1669

Final Waste Pits Remedial Action Project (WPRAP) Remedial Design Package

Volume 1 of 3

Submitted by:

U.S. Department of Energy
Fernald Area Office
P. O. Box 398705
Cincinnati, Ohio 45239-8705

Waste Pit Remedial Action Project (WPRAP)
Remedial Design Package Contents

(Page 1 of 2)

Design Package	Design Document	Document Description
Volume 1 of 3		
Overview of Remedial Design		Summary of Remedial Design Package Contents
Plant Facilities Engineering Package	Description of Operation and Processes	Contains facility process and control descriptions for waste preparation, drying, blending, loadout, air emissions control, water management
	Design Criteria and Assumptions	Description of the criteria which effect the facility design including DOE orders, engineering standards and performance requirements
	Process Flow Diagrams (PFDs) w/Mass and Energy Balances	Contains process flow diagrams for the facility. Dryer process conditions are for the average waste profile.
	Site Plans	Plan view drawings of the overall facility layout
	General Arrangement Plans	Drawings of the facility equipment and building configuration with plan and elevation views
	Equipment Data Sheets/ Specifications	Description of the process duty/performance requirements of the individual facility equipment items
	Utility Plans for Portable Structures	Utility routing drawings for the facility
	Point Source Emission Data	Estimate of air emissions from point sources

Waste Pit Remedial Action Project (WPRAP)
Remedial Design Package Contents

(Page 2 of 2)

Design Package	Design Document	Document Description
Volume 2 of 3		
	Excavation Plan	Description of the waste pit excavation activities
	Pre-Operational Schedule	Detailed schedule of activities through facility startup
Volume 3 of 3		
Site Preparation Package	Description of Site Preparation Activities	Presents the contents of the Site Preparation Package and their inter-relationships.
	Site Plan	Plan view drawings of the overall facility layout
	Grading Plan	Site grading plan drawing
	Associated Profiles and Details	Grading profile and detail drawings
	Specifications	Civil construction specifications
	Manufacturers' Fabrication Drawings of Portable Structures	General floor plan, skirting, and anchoring details for trailers
Project Pre-Operational	Pre-Operational Environmental Control Plan	Description of methods and materials to be used during construction to control erosion, dust and stormwater
	Operation and Maintenance Plan for Existing Facilities	Description of the inspection and maintenance activities to be performed prior to facility operation
	Pre-Operational Health and Safety Plan	Project specific health and safety plan to be used during construction and prior to facility operation

1669

Waste Pits Remedial Action Project
(WPRAP)
Overview of Remedial Design Package

***

PREPARED
for
Fluor Daniel Fernald, Inc.
Fernald, Ohio

FDF Subcontract No. 98SC000001

***

PREPARED
by
IT Corporation
2790 Mosside Boulevard
Monroeville, PA 15146-2790

IT Project No. 773481

***

Revision 0
Issue Date: August 25, 1998

000004

Record of Issue/Revisions

Date	Rev. No.	Description of Issue/Revision
1-9-98	A	Initial issue for review and comment - draft
2-13-98	B	Draft Issue for EPA Review
3-27-98	C	Draft Issue for FDF Review
N/A	D	Not issued
6-5-98	E	Draft Issue for EPA Review
8-25-98	0	Final

Table of Contents

1.0 PURPOSE OF DOCUMENTS 1

2.0 PROJECT BACKGROUND 1
2.1 Site Location and Description 1
2.2 Remediation Strategy 1

3.0 GENERAL STRUCTURE OF REMEDIATION DESIGN PACKAGES 2

4.0 VOLUME 1 - REMEDIAL DESIGN PACKAGE CONTENTS 2
4.1 Plant Facilities Engineering Package 2
4.1.1 Description of the Operation and Processes 2
4.1.2 Design Criteria and Assumptions 2
4.1.3 Process Flow Diagrams with Mass and Energy Balances 3
4.1.4 Site Plans 3
4.1.5 General Arrangement Plans 3
4.1.6 Equipment Data Sheets and Specifications 3
4.1.7 Utility Plans for Portable Structures 3
4.1.8 Point Source Emissions Data 3

5.0 VOLUME 2 - REMEDIAL DESIGN PACKAGE CONTENTS 3
5.1 Excavation Plan 3
5.2 Pre-Operational Schedule 4

6.0 VOLUME 3 - REMEDIAL DESIGN PACKAGE CONTENTS 5
6.1 Site Preparation Package 5
6.1.1 Description of Preparation Activities 5
6.1.2 Site Plan 5
6.1.3 Underground Utility Plan 5
6.1.4 Grading Plan 5
6.1.5 Associated Profiles and Details 5
6.1.6 Specifications 5
6.1.7 Manufacturers Fabrication Drawings of Portable Structures 5
6.2 Pre-Operational Environmental Control Plan 5
6.3 Operation and Maintenance Plan for Existing Facilities 6
6.4 Pre-Operational Health and Safety Plan 6

7.0 SUMMARY AND CONCLUSIONS 6

8.0 REFERENCES 6

000006

List of Acronyms/Abbreviations

AASHTO	American Association of State Highway Transportation Officials
ABMA	American Bearing Manufacturers Association
ACGIH	American Conference of Government Industrial Hygienists
ACI	American Concrete Institute
ACM	Asbestos Containing Material
ACOE	United States Army Corps of Engineers
AFBMA	Anti-Friction Bearing Manufacturers Association
AGMA	American Gear Manufacturers Association
AISC	American Institute of Steel Construction
ALARA	As Low As Reasonably Achievable
ALTER	Accelerated Life Testing and Environmental Research Facility
AMCA	Air Movement and Control Association
ANS	American Nuclear Society
ANSI	American National Standards Institute
APC	Air Pollution Control
API	American Petroleum Institute
ARAR	Applicable or Relevant and Appropriate Requirement.
ARI	American Refrigeration Institute
ASCE	American Society of Civil Engineers
ASHRAE	American Society of Heating, Refrigeration and Air Conditioning Engineers
ASME	American Society of Mechanical Engineers
ASNT	American Society of Nondestructive Testing
ASTM	American Society for Testing and Materials
AWS	American Welding Society
AWWA	American Water Works Association
AWWT	Advanced Wastewater Treatment
BAT	Best Available Technology
BSL	Biodenitrification Surge Lagoon
CAM	Continuous Air Monitor
CBR	California Bearing Ratio
CDF	Commercial Disposal Facility
CEM	Continuous Emissions Monitor
CEMA	Conveyor Equipment Manufacturers Association

000007

List of Acronyms and Abbreviations *(Continued)*

CERCLA	Comprehensive, Environmental Response, Compensation, and Liability Act
CFR	Code of Federal Regulations
COC	Constituent of Concern
CPT	Cone Penetrometer Test
CRSI	Concrete Reinforcing Steel Institute
CRU	CERCLA/RCRA Unit
CWA	Clean Water Act of 1977, as amended
D&D	Decontamination and Dismantlement
DAC	Derived Air Concentration
DCD	Design Criteria Document
DEEP	Dewatering Excavation Evaluation Program
DOE	United States Department of Energy
DOE-NV	United States Department of Energy - Nevada Office of Operations
DOT	United States Department of Transportation
EJMA	Expansion Joint Manufacturers Association
ERDA	Energy Research and Development Administration
F	Fahrenheit
FDF	Fluor Daniel Fernald, Inc.
FEMP	Fernald Environmental Management Project
FERMCO	Fernald Environmental Restoration Management Corporation
FFCA	Federal Facilities Compliance Agreement
fpm	feet per minute
FS	Feasibility Study
FSAR	Final Safety Analysis Report
ft^2	square foot (feet)
GCS	Gas Cleaning System
GFCI	Ground Fault Circuit Interrupter
GLC	Ground Level Concentration
gpm	gallons per minute
HEPA	High Efficiency Particulate Air (filter)
hr	hour
HVAC	Heating, Ventilation, and Air Conditioning
IEEE	Institute of Electrical and Electronics Engineers
IES	Illuminating Engineers Society

000008

List of Acronyms and Abbreviations *(Continued)*

ID	Induced Draft
IPC	Inclined Plate Clarifier
ISA	International Society for Measurement and Control
IT	IT Corporation
kg	kilogram
kV	kilovolt
kVA	kilovolt-ampere
kW	kilowatt
lb	pound
LLRW	Low Level Radioactive Wastes
m^2	square meter
MAGLC	Maximum Allowable Ground Level Concentration
MAWC	Maximum Average Waste Concentration
MBMA	Metal Building Manufacturers Association
MCC	Motor Control Center
MEI	Maximally Exposed Individual
MHB	Material Handling Building
µCi/cc	microcurie per cubic centimeter
mrem	millirem
MSS	Manufacturers Standardization Society
NAD	North American Datum
NEC	National Electric Code
NEMA	National Electrical Manufacturers Association
NESHAP	National Emission Standards for Hazardous Air Pollutants
NETA	National Electrical Testing Association
NFC	National Fuel Code
NFPA	National Fire Protection Association
NP	Nonplastic
NPDES	National Pollutant Discharge Elimination System
NPH	Natural Phenomenal Hazard
NTS	Nevada Test Site
OAC	Ohio Administrative Code
OBBC	Ohio Basic Building Code
ODOT	Ohio Department of Transportation

000009

List of Acronyms and Abbreviations *(Continued)*

OEPA	Ohio Environmental Protection Agency
OSDF	On Site Disposal Facility
OSHA	Occupational Safety and Health Administration
OU	Operable Unit
PC	Performance Category
PCB	Polychlorinated Biphenyl
pcf	pounds per cubic foot
pCi/L	picoCuries per liter
PFD	Process Flow Diagram
PID	Photoionizing Detector
PLC	Programmable Logic Controller
PPE	Personal Protective Equipment
psf	pounds per square foot
psi	pounds per square inch
psig	pounds per square inch gauge
PTI	Permit to Install
PTO	Permit to Operate
PVC	Polyvinyl Chloride
QAP	Quality Assurance Plan
RCRA	Resource Conservation and Recovery Act
RD	Remedial Design
RI	Remedial Investigation
RLB	Railcar Loadout Building
ROD	Record of Decision
SAE	Society of Automotive Engineers
SCS	Soil Conservation Service
scfm	standard cubic feet per minute
SDI	Steel Deck Institute
sec	second
SJI	Steel Joist Institute
SMACNA	Sheet Metal and Air Conditioning Contractors National Association
SPT	Standard Penetration Test
SSC	Structure, System and Component
STD	Standard (DOE)

000010

List of Acronyms and Abbreviations *(Continued)*

SWM	Solid Waste Management
SWPPP	FERMCO Storm Water Pollution Prevention Plan
TBC	To Be Considered
TBP	Tributyl Phosphate
TEMA	Tubular Exchanger Manufacturers Association
TOC	Total Organic Carbon
TSDF	Waste Treatment, Storage or Disposal Facility
UBC	Uniform Building Code
UCRL	University of California Research Laboratory
UL	Underwriters Laboratory
USCS	Unified Soil Classification System
USEPA	United States Environmental Protection Agency (EPA)
V	Volt
WAC	Waste Acceptance Criteria
WESP	Wet Electrostatic Precipitator
WPRAP	Waste Pits Remedial Action Project
WTS	IT Corporation Wastewater Treatment System
yd^3	cubic yard
yr	year

1.0 PURPOSE OF DOCUMENTS

The design documents contained in this Remedial Design Package are submitted for review by the United States Environmental Protection Agency (US EPA)/Ohio Environmental Protection Agency (Ohio EPA) for the Fernald Waste Pits Remedial Action Project (WPRAP) remediation of the Fernald Environmental Management Project (FEMP) Operable Unit 1 (OU1) waste pits.

2.0 PROJECT BACKGROUND

2.1 Site Location and Description

The FEMP is a 1050-acre, government owned facility located approximately 18 miles northwest of the city of Cincinnati, Ohio. It is situated on the boundary between Hamilton and Butler Counties. The FEMP, which operated under the name of the Feed Materials Production Center, produced high purity uranium metal products for the United States Department of Energy (DOE) and its predecessor agencies from 1952 to 1989. Former uranium processing operations at the FEMP were limited to a fenced, 136-acre tract, closed to public access, known as the production area. In June 1991, the site was officially closed for production by an act of Congress. The Fernald site was included on the Comprehensive Environmental Response, Compensation, and Liability Act National Priorities List in 1989. The current mission of the site is the safe environmental restoration of the site in accordance with all applicable requirements.

OU1 is a well-defined, 37.7-acre area located in the northwest quadrant of the FEMP site. Large quantities of liquid and solid wastes that were generated by various chemical and metallurgical processing operations were stored or disposed in the six waste pits and the Clearwell, or burned in the Burn Pit. These waste pits are located in a portion of the FEMP Waste Storage Area and are contained within the boundaries of OU1. A detailed discussion of each waste pit's construction, contents, and volume of waste material is provided in the Remedial Investigation Report for Operable Unit 1 (DOE 1994).

2.2 Remediation Strategy

Remediation of OU1 is based on the final Record of Decision (ROD) for Remedial Action at Operable Unit 1 (DOE 1995a), signed by the US EPA on March 1, 1995. The overall goal of the Waste Pits Remedial Action Project (WPRAP) (the area known as OU1) is to remediate all the OU1 components in a timely, efficient, and cost-effective manner, ensuring compliance with all Applicable or Relevant and Appropriate Requirements (ARARs), and protecting human health and the environment. The selected remedy presented in the OU1 ROD is excavation of the waste

pit contents, waste processing and treatment by thermal drying (as necessary to remove free water), and off-site disposal at a Commercial Disposal Facility (CDF).

3.0 GENERAL STRUCTURE OF REMEDIATION DESIGN PACKAGES

This submittal consists of several design documents which have been compiled into three separate volumes. The information is divided as follows:

- Volume 1 addresses the equipment and facilities directly associated with the processing of waste.
- Volume 2 addresses the waste excavation plan and pre-operational schedule.
- Volume 3 addresses the site preparation package and the project preoperational plans to support the construction and other pre-operation activities of the waste processing facility.

To the extent possible, various documents reference each other rather than repeat detailed information.

4.0 VOLUME 1 - REMEDIAL DESIGN PACKAGE CONTENTS

4.1 Plant Facilities Engineering Package

4.1.1 Description of the Operation and Processes

This document provides a description of the WPRAP operation and processes including the sequence and operating parameters associated with waste preparation; material handling; wastewater and storm water treatment, control, and distribution; process surge capacity and configuration; blending; drying; air emissions controls (fugitive and point source); sampling and analysis; loadout; and process control philosophy. Also discussed are the rationale for selecting the process sequence and utility requirements.

4.1.2 Design Criteria and Assumptions

This document provides a description of the specific criteria which affect the WPRAP design including performance requirements, applicable DOE orders, and standard industrial codes. The design criteria also covers the compliance strategy for ARARs and substantive permit requirements. A permitting crosswalk is presented including a description of where in the design package a particular requirement is addressed. The design criteria also summarizes the results of

studies and evaluations made in support of the design. Assumptions are stated for any design criteria which can not be verified until field work begins.

4.1.3 Process Flow Diagrams with Mass and Energy Balances

Contains the Process Flow Diagrams (PFDs) for the facility processes including waste preparation, drying and off-gas treatment, dried waste loadout and blending, wastewater treatment, and overall water balance.

4.1.4 Site Plans

A plan view drawing of the overall WPRAP facility layout is given in this section.

4.1.5 General Arrangement Plans

Drawings of the equipment and building configurations are given in this section in both plan and elevation views. The waste preparation and blending area, drying and off-gas treatment area, rail car loadout area, and wastewater treatment area are included in the views.

4.1.6 Equipment Data Sheets and Specifications

A description of the process duty and/or general specification for major process equipment items is given in this section. This includes the material handling equipment, dryer and off-gas treatment system, and wastewater treatment equipment.

4.1.7 Utility Plans for Portable Structures

Drawings of the utility routing to the facility portable structures (trailers) is given in this section. Utilities for both the process and administration area structures are included.

4.1.8 Point Source Emissions Data

Estimate of the air emissions from the dryer and off-gas treatment system as well as other project point sources (e.g. Laboratory). Also included are area source emissions estimates from the Material Handling Building, and Railcar Loadout Building.

5.0 VOLUME 2 - REMEDIAL DESIGN PACKAGE CONTENTS

5.1 Excavation Plan

Provides a description of the processes used to transfer material from the waste pit area to the waste processing facility. The document also includes the following:

000014

- Overall excavation sequence and method
- Criteria and assumptions (including slope stability and bearing capacity of the waste material)
- Profiles, sections, and details of the pits as they currently exist
- Material handling considerations, including considerations specific to the handling of nontypical wastes
- Discussion of pit dewatering
- Leachate and storm water run-on/runoff management and approach to minimize leachate infiltration to the aquifer
- Excavation sequencing and processes to be used in the excavation of individual waste pits including plans and sections
- Manpower requirements and equipment selection for waste excavation and transport
- Proposed stockpile areas for potential blending and segregation
- Debris management and segregation
- Air monitoring (specific sampling and analysis details are given in the Sampling and Analysis Plan which is not part of this package)
- Dust and fugitive emissions controls
- Equipment decontamination facilities and procedures
- Interim and final grading.

5.2 Pre-Operational Schedule

The schedule identifies major activity elements and milestones, from WPRAP contract award to Initiation of Operations.

6.0 VOLUME 3 - REMEDIAL DESIGN PACKAGE CONTENTS

6.1 Site Preparation Package

6.1.1 Description of Preparation Activities

This section presents the contents of the site preparation package and their interrelationships.

6.1.2 Site Plan

Drawing depicts the overall facility layout including relative location of the WPRAP facility structures and equipment in relation to the waste pits and rail spurs.

6.1.3 Underground Utility Plan

This section contains utility routing drawings for the facility. Utilities for both the process and administration area structures are included.

6.1.4 Grading Plan

This section contains the soil grading plan drawing for construction of the WPRAP facility.

6.1.5 Associated Profiles and Details

Contains soil grading drawings which show the sections, profiles and details for construction of the facility.

6.1.6 Specifications

Contains civil construction specifications.

6.1.7 Manufacturers Fabrication Drawings of Portable Structures

General floor plan, skirting , and anchoring details for trailers.

6.2 Pre-Operational Environmental Control Plan

This document contains a description of the methods and materials to be used during site preparation and construction to control erosion, dust, and storm water to minimize the impact of these activities upon the environment.

6.3 Operation and Maintenance Plan for Existing Facilities

This document contains a description of the inspection and maintenance activities to be performed in the waste pit and site improvement area prior to facility operation.

6.4 Pre-Operational Health and Safety Plan

The Pre-Operational Health and Safety Plan provides the methods which will be implemented to comply with the FEMP health and safety requirements for the safe performance of the pre-operational remedial activities.

7.0 SUMMARY AND CONCLUSIONS

The design documents contained in this Remedial Design Package support the planned OU1 remediation activities.

8.0 REFERENCES

Accelerated Life Testing and Environmental Research Facility (ALTER), 1994, ***CRU1 Cooperative Remedy Screening Program, Final Report***, Cincinnati: University of Cincinnati, College of Engineering, July.

Accelerated Life Testing and Environmental Research Facility (ALTER), 1995, ***Interim Report, CRU-1-Dewatering, Excavation, Evaluation Program: Waste Pits 1 2, and 3***. Cincinnati: University of Cincinnati, College of Engineering, September.

Fernald Environmental Management Project (FEMP), ***Stormwater Pollution Prevention Plan***, RM-0039.

Fernald Environmental Restoration Management Corporation (FERMCO), 1995, ***Management Plan: FERMCO Policies and Requirements Manual***, Rev. 7, Fernald: FERMCO, RM-0016, June.

Ohio Department of Natural Resources (DNR), 1996, ***Rainwater and Land Development, Ohio's Standards for Stormwater Management Land Development and Urban Stream Protection***, Second Edition, 1996.

Harmer, D., IT Corporation, 1997, ***Calculation Bases and Methods for Uranium Enrichment/ Depletion in the Fernald Operable Unit 1 Pits***, June 10, 1997.

Jenike and Johanston, Inc., 1994, ***Flow Properties Test Report***, Westford, MA, Jenike and Johanston, Inc. 1994.

Kirk-Othmer, 1994, "Encyclopedia of Chemical Technology," Fourth Edition, Vol. 9, Elastomers, Polyisoprene to Expert Systems, published by John Wiley & Sons, New York, New York.

PARSONS ERA Project, 1994, ***Report on Execution of Surrogate Waste Drying Tests***, Revision A, Fairfield: August 1994.

PARSONS ERA Project, 1994, ***Shredding Engineering Tests Report***, Fairfield: PARSONS 1994.

PARSONS ERA Project, 1995, ***Preliminary Technical Summary of DEEP Test Data***, Revision A, Fairfield: PARSONS October 1995.

PARSONS ERA Project, 1995, ***Dryer Off-Gas Compositions, Operable Unit 1 Remediation System***, Revision A, Fairfield: PARSONS, September 1995.

PARSONS ERA Project, 1995, ***Process Description for the Remediation System Design***, Revision C, Fairfield: PARSONS, October 1995.

PARSONS ERA Project, 1995, ***Control Philosophy for the Remediation System Design***, Revision C, Fairfield: PARSONS, October 1995.

PARSONS ERA Project, 1995, ***Preliminary Estimate of Utility Requirements for Proposed Remedial Facilities for OU1 Remediation***, Revision B, Fairfield: PARSONS, October 1995.

PARSONS ERA Project, 1995, ***Description of Site Preparation Activities***, and related drawings, Fairfield: PARSONS, October 1995.

PARSONS ERA Project, 1995, ***Waste Excavation Plan for the Operable Unit 1 Remediation System Design***, Fairfield: PARSONS, October 1995.

U.S. Department of Commerce, 1995, "Rainfall Frequency Atlas of the U.S.", Technical Paper 40.

U.S. Department of Energy (DOE), 1994, ***Operable Unit 1 Dewatering Excavation Evaluation Program (DEEP) Treatability Study Work Plan***, Final, Fernald: DOE Fernald Field Office, DOE 1994a.

U.S. Department of Energy (DOE), 1994b, ***Remedial Investigation Report for Operable Unit 1***, Final, Fernald: DOE Fernald Field Office, DOE, August 1994.

U.S. Department of Energy (DOE), 1994, ***Feasibility Study Report for Operable Unit 1***, Final, Fernald: DOE Fernald Field Office, DOE/EA-0938, October 1994.

U.S. Department of Energy (DOE), 1995, ***Final Record of Decision for Remedial Actions at Operable Unit 1***, Fernald: DOE Fernald Field Office, January 1995.

U.S. Department of Energy (DOE), 1995, ***Final Remedial Design Work Plan for Remedial Actions at Operable Unit 1***, Fernald: DOE Fernald Field Office, July 1995.

U.S. Department of Energy (DOE), 1997, ***Final Remedial Action Work Plan for Remedial Actions at Operable Unit 1, Fernald, DOE Fernald Area Office***, January, 1997.

Weston, Roy F., Inc., 1988, ***Characterization Investigation Study Geotechnical Evaluation of Waste Pit Material Properties and Boring Logs***, Cincinnati, March 1988.

Waste Pits Remedial Action Project (WPRAP) Description of the Operation and Processes

***

PREPARED
for
Fluor Daniel Fernald, Inc.
Fernald, Ohio

FDF Subcontract No. 98SC000001

***

PREPARED
by
IT Corporation
2790 Mosside Boulevard
Monroeville, PA 15146-2790

IT Project No. 773481

***

Revision 0
Issue Date: August 25, 1998

Record of Issue/Revisions

Date	Rev. No.	Description of Revision
1-9-98	A	Original Issue of Draft
2-13-98	B	Draft Issue for EPA Review
3-27-98	C	Draft Issue for FDF Review
N/A	D	Not Issued
6-5-98	E	Draft Issue for EPA Review
8-25-98	0	Final

Table of Contents

List of Tables v
List of Acronyms/Abbreviations vi
1.0 INTRODUCTION 1
2.0 PROCESS DESCRIPTION 1
2.1 Waste Excavation 1
2.2 Waste Blending 2
2.3 Waste Preparation (PFD D-15-10-001) 4
2.3.1 Initial Waste Classification 4
2.3.2 Initial Blending 5
2.3.3 Screening 5
2.3.4 Shredding 6
2.3.5 Dust Control 6
2.3.6 Waste Processing 7
2.3.7 Final Blending 7
2.4 Rotary Dryer Feed System (PFD D-20-10-001 and -002) 7
2.5 Rotary Dryer Operation (PFD D-20-10-001 and -002) 8
2.6 Gas Cleaning System (PFD D-50-10-001 and-002) 9
2.7 Railcar Loadout and Lidding (PFD D-35-10-001) 11
2.7.1 Railcar Loadout and Lidding Operations 12
2.7.2 Railcar Rejection at the CDF 14
2.8 Water Management (PFDs D-65-10-001 and D-90-10-001) 14
2.8.1 Process Wastewater 16
2.8.1.1 Cooling Tower Blowdown Water 17
2.8.1.2 GCS Blowdown Water 17
2.8.1.3 Backwash/Recycle Water from the WTS 17
2.8.2 Nonprocess Wastewater and Contact Storm Water 17
2.8.2.1 Laundry Water 18
2.8.2.2 Respirator Wash Water 18
2.8.2.3 Grey Water Collection Tank 19
2.8.2.4 Laboratory Wastewater 19
2.8.2.5 Material Handling Building Collection Sumps 19
2.8.2.6 Railcar Loadout Building Collection Sumps 19
2.8.2.7 Rotary Dryer Area Collection Sump 20

Table of Contents (Continued)

2.8.2.8 Material Handling Building Collection Tank 20
2.8.2.9 Truck Turnaround Area Collection Sump 20
2.8.2.10 Truck Wash Collection Sump 20
2.8.2.11 Decontamination Pad Wastewater 21
2.8.2.12 GCS/WTS Building Collection Sumps 21
2.8.3 Noncontact Storm Water Outside the Pit Area 21
2.8.4 Contact Storm Water and Excavation Water from the Waste Pit Area 22
2.8.4.1 Contact Storm Water from Waste Pit 6 22
2.8.4.2 Contact Storm Water from Waste Pit 5 23
2.8.4.3 Excavation Water 24
2.8.4.4 Contact Storm Water from Haul Roads in the Waste Pit Area . . 25
2.8.4.5 Contact Storm Water in the Clearwell and Surrounding Areas . . 25
2.8.5 Noncontact Storm Water Inside the Pit Area 25
2.8.5.1 Noncontact Storm Water from Waste Pits 1, 2, and 3 26
2.8.5.2 Noncontact Storm Water from Waste Pit 4 26
2.8.5.3 Noncontact Storm Water from Areas Bordering the Waste Pits . 27
2.8.6 Storm Water Controls for Storage Piles 27
2.9 Water Treatment System (PFD D-65-10-001) 27
2.9.1 Solids Setting and Equalization 27
2.9.2 Initial pH Adjustment 28
2.9.3 Clarification 28
2.9.4 Sand Filtration 28
2.9.5 Ion Exchange 29
2.9.6 Final pH Adjustment 29
2.9.7 Effluent Discharge/Recycle 29
3.0 PROCESS CONTROL PHILOSOPHY 29
3.1 Waste Removal, Blending, and Preparation 30
3.2 Rotary Dryer Feed System (PFD D-20-10-001 and -002) 31
3.2.1 Operations 31
3.2.2 Instrumentation and Controls 32
3.3 Rotary Dryer Operation (PFD D-20-10-001 and -002) 33
3.3.1 Operations 33
3.3.2 Instrumentation and Controls 33

Table of Contents (Continued)

3.4 Gas Cleaning System (PFD D-50-10-001 and -002) 34
3.4.1 Operations 34
3.4.2 Instrumentation and Controls 36
3.5 Railcar Loadout and Lidding Operations (PFD D-35-10-001) 37
3.6 Water Treatment System 37

4.0 SAMPLING AND ANALYSIS 38
4.1 Sampling 38
4.2 Analyses 39

5.0 UTILITY REQUIREMENTS 42
5.1 Electricity 43
5.2 Caustic 43
5.3 Natural Gas 44
5.4 Compressed Air (Plant and Instrument) 44
5.5 Water (Potable and Process) 44
5.6 Fire Water 45
5.7 Cooling Water 45

List of Tables

4-1 Preliminary Sampling and Analytical Program
4-2 Parameters for Analysis for Samples from the M-5 Sampling Train
4-3 Parameters for Analysis for Samples from the MM-5 Sampling Train
4-4 Parameters for Analysis for Samples from the VOST
4-5 Radionuclide Parameters for Samples from Method-114
4-6 Continuous Emissions Monitors

List of Acronyms/Abbreviations

AASHTO	American Association of State Highway Transportation Officials
ABMA	American Bearing Manufacturers Association
ACGIH	American Conference of Government Industrial Hygienists
ACI	American Concrete Institute
ACM	Asbestos Containing Material
ACOE	United States Army Corps of Engineers
AFBMA	Anti-Friction Bearing Manufacturers Association
AGMA	American Gear Manufacturers Association
AISC	American Institute of Steel Construction
ALARA	As Low As Reasonably Achievable
ALTER	Accelerated Life Testing and Environmental Research Facility
AMCA	Air Movement and Control Association
ANS	American Nuclear Society
ANSI	American National Standards Institute
APC	Air Pollution Control
API	American Petroleum Institute
ARAR	Applicable or Relevant and Appropriate Requirement.
ARI	American Refrigeration Institute
ASCE	American Society of Civil Engineers
ASHRAE	American Society of Heating, Refrigeration and Air Conditioning Engineers
ASME	American Society of Mechanical Engineers
ASNT	American Society of Nondestructive Testing
ASTM	American Society for Testing and Materials
AWS	American Welding Society
AWWA	American Water Works Association
AWWT	Advanced Wastewater Treatment
BAT	Best Available Technology
BSL	Biodenitrification Surge Lagoon
CAM	Continuous Air Monitor
CBR	California Bearing Ratio
CDF	Commercial Disposal Facility
CEM	Continuous Emissions Monitor
CEMA	Conveyor Equipment Manufacturers Association

List of Acronyms and Abbreviations *(Continued)*

CERCLA	Comprehensive, Environmental Response, Compensation, and Liability Act
CFR	Code of Federal Regulations
COC	Constituent of Concern
CPT	Cone Penetrometer Test
CRSI	Concrete Reinforcing Steel Institute
CRU	CERCLA/RCRA Unit
CWA	Clean Water Act of 1977, as amended
D&D	Decontamination and Dismantlement
DAC	Derived Air Concentration
DCD	Design Criteria Document
DEEP	Dewatering Excavation Evaluation Program
DOE	United States Department of Energy
DOE-NV	United States Department of Energy - Nevada Office of Operations
DOT	United States Department of Transportation
EJMA	Expansion Joint Manufacturers Association
ERDA	Energy Research and Development Administration
F	Fahrenheit
FDF	Fluor Daniel Fernald, Inc.
FEMP	Fernald Environmental Management Project
FERMCO	Fernald Environmental Restoration Management Corporation
FFCA	Federal Facilities Compliance Agreement
fpm	feet per minute
FS	Feasibility Study
FSAR	Final Safety Analysis Report
ft2	square foot (feet)
GCS	Gas Cleaning System
GFCI	Ground Fault Circuit Interrupter
GLC	Ground Level Concentration
gpm	gallons per minute
HEPA	High Efficiency Particulate Air (filter)
hr	hour
HVAC	Heating, Ventilation, and Air Conditioning
IEEE	Institute of Electrical and Electronics Engineers
IES	Illuminating Engineers Society

List of Acronyms and Abbreviations *(Continued)*

ID	Induced Draft
IPC	Inclined Plate Clarifier
ISA	International Society for Measurement and Control
IT	IT Corporation
kg	kilogram
kV	kilovolt
kVA	kilovolt-ampere
kW	kilowatt
lb	pound
LLRW	Low Level Radioactive Wastes
m^2	square meter
MAGLC	Maximum Allowable Ground Level Concentration
MAWC	Maximum Average Waste Concentration
MBMA	Metal Building Manufacturers Association
MCC	Motor Control Center
MEI	Maximally Exposed Individual
MHB	Material Handling Building
µCi/cc	microcurie per cubic centimeter
mrem	millirem
MSS	Manufacturers Standardization Society
NAD	North American Datum
NEC	National Electric Code
NEMA	National Electrical Manufacturers Association
NESHAP	National Emission Standards for Hazardous Air Pollutants
NETA	National Electrical Testing Association
NFC	National Fuel Code
NFPA	National Fire Protection Association
NP	Nonplastic
NPDES	National Pollutant Discharge Elimination System
NPH	Natural Phenomenal Hazard
NTS	Nevada Test Site
OAC	Ohio Administrative Code
OBBC	Ohio Basic Building Code
ODOT	Ohio Department of Transportation

000028

List of Acronyms and Abbreviations *(Continued)*

OEPA	Ohio Environmental Protection Agency
OSDF	On Site Disposal Facility
OSHA	Occupational Safety and Health Administration
OU	Operable Unit
PC	Performance Category
PCB	Polychlorinated Biphenyl
pcf	pounds per cubic foot
pCi/L	picoCuries per liter
PFD	Process Flow Diagram
PID	Photoionizing Detector
PLC	Programmable Logic Controller
PPE	Personal Protective Equipment
psf	pounds per square foot
psi	pounds per square inch
psig	pounds per square inch gauge
PTI	Permit to Install
PTO	Permit to Operate
PVC	Polyvinyl Chloride
QAP	Quality Assurance Plan
RCRA	Resource Conservation and Recovery Act
RD	Remedial Design
RI	Remedial Investigation
RLB	Railcar Loadout Building
ROD	Record of Decision
SAE	Society of Automotive Engineers
SCQ	Sitewide CERCLA Quality Assurance Project Plan
SCS	Soil Conservation Service
scfm	standard cubic feet per minute
SDI	Steel Deck Institute
sec	second
SJI	Steel Joist Institute
SMACNA	Sheet Metal and Air Conditioning Contractors National Association
SPT	Standard Penetration Test
SSC	Structure, System and Component

List of Acronyms and Abbreviations *(Continued)*

STD	Standard (DOE)
SWM	Solid Waste Management
SWPPP	FERMCO Storm Water Pollution Prevention Plan
TBC	To Be Considered
TBP	Tributyl Phosphate
TEMA	Tubular Exchanger Manufacturers Association
TOC	Total Organic Carbon
TSDF	Waste Treatment, Storage or Disposal Facility
UBC	Uniform Building Code
UCRL	University of California Research Laboratory
UL	Underwriters Laboratory
USCS	Unified Soil Classification System
USEPA	United States Environmental Protection Agency (EPA)
V	Volt
WAC	Waste Acceptance Criteria
WESP	Wet Electrostatic Precipitator
WPRAP	Waste Pits Remedial Action Project
WTS	IT Corporation Wastewater Treatment System
yd^3	cubic yard
yr	year

1.0 INTRODUCTION

The waste materials in the pits are to be excavated, treated and/or blended as necessary, and ultimately transported to an off-site Commercial Disposal Facility (CDF). The general steps and activities associated with fulfilling this processing are:

- Waste excavation and initial segregation
- Preparation of the excavated waste materials (i.e., sorting, blending, size reduction, etc.)
- Thermally drying some or all of the waste materials
- Blending of the processed material (e.g., Radiological WAC blending)
- Storage and loadout for transport to the CDF.

Rainwater and other waters associated with the excavation and processing of the materials will be controlled and treated as necessary. Dust control procedures will be followed at all project areas including the excavation, haul roads, and processing area. The thermal drying process, which will utilize two indirectly heated rotary dryers, requires that the materials be prepared and fed to the rotary dryers, and that the emissions from the drying process be properly controlled with a gas cleaning system. Railcars utilized for hauling the processed wastes to the CDF will be properly prepared and maintained.

This document provides a description of the operations and processes involved in the excavation, preparation, and loadout of the waste materials for transport off site. Section 2.0 provides a description of each process step from waste excavation through loading of the railcars, including associated activities such as the control and treatment of storm and waste waters. Section 3.0 provides the process control philosophy associated with each of the process steps. Section 4.0 describes the sampling and analyses. Section 5.0 describes the utilities associated with the processing activities.

2.0 PROCESS DESCRIPTION

2.1 Waste Excavation

Waste excavation will begin upon receipt of the Authorization to Operate from FDF. Two or more waste pits will be excavated concurrently to provide feed for the radiological and moisture

content-based waste blending program. After initial segregation, the excavated materials will be transferred to the Material Handling Building.

The excavation of the various pits and Clearwell will be performed using conventional earth moving equipment. This equipment will include bulldozers, articulating dump trucks, track mounted excavators and long reach excavators. Access for mechanical excavation of pit materials will be from existing berms and covers, constructed access ramps or the pit bottom. Areas will be provided for moisture conditioning, nontypical waste staging, and nonprocessable waste staging.

As the waste pit excavations progress, sump areas adjacent to the excavation face will be used for dewatering of pit areas. To the extent possible, water removal from the waste will be accomplished via gravity drainage into the pit area low-point sumps prior to excavation and transportation to the waste processing area. All water collected within the excavations will be transferred to the Clearwell prior to treatment through the IT Wastewater Treatment System (WTS).

Additional information regarding excavation sequence, health and safety, material handling and segregation, and loading and hauling is presented in the Excavation Plan.

2.2 Waste Blending

Waste material blending, sampling, and analysis activities are described throughout the RD documents. The blending described is for the purpose of producing material which meets the CDF WAC for radiological and moisture constraints and is not for the purpose of diluting characteristically hazardous waste to render it nonhazardous. Unless stated otherwise, sampling and analysis described in the RD documents will be for radiological, moisture, or other WAC compliance characteristics other than RCRA. The analysis of samples for the determination of RCRA characteristic hazardousness will occur only on the material staged in the railcar storage bins prior to railcar loadout as described in Sections 2.7 and 4.2.

Blending of the waste material will occur in several locations. In the excavation areas, blending of waste materials from a single waste pit will be performed to produce a consistent material coming from the pit. In the Material Handling Building, material from multiple sources will be combined to meet waste acceptance criteria (WAC). In the Railcar Loadout Building,

nonprocessable material will be combined with dried waste in the railcars. The following sections detail the various waste handling and blending procedures.

During excavation, waste materials within the pit will be segregated into three categories:

- Nontypical waste
- Nonprocessable waste
- Processable waste.

Nontypical waste that does not meet the CDF WAC or cannot be treated to meet the CDF WAC will be stockpiled in the excavation areas and managed until the material is turned over to FDF for disposal. IT will transfer nontypical waste material to a designated area between Waste Pits 4 and 6, along the existing roadway, where the material can be containerized by IT (as-required) and containers radiologically surveyed prior to being transferred to FDF for subsequent handling and disposal.

Nonprocessable waste is waste material that meets the CDF WAC but cannot be fed into the rotary dryer. This type of waste may consist of debris that could not pass through a 4-inch screen such as rocks, wood, clumps of clay, etc. To the extent possible, nonprocessable waste will be segregated in the excavation areas and transported to the Material Handling Building separately.

Processable waste from a single source will be blended in the excavation, primarily on the basis of moisture content, to achieve a manageable material.

When excavated, wastes will be classified as low WAC or high WAC material, depending on the levels of radioactive constituents and other pertinent processing/disposal criteria. Historical surveys and investigations of each pit, the trend analysis from ongoing monitoring, and chemical analysis of waste materials as the remediation proceeds, will allow segregation of waste materials based on the levels of radioactive constituents. Wastes will be loaded into contained dump trucks (approximate 21-yard capacity) and transported from the pit area over the designated haul road to the Material Handling Building. Three trucks are expected to be making the continuous route at any given time, at an average rate of three trucks per hour up to a maximum rate of six trucks per hour.

Additional waste blending will occur in the Material Handling Building and Railcar Loadout Building. The blending of material from more than one source will occur in the mixing pits,

located along the west side of the Material Handling Building. The blend ratios will be determined in the field, and dump trucks will be directed to haul material from designated pits to the appropriate mixing pit to achieve a blended material that meets the WAC for railcar loadout. Front end mixing loaders will be used to blend the materials in the mixing pits. The material will be removed from the pits, screened to remove oversize materials, and stored in bins along the east wall of the building awaiting sampling and drying.

In the event that waste delivered to the mixing pits in the Material Handling Building from the excavation is not dry enough for convenient handling, waste material from OU1 Contaminated Soil Stockpile (typically drier material) or material that has been dried can be mixed with incoming material to improve consistency.

2.3 Waste Preparation (PFD D-15-10-001)

Process flow diagram (PFD) D-15-10-001 depicts handling of the excavated waste. All waste preparation will take place in the Material Handling Building. Waste preparation includes the receipt of excavated waste material from the pits, followed by blending, further separation by screening, and size reduction of material. Finally, a portion of the conditioned waste material will be selected for drying while the balance of the waste material will bypass the rotary dryers to be blended later with dried material prior to being transferred to the Railcar Loadout Building. Waste preparation activities will be conducted on a 1-, 2-, or 3-shift per day schedule. Sufficient storage will be provided in the Material Handling Building to support three shifts per day operation of the rotary dryers and final blending operations.

2.3.1 Initial Waste Classification

Wastes will be received at the Material Handling Building from a number of sources as follows:

- Processable waste from the excavations as previously described,
- Certain nonprocessable waste such as pallets, wood boards, and similar wastes that may be considered shreddable will be transferred to the Material Handling Building. The shreddable material will be segregated inside the building prior to shredding,
- Used personal protective equipment, consisting mainly of disposable outer garments and expended air purifying respirator cartridges, will be sent to the Material Handling Building for processing as required to meet the WAC,
- Material from OU1 Contaminated Soil Stockpile will be conveyed across the rail spur into the Material Handling Building and will be stockpiled in a designated bin.

Following segregation in the waste pit area, excavated material will be transferred at a rate of approximately 100 tons per hour, to one of two mixing pits in the Material Handling Building. A common sump, located to the south of the mixing pits, will collect free water runoff from the waste being received. The water collected in the sump will be pumped out as needed for processing through the WTS.

2.3.2 Initial Blending

Waste material will be removed from the mixing pits by a front end loader and moved to a blending area in the Materials Handling Building. The initial blending will serve two purposes: (1) to blend materials with high radioactive content and materials with low radioactive content in such proportions as to meet the off-site disposal facility WAC, and (2) attempt to achieve optimum moisture content without the need for processing through the rotary dryers. This blending is not for the purpose of diluting characteristically hazardous waste to render it nonhazardous. Should both of the objectives of the initial blending operation be achieved, the blended wastes will be transferred directly to the Railcar Loadout Building for storage and sampling prior to loading into railcars for shipment to the off-site disposal facility without further processing. Production of WAC-compliant blends bypassing the rotary dryer operations may be used as the principal method of production for some excavation phases. This mode of production is referred to as Alternative Waste Production.

2.3.3 Screening

Waste material will be screened with or without blending at the discretion of the IT Shift Supervisor. The primary objective of the screening operation is to properly size waste material for processing through the rotary dryer. Three screening systems are being evaluated for use in this operation. These are:

- A stationary 4-inch vibrating deck screen
- A rotating trommel-type screen
- An equipment-mounted rotating trommel-type screen.

Material handling equipment, such as a front end loader will be used to feed either of the screening devices. The screens will discharge both oversize and on-size materials to piles on the floor of the Materials Handling Building from which they will be moved by front end loaders (or other material handling equipment). Oversize material may be separated visually into shreddable and nonshreddable waste. When such a separation is made, the shreddable waste will be moved

to the storage area for shreddable material to await processing, while the nonshreddable waste will be segregated for size reduction and final blending with rotary dryer-processed waste. Sized waste will be moved into bins on the east side of the building and held for processing through the rotary dryer or for final blending with rotary dryer-processed waste. Nonshreddable waste may be size-reduced in the pit area or the Material Handling Building using methods that may include cleavage of debris with equipment bucket/blade; runover by equipment track; cleavage with equipment mounted ram, jaws or other device; or flame cutting.

If an equipment-mounted rotating trommel-type screen is selected for this project, the waste will be picked up by the material handling equipment from the blending pile, the trommel screen closed, and the equipment will be moved to the selected storage bin where rotation will be started. Oversize material will be retained inside the rotating screen, while sized material will discharge through the screen into the bin. After each load of waste has been screened, the trommel device will be moved to the oversize material area, discharged, and the oversize handled as previously described.

2.3.4 Shredding

Waste material segregated and awaiting shredding will be processed in "campaigns" when sufficient material for shredding has accumulated. Shredding will be accomplished using a stationary, low-speed shear type debris shredder (M-1501). Wastes will be moved out of the holding bin and into the shredder feed hopper using conventional material handling equipment. The shredded material will be discharged onto the floor of the Materials Handling Building. It will be picked up by the material handling equipment and transferred to a segregated area to await final blending with rotary dryer-processed waste.

2.3.5 Dust Control

Water sprays will be used at stationary equipment transfer points in the waste preparation area to control dust. In general, the moisture content of the waste material received at the waste preparation area is expected to be high enough to prevent dusting during processing. Water sprays will be available, however, to suppress dust in the event that some material handling systems require dust suppression. Sumps in the floor of the Materials Handling Building will collect any free moisture from the dust suppression sprays and from housekeeping activities. The collected water will be discharged to the Clearwell for subsequent treatment in the WTS.

2.3.6 Waste Processing

The majority of the waste material is expected to require drying. However, a greater or lesser amount may be dried, depending upon actual waste condition in the pits upon excavation. Since these waste materials will ultimately be landfilled, proper moisture is critical to achieving adequate compaction when placed in the landfill. Uniformity and dryness are also necessary in handling to prevent bulking, cementing, or hold up in railroad cars during unloading.

2.3.7 Final Blending

Material loaded out in railcars must meet the WAC for the disposal facility. Wastes will be blended to meet moisture and radiological criteria and to maximize efficient loading of railcars. As noted earlier, most of the waste will be processed through the rotary dryer since it contains a significant overall excess of water. Some of the wastes including the pit soil caps and certain materials stockpiled in the OU1 Contaminated Soil Stockpile area are expected to be near optimum moisture as excavated. These materials may be loaded as is or reserved for blending.

The material exiting the rotary dryer may be further mixed with material that has bypassed the drying step. Further blending before or after the rotary dryer can be utilized to improve/ensure the blend quality of the final product.

The average bulk density of waste material loaded out into the railcars is expected to be 1.23 tons per cubic yard.

2.4 Rotary Dryer Feed System (PFD D-20-10-001 and -002)

PFDs D-20-10-001 and -002 depict operations for waste materials fed from the waste preparation area into the dual rotary dryer unit operations (F-2001 A/B). A front-end loader will be used to transfer solid waste materials from the staging bins to the feed hoppers of the mass flow screw feeders (H-1001A/B). Material is transferred from the mass flow screw feeders to the belt feed conveyors (H-1002 A/B) which include belt scales. The speed of each mass flow feeder is automatically controlled to adjust the mass rate of waste material being fed as measured and indicated by the belt scale. The feed material discharges from the belt feed conveyors into the dryer feed screws (H-2001 A/B) that extend into the rotary dryers. The screw feeders provide a positive feed mechanism to assure uniform transfer of the material into the rotary dryers, and it also provides a positive seal that limits the amount of infiltration air into the rotary dryers.

2.5 Rotary Dryer Operation (PFD D-20-10-001 and -002)

Drawings D-20-10-001 and -002 also depict operations for waste materials being received from the waste preparation area and processed through the rotary dryer. Two indirectly heated rotary dryers (F-2001 A/B) receive and process wet waste material of various moisture contents, depending on the type of waste. The design basis moisture content is 40 percent (wet basis). The rotary dryers reduce the moisture content of the waste materials to 10 - 15 percent (wet weight basis). Waste materials are fed to each rotary dryer primarily as solids through the feed screws (Stream 116). The feed screws extend inside the rotary dryers to deposit wet waste within the heated zone.

Each rotary dryer system consists of a cylindrical shell rotated with a variable speed drive. The rotating cylinder is heated externally by a furnace with adequate length and diameter to satisfy heat transfer requirements. Using natural gas as fuel for combustion, heat energy for the indirect drying is produced in multiple furnace zones by a set of burners located in each zone. Burners are operated with adjustable primary air/fuel ratio and secondary air addition to control the flame temperature so the rotating cylinder does not exceed its design temperature. Air to the burners is supplied by combustion air fans (B-2001 A/B).

Burner exhaust gases from each furnace zone are vented directly to the atmosphere through multiple vent stacks. Heat energy from each furnace zone is indirectly transferred to the material advancing inside the rotating shell.

Each rotary dryer has multiple furnace zones and is provided with individual temperature control of each zone. This ability to control the temperature throughout the rotary dryer provides flexibility and simplicity in drying wastes with varying levels of incoming moisture content to achieve the desired moisture content in the dried product. It is anticipated that the rotary dryer shell temperature may vary from 1200°F to 1600°F.

The slope and speed of the cylinder's rotation determine the retention time in the rotary dryer. The slope is fixed, but the rotation speed is variable and is used to adjust the retention time as necessary, providing additional control of the drying process.

The product from each rotary dryer (Stream 204) is discharged to the product conveyors (H-3001 A/B). An enclosed drag flight conveyor will be used for this application. Atomized water sprays will be utilized at the outlet of the conveyors to control dust as required. A set of airlock valves

(H-3002A/B) will be located at the discharge of each dryer product conveyor to minimize air infiltration. The dryer product mixers (H-3003A/B) will be used as required to intermix rotary dryer product to a uniform consistency.

Infiltration air enters the rotary dryers operating under a vacuum at a predetermined rate to aid in carrying the water vapor produced during the drying process through the gas cleaning system. Inert gas is introduced as necessary to control the ultimate oxygen concentration in the system. After exiting the rotary dryers, the process off-gas stream (Stream 203) is routed to the gas cleaning system as shown on PFD D-50-10-001 and -002. A portion of the off-gas entrained solids are collected in the downstream cyclones (S-5001 A/B) and returned to the dryer product conveyors (H-3001 A/B) as Stream 501.

2.6 Gas Cleaning System (PFD D-50-10-001 and -002)

PFDs D-50-10-001 and -002 present the process design for the cleaning of the off-gases from the rotary dryer operation. The PFDs also indicate the various solid and liquid purge streams from the gas cleaning process.

The off-gas from each rotary dryer initially passes through the high efficiency cyclone separators (S-5001 A/B) to remove large, entrained particulate. The solids removed from the off-gas are transferred from the cyclones via the cyclone solids transfer screws (H-5001A/B) to the rotary dryer product system and combined in a mixing operation to assure the proper product consistency and moisture content. This design mitigates dust generation and minimizes worker exposure as defined in the ALARA concept.

The off-gas from the cyclones is conditioned in the scrubber (V-5001) to cool the rotary dryer off-gas, remove a portion of the entrained particulate, and partially condense water vapor generated by the drying process. The scrubber spray water is recirculated at a nominal rate of 150 GPM. The water and condensate pass from the scrubber into the scrubber sump tank (T-5001). The scrubber pumps (P-5001A/B) recycle water from the scrubber sump tank back to the scrubber. A continuous blowdown (Stream 506) circulates to the process blowdown pre-treatment system to control suspended solids concentration in the scrubber water. The majority of the blowdown stream is then returned as makeup to the scrubber. Sodium hydroxide (caustic) from the caustic tank and/or acid from the acid tank is added to the Scrubber recycle stream to neutralize the process as needed.

The off-gas from the scrubber flows to the subcool quench (V-5002). Cooling water is recirculated through the subcool quench at a nominal rate of 1600 GPM by the subcool quench recirculation pumps (P-5002A/B). This recycle water is cooled in the quench heat exchangers (E-5002 A/B) prior to introduction into the off-gas stream in the subcool quench. This further reduces the temperature of the off-gas to a nominal 100° F. Subcooling the off-gas generates a nominal 30 GPM of condensate (Stream 517) which flows to the Process Blowdown Pre-treatment System (PFD D-60-10-001) and ultimately to the Wastewater Treatment System.

A cooling tower (W-5001) and recirculating cooling water loop is used as the cooling medium for the subcool quench heat exchangers. Cooling water is recycled by the cooling tower recirculation pumps (P-5003 A/B) from the cooling tower through the heat exchangers back to the tower. A small purge stream is discharged from the cooling tower to the Clearwell. This water does not contact contaminated materials and is not expected to be contaminated. (This stream is discussed in the request to route process water to the Clearwell given in Section 2.8.1.1.)

Off-gas from the Subcool Quench flows into a wet electrostatic precipitator (WESP) (S-5004) for the removal of submicron particulate and water droplets. Water and particulate collected in the WESP are pumped to the Process Blowdown Pretreatment System.

The off-gas from the WESP is slightly reheated in the electrically heated off-gas reheater (E-5003) to prevent any condensation in the HEPA filters. The HEPA filters (FX-5004 A/B) are mounted in parallel with only one set being used at a time, with the other on standby or being replaced as necessary. The HEPA filters remove particulate greater than 0.3 microns that may have passed through the WESP. Two induced-draft fans (B-5001 A/B) are used to pull the off-gases through the system from the rotary dryer through the HEPA filters, keeping the entire system under negative pressure so that any leakage is into the system. The two ID Fans are arranged as an inline spare configuration with one fan normally operating and the other on standby.

The filtered off-gas from the HEPAs is directed into the Thermal Oxidizer (F-5001) which provides an effective means for the treatment of remaining volatile organic compounds (VOCs) and carbon monoxide (CO) in the off-gas stream. The system off-gasses are finally released to the atmosphere through the vent stack (X-5001). Point source emission estimates are discussed in the Point Source Emission Data section of this design package.

The condensed and purged liquids from the GCS are directed to the Process Blowdown Pretreatment System shown on PFD D-60-10-001. All liquid blowdown streams flow to the primary clarifier (T-6001) and then to the secondary clarifier (T-6002) for solids settlement using polymer and pH controlled clarification. The outflow from the secondary clarifier is accumulated in the clarifier surge tank (T-6008) and pumped via the clarifier discharge pump (P-6008) through dual sand filters (FX-6002 A/B), dual bag filters (FX-6003 A/B), and recycled to the drying process as scrubber makeup (Stream 505). Sludge from the clarifier bottoms (stream 603) is directed to the sludge mix tank (T-6005). Raked or skimmed organic materials are collected in the organic condensate surge container (T-6003) and subsequently pumped to the sludge mix tank. The sludge mix tank also receives site sump flows and the Wastewater Treatment System (WTS) solids blowdown (Stream 658). Solid materials are separated from the sludge in the filter press (FX-6001) with the liquid collected in the filtrate storage tank (T-6006). Oily liquids are pumped to the organic condensate storage tank (T-6004). The water fraction will be routed to the WTS influent tank for pretreatment prior to discharge to the BSL. The oil fraction will be turned over to FDF for subsequent handling and disposal.

2.7 Railcar Loadout and Lidding (PFD D-35-10-001)

PFD D-35-10-001 depicts the transfer of blended materials from the Material Handling Building to the storage bins in the Railcar Loadout Building. The material is transferred using conventional rubber-tired front end loaders. During storage bin filling, sampling of the material is undertaken per the Sampling and Analysis Plan and a composite sample is obtained to determine if the bin meets the requirements of the CDF WAC. The filled bins have a storage capacity of 600 tons approximately. The bin capacity should accommodate filling six rail road cars. Each railcar will have a unique identification number and will correspond to the Certificate of Analysis from the bin from which it was loaded.

In the unlikely event that sampling and analysis indicate that a material in a storage bin does not meet the CDF WAC due to radiological or moisture content, the material will be removed from the bin and reblended with other materials to meet the WAC. If a material is determined to be RCRA characteristic waste, it will be turned over to FDF for subsequent handling and disposal.

Railcar Loading. Railcar loading will be supervised from an enclosed elevated control position located on the east side of the Railcar Loadout Building adjacent to the rail weigh scale and directly in front of the loadout area. The Loadout Supervisor will be in radio or visible contact with the personnel involved in moving the railcars, lid removal, liner installation, waste loading,

liner sealing, lid replacement, and decontamination and survey activities. The supervisor will also be monitoring for dust generation and will have the ability to activate the dust suppression system if required. The supervisor will be responsible for completing the necessary documentation relating to the weight of each railcar and identifying from which storage bin each railcar is filled. A conventional front-end loader will remove the material from the characterized bin certified in meeting the WAC and place it evenly distributed in the railcar until the maximum cargo weight is achieved. The maximum cargo weight is 108.17 tons. Debris meeting the WAC will be placed in the railcar utilizing a front-end loader along with the waste per the constraints of the WAC.

Railcar Lining. Railcars will be lined with a material that will help prevent the contamination of the railcar. The liners will be constructed to resist tearing during normal loading operations. The liners will be stored in the lid/liner storage area and transferred to the liner installation area utilizing a pallet jack. The liner will be placed in the railcar and will be overlapped over the side of the railcar adjacent to the loadout position. The overhung liner will protect the railcar siding from contamination in the event of spillage during the loadout operation. Once the loadout is complete, the liner is folded over the waste.

2.7.1 Railcar Loadout and Lidding Operations

These operations involve moving four railcars at a time utilizing a track mobile. The railcars will enter the loadout building at the northeast corner (through the rail decontamination area). For discussion purposes, the first car that enters the building is referred to as Car 4, with all cars that follow being referred to in a descending numerical order because the last car to enter the building will be the first car to leave the building. Each car will proceed through five operations necessary for completion of loadout. These operations include:

- Lid removal and inspection
- Railcar lining
- Loadout
- Lidding and decontamination
- Radiological survey.

The following is a step-by-step description of the operation in the Railcar Loadout Building:

Step 1. As the railcars pass through the decontamination area, the lids will be removed and visually inspected to assess their condition and to identify any damages.

- If the lid is in good condition, it will be placed in a rack located within the decontamination area and stacked/stored until the lid replacement step, after railcar loadout is completed.

- If a lid requires repair, it will be placed back on Car 1. The railcars then move to the liner and lid repair area at the southern end of the building where damaged lids will be removed as needed for repair.

Step 2. Once all of the lids are removed, either in the decontamination area or the liner and lid repair area, the cars will be moved to the liner and lid repair area. Car 1 is positioned in the lining area and lined, with Cars 2, 3, and 4 awaiting lining.

Step 3. The cars will advance so that Car 1 is awaiting loadout, Car 2 is being lined, and Cars 3 and 4 are awaiting lining.

Step 4. The cars will advance so that Car 1 is positioned on the scale in front of the loadout pad and filled to the desired weight, while Car 2 is awaiting loadout. Car 3 is lined, and Car 4 is awaiting lining. Following filling, the liner on Car 1 will be folded inward to cover the waste material.

Step 5. The cars will advance so that Car 1 is in the decontamination area where a lid will be placed back on the car, sealing the car, and the outside of the car decontaminated as required. Car 2 is filled and weighed, Car 3 is awaiting loadout, and Car 4 is lined.

Step 6. Car 1 will advance out of the decontamination area to a dedicated holding area to await radiological survey results. Car 2 is lidded and decontaminated, Car 3 is filled and weighed, and Car 4 is awaiting loadout.

Step 7. The cars will advance so that Car 2 awaits decontamination results in the holding area, Car 3 is covered and decontaminated, and Car 4 is filled and weighed.

Step 8. The cars will advance so that Car 3 awaits decontamination results in the holding area and Car 4 is covered and decontaminated.

Step 9. The cars will advance so that Car 4 awaits decontamination results in the holding area.

Step 10. Once that the cars are verified for radiological release, FDF will be notified to transfer cars out of the area and replace with empty cars. FDF will subsequently transfer the cars to the on-site rail yard to await shipment off site.

In the unlikely event that a railcar fails the radiological testing, the car will be returned to the decontamination area for additional cleaning. The car will then be tested to determine if it meets the radiological release requirements. Although the FEMP is optimistic that the railcars can be consistently decontaminated to the established radiological limits, if the limits cannot be met the railcar will not be released from the site.

2.7.2 Railcar Rejection at the CDF

In the event that the contents of a railcar are rejected at the CDF, measures may be taken at the CDF to render compliance with the WAC. If unsuccessful, the railcar will be returned to the FEMP because its contents do not pass the WAC, then the railcar will be unloaded in the load out area. Unloading will be done with conventional earth-moving equipment during an off-shift. If this unloading results in the liner being uncapable of containing the waste (i.e., if it is ripped or torn), it will be folded into the railcar and a new liner will be installed over it. If the material was rejected because of radiological content or moisture, it will be reblended with other pit waste until it satisfies the CDF WAC. If the material is rejected because of RCRA characteristics, it will be unloaded and turned over to FDF for handling and disposal.

The measures to deal with non-compliant railcar contents at the CDF, including specific actions and payments, will be dealt with on a case-by-case basis and are subject to various contractual relationships between DOE, FDF, IT, and the yet to be developed contractual relationships with rail carriers and the CDF. Actions to deal with non-compliant railcars are dependent on a number of variables including the specific basis for non-compliance, contractual requirements and remedies between involved parties, specific methods and alternatives available to bring the materials into compliance, and costs. Such actions can include treatment at the CDF, and/or disposal potentially at an increased cost. The ultimate receipt and disposal of the waste materials will be in compliance with applicable regulations and licensing agreements.

2.8 Water Management (PFDs D-65-10-001 and D-90-10-001)

Water management at the WPRAP site consists of collecting, sampling, treating (as necessary) and discharging water from multiple sources. Proper water management is a key part of project

operations and is critical to waste excavation. The following sections discuss site water based on where the water originates and how the water must be handled. The water being managed during the WPRAP is separated into the following categories:

- Process wastewater
- Nonprocess wastewater and contact storm water outside the waste pit area
- Noncontact storm water outside the waste pit area
- Excavation water and contact storm water inside the waste pit area
- Noncontact storm water inside the waste pit area.

The following definitions are used in this document during discussion of water management:

- **Perched Water.** Subsurface water occurring in the glacial overburden. Perched water that seeps through the sidewalls of the excavations is referred to as "seepage."

- **Contact Storm Water.** Storm water that contacts raw waste material within an open excavation; storm water that lands on the water cover of the Clearwell, Waste Pit 5, and Waste Pit 6; and storm water that contacts potentially contaminated surfaces (e.g., haul roads, contaminated concrete pads, and roads).

- **Noncontact Storm Water.** Storm water that does not contact any raw waste or potentially contaminated surfaces. Examples include roof drains, storm water that lands on covered sections of the waste pits and is diverted to the K-65 Runoff Basin, and storm water that falls on the ground outside the waste pit area and is diverted to the Storm Water Management (SWM) Pond or to existing drainage swales. Storm water collected in the SWM pond will require monitoring to verify that it is noncontaminated.

- **Excavation Water.** The combined water pumped from an excavation to the Clearwell. This is composed of contact storm water, drainage from excavated materials, and perched water seepage into the excavation.

- **Nonprocess Wastewater.** Water streams requiring pretreatment by the IT Wastewater Treatment System (WTS) and/or discharge to the BSL and treatment by the FDF Advanced Wastewater Treatment (AWWT) Facility. Examples include laboratory wastewater, laundry wastewater, personnel decontamination shower wastewater, respirator wash water, drainage water and excess dust suppression spray collected in the sumps in the buildings, and decontamination water.

- **Process Wastewater.** Wastewater resulting from the Gas Cleaning System (GCS) system and WTS. Examples include GCS blowdown, WTS backwash water, and cooling tower blowdown.

- **WTS.** The IT WTS will be used to pretreat water as necessary prior to discharge to the BSL and subsequent treatment in the AWWT Facility.

Portions of the water management activities described in this document refer to the placement of various water and wastewater streams into Waste Pit 5, Waste Pit 6 and the Clearwell. These descriptions constitute a request to the Ohio EPA in accordance with the 1988 Consent Decree. The following possible flow patterns are included in this request:

- FEMP fire water to the water covers on Waste Pits 5 and 6
- Waste Pit 6 storm water to the Clearwell
- Excavation water to the Clearwell or Waste Pit 5
- WTS backwash/recycle water to the Clearwell
- Nonprocess wastewater to the Clearwell
- Cooling Tower blowdown water to the Clearwell
- Noncontact storm water from the SWM Pond to the Clearwell.

The request to route these waters as described is put forth for the following reasons:

- All water streams being managed within OU1 (with the exception of FDF fire water, and FDF potable water supplies) originate from the waste pits or from the remediation of the waste pits.

- FDF fire water and FDF potable water is uncontaminated and will only be added to Waste Pits 5 and 6 as needed to manage the water covers.

- The only process wastewater streams that would be sent to the Clearwell are cooling tower blowdown (which is a noncontact stream and should be clean), backwash water (which is previously treated water from the WTS containing suspended solids from the WTS filters and resin beds), and recycle water (which is partially treated water from the WTS which may not or does not meet the BSL WAC).

- The Clearwell provides a logical surge capacity for water that must be pretreated by the WTS. Construction of an alternate surge point for these streams would be very impractical.

The following sections discuss management of the five site water categories given above. Routing of water to the Clearwell (part of the request to the Ohio EPA explained above) is included in these sections where appropriate.

2.8.1 Process Wastewater

The following is a list of process wastewater sources:

- Cooling tower blowdown water
- Water purged from the GCS
- Backwash/recycle water from the IT WTS.

These streams will remain relatively constant throughout operations at the site and are not expected to change during the various excavation phases. The sections below describe the method by which the water will be collected and transferred to the WTS, the expected flow rate, and notes on the chemical composition of each stream.

2.8.1.1 Cooling Tower Blowdown Water

A blowdown stream from the cooling tower in the rotary dryer system will be routed to the Clearwell for subsequent treatment by the WTS. This stream is expected to be approximately 14,400 gpd and is not expected to contain contaminants at levels higher than the BSL WAC.

2.8.1.2 GCS Blowdown Water

Process water generated by the GCS associated with the rotary dryer will be combined and routed through a primary and secondary clarifier for removal of any free-phase organics and suspended solids. The aqueous stream from the secondary clarifier will be pumped to the influent tank in the WTS. This stream is not expected to exceed 52,000 gpd.

2.8.1.3 Backwash/Recycle Water from the WTS

Water generated during the backwashing of the sand filter and ion exchange beds in the WTS is piped to flow directly to the Clearwell. The line pressure supplied by the backwash will be sufficient to transfer the water to the Clearwell, no additional pump is necessary. The average flow of backwash water from the WTS to the Clearwell is approximately 15,000 gpd. This stream will have a high suspended solids concentration.

Recycle water is partially treated water from the WTS which may not or does not meet the BSL WAC. Partially treated water may be diverted to the Clearwell during startup of the WTS or at times during which it is suspected that the WTS effluent does not meet the BSL WAC. This stream may also include water collected in the WTS containment area. Recycle water has an intermittent flow.

2.8.2 Nonprocess Wastewater and Contact Storm Water

The following is a list of nonprocess wastewater and contact storm water sources that originate outside the pit area:

- Laundry water
- Laboratory wastewater
- Material handling building collection sumps
- Railcar loadout building collection sumps
- Rotary dryer area collection sump
- Truck turnaround area collection sump
- Truck wash collection sump
- Decontamination pad water
- GCS/WTS building collection sump

These streams will remain relatively constant throughout operations at the site and are not expected to change during the various excavation phases. The sections below describe the method by which the water will be collected and transferred, the expected flow rate, and notes on the chemical composition of each stream.

2.8.2.1 Laundry Water

Wastewater from the washing machines in the laundry facility will flow by gravity from the laundry facility to the Grey Water Collection Tank as needed. The laundry facility will generate approximately 750 gpd average over a seven-day week. Because the clothes being washed are worn under PPE, the laundry water is not expected to contain contaminants at levels higher than the BSL WAC.

2.8.2.2 Respirator Wash Water

Wastewater from the respirator wash facility will flow by gravity from the respirator wash facility to the Grey Water Collection Tank. The respirator wash facility will generate approximately 100 gpd average over a seven-day week. Because the cartridges of the respirator will be disposed of prior to cleaning, the wash water is not expected to contain contaminants at levels higher than the BSL WAC.

2.8.2.3 Grey Water Collection Tank

Wastewater from the laundry facility, and respirator wash facility will flow by gravity to the Grey Water Collection Tank. The tank will be buried between the laundry and respirator wash facilities to allow for gravity flow from the facilities via buried lines. The tank will contain a submersible pump and a series of three level switches for pump on and off and high-level alarm.

The pump discharge line will be equipped with a flow meter/totalizer to track discharge. The tank will collect an approximate average of 850 gpd. The discharge pump will transfer water from the tank to the BSL. The water is not expected to contain contaminants at levels higher than the BSL WAC. A monitoring program will be established for the Grey Water Collection Tank effluent discharge to the BSL. Details of the monitoring program will be given in the Sampling and Analysis Plan.

2.8.2.4 Laboratory Wastewater

Wastewater generated in the on-site laboratory will be pumped to the Grey Water Collection Tank. This wastewater is generated as a result of analytical activities. The average flow rate from the laboratory is not expected to be greater than 100 gpd. The water is not expected to contain contaminants at levels higher than the BSL WAC.

2.8.2.5 Material Handling Building Collection Sumps

The Material Handling Building will contain three collection sumps. Water from the material being handled in the mixing pits will collect in a sump to the south of the pits. The trench from the mixing pits to the sump will include a weir to minimize the accumulation of solids in the sump. Water draining from material stock piles in the bins along the east wall of the building will be collected by an open trench behind the storage bins. This trench will be sloped to a sump in the center of the trench. The connection between the trench and the sump will include a weir to minimize the accumulation of solids in the sump. A third sump will be located in the southwest portion of the building near the filter press. The floor in this area will be sloped to drain free water to the collection sump. Each collection sump will contain a single sump pump and will transfer water to the Material Handling Building Collection Tank. The average flow rate from the three sumps in the Material Handling Building is not expected to be greater than 300 gpd average.

2.8.2.6 Railcar Loadout Building Collection Sumps

The Railcar Loadout Building contains three collection sumps. Water from railcar decontamination and excess water from dust suppression spraying will be collected by these sumps. Each sump will contain a dedicated sump pump. The sump pumps will transfer the water to the

Material Handling Building Collection Tank. The average flow rate from the Railcar Loadout Building is not expected to be greater than 1,200 gpd.

2.8.2.7 Rotary Dryer Area Collection Sump

The rotary dryer area is sloped to drain to a collection sump. Storm water will be collected by this sump. A sump pump will transfer the water to the Clearwell. The average flow rate from the sump is not expected to be greater than 418 gpd.

2.8.2.8 Material Handling Building Collection Tank

Wastewater from collection sumps in the Material Handling Building and Railcar Loadout Building will be pumped to the Material Handling Building Collection Tank. The tank will be an above ground storage tank with an open top, located along the wall in the Material Handling Building. The tank will have a horizontal centrifugal pump mounted outside the tank, and the level in the tank will be monitored. The tank will collect an average of 1,428 gpd. The discharge pump will transfer water from the tank to the Clearwell.

2.8.2.9 Truck Turnaround Area Collection Sump

The Truck Turnaround Area is sloped to drain to two low points: one in the center of the open eastern portion (an area of approximately 26,450 ft^2) and the other at the west end of the haul road portion of the area (an area of approximately 8,450 ft^2). Contact storm water and excess dust suppression spray landing in the Truck Turnaround Area will be collected in two catch basins that are tied together below grade. Water will be pumped from a sump tied to the basins to the Clearwell through a line buried along the southern edge of the Turnaround Area. The average flow rate is not expected to be greater than 1,800 gpd.

Storm water and excess dust suppression spray landing in the haul road leading to the Truck Turnaround Area will drain to a collection sump adjacent to the Truck Wash and Personnel Boot Wash. The average flow from this haul road to the Truck Wash sump is approximately 600 gpd.

2.8.2.10 Truck Wash Collection Sump

The Truck Wash and Personnel Boot Wash area is curbed and sloped to drain to a collection sump. Decontamination water, contact storm water landing in the area, and excess water from dust suppression spraying will be collected by this sump. In addition, water from the haul road leading to the Truck Turnaround Area will flow by gravity through a buried line to this sump. The Truck Wash sump pump will transfer the water directly to the Clearwell. The average flow

rate of decontamination water and contact storm water from the Truck Wash pad is not expected to be greater than 420 gpd. The average combined flow from the haul road and the Truck Wash is not expected to be greater than 1,000 gpd.

2.8.2.11 Decontamination Pad Wastewater

The Decontamination Pad located immediately south of the Truck Turnaround Area is sloped to drain to a collection sump. Wash water and contact storm water from this pad will be collected by the Truck Turnaround Area sump. The average flow rate from the pad is not expected to be greater than 1,500 gpd.

2.8.2.12 GCS/WTS Building Collection Sump

The floor of the GCS/WTS building is sloped to two sumps. Water will be transferred from these sumps to tankage in the WTS. The sumps are not expected to generate water during normal operation.

2.8.3 Noncontact Storm Water Outside the Pit Area

Storm water collected from certain areas within IT's work area in OU1 is not expected to contact contaminated materials. These areas include:

- The ground west and south of the Railcar Loadout Building, including the area around the warehouse and the laboratory
- The access road that runs along the north and east sides of the BSL
- The ground outside the waste pit area between Waste Pit 4 and the BSL, including the area around the trailers
- The roofs of the Material Handling Building, the Railcar Loadout Building, Railcar Prep and Liner Stoarge Building, and the GCS/WTS Building.

Storm water from these areas is not expected to be contaminated and, therefore, should not require treatment in the WTS or the AWWT. Storm water from the area identified in the first bullet will flow directly to Paddys Run. Storm water from the area identified in second bullet will flow to the K-65 Runoff Basin. Storm water from the areas identified in the third and fourth bullets will be directed to the SWM Pond. During construction of the Truck Turnaround area and the Material Handling Building, one or more of the catch basins will be closed to keep contact storm water from this area from entering the SWM Pond during facility operation. Roof

drains from the Material Handling Building and the Railcar Loadout Building will be directed into the SWM Pond. Roof runoff from other WPRAP buildings and structures may be directed to the collection basins or to other surface drainage features.

A monitoring program will be established for the SWM pond consistent with the requirements of the SWPPP to allow discharge of this water directly to Paddys Run. If suitable for discharge, the water will be pumped directly to the drainage swales that lead to Paddys Run. If not suitable for direct discharge to Paddys Run, the water will be transferred to the Clearwell, WTS, or directly to the BSL. Water collected in the SWM pond may alternatively be used for dust suppression, Waste Pit 5 or Waste Pit 6 water cap management, or makeup water to the rotary dryer. Details of the SWM pond monitoring program will be given in the Sampling and Analysis Plan.

In the event of a 25-year, 24-hour storm event, the water in the SWM Pond naturally overflows to a series of smaller ponds north of the SWM Pond and eventually to drainage swales along the north boundary of OU1 to Paddys Run.

2.8.4 Contact Storm Water and Excavation Water from the Waste Pit Area

The following is a list of wastewater sources that originate inside the pit area:

- Contact storm water from Waste Pit 6
- Contact storm water from Waste Pit 5
- Contact storm water, drainage water, and perched water seepage in the excavation area (collectively referred to as excavation water)
- Contact storm water from haul roads in the waste pit area
- Contact storm water from the Clearwell and surrounding portions of Waste Pits 1 and 3 (which drain to the Clearwell).

Handling of these streams will change as the areas where the water originates are excavated and subsequently deemed clean. The sections below describe the method by which the water will be collected and transferred to the appropriate destination, the expected flow rate, and notes on the chemical composition of each wastewater stream.

2.8.4.1 Contact Storm Water from Waste Pit 6

During excavation Phases 1 through 7, the water cap on Waste Pit 6 will be maintained. The only source of water entering Waste Pit 6 is storm water that falls within the limits of the pit (an area of approximately 0.74 acres or 32,234 ft^2). Water is drained from the pit using a portable pump. Typically, the water will be pumped from the pit to the Clearwell for subsequent treatment by the WTS. The average flow rate is not expected to be greater than 2,210 gpd. In the event the water meets the BSL WAC, the water can be transferred directly to the BSL.

In the event of a 25-year/24-hour storm event, the freeboard in the pit will be used to manage the storm water (4.8 inches). Managing the water level in Waste Pit 6 may also involve adding water to the pit during especially dry periods, although this is not common. Water must be added to the pit when the level drops to a predetermined low level.

Beginning in excavation Phase 8, the water cap on Waste Pit 6 will be pumped to the Clearwell for subsequent treatment in the WTS to facilitate excavation. For Phases 8 through 11 of the excavation and during the six-month period prior to certification of the pit as "clean," any storm water that lands in the open section of the pit and perched water seepage into the excavated portion will be handled as described in Section 2.8.4.3. Storm water from the portion of the pit covered with Poly-Shell can be handled as before and pumped to the Clearwell or BSL if dikes are in place to keep it out of the excavation areas. After the pit has been certified as "clean," storm water landing in Waste Pit 6 will be treated as noncontact storm water and will be directed to Paddys Run or the K-65 Runoff Basin.

2.8.4.2 Contact Storm Water from Waste Pit 5

During excavation Phases 1 though 8, the water cap on Waste Pit 5 will be maintained. The only source of water entering Waste Pit 5 is storm water that falls within the limits of the pit (an area of approximately 3.74 acres or 162,914 ft^2). Water is drained from the pit through a concrete "well" structure located near the southwest corner of the pit. The "well" is equipped with several slide gate valves which act as weirs to control the water level in the pit. Water that drains into the "well" flows by gravity through a buried line to the Clearwell. The average flow rate is not expected to be greater than 11,170 gpd.

In the event of a 25-year/24-hour storm event, the freeboard in the pit will be used to manage the storm water (4.8 inches). Managing the water level in Waste Pit 5 may also involve adding water

to the pit during especially dry periods, although this is not common. Water must be added to the pit when the level drops to a predetermined low level.

Beginning in excavation Phase 9, the water cap on Waste Pit 5 will be pumped to the concrete "well" for drainage to the Clearwell for subsequent treatment in the WTS. When the water has been removed, the surface of the material in the pit will be sprayed with Poly-Shell (or equivalent). For Phases 9 through 18 of the excavation and during the six-month period prior to certification of the pit as "clean," any storm water that lands in the open section of the pit and perched water seepage into the excavated portion will be handled as described in Section 2.8.4.3. Storm water from the portion of the pit covered with Poly-Shell must be pumped to the concrete "well" for drainage to the Clearwell. After the pit has been certified as "clean," storm water landing in Waste Pit 5 will be treated as noncontact storm water and will be directed to Paddys Run or the K-65 Runoff Basin.

2.8.4.3 Excavation Water

During the excavation of a waste pit, several means will be employed to reduce the amount of contact storm water in the excavation area. These methods include: (1) minimization of exposed material surface; (2) excavating from a high area to a low area to allow continued drainage of untouched areas within the pit; and (3) where necessary, placement of berms around open areas to minimize run-on. The excavation sequence and the details of the excavation process for each phase are described in the Excavation Plan.

Water from the open excavations will consist of contact storm water, free drainage from excavated materials, and perched water seepage into the excavation. The amount of water generated will change constantly during the excavation process. The water in the excavations will be diverted to "sumps" by grading the bottom of the excavations and/or digging shallow (e.g., 6-inch) trenches in the excavations to direct the water to the sumps. One or more sumps may be required in each excavation (i.e., each waste pit) depending of the amount of open area. Portable pumps will be used to transfer excavation water to the Clearwell for subsequent treatment by the WTS. The excavation water average daily flow rates for each phase of the excavation are presented in the Excavation Plan.

Contact storm water from excavated waste pits awaiting certification as clean will continue to be collected and treated in the WTS. Existing pumps and piping (from the excavation phases) will be used in these areas to transfer water to the Clearwell. The average volumetric flow of this

contact storm water is included on the site water balance process flow diagram (PFD) (D-90-10-001) as a separate stream, apart from excavation water.

2.8.4.4 Contact Storm Water from Haul Roads in the Waste Pit Area

Contact storm water from the haul roads in the waste pit area will be directed to excavation areas to be collected and transferred to the Clearwell for subsequent treatment by the WTS. The existing area that will be used as haul roads consists of the road that runs along the southern side of Waste Pit 5 and Waste Pit 6, the branch that runs from that road to the south between Waste Pit 3 and Waste Pit 4 (over the Burn Pit), and a strip that continues toward the south between Waste Pit 3 and Waste Pits 2 and 1. The average flow rate is not expected to be greater than 2,060 gpd.

The haul roads will be isolated from the current noncontact storm water drainage patterns by curbing the road sides, regrading the roads to change the direction of drainage, and running noncontact storm water through designated ditches and under haul roads through culverts. All of these methods will be utilized to keep the noncontact storm water in the waste pit area from contacting the haul road contact storm water. This segregation allows the noncontact storm water to continue to flow to the K-65 Runoff Basin.

2.8.4.5 Contact Storm Water in the Clearwell and Surrounding Areas

Storm water that falls directly into the Clearwell or on areas that are sloped to drain into the Clearwell will be treated by the WTS. The sections of Waste Pits 1 and 3 that currently drain to the Clearwell will continue to drain in this way until some time during excavation Phases 4 and 9, respectively. The Clearwell will remain in operation until all the waste pits have been cleaned, therefore, storm water that falls in the Clearwell must be treated until the Clearwell is excavated starting during Phase 18. The average storm water rate from the Clearwell and surrounding drainage areas (total surface area of approximately 106,000 ft^2) is approximately 7,220 gpd. When the drainage area in Waste Pit 1 (approximately 45,000 ft^2) is removed, the average storm water flow from the remaining area is approximately 4,180 gpd. When the drainage area in Waste Pit 3 (approximately 32,620 ft^2) is removed, the average storm water flow from the remaining area is approximately 1,940 gpd.

While the Clearwell is being excavated during excavation Phases 18 and 19, the water that falls in the excavation will be pumped to the influent tank in the WTS.

2.8.5 Noncontact Storm Water Inside the Pit Area

There are locations in the pit area where storm water is not contacting raw waste. These locations include the following:

- Storm water from the covered section of Waste Pits 1, 2, and 3
- Storm water from the covered section of Waste Pit 4
- Storm water from other areas bordering the waste pits.

Estimated daily noncontact storm water rates from the waste pit area for each excavation phase are presented in the Excavation Plan and the site water balance PFD (D-90-10-001).

2.8.5.1 Noncontact Storm Water from Waste Pits 1, 2, and 3

Storm water that falls on the portions of Waste Pits 1, 2, and 3 that have not been exposed will continue to drain to the K-65 Runoff Basin (only small sections drain to the Clearwell). This water is referred to as noncontact storm water. This water drains off the western side of Waste Pit 3 to drainage trenches along the western boundary of the waste pit area to the basin. Water from the eastern side of Waste Pit 3 and most of Waste Pits 1 and 2 drains to drainage ditches along the access road that runs along the east side of Waste Pit 2. After Waste Pits 1, 2, and 3 have been certified "clean," the storm water that is collected in the excavations will be directed to Paddys Run or the K-65 Runoff Basin.

2.8.5.2 Noncontact Storm Water from Waste Pit 4

Noncontact storm water from Waste Pit 4 consists of the storm water that runs off the covered pit materials (an approximate area of 1.5 acres or 65,340 ft^2) and is collected in the trench around the pit. The average flow of noncontact storm water from Waste Pit 4 during Phases 1 through 4 is approximately 4,480 gpd. This water currently makes its way to the K-65 Runoff Basin through storm trenches that run along the access roads through the waste pit area. During excavation activities, care will be taken to route these streams across the waste pit area without allowing them to combine with contact storm water from the haul roads. This will be achieved by designating certain drainage trenches and culverts as "clean" and keeping them decoupled from contact storm water streams.

Beginning in Phase 5, a portion of the pit will be excavated. The pit will remain open to some degree through Phase 16. During this period, measures will be taken to separate storm water that lands on the unexcavated portion of the pit from entering the excavation and continuing to drain to the K-65 Runoff Basin.

2.8.5.3 Noncontact Storm Water from Areas Bordering the Waste Pits

There are other areas within the waste pit area which are considered uncontaminated and from which the storm water is allowed to drain to the K-65 Runoff Basin, or to drainage ditches to the north of the waste pit area which drain directly to Paddys Run. These areas include some of the areas between the radiological fences and the boundaries of the waste pits. During excavation activities, all operations in the pits will be performed from the inside of the waste pit area toward the fence limits, thus these streams should not be effected.

2.8.6 Storm Water Controls for Storage Piles

Clean soil stockpiled from foundation excavations during construction will be secured to preclude dust generation by providing a tight surface. Silt fencing will be provided to control soil erosion and sediment migration from the pile during storm events. Additionally, any contaminated soil found during the construction phase will be placed in a separate stockpile in the waste pit area. Similar measures as described above will be undertaken to control erosion and sedimentation for this pile. Water runoff from the contaminated stockpile will be directed to the clearwell and pumped to the BSL for treatment through the AWWT prior to discharge.

During the operational phase, waste stockpiles in the pit area will be managed as outlined in the excavation plan. Waste stockpiles in the Material Handling Building and Railcar Loadout Building are protected from the weather. Adequate drainage and collection sumps are provided to collect free water that is released from the stockpiles as a result of free drainage.

2.9 Water Treatment System (PFD D-65-10-001)

Several wastewater streams are expected to meet the WAC established by FDF for discharge to the BSL and will be piped directly to the BSL. Water that does not meet the WAC must be pretreated prior to discharge to the BSL. The WTS is used to provide this pretreatment. The system will be designed for approximately 250 gpm. The WTS is located outside the waste pit area, due north of the BSL. The following sections describe the unit operations to be included in the WTS.

2.9.1 Solids Settling and Equalization

The Clearwell will serve as the initial collection point and "surge tank" for the WTS. Waste-water streams from within the waste pit area and material drainage in the buildings will be pumped to the Clearwell for solids settling and equalization. Water will be pumped from the Clearwell to the influent tank in the WTS.

Wastewater from the secondary clarifier in the rotary dryer system will be pumped to the influent tank, where it will combine with water from the Clearwell. Water will be pumped from the influent tank to the inclined plate clarifier for solids removal.

2.9.2 Initial pH Adjustment

In the event that the pH of the water from the influent tank must be raised to enhance the removal of heavy metals in the clarifier, sodium hydroxide (caustic) will be added to the feed line to the flash mix tank upstream of an in-line static mixer. The feed rate of caustic will be controlled by a pH controller that receives a signal from a pH probe in the flash mix tank. Caustic addition will only be used as necessary. Lime may also be added to the Clearwell to increase pH if deemed necessary.

2.9.3 Clarification

Heavy metals precipitation and solids settling will take place in an inclined plate clarifier (IPC). The clarifier will be equipped with a Flash Mix Tank and a Flocculation Tank. A coagulating agent and a polymer will be added, if necessary, in these tanks to enhance the removal of suspended solids. In the event that heavy metals concentrations in the water exceed the BSL WAC, this system will be operated at the appropriate pH and sufficient coagulant and polymer will be added for the required precipitation. These parameters will be determined by performing bench-scale tests in the field. In the event that heavy metals are not present at levels higher than the BSL WAC, the IPC will be operated to remove as much suspended solids as possible while minimizing chemical usage and sludge generation.

Sludge will be transferred from the bottom of the IPC to a sludge holding tank in the process blowdown pre-treatment system (PFD D-60-10-001). Sludges will be dewatered using a filter press (FX-6001) located inside the Material Handling Building.

In the event that the effluent water from the clarifier meets the BSL WAC, the water will be transferred from the clarifier overflow tank to the effluent tank and then to the BSL without further treatment. If the water fails based on suspended solids, heavy metals, or uranium, the water will be pumped through the sand filter(s) for additional solids removal.

2.9.4 Sand Filtration

Two sand filters will be used for additional solids removal to meet discharge requirements or prepare the water for treatment in the ion exchange unit(s). During sand filter backwash

operation only one filter will be operated. Backwash water will be supplied from the effluent tank to minimize the amount of water discharged from the site. In the event that the effluent from the sand filters meets the BSL WAC (i.e., the uranium concentration is less than 5,000 ppb), the water will bypass the ion exchange unit and be discharged in the effluent tank and then to the BSL. If the uranium concentration in the water is higher than 5,000 ppb, the water will be directed through the ion exchange unit.

2.9.5 Ion Exchange

Two ion exchange units will be used for removal of dissolved uranium to meet discharge requirements. The effluent from the ion exchange units discharges to the effluent tank. During backwash of the ion exchange units, only one ion exchange unit will be operated. Backwash water will be supplied from the effluent tank to minimize the amount of water discharged from the site. Regeneration of the ion exchange resin is not currently expected to be needed. The ion exchange system may be bypassed if the influent water meets the BSL WAC.

2.9.6 Final pH Adjustment

In the event that the pH of the water must be adjusted above or near 10 to precipitate the heavy metals, a final pH adjustment step is available to lower the pH through the addition of acid. This will only be used as necessary.

2.9.7 Effluent Discharge/Recycle

Water will be discharged from the effluent tank to the BSL. Sampling of the effluent to the BSL and reporting to FDF will be performed to monitor operation of the system and ensure that water discharge to the BSL meets the WAC. At times during which the WTS effluent may not be meeting the BSL WAC, such as startup or during process upset conditions, partially treated water may be recycled back to the WTS influent tank or to the Clearwell. This flow path may be used intermittently to facilitate operation of the WTS.

3.0 PROCESS CONTROL PHILOSOPHY

This section covers the overall control philosophy for the remediation activities. A programmable logic controller (PLC) based system will be utilized to monitor the operations of the rotary dryer and gas cleaning system and to provide certain control functions. The PLC system will be capable of providing the following:

- Collection and display of process parameters (i.e., temperature, pressure, flow rate, etc.).

- Orderly display and information on video monitors. The monitor display program includes graphic features for displaying process parameters.
- Automatic or manual operation of selected control loops through the operator interface station.
- Initiation of an audible and/or visual alarm signal when any input parameter exceeds a preset limit or status.
- Data retention for data management, manipulations, trending, and report generation.
- Automatic printing of alarms on a dedicated printer.

The following general statements apply to all process equipment, but not necessarily heating, ventilation, fire protection, etc.:

- Pumps and other motor driven equipment will generally be started locally, not from the central PLC. The PLC will be able to stop pumps and other equipment, as appropriate, for safety and other interlock functions.
- Local controls will be provided for major processes (i.e., rotary dryer, gas cleaning system, WTS). Monitoring, interlocks, and certain controls will also be provided by the central PLC.
- Alarms will be audibly and visually displayed on local panels as well as on the PLC.

3.1 Waste Removal, Blending, and Preparation

Waste removal, segregation, and handling in the excavations will be manual operations utilizing heavy equipment. No automated controls will be required in the excavations. Operation of the water transfer pumps in the excavations will be manual. The pumps will be started and stopped, as necessary, by the personnel in the excavation. The pumps will be monitored to ensure that the suction lines remain submerged and the working areas are adequately dewatered. Pumps may be provided with instrumentation to prevent dry-running and overheating.

Waste blending and preparation in the Material Handling Building will consist primarily of manual operations utilizing heavy equipment. Minimal automated controls will be used in the Material Handling Building. This automation will consist of electrical controls on the transfer conveyer from OU1 Contaminated Soil Stockpile to the Material Handling Building.

Sump pumps and the collection tank transfer pump will operate based on the level in the sump or tank. A single float switch with a 60-degree operating angle will be used for on/off operation of the pumps, or separate high- and low-level switches and a pump control relay will be used. The following is a list of sump pumps and transfer pumps associated with waste excavation, blending and preparation that will operate in this fashion:

- Truck wash sump pump
- Truck turnaround area sump pump
- Decontamination pad sump pump
- Material handling building sump pump
- Material handling building Collection Tank transfer pump.

The truck wash sump pump, the truck turnaround area sump pump, and the decontamination pad sump pump transfer water to the Clearwell as needed as dictated by the float switches in the sumps. The sump pumps in the material handling building transfer water to the material handling building collection tank. The level switch(es) in the tank dictate when water is transferred from the tank to the Clearwell.

3.2 Rotary Dryer Feed System (PFD D-20-10-001 and -002)

3.2.1 Operations

As shown on PFD D-20-10-001 and -002, the solid feed will be transferred to the mass flow screw feeder (H-1001). This transfer will be by a front end loader. The mass flow screw feeder is variable speed driven for variable flow control. The mass flow screw feeder has an anti-jam program in the PLC that senses a jam condition, causing the affected screw to automatically stop and reverse for one revolution in an attempt to free the jam before returning to forward running condition. If after three attempts within a specified time limit normal operation is not restored, the drive is shut down and an alarm beacon is lit to indicate operator assistance is necessary to free the jam condition. Level in the mass flow screw feeder hopper is visually monitored.

The screw feeder discharges onto the belt feed conveyor. The conveyor is electrically driven and runs at a constant speed. The belt conveyor is equipped with a single idler weigh belt scale. The weight of the feed material and the speed of the conveyor are measured for calculation of the feed rate by a PLC controller. The feed rate is continuously compared with a set point feed rate and a feed back loop will adjust the screw feed rate until the feed rate matches the set point. If the measured feed rate cannot meet the set point feed rate within a specified time limit, the drive is shut down and an alarm beacon is lit to indicate operator assistance is necessary. It is expected

that failure to maintain controlled feed will usually be caused by a plug condition at the screw discharge.

The weigh belt discharges into the dryer feed screw. The feed screw is driven for variable speed control and fixed maximum torque. The feed screw is designed such that it can be retracted for maintenance. Depending on the moisture content, the cohesive and adhesive strength of the material can cause material bridging in the feed screw hopper. Therefore, the screw speed will be manually adjusted to maintain a feed rate that will meet or exceed the feed rate of the material being delivered to it so as to prevent an accumulation of material in the feed screw hopper. A video camera is located in the feed screw hopper that will be monitored by the control room operator. The operator can visually determine if material plugging is occurring in the feed screw or the screw feeder is delivering material to the rotary dryer at a rate that is slower than the rate delivered to it by the feed belt conveyor.

The dryer feed screw has an anti-jam program in the PLC that will sense a jam condition. The screw will automatically stop and reverse for one revolution in an attempt to free the jam before returning to forward running condition. If after three attempts within a specified time limit normal operation is not restored, the drive is shut down and an alarm beacon is lit to indicate operator assistance is necessary to free the jam condition. All upstream equipment is shut down on the sensing of a jam condition.

3.2.2 Instrumentation and Controls

To support and control the rotary dryer feed operation depicted on PFD D-20-10-001and -002, the following major controls and instrumentation are implemented:

1) The belt speed and material weight on the feed conveyor belt are automatically measured and converted to mass feed rate by the belt scale.

2) Video monitoring on the dryer feed screw hopper.

3.3 Rotary Dryer Operation (PFD D-20-10-001, and -002)

3.3.1 Operations

As shown on PFD D-20-10-001,and -002 the rotary dryer receives waste materials with various moisture contents depending on the type of waste. Waste materials are fed into the rotary dryer

from the storage pile. Waste materials are metered into the rotary dryer and dried to a design basis product with 10 percent moisture content (wet weight basis).

The rotary dryer system consists of a cylindrical shell rotated with a variable speed drive. The rotating cylinder is heated externally by a furnace with adequate length to satisfy heat transfer requirements. Using natural gas as fuel for combustion, heat energy for the indirect drying is produced in multiple furnace zones by a set of burners located in each zone. Burners are operated with adjustable primary air/fuel ratio, and secondary air addition to control the flame temperature so the rotating cylinder does not exceed its design temperature. Air to the burners is supplied by the combustion air fan.

The drying operation is controlled by adjusting the temperature conditions in each zone of the rotary dryer, the feed rate into the rotary dryer, and the retention time in the rotary dryer. The retention time is controlled by varying the speed of rotation of the rotary dryer shell. The feed rate is controlled by a variable rate feeder, and the temperature conditions are manually set on the temperature controllers for each zone of the multiple-zone furnace. Product temperature which will be correlated to product moisture is monitored and will be used to control drying operation.

The product moisture content is targeted at 10 percent so that the optimum moisture content of the waste can be achieved in the railcar by mixing the rotary dryer product with wet (not dried) material from the storage pile. Knowing the moisture content and flow rate of the dried product, and the moisture content of the wet material, the flow of the wet material is controlled to achieve the desired moisture content.

A more complete explanation of the operation is available in the Process Description (Section 2.5).

3.3.2 Instrumentation and Controls

To support and control the operation depicted in PFD D-20-10-001, and -002 the following major controls and instrumentation are implemented:

1. A burner management system ensures safe operation of the rotary dryer. The safety-interlock logic ensures that the required limits and conditions (as specified by the vendor and standard burner management/safeguard practice) are satisfied prior to permitting start-up, continued operation, or shutdown of the rotary dryer. If the limits and conditions of the logic are not met, the

management system does not allow start-up of the burners, or shuts them down if in operation.

2. The burners in each zone are automatically controlled to maintain the selected shell temperatures. The shell temperatures are selected manually by the operator. Vendors recommended shell temperatures will not be exceeded.

3. The fuel/air ratio of each burner is controlled by a pressure-balanced regulator or a fully-metered electronic control integrated with a programmable microprocessor as determined by the vendor.

4. The pressure inside the rotary dryer shell is maintained at a negative pressure by adjusting the speed of the induced draft fan (B-5001).

5. Temperature instrumentation is provided in the following locations: primary combustion air to burners, rotary dryer shell temperature in each zone, combustion gases in each furnace zone in various locations in the annular space between the furnace wall and the rotary dryer shell, combustion gases exiting each furnace zone, process off-gas from the rotary dryer, rotary dryer product temperature just before leaving the last rotary dryer zone, and furnace stack gas.

6. Flow instrumentation is provided on the following: natural gas to the burners, primary combustion air to the burners.

7. Pressure instrumentation is provided on the following: natural gas to burners, primary combustion air to burners, and process off-gas from rotary dryer.

3.4 Gas Cleaning System (PFD D-50-10-001, and -002)

3.4.1 Operations

PFDs D-50-10-001 and -002 present the process design for the cleaning of the off-gases from the rotary dryer operation. The PFDs also indicate the various solid and liquid purge streams from the gas cleaning process.

The off-gas from each rotary dryer initially passes through the high efficiency cyclone separators (S-5001 A/B) to remove large, entrained particulate. The solids removed from the off-gas are transferred from the cyclones via the cyclone solids transfer screws (H-5001A/B) to the rotary dryer product system and combined in a mixing operation to assure the proper product consistency and moisture content. This design mitigates dust generation and minimizes worker exposure as defined in the ALARA concept.

000069

The off-gas from the cyclones is conditioned in the scrubber (V-5001) to cool the rotary dryer off-gas, remove a portion of the entrained particulate, and partially condense water vapor generated by the drying process. The scrubber spray water is recirculated at a nominal rate of 150 GPM. The water and condensate pass from the scrubber into the scrubber sump tank (T-5001). The scrubber pumps (P-5001A/B) recycle water from the scrubber sump tank back to the scrubber. A continuous blowdown (Stream 506) circulates to the process blowdown pre-treatment system to control suspended solids concentration in the scrubber water. The majority of the blowdown stream is then returned as makeup to the scrubber. Sodium hydroxide (caustic) from the caustic tank and/or acid from the acid tank is added to the Scrubber recycle stream to neutralize the process as needed.

The off-gas from the scrubber flows to the subcool quench (V-5002). Cooling water is recirculated through the subcool quench at a nominal rate of 1600 GPM by the subcool quench recirculation pumps (P-5002A/B). This recycle water is cooled in the quench heat exchangers (E-5002 A/B) prior to introduction into the off-gas stream in the subcool quench. This further reduces the temperature of the off-gas to a nominal 100° F. Subcooling the off-gas generates a nominal 30 GPM of condensate (Stream 517) which flows to the Process Blowdown Pre-treatment System (PFD D-60-10-001) and ultimately to the Wastewater Treatment System.

A cooling tower (W-5001) and recirculating cooling water loop is used as the cooling medium for the subcool quench heat exchangers. Cooling water is recycled by the cooling tower recirculation pumps (P-5003 A/B) from the cooling tower through the heat exchangers back to the tower. A small purge stream is discharged from the cooling tower to the Clearwell. This water does not contact contaminated materials and is not expected to be contaminated. (This stream is discussed in the request to route process water to the Clearwell given in Section 2.8.1.1.)

Off-gas from the Subcool Quench flows into a wet electrostatic precipitator (WESP) (S-5004) for the removal of submicron particulate and water droplets. Water and particulate collected in the WESP are pumped to the Process Blowdown Pretreatment System.

The off-gas from the WESP is slightly reheated in the electrically heated off-gas reheater (E-5003) to prevent any condensation in the HEPA filters. The HEPA filters (FX-5004 A/B) are mounted in parallel with only one set being used at a time, with the other on standby or being replaced as necessary. The HEPA filters remove particulate greater than 0.3 microns that may

have passed through the WESP. Two induced-draft fans (B-5001 A/B) are used to pull the off-gases through the system from the rotary dryer through the HEPA filters, keeping the entire system under negative pressure so that any leakage is into the system. The two ID Fans are arranged as an inline spare configuration with one fan normally operating and the other on standby.

The filtered off-gas from the HEPAs is directed into the Thermal Oxidizer (F-5001) which provides an effective means for the treatment of remaining volatile organic compounds (VOCs) and carbon monoxide (CO) in the off-gas stream. The system off-gasses are finally released to the atmosphere through the vent stack (X-5001). Point source emission estimates are discussed in the Point Source Emission Data section of this design package.

3.4.2 Instrumentation and Controls

To support and control the operation depicted in PFD D-50-10-001, and -002 the following major controls and instrumentation are implemented:

1) The off-gas pressure differential across the cyclones is continuously monitored.

2) Purge from the cooling tower is manually adjusted, and is based on periodic manual sampling and analysis of the cooling tower water.

3) Pressure differential across the scrubber is continuously monitored.

4) Caustic addition rate to the scrubber recycle flow is automatically adjusted based on pH measurement of the recycle stream.

5) The rate of water sprayed into the WESP is manually adjusted.

6) The output voltage on the WESP is continuously monitored.

7) Electrical power to the off-gas reheater is automatically controlled based on the off-gas exit temperature.

8) The speed of the ID fan is automatically controlled based on the pressure (vacuum) in the rotary dryer.

9) The off-gas in the stack is continuously monitored for radon.

10) Temperature instrumentation is provided on the following: scrubber off-gas, subcool quench off-gas, subcool quench recycle water into and out of the heat exchanger, off-gas reheater inlet and outlet, and thermal oxidizer outlet.

11) Flow instrumentation is provided on the following: recycle flow to the scrubber, recycle flow to the subcool quench, recycle flow to the cooling tower, and water flow to the WESP spray.

12) Pressure differential instrumentation is provided across the following: cyclone, scrubber, subcool quench, ID fan, and HEPA filter.

13) Level instrumentation is provided on the following: scrubber sump tank, and quench sump tank.

14) Makeup water addition to the cooling tower is automatically controlled based on level measurement in the cooling tower sump.

3.5 Railcar Loadout and Lidding Operations (PFD D-35-10-001)

Railcar decontamination and loadout activities in the Railcar Loadout Building will consist primarily of manual operations. Minimal automated controls will be used in the Railcar Loadout Building. This automation will consist of electrical controls on the lid hoist and instrumentation associated with the railcar scale.

The collection sump in the Railcar Loadout Building will operate based on level in the sump. A single float switch will be used for on/off operation of the pump, or separate high- and low-level switches and a pump control relay will be used.

3.6 Water Treatment System

The WTS operates semiautomatically. Automated controls will be provided by the PLC based facility process control system. Plant operators initiate operation of the system by placing the hand switches for the electrical equipment in the AUTO position and starting the Clearwell transfer pump.

The following is a summary of how each piece of electrical equipment is controlled:

- The caustic feed control valve operates based on a pH probe signal. The pH probe will be located in the flash mix tank. This pump will only be used if pH control is required.

- The flash and flocculation mixers are started and stopped by placing the associated handswitch in the ON or OFF position. No interlocks govern operation of these mixers.

- The polymer and flocculent feed pumps are controlled based on an influent flow rate signal. Calibration of the control loops will be based on influent water quality.

- The clarifier sludge transfer pump is started and stopped based on timers by placing the associated handswitch in the AUTO position.

- The filter feed pump will operate based on level switches in the clarifier overflow tank. A high-level will start the pump and a low-level will stop the pump. The pump can transfer water to the sand filter or to the effluent tank depending on the need for filtration. The operator will manually adjust the necessary valves to direct the flow.

- The effluent pump will operate based on level switches in the effluent tank. A high-level will start the pump and a low-level will stop the pump. The operator will manually adjust the necessary valves to direct the flow.

In the event that the water level in the influent tank reaches a high-high level (i.e., if the filter feed pump fails, etc.), flow to the tank must be stopped. Because it would be cumbersome to interlock control of the existing Clearwell transfer pumps to level switches in the influent tank, an actuated valve in the influent line may be used to stop flow to the WTS. The existing discharge line from the Clearwell transfer pumps will be protected by including a pressure switch that will cause the transfer pump to shut down once the actuated valve closes at the WTS.

Alarm horns and flashing lights will be used to alert WTS operators of conditions requiring immediate attention when a process upset condition arises.

4.0 SAMPLING AND ANALYSIS

Sampling and analysis will be performed on a regular basis in support of operations. Samples taken will include solids from the waste pits, contaminated water derived from the various processes, and filters from the laboratory ventilation system. The preliminary sampling frequency and analysis for various sampling locations are presented in Table 4-1. Detailed sampling and analytical procedures will be presented in the Sampling and Analysis Plan. A brief overview of the sampling and analytical program is presented below.

4.1 Sampling

Sampling will be conducted in accordance with federal, state, and local regulations to produce valid, accurate, and defensible data. Field sampling teams will be equipped with portable organic vapor analyzers (HNu-sensors, PID detectors), or other similar devices to detect organic vapors that may be present in the sampling area. Refrigerated ice packs or ice placed into portable coolers will be used for collection of samples that require temperature control. A chain-of-

custody protocol, with tamper-safe seals of all sample containers, will be established for all field-generated samples. Chain-of-custody forms will, at a minimum, include the following:

- Chain-of-custody number
- Sample number
- Sample location
- Date and time the sample was taken
- Name of the person that collected the sample
- Analyses planned for the samples
- Relinquished/received by
- Any pertinent comments.

Field personnel will also maintain a field notebook in which their daily activities will be recorded. The notebook, along with the chain-of-custody, will contain sufficient information to allow reconstruction of the sample collection and handling procedures at a later time.

FDF WPRAP Radiological Control will do radiological sampling/surveys as determined by FDF WPRAP Radiological Control in accordance with FDF radiological control procedures. New methods for real-time radiological monitoring will continue to be sought.

4.2 Analyses

IT will use an on-site laboratory facility to perform all the of required analysis for the BSL WAC and the CDF WAC. In addition, the on-site laboratory facility will provide the process operational data necessary to insure compliance with the CDF WAC.

The on-site laboratory facility will be operated in compliance with QA procedures documented in the Sampling and Analytical Plan and according to the requirements of Sections 9 and 12, and Appendices E and G of the FEMP Sitewide CERCLA Quality Assurance Project Plan (SCQ). The on-site laboratory will maintain certification with the state of Ohio, the state of Utah, or other states, as required, and will use analytical methods for waste characterization which satisfy the general requirements of the CDF and AWWT.

A description of the major types of analyses is presented below.

Solids. To generate data for process operations, samples will be taken from the following locations:

- Pit face

000069

- The waste processing building receiving bins
- The blending area after emerging from the rotary dryer.

The pit face samples will be analyzed for radionuclides, moisture, and specific gravity to confirm that the material handling approach is appropriate for the material. Samples of the pit face will typically be taken more frequently at the beginning of the excavation of a particular pit. As the excavation proceeds, if the excavated material appears to have consistent physical and radiological characteristics, the sampling and analytical requirements for the pit face will be reduced.

As an ongoing check of the physical and radiological characteristics of the excavated materials, random samples will be taken from the transfer trucks. The samples from the transfer trucks will be analyzed for radionuclides, moisture, and specific gravity.

Grab samples for chemical and radiochemical analysis will be taken as the material is added to the railcar storage bins. These grab samples will be composited to generate a representative bin sample and will be analyzed for the waste acceptance criteria. These samples will be used to document compliance with the CDF WAC. The sample collection and compositing methods will be described in the Sampling and Analysis Plan.

The analysis of samples for the determination of RCRA characteristic hazardousness will occur only on the material staged in the railcar storage bins prior to railcar loadout. All other sampling and analysis for WAC compliance and chemical analysis prior to placement in the railcar storage bin will involve sampling and analysis for determination of WAC compliance characteristics other than RCRA.

Water Sampling. Water will be sampled from the following streams:

- Grey water collection tank
- Laboratory wastewater
- Clearwell
- Noncontact storm water discharge to Paddys Run from the SWM Pond
- Water treatment system effluent to BSL.

Noncontact Storm Water Discharge to Paddys Run. The only point source discharge of noncontact storm water from the project will be routed to Paddys Run from the SWM Pond.

This water will be sampled and analyzed, as needed, to demonstrate compliance with the FEMP SWPPP and NPDES permit.

Clarifier Discharge. Process wastewater from the thermal drying operation (process water) will be routed to the WTS. Sampling and analysis of the stream will be covered by the WTS effluent sampling.

Water Treatment System Effluent. WTS effluent will be sampled using an automatic composite sampling device. Composite samples will be analyzed for BSL WAC. This will allow the continuous treatment of wastewater through the WTS to the BSL.

Clearwell. The Clearwell will be used as an influent holding pond for the WTS. All water discharge from the Clearwell will be treated through the WTS prior to discharge of the BSL.

Air Emissions. Point sources will be tested by an independent performance testing firm to verify that BAT removal efficiency requirements are being met.

The following is a preliminary strategy for point source emissions testing. Testing criteria will be further developed and submitted in the future for EPA review. Testing parameters will be based on FDF site-wide air dispersion modeling.

A performance test will be conducted on the emissions from two rotary dryer system stacks. The performance test will include the following test procedures on the rotary dryer gas cleaning system stack:

- Method 5 (M-5) sampling train for the parameters listed in Table 4-2
- Modified Method 5 (MM-5) sampling train for the parameters listed in Table 4-3
- VOST for the parameters listed in Table 4-4
- Method 8 sampling train for sulfuric acid
- Method 15 semicontinuous GC for carbon disulfide
- Method 114 for radionuclides and radon Table 4-5
- Operation of the CEMs listed in Table 4-6.

The following tests will be conducted on the emissions from a rotary dryer furnace stack:

- An M-5 sampling train for particulate.
- CEMs for NO_x and CO_2.

The alpha CAM and isokinetic continuous stack monitoring for radionuclides will be verified during the performance test using Method 114. O_2 and CO_2 emission rates will be determined for both stacks by analysis.

Laboratory Facility. The on-site laboratory will operate under existing or, if necessary, revised DOE and/or NRC licenses and/or permits. The on-site laboratory will be equipped and staffed to provide full-scope chemical and radiochemical analysis.

The on-site laboratory facility QAP will be carried out through the use of detailed Quality Implementing Procedures. These will specify requirements for tracking laboratory performance and personnel training and will enforce compliance through a Corrective Action Response program. The QAP Quality Implementing Procedures will be consistent with the requirements of Sections 9 and 12, and Appendices E and G of the FEMP Sitewide CERCLA Quality Assurance Project Plan (SCQ). Regularly scheduled internal surveillance and audits will assure the quality of the on-site laboratory facility operation.

5.0 UTILITY REQUIREMENTS

The utilities required to support the Fernald WPRAP site remediation are listed below:

- Electricity
- Natural gas
- Caustic
- Compressed air (plant and instrument)
- Water (potable and process)
- Cooling water
- Fire water
- Sewage.

IT will tie-in to the existing FDF utility storage, supply, and/or collection systems listed below:

- Electricity
- Natural gas
- Water (potable and process)
- Firewater.
- Sanitary sewer.

IT will provide the necessary equipment for the storage, delivery, and/or transfer of the utilities listed below:

000072

- Caustic
- Compressed air (plant and instrument)
- Cooling water.

A description of each utility system is provided in the following subsections.

5.1 Electricity

Electricity will be tied-in to the existing power lines. New power lines will be run aboveground from the existing FDF power lines to the IT transformer(s). Most electrical equipment will be 480 volts. The power distribution system that includes the switchgear for distributing power to the electrical equipment will be located near the transformer(s). Power factor compensating capacitors will be installed in the power distribution system to maintain the power factor above 90 percent. An electric power meter will be installed that will provide indication and recording of the power consumption, demand and power factor.

Incoming line voltage to the transformer will be 13.2 kV at 1500/1200 kva. The average electricity usage is estimated to be approximately 1.0 MW (5018 MW-hr/yr). The peak usage is estimated to be approximately 1.3 MW.

5.2 Caustic

Caustic (sodium hydroxide) may be required in the rotary dryer gas cleaning system for neutralization of any acids that may be present in the condensed water and to adjust the pH of the influent to the inclined plate clarifier. The caustic would be received by tank truck as either a 20 percent or a 50 percent solution depending on actual usage rates. If a 50 percent solution is delivered to the site, then the 50 percent caustic will be diluted to approximately 20 percent and then stored in the caustic storage tank.

The caustic storage tank will be located outside the contamination zone. The tank will have secondary containment.

5.3 Natural Gas

A new underground natural gas line will be installed from the existing FDF natural gas main line. The tie-in line for natural gas will have isolation valves and meters to indicate, record and

totalize the natural gas flow to IT. The primary use of the natural gas is as a fuel for the rotary dryer burners.

The peak natural gas flow rate is estimated to be approximately 850 scfm. The annual average natural gas flow rate is estimated to be approximately 833 scfm. The pressure of the natural gas at the tie-in point will be in the range of 40 to 55 psig. The annual natural gas consumption is estimated to be approximately 242 million standard cubic feet.

5.4 Compressed Air (Plant and Instrument)

Compressed air will be used by the rotary dryer system. The users include both process equipment and instruments. The air used by the instruments (instrument air) will be dehumidified (dried) to a relatively low dew point. A desiccant air dryer system will be used to dehumidify the instrument air. The air compressor will be electrically powered. The air compressor, dehumidifier, and surge tank will all be located outside the contamination zone. All compressed air piping will be installed above ground. The pressure of the compressed air will be approximately 100 psig. The average compressed air usage is estimated to be approximately 150 scfm with a peak usage rate of approximately 200 scfm.

5.5 Water (Potable and Process)

The water used by IT to support the Fernald WPRAP site remediation will be provided from the FDF. A new underground water line will be installed by IT that will tie-in to the FDF existing water line. Appropriate isolation valves as well as a back-flow preventer will be installed at the tie-in. A flow meter will be installed in the water line, just after the back-flow preventer, that will measure, indicate, record and totalize the water flow to the IT plant.

Once within the IT plant battery limits, the water line will be split to provide both potable and process water. The branch to the process water users will include isolation valves and a back-flow preventer. The branch to the potable water users will contain isolation valves.

The pressure of the water at the tie-in location is approximately 45 psig. The average water usage rate is estimated to be approximately 65 gpm with a peak usage rate of 90 gpm.

1669

5.6 Fire Water

A below ground firewater branch line will be installed to the IT plant from the existing FDF fire water system. The line will be sized to provide the water flow rate to a hydrant in accordance with the appropriate NFPA codes and standards.

5.7 Cooling Water

Cooling water is used in the rotary dryer gas cleaning system to remove heat from the off-gas and in the process, condense the water vapor. The cooling water will be recirculated through indirect heat exchangers (plate and frame type) so that the cooling water does not come into contact with the process streams (gas or water).

A more complete description of the rotary dryer gas cleaning system and the cooling water system is provided in Section 2.6.

000075

TABLES

Table 4-1

Preliminary
Sampling and Analytical Program

Matrix	Location	Analysis	Frequency	Type
Solids	Newly exposed pit excavation face	Radionuclides, moisture, specific gravity	1/day/pit [a]	grab/ composite [b]
	Transfer truck loading or receiving bay in waste processing building area along side pit	Radionuclides, moisture, specific gravity	1/day	composite
	Blending Area	Radionuclides, moisture, specific gravity, Proctor density	1/day	composite
	Composited sample from loader bucket used to transfer/load material into bin	PCDF WAC	8/bin	composite
	Non pit waste solids (e.g. ion exchange resin)	PCDF WAC[f]	1/batch[f]	grab[f]
Water	Clearwell	BSL WAC [d]	1/week [c]	grab
	Laboratory Wastewater	BSL WAC	monitor [e]	grab
	Grey Water Collection Tank effluent	BSL WAC	monitor [e]	grab
	Noncontact storm water discharge from SWM Pond to Paddys Run	FEMP SPPP, Section 6.3	monitor [e]	grab
	Water treatment plant effluent	BSL WAC	monitor [e]	composite
Air	Lab ventilation system	gross Alpha	monitor [e]	filter

[a] This is a preliminary estimated average number of samples. A newly encountered pit may be sampled more frequently during the initial excavation stage. Sampling may diminish as the pit material exhibits consistent characteristics.
[b] Grab and/or composites from grabs will be analyzed.
[c] Clearwell water sampling frequency will vary based on changes in waste pit excavation activities.
[d] Wastewater may be sampled and analyzed for various compounds which are part of the BSL influent criteria. Analysis may not be for all BSL influent WAC constituents.
[e] Sampling frequency will be defined in the Sampling and Analysis Plan.
[f] Non pit waste solids will be sampled and analyzed for disposal consistent with the requirements for pit waste materials.

Table 4-2
Parameters for Analysis for Samples from the M-5 Sampling Train

Particulate	
Hydrogen Fluoride	Ammonia
Hydrogen Chloride	Nitric Acid

Table 4-3
Parameters for Analysis for Samples from the MM-5 Sampling Train

2,4-Dinitrotoluene 2,6-Dinitrotoluene 2-Methylnaphthalene 4,4-Dinitrodiphenyltrichloroethane Diethyl Phthalate Hexachloroethane	Isophorone Naphthalene Pentachlorophenol Phenol Tributyl Phosphate

Table 4-4
Parameters for Analysis for Samples from the VOST

1,1,1-Trichloroethane 1,1,2,2-Tetrachloroethane 1,1-Dichloroethane 1,1-Dichloroethene 1,2-Dichloroethane 1,2-Dichloroethylene 1,4-Dioxane 2-Butanone 2-Hexanone Acetone Benzene Carbon Tetrachloride Chlorobenzene Chloroform	Dichlorodifluoromethane Dichloromethane Ethyl Benzene Isobutyl Alcohol Methylene Chloride Styrene Tetrachloroethene Toluene Total Xylene trans-1,2-Dichloroethene Trichloroethene Trichlorofulormethane Vinyl Chloride

Table 4-5
Radionuclide Parameters for Samples from Method-114

U-238 U-235 U-234	Th-232 Th-230 Th-228

Table 4-6
Continuous Emissions Monitors

NO_x Gross gamma/beta particulate	SO_2 Radon

Waste Pits Remedial Action Project (WPRAP) Design Criteria and Assumptions

***

PREPARED
for
Fluor Daniel Fernald, Inc.
Fernald, Ohio

FDF Subcontract No. 98SC000001

***

PREPARED
by
IT Corporation
2790 Mosside Boulevard
Monroeville, PA 15146-2790

IT Project No. 773481

***

Revision 0
Issue Date: August 25, 1998

Record of Issue/Revisions

Date	Rev. No.	Description of Issue/Revision
1-9-98	A	Original Issue of Draft
2-13-98	B	Draft Issued for EPA Review
3-27-98	C	Draft Issued for FDF Review
N/A	D	Not Issued
6-5-98	E	Draft Issued for EPA Review
8-25-98	0	Final

Table of Contents

LIST OF TABLES v
LIST OF FIGURES vi
LIST OF APPENDICES vii
LIST OF ACRONYMS viii
1.0 INTRODUCTION 1

2.0 SYSTEM PERFORMANCE, DESIGN BASIS, AND ASSUMPTIONS 1
2.1 Waste Excavation 4
2.1.1 Functional Requirements 4
2.1.2 Design Criteria 5
2.2 Waste Blending 6
2.2.1 Functional Requirements 6
2.3 Waste Preparation 7
2.3.1 Functional Requirements 7
2.3.2 Design Criteria 7
2.4 Rotary Dryer Feed System 8
2.4.1 Functional Requirements 8
2.4.2 Design Criteria 8
2.5 Rotary Dryer 8
2.5.1 Functional Requirements 8
2.5.2 Design Criteria 9
2.6 Gas Cleaning System 9
2.6.1 Functional Requirements 9
2.7 Railcar Loadout 10
2.7.1 Functional Requirements 10
2.7.2 Design Criteria 11
2.8 Site Water Management 13
2.8.1 Functional Requirements 13
2.8.2 Design Criteria 15

3.0 APPLICABLE REGULATORY REQUIREMENTS AND COMPLIANCE DEMONSTRATIONS 16
3.1 Substantive Permitting Requirements for Air Contaminant Sources 17

Table of Contents *(Continued)*

3.2 Substantive Permitting Requirements for Wastewater and Storm Water Streams 18
3.3 Substantive RCRA Permitting Requirements 20
3.4 Substantive Permitting Requirements for Wetlands and Waters of the U.S. 21

4.0 WASTE ACCEPTANCE CRITERIA 22
4.1 On-Site Disposal Facility 23
4.2 Commercial Disposal Facility 26
4.2.1 Physical Requirements 26
4.2.2 Radiological Requirements 27
4.2.3 Chemical Requirements 28

5.0 APPLICABLE DOE ORDERS 29

6.0 PRE-OPERATIONAL D&D MEASURES 29

7.0 DESIGN CRITERIA 31
7.1 Process 31
7.1.1 Codes, Standards, and Regulations 31
7.1.2 Design Criteria 32
7.2 Mechanical 32
7.2.3 Piping 36
7.2.4 Materials Handling 36
7.3 Civil Design Basis 37
7.3.1 Geotechnical 37
7.3.2 Access Roads and Fencing 38
7.3.3 Laying Out of Work 40
7.3.4 Identification and Relocation of Utilities 40
7.3.5 Site Clearing 40
7.3.6 Earthwork (Except Pit Excavation) 40
7.3.7 Dust Suppression 41
7.4 Structural Design Basis 41
7.4.1 Codes, Standards, and Regulations 41

Table of Contents *(Continued)*

7.4.2 Design Load 42
7.4.3 Structural Materials 44
7.5 Architectural Design Basis 44
7.5.1 Codes, Standards, and Regulations 44
7.5.2 Pre-Engineered Buildings 45
7.5.2.1 Material Handling Building 45
7.5.2.2 Railcar Loadout Building 46
7.5.2.3 Railcar Preparation and Liner Storage Building 47
7.5.2.4 Railcar Survey Area 48
7.5.2.5 GCS/WTS Building 48
7.5.2.6 Maintenance Building 48
7.5.2.7 Warehouse 48
7.5.2.8 Laboratory 48
7.5.3 Portable Structures 48
7.6 Electrical 50
7.6.1 Power 50
7.6.2 Instrumentation and Controls 51

000084

List of Tables

3-1	ARARs (Applicable Requirements; Relevant and Appropriate Requirements)
3-2	Substantive Permitting Requirements
4-1	On-Site Disposal Facility Waste Acceptance Criteria
4-2	CDF Radiological Acceptance Criteria
5-1	DOE Orders
5-2	Engineering Standards

List of Figures

2-1 Waste Pits Excavation Limit

2-2 Waste Pits Cross Sections

2-3 Schematic of Representative Waste Pit Excavation Phases

List of Appendices

Appendix A Waste Characterization Summary

List of Acronyms/Abbreviations

AASHTO	American Association of State Highway Transportation Officials
ABMA	American Bearing Manufacturers Association
ACGIH	American Conference of Government Industrial Hygienists
ACI	American Concrete Institute
ACM	Asbestos Containing Material
ACOE	United States Army Corps of Engineers
AFBMA	Anti-Friction Bearing Manufacturers Association
AGMA	American Gear Manufacturers Association
AISC	American Institute of Steel Construction
ALARA	As Low As Reasonably Achievable
ALTER	Accelerated Life Testing and Environmental Research Facility
AMCA	Air Movement and Control Association
ANS	American Nuclear Society
ANSI	American National Standards Institute
APC	Air Pollution Control
API	American Petroleum Institute
ARAR	Applicable or Relevant and Appropriate Requirement.
ARI	American Refrigeration Institute
ASCE	American Society of Civil Engineers
ASHRAE	American Society of Heating, Refrigeration and Air Conditioning Engineers
ASME	American Society of Mechanical Engineers
ASNT	American Society of Nondestructive Testing
ASTM	American Society for Testing and Materials
AWS	American Welding Society
AWWA	American Water Works Association
AWWT	Advanced Wastewater Treatment
BAT	Best Available Technology
BSL	Biodenitrification Surge Lagoon
CAM	Continuous Air Monitor
CBR	California Bearing Ratio
CDF	Commercial Disposal Facility
CEM	Continuous Emissions Monitor
CEMA	Conveyor Equipment Manufacturers Association

000088

List of Acronyms and Abbreviations *(Continued)*

CERCLA	Comprehensive, Environmental Response, Compensation, and Liability Act
CFR	Code of Federal Regulations
COC	Constituent of Concern
CPT	Cone Penetrometer Test
CRSI	Concrete Reinforcing Steel Institute
CRU	CERCLA/RCRA Unit
CWA	Clean Water Act of 1977, as amended
D&D	Decontamination and Dismantlement
DAC	Derived Air Concentration
DCD	Design Criteria Document
DEEP	Dewatering Excavation Evaluation Program
DOE	United States Department of Energy
DOE-NV	United States Department of Energy - Nevada Office of Operations
DOT	United States Department of Transportation
EJMA	Expansion Joint Manufacturers Association
ERDA	Energy Research and Development Administration
F	Fahrenheit
FDF	Fluor Daniel Fernald, Inc.
FEMP	Fernald Environmental Management Project
FERMCO	Fernald Environmental Restoration Management Corporation
FFCA	Federal Facilities Compliance Agreement
fpm	feet per minute
FS	Feasibility Study
FSAR	Final Safety Analysis Report
ft^2	square foot (feet)
GCS	Gas Cleaning System
GFCI	Ground Fault Circuit Interrupter
GLC	Ground Level Concentration
gpm	gallons per minute
HEPA	High Efficiency Particulate Air (filter)
hr	hour
HVAC	Heating, Ventilation, and Air Conditioning
IEEE	Institute of Electrical and Electronics Engineers
IES	Illuminating Engineers Society

000089

List of Acronyms and Abbreviations *(Continued)*

ID	Induced Draft
IPC	Inclined Plate Clarifier
ISA	International Society for Measurement and Control
IT	IT Corporation
kg	kilogram
kV	kilovolt
kVA	kilovolt-ampere
kW	kilowatt
lb	pound
LLRW	Low Level Radioactive Wastes
m^2	square meter
MAGLC	Maximum Allowable Ground Level Concentration
MAWC	Maximum Average Waste Concentration
MBMA	Metal Building Manufacturers Association
MCC	Motor Control Center
MEI	Maximally Exposed Individual
MHB	Material Handling Building
µCi/cc	microcurie per cubic centimeter
mrem	millirem
MSS	Manufacturers Standardization Society
NAD	North American Datum
NEC	National Electric Code
NEMA	National Electrical Manufacturers Association
NESHAP	National Emission Standards for Hazardous Air Pollutants
NETA	National Electrical Testing Association
NFC	National Fuel Code
NFPA	National Fire Protection Association
NP	Nonplastic
NPDES	National Pollutant Discharge Elimination System
NPH	Natural Phenomenal Hazard
NTS	Nevada Test Site
OAC	Ohio Administrative Code
OBBC	Ohio Basic Building Code
ODOT	Ohio Department of Transportation

000090

List of Acronyms and Abbreviations *(Continued)*

OEPA	Ohio Environmental Protection Agency
OSDF	On Site Disposal Facility
OSHA	Occupational Safety and Health Administration
OU	Operable Unit
PC	Performance Category
PCB	Polychlorinated Biphenyl
pcf	pounds per cubic foot
pCi/l	picoCuries per liter
PFD	Process Flow Diagram
PID	Photoionizing Detector
PLC	Programmable Logic Controller
PPE	Personal Protective Equipment
psf	pounds per square foot
psi	pounds per square inch
psig	pounds per square inch gauge
PTI	Permit to Install
PTO	Permit to Operate
PVC	Polyvinyl Chloride
QAP	Quality Assurance Plan
RCRA	Resource Conservation and Recovery Act
RD	Remedial Design
RI	Remedial Investigation
RLB	Railcar Loadout Building
ROD	Record of Decision
SAE	Society of Automotive Engineers
scfm	standard cubic feet per minute
SCS	Soil Conservation Service
SDI	Steel Deck Institute
sec	second
SJI	Steel Joist Institute
SMACNA	Sheet Metal and Air Conditioning Contractors National Association
SPT	Standard Penetration Test
SSC	Structure, System and Component
STD	Standard (DOE)

000091

List of Acronyms and Abbreviations *(Continued)*

SWM	Solid Waste Management
SWPPP	FERMCO Storm Water Pollution Prevention Plan
TBC	To Be Considered
TBP	Tributyl Phosphate
TEMA	Tubular Exchanger Manufacturers Association
TOC	Total Organic Carbon
TSDF	Waste Treatment, Storage or Disposal Facility
UBC	Uniform Building Code
UCRL	University of California Research Laboratory
UL	Underwriters Laboratory
USCS	Unified Soil Classification System
USEPA	United States Environmental Protection Agency (EPA)
V	Volt
WAC	Waste Acceptance Criteria
WESP	Wet Electrostatic Precipitator
WPRAP	Waste Pits Remedial Action Project
WTS	IT Corporation Wastewater Treatment System
yd^3	cubic yard
yr	year

000092

1.0 INTRODUCTION

This document provides the design criteria and assumptions utilized for the design and specification of the waste material excavation, preparation, drying, and blending processes, as well as for associated activities such as the treatment of rain and waste waters. The characteristics of the wastes impact much of the design activities, especially the design of the indirectly heated rotary dryer and its associated gas cleaning system. A summary of waste material characterization is provided in Appendix A to this document. Deviations in the actual waste materials and other site parameters from these criteria, assumptions, and characteristics can significantly impact the waste pit remediation process.

Section 2.0 of this document provides the performance, design basis, and assumptions utilized in the design and specification of the process from the excavation of waste to the loading of treated material into railcars for off-site shipment. Section 3.0 describes the applicable regulatory requirements and compliance demonstrations that impact the site processing activities. Section 4.0 describes the waste acceptance criteria that the wastes have to meet to be shipped off site, or that processing wastes (i.e., wastewater, etc.) have to meet to be discharged from the processing area. Section 5.0 lists the various DOE orders that impact the excavation and processing of the waste materials. Section 6.0 describes the pre-operational decontamination and dismantlement (D&D) philosophy utilized in the system design. Section 7.0 describes the specific design criteria associated with the design of the waste processing equipment and buildings.

2.0 SYSTEM PERFORMANCE, DESIGN BASIS, AND ASSUMPTIONS

General Requirements

Description of the Remedial Activities. In accordance with remedial requirements set forth in the ROD, the selected remedial activity for OU1 consists of waste pit excavation, waste segregation and preparation, thermal drying and off-gas treatment to remove excess moisture, loadout and removal to an off-site CDF. The selected remedial actions will include the following key activities:

- Construction of waste processing, treatment, and loadout facilities
- Removal of excess water from open waste pits to the existing on-site Advanced Wastewater Treatment (AWWT) facility.

- Removal of waste pit contents, including caps, liners and surrounding contaminated soils
- Confirmation sampling and analysis of waste pit excavation area (following removal of contaminated materials) to verify achievement of remediation levels
- Waste preparation, including waste segregation, screening, size reduction and blending
- Thermal drying of waste, as required to meet the WAC for the disposal facility
- Sampling and analysis of waste material prior to shipment to ensure material meets the WAC of the disposal facility
- Loadout and shipment of waste material to off-site disposal facility
- Decontamination, decommissioning and/or disposal of all process equipment and facilities
- OU1 site restoration, including any regrading by FDF necessary to accommodate the FEMP's Natural Resources Restoration Plan.

General Process Assumptions. Several design criteria cannot be verified until WPRAP field operations are commenced. Process assumptions have been made throughout the WPRAP design based on existing data and process knowledge, however, the following design issues/assumptions will require field verification.

- Material Handling - Material is capable of being conveyed with appropriate design which includes vertical hopper sidewalls, positive material movement such as screws, and minimized transfer points.
- Rotary Dryer and Off-Gas Treatment - Material is capable of being dried in an indirect-fired rotary dryer without excessive fouling that would inhibit heat transfer rates.
- Inspection of the waste pit data during the RD process indicated measured quantities of total organic carbon (TOC) in the waste pits. The TOC may be from a variety of sources including: graphite crucibles, charcoal, wood, asphalt, tars, solvents, oils and greases. The rotary dryer will be operated to minimize unnecessary volatilization of organics while meeting the drying commitments for the pit waste. The Gas Cleaning System (GCS) system provides control of organic vapor emissions by condensation of the condensible organics, and thermal oxidation of the non-condensible organics, that may be volatilized during the drying process.

  The design assumes that volatile organic compounds will be present in the rotary dryer off-gas stream. The design also assumes a fixed fraction of the waste material fed to

the rotary dryer will report to the rotary dryer off-gas stream as volatile organics. These assumptions are based on bench and pilot scale design verification testing conducted on archived waste pit materials. Should this fraction differ during actual operation, the revised design should be able to accommodate a range of organic volatile concentrations in the rotary dryer off-gas. Fouling due to organics is still possible, however the present design has increased the operational flexibility of the system.

- Blending and Railcar Loadout - The characteristics of the excavated waste material will allow classification utilizing conventional equipment.
- Any enriched uranium present in the pit waste is only slightly enriched above the naturally occurring ratios and is not enriched-restricted.
- Water Treatment - Contaminated water from the excavation and from the process area can be treated using conventional precipitation, filtration, and adsorption technologies.
- Drainage performance of in-pit dewatering process such as sumps and dewatering wells.
- Water in flow to pits during excavation.
- Optimum proctor moisture for blended waste.
- Requested variances from optimum moisture content from CDF facility.
- Boundaries of the Burn Pit excavation.
- Depth of directed excavation below pit liners.
- Delivery schedule and quantities of OU1 Contaminated Soil Stockpile materials.
- Actual quantities and composition of non-typical waste.
- Variability of waste for blending criteria of depleted/enriched uranium.
- Density and moisture content.
- Respiratory protection requirements for each area.
- Inhomogeneity of blended wastes for compliance with the WAC; and other areas where we may be making assumptions that are not fully defined.

A summary of design requirements for the primary remediation activities is discussed in the following sections.

2.1 Waste Excavation

2.1.1 Functional Requirements

- The waste material to be excavated consists of the OU1 Waste Pits 1, 2, 3, 4, 5, 6, Clearwell, and Burn Pit (including waste pit caps, contents, and liners and contaminated soil below the pits).

- Mechanical excavation will be the primary method of waste excavation to limit the subsequent waste dewatering that would be necessary if hydraulic excavation were used.

- Excavated waste will be transferred to the process area using conventional material handling equipment.

- Contaminated materials from other FEMP projects will be delivered periodically by FDF to a common stockpile area (OU1 Contaminated Soil Stockpile). This material will be transferred to the processing area on a periodic basis as required to manage stockpile size.

- Excavation sequencing will take into account the need to blend materials from two or more pits concurrently to facilitate blending for radiological, moisture, and density constraints.

- Excavation will be performed so that the OU1 work area remains classified as an "Other Industrial Facility" as defined by DOE-EM-STD-5502-94 and based upon separate segmentation of the pit area excavation facilities and activities from the waste processing and railcar loadout facilities and activities.

- Large debris will be segregated from waste in the pit area to avoid excessive handling. Debris segregation will be performed using conventional mechanized material handling equipment to the extent practical.

- Excavation activities will be defined by two phases. Phase I will be the neat-line excavation of the waste pit caps, waste, and liners. Phase II will be the excavation of any contaminated soil below the pit liners. The bottom of waste pit liners are defined on the waste pit construction drawings (Figures 2-1 and 2-2) and the schematic on Figure 2-3.

- All excavated material from Phase I will be disposed of at the CDF except certain nontypical waste.

- Phase II excavation will be directed by FDF. The depth of excavation and final disposition of the excavated soils will be based on FDF sampling and analysis.

- Excavation will include the removal of any pumps, utility lines, monitoring wells, and other appurtenances within the waste pit area boundary (see Figure 2-1) which are

encountered during the excavation of the waste pits and surrounding soils. Specifically included in this is the Clearwell Pump House. These materials will be handled (e.g., disposed) consistent with the handling of debris from the waste pits.

- Run-on control measures will be implemented to reduce the volume of contaminated water sent to treatment. Existing perimeter storm water controls will be kept intact.

- Any freestanding water will be removed from the excavation to minimize infiltration of contaminated water to the soil and aquifer below the pits

- Water entering the excavation will include leachate from saturated zones within the waste and water from perched water zones surrounding the waste pit area.

- Dewatering and excavation activities may occur simultaneously.

- Water collected in the pit excavation area will be transferred to the clearwell, but will ultimately be discharged to the BSL. This water will require suspended solids removal and may require other water treatment prior to discharge to the BSL per the BSL WAC.

- Airborne dust emission will be minimized or eliminated during pit excavation by meeting the criteria included in Ohio Administration Code (OAC) 3745-31-05, which includes the use of Best Available Technology (BAT) to control emissions.

- Trucks used for transporting dry waste will utilize protective measures to control dust dispersion.

- Contaminated soil (soil having contamination levels above the Final Remediation Levels) will be disposed of at the CDF or OSDF.

- All pit wastes, pit caps, and pit liners will be treated as required to meet the disposal requirements of the CDF.

- Any nontypical waste encountered in the pit waste, which does not meet the CDF WAC and cannot be processed to meet the WAC will be segregated for transfer to FDF. See Section 4.6.3 of the Excavation plan for a detailed description of activities.

2.1.2 Design Criteria

- The as-built dimensions and features of the waste pits are defined by Figure 2-1 and Figure 2-2.

- Estimated volume of material to be excavated, processed, and disposed of (in-situ volumes). Reference Figure 2-3.

  - Phase I - Neat-Line Excavation Waste

(including caps and liners)	628,200 cubic yards
- Phase II - Directed Excavation Contaminated Soil below Pit Liners (assuming 3 feet)	83,640 cubic yards
- Contaminated Materials from other FEMP Projects (processed and loaded only)	47,600 cubic yards
Total	759,440 cubic yards

The average in-situ moisture contents of pit wastes have been estimated based on existing waste pit data and are given in the Excavation Plan.

- The moisture content of waste to be processed (as delivered to the treatment system) has been estimated based on existing waste pit data and the solids recovery of the selected excavation technique. These data are given in the Excavation Plan.

- Excavation rates and schedule are given in the Excavation Plan.

2.2 Waste Blending

2.2.1 Functional Requirements

- Wastes from two or more pits may be mixed together to improve workability or to meet the WAC for the CDF for the radiological, moisture content, or density criteria.

- High moisture content pits will be blended with lower moisture content pit wastes to provide a steady thermal load to the rotary dryer.

- Low bulk density wastes will be blended with higher bulk density wastes to provide weight limited railcar loading.

- Enriched uranium waste sources will be blended with depleted uranium waste sources to provide shipped waste materials that will qualify as depleted.

- Low radiological WAC factor waste sources will be blended with high radiological WAC factor waste sources to provide shipped waste materials, which meet the radiological WAC.

- Waste processed through the rotary dryer may be blended with wastes which have bypassed the rotary dryer in order to meet the WAC.

  - Blending cannot be done for the purpose of diluting characteristically hazardous waste to render it nonhazardous.

2.3 Waste Preparation

2.3.1 Functional Requirements

- Debris greater than 4 inches in size will be removed from the waste prior to processing through the rotary dryer.

- Uranium derbies and other non-typical wastes will be removed from the pit waste and segregated for transfer to FDF for subsequent handling and disposition.

- Waste will be temporarily stockpiled adjacent to the rotary dryer and railcar loadout areas to provide a process surge capacity in case of temporary interruptions in waste excavation to facilitate continuous rotary dryer operation.

- Stockpiled waste will be covered or otherwise managed to prevent wind dispersion and control waste runoff.

- Stockpile size will not exceed the limits determined to be necessary to maintain the "Other Industrial Facility" classification as defined by DOE-EM-STD-5502-94 and based upon separate segmentation of the pit area excavation facilities and activities from the waste processing and railcar loadout facilities and activities.

- Waste material and debris will be size reduced as required to meet the CDF WAC. Nonshreddable waste may be size reduced in the pit area or the Material Handling Building. Size reduction activities may include cleavage of debris with equipment bucket/blade; run over by equipment track; cleavage with equipment mounted ram, jaws, or other device; flame cutting.

2.3.2 Design Criteria

Debris screening or separation rate:	100 tons per hour
Debris size reduction rate:	5 cubic yards per hour
Debris separation and sizing schedule:	24 hours/day, 7 days/week max. 16 hours/day, 5 days/week normal
Waste stockpile size: Material Handling Bldg:	11,400 tons approximate
Waste stockpile size: Railcar Loadout Bldg:	3,600 tons approximate

Nontypical waste types:	Pyrophoric materials (uranium metal) Compressed gas cylinders Transformers Unopened, intact drums PCB wastes Large debris (mechanical equipment or reinforced concrete) Thorium metal/oxides Asbestos

2.4 Rotary Dryer Feed System

2.4.1 Functional Requirements

- The rotary dryer feed system will be used to transfer waste materials to the rotary dryer at a controlled rate.
- The system will be capable of handling a wide range of waste moisture contents and physical properties.
- The system will minimize air infiltration to the rotary dryer.

2.4.2 Design Criteria

Feed Rate to Rotary Dryers:	50 tons/hr Max. 30 tons/hr Normal
Load to multiple units:	50% rate to each of two rotary dryers
Feed Size:	4 inch minus
Feed Moisture Range:	20% to 80% wet basis
Operating Schedule:	Same as thermal

2.5 Rotary Dryer

2.5.1 Functional Requirements

- The rotary dryer will meet the USEPA's definition of a sludge dryer which states: "A sludge dryer means any enclosed thermal treatment device that is used to dehydrate sludge that has a maximum total thermal input, excluding the heating value of the sludge itself, of 2,500 Btu/lb of sludge treated on a wet weight basis." Thermal drying will not be performed using any device which meets USEPA's definition of an incinerator.

000100

- The drying chamber will be sealed and maintained under a negative pressure to minimize the release of pollutants to the environment. Exhaust from the drying chamber and the furnace will be treated in accordance with the applicable requirements for air emission limits.

- The drying system will conform to applicable fire and safety codes and standards.

- All conductive surfaces that personnel may potentially contact will be designed to stay at or below 125°F, and all nonconductive surfaces such as insulation or plastic that personnel may potentially contact will be designed to stay at or below 150°F. If this cannot be achieved, a protective guard will be supplied to keep personnel from contact with such surfaces.

- The rotary dryer will use natural gas as fuel for the rotary dryer burners.

2.5.2 Design Criteria

Design Feed Rate:	10 to 30 tons/hr @ 40% H_2O (wet basis)
Moisture Removal Rate:	7.65 tons/hr H_2O removal Avg. 10 tons/hr H_2O removal Max.
Load to multiple units:	50% rate to each of two rotary dryers
Product Moisture Content:	10 to 20% H_2O (wet basis)
Burner Fuels:	Natural Gas
Natural Gas Supply:	850 scfm interruptible @ 40 to 50 psig; 47 psig annual avg.
Operating Schedule:	24 hrs/day, 7 days/wk Max. 24 hrs/day, 5 days/wk Normal

2.6 Gas Cleaning System

2.6.1 Functional Requirements

- Rotary dryer process off-gases will be treated to control toxic, particulate, and radiological emissions, per applicable regulatory standards, prior to discharge to the atmosphere.

- Emissions from the gas cleaning system will be via a process exhaust stack which will be considered a point source.

000101

- Radon emissions from the gas cleaning system stack will meet a stack discharge limit based on a maximum allowable off-site impact of 0.5 pCi/L annual average. The stack limit for radon will be determined by FDF using a site-wide model and the point source emissions estimate from the process design.

- Radionuclide emissions, excluding radon, will meet 40 CFR 61, subpart H.

- Point source emissions that exceed the maximum allowable ground level concentrations (MAGLC) at the site boundary must also apply BAT, as required by Ohio EPA. Using BAT at all point sources covers toxic, particulate, and radiological emissions except radon emissions from point sources.

2.7 Railcar Loadout

2.7.1 Functional Requirements

Railcar Loadout

- Waste will be loaded into FDF-provided railcars at a rate that will satisfy the yearly production rates and will not exceed the physical or supply limitations of the railcars.

- Railcar transportation to the off-site CDF will be coordinated and controlled by FDF to support the shipment of between 108,000 and 135,000 tons of waste per year. Off-site shipment of waste will be coordinated on a site-wide basis, with WPRAP as a lead for rail shipment to the CDF.

- Railcars will be moved inside the loadout area using a trackmobile or locomotive engine of suitable size to handle at least four filled railcars.

- Railcars will be loaded by mobile earthmoving-type equipment. Emissions will be controlled to meet applicable ARARs, dust/fugitive emission control requirements, radiological and health and safety requirements. The loading concept will incorporate the principles of ALARA.

- Debris will be placed in the railcars in accordance with the CDF WAC.

- The exterior, wheels, brakes, and other exposed sections of the railcars and all track sections will be protected as much as practical during all loading operations and at any other time processed waste materials have the potential to contact the railcar exterior.

- The railcar and cover will satisfy DOT regulations 49 CFR 173, 427, and 174.700(f), which specify that LSA material be transported in a "strong tight package" in a closed transportation vehicle, under exclusive use conditions. A strong tight package is a package that will prevent the release of any radioactive material under normal transport conditions.

- Each railcar will be lined, filled with CDF WAC compliant material, sealed (with lid), weighed, decontaminated (as necessary), radiologically surveyed to determine if the railcar meets the DOE and DOT requirements. If the rail car meets the radiological requirements, it will be transferred to FDF for transport off site to the CDF.

- In the event that a railcar is rejected at the CDF and returned to the FEMP because its contents do not pass the WAC according to the CDF, the railcar will be unloaded in the loadout area using conventional earthmoving equipment.

Railcar Liners and Covers

- Liners will be placed in railcars prior to the placement of waste material into the railcar. Liners will be of a construction to resist tearing during normal loading operations. Each liner will be disposed of with the waste at the CDF.

- The liner will be folded over the waste after waste loading.

- Hard covers (lids) will be placed on filled railcars following liner closure.

- Hard covers (lids) will be provided (by IT) for each of the railcars. Any covers which sustain damage due to normal wear and tear during transport or handling will be repaired or replaced as required.

- Covers, installed on railcar, will meet DOT criteria 49 CFR 173.403(c).

- Covers will be used on open-top gondola cars.

2.7.2 Design Criteria

- The estimated tonnage of material that will be loaded into railcars for transportation to the CDF based on estimated in-situ conditions and assuming fluffing factors and final moisture contents.

- Waste (including caps and liners)	456,601 tons
- Contaminated soil below pits (assuming 1.5 feet deep)	79,458 tons
- Contaminated material from other FEMP projects	90,440 tons
- Total to CDF	626,499 tons

- The estimated tonnage of material that will be loaded into containers and disposed of in the OSDF based on estimated in-situ conditions and assuming fluffing factors and final moisture contents.

- Contaminated soil below pits (assuming an additional 1.5 feet below the soil bound for the CDF)	79,500 tons

000103

- Estimated total to CDF and OSDF — 705,999 tons

- Railcar loading criteria:

  - Average estimated number of railcars available for loading during years 1999 - 2004: — 47 railcars every 16 calendar days

  - Maximum estimated number of railcars available for loading during years 1999 - 2004: — 58 railcars every 16 calendar days

  - Maximum estimated weight of material which can be loaded into a railcar: — 108.17 tons

  - Maximum estimated volume of material which can be loaded into a railcar: — 87.84 cubic yards (with a minimum 9-inch freeboard)

  - Waste shipment rate to the CDF: — up to 112,149 tons/yr

  - Each railcar will be loaded to meet either maximum weight or maximum volume limit, whichever occurs first (+0% / -0.5%).

- The cycle time for transportation and disposal to the CDF and return of empty railcars to FDF is approximately 18 calendar days.

- Estimated railcar loadout rate: — 8 cars/day Maximum
  6 cars/day Average

- Operating Schedule: — 16 hrs/day, 5 days/wk Normal

- Railcar

  - Total number of railcars available: — 135 cars (provided by FDF)

  - Railcar type: — Low-side gondola

  - Approximate box dimensions (interior): — 52 feet length
    9.5 feet width
    5.5 feet height

  - Coupler-to-coupler length: — 57 feet
    (This length affects the track needs for storage)

- Railcar Hard Covers (Lids)

000104

- Covers will be of reusable, rigid, modular fiberglass construction, ECOFAB railcar cover or equal.

- Covers will have manual locking mechanism, ECOFAB or equivalent.

2.8 Site Water Management

2.8.1 Functional Requirements

- Wastewater or contaminated storm water collected from the WPRAP work areas shall be transferred directly either to the Biodenitrification Surge Lagoon (BSL), or for non-process wastewater and contaminated storm water, indirectly to the BSL via the Clearwell, prior to entering the Advanced Wastewater Treatment (AWWT) for final treatment.

- The maximum average 24-hour flow rate of all wastewater and contaminated storm water streams from the WPRAP work area to the BSL should not exceed 200 gallons per minute. This includes streams currently being discharged from the Waste Pit Area such as the surface water runoff collected in the Clearwell and in the ditches surrounding the perimeter of some waste pits.

- The peak flow rate of all wastewater and contaminated storm water streams from the WPRAP work area to the BSL should not exceed 2,650 gpm. If the level of the water in the BSL reaches the 12-hour alarm level, the AWWT Operations Manager may request the WPRAP and other site projects to prepare for flow reductions or terminations within the 12-hour period following the alarm. The sequence of stream flow reductions or termination will generally follow a predetermined site-wide priority list that will be based on the impact of releasing each stream untreated to the environment.

- Measures will be taken to provide pretreatment to remove suspended solids. The concentration of suspended solids in the water (from any source) delivered to the BSL should not be greater than 1000 ppm.

- Dissolved concentrations of heavy metals in any wastewater effluents to the BSL should not exceed the clean Water Act (CWA) Toxic Notification Levels as stated in 40 CFR 122.42, (1) (i) & (ii) for the CWA Section 307 Toxic Pollutants. If treatment for heavy metals is determined to be necessary, pH adjustment, such as lime addition, followed by settling and possibly flocculation, may be used as a treatment method.

- No wastewater shall be discharged to the BSL that exhibits the characteristics of a RCRA waste.

- Thorium-230 and thorium-232 concentrations in any wastewater effluents to the BSL shall not exceed 300 pCi/l and 50 pCi/l, respectively.

- Total Dissolved Uranium should not exceed 5,000 ppb in any wastewater effluents to the BSL.

- As a minimum, discharges to the BSL shall be monitored and reported to FDF for the following constituents:

  Arsenic
  Cadmium
  Chromium
  Copper
  Cyanide
  Nickel
  Silver
  Radium-226
  Thorium-230
  Thorium-232
  Total dissolved uranium
  Chloride
  Nitrates
  1,1,1-trichloroethane
  tetrachloroethane
  1,1-dichloroethane
  1,1-dichloroethene
  Chloroethane
  pH
  Suspended solids

- The quantity of contaminated storm water from the 10.5-acre WPRAP process area shall be minimized by hydraulically segregating clean area runoff from potentially contaminated runoff. Clean runoff could include building roof drainage and runoff from areas not in direct contact with the waste. Contaminated runoff would come from areas that are in direct contact with waste or have a high potential of coming in contact with waste such as stockpile areas and roadways. "Clean" storm water shall be discharged into the ditches surrounding the process area that discharge directly to Paddys Run. Process area storm water shall be directed into the storm water management pond in the northern portion of the subcontractor's work area.

- All flow streams discharged to the BSL shall be metered with a flow totalizer and flow meter.

- Water discharges to the BSL should have a pH of between 6 and 10.

- Noncontact storm water will be used for washing or dust control, where feasible, to minimize the volume of water requiring treatment.

- All wastewater discharges at the FEMP are, and will continue to be, covered by a National Pollutant Discharge Elimination System (NPDES) Permit. Wastewater and storm water discharges from the WPRAP are required to be covered by the FEMP

NPDES Permit. The FEMP currently discharges under Ohio EPA Permit No. 11000004*ED.

FDF will prepare the necessary permit application to successfully obtain the permit under which the WPRAP will be allowed to discharge. To support the permit renewal application process, or permit modification process, IT will supply information such as process descriptions (sizing, throughput, etc.), water balances, material balances, analytical data, etc., to sufficiently characterize the effluent discharge from the WPRAP. Pollution prevention and recycling of waste streams must be considered in all processes in anticipation of any anti-degradation review deemed necessary by Ohio EPA.

- Wastewater includes, but is not limited to, water that free-drains from the pit waste in the excavation or during storage (e.g., waste in stockpiles), water that enters the excavation either from surrounding perched water tables or from precipitation, condensed water vapor, decontamination water and gas cleaning system bleed streams.

- Wastewater shall be pretreated as necessary to meet the WAC of the existing FEMP Advanced Wastewater Treatment (AWWT) system.

- The site water management design will have features designed to prevent the introduction of any substances or materials into any stream, lake, aquifer, or other body of water which may pollute or degrade the water or constitute substances or materials deleterious to fish and wildlife.

2.8.2 Design Criteria

- New storm water management systems shall be designed for the 25-year, 24-hour storm per FEMP site policy. ("Rainfall Frequency Atlas of the U.S.," Technical Paper 40, U.S. Department of Commerce, provides levels for this storm event for the FEMP.)

- Open channels will use the 10-year, 24-hour storm for evaluating velocity, per the Rainwater and Land Development, Ohio's Standards for Stormwater management and Stream Protection.

- Storm water management basins will be designed to safely pass the 100-year, 24-hour storm. ("Rainfall Frequency Atlas of the U.S.," Technical Paper 40, U.S. Department of Commerce, provides levels for this storm event for the FEMP.)

- Storm drain systems not directly connected to the storm water management system, with catchments less than 160 acres, may be designed by the rational method.

- Those storm drain systems directly connected to an existing storm water management system shall be designed by SCS methods (e.g., TR-55, TR-20). No storm drains

currently exist in the work area that drain to the existing storm water management system.

- Design details, construction methods, and materials shall be in accordance with ODOT standards. The applicable portions of the following standards will be used for site water management design:

  - ODOT 601 - Slope and Channel Protection
  - ODOT 603 - Pipe, Culverts, Sewers, and Drains
  - ODOT 604 - Manholes, Catch Basins, Inlets, Inspection Wells, Junction Chambers, or Monuments
  - ODOT 707 - Steel, Aluminum, and Plastic Pipe.

- Erosion control shall be consistent with the Rainwater and Land Development, Ohio's Standards for Stormwater management and Stream Protection, and the FDF Stormwater Pollution Prevention Plan (SWPPP).

Meteorological Data:

- The average annual rainfall in the area is 40.14 inches/year

- The 25-year/24-hour storm event consists of 4.8 inches of precipitation in a 24-hour period.

3.0 APPLICABLE REGULATORY REQUIREMENTS AND COMPLIANCE DEMONSTRATIONS

Substantive Permitting Requirements Crosswalk

The OU1 ROD established thermal drying and the subsequent off-site disposal of OU1 wastes at a CDF as the selected remedy for the OU1 remedial action. The OU1 ROD also established the ARARs that must be followed to ensure that OU1 remedial activities are conducted in compliance with the substantive requirements of existing federal, state and local environmental laws and regulations.

OU1 remedial activities are regulated in the CERCLA, as amended by the Superfund Amendments and Reauthorization Act of 1986. CERCLA, as well as the National Oil and Hazardous Substances Pollution Contingency Plan (NCP) and 40 CFR Part 300, specify that on-site remedial actions are exempt from the requirements to obtain formal permit approval, provided these actions are conducted in compliance with the substantive requirements of applicable and/or relevant and appropriate federal, state and local permits and regulations.

To comply with these requirements, the DOE is required to provide the USEPA and the Ohio EPA with information demonstrating how remedial activities will comply with substantive permitting and ARAR-driven requirements associated with the selected remedy for each operable unit at the Fernald site. The DOE has committed to providing this information in the form of Permitting and ARAR Crosswalk Tables, in which all substantive permit and ARAR-related requirements are identified along with a description of where in the design package the particular requirement is specifically addressed.

This section provides an overview of specific substantive permitting and ARAR-driven requirements associated with the OU1 remedial action. Table 3-1 shows the ARAR compliance strategy. Table 3-2 shows a detailed listing of all substantive permitting requirements associated with the OU1 remedial action and references the specific sections of the design submittals where additional information on these requirements are addressed.

3.1 Substantive Permitting Requirements for Air Contaminant Sources

Applicability of Air Permit Program. The OU1 remedial action consists of the excavation and thermal drying of material contained in the waste pits. As a result of these activities, several sources of fugitive and point source emissions of regulated air contaminants will exist. These sources are subject to compliance with the provisions of existing federal and state air control regulations.

Substantive Air Permitting Requirements Associated with OU1 Remediation. Under the federally enforceable NESHAP (40 CFR 61 Subpart H), radiological emission from all sources at the site are limited to an annual effective dose equivalent of 10 mrem per year. Pursuant to the NESHAP, emission estimates must be prepared for fugitive and point-source air emissions associated with the OU1 remedial action to demonstrate compliance with the exposure standard. Each potential air emissions point source must be evaluated (using the appropriate modeling techniques) prior to placement to determine permitting and monitoring requirements. Specifically point sources with the potential for releases that could exceed a 0.1 mrem per year dose to any member of the general public on an uncontrolled basis must be continuously monitored. In addition, a notice of project completion for sources that exceed a 0.1 mrem/yr dose to any member of the general public on a controlled basis is required.

In addition to the federal requirements described above, the substantive permitting requirements of Ohio EPA's PTI and PTO (OAC 3745-31 and 3745-35, respectively) rules are applicable to air contaminant sources associated with the OU1 remedial action, The use of Best Available Technology (BAT) to control air pollutant emissions is included under these requirements.

Compliance Strategy. Specific compliance strategies for the substantive air permitting requirements associated with the OU1 remediation are given in Table 3-2a.

Other Air Regulatory Issues

1) Required documentation will be prepared to demonstrate compliance with the substantive requirements of the air permitting regulations. Emission rates of the constituents of concern (COCs, including the air toxins, particulates, and radon) will be estimated based on the specified air pollution controls.

2) A Performance Test Criteria for rotary dryer emissions will be prepared and a performance test conducted by an independent contractor. The independent firm performing the stack sampling will also be qualified to prepare the Performance Test Criteria.

3) FDF will perform site-wide air dispersion modeling calculations for the purpose of determining stack emission limits based on the maximum allowable ground level concentration (MAGLC) at the fence line for air borne COCs. Estimated point source emissions will be compared against the FDF air modeling based stack limits as an initial evaluation of the process design. Stack testing will be performed on the rotary dryer off-gas to further verify compliance with the fenceline limits.

3.2 Substantive Permitting Requirements for Wastewater and Storm Water Streams

Applicability of NPDES Permit Program. Section 402 of the Clean Water Act (CWA) established the National Pollutant Discharge Elimination System (NPDES) permit program. The program is implemented in accordance with regulations promulgated in 40 CFR 122 through 136, which regulate the point source discharge of wastewater to Navigable waters of the United States through the issuance of NPDES permits. NPDES permits are designed to specify discharge limitations necessary to comply with applicable technology-based effluent standards and/or water quality-based standards. NPDES permits typically include monitoring requirements and additional conditions regulating point source discharges. Discharges of storm water from

specific types of activities have also been included under the NPDES permit program. Authority for administering the NPDES permit program within Ohio has been delegated to the Ohio EPA.

NPDES Permitting Requirements. The DOE, USEPA, and Ohio EPA have agreed that off-site discharges of process wastewater and storm water generated during the course of the CERCLA remedial action will be subject to compliance with both the substantive and administrative provision of the Ohio EPA's NPDES permit program. OU1 discharges will be treated within the FEMP wastewater treatment system prior to discharge to the Great Miami River. Surge capacity and primary settling of OU1 wastewater will be provided at the clearwell and the BSL. Final treatment of OU1 process wastewater will be provided at the AWWT. Process wastewater will be produced during initial dewatering of waste pits, waste excavation and handling operations and rotary dryer system operations. Storm water runoff currently being collected in the waste pit area will also continue to be processed through the existing wastewater treatment system via the waste pit storm water collection system.

A new industrial storm water outfall to Paddys Run was established during FDF's Site Improvement Activities for OU1. Discharges from this outfall will be comprised of overflows from the new storm water management basin that will be used to collect storm water runoff for the waste processing area. Establishment of this outfall constitutes a new point source discharge of industrial storm water, and as such is subject to the provisions of the Ohio EPA's NPDES permit program.

Process wastewater and storm water discharges associated with the OU1 remedial action will be treated at the AWWT to ensure compliance with the terms and condition of the existing NPDES permit. By permit condition, the DOE is required to notify the Ohio EPA of any activities or changes at the site which have the potential to significantly alter the character of the wastewater streams being discharged under its existing NPDES permit. A NPDES permit modification is required if the discharge is deemed significant enough to cause a change in the character of the wastewater stream. The DOE has evaluated process wastewater discharges associated with the OU1 remedial action and has determined that they are of significant nature to warrant a NPDES permit modification. The existing FEMP NPDES permit will be updated to reflect the addition of the new industrial storm water outfall to Paddys Run. Construction related storm water runoff will continue to be managed in accordance with the requirements of the existing FEMP NPDES permit and Storm Water Pollution Prevention Plan.

Compliance Demonstration. The DOE, USEPA and Ohio EPA have agreed that off-site wastewater discharges associated with the AWWT and any other point-source wastewater or storm water discharges to the Great Miami River or Paddys Run will continue to be permitted through the NPDES modification and renewal process. In order to comply with the requirements of this agreement, the existing FEMP NPDES permit will be renewed and/or modified to reflect process wastewater and storm water discharges associated with the OU1 remedial action. Table 3-2b describes NPDES-related permitting requirements associated with the OU-1 remediation.

Other Water Regulatory Issues

The existing NPDES permit will be modified by FDF to incorporate future discharges from OU1. Data, such as the volume and composition of all water discharges from the WPRAP OU1 remediation site, will be provided by IT and used to support these permit modifications.

3.3 Substantive RCRA Permitting Requirements

Applicability of RCRA Permit Program. Subtitle C of the Resource Conservation and Recovery Act (RCRA) requires that all hazardous waste treatment, storage or disposal facilities (TSDF) obtain RCRA Part A and Part B permits. Part A permits include basic information about the TSDF, such as its name, location and types of activities performed at the facility. Part B permits require more detailed information about the TSDF, and include the types of wastes to be handled, groundwater monitoring plans and facility design information. These permit requirements are established in 40 CFR 270 and reflect the requirements of 40 CFR 264. The administration of the RCRA permitting process has been delegated to the Ohio EPA.

Substantive RCRA Permitting Requirements Associated with the OU1 Remediation. The FEMP must characterize waste materials to determine whether or not they are hazardous in accordance with the requirements of 40 CFR 262.11 (OAC 3745-52-11).

The June 1996 Director's Findings and Orders between Ohio EPA and DOE specify that demonstration of compliance with substantive closure and post-closure requirements for hazardous waste management units will be documented in the remedial design and remedial action deliverables.

Compliance Demonstration. Excavation, size reduction, homogenization, blending and drying of OU1 pit wastes will be conducted to produce a single waste stream that will be shipped off-

site for disposal at a CDF. Prior to shipment, wastes will be analyzed to determine if they meet the CDF WAC. If, during waste acceptance criteria testing, RCRA characteristic wastes are identified, the waste will be segregated for turnover to FDF for subsequent handling and disposal in accordance with the applicable requirements of the hazardous waste regulations.

Substantive RCRA permitting requirements and hazardous waste management unit closure and post-closure requirements associated with the OU1 remedial action are addressed in Table 3-2c.

3.4 Substantive Permitting Requirements for Wetlands and Waters of the U.S.

Applicability of Clean Water Act Wetland Permit Programs. Pursuant to section 404 of the CWA, any activity that results in the discharge of dredge or fill material into waters of the U.S., including wetlands, requires permit authorization by the United States Army Corps of Engineers (ACOE). The ACOE authorizes dredge and fill activities within wetlands and other waters of the United States through the issuance of permit under its Nationwide or Individual Permit Programs (33 CFR Parts 330 and 332, respectively). In instances where discharges of dredge and fill material are associated with CERCLA removal and remedial actions, the ACOE has delegated responsibility for ensuring discharges are conducted in accordance with Sections 401 and 404 of the CWA to the USEPA.

In addition to the federally enforceable permitting requirements mandated under Section 404 of the CWA, individual states are delegated responsibility for ensuring discharges of dredged or fill material conducted within their border comply with the requirements of Section 401 of the CWA. In Ohio, the Section 401 State Water Quality Certification program is administered by the Ohio EPA pursuant to OAC 3745-32.

Substantive Permitting Requirements Associated with the Remedial Action. Impacts to wetlands and waters of the United States were considered during selection of the OU1 selected remedy as documented in the OU1 ROD. Although the DOE has avoided and minimized wetland impacts to the maximum extent practicable during its remedial design efforts, approximately 4.96 acres of headwaters and isolated jurisdictional wetlands will be dredged and/or filled as a result of the OU1 remedial action. Because the OU1 remedial action will result in the dredging and filling of these jurisdictional wetlands, the substantive permitting requirements mandated under the implementing regulation of the CWA Section 404 and 401 permit Programs are applicable to the OU1 remedial action.

Based upon review of ACOE Nationwide permits promulgated in Appendix A of 33 CFR Part 330, the DOE has determined that impacts associated with the OU1 remedial action meet the substantive terms and conditions of Nationwide Permit 26, and therefore would have been authorized under this Nationwide Permit in absence of the CERCLA Section 12(e) exemption. The Ohio EPA granted its corresponding Section 401 State Water Quality Certification for Nationwide Permit 26 in January 1992.

The specific terms and conditions of Nationwide Permit 26 that must be followed for discharges to be authorized under the Nationwide Permit are promulgated in Appendix A of 33 CFR Part 330. Of these, only those requirements which are deemed substantive in nature are considered applicable to the OU1 remedial action. Substantive permitting requirements mandated under the Ohio EPA's corresponding Section 401 State Water Quality Certification are limited to restrictions on the acreage of dredge and fill activities and on discharges to special aquatic areas such as bogs and fens. The substantive permitting requirements of Nationwide Permit 26 and its corresponding Section 401 State Water Quality Certification that are applicable to the OU1 remedial action are given in Table 3-2a.

Compliance Demonstration. The unavoidable 4.96 acre impact that will result from OU1 remedial action will be conducted in accordance with the substantive permitting requirements of Nationwide Permit 26 and its corresponding Section 401 State Water Quality Certification, including soil and erosion control and wetland mitigation. To avoid a piece-meal approach to mitigation, wetland impacts will be mitigated on a sitewide basis. Documentation addressing how specific mitigatory requirements will be addressed will be submitted pursuant to the schedule established in the OU5 Remedial Design Work Plan.

4.0 WASTE ACCEPTANCE CRITERIA

Several waste streams will be generated from the remedial activities that must meet various waste acceptance criteria. These waste streams will include:

- Solid waste (construction, D&D, pit wastes)
- Contaminated soil waste
- Wastewater
- Storm water.

The solid, soil and liquid waste streams will be sampled to ensure that they meet all onsite waste acceptance criteria before onsite disposal, or all CDF waste acceptance criteria before shipment

off site. The waste acceptance criteria for on-site transfer of waste water is discussed in Section 2.8.1. Storm water discharge criteria is also referenced in Section 2.8.1.

Disposition and waste acceptance criteria for construction waste are addressed in Section 6.0 of the Site Preparation Package. Disposition and WAC for D&D wastes will be addressed in the D&D Implementation Plan.

4.1 On-Site Disposal Facility

All OU1 waste, liners, and caps must go to the CDF for disposal in accordance with the ROD. All waste pit wastes are specifically excluded from disposal at the OSDF regardless of contaminant concentrations. Only residual contaminated soils generated from the OU1 remedial activities may be amenable to disposal in the On-Site Disposal Facility (OSDF). The waste acceptance criteria for on-site disposal were established in the following documents:

- Final Record of Decision (ROD) for remedial actions at Operable Unit 2 (OU2 ROD) - Established a radiological waste acceptance criteria of 346 picoCuries/gram (pCi/g) of uranium 238 or 1,030 milligrams per kilogram total uranium for materials destined for the OSDF.

- Final ROD for remedial actions at Operable Unit 3 (OU3 ROD) - Established a radiological waste acceptance criteria of 105 grams technetium-99 for Operable Unit 3 remediation debris.

- Final ROD for remedial actions at Operable Unit 5 (OU5 ROD) - Established radiological and chemical waste acceptance criteria for Operable Unit 5 remediation solids destined for the On-Site Disposal Facility (OSDF).

These waste acceptance criteria are summarized in Table 4-1. The remediation materials sent to the OSDF from Operable Unit 3 may also include small material contributions from Operable units 1 and 4. Any structural debris resulting from the D&D of the remediation facilities from these latter operable units destined for the OSDF must meet the Operable Unit 3 waste acceptance criteria.

The following physical criteria must be met for all materials sent to the OSDF:

- Materials from various building components (steel, concrete, masonry rubble, finish components, etc.) shall be segregated at the staging area

- The maximum length of irregularly shaped materials or other components of a building superstructure or finish components shall be 10 feet

- The maximum thickness of irregularly shaped metals or components of a building superstructure shall be 18 inches

- The maximum thickness of concrete or other components of a building slab or substructure shall be 18 inches when the materials are part of a load of similar materials

- The maximum thickness of an individual concrete member or other component of a building or slab or substructure shall be 4 feet. When the item is handled individually and is a regular shape having no concrete protrusions greater than 18 inches

- Concrete reinforcement bars shall be cut within nominal 12 inches of the concrete mass

- The maximum thickness of uniform pallets of building cladding (e.g., transite panels) properly banded into rectangular shapes shall be 4 feet

- Regulated asbestos containing material (ACM) shall be double-bagged at the source and delivered unmixed with other materials

- ACM brick and commingled debris shall be double-contained and segregated at the source

- Piping having insulation of ACM shall be segregated at the source and delivered unmixed with other materials

- General building rubble consisting of wood, drywall, HVAC systems, electrical systems, plumbing systems, and minor equipment shall be sufficiently reduced in size to be gradeable into an 18-inch (1.5 foot) lift by equipment similar to a Caterpillar D8 bulldozer

- Equipment shall be drained of all oils and liquids

- Piping with a nominal diameter of 12 inches or greater will be split in half

- The maximum dimension of general building rubble consisting of concrete, masonry, and other similar materials shall be 18 inches.

Impacted materials brought to the OSDF should not be at such a high moisture content that impacted material placement and compaction activities are impeded. Soil should have a moisture content that allows the material to be compacted to the required relative compaction using

standard soil compaction equipment and procedures. Soil should also have a moisture content that does not result in excessive "bleeding" of liquids.

The following are specifically prohibited from disposal in the OSDF:

- Impacted material exceeding the Waste Acceptance Criteria (WAC) in Table 4-1
- Impacted material that is "characteristically hazardous" ("RCRA characteristic waste"), excluding characteristic waste that has been treated so that it is no longer characteristically hazardous
- Material from any off-site source, except for laboratory wastes generated at off-site facilities resulting directly from the chemical, radiological, and engineering analysis of FEMP waste contaminated media or wastes generated at off site facilities during the conduct of treatability or demonstration type studies on FEMP material
- Pressurizable gas cylinders
- Process-related metals (OU3 ROD Category C materials)
- Product, residues, and other special materials (a subset of OU3 ROD Category J materials)
- Materials containing free liquids
- Intact drums (drums must be empty and crushed)
- Acid Brick (OU3 ROD Category F materials)
- Transformers, which have not been either crushed or had their void spaces filled with grout or other material approved by the Fluor Daniel Fernald Technical Representative
- Whole or shredded scrap tires
- Used oils
- Materials not accompanied by the appropriate transportation "manifest" information.

4.2 Commercial Disposal Facility

The majority of OU1 remediation waste will be suitable for disposal at an off-site Commercial Disposal Facility (CDF). The CDF will provide the procedures that must be followed to characterize the waste and to verify acceptability of the treated and blended waste for acceptance. Before waste shipment, the disposal facility will require a waste profile and waste samples to establish a baseline for future shipments. This will be accomplished using sampling and analyses of the waste streams to determine their disposition for disposal. About six months are expected to be required to gain initial acceptance of the wastes stream.

Analytical samples will be analyzed at the disposal facilities on-site laboratory. The OU1 on-site laboratory will be used to analyze treated waste samples prior to shipping to the CDF. Details of the sampling and analysis procedures and methodologies will be presented in the Sampling and Analysis Plan document.

The following criteria must be met for all materials sent to the CDF.

4.2.1 Physical Requirements

- Free Liquids - Radioactive waste containing free liquid shall not be accepted for disposal.

- Moisture Content - As-received dried waste shall have a moisture content within ±5 percent of the optimum moisture content as determined by the Standard Proctor test. The minimum moisture content is 5 to 7 percent to minimize dust generation.

  During the winter (December 1 through March 1), a drier product may need to be produced to prevent frozen railcars. Conversely, in the summer season, it is possible that less drying may be necessary.

- Amount of Debris - Debris is defined as any radioactive waste other than soils.

  Compactable debris:

  - Will pass through a 4-inch grizzly
  - Has a density greater than 70 pounds per cubic foot.

  Contaminated materials, other than soil, not meeting either of these criteria are defined as noncompactable debris. Wastes are limited to less than 10 percent by volume of compactable debris uniformly distributed throughout soil like wastes.

Noncompactable debris in the form of concrete, stone, or metal may be uniformly spaced in soil-like wastes up to 25 percent by volume.

The requirements for compactable and noncompactable debris apply as a whole to an entire unit train.

- Size of Debris - All debris shall be less than 10 inches in at least one dimension, and no longer than 8 feet in any other dimension.

4.2.2 Radiological Requirements

Specific Radionuclides

- The following radionuclides are commonly found at the FEMP:

  - U-235
  - U-238
  - Th-230
  - Th-232
  - Th-234
  - Ra-226
  - Ra-228.

- For a material containing a mixture of radionuclides (e.g., A, B, and C) with respective concentrations (e.g., C_A, C_B, C_C), having the Maximum Average Waste Concentrations (MAWC) noted in Table 4-2, the following relationship must be met:

$$\frac{C_A}{MWC_A} + \frac{C_B}{MWC_B} + \frac{C_C}{MWC_C} \leq 1$$

- Radiological analyses, to date, show that homogenized, processed OU1 material will not exceed the maximum permitted average concentrations for all radionuclides.

  Waste shipments arriving at the CDF will be checked for radiological parameters vis-a-vis the established acceptance criteria. For radiological parameters, the data from the total number of checked shipping conveyances are averaged. Thus, samples from some of the conveyances may be up to 10 times higher than the acceptance criteria, provided that the average is within the limits of the Maximum Average Waste Concentration (MAWC).

Mixed Radionuclides

- The CDF must not dispose of substances until it has been determined that the concentration of radionuclides is approximately uniform except for debris superficially contaminated with radionuclides. The waste shall have approximately homogeneous

characteristics for each radionuclide within each batch of materials, subject to the maximum radionuclide-specific limitations in the above-noted requirements.

4.2.3 Chemical Requirements

- Hazardous Waste Determination - Chemical analyses performed on the pit waste using the TCLP method indicates that the pits do not contain RCRA-characteristic waste. However, isolated pockets of hazardous substances may exist with concentrations that exceed the RCRA limits. Wastes will be characterized in accordance with the USEPA's hazardous waste regulations and the CDF's waste acceptance criteria. Materials determined to be mixed wastes will be loaded into boxes and managed as non-typical wastes.

- Incoming-Shipment Acceptance Parameters - In addition to all of the parameters noted in this Section, concentrations of the following parameters determined by acceptance testing of shipments must correspond to measurements taken from pre-shipment samples:

  - Photoionizer "sniffer"
  - Air reactivity
  - Water reactivity
  - Paint filter liquid test or visual appearance
  - Pyrophoricity
  - Oxidizer/reducer
  - Shock sensitivity
  - Solid/soil pH
  - Cyanide test
  - Sulfide test.

- Asbestos - Wastes regulated as asbestos may not be accepted. However, this requirement does not prohibit the facility from accepting radioactive waste with some asbestos contamination. Such waste may be accepted on a case by case basis. Although a small portion of the OU1 waste may contain asbestos, the total is less than the regulatory threshold of one per cent. If readily separable asbestos-like material (e.g., double bagged material placed in Waste Pit 6) is encountered, this material should be managed as non-typical wastes.

- Polychlorinated Biphenyls - Polychlorinated biphenyl (PCB) contaminated wastes will not be accepted unless the PCB concentrations meet municipal solid waste disposal levels (less than 50 ppm). Wastes that exceed the 50 ppm regulatory threshold are not expected to be encountered. If PCB contaminated material is encountered, it should be managed as non-typical wastes.

- Chelating Agents - Chelating agents may be used at less than 0.1 percent by weight.

- Other - Wastes containing LLRW pathogens, infectious wastes, or other etiologic agents may not be sent to the CDF.

5.0 APPLICABLE DOE ORDERS

Components and systems will be designed, tested , and installed in accordance with the codes and standards listed in Tables 5-1 and 5-2, as applicable. Applicability will be based upon standard industrial practice or as required by applicable codes or DOE Orders. Where IT proposes using existing or pre-engineered components or systems that do not conform to the applicable codes or standards, IT will document the codes or standards that were applied along with a justification for differing from the requirements.

Use of the latest editions or revisions of the codes and standards listed in Tables 5-1 and 5-2 shall be followed as applicable to the design, fabrication, assembly, and testing of all equipment furnished. Items that are not covered by the specifications and codes shall be in accordance with the individual manufacturer's standards and regulations as the manufacturer and IT, in the exercise of their knowledge, deems appropriate to produce a safe and reliable system.

6.0 PRE-OPERATIONAL D&D MEASURES

The requirements of the D&D phase will be incorporated into the pre-operational activities, including provisions in the design to maximize free release and recycling of materials. A listing of the pre-operational measures include:

Equipment

- Minimize and/or eliminate, to the extent feasibly possible, inaccessible areas as part of the equipment design and selection.

- Cover or protect, to the extent feasibly possible, inaccessible areas that remain using methods that include:

  - Smoothing out welds and rough surfaces
  - Using protective barriers to cover areas such as hydraulic and pneumatic fittings, grooved casing, and wiring bundles

  - Using strippable coatings on accessible porous materials and areas of high contamination potential, example - counterweights on heavy equipment.

  - Implementing an effective maintenance program to include the installation, frequent monitoring and replacement of filters on all air intakes.

- Minimize on-site equipment—repair and standby equipment to be kept in "clean" areas until required.

- Select and use of low porosity materials where feasible.

Facilities

- The main waste processing handling and railcar loadout building floors will be constructed of a high-density concrete to reduce the porous nature of the material. A sealer will be applied to the floor slab in facilities where wetted waste material can be expected to be received and stored (i.e. waste receiving/mixing bins in the Material Handling Building) to improve the chemical resistance of the concrete.

- Floor joints will be sealed to control effluents.

- Select material with a smooth surface for the construction of the process facilities.

- Include ease of decontamination as a factor in the design and selection of construction materials.

- Optimize use of walls or partial walls.

- Utilize effective flow logic to minimize spread of contamination and efficient D&D.

- Maximize "clean" access for personnel, deliveries, and storage.

- Maintain a clean area control room.

Haul Roads

- Install roadside berms to minimize the migration of contamination.

- Use effective flow logic for waste transportation within the OU1 work area to minimize the surface area of contaminated haul roads (e.g. provide access to several pits from the same haul road).

Operational Measures. During operations, standard operating procedures will provide direction for controlling the spread of contamination. A list of Standard Operating Procedures (SOPs) will be provided in the O&M Plan for Remediation Facilities. Provisions in the operational phase will include:

Equipment

- Control of the potential for cross-contamination of excavation equipment by designating equipment for the exclusive use in specific areas and waste pits.

- Develop, implement, and maintain a program for routine cleaning of equipment.
- Use effective containment and control methods during equipment maintenance and repair.
- Implement and maintain an effective materials management system.
- Ongoing decontamination of nonessential equipment.

Facilities

- Perform routine general; housekeeping activities within the facility.
- Provide additional training for employees on ALARA methods, decontamination, and contamination control.
- Modify and/or improve equipment promptly for better control of contamination.
- Use effective contamination control methods during maintenance and repair, including containments and localized ventilation.

Haul Roads

- Minimize traffic on contaminated haul roads.
- Maintain a truck wheel wash facility at the pit area exit.
- Utilize a paved haul road with berms to minimize the spread of contamination from the truck wheel wash facility to the Material Handling Building.

7.0 DESIGN CRITERIA

7.1 Process

Process design activities include the development of the project conceptual flowsheets, heat and material balances, and initial process equipment sizing.

7.1.1 Codes, Standards, and Regulations

No specific codes or standards apply to the process design beyond the ARARs listed in Tables 3-1 and 3-2, as well as those listed in the mechanical and material handling sections.

7.1.2 Design Criteria

1669

The design criteria for the process includes remedial activities such as excavation, stockpiling, waste preparations, rotary dryer operation, air pollution control operation, treated material discharge, and loadout.

See Section 2.0 for process-related design criteria.

Process Parameters Table

Operation	Operating Times	Design Rates
Mechanical Excavation	8 hours/day, 5 days/week	100 tons/hour
Waste Preparation Facility Production	24 hours/day, 7 days/week max.	100 tons/hour
Rotary Dryer Feed Handling	24 hours/day, 5-7 days/week	10-30 tons/hour
Rotary Dryer Product Handling	24 hours/day, 5-7 days/week	9-24 tons/hour
Moisture Removal from Gas Cleaning System	24 hours/day, 5-7 days/week	4-10 tons/hour
Loadout	2 shifts/day - 5 days/week	864 tons/day

7.2 Mechanical

Mechanical design activities include process equipment sizing, process equipment layout, and general mechanical utilities (i.e., heating, ventilation and/or air conditioning).

Development of specifications of the following equipment will be performed as part of the mechanical (and process) design activities:

- Rotary dryers
- Conveyors
- Waste feeders
- Fans/blowers
- Stacks
- Tanks (storage and capture)
- Pumps
- Air compressors (plant and instrument air)
- Heat exchangers
- Precipitator filters (wet electrostatic)
- Scrubber/quench
- HEPA filters
- Cooling tower.

000124

Equipment will be designed to ensure proper capacities, tie-in with utilities, weatherability and operational balance.

Codes, Standards and Regulations. Components and systems will be designed, tested, and installed in accordance with the following codes and standards, as applicable. Applicability will be based upon standard industrial practice or as required by applicable codes or DOE orders. Where IT proposes using existing or pre-engineered components or systems that do not conform to the applicable codes or standards, IT will document the codes or standards that were applied along with a justification for differing from the requirements:

- Bearings
  - American Bearing Manufacturers Association, Inc. (ABMA)
- Gears
  - American Gear Manufacturers Association (AGMA)
- Motors
  - Institute of Electrical and Electronics Engineers (IEEE)
- Air Handling Equipment
  - Air Movement and Control Association (AMCA)
  - American National Standards Institute (ANSI)
  - American Society of Mechanical Engineers (ASME)
  - American Society for Testing and Materials (ASTM)
  - Sheet Metal and Air Conditioning Contractors national Association (SMACNA)
  - Energy Research and Development Administration (ERDA)
- Pipe, Fittings, Valves, and Accessories
  - ASME
  - ASTM
  - ANSI
  - Expansion Joint Manufacturer's Association (EJMA)
  - American Society for Nondestructive Testing (ASNT)
  - Manufacturers Standardization Society (MSS)
- Tanks and Pressure Vessels
  - ASME
  - American Petroleum Institute (API)
- Pumps
  - ASME
  - Hydraulic Institute Standards - 1995

- ANSI (for water pumps with flow less than 400 gpm and discharge pressure less than 250 psig)

- Heat Exchangers
  - Tubular Exchanger Manufacturers Association (TEMA)

Design Criteria. All process equipment will be designed, constructed and installed in accordance with the appropriate codes, standards and regulations listed above. Equipment will be designed to incorporate personnel access for maintenance and a range of environmental conditions (temperature, wind, etc.).

Design of mechanical systems will consider the use of secondary containment to restrict movement of radioactive liquid waste that has the potential for human contact or reducing groundwater quality. Materials will be designed for corrosion resistance and ease of decontamination.

Mechanical design activities will also include the following facility equipment:

- HVAC
- Air cleaning (filtration)
- Process water
- Natural gas
- Fuel oil
- Plant air
- Instrument air
- Caustic
- Fire protection
- Plumbing.

Codes, Standards and Regulations. Components and systems will be designed, tested, and installed in accordance with the following codes and standards, as applicable. Applicability will be based upon standard industrial practice or as required by applicable codes of DOE orders. Where IT proposes using existing or pre-engineered components or systems that do not conform to the applicable codes or standards, IT will document the codes or standards that were applied along with a justification for differing from the requirements:

1) AMCA - Air Movement and Control Association
2) ANSI - American National Standards Institute
3) ASME - American Society of Mechanical Engineers
4) ASTM - American Society for Testing and Materials

5) SMACNA - Sheet Metal and Air Conditioning Contractors National Association
6) ERDA - Energy Research and Development Association
7) EJMA - Expansion Joint Manufacturer's Association
8) ASNT - American Society for Nondestructive Testing
9) MSS - Manufacturers Standardization Society
10) AWWA - American Water Works Association
11) NFPA - National Fire Protection Agency
12) AWS - American Welding Society
13) NFC - National Fuel Code
14) UL - Underwriters Laboratories
15) Ohio Basic Building Code
16) DOE Order 420.1 - Fire Protection for Relocatable Structures
17) DOE Standard 1088-95 - Fire Protection for Relocatable Structures.

Design Criteria

HVAC. HVAC systems shall be designed, tested and installed in accordance with applicable requirements of UL 778 - Motor Operated Water Pumps, NFPA 70 - National Electrical Code, ASTM, ASME, and ANSI. The air handling equipment codes cited previously will be applied to HVAC systems.

Fire Detection/Suppression Systems. Fire detection/suppression systems will be designed, tested and installed according to the Ohio Basic Building code (latest edition), NFC, NFPA, DOE Order 420.1, and DOE Standard 1088-95, Fire Protection for Relocatable Structures.

Potable Water. Piping will be installed for locations requiring emergency eyewash stations, emergency showers or other potable water equipment.

Backflow preventers will be installed on process water lines at the tie-in point to the lines and wherever a potable water branch line is connected to the process water line.

Totalizers/meters, with isolation valves, will be installed on all tie-ins to natural gas lines and process water lines.

Fuel Storage/Dispensing Facilities and Fuel Oil/Diesel. Fuel storage tanks and lines will be designed, tested and installed according to the ASME, API, NFC, and ASTM requirements. Fuel storage/dispensing facilities must also meet applicable USEPA and NFPA requirements. The

fuel loading system will be designed such that fuel vendors do not enter a contamination zone to deliver and off-load fuels.

7.2.3 Piping

Piping will be a mechanical design activity and will include the specification of pipes, fittings, valves, pipe supports/anchors and piping equipment and insulation.

Codes, Standards and Regulations. Components and systems will be designed, tested, and installed in accordance with the following codes and standards, as applicable. Applicability will be based upon standard industrial practice or as required by applicable codes of DOE orders. Where IT proposes using existing or pre-engineered components or systems that do not conform to the applicable codes or standards, IT will document the codes or standards that were applied along with a justification for differing from the requirements:

1) ASME - American Society of Mechanical Engineers
2) ASTM - American Society for Testing and Materials
3) ANSI - American National Standards Institute
4) EJMA - Expansion Joint Manufacturer's Association
5) ASNT - American Society for Nondestructive Testing
6) MSS - Manufacturers Standardization Society
7) Ohio Basic Building Code (plumbing)

Design Criteria. All piping will be designed to withstand dynamic conditions (wind, vibration, thermal extremes, flow, solids settling, corrosion) as well as static conditions (dead loads, test loads, etc.) in accordance with the proper codes and standards. Piping will be insulated for freeze protection where required.

7.2.4 Materials Handling

The Materials Handling will be a mechanical design activity and will include the design of the solids handling and waste processing equipment such as hoppers, conveyors, feeders and shredders.

Codes, Standards and Regulations. Components and systems will be designed, tested, and installed in accordance with the following codes and standards, as applicable. Applicability will be based upon standard industrial practice or as required by applicable codes of DOE orders. Where IT proposes using existing or pre-engineered components or systems that do not conform

to the applicable codes or standards, IT will document the codes or standards that were applied along with a justification for differing from the requirements:

1) CEMA - Conveyor Equipment Manufacturers Association
2) OAC-3745-17-07(B)
3) OAC-3745-17-08(B)
4) ANSI - American National Standards Institute
5) AGMA - American Gear Manufacturers Association
6) ABMA - American Bearing Manufacturers Association
DOE 5480.2 - Safety Requirements for the Packaging and Transportation of Hazardous Materials

Design Criteria. All equipment and processes shall be designed to conform with the applicable codes, standards and regulations listed above.

7.3 Civil Design Basis

7.3.1 Geotechnical

Allowable Bearing Pressure. Based on the Geotechnical Boring and Analysis Report.

Frost Penetration. 36 inches.

Minimum Cover for Underground Piping. 42 inches.

Foundation Preparation.

- Class I Structural Fill - Beneath equipment, slabs, foundations, tanks, roads, parking areas, turnarounds, etc. Placed in uniform layers not exceeding 9 inches loose thickness. Each layer compacted to a dry density equal to 95 percent of the dry density obtained by compaction using ASTM D698.

- Class II Structural Fill - Around foundations, dikes, embankments, etc. Placed in uniform layers not exceeding 10 inches loose thickness. Each layer compacted to a dry density equal to 90 percent of the dry density obtained by compaction using ASTM D698.

- Class III Nonstructural Fill - Operations where no equipment is planned and grading is only required to reach specific elevations. Placed in uniform layers not exceeding 14

inches loose thickness. Each layer compacted uniformly by earth moving and spreading equipment.

Erosion Control

- Permanent or temporary measures will be implemented to prevent erosion (both wind and water) and control sediment during site preparation and construction.
- Erosion/sediment control measures will be maintained throughout the duration of the work. ODOT standards for control measures will be followed.
- Erosion control will be consistent with the Rainwater and Land Development, Ohio's Standards for Storm Water Management and Stream Protection, 1995 and the Fluor Daniel Fernald, Inc. Storm Water Pollution Prevention Plan (SWPPP).
- Erosion control features will be in place prior to any disturbance of the soil in the work area.

7.3.2 Access Roads and Fencing

Applicable Codes

- Ohio Department of Transportation (ODOT) specification and standards
- American Association of Highway and Transportation Official (AASHTO) Geometric Design of Highways and Streets.

Design Vehicle. WB-50 (55-foot semitrailer) for selected areas, P for selected areas, articulating dump trucks for waste pit area and haul road.

Design Speed. 15 mph.

Minimum Turning Radius. To suit the requirement of the expected vehicular traffic i.e., 50 feet for WB-50, 25 feet for P, and 20 feet for articulating dump trucks.

Width.
- 20 feet - two-way traffic
- 12 feet - one-way traffic.

Cross Slope. 1/4 inch per foot

Minimum Slope. 0.5 percent

Maximum Slope.
- Plant area 8 percent

- Pit area 18 percent

Surfacing

- Haul Road - Bituminous ashpalt or concrete.
- Light Service Roads - crushed rock.
- Heavy Service Roads and Pit Access Roads - Rock / gravel.
- Sidewalks - Bituminous asphalt or concrete.

Overhead Clearance. 18 feet over roads and 18 feet over railroad tracks.

Roads

- Emergency vehicle access roads will be provided so the perimeter of a portable structure is not more than 150 feet from the nearest roadway.

- All vehicle access roads will be a minimum of 20 feet clear in width. Roads of less than 30 feet in width will be posted as "Fire Lane No Parking".

- Structures within 10 feet of a roadway will be protected from impact.

Fencing

- Security fences will not restrict emergency access or exit.

- Radiological Control fencing is required around the entire perimeter of the work area.

- Radiological Control fencing will be constructed similar to snow fencing.

- All fencing will be installed according to manufacturer's instructions.

- All fencing will be designed and manufactured in accordance with ASTM codes and standards.

- Snow fence will be orange for construction fencing or yellow for radiological boundaries and 4 feet high. Fencing material shall be as follows:

  Material: High density polyethylene
  Ultraviolet: Fully stabilized.

- Snow fence posts will be No. 5 rebar with orange plastic protective end caps spaced no more than 8 feet apart and electric tie-wraps to secure fencing.

7.3.3 Laying Out of Work

000131

- The construction and the rights of way of work will be staked out and dimensions relating to the interconnection with existing features will be verified.

- Any inconsistencies in the dimensions of the existing site features or utility locations will be communicated to the Fluor Daniel Fernald, Inc. Technical Representative for review and approval prior to commencing work.

7.3.4 Identification and Relocation of Utilities

- IT will verify the location of all buried utilities, cable, pipes, and wire that may be located in the area of work and repair any underground utilities damaged by the subcontractor during execution of the work.

7.3.5 Site Clearing

- Clearing includes the removal and disposal of large debris that obtrude, encroach upon, or otherwise obstruct the work. Loose rocks, boulders, or rock piles present on the surface of the areas designated to be cleared shall be distributed and incorporated into the filling operation.

- All areas to be cleared will be clearly marked prior to beginning clearing.

- The remediation facility will be arranged to reduce the amount of clearing required.

- Work will be performed in accordance with ODOT standards.

- Topsoil will be removed and salvaged for reuse where possible.

- Material that cannot be reused will be disposed of as described in the Site Preparation Package (e.g., Sections 3.2 and 6.0).

7.3.6 Earthwork (Except Pit Excavation)

- Earthwork includes all grading, excavation, compaction, trenching, and filling, and will be performed to conform to ODOT standards.

- Trenching and open pit excavations will conform to Occupational Safety and Health Administration (OSHA) standards, 29 CFR Part 1926.

- Where feasible, permanent slopes shall be a minimum of 0.5 percent for impervious surfaces, 2 percent for vegetated surfaces, and a minimum of 3 horizontal to 1 vertical (3H:1V) for slopes of cohesionless soils, with no vegetative cover present.

- Cut and fill will be planned to avoid, if possible, adding any new material to the work area.

- IT will minimize the creation of additional wastes and excessive earthwork.
- Backfill material may be obtained from an off-site borrow area.
- Any excess or temporarily unused materials will be stockpiled as described in the Site Preparation Package (e.g., Section 3.2).

7.3.7 Dust Suppression

- All excavation, embankments, haul roads, plant sites, waste disposal areas, borrow areas, and all other areas within the work area will be maintained so as to minimize the creation and dispersion of dust in accordance with the FEMP Sitewide Dust Control Policy.
- In general, water or other substances used for dust suppression will not increase the concentration of contamination in the area where the water is being applied. Storm water from the storm water management pond (located in the northern half of the process area) may be used to suppress dust during site preparation and construction activities.
- Trucks used for transporting excavated or borrow material will be equipped with covers or some other means to control dust from the cargo. If dust levels are significant, per applicable requirements of the OAC, the covers or other acceptable method shall be implemented to prevent the generation of dust.
- Dust suppressant will be applied in accordance with the procedures for dust control described in the Pre-Operational Environmental Control Plan.

7.4 Structural Design Basis

7.4.1 Codes, Standards, and Regulations

Components and systems will be designed, tested, and installed in accordance with the following codes and standards, as applicable. Applicability will be based upon standard industrial practice or as required by applicable codes of DOE orders. Where IT proposes using existing or pre-engineered components or systems that do not conform to the applicable codes or standards, IT will document the codes or standards that were applied along with a justification for differing from the requirements:

- American Institute of Steel Construction (AISC) - Specification for the Design, Fabrication, and Erection of Structural Steel for Buildings

000133

1669

- AISC - Manual of Steel Construction, Latest Edition
- AISC - Code of Standard Practice for Steel Buildings
- AISC - Specification for Structural Connections using ASTM A325 Bolts
- American Concrete Institute (ACI) 301 - Specifications for Structural Concrete for Buildings
- ACI 318 - Building Code Requirements for Reinforced Concrete, latest edition
- ACI 347 - Recommended Practice for Concrete Formwork
- American Society of Civil Engineers (ASCE), 7-93, "Minimum Design Loads for Buildings and Other Structures"
- American Society for Testing and Materials (ASTM) - Applicable "Standards"
- Concrete Reinforcing Steel Institute (CRSI) - Applicable Codes
- ACI - Applicable "Recommended Practice"
- American Welding Society (AWS) 1.1D - Structural Welding Code
- Occupational Safety and Health Administration (OSHA), CFR29
- Ohio Basic Building Code (OBBC), latest edition
- Steel Deck Institute (SDI) Publications
- Steel Joist Institute (SJI) Publications
- All applicable local and state codes
- Specific codes or specifications delineated on drawings, requisitions, etc.

7.4.2 Design Load

- Dead load - Actual operating weight of equipment, materials and support structures.
- Live loads - Largest loads produced in accordance with their intended use and not less than the minimum live loads presented below.

000134

- Minimum Design Loads

- Ground floor:	125 psf
- Roof:	20 psf
- Snow Loads:	25 psf Exposure factor 0.7 Importance factor 1.00
- Platforms and walkways:	75 psf
- Windloads:	80 mph basic wind speed Exposure "C" Importance Factor 1.00

- Wind Load - The following combinations of loading conditions shall be considered in the design of enclosed or open-sided structures, wherever applicable:

  - Dead load + live load
  - Dead load + live load + wind/earthquake load
  - Dead load + wind/earthquake load
  - The design stresses for members subjected to wind (or earthquake) combined with any other loads shall be increased not more than 33-1/3 percent provided that the members thus required are not less than those necessary for the combination of dead load + live load + impact (if any) computed without the 33-1/3 percent.

- Dynamic loads - Careful attention shall be given to any loading condition or equipment which includes vibrating or reaction loads due to movement of fluids or solids in pipe lines and equipment, reciprocating engines, agitators, etc.

- Piping loads - An additional live load of 15 psf, uniformly distributed, shall be added to the design load at each floor.

- Impact loads - An additional increase must be applied to each member which carries the load. The safe operating load must be indicated on the design drawings and on the crane, davits, or trolley beams.

- Seismic Design and Evaluation will be performed in accordance with OBBC Section 1612.0.

7.4.3 Structural Materials

- Structural steel - ASTM designation A-36. Design shall conform to AISC specification.
- Bolts and nuts - AISC specification A325 bearing type, thread in shear plane.
- Floor grating - Rectangular bar type.
- Reinforced concrete - Footings - 3,000 psi (min.); Wall, Piers, and Slabs - 4,000 psi.
- Reinforcing steel - ASTM specification A-615 (Grade 60).
- Concrete finish - Interior Slabs - troweled finish three passes; Exterior Slabs - broomed finish or as noted on drawings.
- Grout - Nonshrink type grout to be specified suitable for the respective applications.
- Framing members, columns, and connections - Total load (live load and dead load) over the total surface of the pipe rack, for 8-inch pipe size or larger to be the actual weight of the pipes and 30 psf for pipes smaller than 8-inch size. Load for electrical areas will be 30 psf.

7.5 Architectural Design Basis

7.5.1 Codes, Standards, and Regulations

Components and systems will be designed, tested, and installed in accordance with the following codes and standards, as applicable. Applicability will be based upon standard industrial practice or as required by applicable codes of DOE orders. Where IT proposes using existing or pre-engineered components or systems that do not conform to the applicable codes or standards, IT will document the codes or standards that were applied along with a justification for differing from the requirements:

- OBBC 1995
- UBC 1997
- NFPA 101, Life Safety Code
- NFPA 13, Standard for Installation of Sprinkler Systems
- BMA - Recommended Design Practice Manual
- 40 CFR 101-19.6, "Uniform Federal Accessibility Standards"
- Performance Criteria for Roofing Membranes Using Polymer Modified Bituminous Products
- Recommended Work Procedures for Resilient Floor Covering
- Architectural Painting and Wall Covering Manual.

- AISC - applicable codes
- ACI - applicable codes
- ASTM - applicable codes
- ANSI - applicable codes.

7.5.2 Pre-Engineered Buildings

7.5.2.1 Material Handling Building

Structure. The Material Handling Building will consist of a pre-engineered, rigid-frame steel structure measuring 170 feet in width and 360 feet in length with an approximate eave height of 23 feet. The southern end of the building will abut against the northern end of the Railcar Loadout Building. This end will be fully enclosed except for the entrance into the building. The western side will have two door openings where material will enter the building. The building will be designed with side wall openings and full-length ridge-roof ventilators.

Flooring. The floor will consist of sloped reinforced concrete slabs designed to withstand the anticipated loads. A series of trench drains and sumps will be provided to collect water which may permeate from the stored material and wash water from regularly scheduled housekeeping activities.

Mixing Pits. Trucks will turn-around in the area provided and back to the door openings, raise their beds, and deposit the contents into one of two mixing pits based on the CDF WAC. The outside area will ramp up to the facility to create a 6 foot drop into the building. The mixing pits will be 30 feet by 60 feet and 6 feet deep, 3 feet below and 3 feet above the floor. The two pits will be separated by a concrete wall and will have sumps in them for draining of moisture. The waste material will then be transferred to one of five different bins.

Storage Area. The storage of material will occur along the eastern side of the building. A series of six storage bins will be partitioned using precast concrete traffic (Jersey) barriers. The outer bin walls will measure fourteen feet in height and the lower seven feet will consist of reinforced concrete to sustain the anticipated impact loads due to loading and unloading. The upper seven feet will consist of steel plating stiffened with angles or channels. The bins will receive material based on the CDF WAC. One of the bins will occasionally be used to store material conveyed into the building from OU1. The material will then be transported to the material processing area.

7.5.2.2 Railcar Loadout Building

Structure. The Railcar Loadout Building will consist of a pre-engineered, rigid-frame steel structure measuring 120 feet in width and 230 feet in length with an approximate eave height of 22 feet. One end of the building will abut against the southern end of the Material Handling Building. This end will be fully enclosed except for the entrance into the building (through the railcar decontamination area) located at the northeast corner. The eastern side of the building will have siding up to a level of sixteen feet. The southern end of the building will abut the northern end of the Railcar Preparation and Liner Storage Building. This end will also be fully enclosed. The western side of this building will have siding up to a level of sixteen feet. The upper seven feet of the east and west walls will remain open and a continuous ridge vent will be provided so that adequate ventilation is achieved while preventing wind dispersion of dried materials.

Flooring. The floor will consist of a reinforced concrete slab designed to withstand the anticipated loads. Curbs and sumps will be provided to contain, collect, and remove wash water from regularly scheduled housekeeping activities.

During the final design phase, various coatings will be evaluated for both the structure and floor slab to facilitate cleaning and decontamination activities.

Storage Area. The storage of dried materials and debris will occur along the western side of the building. A series of six storage bins will be sized to provide one-day storage (approximately 600 tons). These bins will be constructed of steel soldier beams with reinforced concrete and steel crib walls. The bin walls will measure approximately 14-feet in height with the lower portion of reinforced concrete to sustain the anticipated impact loads due to loading and unloading. The upper section will consist of steel plating stiffened with angles or channels.

Decontamination and Lid Removal Area. The railcar decontamination and lid removal area will be located in the northeast corner of this facility. This area will be partitioned off from the remaining portions of the building and will be equipped with a 4-ton (minimum) bridge crane for lid removal and replacement, elevated walkways and piping to facilitate lid removal and decontamination procedures, and collection sumps and pump for collecting and removing wash water.

Loadout and Weighing Area. The loadout and weighing area will be located in the central portion of the building and will make use of the existing loadout slab and scale installed by FDF in 1997. A water mist system will also be installed to provided for dust suppression. Existing sumps will be used to collect any over spray from the mister and wash water from clean up of spillage during routine housekeeping activities.

7.5.2.3 Railcar Preparation and Liner Storage Building

Structure. This preparation and storage building will consist of a pre-engineered, rigid-frame steel structure 60 feet in width and 120 feet in length with an approximate eave height of 22 feet. The northern end of the building will abut against the southern end of the Railcar Loadout Building. This building will be fully enclosed with entrances into the building for railcars, delivery of materials, and personnel access.

Flooring. The floor will consist of a reinforced concrete slab designed to withstand the anticipated loads. Curbs and sumps will be provided to contain, collect, and remove wash water from regularly scheduled housekeeping activities.

Liner Area. The liner installation area will be located in the northern end of this building as will an area to store and repair lids, if necessary. Platforms will be provided to assist with the installation of the railcar liners and lid removal and replacement. A 4-ton monorail crane will also be provided to remove and replace lids which require repair and to also act as a backup in the event that the crane located in the lid removal area is out of service.

Storage Area. The storage area will be located in the southern portion of this building.

7.5.2.4 Railcar Survey Area

The Railcar Survey Area will be located north of the railcar decontamination area and will abut the southeast corner of the Material Handling Building. This structure will consist only of a canopy under which radiological surveys may be conducted prior to release for transport.

7.5.2.5 Gas Cleaning System / Water treatment System (GCS/WTS) Building

The GCS/WTS Building will consist of a pre-engineered, rigid-frame steel structure measuring 130 feet long and 110 feet wide with open sides. The eave height will be based on the final design. The building will be designed with sidewall openings and full length ridge ventilators.

7.5.2.6 Maintenance Building

The Maintenance Building will consist of a pre-engineered, rigid-frame steel structure measuring 80 feet long by 40 feet wide with an approximate eave height of 20 feet. It will be located to the west of the GCS/WTS building and adjacent to the equipment decontamination pad. Both the haul roads and service roads will provide access to the building.

7.5.2.7 Warehouse

The warehouse facility will consist of a pre-engineered, rigid-frame steel structure measuring 60 feet in length and 40 feet in width with an approximate eave height of 20 feet. This facility will have an office and a mezzanine storage level. It will be located to the west of the railcar liner storage building. It will be a fully enclosed building.

7.5.2.8 Laboratory

The laboratory building will consist of a pre-engineered, rigid-frame steel structure measuring 80 feet long and 50 feet wide. The eave height will be approximately 20 feet. The laboratory will be at the south end of the project area.

7.5.3 Portable Structures

Portable structures shall consist of prefabricated trailers and will be utilized for the following facilities:

- Superintendent's office trailer
- Laundry facility
- Respirator wash facility
- Changeout facility
- Break room
- Administrative office facility.

Portable structures will comply with the following requirements:

- Each portable structure will have support and anchoring systems that will resist overturning and lateral movement of the unit. Support and anchoring equipment shall be in accordance with manufacturer's specifications or an anchoring system designed and stamped by a registered professional engineer.

- Portable structures will be identified by a unique, alphanumeric marking on each side of the unit consisting of a painted 14-inch x 14-inch orange square, bordered by a 1-inch black border, with identification marking in black characters, ½-inch or wider and at least 4-inches high within the orange square.

000140

- Each portable structure will have the area under the floor enclosed to prevent the accumulation of windblown debris and to prevent the space from being used for storage. Semi-trailers used exclusively for storage will require orange snow fence or similar skirting to prevent accumulation of debris. The skirting will be of noncombustible material and without openings.

- Stairs, ramps and platforms will be constructed of weather-resistant lumber or other weather-resistant materials. All stairs will comply with OSHA Subparts D & E and NFPA 101.

- Plumbing and sanitation facilities will meet state and local code requirements.

- All electrical conductors and equipment will be in accordance with the latest edition of NFPA 70, "National Electric Code".

- Heating and cooling equipment will be UL listed or labeled, and installed in accordance with its listed design and appropriate standards. Only electric or steam units will be installed.

- All normally occupied portable structures will have a minimum of two exits remote from each other unless the maximum occupancy is ten persons or less and provided the travel distance to the outside shall not exceed 75 feet.

- The minimum width of any corridor, or main aisle-way exit passageway, or primary aisle-way will be 44 inches. The minimum width of any aisle serving to gain access to a corridor or exit passageway shall be 36 inches in the clear. No door opening in the means of egress shall be less than 32 inches in clear width.

- Doors will be arranged to be readily opened from the egress side whenever the structure is occupied.

- Exits will be marked by an approved sign readily visible from any direction of exit access. An exception is the main exterior doors that are obvious and clearly identified as exits.

- All complexes will be located so that fire fighting equipment is not blocked from access to adjacent structures.

- Portable structures will not be located within 50 feet of a fire hydrant. All exterior portions of the structure will be within 300 feet of a hydrant in a hydrated area.

- Portable structures will not be located over control valves, manholes serving underground utility systems, gas mains, water mains, or utility corridors or beneath vital power lines/utilities or any power lines over 600 volts.

000141

- NFPA 80A will be used to determine minimum separation distances between fire areas. NFPA 80A will be used to determine the required separation distances between a portable structure and a permanent building.

- Fire alarms, Emergency Message System, and evacuation alarms will be installed as required by 29 CFR 110.155.

- Portable structures will meet the requirements of the Ohio Basic Building Code (OBBC) or DOE STD 1088-95 "Fire Protection for Relocatable Structures."

7.6 Electrical

7.6.1 Power

Electrical design activities will include all electrical power distribution, connections, backup power supply, grounding systems, facility lighting, and instrumentation systems.

Codes, Standards and Regulations. Components and systems will be designed, tested, and installed in accordance with the following codes and standards, as applicable. Applicability will be based upon standard industrial practice or as required by applicable codes of DOE orders. Where IT proposes using existing or pre-engineered components or systems that do not conform to the applicable codes or standards, IT will document the codes or standards that were applied along with a justification for differing from the requirements:

1) NEC - National Electric Code
2) UL - Underwriters Laboratories
3) ANSI - American National Standards Institute
4) NEMA - National Electrical Manufacturing Association
5) NETA - International Electrical Testing Association
6) ISA - International Society for Measurement and Control.

Design Criteria. Electrical systems will be designed and installed in accordance with the appropriate codes, standards and regulations listed above.

There are no specific design criteria for the electrical and instrumentation systems, other than those imposed by the manufacturers standards. Electrical power will be supplied by a tie-in to the local 13.2 kV electrical utility main. In the event of power loss from the main electrical supply, backup power will be supplied as required through the use of a diesel generator. Backup power requirements and utilization will be evaluated during design.

Adequate electrical power shall be provided for the operation of all electrical components, emissions monitoring equipment, and all items requiring electrical power.

Motors over 100 kW will have efficiency of 90 percent or higher.

Power factor compensating capacitors will be installed to maintain power factor above 90 percent.

High intensity facility lighting will be installed in the process areas, outdoor areas, railcar loadout areas, and exhaust stacks. Fluorescent lighting will be installed in offices, electrical rooms, laboratory, change out facility and control room. Emergency lighting will be supplied by battery backup units.

The fire alarm and evacuation systems for the OU1 facility will be connected to the central command center via existing facilities as directed by site fire protection.

Totalizers/meters will be installed to monitor power consumption demand and power factor. Power factor will be maintained above 90 percent.

7.6.2 Instrumentation and Controls

Instrumentation design activities will include the process control systems and instrument equipment.

Codes, Standards and Regulations. Components and systems will be designed, tested, and installed in accordance with the following codes and standards, as applicable. Applicability will be based upon standard industrial practice or as required by applicable codes of DOE orders. Where IT proposes using existing or pre-engineered components or systems that do not conform to the applicable codes or standards, IT will document the codes or standards that were applied along with a justification for differing from the requirements:

1) NEC - National Electric Code
2) UL - Underwriters Laboratories
3) ANSI - American National Standards Institute
4) NEMA - National Electrical Manufacturing Association
5) NETA - International Electrical Testing Association
6) ISA - International Society for Measurement and Control.

1669

Design Criteria. Instrumentation will be designed in conformance with applicable standards and codes. Instrumentation specific to purchased equipment will be designed to manufacturers standards and design specifications.

Design information will be required from the vendor for all purchased equipment. A dedicated control system will be designed for interfacing with any process package systems or process operations.

000144

TABLES

TABLE 3-1a. LOCATION-SPECIFIC ARARS
(APPLICABLE REQUIREMENTS; RELEVANT AND APPROPRIATE REQUIREMENTS)

Category	Applicable Requirements	Requirements Assessment	Compliance Strategy	Index to Design
Wildlife Protection	16 USC 1531 et. seq., and 50 CFR 17.21, 17.31, 17.61, 17.71, 17.94, 50 CFR 402, and Endangered Species Act All federal agencies must insure that any action authorized, funded or carried out by them is not likely to jeopardize the continued existence of any listed species or result in the destruction or adverse modification of the constituent elements essential to the conservation of a listed species within a defined critical habitat. Additional requirements apply if it is determined that a proposed activity could adversely affect these species or their habitat.	In 1994, updated surveys at the FEMP determined the presence of summer habitat for the federally-listed endangered Indiana bat along Paddys Run including areas adjacent to OU1. This area is not critical habitat. Consultation with U.S. Fish and Wildlife Service will determine restorative measures that may need to be taken during and after remedial actions. If any endangered or threatened species are encountered, the additional requirements of the referenced regulation would be applicable. Efforts will be made during remediation to preserve riparian vegetation, habitat for the Indiana bat, to the maximum practicable extent. (**NOTE:** Mitigatory requirements will be determined and implemented by others on a site-wide basis.)	This area is not critical habitat. If any endangered/threatened species are encountered, the requirement of the referenced regulations will be applied.	N/A
Wildlife Protection	ORC 1531.25, 1518.02, and 1501: 18-1, Ohio Endangered Species Regulations No person shall take or possess any native species of wild animal, or any eggs, or offspring thereof, that is endangered with state-wide extinction.	Updated surveys in 1993 and 1994 found state-listed threatened Sloan's crayfish populations in sections of Paddys Run, including sections directly adjacent to OU1 area. Wastewater controls will be designed to minimize negative impacts on Paddys Run, to the maximum practicable extent during and after remedial activities. Process wastewater will not be discharged to Paddys Run from any OU1 operation. Storm water flows from the new facilities area, for storms greater than the 25 year, 24 hour will discharge to Paddys Run. (**NOTE:** Mitigatory requirements will be determined and implemented by others on a site-wide basis.)	Process and pit excavation wastewater will not be discharged directly to Paddys Run. Clean water from roofs and storm water flows from the new facilities area for storms greater than the 25-yr, 24-hr storm will be discharged to Paddys Run under the NPDES permit. Discharges of stormwater from the Storm Water Management (SWM) Pond will be included in the NPDES permit modification.	Description of the Operation & Process Sections 2.8, 2.9, and 4.0; Design Criteria and Assumptions Sections 2.8 and 3.2; Excavation Plan Section 6.0; Pre-Operational Environmental Control Plan Sections 2.3, 3.3, and 6.0; Operation and Maintenance Plan for Existing Facilities Section 4.5.

TABLE 3-1a. LOCATION-SPECIFIC ARARS (Continued)

Category	Applicable Requirements	Requirements Assessment	Compliance Strategy	Index to Design
Wildlife Protection	16 USC 66 *et seq.*, Fish and Wildlife Coordination Act Requires consultation with other state agencies for any activities which might affect any body of water for the purpose of conserving fish and wildlife resources.	Remedial activities at OU1 may have the potential to affect wildlife and fish in Paddys Run. Wastewater controls will be designed to minimize negative impacts on Paddys Run, to the maximum practicable extent during and after remedial activities. Process wastewater will not be discharged to Paddys Run from any OU1 operation. Stormwater flows from the new facilities area, for storms greater than the 25 year, 24 hour will discharge to Paddys Run.	Process wastewater will not be discharged directly to Paddys Run. Clean water from roofs and stormwater flows from the new facilities area, for storms greater than the 25-yr 24-hr storms, will be discharged to Paddys Run under the NPDES permit. Discharges of stormwater from the Storm Water Management (SWM) Pond will be included in the NPDES permit modification.	Description of the Operation & Process Sections 2.8, 2.9, and 4.0; Design Criteria and Assumptions Sections 2.8 and 3.2; Excavation Plan Section 6.0; Pre-Operational Environmental Control Plan Sections 2.3, 3.3, and 6.0; Operation and Maintenance Plan for Existing Facilities Section 4.5.
Historic Preservation	16 USC 469, Archaeological and Historic Preservation Act Requires preservation of artifacts and data associated with archaeological finds.	Historical data and artifacts are not expected to be discovered or destroyed during remedial activities at OU1. Nevertheless, the requirements of the law are applicable.	Discovery/destruction of historical data and artifacts is not anticipated during remedial activities at OU1. Should they be encountered, the affected portion of the work area will be managed in compliance with the FEMP Cultural Resource Policy.	N/A
Historic Preservation	16 USC 470 *et seq.*, National Historic Preservation Act DOE must take into account the effect of an undertaking on historic properties and accord the Advisory Council on Historic Preservation a reasonable opportunity to comment. Historic properties are described as any prehistoric or historic district, building, site, structure, or object included in, or eligible for inclusion in the National Register of Historic Places. This term includes artifacts, records, and remains that are related to and located within such properties. Historic properties that are substantially altered or demolished must be recorded for future use and reference.	Areas adjacent to OU1 boundaries will be surveyed pursuant to the programmatic agreement by the DOE, the Advisory Council on Historic Preservation, and the Ohio Historic Preservation Office. The programmatic agreement will stipulates what actions are required for compliance with the National Historic Preservation Act. Historic sites listed or eligible for listing in the *National Register of Historic Places* are not present within OU1 nor is it expected that any will be. Nevertheless, the requirements of the law are applicable.	Historic sites listed/eligible for listing are not present within OU1, nor are any anticipated. Should they be encountered, the affected portion of the work area will be managed in compliance with the FEMP Cultural Resource Policy.	N/A

000147

F-1669

TABLE 3-1a. LOCATION-SPECIFIC ARARS (Continued)

Category	Applicable Requirements	Requirements Assessment	Compliance Strategy	Index to Design
Historic Preservation	16 USC 470 (aa) - 470 (11), Archaeological Resources Protection Act Requires permit for removal of any archaeological resources from federal lands.	OU1 is located on federal land. Although archeological resources are not expected on the site, the requirements of the law remain applicable to OU1 remedial activities.	Due to significant recent filling and earthwork at OU1, archeological resources are not anticipated on the site. Should they be encountered, the affected portion of the work area will be managed in compliance with the FEMP Cultural Resource Policy.	N/A
Historic Preservation	16 USC 431-433 and USC 461-467, Antiquities Act and Historic Sites Act. Requires that no person may appropriate, excavate, injure or destroy any historical or prehistoric ruin or monument or any object or antiquity situated or controlled by the U.S. Government without an applicable permit. Also requires the identification and preservation of cultural resources on federal lands.	Although OU1 is not expected to contain cultural resources or natural landmarks of significance, it is located on federal land and the law is applicable should any cultural resources be discovered during remedial actions on site.	OU1 is not expected to contain cultural resources or natural landmarks of significance. Should they be encountered, the affected portion of the work area will be managed in compliance with the FEMP Cultural Resource Policy.	N/A
Historic Preservation	25 USC 3001, Native American Graves Protection and Repatriation Act Provides for return of human remains and cultural objects from Native American graves to affiliated tribes.	Although OU1 does not contain known American Indian burial grounds, this law would apply should graves and human remains be discovered during excavation of the waste pits.	OU1 does not contain known American Indian burial grounds. Should they be encountered, the affected portion of the work area will be managed in compliance with the FEMP Cultural Resource Policy.	N/A
Historic Preservation	42 USC 1996, American Indian Religious Freedom Act Provides for tribal access by native peoples to grave sites and sites of cultural, symbolic, or religious significance.	Although no sites of this nature have been identified at OU1, the law is applicable to federal lands and activities.	Grave sites and sites of cultural, symbolic or religious significance are not known on the OU1 site. Should they be encountered, the affected portion of the work area will be managed in compliance with the FEMP Cultural Resource Policy.	N/A
Historic Preservation	Executive Order 11593, Protection and Enhancement of Cultural Environment. Requires an inventory of site for potential historic places for eligibility in the *National Register of Historic Places*.	The requirement is applicable to activities at OU1. An updated inventory will be completed prior to remedial action. It is not expected that any sites of this nature will be identified at OU1.	No potential historic sites have been identified on the OU1 site. Should they be encountered, the affected portion of the work area will be managed in compliance with the FEMP Cultural Resource Policy.	N/A

000148

1669

TABLE 3-1a. LOCATION-SPECIFIC ARARS (Continued)

Category	Applicable Requirements	Requirements Assessment	Compliance Strategy	Index to Design
Siting	<u>10 CFR 1022, Protection of Wetlands and Floodplain Management</u> 10 CFR 1022 contains the DOE regulation implementing Executive Orders 11990 and 11988. Executive Order 11990 requires that Federal agencies take action to avoid adversely impacting wetlands wherever possible, to minimize wetlands destruction, to preserve the values of wetlands, and to prescribe procedures to implement the policies and procedures of the Executive Order. Executive Order 11988 requires Federal agencies undertaking actions within a floodplain to evaluate the potential the action has for adverse impact on the floodplain. If it is determined that adverse impacts could occur, the effects of the action must be minimized to the extent practical.	Approximately 36 acres of jurisdictional wetlands were identified on the site as the result of the 1993 wetland delineation, 4.96 acres of which were identified within OU1. It has been determined that OU1 remediation efforts will result in an unavoidable impact to the entire 4.96 acres. Impacts to wetlands outside of the subcontractor's work area will be minimized during remedial activities by avoiding these areas to the maximum extent possible. OU1 is in the immediate vicinity of the Paddys Run Floodplain. Remediation activities will be undertaken while minimizing impacts to the floodplain primarily through minimizing activities within the floodplain which would cause substantial adverse changes to the floodplain. (**NOTE:** Mitigatory requirements relative to wetlands impacts and the final topography (and its impact on the floodplain) will be assessed by others on a site-wide basis. The final grading plan will be reflective of these efforts.)	Mitigatory strategies relative to wetland impacts and the final topography (and its impact on the Paddys Run floodplain) will be assessed by FDF on a sitewide basis. The final grading plan will be reflective of the results of this assessment.	Final site grading plan

000149

1669

TABLE 3-1a. LOCATION-SPECIFIC ARARS (Continued)

Category	Applicable Requirements	Requirements Assessment	Compliance Strategy	Index to Design
Construction	33 CFR 330, Nationwide Permit Program (33 CFR 323 and OAC 3745-32) The Army Corps of Engineers authorizes discharges of dredge or fill material into wetlands and waters of the United States under its Nationwide Permit or Individual Permit Programs. Section 401 State Water Quality Certification is also required for these types of discharges. Approximately 4.96 acres of jurisdictional wetlands will be impacted as a result of the OU1 Remedial Action and will be subjected to the substantive requirements of these regulations. **See Table 3-2d for a detailed discussion relative to the substantive requirements of Nationwide Permit 26.**	Discharges of dredged and fill material associated with the OU1 remedial action will be conducted in accordance with the substantive requirements of Nationwide Permit 26 - Headwaters and Isolated Waters Discharges and its corresponding Section 401 State Water Quality Certification. **(NOTE:** Wetland mitigatory requirements for OU1 impacts will be addressed by others under a site-wide wetland mitigation plan.) **See Table 3-2d for additional details.**	Compliance strategy is addressed in substantive permitting requirements. (see Table 3-2)	See Table 3-2

000150

1669

TABLE 3-1b. CHEMICAL-SPECIFIC ARARS
(APPLICABLE REQUIREMENTS; RELEVANT AND APPROPRIATE REQUIREMENTS; TBCs)

Category	Applicable Requirements	Requirements Assessment	Compliance Strategy	Index to Design
Surface Water Discharges	OAC 3745-1 Ohio Water Quality Standards It is the purpose of these Water Quality Standards to establish minimum water quality requirements for all surface waters of the State, thereby protecting public health and welfare; and to enhance, improve, and maintain water quality as provided under the laws of the State of Ohio, and ORC 6111.041, the Federal Clean Water Act, 33 U.S.C. Section 1251 *et seq.* Whenever two or more use designations apply to the same surface water, the more stringent criteria of each use designation will apply.	OU1 remediation activities will not result in the direct discharge of wastewater to a water of the State. Wastewater generated by OU1 remediation activities will be pretreated and discharged to the existing FEMP wastewater treatment system where it will be combined with other site wastewater for treatment. Treated wastewaters will be discharged in accordance with the requirements of the FEMP NPDES permit and applicable numeric and narrative water quality standards promulgated in OAC 3745-1.	Process and pit excavation wastewater will not be directly discharged to a water of the state. These wastewaters will be discharged to the existing FEMP wastewater treatment system, in compliance with the BSL WAC, where they will be combined with other site wastewater for treatment. Treated wastewater will be discharged in accordance with the requirements of the FEMP NPDES permit and applicable numeric and narrative quality standards promulgated in OAC 3745-1. Clean water from roofs and storm water flows from the new facilities area for storms greater than the 25-yr, 24-hr storm will be discharged to Paddys Run under the NPDES permit. Discharges of stormwater from the Storm Water Management (SWM) Pond will be included in the NPDES permit modification.	Description of the Operation & Process Sections 2.8, 2.9, 3.6, and 4.0; Design Criteria and Assumptions Section 2.8; Excavation Plan Section 6.0; Pre-Operational Environmental Control Plan Sections 2.3, 3.3, and 6.0; see also Table 3-2.

000151

1669

TABLE 3-1b. CHEMICAL-SPECIFIC ARARS (Continued)

Category	Applicable Requirements	Requirements Assessment	Compliance Strategy	Index to Design
Surface Water Discharges	OAC 3745-01-04 Criteria Applicable to All Waters The following general water quality criteria shall apply to all surface waters of the State including mixing zones. To every extent practical and possible as determined by the director, these waters shall be: (A) Free from suspended solids or other substances that enter the waters as a result of human activity and that will settle to form putrescent or otherwise objectionable sludge deposits, or that will adversely affect aquatic life; (B) Free from floating debris, oil, scum and other floating materials entering the waters as a result of human activity in amounts sufficient to be unsightly or cause degradation; (C) Free from materials entering the waters as a result of human activity producing color, odor or other conditions in such a degree as to create a nuisance; (D) Free from substances entering the waters as a result of human activity in concentrations that are toxic or harmful to human, animal or aquatic life and/or are rapidly lethal in the mixing zone; (E) Free from nutrients entering the waters as a result of human activity in concentrations that create nuisance growths of aquatic weeds and algae.	OU1 remediation activities will not result in the direct discharge of wastewater to a water of the State. Wastewater generated by OU1 remediation activities will be pretreated and discharged to the existing FEMP wastewater treatment system where it will be combined with other site wastewaters for treatment. Treated wastewaters will be discharged in accordance with the requirements of the FEMP NPDES permit and applicable numeric and narrative water quality standards promulgated in OAC 3745-1.	Process and pit excavation wastewater will not be directly discharged to a water of the state. These wastewaters will be discharged to the existing FEMP wastewater treatment system, in compliance with the BSL WAC, where they will be combined with other site wastewater for treatment. Treated wastewater will be discharged in accordance with the requirements of the FEMP NPDES permit and applicable numeric and narrative quality standards promulgated in OAC 3745-1. Clean water from roofs and storm water flows from the new facilities area for storms greater than the 25-yr, 24-hr storm will be discharged to Paddys Run under the NPDES permit. Discharges of stormwater from the Storm Water Management (SWM) Pond will be included in the NPDES permit modification.	Description of the Operation & Process Sections 2.8, 2.9, 3.6, and 4.0; Design Criteria and Assumptions Section 2.8; Excavation Plan Section 6.0; Pre-Operational Environmental Control Plan Sections 2.3, 3.3, and 6.0; see also Table 3-2.

000152

1669

TABLE 3-1b. CHEMICAL-SPECIFIC ARARS (Continued)

Category	Applicable Requirements	Requirements Assessment	Compliance Strategy	Index to Design
Surface Water Discharges	OAC 3745-1-07, Table 7-1, Numerical and Narrative Criteria for Aquatic Life Habitat and Water Supply Use Designation Surface Waters in the State of Ohio must comply with the maximum concentrations of each contaminant of concern listed in Table I-5 and I-6 in Attachment I for inside and outside the mixing zones of the receiving water to protect warm water aquatic habitats.	OU1 remediation activities will not result in the direct discharge of wastewater to a water of the State. Wastewater generated by OU1 remediation activities will be pretreated and discharged to the existing FEMP wastewater treatment system where it will be combined with other site wastewaters for treatment. Treated wastewaters will be discharged in accordance with the requirements of the FEMP NPDES permit and applicable numeric and narrative water quality standards promulgated in OAC 3745-1.	Process and pit excavation wastewater will not be directly discharged to a water of the state. These wastewaters will be discharged to the existing FEMP wastewater treatment system, in compliance with the BSL WAC, where they will be combined with other site wastewater for treatment. Treated wastewater will be discharged in accordance with the requirements of the FEMP NPDES permit and applicable numeric and narrative quality standards promulgated in OAC 3745-1. Clean water from roofs and storm water flows from the new facilities area for storms greater than the 25-yr, 24-hr storm will be discharged to Paddys Run under the NPDES permit. Discharges of stormwater from the Storm Water Management (SWM) Pond will be included in the NPDES permit modification.	Description of the Operation & Process Sections 2.8, 2.9, 3.6, and 4.0; Design Criteria and Assumptions Section 2.8; Excavation Plan Section 6.0; Pre-Operational Environmental Control Plan Sections 2.3, 3.3, and 6.0; see also Table 3-2.

000153

1669

TABLE 3-1b. CHEMICAL-SPECIFIC ARARS (Continued)

Category	Applicable Requirements	Requirements Assessment	Compliance Strategy	Index to Design
Surface Water Discharges	OAC 3745-1-07, Table 7-10, Outside Mixing Zone Maximum Criteria for Water Hardness Dependent Parameters in Warm Water Habitats Table I-7 in Attachment I contains the numerical limits on cadmium, copper, chromium, lead, and silver.	OU1 remediation activities will not result in the direct discharge of wastewater to a water of the State. Wastewater generated by OU1 remediation activities will be pretreated and discharged to the existing FEMP wastewater treatment system where it will be combined with other site wastewaters for treatment. Treated wastewaters will be discharged in accordance with the requirements of the FEMP NPDES permit and applicable numeric and narrative water quality standards promulgated in OAC 3745-1.	Process and pit excavation wastewater will not be directly discharged to a water of the state. These wastewaters will be discharged to the existing FEMP wastewater treatment system, in compliance with the BSL WAC, where they will be combined with other site wastewater for treatment. Treated wastewater will be discharged in accordance with the requirements of the FEMP NPDES permit and applicable numeric and narrative quality standards promulgated in OAC 3745-1. Clean water from roofs and storm water flows from the new facilities area for storms greater than the 25-yr, 24-hr storm will be discharged to Paddys Run under the NPDES permit. Discharges of stormwater from the Storm Water Management (SWM) Pond will be included in the NPDES permit modification.	Description of the Operation & Process Sections 2.8, 2.9, 3.6, and 4.0; Design Criteria and Assumptions Section 2.8; Excavation Plan Section 6.0; Pre-Operational Environmental Control Plan Sections 2.3, 3.3, and 6.0; see also Table 3-2.

000154

1669

TABLE 3-1b. CHEMICAL-SPECIFIC ARARS (Continued)

Category	Applicable Requirements	Requirements Assessment	Compliance Strategy	Index to Design
Surface Water Discharges	OAC 3745-1-07, Table 7-11 Outside Mixing Zone 30-Day Average Criteria for Water Hardness Dependent Parameters in Warm Water Habitats Table I-8 in Attachment I contains the average numerical limits for cadmium, copper, chromium, lead, and silver.	OU1 remediation activities will not result in the direct discharge of wastewater to a water of the State. Wastewater generated by OU1 remediation activities will be pretreated and discharged to the existing FEMP wastewater treatment system where it will be combined with other site wastewaters for treatment. Treated wastewaters will be discharged in accordance with the requirements of the FEMP NPDES permit and applicable numeric and narrative water quality standards promulgated in OAC 3745-1.	Process and pit excavation wastewater will not be directly discharged to a water of the state. These wastewaters will be discharged to the existing FEMP wastewater treatment system, in compliance with the BSL WAC, where they will be combined with other site wastewater for treatment. Treated wastewater will be discharged in accordance with the requirements of the FEMP NPDES permit and applicable numeric and narrative quality standards promulgated in OAC 3745-1. Clean water from building roofs and stormwater flows from the new facilities area, for storms greater than the 25-yr 24-hr storm, will be discharged directly to Paddys Run. Work will control contamination in areas subject to the stormwater discharge. Additional discharges of stormwater from the Storm Water Management (SWM) Pond may occur if monitoring shows the water meets the NPDES requirements.	Description of the Operation & Process Sections 2.8, 2.9, 3.6, and 4.0; Design Criteria and Assumptions Section 2.8; Excavation Plan Section 6.0; Pre-Operational Environmental Control Plan Sections 2.3, 3.3, and 6.0; see also Table 3-2.

000155

1669

TABLE 3-1b. CHEMICAL-SPECIFIC ARARS (Continued)

Category	Applicable Requirements	Requirements Assessment	Compliance Strategy	Index to Design
Surface Water Discharges	OAC Table 7-12 Inside Mixing Zone Maximum Criteria for Water Hardness Dependent Criteria in Warm Water Habitats Table I-8 in Attachment I contains numerical limits for cadmium, copper, chromium, lead, and silver.	OU1 remediation activities will not result in the direct discharge of wastewater to a water of the State. Wastewater generated by OU1 remediation activities will be pretreated and discharged to the existing FEMP wastewater treatment system where it will be combined with other site wastewaters for treatment. Treated wastewaters will be discharged in accordance with the requirements of the FEMP NPDES permit and applicable numeric and narrative water quality standards promulgated in OAC 3745-1.	Process and pit excavation wastewater will not be directly discharged to a water of the state. These wastewaters will be discharged to the existing FEMP wastewater treatment system, in compliance with the BSL WAC, where they will be combined with other site wastewater for treatment. Treated wastewater will be discharged in accordance with the requirements of the FEMP NPDES permit and applicable numeric and narrative quality standards promulgated in OAC 3745-1. Clean water from roofs and storm water flows from the new facilities area for storms greater than the 25-yr, 24-hr storm will be discharged to Paddys Run under the NPDES permit. Discharges of stormwater from the Storm Water Management (SWM) Pond will be included in the NPDES permit modification.	Description of the Operation & Process Sections 2.8, 2.9, 3.6, and 4.0; Design Criteria and Assumptions Section 2.8; Excavation Plan Section 6.0; Pre-Operational Environmental Control Plan Sections 2.3, 3.3, and 6.0; see also Table 3-2.

000156

1669

TABLE 3-1b. CHEMICAL-SPECIFIC ARARS (Continued)

Category	Applicable Requirements	Requirements Assessment	Compliance Strategy	Index to Design
Surface Water Discharges	OAC 3745-1-07 Outside Mixing Zone Maximum Criteria for pH dependent Parameters in warm water Aquatic Habitats Table I-10 in Attachment I contains the numerical limits for pentachlorophenol. OAC 3745-1-07 Inside the Mixing Zone Maximum Criteria for pH dependent Parameters in warm water Aquatic Habitats Table I-11 in Attachment I contains the numerical limits for pentachlorophenol.	OU1 remediation activities will not result in the direct discharge of wastewater to a water of the State. Wastewater generated by OU1 remediation activities will be pretreated and discharged to the existing FEMP wastewater treatment system where it will be combined with other site wastewaters for treatment. Treated wastewaters will be discharged in accordance with the requirements of the FEMP NPDES permit and applicable numeric and narrative water quality standards promulgated in OAC 3745-1.	Process and pit excavation wastewater will not be directly discharged to a water of the state. These wastewaters will be discharged to the existing FEMP wastewater treatment system, in compliance with the BSL WAC, where they will be combined with other site wastewater for treatment. Treated wastewater will be discharged in accordance with the requirements of the FEMP NPDES permit and applicable numeric and narrative quality standards promulgated in OAC 3745-1. Clean water from roofs and storm water flows from the new facilities area for storms greater than the 25-yr, 24-hr storm will be discharged to Paddys Run under the NPDES permit. Discharges of stormwater from the Storm Water Management (SWM) Pond will be included in the NPDES permit modification.	Description of the Operation & Process Sections 2.8, 2.9, 3.6, and 4.0; Design Criteria and Assumptions Section 2.8; Excavation Plan Section 6.0; Pre-Operational Environmental Control Plan Sections 2.3, 3.3, and 6.0; see also Table 3-2.

000157

V 1669

TABLE 3-1b. CHEMICAL-SPECIFIC ARARS (Continued)

Category	Applicable Requirements	Requirements Assessment	Compliance Strategy	Index to Design
Surface Water Discharges	OAC 3745-1-07 Lower Miami River Temperature Criteria in Fahrenheit and degrees (Celsius) Table I-12 in Attachment I contains the acceptable monthly temperatures for water discharged to the Lower Great Miami River.	OU1 remediation activities will not result in the direct discharge of wastewater to a water of the State. Wastewater generated by OU1 remediation activities will be pretreated and discharged to the existing FEMP wastewater treatment system where it will be combined with other site wastewaters for treatment. Treated wastewaters will be discharged in accordance with the requirements of the FEMP NPDES permit and applicable numeric and narrative water quality standards promulgated in OAC 3745-1.	Process and pit excavation wastewater will not be directly discharged to a water of the state. These wastewaters will be discharged to the existing FEMP wastewater treatment system, in compliance with the BSL WAC, where they will be combined with other site wastewater for treatment. Treated wastewater will be discharged in accordance with the requirements of the FEMP NPDES permit and applicable numeric and narrative quality standards promulgated in OAC 3745-1. Clean water from roofs and storm water flows from the new facilities area for storms greater than the 25-yr, 24-hr storm will be discharged to Paddys Run under the NPDES permit. Discharges of stormwater from the Storm Water Management (SWM) Pond will be included in the NPDES permit modification.	Description of the Operation & Process Sections 2.8, 2.9, 3.6, and 4.0; Design Criteria and Assumptions Section 2.8; Excavation Plan Section 6.0; Pre-Operational Environmental Control Plan Sections 2.3, 3.3, and 6.0; see also Table 3-2.
Air Discharges	OAC 3745-17-07 Particulate Matter Standards Visible particulate emissions from any stack may exceed twenty per cent opacity, as a six minute average, for not more than six consecutive minutes in any sixty minutes, but shall not exceed sixty per cent opacity, as a six-minute average, at any time. **See Table 3-2.a for a detailed discussion relative to substantive requirements.**	The State standard for particulate emissions is an ARAR because it places a time limit on particulate emissions that may work in tandem with the Federal annual average. **See Table 3-2.a for additional details.**	Compliance strategy is addressed in Substantive Permitting requirements (see Table 3-2)	See Table 3-2

000158

1669

TABLE 3-1b. CHEMICAL-SPECIFIC ARARS (Continued)

Category	To-Be-Considered Requirements	Requirements Assessment	Compliance Strategy	Index to Design
Radiation	DOE Order 5400.5 Radiation Protection of the Public and the Environment To prevent buildup of radionuclide concentrations in sediment, liquid process waste streams containing radioactive material in settleable solids may be released to natural waterways if the concentration of radioactive material in the solids present in the waste stream do not exceed 5 pCi/g above background levels of settle-able solids of alpha-emitting radionuclides or 50 pCi/g above background level of settle-able solids for beta-gamma-emitting radionuclides. To protect native animal aquatic organisms, the absorbed dose to these organisms shall not exceed 1 rad per day from exposure to the radioactive material in liquid wastes discharged to material waterways.	OU1 remediation activities will not result in the direct discharge of wastewater to a water of the State. Wastewater generated by OU1 remediation activities will be pretreated and discharged to the existing FEMP wastewater treatment system where it will be combined with other site wastewaters for treatment. Treated wastewaters will be discharged in accordance with the requirements of the FEMP NPDES permit and applicable numeric and narrative water quality standards promulgated in OAC 3745-1.	Process and pit excavation wastewater will not be directly discharged to a water of the state. These wastewaters will be discharged to the existing FEMP wastewater treatment system, incompliance with the BSL WAC, where they will be combined with other site wastewater for treatment. Treated wastewater will be discharged in accordance with the requirements of the FEMP NPDES permit and applicable numeric and narrative quality standards promulgated in OAC 3745-1. Clean water from roofs and storm water flows from the new facilities area for storms greater than the 25-yr, 24-hr storm will be discharged to Paddys Run under the NPDES permit. Discharges of stormwater from the Storm Water Management (SWM) Pond will be included in the NPDES permit modification.	Description of the Operation & Process Sections 2.8, 2.9, 3.6, and 4.0; Design Criteria and Assumptions Section 2.8; Excavation Plan Section 6.0; Pre-Operational Environmental Control Plan Sections 2.3, 3.3, and 6.0; see also Table 3-2.
Radiation	DOE Order 5400.5 Radiation Protection of the Public and Environment DOE Order 5400.5 requires compliance with 40 CFR Part 61, Subpart H criterion of 10 mrem/year effective dose equivalent and monitoring of point-source emissions. **See Table 3-1a for a detailed discussion relative to substantive requirements.**	**See Table 3-2.a for additional details.**	Compliance strategy is addressed in Substantive Permitting requirements (see Table 3-2)	See Table 3-2

000159

1669

TABLE 3-1b. CHEMICAL-SPECIFIC ARARS (Continued)

Category	To-Be-Considered Requirements	Requirements Assessment	Compliance Strategy	Index to Design
Radiation	DOE Order 5400.5 Residual plus natural dose limit for public exposure to residual radioactive material are 100 mrem effective dose equivalent per year. Guidelines for residual concentrations of radionuclides in soil shall be derived from the basic dose limits by means of an environment pathway analysis using specific property data where available. Procedures for these derivations are given in DOE/CH-8901. Residual concentrations of radioactive material in soils are defined as those in excess of background concentrations averaged over an area of 100 square meters. Control and Stabilization and Administrative Control features shall be designed to provide to the extent reasonably achievable, an effective life of 50 years with a minimum life of at least 25 years. Groundwater shall be protected in accordance with legally applicable Federal and State standards.	All waste pit material will be removed from OU1. The only residual material will be soil that meets the Final Remediation Levels established by the OU5 remedial action. The Final Remediation Levels have been developed in accordance with this requirement. Compliance will be demonstrated on a sitewide basis following remediation of the entire site by the Soil Characterization & Excavation Project. Some material from OU1 will be placed into the On-Site Disposal Facility. The disposal facility will be designed to meet this requirement and demonstration of compliance will be performed by the On-Site Disposal Cell Project.	All waste pit material will be removed from OU1. The only residual material will be soil that meets the established FRLs established by FEMP in accordance with this requirement. Sitewide compliance will be demonstrated by FEMP. Some residual contaminated soils from OU1 may be placed into the OSDF. This determination will be made in accordance with the final site grading plan. The excavation of waste pit material will be executed to minimize and control releases to groundwater by reasonably maintaining the pits in a pumped-down condition after removal of liners and prior to confirmation that removal meets the established FRLs.	Description of the Operation & Process Sections 2.1, 2.2, 2.3, and 2.8; Design Criteria and Assumptions Sections 2.1, 2.3, 2.8, and 4.1.

000160

1669

TABLE 3-1b. CHEMICAL-SPECIFIC ARARS (Continued)

Category	To-Be-Considered Requirements	Requirements Assessment	Compliance Strategy	Index to Design
Soil Remediation	<u>40 CFR 761.125 Requirements for PCB Spill Cleanup</u> PCBs at concentrations greater than 50 ppm are subject to decontamination TSCA requirements in 40 CFR 761.120(b). PCB containers containing non-liquid PCBs, such as contaminated soil, rags, and debris designated for disposal may be stored temporarily (up to 30 days from the date of removal) in an area that does not comply with the storage building requirements at 40 CFR 761.65 (b). <u>40 CFR 761.125©</u> Soils in non-restricted access areas contaminated by a PCB spill will be decontaminated to 50 ppm PCB by weight, provided that the soil is excavated to a minimum depth of 10 inches. The excavated soils will be replaced with clean soils, i.e., containing <1 ppm PCB, and the spill site will be restored (e.g., replacement of turf) [40 CFR 761.125(c)(4)(v)]. For soils in restricted access areas, decontaminate to 25 ppm PCB by weight [40 CFR 761.125(c)(3)(v)].	Concentrations of PCBs at OU1 are expected to be less than 50 ppm. This regulation would then be considered guidance to be considered.	Concentrations of PCBs at OU1 are expected to be less than 50 ppm. Should regulated PCB levels be encountered, the material will be segregated and managed as non-typical waste.	Description of the Operation & Process Section 4.0; Design Criteria and Assumptions Section 4.2

000161

1669

TABLE 3-1c. ACTION-SPECIFIC ARARS
(APPLICABLE REQUIREMENTS; RELEVANT AND APPROPRIATE REQUIREMENTS; TBCs)

Category	Applicable Requirements	Requirements Assessment	Compliance Strategy	Index to Design
Radon	40 CFR Part 61, Subpart Q Emission of radon-222 from DOE interim and storage facilities is limited to 20 pCi/m^2/s on an average over the entire source. **See Table 3-2.a for a detailed discussion relative to substantive requirements.**	**See Table 3-2.a for additional details.**	Compliance strategy is addressed in Substantive Permitting requirements (see Table 3-2)	See Table 3-2
Stormwater Control	40 CFR 122.26 (OAC 3745-38) Discharge of Storm Water Runoff Stormwater runoff from landfills, construction sites, and industrial activities must be monitored and controlled. A Storm Water Pollution Prevention Plan (SWPPP) is required for construction activities which result in a total land disturbance of 5 or more acres.	Remedial activities will comply with an approved FEMP SWPPP which will include specific inspection and monitoring criteria applicable to all site projects. Guidelines set forth in Rainwater and Land Development, Ohio's Standard for Stormwater Management Stream Protection, 1996, will be followed.	Routine inspections of the OU1 stormwater management features will be performed and documented throughout the OU1 remedial activities. A monitoring program will be established for the SWM Pond consistent with its requirements of the SWPPP, to allow discharge of non-contaminated stormwater directly to Paddy's Run. Existing procedures will be used as appropriate to monitor and control stormwater runoff.	Description of the Operation & Processes Sections 2.8, 2.9, and 4.0; Design Criteria and Assumptions Section 2.8; Excavation Plan Section 6.0; Pre-Operational Environmental Control Plan Sections 2.3, 3.3, and 6.0.
Well Abandonment	OAC 3745-9-10 Ohio Water Well Standards Abandonment of Test Holes and Wells	These requirements for closure of test holes and wells at the FEMP are implemented through existing site procedures.	The closure of test holes and wells at OU1 will be implemented through the existing FEMP site procedures.	N/A
Hazardous Waste	ORC 3734.02(H) Digging Where Hazardous or Solid Waste was Located Filling, grading, excavating, building, drilling, or mining on land where hazardous waste or solid waste facility was operated is prohibited without prior approval from the Director of the Ohio EPA.	This requirement needs no further discussion relative to attainment, since Ohio EPA concurrence on the OU1 ROD has met the intent of this requirement.	Ohio EPA concurrence on the OU1 ROD has met the intent of this requirement.	N/A
Hazardous Waste	OAC 3745-56-51, 54 and 58; Waste Piles These requirements specify design and operating requirements, monitoring and inspection, closure and post-closure care. **See Table 3-2c for a detailed discussion relative to specific substantive requirements.**	The requirements for hazardous waste piles are potentially applicable only to waste excavated from Pits 4 and 5. **See Table 3-2c for additional details.**	Compliance strategy is addressed in Substantive Permitting requirements (see Table 3-2)	See Table 3-2

000162

1669

TABLE 3-1c. ACTION-SPECIFIC ARARS (Continued)

Category	Applicable Requirements	Requirements Assessment	Compliance Strategy	Index to Design
Air Discharges	OAC 3745-15-07(A) Ohio Air Pollution Control Regulations Describes forms of air pollution nuisances and prohibits their emission or escape. **See Table 3-2.a for a detailed discussion relative to substantive requirements.**	Both excavation and waste treatment processes have the potential to generate prohibited fugitive emissions. **See Table 3-1a for additional details.**	Compliance strategy is addressed in Substantive Permitting requirements (see Table 3-2)	See Table 3-2
Fugitive Dust	OAC 3745-17-08 Control of Fugitive Dust Requires the minimization or elimination of visible emissions of fugitive dust generated during grading, loading, or construction operations and other practices which emit fugitive dust. **See Table 3-2.a for a detailed discussion relative to substantive requirements.**	The implementation of remedial action alternatives will require the movement of dirt and other material likely to result in fugitive dust emissions. **See Table 3-2.a for additional details.**	Compliance strategy is addressed in Substantive Permitting requirements (see Table 3-2)	See Table 3-2
Air Discharges	OAC 3745-21-02© and -03(D) Ambient air quality standards and guidelines and methods of ambient air quality measurements (for non-methane hydrocarbons). Mean ambient concentration of non-methane hydrocarbons not to exceed 160 μg/cubic meters (0.24 ppm as carbon) between 6 and 9 a.m.; methods for determining ambient concentration of non-methane hydrocarbons. **See Table 3-2.a for a detailed discussion relative to substantive requirements.**	During drying, hydrocarbon soil contaminants may be evolved with the steam. An uncontrolled release could lead to a violation of this standard. Air emissions will be determined during design and appropriate design measures will be included to insure compliance with this requirement. **See Table 3-2.a for additional details.**	Compliance strategy is addressed in Substantive Permitting requirements (see Table 3-2)	See Table 3-2

000163

1669

TABLE 3-1c. ACTION-SPECIFIC ARARS (Continued)

Category	Applicable Requirements	Requirements Assessment	Compliance Strategy	Index to Design
Air Discharges	OAC 3745-21-07 (G)(2) Control of emissions of organic material from stationary sources. Emissions of photochemical reactive material from processes, including drying, not to exceed 40 lbs/day, with a peak of 8 lbs/hour. **See Table 3-2.a for a detailed discussion relative to substantive requirements.**	Data from the OU1 Remedial Investigation Report indicate that VOCs do not need to be controlled because of their low concentrations. Although the concentration of organic material in the pit waste is expected to be low, the volume of the waste to be treated could result in sufficient emissions for this standard to be violated if emissions are uncontrolled. Note that it is current Ohio EPA policy to consider all VOCs to be photochemical reactive materials. **See Table 3-2.a for additional details.**	Compliance strategy is addressed in Substantive Permitting requirements (see Table 3-2)	See Table 3-2
Air Discharges	OAC 3745-31-05(A)(3) Permit to Install The director shall issue a permit to install if he determines that the installation or modification and operation of the air contaminant source will employ the best available technology. **See Table 3-2.a for a detailed discussion relative to substantive requirements.**	Although an administrative Permit to Install is not required for alternatives involving treatment, the substantive requirements of this section must be met by employing Best Available Technology (BAT) for treating particulate and off-gas emissions. **See Table 3-2.a for additional details.**	Compliance strategy is addressed in Substantive Permitting requirements (see Table 3-2)	See Table 3-2
NEPA	10 CFR 1021.2 DOE actions must be subjected to NEPA evaluation as outlined by CEQ regulations in 40 CFR 1500-1508.	On June 13, 1994, the DOE issued a revised policy statement on NEPA. The new policy allows DOE, at CERCLA sites, to rely on the CERCLA process to satisfy the procedural aspects of NEPA. NEPA values have been incorporated into the Final Operable Unit 1 Feasibility Study Report.	NEPA values have been incorporated into the Final OU1 Feasibility Study Report.	N/A

000164

A-1669

TABLE 3-1c. ACTION-SPECIFIC ARARS (Continued)

Category	Applicable Requirements	Requirements Assessment	Compliance Strategy	Index to Design
Air Discharges	40 CFR 61.670 Subpart OOO Stack emissions from affected facilities shall not: • Contain particulate matter in excess of 0.05 g/dscm; or • Exhibit greater than 7 percent opacity, unless the stack emissions are discharged from an affected facility using a wet scrubbing control device. **See Table 3-2.a for a detailed discussion relative to substantive requirements.**	These standards are relevant and appropriate to OU1 remedial activities since they specify requirements for crusher and conveyor systems. The standards will be considered when determining BAT requirements for these systems in accordance with OAC 3745-31-05(A)(3). **See Table 3-2.a for additional details.**	Compliance strategy is addressed in Substantive Permitting requirements (see Table 3-2)	See Table 3-2
BMP Program	40 CFR 125.100 and 125.104 Discharge of Treatment System Effluent Best Management Practices Development and implement a BMP program to prevent the release of toxic or hazardous pollutants to waters of the U.S. Development and implementation of a sitewide BMP Program is also required as a condition of the FEMP NPDES Permit.	As of September 27, 1995 [the issuance date of the current site NPDES permit (Ohio EPA Permit No. 1IO00004*ED)] activities at the Fernald Site are no longer subject to the provisions of the site BMP Plan or 40 CFR 125.100 and 125.104. Although no longer subject to the provisions of these requirements, discharges of stormwater and process wastewater must be managed in accordance with all applicable site procedures, the FEMP SWPPP and SPCCC Plans, and the current NPDES permit to mitigate potential releases of hazardous pollutants to waters of the U.S.	No action is required.	N/A
Solid Waste	40 CFR 241 Subpart B (OAC 3745-27), RCRA Subtitle D On-Property Solid Nonhazardous Waste Management Facilities Design standards are presented in the following citations: 241.200-2, 241.201-2, 241.202-2, 241.203-2, 241.204-2, 241.205-2, 241.206-2, 241.207-2, 241.208-2, 241.209-2, and 241.210-2.	Land disposal of solid waste will not occur in OU1. Solid waste from OU1 destined for on-site disposal will be sent to the On-Site Disposal Facility. The OU1 selected remedy involves handling residual contaminated soils and oversized materials in accordance with the OU5 and OU3 RODs, respectively. The OU1 design will necessarily reflect any requirements developed through the On-Site Disposal Facility design, relative to activities resulting in the placement of OU1 materials in the On-Site Disposal Facility.	Land disposal of solid waste will not occur in OU1.	Overview of Remedial Design Package Section 2.2; Design Criteria and Assumptions. Section 2.1 and 4.0.

000165

1669

TABLE 3-1c. ACTION-SPECIFIC ARARS (Continued)

Category	Applicable Requirements	Requirements Assessment	Compliance Strategy	Index to Design
Hazardous Waste	40 CFR 262.11 (OAC 3745-52-11) Hazardous Waste Determinations Any generator of waste must determine whether or not the waste is hazardous. **See Table 3-2c for a detailed discussion relative to substantive requirements.**	Excavation, size reduction, homogenization, blending, and drying of pit wastes are process activities which result in generation of a single waste stream. The newly generated waste is the waste stream that will be shipped off-site for disposal and represents the waste that must comply with regulatory requirements and disposal facility waste acceptance criteria. As documented in the OU1 Feasibility Study, Proposed Plan, and Record of Decision, this waste stream does not contain RCRA listed wastes; and in accordance with US EPA guidance for Superfund sites and 40 CFR 262.11 (c), the waste will be sampled for RCRA characteristics only. The methods that will be used to demonstrate compliance with regulatory criteria and WAC will be included in the Sampling and Analysis Plan developed to support the implementation of off-site shipping/ disposal. **See Table 3-2c for additional details.**	Compliance strategy is addressed in Substantive Permitting requirements (see Table 3-2)	See Table 3-2
Hazardous Waste	Closure 40 CFR 264, Subpart G (OAC 3745-55-(11-16)) Operator must close facility in a manner that: • Minimizes the need for further maintenance • Minimizes post-closure escape of hazardous constituents • Complies with specific unit type closure requirements **See Table 3-2c for a detailed discussion relative to substantive requirements.**	As documented in the Draft Director's Findings and Orders between Ohio EPA and DOE, demonstration of compliance with substantive closure and post-closure requirements for hazardous waste management units will be documented in remedial design and remedial action deliverables. DOE will provide a cross-reference to Ohio EPA that will contain an index to closure and post-closure requirements within the RD/RA deliverables. The RD/RA deliverables will be submitted for review in accordance with the Amended Consent Agreement. **See Table 3-2c for additional details.**	Compliance strategy is addressed in Substantive Permitting requirements (see Table 3-2)	See Table 3-2

000166

1669

TABLE 3-1c. ACTION-SPECIFIC ARARS (Continued)

Category	Applicable Requirements	Requirements Assessment	Compliance Strategy	Index to Design
Air Discharges	40 CFR 264.1030 - 264.1036, Subpart AA Air Emission Standards for Process Vents • Reduce total organic emissions below 1.4 kg/h (3 lb/h) and 2.8 Mg/yr (3.1 tons/yr) • Control device (condenser and absorber) must recover organic vapors with an efficiency of 95 percent or greater. **See Table 3-2.a for a detailed discussion relative to substantive requirements.**	No regulations have been promulgated for process vents associated with thermal drying; however, 40 CFR 264.1030 - .0136 will be relevant and appropriate but not applicable to air emission standards for process vents associated with thermal drying. **See Table 3-2.a for additional details.**	Compliance strategy is addressed in Substantive Permitting requirements (see Table 3-2)	See Table 3-2
Hazardous Waste	Post-Closure 40 CFR 264 Subpart G 40 CFR 264.117 (OAC 3745-55-17) 40 CFR 264.119 (OAC 3745-55-19) Post-closure care and use of property for a period as necessary to protect human health and the environment including: • Access controls • Monitoring Post-closure notices must include deed notation/use restriction. **See Table 3-2c for a detailed discussion relative to substantive requirements.**	As documented in the Draft Director's Findings and Orders between Ohio EPA and DOE, demonstration of compliance with substantive closure and post-closure requirements for hazardous waste management units will be documented in remedial design and remedial action deliverables. DOE will provide a cross-reference to Ohio EPA that will contain an index to closure and post-closure requirements within the RD/RA deliverables. The RD/RA deliverables will be submitted for review in accordance with the Amended Consent Agreement. **See Table 3-2c for additional details.**	Compliance strategy is addressed in Substantive Permitting requirements (see Table 3-2)	See Table 3-2
Monitoring	OAC 3745-57-91 and 92, Miscellaneous Methods of Waste Treatment Parts 91 and 92 include requirements for miscellaneous units environmental performance standards and monitoring, analysis, inspection, response, reporting, and corrective action.	This ARAR will be met by the implementation of activities associated with other ARARs that are protective of human health and the environment. Releases to the environment will be controlled using appropriate ventilation (for air emissions) and a stormwater/wastewater collection system (for water discharges).	Releases to the environment will be controlled using appropriate ventilation (for air emissions) and a stormwater/wastewater collection system (for water discharges).	Description of the Operation & Processes Sections 2.3, 2.8, 4.0; Design Criteria and Assumptions Section 3.1.

000167

1669

TABLE 3-1c. ACTION-SPECIFIC ARARS (Continued)

Category	Applicable Requirements	Requirements Assessment	Compliance Strategy	Index to Design
CAMUs	Corrective Action for SWMUs 40 CFR Subpart S 40 CFR 264.552,.553 Corrective Action Management Units (CAMUs) might be designed at the site as areas where remediation wastes (solid, hazardous, or contaminated media and debris) might be placed during the process of remediation. Temporary units (TUs) consisting of tanks and container storage units might be used to store and treat hazardous waste during the process of corrective action.	As an ARAR, the CAMU designation does not apply to waste disposed off-site; however, it does apply to waste that is managed on-site. OU1 pit wastes will be disposed of at an off-site facility and therefore, must meet all regulatory and disposal facility requirements. CAMUs can apply to residual soils remaining on site. As such, residual OU1 soils will be managed in accordance with the OU5 ROD which designates the FEMP site as a CAMU.	Residual OU1 soils will be managed in accordance with the OU5 ROD which designates the FEMP site as a CAMU.	Description of the Operation and Processes Section 2.0; Design Criteria and Assumptions Section 2.0; Excavation Plan; Site Preparation Package.
Category	**To-Be-Considered Requirements**	**Requirements Assessment**	**Compliance Strategy**	**Index to Design**
	DOE Order 5400.1 @ p. iv - 1 Since each DOE facility is unique, the need and level of effort for monitoring programs shall be determined by the appropriate field organization on a case-by-case basis.	OU1 is part of a DOE facility and is subject to these orders. The existing FEMP sitewide monitoring program will be supplemented, as necessary, to address the OU1 remediation facilities. Any additional monitoring will be reflected in the Sampling and Analysis Plan.	Additional monitoring activities will be reflected in the Sampling and Analysis Plan.	Description of the Operation & Processes Section 4.0; Design Criteria and Assumptions Sections 2.0 and 4.0.
	DOE Order 5400.1 @ iv - 9, 10 Groundwater that is or could be affected by DOE activities shall be monitored to determine and document the effects of operations on groundwater quality and quantity and to demonstrate compliance with DOE requirements and applicable Federal, State, and local laws and regulations.	As discussed in Subsection 4.4.1 of the OU1 Remedial Design Work Plan, the existing FEMP groundwater monitoring program will be used for assessing potential impacts to the groundwater due to planned OU1 remediation activities.	The existing FEMP groundwater monitoring program will be used for assessing potential impacts to the groundwater due to planned OU1 remediation activities	N/A

000168

1669

TABLE 3-1c. ACTION-SPECIFIC ARARS (Continued)

Category	To-Be-Considered Requirements	Requirements Assessment	Compliance Strategy	Index to Design
	DOE Order 5820.2A @ 1 Radioactive Waste Management DOE 5820.2A III.3h Management of Low-Level Waste, Long-Term Storage Radioactive and mixed wastes shall be managed in a manner that assures protection of the health and safety of the public, DOE and contractor employees, and the environment. 5820.2A III.3h requires achieving performance objectives of DOE. 5820.2A III.3a requires records and documentation be kept for storage of low-level waste and permits the storage of waste until disposal by approved methods.	The treatment and storage of OU1 radioactive wastes, and the other pollutants or hazardous substances they contain, will be accomplished in a manner that complies with all applicable Federal, State and local environmental, safety, and health laws and regulations, and DOE requirements.	The treatment and storage of OU1 radioactive wastes, and the other pollutants or hazardous substances they contain, will be accomplished in a manner that complies with all applicable Federal, State, and local environmental, safety, and health law and regulations, and DOE requirements.	Description of the Operation & Processes Sections 2.2, 2.3, 2.4, 2.5, 2.6, 2.7, 2.8, 2.9, 3.2, 3.3, 3.4, 3.5, and 3.6; Design Criteria and Assumptions Sections 2.2, 2.3, 2.4, 2.5, 2.6, 2.7, 2.8, 4.1, and 4.2; Excavation Plan Sections 5.0, 6.0, and 7.0.

000169

1669

TABLE 3-2a. SUBSTANTIVE PERMITTING REQUIREMENTS FOR AIR CONTAMINANT SOURCES

Citation	Substantive Permitting Requirements	Requirements Assessment	Compliance Strategy	Index to Design
		Substantive Air Permits - Dryer		
Permits to Install New Sources of Emissions OAC 3745-31-05(A)	The director shall issue a permit to install if he determines that the installation or modification and operation of an air contaminant source will: • Not prevent or interfere with the attainment or maintenance of applicable ambient air quality standards; • Not result in a violation of any applicable air pollution control laws; and • Employ best available technology to control emissions.	Permits to Install would be required for facilities such as a fueling station, rotary dryer, and gas furnace in absence of the CERCLA 121 (e) permitting exemption. These sources will be installed such that they do not interfere with the attainment or maintenance of any applicable air quality standards or cause a violation of applicable air control laws. BAT will be employed to control both point source and fugitive emissions associated with the project. BAT for particulate radionuclides emissions shall be HEPA Filtration with differential pressure gauge and low differential pressure alarm to be installed on the dryer off-gas system.	Permits to install would be required for the rotary dryer, natural gas furnace and fueling station(s), in the absence of the CERCLA 121(e) permitting exemption. These sources will be installed such that they do not interfere with the attainment or maintenance of any applicable air quality standards or cause a violation of applicable air control laws. BAT will be employed to control both point source; and fugitive emissions associated with the project. BAT for organic emission is a carbon filter or thermal oxidation. BAT for particulate radionuclides emissions shall be HEPA Filtration with differential pressure gauge and low differential pressure alarm to be installed on the rotary dryer off-gas system.	Description of the Operation and Processes Sections 2.4, 2.5, 2.6, 3.2, 3.3, 3.4, 4.0, and 5.4; Design Criteria and Assumptions Sections 2.4, 2.5, 2.6, and 3.1

000170

1669

TABLE 3-2a. SUBSTANTIVE PERMITTING REQUIREMENTS FOR AIR CONTAMINANT SOURCES (CONTINUED)

Citation	Substantive Permitting Requirements	Requirements Assessment	Compliance Strategy	Index to Design
		Substantive Air Permits - Rotary Dryer		
Particulate Matter Standards OAC 3745-17-07	Visible particulate emissions from any stack may exceed twenty percent opacity, as a six minute average, for not more than six consecutive minutes in any sixty minutes, but shall not exceed sixty percent opacity, as a six minute average, at any time.	BAT shall mean that visible emissions of particulate shall not exceed zero (0%) percent opacity from the discharge stack of any control device associated with this source excluding water vapor.	Visible emissions of the particulate from the rotary dryer stack will not exceed 0 percent opacity through the use of HEPA filtration with differential pressure gauges and low differential pressure alarm. Fugitive dust emissions, primarily from excavation, hauling, and processing soils will be mitigated by the use of the following, as appropriate, when visible dust is present: - Water or other dust suppression chemicals - Periodic application of water or other suitable dust suppressing chemicals is required on all dirt or gravel roads, parking lots, or other surfaces that can cause fugitive emissions. - Maintaining roadways in clean conditions - Covering open bodied vehicles when transporting materials likely to become airborne. Reasonably available control measures shall include: use of water or other suitable dust suppression chemicals for the control of fugitive dust, conducting shredding and screening operations in a processing building, covering of open bodied vehicles when transporting materials likely to become airborne, appropriate maintenance of roadways and work areas to control dust and the visual monitoring for visible dust. For materials stored or exposed for extended periods, more stringent BAT controls will be applied, including application of PolyShell or other crusting agents, or by maintaining the waste surface in a moist condition thereby eliminating the potential for airborne emissions.	Description of the Operation and Processes Sections 2.4, 2.5, 2.6, 3.2, 3.3, and 3.4; Design Criteria and Assumptions Sections 2.4, 2.5, 2.6, and 3.1; Pre-Operational Environmental Control Plan Section 5.0

000171

1669

TABLE 3-2a. SUBSTANTIVE PERMITTING REQUIREMENTS FOR AIR CONTAMINANT SOURCES (CONTINUED)

Citation	Substantive Permitting Requirements	Requirements Assessment	Compliance Strategy	Index to Design
Substantive Air Permits - Rotary Dryer				
National Emission Standards for Hazardous Air Pollutants (NESHAP) - 40 CFR Part 61, Subpart H - Emissions of Radionuclides Other Than Radon From DOE Facilities 40 CFR 61.90 and 40 CFR 61.96(b) and 40 CFR 61.92 (DOE 5400.5) and 40 CFR 61.93(b)	An application for approval does not have to be filed for radionuclide sources if the effective dose equivalent caused by all emissions from the new construction or modification is less than 0.1 mrem per year. Radiological emissions (except radon-222 and radon-220) to the ambient air from DOE facilities shall not exceed those amounts that would cause any member of the public to receive an effective dose equivalent of 10 mrem in any one year. Continuous emission monitoring is required for stacks and vents that have the potential, under normal operating conditions, but without emission control release radionuclides in sufficient quantities to cause any member of the general public to receive an effective dose equivalent of 0.1 mrem/year or greater.	HEPA filtration is BAT for radionuclide emissions and shall be installed to minimize radiological emissions to the ambient air and the contribution to the effective dose equivalent to any member of the public from the dryer stack. If determined to be necessary, based on modeling of radionuclide emissions to the site boundary, a continuous stack monitor shall be operated when radionuclide emissions are exhausted through the stack. The monitoring system shall have an isokinetic sampler designed and built in accordance with 40 CFR 61.93. The sampler shall include a radiation monitor with a high radiation alarm.	HEPA filtration is BAT for radionuclide emissions and shall be installed to minimize radiological emissions to the ambient air and the contribution to the effective dose equivalent to any member of the public from the rotary dryer stack. Radon emission from the rotary dryer or other point sources will meet a stack limit based on a maximum allowable off-site impact of 0.5 pCi/L annual average. Air emissions data and design assumptions will be provided to FDF for incorporation into the site-wide air model for calculation of stack limits. An independent performance test firm shall be retained to verify BAT is being met for emissions. To confirm operation of the CEM, sampling will be done during the performance test using Method 114. The monitoring system shall have an isokinetic sampler design and built in accordance with 40 CFR 61.93. The sampler shall include a radiation monitor with a high radiation alarm. A continuous air monitoring system will be provided to monitor the rotary dryer process off-gas downstream of the HEPA filters. The continuous air monitoring system will have the capability to discriminate radon.	Description of the Operation and Processes Sections 2.4, 2.5, 2.6, 3.2, 3.3, 3.4 and 4.0; Design Criteria and Assumptions Sections 2.4, 2.5, 2.6, and 3.1

000172

1669

TABLE 3-2a. SUBSTANTIVE PERMITTING REQUIREMENTS FOR AIR CONTAMINANT SOURCES (CONTINUED)

Citation	Substantive Permitting Requirements	Requirements Assessment	Compliance Strategy	Index to Design
		Substantive Air Permits - Rotary Dryer		
Radon Emissions 40 CFR 192, Subpart A	Radon emissions from the dryer or other point sources shall meet a stack limit based on a maximum allowable off-site impact of 0.5 pCi/l annual average for each point source. This limit is based on 40 CFR 192, Subpart A. Although this limit is not directly applicable to point sources, applying to the impact from restored sites and not sites under remediation, it is being identified as a relevant and appropriate limit. To calculate the stack limit for a point source, EPA-approved dispersion modeling shall be used.		Radon emissions from the rotary dryer or other point sources shall meet stack limits based on a maximum allowable off-site impact of 0.5 pCi/L annual average. Design data shall be provided to FDF for determination of the emissions limit using the FEMP site-wide model. A continuous air monitoring system will be provided to monitor the rotary dryer process off-gas downstream of the HEPA filters. The continuous air monitoring system will have the capability to discriminate radon.	Description of the Operation and Processes Sections 2.4, 2.5, 2.6, 3.2, 3.3, 3.4, and 4.0; Design Criteria and Assumptions Sections 2.4, 2.5, 2.6, and 3.1
Ohio EPA Air Toxics Policy	The current PTI regulations provide the Director of Ohio EPA with a mechanism to require the evaluation of toxic air contaminants from new sources. The Ohio EPA Air Toxics Policy provides a mechanism for calculating the Maximum Acceptable Ground-Level Concentration (MAGLC) for a toxic substance. This value at the site boundary will be modeled to the stack to determine a stack limit. All toxic compounds that will exceed the stack limit shall be controlled administratively or by BAT to lower emissions to below the calculated stack limit.	For toxic compound emissions that were calculated to exceed the established stack limit, administrative controls shall be implemented or emissions shall be controlled by implementing BAT for toxic emissions. BAT for toxic emissions shall be throughput/materials restrictions or carbon beds for organic, caustic scrubbers for acidic fumes, or condenser for organic and acidic fumes. Performance of these control measures will be verified through performance testing during initial operation.	Administrative controls will be implemented or emissions will be controlled by implementing BAT for toxic emissions that are calculated to exceed stack limits. BAT for toxic emissions will be throughput/materials restriction, carbon beds, or thermal oxidation for organic vapors, caustic addition for acidic fumes, and condensation for organic and acidic fumes. Performance of these control measures will be verified through performance testing during initial operation.	Description of the Operation and Processes Sections 2.5, 2.6, 3.3, 3.4, and 4.0; Design Criteria and Assumptions Sections 2.5, 2.6 and 3.1
Air Emission Standards for Process Vents 40 CFR 264.1030-264.1036	No regulations have been promulgated for process vents associated with thermal drying, however, 40 CFR 264.1030-1036 will be relevant and appropriate but not applicable to air emission standards for process vents associated with thermal drying.	To control organic emissions, BAT shall be implemented. BAT for organic emissions shall be either carbon beds or condensers or administrative controls.	Pressure relief disks or panels will be used on the process equipment as there is a potential for combustible atmospheres to exist during upset conditions. Inert gas blanketing will be used to minimize the potential for the development of combustible atmospheres. BAT for organic emissions will be condensation followed by carbon beds or thermal oxidation.	Description of the Operation and Processes Sections 2.5, 2.6, 3.3, and 3.4; Design Criteria and Assumptions Sections 2.5, 2.6 and 3.1

000173

1669

TABLE 3-2a. SUBSTANTIVE PERMITTING REQUIREMENTS FOR AIR CONTAMINANT SOURCES (CONTINUED)

Citation	Substantive Permitting Requirements	Requirements Assessment	Compliance Strategy	Index to Design
Substantive Air Permits - Rotary Dryer				
Air Quality Standards 40 CFR 60.670 Subpart OOO	Stack emissions from affected facilities shall not: contain particulate matter in excess of 0.05 g/dscm; or exhibit greater than 7 percent opacity, unless the stack emissions are discharged from an affected facility using a wet scrubbing control device. These standards are relevant and appropriate since shredder and conveyor systems were identified in the Operable Unit 1 FS.	Shredder and conveyor systems will be enclosed with dust suppression system to meet this requirement. BAT for particulate radionuclides emissions shall be HEPA Filtration with differential pressure gauge and low differential pressure alarm to be installed on the dryer off-gas system.	Conveyor systems installed outdoors will be covered type with water spray dust suppression system to control airborne dust at the outfeed. Shredder and conveyor systems installed inside buildings need not be covered and will have water spray dust suppression systems to control airborne dust at the outfeed. A wet scrubbing system has been utilized. BAT for particulate radionuclides emissions shall be HEPA Filtration with differential pressure gauge and low differential pressure alarm to be installed on the rotary dryer off-gas system.	Description of the Operation and Processes Sections 2.4, 2.5, 2.6, 3.2, 3.3, and 3.4; Design Criteria and Assumptions Sections 2.4, 2.5, 2.6, and 3.1
Air Quality Standards OAC 3745-21-07(G)(2)	Emissions of photochemical reactive material from processes, including drying, not to exceed 40 lbs/day, with a peak of 8 lbs/hour.	BAT shall be implemented to control organic emissions. BAT for organic emissions shall be either administrative controls or installing carbon beds or a condenser.	BAT shall be implemented to control organic emissions. BAT for organic emissions on the rotary dryer shall be vapor condensation combined with carbon beds or thermal oxidation. BAT for other processes shall be application of administrative controls.	Description of the Operation and Processes Sections 2.5, 2.6, 3.3, and 3.4; Design Criteria and Assumptions Sections 2.5, 2.6, and 3.1.
Air Quality Standards OAC 3745-21-02(C) and OAC 3745-21-03(D)	This requirement covers ambient air quality standards, guidelines, and methods of ambient air quality measurements for non-methane hydrocarbons. Mean ambient concentration of non-methane hydrocarbons not to exceed 160 micrograms/cubic meters (0.24 ppm as carbon) between 6 and 9 a.m.; methods for determining ambient concentration of non-methane hydrocarbons.	During drying, hydrocarbon soil contaminants may be evolved with the steam. An uncontrolled release could lead to a violation of this standard. BAT shall be implemented to control non-methane hydrocarbon emissions. BAT to reduce non-methane hydrocarbon emissions shall be either administrative controls or installing carbon beds or a condenser. Compliance to this standard shall be demonstrated using EPA-approved air modeling.	BAT shall be implemented to control organic emissions. BAT for organic emissions on the rotary dryer shall be vapor condensation combined with carbon beds or thermal oxidation. BAT for other processes shall be application of administrative controls. Compliance to this standard shall be demonstrated using the FEMP site-wide air model based upon design assumptions and data from the performance test.	Description of the Operation and Processes Sections 2.5, 2.6, 3.3, 3.4, and 4.0; Design Criteria and Assumptions Sections 2.5, 2.6, and 3.1.
General Provisions on Air Pollution Control OAC 3745-15-07(A)	Emission of any substance into the air in such a manner or in such amounts as to endanger the health, safety or welfare of the public, or cause unreasonable injury or damage to property, is hereby found and declared a public nuisance. It shall be unlawful for any person to cause, permit, or maintain any such public nuisance.	Potential emissions from the dryer shall be evaluated during the design phase. Emissions shall be controlled using BAT either administratively or installing BAT control equipment.	Potential emissions from the rotary dryer will be evaluated during the design phase. Using the FDF site-wide dispersion model emissions will be controlled using BAT either administratively and/or installing BAT control equipment. Fugitive emissions will be controlled using BAT. See OAC 3745-17-07(B) and OAC 3745-17-8(B).	Description of the Operation and Processes Sections 2.4, 2.5, 2.6, 3.2, 3.3, 3.4 and 4.0; Design Criteria and Assumptions Sections 2.4, 2.5, 2.6, and 3.1

000174

1669

TABLE 3-2a. SUBSTANTIVE PERMITTING REQUIREMENTS FOR AIR CONTAMINANT SOURCES (CONTINUED)

Citation	Substantive Permitting Requirements	Requirements Assessment	Compliance Strategy	Index to Design
Nitrogen Oxide Standards OAC 3745-23-06(B)	Except as otherwise provided in these regulations, all stationary nitrogen oxide emission sources shall minimize nitrogen oxide emission by use of the latest available control techniques and operating practices in accordance with best current technology.	To minimize nitrogen oxide emissions, the dryer shall be equipped with low NOx burners which is considered BAT for gas-fired burners.	To minimize nitrogen oxide emissions the rotary dryer will be equipped with low NOx burners which is considered BAT for gas burners.	Description of the Operation and Processes Sections 2.5 and 3.3; Design Criteria and Assumptions Section 2.5.

000175

1669

TABLE 3-2a. SUBSTANTIVE PERMITTING REQUIREMENTS FOR AIR CONTAMINANT SOURCES (CONTINUED)

Citation	Substantive Permitting Requirements	Requirements Assessment	Compliance Strategy	Index to Design
Excavated Working Materials - Materials Being Excavated, Transported, Stored, or Blended				
Permits to Install New Sources of Emissions OAC 3745-31-05(A)	The director shall issue a permit to install if he determines that the installation or modification and operation of an air contaminant source will: · Not prevent or interfere with the attainment or maintenance of applicable ambient air quality standards; • Not result in a violation of any applicable air pollution control laws; and • Employ best available technology to control emissions.	Permits to Install would be required for facilities such as a fueling station, rotary dryer, and gas furnace in absence of the CERCLA 121 (e) permitting exemption. These sources will be installed such that they do not interfere with the attainment or maintenance of any applicable air quality standards or cause a violation of applicable air control laws. BAT will be employed to control both point source and fugitive emissions associated with the project.	Permits to install would be required for the rotary dryer, natural gas furnace and fueling station(s), in the absence of the CERCLA 121(e) permitting exemption. Sources will be installed such that they do not interfere with the attainment or maintenance of any applicable air quality standards or cause a violation of applicable air control laws. BAT will be employed to control both point source and fugitive emissions associated with the project.	Description of the Operation and Processes Sections 2.1, 2.2, 2.3, 2.7, 3.1, and 3.5; Design Criteria and Assumptions Sections 2.1, 2.2, 2.3, 2.7, 3.1, and 7.3; Excavation Plan Section 5.0; Pre-Operational Environmental Control Plan Section 5.0.
Radon Emissions	Radon emissions from excavated working materials are intermittent fugitive sources and will be controlled by implementing BAT with no numerical emission rate limit. This policy is described in greater detail in Section J.4.2.2.3 of this Attachment.	BAT control for radon emissions from excavated working materials can be, but is not limited to, applying water or a dust suppressant over the residues, or work practices to minimize handling, disturbances or time exposed. For storage piles that will be stored for an extended period of time, more stringent BAT controls shall be implemented such as applying tarps or building a ventilated temporary structure with controls such as carbon beds.	BAT control for radon emissions from excavated working materials shall include, but not be limited to, applying water or a dust suppressant over the residues, or work practices to minimize handling, disturbances, or time exposed. For storage piles needed for an extended period of time, more stringent BAT controls shall be implemented such as applying polyshell or equal.	Description of the Operation and Processes Sections 2.1, 2.2, 2.3, and 3.1; Design Criteria and Assumptions Sections 2.1, 2.2, 2.3, and 3.1; Excavation Plan Section 5.0; Pre-Operational Environmental Control Plan Section 5.0.
General Provisions on Air Pollution Control OAC 3745-15-07 (A)	Emission of any substance into the air in such a manner or in such amounts as to endanger the health, safety or welfare of the public, or cause unreasonable injury or damage to property, is hereby found and declared a public nuisance. It shall be unlawful for any person to cause, permit, or maintain any such public nuisance.	Fugitive emissions shall be controlled using BAT. See OAC 3745-17-07(B) and OAC 3745-17-8 (B).	Fugitive emissions shall be controlled using BAT including, as is deemed necessary, the application PolyShell, a plastic and fly ash mixture, or equivalent material, to exposed pit surfaces to control dust and erosion and to minimize water run-on. Water or other dust suppressants will be applied as deemed necessary during operations.	Description of the Operation and Processes Sections 2.1, 2.2, 2.3, 2.7, 3.1, and 3.5; Design Criteria and Assumptions Sections 2.1, 2.2, 2.3, 2.7, 3.1, and 7.3 Excavation Plan Section 5.0; Pre-Operational Environmental Control Plan Section 5.0.

000176

1669

TABLE 3-2a. SUBSTANTIVE PERMITTING REQUIREMENTS FOR AIR CONTAMINANT SOURCES (CONTINUED)

Citation	Substantive Permitting Requirements	Requirements Assessment	Compliance Strategy	Index to Design
Excavated Working Materials - Materials Being Excavated, Transported, Stored, or Blended				
Particulate Matter Standards OAC 3745-17-07(B) and OAC 3745-17-8 (B)	Visible particulate emissions from any fugitive dust source shall not exceed twenty percent opacity as a three-minute average except: a) There shall be no visible particulate emissions from any paved roadway or parking area except for a period of time not to exceed six minutes during any sixty-minute observation period. b) There shall be no visible particulate emissions from any unpaved roadway or parking area except for a period of time not to exceed thirteen minutes during any sixty-minute observation period. c) There shall be no visible particulate emissions from any material storage piles except for a period of time not to exceed thirteen minutes during any sixty-minute observation period.	No person shall cause or permit any fugitive dust source to be operated; or any materials to be handled, transported, or stored; or a building or its appurtenances or a road to be used, without taking or installing reasonably available control measures to prevent fugitive dust from becoming airborne. Such reasonably available control measures shall include, but not limited to, one or more of the following which are appropriate to minimize or eliminate visible particulate emissions of fugitive dust: 1) The use of water or other suitable dust suppression chemicals for the control of fugitive dust from demolition of existing buildings or structures, constructions operations, the grading of roads or clearing land; 2) The periodic application of asphalt, water, or other suitable dust suppression chemicals on dirt or gravel roads and parking lots, and other surfaces which can cause emissions of fugitive dust; suitable coverings; 3) The periodic application of water or other suitable dust suppression chemicals, the installation of storage silos, bins, or other enclosed structures, or the use of canvas or other suitable coverings, for all materials stockpiles and stockpiling operations; 4) The covering, at all times, of open bodied vehicles when transporting materials likely to become airborne; 5) The paving of roadways and the maintaining of roadways in a clean condition. Fugitive sources can also be controlled through work practices such as minimize handling, disturbances, or time exposed to the residues. Note 1: The presence of visible dust indicates the need for implementation of the above, as applicable. Note 2: For contingency materials that will be stored for an extended period of time, more stringent BAT controls shall be implemented such as applying tarps or building a ventilated temporary structure with BAT controls such as HEPA filtration.	Fugitive dust emissions, primarily from excavation, hauling, and processing soils will be mitigated by the use of the following, as appropriate, when visible dust is present: - Water or other dust suppression chemicals - Periodic application of water, or other suitable dust suppressing chemicals as required on all dirt or gravel roads, parking lots, or other surfaces that can cause fugitive emissions. - Maintaining roadways in clean conditions - Providing a structure for the waste feed and treated material storage areas with a passive ventilation system. - Covering at all times open bodied vehicles when transporting materials likely to become airborne. Reasonably available control measures shall include, as is deemed necessary, the following: use of water or other suitable dust suppression chemicals for the control of fugitive dust, providing a structure for the shredding and screening operations, covering of open bodied vehicles when transporting materials likely to become airborne, appropriate maintenance of roadways and work areas to control dust and the visual monitoring for visible dust. For materials stored or exposed for extended periods, more stringent BAT controls will be applied, including application of PolyShell or equal. * It should be noted that this ARAR was identified in the OU1 ROD, and the discussion of the requirements of this ARAR is correctly represented in this table. However, it should also be noted that the project will comply with the Ohio EPA approved FEMP Site Wide Dust Control Policy.	Description of the Operation and Processes Sections 2.1, 2.2, 2.3 2.7, 3.1, and 3.5; Design Criteria and Assumptions Sections 2.1, 2.2, 2.3, 2.7, and 3.1; Excavation Plan Section 5.0; Pre-Operational Environmental Control Plan Section 5.0.

000177

1669

TABLE 3-2a. SUBSTANTIVE PERMITTING REQUIREMENTS FOR AIR CONTAMINANT SOURCES (CONTINUED)

Citation	Substantive Permitting Requirements	Requirements Assessment	Compliance Strategy	Index to Design
		Waste Pits		
National Emission standards for Air Pollutants (NESHAP) - 40 CFR 61, Subpart Q - Emissions of Radon From Department of Energy Facilities	No source at a DOE facility shall emit more than 20 pCi/m^2/sec of radon-222 as an average for the entire source, into the air. Source means any building, structure, pile, impoundment or area used for interim storage or disposal that is or contains waste material containing radium in sufficient concentration to emit radon-222 in excess of this standard prior to remedial action.		BAT control for radon emissions from the waste pits will include, but is not limited to, applying water or dust suppressant over the residues, or work practices to minimize handling, disturbances or time exposed.	Description of the Operation and Processes Sections 2.1, 2.2, 2.3, and 3.1; Design Criteria and Assumptions Sections 2.1, 2.2, 2.3, and 3.1; Excavation Plan Section 5.0; Pre-Operational Environmental Control Plan Section 5.0.

000178

1669

TABLE 3-2b. NPDES PERMITTING REQUIREMENTS

Citation	Substantive Permitting Requirements	Requirements Assessment	Compliance Strategy	Index to Design
		Ohio EPA Permit No. 1IO00004*ED		
Ohio EPA NPDES Permit No. 1IO00004*ED	Wastewater discharges associate with the Operable Unit 1 remedial action must be treated to ensure compliance with the terms and conditions of the FEMP NPDES permit. DOE is required to notify Ohio EPA of any activities or changes at the site which have the potential to significantly alter the character of the wastewater streams being discharged under its existing NPDES permit. A NPDES permit modification is required if the discharge is deemed significant enough to cause a change in the character of the wastewater stream. The existing NPDES permit must also be modified to reflect the addition on any new point source discharges of process wastewaters or storm waters. Construction related storm water runoff must be managed in accordance with the requirements of the existing FEMP NPDES permit and Stormwater Pollution Prevention Plan.	Wastewater discharges associated with the Operable Unit 1 remedial action will be treated to ensure compliance with NPDES permit requirements. The existing NPDES permit will be modified and/or renewed to reflect process wastewater discharges and to incorporate the addition of the new industrial storm water outfall to Paddy's Run Creek. Construction related storm water runoff will continue to be managed in accordance with the requirements of the existing FEMP NPDES permit and Stormwater Pollution Prevention Plan.	Wastewater discharges associated with the OU1 remedial action will be treated to ensure compliance with the NPDES permit requirements. IT will provide FDF with the data necessary to modify the existing NPDES permit to reflect process wastewater discharges and any changes to storm water outfalls to Paddy's Run Creek. Construction related storm water run-off will continue to be managed in accordance with the requirements of the existing FEMP NPDES permit and Stormwater Pollution Prevention Plan.	Description of the Operation and Processes Sections 2.8, 2.9, 3.6, and 4.0; Design Criteria and Assumptions Sections 2.8 and 3.2; Excavation Plan Section 6.0; Pre-Operational Environmental Control Plan Sections 2.3, 3.3, 6.0, and 7.1; Operation and Maintenance Plan for Existing Facilities Section 4.5.

000129

1669

TABLE 3-2c. RCRA SUBSTANTIVE PERMITTING REQUIREMENTS

Citation	Substantive Permitting Requirements	Requirements Assessment	Compliance Strategy	Index to Design
RCRA Substantive Permitting Requirements				
Hazardous Waste Determinations 40 CFR 262.11 (OAC 3745-52-11)	Generators of wastes must determine whether or not these wastes are hazardous in accordance with the requirements of this rule.	Excavation, size reduction, homogenization, blending, and drying of pit wastes will result in the production of a single waste stream that will subsequently be shipped off-site by railcar for disposal at a commercially permit disposal facility. Representative samples from each railcar will be sampled to ensure they meet regulatory and disposal facility waste acceptance criteria. As documented in the Operable Unit 1 FS/PP and ROD, this waste stream does not contain RCRA listed wastes and therefore, samples will be analyzed for RCRA characteristics only in accordance with the requirements of 40 CFR 262.11 and OAC 3745-52-11. If analytical results indicate the waste exhibits RCRA hazardous characteristics, the material will be staged and packaged by the subcontractor for turn-over to Fluor Daniel Fernald, Inc. who in turn will perform any additional characterization, packaging, etc. necessary for shipment and disposal as hazardous waste.	Representative samples of waste material will be collected and analyzed prior to railcar loadout to ensure compliance with the CDF WAC. Details of waste sampling activities will be given in the Sampling and Analysis Plan.	Description of the Operation and Processes Section 4.0; Design Criteria and Assumptions Section 3.3
Preparing and Transporting Hazardous Waste Off-site. 40 CFR 262.20 through 262.33 and 40 CFR 263.20 (OAC 3745-52-20 through 33 and OAC 3745-52-40 and OAC 3745-52-42)	Any generator who transports hazardous waste for off-site treatment, storage, or disposal must originate and follow-up the manifest for off-site shipments. Pre-transporting requirements include appropriate packaging, labeling, marking, and placarding.	If analytical results indicate the waste exhibits RCRA hazardous characteristics, the material will be staged and packaged by the subcontractor for turn-over to Fluor Daniel Fernald, Inc. who in turn will perform any additional characterization, packaging, etc. necessary for shipment to a permitted commercial disposal facility for treatment and disposal as hazardous waste in accordance with the provisions of these regulations.	Hazardous waste, if encountered, will be turned over to FDF for handling and disposition.	Description of the Operation and Processes Section 4.0; Design Criteria and Assumptions Section 3.3; Excavation Plan 5.0.

000180

1669

TABLE 3-2c. RCRA SUBSTANTIVE PERMITTING REQUIREMENTS (CONTINUED)

Citation	Substantive Permitting Requirements	Requirements Assessment	Compliance Strategy	Index to Design
		RCRA Substantive Permitting Requirements		
Closure 40 CFR 264, Subpart G (OAC 3745-55-11 through 16)	Owner and/or operators must close facilities in a manner that: • Minimizes the need for further maintenance • Minimizes post-closure escape of hazardous constituents • Complies with specific unit type closure requirements	Hazardous waste management units located within the Operable Unit 1 boundary will be closed in accordance with the substantive provisions of these requirements during the Operable Unit 1 remedial process. As documented in the Director's Final Findings and Orders between DOE and Ohio EPA, demonstration of compliance with substantive closure and post-closure requirements for hazardous waste management units will be documented in the various remedial design and remedial action documents developed for this project.	Hazardous waste management units located within the OU1 boundary will be closed in accordance with the substantive provisions of these requirements during the OU1 remedial process. As documented in the Director's Final Findings and Orders between DOE and Ohio EPA, demonstration of compliance with substantive closure and post-closure requirements for hazardous waste management units will be documented in the various remedial design and remedial action documents developed for this project	Design Criteria and Assumptions Section 3.3
Post-Closure 40 CFR 264 Subpart G 40 CFR 264.117 and 40 CFR 264.119 (OAC 3745-55-17 and OAC 3745-55-19)	Post-closure care and use of property for a period as necessary to protect human health and the environment including: • Access controls • Monitoring Post-closure notices must include deed notation/use restriction.	Post-closure care will be provided in accordance with the substantive provisions of these requirements during the Operable Unit 1 remedial process. As documented in the Director's Final Findings and Orders between DOE and Ohio EPA, demonstration of compliance with substantive closure and post-closure requirements for hazardous waste management units will be documented in the various remedial design and remedial action documents developed for this project.	Post-closure care will be provided in accordance with the substantive provisions of these requirements during the OU1 remedial process. As documented in the Director's Final Findings and Orders between DOE and the Ohio EPA, demonstration of compliance with substantive closure and post-closure requirements for hazardous waste management units will be documented in the various remedial design and remedial action documents developed for this project.	Design Criteria and Assumptions Section 3.3

000151

F-1669

TABLE 3-2c. RCRA SUBSTANTIVE PERMITTING REQUIREMENTS (CONTINUED)

Citation	Substantive Permitting Requirements	Requirements Assessment	Compliance Strategy	Index to Design
RCRA Substantive Permitting Requirements				
Waste Piles OAC 3745-56-51, 54, and 58	These requirements specify design and operating requirements, monitoring, and inspection, closure and post-closure care. Specific substantive requirements include: • Run-on/run-off control systems must be designed and installed to prevent flow onto or runoff from the active pile during peak flows from a 25-year, 24-hour storm event. • Collection and hold facilities associated with run-on/run-off control systems must be emptied after storms. • Piles must be covered or otherwise managed to prevent wind dispersion. • Waste piles must be inspected weekly and after storms to ensure the integrity of run-on and run-off controls. • At closure, owners must remove or decontaminate all waste residues, contaminated system components, contaminated subsoils and structures, and equipment contaminated with waste and leachate, and manage as hazardous waste.	Waste piles generated during the course of the project will be managed in accordance with the substantive provisions of these requirements. Upon completion of remedial activities, the processing facility will be remediated to remove all processing facilities and residual contamination consistent with established remedial levels.	Outdoor stockpiles will be utilized during the pre-operational phase of the project. Stockpile Run-on/run-off controls will be designed and installed in compliance with the requirements of the FDF Stormwater Pollution Prevention Plan (SWPPP). No outdoor waste stockpiles, outside of the waste pit area, are anticipated during the operation of the facility. During facility operation, waste stockpiles will be located inside the facility buildings. Buildings will have roofs, partial side walls, perimeter curbs, floor sumps, and areas sloped to manage drainage. These building features will control runon/runoff for the indoor stockpiles. Stockpile run-on/run-off collection and hold facilities will be managed in compliance with the requirements of the SWPPP. Indoor stockpiles will managed to prevent wind dispersion using building structures with roof and partial side walls. Outdoor stockpiles, if any, will be managed to prevent wind dispersion using applicable covers or by application of dust suppressants. Routine inspections of OU1 Stockpiles will be performed at least weekly and documented throughout the OU1 remedial activities. Stockpiles inside the facility buildings will be visually monitored by the personnel working in the buildings and/or remotely by video camera. At closure, the facility will be decontaminated and dismantled per the D&D Implementation Plan in accordance with the Director's Final Findings and Orders between DOE and the Ohio EPA.	Description of the Operation and Processes Sections 2.1, 2.2, 2.3, and 2.8; Design Criteria and Assumptions Sections 2.1, 2.2, 2.3, 2.8, 3.2, and 3.3; Excavation Plan Section 6.0; Pre-Operational Environmental Plan Sections 2.3, 3.3, 6.0, and 7.1; Operational and maintenance Plan for Existing Facilities Section 4.5; D&D Implementation Plan.

000182

1669

TABLE 3-2d. CWA SECTION 404 AND 401 SUBSTANTIVE WETLAND PERMITTING REQUIREMENTS

Citation	Substantive Permitting Requirements	Requirements Assessment	Compliance Strategy	Index to Design
Nationwide Permit 26 - Substantive Permitting Requirements				
Nationwide Permits 33 CFR Part 330, Appendix A	Discharges of dredged and fill material associated with the Operable Unit 1 remedial action shall not exceed 10 acres or more of total disturbance.	Discharges of dredged or fill material associated with the Operable Unit 1 remedial action total approximately 4.96 acres.	N/A	N/A
Nationwide Permits 33 CFR Part 330, Appendix A	No activity may cause more than a minimal adverse effect on navigation.	Discharges will be conducted within isolated and headwater wetlands and therefore, will have no adverse impacts on navigation.	N/A	N/A
Nationwide Permits 33 CFR Part 330, Appendix A	Any structure or fill authorized shall be properly maintained, including maintenance to ensure public safety.	Fill material will be maintained and stabilized upon completion of remedial activities. Public access to the Operable Unit 1 area of the site is restricted to site personnel, via the existing site security system.	N/A	N/A
Nationwide Permits 33 CFR Part 330, Appendix A	Appropriate erosion control and siltation controls must be used and maintained in effective operating condition during construction, and all exposed soil or other fills must be permanently stabilized at the earliest practicable date.	Appropriate erosion control and siltation devices will be installed and maintained to minimize solids loadings to wetlands and Paddys Run. Erosion and siltation control devices will be design in accordance with the applicable requirements of USDA's Water Management and Sedimentation Control Manual for Urbanizing Areas and the provisions of the current FEMP Stormwater Pollution Prevention Plan.	Appropriate erosion control and siltation devices will be installed per the provisions of the current FEMP Stormwater Pollution Prevention Plan and ODNR Rainwater and Land Development guidance.	Description of the Operation and Processes Sections 2.1, 2.2, 2.8, and 3.1; Design Criteria and Assumptions Sections 2.1, 2.2, 3.2, 3.3, and 3.4; Excavation Plan Section 6.0; Pre-Operational Environmental Control Plan Sections 2.3, 3.3, 6.0, and 7.1; Operation and maintenance Plan for Existing Facilities Section 4.5.
Nationwide Permits 33 CFR Part 330, Appendix A	No activity may substantially disrupt the movement of those species of aquatic life indigenous to the water body, including those species which normally migrate through the area, unless the activity's primary purpose is to impound water.	Discharges of dredge and fill material will be conducted with headwater and isolated wetland systems and therefore, will not substantially disrupt the movement of any indigenous aquatic species.	N/A	N/A
Nationwide Permits 33 CFR Part 330, Appendix A	Heavy equipment working in wetlands must be placed on mats or other measures must be taken to minimize soil disturbance.	Appropriate measures will be taken to ensure impacts from heavy equipment operating in wetlands outside of the subcontractor's work area will be avoided or minimized to the maximum extent practicable.	Mats or other appropriate measures will be utilized to minimize soil disturbance due to heavy equipment operation in wetlands areas.	Excavation Plan Sections 4.4 and 5.0.

000183

1669

TABLE 3-2d. CWA SECTION 404 AND 401 SUBSTANTIVE WETLAND PERMITTING REQUIREMENTS (CONTINUED)

Citation	Substantive Permitting Requirements	Requirements Assessment	Compliance Strategy	Index to Design
Nationwide Permit 26 - Substantive Permitting Requirements				
Nationwide Permits 33 CFR Part 330, Appendix A	No activity is authorized under any Nationwide Permit which is likely to jeopardize the continued existence of a threatened or endangered species or a species proposed for such designation, as identified in the Federal Endangered Species Act, or which is likely to destroy or adversely modify the critical habitat of such species.	No known federally listed or proposed threatened or endangered species will be impacted by dredge and fill activities conducted in support of the Operable Unit 1 remedial action.	N/A	N/A
Nationwide Permits 33 CFR Part 330, Appendix A	No activity which may adversely affect historic properties listed, or eligible for listing, in the National Register of Historic properties is authorized.	No known listed or potential eligible historic properties will be impacted by the Operable Unit 1 remedial action.	N/A	N/A
Nationwide Permits 33 CFR Part 330, Appendix A	A wetland delineation is required to define the areal extent of impacts to wetland areas. Wetland delineations must be prepared in accordance with the current method required by the ACOE.	A site-wide jurisdictional wetland delineation was conducted using the ACOE 1987 Wetland Delineation manual and was subsequently approved by the ACOE in 1993. This delineation has served as the basis for defining wetland impacts associated with remedial activities at the FEMP site.	N/A	N/A
Nationwide Permits 33 CFR Part 330, Appendix A	No discharge of dredged or fill material may occur in the proximity of a public water supply intake except where the discharge is for repair of the public water supply intake structures or adjacent bank stabilization.	No known public water supply intake structures existing within a 1000 foot radius of proposed Operable Unit 1 discharges.	N/A	N/A
Nationwide Permits 33 CFR Part 330, Appendix A	No discharge of dredged or fill material may consist of unsuitable material (e.g. trash, debris, car bodies, etc.) and material discharged must be free from toxic pollutants in toxic amount (see section 307 of the Clean Water Act).	Fill material associated with Operable Unit 1 fill activities will consist of suitable material. Clean backfill will be used during stabilization of the Operable Unit 1 area upon completion of remedial activities.	Imported construction fill material, if required, will be obtained from FDF approved sources.	Excavation Plan Sections 4.11; Site Preparation Package Section 3.2.
Nationwide Permits 33 CFR Part 330, Appendix A	Discharges of dredged or fill material into waters of the United States must be minimized or avoided to the maximum extent practicable at the project site. A compensatory mitigation plan defining the manner in which adverse impacts will be compensated for may be required.	Although DOE has avoided and minimized impacts to wetlands and waters of the United States through the remedial design process, approximately 4.96 acres of unavoidable adverse wetland impacts will be associated with the Operable Unit 1 remedial action. Impacts to these areas will be mitigated at a 1 to 1.5 acre ration in accordance with the Site-wide Wetland Mitigation Plan currently being prepared under the Operable Unit 5 Remedial Design process.	Approximately 4.96 acres of unavoidable adverse wetland impacts will be associated with the OU1 remedial action. Impacts to these areas will be mitigated at a 1 to 1.5 acre ratio in accordance with the Site-wide Wetland Mitigation Plan currently being prepared under the OU5 Remedial Design process.	N/A

0001184

1699

TABLE 3-2d. CWA SECTION 404 AND 401 SUBSTANTIVE WETLAND PERMITTING REQUIREMENTS (CONTINUED)

Citation	Substantive Permitting Requirements	Requirements Assessment	Compliance Strategy	Index to Design
Nationwide Permit 26 - Substantive Permitting Requirements				
Nationwide Permits 33 CFR Part 330, Appendix A	To the maximum extent practicable, discharges must not permanently restrict or impede the passage of normal or expected high flows or cause the relocation of waters unless the primary purpose of the fill is to impound waters.	Fluor Daniel Fernald, Inc. has determined that discharges associated with the Operable Unit 1 remedial action will not adversely affect normal or anticipated high flows within those drainage basins which are contained within the Operable Unit 1 boundary.	N/A	N/A
Nationwide Permits 33 CFR Part 330, Appendix A	If the discharge creates an impoundment of water, adverse impact on the aquatic system caused by the accelerated passage of water and/or the restriction of its flow shall be minimized to the maximum extent practicable.	Fluor Daniel Fernald, Inc. has determined that discharges of dredged or fill material associated with the Operable Unit 1 remedial action will not result in the impoundment of water within wetland areas located within the Operable Unit 1 boundary.	N/A	N/A
Nationwide Permits 33 CFR Part 330, Appendix A	Discharges into breeding areas for migratory waterfowl must be avoided to the maximum extent practicable.	Fluor Daniel Fernald, Inc. has determined that proposed discharges of dredge and fill material will not occur with migratory waterfowl breeding areas.	N/A	N/A
Nationwide Permits 33 CFR Part 330, Appendix A	Any temporary fills must be removed in their entirety and the affected areas returned to their preexisting elevation.	Temporary fills will be removed upon completion of remedial activities and the Operable Unit 1 will be stabilized in accordance with the requirements of the grading plan prepared as part of this design package.	N/A	N/A
Section 401 State Water Quality Certification - Substantive Permitting Requirements				
Section 401 Water Quality Certifications OAC 3745-32	Discharges of dredged or fill material are limited to a total disturbance of five (5) acres or less.	While Nationwide Permit 26 allows for a maximum disturbance of 10 acres, Ohio EPA has restricted the total allowable acreage authorized under the Nationwide Permit to 5 acres under its corresponding Section 401 State Water Quality Certification. The Operable Unit 1 remedial action will result in a total impact of 4.96 acres and therefore, this impact is in compliance with this substantive requirement.	While Nationwide Permit 26 allows for a maximum disturbance of 10 acres, Ohio EPA has restricted the total allowable acreage authorized under the Nationwide Permit to 5 acres under its corresponding Section 401 State Water Quality Certification. The OU1 remedial action will result in a total impact of 4.96 acres and therefore, this impact is in compliance with this substantive requirement.	Description of the Operation and Processes Sections 2.1, 2.2, 2.8, and 3.1; Design Criteria and Assumptions Sections 2.1, 3.2, 3.3, and 3.4; Excavation Plan Sections 5.0 and 6.0
	Discharges of dredged or fill material are precluded from occurring in special aquatic sites such as bogs and fens.	The wetland systems located within the Operable Unit 1 boundary do not meet the technical definition of bogs or fens as established in the 401 State Water Quality Certification.	N/A	N/A

000185

1669

Table 4-1

On-site Disposal Facility Waste Acceptance Criteria[a]

Constituent of Concern	Soil[b]		Debris[c]
	OU2	OU5[d]	OU3
Radionuclides			
Neptunium-237	NA[e]	3.12×10^{9} pCi/g	NA[e]
Strontium-90	NA[e]	5.67×10^{10} pCi/g	NA[e]
Technetium-99	NA[e]	29.1 pCi/g	105 g
Uranium-238	346 pCi/g	NA[e]	NA[e]
Total Uranium	1,303 mg/kg	1,030 mg/kg	NA[e]
Inorganics			
Boron	NA[e]	1.04×10^{3} mg/kg	NA[e]
Mercury	NA[e]	5.66×10^{4} mg/kg	NA[e]
Organics			
Bromodichloromethane	NA[e]	9.03×10^{-1} mg/kg	NA[e]
Carbazole	NA[e]	7.27×10^{4} mg/kg	NA[e]
Alpha-chlordane	NA[e]	2.89 mg/kg	NA[e]
Bis(2-chloroisopropyl)ether	NA[e]	2.44×10^{-2} mg/kg	NA[e]
Chloroethane	NA[e]	3.92×10^{5} mg/kg	NA[e]
1,1-Dichloroethene[f]	NA[e]	11.4 mg/kg	NA[e]
1,2-Dichloroethene[f]	NA[e]	11.4 mg/kg	NA[e]
4-Nitroaniline	NA[e]	4.42×10^{-2} mg/kg	NA[e]
Tetrachloroethene[f]	NA[e]	128 mg/kg	NA[e]
Toxaphene[f]	NA[e]	1.06×10^{5} mg/kg	NA[e]
Trichloroethene[f]	NA[e]	128 mg/kg	NA[e]
Vinyl chloride[f]	NA[e]	1.51 mg/kg	NA[e]

[a] Based on OU2 ROD, OU3 ROD, and OU5 ROD.
[b] Maximum concentration
[c] Maximum total mass
[d] Constituents which have established maximums which serve as Waste Acceptance Criteria; other compounds which will not exceed designated Great Miami Aquifer action levels within 1,000-year performance period, regardless of starting concentration in the OSDF, are not listed.
[e] Not applicable.
[f] RCRA-based constituent of concern

Table 4-2

CDF Radiological Acceptance Criteria

Isotope	MAWC, pCi/g
Cesium-137	560[a]
Neptunium-237	2,000[b]
Plutonium-238	1,000
Plutonium-239	1,000
Plutonium-240	1,000
Potassium-40	1,000
Radium-226	2,000[a]
Radium-228 (5 years)	670
Ruthenium-106	19,000[a]
Strontium-90	20,000[a]
Technetium-99	100,000
Thorium-230	15,000
Thorium-232	680[a]
Uranium-234	37,000
Uranium-235	770
Uranium-236	36,000
Uranium-238	28,000[b]
Uranium-Depleted	110,000[b,c]

[a] Decay products are assumed to be present in concentrations equal to parent.

[b] Short lived decay products of U-238 (Th-234 and Pa-234) and of Np-237 (Pa-233) are assumed to be present in concentrations equal to the parent.

[c] The PCDF has agreed that initial waste acceptance for the depleted uranium portion of the materials can be based upon the above-noted all-inclusive limit for depleted uranium instead of considering the individual contributions of all uranium isotopes.

Table 5-1

DOE Orders

CODE	REMEDIAL DESIGN ISSUE
DOE 10 CFR PART 707	EMPLOYEE EDUCATION AND TRAINING
DOE 1540.2	HAZARDOUS MATERIAL PACKAGING FOR TRANSPORTATION ADMINISTRATIVE PROCEDURES
DOE 5000.3B	ABNORMAL EVENT NOTIFICATION
DOE 5400.5	RADIATION PROTECTION OF THE PUBLIC AND THE ENVIRONMENT
DOE 5480.1	RADIATION PROTECTION FOR OCCUPATIONAL WORKERS
DOE 5480.2	SAFETY REQUIREMENTS FOR THE PACKAGING AND TRANSPORTATION OF HAZARDOUS MATERIALS
DOE 5480.23	HAZARD CLASSIFICATIONS
DOE ORDER 232.1	OCCURRENCE REPORTING AND PROCESSING OF OPERATIONS INFORMATION
DOE ORDER 420.1	FIRE PROTECTION FOR RELOCATABLE STRUCTURES
DOE ORDER 425.1	READINESS TO OPERATE
DOE ORDER 5400.5	RADIATION PROTECTION OF THE PUBLIC AND THE ENVIRONMENT
DOE ORDER 5480.19	CONDUCT OF OPERATIONS REQUIREMENTS (CONOPS)
DOE ORDER 5480.19	CONDUCT OF OPERATIONS REQUIREMENTS FOR DOE FACILITIES
DOE ORDER 550.3A	PLANNING AND PREPAREDNESS FOR OPERATIONAL EMERGENCIES
DOE ORDER 5500.1B	EMERGENCY MANAGEMENT SYSTEM
DOE ORDER 5700.6C	REGULATORY REQUIREMENTS
DOE ORDER 5820.2a	WASTE SAMPLE LABORATORY MANAGEMENT
DOE STD 1088-95	FIRE PROTECTION FOR RELOCATABLE STRUCTURES
DOE STD 1088-95	FIRE PROTECTION FOR RELOCATABLE STRUCTURES
DOE-5480.23	SAFETY ASSESSMENT DOCUMENT
DOE-EH-0256T	RADIOLOGICAL CONTROL MANUAL
DOE-EM-STD-5502-94	REQUIREMENTS for "OTHER INDUSTRIAL HAZARD"
DOE-STD-1027-92	HAZARD CATEGORIZATION AND ACCIDENT ANALYSIS TECHNIQUES COMPLIANCE WITH DOE ORDER 5480.23
DOE-STD-3005-xx	EVALUATION GUIDELINES FOR ACCIDENT ANALYSIS OF SAFETY STRUCTURES, SYSTEMS AND COMPONENTS
DOE-STD-3009-93	PREPARATION GUIDE FOR US DOE NONREACTOR NUCLEAR FACILITY SAFETY ANALYSIS REPORT
DOE/EH-0256T	RADIOLOGICAL CONTROL MANUAL APRIL 1994
DOE/EH-0266	ENVIRONMENTAL HEALTH AND SAFETY BULLETIN
DOE/EH-0266	SUSPECT/COUNTERFEIT PARTS
DOE/EM-0142P	DECOMMISSIONING HANDBOOK, CHAPTER 9, MARCH 1994

Table 5-2

Engineering Standards

CODE	DESCRIPTION OF REQUIREMENT
10 CFR 830.120	REGULATORY REQUIREMENTS
10 CFR 830.120	DOE NUCLEAR SAFETY REQUIREMENTS
10 CFR 835	OCCUPATIONAL RADIATION PROTECTION
29 CFR 110.155	ALARM SYSTEMS
29 CFR 1910	PROJECT SHALL BE PERFORMED IN ACCORDANCE OSHA
29 CFR 1910 SUBPART D	LADDERS
29 CFR 1910 SUBPART D	SCAFFOLDING
29 CFR 1910.119	CHART SHOWING POTENTIALLY RELEASABLE INVENTORY
29 CFR 1910.120	HAZARDOUS WASTE OPERATIONS
29 CFR 1910.120 (h)	RADIOLOGICAL MONITORING
29 CFR 1926	SAFETY AND HEALTH STANDARDS FOR CONSTRUCTION
29 CFR 1926 SUBPART L	SCAFFOLDING
29 CFR 1926 SUBPART P	TRENCHING AND EXCAVATIONS
29 CFR 1926 SUBPART Z	TOXIC AND HAZARDOUS SUBSTANCES
29 CFR 1926 SUBPART Z	REGULATED CARCINOGENS
29 CFR 1926.501	FALL PROTECTION FOR 6 FT AND HIGHER
29 CFR PART 1926	OSHA TRENCHING AND EXCAVATION
33 CFR 330	HEADWATERS AND ISOLATED WATER DISCHARGES
40 CFR 122 THROUGH 136	STORM WATER DISCHARGE
40 CFR 122.42, (1) (I) AND (2) (I) & (ii)	CWA TOXIC NOTIFICATION LEVELS NOT TO BE EXCEEDED CWA SECTION 307
40 CFR 192 SUBPART A	STANDARDS FOR THE CONTROL OF RESIDUAL RADIOACTIVE MATERIALS FROM INACTIVE URANIUM PROCESSING SITES
40 CFR 264	RCRA PERMIT PROGRAM
40 CFR 265	INTERIM STATUS STANDARDS OF HAZARDOUS WASTE TREATMENT
40 CFR 270	RCRA PERMIT PROGRAM
40 CFR 302 APPENDIX B	CHART SHOWING POTENTIALLY RELEASABLE INVENTORY
40 CFR 302 TABLE	CHART SHOWING POTENTIALLY RELEASABLE INVENTORY
40 CFR 302.4 LEVELS	CHART SHOWING POTENTIALLY RELEASABLE INVENTORY
40 CFR 355	CHART SHOWING POTENTIALLY RELEASABLE INVENTORY
40 CFR 60	STACK SAMPLING
40 CFR 60 APPENDIX A	STACK PERFORMANCE TESTING
40 CFR 61 APPENDIX B	STACK PERFORMANCE TESTING
40 CFR 61 SUBPART H	RADIOLOGICAL AIR PERMITTING
40 CFR 61, SUBPART H	RADIONUCLIDE EMISSIONS
40 CFR 61.92, NESHAP H	ISOKINETIC SAMPLING AND STACK MONITORING

Table 5-2

Engineering Standards

CODE	DESCRIPTION OF REQUIREMENT
40 CFR 761	PCB's MANUFACTURING, PROCESSING DISTRIBUTING IN COMMERCE AND USE PROHIBITIONS
40 CFR PART 261	HAZARDOUS WASTE CLASSIFICATION
40 CFR PART 262	HAZARDOUS WASTE CLASSIFICATION
40 CFR PART 300	NATIONAL OIL AND HAZARDOUS SUBSTANCES POLLUTION CONTINGENCY PLAN
40 CFR PART 300.435	OPERATIONS AND MAINTENANCE PLAN
41 CFR 101-141	TRANSPORTATION
42 USC §6924(u)	STATUTORY COMPLIANCE/RCRA CERCLA INTEGRATION
42 USC §6924(v)	STATUTORY COMPLIANCE/RCRA CERCLA INTEGRATION
42 USC §9601	STATUTORY COMPLIANCE/RCRA CERCLA INTEGRATION
42 USC §9604	STATUTORY COMPLIANCE/RCRA CERCLA INTEGRATION
42 USC §9621	STATUTORY COMPLIANCE/RCRA CERCLA INTEGRATION
49 CFR 173	RAILCAR COVER
49 CFR 173.403	LSA-1 FINAL WASTE PRODUCT CRITERIA
49 CFR 173.44	RADIATION LEVELS FOR CLEANING
49 CFR 174.700(f)	RAILCAR COVER
49 CFR 427	RAILCAR COVER
AASHTO	ROAD DESIGN
ABMA	AMERICAN BEARING MANUFACTURERS ASSOC. FOR BEARINGS
ACGIH	CARCINOGENS LISTED PER AMERICAN CONFERENCE OF GOVERNMENTAL INDUSTRIAL HYGIENISTS
ACI 301	FOR STRUCTURAL CONCRETE FOR BUILDINGS
ACI 302	CONCRETE FLOOR AND SLABS
ACI 318	BUILDING CODE REQ. FOR REINFORCED CONCRETE
ACI 347	FOR CONCRETE FORMWORK
AISC	BUILDINGS
AGMA	AMERICAN GEAR MANUFACTURERS ASSOC. FOR GEARS
AMCA	FOR AIR HANDLING EQUIPMENT
ANSI	FOR AIR HANDLING EQUIPMENT
ANSI	FOR PIPE, FITTINGS, VALVES, AND ACCESSORIES
ANSI	FOR PUMPS
ANSI	FOR ELECTRICAL
ANSI A10.13-89	CONSTRUCTION AND DEMOLITION OPERATIONS STEEL ERECTION
ANSI A10.6-90	DEMOLITION OPERATIONS SAFETY REQUIREMENTS

Table 5-2

Engineering Standards

CODE	DESCRIPTION OF REQUIREMENT
ANSI A10.8-88	CONSTRUCTION AND DEMOLITION OPERATIONS SCAFFOLDING SAFETY REQUIREMENTS
ANSI A10.9-83	CONSTRUCTION AND DEMOLITION OPERATIONS CONCRETE AND MASONRY WORK SAFETY REQUIREMENTS
ANSI N13.1-1969	STACK SAMPLING
ANSI Z358	SAFETY SHOWERS/EYE WASHES
API	FOR TANKS
ASME	FOR AIR HANDLING EQUIPMENT
ASME	FOR PIPE, FITTINGS, VALVES, AND ACCESSORIES
ASME	FOR TANKS
ASME	FOR PUMPS
ASME/ANSI	DRAWINGS I.A.W. STANDARD Y-14 SERIES
ASNT	FOR PIPE, FITTINGS, VALVES, AND ACCESSORIES
ASTM	FOR AIR HANDLING EQUIPMENT
ASTM	FOR PIPE, FITTINGS, VALVES, AND ACCESSORIES
ASTM	CONCRETE FOUNDATIONS, FLOORS, PADS
ASTM SECTION 4	GEOTECHNICAL SAMPLING I.A.W. SPEC.
CEMA	FOR CONVEYORS AND MATERIAL TRANSFERRING EQUIPMENT
CERCLA SECTION 104	STATUTORY COMPLIANCE/RCRA CERCLA INTEGRATION
CERCLA SECTION 109	STATUTORY COMPLIANCE/RCRA CERCLA INTEGRATION
CERCLA SECTION 113(h)	STATUTORY COMPLIANCE/RCRA CERCLA INTEGRATION
CERCLA SECTION 120(e)	STATUTORY COMPLIANCE/RCRA CERCLA INTEGRATION
CERCLA SECTION 121	STATUTORY COMPLIANCE/RCRA CERCLA INTEGRATION
CERCLA SECTION 310	STATUTORY COMPLIANCE/RCRA CERCLA INTEGRATION
CERCLA SECTION 310(c)	STATUTORY COMPLIANCE/RCRA CERCLA INTEGRATION
CRSI	CONCRETE FOUNDATIONS, FLOORS, PADS
CWA SECTION 401	WETLAND PERMIT PROGRAMS
CWA SECTION 402	STORM WATER DISCHARGE
CWA SECTION 404	WETLAND PERMIT PROGRAMS
EIA/TIA 568B	JACKS TO BE WIRED PER SPEC.
EIA/TIA 569	PATHWAYS AND SPACES PER SPEC.
EJMA	FOR PIPE, FITTINGS, VALVES, AND ACCESSORIES
ERDA	FOR AIR HANDLING EQUIPMENT
HYDRAULIC INST. STD	FOR PUMPS
IEEE	FOR MOTORS
ISA	FOR ELECTRICAL
MSS	FOR PIPE, FITTINGS, VALVES, AND ACCESSORIES

Table 5-2

Engineering Standards

CODE	DESCRIPTION OF REQUIREMENT
NEC	FOR ELECTRICAL
NEMA	FOR ELECTRICAL
NESHAP SUBPART H	RADIOLOGICAL SUBSTANTIVE REQUIREMENTS
NETA	FOR ELECTRICAL
NFPA 10	FIRE EXTINGUISHERS
NFPA 101	STAIRS, RAMPS , PLATFORMS PER OSHA & NFPA
NFPA 101-94	LIFE SAFETY CODE
NFPA 241-93	SAFEGUARDING CONSTRUCTION, ALTERATION AND DEMOLITION OPERATIONS
NFPA 30	STORAGE FACILITIES
NFPA 30	THE FLAMMABLE & COMBUSTIBLE LIQUID CODE
NFPA 30	STACKING OF CONTAINERS
NFPA 70	HVAC SYSTEMS
NFPA 80A	TO DETERMINE DISTANCES FIRE AREAS AND BUILDINGS
OAC 3745-17-07(B)	DUST SUPPRESSION REQUIREMENTS
OAC 3745-17-07(B)	BAT IN ACCORDANCE WITH OAC
OAC 3745-17-08 (B)	BEST AVAILABLE TECH. I.A.W. OAC
OAC 3745-17-08(B)	DUST SUPPRESSION REQUIREMENTS
OAC 3745-31	PERMIT TO INSTALL
OAC 3745-31-05	CONTROL EMISSIONS
OAC 3745-32	WATER QUALITY CERTIFICATION PROGRAM
OAC 3745-35	PERMIT TO OPERATE
OAC 3745-50	RCRA PERMITTING REQUIREMENTS
OAC 3745-50-10	HAZARDOUS WASTE MANAGEMENT UNIT
OAC 3745-51093	HAZARDOUS WASTE CLASSIFICATION
OAC 3745-65	HAZARDOUS WASTE FACILITY INTERIM STANDARDS
OBBC	FIRE DETECTION/SUPPRESSION
ODOT	EARTHWORK/SITE CLEARING TO CONFORM TO
OSHA 1910.106 SUBPART H	STORAGE FACILITIES
RCRA SECTION 3004(u)	STATUTORY COMPLIANCE/RCRA CERCLA INTEGRATION
RCRA SECTION 3004(v)	STATUTORY COMPLIANCE/RCRA CERCLA INTEGRATION
RCRA SECTION 3008(h)	STATUTORY COMPLIANCE/RCRA CERCLA INTEGRATION
SMACNA	FOR AIR HANDLING EQUIPMENT

Table 5-2

Engineering Standards

CODE	DESCRIPTION OF REQUIREMENT
TEMA	FOR HEAT EXCHANGERS
UL	FOR ELECTRICAL
UL 778	MOTOR OPERATED WATER PUMPS

FIGURES

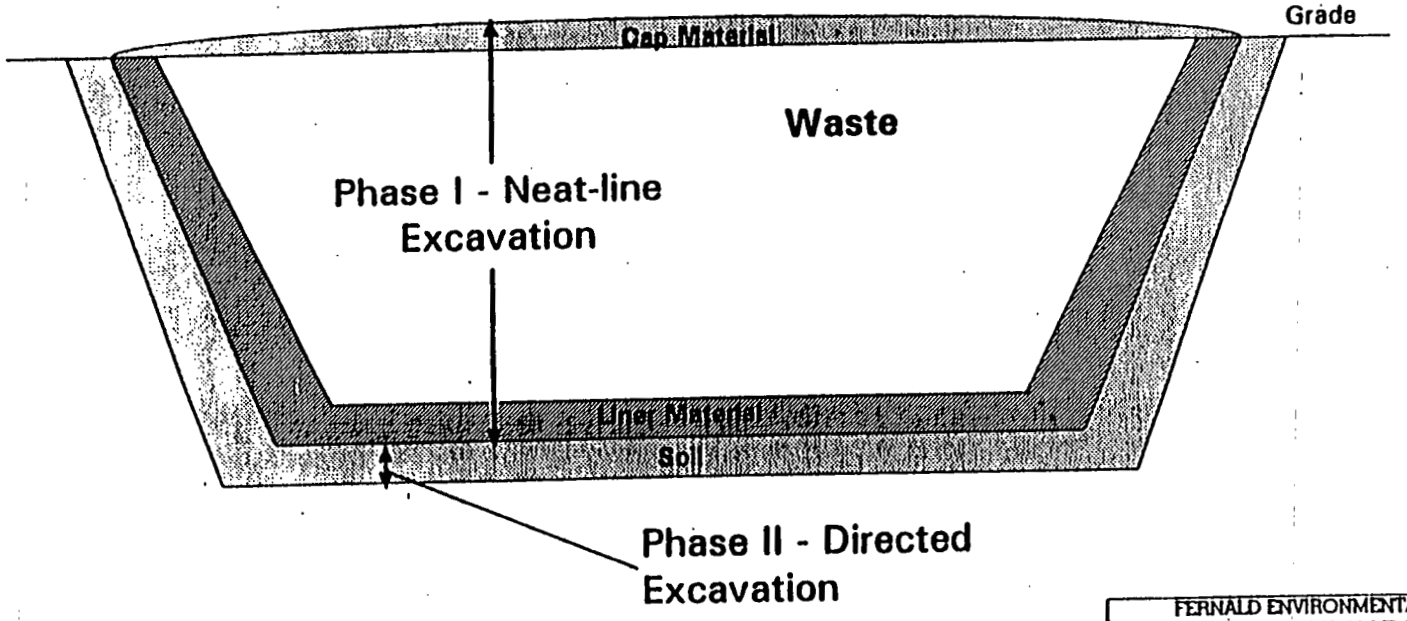

FERNALD ENVIRONMENTAL
RESTORATION MANAGEMENT
CORPORATION

FERNALD
ENVIRONMENTAL MANAGEMENT PROJECT
U.S. DEPARTMENT OF ENERGY

WASTE PIT REMEDIAL ACTION PROJECT

SCHEMATIC OF REPRESENTATIVE
WASTE PIT EXCAVATION PHASES

NTS
Date 9/3/99
Drawn D.E. Wilson

Figure 2-3

000197

F-1669

APPENDIX A

WASTE CHARACTERIZATION SUMMARY

WASTE CHARACTERIZATION SUMMARY

1.0 BACKGROUND

The feed to the dryer will consist of the contents from eight separate waste pits (Pits 1 through 6, the Burn Pit, and Clearwell). These pits contain secondary processing wastes resulting from a uranium processing facility. Consequently, the feed will cover a broad range of characteristics. The majority of feed material is composed of general sump sludge, neutralized raffinate, and magnesium fluoride.

The general sump sludge consists of 1) filtrates from various processing plants, 2) wastewater from the laboratory, and 3) lime. Raffinate from the solvent extraction operation was neutralized and sent to the pits. The magnesium fluoride in the pits was produced by the reduction of uranium tetrafluoride to uranium metal using magnesium metal. Some of the resulting magnesium fluoride slag was reprocessed to recover uranium. The insoluble materials left over after the acid digestion recovery process were filtered out, reslurried, mixed with lime, and pumped to the pits.

Other wastes known to have been deposited in the pits include:

1) Contaminated asbestos materials
2) Contaminated rags, paper, and polyethylene
3) Dust collector bags
4) Scrap salts
5) Uranium and thorium tetrafluoride
6) Contaminated soil, rocks, sand, brick, and ceramics
7) Dust collector residues
8) UO_3 and U_3O_8
9) Miscellaneous sludges
10) Uranium chips and turnings
11) Water softening and treatment sludges
12) Graphite crucibles and molds
13) Ash from burning or incineration (pallets, paper, graphite, oils)
14) Flyash from coal-fired boiler
15) Steel drums

(Note that all dryer feed will be processed to size reduce items so they do not exceed 4 inches in any dimension.)

Samples of the pit wastes have been characterized by several organizations. The data is summarized in this appendix. One important characterization effort was performed by the University of Cincinnati (UC). They classified the wastes based on the Unified Soil Classification System (USCS). Subsequent test work has focused on four major classifications: nonplastic (NP-Type 1), and low-plasticity silt (ML-Type 2), high-plasticity silt (MH-Type 3), and low-plasticity clay (CL-Type 4).

Bench- and pilot-scale drying tests were performed by Parsons using surrogate materials. The surrogates were developed to cover the range of physical characteristics exhibited by the actual wastes. Four surrogates were formulated to first meet the Atterberg limit criteria that would place them in the appropriate USCS group, and also have particle size distributions similar to those of the actual pit wastes. . The pilot-scale drying test were performed in batch and continuous, indirect and direct rotary dryers. The surrogate wastes to be used during acceptance testing are the same as one of the surrogates used during pilot-scale testing (see Tables A and B, Article 3.6).

2.0 PIT WASTE COMPOSITION

In general, the waste pits contain a variety of materials that are not homogeneous, and there is a degree of uncertainty concerning the range of possible pit constituents. There are thought to exist pockets of uranium metal fines from machining operations, which may release heat through pyrophoric reaction in the dryer. Pockets of other reactive materials may, or may not be present, in containers or completely free of containment.

It should also be noted that the sampling techniques used to develop the remedial investigation (RI) database create a certain amount of unpredictable bias. Pit materials that were resistant to hand sampling were often not included. Specific on-site knowledge gained from one of the IT sampling teams indicated that Pit 4 contained significant amounts of asphalt, which were avoided during the sampling. Additionally, certain areas of the pits could not be accessed safely, and were therefore omitted from the characterization.

The following sections present a summary of the pertinent data collected from the RI and the Parsons Design Study. Many of the tables present maximum and minimum values, taken from the RI. Neither the maximums nor the minimum values should be taken as the absolute maximums or minimums for the pits as a whole. The extent of the area to be remediated and the number of samples taken during the characterization do not preclude the possibility of higher concentrations of certain materials in isolated pockets within the various pits. The information is categorized by chemical class or type.

By far the largest percentage of pit waste is relatively inert salts and oxides, which will pass through the dryer unchanged in form.

2.1 Speciated Organics

The concentrations of specific chemicals in the pits are below threshold concentrations that could impact physical operation of the dryer. Table A presents the maximum potential feed rates of the prominent specific organic compounds into the dryer. This data set does not attempt to predict mixing of pit materials or take natural dewatering into account. Of particular concern are the carcinogenic chemicals, (anthene series) and PCBs. This data set is derived from the Parsons OU1 Design Package and formed the basis for their dryer design.

Table A
Potential Feed Rate into Dryer
@ 30 tons/hr

Component	Pit 1	Pit 2	Pit 3	Pit 4	Pit 5	Pit 6	Burn Pit	Clear-well
	lb/hr	lb/hr	lb/hr	lb/hr	lb/hr	lb/hr	lb/hr	lb/hr
4,4 DDT	0.070	0.002	0.000	0.000	0.000	0.000	0.000	0.000
Aroclor 1248	0.439	0.000	0.424	0.139	0.508	0.000	0.000	0.035
Aroclor 1254	0.571	0.000	0.300	0.125	1.017	0.068	0.241	0.077
Benzoic Acid	0.193	0.000	0.432	0.081	0.000	0.000	0.000	0.000
Bis(2-Ethyl hexyl) Phthalate	0.079	0.000	0.097	0.050	0.377	0.097	0.304	0.070
Diethyl phthalate	0.000	0.000	0.380	0.042	0.000	0.000	0.157	0.146
Fluoranthene	0.000	0.856	0.088	0.332	0.000	0.000	0.501	0.324
Phenanthrene	0.105	0.647	0.088	0.295	0.000	0.000	0.472	0.220
Pyrene	0.000	0.435	0.088	0.166	0.000	0.000	0.439	0.146
Tetrachloroethene	0.029	0.000	0.000	0.010	0.000	3.087	0.000	0.000
Tributyl Phosphate	1.097	0.068	0.000	1.328	0.000	0.000	0.000	0.000
2,4,5-Trichlorophenol	0.000	0.000	0.000	0.000	0.000	0.000	0.000	0.794

The data set in Table A is contrasted with the same target organics, plus benzo(a)pyrene from the RI study and CIS data. Table B presents the potential feed rates based on the average concentrations from the RI and when necessary, CIS data sets.

Table B

Average Dryer Feed Rates
of Selected Regulated Organic Compounds
Assuming 30 tons/hr Waste Feed Rate

Component	Pit 1	Pit 2	Pit 3	Pit 4	Pit 5	Pit 6	Burn Pit	Clear well
	lb/hr	lb/hr	lb/hr	lb/hr	lb/hr	lb/hr	lb/hr	lb/hr
4,4 DDT	0.000	0.000	0.000	0.000	0.000	0.000	0.000	0.000
AROCLOR 1248	0.217	0.131	0.074	0.200	0.041	0.000	0.000	0.011
AROCLOR 1254	0.294	0.000	0.062	0.138	0.069	0.012	0.146	0.018
Benzoic Acid	0.046	0.137	0.077	0.044	0.000	0.000	0.000	0.000
Bis(2-Ethyl hexyl) Phthalate	0.017	0.054	0.024	0.042	0.046	0.033	0.126	0.020
Diethyl phthalate	0.000	0.054	0.077	0.021	0.000	0.000	0.042	0.031
Fluoranthene	0.021	4.318	0.025	0.117	0.000	0.000	0.204	0.071

Table B (continued)

Average Dryer Feed Rates of Selected Regulated Organic Compounds Assuming 30 tons/hr Waste Feed Rate

Component	Pit 1	Pit 2	Pit 3	Pit 4	Pit 5	Pit 6	Burn Pit	Clear well
Phenanthrene	0.042	4.262	0.024	0.133	0.000	0.000	0.191	0.000
Pyrene	0.017	3.605	0.024	0.098	0.000	0.000	0.180	0.000
Tetrachloroethene	0.000	0.000	0.000	0.003	0.000	0.868	0.000	0.000
Tributyl Phosphate	0.836	1.346	0.000	3.600	0.000	0.000	0.000	0.000
2,4,5-Trichlorophenol	0.000	0.000	0.000	0.000	0.000	0.000	0.000	0.228
Benzo(a)pyrene	0.000	1.231	0.023	0.044	0.000	0.000	0.058	0.000

The behavior of these organic compounds in the dryer will depend on the physical and chemical properties of the individual species. Some of the relevant chemical properties of these organic compounds are presented in Table C.

Table C
Chemical Properties of the Prominent Organic Compounds

Compound	Melting Point (F)	Boiling Point (F)	Vapor Pressure (mm Hg)	Comments
4,4 DDT	226		1.9×10^{-7} @ 68°F	
AROCLOR 1248		340-375		
AROCLOR 1254		340-375		
Benzoic Acid	251	480		
Bis(2-Ethy hexyl) Phthalate	-58	723		
Diethyl phthalate	-41	568	14 @ 325°F 30 @ 360°F 734 @ 563°F	
Fluoranthene	225	482		
Phenanthrene	212	644		
Pyrene	300	759		
Tetrachloroethene	-9	251	14 @ 68 24 @ 86 45 @ 104	
Tributyl Phosphate	-110	554		decomposes at 554
2,4,5-Trichlorophenol	143	487		

2.2 Total Organic Carbon

Based on the RI, significant concentrations of organic carbon are present in every pit. Table D shows the average, maximum and minimum concentrations of TOC, taken from the RI study finalized in 1994. It should be noted that at least a portion of the graphite known to be present in the pits will be included in the TOC analysis results, due to the conditions under which TOC analysis are carried out. However, there is no data available, at present, to draw conclusions about how much of the TOC shown is actually graphite. The more conservative approach is to assume that the TOC is made up entirely of organic species and other types of organic species, such as asphalt. An exception to this conservative approach will be in the case of the burn pit, where it is logical to assume that a large portion of the TOC is indeed graphite and/or charcoal. The bulk of these species will be non-regulated volatile or semi-volatile organic materials bound to particulate matter in the waste.

Table D
Total Organic Carbon Concentration Summary (percent by weight, dry basis)

	Pit 1	Pit 2	Pit 3	Pit 4	Pit 5	Pit 6	Burn Pit	Clear well
Avg	2.27	11.23	15.23	2.987	1.828	1.411	15.20	5.15
Max	3.36	11.37	17.6	5.365	3.500	3.500	15.20	10.80
Min	0.688	11.08	12.86	0.609	0.261	0.251	15.20	0.300
#	3	2	2	2	10	8	1	7

- refers to the number of determinations

One of the organic compounds known to exist in the pit materials is tributyl phosphate (TBP). It is known that TBP was used in large quantities during the reprocessing of uranium and other fissionable materials at Fernald. Kirk and Othmer, Vol. 9 states that, "in the Purex process, the spent fuel is dissolved in nitric acid and extracted with TBP in 30 volume percent solution in an aliphatic diluent such as kerosene." TBP would react with water in the alkaline pits to form derivative organic compounds. The derivative organic compounds would not be targeted by a standard Appendix IX scan and would only show up in a TOC analysis. While only ppm levels of TBP were found in the pits, the total phosphorus results support the hypothesis that significant quantities of TBP laden waste was disposed of in the pits.

2.3 Oil and Grease

Oil and grease analyses were performed selectively on several of the pits. Oil and grease results should be viewed as minimum values. The analytical method involves the extraction of the sample by a organic solvent, followed by evaporation to dryness and weighing to a final weight. The extraction process is not 100 percent effective on all types of solid waste samples due to limited solubility and the inability of the solvent to strip organic components from some types of waste. Secondly, lighter organics can volatilize during the drying causing a negative bias. Table E presents the summarized data from the OU1 RI/FS study.

	Table E Oil and Grease Concentration Summary (percent by weight, dry basis)							
	Pit 1	Pit 2	Pit 3	Pit 4	Pit 5	Pit 6	Burn Pit	Clear well
Avg	not performed	0.59	0.060	0.492	not performed	0.0030	not performed	0.014
Max	not performed	1.6027	0.151	1.79	not performed	0.0083	not performed	0.029
Min	not performed	0.027	0.012	0.054	not performed	0.0022	not performed	0.005
#		3	4	4		8		7

- refers to the number of determinations

2.4 Organic Nitrogen

Organic nitrogen is present in significant quantities in each of the pits, except Pit 1. Table F presents organic nitrogen data from the RI.

	Table F Organic Nitrogen Concentration Summary (ppm by weight, dry basis)							
	Pit 1	Pit 2	Pit 3	Pit 4	Pit 5	Pit 6	Burn Pit	Clear well
Avg	U	5090	4179	315	266	524	552	500
Max	U	11700	8914	833	626	801	642	909
Min	U	0.1	127	3.2	0	337	461	205
#	1	2	6	4	10	8	2	7

- refers to the number of determinations

2.5 Total Phosphorus

Pits 2 and 3 contain significant levels of phosphorus. One potential source of phosphorus is TBP used in the Purex process to recover uranium. In the pits, TBP should react with water and will be incompatible with caustic materials. In contrast to the high total phosphorus results, the phosphate results are low or undetectable. It is unclear what forms the phosphorus will take in the dryer. At the pH values shown in Table G, no free phosphoric acid should be present in the pits. Calcium, potassium and metal phosphates are stable and would pass through the dryer relatively unaffected. However, the bulk of common organo-phosphorus and inorganic phosphorus compounds, (other than inorganic phosphates) have boiling points less than or equal to the planned dryer shell temperature.

One possibility is that the volatile phosphorus compounds will evolve, react with the moisture and oxygen in the sweep gas to form linear polyphosphoric acids in the process. Kirk and Othmer, states that once formed these acids are "hygroscopic, viscous, oily, gummy and may also consist of a mixture of glassy and crystalline materials." When these acids are dissolved in excess water they degrade to phosphoric acid. It is also conceivable that evolving phosphorus will form P_2O_5 which will condense into submicron particulate. More likely, however, is that evolving phosphorus will form phosphoric acid directly on contact with water vapor.

Partially hydrolyzed tributyl phosphate could form phosphate esters of various types in the pits, which would create corrosive *ortho*-phosphate ions in the dryer. The phosphate ion would form at the shell/material interface and attack the inner surface directly during the drying process.

Table G
Total Phosphorus Concentration Summary (percent by weight, dry basis)

	Pit 1	Pit 2	Pit 3	Pit 4	Pit 5	Pit 6	Burn Pit	Clear well
Avg	.00067	3.80	1.11	.0062	.071	.199	.050	U
Max	.00067	4.37	5.78	.015	.110	.385	.078	U
Min	.00067	3.41	.023	.0002	.042	.057	.021	U
#	1	3	6	4	10	8	2	7
Pit pH (avg.)	not performed	8.04	7.97	6.74	not performed	not performed	8.53	not performed

2.6 Metal Salts and Oxides

No true analytical data is available on specific salts in the pits. The Parsons waste composition was assembled from the data on cations and anions concentrations in each of the pits. Parsons combined anions with cations; however, of these combinations, only a few are actually known to have been discarded to the pits, or would be expected to exist in the reported forms. Magnesium fluoride is known to have been used in the Fernald processes. Calcium hydroxide is known to have been placed in the pits in quantities sufficient to neutralize acids and bring the pH up to acceptable values. It is possible that the uranium in the pits is in the forms suggested by the Parsons data, (U_3O_8 and UO_3). However, the exact form that the bulk of the uranium takes in the pits is, at this time, unknown. The most prevalent salts based on the Parsons data, which were derived from the RI, are shown in Table H. Average and maximum concentrations of metals directly from the RI are shown in bold.

Uranium (IV) fluoride UF_4 is of particular importance because of its potential to react directly with water vapor in the dryer to form hydrofluoric acid (HF).

1669

	Table H Prominent Salts and Oxides Concentration Summary (approximate percent by weight, dry basis)							
	Pit 1	Pit 2	Pit 3	Pit 4	Pit 5	Pit 6[4]	Burn Pit	Clear well
MgF_2 Total Mg	28.6 **6.1/12.9**	0 **4.72/6.79**	0.38 **3.44/5.17**	0.63 **1.61/3.40**	17.4 **3.20/4.30**	43.23 **2.15/4.19**	0.004 **1.70/2.57**	15.9 **2.08/2.72**
$Ca(OH)_2$[1] Total Ca	33.2 **7.71/19.7**	3.1 **8.34/10.4**	30.6 **12.0/19.0**	24.4 **1.54/3.27**	43.2 **17.8/25.0**	22.81 **7.82/15.7**	43.1 **5.9/8.89**	49.6 **13.8/17.7**
Fe_2O_3 Total Fe	6.04 **0.13/0.26**	19.7 **2.24/3.92**	4.06 **1.62/2.58**	9.89 **0.35/0.74**	3.41 **1.26/2.07**	2.56 **0.82/1.48**	17.9 **2.02/3.12**	5.2 **1.76/2.03**
Al_2O_3 Total Al	4.09 **0.24/0.34**	7.68 **1.60/2.31**	11.8 **1.09/1.74**	4.35 **0.55/1.07**	3.88 **0.85/1.19**	5.83 **1.09/1.98**	4.52 **0.64/0.86**	7.76 **1.63/2.07**
UF_4	2.24	0	0	1.77	0.189	1.58	0.03	0.14
U_xO_x [2]	4.11 **1.70/4.84**	10.58 **0.29/0.58**	0.58 **0.34/0.59**	30.3 **5.18/11.6**	0.346 **0.21/0.37**	2.85 **12.8/27.7**	1.27 **0.20/0.45**	0.26 **0.12/0.27**
Mass accounted for[3]	78.3	41.1	47.4	71.37	68.41	78.86	66.83	78.84
Pit pH	not performed	8.04	7.97	6.74	not performed	not performed	8.53	not performed

Parson's Data is shown as the top number in each cell. RI values for the average and maximum are in bold type.

1 - Calcium hydroxide will likely have reacted to form calcium carbonate, based on the pH value data.
2 - Sum of U_3O_8 and UO_3, based on Parsons data.
3 - The mass accounted for as listed in the table is the sum of the individual percentages listed in the table.
4- An error as to the placement of a decimal point was discovered in the Parsons data which impacts the relative concentrations of each constituent. Corrections are reflected in the table.

The balance of material in the pits is made up of combinations of metal oxides, metal salts, organic nitrogen and organic carbon. The melting points and other physical characteristics of the prevalent metallic compounds are shown in Table I.

Table I Prominent Salts and Oxides Chemical Properties Summary			
Compound	Melting Point (F)	Boiling Point (F)	Specific Notations
MgF_2	2305	4105	

000206

$Ca(OH)_2$	971.6		
$CaCO_3$	1652		decomposes @ 1652
Fe_2O_3		2663	decomposes
Al_2O_3	3664	5396	
U_3O_8		2372	decomposes
UO_3			decomposes

2.7 Radionuclides

Considerable analysis has been performed to quantify the levels of radioactive materials in the pits. Complex blending schemes have been completed to mix highly contaminated waste with less contaminated materials to meet acceptance criteria. Table J lists the more prevalent radioactive compounds found in the pits, and information that may impact the design of the dryer.

Table J

Compound	Range of Melting Points (F)	Range of Boiling Points (F)	Decays by	Half Life	Comments
U-235	354 - 4262	737 - 7898	α	7.1×10^8 yr	some forms decompose at low temperatures
U-238	354 - 4262	737 - 7898	α	4.5×10^9 yr	
U-234	354 - 4262	737 - 7898	α	2.47×10^5 yr	some forms decompose at low temperatures
Tc-99	122 - 1,800	140 - 591	β^-	2.12×10^5 yr	most compounds can volatilize
Cs-137	83.8 - 1,130	up to 2372	e^- β^- γ	30 yr	some forms decompose at low temperatures.
Th-230	397 - 5828	1130 - 7952	α γ e^-	80000 yr	nitrates and halogenated forms decompose at relatively low temperatures, oxide is very chemically stable
Ra-226	1292-2120	1652 and up	α γ e^-	1,620 yr	
Ra-228	1292-2120	1652 and up	β^- e^-	6.7 yr	
Rn-222	-95.8	-79.6	α γ	3.82 days	inert gas

Melting points and boiling points ranges are based on commonly available compounds listed in Lange's Handbook, which could conceivably exist in the pits.

3.0 SIZE DISTRIBUTION

In general, the bulk of the feed is very fine (less than 200 mesh). Note that all feed must be less than 4 inches in any dimension so any debris from the pits will be size reduced prior to being fed to the dryer.

4.0 MOISTURE CONTENT

The moisture contents of the actual pit wastes are reported to vary from 10 percent to over 600 percent (all moisture contents expressed on a dry basis = (lb water/lb dry solids) x 100 percent). However, the pit materials will be processed to provide feed with a specified moisture content ranging from 30 to 200%.

5.0 BULK DENSITY

The solid specific gravities of the feed range from 2.60 to 3.25. Bulk (slurry) densities calculated at the minimum and maximum moisture contents of the feed assuming an average solid specific gravity of 2.9, range from 79 to 126 lb/ft^3.

6.0 PLASTICITY DATA (ATTERBERG LIMITS - ASTM D4318)

The dryer feed will consist of materials ranging from non-plastic to high-plasticity silt based on the Atterberg limit data reported in Table K.

Table K - Average Atterberg Limits - Four Types of Feed

Feed Type	Description	Plastic Limit	Plasticity Index
1	Non--plastic	N/A	N/A
2	Low-plasticity Silt	30	15
3	High-plasticity Silt	55	40
4	Low-plasticity Clay	20	20

7.0 WASTE/SOIL CHARACTERISTICS FOR EXCAVATION AND HANDLING

This section provides a general description of the waste materials found in the OU1 waste pits, primarily in terms of soil material classifications. The data were obtained from the OU1 Remedial Investigation/Feasibility Study (RI/FS) and University of Cincinnati Accelerated Life Testing and Environmental Research (ALTER) testing of materials obtained from small diameter samplers (split-spoon and Shelby Tube) and bulk archived sample material from auger boring and grab sampling. The pits, especially the covered pits, contain debris of various sizes. Various debris were encountered during DEEP wet trenching with a track hoe at various locations at Pits 1, 2, and 3. Debris encountered included large pieces of concrete rubble, coarse gravel, planks of lumber, sheet metal, metal bands, and metal wire.

Waste Pit 1. Based on ALTER and OU1 RI/FS data, in general, Pit 1 waste materials behave like nonplastic silts (ML) (with nonplastic fines) with little cohesion and low dry strength. The moisture contents ranged from about 16 to 40 percent (dry weight basis).

Waste Pit 2. Based on ALTER data and OU1 RI/FS data, in general, Pit 2 waste materials range in behavior from nonplastic silts and sands (silt with sand, sandy silt, silty sand) to highly plastic silts (sandy elastic silt). Some lean clays are also present. Moisture contents range from about 17 percent (lean clay with sand) to 320 percent (nonplastic silt with sand). Moisture content of the sandy elastic silt material ranges from about 70 to 230 percent.

Waste Pit 3. Based on ALTER and OU1 RI/FS data, in general, Pit 3 waste materials range in behavior from low plasticity silts and sands (sandy silt and silty sand) to highly plastic silts (sandy elastic silt, elastic silt with sand). Some lean clays are also present. Moisture contents range from about 35 percent (sandy silt) to 153 percent (elastic silt with sand). Moisture content of the sandy elastic silt material ranges from about 42 to 153 percent.

In-place strength of Pit 3 waste from the DEEP Cone Penetrometer Test (CPT) probes and Standard Penetration Test (SPT) tests indicates very low strengths over much of the pit area (below the cap materials). Low strengths are expected to result in waste collapse at quite low natural slopes, which may present safety concerns and excavation inefficiencies due to flat slopes. Based on the relative values from CPT data and previous data, angles of repose are estimated to range from 10 to 12 degrees prior to dewatering. Laboratory test results to confirm the shear strengths estimated from the CPT probes are not yet available. In addition, existing data also indicate that the moisture content for must of the waste (in situ conditions) is above the liquid limit, indicating the material could behave like a fluid. Dewatering may be necessary in Pit 3 to maintain an open, relatively flat, safe slope.

Waste Pit 4. Based on ALTER data and RI/FS data, in general, Pit 4 waste materials range in behavior from nonplastic silts (silt, silt with sand, and sandy silt) to lean and silty clays (lean clay with sand, sandy lean clay, sandy silty clay). Moisture contents range from about 10 percent (sandy lean clay) to 62 percent (sandy silty clay).

Waste Pit 5. Based on ALTER data, in general, Pit 5 waste material behaves as a high-plasticity elastic silt. The pit also contains some nonplastic silt. In general, the moisture content of the waste material in Pit 5 is the highest of the OU1 waste material tested. Moisture content of the elastic silt material ranges from about 161 to 620 percent. The moisture content of the nonplastic silt material was about 109 to 115 percent.

Based on preliminary DEEP data, waste materials appear to be low density with extremely high moisture contents that do not tend to be free-draining.

Waste Pit 6. Based on ALTER data, in general, Pit 6 waste material behaves as a nonplastic to low plasticity silt (silt, sandy silt, silt with sand, and silty sand). The pit also contains some high plasticity elastic silt. Water content of Pit 6 materials range from about 27 percent (silt with

sand) to 425 percent (nonplastic silt). Based on preliminary DEEP data, waste materials appear to be free draining.

Burn Pit. Based on RI/FS and ALTER data, in general, Burn Pit waste material ranges in behavior from a low plasticity silt (sandy silt) to a silty sand. Some lean clay with sand is also present. Water content of Burn Pit waste materials range from about 25 percent (lean clay with sand) to 43 percent (silty sand).

Clearwell. Based on ALTER data, in general, the waste in the Clearwell contains materials behaving as high-plasticity silts (sandy elastic silt, elastic silt with sand), silty sand, and sandy lean clay. The water contents of these materials range from about 35 percent (sandy lean clay) to 72 percent (sandy elastic silt).

Waste Pits Remedial Action Project
(WPRAP)
Process Flow Diagram(s) w/Mass & Energy Balance

***

PREPARED
for
Fluor Daniel Fernald, Inc.
Fernald, Ohio

FDF Subcontract No. 98SC000001

***

PREPARED
by
IT Corporation
2790 Mosside Boulevard
Monroeville, PA 15146-2790

IT Project No. 773481

***

Revision 0
Issue Date: August 25, 1998

Drawing List

Drawing No.	Rev. No.	Description
D-15-10-001	0	Area 15 - Material Handling PFD
D-20-10-001	0	Area 20 - Waste Feed, Dryer & Product Handling PFD
D-20-10-002	0	Area 20 - Waste Feed, Dryer & Product Handling PFD
D-35-10-001	0	Area 35 - Railcar Loading/Lidding PFD
D-50-10-001	0	Area 50 - Gas Cleaning System PFD
D-50-10-002	0	Area 50 - Gas Cleaning System PFD
D-60-10-001	0	Area 60 - Process Blowdown Pretreatment System PFD
D-65-10-001	0	Area 65 - Wastewater Treatment System (WTS) PFD
D-70-10-001	0	Area 70 - Utilities PFD
D-90-10-001	0	Area 90 - Site Water Balance PFD
D-90-10-002	0	Area 90 - Site Water Balance PFD

DRAWING NUMBER D-15-10-001

1669

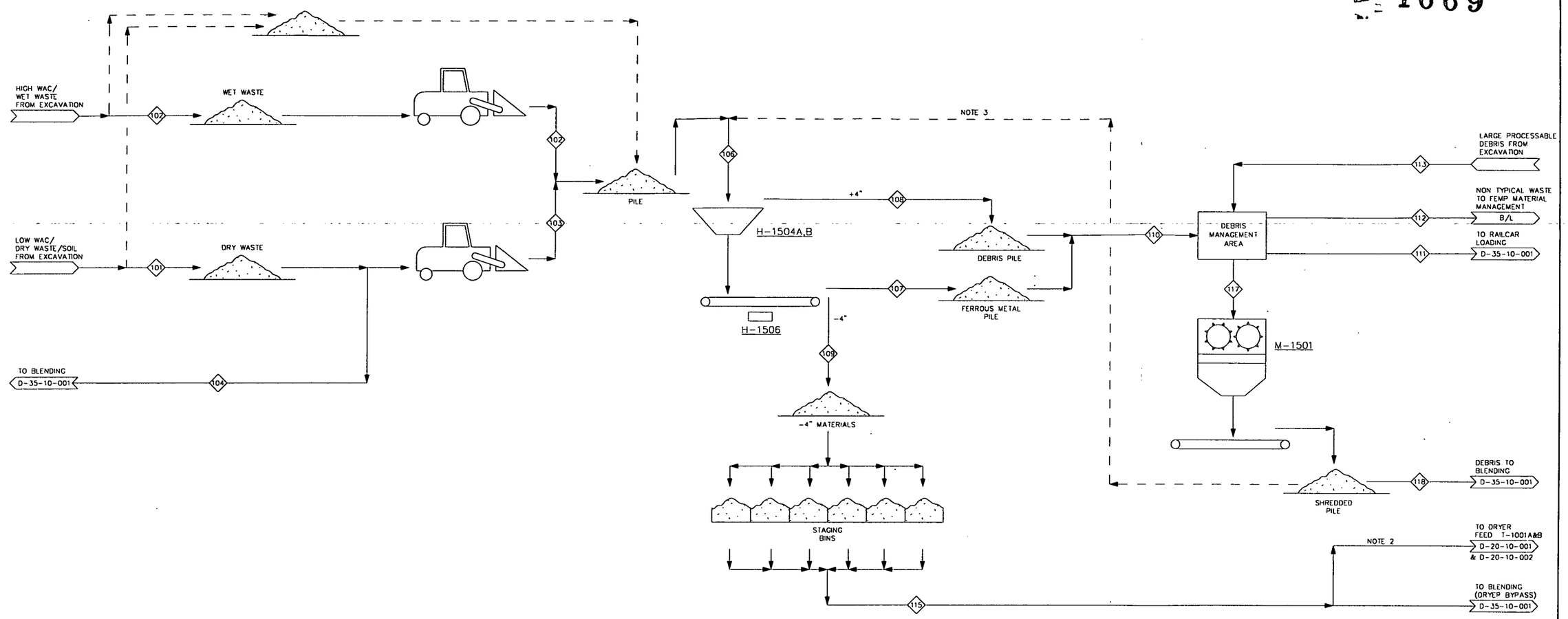

H-1504A,B 4" VIBRATOR SCREEN

H-1506 MAGNETIC SEPARATOR

M-1501 DEBRIS SHREDDER

000213

STREAM NO. / COMPONENT		101 (NOTE 1)	102 (NOTE 1)	103	104	106	107	108	109	110	111	112	113	115	117	118
		LOW WAC WASTE FROM EXCAVATION	HIGH WAC WASTE FROM EXCAVATION	WASTE TO SIZE REDUCTION	WASTE TO BLENDING	WASTE TO SCREEN	FERROUS METAL	OVERSIZE	SCREEND MATERIAL	DEBRIS	DEBRIS TO LOADER	DEBRIS TO FDF	LARGE DEBRIS FROM EXCAVATION	SOLIDS TO DRYER	MATERIAL TO SHREDDER	DEBRIS TO BLENDING
AVERAGE CONDITION																
H_2O	LB/HR													18,400		
SOIL/PARTICULATE	LB/HR													25,300		
ORGANICS	LB/HR													2,300		
TOTAL MASS FLOW	LB/HR													46,000		
VOLUMETRIC FLOW	ACFM (GPM) (YD^2)															
TEMPERATURE	°F	AMB	AMB	AMB	AMB	AMB	AMB	AMB	AMB	AMB	AMB	AMB	AMB	60		
PRESSURE	IN. W.C. (PSI)													ATM		
ENTHALPY	MM BTU/HR															

NOTES:

1. QUANTITY VARIES BY PHASE - SEE EXCAVATION PLAN.
2. STREAM 115 FEEDS TWO THERMAL DRYER UNITS (TDU) EQUALLY DISTRIBUTED AS STREAM 116 ON D-20-10-001 AND D-20-10-002.
3. ALTERNATE PATH FOR WET MATERIALS.

FOR INFORMATION ONLY
NOT FOR CONSTRUCTION

REV	DATE	BY	CHK'D	APR'VD	DESCRIPTION
0	8/25/98	JWH	JAN	CHH	FINAL RD PACKAGE

FLUOR DANIEL FERNALD

WASTE PITS REMEDIAL ACTION PROJECT (WPRAP)
FERNALD, OHIO
FDF SUBCONTRACT NO. 98SC000001

PROJECT NAME: WASTE PITS REMEDIAL ACTION PROJECT (WPRAP)

TITLE: AREA 15 PROCESS FLOW DIAGRAM MATERIAL HANDLING

INTERNATIONAL TECHNOLOGY CORPORATION
... *Creating a Safer Tomorrow*

DESIGNED BY	ODP	CHECKED BY	JAN		REVISION
DRAWN BY	JWH	APPROVED BY	CHH		0
DATE	12/31/97	DWG. SCALE	NONE		
IT PROJECT NO.	773481	DRAWING NO.	D-15-10-001		

C:\PROJECT\40000\15\1510001F1

DRAWING NUMBER D-20-10-001

1669

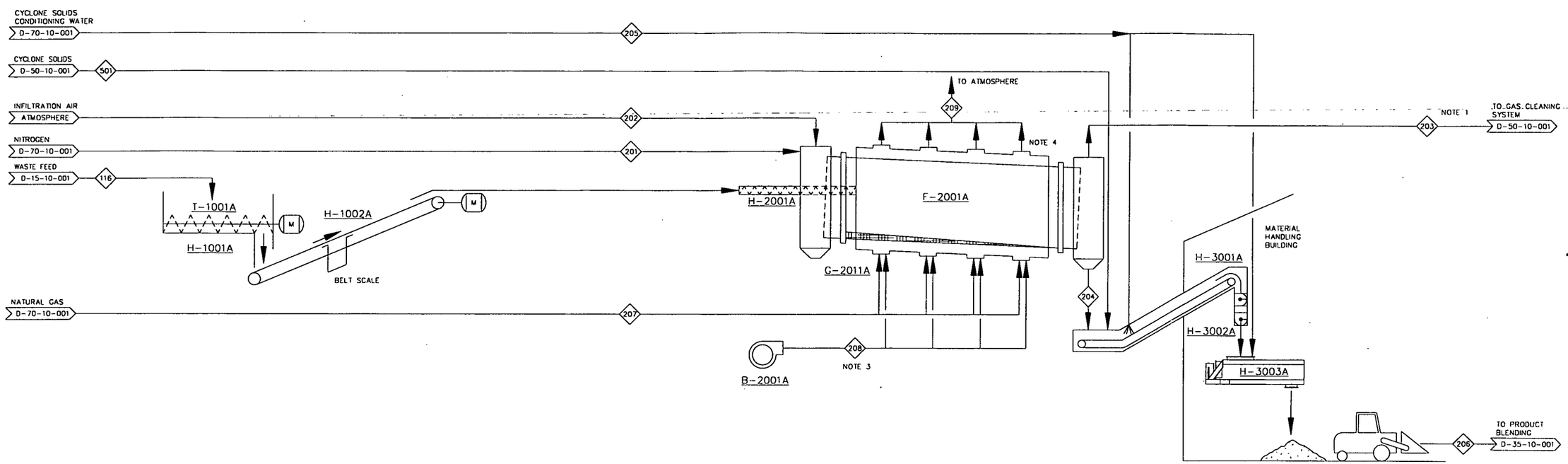

T-1001A LIVE BOTTOM HOPPER

H-1001A MASS FLOW SCREW FEEDER

H-1002A BELT FEED CONVEYOR

H-2001A FEED DUAL SCREW

B-2001A COMBUSTION AIR FAN

G-2011A DRYER BURNERS NOTE 3

F-2001A ROTARY DRYER

H-3001A DRAG FLIGHT CONVEYOR

H-3002A DOUBLE DUMP VALVE

H-3003A PUGMILL

STREAM NO. / COMPONENT		116 SOLIDS FEED TO DRYER	201 NITROGEN	202 AIR LEAKAGE	203 DRYER EXHAUST GAS	204 DRYER SOLIDS	205 CYCLONE SOLIDS CONDITIONING WATER	206 DRYER RESIDUALS TO PRODUCT BLENDING	207 NOTE 3 DRYER BURNER FUEL	208 NOTE 3 DRYER BURNER COMBUSTION AIR	209 DRYER SHELL EXHAUST GAS	501 CYCLONE SOLIDS PER UNIT
CARBON	LB/HR								751			
HYDROGEN	LB/HR								245			
CO2	LB/HR										2,753	
O2	LB/HR			78	78					4,738	790	
N2	LB/HR		760	259	1,020				30	15,730	15,760	
H2O	LB/HR	9,200		3	7,825	1,378	85	1,447		159	2,352	
SOIL/PARTICULATE	LB/HR	12,650			1,379	11,271		11,892				620
ORGANICS	LB/HR	1,150			18	1,132		1,132				
TOTAL MASS FLOW	LB/HR	23,000	760	340	10,319	13,781	85	14,470	1,026	20,628	21,654	620
VOLUMETRIC FLOW	ACFM		175	76	4,685					4,335	17,660	
LIQUID FLOW	GPM						0.2					
TEMPERATURE	°F	70	70	70	350	175	60	175	70	70	1400	345
PRESSURE	IN. W.C.GA.(PSIG)	0.0	0.0	0.0	-1.0	0.0	(45)	0.0	(10)	28.0	0.0	0.0
ENTHALPY	MM BTU/HR	0.13	0.00	0.00	9.44	0.52		0.54	22.38	0.22	10.77	0.04

1. DRYER OFF-GAS FLOW AND TEMPERATURE MAY VARY DURING OPERATION. FLOWS AND TEMPERATURES PROVIDED SHOULD BE CONSIDERED TO BE AVERAGE. SPIKES OF ±100° F AND ±20% OF FLOW WILL BE COMMON DURING ACTUAL OPERATION.
2. THE FLOWS ARE BASED ON NORMAL AVERAGE AT 100% OPERATING FACTOR.
3. TOTAL TO FOUR ZONES (TOTAL OF SIXTEEN BURNERS)
4. DRYER FURNACE EXHAUSTS THROUGH FOUR VENTS TO ATMOSPHERE
5. ALL FLOWS ARE FOR SINGLE DRYER

FOR INFORMATION ONLY
NOT FOR CONSTRUCTION

REV	DATE	BY	CHK'D	APR'VD	DESCRIPTION
0	8/25/98	JWH	JAN	GHH	FINAL RD PACKAGE

FLUOR DANIEL FERNALD — WASTE PITS REMEDIAL ACTION PROJECT (WPRAP), FERNALD, OHIO, FDF SUBCONTRACT NO. 98SC000001

PROJECT NAME: WASTE PITS REMEDIAL ACTION PROJECT (WPRAP)

TITLE: AREAS 10, 20 & 30 WASTE FEED, ROTARY DRYER & PRODUCT HANDLING PROCESS FLOW DIAGRAMS

INTERNATIONAL TECHNOLOGY CORPORATION — ... *Creating a Safer Tomorrow*

DESIGNED BY	PA	CHECKED BY	JAN		REVISION
DRAWN BY	SLT	APPROVED BY	GHH		0
DATE	4/22/98	DWG. SCALE	NONE		
IT PROJECT NO.	773481	DRAWING NO.	D-20-10-001		

000214

G:\PROJECTS\40000\20\2010001F1

DRAWING NUMBER D-20-10-002

1669

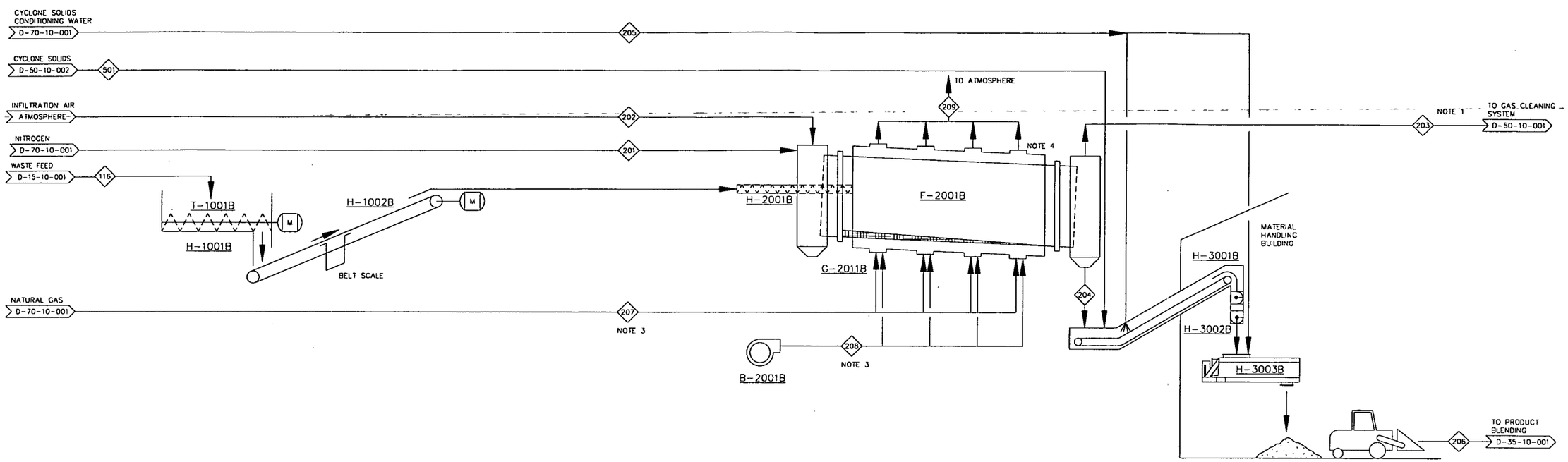

T-1001B	LIVE BOTTOM HOPPER
H-1001B	MASS FLOW SCREW FEEDER
H-1002B	BELT FEED CONVEYOR
H-2001B	FEED DUAL SCREW
B-2001B	COMBUSTION AIR FAN
G-2011B	DRYER BURNERS NOTE 3
F-2001B	ROTARY DRYER
H-3001B	DRAG FLIGHT CONVEYOR
H-3002B	DOUBLE DUMP VALVE
H-3003B	PUGMILL

STREAM NO. / COMPONENT		116	201	202	203	204	205	206	207 (NOTE 3)	208 (NOTE 3)	209	501
		SOLIDS FEED TO DRYER	NITROGEN	AIR LEAKAGE	DRYER EXHAUST GAS	DRYER SOLIDS	CYCLONE SOLIDS CONDITIONING WATER	DRYER RESIDUALS TO PRODUCT BLENDING	DRYER BURNER FUEL	DRYER BURNER COMBUSTION AIR	DRYER SHELL EXHAUST GAS	CYCLONE SOLIDS PER UNIT
CARBON	LB/HR								751			
HYDROGEN	LB/HR								245			
CO2	LB/HR										2,753	
O2	LB/HR			78	78					4,738	790	
N2	LB/HR		760	259	1,020				30	15,730	15,760	
H2O	LB/HR	9,200		3	7,825	1,378	85	1,447		159	2,352	
SOIL/PARTICULATE	LB/HR	12,650			1,379	11,271		11,892				620
ORGANICS	LB/HR	1,150			18	1,132		1,132				
TOTAL MASS FLOW	LB/HR	23,000	760	340	10,319	13,781	85	14,470	1,026	20,628	21,654	620
VOLUMETRIC FLOW	ACFM		175	76	4,685					4,335	17,660	
LIQUID FLOW	GPM						0.2					
TEMPERATURE	°F	70	70	70	350	175	60	175	70	70	1400	345
PRESSURE	IN. W.C.GA.(PSIG)	0.0	0.0	0.0	-1.0	0.0	(45)	0.0	(10)	28.0	0.0	0.0
ENTHALPY	MM BTU/HR	0.13	0.00	0.00	9.44	0.52		0.54	22.38	0.22	10.77	0.04

1. DRYER OFF-GAS FLOW AND TEMPERATURE MAY VARY DURING OPERATION. FLOWS AND TEMPERATURES PROVIDED SHOULD BE CONSIDERED TO BE AVERAGE. SPIKES OF ±100° F AND ±20% OF FLOW WILL BE COMMON DURING ACTUAL OPERATION.
2. THE FLOWS ARE BASED ON NORMAL AVERAGE AT 100% OPERATING FACTOR.
3. TOTAL TO FOUR ZONES (TOTAL OF SIXTEEN BURNERS)
4. DRYER FURNACE EXHAUSTS THROUGH FOUR VENTS TO ATMOSPHERE
5. ALL FLOWS ARE FOR SINGLE DRYER.

FOR INFORMATION ONLY
NOT FOR CONSTRUCTION

REV	DATE	BY	CHK'D	APR'VD	DESCRIPTION
0	8/25/98	JWH	JAN	GHH	FINAL RD PACKAGE

FLUOR DANIEL FERNALD
WASTE PITS REMEDIAL ACTION PROJECT (WPRAP)
FERNALD, OHIO
FDF SUBCONTRACT NO. 98SC000001

PROJECT NAME: WASTE PITS REMEDIAL ACTION PROJECT (WPRAP)

TITLE: AREAS 10, 20 & 30 WASTE FEED, ROTARY DRYER & PRODUCT HANDLING PROCESS FLOW DIAGRAMS

INTERNATIONAL TECHNOLOGY CORPORATION
... Creating a Safer Tomorrow

DESIGNED BY	PA	CHECKED BY	JAN		REVISION
DRAWN BY	SLT	APPROVED BY	GHH		0
DATE	4/22/98	DWG. SCALE	NONE		
IT PROJECT NO.	773481	DRAWING NO.	D-20-10-002		

000215

C:\PROJECTS\40000\20\201002F1

DRAWING NUMBER D-35-10-001

1669

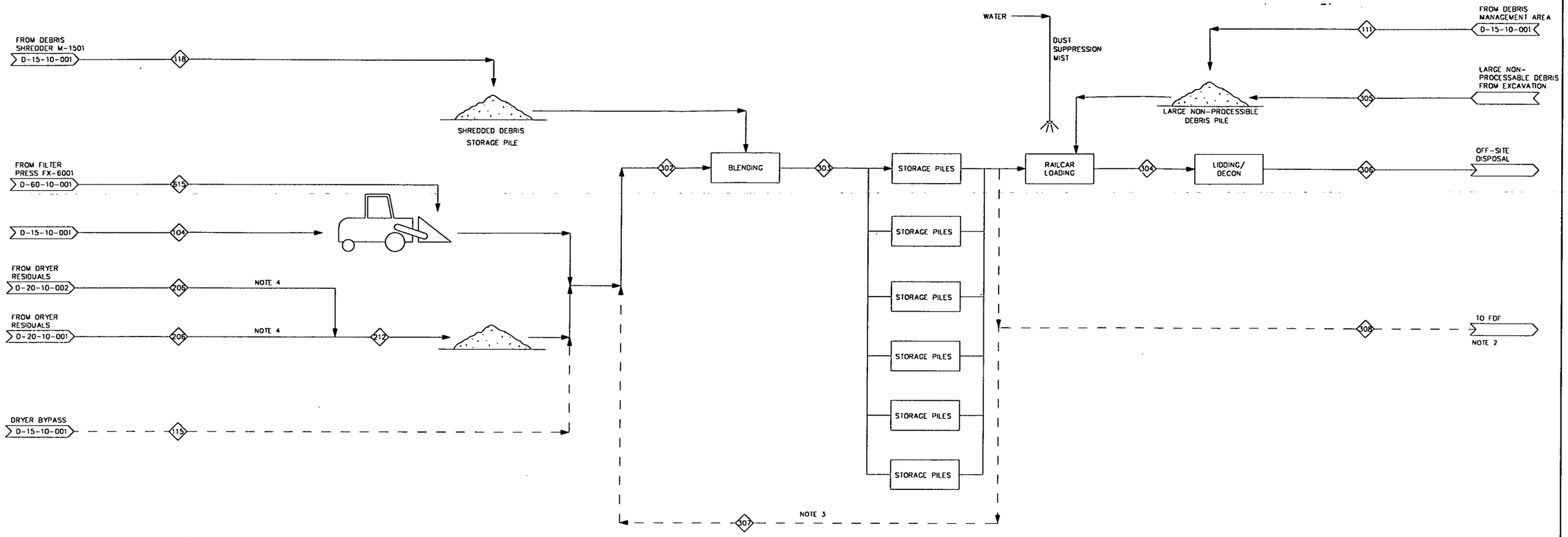

000216

STREAM NO. / COMPONENT		104	111	115	118	212	302	303	304	305	306	615
		NOTE 1	NOTE 1									
		NON-DRIED WASTE FOR BLENDING	LARGE NON-PRESSABLE WASTE FROM WASTE PROCESSING	DRYER BYPASS MATERIAL	SHREDDED MATERIAL	DRIED WASTE	WASTE TO BLENDING	BLENDED WASTE	RAILCAR LOADOUT	NON-PROCESSABLE WASTE FROM EXCAVATION	WASTE TO PCDF	FILTER CAKE
AVERAGE CONDITION												
H_2O	LB/HR					2,894						1,592
SOIL/PARTICULATE	LB/HR					23,784						1,592
ORGANICS	LB/HR					2,264						1.5
TOTAL MASS FLOW	LB/HR					28,940						3,185
VOLUMETRIC FLOW	ACFM (GPM)											
TEMPERATURE	T	AMB		AMB		175						135
PRESSURE	IN. W.C. (PSI)											
ENTHALPY	MM BTU/HR											
CARS/DAY	AUC/MAX								6/8		6/8	

NOTES:

1. VARIES WITH PHASE – SEE EXCAVATION PLAN.
2. IN THE UNLIKELY EVENT THAT SAMPLING AND ANALYSIS INDICATES RCRA CHARACTERISTIC WASTE IT WILL BE TURNED OVER TO FDF.
3. IN THE UNLIKELY EVENT THAT SAMPLING AND ANALYSIS INDICATES WASTE IN A STORAGE BIN DOES NOT MEET CDF WAC FOR MOISTURE OR RADIONUCLIDES IT WILL BE REBLENDED.
4. STREAM 206 FROM EACH DRYER ARE COMBINED AS STREAM 212.

FOR INFORMATION ONLY
NOT FOR CONSTRUCTION

REV	DATE	BY	CHK'D	APR'VD	DESCRIPTION
0	8/25/98	JWH	JAN	GHH	FINAL RD PACKAGE

FLUOR DANIEL FERNALD
WASTE PITS REMEDIAL ACTION PROJECT (WPRAP)
FERNALD, OHIO
FDF SUBCONTRACT NO. 98SC000001

PROJECT NAME
WASTE PITS REMEDIAL ACTION PROJECT (WPRAP)

TITLE
AREA 35
PROCESS FLOW DIAGRAM
RAILCAR LOADING/LIDDING

INTERNATIONAL TECHNOLOGY CORPORATION
... *Creating a Safer Tomorrow*

DESIGNED BY		CHECKED BY	JAN		REVISION
DRAWN BY	JWH	APPROVED BY	GHH		
DATE	12/31/97	DWG. SCALE	NONE		0
IT PROJECT NO.	773481	DRAWING NO.	D-35-10-001		

C:\PROJECT\40000\35\3510001F1

DRAWING NUMBER D-50-10-001

1669

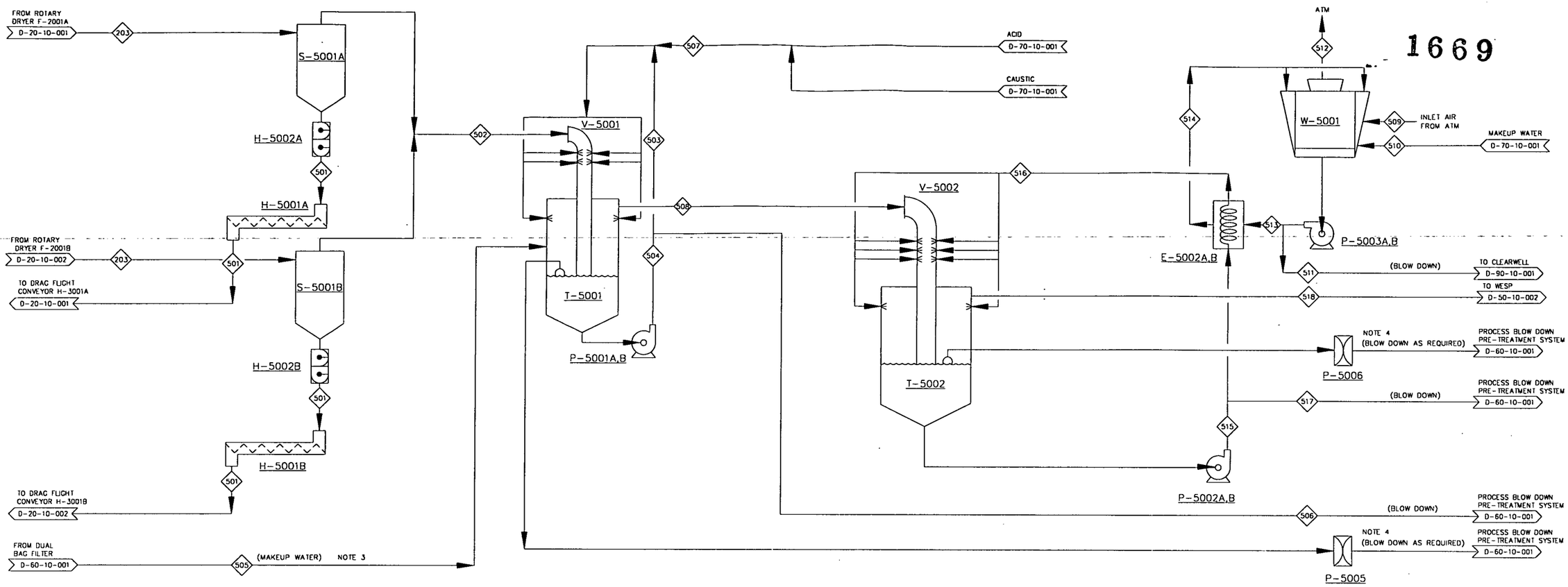

H-5002A,B	S-5001A,B	H-5001A,B	V-5001	T-5001	P-5001A,B	V-5002	T-5002	E-5002A,B	P-5002A,B	P-5003A,B	W-5001	P-5005	P-5006
DOUBLE DUMP VALVES	CYCLONE SEPARATOR	CYCLONE SOLIDS TRANSFER SCREWS	SCRUBBER	SCRUBBER SUMP TANK	SCRUBBER RECIRC. PUMP	SUBCOOL QUENCH	QUENCH SUMP TANK	QUENCH HEAT EXCHANGERS	SUBCOOL QUENCH RECIRC. PUMPS	COOLING TOWER RECIRC. PUMPS	COOLING TOWER	SCRUBBER ORGANICS PUMP	QUENCH ORGANIC PUMP

000217

STREAM NO.	501	502	503	504	505	506	507	508	509	510	511	512	513	514	515	516	517	518
COMPONENT	CYCLONE SOLIDS PER UNIT	COMBINED CYCLONE EXHAUST GAS	SCRUBBER RECYCLE FLOW INLET	SCRUBBER RECYCLE FLOW OUTLET	SCRUBBER MAKEUP WATER	SCRUBBER BLOWDOWN	SCRUBBER CHEMICAL INJECTION	SCRUBBER EXHAUST GAS	INLET COOLING AIR	COOLING TOWER MAKEUP WATER	COOLING TOWER BLOWDOWN	COOLING TOWER EXHAUST GAS	COOLING TOWER RECYCLE OUTLET	COOLING TOWER RECYCLE INLET	SUBCOOLING QUENCH RECYCLE OUTLET	SUBCOOLING QUENCH RECYCLE INLET	SUBCOOLING QUENCH BLOWDOWN	SUBCOOLING QUENCH EXHAUST GAS
CARBON LB/HR																		
HYDROGEN LB/HR																		
CO2 LB/HR																		
O2 LB/HR		156						156	109,081			109,081						156
N2 LB/HR		2,039						2,039	362,112			362,112						2,039
H2O LB/HR		15,649	75,000	100,350	25,000	25,350		15,299	9,176	18,089	5,000	22,245	900,000	900,000	815,198	800,000	15,198	101
SOIL/PARTICULATE LB/HR	620	1,517	4,039	5,404		1,365		152							7,729	7,585	144	8
ORGANICS LB/HR		37						37							790	775	15	22
TOTAL MASS FLOW LB/HR	620	19,398	79,039	105,754	25,000	26,715	INTERMITTENT	17,683	480,368	18,089	5,000	493,437	900,000	900,000	823,716	808,359	15,357	2,326
VOLUMETRIC FLOW ACFM		9,382						7,667	111,699			120,388						590
LIQUID FLOW GPM			158	212	50	53				36	10		1,800	1,800	1,647	1,617	31	
TEMPERATURE °F	345	345	207	207	150	207	60	207	85	60	85	103	85	103	110	90	110	100
PRESSURE IN. W.C.GA. (PSIG)	0.0	-4.0	(35)	(45)	(45)	(45)	(40)	-7.0	0.0	(30)	(30)	0.0	(35)	(5)	(45)	(39)	(45)	-9.0
ENTHALPY MM BTU/HR	0.04	18.75	11.15	14.91	2.25	3.77		17.23	12.63		0.13	28.84	22.50	38.83	41.17	24.07	0.77	0.13

NOTES:
1. THE FLOWS ARE BASED ON NORMAL, AVERAGE AT 100% OPERATING FACTOR.
2. WTS (WATER TREATMENT SYSTEM.)
3. PROCESS MAKEUP WATER IS TREATED RECYCLE FROM PROCESS BLOWDOWN PRETREATMENT SYSTEM.
4. INTERMITTENT BLOWDOWN RATE IS A NOMINAL 15-20 GPM.

FOR INFORMATION ONLY
NOT FOR CONSTRUCTION

REV	DATE	BY	CHK'D	APR'VD	DESCRIPTION
0	8/25/98	JWH	JAN	GHH	FINAL RD PACKAGE

FLUOR DANIEL FERNALD
WASTE PITS REMEDIAL ACTION PROJECT (WPRAP)
FERNALD, OHIO
FDF SUBCONTRACT NO. 98SC000001

PROJECT NAME
WASTE PITS REMEDIAL ACTION PROJECT (WPRAP)

TITLE
AREA 50
GAS CLEANING SYSTEM
PROCESS FLOW DIAGRAM

INTERNATIONAL TECHNOLOGY CORPORATION
... Creating a Safer Tomorrow

DESIGNED BY	PA	CHECKED BY	JAN		REVISION
DRAWN BY	SLT	APPROVED BY	GHH		0
DATE	4/22/98	DWG. SCALE	NONE		
IT PROJECT NO.	773481	DRAWING NO.	D-50-10-001		

C:\PROJECT\40000\50\5010001F1

DRAWING NUMBER D-50-10-002

1669

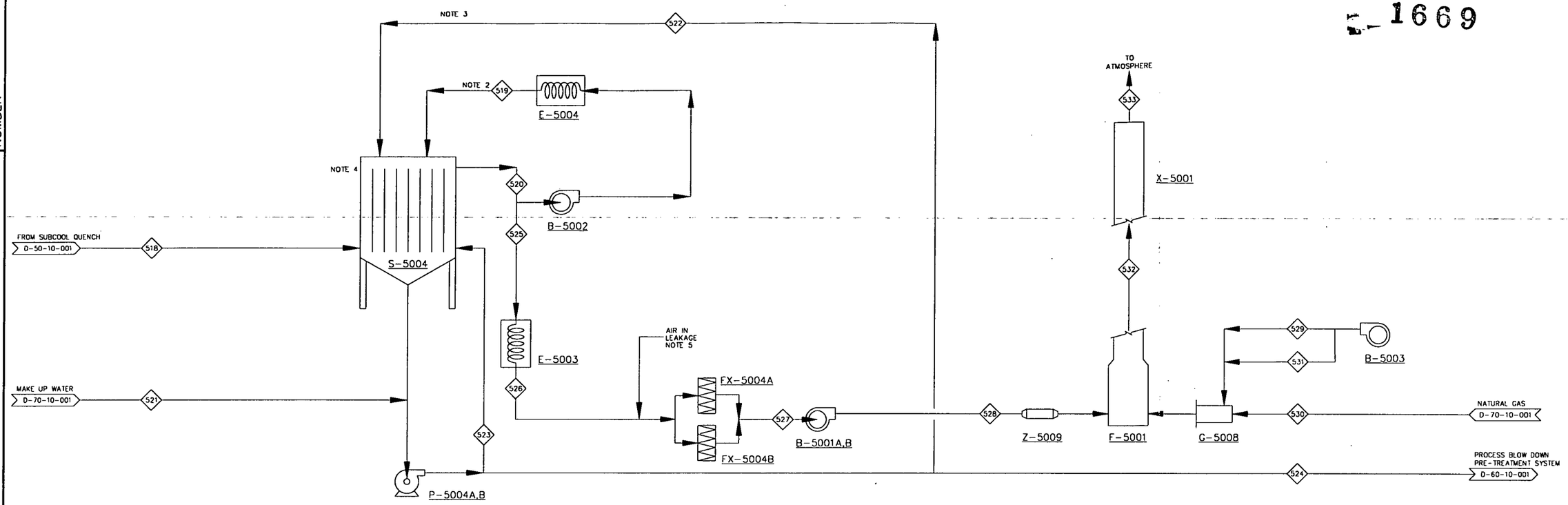

S-5004 WET ELECTROSTATIC PRECIPITATOR

E-5003 OFF-GAS REHEATER

P-5004A,B WESP RECYCLE PUMPS

FX-5004A,B HEPA UNITS 1 & 2

E-5004 PURGE GAS HEATER

B-5002 PURGE GAS BLOWER

B-5001A,B INDUCED AIR FANS

Z-5009 FLAME ARRESTER

G-5008 THERMAL OXIDIZER BURNER

F-5001 THERMAL OXIDIZER NOTE 6

X-5001 VENT STACK

B-5003 COMBUSTION AIR BLOWER

000218

STREAM NO. / COMPONENT		518 SUBCOOLING QUENCH EXHAUST GAS	519 WESP INSULATOR PURGE GAS	520 WESP OUTLET GAS	521 WESP MAKEUP WATER	522 WESP WASH RECYCLE	523 WESP SPRAY HEADER	524 WESP BLOWDOWN	525 REHEATER INLET GAS	526 REHEATER OUTLET GAS	527 HEPA FILTER OUTLET GAS	528 ID FAN OUTLET GAS	529 T.O. VOLATILES COMBUSTION AIR	530 T.O. BURNER AUXILIARY FUEL	531 T.O. BURNER COMBUSTION AIR	532 T.O. EXHAUST GAS	533 STACK EXHAUST GAS
CARBON	LB/HR													80			
HYDROGEN	LB/HR													26			
CO2	LB/HR															364	364
O2	LB/HR	156	344	500					156	156	208	208	109		504	329	329
N2	LB/HR	2,039	4,483	6,522					2,039	2,039	2,212	2,212	363	3	1,673	4,251	4,251
H2O	LB/HR	101	221	322	1,000		25,000	1,000	101	101	101	101	4		17	378	378
SOIL/PARTICULATE	LB/HR	8	0.0	0.024				7.6	0.008	0.008	0.000004	0.000004				0.008	0.008
ORGANICS	LB/HR	22	49	71					22	22	22	22				1.1	1.1
TOTAL MASS FLOW	LB/HR	2,326	5,096	7,415	1,000	INTERMITTENT	25,000	1,008	2,318	2,318	2,543	2,543	475	109	2,194	5,323	5,323
VOLUMETRIC FLOW	ACFM	590	1,381	1,916					599	621	687	660	105		461	4,785	4,796
LIQUID FLOW	GPM				2		50	2									
TEMPERATURE	°F	100	150	108	60		108	108	108	128	128	128	70	70	70	1,600	1,600
PRESSURE	IN. W.C.GA. (PSIG)	-9.0	0.0	-9.5	(45)	(40)	(50)	(40)	-9.5	-10.0	-15.0	1.0	8.0	(15)	28.0	1.0	0.0
ENTHALPY	MM BTU/HR	0.13	0.35	0.44				0.05	0.14	0.15	0.15	0.15	0.01	2.38	0.02	2.69	2.69

NOTES:
1. THE FLOWS ARE BASED ON NORMAL, AVERAGE AT 100% OPERATING FACTOR.
2. PURGE GAS TO WESP IS AT THE RATE OF 300 SCFM/INSULATOR (1200 SCFM. TOTAL)
3. 100 GPM OF WASH WATER TO WESP AS REQUIRED.
4. 50,000 BTU/HR WESP SURFACE HEAT LOSS.
5. STREAM 527 INCLUDES AIR INLEAKAGE OF 50 SCFM.
6. T.O. (THERMAL OXIDIZER).

FOR INFORMATION ONLY
NOT FOR CONSTRUCTION

REV	DATE	BY	CHK'D	APR'VD	DESCRIPTION
0	8/25/98	JWH	JAN	GHH	FINAL RD PACKAGE

FLUOR DANIEL FERNALD
WASTE PITS REMEDIAL ACTION PROJECT (WPRAP)
FERNALD, OHIO
FDF SUBCONTRACT NO. 98SC000001

PROJECT NAME: WASTE PITS REMEDIAL ACTION PROJECT (WPRAP)

TITLE: AREA 50 GAS CLEANING SYSTEM PROCESS FLOW DIAGRAM

INTERNATIONAL TECHNOLOGY CORPORATION
... Creating a Safer Tomorrow

DESIGNED BY	PA	CHECKED BY	JAN		REVISION
DRAWN BY	SLT	APPROVED BY	GHH		0
DATE	4/22/98	DWG. SCALE	NONE		
IT PROJECT NO.	773481	DRAWING NO.	D-50-10-002		

G:\PROJECT\40000\50\5010002F1

DRAWING NUMBER D-60-10-001

1669

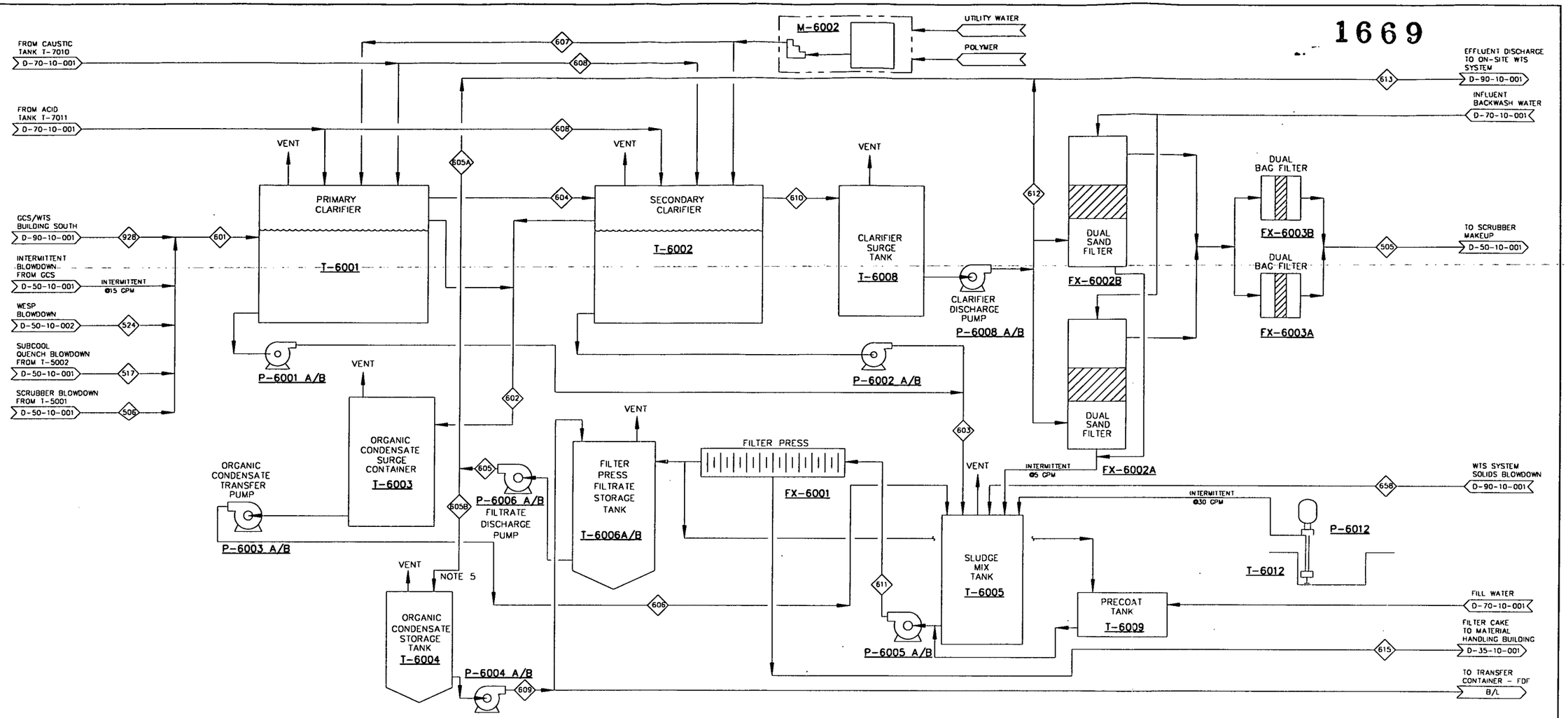

T-6001	P-6001A/B	P-6003A/B	T-6004	P-6006A/B	T-6003	P-6004A/B	T-6006A/B	T-6002	M-6002	FX-6001	P-6002A/B	P-6005A/B	T-6005	T-6008	T-6009	P-6008A/B	P-6012	T-6012	FX-6002A,B	FX-6003A,B
PRIMARY CLARIFIER 12,000 GAL.	PRIMARY CLARIFIER SLUDGE PUMP	ORGANIC CONDENSATE TRANSFER PUMP	ORGANIC CONDENSATE STORAGE TANK 750 GAL.	FILTRATE DISCHARGE PUMP	ORGANIC CONDENSATE SURGE CONTAINER 300 GAL.	ORGANIC CONDENSATE DISCHARGE PUMP	FILTER PRESS FILTRATE STORAGE TANK, 12,500 GAL.	SECONDARY CLARIFIER 12,000 GAL.	POLYBLEND UNIT	FILTER PRESS 100 CU. FT.	SECONDARY CLARIFIER SLUDGE PUMP	FILTER PRESS SLUDGE PUMP	SLUDGE MIX TANK 20,000 GAL.	CLARIFIER SURGE TANK 3000 GAL.	PRECOAT TANK 1200 GALLON	CLARIFIER DISCHARGE PUMP	SUMP PUMP	PRESS AREA SUMP	EFFLUENT DUAL SAND FILTERS	DUAL BAG FILTERS

STREAM NO.		505	506	517	524	601	602	603	604	605	605A	605B	606	607	608	609	610	611	612	613	615	658
COMPONENT		SCRUBBER MAKEUP WATER	SCRUBBER BLOWDOWN	SUBCOOLING QUENCH BLOWDOWN	WESP BLOWDOWN	TOTAL BLOWDOWN FLOW TO CLARIFIER	COMBINED CLARIFIER SKIMMER FLOW	COMBINED CLARIFIER BLOWDOWN FLOW	PRIMARY CLARIFIER EFFLUENT	FILTRATE STORAGE DISCHARGE	FILTRATE TO ON-SITE WTS	ORGANIC CONDENSATE DECANT	ORGANIC CONDENSATE TRANSFER	LIQUID POLYMER	ACID OR CAUSTIC FLOW	ORGANIC STREAM FOR DISPOSAL	SECONDARY CLARIFIER EFFLUENT	SLUDGE TO FILTER PRESS	EFFLUENT TO ON-SITE WTS	EFFLUENT DISCHARGE TO WTS	FILTER CAKE	WTS BLOWDOWN
H2O	LB/HR	25,000	25,350	15,198	1,000	41,548	2,500	7,500	36,554	17,807	17,807		2,500	6			31,554	19,662	6,554	24,362	1,855	9,662
SUSPENDED SOLIDS	LB/HR		1,365	144	8	1,517		1,517	758									1,855			1,855	338
DISSOLVED SOLIDS	LB/HR																					
ORGANICS	LB/HR			14.7		14.7	13.2	1.5	7.4	13.2		13.2	13.2			13.2		14.7			1.5	
LIQUID POLYMER	LB/HR													0.03								
ACID/CAUSTIC	LB/HR																					
TOTAL MASS FLOW	LB/HR	25,000	26,715	15,357	1,008	43,080	2,513	9,018	37,320	17,821	17,807	13.2	2,513	6	NOTE 7	13.2	31,554	21,531	6,554	24,362	3,711	10,000
LIQUID FLOW	GPM	50	53	31	2	86	5	18	75	36	36	0.03	5	0		0.03	63	43	13	49		20
TEMPERATURE	°F	150	207	110	108	169	160	160	160	104	104	104	100	60	60	70	150	104	150	116	104	60
PRESSURE	PSIG	45	45	45	40	10	5	60	2	60	60	60	45	35		45	2	150	60	60		
ENTHALPY	MM BTU/HR	2.25	3.77	0.77	0.05	4.58	0.25	0.79	3.67	0.79	0.79	0.00	0.10			0.00	2.84	0.89	0.59	1.38		

000219

NOTES:

1. COMBINED CLARIFIER REMOVAL EFFICIENCY: SOLIDS 100%.
2. 90% ORGANICS IN THE CLARIFIER SKIM FLOW AND 10% ORGANICS IN THE CLARIFIER SOLIDS ASSUMED.
3. THE PROCESS BLOWDOWN SYSTEM IS SIZED FOR 100 GPM.
4. DUAL SAND FILTER (FX-6002A/B) AND DUAL BAG FILTER (FX-6003A/B) ARE CONFIGURED AS INLINE SPARES.
5. INTERMITTENT DECANTING AS REQUIRED
6. HEAD SPACE VENT (TYPICAL)
7. INTERMITTENT

FOR INFORMATION ONLY
NOT FOR CONSTRUCTION

REV	DATE	BY	CHK'D	APR'VD	DESCRIPTION
0	8/25/98	JWH	JAN	GHH	FINAL RD PACKAGE

FLUOR DANIEL FERNALD
WASTE PITS REMEDIAL ACTION PROJECT (WPRAP)
FERNALD, OHIO
FDF SUBCONTRACT NO. 98SC000001

PROJECT NAME: WASTE PITS REMEDIAL ACTION PROJECT (WPRAP)

TITLE: AREA 60 PROCESS BLOWDOWN PRE-TREATMENT SYSTEM PROCESS FLOW DIAGRAM

INTERNATIONAL TECHNOLOGY CORPORATION
... *Creating a Safer Tomorrow*

DESIGNED BY	PA & GM	CHECKED BY	JAN		REVISION
DRAWN BY	SLT	APPROVED BY	GHH		0
DATE	4/22/98	DWG. SCALE	NONE		
IT PROJECT NO.	773481	DRAWING NO.	D-60-10-001		

C:\PROJECT\40000\60\6010001F1

DRAWING NUMBER D-65-10-001

1669

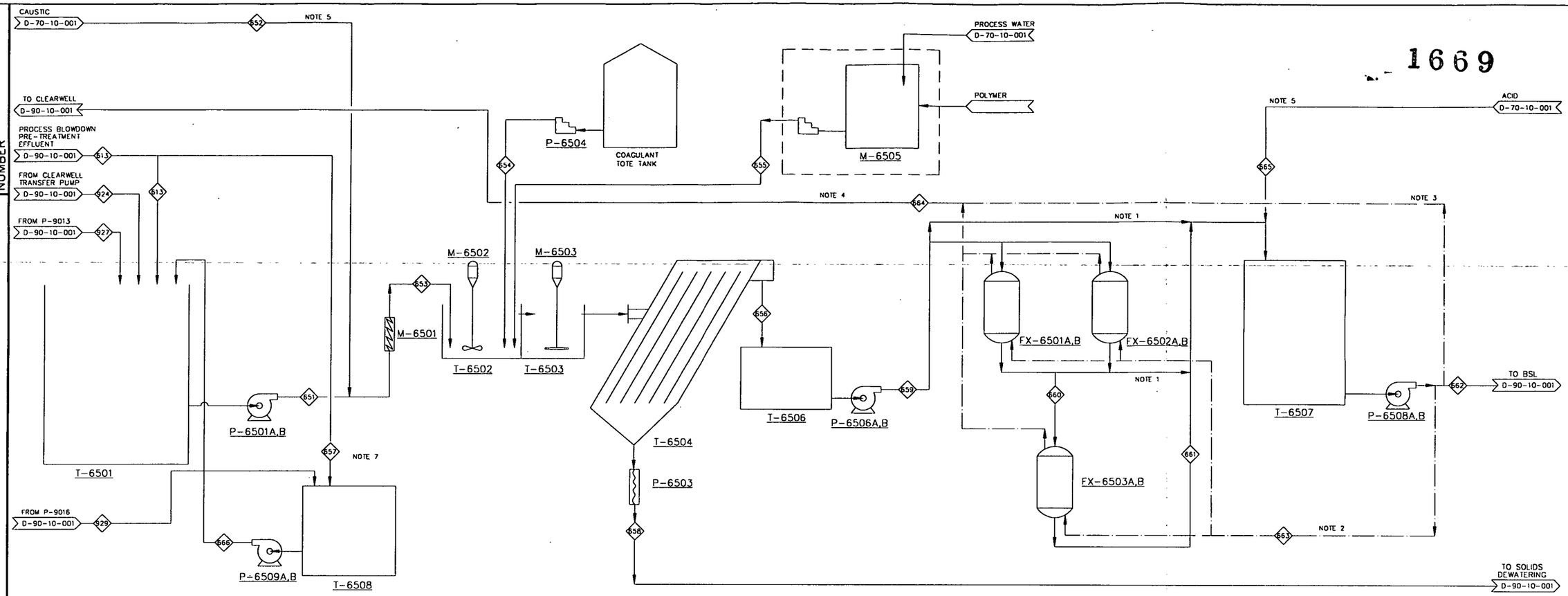

T-6501 INFLUENT TANK

P-6501A,B CLARIFIER FEED PUMPS

M-6501 STATIC MIXER

M-6502 FLASH MIXER

T-6502 FLASH MIX TANK

P-6509A,B TEMPORARY HOLDING TANK TRANSFER PUMPS

M-6503 FLOCCULATION MIXER

T-6503 FLOCCULATION TANK

T-6504 INCLINED PLATE CLARIFIER

P-6503 CLARIFIER SLUDGE PUMP

P-6504 COAGULANT METERING PUMP

T-6508 TEMPORARY HOLDING TANK

M-6505 POLYBLEND UNIT

T-6506 CLARIFIER OVERFLOW TANK

P-6506A,B FILTER FEED PUMPS

FX-6501A,B, FX-6502A,B SAND FILTERS

FX-6503A,B ION EXCHANGE UNITS

T-6507 EFFLUENT TANK

P-6508A,B EFFLUENT PUMPS

STREAM NO. / COMPONENT		613	651	652	653	654	655	656	657	658	659	660	661	662	663	664	665	666	924	927	929
		PROCESS BLOWDOWN PRE-TREATMENT EFFLUENT	WTS INFLUENT	CAUSTIC FEED	CLARIFIER INFLUENT	COAGULANT FEED	POLYMER FEED	CLARIFIER OVERFLOW	EMERGENCY OVERFLOW	WTS SLUDGE DISCHARGE	SAND FILTER FEED	ION EXCHANGE FEED	ION EXCHANGE EFFLUENT	WTS EFFLUENT	BACKWASH FEED	WTS BACKWASH	ACID FEED	TEMPORARY HOLDING TANK EFFLUENT	CLEARWELL TRANSFER PUMP	GCS/WTS SUMP (NORTH)	GCS/WTS SUMP (WEST)
TOTAL SUSPENDED SOLIDS	mg/L	0	2,279	0	2,279	0	0	15	0	35,000	15	0	0	0	0	185	0	0	3,000	0	0
WATER	LB/HR	16,463	68,469	0	68,469	86	9	64,133	0	4,430	64,133	64,133	64,133	58,920	5,213	5,213	0	0	52,006	0	0
SOLID/PARTICULATE	LB/HR		156	0	156	0	0	1	0	155	1	0	0	0	0	1	0	0	156	0	0
TOTAL MASS FLOW	LB/HR	16,463	68,625	0	68,625	86	9	64,134	0	4,585	64,134	64,133	64,133	58,920	5,213	5,214	0	0	52,162	0	0
VOLUMETRIC FLOW (NOTE 6)	GPM	33	240	0	240	0.3	0.03	240	0	200	250	250	250	260	500	500	0	0	200	0	0
AVERAGE VOLUMETRIC FLOW	GPD	47,520	197,160	0	197,160	246	25	184,534	0	12,747	184,534	184,534	184,534	169,534	15,000	15,000	0	0	149,640	0	0
TEMPERATURE	°F	150	AMB	AMB	AMB	AMB	AMB	AMB	AMB	AMB	AMB	AMB	AMB	AMB	AMB	AMB	AMB	AMB	AMB	AMB	AMB

000220

NOTE:

1. WATER CAN BYPASS SAND FILTER AND ION EXCHANGE UNIT OR ONLY THE ION EXCHANGE DEPENDING ON WATER QUALITY.
2. TREATED EFFLUENT CAN BE USED AS BACKWASH WATER.
3. TREATED WATER CAN BE RECYCLED TO THE CLEARWELL IF IT DOES NOT MEET THE WAC FOR DISCHARGE TO THE BSL.
4. PRIMARILY BACKWASH WATER. RECYCLED EFFLUENT WATER ONLY AS NECESSARY.
5. USED FOR pH CONTROL AS NEEDED.
6. INTERMITTENT FLOW RATE. ALL OTHER RATES ARE 24-HOUR AVERAGES.
7. FLOW FROM AREA 60 TO T-6508 WOULD OCCUR ONLY IN THE EVENT OF WTS SHUTDOWN

FOR INFORMATION ONLY
NOT FOR CONSTRUCTION

REV	DATE	BY	CHK'D	APR'VD	DESCRIPTION
0	8/25/98	JWH	JAN	GHH	FINAL RD PACKAGE

FLUOR DANIEL FERNALD

WASTE PITS REMEDIAL ACTION PROJECT (WPRAP)
FERNALD, OHIO
FDF SUBCONTRACT NO. 98SC000001

PROJECT NAME: WASTE PITS REMEDIAL ACTION PROJECT (WPRAP)

TITLE: AREA 65 WASTEWATER TREATMENT SYSTEM (WTS) PROCESS FLOW DIAGRAM

INTERNATIONAL TECHNOLOGY CORPORATION
... *Creating a Safer Tomorrow*

DESIGNED BY	PMS	CHECKED BY	JAN		REVISION
DRAWN BY	CSJ	APPROVED BY	GHH		0
DATE	11/24/97	DWG. SCALE	NONE		
IT PROJECT NO.	773481	DRAWING NO.	D-65-10-001		

C:\PROJECT\40000\65\6510001F1

DRAWING NUMBER D-70-10-001

- 1669

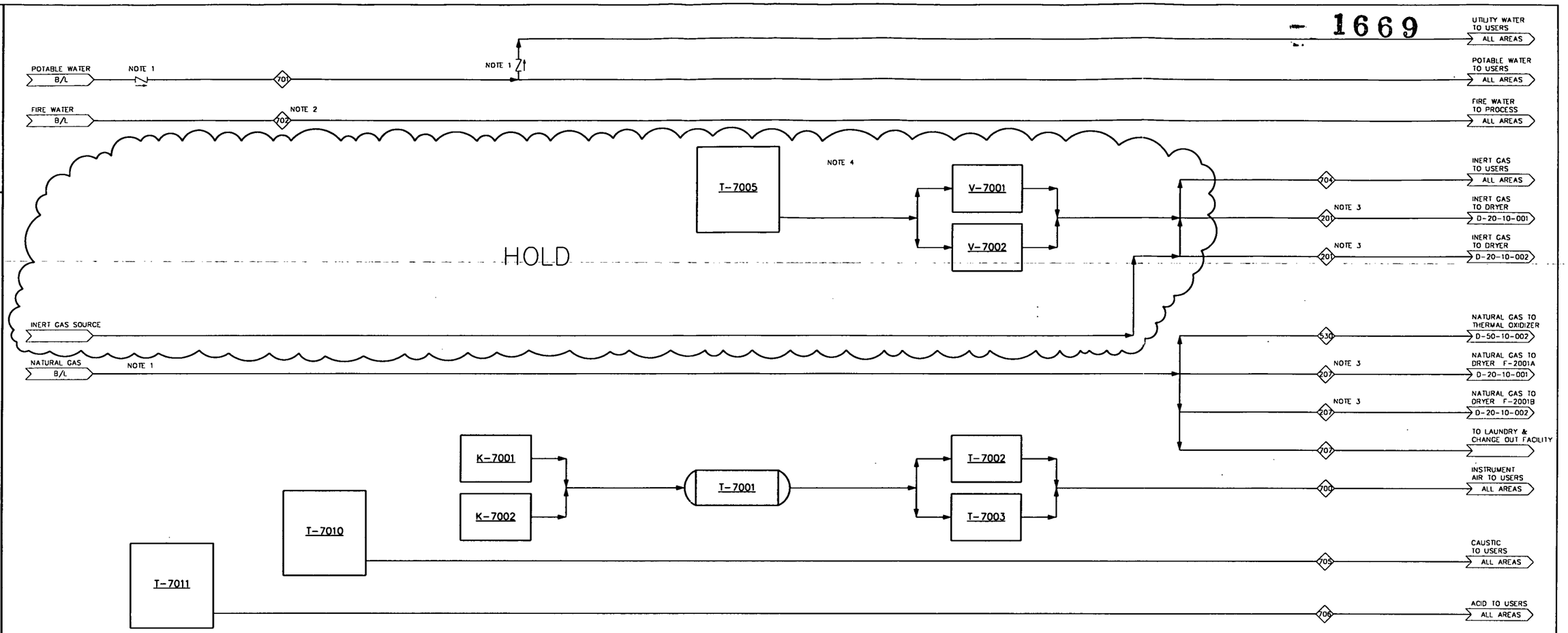

T-7005	NITROGEN STORAGE TANK
V-7001	LIQUID NITROGEN VAPORIZER
V-7002	LIQUID NITROGEN VAPORIZER
T-7011	ACID TANK
T-7010	CAUSTIC TANK
K-7001	AIR COMPRESSOR SYSTEM
K-7002	AIR COMPRESSOR SYSTEM
T-7001	INSTRUMENT AIR RECEIVER
T-7002	INSTRUMENT AIR DRYER
T-7003	INSTRUMENT AIR DRYER

000221

STREAM NO. / COMPONENT		201	207	530	700	701	702	704	705	706	707
		INERT GAS	NATURAL GAS TO DRYERS	NATURAL GAS TO THER. OXIDIZER	COMPRSSED AIR	WATER	FIRE WATER	INERT GAS	CAUSTIC	ACID	NATURAL GAS TO LAUNDRY & CHANGE OUT FACILITY
AVERAGE											
CAUSTIC	LB/HR								500		
ACID	LB/HR									500	
H_2O	LB/HR					45,036	100,000				
AIR	LB/HR				1,690						
NITROGEN	LB/HR	760						150			
NATURAL GAS	LB/HR		1,026	109							10
TOTAL MASS FLOW	LB/HR	760	1,026	109	1,690	45,036	1,164,000	150	500	500	10
VOLUMETRIC FLOW	SCFM (GPM)	175	404	43	320	(90)	(1,600)	35	(1)	(1)	4
TEMPERATURE	°F	70	70	70	70	70	70	70	70	70	70
PRESSURE	IN. W.C. (PSI)	(40)	(15)	(15)	(125)	(45)	(50)	(40)	(50)	(50)	(15)
MAXIMUM											
H_2O	LB/HR					60,048	1,164,000				
AIR	LB/HR				1,900						
NITROGEN	LB/HR	1,000						1,500			
NATURAL GAS	LB/HR		1,300	109							10

NOTES:

1. BACKFLOW PREVENTER
2. EMERGENCY FLOW ONLY.
3. AMOUNTS REQUIRED FOR EACH DRYER.
4. NITROGEN MAY BE USED AS AN ALTERNATE TO OTHER INERT GAS SOURCE.
5. NATURAL GAS PRESSURE AT TIE POINT 47 PSIG.

FOR INFORMATION ONLY
NOT FOR CONSTRUCTION

REV	DATE	BY	CHK'D	APR'VD	DESCRIPTION
0	8/25/98	JWH	JAN	GHH	FINAL RD PACKAGE

FLUOR DANIEL FERNALD
WASTE PITS REMEDIAL ACTION PROJECT (WPRAP)
FERNALD, OHIO
FDF SUBCONTRACT NO. 98SC000001

PROJECT NAME
WASTE PITS REMEDIAL ACTION PROJECT (WPRAP)

TITLE
AREA 70
PROCESS FLOW DIAGRAM
UTILITIES

INTERNATIONAL TECHNOLOGY CORPORATION
... *Creating a Safer Tomorrow*

DESIGNED BY	TGB	CHECKED BY	JAN		REVISION
DRAWN BY	JWH	APPROVED BY	GHH		0
DATE	12/31/97	DWG. SCALE	NONE		
IT PROJECT NO.	773481	DRAWING NO.	D-70-10-001		

C:\PROJECT\40000\70\7010001F1

DRAWING NUMBER D-90-10-001

1669

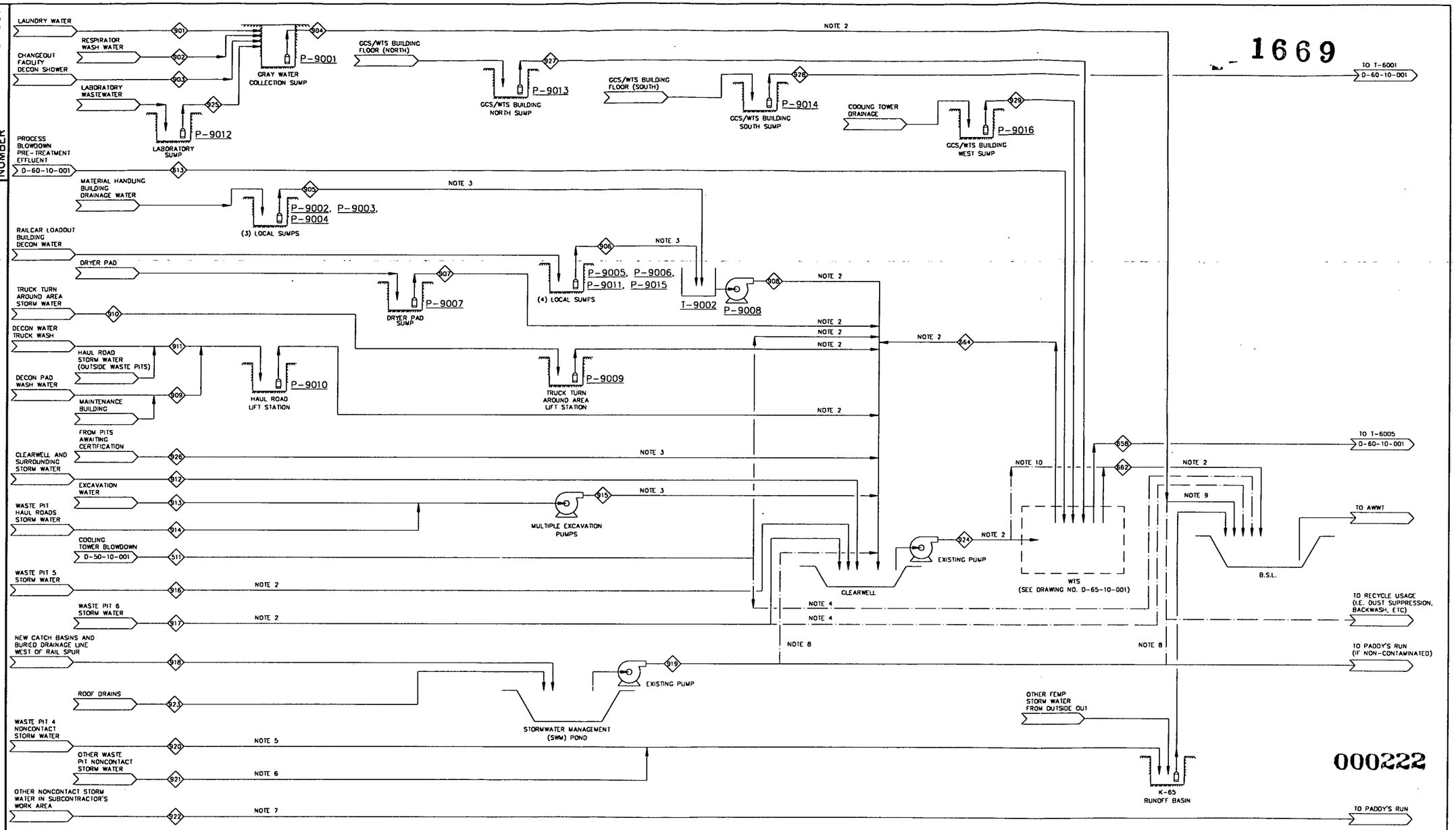

000222

P-9001	GRAY WATER PUMP
P-9002, 9003, 9004	MATERIAL HANDLING BUILDING (MHB) SUMP PUMPS
P-9005, 9006	RAILCAR LOADOUT BUILDING (RLB) SUMP PUMPS (NORTH AND SOUTH)
P-9015	RAILCAR LOADOUT BUILDING WASH WATER SUMP PUMP
P-9011	RAILCAR LOADOUT BUILDING (RLB) DECON SUMP PUMP
P-9012	LABORATORY SUMP PUMP
P-9007	DRYER PAD SUMP PUMP
T-9002	MHB COLLECTION TANK (MHBCT)
P-9008	MHBCT TRANSFER PUMP
P-9009	TRUCK TURN AROUND AREA SUMP PUMP
P-9010	TRUCK WASH SUMP PUMP
P-9013	GCS/WTS BUILDING SUMP PUMP (NORTH)
P-9014	GCS/WTS BUILDING SUMP PUMP (SOUTH)
P-9016	GCS/WTS BUILDING SUMP PUMP (WEST)

STREAM NUMBER	511	613	901	902	903	904	905	906	907	908	909	910	911	912	913	914	915	916	917	918	919	920	921	922	923	924	925	926	927	928	929	658	662	664
(NOTE 1)	COOLING TOWER BLOWDOWN	PROCESS BLOWDOWN PRE-TREATMENT EFFLUENT	LAUNDRY WATER	RESPIRATOR WASH WATER	DECON SHOWER	GRAY WATER SUMP	MATERIAL HANDLING BLDG SUMPS	RAILCARD LOADOUT BLDG SUMPS	DRYER PAD SUMP	MHBCT TRANSFER PUMP	DECON PAD WATER	TRUCK TURN AROUND AREA SUMP	TRUCK WASH SUMP	CLEARWELL STORM WATER	EXCAVATION WATER	HAUL ROAD STORM WATER	EXCAVATION PUMPS	WASTE PIT 5 STORM WATER	WASTE PIT 6 STORM WATER	SWM POND COLLECTION BASINS	SWM POND EFFLUENT	WASTE PIT 4 NONCONTACT STORM WATER	OTHER WASTE PIT NONCONTACT STORM WATER	NONCONTACT STORM WATER OUTSIDE PITS	ROOF DRAINS	CLEARWELL TRANSFER PUMP	LABORATORY WASTEWATER	FROM PITS AWAITING CERTIFICATION	GCS/WTS BUILDING (NORTH)	GCS/WTS BUILDING (SOUTH)	COOLING TOWER DRAINAGE	WATER IN WTS SLUDGE DISCHARGE	WTS EFFLUENT	WTS BACKWASH

NOTES:

1. STREAM DESCRIPTIONS ARE GIVEN ON DWG. D-90-11-002, BY PHASE.
2. BURIED LINE.
3. SHOWN AS A SINGLE STREAM FOR CALCULATION PURPOSES. ACTUAL FIELD CONDITIONS MAY REQUIRE SEVERAL SEPARATE STREAMS.
4. STREAM CAN GO TO THE BSL IF IT MEETS THE WAC FOR DISCHARGE TO THE BSL.
5. COLLECTION TRENCH AROUND PIT AND THROUGH EXISTING CULVERTS.
6. EXISTING TRENCHES AND CULVERTS.
7. DRAINAGE SWALES AROUND NORTH AND SOUTH SIDE OF BSL; AND AREA NORTH OF PIT 6 AND SWM POND.
8. STREAM CAN GO TO BSL OR CLEARWELL IF IT DOES NOT MEET CRITERIA FOR NPDES DISCHARGE.
9. EXISTING BURIED LINE FROM SWM POND TO BSL.
10. EXISTING BURIED LINE FROM CLEARWELL TO BSL.

FOR INFORMATION ONLY
NOT FOR CONSTRUCTION

REV	DATE	BY	CHK'D	APR'VD	DESCRIPTION
0	8/25/98	JWH	JAN	GHH	FINAL RD PACKAGE

FLUOR DANIEL FERNALD — WASTE PITS REMEDIAL ACTION PROJECT (WPRAP), FERNALD, OHIO, FDF SUBCONTRACT NO. 98SC000001

PROJECT NAME: WASTE PITS REMEDIAL ACTION PROJECT (WPRAP)

TITLE: AREA 90 SITE WATER BALANCE PROCESS FLOW DIAGRAM

INTERNATIONAL TECHNOLOGY CORPORATION
... *Creating a Safer Tomorrow*

DESIGNED BY	P. STEARNS	CHECKED BY	JAN	REVISION
DRAWN BY	RJC	APPROVED BY	GHH	0
DATE	17 DECEMBER 97	DWG. SCALE	NO SCALE	
IT PROJECT NO.	773481	DRAWING NO.	D-90-10-001	

G:\PROJECT\40000\90\9010001F1

DRAWING NUMBER D-90-10-002

1669

NO.	DESCRIPTION	UNITS	PH. 1	PH. 2	PH. 3	PH. 4	PH. 5	PH. 6	PH. 7	PH. 8	PH. 9	PH. 10	PH. 11	PH. 12	PH. 13	PH. 14	PH. 15	PH. 16	PH. 17	PH. 18	PH. 19
511	COOLING TOWER BLOWDOWN	gpd	14,400	14,400	14,400	14,400	14,400	14,400	14,400	14,400	14,400	14,400	14,400	14,400	14,400	14,400	14,400	14,400	14,400	14,400	14,400
613	PROCESS BLOWDOWN PRE-TREATMENT	gpd	47,520	47,520	47,520	47,520	47,520	47,520	47,520	47,520	47,520	47,520	47,520	47,520	47,520	47,520	47,520	47,520	47,520	47,520	47,520
901	LAUNDRY WATER	gpd	750	750	750	750	750	750	750	750	750	750	750	750	750	750	750	750	750	750	750
902	RESPIRATOR WASH WATER	gpd	100	100	100	100	100	100	100	100	100	100	100	100	100	100	100	100	100	100	100
903	DECON SHOWERS	gpd	0	0	0	0	0	0	0	0	0	0	0	0	0	0	0	0	0	0	0
904	GWCT TRANSFER PUMP	gpd	950	950	950	950	950	950	950	950	950	950	950	950	950	950	950	950	950	950	950
905	MATERIAL HANDLING BLDG SUMPS	gpd	228	228	228	228	228	228	228	228	228	228	228	228	228	228	228	228	228	228	228
906	RAILCAR LOADOUT BLDG SUMPS	gpd	1,200	1,200	1,200	1,200	1,200	1,200	1,200	1,200	1,200	1,200	1,200	1,200	1,200	1,200	1,200	1,200	1,200	1,200	1,200
907	DRYER PAD SUMP	gpd	418	418	418	418	418	418	418	418	418	418	418	418	418	418	418	418	418	418	418
908	MHBCT TRANSFER PUMP	gpd	1,428	1,428	1,428	1,428	1,428	1,428	1,428	1,428	1,428	1,428	1,428	1,428	1,428	1,428	1,428	1,428	1,428	1,428	1,428
909	DECON PAD WATER	gpd	1,500	1,500	1,500	1,500	1,500	1,500	1,500	1,500	1,500	1,500	1,500	1,500	1,500	1,500	1,500	1,500	1,500	1,500	1,500
910	TRUCK TURN-AROUND AREA STORM WATER	gpd	1,800	1,800	1,800	1,800	1,800	1,800	1,800	1,800	1,800	1,800	1,800	1,800	1,800	1,800	1,800	1,800	1,800	1,800	1,800
911	TRUCK WASH SUMP	gpd	1,000	1,000	1,000	1,000	1,000	1,000	1,000	1,000	1,000	1,000	1,000	1,000	1,000	1,000	1,000	1,000	1,000	1,000	1,000
912	CLEARWELL STORM WATER	gpd	7,266	4,181	4,181	4,181	4,181	4,181	3,136	1,941	1,941	1,941	1,941	1,941	1,941	1,941	1,941	1,941	1,941	0	0
913	EXCAVATION WATER	gpd	20,578	28,037	29,030	70,344	92,405	97,488	98,410	124,114	125,597	109,195	112,406	56,189	63,230	109,598	122,659	114,984	19,930	15,336	0
914	WASTE PIT HAUL ROAD STORM WATER	gpd	2,060	2,060	2,060	2,060	2,060	2,060	2,060	2,060	2,060	2,060	2,060	2,060	2,060	2,060	2,060	2,060	2,060	2,060	2,060
915	EXCAVATION PUMPS	gpd	22,638	30,097	31,090	72,404	94,465	99,548	100,470	126,174	127,657	111,255	114,466	58,249	65,290	111,658	124,719	117,044	21,990	17,396	2,060
916	WASTE PIT 5 STORM WATER	gpd	11,169	11,169	11,169	11,169	11,169	11,169	11,169	11,169	8,153	6,242	5,794	4,569	4,241	2,598	2,568	1,672	0	0	0
917	WASTE PIT 6 STORM WATER	gpd	2,210	2,210	2,210	2,210	2,210	2,210	2,210	0	0	0	0	0	0	0	0	0	0	0	0
918	SWM POND COLLECTION BASINS	gpd	9,160	9,160	9,160	9,160	9,160	9,160	9,160	9,160	9,160	9,160	9,160	9,160	9,160	9,160	9,160	9,160	9,160	9,160	9,160
919	SWM POND EFFLUENT	gpd	17,051	17,051	17,051	17,051	17,051	17,051	17,051	17,051	17,051	17,051	17,051	17,051	17,051	17,051	17,051	17,051	17,051	17,051	17,051
920	WASTE PIT 4 N.C. STORM WATER	gpd	4,480	4,480	4,480	4,480	2,598	2,598	2,538	2,538	2,538	2,538	2,538	2,329	2,329	0	0	0	0	0	0
921	OTHER WASTE PIT N.C. STORM WATER	gpd	19,791	11,199	8,959	6,719	2,240	1,493	1,493	1,493	1,493	1,493	1,493	0	0	0	0	0	0	0	0
922	NONCONTACT STORM WATER OUTSIDE PITS	gpd	10,290	10,290	10,290	10,290	10,290	10,290	10,290	10,290	10,290	10,290	10,290	10,290	10,290	10,290	10,290	10,290	10,290	10,290	10,290
923	ROOF DRAINS	gpd	7,891	7,891	7,891	7,891	7,891	7,891	7,891	7,891	7,891	7,891	7,891	7,891	7,891	7,891	7,891	7,891	7,891	7,891	7,891
924	CLEARWELL TRANSFER PUMP	gpd	78,829	83,203	84,197	125,510	156,974	152,654	152,531	181,785	180,252	177,376	180,139	157,286	141,607	195,160	173,602	165,030	163,215	147,766	146,052
925	LABORATORY WASTEWATER	gpd	100	100	100	100	100	100	100	100	100	100	100	100	100	100	100	100	100	100	100
926	WATER FROM PITS AWAITING CERTIFICATION	gpd	0	0	0	0	9,403	0	0	6,955	6,955	22,392	22,392	56,981	34,589	43,416	8,827	8,827	103,738	94,824	108,446
927	GCS/WTS BUILDING NORTH SUMP	gpd	0	0	0	0	0	0	0	0	0	0	0	0	0	0	0	0	0	0	0
928	GCS/WTS BUILDING SOUTH SUMP	gpd	0	0	0	0	0	0	0	0	0	0	0	0	0	0	0	0	0	0	0
929	GCS/WTS BUILDING WEST SUMP	gpd	0	0	0	0	0	0	0	0	0	0	0	0	0	0	0	0	0	0	0
658	WATER IN WTS SLUDGE DISCHARGE	gpd	12,747	12,747	12,747	12,747	12,747	12,747	12,747	12,747	12,747	12,747	12,747	12,747	12,747	12,747	12,747	12,747	12,747	12,747	12,747
662	WTS EFFLUENT	gpd	98,602	102,976	103,969	145,283	176,747	172,427	172,304	201,558	200,024	197,149	199,912	177,059	161,380	214,932	193,374	184,803	182,987	167,539	165,825
664	WTS BACKWASH	gpd	15,000	15,000	15,000	15,000	15,000	15,000	15,000	15,000	15,000	15,000	15,000	15,000	15,000	15,000	15,000	15,000	15,000	15,000	15,000

000223

FOR INFORMATION ONLY
NOT FOR CONSTRUCTION

REV	DATE	BY	CHK'D	APR'VD	DESCRIPTION
0	8/25/98	JWH	JAN	GHH	FINAL RD PACKAGE

FLUOR DANIEL FERNALD
WASTE PITS REMEDIAL ACTION PROJECT (WPRAP)
FERNALD, OHIO
FDF SUBCONTRACT NO. 98SC000001

PROJECT NAME
WASTE PITS REMEDIAL ACTION PROJECT (WPRAP)

TITLE
AREA 90
SITE WATER BALANCE
PROCESS STREAM TABLE

INTERNATIONAL TECHNOLOGY CORPORATION
... *Creating a Safer Tomorrow*

DESIGNED BY	PWS	CHECKED BY	JAN		REVISION
DRAWN BY	JWH	APPROVED BY	GHH		0
DATE	7/8/98	DWG. SCALE	NO SCALE		
IT PROJECT NO.	773481	DRAWING NO.	D-90-10-002		

C:\PROJECT\40000\90\90100021

Waste Pits Remedial Action Project
(WPRAP)
Site Plans

***

PREPARED
for
Fluor Daniel Fernald, Inc.
Fernald, Ohio

FDF Subcontract No. 98SC000001

***

PREPARED
by
IT Corporation
2790 Mosside Boulevard
Monroeville, PA 15146-2790

IT Project No. 773481

***

Revision 0
Issue Date: August 25, 1998

Drawing List

Drawing No.	Rev. No.	Description
M-00-02-001	0	Overall Site Facilities Map
M-00-02-002	0	Site Facilities Layout

Waste Pits Remedial Action Project
(WPRAP)
General Arrangement Plan(s)

***

PREPARED
for
Fluor Daniel Fernald, Inc.
Fernald, Ohio

FDF Subcontract No. 98SC000001

***

PREPARED
by
IT Corporation
2790 Mosside Boulevard
Monroeville, PA 15146-2790

IT Project No. 773481

***

Revision 0
Issue Date: August 25, 1998

Drawing List

1669

Drawing No.	Rev. No.	Description
M-00-02-112	0	GCS/WTS Building General Arrangement Plan, Elevation and Section
M-15-02-001	1	Pre-Engineered Buildings General Arrangement Plan
M-15-02-002	0	Material Handling Building General Arrangement Plan
M-15-02-003	1	Material Handling Building General Arrangement Elevations and Sections
M-35-02-001	1	Railcar Loadout and Railcar Prep/Liner Storage Buildings General Arrangement Plan
M-35-02-002	0	Railcar Loadout and Railcar Prep/Liner Storage Buildings General Arrangement Elevations and Sections
D-50-02-001 SHT1	0	Area 50 / Gas Cleaning System General Arrangement Elevation
D-50-02-001 SHT2	0	Area 50 / Gas Cleaning System General Arrangement Elevation
D-90-02-002	0	Dryer Process Area Equipment General Arrangement Plan

000329

DRAWING NUMBER D-50-02-001

1669

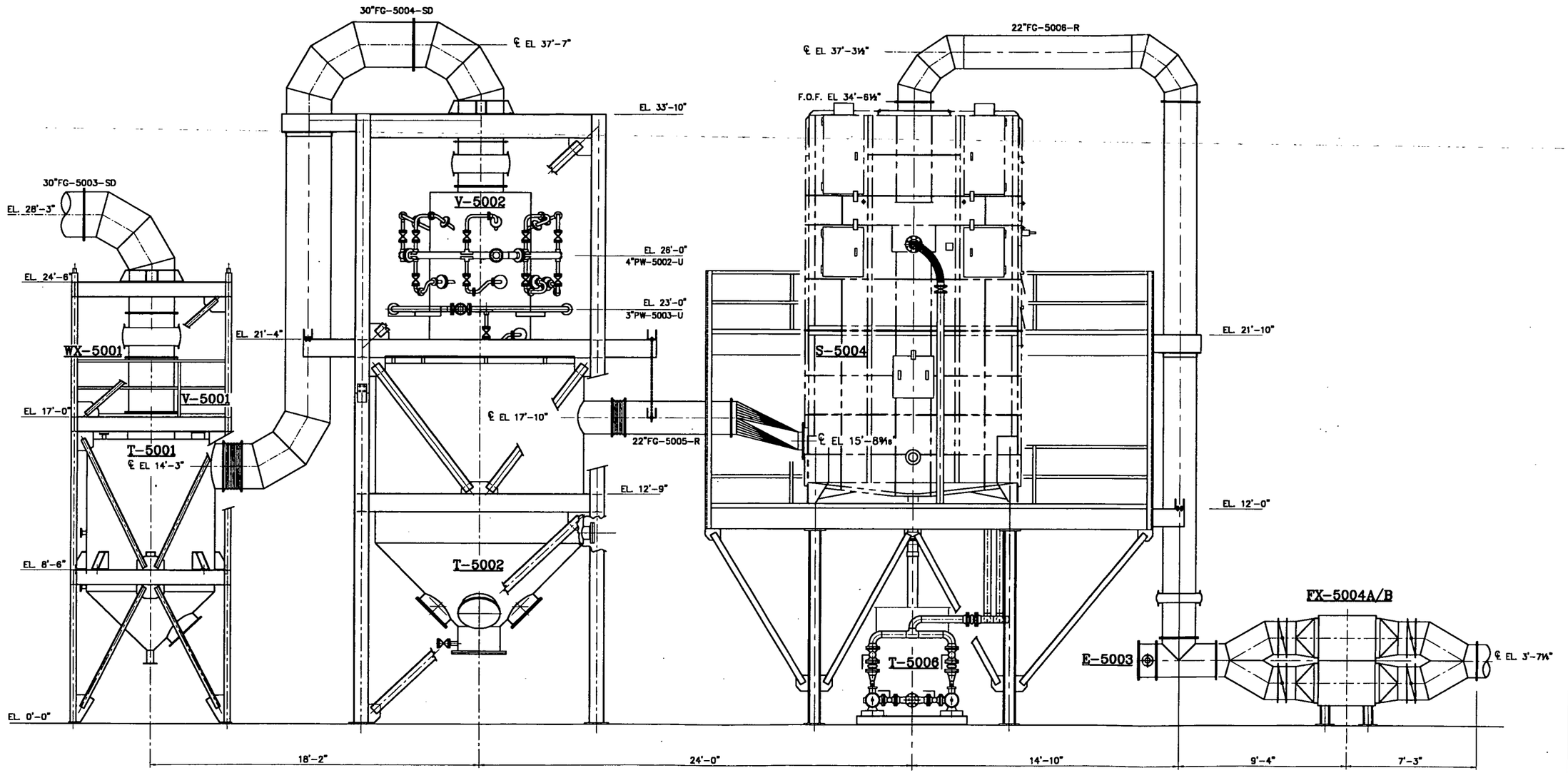

000236

ELEVATION VIEW – GAS CLEANING SYSTEM

NOTES:
1. BOTTOM OF STEEL EL. 0'-0" = PLANT ELEVATION 583'-4½".

FOR INFORMATION ONLY
NOT FOR CONSTRUCTION

REV	DATE	BY	CHK'D	APR'VD	DESCRIPTION
0	9-20-98	JFM	RJL	BAH	FINAL RD PACKAGE

FLUOR DANIEL FERNALD — WASTE PITS REMEDIAL ACTION PROJECT (WPRAP), FERNALD, OHIO, FDF SUBCONTRACT NO. 98SC000001

PROJECT NAME: WASTE PITS REMEDIAL ACTION PROJECT (WPRAP)

TITLE: AREA 50/GAS CLEANING SYSTEM GENERAL ARRANGEMENT ELEVATION

INTERNATIONAL TECHNOLOGY CORPORATION
... Creating a Safer Tomorrow

DESIGNED BY	MFL	CHECKED BY	8-20-98	REVISION
DRAWN BY	MFL	APPROVED BY	8-21-98	0
DATE	3/27/98	DWG. SCALE	3/8" = 1'-0"	
IT PROJECT NO.	773481	DRAWING NO.	D-50-02-001	1 OF 2

773481-49 08/21/98 8:30am JFM

DRAWING NUMBER D-50-02-001

1669

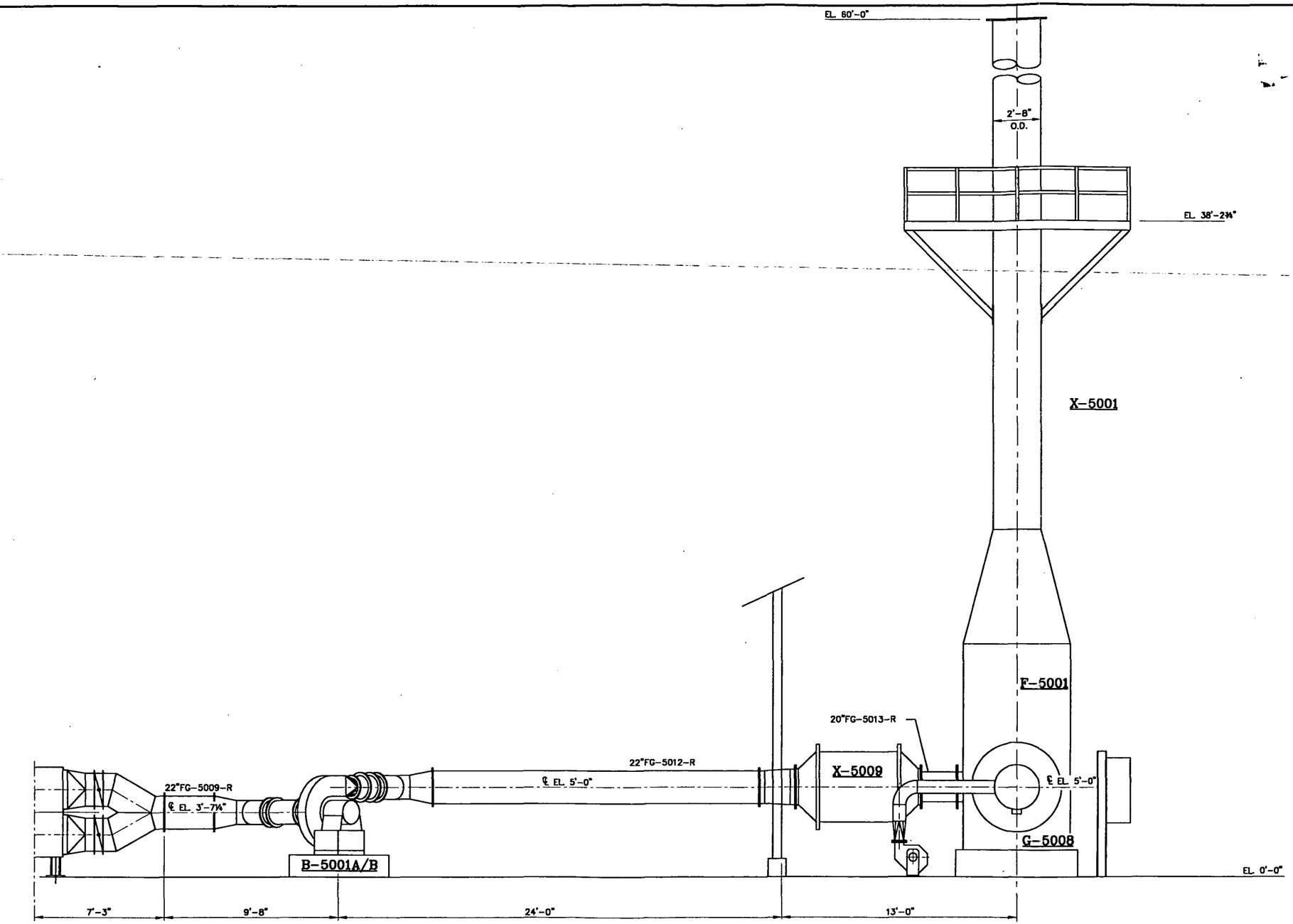

ELEVATION VIEW – GAS CLEANING SYSTEM

000237

NOTES:
1. BOTTOM OF STEEL EL. 0'-0" = PLANT ELEVATION 583'-4½".

FOR INFORMATION ONLY
NOT FOR CONSTRUCTION

REV	DATE	BY	CHK'D	APR'VD	DESCRIPTION
0	8/20/98	JFM	RJL	BAH	FINAL RD PACKAGE

FLUOR DANIEL FERNALD
WASTE PITS REMEDIAL ACTION PROJECT (WPRAP)
FERNALD, OHIO
FDF SUBCONTRACT NO. 98SC000001

PROJECT NAME
WASTE PITS REMEDIAL ACTION PROJECT (WPRAP)

TITLE
AREA 50/GAS CLEANING SYSTEM
GENERAL ARRANGEMENT
ELEVATION

INTERNATIONAL TECHNOLOGY CORPORATION
... Creating a Safer Tomorrow

DESIGNED BY	MFL	CHECKED BY	RJK 8-20-98	REVISION
DRAWN BY	MFL	APPROVED BY	BAH 8-21-98	0
DATE	3/27/98	DWG. SCALE	3/8" = 1'-0"	
IT PROJECT NO.	773481	DRAWING NO.	D-50-02-001	2 OF 2

773481rc0 08/21/98 8:25am JFM

DRAWING NUMBER D-90-50-002

1669

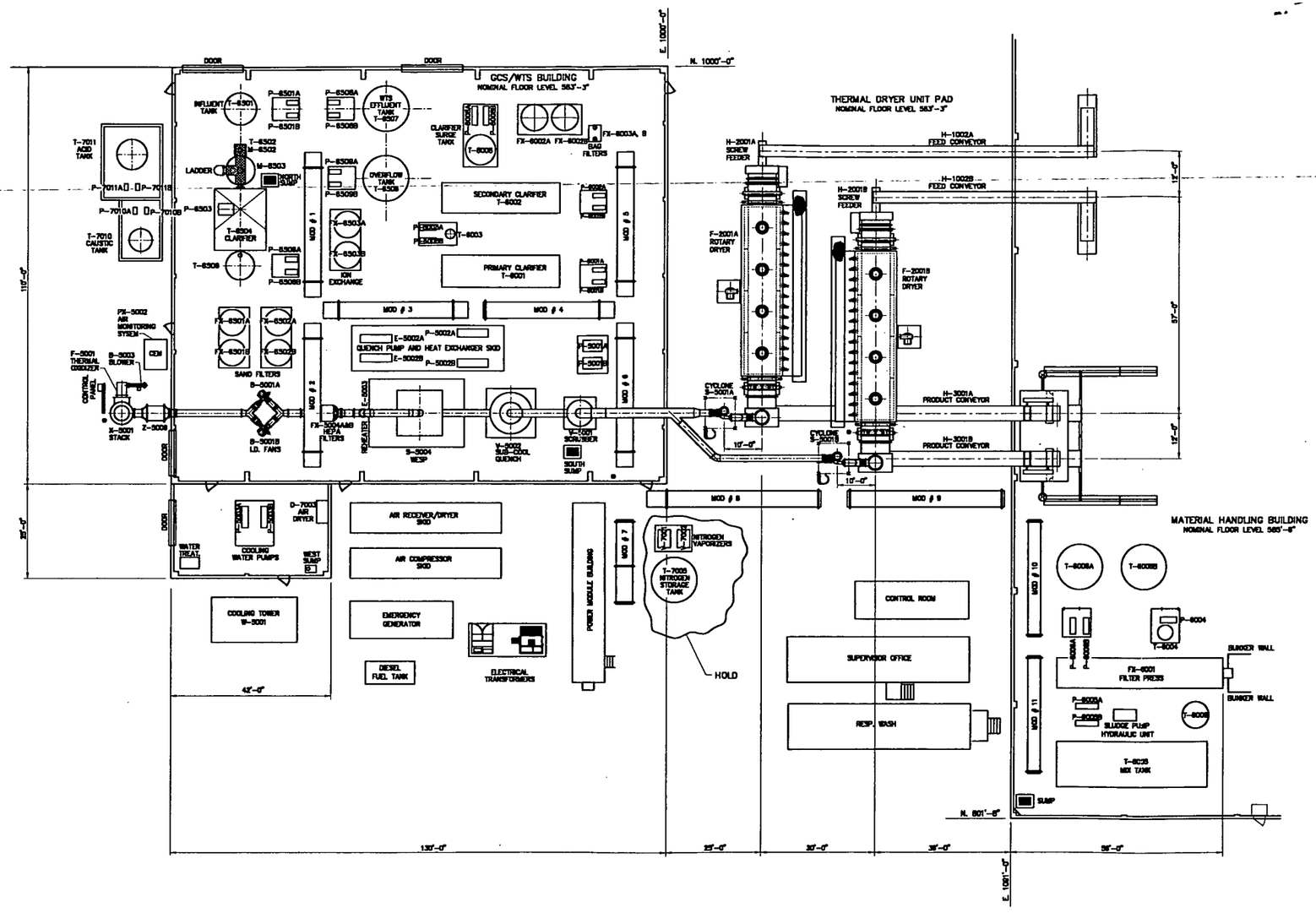

000238

1. PLANT NORTH DESIGNATED TO RUN PARALLEL WITH LINE OF BUILDING WALLS.
2. ALL LOCATION COORDINATES SHOWN ARE REFERENCED FROM NORTH-EAST CORNER OF GCS/WTS BUILDING WHICH IS DESIGNATED AS E. 1000'-0", N. 1000'0".

FOR INFORMATION ONLY
NOT FOR CONSTRUCTION

REV	DATE	BY	CHK'D	APR'VD	DESCRIPTION
0	8-20-98	JFM	RJL	BAH	FINAL RD PACKAGE

FLUOR DANIEL FERNALD
WASTE PITS REMEDIAL ACTION PROJECT (WPRAP)
FERNALD, OHIO
FDF SUBCONTRACT NO. 98SC000001

PROJECT NAME
WASTE PITS REMEDIAL ACTION PROJECT (WPRAP)

TITLE
DRYER PROCESS AREA EQUIPMENT
GENERAL ARRANGEMENT PLAN

INTERNATIONAL TECHNOLOGY CORPORATION
... *Creating a Safer Tomorrow*

DESIGNED BY	RJL	CHECKED BY	RJK 8-20-98	REVISION
DRAWN BY	STC	APPROVED BY	BAH 8-21-98	0
DATE	12/22/97	DWG. SCALE	1"=15'-0"	
IT PROJECT NO.	773481	DRAWING NO.	D-90-02-002	1 OF 1

773481B6 08/21/98 8:35am JFM

1669

Waste Pits Remedial Action Project
(WPRAP)
Equipment Data Sheets/Specifications

***

PREPARED
for
Fluor Daniel Fernald, Inc.
Fernald, Ohio

FDF Subcontract No. 98SC000001

***

PREPARED
by
IT Corporation
2790 Mosside Boulevard
Monroeville, PA 15146-2790

IT Project No. 773481

***

Revision 0
Issue Date: August 25, 1998

000239

Record of Issue/Revisions

1669

Date	Rev. No.	Description of Issue/Revision
1-9-98	A	Original Issue of Draft
2-13-98	B	Draft Issue for EPA Review
3-25-98	C	Draft Issue for FDF Review
N/A	D	Not Issued
6-5-98	E	Draft Issue for EPA Review
8-25-98	0	Final

000240

1.0 INTRODUCTION

1669

This section presents general standard industrial specifications for process equipment typical of the process equipment shown on the PFDs and discussed in the Description of the Operation and Process. The specifications describe the process determined features required for the individual equipment items. This description of features includes the performance requirements and the mechanical requirements as appropriate to clarify or describe desirable and necessary features of the equipment. These specifications provide the basic information for preparation of subsequent detailed designs, drawings, and purchase requisitions. The specifications in this section are not the final detail design specifications for the equipment.

This section includes an equipment list which lists the equipment item, provides the equipment number if appropriate, a brief description of the equipment duty, and the reference to the specification which describes the equipment in more detail. Summary estimated motor horsepowers are also provided on the equipment list.

Specifications are not typically provided in this section for existing equipment. The equipment specifications follow the equipment list in numerical order.

For Information Only

Company Name:	Fluor Daniel Fernald		Initiated:	J. Newburn
Project Name:	Waste Pits Remedial Action Project OU-1	PROCESS EQUIPMENT LIST	Checked:	B. Halley
Location:	Fernald, OH		Approved:	
Subcontract No..	98SC000001		Revision:	0
Project Number:	773481			08/25/98

Equipment Number	Qty	Equipment Name	Equipment Description	Comments	P&ID DWG	Spec. No.
Area 10 - Dryer Feed System						
H-1001 A/B	2	Mass Flow Feeder J.C. Steele Model # 124C	25 tph, multi screw		D-10-11-001,2	773481-H1001
H-1002 A/B	2	Belt Feed Conveyor	25 tph, 24 inch wide, belt conveyor		D-10-11-001,2	773481-H1002A,B
H-1003 A/B	2	Feed Hopper X-Screw			D-10-11-001,2	
H-1004 A/B	2	Drag Flight COnveyor			D-10-11-001,2	
T-1001 A/B	2	Live Bottom Hopper	7 yd. Capacity	w/ H-1001 A/B	D-10-11-001,2	
Z-1001 A/B	2	Belt Scale	25 tph, +/- 0.5% accuracy		D-10-11-001,2	11110
Area 15 - Material Handling Building & Equipment						
H-1504 A/B	2	Material Screening Equipment	<2" material, 110 tph			
H-1506	1	Magnetic Separator				
M-1501	1	Debris Shredder	Low speed, shear shredder			
P-1502 A/B	2	Sump Pumps				15150
	1	Material Handling Building	170 ft x 360 ft x 23 ft eave, pre-engineered, rigid steel frame			13122
	1	Front End Loader	Wheel loader, diesel engine, 3 CY bucket			
	1	Stockpile Conveyor				
	1	Dust Suppression Spray System				
Area 20 - Dryer						
B-2001 A/B	2	Combustion Air Fan	Centrifugal Fan, 5800 cfm, 35" wc 60 HP	w/ Dryer	D-20-11-001,2	773481-B2001
D-2001 A/B	2	Feed Screw Hydraulic Drive			D-10-11-001,2	
D-2002 A/B	2	Dryer Main Drive System		w/Dryer	D-20-11-003,4	11182
D-2003 A/B	2	Dryer Emergency Drive System		w/Dryer	D-20-11-003,4	11182
H-2001 A/B	2	Dual Feed Screw	25 tph, 18 inch diameter, min. 15 ft lg, cantilevered single screw		D-10-11-001,2	773481-H2001
HV-201 A/B	2	Slide gate Valves	3' x 3' Slide Gate Valves, with Pneumatic Cylinder		D-10-11-001,2	773481-HV201
F-2001 A/B	2	Rotary Dryer	46 ft. heated length rotary dryer, indirect fired	w/Dryer	D-20-11-003,4	773481-F2001
G-2011-14 A/B	8	Dryer Burners, Zone 1	2 Dryers, 4 burners per zone , 1.5 MM Btu/Hr each	w/Dryer	D-20-11-001,2	11182
G-2021-24 A/B	8	Dryer Burners, Zone 2	2 Dryers, 4 burners per zone , 1.5 MM Btu/Hr each	w/Dryer	D-20-11-001,2	11182
G-2031-34 A/B	8	Dryer Burners, Zone 3	2 Dryers, 4 burners per zone , 1.5 MM Btu/Hr each	w/Dryer	D-20-11-001,2	11182
G-2041-44 A/B	8	Dryer Burners, Zone 4	2 Dryers, 4 burners per zone , 1.5 MM Btu/Hr each	w/Dryer	D-20-11-001,2	11182
S-2001 A/B	2	Blower Filter/Silencer	80 dBA lt 3 ft.	w/Dryer	D-20-11-001,2	11182
T-2001 A/B	2	Feeder Transition Hopper	1.5 cu. Yd. Capacity		D-10-11-001,2	
Z-2001 A/B	2	Feed Screw Expansion Joint			D-10-11-001,2	
Z-2002 A/B	2	Dryer Expansion Joint			D-20-11-003,4	
Z-2003 A/B	2	Feed Hood and Seal		w/Dryer	D-20-11-003,4	11182
Z-2004 A/B	2	Discharge Hood And Seal		w/Dryer	D-20-11-003,4	11182
Z-2005 A/B	2	Blower Expansion Joints			D-20-11-001,2	
Area 30 - Dryer Product Handling System						
H-3001 A/B	2	Drag Flight Conveyor	25 tph, C.S.		D-30-11-001,2	773481-H3001
H-3002 A/B	2	Double Dump Valve	Platco, Model SK-3695		D-30-11-001,2	773481-H3002
H-3003 A/B	2	Pugmill Mixer	Portec, Model 50		D-30-11-001,2	773481-H3003
HV-301A/B	2	Slide gate Valves	2' 10" x 3' Slide Gate Valves, with Pneumatic Cylinder		D-30-11-001,2	773481-HV301
Z-3001 A/B	2	Drag Conveyor Expansion Joint			D-30-11-001,2	
Z-3002 A/B	2	Double Dump Valve Expansion Joint			D-30-11-001,2	
Z-3003 A/B	2	Pugmill Expansion Joint			D-30-11-001,2	
Area 35 - Railcar Loadout / Lid Building & Equipment						
	1	Railcar Filling Skirt	Fabrication w/ positioner			
	1	Railcar Lid Service Crane	Overhead monorail crane for lid & debris placement, 4 ton			
	1	Railcar Lid Service Crane	Bridge crane for lid & debris placement, 4 ton			
	1	Railcar Loadout Building	120 ft x 240 ft x 23 ft eave, pre-engineered, rigid steel frame			13122
	1	Rail Car Scale	Provided by FDF			

000242

1669

For Information Only

Company Name:	Fluor Daniel Fernald	PROCESS EQUIPMENT LIST	Initiated:	J. Newburn	
Project Name:	Waste Pits Remedial Action Project OU-1		Checked:	B. Halley	
Location:	Fernald, OH		Approved:		
Subcontract No..	98SC000001		Revision:	0	
Project Number:	773481			08/25/98	

Equipment Number	Qty	Equipment Name	Equipment Description	Comments	P&ID DWG	Spec. No.
	1	Front End Loader	Wheel loader, diesel engine, 3 CY bucket			
		Decontamination Hoses and Nozzles				
		Water Mist Dust Suppression System				
Area 50 - Gas Cleaning System						
B-5001 A/B	2	Induced Draft Fan	Centrifugal fan (3000 cfm @ 35" w.c.) variable speed drive		D-50-11-006	773481-B5001
	1	GCS/WTS Building	180 ft x 360 ft x 23 ft eave, pre engineered, rigid steel frame			13122
B-5002	1	Purge Gas Blower	Centrifugal fan (1400 cfm @ 7" w.c.)		D-50-11-005	773481-B5002
B-5003	1	Thermal Oxidizer Combustion Air Blower	Centrifugal fan (3000 cfm @ 7" w.c.)		D-50-11-007	773481-B5003
B-5004	1	GCS/WTS Building Roof Ventilators	Roof Fan 1,600 CFM, 2HP			
B-5005	1	GCS/WTS Building Roof Ventilators	Roof Fan 1,600 CFM, 2HP			
B-5006	1	GCS/WTS Building Roof Ventilators	Roof Fan 1,600 CFM, 2HP			
B-5007	1	GCS/WTS Building Roof Ventilators	Roof Fan 1,600 CFM, 2HP			
B-5008	1	GCS/WTS Building Roof Ventilators	Roof Fan 1,600 CFM, 2HP			
B-5009	1	GCS/WTS Building Roof Ventilators	Roof Fan 1,600 CFM, 2HP			
E-5002 A/B	2	Quench Heat Exchanger	20 MMBtu/hr, 1600 gpm process / 1800 gpm cooling		D-50-11-003	773481-E5002
E-5003	1	Off-Gas Reheater	155,000 Btu/hr gas stream reheater, electrical resistance		D-50-11-006	773481-E5003
E-5004	1	Purge Gas Heater	Included with WESP (S-5004)		D-50-11-005	
F-5001	1	Thermal Oxidizer	6' OD x 20' vertical free standing refractory lined vessel		D-50-11-007	773481-F5001
FX-5001 A/B	2	Scrubber pump strainers	6" FRP w/ 3/16" Hast C Basket		D-50-11-002	773481-FX5001
FX-5002 A/B	2	Subcool Quench pump strainers	10" FRP w/ 3/16" Hast C Basket		D-50-11-003	773481-FX5002
FX-5004 A/B	2	HEPA Units 1 & 2	99.97 removal at 0.3 micron 1H x 2W HEPA		D-50-11-006	773481-FX5004
G-5001 A-C	3	Scrubber Spray Guns	Bete, 316 SS		D-50-11-002	773481-G5001
G-5002 A-C	3	Scrubber Spray Guns	Bete, 316 SS		D-50-11-002	773481-G5002
G-5003 A-E	8	Scrubber Spray Guns	Bete, 316 SS		D-50-11-002	773481-G5003
G-5004 A-F	8	Quench Spray Guns	Bete, 316 SS		D-50-11-003	773481-G5004
G-5005 A-F	8	Quench Spray Guns	Bete, 316 SS		D-50-11-003	773481-G5005
G-5006 A-F	8	Quench Spray Guns	Bete, 316 SS		D-50-11-003	773481-G5006
G-5007 A-E	5	Quench Spray Guns	Bete, 316 SS		D-50-11-003	773481-G5007
G-5008	1	Thermal Oxidizer Burner	Forced Draft, 10 MM Btu/Hr max. duty		D-50-11-007	773481-G5008
H-5001 A/B	2	Cyclone Solids Transfer Screw	5 tph Screw conveyor		D-50-11-001	773481-H5001
H-5002 A/B	2	Cyclone Double Dump Valves	Platco Model S4-822		D-50-11-001	773481-H5002
P-5001A,B	2	Scrubber Recirc Pumps	Duiron 2K4x3 - 13 (210 GPM, 50 psig, 10 HP, 3600 RPM)		D-50-11-002	773481-P5001
P-5002 A,B	2	SubCool Quench Recirc Pumps	Duiron 3K10x8 -16HRV (1600 GPM, 50 psig, 100 HP, 1200 RPM)		D-50-11-003	773481-P5002
P-5003 A,B	2	Cooling Tower Circulation Pumps	Duiron 3K10x8 -16RV (1800 GPM, 35 psig, 60 HP, 1200 RPM)		D-50-11-004	773481-P5003
P-5004 A/B	2	WESP Recycle Pumps	Centrifugal pumps rated for 100 gpm @ 50 psig, 15 HP		D-50-11-005	773481-P5004
P-5005	1	Scrubber Organic Pump	Diaphram pump		D-50-11-002	773481-P5005
P-5006	1	Quench Organics Pump	Diaphram pump		D-50-11-003	773481-P5006
PX-5001	1	Cooling Tower Chemical Injection System			D-50-11-004	
PX-5002	1	Air Monitoring/Sampling System	CAMs for isokinetic radionuclide monitoring at stack		D-50-11-006	
S-5001 A/B	2	Cyclone Separator	Dual Cyclones each rated at 4700 ACFM, 45 % overall removal		D-50-11-001	773481-S5001
S-5004	1	Wet Electrostatic Precipitator (WESP)	DUCON , 316 SS		D-50-11-005	773481-S5004
S-5005	1	Filter/Silencer (for B-5003)	TBD		D-50-11-007	
T-5001	1	Scrubber Sump Tank	7' - 6" ID x 13' - 9" OAH, 304 SS tank		D-50-11-002	773481-T5001
T-5002	1	Subcool Quench Sump Tank	11' - 6" ID x 18' -6" OAH, CS tank		D-50-11-003	773481-T5002
T-5006	1	WESP Overflow Tank	6' - 0" ID x 7' - 0" OAH (500 Gal.)		D-50-11-005	773481-T5006
V-5001	1	Scrubber	30" ID x 3 ft. lg. Spray Scrubber (200 gpm circulation)-304ss		D-50-11-002	773481-V5001
V-5002	1	Subcool Quench	5ft. - 9in ID x 8ft.-6in. lg. Spray Cooler (1600 gpm circulation)		D-50-11-003	773481-V5002
VX-5001	1	Scrubber Insert	30" ID x 7' 3" long insert sleeve		D-50-11-002	773481-VX5001
VX-5002	1	Quench Insert	30" ID x 7' 3" long insert sleeve		D-50-11-003	773481-VX5002
W-5001	1	Cooling Tower	Marley series NC9000		D-50-11-004	773481-W5001
WX-5001	1	Weir assy.	30" ID, 304 ss		D-50-11-002	773481-WX5001
X-5001	1	Thermal Oxidizer Vent Stack	Gas cleaning system exhaust point, 60' height, 42 " OD		D-50-11-007	773481-X5001
Z-5001 A-D	4	18" Cyclone expansion joints			D-50-11-001	
Z-5002	1	24" Cyclone exit duct expansion joint			D-50-11-001	
Z-5003	1	24" Scrubber inlet expansion joint			D-50-11-002	
Z-5004	1	30" Scrubber outlet expansion joint			D-50-11-002	
Z-5005	1	30" Subcool Quench Inlet Expansion Joint			D-50-11-003	

000243

F-1669

Company Name:	Fluor Daniel Fernald		Initiated:	J. Newburn	
Project Name:	Waste Pits Remedial Action Project OU-1	PROCESS EQUIPMENT LIST	Checked:	B. Halley	
Location:	Fernald, OH		Approved:		
Subcontract No..	98SC000001		Revision:	0	
Project Number:	773481			08/25/98	

Equipment Number	Qty	Equipment Name	Equipment Description	Comments	P&ID DWG	Spec. No.
Z-5006	1	18" Subcool Quench Outlet Expansion Joint			D-50-11-003	
Z-5007	1	WESP Expansion Joint			D-50-11-005	
Z-5008 A/B	4	ID Fan Expansion Joints			D-50-11-006	
Z-5009	1	Flame Arrestor	24" Protectoseal or equal (CS Body w/ 316 SS Element)		D-50-11-007	773481-Z5009
Z-5010	1	Blower Expansion Joint			D-50-11-007	
ZX-501 A/B	4	Scrubber Pump Expansion Joints			D-50-11-002	
ZX-502 A/B	4	Subcool Quench Pump Expansion Joints			D-50-11-003	
ZX-503 A/B	4	Cooling Tower Pump Expansion Joints			D-50-11-004	
ZX-504 A/B	4	WESP Recycle Pump Expansion Joint			D-50-11-005	
ZX-505	8	Heat Exchanger Expansion Joints			D-50-11-003	
Area 60 - Process Blowdown Pretreatment System						
D-6001	1	Filter Press Hydraulic Drive			D-60-11-003	
FX-6001	1	Filter Press 100 FT^3			D-60-11-003	773481-FX6001
FX-6002 A/B	1	Dual Cell Sand Filters	7'Dia.,100GPM,carbon steel, filter media sand & gravel		D-60-11-002	773481-FX6002
FX-6003 A/B	2	Dual Bag Filters	Rosedale Model 8-30-3P-2-150-NCBSB		D-60-11-002	773481-FX6003
H-6001	1	Filter Press Conveyor			D-60-11-003	
M-6001	1	Static Mixer			D-60-11-001	
M-6002	1	Polyblend Unit	316 Stainless steel		D-60-11-001	773481-M6002
M-6003 A,B,C	3	Sludge Tank Mixers/Polyblend Unit			D-60-11-003	773481-M6003
M-6004	1	Precoat Tank Mixer			D-60-11-003	773481-M6004
P-6001A/B	2	Primary Clarifier Sludge Pumps	ASH 2-1/2 x 2 SRC - 2800 RPM (100 GPM, 60 psig, 10 HP)		D-60-11-001	773481-P6001
P-6002 A/B	2	Secondary Clarifier Sludge Pumps	ASH 2-1/2 x 2 SRC - 2800 RPM (100 GPM, 60 psig, 10 HP)		D-60-11-001	773481-P6002
P-6003 A/B	2	Organic Condensate Transfer Pumps	Duiron 2K2x1 - 10ARV (40 GPM, 45 psig, 7.5 HP)		D-60-11-001	
P-6004	1	Organic Condensate Discharge Pump	Duiron 2K2x1 - 10ARV (40 GPM, 45 psig, 7.5 HP)		D-60-11-003	773481-P6004
P-6005 A/B	2	Filter Press Sludge Pumps			D-60-11-003	773481-P6005
P-6006 A/B	2	Filtrate Discharge Pumps	ASH 2-1/2 x 2 SRC (100 GPM, 60 psig, 10 HP, 2800 RPM)		D-60-11-003	773481-P6006
P-6008 A/B	2	Clarifier Discharge Pumps	ASH 2-1/2 x 2 SRC - 2800 RPM (100 GPM, 60 psig, 10 HP)		D-60-11-002	773481-P6008
P-6012	1	Sump Pump				
T-6001	1	Primary Clarifier	Primary Clarifier 18,000 Gallon Capacity		D-60-11-001	773481-T6001
T-6002	1	Secondary Clarifier	Secondary Clarifier 18,000 Gallon Capacity		D-60-11-001	773481-T6002
T-6003	1	Organic Condensate Surge Container	300 gallon		D-60-11-001	773481-T6003
T-6004	1	Organic Condensate Storage Tank	750 Gallon		D-60-11-003	773481-T6004
T-6005	1	Sludge Mix Tank (20,000 Gal.)			D-60-11-003	773481-T6005
T-6006 A/B	2	Filter Press Filtrate Storage Tank	12,500 Gallon		D-60-11-003	773481-T6006
T-6007	1	Polymer Tank(150 gals)				
T-6008	1	Clarifier Surge Tank (3000 Gal.)			D-60-11-002	773481-T6008
T-6009	1	Precoat Tank (1200 Gal.)			D-60-11-003	773481-T6009
ZX-608 A\B	2	Pipe Expansion Joints			D-60-11-002	
ZX-601 A	2	Pipe Expansion Joints			D-60-11-001	
ZX-601 B	2	Pipe Expansion Joints			D-60-11-001	
ZX-602 A	2	Pipe Expansion Joints			D-60-11-001	
ZX-602 B	2	Pipe Expansion Joints			D-60-11-001	
ZX-603 A	2	Pipe Expansion Joints			D-60-11-001	
ZX-603 B	2	Pipe Expansion Joints			D-60-11-001	
ZX-604 A	1	Pipe Expansion Joints			D-60-11-003	
ZX-604 B	1	Pipe Expansion Joints			D-60-11-003	
ZX-605 A	2	Press Sludge Pump Expansion Joint			D-60-11-003	
ZX-605 B	2	Press Sludge Pump Expansion Joint			D-60-11-003	
ZX-606 A	2	Organic Condensate Pipe Expansion Joint			D-60-11-003	
ZX-606 B	2	Organic Condensate Pipe Expansion Joint			D-60-11-003	
Area 65 - Water Treatment System						

000244

1669

Company Name:	Fluor Daniel Fernald		Initiated:	J. Newburn	
Project Name:	Waste Pits Remedial Action Project OU-1	PROCESS EQUIPMENT LIST	Checked:	B. Halley	
Location:	Fernald, OH		Approved:		
Subcontract No..	98SC000001		Revision:	0	
Project Number:	773481			08/25/98	

Equipment Number	Qty	Equipment Name	Equipment Description	Comments	P&ID DWG	Spec. No.
FX-6501 A/B	2	Dual Cell Sand Filter	7' Diameter, 250 GPM, carbon steel, filter media sand & gravel		D-65-11-002	773481-65-FX6501
FX-6502 A/B	2	Dual Cell Sand Filter	7' Diameter, 250 GPM, carbon steel, filter media sand & gravel		D-65-11-002	773481-65-FX6501
FX-6503 A/B	2	Dual Cell Ion Exchange Unit	7' Diameter, 250 GPM, carbon steel, Dowex 21KXLT Anion Resin		D-65-11-002	773481-65-FX6503
M-6501	1	Static Mixer	Carb. Stl. Housing, ss internals, 4in diameter, flanged		D-65-11-001	773481-M6501
M-6502	1	Flash Mixer	480 V/3 ph, st stl wet parts		D-65-11-001	773481-M6502
M-6503	1	Flocculation Mixer	480 V/3 ph, st stl wet parts		D-65-11-001	773481-M6503
M-6504	1	Coagulant Mixer	480 V/3 ph, st stl wet parts			
M-6505	1	Polyblend Unit Mixer	120 V/1 ph		D-65-11-001	773481-M6505
P-6501 A/B	2	Clarifier Feed Pumps	Horiz centr, cast iron, 250 GPM @40 ft TDH, 480 V/3 ph		D-65-11-001	773481-65-P6501
P-6503	1	Clarifier Sludge Pump	Prog cavity, cast iron, 80 GPM @ 80 ft TDH, 480 V/3 ph		D-65-11-001	773481-65-P6503
P-6504	1	Coagulant Metering Pump	Metering pump, 0 - 30 GPH, 120 V/1 ph		D-65-11-001	773481-65-P6504
P-6506 A/B	2	Filter Feed Pumps	Horiz centr, cast iron, 250 GPM @110 ft TDH, 480 V/3 ph		D-65-11-001	773481-65-P6506
P-6508 A/B	2	Effluent Pumps	Horiz centr, cast iron, 400 GPM @80 ft TDH, 480 V/3 ph		D-65-11-002	773481-65-P6508
P-6509 A/B	2	Temporary Holding Tank Transfer Pumps	Horiz centr, cast iron, 200 GPM @40 ft TDH, 480 V/3 ph		D-65-11-001	773481-65-P6509
T-6501	1	Influent Tank	5000 Gallons, FRP		D-65-11-001	773481-65-T6501
T-6502	1	Flash Mix Tank	Carbon steel		D-65-11-001	
T-6503	1	Flocculation Tank	Carbon steel		D-65-11-001	
T-6504	1	Inclined Plate Clarifier	Carbon steel		D-65-11-001	773481-65-T6504
T-6506	1	Clarifier Overflow Tank	6000 Gallons, HDPE, 8.5 ft diam x 14.5 ft high		D-65-11-001	773481-65-T6506
T-6507	1	Effluent Tank	20,000 Gallons, coated carbon steel, 12 ft diam x 24 ft high		D-65-11-002	773481-65-T6507
T-6508	1	Temporary Holding Tank	20,000 Gallons, coated carbon steel, 12 ft diam x 24 ft high		D-65-11-001	773481-65-T6508
ZX-651A	2	Clarifier Feed PumpExpansion Joints			D-65-11-001	
ZX-651B	2	Clarifier Feed PumpExpansion Joints			D-65-11-001	
ZX-656A	2	Filter Feed Pump Expansion Joints			D-65-11-001	
ZX-656B	2	Filter Feed Pump Expansion Joints			D-65-11-001	
ZX-658A	2	Effluent Pump Expansion Joints			D-65-11-002	
ZX-658B	2	Effluent Pump Expansion Joints			D-65-11-002	
ZX-659A	2	Temp Hold Tank Transfer Pump Expansion Joints			D-65-11-001	
ZX-659B	2	Temp Hold Tank Transfer Pump Expansion Joints			D-65-11-001	
Area 70 - Utilities						
D-7001	1	Air Compressor Motor	75 hp		D-70-11-001	
D-7002	1	Diesel Drive	285 BHP		D-70-11-001	
E-7001	1	Air and Oil After Cooler	3 hp		D-70-11-001	773481-E7001
E-7002	1	Air After-Cooler	10 hp		D-70-11-001	773481-E7002
FX-701	1	Compressor Air Inlet Filter			D-70-11-001	
FX-702	1	Engine Comb. Air Inlet Filter			D-70-11-001	
FX-703	1	Compressor Air Inlet Filter			D-70-11-001	
K-7001	1	Air Compressor	Electric driven,350 SCFM, 125 psig max		D-70-11-001	773481-K7001
K-7002	1	Air Compressor	Diesel driven,850 SCFM, 125 psig max		D-70-11-001	773481-K7002
P-7005	1	Sanitary Sump Pump			D-70-11-005	
P-7010 A/B	2	Caustic Pumps			D-70-11-004	773481-P7010
P-7011 A/B	2	Acid Pumps			D-70-11-004	773481-P7011
S-7003 A/B	2	Air Pre-Filter	300 SCFM @150 psig		D-70-11-001	773481-S7003
S-7004 A,B	2	Air After Filter	300 SCFM @150 psig max		D-70-11-001	773481-S7004
S-7005	1	Dryer Inlet Air Filter			D-70-11-001	
S-7006	1	Dryer Inlet Air Filter			D-70-11-001	
S-7007 A/B	2	Air After-Filters			D-70-11-001	773481-S7007
T-7001	1	Air Receiver	96" O.D. x 24' S.S.		D-70-11-001	
T-7002A,B	2	Air Dryer	150 SCFM @150 psig max (Heat Regen.)(5KW)		D-70-11-001	773481-T7002
T-7003A,B	2	Air Dryer	300 SCFM @150 psig max (Heat Regen.)(5KW)		D-70-11-001	773481-T7003
T-7004	1	Diesel Storage Tank	400 gallon tank		D-70-11-001	
T-7005	1	Nitrogen Storage Tank	3000 gallon tank		D-70-11-005	773481-T7005

000245

1669

Company Name:	Fluor Daniel Fernald		Initiated:	J. Newburn	
Project Name:	Waste Pits Remedial Action Project OU-1	PROCESS EQUIPMENT LIST	Checked:	B. Halley	
Location:	Fernald, OH		Approved:		
Subcontract No..	98SC000001		Revision:	0	
Project Number:	773481			08/25/98	

Equipment Number	Qty	Equipment Name	Equipment Description	Comments	P&ID DWG	Spec. No.
T-7010	1	Caustic Tank			D-70-11-004	773481-T7010
T-7011	1	Acid Tank			D-70-11-004	773481-T7011
V-7001	1	Liquid Nitrogen Vaporizer	250 CFM		D-70-11-005	773481-V7001
V-7002	1	Liquid Nitrogen Vaporizer	250 CFM		D-70-11-005	773481-V7002
ZX-700A	2	Expansion Joints			D-70-11-004	
ZX-700B	2	Expansion Joints			D-70-11-004	
ZX-701A	2	Expansion Joints			D-70-11-004	
ZX-701B	2	Expansion Joints			D-70-11-004	
Area 80 - Power & Control						
	1	Control Room				
	1	Power Module Building				
Area 90 - Site Water Balance						
P-9001	1	Gray Water Sump Pump	Submersible, 32gpm @ 25 ft TDH, 120 V/1ph		D-90-11-001	773481-90-P9001
P-9002	1	MHB Mixing Pit Sump Pump	Submersible, 32gpm @ 27 ft TDH, 120 V/1ph		D-90-11-001	773481-90-P9002
P-9003	1	MHB Storage Bin Sump Pump	Submersible, 23gpm @ 27 ft TDH, 120 V/1ph		D-90-11-001	773481-90-P9003
P-9004	1	MHB Filter Press Area Sump Pump	Submersible, 32gpm @ 27 ft TDH, 120 V/1ph		D-90-11-001	773481-90-P9004
P-9005	1	RLB South Sump Pump	Submersible, 23gpm @ 27 ft TDH, 120 V/1ph		D-90-11-001	773481-90-P9005
P-9006	1	RLB North Sump Pump	Submersible, 26gpm @ 25 ft TDH, 120 V/1ph		D-90-11-001	773481-90-P9006
P-9007	1	Dryer Pad Sump Pump	Submersible, 30gpm @ 24 ft TDH, 120 V/1ph		D-90-11-001	773481-90-P9007
P-9008	1	MHB Collection Tank Transfer Pump	Horiz Centr, cast iron, 50GPM @ 30 ft TDH, 480 V/3 ph		D-90-11-001	773481-90-P9008
P-9009	1	Truck Turn Around Area Sump Pump	Submersible, 40gpm @ 24 ft TDH, 120 V/1ph		D-90-11-001	773481-90-P9009
P-9010	1	Haul Road Sump Pump	Submersible, 40gpm @ 20 ft TDH, 120 V/1ph		D-90-11-001	773481-90-P9010
P-9011	1	RLB Decon Sump Pump	Submersible, 30gpm @ 27 ft TDH, 120 V/1ph		D-90-11-001	773481-90-P9011
P-9012	1	Laboratory Sump Pump	Submersible, 30gpm @ 27 ft TDH, 120 V/1ph		D-90-11-001	773481-90-P9012
P-9013	1	GCS/WTS Building NorthSump Pump	Submersible, 35gpm @ 24 ft TDH, 120 V/1ph		D-90-11-001	773481-90-P9013
P-9014	1	GCS/WTS Building South Sump Pump	Submersible, 35gpm @ 24 ft TDH, 120 V/1ph		D-90-11-001	773481-90-P9014
P-9015	1	Railcar Building Washwater Sump Pump	Submersible, 30gpm @ 27 ft TDH, 120 V/1ph		D-90-11-001	773481-90-P9015
P-9016	1	GCS/WTS Building West Sump Pump	Submersible, 35gpm @ 24 ft TDH, 120 V/1ph		D-90-11-001	773481-90-P9016
	1	Warehouse	40 ft x 60 ft x 20 ft eave, pre engineered, rigid steel frame			
	1	Maintenance Building	40 ft x 80 ft x 20 ft eave, pre engineered, rigid steel frame			
T-9002	1	MHB Collection Tank (MHBTC)	2000 Gallon		D-90-11-001	773481-90-T9002

000246

1669

I.T. CORPORATION	FAN SPECIFICATION 1669	IT CORP. SPEC. NO. 773481-B2001
AREA NO: 20 AREA NAME: DRYER SYSTEM TAG NO.: B-2001 A/B EQUIPMENT NAME DRYER COMBUSTION AIR FAN		SHEET 1 OF 1 PROJECT NAME FERNALD WPRAP OU1 JOB NO. 773481 LOCATION FERNALD, OHIO

NO	BY	DATE	REV.
D	JAN	05/12/98	CFC DRAFT
E	MSD	6/5/98	Draft Issue for EPA Review
F	RJB	7/9/98	DRAFT CFC HOLD

BY	APPR	DATE

1	GENERAL	Manufacturer: North American Mfg. Co.		Model No.: 2320-37/1-T60D		
2		No. of Units: 2 (Two)				
3		Description of Gas and Materials Handled: Air				
4		Flow: 7,700 ACFM	S.P 35 Inches W.G.	Temp, F: 70	Gas Density: 0.075 Lbs/Cu.Ft.	
5		Hours per day operation: 24				
6		Noise Rating Per Attached Noise Level Spec. No. 13310, Maximum 85 dB at 3 feet w/ inlet filter-silencer & ducted outlet				
7		WHEEL Diameter: * Inches	Gage and Material of Rims: Mild Steel		Blades: Mild Steel	
8		HOUSING GAGE & MATERIALS: 1/4" PL. Mild Steel		Sides Mild Steel	Tube (Axial)	
9		Performance Curves: YES	Curve No.: *	Mfr. Size & Type:	Weight: * Lbs.	
10		R.P.M.: 1780	B.H.P. Required: 56	Mech. Efficiency	Outlet Velocity	
11		BEARINGS: Type: Antifriction ball - Note 3,4		Make: *	Manufacturers No.:	
12		SHAFT: Diameter at Bearings: * inches		Diameter at Wheel: * inches		
13		Distance Between Bearings:		Distance from Bearing to Fan Wheel:		
14		Maximum Shaft Speed: *				
15						
16	CNTRFGL	Arrangement: *	Rotation: TBD - Note 5		Discharge: TBD	
17		Single Width? YES	Double Width?	Single Inlet? YES	Double Inlet?	
18		SPECIAL FEATURES REQUIRED: Flanged Inlet and Outlet? YES			Drain in Housing? 1" drain	
19		Clean Out in Housing? YES	Split Housing? YES		Water Jacketed Bearings?	
20		Shaft Seals? NO	Inlet or Outlet Dampers? None		Other: GUARDS & SCREENS	
21						
22						
23	AXIAL	Vertically or Horizontally Mounted?				
24		Tubeaxial?	Vaneaxial?	Arrangement	Rotation	
25		TYPE OF INLET AND OUTLET	Streamlined Inlet?	Inlet Cone?	Outlet Cone?	
26		SPECIAL FEATURES REQUIRE	Access Doors?	Support Legs?	Motor Hood?	
27		Inlet or Outlet Guard?	Outside Belt Guard?	Flanged Inlet & Outlet?	Other	
28						
29						
30	PRPLR	Horizontally or Vertically Mounted?				
31		Direct Drive?		High Capacity Static Conducting V-Belt Drive?		
32		SPECIAL FEATURES REQUIRED Safety Guards?		Shutters?	Other	
33		Description of Guard & Shutter				
34		Adjustable Pitch?		Automatic Variable Pitch?		
35						
36	DRIVER	Furnished By FAN MFG'R	Elec. or Steam Turbine? Electric	Direct, Gear, Belt or V-Rope? Multi Belt		
37		ELECTRIC MOTOR:	Mfr.: Reliance (or equal)	STEAM TURBINE	Mfr.	
38		Mounted By Note 6	Enclosure: TEFC	Mounted By	Model	
39		Speed: 3580 rpm	Service Factor: 1.15	Horsepower HP	Water Rates Lbs/Hr	
40		Volts: 480	Temp. Rise: 40 C	Speed rpm	Vacuum (if any)	
41		Phase: 3	Insulation: CLASS F	Inlet Steam Press	Inlet Steam Temp	
42		Cycles: 60	Frame: TBD	Normal psig	Normal deg F	
43		Nominal Siz 60 HP	Est. BHP Req'd: 56 HP	Max psig	Max deg F	
44		SPEED REDUCERS	Integral - Separat N/A	Backpressure psig		
45		Mfr.: N/A	Ratio: N/A	Nozzles Size	Rating	Facing Location
46		Model: N/A	Class: N/A *	Inlet		
47				Exhaust		
48		SEE DRIVER SPECIFICATION NO.:				
49	NOTES	1. Reserved				
50		2. Reserved				
51		3. L10 life 200,000 hrs.				
52		4. Fan bearing housing vibration less than 0.15 in./sec. @ 3550 RPM (Radial direction)				
53		5. Rotation Arrows near shaft				
54		6. Blower to be supplied with motor assembled on frame w/ shaft & coupling guards when required.				
55						

I.T. CORPORATION	FAN SPECIFICATION 1669				IT CORP. SPEC. NO. 773481-B5001
	NO	BY	DATE	REV.	SHEE 1 OF 1
	D	JAN	05/12/98	CFC DRAFT	PROJECT NAME FERNALD WPRAP OU1
AREA NO: 50 AREA NAME: GCS SYSTEM TAG NO.: B-5001 A/B EQUIPMENT NAME: INDUCED DRAFT FAN	E	MSD	6/5/98	Draft Issue for EPA Review	JOB NO. 773481
	F	JAN	7/9/98	DRAFT CFC HOLD	LOCATION FERNALD, OHIO BY / APPR / DATE

1		Manufacturer: *		Model No.: *		
2		No. of Units: 2 (Two)				
3		Description of Gas and Materials Handled: Gas Cleaning System Off Gas				
4		Flow: Note 1 3000 ACFM	S.P (-29 to +4) 33 Diff. Inches W.G	Temp, F: 200	Gas Density: 0.045 Lbs/Cu.Ft.	
5	G	Hours per day operation: Continuous, 24				
6	E	Noise Rating Per Attached Noise Level Spec. No. 13310, Maximum 85 dB at 3 feet w/ inlet filter-silencer & ducted outlet				
7	N	WHEEL Diameter: * Inches	Gage and Material of Rims: Mild Steel		Blades: Mild Steel	
8	E	HOUSING GAGE & MATERIAL 1/4" PL. Mild Steel - Note 2		Sides Mild Steel	Tube (Axial)	
9	R	Performance Curves: YES	Curve No.: *	Mfr. Size & Type:	Weight: * Lbs.	
10	A	R.P.M.: 1,800	B.H.P. Required: Est. 26	Mech. Efficiency	Outlet Velocity	
11	L	BEARINGS: Type: Antifriction ball - Note 3,4		Make: *	Manufacturers No.:	
12		SHAFT: Diameter at Bearings: * inches		Diameter at Wheel: * inches		
13		Distance Between Bearings:		Distance from Bearing to Fan Wheel:		
14		Maximum Shaft Speed: *				
15						
16	C	Arrangement: 8	Rotation: One CW / One CCW - Note 5		Discharge: TH	
17	N	Single Width? YES	Double Width? N/A	Single Inlet? YES	Double Inlet? N/A	
18	T	SPECIAL FEATURES REQUIRED: Flanged Inlet and Outlet? YES			Drain in Housing? 1" drain	
19	R	Clean Out in Housing? Bolted	Split Housing? *		Water Jacketed Bearings? N/A	
20	F	Shaft Seals? Split carbon ring packing gland	Inlet or Outlet Dampers? OUTLET		Other: OSHA Guards & Screens	
21	G	W/ 316 ss springs, spacer, and seal body				
22	L					
23		Vertically or Horizontally Mounted?				
24	A	Tubeaxial?	Vaneaxial?	Arrangement	Rotation	
25	X	TYPE OF INLET AND OUTLET: Streamlined Inlet?		Inlet Cone?	Outlet Cone?	
26	I	SPECIAL FEATURES REQUIR Access Doors?		Support Legs?	Motor Hood?	
27	A	Inlet or Outlet Guard?	Outside Belt Guard?	Flanged Inlet & Outlet?	Other	
28	L					
29						
30	P	Horizontally or Vertically Mounted?				
31	R	Direct Drive?		High Capacity Static Conducting V-Belt Drive?		
32	P	SPECIAL FEATURES REQUIRED: Safety Guards?		Shutters?	Other	
33	L	Description of Guard & Shutter				
34	R	Adjustable Pitch?		Automatic Variable Pitch?		
35						
36		Furnished By FAN MFG'R	Elec. or Steam Turbine? ELEC	Direct, Gear, Belt or V-Rope? DIRECT		
37		ELECTRIC MOTOR	Mfr.: Reliance (or equal)	STEAM TURBINE	Mfr.	
38		Mounted By Note 6	Enclosure: TEFC	Mounted By	Model	
39	D	Speed: 1780 rpm	Service Factor: 1.15	Horsepower HP	Water Rates Lbs/Hr	
40	R	Volts: 480	Temp. Rise: 40 C	Speed rpm	Vacuum (if any)	
41	I	Phase: 3	Insulation: CLASS F	Inlet Steam Press	Inlet Steam Temp	
42	V	Cycles: 60	Frame: TBD	Normal psig	Normal deg F	
43	E	Nominal Siz 30 HP	Est. BHP Req'd: 26 HP	Max psig	Max deg F	
44	R	SPEED REDUCERS	Integral - Sep SEP. FREQ. CONTROL	Backpressure psig		
45		Mfr.: *	Ratio: REDUCED FREQUENCY AC	Nozzles / Size / Rating / Facing / Location		
46		Model: *	Class: *	Inlet		
47				Exhaust		
48		SEE DRIVER SPECIFICATION NO.:				
49		1. Inlet cfm at rated duty - 20.4 MW. The Maximum Process Design Duty is 2660 cfm (200 F and 20.4 MW) - 6750 lb/hr.				
50	N	Normal duty is a nominal 687 cfm (128 F and 27.94 MW) - 2543 lb/hr, Min. Duty at turndown is 350 cfm				
51	O	2. Epoxy caoted internal surfaces.				
52	T	3. L10 life 200,000 hrs.				
53	E	4. Fan bearing housing vibration less than 0.15 in./sec. @ 3550 RPM (Radial direction)				
54	S	5. Rotation Arrows near shaft				
55		6. Blower to be supplied with motor assembled on frame w/ shaft & coupling guards when required.				

B5001.xls

I.T. CORPORATION	FAN SPECIFICATION 1669	IT CORP. SPEC. NO. 773481-B5002

NO	BY	DATE	REV.
D	JAN	05/12/98	CFC DRAFT
E	MSD	6/5/98	Draft Issue for EPA Review
F	JAN	7/9/98	DRAFT CFC HOLD

SHEE 1 OF 1

PROJECT NAME: FERNALD WPRAP OU1

JOB NO.: 773481

LOCATION: FERNALD, OHIO

BY	APPR	DATE

AREA NO: 50
AREA NAME: GCS SYSTEM
TAG NO.: B-5002
EQUIPMENT NAME WESP PURGE AIR BLOWER

1		Manufacturer: *		Model No.: *		
2		No. of Units: 2 (Two)				
3		Description of Gas and Materials Handled: Flue Gases				
4		Flow: Note 1 1400 ACFM	S.P 10 Inches W.G.	Temp, F: 108	Gas Density: 0.065 Lbs/Cu.Ft.	
5	G	Hours per day operation: 24				
6	E	Noise Rating Per Attached Noise Level Spec. No. 13310, Maximum 85 dB at 3 feet w/ inlet filter-silencer & ducted outlet				
7	N	WHEEL Diameter: * Inches	Gage and Material of Rims: Mild Steel		Blades: Mild Steel	
8	E	HOUSING GAGE & MATERIALS 1/4" PL. Mild Steel - Note 2		Sides Mild Steel	Tube (Axial)	
9	R	Performance Curves: YES	Curve No.: *	Mfr. Size & Type:	Weight: * Lbs.	
10	A	R.P.M.: 1780	B.H.P. Required: 5	Mech. Efficiency	Outlet Velocity	
11	L	BEARINGS: Type: Antifriction ball - Note 3,4		Make: *	Manufacturers No.:	
12		SHAFT: Diameter at Bearings: * inches		Diameter at Wheel: * inches		
13		Distance Between Bearings:			Distance from Bearing to Fan Wheel:	
14		Maximum Shaft Speed: *				
15						
16	C	Arrangement: 9	Rotation: TBD - Note 5		Discharge: TH	
17	N	Single Width? YES	Double Width?	Single Inlet? YES	Double Inlet?	
18	T	SPECIAL FEATURES REQUIRED: Flanged Inlet and Outlet? YES			Drain in Housing? 1" drain	
19	R	Clean Out in Housing? YES	Split Housing? YES		Water Jacketed Bearings?	
20	F	Shaft Seals? YES	Inlet or Outlet Dampers? MANUAL / OUTLET		Other: GUARDS & SCREENS	
21	G					
22	L					
23		Vertically or Horizontally Mounted?				
24	A	Tubeaxial?	Vaneaxial?	Arrangement	Rotation	
25	X	TYPE OF INLET AND OUTLET Streamlined Inlet?		Inlet Cone?	Outlet Cone?	
26	I	SPECIAL FEATURES REQUIRE Access Doors?		Support Legs?	Motor Hood?	
27	A	Inlet or Outlet Guard?	Outside Belt Guard?	Flanged Inlet & Outlet?	Other:	
28	L					
29						
30	P	Horizontally or Vertically Mounted?				
31	R	Direct Drive?		High Capacity Static Conducting V-Belt Drive?		
32	P	SPECIAL FEATURES REQUIRED Safety Guards?		Shutters?	Other:	
33	L	Description of Guard & Shutter:				
34	R	Adjustable Pitch?		Automatic Variable Pitch?		
35						
36		Furnished By FAN MFG'R	Elec. or Steam Turbine? ELE	Direct, Gear, Belt or V-Rope?	Multi Belt	
37		ELECTRIC MOTOR:	Mfr.: Reliance (or equal)	STEAM TURBINE	Mfr.:	
38		Mounted By Note 6	Enclosure: TEFC	Mounted By:	Model:	
39	D	Speed: 3580 rpm	Service Factor: 1.15	Horsepower: HP	Water Rates: Lb/Hr	
40	R	Volts: 480	Temp. Rise: 40 C	Speed: rpm	Vacuum (if any):	
41	I	Phase: 3	Insulation: CLASS F	Inlet Steam Press:	Inlet Steam Temp:	
42	V	Cycles: 60	Frame: TBD	Normal: psig	Normal: deg F	
43	E	Nominal Siz 5 HP	Est. BHP Req'd: 4 HP	Max: psig	Max: deg F	
44	R	SPEED REDUCERS:	Integral - Separat N/A	Backpressure: psig		
45		Mfr.: N/A	Ratio: N/A	Nozzles: Size: Rating:	Facing: Location:	
46		Model: N/A	Class: N/A *	Inlet:		
47				Exhaust:		
48		SEE DRIVER SPECIFICATION NO.:				
49		1. Inlet cfm at rated duty. Max duty is a nominal 1300 cfm (108 F) - 27.4 mw				
50	N	2. Epoxy caoted internal surfaces.				
51	O	3. L10 life 200,000 hrs.				
52	T	4. Fan bearing housing vibration less than 0.15 in./sec. @ 3550 RPM (Radial direction)				
53	E	5. Rotation Arrows near shaft				
54	S	6. Blower to be supplied with motor assembled on frame w/ shaft & coupling guards when required.				
55						

I.T. CORPORATION	FAN SPECIFICATION 1669	IT CORP. SPEC. NO. 773481-B5003

NO	BY	DATE	REV.	
D		05/12/98	CFC DRAFT	
E				
F	JAN	7/9/98	DRAFT CFC HOLD	

SHEE 1 OF 1

PROJECT NAME: FERNALD WPRAP OU1

JOB NO.: 773481

LOCATION: FERNALD, OHIO

BY	APPR	DATE

AREA NO: 50
AREA NAME: APC SYSTEM
TAG NO.: B-5003
EQUIPMENT NAME: THERMAL OXIDIZER COMBUSTION AIR BLOWER

1		Manufacturer: *		Model No.: *		
2		No. of Units: 1 (One)				
3		Description of Gas and Materials Handled: Flue Gases				
4		Flow: 2800 CFM	S.P 10 Inches W.G.	Temp, F: 70	Gas Density: 0.075 Lbs/Cu.Ft.	
5	G	Hours per day operation: 24				
6	E	Noise Rating Per Attached Noise Level Spec. No. 13310, Maximum 85 dB at 3 feet				
7	N	WHEEL Diameter: * Inches	Gage and Material of Rims: Mild Steel		Blades: Mild Steel	
8	E	HOUSING GAGE & MATERIALS: 1/4" PL. Mild Steel		Sides Mild Steel	Tube (Axial)	
9	R	Performance Curves: YES	Curve No.: *	Mfr. Size & Type:	Weight: * Lbs.	
10	A	R.P.M.: 1780	B.H.P. Required: 7.5	Mech. Efficiency	Outlet Velocity	
11	L	BEARINGS: Type: *		Make: *	Manufacturers No.:	
12		SHAFT: Diameter at Bearings: * inches		Diameter at Wheel: * inches		
13		Distance Between Bearings:		Distance from Bearing to Fan Wheel:		
14		Maximum Shaft Speed: *				
15						
16	C	Arrangement: *	Rotation:		Discharge: TH	
17	N	Single Width? YES	Double Width?	Single Inlet? YES	Double Inlet?	
18	T	SPECIAL FEATURES REQUIRED: Flanged Inlet and Outlet? YES			Drain in Housing? 1" drain	
19	R	Clean Out in Housing? YES	Split Housing? YES		Water Jacketed Bearings?	
20	F	Shaft Seals? YES	Inlet or Outlet Dampers?		Other: GUARDS & SCREENS	
21	G					
22	L					
23		Vertically or Horizontally Mounted?				
24	A	Tubeaxial?	Vaneaxial?	Arrangement:	Rotation:	
25	X	TYPE OF INLET AND OUTLET:	Streamlined Inlet?	Inlet Cone?	Outlet Cone?	
26	I	SPECIAL FEATURES REQUIRED	Access Doors?	Support Legs?	Motor Hood?	
27	A	Inlet or Outlet Guard?	Outside Belt Guard?	Flanged Inlet & Outlet?	Other:	
28	L					
29						
30	P	Horizontally or Vertically Mounted?				
31	R	Direct Drive?		High Capacity Static Conducting V-Belt Drive?		
32	P	SPECIAL FEATURES REQUIRED: Safety Guards?		Shutters?	Other:	
33	L	Description of Guard & Shutter:				
34	R	Adjustable Pitch?		Automatic Variable Pitch?		
35						
36		Furnished By FAN MFG'R	Elec. or Steam Turbine? Electric	Direct, Gear, Belt or V-Rope? *		
37		ELECTRIC MOTOR	Mfr.: *	STEAM TURBINE	Mfr.:	
38		Mounted By:	Enclosure: TEFC	Mounted By:	Model:	
39	D	Speed: 1800 rpm	Service Factor: *	Horsepower: HP	Water Rates: Lbs/Hr	
40	R	Volts: 480	Temp. Rise:	Speed rpm	Vacuum (if any):	
41	I	Phase: 3	Insulation:	Inlet Steam Press.:	Inlet Steam Temp.:	
42	V	Cycles: 60	Frame:	Normal: psig	Normal: deg. F	
43	E	Nominal Siz 10 HP	Est. BHP Req'd: 8 HP	Max.: psig	Max.: deg F	
44	R	SPEED REDUCERS	Mfr.: *	Backpressure: psig		
45		Ratio:	Model: *	Nozzles / Size / Rating / Facing / Location		
46		Integral or Separate?	Class: *	Inlet		
47				Exhaust		
48		SEE DRIVER SPECIFICATION NO.:				
49		1. Inlet cfm at rated duty. Max duty is a nominal 2300 cfm (100 F - 29 MW). Normal Duty is 445 cfm.				
50	N	2. Epoxy caoted internal surfaces.				
51	O	3. L10 life 200,000 hrs.				
52	T	4. Fan bearing housing vibration less than 0.15 in./sec. @ 3550 RPM (Radial direction)				
53	E	5. Rotation Arrows near shaft				
54	S	6. Blower to be supplied with motor assembled on frame w/ shaft & coupling guards when required.				
55						

B5003.xls

I.T. CORPORATION	HEAT EXCHANGER SPECIFICATION 1669	IT CORP. SPEC. NO. 773481-E5002

NO	BY	DATE	REV.	SHEET 1 OF 1
D	JAN	05/12/98	CFC DRAFT	PROJECT NAME: FERNALD WPRAP OU1
E	MSD	6/5/98	Draft Issue for EPA Review	JOB NO. 773481
F	JAN	7/9/98	DRAFT CFC	LOCATION: FERNALD, OHIO

BY	APPR	DATE

AREA NO: 50
AREA NAME: GCS SYSTEM
TAG NO.: E-5002 A/B
EQUIPMENT NAME: QUENCH HEAT EXCHANGER

1						
2		SIZE:	SX-415-HP-685	TYPE: PLATE	NO. of UNITS 2 (TWO)	
3		SHELLS per UNIT		HORIZONTAL CONNECTED IN (parallel or series)	Parallel (Inline Spare)	
4		SURFACE per UNIT	5626.2	SQ. FT.		
5				A' SIDE	B' SIDE	
6	S			IN / OUT	IN / OUT	
7	E	FLUID ENTERING	Type	Cooling Water / Cooling Water	Process Water / Process Water	
8	R	TOTAL FLUID ENTERING	lb/hr	900,000 / 900,000	810,000 / 810,000	
9	V	VAPOR	lb/hr			
10	I	LIQUID	lb/hr			
11	C	STEAM	lb/hr			
12	E	WATER	lb/hr	900,000 / 900,000	810,000 / 810,000	
13		NON-CONDENSIBLES	lb/hr			
14		FLUID VAPORISED or CONDENSED	lb/hr			
15						
16						
17		SPECIFIC GRAVITY		1.0 / 1.0	1.05 / 1.05	
18	P	MOLECULAR WT. (VAPOR)				
19	R	MOLECULAR WT. (NON_CONDENSIBLES)				
20	O	VISCOSITY	cp	1.0 / 1.0	1.0 / 1.0	
21	C	LATENT HEAT				
22	E	SPECIFIC HEAT	btu/lb-f	1.0 / 1.0	1.0 / 1.0	
23	S					
24	S	THERMAL CONDUCTIVITY				
25						
26	D	OPERATING TEMPERATURE (F)		85 / 103	110 / 90	
27	A	OPERATING PRESSURE (psig)				
28	T	PRESSURE DROP (psig)				
29	A	VELOCITY (FPS)				
30		FOULING RESISTANCE				
31		HEAT EXCHANGED (MM BTU / HR)				
32		TRANSFER RATE SERVICE				
33		DESIGN CODE		ASME Sect. VIII, Div. 1, U Stamp		
34	C	DESIGN PRESSURE (psig)		80		
35	O	TEST PRESSURE (psig)		120		
36	N	DESIGN TEMPERATURE (F)		150		
37	S	METAL TEMPERATURE (F)		120		
38	T	PLATE M.O.C.		SS		
39	U	PLATES NO.	586	THICKNESS IN	LENGTH(FT)	PITCH
40	C	SHELL		IN. ID		
41	T	CHANNEL		CH. COVER	HD. COVER	
42	I	TUBE SHEET	TYPE	STATIONARY	FLOATING	
43	O	BAFFLE CROSS	TYPE		SPACING % CUT	
44	N	TUBE SUPPORTS	TYPE		SPACING	
45		LONG BAFFLE	TYPE			
46	D	IMPINGEMENT BAFFLE	TYPE			
47	E	TYPE OF JOINT		TUBE	TUBE ATTACH	
48	T	GASKETS - SHELL		CHANNEL	FLT. HEAD	
49	A	CONNECTIONS SHELL IN		INTERCONN	SHELL OUT	
50	I	CONNECTIONS - CHANNEL IN		INTERCONN	CHANNEL OUT	
51	L	CORROSION ALLOWANCE		SHELL SIDE	TUBE SIDE	
52	S	EXPANSION BELLOWS		BOLTS	NUTS	
53		INSPECTION		PAINTING	INSULATION	
54		WEIGHT OF ONE UNIT - lbs.	12392	EMPTY	OPERATING	
55	O					
56	T	DATE OF INQUIRY				
57	H	DATE OFORDER				
58	E	MNUFACTURER		Tranter (or equal)		
59	R	DWG. NO.		D-4-58881		
60						
61						

I.T. CORPORATION	ELECTRICAL HEATER SPECIFICATION 1669	IT CORP. SPEC. NO. 773481 - E5003
		SHEET 1 OF 1
AREA NO: 50		PROJECT NAME FERNALD WPRAP OU1
AREA NAME: GCS SYSTEM		JOB NO. 773481
TAG NO.: E-5003		LOCATION FERNALD, OHIO
EQUIPMENT NAME: OFF-GAS REHEATER		BY / APPR / DATE

NO	BY	DATE	REV.
D	JAN	05/12/98	CFC DRAFT
E	MSD	06/05/98	Draft Issue for EPA Review
F	JAN	07/09/98	DRAFT CFC

1		Total Volume: 70 Gal.	Field Erected? NO		No. Units: 1(ONE)			
2		Operating Pressure, psig	negative 0.6					
3		Operating Temperature, deg F	Inlet: 100		Outlet: 128			
4		Type:	Inline Circulation Heater					
5		Contents Lethal?	No					
6		Design Pressure, psig	negative 0.9 to +2 for Housing					
7	D	Design Temperature, deg F	Shell: 250		Process: 175			
8	E	Shell / Heads / Corr. Allow, In.	1/16"		1/16"			
9	S	Shell / Heads / Joint Eff., %						
10	I	Pressure Drop:in.WC (Note 4)	Upset Max: *	Design *	Nor. *			
11	G	Flow Velocity - FPM	Upset Max: 1137	Design 227	Nor. 118			
12	N	Design Flow - acfm	Upset Max: 3000	Design 600	Nor. 310			
13		Cyclic Condition: N/A	Pulsating Service: N/A					
14	D	Description of Dust or Gas:	Inert Gas , H2O vapor w/ trace HC -Note3					
15	A	Kst or Class of Dust:	Less than 10 micron					
16	T	Electrical Duty:	KW 20					
17	A	Watt Density:	W/sq. In. 15					
18		Conveying Duct (Size & Length):	22" diameter duct.					
19		Discharge Duct (Size & Length):	22" diameter duct.					
20		Vessel Surface Area	20 sq. ft.	Insul. Rings: No				
21		Sandblast: SSPC - SP6	Paint: 09900 - Finish 205					
22		Wind Load: 80 mph, Exp. C (I=1.0)	Seismic: ZONE 1					
23		Weight Empty: * lbs.	Weight Full of Water: * lbs.					

		Item	Thickness	Mat'l Class	Mat'l - Minimum Quality
24					
25		Housing - Note 1	1/4"	CS	A36
26	M	Heating Elements	0.457" diam. X 26"		Incoloy
27	A				
28	T				
29	E				
30	R	Holdown	CS		A36
31	I	Nozzle Necks	CS		A36
32	A	Flanges	CS		A36
33	L	Coupling			
34	S	Access Doors	N/A		
35		Supports	CS		A36 Galvanized (by owner)
36		Bolts/Studs	Alloy Steel		A193 Gr B8
37		Nuts	Heavy Hex		A194 Gr 2H
38		Gaskets	*		*

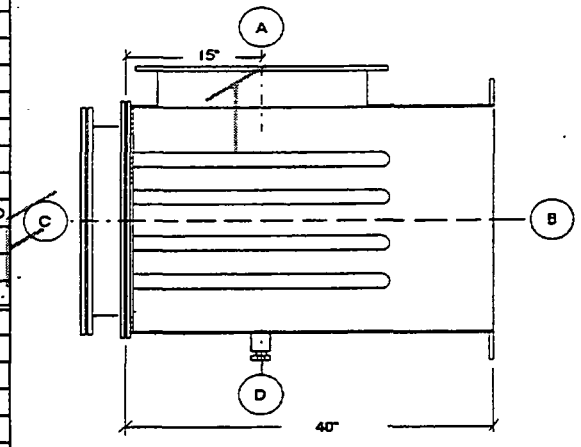

		Service	Mark	No.	Size	Rating	Face	Type
39								
40	N	Inlet	A	1	22"	5#	FF	Flg.
41	O	Outlet	B	1	22"	5#	FF	Flg.
42	Z	Terminal Housing	C	1	*	5#	FF	Flg.
43	Z	Drain w /plug	D	1	1"	N/A	MNPT	Thrd
44	L							
45	E							
46								

V		
E	Nominal Size	22" OD x 40" OAL
N	Assy. Type	Flanged Insert
D	Dwg. No.	98-9170-MB
O	Model / Serial No.	Custom
R	Control Panel	Note 1
	Manufacturer	Watlow Process Systems (or equal)

47 NOTES
1. Control Panel complete with 30 amp main disconnect, 480-110 transformer (primary and secondarycontrol fusing), process temperature
48 controller, on-off control selector switch, all in a NEMA 12 enclosure.
49 2. Items marked * by Detail Design.
50 3. Normal and Design gas MW avg. is 27.5 (7% O2, 85% N2, 6.5% H2O,1.5% HC by Vol);
51 Upset gas MW avg. is 20.42 (1.5% O2, 22% N2, 76% H2O, .5% HC)
52 4. Maximum Allowable pressure drop at Upset condition is 2.5" WC.
53
54
55

000252

E5003.xls

I.T. CORPORATION	AIR AFTER COOLER SPECIFICATION				IT CORP. SPEC. NO. 773481-E7001		
	NO	BY	DATE	REV.	SHEET 1 OF 1		
	D	KKK	5/12/98	CFC DRAFT	PROJECT NAME FERNALD WPRAP OU-1		
PROJECT: FERNALD WPRAP AREA: UTILITIES TAG NO.: E-7001 EQUIPMENT: AIR AFTER COOLER	E	BAH	6/5/98	DRAFT ISSUE FOR EPA REVIEW	JOB NO. 773481		
					LOCATION FERNALD, OH		
	F	BAH	7/9/98	DRAFT CFC	BY	APPR	DATE 5/98

Process Data:	
Fluid:	Compressed Air
Design Pressure:	250 psig
Design Temperature:	400 deg F
Inlet Temperature:	175 deg F
Max. Pressure	150 psig
Approach Temp.	10 deg F
Normal Flow Rate:	850 SCFM
Min Flow Rate:	300 SCFM
Max Flow Rate:	900 SCFM
Design Data:	
Manufacturer:	Thermal Transfer Products
Model:	AHP-950
Fan Size	
Weight	
Fan CFM	
Size Connections	2.5" NPT
Driver:	
Driver Horsepower	3 HP, TEFC
RPM	1800
Driver Power	
Volts	460
Phase	3
Cycle	60
Temp. Range:	
Ambient Conditions:	
Equipment Location:	Outdoors
Ambient Temp:	-30/110 deg F
Wind Load:	N/A
Seismic Zone:	1

Notes:

* Information to be supplied by vendor.

I.T. CORPORATION	AIR AFTER COOLER SPECIFICATION				IT CORP. SPEC. NO. 773481-E7002		
	NO	BY	DATE	REV.	SHEET 1 OF 1		
	D	KKK	5/12/98	CFC DRAFT	PROJECT NAME FERNALD WPRAP OU-1		
PROJECT: FERNALD WPRAP AREA: UTILITIES TAG NO.: E-7002 EQUIPMENT: AIR AFTER COOLER	E	BAH	6/5/98	DRAFT ISSUE FOR EPA REVIEW	JOB NO. 773481		
					LOCATION FERNALD, OH		
	F	BAH	7/9/98	DRAFT CFC	BY	APPR	DATE 5/98

Process Data:	
Fluid:	Compressed Air/oIL
Design Pressure:	250 psig
Design Temperature:	400 deg F
Inlet Temperature:	175 deg F
Max. Pressure	150 psig
Approach Temp.	10 deg F
Normal Flow Rate:	350 SCFM
Min Flow Rate:	100 SCFM
Max Flow Rate:	400 SCFM
Design Data:	
Manufacturer:	GARDNER DENVER
Model:	202 EAU 806
Fan Size	
Weight	
Fan CFM	
Size, Connections	3" NPT Air, 2" NPT Oil
Driver:	
Driver Horsepower	10 HP, TEAO
RPM	1200
Driver Power	
Volts	460
Phase	3
Cycle	60
Temp. Range:	
Ambient Conditions:	
Equipment Location:	Outdoors
Ambient Temp:	-30/110 deg F
Wind Load:	N/A
Seismic Zone:	1

Notes:

* Information to be supplied by vendor.

1669

I.T. CORPORATION

ROTARY DRYER SPECIFICATION

NO	BY	DATE	REV.
D	RJB	05/12/98	CFC DRAFT
E	MSD	6/5/98	Draft Issue for EPA Review
F	RJB	7/9/98	DRAFT CFC

IT CORP SPEC. NO. 773481-F2001

SHEET 1 OF 1

PROJECT NAME: FERNALD WPRAP OU1

JOB NO. 773481

LOCATION: FERNALD, OHIO

BY	APPR	DATE

AREA NO: 20
AREA NAME: DRYER
TAG NO.: F-2001A & F-2001B
EQUIPMENT NAME: ROTARY DRYER

1		Total Volume: 2,678 cu.ft.	Field Erected? NO	No. Units: 2	
2		Operating Pressure, in. w.c.	0 - (-1)		
3		Operating Temperature, deg F	1200 - 1600		
4		Contents Lethal?	NO		
5		Design Pressure, psi	1 psig pos. to -20 in.w.c. neg.		
6		Design Temperature, deg F	1700		
7		Vessel Content:	Contaminated soils / sludges		
8	D	Feed soil nominal density, lb/ft³	90		
9	E	Feed soil design density, lb/ft³	70 - 130		
10	S	Design soil residence time, min.	90		
11	I	Rotational speed max./min., rpm	0.15 / 3.0		
12	G	Design feed rate, ton/hr / ea. unit	15		
13	N	Design evaporation rate, ton/hr / ea.	3.5		
14		Shell Corrosion Allowance, mpy:	3		
15	D	Code: ASME Sections VIII & IX	Stamp: Not Required		
16	A	Radiograph: 10% of shell welds	Stress Relieve: NO		
17	T	Type Supports:	ASTM A-36 c.s. structural frame for entire dryer		
18	A	Furnace insulation:	9" thick ceramic fiber		
19		Sandblast: SSPC-SP-6-85	Paint: Spec. 09900 & Mfg. Std.		
20		MANHOLE: Hinged? NO	Davited? YES	Other: HANDLE	
21		Platform Clips: NO	Ladder Clips:	Insul. Rings: NO	
22		Pipe Supports:	ASTM A-36 c.s. structural frame for burner piping		
23		Wind Load: 80mph, I =1.00	Seismic: OBBC Sec. 1612.0		
24		Weight Empty: * lbs	Loaded Weight * lbs		

		Item	Thickness	Mat'l Class	Mat'l - Minimum Quality
25					
26		Rotary dryer shell	1/2"		800 HT
27	M	Heads	1/4"		304 SS
28	A	Furnace	7 ga.		Carbon Steel
29	T	Shell O.D., ft			7.5
30	E	Shell heated lgth, ft	45		
31	R	Shell overall lgth, ft	62		
32	I	Furnace O.D., ft	*		
33	A	Nozzle Necks	A-53		Carbon Steel
34	L	Flanges	A-105		Carbon Steel
35	S	M.H. Cover			304 SS
36		Supports	A-36		Carbon Steel
37		Bolts/Studs			Carbon Steel
38		Nuts	Steel		Carbon Steel
39		Gaskets			

		Service	Mark	No.	Size	Rating	Face	Type
40								
41		Feed Screw Entry	A	1	24" x 36"	n/a	2" x 1/4"L	Flg.
42		Manhole	B	1	24"	n/a	2" x 1/4"L	Flg.
43	N	Dryer Exhaust Gas	C	1	20"	n/a	2" x 1/4"L	Flg.
44	O	Dryer Treated Resid.	D	1	34" x 36"	n/a	3" x 3/8" L	Flg.
45	Z		E					
46	Z		F					
47	L		G					
48	E		H					
49	S		J					
50			K					
51			L					
52			M					

53		
54	N	1. Items marked with * to be filled in by Vendor
55	O	2. Dryer size determined based on performance spec.
56	T	3. Dryer to be configured for ease of transport and installation
57	E	4. Refer to Procurement Spec. no. 11182
58	S	
59		

HOLD

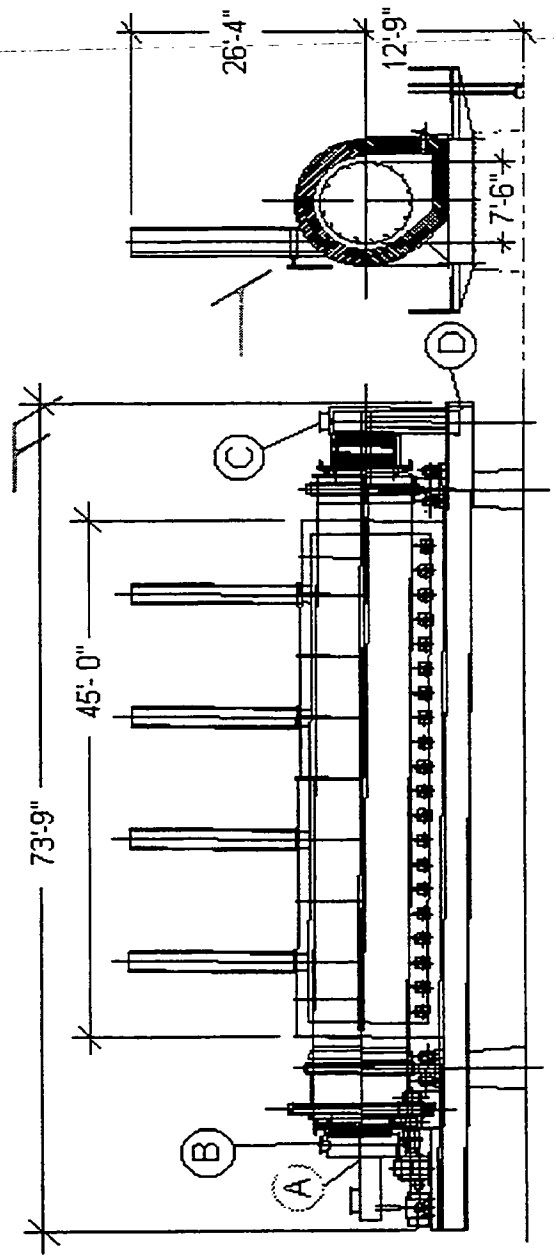

000255

F2001.xls

1669

I.T. CORPORATION

VESSEL SPECIFICATION

NO	BY	DATE	REV.
D	JAN	05/12/98	CFC DRAFT
E	MSD	06/05/98	Draft Issue for EPA Review
F	JAN	07/09/98	DRAFT CFC

IT CORP. SPEC. NO. 773481 - F5001

SHEET 1 OF 1

PROJECT NAME: FERNALD WPRAP OU1

JOB NO. 773481

LOCATION: FERNALD, OHIO

BY | APPR | DATE

AREA NO: 50
AREA NAME: GCS SYSTEM
TAG NO.: F-5001
EQUIPMENT NAME: THERMAL OXIDIZER

1		Total Volume: 4,000 Gal.	Field Erected? Yes	No. Units: 1(ONE)		
2		Operating Pressure, psig	0.03, (0.8" WC)			
3		Operating Temperature, deg F	1600 Internal / 350 Shell			
4		Liquid Specific Gravity	N/A			
5		Contents Lethal?	NO			
6		Design Pressure, psig	+/- 2			
7	D	Design Temperature, deg F	2500 Internal / 500 Shell			
8	E	Shell / Heads / Corr. Allow, In.	1/16"	1/16"		
9	S	Shell / Heads / Joint Eff., %				
10	I	Max. Allow. Press. (New&Cold) psig	N/A			
11	G	Limited by	N/A			
12	N	Hydrostatic Test Pressure, psig	N/A			
13		Code: ASME Sect. VIII	Stamp: NO			
14	D	Radiograph: N/A	Stress Relieve: N/A			
15	A	Insulation:	Heat Shield to 6' El. / Internal Refractory - Shop Installed			
16	T	Fireproofing:	NONE			
17	A	Sandblast: SSPC - SP6	Paint: 09900 - Finish 206			
18		MANHOLE: Hinged?	Davited?	Other: Bolted		
19		Type support:	Free Standing w/ Double Base Ring (See dwg.)			
20		Platform Clips: Yes	Ladder Clips: Yes	Insul. Rings: NO		
21		Pipe Supports: N/A				
22		Wind Load: 80 mph, Exp. C (I=1.0)	Seismic: ZONE 1			
23		Weight Empty: 9000 lbs.	Weight Full of Water: 42500 lbs.			

		Item	Thickness	Mat'l Class	Mat'l - Minimum Quality
24					
25		Shell (to 8' El.)	1/2"	CS	A36
26	M	Shell (8' to 20' El.)	3/8"	CS	A36
27	A				
28	T				
29	E				
30	R				
31	I	Nozzle Necks	CS		A36
32	A	Flanges	CS		
33		Coupling			
34	S	M.H. Cover	CS		
35		Supports	CS		A36
36		Bolts/Studs	Studs		Alloy
37		Nuts	Heavy Hex		Alloy
38		Gaskets	A&M 1/8" Full face		High Temp. (Non Asbestos)

		Service	Mark	No.	Size	Rating	Face	Type
39	N							
40	O	Burner	A	1	2' - 6"	5#	FF	Note 8
41	Z	Stack (X-5001)	B	1	2' - 8"	N/A	Round	Note 10
42	Z	Scanner	C	1	1"	3000#	MNPT	Cplg.
43	L	Drain	D	1	2"	150#	RF	Flg.
44	E	Access	E	1	24"	5#	FF	Note 9
45		APC Process Vent	F	1	22"	5#	FF	Fab.
46	S	Sight Port	G	1	2"	150#	RF	Flg.
47	C		H					
48	H		J					

49	E	8. 3' -2" OD x 1" Thk.w/ 48-7/8" Diam. Holes on 3' - 2 1/2" BC
50	D	9. 2' - 11 1/2" OD x 1/2" Thk. W/ 36-3/4" Diam. Holes on 2' - 9 1/2" BC.
51	U	10. Stack X-5001 to be field welded to existing vessel (after modifications)
52	L	and designed for a one piece lift.
53	E	11. Bolt Holes to straddle normal centerlines.
54		12. Nozzle projection to be 8" unless noted.
55		13. 3/8" Minimum Flange Thickness.

Nozzle orientation per existing dwg. and as shown below:

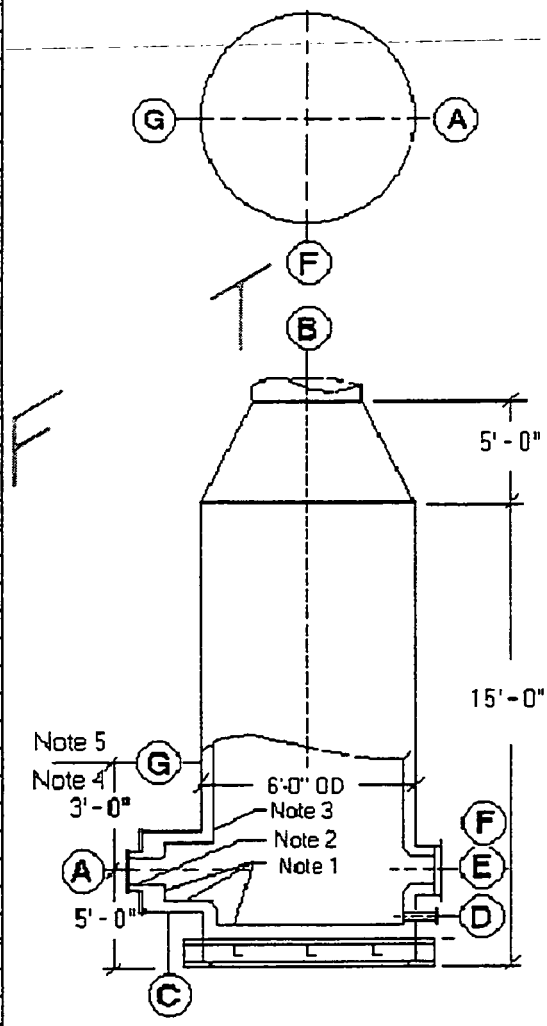

NOTES

1. 5" Thk. Kast-O-Lite 25 Castable
2. 3" Thk. Mizzou Castable
3. 5" Thk. X 5'-6" Sq. Blk. Of Kast-O-Lite 25 Castable
4. 2 - 1" Thk. Layers of Inswool HT Blanket (2700F)to 8' El. backed w/ 2-1" Thk. Layers of Inswool LT (1500 F) Blanket.
5. 3 - 1" Thk. Layers of Inswool HP Blanket (2400) above 8' El. To 20' El.
6. All castable to be anchored w/ 309 SS 'staghorn' anchors on 8" staggered centers.
7. All Blanket material to be anchored with 309 SS pins on 9" centers.

000256

F5001.xls

I.T. CORPORATION

STRAINER SPECIFICATION

NO	BY	DATE	REV.
D	GJM	05/12/98	CFC Draft
E	MSD	06/05/98	Draft Issue for EPA Review
F	JAN	07/09/98	DRAFT CFC

IT CORP. SPEC. NO. 773481 - FX5001
SHEET 1 OF 1
PROJECT NAME: FERNALD WPRAP OU1
JOB NO. 773481
LOCATION: FERNALD, OHIO
BY | APPR | DATE

AREA NO: 50
AREA NAME: GCS SYSTEM
TAG NO.: FX-5001 A / B
EQUIPMENT NAME: SCRUBBER PUMP STRAINERS

1		Filter Type: Basket	Field Erected? NO		No. Units: 2(TWO)	
2		Basket Type:	Cylinder			
3		Element Perforations:	3/16"			
4		Liquid Type: scrubber water	Scrubber Water			
5		Operating Temperature: F	207			
6		Design Temperature: F	220			
7	D	Operating Pressure: psig	43			
8	E	Design Pressure: psig	Tested at 115 psig for 1 hr			
9	S	Pressure Drop: psi		Clean		Dirty
10	I	Area: Sq. In.	300	Gross		Free
11	G	Filter Dimensions:	"6 1/2" ID x 16 1/2"			
12	N	Flow Velocity - FPM	Max:		Nor:	
13		Design Flow - gpm	Max:	210	Nor:	201
14	D	Cyclic Condition: N/A	Pulsating Service:			N/A
15	A	Dimensions: 1'10" x 2'10"				
16	T	Description of Solids:				
17	A	Drain Valve: 3/4" FNPT	Vent Diameter: 3/4" FNPT			
18		Hand Hole: NA	Clean Out: 10" ID			
19		Code Stamp: NO				
20		Support Lugs: NO				
21		Flanged and Bolted Cover: Yes	With Swing Bolts: 10" centriclamp			
22		Wind Load: 80 mph, Exp. C (I=1.0)	Seismic: ZONE 1			
23		Weight Empty: 25 lbs.	Weight Full of Water: 125 lbs.			

		Item	Thickness	Mat'l Class	Mat'l - Minimum Quality
24					
25		Shell	5/16"	FRP	Dow Derakane 470
26	M	Filter			
27	A	Liner	100 Mil	Syn. Mat.	Nexus
28	T	Basket	Note 1	Alloy	HAST C
29	E	Bottom	1/2"	FRP	Dow Derakane 470
30	R	Holdown		FRP	Dow Derakane 470
31	I	Nozzle Necks	1/4"	FRP	Dow Derakane 470
32	A	Flanges		FRP	Dow Derakane 470
33	L	Coupling		FRP	Dow Derakane 470
34	S	Access Doors		FRP	Dow Derakane 470
35		Supports			
36		Bolts/Studs			
37		Nuts			
38		Gaskets	10" O Ring		Neoprene

HOLD

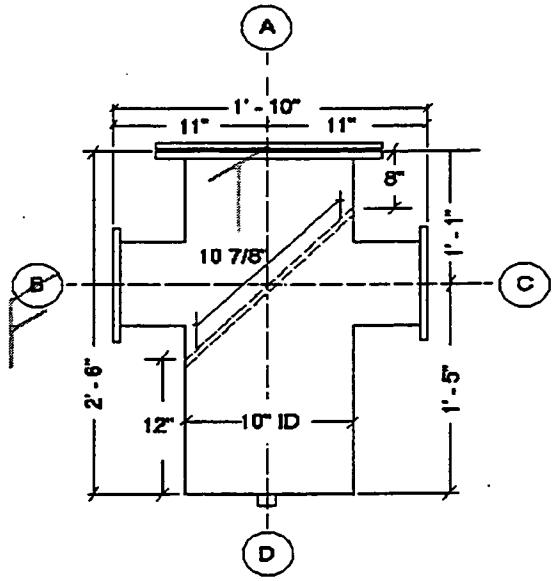

		Service	Mark	No.	Size	Rating	Face	Type
39								
40	N	Access	A	1	10"	80#	FF	Note 2
41	O	Inlet	B	1	6"	80#	FF	Note 3
42	Z	Outlet	C	1	6"	80#	FF	Note 3
43	Z	Drain w /plug	D	1	3/4"	N/A	FNPT	Cplg.
44	L							
45	E							
46								

V		
E	Nominal Size	10"
N	Assy. Type	Basket Strainer
D	Dwg. No.	FPF-00213-1
O	Model / Serial No.	Custom
R	Control Panel	N/A
	Manufacturer	Control Plastic Fabricators

47		1. 3/16" diam. Perforations / 6 1/2" OD Basket
48	N	2. Fig. 38 x 10"
49	O	3. Fig. 18 x 6"
50	T	4. FRP Design per NPS 15-69
51	E	5. Existing Euipment (Findlay)
52	S	
53		
54		
55		

FX5001.xls

1669

I.T. CORPORATION	STRAINER SPECIFICATION	IT CORP. SPEC. NO. 773481 - FX5002

NO	BY	DATE	REV.
D	GJM	05/12/98	CFC Draft
E	MSD	06/05/98	Draft Issue for EPA Review
F	JAN	07/09/98	DRAFT CFC

SHEET 1 OF 1

PROJECT NAME: FERNALD WPRAP OU1

JOB NO. 773481

LOCATION: FERNALD, OHIO

BY	APPR	DATE

AREA NO: 50
AREA NAME: GCS SYSTEM
TAG NO.: FX-5002 A / B
EQUIPMENT NAME: SUBCOOL QUENCH PUMP STRAINERS

1		Filter Type: Basket	Field Erected? NO		No. Units: 2(TWO)	
2		Basket Type:	Cylinder			
3		Element Perforations:	3/16"			
4		Liquid Type:	Subcool Quench			
5		Operating Temperature: F	105			
6		Design Temperature: F	220			
7	D	Operating Pressure: psig	45			
8	E	Design Pressure: psig	Tested at 115 psig for 1 hr			
9	S	Pressure Drop: psi		Clean		Dirty
10	I	Area: Sq. In.		Gross		Free
11	G	Filter Dimensions:				
12	N	Flow Velocity - FPM	Max:		Nor:	
13		Design Flow - gpm	Max:	1800	Nor:	1600
14	D	Cyclic Condition: N/A	Pulsating Service:			N/A
15	A	Dimensions: 2' - 7" x 3' - 3"				
16	T	Description of Solids:				
17	A	Drain Valve: 3/4" FNPT	Vent Diameter: 3/4" FNPT			
18		Hand Hole: NA	Clean Out: 14" ID			
19		Code Stamp: NO				
20		Support Lugs: NO				
21		Flanged and Bolted Cover: NO	With Swing Bolts: 10" centriclamp			
22		Wind Load: 80 mph, Exp. C (I=1.0)	Seismic: ZONE 1			
23		Weight Empty: 45 lbs.	Weight Full of Water: 295 lbs.			

		Item	Thickness	Mat'l Class	Mat'l - Minimum Quality
24					
25		Shell	5/16"	FRP	Dow Derakane 470
26	M	Filter			
27	A	Liner	100 Mil	Syn. Mat	Nexus
28	T	Basket	Note 1	Alloy	HAST C
29	E	Bottom	5/8"	FR	Dow Derakane 470
30	R	Holdown		FRP	Dow Derakane 470
31	I	Nozzle Necks	5/16"	FRP	Dow Derakane 470
32	A	Flanges		FRP	Dow Derakane 470
33	L	Coupling		FRP	Dow Derakane 470
34	S	Access Doors		FRP	Dow Derakane 470
35		Supports			
36		Bolts/Studs			
37		Nuts			
38		Gaskets	1/8" Full Face		Neoprene

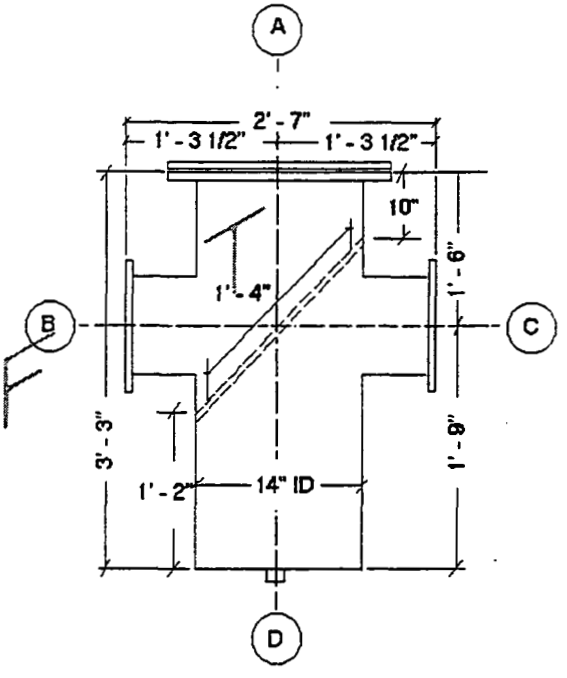

		Service	Mark	No.	Size	Rating	Face	Type
39								
40	N	Access	A	1	14"	80#	FF	Note 2
41	O	Inlet	B	1	10"	80#	FF	Note 3
42	Z	Outlet	C	1	10"	80#	FF	Note 3
43	Z	Drain w /plug	D	1	3/4"	N/A	FNPT	Cplg.
44	L							
45	E							
46								

V		
E	Nominal Size	14"
N	Assy. Type	Basket Strainer
D	Dwg. No.	FPF-00213-1
O	Model / Serial No.	Custom
R	Control Panel	N/A
	Manufacturer	Cortrol Plastic Fabricators

47		1. 3/16" diam. Perforations / 10" OD Basket
48	N	2. 21" OD x 1 5/16" Thk. w/ 12 1-1/8" Holes on 18 3/4" BC
49	O	3. Fig. 18 x 10"
50	T	4. FRP Design per NPS 15-69
51	E	5. Existing Euipment (Findlay)
52	S	
53		
54		
55		

000258

FX5002.xls

1669

I.T. CORPORATION	HEPA FILTER SPECIFICATION	IT CORP. SPEC. NO. 773481 - FX5004

NO	BY	DATE	REV.
D	JAN	05/12/98	CFC DRAFT
E	MSD	06/05/98	Draft Issue for EPA Review
F	JAN	07/09/98	DRAFT CFC

SHEET 1 OF 1

PROJECT NAME: FERNALD WPRAP OU1

JOB NO. 773481

LOCATION: FERNALD, OHIO

BY	APPR	DATE

AREA NO: 50
AREA NAME: GCS SYSTEM
TAG NO.: FX-5004 A / B
EQUIPMENT NAME: HEPA UNIT 1 & 2

1		Total Volume: 670 Gal.	Field Erected? NO	No. Units: 2 (TWO)					
2		Operating Pressure, psig	negative 0.6 - Note 1						
3		Operating Temperature, deg F	110						
4		Liquid Specific Gravity	N/A						
5		Contents Lethal?	No						
6		Design Pressure, psig	negative 0.9 to +2 for Housing						
7	D	Design Temperature, deg F	175						
8	E	Shell / Heads / Corr. Allow, In.	1/16"	N/A					
9	S	Shell / Heads / Joint Eff., %							
10	I	DOP Test	NO						
11	G	Pressure Drop:in.WC (Note 2)	Upset Max:	3	Design	0.5	Nor.	0.3	
12	N	Flow Velocity - FPM	Upset Max:	375	Design	86	Nor.	44	
13		Design Flow - acfm	Upset Max:	3000	Design	687	Nor.	350	
14	D	Cyclic Condition: N/A	Pulsating Service: N/A						
15	A	Filter Design Criteria:	HEPA type (Industrial Grade)						
16	T	Description of Dust or Gas:	Reheated water vapor w/ trace LLW org/solids						
17	A	Kst or Class of Dust:	Less than 10 micron						
18		Conveying Duct (Size & Length):	Transition from 22" diameter duct.						
19		Discharge Duct (Size & Length):	Transition to 22" diameter duct.						
20		Vessel Surface Area	* sq. ft.	Insul. Rings: Yes					
21		Req'd Vent Area per Unit @ Design	2.07 sq. ft. ea.	8 sq. ft. total (actual)					
22		Wind Load: 80 mph, Exp. C (I=1.0)	Seismic: ZONE 1						
23		Weight Empty: * lbs.	Weight Full of Water: * lbs.						

		Item	Thickness	Mat'l Class	Mat'l - Minimum Quality
24					
25		Housing - Note 1	11 Ga.	SS	304L
26	M	Transition	11 Ga.	CS	A36 - Note 3
27	A	Filter Depth	12"		
28	T				
29	E				
30	R	Holdown	SS		304
31	I	Nozzle Necks	SS		304
32	A	Flanges	SS		304
33	L	Coupling			
34	S	Access Doors	SS		Primary and Prefilter
35		Supports	CS		A36 Galvanized (by owner)
36		Bolts/Studs	Alloy Steel		A193 Gr B8
37		Nuts	Heavy Hex		A194 Gr 2H
38		Gaskets	*		*

39	G	Nominal Size	1H x 2W
40	E	Assy. Type	Bag In /Bag Out
41	N	Dwg. No.	*
42	E	Model / Serial No.	*
43	R	Filter Type:	Industrial Grade
44	A	Manufacturer	Flanders or equal
45	L	Other:	*

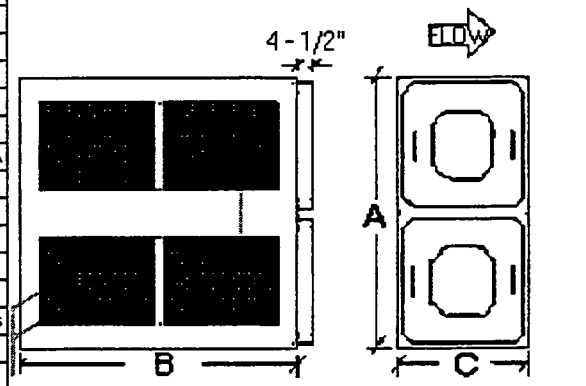

Upstream View — Side View (Door Access)

Unit Size (Height x Width)	A (Height)	B (Width)
1H1W	30"	27"
1H2W	30"	51"
1H3W	30"	75"
2H1W	60"	27"
2H2W	60"	51"
2H3W	60"	75"
3H1W	90"	27"
3H2W	90"	51"
3H3W	90"	75"
4H1W	120"	27"
4H2W	120"	51"
4H3W	120"	75"

C (Depth)	inches
12" Deep Filter or Adsorber	25
12" Deep Filter or Adsorber w/PF	37-1/2
16" or 18" Deep Adsorber	32-7/8
16" or 18" Deep Adsorber w/ PF	45-1/4

46	N	1. Vendor to confirm housing thickness and requirements for stiffeners.
47	O	2. Clean - Includes Pre-Filter.
48	T	3. Inlet and Outlet transitions by owner.
49	E	4. Items marked * by Supplier.
50	S	
51		
52		
53		
54		
55		

000259

FX5004.xls

I.T. CORPORATION	FILTER PRESS SPECIFICATION	IT CORP. SPEC. NO. 1669 773481-FX6001
	SHEET 1 OF 1	
AREA NO: 60	PROJECT NAME: FERNALD WPRAP OU1	
AREA NAME: PROCESS BLOWDOWN PRETREATMENT	JOB NO. 773481	
TAG NO.: FX-6001	LOCATION: FERNALD, OH	
EQUIPMENT NAME: FILTER PRESS	BY / APPR / DATE	

No.	BY	DATE	REV.
D	PA	#####	CFC DRAFT
E	MSD	6/5/98	Draft Issue for EPA Review
F	JAN	7/9/98	Draft Issue for EPA Review HOLD

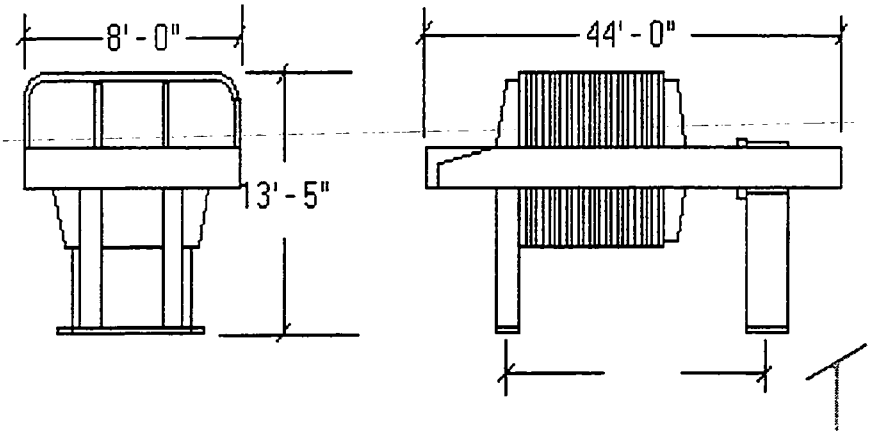

MATERIALS	Item	Thickness	Mat'l Class	Mat'l - Minimum Quality
	Shell	•		CS
	Internals	•		CS
	External Stiffener	•		CS
	Nozzle Necks			CS
	Flanges			CS
	Coupling		None	
	M.H. Cover			
	Supports			
	Bolts/Studs		Studs	Alloy
	Nuts		Haevy Hex	Alloy
	Gaskets		1/8" Full Face	DYNEX

NOZZLES	Service	Mark	No.	Size	Rating	Face	Type
	Sludge Influent	A	1	3"	150#	RF	Flg.
	Sludge Effluent	B	4	2"	150#	RF	Flg.
	Filter Cake Out	C					

DATA				
Capacity:	100 ft3	Field Erected?	No	
No. Units:	One			
Operating Pressure, psig:		100 psig		
Operating Temperature, °F:		150		
Liquid Specific Gravity		1.1		
Contents Lethal?		NO		
Design Pressure, psig:		225		
Design Temperature, °F:		250		
Shell / Heads	Corr. Allow. - in.:			
Shell / Heads	Joint eff. %			
Max. Allow. Press. (New & Cold)psig:				
Limited by:				
Hydrostatic Test Pressure:				
Code:	ASME Sec V111&1X	Stamp:	Not Required	
Radiograph:	10% Of Shell Welds	Stress Relieve:	NO	
Insulation:	N/A	Fireproofing	N/A	
Sandblast:	Yes	Paint:	Primer	
Type Suppoprts:	ASTM A-36 CS			
Manhole:	Davited: YES	Other:	Handle	
Pltform Clips: NO	Ladder Clips: YES	Insul. Rings:		
Pipe Supports:				
Wind Load: 80 mph, Exp. C (I=1.0)		Seismic:	Zone 1	
Weight Empty:19,807 lbs.	w / Water:27,860 lbs		lbs.	

NOTES

1. JWI J-Press 1500N25-67-100H (or equal)

000260

FX6001.xls

1669

I.T. CORPORATION

FILTER SPECIFICATION

No.	BY	DATE	REV.
D	PA	05/12/98	CFC DRAFT
E	MSD	06/05/98	Draft Issue for EPA Review
F	WC	07/09/98	DRAFT CFC

IT CORP SPEC. NO. 11182-FX6002

SHEET 1 OF 1

PROJECT NAME: FERNALD WPRAP OU1

JOB NO. 773481

LOCATION: FERNALD, OHIO

BY | APPR | DATE

AREA NO: 60
AREA NAME: PROCESS BLOWDOWN PRETREATMENT
TAG NO.: FX-6002 A/B
EQUIPMENT NAME: DUAL SAND FILTERS

1		Total Volume: 1152 Gal.	Field Erected? NO	No. Units: 1 (One)	
2		Operating Pressure, in. w.c.	60		
3		Operating Temperature, deg F	105		
4		Contents Lethal?	NO		
5		Design Pressure, psi	80		
6		Design Temperature, deg F	250		
7					
8	D	Blowdown water density,lb/ft3	69		
9	E	Design Liquid Residence Time,Hrs	0.2		
10	S	Design Feed Rate,Gpm	100		
11	I	Backwash Rate: gpm	5 to 10		
12	G	Configuration:	Parallel (Inline Spare)		
13	N	Vessel Diameter: inches	84		
14		Shell / Head Corrosion Allowance:	1/8"		
15	D	Code: ASME Sections VIII & IX	Stamp: U Stamp		
16	A	Radiograph: 10% of shell welds	Stress Relieve: NO		
17	T	Type Supports: 4" x 4" x 1/2" CS angle legs and W6 x 25 lb. CS H beam skid			
18	A	Insulation: N/A			
19		Sandblast: YES	Paint: Primer		
20		Manhole: Hinged? NO	Davited? YES	Other: HANDLE	
21		Platform Clips: NO	Ladder Clips: YES	Insul. Rings:	
22		Pipe Supports: ASTM A-36 c.s. structural frame for filter piping			
23		Wind Load: 80 mph, Exp. C (I=1.0)	Seismic: Zone 1		
24		Weight Empty: * lbs	Loaded Weight * lbs		

		Item	Thickness	Mat'l Class	Mat'l - Minimum Quality
25					
26		Shell	1/2"	CS	A36
27	M	Heads	5/8"	CS	A36
28	A				
29	T				
30	E				
31	R				
32	I				
33	A	Nozzle Necks	A-53		CS
34	L	Flanges	A-105		CS
35	S	M.H. Cover	A-36		CS
36		Supports	A-36		CS
37		Bolts/Studs	Studs		CS
38		Nuts	Heavy Hex		Alloy
39		Gaskets			Alloy

		Service	Mark	No.	Size	Rating	Face	Type
40								
41		Clarified Water inlet	A	1	3"	150#	RF	Flg.
43	N	Clarified Water outlet	B	1	3"	150#	RF	Flg.
44	O	Access	G	2	24"		Note 3	
45	Z	Drain Line	D	1	4"	150#	RF	Flg.
46	Z							
47	L							
48	E							
49	S							
50								
51								
52								

53		1. Water Relief valve to be Kunkle 537-G01-HM (1-1/2")
54	N	2. Air Relief Valve to be kunkle 6010GG01 (916 CFM @ 80 psig) 1-1/2"
55	O	3. 20" Camlock Manway
56	T	4. Ladder Rungs attached.
57	E	5. Spreader Lifting Point (4 lugs)
58	S	
59		

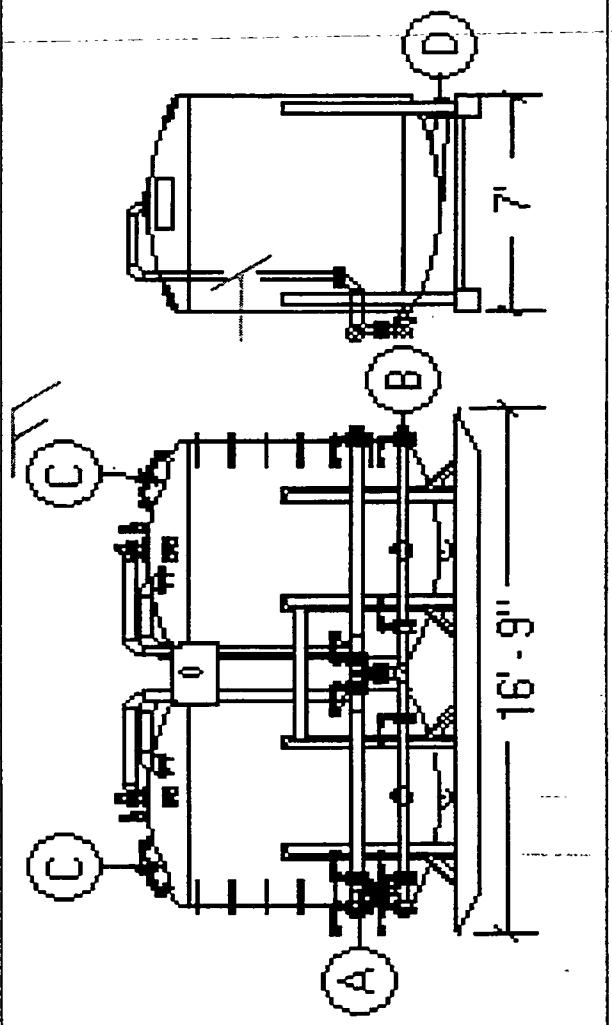

000261

FX6002.xls

1669

I.T. CORPORATION	BAG FILTER SPECIFICATION	IT CORP SPEC. NO. 773481-FX6003
		SHEET 1 OF 1
		PROJECT NAME FERNALD WPRAP OU1
		JOB NO. 773481
		LOCATION FERNALD, OHIO

No.	BY	DATE	REV.
D	PA	05/12/98	CFC DRAFT
E	MSD	06/05/98	Draft Issue for EPA Review
F	WC	07/09/98	DRAFT CFC

BY	APPR	DATE

AREA NO: 60
AREA NAME: PROCESS BLOWDOWN PRETREATMENT
TAG NO.: FX-6003 A/B
EQUIPMENT NAME: DUAL BAG FILTERS

1		Total Volume: Ft3	Field Erected? NO	No. Units: 2 in paralell	
2		Operating Pressure, psig	50		
3		Operating Temperature, °F	150 to 200		
4		Contents Lethal?	NO		
5		Design Pressure, psi	100		
6		Design Temperature, °F	200		
7	D	Vessel Content:	Clarified Water		
8	E	Blowdown water density,lb/ft3	69		
9	E				
10	S	Design Feed Rate,Gpm	100		
11	I	Manufacturer:	Rosedale		
12	G	Model No.	8-30-3P-2-150-NCBSB		
13	N	Relief Valve Type:	Kunkle 1' x F x 1.5 Model 912		
14		Shell Corrosion Allowance:	1/16"		
15	D	Code: ASME Sections VIII & IX	Stamp: Yes (U)		
16	A	Radiograph: 10% of shell welds	Stress Relieve: NO		
17	T	Type Supports: A-36 c.s. leg supports each filter			
18	A	Insulation: N/A			
19		Sandblast: YES	Paint: Std. Finish		
20		Manhole: Hinged? NO	Davited? NO	Other: HANDLE	
21		Platform Clips: NO	Ladder Clips: NO	Insul. Rings:	
22		Pipe Supports: A-36 structural frame for filter piping.			
23		Wind Load: 80 mph, Exp. C (I=1.0)	Seismic: Zone 1		
24		Weight Empty: 600 lbs	Loaded Weight 630 lbs		

		Item	Thickness	Mat'l Class	Mat'l - Minimum Quality
25					
26		Shell	1/2"	CS	A36
27	M	Heads	5/8"	CS	A36
28	A				
29	T				
30	E				
31	R				
32	I				
33	A	Nozzle Necks		CS	A53
34	L	Flanges		CS	A105
35	S	M.H. Cover		CS	A36
36		Supports		CS	A36
37		Bolts/Studs		Studs	CS
38		Nuts		Heavy Hex	Alloy
39		Gaskets			Alloy

		Service	Mark	No.	Size	Rating	Face	Type
40								
41		Clarified Water Inlet	A	1	2"	150#	RF	Flg.
43	N	Clarified Water Outlet	B	1	2"	150#	RF	Flg.
44	O	Drain Line	C	1	1"	3000#	NPT	Cplg.
45	Z							
46	Z							
47	L							
48	E							
49	S							
50								
51								
52								

53		1. 1/4" couplings on discharge side only.
54	N	2. 1' couplings on inlet side only.
55	O	3. 8-1/2" OD typical each filter.
56	T	4. 3" wafer buterfly valve (typical)
57	E	5. Designed to remove particles 50 micron and below.
58	S	
59		

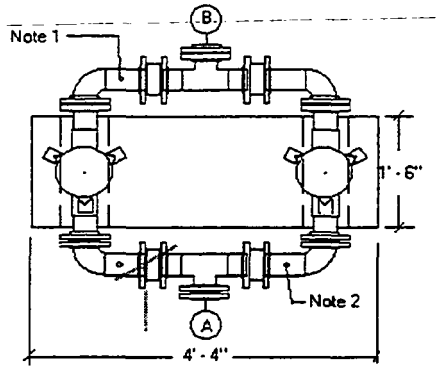

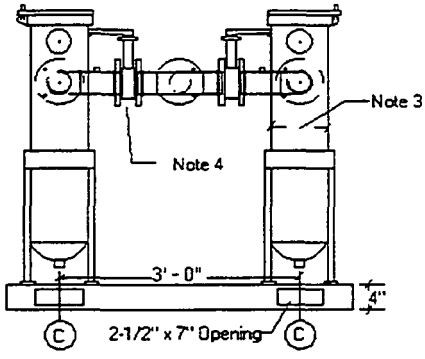

000262

FX6003.xls

I.T. CORPORATION	SAND FILTER SPECIFICATION 1669	IT CORP SPEC. NO. 773481-65-FX6501
		SHEET 1 OF 1

NO	BY	DATE	REV.
D	PMS	05/12/98	CFC DRAFT
E	MSD	06/05/98	Draft Issue for EPA Review
F	PMS	07/09/98	DRAFT CFC

PROJECT NAME: FERNALD WPRAP OU1
JOB NO.: 773481
LOCATION: FERNALD, OHIO

BY	APPR	DATE
PMS		

AREA NO: 65
AREA NAME: WATER TREATMENT SYSTEM
TAG NO.: FX-6501A,B & FX-6502A,B
EQUIPMENT NAME: DUAL SAND FILTERS

1	DESIGN DATA	Media Volume (each): 187.5 Ft3	Field Erected? NO	No. Units: 2 skids w/2 in parallel	
2		Operating Pressure, psi	30		
3		Operating Temperature, deg F	Ambient		
4		Contents Lethal?	NO		
5		Design Pressure, psi	80		
6		Design Temperature, deg F	Ambient		
7		Process Fluid:	Clarified Water		
8		Blowdown water density,lb/ft3	69		
9		Tank Volume (empty), GAL	1874		
10		Design Feed Rate,GPM	125		
11		Backwash Rate,GPM	500		
12		System Empty Bed Contact Time, mins.	1402		
13					
14		Shell Corrosion Allowance:	1/16"		
15		Code:	Stamp: Not Required		
16		Radiograph:	Stress Relieve: NO		
17		Type Supports:	filter piping		
18		Insulation: N/A			
19		Sandblast: YES	Paint: Epoxy		
20		Manhole: Hinged? NO	Davited? YES	Other: HANDLE	
21		Platform Clips: NO	Ladder Clips: NO	Insul. Rings:	
22		Pipe Supports:			
23		Wind Load:	Seismic:		
24		Weight Empty: * lbs	Loaded Weight * lbs		

		Item	Thickness	Mat'l Class	Mat'l - Minimum Quality
25	MATERIALS				
26		Shell	*	CS	A36
27		Heads	*	CS	A36
28					
29					
30					
31					
32					
33		Nozzle Necks	A-53		CS
34		Flanges	A-105		CS
35		M.H. Cover	A-36		CS
36		Supports	A-36		CS
37		Bolts/Studs	Studs		CS
38		Nuts	Heavy Hex		Alloy
39		Gaskets			

		Service	Mark	No.	Size	Rating	Face	Type
40	NOZZLES							
41			A					
43			B					
44			C					
45			D					
46			E					
47			G					
48			H					
49			J					
50			K					
51			L					
52			M					

53
54 NOTES: 1. Items marked with * to be filled in by Vendor
55 2. Sand Filters to be configured for ease of transport and installation
56 3. Back Wash is performed as necessary
57
58
59

000263

PT/_7/7/98_/(A65spec)-F6501,2

I.T. CORPORATION	ION EXCHANGE UNIT SPECIFICATION 1669	IT CORP SPEC. NO. 773481-65-FX6503

NO	BY	DATE	REV.
D	PMS	05/12/98	CFC DRAFT
E	MSD	06/05/98	Draft Issue for EPA Review
F	PMS	07/09/98	DRAFT CFC

SHEET 1 OF 1

PROJECT NAME: FERNALD WPRAP OU1

JOB NO. 773481

LOCATION: FERNALD, OHIO

BY	APPR	DATE
PMS		

AREA NO: 65
AREA NAME: WATER TREATMENT SYSTEM
TAG NO.: FX-6503A,B
EQUIPMENT NAME: DUAL ION EXCHANGE UNITS

1		Media Volume (each): 187.5 Ft3	Field Erected? NO	No. Units: 2 in parallel	
2		Operating Pressure, psi	30		
3		Operating Temperature, deg F	Ambient		
4		Contents Lethal?	NO		
5		Design Pressure, psi	80		
6		Design Temperature, deg F	Ambient		
7		Process Fluid:	Clarified Water		
8	D	Blowdown water density,lb/ft3	69		
9	E	Tank Volume (empty), GAL	1874		
10	S	Design Feed Rate,GPM	125		
11	I	Backwash Rate,GPM	500		
12	G	System Empty Bed Contact Time, mins.	1402		
13	N				
14		Shell Corrosion Allowance:	1/16"		
15	D	Code:	Stamp: Not Required		
16	A	Radiograph:	Stress Relieve: NO		
17	T	Type Supports:	filter piping		
18	A	Insulation: N/A			
19		Sandblast: YES	Paint: Epoxy		
20		Manhole: Hinged? NO	Davited? YES	Other: HANDLE	
21		Platform Clips: NO	Ladder Clips: NO	Insul. Rings:	
22		Pipe Supports:			
23		Wind Load:	Seismic:		
24		Weight Empty: * lbs	Loaded Weight * lbs		

		Item	Thickness	Mat'l Class	Mat'l - Minimum Quality
25					
26		Shell	*	CS	A36
27	M	Heads	*	CS	A36
28	A				
29	T				
30	E				
31	R				
32	I				
33	A	Nozzle Necks	A-53		CS
34	L	Flanges	A-105		CS
35	S	M.H. Cover	A-36		CS
36		Supports	A-36		CS
37		Bolts/Studs	Studs		CS
38		Nuts	Heavy Hex		Alloy
39		Gaskets			

		Service	Mark	No.	Size	Rating	Face	Type
40								
41			A					
43	N		B					
44	O		C					
45	Z		D					
46	Z		E					
47	L		G					
48	E		H					
49	S		J					
50			K					
51			L					
52			M					

53		
54	N	1. Items marked with * to be filled in by Vendor
55	O	2. Units to be configured for ease of transport and installation
56	T	3. Back Wash is performed as necessary
57	E	
58	S	
59		

000264

I.T. CORPORATION	SPECIALTY 1669 EQUIPMENT SPECIFICATION	IT CORP. SPEC. NO. 773481-G5001
		SHEET 1 OF 1
		PROJECT NAME FERNALD WPRAP OU1
		JOB NO. 773481
		LOCATION FERNALD, OHIO

NO	BY	DATE	REV.
D	JAN	05/12/98	CFC DRAFT
E	MSD	06/05/98	Draft Issue for EPA Review
F	JAN	07/09/98	DRAFT CFC

BY	APPR	DATE

AREA NO: 50
AREA NAME: GCS SYSTEM
TAG NO.: G - 5001 A - C
EQUIPMENT NAM SCRUBBER SPRAY NOZZLE ASSEMBLY

HOLD

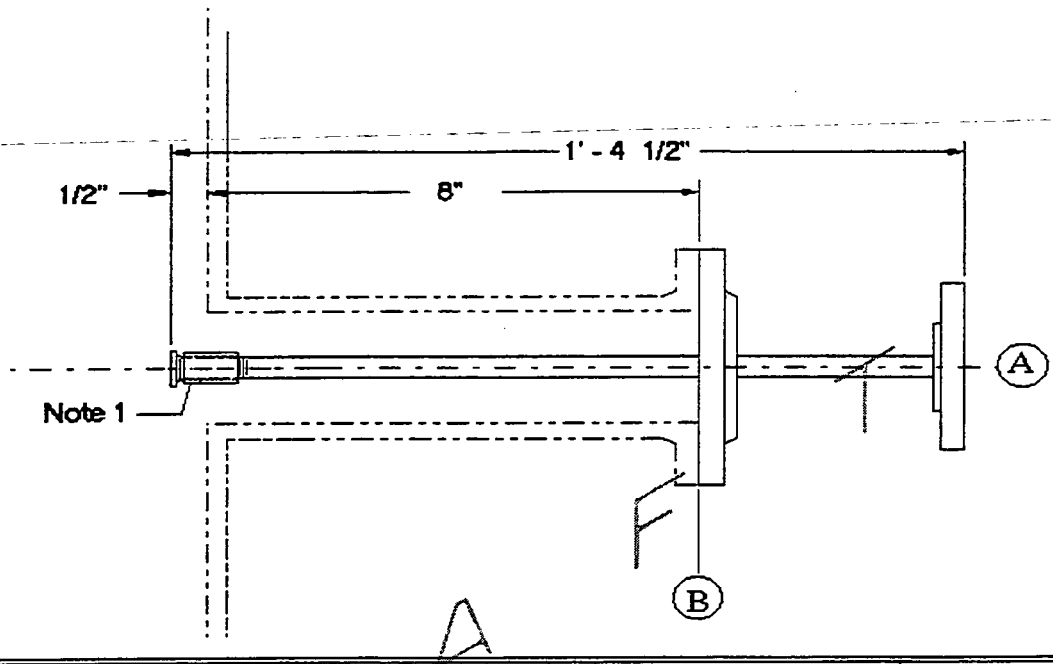

	Item	Thk.	Mat'l. Class	Material - Minimum Quality
MATERIALS	Spray Nozzle	*	SS	316
	Pipe	Sch 40	SS	304 Seamless
	Nozzle Necks	SS		304
	Flanges	SS		304
	Coupling	SS		304
	M.H. Cover			
	Supports			
	Bolts/Studs	Studs		Alloy
	Nuts	Haevy Hex		Alloy
	Gaskets	1/8"		TFE Filled

	Service	Mark	No.	Size	Rating	Face	Type
NOZZLE	Recirculation	A	1	1"	N/A	NPT	Thr'd
	Vessel	B	1	2"	150#	RF	Red.

DESIGN DATA				
No. Units:	Three			
Liquid Specific Gravity:	1.05			
Operating Temperature, F:	205			
Design Temperature, F:	600			
Operating Pressure, psig:	35			
Design Pressure, psig:	150			
Atomization Media:	Mechanical			
Atomozation Temperature,F:	N/A			
Atomization Pressure,psig:	N/A			
Liquid Flow Rate, GPM:	16	Ea.	48	Total
Nozzle Type:	Bete			
Nozzle Model No.	NF200120			
Included Spray Angle (Deg.)	120			
Spray Nozzle Connection:	1/2" NPT			
Turndown Ratio:	2:1			
Vessel Operating Temp. F:	250 - 350 Gas Inlet			
Vessel Operating Press. psig:	-.7 psig (14 psia)			
Code: N/A				
Stamp: N/A				

NOTES

1. Camco SS 1/2" x 1" Reducing Coupling
2. End of spray nozzle extends 1/2" from inside vessel wall.
3. Vessel nozzle is angled 15 degrees down from horizontal.
4. Vessel nozzles are equally spaced and offset from bottom row.

000265

G5001.xls

1669

I.T. CORPORATION	SPECIALTY EQUIPMENT SPECIFICATION	IT CORP. SPEC. NO. 773481-G5002
		SHEET 1 OF 1
		PROJECT NAME FERNALD WPRAP OU1
		JOB NO. 773481
		LOCATION FERNALD, OHIO

NO	BY	DATE	REV.
D	JAN	05/12/98	CFC DRAFT
E	MSD	06/05/98	Draft Issue for EPA Review
F	JAN	07/09/98	DRAFT CFC

BY	APPR	DATE

AREA NO: 50
AREA NAME: GCS SYSTEM
TAG NO.: G - 5002 A - C
EQUIPMENT NAM SCRUBBER SPRAY NOZZLE ASSEMBLY

HOLD

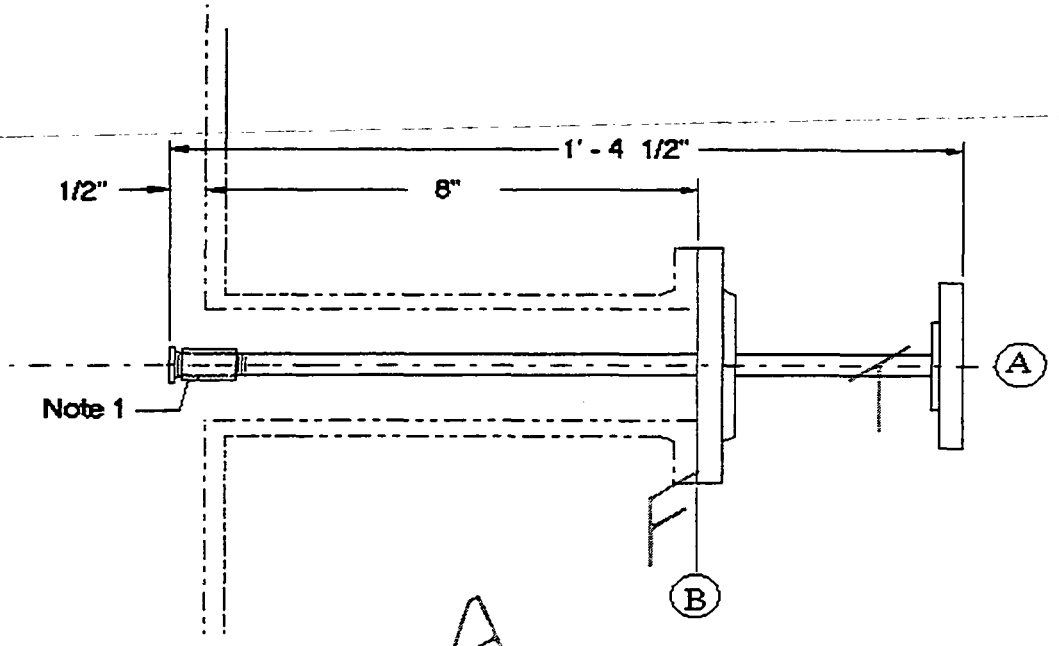

	Item	Thk.	Mat'l. Class	Material - Minimum Quality
	Spray Nozzle	*	SS	316
MATERIALS	Pipe	Sch 40	SS	304 Seamless
	Nozzle Necks		SS	304
	Flanges		SS	304
	Coupling		SS	304
	M.H. Cover			
	Supports			
	Bolts/Studs		Studs	Alloy
	Nuts		Haevy Hex	Alloy
	Gaskets		1/8"	TFE Filled

NOZZLE	Service	Mark	No.	Size	Rating	Face	Type
	Recirculation	A	1	1"	N/A	NPT	Thr'd
	Vessel	B	1	2"	150#	RF	Red.

DESIGN DATA				
No. Units:	Three			
Liquid Specific Gravity:	1.05			
Operating Temperature, F:	205			
Design Temperature, F:	600			
Operating Pressure, psig:	35			
Design Pressure, psig:	150			
Atomization Media:	Mechanical			
Atomozation Temperature,F:	N/A			
Atomization Pressure,psig:	N/A			
Liquid Flow Rate, GPM:	16	Ea.	48	Total
Nozzle Type:	Bete			
Nozzle Model No.	NF200120			
Included Spray Angle (Deg.)	120			
Spray Nozzle Connection:	1/2" NPT			
Turndown Ratio:	2:1			
Vessel Operating Temp. F:	250 - 350 Gas Inlet			
Vessel Operating Press. psig:	-.7 psig (14 psia)			
Code:	N/A			
Stamp:	N/A			

NOTES

1. Camco SS 1/2" x 1" Reducing Coupling
2. End of spray nozzle extends 1/2" from inside vessel wall.
3. Vessel nozzle is angled 15 degrees down from horizontal.
4. Vessel nozzles are equally spaced and offset from top row.

000266

G5002.xls

I.T. CORPORATION	SPECIALTY EQUIPMENT SPECIFICATION 1669	IT CORP. SPEC. NO. 773481-G5003

NO	BY	DATE	REV.
D	JAN	05/12/98	CFC DRAFT
E	MSD	06/05/98	Draft Issue for EPA Review
F	JAN	07/09/98	DRAFT CFC

SHEET 1 OF 1

PROJECT NAME: FERNALD WPRAP OU1

JOB NO. 773481

LOCATION: FERNALD, OHIO

BY	APPR	DATE

AREA NO: 50
AREA NAME: GCS SYSTEM
TAG NO.: G - 5003 A - E
EQUIPMENT NAM SCRUBBER SPRAY NOZZLE ASSEMBLY

HOLD

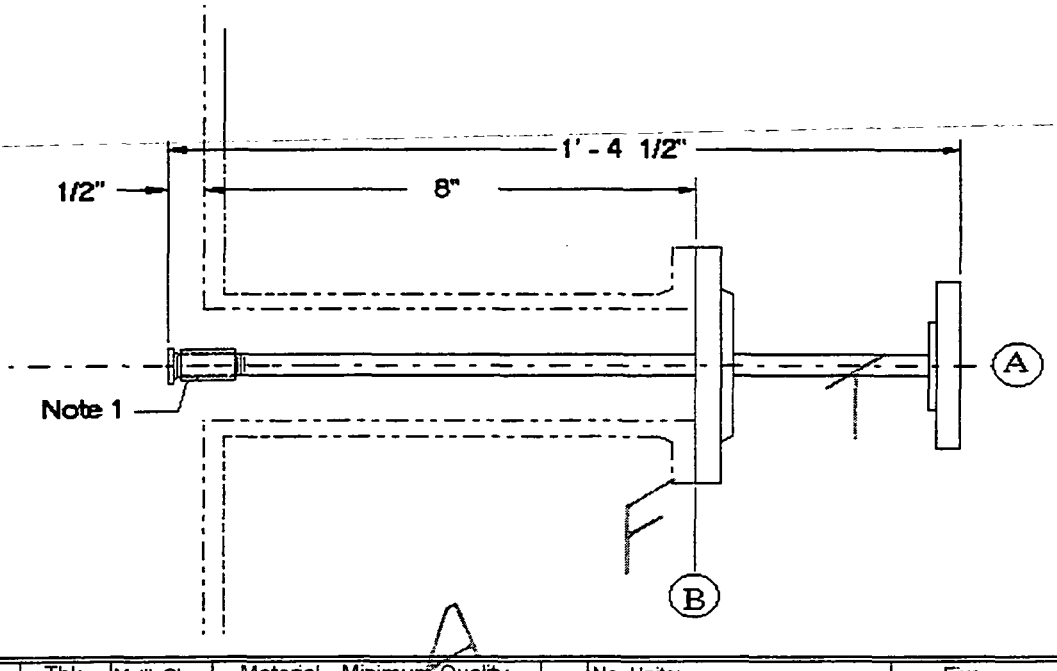

	Item	Thk.	Mat'l. Class	Material - Minimum Quality
MATERIALS	Spray Nozzle	*	SS	316
	Pipe	Sch 40	SS	304 Seamless
	Nozzle Necks		SS	304
	Flanges		SS	304
	Coupling		SS	304
	M.H. Cover			
	Supports			
	Bolts/Studs	Studs		Alloy
	Nuts	Haevy Hex		Alloy
	Gaskets	1/8"		TFE Filled

NOZZLE	Service	Mark	No.	Size	Rating	Face	Type
	Recirculation	A	1	1"	150#	RF	Note 1
	Vessel	B	1	2"	150#	RF	Red.

DESIGN DATA	
No. Units:	Five
Liquid Specific Gravity:	1.05
Operating Temperature, F:	205
Design Temperature, F:	600
Operating Pressure, psig:	35
Design Pressure, psig:	150
Atomization Media:	Mechanical
Atomozation Temperature,F:	N/A
Atomization Pressure,psig:	N/A
Liquid Flow Rate, GPM:	17 Ea. 85 Total
Nozzle Type:	Bete
Nozzle Model No.	NF200120
Included Spray Angle (Deg.)	120
Spray Nozzle Connection:	1/2" NPT
Turndown Ratio:	2:1
Vessel Operating Temp. F:	250 - 350 Gas Inlet
Vessel Operating Press. psig:	-.7 psig (14 psia)
Code:	N/A
Stamp:	N/A

NOTES

1. Camco SS 1/2" x 1" Reducing Coupling
2. End of spray nozzle extends 1/2" from inside vessel wall.
3. Vessel nozzle is angled 15 degrees down from horizontal.
4. Vessel nozzles are eually spaced.

000267

G5003.xls

I.T. CORPORATION	SPECIALTY EQUIPMENT SPECIFICATION 1669	IT CORP. SPEC. NO. 773481-G5004

NO	BY	DATE	REV.
D	JAN	05/12/98	CFC DRAFT
E	MSD	06/05/98	Draft Issue for EPA Review
F	JAN	07/09/98	DRAFT CFC

SHEET 1 OF 1

PROJECT NAME: FERNALD WPRAP OU1

JOB NO. 773481

LOCATION: FERNALD, OHIO

BY	APPR	DATE

AREA NO: 50
AREA NAME: GCS SYSTEM
TAG NO.: G - 5004 A - F
EQUIPMENT NAME SUBCOOL QUENCH SPRAY NOZZLE ASSEMBLY

HOLD

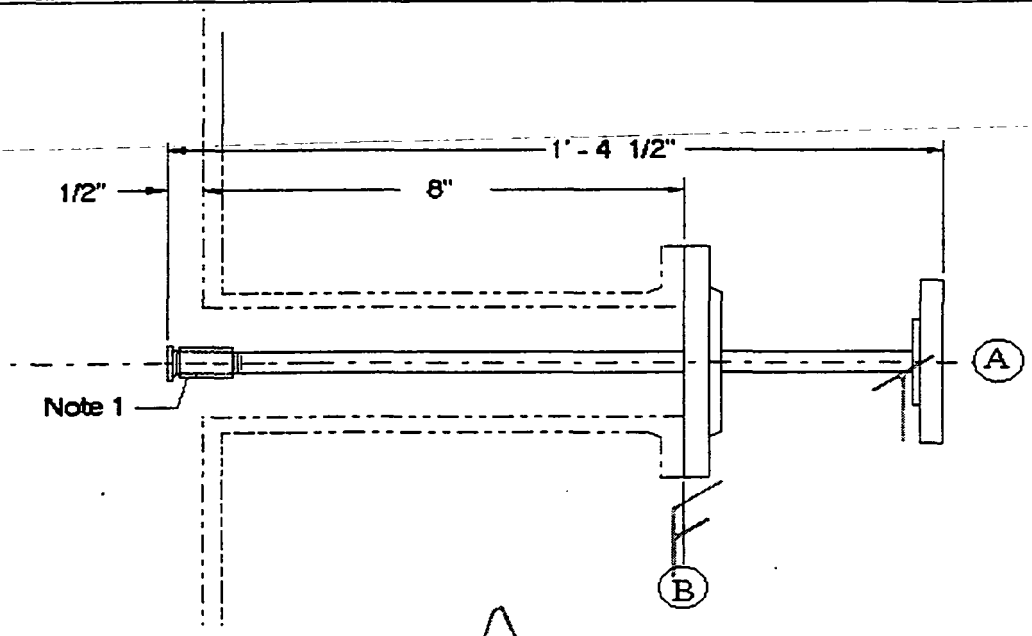

A

MATERIALS	Item	Thk.	Mat'l. Class	Material - Minimum Quality
	Spray Nozzle	*	SS	316
	Pipe	Sch 40	SS	304 Seamless
	Nozzle Necks		SS	304
	Flanges		SS	304
	Coupling		SS	304
	M.H. Cover			
	Supports			
	Bolts/Studs		Studs	Alloy
	Nuts		Haevy Hex	Alloy
	Gaskets		1/8"	TFE Filled

NOZZLE	Service	Mark	No.	Size	Rating	Face	Type
	Recirculation	A	1	1-1/2"	150#	RF	Flg.
	Vessel	B	1	3"	150#	RF	Red.

DESIGN DATA					
No. Units:	Six				
Liquid Specific Gravity:	1.05				
Operating Temperature, F:	100				
Design Temperature, F:	400				
Operating Pressure, psig:	38				
Design Pressure, psig:	150				
Atomization Media:	Mechanical				
Atomozation Temperature,F:	N/A				
Atomization Pressure,psig:	N/A				
Liquid Flow Rate, GPM:	53	Ea.	318	Total	
Nozzle Type:	Bete				
Nozzle Model No.	NF53090				
Included Spray Angle (Deg.)	90 Fan (Flat Spray)				
Nozzle Connection:	1" MNPT				
Turndown Ratio:	2:1				
Vessel Operating Temp. F:	205 Gas Inlet				
Vessel Operating Press. psig:	-.7 psig (14 psia)				
Code: N/A					
Stamp: N/A					

NOTES

1. Camco SS 1" x 1-1/2" Reducing Coupling
2. Vessel nozzle is angled 20 degrees down from horizontal.
3. Vessel nozzles are equally spaced and offset 20 degrees from other rows..
4. All fan sprays are mounted w/ spray patterns horizontal.

G5004.xls

I.T. CORPORATION	SPECIALTY EQUIPMENT SPECIFICATION 1669	IT CORP. SPEC. NO. 773481-G5005

NO	BY	DATE	REV.
D	JAN	05/12/98	CFC DRAFT
E	MSD	06/05/98	Draft Issue for EPA Review
F	JAN	07/09/98	DRAFT CFC

SHEET 1 OF 1

PROJECT NAME: FERNALD WPRAP OU1

JOB NO. 773481

LOCATION: FERNALD, OHIO

BY	APPR	DATE

AREA NO: 50
AREA NAME: GCS SYSTEM
TAG NO.: G - 5005 A - F
EQUIPMENT NAM SUBCOOL QUENCH SPRAY NOZZLE ASSEMBLY

HOLD

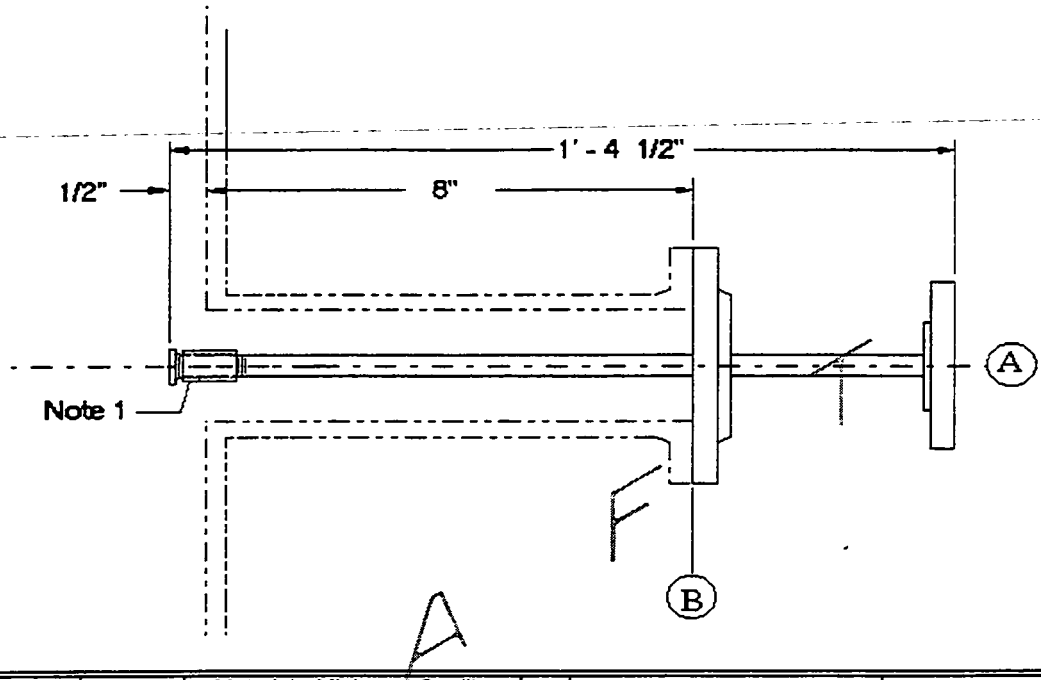

MATERIALS	Item	Thk.	Mat'l. Class	Material - Minimum Quality
	Spray Nozzle	*	SS	316
	Pipe	Sch 40	SS	304 Seamless
	Nozzle Necks		SS	304
	Flanges		SS	304
	Coupling		SS	304
	M.H. Cover			
	Supports			
	Bolts/Studs	Studs		Alloy
	Nuts	Haevy Hex		Alloy
	Gaskets	1/8"		TFE Filled

NOZZLE	Service	Mark	No.	Size	Rating	Face	Type
	Recirculation	A	1	1-1/2"	150#	RF	Flg.
	Vessel	B	1	3"	150#	RF	Red.

DESIGN DATA					
No. Units:	Six				
Liquid Specific Gravity:	1.05				
Operating Temperature, F:	100				
Design Temperature, F:	400				
Operating Pressure, psig:	38				
Design Pressure, psig:	150				
Atomization Media:	Mechanical				
Atomozation Temperature,F:	N/A				
Atomization Pressure,psig:	N/A				
Liquid Flow Rate, GPM:	53	Ea.	318	Total	
Nozzle Type:	Bete				
Nozzle Model No.	NF53090				
Included Spray Angle (Deg.)	90 Fan (Flat Spray)				
Nozzle Connection:	1" MNPT				
Turndown Ratio:	2:1				
Vessel Operating Temp. F:	205 Gas Inlet				
Vessel Operating Press. psig:	-.7 psig (14 psia)				
Code: N/A					
Stamp: N/A					

NOTES

1. Camco SS 1" x 1-1/2" Reducing Coupling
2. Vessel nozzles are equally spaced and offset 20 degrees from other rows..
3. All fan sprays are mounted w/ spray patterns horizontal.

G5005.xls

I.T. CORPORATION	SPECIALTY EQUIPMENT SPECIFICATION 1669	IT CORP. SPEC. NO. 773481-G5006

NO	BY	DATE	REV.
D	JAN	05/12/98	CFC DRAFT
E	MSD	06/05/98	Draft Issue for EPA Review
F	JAN	07/09/98	DRAFT CFC

SHEET 1 OF 1

PROJECT NAME: FERNALD WPRAP OU1

JOB NO. 773481

LOCATION: FERNALD, OHIO

BY	APPR	DATE

AREA NO: 50
AREA NAME: GCS SYSTEM
TAG NO.: G - 5006 A - F
EQUIPMENT NAM SUBCOOL QUENCH SPRAY NOZZLE ASSEMBLY

HOLD

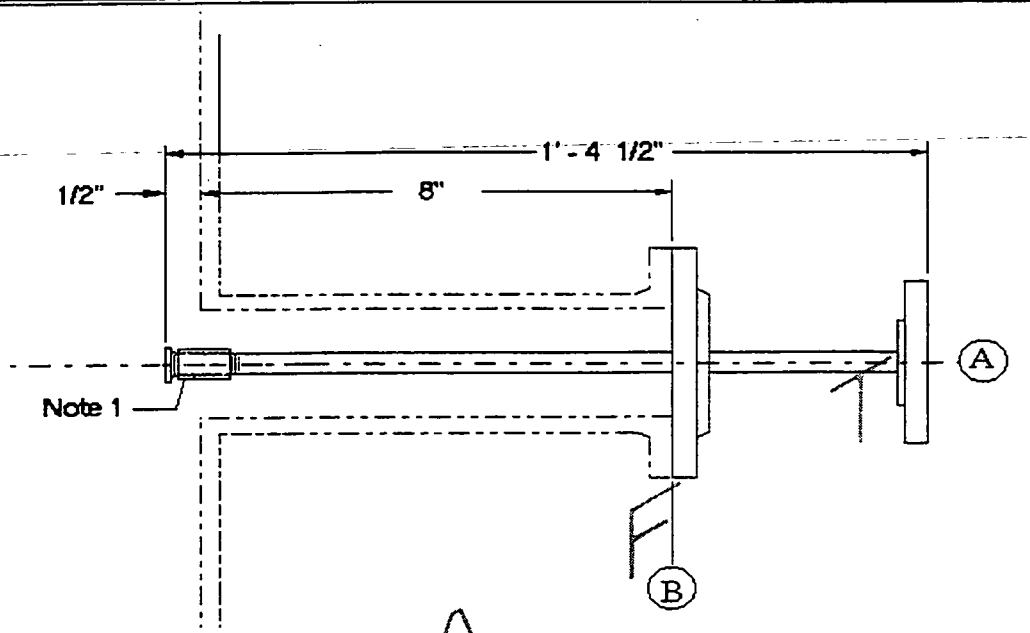

MATERIALS	Item	Thk.	Mat'l. Class	Material - Minimum Quality
	Spray Nozzle	*	SS	316
	Pipe	Sch 40	SS	304 Seamless
	Nozzle Necks		SS	304
	Flanges		SS	304
	Coupling		SS	304
	M.H. Cover			
	Supports			
	Bolts/Studs		Studs	Alloy
	Nuts		Haevy Hex	Alloy
	Gaskets		1/8"	TFE Filled

NOZZLE	Service	Mark	No.	Size	Rating	Face	Type
	Recirculation	A	1	1-1/2"	150#	RF	Flg.
	Vessel	B	1	3"	150#	RF	Red.

DESIGN DATA	
No. Units:	Six
Liquid Specific Gravity:	1.05
Operating Temperature, F:	100
Design Temperature, F:	400
Operating Pressure, psig:	38
Design Pressure, psig:	150
Atomization Media:	Mechanical
Atomozation Temperature,F:	N/A
Atomization Pressure,psig:	N/A
Liquid Flow Rate, GPM:	53 Ea. 318 Total
Nozzle Type:	Bete
Nozzle Model No.	NF53090
Included Spray Angle (Deg.)	90 Fan (Flat Spray)
Nozzle Connection:	1" MNPT
Turndown Ratio:	2:1
Vessel Operating Temp. F:	205 Gas Inlet
Vessel Operating Press. psig:	-.7 psig (14 psia)
Code: N/A	
Stamp: N/A	

NOTES

1. Camco SS 1" x 1-1/2" Reducing Coupling
2. Vessel nozzles are equally spaced.
3. All fan sprays are mounted w/ spray patterns horizontal.

000270

G5006.xls

I.T. CORPORATION	SPECIALTY EQUIPMENT SPECIFICATION 1669	IT CORP. SPEC. NO. 773481-G5007
		SHEET 1 OF 1
		PROJECT NAME FERNALD WPRAP OU1
		JOB NO. 773481
		LOCATION FERNALD, OHIO

NO	BY	DATE	REV.
D	JAN	05/12/98	CFC DRAFT
E	MSD	06/05/98	Draft Issue for EPA Review
F	JAN	07/09/98	DRAFT CFC

BY	APPR	DATE

AREA NO: 50
AREA NAME: GCS SYSTEM
TAG NO.: G - 5007 A - E
EQUIPMENT NAME SUBCOOL QUENCH SPRAY NOZZLE ASSEMBLY

HOLD

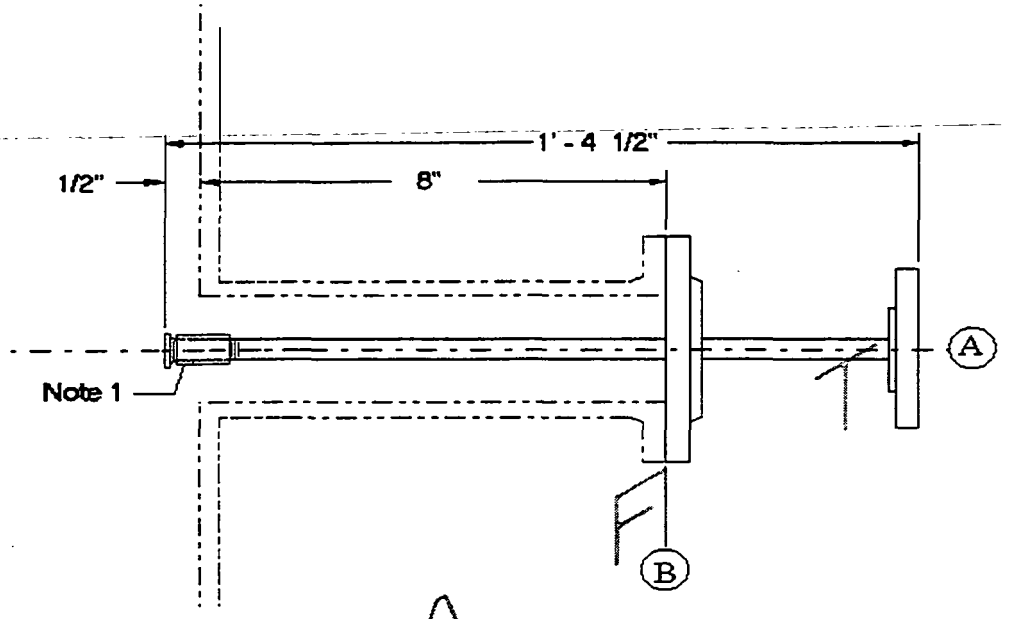

MATERIALS	Item	Thk.	Mat'l. Class	Material - Minimum Quality
	Spray Nozzle	*	SS	316
	Pipe	Sch 40	SS	304 Seamless
	Nozzle Necks	SS		304
	Flanges	SS		304
	Coupling	SS		304
	M.H. Cover			
	Supports			
	Bolts/Studs	Studs		Alloy
	Nuts	Haevy Hex		Alloy
	Gaskets	1/8"		TFE Filled

NOZZLES	Service	Mark	No.	Size	Rating	Face	Type
	Recirculation	A	1	1-1/2"	150#	RF	Flg.
	Vessel	B	1	4"	150#	RF	Red.

DESIGN DATA			
	No. Units:	Five	
	Liquid Specific Gravity:	1.05	
	Operating Temperature, F:	100	
	Design Temperature, F:	400	
	Operating Pressure, psig:	38	
	Design Pressure, psig:	150	
	Atomization Media:	Mechanical	
	Atomozation Temperature,F:	N/A	
	Atomization Pressure,psig:	N/A	
	Liquid Flow Rate, GPM:	95 Ea.	475 Total
	Nozzle Type:	Bete	
	Nozzle Model No.	NF53090	
	Included Spray Angle (Deg.)	90 Fan (Flat Spray)	
	Nozzle Connection:	1-1/2" MNPT	
	Turndown Ratio:	2:1	
	Vessel Operating Temp. F:	205 Gas Inlet	
	Vessel Operating Press. psig:	-.7 psig (14 psia)	
	Code:	N/A	
	Stamp:	N/A	

NOTES

1. Camco SS 1-1/2" x 1-1/2" Coupling
2. Vessel nozzle is angled 10 degrees down from horizontal.
3. Vessel nozzles are equally spaced.
4. All fan sprays are mounted w/ spray patterns horizontal.

000271

G5007.xls

1669

I.T. CORPORATION	SPECIALTY EQUIPMENT SPECIFICATION	IT CORP. SPEC. NO. 773481-G5008
		SHEET 1 OF 1
		PROJECT NAME FERNALD WPRAP OU1
		JOB NO. 773481
		LOCATION FERNALD, OHIO

NO	BY	DATE	REV.
D	JAN	05/12/98	CFC DRAFT
E	MSD	06/05/98	Draft Issue for EPA Review
F	JAN	07/09/98	DRAFT CFC

BY	APPR	DATE

AREA NO: 50
AREA NAME: GCS SYSTEM
TAG NO.: G - 5008
EQUIPMENT NAM THERMAL OXIDIZER BURNER ASSEMBLY

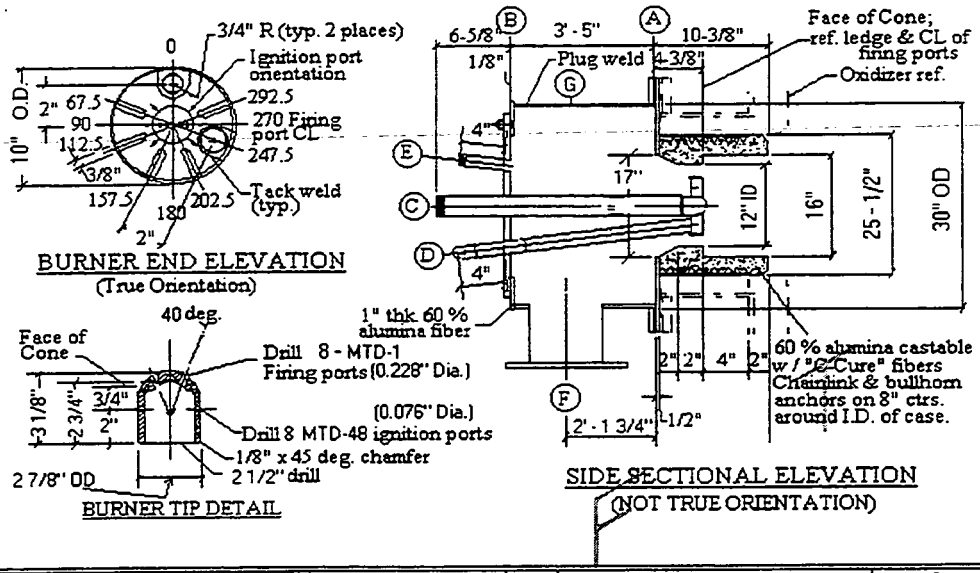

	Item	Thk.	Mat'l. Class	Material - Minimum Quality
MATERIALS	Housing	1/4"	CS	A36
	Pipe	Sch 40	SS	304 Seamless
	Nozzle Necks	SS		304
	Flanges	SS		304
	Coupling	SS		304
	M.H. Cover			
	Supports	CS		A36
	Bolts/Studs	Studs		Alloy
	Nuts	Heavy Hex		Alloy
	Gaskets	1/8" Full Face		High Temp. (Non-asbestos)

	Service	Mark	No.	Size	Rating	Face	Type
NOZZLE	Vessel	A	1	2' - 6"	N/A	FF	Note 1
	Burner	B	1	2' - 0"	N/A	FF	Note 2
	Fuel Gas	C	1	2"	150#	RF	Flg.
	Ignitor	D	1	4"	150#	RF	Flg.
	Sight Port	E	1	2"	N/A	Thrd	MNPT
	Comb. Air	F	1	12"	N/A	FF	Flg.
	Drain	G	1	1"	N/A	w/plug	FNPT

DESIGN DATA	
No. Units:	One
Burner Type:	Raw Gas Diffusion
Fuel Type:	Natural Gas .60 SG
Fuel Temperature, F:	70
Fuel Pressure, psig:	10 at burner
Primary Air Temperature, F:	70-100
Primary Air Pressure, in. WC:	7"
Atomization Media:	N/A
Atomozation Temperature,F:	N/A
Thermal Duty, MM Btu/Hr: Max	10
Thermal Duty, MM Btu/Hr: Nor	1.5
Thermal Duty, MM Btu/Hr: Min	1.5
Fuel Rate at Max. Load, SCFH	10000
Air Rate at Max. Load, SCFM	2200
Turndown Ratio:	12:1
Flame Failure Protection:	UV Scanner
Vessel Operating Temp. F:	250 - 350 Gas Inlet
Vessel Operating Press. psig:	-.7 psig (14 psia)
Ignitor Type:	Pilot Assy.
Combustion Intensity, Btu/Hr-Ft3	34000
Flame Characteristics/Shape:	Conical
Design Temperature, F: 600	Design Pressure, psig: 2

NOTES

1. 3' - 2" OD x 1/2" PL. w/ 40 - 3/4" diam. Holes on 3' - 0" BC
2. 2' - 0" OD x 3/8" PL w/ 28 -3/4" diam. Holes on 2' - 3" BC
3. Paint all CS surfaces per Spec. 09900 - Finish 206

000272

G5008.xls

1669

I.T. CORPORATION	MASS FLOW FEEDER SPECIFICATION	IT CORP. SPEC. NO. 773481-H1001
		SHEET 1 OF 1
		PROJECT NAME FERNALD WPRAP OU1
		JOB NO. 773481
		LOCATION FERNALD, OHIO

NO	BY	DATE	REV.
D	RJB	05/12/98	CFC DRAFT
E	MSD	6/5/98	Draft Issue for EPA Review
F	RJB	7/9/98	DRAFT CFC

BY	APPR	DATE

AREA NO: 10
AREA NAME: SOLID FEED SYSTEM SYSTEM
TAG NO.: H-1001A or B
EQUIPMENT NAME: MASS FLOW SCREW FEEDER

1		Manufacturer: J.C. Steele	Model: 124-C	
2		Type:	Even Clay Feeder	
3		Quantity:	2 (Two)	
4		Operating pressure, in. w.c.	Atmospheric	
5		Operating temperature, deg F	0 - 100	
6	D	Operating time, hrs/day	24 continuous	
7	E	Contents lethal?	No	
8	S	Design pressure, psi	Atmospheric	
9	I	Design max. temperature, deg F	120	
10	G	Feed material	Soils & Sludges	
11	N	Feed maximum particle size, inches	4	
12		Feed moisture range, %(wet)	15 - 67	
13	D	Feed bulk dens. range, lb/cu. ft	70 - 130	
14	A	Feed nominal density, lb/cu. ft	90	
15	T	Feed angle of repose, deg.	40 - 45	
16	A	Design feed rate, ton/hr / ea.	25	
17		Normal feed rate, ton/hr / ea.	12	
18		Orientation:	Horizontal	
19		Rotational speed, rpm	•	
20		Screw dia., inches	10	
21		Screw length, ft.	Approx. 12	
22		Overall length, ft.	Approx. 16	
23		Wind Load: 80 mph, I = 1.00	Seismic: OBBC Sec. 1612.0	
24		Feed Screw Weight: • lbs	Feed Screw w/Material: • lbs	
25		Main Drive Type: Electric., Var. A.C.	Drive HP: 30	
26		Cross Screw Drive: Electric	Drive HP: 1-1/2	
27				

		Item	Thickness	Mat'l - Minimum Quality
28				
29	M	Hopper	1/4"	A-36, reinforced
30	A	Hopper floor	1/4"	A-36, reinforce, hinged
31	T	Auger shaft		3-7/8" dia.
32	E	Shaft spirals	10" dia.	Notched type, 28PC chrome alloy
33	R	Support Frame		A-36
34	I	Bolts/Studs		A-307, Gr C
35	A	Nuts		Steel, Heavy Hex
36	L	Gaskets		

37	Service	Mark	No.	Size	Rating	Face
38	Hopper opening	A	1	10'x3.5'	n/a	2.5"x1/4" L
39	Discharge	B	1	12"x40"	n/a	
40						

41
42 N 1. Feeder shall be equipped with cross screw at discharge to
43 O facilitate material movement
44 T 2. Vendor to complete information marked •
45 E 3. Four foot high, straight-sided hopper extension to be incuded.
46 S (not shown)
47 4. Refer to J.C. Steele & Sons Dwg. No. SK-83-61A
48
49
50

HOLD

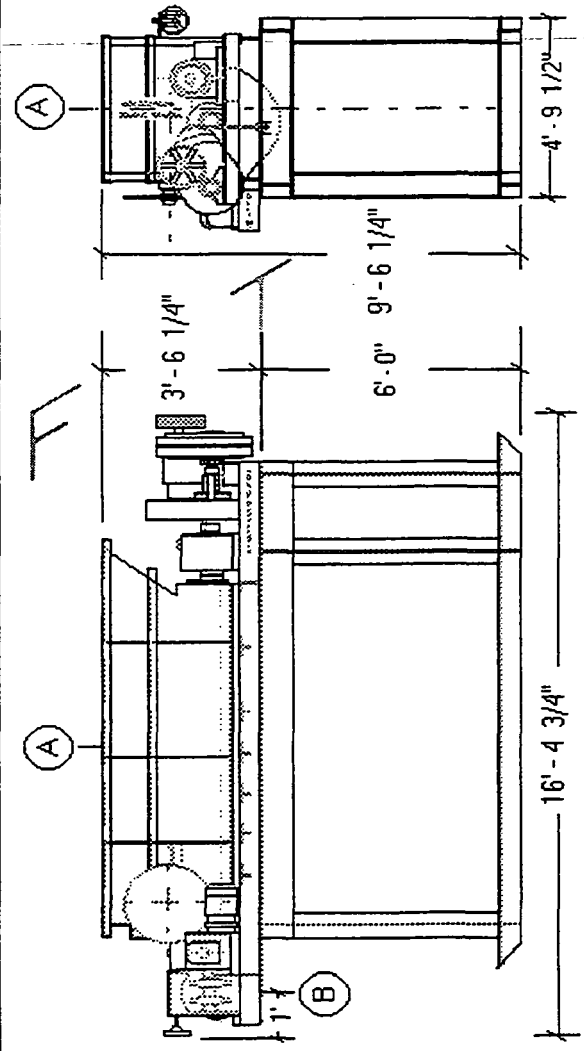

000273

H1001.xls

1669

I.T. CORPORATION	BELT FEED CONVEYOR SPECIFICATION	IT CORP. SPEC. NO. 773481-H1002A

NO	BY	DATE	REV.
D	RJB	05/12/98	CFC DRAFT
E	MSD	6/5/98	Draft Issue for EPA Review
F	RJB	7/9/98	DRAFT CFC

SHEET 1 OF 1

PROJECT NAME: FERNALD WPRAP OU1

JOB NO. 773481

LOCATION: FERNALD, OHIO

BY	APPR	DATE

AREA NO: 10
AREA NAME: SOLID FEED SYSTEM SYSTEM
TAG NO.: H-1002A
EQUIPMENT NAME: BELT FEED CONVEYOR

1	DESIGN DATA	Manufacturer: *	Model: *
2		Type:	Troughing Belt
3		Quantity:	2 (Two)
4		Operating pressure, in. w.c.	Atmospheric
5		Operating temperature, deg F	0 - 100
6		Operating time, hrs/day	24 continuous
7		Contents lethal?	No
8		Design pressure, psi	Atmospheric
9		Design temperature, deg F	120
10		Feed material	Soils & Sludges
11		Feed maximum particle size, inches	4
12		Feed moisture range, %(wet)	15 - 67
13		Material bulk dens. range (lb/cu. ft)	70 - 130
14		Solids flow rate, tons/hr	25
15		Belt width, inches:	24
16		Conveyor length, ft:	Approx. 60
17		Conveyor orientation:	Inclined at 18 deg.
18		Troughing angle, degrees:	35
19		Speed at head pulley, ft/min:	100
20		Wind Load: 80 MPH, I = 1.00	Seismic: OBBC Sec. 1612.0
21		Conveyor Weight: * lbs	Conveyor w/material: * lbs
22		Motor HP: *	
23			

		Item	Thickness	Mat'l - Minimum Quality
24	MATERIALS	Item	Thickness	Mat'l - Minimum Quality
25		Bottom pan	1/4"	A-36 orAR-235
26		Top cover	7 Ga.	A-36
27		Chutes	1/4"	A-36
28		Supports		A-36
29		Bolts/Studs		A-307 Gr C
30		Nuts		Heavy Hex.
31		Conveyor belt	1/4"	24" wide, 3-ply, 285 PIW rating
32		Troughing idlers	5" dia., 4' centers, CEMA class C, 35 deg.	
33		Return idlers	5" dia., 10' centers, CEMA class C	
34		Skirt boards	Located at bottom 10' of conveyor	

	Service	Mark	No.	Size	Rating	Face	Type
35	Service	Mark	No.	Size	Rating	Face	Type
36	Feed matl. entry	A	1	24"x40"	n/a	2"x1/4"L	Flg.
37	Feed matl. disch.	B	1	36"x36"	n/a	2"x1/4"L	Flg.
38							
39							
40							

41 NOTES
1. Portion of conveyor outside of building shall be totally enclosed;
42 Portion of conveyor inside building shall be open.
43 2. OPTIONAL: Conveyor bottom catch pan shall consist of 1/4"
44 AR-235 and shall be equipped with a drag flight mechanism
45 to remove accumulated feed material.
46 3. Conveyor top cover shall be constructed of 7 Ga. C.s. and shall
47 have removable panels for ease of maintenance
48 4. Conveyor open section shall be equipped with a Ramsey
49 single idler weigh belt scale.
50 5. Refer to Procurement Spec. no. 11110
51 6. Vendor to complete information marked *
52

HOLD

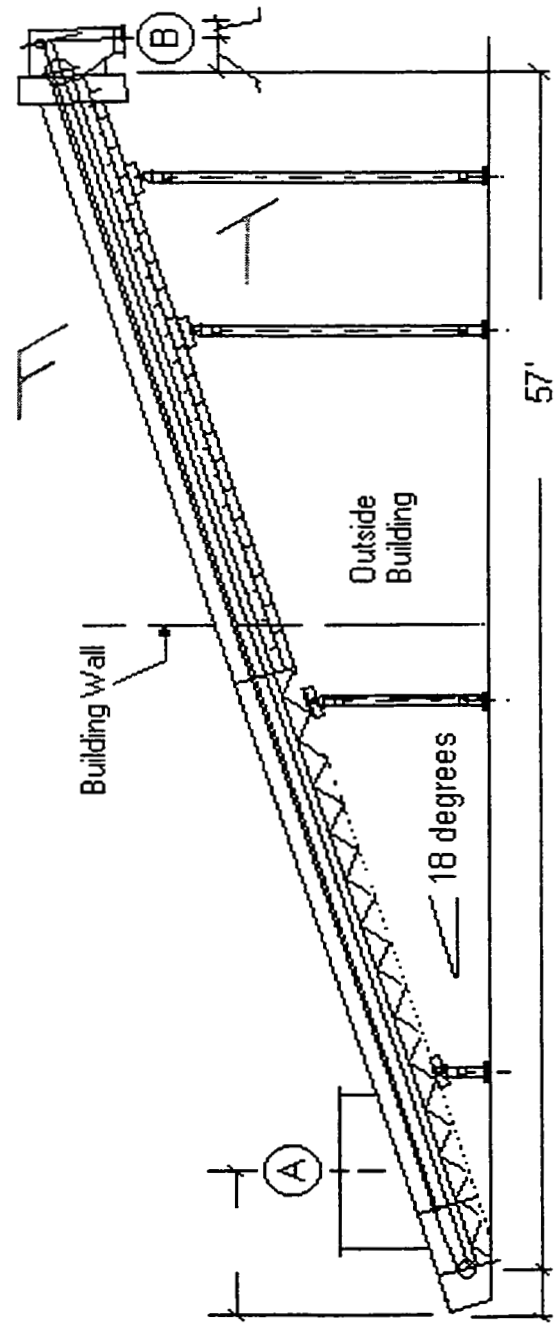

H1002.xls

000274

1669

I.T. CORPORATION	BELT FEED CONVEYOR SPECIFICATION	IT CORP. SPEC. NO. 773481-H1002B
		SHEET 1 OF 1
		PROJECT NAME FERNALD WPRAP OU1
		JOB NO. 773481
		LOCATION FERNALD, OHIO

NO	BY	DATE	REV.
D	RJB	05/12/9	CFC DRAFT
E	MSD	6/5/98	Draft Issue for EPA Review
F	RJB	7/9/98	DRAFT CFC

BY	APPR	DATE

AREA NO: 10
AREA NAME: SOLID FEED SYSTEM SYSTEM
TAG NO.: H-1002B
EQUIPMENT NAM BELT FEED CONVEYOR

1		Manufacturer: *	Model: *
2		Type:	Troughing Belt
3		Quantity:	2 (Two)
4		Operating pressure, in. w.c.	Atmospheric
5		Operating temperature, deg F	0 - 100
6	D	Operating time, hrs/day	24 continuous
7	E	Contents lethal?	No
8	S	Design pressure, psi	Atmospheric
9	I	Design temperature, deg F	120
10	G	Feed material	Soils & Sludges
11	N	Feed maximum particle size, inches	4
12		Feed moisture range, %(wet)	15 - 67
13	D	Material bulk dens. range (lb/cu. ft)	70 - 130
14	A	Solids flow rate, tons/hr	25
15	T	Belt width, inches:	24
16	A	Conveyor length, ft:	Approx. 90
17		Conveyor orientation:	Inclined at 12 deg.
18		Troughing angle, degrees:	35
19		Speed at head pulley, ft/min:	100
20		Wind Load: 80 MPH, I = 1.00	Seismic: OBBC Sec. 1612.0
21		Conveyor Weight: * lbs	Conveyor w/material: * lbs
22		Motor HP: *	
23			

		Item	Thickness	Mat'l - Minimum Quality
24				
25	M	Bottom pan	1/4"	A-36 orAR-235
26	A	Top cover	7 Ga.	A-36
27	T	Chutes	1/4"	A-36
28	E	Supports		A-36
29	R	Bolts/Studs		A-307 Gr C
30	I	Nuts		Heavy Hex.
31	A	Conveyor belt	1/4"	24" wide, 3-ply, 285 PIW rating
32	L	Troughing idlers	5" dia., 4' centers, CEMA class C, 35 deg.	
33	S	Return idlers	5" dia., 10' centers, CEMA class C	
34		Skirt boards	Located at bottom 10' of conveyor	

	Service	Mark	No.	Size	Rating	Face	Type
35							
36	Feed matl. entry	A	1	24"x40"	n/a	2"x1/4"L	Flg.
37	Feed matl. disch.	B	1	36"x36"	n/a	2"x1/4"L	Flg.
38							
39							
40							

41		1. Portion of conveyor outside of building shall be totally enclosed;
42		Portion of conveyor inside building shall be open.
43	N	2. OPTIONAL: Conveyor bottom catch pan shall consist of 1/4"
44	O	AR-235 and shall be equipped with a drag flight mechanism
45	T	to remove accumulated feed material.
46	E	3. Conveyor top cover shall be constructed of 7 Ga. C.s. and shall
47	S	have removable panels for ease of maintenance
48		4. Conveyor open section shall be equipped with a Ramsey
49		single idler weigh belt scale.
50		5. Refer to Procurement Spec. no. 11110
51		6. Vendor to complete information marked *

HOLD

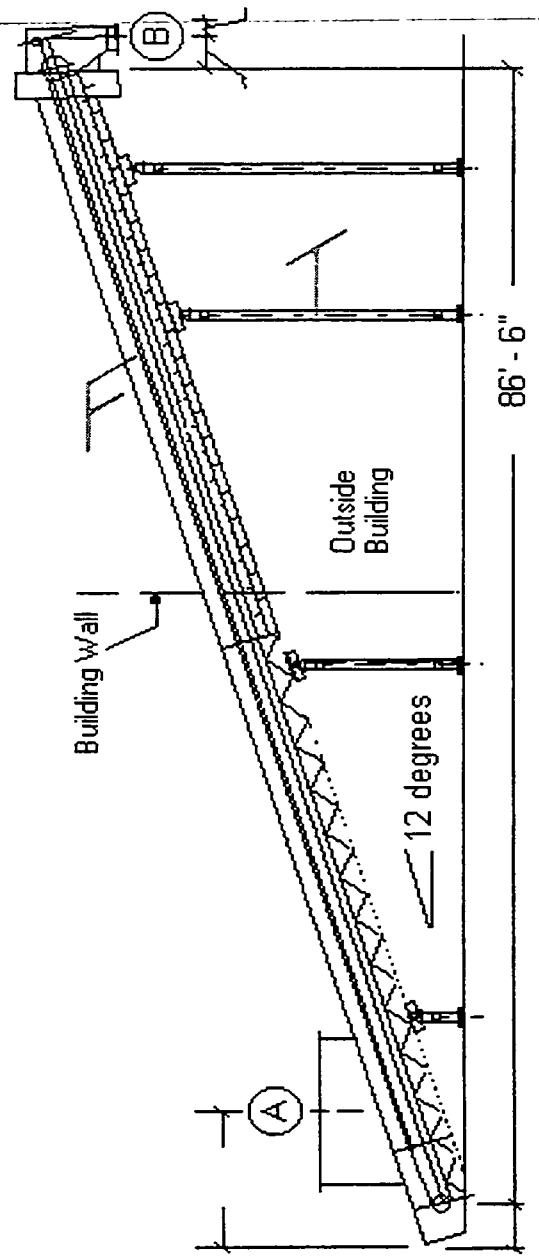

000275

1669

FEED SCREW SPECIFICATION

I.T. CORPORATION

NO	BY	DATE	REV.
D	RJB	05/12/98	CFC DRAFT
E	MSD	6/5/98	Draft Issue for EPA Review
F	RJB	7/9/98	DRAFT CFC

IT CORP. SPEC. NO. 773481-H2001

SHEET 1 OF 1

PROJECT NAME: FERNALD WPRAP OU1

JOB NO. 773481

LOCATION: FERNALD, OHIO

BY	APPR	DATE

AREA NO: 20
AREA NAME: DRYER SYSTEM
TAG NO.: H-2001A & B
EQUIPMENT NAME: DRYER FEED SCREW

HOLD

1	DESIGN DATA	Manufacturer: *	Model: *
2		Type:	Dual Screw
3		Quantity:	2 (Two)
4		Operating pressure, in. w.c.	Atmospheric
5		Operating temperature, deg F	0 - 200
6		Operating time, hrs/day	24 continuous
7		Contents lethal?	No
8		Design pressure, psi	Atmospheric
9		Design max. temperature, deg F	300
10		Feed material	Soils & Sludges
11		Feed maximum particle size, inches	4
12		Feed moisture range, %(wet)	15 - 67
13		Feed bulk dens. range, lb/cu. ft	70 - 130
14		Feed nominal density, lb/cu. ft	90
15		Feed angle of repose, deg.	40 - 45
16		Design feed rate, ton/hr / ea.	25
17		Normal feed rate, ton/hr / ea.	11-15
18		Orientation:	Horizontal
19		Rotational speed, rpm	*
20		Screw dia., inches	18
21		Screw length, ft.	Approx. 17'-6"
22		Overall length, ft.	Approx. 21'
23		Wind Load: 80 mph, I = 1.00	Seismic: OBBC/Sec. 1612.0
24		Feed Screw Weight: * lbs	Feed Screw w/Material: * lbs
25		Drive Type: Hydraulic, var. speed	Drive HP: *
26			

		Item	Thickness	Mat'l - Minimum Quality
27	MATERIAL			
28		Housing	1/4"	304 SS
29		Housing Liner	n/a	n/a
30		Screws Flighting	1/2"	AR-360
31		Screw Shafts	6" dia.	6" Sch. 160 pipe
32		Stub Shafts	*	*
33		Support Frame		A-36
34		Rails		100 lb ASCE
35		Bolts/Studs		A-307, Gr C
36		Nuts		Steel, Heavy Hex
37		Gaskets		

	Service	Mark	No.	Size	Rating	Face	Type
38							
39	Feed matl. entry	A	1	36"x36"	n/a	2"x1/4" L	Flg.
40	Dryer entry plate	B	1	24"x36"	n/a	2"x1/4" L	Flg.
41							

NOTES

42. 1. Feed Screw shall be rail-mounted for ease of retraction
43. 2. Cooling jacket for screw feeder not required
44. 3. Screws shall be be fitted with double end bearings
45. 4. Screws shall be coupled to front and rear stub shaft.
46. 5. Screw shaft to be Sch. 160 pipe
47. 6. Screws shall be stepped pitch, with initial 6' at 9" pitch and
48. remainder of screw at 12" pitch
49. 7. Refer to Procurement Spec. no. 11110
50. 8. Vendor to complete information marked *
51.

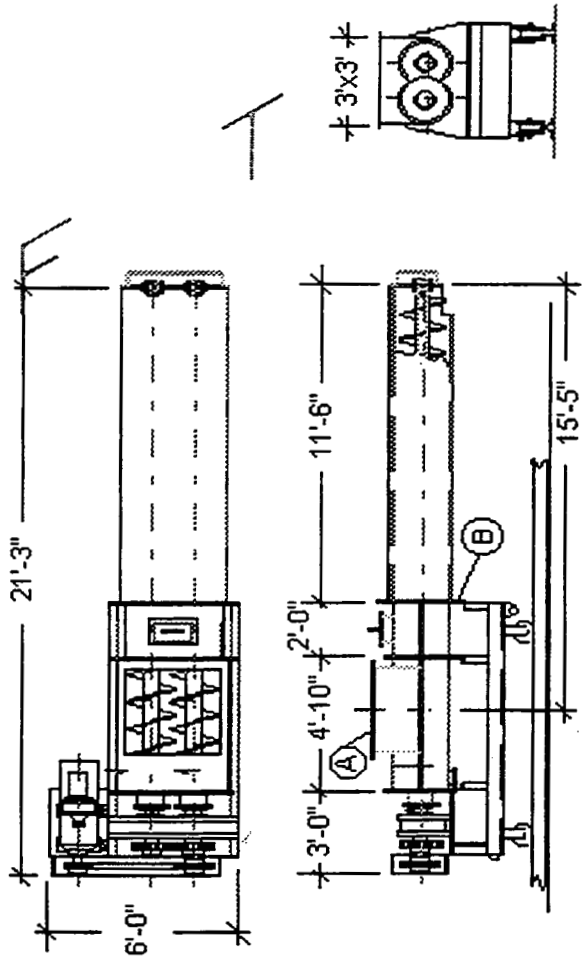

000276

H2001.xls

1669

I.T. CORPORATION	DRAG CONVEYOR SPECIFICATION	IT CORP. SPEC. NO. 773481-H3001
		SHEET 1 OF 1
		PROJECT NAME FERNALD WPRAP OU1
		JOB NO. 773481
		LOCATION FERNALD, OHIO

NO	BY	DATE	REV.
D	RJB	05/12/98	CFC DRAFT
E	MSD	6/5/98	Draft Issue for EPA Review
F	RJB	7/9/98	DRAFT CFC

BY	APPR	DATE

AREA NO: 30
AREA NAME: DRIED PRODUCT CONVEYOR SYSTEM
TAG NO.: H-3001A & B
EQUIPMENT NAME: DRAG FLIGHT CONVEYOR

1	DESIGN DATA	Manufacturer: *	Model: *
2		Type:	Drag Conveyor
3		Quantity:	2 (Two)
4		Operating pressure, in. w.c.	Atmospheric
5		Operating temperature, deg F	150 - 250
6		Operating time, hrs/day	24 continuous
7		Contents lethal?	No
8		Design pressure, psig	1
9		Design temperature, deg F	800
10		Material	Dried soils & sludges
11		Maximum particle size, inches	8
12		Moisture range, %(wet)	5 - 20
13		Material bulk dens. Range, lb/cu. ft	70 - 130
14		Material bulk dens., ave, lb/cu.ft	90
15		Solids flow rate, tons/hr	22
16		Conveyor width, inches:	42
17		Conveyor orientation:	Tail-level; Head-31 deg. incline
18		Conveyor 3001A level length	Approx. 15'
19		Conveyor 3001B level length	Approx. 45'
20		Conveyor incline length	Approx. 50
21		Conveyor discharge elevation, ft.	Approx. 24
22		Speed, ft/min	15
23		Wind Load: 80 MPH, I = 1.00	Seismic: OBBC Sec. 1612.0
24		Conveyor Weight: * lbs	Conveyor w/material: * lbs
25		Motor HP: *	
26			

		Item	Thickness	Mat'l - Minimum Quality
27	MATERIALS	Bottom	3/4"	AR-400
28		Sides	1/4"	A-36
29		Top cover	1/4"	A-36
30		Chutes	1/4"	A-36
31		Flights	3/4"	AR-235
32		Supports		A-36
33		Bolts/Studs		A-307 Gr C
34		Nuts		Heavy Hex.
35		Flight height:	6"	Chain Strength: 100,000 lb
36		Flight centers:	24"	Head shaft dia.: 4-7/16"
37		Chain pitch	6"	
38		Chain hardness:	460-512 Br.	

	Service	Mark	No.	Size	Rating	Face	Type
39	Matl. entry	A	1	36"x34"	n/a	3"x3/8"L	Flg.
40	Matl. discharge	B	1	30"x24"	n/a	3"x3/8"L	Flg.
41							
42							

NOTES

1. Conveyor shall be totally enclosed with air-tight seals and and gaskets on all shafts and covers.
2. Bottom wear plate shall be bolted in place and removable in sections.
3. Conveyor shall be equipped with a pnuematic cylinder chain tensioning system.
4. Refer to Procurement Spec. no. 11112
5. Vendor to complete information marked *

HOLD

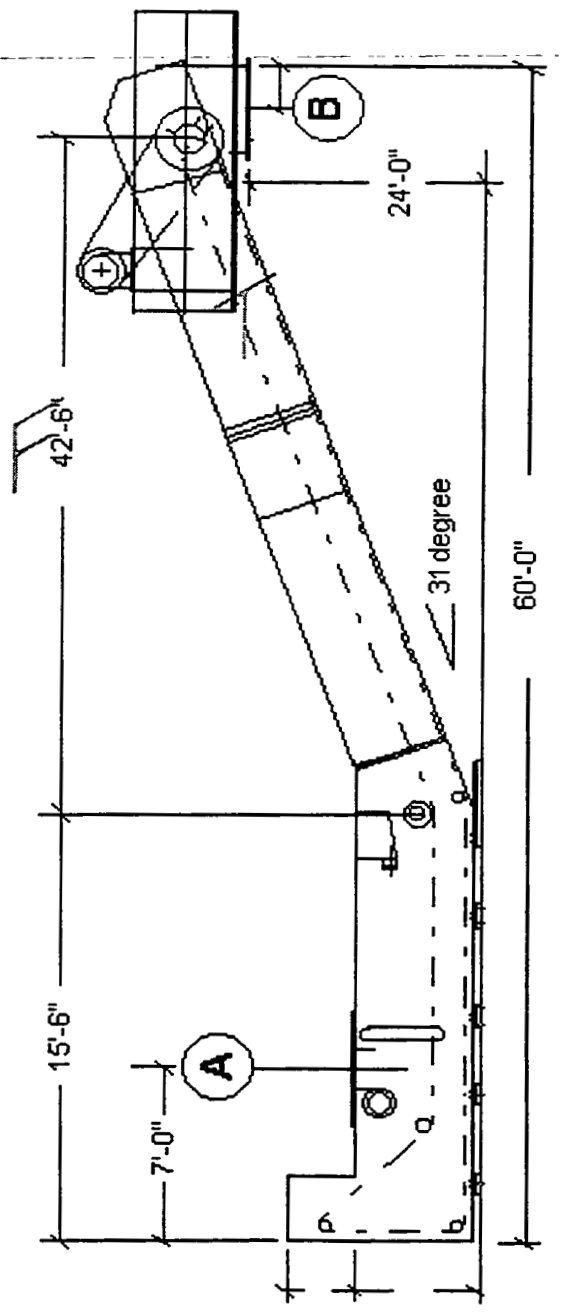

000277

H3001.xls

1669

I.T. CORPORATION	DOUBLE DUMP VALVE SPECIFICATION	IT CORP. SPEC. NO. 773481-H3002
		SHEET 1 OF 1
		PROJECT NAME FERNALD WPRAP OU1
		JOB NO. 773481
		LOCATION FERNALD, OHIO

NO	BY	DATE	REV.
D	RJB	05/12/98	CFC DRAFT
E	MSD	06/5/98	Draft Issue for EPA Review
F	RJB	7/9/98	DRAFT CFC

BY	APPR	DATE

AREA NO: 30
AREA NAME: DRIED PRODUCT CONVEYOR SYSTEM
TAG NO.: H-3002A / B
EQUIPMENT NAME: DOUBLE DUMP VALVES

HOLD

1	DESIGN DATA	Manufacturer: *	Model: *
2		Type:	Double Dump
3		Quantity:	2 (Two)
4		Operating pressure above, in. w.c.	-1 in.w.c.
5		Operating pressure below, in.w.c.	Atmospheric
6		Operating temperature, deg F	150 - 250
7		Operating time, hrs/day	24 continuous
8		Contents lethal?	No
9		Design pressure, psi	Atmospheric
10		Design temperature, deg F	800
11		Material	Dried soils & sludges
12		Maximum particle size, inches	8
13		Moisture range, %(wet)	5 - 20
14		Material bulk dens. Range, lb/cu. ft	70 - 130
15		Material bulk dens., ave, lb/cu.ft	90
16		Solids flow rate, tons/hr	22
17		Inside dimensions, inches	20 x 30
18		Orientation	Vertical
19			
20		Height, inches	5' 0-1/8"
21		Min. cycle time, seconds	Approx. 15
22			
23			
24		Wind Load: 80 MPH, I = 1.00	Seismic: OBBC Sec. 1612.0
25		Weight: * lbs	Weight w/material: * lbs
26		Motor HP: N/A	
27			

		Item	Thickness	Mat'l - Minimum Quality
28	MATERIALS			
29		Body	3/8"	A-36
30		Seat	3/8"	304 SS
31		Flap	1/2"	304 SS
32		Air Cylinder Seals		Viton
33				
34		Supports		A-36
35		Bolts/Studs		
36		Nuts		
37				
38				
39				
40				

	Service	Mark	No.	Size	Rating	Face	Type
41							
42	Compr. Air Conn.	A	4	3/4"	150 lb	n/a	FPT
43							
44							
45							

46 NOTES
1. All flap gate cycle control will be performed by IT's PLC
47
48 2. Dry compressed air required at 80 psig and ___scfm for
49 each cylinder stroke; Time-averaged air required is ___scfm
50 3. Refer to Procurement Spec. no. 11112
51 4. Vendor to complete information marked *
52

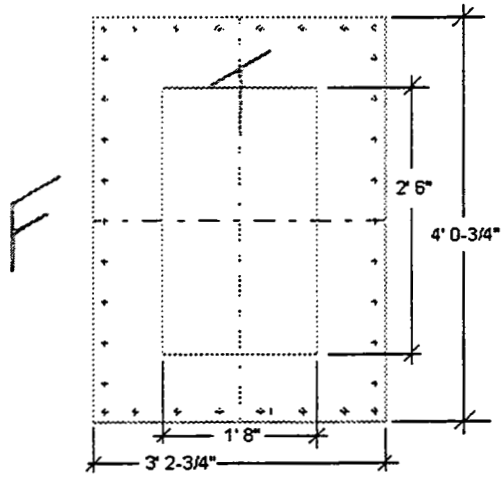

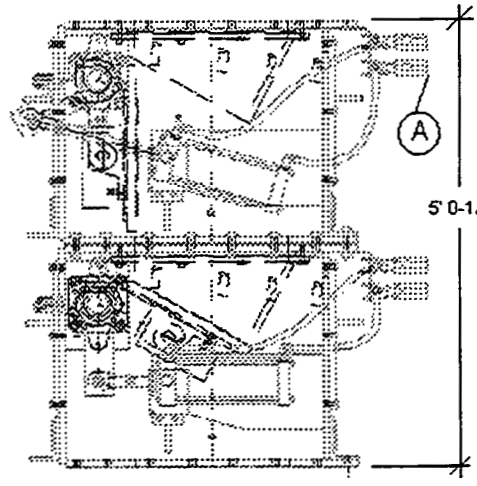

000278

S3001.xls

1669

I.T. CORPORATION	PUGMILL SPECIFICATION	IT CORP. SPEC. NO. 773481-H3003
		SHEET 1 OF 1
		PROJECT NAME FERNALD WPRAP OU1
AREA NO: 30 AREA NAME: DRIED PRODUCT CONVEYOR SYSTEM TAG NO.: H-3003A & B EQUIPMENT NAME: PUGMILL		JOB NO. 773481
		LOCATION FERNALD, OHIO

NO	BY	DATE	REV.
D	RJB	05/12/98	CFC DRAFT
E	MSD	6/5/98	Draft Issue for EPA Review
F	RJB	7/9/98	Issue for Preliminary Design

BY	APPR	DATE

1	DESIGN DATA	Manufacturer: Portec	Model: 50
2		Type:	Pugmill
3		Quantity:	2 (Two)
4		Operating pressure, in. w.c.	Atmospheric
5		Operating temperature, deg F	150 - 250
6		Operating time, hrs/day	24 continuous
7		Contents lethal?	No
8		Design pressure, psi	Atmospheric
9		Design temperature, deg F	800
10		Material	Dried soils & sludges
11		Maximum particle size, inches	8
12		Moisture range, %(wet)	5 - 20
13		Material bulk dens. Range, lb/cu. ft	70 - 130
14		Material bulk dens., ave, lb/cu.ft	90
15		Solids flow rate, tons/hr	22
16		Width	4' 3-3/4"
17		Overall Length	11'
18			Approx. 14
19			Approx. 50
20			Approx. 17
21		Speed, ft/min	10
22		Wind Load: 80 MPH, I = 1.00	Seismic: OBBC Section 1612.0
23		Conveyor Weight: * lbs	Conveyor w/material: * lbs
24		Motor HP: *	
25			

26	MATERIALS	Item	Thickness	Mat'l - Minimum Quality
27		Bottom		A-36
28		Sides		A-36
29		Top cover		A-36
30		Chutes		A-36
31		Paddles		
32		Shafts		
33		Bolts/Studs		A-307 Gr C
34		Nuts		Heavy Hex.
35		Paddle size		
36		No. of of paddles		
37				
38				

39		Service	Mark	No.	Size	Rating	Face	Type
40		Matl. entry	A	1	20"x30"	n/a	3"x3/8"L	Flg.
41		Matl. discharge	B	1	15"x48"	n/a	3"x3/8"L	Flg.
42								
43								

44 NOTES
45 1. Pugmill shall be totally enclosed with air-tight seals and
46 and gaskets on all shafts and covers.
47 2. Vendor to complete information marked *
48
49
50
51
52

HOLD

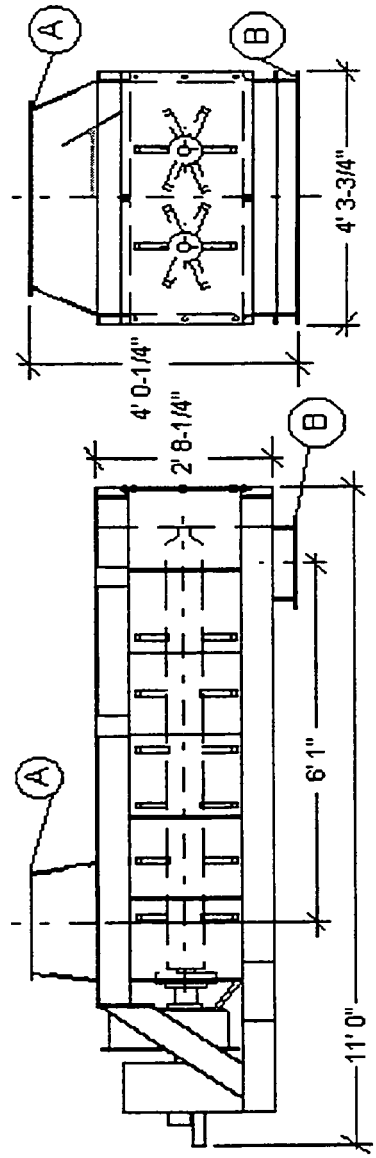

000279

H3003.xls

1669

I.T. CORPORATION	CONVEYOR SPECIFICATION	IT CORP. SPEC. NO. 773481-H5001

No.	BY	DATE	REV.
D	RJB	5/12/98	CFC DRAFT
E	MSD	6/5/98	Draft Issue for EPA Review
F	RJB	7/9/98	DRAFT CFC

SHEET 1 OF 1

PROJECT NAME: FERNALD WPRAP OU1

JOB NO. 773481

LOCATION: FERNALD, OHIO

BY	APPR	DATE

AREA NO: 50
AREA NAME: GCS SYSTEM
TAG NO.: H-5001 A/B
EQUIPMENT NAME: CYCLONE SOLIDS TRANSFER SCREW

1		No. Units:	2 (TWO)	Field Erected? NO
2		Operating pressure, in. w.c.		Atmospheric
3		Operating temperature, deg F		300 - 800
4		Operating time, hrs/d		24 continuous
5		Contents lethal?		No
6		Design pressure, psi		Atmospheric
7	D	Design temperature, deg F		800
8	E	Material		Cyclone Discharge Soil Fines
9	S	Solids bulk density range, lb/cu. Ft		30 to 100
10	I	Solids bulk density, ave., lb/cu.ft		50
11	G	Typical solids flow rate, lb/hr		620
12	N	Max. design solids flow rate, lb/hr		2000
13		Design % fill		15
14	D	Screw RPM		15
15	A	Code:	NONE	Stamp: NO
16	T	Radiograph:	NONE	Stress Relieve: NO
17	A	Type Supports:		
18		Orientation:	Horizontal	
19		Insulation:	NONE	
20		Nominal Size	9"	
21		Length:	8'6" from centerline of inlet A to centerline of outlet B	
22		Sandblast:	NO	Paint: Mfgr Stamdard
23		Wind Load:	80 mph, I = 1.00 MPH	Seismic: OBBC Sec. 1612.0
24		Weight Empty:	* lbs	Weight Full of Ash: * lbs
25	M	Mfgr:	*	Turbine: Electric
26	O	Speed:	1800 rpm	HP: 1
27	T	Volts:	480 V	Enclosure: TEFC
28	O	Phase:	3	Service Factor: 1.15
29	R	Cycles:	60 Hz	Drive: Belt

		Item	Thickness	Mat'l Class	Mat'l - Minimum Quality
30	M				
31	A	Trough	1/4"		c.s. w/ 1 1/2" L top flange, 1/4" end flg
32	T	Trough Ends	1/4"		c.s. w / bearing mtg. Bracket
33	E	Trough Cover	10 Ga		c.s., flanged & bolted
34	R	Screw	1/4"		c.s., 9" dia. full pitch helicoid screw
35	I	Screw shaft			c.s, 2 1/2" sch. 40 pipe
36	A	Bolts/Studs	A-307		GR C
37	L	Nuts	Steel		Heavy Hex.
38		Gaskets	1/8" Teflon or		Gortex

	Service	Mark	No.	Size	Rating	Face	Type
39							
40	Inlet	A	3	8" x 8"	n/a	RF	Flg.
41	Outlet	B	1	10" x 10"	n/a	RF	Flg.

42		Conveyor to Include:
43		
44	F	1. Covers to be bolt on, gasketed, air tight
45	E	2. Screw to be in 1 section with no hangers
46	A	3. Tail shaft to have split gland seal and pedestal mounted
47	T	pillow block bearing
48	U	4. Pillow block bearing mounted on a slider plate for expansion
49	R	5. Drive to be shaft mounted screw conveyor drive on the
50	E	discharge end
51	S	6. Tail shaft to have a zero speed indicator
52		
53		NOTE: Vendor to complete information marked *

HOLD

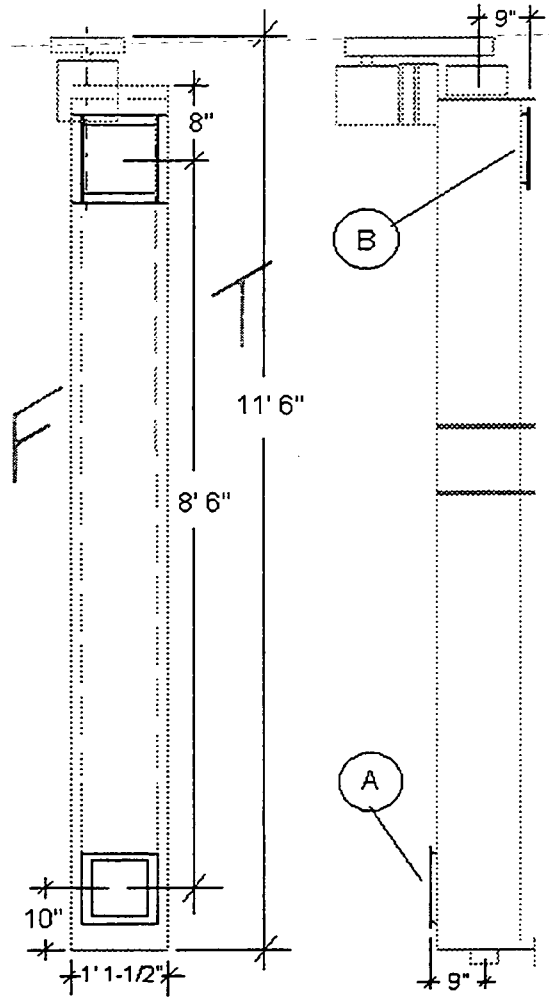

000280

H5001.xls

I.T. CORPORATION	1669 DOUBLE DUMP VALVE SPECIFICATION	IT CORP. SPEC. NO. 773481-H5002
		SHEET 1 OF 1
		PROJECT NAME FERNALD WPRAP OU1
AREA NO: 50		JOB NO. 773481
AREA NAME: GCS SYSTEM		LOCATION FERNALD, OHIO
TAG NO.: H-5002A / B		
EQUIPMENT NAME: CYCLONE DOUBLE DUMP VALVES		

No.	BY	DATE	REV.
D	RJB	5/12/98	CFC Draft
E	MSD	6/5/98	Draft Issue for EPA Review
F	RJB	7/9/98	DRAFT CFC

BY	APPR	DATE

1	DESIGN DATA	Manufacturer: Plattco	Model: S4-822
2		Type:	Double Dump
3		Quantity:	2 (Two)
4		Operating pressure above, in. w.c.	-5 in.w.c.
5		Operating pressure below, in.w.c.	Atmospheric
6		Operating temperature, deg F	300 - 800
7		Operating time, hrs/day	24 continuous
8		Contents lethal?	No
9		Design pressure, psi	Atmospheric
10		Design temperature, deg F	800
11		Material	Cylcone discharge soil fines
12		Maximum particle size, inches	1
13		Moisture range, %(wet)	0 - 10
14		Material bulk dens. Range, lb/cu. ft	30 - 100
15		Material bulk dens., ave, lb/cu.ft	50
16		Typical solids flow rate, lb/hr	620
17		Max. design solids flow rate, lb/hr	1600
18		Inside dimensions, inches	8 x 8
19		Orientation	Vertical
20		Seat Angle, degrees	*
21		Height, inches	1' 4-1/16"
22		Min. cycle time, seconds	Approx. 10
23			
24		Wind Load: 80 MPH, I = 1.00	Seismic: OBBC Sec. 1612.0
25		Weight: lbs	Weight w/material: * lbs
26		Motor HP: N/A	
27			

28	MATERIALS	Item	Thickness	Mat'l - Minimum Quality
29		Body	*	cast iron
30		Seat	*	cast iron
31		Flap	*	cast iron
32		Air Cylinder Seals		*
33				
34		Supports		A-36
35		Bolts/Studs		
36		Nuts		
37				
38				
39		Air Cylinders: *		
40				

41	Service	Mark	No.	Size	Rating	Face	Type
42	Compr. Air Conn.		4	1/4"	150 lb	n/a	FPT
43							
44							
45							

46 NOTES
1. All flap gate cycle control will be performed by IT's PLC
47
48 2. Dry compressed air required at 80 psig and ___scfm for
49 each cylinder stroke; Time-averaged air required is ___scfm
50
51 3. Vendor to complete information marked *
52

HOLD

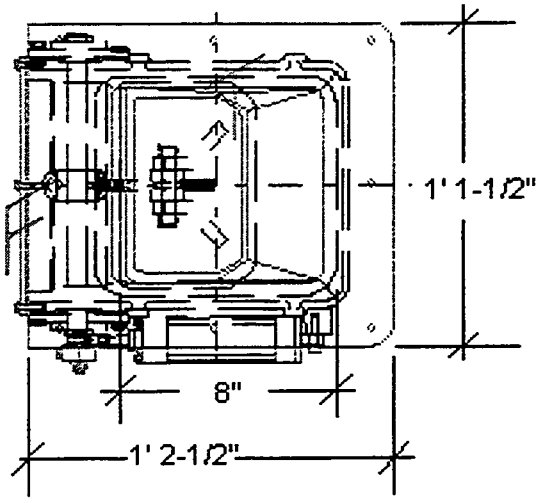

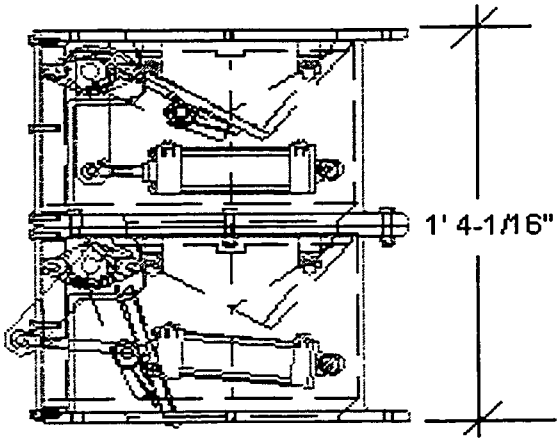

000281

H5002.xls

I.T. CORPORATION	1669 SLIDE GATE VALVE SPECIFICATION	IT CORP. SPEC. NO. 773481-HV201

NO	BY	DATE	REV.
F	RJB	7/9/98	DRAFT CFC

SHEET 1 OF 1

PROJECT NAME: FERNALD WPRAP OU1

JOB NO. 773481

LOCATION: FERNALD, OHIO

BY	APPR	DATE

AREA NO: 20
AREA NAME: DRYER SYSTEM

TAG NO.: HV-201A / B
EQUIPMENT NAME: SLIDE GATE VALVES

1	DESIGN DATA	Manufacturer: *	Model: *
2		Type:	Slide Gate
3		Quantity:	2 (Two)
4		Operating pressure above, in. w.c.	Atmospheric
5		Operating pressure below, in.w.c.	-2 in.w.c.
6		Operating temperature, deg F	0 - 100
7		Operating time, hrs/day	24 continuous
8		Contents lethal?	No
9		Design pressure, psi	Atmospheric
10		Design temperature, deg F	120
11		Material	soils & sludges
12		Maximum particle size, inches	4
13		Moisture range, %(wet)	15 - 67
14		Material bulk dens. Range, lb/cu. ft	70 - 130
15		Material bulk dens., ave, lb/cu.ft	90
16		Solids flow rate, tons/hr	25
17		Inside dimensions, inches	36 x 36
18		Orientation	Vertical
19			
20		Height, inches	6
21		Max. closing time, seconds	Approx. 5
22			
23			
24		Wind Load: 80 MPH, I = 1.00	Seismic: OBBC Sec. 1612.0
25		Weight: * lbs	Weight w/material: * lbs
26		Motor HP: N/A	
27			

		Item	Thickness	Mat'l - Minimum Quality
28	MATERIALS			
29		Body	*	A-36
30		Seat	*	304 SS
31		Blade	1/2"	304 SS
32		Blade seal	*	
33		Seal backing plate	*	304 SS
34		Air Cylinder Dia.	*	
35		Air Cylinder Seals		Viton
36		Supports		A-36
37				
38				
39				
40				

	Service	Mark	No.	Size	Rating	Face	Type
41							
42	Compr. Air Conn.			*	150 lb	n/a	FPT
43							
44							
45							

46 NOTES
47 1. Slide gate shall be provided with local open / close control
48 2. Slide gate shall be operated in remote mode by IT's PLC
49 3. Dry compressed air required at 80 psig and ___ scfm for each cylinder stroke; Time-averaged air required is ___ scfm
50 4. Refer to Procurement Spec. no. 11110
51 5. Vendor to complete information marked *
52

HOLD

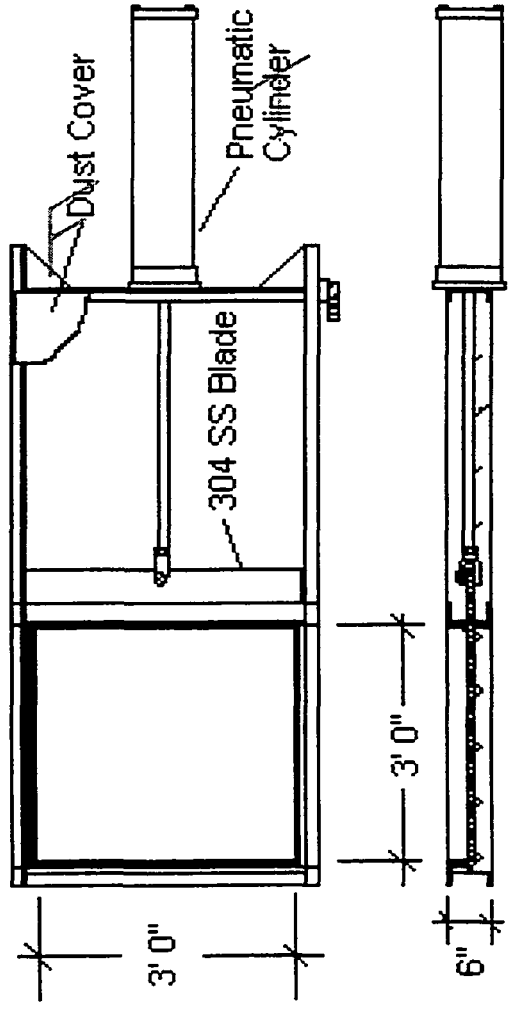

000282

I.T. CORPORATION	SLIDE GATE VALVE SPECIFICATION				IT CORP. SPEC. NO. 773481-HV301
	NO	BY	DATE	REV.	SHEET 1 OF 1
	F	RJB	7/9/98	DRAFT CFC	PROJECT NAME FERNALD WPRAP OU1
AREA NO: 30					JOB NO. 773481
AREA NAME: DRYER SYSTEM					LOCATION FERNALD, OHIO
TAG NO.: HV-301A / B					BY / APPR / DATE
EQUIPMENT NAM SLIDE GATE VALVES					

1		Manufacturer: *	Model: *
2		Type:	Slide Gate
3		Quantity:	2 (Two)
4		Operating pressure above, in. w.c.	-2 in.w.c.
5		Operating pressure below, in.w.c.	Atmospheric
6		Operating temperature, deg F	150 - 250
7	D	Operating time, hrs/day	24 continuous
8	E	Contents lethal?	No
9	S	Design pressure, psi	Atmospheric
10	I	Design temperature, deg F	800
11	G	Material	Dried soils & sludges
12	N	Maximum particle size, inches	8
13		Moisture range, %(wet)	5 - 20
14	D	Material bulk dens. Range, lb/cu. ft	70 - 130
15	A	Material bulk dens., ave, lb/cu.ft	90
16	T	Solids flow rate, tons/hr	22
17	A	Inside dimensions, inches	36 x 34
18		Orientation	Vertical
19		Height, inches	6
20			
21		Max. closing time, seconds	Approx. 5
22			
23			
24		Wind Load: 80 MPH, I = 1.00	Seismic: OBBC Sec. 1612.0
25		Weight: * lbs	Weight w/material: * lbs
26		Motor HP: N/A	
27			

		Item	Thickness	Mat'l - Minimum Quality
28				
29		Body	*	A-36
30	M	Seat	*	304 SS
31	A	Blade	3/4"	304 SS
32	T	Blade seal	*	
33	E	Seal backing plat	*	304 SS
34	R	Air Cylinder Dia	*	
35	I	Air Cylinder Seals		Viton
36	A	Supports		A-36
37	L			
38	S			
39				
40				

	Service	Mark	No.	Size	Rating	Face	Type
41							
42	Compr. Air Conn.			*	150 lb	n/a	FPT
43							
44							
45							

46 NOTES
1. Slide gate shall be provided with local open / close control
2. Slide gate may also be operated in remote mode by IT's PLC
3. Dry compressed air required at 80 psig and ___scfm for each cylinder stroke; Time-averaged air required is ___scfm
4. Refer to Procurement Spec. no. 11112
5. Vendor to complete information marked *

HOLD

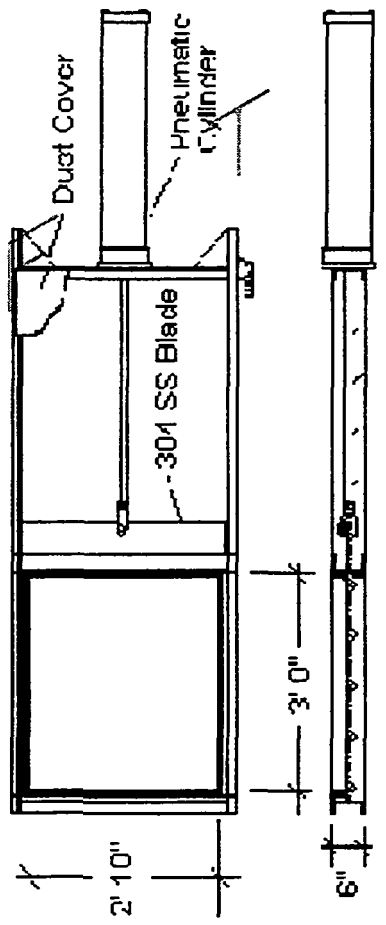

I.T. CORPORATION	ELECTRIC AIR COMPRESSOR SPECIFICATION	IT CORP. SPEC. NO. 773481-K7001
AREA NO: 70 AREA NAME: UTILITIES TAG NO.: K-7001 EQUIPMENT NAME: ELECTRIC ROTARY COMPRESSOR	SHEET 1 OF 1 PROJECT NAME: FERNALD WPRAP JOB NO.: 773481 LOCATION: Fernald, OH	

NO	BY	DATE	REV.
D	KKK	5/12/98	CFC DRAFT
E	BAH	6/5/98	DRAFT ISSUE FOR EPA REVIEW
F	BAH	7/9/98	DRAFT CFC HOLD

BY	APPR	DATE
		5/98

1	GENERAL	Manufacturer: *		Model No.: *			
2		No. of Units: 1 (ONE)		Compressor Type Rotary Screw			
3		Description of Gas and Materials Handled: AIR					
4		Flow: 350 SCFM	Suction Pressure 0 psig	Temp.: -30/110 deg. F	Gas Density: Lbs/Cu.Ft.		
5		Hours per day operation: 24 HR	Discharge Pressure ### psig	Design Temp.: 400 deg. F			
6		Noise Rating Per Attached Noise Level Spec. No. 13310					
7		Lubrication Forced Flow/Auto	Gage and Material of Rims:				
8		HOUSING GAGE & MATERIALS:			Tube		
9		Performance Curves:	Curve No.:	Mfr. Size & Type:	Weight: lbs.		
10		R.P.M.: *	B.H.P. Required: *	Mech. Efficiency *	Outlet Velocity		
11		BEARINGS: Type: *	Make: *	Manufacturers No.: *			
12		SHAFT: Diameter at Bearings:	inches				
13		Distance Between Bearings:					
14		Maximum Shaft Speed:					
15	DRIVER	Elec. or Steam Turbine?	Direct, Gear, V-Belt or Rope?				
16		ELECTRIC MOTOR:	Mfr.: *	STEAM TURBINE:	Mfr.:		
17		Mounted By:	Enclosure:	Mounted By:	Model:		
18		Speed: rpm	Service Factor: 1.15	Horsepower: HP	Water Rates: Lbs/Hr		
19		Volts: 460	Temp. Rise:	Speed rpm	Vacuum (if any):		
20		Phase: 3	Insulation:	Inlet Steam Press.:	Inlet Steam Temp.:		
21		Cycles: 60	Frame:	Normal: psig	Normal: deg. F		
22		Nominal Size: 100 HP	Est. BHP Req'd: Approx. 94 HP	Max.: psig	Max.: deg F		
23		SPEED REDUCERS:	Mfr.:	Backpressure: psig			
24		Ratio:	Model:	Nozzles	Size	Rating	Facing	Location
25		Integral or Separate?	Class:	Inlet				
26				Exhaust				
27		SEE DRIVER SPECIFICATION NO.:					
28	NOTES						
29		* Information to be supplied by vendor.					
30							
31							
32							
33							
34							

AREA70F.XLS

1669

I.T. CORPORATION	DIESEL AIR COMPRESSOR SPECIFICATION				IT CORP. SPEC. NO. 773481-K7002
	NO	BY	DATE	REV.	SHEET 1 OF 1
	D	KKK	5/12/98	CFC DRAFT	PROJECT NAME FERNALD WPRAP
AREA NO: 70 AREA NAME: UTILITIES TAG NO.: K-7002 EQUIPMENT NAME: DIESEL ROTARY COMPRESSOR	E	BAH	6/5/98	DRAFT ISSUE FOR EPA REVIEW	JOB NO. 773481
	F	BAH	7/9/98	DRAFT CFC	LOCATION Fernald, OH BY / APPR / DATE 5/98

1	GENERAL	Manufacturer: GARDNER-DENVER		Model No.: UP825TA/7112			
2		No. of Units: 1 (ONE)		Compressor Type Rotary Screw			
3		Description of Gas and Materials Handled: AIR					
4		Flow: 850 SCFM	Suction Pressure 0 psig	Temp.: -30/110 deg. F	Gas Density: Lbs/Cu.Ft.		
5		Hours per day operation: Back-up	Discharge Pressure 125 psig	Design Temp.: 400 deg. F			
6		Noise Rating Per Attached Noise Level Spec. No. 13310					
7		Lubrication Forced Flow/Auto	Gage and Material of Rims:				
8		HOUSING GAGE & MATERIALS:			Tube		
9		Performance Curves:	Curve No.:	Mfr. Size & Type:	Weight: Lbs.		
10		R.P.M.: 1,800	B.H.P. Required: 285	Cooling: Oil	Outlet Velocity		
11		BEARINGS: Type:	Make:		Manufacturers No.:		
12		SHAFT: Diameter at Bearings:	inches				
13		Distance Between Bearings:					
14		Maximum Shaft Speed:					
15	DRIVER	Electric or Diesel? Diesel	Direct, Gear, V-Belt or Rope? Direct				
16		MOTOR:	Mfr.: Caterpillar	Fuel Tank Cap: ### gal			
17		Mounted By: Manufacturer	Type: 3306 DITA	Radiator Capacity 5 gal			
18		Speed: 1800 rpm	Fuel: Diesel	Idle: 1400 rpm			
19		HP: 285	Cooling: Water	Alternator Amp. rpm			
20		Cylinders: 6	Bore & Stroke:				
21		Cycles: 2	Displacement:				
22		Lubrication System: Oil Flooded	Type Motor Oil 15W40				
23		SPEED REDUCERS:	Mfr.:				
24		Ratio:	Model:	Nozzles	Size	Rating	Facing / Location
25		Integral or Separate?	Class:	Inlet			
26				Exhaust			
27		SEE DRIVER SPECIFICATION NO.:					
28	NOTES						
29		* Information to be supplied by vendor.					
30							
31							
32							
33							
34							

000285

AREA70F.XLS

I.T. CORPORATION

POLYMER BLENDING UNIT SPECIFICATION 1669

IT CORP SPEC. NO. 773481-M6002

SHEET 1 OF 1

NO	BY	DATE	REV.
D	PMS	5/12/98	CFC DRAFT
E	MSD	6/5/98	Draft for EPA Review
F	PMS	7/9/98	DRAFT CFC

PROJECT NAME: FERNALD WPRAP OU1

JOB NO. 773481

LOCATION: FERNALD, OHIO

BY | APPR | DATE

AREA NO: 60
AREA NAME: BLWDOWN PREATRETMENT
TAG NOS.: P-6002/M-6002
EQUIPMENT NAME: POLYBLEND UNIT

1	C	Manufacturer: Stranco (or equal)		Model No.: *	
2	O	No. of Units: 1 (ONE)		Min. Flow at P.T.: 1.5 gph	Normal Flow: 5 gph
3	N	Liquid Pumped: 0.5% Polymer Solution		Max. Flow at P.T.: 30 gph	Fluid pH:
4	D	Pumping Temp.: 0 - 110 deg F Ambient	Sp. Gr. @ P.T.: 1.02	Suction Press.: psia	Min.Viscosity @ P.T.: cP
5	T	Differential Press.: psi	Differential Head: Ft.	Vapor Pressure @ P.T.: Ft.	NPSH Available: psig
6	N	Discharge Press.@ Norm: 10 psig	Discharge Press. @ Max:		NPSH Required (Water): * Ft.
7	S	Type: Metering pump & blending unit		Location:	
8		Horizontal or Vertical Arrangement? Vertical		Single or Double Suction? Single	
9	C	CW OR CCW Direction of Rotation Facing Pump Coupling:		Case Design Press.: psig	Max. Allow. W.P.: psig
10	O	Number of Stages:	Speed: rpm	Shut-off Press.: PSIG	Vol. Eff. @ Rating: %
11	N	BARREL:	Split?	Horizontal?	Vertical?
12	S	IMPELLER:	Type:	Max. Diameter: In.	Min. Diameter: In.
13	T	Actual Imp. Dia.: In.	Vent and Drain Tapped?	Thrust Bearing Type:	Radial Bearing Type:
14	R	Nozzles / Size / Rating / Facing / Location		Bearing Lub. Type:	
15	U	Suction * * * *		Oiler?	Oiler Type:
16	C	Discharge * * * *		Coupling Mfr.:	Coupling Model:
17	T	Vents * * * *		Baseplate?	Type Baseplate:
18	I	Drains * * * *		Water Cooling: Csng, Stffg Bx, Brgs, Pdstl, Glnd or none?	
19	O	Cooling H2O		Total Water Req'd: gpm	Smothering Gland?
20	N	Stuffing Box Lubrication: Oil, Grease or None?		Type Packing:	Seal Oil Connection?
21		MECHANICAL SEAL:	Furnished By:	Manufacturer:	Type:
22	D	Single or Double?	Inside or Outside?	Balanced or Unbalanced?	
23	E	Rotary Unit:	Seal Ring Mtrl:	Face Material:	Shaft Packing:
24	T	Insert:	Reversible?	Face Material:	
25	A	Insert Mounting: Clamped, O-Ring or Press Fit?			
26	I	Gland:	Plain?	Carbon Throttle Bushing?	
27	L	Gland Stuffing Box Machined & Tapped for:		Dead End Lub.?	Circulating Lub.?
28	S	Flushing Seal Faces with Discharge Bypass?		Quenching?	Vent & Drain?
29		Flushing Seal Faces with External Fluid?		Auxilliary Stuffing Box Required?	
30		Weight of Pump: * lbs.	Weight of Base: * lbs.	Weight of Driver: * lbs.	Shipping Weight: * lbs.
31	M	Casing & Covers:	Shaft:	Casing wear Rings:	Shaft Sleeves:
32	T	Impeller:	Lantern Rings:	Impeller Wear Rings:	Stuffing Box Bushings:
33	L	Glands:	Gaskets:		

34		Furnished By: Vendor	Elec. or Steam Turbine? Elec.	Direct, Gear, V-Belt or Rope? *	
35		ELECTRIC MOTOR:	Mfr.: *	STEAM TURBINE:	Mfr.:
36		Mounted By: Vendor	Enclosure: *	Mounted By:	Model:
37	D	Speed: rpm	Service Factor: *	Horsepower: HP	Water Rates: Lbs/Hr
38	R	Volts: 120	Temp. Rise: *	Speed rpm	Vacuum (if any):
39	I	Phase: 1	Insulation: *	Inlet Steam Press.:	Inlet Steam Temp.:
40	V	Cycles: 60	Frame: *	Normal: psig	Normal: deg. F
41	E	Nominal Size: * HP	Est. BHP Req'd: * HP	Max.: psig	Max.: deg F
42	R	SPEED REDUCERS:	Mfr.:	Backpressure: psig	
43		Ratio:	Model:	Nozzles / Size / Rating / Facing / Location	
44		Integral or Separate?	Class:	Inlet	
45				Exhaust	
46		See Driver Specification No.:			

47	T	Performance Curve? *	Certified?	M	Serial Number:
48	E	Curve No.:		I	Outline Drawing Number:
49	S	Hydrotest?	Pressure: psig	S	Cross Section Drawing Number:
50	T	Witness Testing?	Shop Inspection?	C	

51		1. Vendor shall provide Stranco or approved equal.
52		2. Pump shall have a minimum total volumetric turndown of 200:1.
53	N	3. Pump shall have a minimum automatic turndown of 20:1.
54	O	4. Pump shall be provided with an automatic speed controller capable of accepting a 4-20 ma
55	T	input signal.
56	E	5. Pump and associated instrumentation shall be provided with stainless steel I.D. tags.
57	S	6. Pump shall be capable of pulling 2 ft of suction lift.
58		7. Vendor to complete information marked *.
59		
60		

000286

1669

I.T. CORPORATION	AGITATOR SPECIFICATION	IT CORP. SPEC. NO. 773481-M6003

No.	BY	DATE	REV.
D	PA	05/12/98	CFC DRAFT
E	MSD	6/5/98	Draft Issue for EPA Review
F	JAN	7/9/98	DRAFT CFC

SHEET 1 OF 1

PROJECT NAME: FERNALD WPRAP OU1

JOB NO.: 773481

LOCATION: FERNALD, OHIO

BY	APPR	DATE

AREA NO: 60
AREA NAME: PROCESS BLOWDOWN PRETREATMENT
TAG NO.: M-6003 A,B,C
EQUIPMENT NAME: SLUDGE TANK MIXERS

OPERATING CONDITIONS

Mounting Type, Open Tank: Portable (Permanent) Entering Tank at: Side (Top) Bottom

Type Operation: Batch (Continuous) Operating Pressure: (Atmospheric) psig Operating Temperature: Ambient deg. F.

MATERIALS TO BE MIXED	STATE	lb/gal	VISCOSITY - cp	SPEC. GRAV.	deg. F.
Sludge	Solid and Water		1	1.5	Ambient
Precoat Solution	Liquid			1	Ambient
Final Mixture	Liquid			1.2	Ambient

Final Mixture Composition

Solids Present Are: Soluble (Insoluble) Abrasive Crystalline Sticky or Gummy Light or Fluffy

Particle Size or Sieve Analysis: N/A

Settling Rate of Solids: N/A Foaming Tendency of Mixture: (Low) Medium High

Class of Agitation: (Blend) Dissolve Disperse Gas Suspend Solids Heat Transfer Emulsify

Other: N/A

Degree of Agitation: Mild (Medium) Violent

Too Much Agitation will - N/A

Too Little Agitation will - N/A

Largest Batch or Greatest Liquid Depth: Tank Depth is 10ft

Smallest Batch or Lowest Liquid Depth: Empty Tank. Agitator is interlocked for low level.

Mixer Shall Be Designed to:

(Mixer will) will not Be Operated While Filling or Drawing Off the Tank.

Past Experience: N/A

No. of Units: 3

TANK & AGITATOR DATA

Vessel Type: Open Top (Closed Top) (Horizontal) Vertical API Tank Other:

Size: 40 ft X 8 ft in. ID by 10 ft in. Straight Side or in. Length

Bottom Type: (Flat) Flanged & Dished 2:1 Semi-elliptical Cone

Top Type: (Flat) Flanged & Dished 2:1 Semi-elliptical Cone

Vessel Can Be Altered: Yes (No) Describe:

Design Pressure Atmospheric psig; Design Temperature Indoor,Ambient deg. F.

Tank Spec. No. 773481-T6005 ; Copies Attached: Yes (No)

Size of Opening for Impeller Installation * ; Size of Nozzle for Mounting Agitator 8"

Selected Mounting Flange for Agitator: Size 8" ; Rating 150 # ; Facing RF

Location of Mounting Flange: Equi distant on Tank Top

Baffles: No.None ; Width in.; Length in.; Horizontal Vertical Other:

Stabilizing Ring Is Is Not Required; Size

Shaft Seal: (Mechanical) Packing Other: ; Type Lubrication

Special Requirements:

Step Bearing Is Is Not Permissible Head Room Available for Installing Mixer: (Yes)

Materials of Construction for Wetted Parts: 316 STAINLESS STEEL

MIXER DATA

Mixer Model No.: Lightnin 15-S-2 or equivalent Driver Supplied by: * Gear Supplied by: *

Motor Drive Mfgr.: * ; Speed rpm; Horsepower hp; Enclosure TEFC

NEMA Frame ; Volts 230/460 ; Phase 3 ; Cycles 60 Hz

Turbine Drive Mfgr.: ; Speed rpm; Horsepower hp; Water Rate lb./Hr.

Inlet Steam: Pressure psig at deg. F.

Exhaust Steam: Pressure psia psig at deg. F.

Other:

Gear: Mfgr. * ; Ratio * ; AGMA Rating * ; Output Speed 68 rpm

Shaft Coupling: Describe

Mechanical Seal: Describe SINGLE

Stuffing Box: Describe

Shaft: Size in. OD by in. Length from Mounting Flange in.

Impeller: Type ;Size in. OD: No. Blades ; Removable from Shaft: Yes No

Additional Data:

1. Vendor to complete the information marked *

000287

M6003.XLS

I.T. CORPORATION

AGITATOR SPECIFICATION

IT CORP. SPEC. NO. 773481-M6004

SHEET 1 OF 1

PROJECT NAME: FERNALD WPRAP OU1

JOB NO. 773481

LOCATION: FERNALD, OHIO

No.	BY	DATE	REV.
D	PA	5/12/98	CFC DRAFT
E	MSD	6/5/98	Draft Issue for EPA Review
F	WC	7/9/98	DRAFT CFC HOLD

BY	APPR	DATE

AREA NO: 60
AREA NAME: PROCESS BLOWDOWN PRETREATMENT
TAG NO.: M-6004
EQUIPMENT NAME: PRECOAT TANK MIXER

COPOINTS

1. Mounting Type, Open Tank: Portable (Permanent) Entering Tank at: Side (Top) Bottom
2. Type Operation: (Batch) Continuous Operating Pressure: (Atmospheric) psig Operating Temperature: Ambient deg. F.

3 MATERIALS TO BE MIXED	STATE	lb/gal	VISCOSITY - cp	SPEC. GRAV.	deg. F.
4 Precoat Material	Solid		1	1.5	Ambient
5 Process Water/Filtrate	Liquid			1	Ambient
6					
7					
8 Final Mixture	Liquid			1.2	Ambient

9. Final Mixture Composition
10. Solids Present Are: Soluble (Insoluble) Abrasive Crystalline Sticky or Gummy Light or Fluffy
11. Particle Size or Sieve Analysis: N/A
12. Settling Rate of Solids: N/A Foaming Tendency of Mixture: (Low) Medium High
13. Class of Agitation: (Blend) Dissolve Disperse Gas Suspend Solids Heat Transfer Emulsify
14. Other: N/A
15. Degree of Agitation: Mild (Medium) Violent
16. Too Much Agitation will - N/A
17. Too Little Agitation will - N/A
18. Largest Batch or Greatest Liquid Depth: Tank Depth is 6 ft
19. Smallest Batch or Lowest Liquid Depth: 3' Minimum
20. Mixer Shall Be Designed to:
21. (Mixer will) will not Be Operated While Filling or Drawing Off the Tank.
22. Past Experience: N/A
23. No. of Units: 1 (One)

TANK DATA

24. Vessel Type: Open Top (Closed Top) Horizontal (Vertical) API Tank Other:
25. Size: 84 in. ID by 6 ft in. Straight Side or in. Length
26. Bottom Type: Flat Flanged & Dished 2:1 Semi-elliptical (Cone)
27. Top Type: Flat Flanged & Dished (2:1 Semi-elliptical) Cone
28. Vessel Can Be Altered: Yes (No) Describe:
29. Design Pressure Atmospheric psig; Design Temperature Indoor Ambient deg. F.
30. Tank Spec. No. 773481-T6009 ; Copies Attached: Yes (No)
31. Size of Opening for Impeller Installation * ; Size of Nozzle for Mounting Agitator 8"
32. Selected Mounting Flange for Agitator: Size 8" ; Rating 150 # ; Facing RF
33. Location of Mounting Flange: Side of Tank Top
34. Baffles: No.None ; Width in.; Length in.; Horizontal Vertical Other:
35. Stabilizing Ring Is Is Not Required; Size
36. Shaft Seal: (Mechanical) Packing Other: ; Type Lubrication
37. Special Requirements:
38. Step Bearing Is Is Not Permissible Head Room Available for Installing Mixer: (Yes)
39. Materials of Construction for Wetted Parts: 316 STAINLESS STEEL

MIXER DATA

40. Mixer Model No.: Lightnin 15-S-2 or equivalent Driver Supplied by: * Gear Supplied by: *
41. Motor Drive Mfgr.: * ; Speed rpm; Horsepower hp; Enclosure TEFC
42. NEMA Frame ; Volts 230/460 ; Phase 3 ; Cycles 60 Hz
43. Turbine Drive Mfgr.: ; Speed rpm; Horsepower hp; Water Rate lb./Hr.
44. Inlet Steam: Pressure psig at deg. F.
45. Exhaust Steam: Pressure psia psig at deg. F.
46. Other:
47. Gear: Mfgr. * ; Ratio * ; AGMA Rating * ; Output Speed 68 rpm
48. Shaft Coupling: Describe
49. Mechanical Seal: Describe SINGLE
50. Stuffing Box: Describe
51. Shaft: Size in. OD by in. Length from Mounting Flange in.
52. Impeller: Type ;Size in. OD: No. Blades ; Removable from Shaft: Yes No
53. Additional Data:
54. 1. Vendor to complete the information marked *
55. 2. A 3 ft wide platform to be built at the Precoat dump nozzle.

M6004.xls

I.T. CORPORATION	STATIC MIXER SPECIFICATION 1669	IT CORP. SPEC. NO. 773481-65-M6501
		SHEET 1 OF 1

NO	BY	DATE	REV.
D	PMS	5/12/98	CFC DRAFT
E	MSD	6/5/98	Draft Issue for EPA Review
F	PMS	07/09/98	DRAFT CFC

PROJECT NAME: FERNALD WPRAP OU1
JOB NO.: 773481
LOCATION: FERNALD, OHIO

BY	APPR	DATE
PMS		

AREA NO: 65
AREA NAME: WATER TREATMENT SYSTEM
TAG NO.: M-6501
EQUIPMENT NAME: STATIC MIXER

OPERATING CONDITIONS

Mounting Type: (In-line)
Type Operation: Batch (Continuous) | Operating Pressure: 50 psig | Operating Temperature: 28 - 86 deg. F.

MATERIALS TO BE MIXED	STATE	gpm	VISCOSITY - cp	SPEC. GRAV.	deg. F.
Waste Water	Liquid	250	1	1.0	Ambient
Caustic (NaOH)	Liquid	0.5	13	1.22	Ambient
Final Mixture	Liquid		1	1.05	Ambient

Final Mixture Composition
Solids Present Are: Soluble (Insoluble) Abrasive Crystalline Sticky or Gummy Light or Fluffy
Particle Size or Sieve Analysis: N/A
Settling Rate of Solids: N/A | Foaming Tendency of Mixture: (Low) Medium High
Class of Agitation: Blend (Dissolve) Disperse Gas Suspend Solids Heat Transfer Emulsify
Other: N/A
Degree of Agitation: Mild (Medium) Violent
Too Much Agitation will - N/A
Too Little Agitation will - N/A
Process line diameter: 4 inch
Flange type and rating: 150 lb, flat face
Mixer Shall Be Designed to: Fully disperse caustic into the water stream
Unit Length: *
Material of Construction: Stainless Steel
Maximum Pressure Drop: *

No. of Units: 1 (One)

NOTE: Vendor to complete information marked *.

000289

PT/_7/7/98_/[A65spec]-M6501

I.T. CORPORATION

TANK AGITATOR SPECIFICATION 1669

NO	BY	DATE	REV.
D	PMS	5/12/98	CFC DRAFT
E	MSD	6/5/98	Draft Issue for EPA Review
F	PMS	07/09/98	DRAFT CFC

IT CORP. SPEC. NO. 773481-65-M6502

SHEET 1 OF 1

PROJECT NAME: FERNALD WPRAP OU1

JOB NO. 773481

LOCATION: FERNALD, OHIO

BY PMS | APPR | DATE

AREA NO: 65
AREA NAME: WATER TREATMENT SYSTEM
TAG NO.: M-6502
EQUIPMENT NAME: FLASH MIXER

OPERATIONS

Mounting Type, Open Tank: Portable (Permanent) | Entering Tank at: Side (Top) Bottom

Type Operation: Batch (Continuous) | Operating Pressure: Atmospheric psig | Operating Temperature: 28 - 86 deg. F.

MATERIALS TO BE MIXED	STATE	lb/gal	VISCOSITY - cp	SPEC. GRAV.	deg. F.
Waste Water	Liquid		1	1.0	Ambient
Coagulant	Liquid		**	**	Ambient
Polymer	Liquid		**	**	Ambient
Final Mixture	Liquid		1	1.05	Ambient

Final Mixture Composition

Solids Present Are: Soluble (Insoluble) Abrasive Crystalline Sticky or Gummy (Light or Fluffy)

Particle Size or Sieve Analysis: N/A

Settling Rate of Solids: N/A | Foaming Tendency of Mixture: (Low) Medium High

Class of Agitation: (Blend) Dissolve Disperse Gas Suspend Solids Heat Transfer Emulsify

Other: N/A

Degree of Agitation: Mild (Medium) Violent

Too Much Agitation will - N/A

Too Little Agitation will - N/A

Largest Batch or Greatest Liquid Depth: Tank depth is 5'-0"

Smallest Batch or Lowest Liquid Depth: Lowest liquid depth is 4'-0"

Mixer Shall Be Designed to: Disperse coagulant and polymer into solution

(Mixer will) will not Be Operated While Filling Tank

Past Experience: N/A

No. of Units: 1 (One)

INSTALLATION

Vessel Type: (Open Top) Closed Top Horizontal (Vertical) API Tank Other:

Size: 3' x 3' by 5'-0" Straight Side or in. Length

Bottom Type: (Flat) Flanged & Dished 2:1 Semi-elliptical Cone

Top Type: (Flat) Flanged & Dished 2:1 Semi-elliptical Cone

Vessel Can Be Altered: Yes (No) Describe:

Design Pressure Atmospheric psig; Design Temperature Indoor Ambient deg. F.

Tank Spec. No. 773481-65-T6502 ; Copies Attached: Yes (No)

Size of Opening for Impeller Installation N/A ; Size of Nozzle for Mounting Agitator *

Selected Mounting Flange for Agitator: Size * ; Rating * ; Facing *

Location of Mounting Flange: Center of Tank Top

Baffles: No. 4 ; Width 4" in.; Length 4' -0" in.; Horizontal (Vertical) Other:

Stabilizing Ring (Is) Is Not Required; Size *

Shaft Seal: (Mechanical) Packing Other: ; Type Lubrication

Special Requirements:

Step Bearing Is Is Not Permissible Head Room Available for Installing Mixer: (Yes)

Materials of Construction for Wetted Parts: 316 STAINLESS STEEL

MIXER DATA

Mixer Model No.: Sumitoma Model VM 3085 Driver Supplied by: Sumitoma Gear Supplied by: *

Motor Drive Mfgr.: Sumitoma ; Speed * rpm; Horsepower 0.5 hp; Enclosure TEFC

NEMA Frame * ; Volts 230/460 ; Phase 3 ; Cycles 60 Hz

Turbine Drive Mfgr.: ; Speed rpm; Horsepower hp; Water Rate lb./Hr.

Inlet Steam: Pressure psig at deg. F.

Exhaust Steam: Pressure psia psig at deg. F.

Other:

Gear: Mfgr. * ; Ratio 29/1 ; AGMA Rating * ; Output Speed 103 rpm

Shaft Coupling: Describe Lovejoy L095

Mechanical Seal: Describe SINGLE

Stuffing Box: Describe

Shaft: Size * in. OD by in. Length from Mounting Flange * in.

Impeller: Type Propeller ;Size 6 in. OD: No. Blades * ; Removable from Shaft: Yes No

Additional Data:

NOTE: Vendor to complete information marked *

NOTE: nformation marked ** to be supplied by chemical manufacturer

000290

PT/_7/7/98_/[A65spec]-M6502

I.T. CORPORATION

TANK AGITATOR SPECIFICATION 1669

NO	BY	DATE	REV.
D	PMS	5/12/98	CFC DRAFT
E	MSD	6/5/98	Draft Issue for EPA Review
F	PMS	07/09/98	DRAFT CFC

IT CORP. SPEC. NO. 773481-65-M6503
SHEET 1 OF 1
PROJECT NAME FERNALD WPRAP OU1
JOB NO. 773481
LOCATION FERNALD, OHIO
BY PMS | APPR | DATE

AREA NO: 65
AREA NAME: WATER TREATMENT SYSTEM
TAG NO.: M-6503
EQUIPMENT NAME: FLOCCULATION MIXER

OPERATING CONDITIONS

Mounting Type, Open Tank: Portable (Permanent) | Entering Tank at: Side (Top) Bottom

Type Operation: Batch (Continuous) | Operating Pressure: Atmospheric psig | Operating Temperature: 28 - 86 deg. F.

MATERIALS TO BE MIXED	STATE	lb/gal	VISCOSITY - cp	SPEC. GRAV.	deg. F.
Waste Water	Liquid		1	1.05	Ambient
Final Mixture	Liquid		1	1.05	Ambient

Final Mixture Composition

Solids Present Are: Soluble (Insoluble) Abrasive Crystalline Sticky or Gummy (Light or Fluffy)

Particle Size or Sieve Analysis: N/A

Settling Rate of Solids: N/A | Foaming Tendency of Mixture: (Low) Medium High

Class of Agitation: Blend Dissolve Disperse Gas (Suspend Solids) Heat Transfer Emulsify

Other: N/A

Degree of Agitation: Mild (Medium) Violent

Too Much Agitation will - N/A

Too Little Agitation will - N/A

Largest Batch or Greatest Liquid Depth: Tank depth is 6'-0"

Smallest Batch or Lowest Liquid Depth: Lowest liquid depth is 5'-6"

Mixer Shall Be Designed to: Suspend particulates and allow flocculation prior to clarification

(Mixer will) will not Be Operated While Filling Tank

Past Experience: N/A

No. of Units: 1 (One)

TANK & AGITATION DATA

Vessel Type: (Open Top) Closed Top Horizontal (Vertical) API Tank Other:

Size: 8'-0" diam. by 6'-0" Straight Side or in. Length

Bottom Type: (Flat) Flanged & Dished 2:1 Semi-elliptical Cone

Top Type: (Flat) Flanged & Dished 2:1 Semi-elliptical Cone

Vessel Can Be Altered: Yes (No) Describe:

Design Pressure Atmospheric psig; Design Temperature Indoor Ambient deg. F.

Tank Spec. No. 773481-65-T6503 ; Copies Attached: Yes (No)

Size of Opening for Impeller Installation N/A ; Size of Nozzle for Mounting Agitator *

Selected Mounting Flange for Agitator: Size * ; Rating * ; Facing *

Location of Mounting Flange: Center of Tank Top

Baffles: No. 3 ; Width 4" in.; Length 4' -0" in.; Horizontal (Vertical) Other:

Stabilizing Ring (Is) Is Not Required; Size *

Shaft Seal: (Mechanical) Packing Other: ; Type Lubrication

Special Requirements:

Step Bearing Is Is Not Permissible Head Room Available for Installing Mixer: (Yes)

Materials of Construction for Wetted Parts: 316 STAINLESS STEEL

MIXER DATA

Mixer Model No.: Sumitoma Model VC 3100 Driver Supplied by: Sumitoma Gear Supplied by: *

Motor Drive Mfgr.: Sumitoma ; Speed * rpm; Horsepower 0.5 hp; Enclosure TEFC

NEMA Frame * ; Volts 230/460 ; Phase 3 ; Cycles 60 Hz

Turbine Drive Mfgr.: ; Speed rpm; Horsepower hp; Water Rate lb./Hr.

Inlet Steam: Pressure psig at deg. F.

Exhaust Steam: Pressure psia psig at deg. F.

Other:

Gear: Mfgr. * ; Ratio 121/1 ; AGMA Rating * ; Output Speed 3.72 - 18.6 rpm

Shaft Coupling: Describe Lovejoy L095

Mechanical Seal: Describe SINGLE

Stuffing Box: Describe

Shaft: Size * in. OD by in. Length from Mounting Flange * in.

Impeller: Type Picket Fence ;Size * in. OD: No. Blades ; Removable from Shaft: Yes (No)

Additional Data:

NOTE: Vendor to complete information marked *

000291

PT/_7/7/98_/[A65spec]-M6503

I.T. CORPORATION

POLYMER BLENDING UNIT SPECIFICATION

1669

NO	BY	DATE	REV.
D	PMS	5/12/98	CFC DRAFT
E	MSD	6/5/98	Draft for EPA Review
F	PMS	7/9/98	DRAFT CFC

IT CORP SPEC. NO. 773481-65-M6505

SHEET 1 OF 1

PROJECT NAME: FERNALD WPRAP OU1

JOB NO. 773481

LOCATION: FERNALD, OHIO

BY	APPR	DATE
PMS		

AREA NO: 65
AREA NAME: WATER TREATMENT SYSTEM
TAG NOS.: P-6505/M-6505
EQUIPMENT NAME: POLYBLEND UNIT

1	C	Manufacturer: Stranco (or equal)		Model No.: *	
2	O	No. of Units: 1 (ONE)		Min. Flow at P.T.: 1.5 gph	Normal Flow: 5 gph
3	N	Liquid Pumped: 0.5% Polymer Solution		Max. Flow at P.T.: 30 gph	Fluid pH:
4	D	Pumping Temp.: 0 - 110 deg F Ambient	Sp. Gr. @ P.T.: 1.02	Suction Press.: psia	Min.Viscosity @ P.T.: cP
5	T	Differential Press.: psi	Differential Head: Ft.	Vapor Pressure @ P.T.: Ft.	NPSH Available: psig
6	N	Discharge Press.@ Norm: 10 psig	Discharge Press. @ Max:		NPSH Required (Water): * Ft.
7	S	Type: Metering pump & blending unit		Location:	
8		Horizontal or Vertical Arrangement? Vertical		Single or Double Suction? Single	
9	C	CW OR CCW Direction of Rotation Facing Pump Coupling:		Case Design Press.: psig	Max. Allow. W.P.: psig
10	O	Number of Stages:	Speed: rpm	Shut-off Press.: PSIG	Vol. Eff. @ Rating: %
11	N	BARREL:	Split?	Horizontal?	Vertical?
12	S	IMPELLER:	Type:	Max. Diameter: In.	Min. Diameter: In.
13	T	Actual Imp. Dia.: In.	Vent and Drain Tapped?	Thrust Bearing Type:	Radial Bearing Type:
14	R	Nozzles / Size / Rating / Facing / Location		Bearing Lub. Type:	
15	U	Suction * * * *		Oiler?	Oiler Type:
16	C	Discharge * * * *		Coupling Mfr.:	Coupling Model:
17	T	Vents * * * *		Baseplate?	Type Baseplate:
18	I	Drains * * * *		Water Cooling: Csng, Stffg Bx, Brgs, Pdstl, Glnd or none?	
19	O	Cooling H2O		Total Water Req'd: gpm	Smothering Gland?
20	N	Stuffing Box Lubrication: Oil, Grease or None?		Type Packing:	Seal Oil Connection?
21		MECHANICAL SEAL:	Furnished By:	Manufacturer:	Type:
22	D	Single or Double?	Inside or Outside?	Balanced or Unbalanced?	
23	E	Rotary Unit:	Seal Ring Mtrl:	Face Material:	Shaft Packing:
24	T	Insert:	Reversible?	Face Material:	
25	A	Insert Mounting: Clamped, O-Ring or Press Fit?			
26	I	Gland:	Plain?	Carbon Throttle Bushing?	
27	L	Gland Stuffing Box Machined & Tapped for:		Dead End Lub.?	Circulating Lub.?
28	S	Flushing Seal Faces with Discharge Bypass?		Quenching?	Vent & Drain?
29		Flushing Seal Faces with External Fluid?		Auxilliary Stuffing Box Required?	
30		Weight of Pump: * lbs.	Weight of Base: * lbs.	Weight of Driver: * lbs.	Shipping Weight: * lbs.
31	M	Casing & Covers:	Shaft:	Casing wear Rings:	Shaft Sleeves:
32	T	Impeller:	Lantern Rings:	Impeller Wear Rings:	Stuffing Box Bushings:
33	L	Glands:	Gaskets:		
34		Furnished By: Vendor	Elec. or Steam Turbine? Elec.	Direct, Gear, V-Belt or Rope? *	
35		ELECTRIC MOTOR:	Mfr.: *	STEAM TURBINE:	Mfr.:
36		Mounted By: Vendor	Enclosure: *	Mounted By:	Model:
37	D	Speed: rpm	Service Factor: *	Horsepower: HP	Water Rates: Lbs/Hr
38	R	Volts: 120	Temp. Rise: *	Speed rpm	Vacuum (if any):
39	I	Phase: 1	Insulation: *	Inlet Steam Press.:	Inlet Steam Temp.:
40	V	Cycles: 60	Frame: *	Normal: psig	Normal: deg. F
41	E	Nominal Size: * HP	Est. BHP Req'd: * HP	Max.: psig	Max.: deg F
42	R	SPEED REDUCERS:	Mfr.:	Backpressure: psig	
43		Ratio:	Model:	Nozzles / Size / Rating / Facing / Location	
44		Integral or Separate?	Class:	Inlet	
45				Exhaust	
46		See Driver Specification No.:			
47	T	Performance Curve? *	Certified?	M Serial Number:	
48	E	Curve No.:		I Outline Drawing Number:	
49	S	Hydrotest?	Pressure: psig	S Cross Section Drawing Number:	
50	T	Witness Testing?	Shop Inspection?	C	

51 **1. Vendor shall provide Stranco or approved equal.**
52 **2. Pump shall have a minimum total volumetric turndown of 200:1.**
53 N **3. Pump shall have a minimum automatic turndown of 20:1.**
54 O **4. Pump shall be provided with an automatic speed controller capable of accepting a 4-20 ma**
55 T **input signal.**
56 E **5. Pump and associated instrumentation shall be provided with stainless steel I.D. tags.**
57 S **6. Pump shall be capable of pulling 2 ft of suction lift.**
58 **7. Vendor to complete information marked *.**
59
60

000292

PT/_7/7/98_/[A65spec]-P6505

I.T. CORPORATION

PUMP SPECIFICATION

NO	BY	DATE	REV.
D	GJM	5/12/98	CFC Draft
E	MSD	6/5/98	Draft Issue for EPA Review
F	WC	7/9/98	DRAFT CFC

IT CORP SPEC. NO. 773481-P5001

SHEET 1 OF 1

PROJECT NAME: FERNALD WPRAP OU1

JOB NO. 773481

LOCATION: FERNALD, OHIO

BY	APPR	DATE

AREA NO.: 50
AREA NAME: GCS SYSTEM
TAG NO.: P-5001A,B
EQUIP: SCRUBBER RECIRC. PUMP

1	C	Manufacturer: Durco		Model No.: Mark III 2K4X3-10RV		
2	O	No. of Units: 2(Two)		Min. Flow at P.T.: 190 gpm	Normal Flow: 201 gpm	
3	N	Liquid Pumped: Scrubber Water from T-5001		Max. Flow at P.T.: 450 gpm	Fluid pH: 5-9	
4	D	Pumping Temp.: 200 - 210 °F	Sp. Gr. @ P.T.:	Suction Press.: psia	Viscosity @ P.T.: 1	cP
5	T	Differential Press.:	Differential Head: Ft.	Vapor Pressure @ P.T.: Ft.	NPSH Available: 1.0	Ft.
6	N	Discharge Press.@ Norm: psig	Discharge Press. @ Max: 100 ft H_2O		NPSH Required (Water): 1.0	Ft.
7	S	Type: Centrifugal pump		Location: Outdoors		
8		Horizontal or Vertical Arrangement? Horizontal		Single or Double Suction?	Single	
9	C	CW OR CCW Direction of Rotation Facing Pump Coupling:		Case Design Press.: psig	Max. Allow. W.P.:	psig
10	O	Number of Stages: 1	Speed: 1750 rpm	Shut-off Press.: PSIG	Vol. Eff. @ Rating:	%
11	N	BARREL: *	Split? *	Horizontal?	Vertical?	
12	S	IMPELLER: *	Type: Reverse vane	Max. Diameter: 10 In.	Min. Diameter: 6.0	In.
13	T	Actual Imp. Dia.: 10 In.	Vent and Drain Tapped? drain	Thrust Bearing Type: *	Radial Bearing Type: *	
14	R	Nozzles / Size / Rating / Facing / Location		Bearing Lub. Type: *		
15	U	Suction / 4" / 150 / FF / *		Oiler? *	Oiler Type: *	
16	C	Discharge / 3" / 150 / FF / *		Coupling Mfr.: *	Coupling Model: *	
17	T	Vents / NA / * / * / *		Baseplate? *	Type Baseplate: *	
18	I	Drains / 1/2 / * / * / *		Water Cooling: Csng, Stffg Bx, Brgs, Pdstl, Glnd or none?	*	
19	O	Cooling H2O / NA / * / * / *		Total Water Req'd: * gpm	Smothering Gland? *	
20	N	Stuffing Box Lubrication: Oil, Grease or None?		Type Packing: *	Seal Oil Connection? *	
21		MECHANICAL SEAL:	Furnished By: Drurco	Manufacturer: Durco	Type: Durametallic	
22	D	Single or Double? Double	Inside or Outside? inside	Balanced or Unbalanced?	Unbalanced	
23	E	Rotary Unit: Peramic	Seal Ring Mtrl: Viton	Face Material: *	Shaft Packing: *	
24	T	Insert: Carbon	Reversible? *	Face Material: *		
25	A	Insert Mounting: Clamped, O-Ring or Press Fit?		O-Ring		
26	I	Gland: *	Plain? *	Carbon Throttle Bushing? *		
27	L	Gland Stuffing Box Machined & Tapped for:	*	Dead End Lub.? Yes	Circulating Lub.? *	
28	S	Flushing Seal Faces with Discharge Bypass?	*	Quenching? *	Vent & Drain? *	
29		Flushing Seal Faces with External Fluid?	Yes	Auxilliary Stuffing Box Required?	*	
30		Weight of Pump: 225 lbs.	Weight of Base: 177 lbs.	Weight of Driver: * lbs.	Shipping Weight: *	lbs.
31	M	Casing & Covers: CD4M	Shaft: BBC8	Casing wear Rings: *	Shaft Sleeves: *	
32	T	Impeller: Alloy CD4M	Lantern Rings: *	Impeller Wear Rings: *	Stuffing Box Bushings: *	
33	L	Glands: *	Gaskets: TFR			
34		Furnished By: Reliance	Elec. or Steam Turbine? Elec.	Direct, Gear, V-Belt or Rope? Direct		
35		ELECTRIC MOTOR:	Mfr.: *	STEAM TURBINE:	Mfr:	
36		Mounted By: Vendor	Enclosure: TEFC	Mounted By:	Model:	
37	D	Speed: 1800 rpm	Service Factor: *1.15	Horsepower: HP	Water Rates: Lb/	Hr
38	R	Volts: 480	Temp. Rise:	Speed: rpm	Vacuum (if any):	
39	I	Phase: 3	Insulation: *	Inlet Steam Press:	Inlet Steam Temp:	
40	V	Cycles: 60	Frame: *	Normal: psig	Normal:	deg
41	E	Nominal Size: 10 HP	Est. BHP Req'd: 6.3 HP	Max: psig	Max:	deg
42	R	SPEED REDUCERS:	Mfr.:	Backpressure: psig		
43		Ratio:	Model:	Nozzles: / Size / Rating / Facing / Location		
44		Integral or Separate?	Class:	Inlet:		
45				Exhaust:		
46		See Driver Specification No.:				
47	T	Performance Curve? yes	Certified?	M: Serial Number:		
48	E	Curve No.: M37902CV		I: Outline Drawing Number:		
49	S	Hydrotest?	Pressure: psig	S: Cross Section Drawing Number:		
50	T	Witness Testing?	Shop Inspection?	C:		
51						
52		1. Pump and associated instrumentation shall be provided with stainless steel I.D. tags.				
53	N	2. Existing Equipment to be refurbished per project specification prior to use.				
54	O					
55	T					
56	E					
57	S					
58						
59						
60						

I.T. CORPORATION

PUMP SPECIFICATION 1669

NO	BY	DATE	REV.
D	GJM	5/12/98	CFC DRAFT
E	MSD	6/5/98	Draft Issue for EPA Review
F	JAN	7/9/98	DRAFT CFC

IT CORP SPEC. NO. 773481-P5002

SHEET 1 OF 1

PROJECT NAME: FERNALD WPRAP OU1

JOB NO. 773481

LOCATION: FERNALD, OHIO

BY	APPR	DATE

AREA NO.: 50
AREA NAME: GCS SYSTEM
TAG NO.: P-5002 A/B
EQUIP: SUBCOOL QUENCH RECIRC. PUMP

1	C	Manufacturer: Durco			Model No.: Mark III 3K 10X8-16H	
2	O	No. of Units: 2 (TWO)			Min. Flow at P.T.: 10 gpm	Normal Flow: 1630 gpm
3	N	Liquid Pumped: Scrubber water from tank T-5001			Max. Flow at P.T.: 2300 gpm	Fluid pH: 5-9
4	D	Pumping Temp.: 110 F	Sp. Gr. @ P.T.: 1.03		Suction Press.: psia	Min.Viscosity @ P.T.: * cP
5	T	Differential Press.: 50 psi	Differential Head: Ft.		Vapor Pressure @ P.T.: Ft.	NPSH Available: psig
6	N	Discharge Press.@ Norm: 50psig	Discharge Press. @ Max:			NPSH Required (Water): * Ft.
7	S	Type: Centrifical pump			Location: Outdoors	
8		Horizontal or Vertical Arrangement? Horizontal			Single or Double Suction? Single	
9	C	CW OR CCW Direction of Rotation Facing Pump Coupling:			Case Design Press.: psig	Max. Allow. W.P.: psig
10	O	Number of Stages: 1	Speed: 1180 rpm		Shut-off Press.: PSI	Vol. Eff. @ Rating: %
11	N	BARREL: CD4M	Split?		Horizontal?	Vertical?
12	S	IMPELLER: CD4M	Type: Rev Vane		Max. Diameter: 16 In.	Min. Diameter: 13 In.
13	T	Actual Imp. Dia.: 16 In.	Vent and Drain Tapped? Drain		Thrust Bearing Type:	Radial Bearing Type:
14	R	Nozzles / Size / Rating / Facing / Location			Bearing Lub. Type: Standard	
15	U	Suction / 10 " / 150 / FF / *			Oiler? Yes	Oiler Type: Trico
16	C	Discharge / 8" / 150 / FF / *			Coupling Mfr.:	Coupling Model:
17	T	Vents / * / * / * / *			Baseplate?	Type Baseplate:
18	I	Drains / 1/2 / * / * / *			Water Cooling: Csng, Stffg Bx, Brgs, Rdstl, Glnd or none?	
19	O	Cooling H2O / * / * / * / *			Total Water Req'd: gpm	Smothering Gland?
20	N	Stuffing Box Lubrication: Oil, Grease or None?			Type Packing:	Seal Oil Connection?
21		MECHANICAL SEAL:	Furnished By: Durco		Manufacturer: Durametallic	Type: Group III
22	D	Single or Double? Double	Inside or Outside? Inside		Balanced or Unbalanced? Unbalanced	
23	E	Rotary Unit: Peramic	Seal Ring Mtrl: viton		Face Material:	Shaft Packing: Viton
24	T	Insert: carbon	Reversible?		Face Material:	
25	A	Insert Mounting: Clamped, O-Ring or Press Fit? O-Ring				
26	I	Gland:	Plain?		Carbon Throttle Bushing?	
27	L	Gland Stuffing Box Machined & Tapped for:			Dead End Lub.?	Circulating Lub.?
28	S	Flushing Seal Faces with Discharge Bypass?			Quenching?	Vent & Drain?
29		Flushing Seal Faces with External Fluid?			Auxilliary Stuffing Box Required?	
30		Weight of Pump: 992 lbs.	Weight of Base: 746 lbs.		Weight of Driver: * lbs.	Shipping Weight: * lbs.
31	M	Casing & Covers: CD4M	Shaft: 316 SS		Casing wear Rings:	Shaft Sleeves:
32	T	Impeller: CD4M	Lantern Rings:		Impeller Wear Rings:	Stuffing Box Bushings: CD4M
33	L	Glands:	Gaskets: TFR			
34		Furnished By: Vendor	Elec. or Steam Turbine? Elec.		Direct, Gear, V-Belt or Rope? Direct	
35		ELECTRIC MOTOR:	Mfr.: Reliance		STEAM TURBINE:	Mfr.:
36		Mounted By: Durco	Enclosure: TEFC		Mounted By:	Model:
37	D	Speed: 1200 rpm	Service Factor: 1.15		Horsepower:	Water Rate:
38	R	Volts: 460	Temp. Rise: *		Speed: rpm	Vacuum:
39	I	Phase: 3	Insulation: *		Inlet Steam Press.:	Inlet Steam Temp.:
40	V	Cycles: 60	Frame: *		Max. Normal: psig	Max. Normal:
41	E	Nominal Size: 100 HP	Est. BHP Req'd: 89.6 @1800gpm HP		Max. Max.: psig	Max. Max.:
42	R	SPEED REDUCERS:	Mfr.: NA		Backpressure: psig	
43		Ratio:	Model:		Nozzles: Size / Rating	Inlet / Exhaust
44		Integral or Separate?	Class:		Inlet:	
45					Exhaust:	
46		See Driver Specification No.:				
47	T	Performance Curve? *	Certified?	M	Serial Number:	
48	E	Curve No.: M38437V		I	Outline Drawing Number:	
49	S	Hydrotest?	Pressure: psig	S	Cross Section Drawing Number:	
50	T	Witness Testing?	Shop Inspection?	C		

51		
52		
53	N	1. Pump and associated instrumentation shall be provided with stainless steel I.D. tags.
54	O	2. Existing Equipment to be refurbished per project specification prior to use.
55	T	
56	E	
57	S	
58		
59		
60		

P5002.xls

I.T. CORPORATION	PUMP SPECIFICATION 1669				IT CORP SPEC. NO. 773481-P5003
	NO	BY	DATE	REV.	SHEET 1 OF 1
	D	GJM	05/12/98	CFC DRAFT	PROJECT NAME FERNALD WPRAP OU1
AREA NO.: 50 AREA NAME: GCS SYSTEM TAG NO.: P-5003 A/B EQUIP: COOLING WATER CIRCULATION PUMP	E	MSD	06/05/98	Draft Issue for EPA Review	JOB NO. 773481
	F	JAN	07/09/98	DRAFT CFC	LOCATION FERNALD, OHIO BY / APPR / DATE

1	C	Manufacturer: Durco				Model No.: Mark III 3K 10X8-16H		
2	O	No. of Units: 2 (TWO)				Min. Flow at P.T.: 10 gpm	Normal Flow: 1800 gpm	
3	N	Liquid Pumped: Cooling water from Tower W-5001				Max. Flow at P.T.: 3500 gpm	Fluid pH: 5-9	
4	D	Pumping Temp	Sp. Gr. @ P.T.: *			Suction Press.: psia	Min.Viscosity @ P.T.: * cP	
5	T	Differential Press.:	Differential Head: Ft.			Vapor Pressure @ P.T.: Ft.	NPSH Available: psig	
6	N	Discharge Press.@ Norm: 35 psi	Discharge Press. @ Max:				NPSH Required (Water): * Ft.	
7	S	Type: Centrifical pump				Location: Outdoors		
8		Horizontal or Vertical Arrangement? Horizontal				Single or Double Suction? Single		
9	C	CW OR CCW Direction of Rotation Facing Pump Coupling:				Case Design Press.: psig	Max. Allow. W.P.: psig	
10	O	Number of Stages: 1	Speed: 1180 rpm			Shut-off Press.: PSI	Vol. Eff. @ Rating: %	
11	N	BARREL: CD4M	Split?			Horizontal?	Vertical?	
12	S	IMPELLER: CD4M	Type: Rev Vane			Max. Diameter: 16 In.	Min. Diameter: 13 In.	
13	T	Actual Imp. Dia.: 13.875 In.	Vent and Drain Tapped? Drain			Thrust Bearing Type:	Radial Bearing Type:	
14	R	Nozzles	Size	Rating	Facing	Location	Bearing Lub. Type: Standard	
15	U	Suction	10 "	150	FF	*	Oiler? Yes	Oiler Type: Trico
16	C	Discharge	8"	150	FF	*	Coupling Mfr.:	Coupling Model:
17	T	Vents	*	*	*	*	Baseplate?	Type Baseplate:
18	I	Drains	1/2	*	*	*	Water Cooling: Csng, Stffg Bx, Brgs, Pdstl, Glnd or none?	
19	O	Cooling H2O	*	*	*	*	Total Water Req'd: gpm	Smothering Gland?
20	N	Stuffing Box Lubrication: Oil, Grease or None?					Type Packing:	Seal Oil Connection?
21		MECHANICAL SEAL:	Furnished By: Durco				Manufacturer: Durametallic	Type: Group III
22	D	Single or Double? Double	Inside or Outside? Inside				Balanced or Unbalanced? Unbalanced	
23	E	Rotary Unit: Peramic	Seal Ring Mtrl: viton				Face Material:	Shaft Packing: Viton
24	T	Insert: carbon	Reversible?				Face Material:	
25	A	Insert Mounting: Clamped, O-Ring or Press Fit O-Ring						
26	I	Gland:	Plain?				Carbon Throttle Bushing?	
27	L	Gland Stuffing Box Machined & Tapped for:					Dead End Lub.?	Circulating Lub.?
28	S	Flushing Seal Faces with Discharge Bypass?					Quenching?	Vent & Drain?
29		Flushing Seal Faces with External Fluid?					Auxilliary Stuffing Box Required?	
30		Weight of Pump: 992 lbs.	Weight of Base: 746 lbs.				Weight of Driver: * lbs.	Shipping Weight: * lbs.
31	M	Casing & Covers: CD4M	Shaft: 316 SS				Casing wear Rings:	Shaft Sleeves:
32	T	Impeller: CD4M	Lantern Rings:				Impeller Wear Rings:	Stuffing Box Bushings: CD4M
33	L	Glands:	Gaskets: TFR					
34		Furnished By: Vendor	Elec. or Steam Turbine? Elec.				Direct, Gear, V-Belt or Rope? Direct	
35		ELECTRIC MOTOR:	Mfr.: Reliance				STEAM TURBINE:	Mfr.:
36		Mounted By: Durco	Enclosure: TEFC				Mounted By:	Model:
37	D	Speed: 1200 rpm	Service Factor: 1.15				Horsepower: HP	Water Rate: lbs/HP
38	R	Volts: 460	Temp. Rise: *				Speed: rpm	Exhaust Pressure:
39	I	Phase: 3	Insulation: *				Inlet Steam Pressure:	Inlet Steam Temp.:
40	V	Cycles: 60	Frame: *				Power Normal:	Speed Normal:
41	E	Nominal Size: 60 HP	Est. BHP Req'd: 47 HP				Power Max.:	Speed Max.:
42	R	SPEED REDUCERS:	Mfr.: NA				Backpressure:	
43		Ratio:	Model:				Nozzle	Size	Rating	Facing	Location
44		Integral or Separate?	Class:				Inlet				
45							Exhaust				
46		See Driver Specification No.:						
47	T	Performance Curve? YES	Certified?			M	Serial Number:	
48	E	Curve No.: M38427V				I	Outline Drawing Number:	
49	S	Hydrotest?	Pressure: psig			S	Cross Section Drawing Number:	
50	T	Witness Testing?	Shop Inspection?			C		
51								
52								
53	N	1. Pump and associated instrumentation shall be provided with stainless steel I.D. tags.						
54	O	2. Existing Equipment to be refurbished per project specification prior to use.						
55	T							
56	E							
57	S							
58								
59								
60								

I.T. CORPORATION	PUMP SPECIFICATION 1669				IT CORP SPEC. NO. 773481-P5004		
	NO	BY	DATE	REV.	SHEET 1 OF 1		
	D	BAH	5/12/98	CFC DRAFT	PROJECT NAME FERNALD WPRAP OU1		
AREA NO.: 50 AREA NAME: GCS SYSTEM TAG NO.: P-5004 A,B EQUIP: WESP RECYCLE PUMP	E	MSD	6/5/98	Draft Issue for EPA Review	JOB NO. 773481		
					LOCATION FERNALD, OHIO		
	F	JAN	7/9/98	DRAFT CFC	BY	APPR	DATE

1	C	Manufacturer: *		Model No.: *		
2	O	No. of Units: 2(Two)		Min. Flow at P.T.: 80 gpm	Normal Flow: 100 gpm	
3	N	Liquid Pumped:		Max. Flow at P.T.: 130 gpm	Fluid pH:	
4	D	Pumping Temp.: 100 -150 °F	Sp. Gr. @ P.T.: 1.0	Suction Press.: psia	Viscosity @ P.T.: 1.0 cP	
5	T	Differential Press.: 50 psi	Differential Head: Ft.	Vapor Pressure @ P.T.: Ft.	NPSH Available: * Ft.	
6	N	Discharge Press.@ Norm: psig	Discharge Press. @ Max: * ft H_2O		NPSH Required (Water): * Ft.	
7	S	Type: Centrifugal pump		Location: Outdoors		
8		Horizontal or Vertical Arrangement? Horizontal		Single or Double Suction?	Single	
9	C	CW OR CCW Direction of Rotation Facing Pump Coupling:		Case Design Press.: psig	Max. Allow. W.P.: psig	
10	O	Number of Stages: 1	Speed: * rpm	Shut-off Press.: PSI	Vol. Eff. @ Rating: %	
11	N	BARREL: *	Split? *	Horizontal?	Vertical?	
12	S	IMPELLER: *	Type: *	Max. Diameter: * In.	Min. Diameter: * In.	
13	T	Actual Imp. Dia.: * In.	Vent and Drain Tapped? *	Thrust Bearing Type: *	Radial Bearing Type: *	
14	R	Nozzles / Size / Rating / Facing / Location		Bearing Lub. Type: *		
15	U	Suction * * * *		Oiler? *	Oiler Type: *	
16	C	Discharge * * * *		Coupling Mfr.: *	Coupling Model: *	
17	T	Vents * * * *		Baseplate? *	Type Baseplate: *	
18	I	Drains * * * *		Water Cooling: Csng, Stffg Bx, Brgs, Pdstl, Glnd or none? *		
19	O	Cooling H2O * * * *		Total Water Req'd: * gpm	Smothering Gland? *	
20	N	Stuffing Box Lubrication: Oil, Grease or None?		Type Packing: *	Seal Oil Connection? *	
21		MECHANICAL SEAL	Furnished By: *	Manufacturer: *	Type: *	
22	D	Single or Double? *	Inside or Outside? *	Balanced or Unbalanced? *		
23	E	Rotary Unit: *	Seal Ring Mtrl: *	Face Material: *	Shaft Packing: *	
24	T	Insert: *	Reversible? *	Face Material: *		
25	A	Insert Mounting: Clamped, O-Ring or Press Fit? *				
26	I	Gland: *	Plain? *	Carbon Throttle Bushing? *		
27	L	Gland Stuffing Box Machined & Tapped for: *		Dead End Lub.? *	Circulating Lub.? *	
28	S	Flushing Seal Faces with Discharge Bypass?		Quenching? *	Vent & Drain? *	
29		Flushing Seal Faces with External Fluid?		Auxilliary Stuffing Box Required?	*	
30		Weight of Pump: * lbs.	Weight of Base: * lbs.	Weight of Driver: * lbs.	Shipping Weight: * lbs.	
31	M	Casing & Covers: CS	Shaft: *	Casing wear Rings: *	Shaft Sleeves: *	
32	T	Impeller: *	Lantern Rings: *	Impeller Wear Rings: *	Stuffing Box Bushings: *	
33	L	Glands: *	Gaskets: *			
34		Furnished By: Vendor	Elec. or Steam Turbine? Elec.	Direct, Gear, V-Belt or Rope?	Direct or V-belt	
35		ELECTRIC MOTOR	Mfr.: *	STEAM TURBINE	Model:	
36		Mounted By: Vendor	Enclosure: TEFC	Mounted By:	Water Rate: lbs/HP	
37	D	Speed: * rpm	Service Factor: *	Horsepower: HP	Vacuum (Hg):	
38	R	Volts: 480	Temp. Rise: *	Speed: rpm	Inlet Steam Temp:	
39	I	Phase: 3	Insulation: *	Inlet Steam Press: psig	Normal:	
40	V	Cycles: 60	Frame: *	Normal: psig	Max:	
41	E	Nominal Size: 15 HP	Est. BHP Req'd: 8 HP	Max: psig	Back Pressure:	
42	R	SPEED REDUCERS	Mfr.:	Back Pressure: psig	Nozzles / Size / Rating / Facing / Location	
43		Ratio:	Model:	Nozzles / Size / Rating / Facing / Location	Inlet	
44		Integral or Separate?	Class:	Inlet	Exhaust	
45				Exhaust		
46		See Driver Specification No.:				
47	T	Performance Curve? *	Certified?	M	Serial Number:	
48	E	Curve No.:		I	Outline Drawing Number:	
49	S	Hydrotest?	Pressure: psig	S	Cross Section Drawing Number:	
50	T	Witness Testing?	Shop Inspection?	C		

51		
52		
53	N	1. Pump and associated instrumentation shall be provided with stainless steel I.D. tags.
54	O	2. Existing Equipment to be refurbished per project specification prior to use.
55	T	
56	E	
57	S	
58		
59		
60		

1669

I.T. CORPORATION	PUMP SPECIFICATION				IT CORP SPEC. NO. 773481-P5005
	NO	BY	DATE	REV.	SHEET 1 OF 1
	D		05/12/98	CFC DRAFT	PROJECT NAME FERNALD WPRAP OU1
AREA NO.: 50 AREA NAME: GCS SYSTEM TAG NO.: P-5005 EQUIP: SCRUBBER ORGANICS PUMP	E	MSD	6/5/98	Draft Issue for EPA review	JOB NO. 773481
	F	WC	7/9/98	DRAFT CFC HOLD	LOCATION FERNALD, OHIO BY / APPR / DATE

1	C	Manufacturer: Warren Rupp (or equal)		Model No.: SB1 - A	
2	O	No. of Units: 1 (ONE)		Min. Flow at P.T.: 0 gpm	Normal Flow: 2 gpm
3	N	Liquid Pumped: Organics/Water		Max. Flow at P.T.: 30 gpm	Fluid pH:
4	D	Pumping Temp.:	Sp. Gr. @ P.T.: 0.80	Suction Press.: psia	Min.Viscosity @ P.T.: * cP
5	T	Differential Press.: 50 psi	Differential Head: 115 Ft.	Vapor Pressure @ P.T.: Ft.	NPSH Available: psig
6	N	Discharge Press.@ Norm:	Discharge Press. @ Max:		NPSH Required (Water): * Ft.
7	S	Type: Air-Operated Diaphragm Pump		Location: Outdoors	
8		Horizontal or Vertical Arrangement?	Horizontal	Single or Double Suction?	Single
9	C	CW OR CCW Direction of Rotation Facing Pump Coupling:		Case Design Press.: psig	Max. Allow. W.P.: psig
10	O	Number of Stages:	Speed: rpm	Shut-off Press.: PSIG	Vol. Eff. @ Rating: %
11	N	BARREL:	Split?	Horizontal?	Vertical?
12	S	IMPELLER:	Type:	Max. Diameter: In.	Min. Diameter: In.
13	T	Actual Imp. Dia.: In.	Vent and Drain Tapped?	Thrust Bearing Type:	Radial Bearing Type:
14	R	Nozzles / Size / Rating / Facing / Location		Bearing Lub. Type:	
15	U	Suction * * * *		Oiler?	Oiler Type:
16	C	Discharge * * * *		Coupling Mfr.:	Coupling Model:
17	T	Vents * * * *		Baseplate?	Type Baseplate:
18	I	Drains * * * *		Water Cooling: Csng, Stffg Bx, Brgs. Pdstl, Glnd or none?	
19	O	Cooling H2O * * * *		Total Water Req'd: gpm	Smothering Gland?
20	N	Stuffing Box Lubrication: Oil, Grease or None?		Type Packing:	Seal Oil Connection?
21		MECHANICAL SEAL:	Furnished By:	Manufacturer:	Type:
22	D	Single or Double?	Inside or Outside?	Balanced or Unbalanced?	
23	E	Rotary Unit:	Seal Ring Mtrl:	Face Material:	Shaft Packing:
24	T	Insert:	Reversible?	Face Material:	
25	A	Insert Mounting: Clamped, O-Ring or Press Fit?			
26	I	Gland:	Plain?	Carbon Throttle Bushing?	
27	L	Gland Stuffing Box Machined & Tapped for:		Dead End Lub.?	Circulating Lub.?
28	S	Flushing Seal Faces with Discharge Bypass?		Quenching?	Vent & Drain?
29		Flushing Seal Faces with External Fluid?		Auxilliary Stuffing Box Required?	
30		Weight of Pump: * lbs.	Weight of Base: lbs.	Weight of Driver: * lbs.	Shipping Weight: * lbs.
31	M	Casing & Covers: CS	Shaft:	Casing wear Rings:	Shaft Sleeves:
32	T	Impeller:	Lantern Rings:	Impeller Wear Rings:	Stuffing Box Bushings:
33	L	Glands:	Gaskets:		
34		Furnished By:	Electric/Steam turbine:	Direct/Gear/V-Belt/Other:	
35		ELECTRIC MOTOR:	Mfr:	STEAM TURBINE:	Mfr:
36		Mounted By:	Enclosure:	Mounted By:	Model:
37	D	Speed: rpm	Service Factor:	Horsepower: HP	Water Rates:
38	R	Volts:	Temp Rise:	Speed: rpm	Valve Manufacturer:
39	I	Phase:	Insulation:	Inlet Steam Press:	Inlet Steam Temp:
40	V	Cycles:	Frame:	Exhaust Press: psig	Nozzle Size:
41	E	Nominal Size: HP	Est. BHP Req'd:	Exhaust: psig	Nozzle Rating:
42	R	SPEED REDUCERS:	Mfr:	Back Pressure: psig	
43		Ratio:	Model:	Nozzle / Size / Rating / Facing / Location	
44		Integrator/Separate?	Class:	Inlet:	
45				Exhaust:	
46		Seal Driver Specification No.			
47	T	Performance Curve? *	Certified?	M	Serial Number:
48	E	Curve No.:		I	Outline Drawing Number:
49	S	Hydrotest?	Pressure: psig	S	Cross Section Drawing Number:
50	T	Witness Testing?	Shop Inspection?	C	
51					
52					
53	N	1. Vendor shall clearly state any exceptions to the requirements outlined in this data sheet.			
54	O	2. Vendor to tap pump suction and discharge for the installation of pressure gauges.			
55	T	3. Pump and associated instrumentation shall be provided with stainless steel I.D. tags.			
56	E	4. Vendor to complete information marked *.			
57	S	5. Vendor shall clearly state any exceptions to the requirements outlined in Spec# 15150. (Attached)			
58					
59					
60					

P5005.xls

I.T. CORPORATION	PUMP SPECIFICATION				IT CORP SPEC. NO. 773481-P5006
	NO	BY	DATE	REV	SHEET 1 OF 1
	D		05/12/98	CFC DRAFT	PROJECT NAME FERNALD WPRAP OU1
AREA NO.: 50 AREA NAME: GCS SYSTEM TAG NO.: P-5006 EQUIP: SUBCOOL QUENCH ORGANICS PUMP	E	MSD	6/5/98	Draft Issue for EPA Review	JOB NO. 773481
	F	JAN	7/9/98	DRAFT CFC HOLD	LOCATION FERNALD, OHIO BY / APPR / DATE

1669

1	C	Manufacturer: Warren Rupp (or equal)			Model No.: SB1 - A		
2	O	No. of Units: 1 (ONE)			Min. Flow at P.T.: 0 gpm	Normal Flow: 1 gpm	
3	N	Liquid Pumped: Organics/Water			Max. Flow at P.T.: 30 gpm	Fluid pH:	
4	D	Pumping Temp.:	Sp. Gr. @ P.T.: *		Suction Press.: psia	Min.Viscosity @ P.T.: * cP	
5	T	Differential Press.: 50 psi	Differential Head: Ft.		Vapor Pressure @ P.T.: Ft.	NPSH Available: psig	
6	N	Discharge Press.@ Norm:	Discharge Press. @ Max:			NPSH Required (Water): * Ft.	
7	S	Type: Air-Operated Diaphragm Pump			Location: Outdoors		
8		Horizontal or Vertical Arrangement? Horizontal			Single or Double Suction? Single		
9	C	CW OR CCW Direction of Rotation Facing Pump Coupling:			Case Design Press.: psig	Max. Allow. W.P.: psig	
10	O	Number of Stages:	Speed: rpm		Shut-off Press.: PSIG	Vol. Eff. @ Rating: %	
11	N	BARREL:	Split?		Horizontal?	Vertical?	
12	S	IMPELLER:	Type:		Max. Diameter: In.	Min. Diameter: In.	
13	T	Actual Imp. Dia.: In.	Vent and Drain Tapped?		Thrust Bearing Type:	Radial Bearing Type:	
14	R	Nozzles	Size	Rating	Facing	Location	Bearing Lub. Type:
15	U	Suction	*	*	*	*	Oiler? / Oiler Type:
16	C	Discharge	*	*	*	*	Coupling Mfr.: / Coupling Model:
17	T	Vents	*	*	*	*	Baseplate? / Type Baseplate:
18	I	Drains	*	*	*	*	Water Cooling: Csng, Stffg Bx, Brgs, Pdstl, Glnd or none?
19	O	Cooling H2O	*	*	*	*	Total Water Req'd: gpm / Smothering Gland?
20	N	Stuffing Box Lubrication: Oil, Grease or None?			Type Packing:	Seal Oil Connection?	
21		MECHANICAL SEAL:	Furnished By:		Manufacturer:	Type:	
22	D	Single or Double?	Inside or Outside?		Balanced or Unbalanced?		
23	E	Rotary Unit:	Seal Ring Mtrl:		Face Material:	Shaft Packing:	
24	T	Insert:	Reversible?		Face Material:		
25	A	Insert Mounting: Clamped, O-Ring or Press Fit?					
26	I	Gland:	Plain?		Carbon Throttle Bushing?		
27	L	Gland Stuffing Box Machined & Tapped for:			Dead End Lub.?	Circulating Lub.?	
28	S	Flushing Seal Faces with Discharge Bypass?			Quenching?	Vent & Drain?	
29		Flushing Seal Faces with External Fluid?			Auxiliary Stuffing Box Required?		
30		Weight of Pump: * lbs.	Weight of Base: lbs.		Weight of Driver: * lbs.	Shipping Weight: * lbs.	
31	M	Casing & Covers: CS	Shaft:		Casing wear Rings:	Shaft Sleeves:	
32	T	Impeller:	Lantern Rings:		Impeller Wear Rings:	Stuffing Box Bushings:	
33	L	Glands:	Gaskets:				
34		Furnished By:	Electric Steam Turbine		Direct Gear V-Belt Rope		
35		ELECTRIC MOTOR:	Mfr:		STEAM TURBINE:	Mfr:	
36		Mounted By:	Enclosure:		Mounted By:	Model:	
37	D	Speed: rpm	Service Factor:		Horsepower: HP	Water Rate: lbs/hr	
38	R	Volts:	Temp Rise:		Speed: rpm	Vacuum (in Hg):	
39	I	Phase:	Insulation:		Inlet Steam Press: psig	Inlet Steam Temp:	
40	V	Cycles:	Frame:		Normal: psig	Normal: deg F	
41	E	Nominal Size: HP	Ex-Proof Rqd:		Max: psig	Max: deg F	
42	R	SPEED REDUCERS:	Mfr:		Backpressure: psig		
43		Ratio:	Model:		Nozzles:	Size:	Rating: Facing: Location:
44		Integral or Separate:	Class:		Inlet:		
45					Exhaust:		
46		Seal Drive Specification No.					
47	T	Performance Curve? *	Certified?		M	Serial Number:	
48	E	Curve No.:			I	Outline Drawing Number:	
49	S	Hydrotest?	Pressure: psig		S	Cross Section Drawing Number:	
50	T	Witness Testing?	Shop Inspection?		C		
51							
52							
53	N	1. Vendor shall clearly state any exceptions to the requirements outlined in this data sheet.					
54	O	2. Vendor to tap pump suction and discharge for the installation of pressure gauges.					
55	T	3. Pump and associated instrumentation shall be provided with stainless steel I.D. tags.					
56	E	4. Vendor to complete information marked *.					
57	S	5. Vendor shall clearly state any exceptions to the requirements outlined in Spec# 15150. (Attached)					
58							
59							
60							

000298

I.T. CORPORATION

PUMP SPECIFICATION 1669

NO	BY	DATE	REV.
D	PA	5/12/98	CFC DRAFT
E	MSD	6/5/98	Draft Issue for EPA Review
F	JAN	7/9/98	DRAFT CFC

IT CORP SPEC. NO. 773481-P6001
SHEET 1 OF 1
PROJECT NAME FERNALD WPRAP OU1
JOB NO. 773481
LOCATION FERNALD, OHIO
BY | APPR | DATE

AREA NO: 60
AREA NAME: PROCESS BLOWDOWN PRETREATMENT
TAG NO.: P-6001 A,B
EQUIP: PRIMARY CLARIFIER SLUDGE PUMP

1	C	Manufacturer: ASH		Model No.: SRC - 2.5 x 2	
2	O	No. of Units: 2 (One on Standby)		Min. Flow at P.T.: 5 gpm	Normal Flow: 7.5 gpm
3	N	Liquid Pumped: Sludge w/20% water		Max. Flow at P.T.: 100 gpm	Fluid pH:5-9
4	D	Pumping Temperature: 150°F	Sp. Gr. @ P.T 1.20	Suction Press psia	Min.Viscosity @ P.T.: 10 cP
5	T	Differential Press.: psi	Differential Head: Ft.	Vapor Pressure @ P.T.: Ft.	NPSH Available: psig
6	N	Discharge Press@ Normal: 60 psig	Discharge Press. @ Max: 139 ft water		NPSH Required (Water): * Ft.
7	S	Type: Centrifugal Pump		Location:	
8		Horizontal or Vertical Arrangement? Horizantal		Single or Double Suction?	Single
9	C	CW OR CCW Direction of Rotation Facing Pump Coupling:CW		Case Design Press.: psig	Max. Allow. W.P.: psig
10	O	Number of Stages:	Speed: rpm	Shut-off Press.: PSIG	Vol. Eff. @ Rating: %
11	N	BARREL:	Split?	Horizontal?	Vertical?
12	S	IMPELLER:7.5"dia	Type:	Max. Diameter: 8 In.	Min. Diameter: In.
13	T	Actual Imp. Dia.: In.	Vent and Drain Tapped?	Thrust Bearing Type:	Radial Bearing Type:
14	R	Nozzles / Size / Rating / Facin / Location		Bearing Lub. Type:	
15	U	Suction / 2-1/2" / 150 / RF / *		Oiler?	Oiler Type:
16	C	Discharge / 2 / 150 / RF / *		Coupling Mfr.:	Coupling Model:
17	T	Vents / NA / * / * / *		Baseplate?	Type Baseplate:
18	I	Drains / 1/2" / * / * / *		Water Cooling: Csng, Stffg Bx, Brgs, Pdstl, Glnd or none?	
19	O	Cooling H2O / NA / * / * / *		Total Water Req'd: gpm	Smothering Gland?
20	N	Stuffing Box Lubrication: Oil, Grease or None?		Type Packing:	Seal Oil Connection?
21		MECHANICAL SEAL:	Furnished By:	Manufacturer:	Type:
22	D	Single or Double?	Inside or Outside?	Balanced or Unbalanced?	
23	E	Rotary Unit:	Seal Ring Mtrl:	Face Material:	Shaft Packing:
24	T	Insert:	Reversible?	Face Material:	
25	A	Insert Mounting: Clamped, O-Ring or Press Fit?			
26	I	Gland:	Plain?	Carbon Throttle Bushing?	
27	L	Gland Stuffing Box Machined & Tapped for:		Dead End Lub.?	Circulating Lub.?
28	S	Flushing Seal Faces with Discharge Bypass?		Quenching?	Vent & Drain?
		Flushing Seal Faces with External Fluid?		Auxilliary Stuffing Box Required?	
		Weight of Pump: 77 lbs.	Weight of Base: lbs.	Weight of Driver: * lbs.	Shipping Weight: * lbs.
31	M	Casing & Covers: CI w/Elastomer Liner	Shaft: AISI 1045 Steel	Casing wear Rings:	Shaft Sleeves:
32	T	Impeller: Elastomer	Lantern Rings:*	Impeller Wear Rings:	Stuffing Box Bushings:
33	L	Glands:*	Gaskets:TFE		
34		Furnished By: Owner	Elec. or Steam Turbine? Elec.	Direct, Gear, V-Belt or Rope? *	
35		ELECTRIC MOTOR:	Mfr.: *	STEAM TURBINE:	Mfr.:
36		Mounted By: Owner	Enclosure: TEFC	Mounted By:	Model:
37	D	Speed: 1800 rpm	Service Factor 1.15	Brkpwr: HP	Water Rate:
38	R	Volts: 480	Temp. Rise: *	Speed: rpm	Vacuum (Exh):
39	I	Phase: 3	Insulation: *	Inlet Steam Pr.: psig	Inlet Steam Temp.:
40	V	Cycles: 60	Frame: *	Nom. Inlet: psig	Nom. Inlet: deg F
41	E	Nominal Size: 10 HP	Est. BHP Req'd: 8.5 HP	Max. Inlet: psig	Max. Inlet: deg F
42	R	SPEED REDUCERS:	Mfr.:	Backpressure: psig	
43		Ratio:	Model:	Nozzles: Size / Rating / Facing / Location	
44		Integral or Separate?	Class:	Inlet:	
45				Exhaust:	
46		See Driver Specification No.:			
47	T	Performance Curve? yes	Certified?	M Serial Number:	
48	E	Curve No.:C4-2054A		I Outline Drawing Number:	
49	S	Hydrotest?	Pressure: psig	S Cross Section Drawing Number:	
50	T	Witness Testing?	Shop Inspection?	C	
51					
52					
53	N				
54	O	1. Pump and associated instrumentation shall be provided with stainless steel I.D. tags.			
55	T	2. Existing Equipment to be refurbished per project specification prior to use.			
56	E	3. Turndown required is 20:1.			
57	S				
58					
59					
60					

000299

P6001.xls

1669

I.T. CORPORATION

PUMP SPECIFICATION

NO	BY	DATE	REV.
D	PA	5/12/98	CFC DRAFT
E	MSD	6/5/98	Draft Issue for EPA Review
F	JAN	7/9/98	DRAFT CFC

IT CORP SPEC. NO. 773481-P6002
SHEET 1 OF 1
PROJECT NAME FERNALD WPRAP OU1
JOB NO. 773481
LOCATION FERNALD, OHIO
BY | APPR | DATE

AREA NO: 60
AREA NAME: PROCESS BLOWDOWN PRETREATMENT
TAG NO.: P-6002 A,B
EQUIP: SECONDARY CLARIFIER SLUDGE PUMP

1	C	Manufacturer: ASH		Model No.: SRC - 2.5x2	
2	O	No. of Units: 2 (One on Standby)		Min. Flow at P.T.: 5 gpm	Normal Flow: 7.5 gpm
3	N	Liquid Pumped: Sludge w/20% water		Max. Flow at P.T.: 100 gpm	Fluid pH: 5-9
4	D	Pumping Temperature: 150F	Sp. Gr. @ P.T 1.20	Suction Press.: psia	Min.Viscosity @ P.T.: 10 cP
5	T	Differential Press.: psi	Differential Head: Ft.	Vapor Pressure @ P.T.: Ft.	NPSH Available: psig
6	N	Discharge Press@ Normal: 60 psig	Discharge Press. @ Max: 139 ft water		NPSH Required (Water): * Ft.
7	S	Type: Centrifugal Pump		Location:Indoors	
8		Horizontal or Vertical Arrangement?Horizantal		Single or Double Suction?	Single
9	C	CW OR CCW Direction of Rotation Facing Pump Coupling:CW		Case Design Press.: psig	Max. Allow. W.P.: psig
10	O	Number of Stages:	Speed: rpm	Shut-off Press.: PSIG	Vol. Eff. @ Rating: %
11	N	BARREL: *	Split?	Horizontal?	Vertical?
12	S	IMPELLER:7.5" dia	Type:	Max. Diameter: 8 In.	Min. Diameter: In.
13	T	Actual Imp. Dia.: In.	Vent and Drain Tapped?	Thrust Bearing Type:	Radial Bearing Type:
14	R	Nozzles / Size / Rating / Facin / Location		Bearing Lub. Type:	
15	U	Suction / 2 1/2" / 150 / RF / *		Oiler?	Oiler Type:
16	C	Discharge / 2" / 150 / RF / *		Coupling Mfr.:	Coupling Model:
17	T	Vents / NA / * / * / *		Baseplate?	Type Baseplate:
18	I	Drains / 1/2" / * / * / *		Water Cooling: Csng, Stffg Bx, Brgs, Pdstl, Gind or none?	
19	O	Cooling H2O / NA / * / * / *		Total Water Req'd: gpm	Smothering Gland?
20	N	Stuffing Box Lubrication: Oil, Grease or None?		Type Packing:	Seal Oil Connection?
21		MECHANICAL SEAL:	Furnished By:	Manufacturer:	Type:
22	D	Single or Double?	Inside or Outside?	Balanced or Unbalanced?	
23	E	Rotary Unit:	Seal Ring Mtrl:	Face Material:	Shaft Packing:
24	T	Insert:	Reversible?	Face Material:	
	A	Insert Mounting: Clamped, O-Ring or Press Fit?			
	I	Gland:	Plain?	Carbon Throttle Bushing?	
27	L	Gland Stuffing Box Machined & Tapped for:		Dead End Lub.?	Circulating Lub.?
28	S	Flushing Seal Faces with Discharge Bypass?		Quenching?	Vent & Drain?
29		Flushing Seal Faces with External Fluid?		Auxilliary Stuffing Box Required?	
30		Weight of Pump: 77 lbs.	Weight of Base: lbs.	Weight of Driver: * lbs.	Shipping Weight: * lbs.
31	M	Casing & Covers: CI w/Elastomer Lining	Shaft: AISI 1045 Steel	Casing wear Rings:	Shaft Sleeves:
32	T	Impeller: Elastomer	Lantern Rings *	Impeller Wear Rings:	Stuffing Box Bushings:
33	L	Glands: *	Gaskets: TFR		
34		Furnished By: Owner	Elec. or Steam Turbine Elec.	Direct, Gear, V-Belt or Rope?	Direct
35		ELECTRIC MOTOR:	Mfr.: *	STEAM TURBINE:	[redacted]
36		Mounted By: Owner	Enclosure: *	[redacted]	[redacted]
37	D	Speed: 1800 rpm	Service Factor *	[redacted]	[redacted]
38	R	Volts: 480	Temp. Rise: *	[redacted]	[redacted]
39	I	Phase: 3	Insulation: *	[redacted]	[redacted]
40	V	Cycles: 60	Frame: *	[redacted]	[redacted]
41	E	Nominal Size: 10 HP	Est. BHP Req' 9 HP	[redacted]	[redacted]
42	R	SPEED REDUCERS:	Mfr.:	[redacted]	[redacted]
43		Ratio:	Model:	[redacted]	[redacted]
44		Integral or Separate?	Class:	[redacted]	[redacted]
45				[redacted]	[redacted]
46		See Driver Specification No.:			
47	T	Performance Curve?yes Yes	Certified?	M Serial Number:	
48	E	Curve No.: C4-2054A		I Outline Drawing Number:	
49	S	Hydrotest?	Pressure: psig	S Cross Section Drawing Number:	
50	T	Witness Testing?	Shop Inspection?	C	
51					
52					
53	N				
54	O				
55	T				
56	E				
57	S				
58					

P6002.xls

I.T. CORPORATION

PUMP SPECIFICATION

No.	BY	DATE	REV.
D	PA	5/12/98	INTERNAL REVIEW
E	MSD	6/5/98	Draft Issue for EPA Review
F	JAN	7/9/98	DRAFT CFC HOLD

IT CORP SPEC. NO. 773481-P6004
SHEET 1 OF 1
PROJECT NAME: FERNALD WPRAP OU1
JOB NO. 773481
LOCATION: Fernald,OH
BY: PA | APPR | DATE

AREA NO: 60
AREA NAME: PROCESS BLOWDOWN PRETREATMENT
TAG NO.: P-6004
EQUIP: ORGANIC CONDENSATE DISCHARGE PUMP

1	C	Manufacturer: Duriron		Model No.: Mark III 2K2X1-10ARV	
2	O	No. of Units: 1		Min. Flow at P.T.: 5gpm	Normal Flow: 5 gpm
3	N	Liquid Pumped: Organic Condensate or Filtrate from Press		Max. Flow at P.T.: 40gpm	Fluid pH:5-9
4	D	Pumping Temperature: 150°F	Sp. Gr. @ P.T.: 0.7 to 1.05	Suction Press psia	Min.Viscosity @ P.T.: 1 cP
5	T	Differential Press.: psi	Differential Head: Ft.	Vapor Pressure @ P.T.: Ft.	NPSH Available: psig
6	N	Discharge Press@ Normal:45psig	Discharge Press. @ Max:104 ft water		NPSH Required (Water): * Ft.
7	S	Type: Centrifugal Pump		Location:	
8		Horizontal or Vertical Arrangement? Horizantal		Single or Double Suction? Single	
9	C	CW OR CCW Direction of Rotation Facing Pump Coupling:CW		Case Design Press.: psig	Max. Allow. W.P.: psig
10	O	Number of Stages:	Speed:3500 rpm	Shut-off Press.: PSIG	Vol. Eff. @ Rating: %
11	N	BARREL:	Split?	Horizontal?	Vertical?
12	S	IMPELLER:6" dia	Type:Reverse Vane	Max. Diameter: In.	Min. Diameter: In.
13	T	Actual Imp. Dia.: In.	Vent and Drain Tapped?	Thrust Bearing Type:	Radial Bearing Type:
14	R	Nozzles / Size / Rating / Facing / Location		Bearing Lub. Type:	
15	U	Suction / 2" / 150# / RF / *		Oiler?	Oiler Type:
16	C	Discharge / 1" / 150# / RF / *		Coupling Mfr.:	Coupling Model:
17	T	Vents / * / * / * / *		Baseplate?	Type Baseplate:
18	I	Drains / 1" / * / * / *		Water Cooling: Csng, Stffg Bx, Brgs, Pdstl, Glnd or none?	
19	O	Cooling H2O / NA / * / * / *		Total Water Req'd: gpm	Smothering Gland?
20	N	Stuffing Box Lubrication: Oil, Grease or None?		Type Packing:	Seal Oil Connection?
21		MECHANICAL SEAL:	Furnished By:	Manufacturer:	Type:
22	D	Single or Double?	Inside or Outside?	Balanced or Unbalanced?	
23	E	Rotary Unit:	Seal Ring Mtrl:	Face Material:	Shaft Packing:
24	T	Insert:	Reversible?	Face Material:	
	A	Insert Mounting: Clamped, O-Ring or Press Fit?			
	I	Gland:	Plain?	Carbon Throttle Bushing?	
	L	Gland Stuffing Box Machined & Tapped for:		Dead End Lub.?	Circulating Lub.?
28	S	Flushing Seal Faces with Discharge Bypass?		Quenching?	Vent & Drain?
29		Flushing Seal Faces with External Fluid?		Auxilliary Stuffing Box Required?	
30		Weight of Pump:210 lbs.	Weight of Base: lbs.	Weight of Driver: * lbs.	Shipping Weight: * lbs.
31	M	Casing & Covers: ALLOY CD4M	Shaft: BBC8	Casing wear Rings:	Shaft Sleeves:
32	T	Impeller: ALLOY CD4M	Lantern Rings: *	Impeller Wear Rings:	Stuffing Box Bushings:
33	L	Glands: *	Gaskets: TFR		
34		Furnished By: Owner	Elec. or Steam Turbine? Elec.	Direct, Gear, V-Belt or Rope? *	
35		ELECTRIC MOTOR:	Mfr.:Reliance	STEAM TURBINE:	Mfr.:
36		Mounted By: Owner	Enclosure:TEFC	Mounted By:	Model:
37	D	Speed: 3600 rpm	Service Factor:1.15	Horsepower: HP	Water Rates: Lbs/Hr
38	R	Volts: 230/460	Temp. Rise: *	Speed rpm	Vacuum (if any):
39	I	Phase: 3	Insulation: *	Inlet Steam Press.:	Inlet Steam Temp.:
40	V	Cycles: 60	Frame: *	Normal: psig	Normal: deg. F
41	E	Nominal Size: 7.5 HP	Est. BHP Req'd: * HP	Max.: psig	Max.: deg F
42	R	SPEED REDUCERS:	Mfr.:	Backpressure: psig	
43		Ratio:	Model:	Nozzles / Size / Rating / Facing / Location	
44		Integral or Separate?	Class:	Inlet	
45				Exhaust	
46		See Driver Specification No.:			
47	T	Performance Curve? yes	Certified?	M Serial Number:	
48	E	Curve No.:M38390 AV		I Outline Drawing Number:	
49	S	Hydrotest?	Pressure: psig	S Cross Section Drawing Number:	
50	T	Witness Testing?	Shop Inspection?	C	
51					
52		1. Pump and associated instrumentation shall be provided with stainless steel I.D. tags.			
53	N	2. Existing Equipment to be refurbished per project specification prior to use.			
54	O	3. Turndown required is 8:1.			
55	T				
56	E				
	S				
59					
60					

P6004.xls

1669

I.T. CORPORATION	PUMP SPECIFICATION				IT CORP SPEC. NO. 773481-P6005
	No.	BY	DATE	REV.	SHEET 1 OF 1
	D	PA	05/12/98	CFC DRAFT	PROJECT NAME FERNALD WPRAP OU1
AREA NO: 60 AREA NAME: PROCESS BLOWDOWN PRETREATMENT TAG NO.: P-6005 EQUIPMENT NAME: FILTER PRESS SLUDGE PUMP	E	MSD	06/05/98	Draft Issue for EPA Review	JOB NO. 773481 LOCATION FERNALD, OH
	F	JAN	07/09/98	DRAFT CFC HOLD	BY / APPR / DATE

1	C	Manufacturer: Sludge Master		Model No.:		
2	O	No. of Units: 1 (One)				
3	N	Liquid Pumped: Sludge W/20% Solids		Max. Capacity at P.T.: 100 gpm	Discharge Press.: 60 psig	
4	D	Pumping Temp.: 150 deg F	Sp. Gr. @ P.T.: 1.0	Suction Press psia	Viscosity @ P.T.: cP	
5	T	Differential Press.: psi	Differential Head: Ft.	Vapor Pressure @ P.T.: Ft.	NPSH Available: psig	
6	N	Corrosion or erosion Factors:			NPSH Required (Water): Ft.	
7	S	Type: Piston				
8		Horizontal or Vertical Arrangement? Vertical		Single or Double Suction?		
9	C	CW OR CCW Direction of Rotation Facing Pump Coupling:		Case Design Press.: psig	Max. Allow. W.P.: psig	
10	O	Number of Stages:	Speed: rpm	Shut-off Press.: PSIG	Vol. Eff. @ Rating: %	
11	N	BARREL:	Split?	Horizontal?	Vertical?	
12	S	IMPELLER:	Type:	Max. Diameter: In.	Min. Diameter: In.	
13	T	Actual Imp. Dia.: In.	Vent and Drain Tapped?	Thrust Bearing Type:	Radial Bearing Type:	
14	R	Nozzles / Size / Rating / Facing / Location		Bearing Lub. Type:		
15	U	Suction / 3" / N/A / NPT		Oiler?	Oiler Type:	
16	C	Discharge / 3" / N/A / NPT		Coupling Mfr.:	Coupling Model:	
17	T	Vents		Baseplate?	Type Baseplate:	
18	I	Drains		Water Cooling: Csng, Stffg Bx, Brgs, Pdstl, Gind or none?		
19	O	Cooling H2O		Total Water Req'd: gpm	Smothering Gland?	
20	N	Stuffing Box Lubrication: Oil, Grease or None?		Type Packing:	Seal Oil Connection?	
21		MECHANICAL SEAL:	Furnished By:	Manufacturer:	Type:	
22	D	Single or Double?	Inside or Outside?	Balanced or Unbalanced?		
23	E	Rotary Unit:	Seal Ring Mtrl:	Face Material:	Shaft Packing:	
24	T	Insert:	Reversible?	Face Material:		
25	A	Insert Mounting: Clamped, O-Ring or Press Fit?				
26	I	Gland:	Plain?	Carbon Throttle Bushing?		
27	L	Gland Stuffing Box Machined & Tapped for:		Dead End Lub.?	Circulating Lub.?	
28	S	Flushing Seal Faces with Discharge Bypass?		Quenching?	Vent & Drain?	
29		Flushing Seal Faces with External Fluid?		Auxilliary Stuffing Box Required?		
30		Weight of Pump: lbs.	Weight of Base: lbs.	Weight of Driver: lbs.	Shipping Weight: lbs.	
31	M	Housing: Cast Iron	Shaft: N/A	Casing wear Rings:	Shaft Sleeves:	
32	T	Diaphragm: Neoprene	Lantern Rings: N/A	Impeller Wear Rings:	Stuffing Box Bushings:	
33	L		Gaskets: N/A			
34		Furnished By: Owner	Driver: 80psi Compressed Air			
35		ELECTRIC MOTOR:	Mfr.: N/A			
36		Mounted By: N/A	Enclosure: N/A			
37	D	Speed: N/A rpm	Service Factor: N/A			
38	R	Volts: N/A	Temp. Rise: N/A			
39	I	Phase: N/A	Insulation: N/A			
40	V	Cycles: N/A	Frame: N/A			
41	E	Nominal Size: N/A HP	Est. BHP Req'd: N/A HP			
42	R	SPEED REDUCERS:	Mfr.: N/A			
43		Ratio:	Model: N/A			
44		Integral or Separate?	Class: N/A			
45						
46		See Driver Specification No.:				
47	T	Performance Curve?	Certified?	M	Serial Number:	
48	E	Curve No.:		I	Outline Drawing Number:	
49	S	Hydrotest?	Pressure: psig	S	Cross Section Drawing Number:	
50	T	Witness Testing?	Shop Inspection?	C		
51	N					
52	O					
53	T					
54	E					
55	S					

000302

P6005.xls

I.T. CORPORATION

PUMP SPECIFICATION

No.	BY	DATE	REV.
D	PA	5/12/98	CFC DRAFT
E	MSD	6/5/98	Draft Issue for EPA Review
F	WC	7/9/98	DRAFT CFC

IT CORP SPEC. NO. 773481-P6006
SHEET 1 OF 1
PROJECT NAME FERNALD WPRAP OU1
JOB NO. 773481
LOCATION FERNALD, OHIO
BY | APPR | DATE

AREA NO: 60
AREA NAME: PROCESS BLOWDOWN PRETREATMENT
TAG NO.: P-6006 A,B
EQUIP: FILTRATE DISCHARGE PUMP

1	C	Manufacturer: ASH PUMP		Model No.: SRC 2.5 x 2	
2	O	No. of Units: 2 (One on Standby)		Min. Flow at P.T.: 10 gpm	Normal Flow: 23 gpm
3	N	Liquid Pumped: Filtrate From the Filter Press		Max. Flow at P.T.: 100 gpm	Fluid pH:5-9
4	D	Pumping Temperature: 150°F	Sp. Gr. @ P.T.: 1.05	Suction Press.: psia	Min.Viscosity @ P.T.: 1 cP
5	T	Differential Press.: psi	Differential Head: Ft.	Vapor Pressure @ P.T.: Ft.	NPSH Available: psig
6	N	Discharge Press@ Normal:45psig	Discharge Press. @ Max: 104 ft water.		NPSH Required (Water): * Ft.
7	S	Type: Centrifugal Pump		Location:Indoors	
8		Horizontal or Vertical Arrangement? Horizantal		Single or Double Suction?	Single
9	C	CW OR CCW Direction of Rotation Facing Pump Coupling:CW		Case Design Press.: psig	Max. Allow. W.P.: psig
10	O	Number of Stages:2	Speed: 2200 rpm	Shut-off Press.: PSIG	Vol. Eff. @ Rating: %
11	N	BARREL:	Split?	Horizontal?	Vertical?
12	S	IMPELLER:7-1/2 " dia	Type:	Max. Diameter: In.	Min. Diameter: In.
13	T	Actual Imp. Dia.: In.	Vent and Drain Tapped?	Thrust Bearing Type:	Radial Bearing Type:
14	R	Nozzles / Size / Rating / Facing / Location		Bearing Lub. Type:	
15	U	Suction / 2-1/2" / 150# / RF / *		Oiler?	Oiler Type:
16	C	Discharge / 2" / 150# / RF / *		Coupling Mfr.:	Coupling Model:
17	T	Vents / NA / * / * / *		Baseplate?	Type Baseplate:
18	I	Drains / 1/2" / * / * / *		Water Cooling: Csng, Stffg Bx, Brgs, Pdstl, Glnd or none?	
19	O	Cooling H2O / NA / * / * / *		Total Water Req'd: gpm	Smothering Gland?
20	N	Stuffing Box Lubrication: Oil, Grease or None?		Type Packing:	Seal Oil Connection?
21		MECHANICAL SEAL:	Furnished By:	Manufacturer:	Type:
22	D	Single or Double?	Inside or Outside?	Balanced or Unbalanced?	
23	E	Rotary Unit:	Seal Ring Mtrl:	Face Material:	Shaft Packing:
24	T	Insert:	Reversible?	Face Material:	
25	A	Insert Mounting: Clamped, O-Ring or Press Fit?			
26	I	Gland:	Plain?	Carbon Throttle Bushing?	
27	L	Gland Stuffing Box Machined & Tapped for:		Dead End Lub.?	Circulating Lub.?
28	S	Flushing Seal Faces with Discharge Bypass?		Quenching?	Vent & Drain?
29		Flushing Seal Faces with External Fluid?		Auxilliary Stuffing Box Required?	
30		Weight of Pump:77 lbs.	Weight of Base: lbs.	Weight of Driver: * lbs.	Shipping Weight: * lbs.
31	M	Casing & Covers: CI w/Elastomer	Shaft: BBC8	Casing wear Rings:	Shaft Sleeves:
32	T	Impeller: Elastomer	Lantern Rings:*	Impeller Wear Rings:	Stuffing Box Bushings:
33	L	Glands: *	Gaskets:TFR		
34		Furnished By: Owner	Elec. or Steam Turbine Elec.	Direct, Gear, V-Belt or Rope?	V-Belt
35		ELECTRIC MOTOR:	Mfr.: *	STEAM TURBINE:	Mfr.:
36		Mounted By: Owner	Enclosure: *	Mounted By:	Model:
37	D	Speed: 1800 rpm	Service Factor: *	Horsepower: HP	Water Rates: lb/HP-hr
38	R	Volts: 480	Temp. Rise: *	Speed: rpm	Vacuum (Hg):
39	I	Phase: 3	Insulation: *	Inlet Steam Press.:	Inlet Steam Temp.:
40	V	Cycles: 60	Frame: *	Normal:	Normal:
41	E	Nominal Size: 10 HP	Est. BHP Req'd: 7 HP	Max.:	Max.:
42	R	SPEED REDUCERS:	Mfr.:	Back Pressure:	
43		Ratio:	Model:	Nozzles / Size / Rating / Facing / Location	
44		Integral or Separate?	Class:	Inlet:	
45				Exhaust:	
46		See Driver Specification No.:			
47	T	Performance Curve?yes	Certified?	M	Serial Number:
48	E	Curve No.:C4-2054A		I	Outline Drawing Number:
49	S	Hydrotest?	Pressure: psig	S	Cross Section Drawing Number:
50	T	Witness Testing?	Shop Inspection?	C	
51					
52		1. Pump and associated instrumentation shall be provided with stainless steel I.D. tags.			
53	N	2. Existing Equipment to be refurbished per project specification prior to use.			
54	O	3. Turndown required is 10:1.			
55	T				
56	E				
57	S				
58					
59					
60					

P6006.xls

I.T. CORPORATION

PUMP SPECIFICATION

No.	BY	DATE	REV.
D	PA	5/12/98	CFC DRAFT
E	MSD	6/5/98	Draft Issue for EPA Review
F	WC	7/9/98	DRAFT CFC

IT CORP SPEC. NO. 773481-P6008
SHEET 1 OF 1
PROJECT NAME FERNALD WPRAP OU1
JOB NO. 773481
LOCATION FERNALD, OHIO
BY | APPR | DATE

AREA NO: 60
AREA NAME: PROCESS BLOWDOWN PRETREATMENT
TAG NO.: P-6008 A,B
EQUIP: CLARIFIER DISCHARGE PUMP

1	C	Manufacturer: ASH		Model No.: SRC- 2.5X2	
2	O	No. of Units: 2 (One on Standby)		Min. Flow at P.T.: 15 gpm	Normal Flow: 65gpm
3	N	Liquid Pumped: Clarified Water		Max. Flow at P.T.: 100 gpm	Fluid pH:5-9
4	D	Pumping Temperature: 150o F	Sp. Gr. @ P.T.: 1.05	Suction Press.: psia	Min.Viscosity @ P.T.: 1 cP
5	T	Differential Press.: psi	Differential Head: Ft.	Vapor Pressure @ P.T.: Ft.	NPSH Available: psig
6	N	Discharge Pres@ Normal: 60psig	Discharge Press. @ Max: 139 ft water		NPSH Required (Water): * Ft.
7	S	Type: Centrifugal Pump		Location:	
8		Horizontal or Vertical Arrangement? Horizantal		Single or Double Suction? Single	
9	C	CW OR CCW Direction of Rotation Facing Pump Coupling:CW		Case Design Press.: psig	Max. Allow. W.P.: psig
10	O	Number of Stages:2	Speed:2600 # rpm	Shut-off Press.: PSIG	Vol. Eff. @ Rating: %
11	N	BARREL:	Split?	Horizontal?	Vertical?
12	S	IMPELLER:7.5" dia	Type:	Max. Diameter: In.	Min. Diameter: In.
13	T	Actual Imp. Dia.: In.	Vent and Drain Tapped?	Thrust Bearing Type:	Radial Bearing Type:
14	R	Nozzles / Size / Rating / Facing / Location		Bearing Lub. Type:	
15	U	Suction / 2 1/2" / 150 / RF / *		Oiler?	Oiler Type:
16	C	Discharge / 2" / 150 / RF / *		Coupling Mfr.:	Coupling Model:
17	T	Vents / NA / * / * / *		Baseplate?	Type Baseplate:
18	I	Drains / 1/2" / * / * / *		Water Cooling: Csng, Stffg Bx, Brgs, Pdstl, Glnd or none?	
19	O	Cooling H2O / NA / * / * / *		Total Water Req'd: gpm	Smothering Gland?
20	N	Stuffing Box Lubrication: Oil, Grease or None?		Type Packing:	Seal Oil Connection?
21		MECHANICAL SEAL:	Furnished By:	Manufacturer:	Type:
22	D	Single or Double?	Inside or Outside?	Balanced or Unbalanced?	
23	E	Rotary Unit:	Seal Ring Mtrl:	Face Material:	Shaft Packing:
24	T	Insert:	Reversible?	Face Material:	
25	A	Insert Mounting: Clamped, O-Ring or Press Fit?			
26	I	Gland:	Plain?	Carbon Throttle Bushing?	
27	L	Gland Stuffing Box Machined & Tapped for:		Dead End Lub.?	Circulating Lub.?
28	S	Flushing Seal Faces with Discharge Bypass?		Quenching?	Vent & Drain?
29		Flushing Seal Faces with External Fluid?		Auxilliary Stuffing Box Required?	
30		Weight of Pump:77 lbs.	Weight of Base: lbs.	Weight of Driver: * lbs.	Shipping Weight: * lbs.
31	M	Casing & Covers: CI w/Elastomer	Shaft: AISI 1045 Steel	Casing wear Rings:	Shaft Sleeves:
32	T	Impeller: Elastomer	Lantern Rings:*	Impeller Wear Rings:	Stuffing Box Bushings:
33	L	Glands: *	Gaskets:TFR		
34		Furnished By: Owner	Elec. or Steam Turbine Elec.	Direct, Gear, V-Belt or Rope? *	
35		ELECTRIC MOTOR:	Mfr.: *	STEAM TURBINE:	Mfr.:
36		Mounted By: Owner	Enclosure: *	Mounted By:	Model:
37	D	Speed: 1800 rpm	Service Factor: *	Horsepower: HP	Water Rates: Lbs/hr
38	R	Volts: 480	Temp. Rise: *	Speed rpm	Vacuum (if any):
39	I	Phase: 3	Insulation: *	Inlet Steam Press.:	Inlet Steam Temp.:
40	V	Cycles: 60	Frame: *	Normal: psig	Normal: deg. F
41	E	Nominal Size: 10 HP	Est. BHP Req'd: 9 HP	Max.: psig	Max.: deg F
42	R	SPEED REDUCERS:	Mfr.:	Backpressure: psig	
43		Ratio:	Model:	Nozzles / Size / Rating / Facing / Location	
44		Integral or Separate?	Class:	Inlet	
45				Exhaust	
46		See Driver Specification No.:			
47	T	Performance Curve?yes	Certified?	M Serial Number:	
48	E	Curve No.:C4-2054A		I Outline Drawing Number:	
49	S	Hydrotest?	Pressure: psig	S Cross Section Drawing Number:	
50	T	Witness Testing?	Shop Inspection?	C	
51					
52					
53	N	1. Pump and associated instrumentation shall be provided with stainless steel I.D. tags.			
54	O	2. Existing Equipment to be refurbished per project specification prior to use.			
55	T	3. Turndown required is 7:1.			
56	E				
57	S				
58					
59					

1669

I.T. CORPORATION

PUMP SPECIFICATION

NO	BY	DATE	REV.
D	PMS	5/12/98	CFC DRAFT
E	MSD	6/5/98	Draft Issue for EPA Review
F	PMS	7/9/98	DRAFT CFC

IT CORP SPEC. NO. 773481-65-P6501

SHEET 1 OF 1

PROJECT NAME FERNALD WPRAP OU1

JOB NO. 773481

LOCATION FERNALD, OHIO

PMS | APPR | DATE

AREA NO: 65
AREA NAME: WATER TREATMENT SYSTEM
TAG NOS.: P-6501A & P-6501B
EQUIPMENT NAME: CLARIFIER FEED PUMPS

1	C	Manufacturer: EnviroTech Pump Systems		Model No.: ASH Pump Model 4x3SRC	
2	O	No. of Units: 2 (TWO)		Min. Flow at P.T.: 180 gpm	Normal Flow: 250 gpm
3	N	Liquid Pumped: Waste Water		Max. Flow at P.T.: 260 gpm	Fluid pH:
4	D	Pumping Temp.: 0 - 110 deg F	Sp. Gr. @ P.T.: 1.05	Suction Press.: psia	Min.Viscosity @ P.T.: 1.0 cP
5	T	Differential Press.: psi	Differential Head: Ft.	Vapor Pressure @ P.T.: Ft.	NPSH Available: psig
6	N	Discharge Press.@ Norm: 20 psig	Discharge Press. @ Max:		NPSH Required (Water): * Ft.
7	S	Type: Horizontal Centrifugal		Location:	
8		Horizontal or Vertical Arrangement? Horizontal		Single or Double Suction?	Single
9	C	CW OR CCW Direction of Rotation Facing Pump Coupling: *		Case Design Press.: psig	Max. Allow. W.P.: psig
10	O	Number of Stages: 2	Speed: 1400 rpm	Shut-off Press.: PSIG	Vol. Eff. @ Rating: %
11	N	BARREL:	Split?	Horizontal?	Vertical?
12	S	IMPELLER:	Type:	Max. Diameter: In.	Min. Diameter: In.
13	T	Actual Imp. Dia.: 9 In.	Vent and Drain Tapped?	Thrust Bearing Type:	Radial Bearing Type:
14	R	Nozzles / Size / Rating / Facing / Location		Bearing Lub. Type:	
15	U	Suction / 4" / * / * / *		Oiler?	Oiler Type:
16	C	Discharge / 3" / * / * / *		Coupling Mfr.: *	Coupling Model:
17	T	Vents / * / * / * / *		Baseplate?	Type Baseplate:
18	I	Drains / * / * / * / *		Water Cooling: Csng, Stffg Bx, Brgs, Pdstl, Glnd or none?	
19	O	Cooling H2O		Total Water Req'd: gpm	Smothering Gland?
20	N	Stuffing Box Lubrication: Oil, Grease or None?		Type Packing:	Seal Oil Connection?
21		MECHANICAL SEAL:	Furnished By:	Manufacturer:	Type:
22	D	Single or Double?	Inside or Outside?	Balanced or Unbalanced?	
23	E	Rotary Unit:	Seal Ring Mtrl:	Face Material:	Shaft Packing:
24	T	Insert:	Reversible?	Face Material:	
25	A	Insert Mounting: Clamped, O-Ring or Press Fit?			
26	I	Gland:	Plain?	Carbon Throttle Bushing?	
27	L	Gland Stuffing Box Machined & Tapped for:		Dead End Lub.?	Circulating Lub.?
28	S	Flushing Seal Faces with Discharge Bypass?		Quenching?	Vent & Drain?
29		Flushing Seal Faces with External Fluid?		Auxilliary Stuffing Box Required?	
30		Weight of Pump: * lbs.	Weight of Base: * lbs.	Weight of Driver: * lbs.	Shipping Weight: * lbs.
31	M	Casing & Covers: cast Iron	Shaft:	Casing wear Rings:	Shaft Sleeves:
32	T	Impeller: cast Iron	Lantern Rings:	Impeller Wear Rings:	Stuffing Box Bushings:
33	L	Glands:	Gaskets:		
34		Furnished By: *	Elec. or Steam Turbine? Elec.	Direct, Gear, V-Belt or Rope? *	
35		ELECTRIC MOTOR:	Mfr.: *	STEAM TURBINE:	Mfr.:
36		Mounted By: Owner	Enclosure: *	Mounted By:	Model:
37	D	Speed: * rpm	Service Factor: *	Horsepower: HP	Water Rates: Lbs/Hr
38	R	Volts: 230/460	Temp. Rise: *	Speed rpm	Vacuum (if any):
39	I	Phase: 3	Insulation: *	Inlet Steam Press.:	Inlet Steam Temp.:
40	V	Cycles: 60	Frame: *	Normal: psig	Normal: deg. F
41	E	Nominal Size: 7.5 HP	Est. BHP Req'd: 5.1 HP	Max.: psig	Max.: deg F
42	R	SPEED REDUCERS:	Mfr.:	Backpressure: psig	
43		Ratio:	Model:	Nozzles / Size / Rating / Facing / Location	
44		Integral or Separate?	Class:	Inlet	
45				Exhaust	
46		See Driver Specification No.:			
47	T	Performance Curve? *	Certified?	M Serial Number:	
48	E	Curve No.:		I Outline Drawing Number:	
49	S	Hydrotest?	Pressure: psig	S Cross Section Drawing Number:	
50	T	Witness Testing?	Shop Inspection?	C	
51		1. Pump shall be provided with stainless steel I.D. tags.			
52		2. Items marked * to be provided by manufacturer.			
53	N				
54	O				
55	T				
56	E				
57	S				
58					
59					
60					

000305

PT/_7/7/98_/[A65spec]-P6501A,B

I.T. CORPORATION

PUMP SPECIFICATION 1669

NO	BY	DATE	REV.
D	PMS	5/12/98	CFC DRAFT
E	MSD	6/5/98	Draft Issue for EPA Review
F	JAN	7/9/98	DRAFT CFC

IT CORP SPEC. NO. 773481-65-P6503

SHEET 1 OF 1

PROJECT NAME FERNALD WPRAP OU1

JOB NO. 773481

LOCATION FERNALD, OHIO

BY | APPR | DATE

AREA NO: 65
AREA NAME: WATER TREATMENT SYSTEM
TAG NOS.: P-6503
EQUIPMENT NAME: CLARIFIER SLUDGE PUMP

1	C	Manufacturer: TARBY (or equal)		Model No.: 1TL8	
2	O	No. of Units: 1 (ONE)		Min. Flow at P.T.: 10 gpm	Normal Flow: 20 gpm
3	N	Liquid Pumped: Clarifier sludge		Max. Flow at P.T.: 80 gpm	Fluid pH:
4	D	Pumping Temp.: 0 - 110 deg F	Sp. Gr. @ P.T.:	Suction Press.: psia	Min.Viscosity @ P.T.: cP
5	T	Differential Press.: psi	Differential Head: Ft.	Vapor Pressure @ P.T.: Ft.	NPSH Available: psig
6	N	Discharge Press.@ Norm: 80 ft. H2O	Discharge Press. @ Max:		NPSH Required (Water): * Ft.
7	S	Type: Progressive Cavity		Location:	
8		Horizontal or Vertical Arrangement? Horizontal		Single or Double Suction?	Single
9	C	CW OR CCW Direction of Rotation Facing Pump Coupling:		Case Design Press.: psig	Max. Allow. W.P.: psig
10	O	Number of Stages: *	Speed: * rpm	Shut-off Press.: PSIG	Vol. Eff. @ Rating: %
11	N	BARREL:	Split?	Horizontal?	Vertical?
12	S	IMPELLER:	Type:	Max. Diameter: In.	Min. Diameter: In.
13	T	Actual Imp. Dia.: In.	Vent and Drain Tapped?	Thrust Bearing Type:	Radial Bearing Type:
14	R	Nozzles / Size / Rating / Facing / Location		Bearing Lub. Type:	
15	U	Suction / 4" / 150 # / RF / Top		Oiler?	Oiler Type:
16	C	Discharge / 4 / NPT / * / In-Line		Coupling Mfr.: *	Coupling Model:
17	T	Vents / * / * / * / *		Baseplate?	Type Baseplate:
18	I	Drains / * / * / * / *		Water Cooling: Csng, Stffg Bx, Brgs, Pdstl, Glnd or none?	
19	O	Cooling H2O		Total Water Req'd: gpm	Smothering Gland?
20	N	Stuffing Box Lubrication: Oil, Grease or None?		Type Packing:	Seal Oil Connection?
21		MECHANICAL SEAL	Furnished By:	Manufacturer:	Type:
22	D	Single or Double?	Inside or Outside?	Balanced or Unbalanced?	
23	E	Rotary Unit:	Seal Ring Mtrl:	Face Material:	Shaft Packing:
24	T	Insert:	Reversible?	Face Material:	
25	A	Insert Mounting: Clamped, O-Ring or Press Fit?			
26	I	Gland:	Plain?	Carbon Throttle Bushing?	
27	L	Gland Stuffing Box Machined & Tapped for:		Dead End Lub.?	Circulating Lub.?
28	S	Flushing Seal Faces with Discharge Bypass?		Quenching?	Vent & Drain?
29		Flushing Seal Faces with External Fluid?		Auxilliary Stuffing Box Required?	
30		Weight of Pump: * lbs.	Weight of Base: lbs.	Weight of Driver: * lbs.	Shipping Weight: * lbs.
31	M	Casing & Covers: cast iron	Shaft:	Casing wear Rings:	Shaft Sleeves:
32	T	Impeller:	Lantern Rings:	Impeller Wear Rings:	Stuffing Box Bushings:
33	L	Glands:	Gaskets:		
34		Furnished By: Owner	Elec. or Steam Turbine? Elec.	Direct, Gear, V-Belt or Rope? Direct	
35		ELECTRIC MOTOR	Mfr.: *	STEAM TURBINE	Mfr.:
36		Mounted By: Owner	Enclosure: *	Mounted By:	Model:
37	D	Speed: * rpm	Service Factor: *	Horsepower: HP	Water Rates: Lbs/Hr
38	R	Volts: 230/460	Temp. Rise: *	Speed rpm	Vacuum (if any):
39	I	Phase: 3	Insulation: *	Inlet Steam Press.:	Inlet Steam Temp.:
40	V	Cycles: 60	Frame: *	Normal: psig	Normal: deg. F
41	E	Nominal Size: 20 HP	Est. BHP Req'd: * HP	Max.: psig	Max.: deg F
42	R	SPEED REDUCERS	Mfr.:	Backpressure: psig	
43		Ratio:	Model:	Nozzles / Size / Rating / Facing / Location	
44		Integral or Separate?	Class:	Inlet	
45				Exhaust	
46		See Driver Specification No.:			
47	T	Performance Curve? *	Certified?	M Serial Number:	
48	E	Curve No.:		I Outline Drawing Number:	
49	S	Hydrotest?	Pressure: psig	S Cross Section Drawing Number:	
50	T	Witness Testing?	Shop Inspection?	C	
51					
52		1. Pump and associated instrumentation shall be provided with stainless steel I.D. tags.			
53	N	2. Existing Equipment to be refurbished per project specification prior to use.			
54	O	3. Turndown required is 20:1.			
55	T	4. Items marked * to be provided by manufacturer.			
56	E				
57	S				
58					
59					
60					

000306

PT/_7/7/98_/[A65spec]-P6503

I.T. CORPORATION	METERING PUMP SPECIFICATION 1669	IT CORP SPEC. NO. 773481-65-P6504

NO	BY	DATE	REV.
D	PMS	5/12/98	CFC DRAFT
E	MSD	6/5/98	Draft Issue for EPA Review
F	PMS	7/9/98	DRAFT CFC

SHEET 1 OF 1

PROJECT NAME: FERNALD WPRAP OU1

JOB NO.: 773481

LOCATION: FERNALD, OHIO

BY	APPR	DATE
PMS		

AREA NO: 65
AREA NAME: WATER TREATMENT SYSTEM
TAG NOS.: P-6504
EQUIPMENT NAME: COAGULANT PUMP

1	C	Manufacturer: LMI (or equal)		Model No.: *		
2	O	No. of Units: 1 (ONE)		Min. Flow at P.T.: 0.2 gph	Normal Flow: 30 gph	
3	N	Liquid Pumped: 30% Ferric Chloride (or equiv)		Max. Flow at P.T.: 50 gph	Fluid pH:	
4	D	Pumping Temp.: 0 - 110 deg Ambient	Sp. Gr. @ P.T.:	Suction Press.: psia	Min.Viscosity @ P.T.: cP	
5	T	Differential Press.: psi	Differential Head: Ft.	Vapor Pressure @ P.T.: Ft.	NPSH Available: psig	
6	N	Discharge Press.@ Norm: 10 psig	Discharge Press. @ Max:		NPSH Required (Water): * Ft.	
7	S	Type: Metering pump		Location:		
8		Horizontal or Vertical Arrangement? Vertical		Single or Double Suction? Single		
9	C	CW OR CCW Direction of Rotation Facing Pump Coupling:		Case Design Press.: psig	Max. Allow. W.P.: psig	
10	O	Number of Stages:	Speed: rpm	Shut-off Press.: PSIG	Vol. Eff. @ Rating: %	
11	N	BARREL:	Split?	Horizontal?	Vertical?	
12	S	IMPELLER:	Type:	Max. Diameter: In.	Min. Diameter: In.	
13	T	Actual Imp. Dia.: In.	Vent and Drain Tapped?	Thrust Bearing Type:	Radial Bearing Type:	
14	R	Nozzles / Size / Rating / Facing / Location		Bearing Lub. Type:		
15	U	Suction * * * *		Oiler?	Oiler Type:	
16	C	Discharge * * * *		Coupling Mfr.:	Coupling Model:	
17	T	Vents * * * *		Baseplate?	Type Baseplate:	
18	I	Drains * * * *		Water Cooling: Csng, Stffg Bx, Brgs, Pdstl, Glnd or none?		
19	O	Cooling H2O		Total Water Req'd: gpm	Smothering Gland?	
20	N	Stuffing Box Lubrication: Oil, Grease or None?		Type Packing:	Seal Oil Connection?	
21		MECHANICAL SEAL:	Furnished By:	Manufacturer:	Type:	
22	D	Single or Double?	Inside or Outside?	Balanced or Unbalanced?		
23	E	Rotary Unit:	Seal Ring Mtrl:	Face Material:	Shaft Packing:	
24	T	Insert:	Reversible?	Face Material:		
25	A	Insert Mounting: Clamped, O-Ring or Press Fit?				
26	I	Gland:	Plain?	Carbon Throttle Bushing?		
27	L	Gland Stuffing Box Machined & Tapped for:		Dead End Lub.?	Circulating Lub.?	
28	S	Flushing Seal Faces with Discharge Bypass?		Quenching?	Vent & Drain?	
29		Flushing Seal Faces with External Fluid?		Auxilliary Stuffing Box Required?		
30		Weight of Pump: * lbs.	Weight of Base: lbs.	Weight of Driver: * lbs.	Shipping Weight: * lbs.	
31	M	Casing & Covers:	Shaft:	Casing wear Rings:	Shaft Sleeves:	
32	T	Impeller:	Lantern Rings:	Impeller Wear Rings:	Stuffing Box Bushings:	
33	L	Glands:	Gaskets:			
34		Furnished By: Vendor	Elec. or Steam Turbine? Elec.	Direct, Gear, V-Belt or Rope? *		
35		ELECTRIC MOTOR:	Mfr.: *	STEAM TURBINE:	Mfr.:	
36		Mounted By: Vendor	Enclosure: *	Mounted By:	Model:	
37	D	Speed: rpm	Service Factor: *	Horsepower: HP	Water Rates: Lbs/Hr	
38	R	Volts: 120	Temp. Rise: *	Speed rpm	Vacuum (if any):	
39	I	Phase: 1	Insulation: *	Inlet Steam Press.:	Inlet Steam Temp.:	
40	V	Cycles: 60	Frame: *	Normal: psig	Normal: deg. F	
41	E	Nominal Size: * HP	Est. BHP Req'd: * HP	Max.: psig	Max.: deg F	
42	R	SPEED REDUCERS:	Mfr.:	Backpressure: psig		
43		Ratio:	Model:	Nozzles / Size / Rating / Facing / Location		
44		Integral or Separate?	Class:	Inlet		
45				Exhaust		
46		See Driver Specification No.:				
47	T	Performance Curve? *	Certified?	M Serial Number:		
48	E	Curve No.:		I Outline Drawing Number:		
49	S	Hydrotest?	Pressure: psig	S Cross Section Drawing Number:		
50	T	Witness Testing?	Shop Inspection?	C		

51		1. Vendor shall provide LMI or approved equal.
52		2. Pump shall have a minimum total volumetric turndown of 200:1.
53	N	3. Pump shall have a minimum automatic turndown of 20:1.
54	O	4. Pump shall be provided with an automatic speed controller capable of accepting a 4-20 ma
55	T	input signal.
56	E	5. Pump and associated instrumentation shall be provided with stainless steel I.D. tags.
57	S	6. Pump shall be capable of pulling 2 ft of suction lift.
58		7. Vendor to complete information marked *.
59		
60		

LT. CORPORATION

POLYMER BLENDING UNIT SPECIFICATION 1669

CORP SPEC. NO. 773481-65-P6505

NO	BY	DATE	REV.
D	PMS	5/12/98	CFC DRAFT
E	MSD	6/5/98	Draft for EPA Review
F	PMS	7/9/98	DRAFT CFC

SHEET 1 OF 1

PROJECT NAME: FERNALD WPRAP OU1

JOB NO. 773481

LOCATION: FERNALD, OHIO

BY	APPR	DATE
PMS		

AREA NO: 65
AREA NAME: WATER TREATMENT SYSTEM
TAG NOS.: P-6505/M-6505
EQUIPMENT NAME: POLYBLEND UNIT

1	C	Manufacturer: Stranco (or equal)			Model No.: *	
2	O	No. of Units: 1 (ONE)			Min. Flow at P.T.: 1.5 gph	Normal Flow: 5 gph
3	N	Liquid Pumped: 0.5% Polymer Solution			Max. Flow at P.T.: 30 gph	Fluid pH:
4	D	Pumping Temp.: 0 - 110 deg F Ambient	Sp. Gr. @ P.T.: 1.02		Suction Press.: psia	Min.Viscosity @ P.T.: cP
5	T	Differential Press.: psi	Differential Head: Ft.		Vapor Pressure @ P.T.: Ft.	NPSH Available: psig
6	N	Discharge Press.@ Norm: 10 psig	Discharge Press. @ Max:			NPSH Required (Water): * Ft.
7	S	Type: Metering pump & blending unit			Location:	
8		Horizontal or Vertical Arrangement? Vertical			Single or Double Suction?	Single
9	C	CW OR CCW Direction of Rotation Facing Pump Coupling:			Case Design Press.: psig	Max. Allow. W.P.: psig
10	O	Number of Stages:	Speed: rpm		Shut-off Press.: PSIG	Vol. Eff. @ Rating: %
11	N	BARREL:	Split?		Horizontal?	Vertical?
12	S	IMPELLER:	Type:		Max. Diameter: In.	Min. Diameter: In.
13	T	Actual Imp. Dia.: In.	Vent and Drain Tapped?		Thrust Bearing Type:	Radial Bearing Type:
14	R	Nozzles / Size / Rating / Facing		Location	Bearing Lub. Type:	
15	U	Suction * * *		*	Oiler?	Oiler Type:
16	C	Discharge * * *		*	Coupling Mfr.:	Coupling Model:
17	T	Vents * * *		*	Baseplate?	Type Baseplate:
18	I	Drains * * *		*	Water Cooling: Csng, Stffg Bx, Brgs, Pdstl, Glnd or none?	
19	O	Cooling H2O			Total Water Req'd: gpm	Smothering Gland?
20	N	Stuffing Box Lubrication: Oil, Grease or None?			Type Packing:	Seal Oil Connection?
21		MECHANICAL SEAL:	Furnished By:		Manufacturer:	Type:
22	D	Single or Double?	Inside or Outside?		Balanced or Unbalanced?	
23	E	Rotary Unit:	Seal Ring Mtrl:		Face Material:	Shaft Packing:
24	T	Insert:	Reversible?		Face Material:	
25	A	Insert Mounting: Clamped, O-Ring or Press Fit?				
26	I	Gland:	Plain?		Carbon Throttle Bushing?	
27	L	Gland Stuffing Box Machined & Tapped for:			Dead End Lub.?	Circulating Lub.?
28	S	Flushing Seal Faces with Discharge Bypass?			Quenching?	Vent & Drain?
29		Flushing Seal Faces with External Fluid?			Auxilliary Stuffing Box Required?	
30		Weight of Pump: * lbs.	Weight of Base: * lbs.		Weight of Driver: * lbs.	Shipping Weight: * lbs.
31	M	Casing & Covers:	Shaft:		Casing wear Rings:	Shaft Sleeves:
32	T	Impeller:	Lantern Rings:		Impeller Wear Rings:	Stuffing Box Bushings:
33	L	Glands:	Gaskets:			

34		Furnished By: Vendor	Elec. or Steam Turbine? Elec.		Direct, Gear, V-Belt or Rope? *	
35		ELECTRIC MOTOR:	Mfr.: *		STEAM TURBINE:	Mfr.:
36		Mounted By: Vendor	Enclosure: *		Mounted By:	Model:
37	D	Speed: rpm	Service Factor: *		Horsepower: HP	Water Rates: Lbs/Hr
38	R	Volts: 120	Temp. Rise: *		Speed rpm	Vacuum (if any):
39	I	Phase: 1	Insulation: *		Inlet Steam Press.:	Inlet Steam Temp.:
40	V	Cycles: 60	Frame: *		Normal: psig	Normal: deg. F
41	E	Nominal Size: * HP	Est. BHP Req'd: * HP		Max.: psig	Max.: deg F
42	R	SPEED REDUCERS:	Mfr.:		Backpressure: psig	
43		Ratio:	Model:		Nozzles / Size / Rating / Facing / Location	
44		Integral or Separate?	Class:		Inlet	
45					Exhaust	
46		See Driver Specification No.:				

47	T	Performance Curve? *	Certified?	M	Serial Number:
48	E	Curve No.:		I	Outline Drawing Number:
49	S	Hydrotest?	Pressure: psig	S	Cross Section Drawing Number:
50	T	Witness Testing?	Shop Inspection?	C	

51		1. Vendor shall provide Stranco or approved equal.
52		2. Pump shall have a minimum total volumetric turndown of 200:1.
53	N	3. Pump shall have a minimum automatic turndown of 20:1.
54	O	4. Pump shall be provided with an automatic speed controller capable of accepting a 4-20 ma
55	T	input signal.
56	E	5. Pump and associated instrumentation shall be provided with stainless steel I.D. tags.
57	S	6. Pump shall be capable of pulling 2 ft of suction lift.
58		7. Vendor to complete information marked *.
59		
60		

000308

I.T. CORPORATION

PUMP SPECIFICATION 1669

NO	BY	DATE	REV.
D	PMS	5/12/98	CFC DRAFT
E	MSD	6/5/98	Draft Issue for EPA Review
F	PMS	7/9/98	DRAFT CFC

IT CORP SPEC. NO. 773481-65-P6506

SHEET 1 OF 1

PROJECT NAME FERNALD WPRAP OU5

JOB NO. 773481

LOCATION FERNALD, OHIO

PMS	APPR	DATE

AREA NO: 65
AREA NAME: WATER TREATMENT SYSTEM
TAG NOS.: P-6506A & P-6506B
EQUIPMENT NAME: FILTER FEED PUMPS

1	C	Manufacturer: EnviroTech Pump Systems		Model No.: ASH Pump Model 4x3SRC	
2	O	No. of Units: 2 (TWO)		Min. Flow at P.T.: 180 gpm	Normal Flow: 250 gpm
3	N	Liquid Pumped: Waste Water		Max. Flow at P.T.: 260 gpm	Fluid pH:
4	D	Pumping Temp.: 0 - 110 deg F	Sp. Gr. @ P.T.: 1.05	Suction Press.: psia	Min.Viscosity @ P.T.: 1.0 cP
5	T	Differential Press.: psi	Differential Head: Ft.	Vapor Pressure @ P.T.: Ft.	NPSH Available: psig
6	N	Discharge Press.@ Norm: 65 psig	Discharge Press. @ Max:		NPSH Required (Water): * Ft.
7	S	Type: Horizontal Centrifugal		Location:	
8		Horizontal or Vertical Arrangement? Horizontal		Single or Double Suction?	Single
9	C	CW OR CCW Direction of Rotation Facing Pump Coupling: *		Case Design Press.: psig	Max. Allow. W.P.: psig
10	O	Number of Stages: 2	Speed: 2400 rpm	Shut-off Press.: PSIG	Vol. Eff. @ Rating: %
11	N	BARREL:	Split?	Horizontal?	Vertical?
12	S	IMPELLER:	Type:	Max. Diameter: In.	Min. Diameter: In.
13	T	Actual Imp. Dia.: 9 In.	Vent and Drain Tapped?	Thrust Bearing Type:	Radial Bearing Type:
14	R	Nozzles / Size / Rating / Facing / Location		Bearing Lub. Type:	
15	U	Suction / 4" / * / * / *		Oiler?	Oiler Type:
16	C	Discharge / 3" / * / * / *		Coupling Mfr.: *	Coupling Model:
17	T	Vents / * / * / * / *		Baseplate?	Type Baseplate:
18	I	Drains / * / * / * / *		Water Cooling: Csng, Stffg Bx, Brgs, Pdstl, Gind or none?	
19	O	Cooling H2O		Total Water Req'd: gpm	Smothering Gland?
20	N	Stuffing Box Lubrication: Oil, Grease or None?		Type Packing:	Seal Oil Connection?
21		MECHANICAL SEAL:	Furnished By:	Manufacturer:	Type:
22	D	Single or Double?	Inside or Outside?	Balanced or Unbalanced?	
23	E	Rotary Unit:	Seal Ring Mtrl:	Face Material:	Shaft Packing:
24	T	Insert:	Reversible?	Face Material:	
25	A	Insert Mounting: Clamped, O-Ring or Press Fit?			
26	I	Gland:	Plain?	Carbon Throttle Bushing?	
27	L	Gland Stuffing Box Machined & Tapped for:		Dead End Lub.?	Circulating Lub.?
28	S	Flushing Seal Faces with Discharge Bypass?		Quenching?	Vent & Drain?
29		Flushing Seal Faces with External Fluid?		Auxilliary Stuffing Box Required?	
30		Weight of Pump: * lbs.	Weight of Base: * lbs.	Weight of Driver: * lbs.	Shipping Weight: * lbs.
31	M	Casing & Covers: cast Iron	Shaft:	Casing wear Rings:	Shaft Sleeves:
32	T	Impeller: cast Iron	Lantern Rings:	Impeller Wear Rings:	Stuffing Box Bushings:
33	L	Glands:	Gaskets:		
34		Furnished By: *	Elec. or Steam Turbine? Elec.	Direct, Gear, V-Belt or Rope? *	
35		ELECTRIC MOTOR:	Mfr.: *	STEAM TURBINE:	Mfr.:
36		Mounted By: Owner	Enclosure: *	Mounted By:	Model:
37	D	Speed: * rpm	Service Factor: *	Horsepower: HP	Water Rates: Lbs/Hr
38	R	Volts: 230/460	Temp. Rise: *	Speed rpm	Vacuum (if any):
39	I	Phase: 3	Insulation: *	Inlet Steam Press.:	Inlet Steam Temp.:
40	V	Cycles: 60	Frame: *	Normal: psig	Normal: deg. F
41	E	Nominal Size: 20 HP	Est. BHP Req'd: 17.2 HP	Max.: psig	Max.: deg F
42	R	SPEED REDUCERS:	Mfr.:	Backpressure: psig	
43		Ratio:	Model:	Nozzles / Size / Rating / Facing / Location	
44		Integral or Separate?	Class:	Inlet	
45				Exhaust	
46		See Driver Specification No.:			
47	T	Performance Curve? *	Certified?	M Serial Number:	
48	E	Curve No.:		I Outline Drawing Number:	
49	S	Hydrotest?	Pressure: psig	S Cross Section Drawing Number:	
50	T	Witness Testing?	Shop Inspection?	C	

51 **1. Pump shall be provided with stainless steel I.D. tags.**
52 **2. Items marked * to be provided by manufacturer.**
53 N
54 O
55 T
56 E
57 S
58
59
60

000309

PT/_7/7/98_/[A65spec]-P6506A,B

I.T. CORPORATION	PUMP SPECIFICATION 1669				IT CORP SPEC. NO. 773481-65-P6508
	NO	BY	DATE	REV	SHEET 1 OF 1
	D	PMS	5/12/98	CFC DRAFT	PROJECT NAME FERNALD WPRAP OU1
AREA NO: 65 AREA NAME: WATER TREATMENT SYSTEM TAG NOS.: P-6508A & P-6508B EQUIPMENT NAME: EFFLUENT PUMPS	E	MSD	6/5/98	Draft Issue for EPA Review	JOB NO. 773481
					LOCATION FERNALD, OHIO
	F	PMS	7/9/98	DRAFT CFC	PMS / APPR / DATE

1	C	Manufacturer:	EnviroTech Pump Systems			Model No.:	ASH Pump Model 4x3SRC		
2	O	No. of Units:	2 (TWO)			Min. Flow at P.T.:	200 gpm	Normal Flow:	400 gpm
3	N	Liquid Pumped:	Waste Water			Max. Flow at P.T.:	500 gpm	Fluid pH:	
4	D	Pumping Temp.: 0 - 110 deg F		Sp. Gr. @ P.T.:	1.05	Suction Press.:	psia	Min.Viscosity @ P.T.:	1.0 cP
5	T	Differential Press.:	psi	Differential Head:	Ft.	Vapor Pressure @ P.T.:	Ft.	NPSH Available:	psig
6	N	Discharge Press.@ Norm:	60 psig	Discharge Press. @ Max:				NPSH Required (Water): *	Ft.
7	S	Type:	Horizontal Centrifugal			Location:			
8		Horizontal or Vertical Arrangement?		Horizontal		Single or Double Suction?		Single	
9	C	CW OR CCW Direction of Rotation Facing Pump Coupling:		*		Case Design Press.:	psig	Max. Allow. W.P.:	psig
10	O	Number of Stages:	2	Speed:	2400 rpm	Shut-off Press.:	PSIG	Vol. Eff. @ Rating:	%
11	N	BARREL:		Split?		Horizontal?		Vertical?	
12	S	IMPELLER:		Type:		Max. Diameter:	In.	Min. Diameter:	In.
13	T	Actual Imp. Dia.:	9 In.	Vent and Drain Tapped?		Thrust Bearing Type:		Radial Bearing Type:	
14	R	Nozzles	Size	Rating	Facing	Location	Bearing Lub. Type:		
15	U	Suction	4"	*	*	*	Oiler?		Oiler Type:
16	C	Discharge	3"	*	*	*	Coupling Mfr.:	*	Coupling Model:
17	T	Vents	*	*	*	*	Baseplate?		Type Baseplate:
18	I	Drains	*	*	*	*	Water Cooling: Csng, Stffg Bx, Brgs, Pdstl, Glnd or none?		
19	O	Cooling H2O					Total Water Req'd:	gpm	Smothering Gland?
20	N	Stuffing Box Lubrication: Oil, Grease or None?					Type Packing:		Seal Oil Connection?
21		MECHANICAL SEAL:		Furnished By:			Manufacturer:		Type:
22	D	Single or Double?		Inside or Outside?			Balanced or Unbalanced?		
23	E	Rotary Unit:		Seal Ring Mtrl:			Face Material:		Shaft Packing:
24	T	Insert:		Reversible?			Face Material:		
25	A	Insert Mounting: Clamped, O-Ring or Press Fit?							
26	I	Gland:		Plain?			Carbon Throttle Bushing?		
27	L	Gland Stuffing Box Machined & Tapped for:					Dead End Lub.?		Circulating Lub.?
28	S	Flushing Seal Faces with Discharge Bypass?					Quenching?		Vent & Drain?
29		Flushing Seal Faces with External Fluid?					Auxilliary Stuffing Box Required?		
30		Weight of Pump:	* lbs.	Weight of Base:	* lbs.		Weight of Driver:	* lbs.	Shipping Weight: * lbs.
31	M	Casing & Covers:	cast iron	Shaft:			Casing wear Rings:		Shaft Sleeves:
32	T	Impeller:	cast iron	Lantern Rings:			Impeller Wear Rings:		Stuffing Box Bushings:
33	L	Glands:		Gaskets:					
34		Furnished By:	*	Elec. or Steam Turbine?	Elec.		Direct, Gear, V-Belt or Rope?	*	
35		ELECTRIC MOTOR:		Mfr.:	*		STEAM TURBINE:		Mfr.:
36		Mounted By:	Owner	Enclosure:	*		Mounted By:		Model:
37	D	Speed:	* rpm	Service Factor:	*		Horsepower:	HP	Water Rates: Lbs/Hr
38	R	Volts:	230/460	Temp. Rise:	*		Speed	rpm	Vacuum (if any):
39	I	Phase:	3	Insulation:	*		Inlet Steam Press.:		Inlet Steam Temp.:
40	V	Cycles:	60	Frame:	*		Normal:	psig	Normal: deg. F
41	E	Nominal Size:	25 HP	Est. BHP Req'd:	22.6 HP		Max.:	psig	Max.: deg F
42	R	SPEED REDUCERS:		Mfr.:			Backpressure:	psig	
43		Ratio:		Model:			Nozzles	Size	Rating / Facing / Location
44		Integral or Separate?		Class:			Inlet		
45							Exhaust		
46		See Driver Specification No.:							
47	T	Performance Curve?	*	Certified?		M	Serial Number:		
48	E	Curve No.:				I	Outline Drawing Number:		
49	S	Hydrotest?		Pressure:	psig	S	Cross Section Drawing Number:		
50	T	Witness Testing?		Shop Inspection?		C			

51 **1. Pump shall be provided with stainless steel I.D. tags.**

52 **2. Items marked * to be provided by manufacturer.**

53 N
54 O
55 T
56 E
57 S
58
59
60

000310

PT/_7/7/98_/[A65spec]-P6508A,B

I.T. CORPORATION

PUMP SPECIFICATION 1669

IT CORP SPEC. NO. 773481-65-P6509

SHEET 1 OF 1

NO	BY	DATE	REV.
D	PMS	5/12/98	CFC DRAFT
E	MSD	6/5/98	Draft Issue for EPA Review
F	PMS	7/9/98	DRAFT CFC

PROJECT NAME: FERNALD WPRAP OU1

JOB NO. 773481

LOCATION: FERNALD, OHIO

PMS	APPR	DATE

AREA NO: 65
AREA NAME: WATER TREATMENT SYSTEM
TAG NOS.: P-6509A & P-6509B
EQUIPMENT NAME: TEMPORARY HOLDING TANK TRANSFER PUMP

1	C	Manufacturer: EnviroTech Pump Systems		Model No.: ASH Pump Model 4x3SRC	
2	O	No. of Units: 2 (TWO)		Min. Flow at P.T.: 180 gpm	Normal Flow: 200 gpm
3	N	Liquid Pumped: Waste Water		Max. Flow at P.T.: 260 gpm	Fluid pH:
4	D	Pumping Temp.: 0 - 110 deg F	Sp. Gr. @ P.T.: 1.05	Suction Press.: psia	Min.Viscosity @ P.T.: 1.0 cP
5	T	Differential Press.: psi	Differential Head: Ft.	Vapor Pressure @ P.T.: Ft.	NPSH Available: psig
6	N	Discharge Press.@ Norm: 20 psig	Discharge Press. @ Max:		NPSH Required (Water): * Ft.
7	S	Type: Horizontal Centrifugal		Location:	
8		Horizontal or Vertical Arrangement? Horizontal		Single or Double Suction?	Single
9	C	CW OR CCW Direction of Rotation Facing Pump Coupling: *		Case Design Press.: psig	Max. Allow. W.P.: psig
10	O	Number of Stages: 2	Speed: 1400 rpm	Shut-off Press.: PSIG	Vol. Eff. @ Rating: %
11	N	BARREL:	Split?	Horizontal?	Vertical?
12	S	IMPELLER:	Type:	Max. Diameter: In.	Min. Diameter: In.
13	T	Actual Imp. Dia.: 9 In.	Vent and Drain Tapped?	Thrust Bearing Type:	Radial Bearing Type:
14	R	Nozzles / Size / Rating / Facing / Location		Bearing Lub. Type:	
15	U	Suction / 4" / * / * / *		Oiler?	Oiler Type:
16	C	Discharge / 3" / * / * / *		Coupling Mfr.: *	Coupling Model:
17	T	Vents / * / * / * / *		Baseplate?	Type Baseplate:
18	I	Drains / * / * / * / *		Water Cooling: Csng, Stffg Bx, Brgs, Pdstl, Glnd or none?	
19	O	Cooling H2O		Total Water Req'd: gpm	Smothering Gland?
20	N	Stuffing Box Lubrication: Oil, Grease or None?		Type Packing:	Seal Oil Connection?
21		MECHANICAL SEAL:	Furnished By:	Manufacturer:	Type:
22	D	Single or Double?	Inside or Outside?	Balanced or Unbalanced?	
23	E	Rotary Unit:	Seal Ring Mtrl:	Face Material:	Shaft Packing:
24	T	Insert:	Reversible?	Face Material:	
25	A	Insert Mounting: Clamped, O-Ring or Press Fit?			
26	I	Gland:	Plain?	Carbon Throttle Bushing?	
27	L	Gland Stuffing Box Machined & Tapped for:		Dead End Lub.?	Circulating Lub.?
28	S	Flushing Seal Faces with Discharge Bypass?		Quenching?	Vent & Drain?
29		Flushing Seal Faces with External Fluid?		Auxiliary Stuffing Box Required?	
30		Weight of Pump: * lbs.	Weight of Base: * lbs.	Weight of Driver: * lbs.	Shipping Weight: * lbs.
31	M	Casing & Covers: cast iron	Shaft:	Casing wear Rings:	Shaft Sleeves:
32	T	Impeller: cast iron	Lantern Rings:	Impeller Wear Rings:	Stuffing Box Bushings:
33	L	Glands:	Gaskets:		
34		Furnished By: *	Elec. or Steam Turbine? Elec.	Direct, Gear, V-Belt or Rope? *	
35		ELECTRIC MOTOR:	Mfr.: *	STEAM TURBINE:	Mfr.:
36		Mounted By: Owner	Enclosure: *	Mounted By:	Model:
37	D	Speed: * rpm	Service Factor: *	Horsepower: HP	Water Rates: Lbs/Hr
38	R	Volts: 230/460	Temp. Rise: *	Speed rpm	Vacuum (if any):
39	I	Phase: 3	Insulation: *	Inlet Steam Press.:	Inlet Steam Temp.:
40	V	Cycles: 60	Frame: *	Normal: psig	Normal: deg. F
41	E	Nominal Size: 7.5 HP	Est. BHP Req'd: 5.1 HP	Max.: psig	Max.: deg F
42	R	SPEED REDUCERS:	Mfr.:	Backpressure: psig	
43		Ratio:	Model:	Nozzles / Size / Rating / Facing / Location	
44		Integral or Separate?	Class:	Inlet	
45				Exhaust	
46		See Driver Specification No.:			
47	T	Performance Curve? *	Certified?	M Serial Number:	
48	E	Curve No.:		I Outline Drawing Number:	
49	S	Hydrotest?	Pressure: psig	S Cross Section Drawing Number:	
50	T	Witness Testing?	Shop Inspection?	C	

51		1. Pump shall be provided with stainless steel I.D. tags.
52		2. Items marked * to be provided by manufacturer.
53	N	
54	O	
55	T	
56	E	
57	S	
58		
59		
60		

000311

PT/_7/7/98_/[A65spec]-P6509A.B

I.T. CORPORATION	PUMP SPECIFICATION 1669	IT CORP SPEC. NO. 773481-P7010
	NO / BY / DATE / REV. D	SHEET 1 OF 1
	F / BAH / 7/9/98 / DRAFT CFC HOLD	PROJECT NAME FERNALD WPRAP
PROJECT: FERNALD WPRAP AREA NO.: 70 AREA NAME: UTILITIES TAG NO.: P-7010A,B EQUIP: CAUSTIC PUMPS	0	JOB NO. 773481
	1	LOCATION FERNALD, OH
		BY / APPR / DATE 7/98

1	C	Manufacturer: *				Model No.: *		
2	O	No. of Units: 2(Two)				Min. Flow at P.T.: 10 gpm	Normal Flow: 50 gpm	
3	N	Liquid Pumped: 20 % Caustic				Max. Flow at P.T.: 80 gpm	Fluid pH: 14	
4	D	Pumping Temp.: 0 - 110 °F	Sp. Gr. @ P.T.: 1.2			Suction Press.: 15 psia	Viscosity @ P.T.: 0.85	cP
5	T	Differential Press.: 50 psi	Differential Head: 162 Ft.			Vapor Pressure @ P.T.: .51 PSIA	NPSH Available: 32.0	Ft.
6	N	Discharge Press.@ Norm:	Discharge Press. @ Max: 85 psia				NPSH Required (Water): 15	Ft.
7	S	Type: Centrifugal pump				Location: Outdoors		
8		Horizontal or Vertical Arrangement? Horizontal				Single or Double Suction?	Single	
9	C	CW OR CCW Direction of Rotation Facing Pump Coupling: CW				Case Design Press.: 285 psig	Max. Allow. W.P.:	psig
10	O	Number of Stages: 1	Speed: 3550 rpm			Shut-off Press.:	Vol. Eff. @ Rating:	%
11	N	BARREL:	Split?			Horizontal?	Vertical?	
12	S	IMPELLER:	Type:			Max. Diameter: In.	Min. Diameter:	In.
13	T	Actual Imp. Dia.: In.	Vent and Drain Tapped? Yes			Thrust Bearing Type:	Radial Bearing Type:	
14	R	Nozzles / Size	Rating	Facing	Location	Bearing Lub. Type:		
15	U	Suction / 1.5"	NPT		END	Oiler?	Oiler Type:	
16	C	Discharge / 1.25"	NPT		TOP	Coupling Mfr.:	Coupling Model:	
17	T	Vents				Baseplate? Yes	Type Baseplate: Cast Iron	
18	I	Drains				Water Cooling: Csng, Stffg Bx, Brgs, Pdstl, Glnd? Stffg Bx		
19	O	Cooling H2O NONE				Total Water Req'd: gpm	Smothering Gland? No	
20	N	Stuffing Box Lubrication: Oil, Grease or None?				Type Packing:	Seal Oil Connection?	
21		MECHANICAL SEAL:	Furnished By:			Manufacturer: *	Type:	
22	D	Single or Double?	Inside or Outside?			Balanced or Unbalanced?		
23	E	Rotary Unit:	Seal Ring Mtrl:			Face Material:	Shaft Packing:	
24	T	Insert:	Reversible?			Face Material:		
25	A	Insert Mounting: Clamped, O-Ring or Press Fit?						
26	I	Gland: *	Plain? *			Carbon Throttle Bushing?		
27	L	Gland Stuffing Box Machined & Tapped for:				Dead End Lub.?	Circulating Lub.? *	
28	S	Flushing Seal Faces with Discharge Bypass?				Quenching?	Vent & Drain?	
29		Flushing Seal Faces with External Fluid?				Auxilliary Stuffing Box Required?		
30		Weight of Pump: * lbs.	Weight of Base: * lbs.			Weight of Driver: * lbs.	Shipping Weight: * lbs.	
31	M	Casing & Covers: *	Shaft: *			Casing wear Rings:	Shaft Sleeves: *	
32	T	Impeller: *	Lantern Rings:			Impeller Wear Rings:	Stuffing Box Bushings:	
33	L	Glands: *	Gaskets:					

34		Furnished By: Pump Mfgr.	Elec. or Steam Turbine? Elec.			Direct, Gear, V-Belt or Rope? Direct		
35		ELECTRIC MOTOR:	Mfr.: *			STEAM TURBINE:	Mfr.:	
36		Mounted By: Vendor	Enclosure: TEFC			Mounted By:	Model:	
37	D	Speed: 3550 rpm	Service Factor: 1.15			Horsepower: HP	Water Rates:	Lbs/Hr
38	R	Volts: 480	Temp. Rise:			Speed rpm	Vacuum (if any):	
39	I	Phase: 3	Insulation: F			Inlet Steam Press.:	Inlet Steam Temp.:	
40	V	Cycles: 60	Frame: 256 T			Normal: psig	Normal:	deg. F
41	E	Nominal Size: * HP	Est. BHP Req'd: * HP			Max.: psig	Max.:	deg F
42	R	SPEED REDUCERS:	Mfr.:			Backpressure: psig		
43		Ratio:	Model:			Nozzles / Size	Rating	Facing / Location
44		Integral or Separate?	Class:			Inlet		
45						Exhaust		
46		See Driver Specification No.:						

47	T	Performance Curve? Yes	Certified? No	M	Serial Number: *
48	E	Curve No.: *		I	Outline Drawing Number:
49	S	Hydrotest? Yes	Pressure: * psig	S	Cross Section Drawing Number:
50	T	Witness Testing? No	Shop Inspection? No	C	

51		
52		1. Vendor to complete information marked *.
53	N	2. Pump should be magnetic drive (Polypropylene).
54	O	
55	T	
56	E	
57	S	
58		
59		
60		

000312

AREA70F.XLS

I.T. CORPORATION

PUMP SPECIFICATION 1669

IT CORP SPEC. NO. 773481-P7011

SHEET 1 OF 1

NO	BY	DATE	REV. D
F	BAH	7/9/98	DRAFT CFC HOLD
0			
1			

PROJECT NAME: FERNALD WPRAP

JOB NO. 773481

LOCATION: FERNALD, OH

BY	APPR	DATE
		7/98

PROJECT: FERNALD WPRAP
AREA NO.: 70
AREA NAME: UTILITIES
TAG NO.: P-7011A,B
EQUIP: ACID PUMPS

1	C	Manufacturer: *			Model No.: *	
2	O	No. of Units: 2(Two)			Min. Flow at P.T.: 10 gpm	Normal Flow: 50 gpm
3	N	Liquid Pumped: 20 - 30% HCl			Max. Flow at P.T.: 80 gpm	Fluid pH: 14
4	D	Pumping Temp.: 0 - 110 °F	Sp. Gr. @ P.T.: 1.2		Suction Press.: 15 psia	Viscosity @ P.T.: 0.85 cP
5	T	Differential Press.: 50 psi	Differential Head: 162 Ft.		Vapor Pressure @ P.T.: .51 PSIA	NPSH Available: 32.0 Ft.
6	N	Discharge Press.@ Norm:	Discharge Press. @ Max: 85 psia			NPSH Required (Water): 15 Ft.
7	S	Type: Centrifugal pump			Location: Outdoors	
8		Horizontal or Vertical Arrangement? Horizontal			Single or Double Suction?	Single
9	C	CW OR CCW Direction of Rotation Facing Pump Coupling: CW			Case Design Press.: 285 psig	Max. Allow. W.P.: psig
10	O	Number of Stages: 1	Speed: 3550 rpm		Shut-off Press.:	Vol. Eff. @ Rating: %
11	N	BARREL:	Split?		Horizontal?	Vertical?
12	S	IMPELLER:	Type:		Max. Diameter: In.	Min. Diameter: In.
13	T	Actual Imp. Dia.: In.	Vent and Drain Tapped? Yes		Thrust Bearing Type:	Radial Bearing Type:
14	R	Nozzles / Size / Rating / Facing / Location			Bearing Lub. Type:	
15	U	Suction / 1.5" / NPT / / END			Oiler?	Oiler Type:
16	C	Discharge / 1.25" / NPT / / TOP			Coupling Mfr.:	Coupling Model:
17	T	Vents			Baseplate? Yes	Type Baseplate: Cast Iron
18	I	Drains			Water Cooling: Csng, Stffg Bx, Brgs, Pdstl, Glnd? Stffg Bx	
19	O	Cooling H2O NONE			Total Water Req'd: gpm	Smothering Gland? No
20	N	Stuffing Box Lubrication: Oil, Grease or None?			Type Packing:	Seal Oil Connection?
21		MECHANICAL SEAL:	Furnished By:		Manufacturer: *	Type:
22	D	Single or Double?	Inside or Outside?		Balanced or Unbalanced?	
23	E	Rotary Unit:	Seal Ring Mtrl:		Face Material:	Shaft Packing:
24	T	Insert:	Reversible?		Face Material:	
25	A	Insert Mounting: Clamped, O-Ring or Press Fit?				
26	I	Gland: *	Plain? *		Carbon Throttle Bushing?	
27	L	Gland Stuffing Box Machined & Tapped for:			Dead End Lub.?	Circulating Lub.? *
28	S	Flushing Seal Faces with Discharge Bypass?			Quenching?	Vent & Drain?
29		Flushing Seal Faces with External Fluid?			Auxilliary Stuffing Box Required?	
30		Weight of Pump: * lbs.	Weight of Base: * lbs.		Weight of Driver: * lbs.	Shipping Weight: * lbs.
31	M	Casing & Covers: *	Shaft: *		Casing wear Rings:	Shaft Sleeves: *
32	T	Impeller: *	Lantern Rings:		Impeller Wear Rings:	Stuffing Box Bushings:
33	L	Glands: *	Gaskets:			
34		Furnished By: Pump Mfgr.	Elec. or Steam Turbine? Elec.		Direct, Gear, V-Belt or Rope? Direct	
35		ELECTRIC MOTOR:	Mfr.: *		STEAM TURBINE:	Mfr.:
36		Mounted By: Vendor	Enclosure: TEFC		Mounted By:	Model:
37	D	Speed: 3550 rpm	Service Factor: 1.15		Horsepower: HP	Water Rates: Lbs/Hr
38	R	Volts: 480	Temp. Rise:		Speed rpm	Vacuum (if any):
39	I	Phase: 3	Insulation: F		Inlet Steam Press.:	Inlet Steam Temp.:
40	V	Cycles: 60	Frame: 256 T		Normal: psig	Normal: deg. F
41	E	Nominal Size: * HP	Est. BHP Req'd: * HP		Max.: psig	Max.: deg F
42	R	SPEED REDUCERS:	Mfr.:		Backpressure: psig	
43		Ratio:	Model:		Nozzles / Size / Rating / Facing / Location	
44		Integral or Separate?	Class:		Inlet	
45					Exhaust	
46		See Driver Specification No.:				
47	T	Performance Curve? Yes	Certified? No	M	Serial Number: *	
48	E	Curve No.: *		I	Outline Drawing Number:	
49	S	Hydrotest? Yes	Pressure: * psig	S	Cross Section Drawing Number:	
50	T	Witness Testing? No	Shop Inspection? No	C		
51						
52		1. Vendor to complete information marked *.				
53	N	2. Pump should be magnetic drive (PVDF).				
54	O					
55	T					
56	E					
57	S					
58						
59						
60						

000313

AREA70F.XLS

I.T. CORPORATION	SUMP PUMP SPECIFICATION	IT CORP SPEC. NO. 773481-90-P9001
		SHEET 1 OF 1
AREA NO: 90		PROJECT NAME FDF WPRAP
AREA NAME: YARD & BUILDING SUMPS		JOB NO. 773481
TAG NOS.: P-9001		LOCATION FERNALD, OHIO
EQUIP NAME: GRAY WATER SUMP PUMP		BY PMS / APPR / DATE

NO	BY	DATE	REV.
D	PMS	5/12/98	CFC DRAFT
F	PMS	7/9/98	CFC DRAFT

1	C	Manufacturer: *			Model No.: *		
2	O	No. of Units: 1 (ONE)			Min. Flow at P.T.: 0 gpm	Normal Flow: 32 gpm	
3	N	Liquid Pumped: Waste water			Max. Flow at P.T.: 50 gpm	Fluid pH:	
4	D	Pumping Temp.: 40-100 oF	Sp. Gr. @ P.T.: 1.00		Suction Press psia	Min.Viscosity @ P.T.: * cP	
5	T	Differential Press.:	Differential Head: Ft.		Vapor Pressure @ P.T.: Ft.	NPSH Available: psig	
6	N	Discharge Press.@ Norm: 25 ft H2O	Discharge Press. @ Max:			NPSH Required (Water): * Ft.	
7	S	Type: Sump pump - submersible			Location: Outdoors		
8		Horizontal or Vertical Arrangement? Vertical			Single or Double Suction? Single		
9	C	CW OR CCW Direction of Rotation Facing Pump Coupling:			Case Design Press.: psig	Max. Allow. W.P.: psig	
10	O	Number of Stages: 1	Speed: rpm		Shut-off Press.: PSI	Vol. Eff. @ Rating: %	
11	N	BARREL:	Split?		Horizontal?	Vertical?	
12	S	IMPELLER:	Type:		Max. Diameter: In.	Min. Diameter: In.	
13	T	Actual Imp. Dia.: In.	Vent and Drain Tapped?		Thrust Bearing Type:	Radial Bearing Type:	
14	R	Nozzles / Size / Rating	Facing	Location	Bearing Lub. Type:		
15	U	Suction			Oiler?	Oiler Type:	
16	C	Discharge * *	*	*	Coupling Mfr.:	Coupling Model:	
17	T	Vents			Baseplate?	Type Baseplate:	
18	I	Drains			Water Cooling: Csng, Stffg Bx, Brgs, Pdstl, Glnd or none?		
19	O	Cooling H2O			Total Water Req'd: gp	Smothering Gland?	
20	N	Stuffing Box Lubrication: Oil, Grease or None?			Type Packing:	Seal Oil Connection?	
21		MECHANICAL SEAL:	Furnished By:		Manufacturer:	Type:	
22	D	Single or Double?	Inside or Outside?		Balanced or Unbalanced?		
23	E	Rotary Unit:	Seal Ring Mtrl:		Face Material:	Shaft Packing:	
24	T	Insert:	Reversible?		Face Material:		
25	A	Insert Mounting: Clamped, O-Ring or Press Fit?					
26	I	Gland:	Plain?		Carbon Throttle Bushing?		
27	L	Gland Stuffing Box Machined & Tapped for:			Dead End Lub.?	Circulating Lub.?	
28	S	Flushing Seal Faces with Discharge Bypass?			Quenching?	Vent & Drain?	
29		Flushing Seal Faces with External Fluid?			Auxilliary Stuffing Box Required?		
30		Weight of Pump: * lbs.	Weight of Base: lbs.		Weight of Driver: * lbs.	Shipping Weight: * lbs.	
31	M	Casing & Covers: CS	Shaft:		Casing wear Rings:	Shaft Sleeves:	
32	T	Impeller:	Lantern Rings:		Impeller Wear Rings:	Stuffing Box Bushings:	
33	L	Glands:	Gaskets:				
34		Furnished By: Vendor	Elec. or Steam Turbine? Elec.		Direct, Gear, V-Belt or Rope? Direct		
35		ELECTRIC MOTOR:	Mfr.: *		STEAM TURBINE:	Mfr.:	
36		Mounted By: Vendor	Enclosure: *		Mounted By:	Model:	
37	D	Speed: * rpm	Service Factor: *		Horsepower: HP	Water Rates: Lbs/Hr	
38	R	Volts: 115	Temp. Rise: *		Speed rpm	Vacuum (if any):	
39	I	Phase: 1	Insulation: *		Inlet Steam Press.:	Inlet Steam Temp.:	
40	V	Cycles: 60	Frame: *		Normal: psig	Normal: deg. F	
41	E	Nominal Size: * HP	Est. BHP Req'd: * HP		Max.: psig	Max.: deg F	
42	R	SPEED REDUCERS:	Mfr.:		Backpressure: psig		
43		Ratio:	Model:		Nozzles / Size / Rating / Facing / Location		
44		Integral or Separate?	Class:		Inlet		
45					Exhaust		
46		See Driver Specification No.:					
47	T	Performance Curve? *	Certified?		M Serial Number:		
48	E	Curve No.:			I Outline Drawing Number:		
49	S	Hydrotest?	Pressure: psig		S Cross Section Drawing Number:		
50	T	Witness Testing?	Shop Inspection?		C		
51							
52							
53	N	1. Vendor shall clearly state any exceptions to the requirements outlined in this data sheet.					
54	O	2. Pump shall be provided with stainless steel I.D. tags.					
55	T	3. Vendor to complete information marked *.					
56	E	4. Vendor shall provide Goulds Model 2871 EP05or equal.					
57	S	5. Pump shall be equipped with a float-type on-off switch.					
58							
59							
60							

1669

I.T. CORPORATION	SUMP PUMP SPECIFICATION	IT CORP SPEC. NO. 773481-90-P9002
		SHEET 1 OF 1
AREA NO: 90 AREA NAME: YARD & BUILDING SUMPS TAG NOS.: P-9002 EQUIP NAME: MHB MIXING PIT SUMP PUMP		PROJECT NAME: FDF WPRAP JOB NO.: 773481 LOCATION: FERNALD, OHIO

NO	BY	DATE	REV.
D	PMS	5/12/98	CFC DRAFT
F	PMS	7/9/98	CFC DRAFT

BY	APPR	DATE
PMS		

1	C	Manufacturer: *		Model No.: *	
2	O	No. of Units: 1 (ONE)		Min. Flow at P.T.: 0 gpm	Normal Flow: 23 gpm
3	N	Liquid Pumped: Waste water		Max. Flow at P.T.: 50 gpm	Fluid pH:
4	D	Pumping Temp.: 40-100 oF	Sp. Gr. @ P.T.: 1.00	Suction Press psia	Min.Viscosity @ P.T.: * cP
5	T	Differential Press.:	Differential Head: Ft.	Vapor Pressure @ P.T.: Ft.	NPSH Available: psig
6	N	Discharge Press.@ Norm: 28 ft H2O	Discharge Press. @ Max:		NPSH Required (Water): * Ft.
7	S	Type: Sump pump - submersible		Location: Outdoors	
8		Horizontal or Vertical Arrangement? Vertical		Single or Double Suction? Single	
9	C	CW OR CCW Direction of Rotation Facing Pump Coupling:		Case Design Press.: psig	Max. Allow. W.P.: psig
10	O	Number of Stages: 1	Speed: rpm	Shut-off Press.: PSI	Vol. Eff. @ Rating: %
11	N	BARREL:	Split?	Horizontal?	Vertical?
12	S	IMPELLER:	Type:	Max. Diameter: In.	Min. Diameter: In.
13	T	Actual Imp. Dia.: In.	Vent and Drain Tapped?	Thrust Bearing Type:	Radial Bearing Type:
14	R	Nozzles / Size / Rating / Facing / Location		Bearing Lub. Type:	
15	U	Suction		Oiler?	Oiler Type:
16	C	Discharge * * * *		Coupling Mfr.:	Coupling Model:
17	T	Vents		Baseplate?	Type Baseplate:
18	I	Drains		Water Cooling: Csng, Stffg Bx, Brgs, Pdstl, Glnd or none?	
19	O	Cooling H2O		Total Water Req'd: gp	Smothering Gland?
20	N	Stuffing Box Lubrication: Oil, Grease or None?		Type Packing:	Seal Oil Connection?
21		MECHANICAL SEAL:	Furnished By:	Manufacturer:	Type:
22	D	Single or Double?	Inside or Outside?	Balanced or Unbalanced?	
23	E	Rotary Unit:	Seal Ring Mtrl:	Face Material:	Shaft Packing:
24	T	Insert:	Reversible?	Face Material:	
25	A	Insert Mounting: Clamped, O-Ring or Press Fit?			
26	I	Gland:	Plain?	Carbon Throttle Bushing?	
27	L	Gland Stuffing Box Machined & Tapped for:		Dead End Lub.?	Circulating Lub.?
28	S	Flushing Seal Faces with Discharge Bypass?		Quenching?	Vent & Drain?
29		Flushing Seal Faces with External Fluid?		Auxilliary Stuffing Box Required?	
30		Weight of Pump: * lbs.	Weight of Base: lbs.	Weight of Driver: * lbs.	Shipping Weight: * lbs.
31	M	Casing & Covers: CS	Shaft:	Casing wear Rings:	Shaft Sleeves:
32	T	Impeller:	Lantern Rings:	Impeller Wear Rings:	Stuffing Box Bushings:
33	L	Glands:	Gaskets:		
34		Furnished By: Vendor	Elec. or Steam Turbine? Elec.	Direct, Gear, V-Belt or Rope? Direct	
35		ELECTRIC MOTOR:	Mfr.: *	STEAM TURBINE:	Mfr.:
36		Mounted By: Vendor	Enclosure: *	Mounted By:	Model:
37	D	Speed: * rpm	Service Factor: *	Horsepower: HP	Water Rates: Lbs/Hr
38	R	Volts: 115	Temp. Rise: *	Speed rpm	Vacuum (if any):
39	I	Phase: 1	Insulation: *	Inlet Steam Press.:	Inlet Steam Temp.:
40	V	Cycles: 60	Frame: *	Normal: psig	Normal: deg. F
41	E	Nominal Size: * HP	Est. BHP Req'd: * HP	Max.: psig	Max.: deg F
42	R	SPEED REDUCERS:	Mfr.:	Backpressure: psig	
43		Ratio:	Model:	Nozzles / Size / Rating / Facing / Location	
44		Integral or Separate?	Class:	Inlet	
45				Exhaust	
46		See Driver Specification No.:			
47	T	Performance Curve? *	Certified?	M Serial Number:	
48	E	Curve No.:		I Outline Drawing Number:	
49	S	Hydrotest?	Pressure: psig	S Cross Section Drawing Number:	
50	T	Witness Testing?	Shop Inspection?	C	
51					
52					
53	N	1. Vendor shall clearly state any exceptions to the requirements outlined in this data sheet.			
54	O	2. Pump shall be provided with stainless steel I.D. tags.			
55	T	3. Vendor to complete information marked *.			
56	E	4. Vendor shall provide Goulds Model 2871 EP05or equal.			
57	S	5. Pump shall be equipped with a float-type on-off switch.			
58					
59					
60					

000315

PT/_7/7/98_/[A90spec]-P9002

1669

I.T. CORPORATION	SUMP PUMP SPECIFICATION				IT CORP SPEC. NO. 773481-90-P9003
	NO	BY	DATE	REV.	SHEET 1 OF 1
	D	PMS	5/12/98	CFC DRAFT	PROJECT NAME FDF WPRAP
AREA NO: 90 AREA NAME: YARD & BUILDING SUMPS TAG NOS.: P-9003 EQUIP NAME: MHB STORAGE BIN SUMP PUMP	F	PMS	7/9/98	CFC DRAFT	JOB NO. 773481
					LOCATION FERNALD, OHIO
					BY PMS / APPR / DATE

1	C	Manufacturer: *			Model No.: *		
2	O	No. of Units: 1 (ONE)			Min. Flow at P.T.: 0 gpm	Normal Flow: 23 gpm	
3	N	Liquid Pumped: Waste water			Max. Flow at P.T.: 50 gpm	Fluid pH:	
4	D	Pumping Temp.: 40-100 oF	Sp. Gr. @ P.T.: 1.00		Suction Press psia	Min.Viscosity @ P.T.: * cP	
5	T	Differential Press.:	Differential Head: Ft.		Vapor Pressure @ P.T.: Ft.	NPSH Available: psig	
6	N	Discharge Press.@ Norm: 27 ft H2O	Discharge Press. @ Max:			NPSH Required (Water): * Ft.	
7	S	Type: Sump pump - submersible			Location: Outdoors		
8		Horizontal or Vertical Arrangement? Vertical			Single or Double Suction? Single		
9	C	CW OR CCW Direction of Rotation Facing Pump Coupling:			Case Design Press.: psig	Max. Allow. W.P.: psig	
10	O	Number of Stages: 1	Speed: rpm		Shut-off Press.: PSI	Vol. Eff. @ Rating: %	
11	N	BARREL:	Split?		Horizontal?	Vertical?	
12	S	IMPELLER:	Type:		Max. Diameter: In.	Min. Diameter: In.	
13	T	Actual Imp. Dia.: In.	Vent and Drain Tapped?		Thrust Bearing Type:	Radial Bearing Type:	
14	R	Nozzles / Size	Rating	Facing	Location	Bearing Lub. Type:	
15	U	Suction				Oiler?	Oiler Type:
16	C	Discharge *	*	*	*	Coupling Mfr.:	Coupling Model:
17	T	Vents				Baseplate?	Type Baseplate:
18	I	Drains				Water Cooling: Csng, Stffg Bx, Brgs, Pdstl, Glnd or none?	
19	O	Cooling H2O				Total Water Req'd: gp	Smothering Gland?
20	N	Stuffing Box Lubrication: Oil, Grease or None?				Type Packing:	Seal Oil Connection?
21		MECHANICAL SEAL:	Furnished By:			Manufacturer:	Type:
22	D	Single or Double?	Inside or Outside?			Balanced or Unbalanced?	
23	E	Rotary Unit:	Seal Ring Mtrl:			Face Material:	Shaft Packing:
24	T	Insert:	Reversible?			Face Material:	
25	A	Insert Mounting: Clamped, O-Ring or Press Fit?					
26	I	Gland:	Plain?			Carbon Throttle Bushing?	
27	L	Gland Stuffing Box Machined & Tapped for:				Dead End Lub.?	Circulating Lub.?
28	S	Flushing Seal Faces with Discharge Bypass?				Quenching?	Vent & Drain?
29		Flushing Seal Faces with External Fluid?				Auxilliary Stuffing Box Required?	
30		Weight of Pump: * lbs.	Weight of Base: lbs.			Weight of Driver: * lbs.	Shipping Weight: * lbs.
31	M	Casing & Covers: CS	Shaft:			Casing wear Rings:	Shaft Sleeves:
32	T	Impeller:	Lantern Rings:			Impeller Wear Rings:	Stuffing Box Bushings:
33	L	Glands:	Gaskets:				

34		Furnished By: Vendor	Elec. or Steam Turbine? Elec.		Direct, Gear, V-Belt or Rope? Direct			
35		ELECTRIC MOTOR:	Mfr.: *		STEAM TURBINE:		Mfr.:	
36		Mounted By: Vendor	Enclosure: *		Mounted By:		Model:	
37	D	Speed: * rpm	Service Factor: *		Horsepower: HP		Water Rates: Lbs/Hr	
38	R	Volts: 115	Temp. Rise: *		Speed rpm		Vacuum (if any):	
39	I	Phase: 1	Insulation: *		Inlet Steam Press.:		Inlet Steam Temp.:	
40	V	Cycles: 60	Frame: *		Normal: psig		Normal: deg. F	
41	E	Nominal Size: * HP	Est. BHP Req'd: * HP		Max.: psig		Max.: deg F	
42	R	SPEED REDUCERS:	Mfr.:		Backpressure: psig			
43		Ratio:	Model:		Nozzles	Size	Rating	Facing / Location
44		Integral or Separate?	Class:		Inlet			
45					Exhaust			
46		See Driver Specification No.:						

47	T	Performance Curve? *	Certified?	M	Serial Number:
48	E	Curve No.:		I	Outline Drawing Number:
49	S	Hydrotest?	Pressure: psig	S	Cross Section Drawing Number:
50	T	Witness Testing?	Shop Inspection?	C	

51		
52		
53	N	1. Vendor shall clearly state any exceptions to the requirements outlined in this data sheet.
54	O	2. Pump shall be provided with stainless steel I.D. tags.
55	T	3. Vendor to complete information marked *.
56	E	4. Vendor shall provide Goulds Model 2871 EP05or equal.
57	S	5. Pump shall be equipped with a float-type on-off switch.
58		
59		
60		

000316

PT/_7/7/98_/[A90spec]-P9003

1669

I.T. CORPORATION	SUMP PUMP SPECIFICATION				IT CORP SPEC. NO. 773481-90-P9004
	NO	BY	DATE	REV.	SHEET 1 OF 1
	D	PMS	5/12/98	CFC DRAFT	PROJECT NAME FDF WPRAP
AREA NO: 90 AREA NAME: YARD & BUILDING SUMPS TAG NOS.: P-9004 EQUIP NAME: MHB FILTER PRESS AREA SUMP PUMP	F	PMS	7/9/98	CFC DRAFT	JOB NO. 773481 LOCATION FERNALD, OHIO
					BY PMS / APPR / DATE

1	C	Manufacturer: *				Model No.: *		
2	O	No. of Units: 1 (ONE)				Min. Flow at P.T.: 0 gpm	Normal Flow: 32 gpm	
3	N	Liquid Pumped: Waste water				Max. Flow at P.T.: 50 gpm	Fluid pH:	
4	D	Pumping Temp.: 40-100 oF	Sp. Gr. @ P.T.: 1.00			Suction Press psia	Min.Viscosity @ P.T.: * cP	
5	T	Differential Press.:	Differential Head: Ft.			Vapor Pressure @ P.T.: Ft.	NPSH Available: psig	
6	N	Discharge Press.@ Norm: 27 ft H2O	Discharge Press. @ Max:				NPSH Required (Water): * Ft.	
7	S	Type: Sump pump - submersible				Location: Outdoors		
8		Horizontal or Vertical Arrangement? Vertical				Single or Double Suction? Single		
9	C	CW OR CCW Direction of Rotation Facing Pump Coupling:				Case Design Press.: psig	Max. Allow. W.P.: psig	
10	O	Number of Stages: 1	Speed: rpm			Shut-off Press.: PSI	Vol. Eff. @ Rating: %	
11	N	BARREL:	Split?			Horizontal?	Vertical?	
12	S	IMPELLER:	Type:			Max. Diameter: In.	Min. Diameter: In.	
13	T	Actual Imp. Dia.: In.	Vent and Drain Tapped?			Thrust Bearing Type:	Radial Bearing Type:	
14	R	Nozzles	Size	Rating	Facing	Location	Bearing Lub. Type:	
15	U	Suction					Oiler?	Oiler Type:
16	C	Discharge	*	*	*	*	Coupling Mfr.:	Coupling Model:
17	T	Vents					Baseplate?	Type Baseplate:
18	I	Drains					Water Cooling: Csng, Stffg Bx, Brgs, Pdstl, Glnd or none?	
19	O	Cooling H2O					Total Water Req'd: gp	Smothering Gland?
20	N	Stuffing Box Lubrication: Oil, Grease or None?					Type Packing:	Seal Oil Connection?
21		MECHANICAL SEAL:	Furnished By:				Manufacturer:	Type:
22	D	Single or Double?	Inside or Outside?				Balanced or Unbalanced?	
23	E	Rotary Unit:	Seal Ring Mtrl:				Face Material:	Shaft Packing:
24	T	Insert:	Reversible?				Face Material:	
25	A	Insert Mounting: Clamped, O-Ring or Press Fit?						
26	I	Gland:	Plain?				Carbon Throttle Bushing?	
27	L	Gland Stuffing Box Machined & Tapped for:					Dead End Lub.?	Circulating Lub.?
28	S	Flushing Seal Faces with Discharge Bypass?					Quenching?	Vent & Drain?
29		Flushing Seal Faces with External Fluid?					Auxilliary Stuffing Box Required?	
30		Weight of Pump: * lbs.	Weight of Base: lbs.				Weight of Driver: * lbs.	Shipping Weight: * lbs.
31	M	Casing & Covers: CS	Shaft:				Casing wear Rings:	Shaft Sleeves:
32	T	Impeller:	Lantern Rings:				Impeller Wear Rings:	Stuffing Box Bushings:
33	L	Glands:	Gaskets:					
34		Furnished By: Vendor	Elec. or Steam Turbine? Elec.				Direct, Gear, V-Belt or Rope? Direct	
35		ELECTRIC MOTOR:	Mfr.: *				STEAM TURBINE:	Mfr.:
36		Mounted By: Vendor	Enclosure: *				Mounted By:	Model:
37	D	Speed: * rpm	Service Factor: *				Horsepower: HP	Water Rates: Lbs/Hr
38	R	Volts: 115	Temp. Rise: *				Speed rpm	Vacuum (if any):
39	I	Phase: 1	Insulation: *				Inlet Steam Press.:	Inlet Steam Temp.:
40	V	Cycles: 60	Frame: *				Normal: psig	Normal: deg. F
41	E	Nominal Size: * HP	Est. BHP Req'd: * HP				Max.: psig	Max.: deg F
42	R	SPEED REDUCERS:	Mfr.:				Backpressure: psig	
43		Ratio:	Model:				Nozzles / Size / Rating / Facing / Location	
44		Integral or Separate?	Class:				Inlet	
45							Exhaust	
46		See Driver Specification No.:						
47	T	Performance Curve? *	Certified?				M	Serial Number:
48	E	Curve No.:					I	Outline Drawing Number:
49	S	Hydrotest?	Pressure: psig				S	Cross Section Drawing Number:
50	T	Witness Testing?	Shop Inspection?				C	
51								
52								
53	N	1. Vendor shall clearly state any exceptions to the requirements outlined in this data sheet.						
54	O	2. Pump shall be provided with stainless steel I.D. tags.						
55	T	3. Vendor to complete information marked *.						
56	E	4. Vendor shall provide Goulds Model 2871 EP05or equal.						
57	S	5. Pump shall be equipped with a float-type on-off switch.						
58								
59								
60								

000317

PT/_7/7/98_/[A90spec]-P9004

I.T. CORPORATION	SUMP PUMP SPECIFICATION	IT CORP SPEC. NO. 773481-90-P9005

NO	BY	DATE	REV.
D	PMS	5/12/98	CFC DRAFT
F	PMS	7/9/98	CFC DRAFT

SHEET 1 OF 1

PROJECT NAME: FDF WPRAP

JOB NO.: 773481

LOCATION: FERNALD, OHIO

BY	APPR	DATE
PMS		

1669

AREA NO: 90
AREA NAME: YARD & BUILDING SUMPS
TAG NOS.: P-9005
EQUIP NAME: RLB SOUTH SUMP PUMP

1	C	Manufacturer: *			Model No.: *	
2	O	No. of Units: 1 (ONE)			Min. Flow at P.T.: 0 gpm	Normal Flow: 23 gpm
3	N	Liquid Pumped: Waste water			Max. Flow at P.T.: 50 gpm	Fluid pH:
4	D	Pumping Temp.: 40-100 oF	Sp. Gr. @ P.T.: 1.00		Suction Press psia	Min.Viscosity @ P.T.: * cP
5	T	Differential Press.:	Differential Head: Ft.		Vapor Pressure @ P.T.: Ft.	NPSH Available: psig
6	N	Discharge Press.@ Norm: 28 ft H2O	Discharge Press. @ Max:			NPSH Required (Water): * Ft.
7	S	Type: Sump pump - submersible			Location: Outdoors	
8		Horizontal or Vertical Arrangement? Vertical			Single or Double Suction? Single	
9	C	CW OR CCW Direction of Rotation Facing Pump Coupling:			Case Design Press.: psig	Max. Allow. W.P.: psig
10	O	Number of Stages: 1	Speed: rpm		Shut-off Press.: PSI	Vol. Eff. @ Rating: %
11	N	BARREL:	Split?		Horizontal?	Vertical?
12	S	IMPELLER:	Type:		Max. Diameter: In.	Min. Diameter: In.
13	T	Actual Imp. Dia.: In.	Vent and Drain Tapped?		Thrust Bearing Type:	Radial Bearing Type:
14	R	Nozzles / Size / Rating / Facing / Location			Bearing Lub. Type:	
15	U	Suction			Oiler?	Oiler Type:
16	C	Discharge * * * *			Coupling Mfr.:	Coupling Model:
17	T	Vents			Baseplate?	Type Baseplate:
18	I	Drains			Water Cooling: Csng, Stffg Bx, Brgs, Pdstl, Glnd or none?	
19	O	Cooling H2O			Total Water Req'd: gp	Smothering Gland?
20	N	Stuffing Box Lubrication: Oil, Grease or None?			Type Packing:	Seal Oil Connection?
21		MECHANICAL SEAL:	Furnished By:		Manufacturer:	Type:
22	D	Single or Double?	Inside or Outside?		Balanced or Unbalanced?	
23	E	Rotary Unit:	Seal Ring Mtrl:		Face Material:	Shaft Packing:
24	T	Insert:	Reversible?		Face Material:	
25	A	Insert Mounting: Clamped, O-Ring or Press Fit?				
26	I	Gland:	Plain?		Carbon Throttle Bushing?	
27	L	Gland Stuffing Box Machined & Tapped for:			Dead End Lub.?	Circulating Lub.?
28	S	Flushing Seal Faces with Discharge Bypass?			Quenching?	Vent & Drain?
29		Flushing Seal Faces with External Fluid?			Auxilliary Stuffing Box Required?	
30		Weight of Pump: * lbs.	Weight of Base: lbs.		Weight of Driver: * lbs.	Shipping Weight: * lbs.
31	M	Casing & Covers: CS	Shaft:		Casing wear Rings:	Shaft Sleeves:
32	T	Impeller:	Lantern Rings:		Impeller Wear Rings:	Stuffing Box Bushings:
33	L	Glands:	Gaskets:			
34		Furnished By: Vendor	Elec. or Steam Turbine? Elec.		Direct, Gear, V-Belt or Rope? Direct	
35		ELECTRIC MOTOR:	Mfr.: *		STEAM TURBINE:	Mfr.:
36		Mounted By: Vendor	Enclosure: *		Mounted By:	Model:
37	D	Speed: * rpm	Service Factor: *		Horsepower: HP	Water Rates: Lbs/Hr
38	R	Volts: 115	Temp. Rise: *		Speed rpm	Vacuum (if any):
39	I	Phase: 1	Insulation: *		Inlet Steam Press.:	Inlet Steam Temp.:
40	V	Cycles: 60	Frame: *		Normal: psig	Normal: deg. F
41	E	Nominal Size: * HP	Est. BHP Req'd: * HP		Max.: psig	Max.: deg F
42	R	SPEED REDUCERS:	Mfr.:		Backpressure: psig	
43		Ratio:	Model:		Nozzles / Size / Rating / Facing / Location	
44		Integral or Separate?	Class:		Inlet	
45					Exhaust	
46		See Driver Specification No.:				
47	T	Performance Curve? *	Certified?	M	Serial Number:	
48	E	Curve No.:		I	Outline Drawing Number:	
49	S	Hydrotest?	Pressure: psig	S	Cross Section Drawing Number:	
50	T	Witness Testing?	Shop Inspection?	C		
51						
52						
53	N	1. Vendor shall clearly state any exceptions to the requirements outlined in this data sheet.				
54	O	2. Pump shall be provided with stainless steel I.D. tags.				
55	T	3. Vendor to complete information marked *.				
56	E	4. Vendor shall provide Goulds Model 2871 EP05or equal.				
57	S	5. Pump shall be equipped with a float-type on-off switch.				
58						
59						
60						

000318

PT/_7/7/98_/[A90spec]-P9005

I.T. CORPORATION	SUMP PUMP SPECIFICATION				IT CORP SPEC. NO. 773481-90-P9006
	NO	BY	DATE	REV.	SHEET 1 OF 1
	D	PMS	5/12/98	CFC DRAFT	PROJECT NAME FDF WPRAP
AREA NO: 90 AREA NAME: YARD & BUILDING SUMPS TAG NOS.: P-9006 EQUIP NAME: RLB NORTH SUMP PUMP	F	PMS	7/9/98	CFC DRAFT	JOB NO. 773481
					LOCATION FERNALD, OHIO
					BY PMS / APPR / DATE

1669

1	C	Manufacturer: *		Model No.: *		
2	O	No. of Units: 1 (ONE)		Min. Flow at P.T.: 0 gpm	Normal Flow: 26 gpm	
3	N	Liquid Pumped: Waste water		Max. Flow at P.T.: 50 gpm	Fluid pH:	
4	D	Pumping Temp.: 40-100 oF	Sp. Gr. @ P.T.: 1.00	Suction Press psia	Min.Viscosity @ P.T.: * cP	
5	T	Differential Press.:	Differential Head: Ft.	Vapor Pressure @ P.T.: Ft.	NPSH Available: psig	
6	N	Discharge Press.@ Norm: 28 ft H2O	Discharge Press. @ Max:		NPSH Required (Water): * Ft.	
7	S	Type: Sump pump - submersible		Location: Outdoors		
8		Horizontal or Vertical Arrangement? Vertical		Single or Double Suction? Single		
9	C	CW OR CCW Direction of Rotation Facing Pump Coupling:		Case Design Press.: psig	Max. Allow. W.P.: psig	
10	O	Number of Stages: 1	Speed: rpm	Shut-off Press.: PSI	Vol. Eff. @ Rating: %	
11	N	BARREL:	Split?	Horizontal?	Vertical?	
12	S	IMPELLER:	Type:	Max. Diameter: In.	Min. Diameter: In.	
13	T	Actual Imp. Dia.: In.	Vent and Drain Tapped?	Thrust Bearing Type:	Radial Bearing Type:	
14	R	Nozzles / Size / Rating / Facing / Location		Bearing Lub. Type:		
15	U	Suction		Oiler?	Oiler Type:	
16	C	Discharge * * * *		Coupling Mfr.:	Coupling Model:	
17	T	Vents		Baseplate?	Type Baseplate:	
18	I	Drains		Water Cooling: Csng, Stffg Bx, Brgs, Pdstl, Glnd or none?		
19	O	Cooling H2O		Total Water Req'd: gp	Smothering Gland?	
20	N	Stuffing Box Lubrication: Oil, Grease or None?		Type Packing:	Seal Oil Connection?	
21		MECHANICAL SEAL	Furnished By:	Manufacturer:	Type:	
22	D	Single or Double?	Inside or Outside?	Balanced or Unbalanced?		
23	E	Rotary Unit:	Seal Ring Mtrl:	Face Material:	Shaft Packing:	
24	T	Insert:	Reversible?	Face Material:		
25	A	Insert Mounting: Clamped, O-Ring or Press Fit?				
26	I	Gland:	Plain?	Carbon Throttle Bushing?		
27	L	Gland Stuffing Box Machined & Tapped for:		Dead End Lub.?	Circulating Lub.?	
28	S	Flushing Seal Faces with Discharge Bypass?		Quenching?	Vent & Drain?	
29		Flushing Seal Faces with External Fluid?		Auxilliary Stuffing Box Required?		
30		Weight of Pump: * lbs.	Weight of Base: lbs.	Weight of Driver: * lbs.	Shipping Weight: * lbs.	
31	M	Casing & Covers: CS	Shaft:	Casing wear Rings:	Shaft Sleeves:	
32	T	Impeller:	Lantern Rings:	Impeller Wear Rings:	Stuffing Box Bushings:	
33	L	Glands:	Gaskets:			
34		Furnished By: Vendor	Elec. or Steam Turbine? Elec.	Direct, Gear, V-Belt or Rope? Direct		
35		ELECTRIC MOTOR	Mfr.: *	STEAM TURBINE	Mfr.:	
36		Mounted By: Vendor	Enclosure: *	Mounted By:	Model:	
37	D	Speed: * rpm	Service Factor: *	Horsepower: HP	Water Rates: Lbs/Hr	
38	R	Volts: 115	Temp. Rise: *	Speed rpm	Vacuum (if any):	
39	I	Phase: 1	Insulation: *	Inlet Steam Press.:	Inlet Steam Temp.:	
40	V	Cycles: 60	Frame: *	Normal: psig	Normal: deg. F	
41	E	Nominal Size: * HP	Est. BHP Req'd: * HP	Max.: psig	Max.: deg F	
42	R	SPEED REDUCERS	Mfr.:	Backpressure: psig		
43		Ratio:	Model:	Nozzles / Size / Rating / Facing / Location		
44		Integral or Separate?	Class:	Inlet		
45				Exhaust		
46		See Driver Specification No.:				
47	T	Performance Curve? *	Certified?	M	Serial Number:	
48	E	Curve No.:		I	Outline Drawing Number:	
49	S	Hydrotest?	Pressure: psig	S	Cross Section Drawing Number:	
50	T	Witness Testing?	Shop Inspection?	C		
51						
52						
53	N	1. Vendor shall clearly state any exceptions to the requirements outlined in this data sheet.				
54	O	2. Pump shall be provided with stainless steel I.D. tags.				
55	T	3. Vendor to complete information marked *.				
56	E	4. Vendor shall provide Goulds Model 2871 EP05or equal.				
57	S	5. Pump shall be equipped with a float-type on-off switch.				
58						
59						
60						

000319

PT/_7/7/98_/[A90spec]-P9006

I.T. CORPORATION	SUMP PUMP SPECIFICATION				IT CORP SPEC. NO. 773481-90-P9007
	NO	BY	DATE	REV.	SHEET 1 OF 1
	D	PMS	5/12/98	CFC DRAFT	PROJECT NAME FDF WPRAP
AREA NO: 90 AREA NAME: YARD & BUILDING SUMPS TAG NOS.: P-9007 EQUIP NAME: DRYER PAD SUMP PUMP	F	PMS	7/9/98	CFC DRAFT	JOB NO. 773481
					LOCATION FERNALD, OHIO
					BY PMS / APPR / DATE

1669

1	C	Manufacturer: *		Model No.: *		
2	O	No. of Units: 1 (ONE)		Min. Flow at P.T.: 0 gpm	Normal Flow: 30 gpm	
3	N	Liquid Pumped: Waste water		Max. Flow at P.T.: 50 gpm	Fluid pH:	
4	D	Pumping Temp.: 40-100 oF	Sp. Gr. @ P.T.: 1.00	Suction Press psia	Min.Viscosity @ P.T.: * cP	
5	T	Differential Press.:	Differential Head: Ft.	Vapor Pressure @ P.T.: Ft.	NPSH Available: psig	
6	N	Discharge Press.@ Norm: 24 ft H2O	Discharge Press. @ Max:		NPSH Required (Water): * Ft.	
7	S	Type: Sump pump - submersible		Location: Outdoors		
8		Horizontal or Vertical Arrangement? Vertical		Single or Double Suction? Single		
9	C	CW OR CCW Direction of Rotation Facing Pump Coupling:		Case Design Press.: psig	Max. Allow. W.P.: psig	
10	O	Number of Stages: 1	Speed: rpm	Shut-off Press.: PSI	Vol. Eff. @ Rating: %	
11	N	BARREL:	Split?	Horizontal?	Vertical?	
12	S	IMPELLER:	Type:	Max. Diameter: In.	Min. Diameter: In.	
13	T	Actual Imp. Dia.: In.	Vent and Drain Tapped?	Thrust Bearing Type:	Radial Bearing Type:	
14	R	Nozzles / Size / Rating / Facing / Location		Bearing Lub. Type:		
15	U	Suction		Oiler?	Oiler Type:	
16	C	Discharge * * * *		Coupling Mfr.:	Coupling Model:	
17	T	Vents		Baseplate?	Type Baseplate:	
18	I	Drains		Water Cooling: Csng, Stffg Bx, Brgs, Pdstl, Glnd or none?		
19	O	Cooling H2O		Total Water Req'd: gp	Smothering Gland?	
20	N	Stuffing Box Lubrication: Oil, Grease or None?		Type Packing:	Seal Oil Connection?	
21		MECHANICAL SEAL:	Furnished By:	Manufacturer:	Type:	
22	D	Single or Double?	Inside or Outside?	Balanced or Unbalanced?		
23	E	Rotary Unit:	Seal Ring Mtrl:	Face Material:	Shaft Packing:	
24	T	Insert:	Reversible?	Face Material:		
25	A	Insert Mounting: Clamped, O-Ring or Press Fit?				
26	I	Gland:	Plain?	Carbon Throttle Bushing?		
27	L	Gland Stuffing Box Machined & Tapped for:		Dead End Lub.?	Circulating Lub.?	
28	S	Flushing Seal Faces with Discharge Bypass?		Quenching?	Vent & Drain?	
29		Flushing Seal Faces with External Fluid?		Auxilliary Stuffing Box Required?		
30		Weight of Pump: * lbs.	Weight of Base: lbs.	Weight of Driver: * lbs.	Shipping Weight: * lbs.	
31	M	Casing & Covers: CS	Shaft:	Casing wear Rings:	Shaft Sleeves:	
32	T	Impeller:	Lantern Rings:	Impeller Wear Rings:	Stuffing Box Bushings:	
33	L	Glands:	Gaskets:			
34		Furnished By: Vendor	Elec. or Steam Turbine? Elec.	Direct, Gear, V-Belt or Rope? Direct		
35		ELECTRIC MOTOR:	Mfr.: *	STEAM TURBINE:	Mfr.:	
36		Mounted By: Vendor	Enclosure: *	Mounted By:	Model:	
37	D	Speed: * rpm	Service Factor: *	Horsepower: HP	Water Rates: Lbs/Hr	
38	R	Volts: 115	Temp. Rise: *	Speed rpm	Vacuum (if any):	
39	I	Phase: 1	Insulation: *	Inlet Steam Press.:	Inlet Steam Temp.:	
40	V	Cycles: 60	Frame: *	Normal: psig	Normal: deg. F	
41	E	Nominal Size: * HP	Est. BHP Req'd: * HP	Max.: psig	Max.: deg F	
42	R	SPEED REDUCERS:	Mfr.:	Backpressure: psig		
43		Ratio:	Model:	Nozzles / Size / Rating / Facing / Location		
44		Integral or Separate?	Class:	Inlet		
45				Exhaust		
46		See Driver Specification No.:				
47	T	Performance Curve? *	Certified?	M Serial Number:		
48	E	Curve No.:		I Outline Drawing Number:		
49	S	Hydrotest?	Pressure: psig	S Cross Section Drawing Number:		
50	T	Witness Testing?	Shop Inspection?	C		
51						
52						
53	N	1. Vendor shall clearly state any exceptions to the requirements outlined in this data sheet.				
54	O	2. Pump shall be provided with stainless steel I.D. tags.				
55	T	3. Vendor to complete information marked *.				
56	E	4. Vendor shall provide Goulds Model 2871 EP05or equal.				
57	S	5. Pump shall be equipped with a float-type on-off switch.				
58						
59						
60						

000320

PT/_7/7/98_/[A90spec]-P9007

1669

I.T. CORPORATION	PUMP SPECIFICATION				IT CORP SPEC. NO. 773481-90-P9008
	NO	BY	DATE	REV.	SHEET 1 OF 1
	D	PMS	5/12/98	CFC DRAFT	PROJECT NAME FDF WPRAP
AREA NO: 90 AREA NAME: YARD & BUILDING SUMPS TAG NOS.: P-9008 EQUIP NAME: MHB COLLECTION TANK TRANSFER PUMP	F	PMS	7/9/98	CFC DRAFT	JOB NO. 773481 LOCATION FERNALD, OHIO
					BY PMS / APPR / DATE

1	C	Manufacturer: *		Model No.: *	
2	O	No. of Units: 1 (ONE)		Min. Flow at P.T.: 30 gpm	Normal Flow: 50 gpm
3	N	Liquid Pumped: Waste Water		Max. Flow at P.T.: 60 gpm	Fluid pH:
4	D	Pumping Temp.: 0 40-100 oF	Sp. Gr. @ P.T.: 1.00	Suction Press psia	Min.Viscosity @ P.T.: cP
5	T	Differential Press.: psi	Differential Head: Ft.	Vapor Pressure @ P.T.: Ft.	NPSH Available: psig
6	N	Discharge Press.@ Norm: 30 ft. H2O	Discharge Press. @ Max:		NPSH Required (Water): * Ft.
7	S	Type: Horizontal Centrifugal		Location:	
8		Horizontal or Vertical Arrangement? Horizontal		Single or Double Suction? Single	
9	C	CW OR CCW Direction of Rotation Facing Pump Coupling:		Case Design Press.: psig	Max. Allow. W.P.: psig
10	O	Number of Stages: 1	Speed: 1750 rpm	Shut-off Press.: PSI	Vol. Eff. @ Rating: %
11	N	BARREL:	Split?	Horizontal?	Vertical?
12	S	IMPELLER:	Type:	Max. Diameter: In.	Min. Diameter: In.
13	T	Actual Imp. Dia.: * In.	Vent and Drain Tapped?	Thrust Bearing Type:	Radial Bearing Type:
14	R	Nozzles / Size / Rating / Facing / Location		Bearing Lub. Type:	
15	U	Suction * * * *		Oiler?	Oiler Type:
16	C	Discharge * * * *		Coupling Mfr.: *	Coupling Model:
17	T	Vents * * * *		Baseplate? YES	Type Baseplate: *
18	I	Drains * * * *		Water Cooling: Csng, Stffg Bx, Brgs, Pdstl, Glnd or none?	
19	O	Cooling H2O		Total Water Req'd: gp	Smothering Gland?
20	N	Stuffing Box Lubrication: Oil, Grease or None? NONE		Type Packing:	Seal Oil Connection?
21		MECHANICAL SEAL:	Furnished By:	Manufacturer:	Type:
22	D	Single or Double?	Inside or Outside?	Balanced or Unbalanced?	
23	E	Rotary Unit:	Seal Ring Mtrl:	Face Material:	Shaft Packing: *
24	T	Insert:	Reversible?	Face Material:	
25	A	Insert Mounting: Clamped, O-Ring or Press Fit?			
26	I	Gland:	Plain?	Carbon Throttle Bushing?	
27	L	Gland Stuffing Box Machined & Tapped for:		Dead End Lub.?	Circulating Lub.?
28	S	Flushing Seal Faces with Discharge Bypass?		Quenching?	Vent & Drain?
29		Flushing Seal Faces with External Fluid?		Auxilliary Stuffing Box Required?	
30		Weight of Pump: * lbs.	Weight of Base: lbs.	Weight of Driver: * lbs.	Shipping Weight: * lbs.
31	M	Casing & Covers: cast iron	Shaft: *	Casing wear Rings:	Shaft Sleeves:
32	T	Impeller: cast iron	Lantern Rings:	Impeller Wear Rings:	Stuffing Box Bushings:
33	L	Glands: *	Gaskets:		
34		Furnished By: Vendor	Elec. or Steam Turbine? Elec.	Direct, Gear, V-Belt or Rope? *	
35		ELECTRIC MOTOR:	Mfr.: *	STEAM TURBINE:	Mfr.:
36		Mounted By: Vendor	Enclosure: *	Mounted By:	Model:
37	D	Speed: * rpm	Service Factor: *	Horsepower: HP	Water Rates: Lbs/Hr
38	R	Volts: 230/460	Temp. Rise: *	Speed rpm	Vacuum (if any):
39	I	Phase: 3	Insulation: *	Inlet Steam Press.:	Inlet Steam Temp.:
40	V	Cycles: 60	Frame: *	Normal: psig	Normal: deg. F
41	E	Nominal Size: * HP	Est. BHP Req'd: * HP	Max.: psig	Max.: deg F
42	R	SPEED REDUCERS:	Mfr.:	Backpressure: psig	
43		Ratio:	Model:	Nozzles / Size / Rating / Facing / Location	
44		Integral or Separate?	Class:	Inlet	
45				Exhaust	
46		See Driver Specification No.:			
47	T	Performance Curve? *	Certified?	M Serial Number:	
48	E	Curve No.:		I Outline Drawing Number:	
49	S	Hydrotest?	Pressure: psig	S Cross Section Drawing Number:	
50	T	Witness Testing?	Shop Inspection?	C	
51		1. Vendor shall provide Durco Mark III 1.5x1-8 or approved equal			
52		2. Pump shall be provided with stainless steel I.D. tags.			
53	N	3. Vendor to complete information marked *.			
54	O				
55	T				
56	E				
57	S				
58					
59					
60					

000321

PT/_7/7/98_/[A90spec]-P9008

1669

I.T. CORPORATION	SUMP PUMP SPECIFICATION				IT CORP SPEC. NO. 773481-90-P9009
	NO	BY	DATE	REV.	SHEET 1 OF 1
	D	PMS	5/12/98	CFC DRAFT	PROJECT NAME FDF WPRAP
AREA NO: 90 AREA NAME: YARD & BUILDING SUMPS TAG NOS.: P-9009 EQUIP NAME: TRUCK TURN AROUND AREA LIFT STATION SUMP PUMP	F	PMS	7/9/98	CFC DRAFT	JOB NO. 773481
					LOCATION FERNALD, OHIO
					BY PMS / APPR / DATE

1	C	Manufacturer: *		Model No.: *		
2	O	No. of Units: 1 (ONE)		Min. Flow at P.T.: 0 gpm	Normal Flow: 40 gpm	
3	N	Liquid Pumped: Waste water		Max. Flow at P.T.: 50 gpm	Fluid pH:	
4	D	Pumping Temp.: 40-100 oF	Sp. Gr. @ P.T.: 1.00	Suction Press psia	Min.Viscosity @ P.T.: * cP	
5	T	Differential Press.:	Differential Head: Ft.	Vapor Pressure @ P.T.: Ft.	NPSH Available: psig	
6	N	Discharge Press.@ Norm: 24 ft H2O	Discharge Press. @ Max:		NPSH Required (Water): * Ft.	
7	S	Type: Sump pump - submersible		Location: Outdoors		
8		Horizontal or Vertical Arrangement? Vertical		Single or Double Suction? Single		
9	C	CW OR CCW Direction of Rotation Facing Pump Coupling:		Case Design Press.: psig	Max. Allow. W.P.: psig	
10	O	Number of Stages: 1	Speed: rpm	Shut-off Press.: PSI	Vol. Eff. @ Rating: %	
11	N	BARREL:	Split?	Horizontal?	Vertical?	
12	S	IMPELLER:	Type:	Max. Diameter: In.	Min. Diameter: In.	
13	T	Actual Imp. Dia.: In.	Vent and Drain Tapped?	Thrust Bearing Type:	Radial Bearing Type:	
14	R	Nozzles / Size / Rating / Facing / Location		Bearing Lub. Type:		
15	U	Suction		Oiler?	Oiler Type:	
16	C	Discharge * * * *		Coupling Mfr.:	Coupling Model:	
17	T	Vents		Baseplate?	Type Baseplate:	
18	I	Drains		Water Cooling: Csng, Stffg Bx, Brgs, Pdstl, Glnd or none?		
19	O	Cooling H2O		Total Water Req'd: gp	Smothering Gland?	
20	N	Stuffing Box Lubrication: Oil, Grease or None?		Type Packing:	Seal Oil Connection?	
21		MECHANICAL SEAL:	Furnished By:	Manufacturer:	Type:	
22	D	Single or Double?	Inside or Outside?	Balanced or Unbalanced?		
23	E	Rotary Unit:	Seal Ring Mtrl:	Face Material:	Shaft Packing:	
24	T	Insert:	Reversible?	Face Material:		
25	A	Insert Mounting: Clamped, O-Ring or Press Fit?				
26	I	Gland:	Plain?	Carbon Throttle Bushing?		
27	L	Gland Stuffing Box Machined & Tapped for:		Dead End Lub.?	Circulating Lub.?	
28	S	Flushing Seal Faces with Discharge Bypass?		Quenching?	Vent & Drain?	
29		Flushing Seal Faces with External Fluid?		Auxilliary Stuffing Box Required?		
30		Weight of Pump: * lbs.	Weight of Base: lbs.	Weight of Driver: * lbs.	Shipping Weight: * lbs.	
31	M	Casing & Covers: CS	Shaft:	Casing wear Rings:	Shaft Sleeves:	
32	T	Impeller:	Lantern Rings:	Impeller Wear Rings:	Stuffing Box Bushings:	
33	L	Glands:	Gaskets:			
34		Furnished By: Vendor	Elec. or Steam Turbine? Elec.	Direct, Gear, V-Belt or Rope? Direct		
35		ELECTRIC MOTOR:	Mfr.: *	STEAM TURBINE:	Mfr.:	
36		Mounted By: Vendor	Enclosure: *	Mounted By:	Model:	
37	D	Speed: * rpm	Service Factor: *	Horsepower: HP	Water Rates: Lbs/Hr	
38	R	Volts: 115	Temp. Rise: *	Speed rpm	Vacuum (if any):	
39	I	Phase: 1	Insulation: *	Inlet Steam Press.:	Inlet Steam Temp.:	
40	V	Cycles: 60	Frame: *	Normal: psig	Normal: deg. F	
41	E	Nominal Size: * HP	Est. BHP Req'd: * HP	Max.: psig	Max.: deg F	
42	R	SPEED REDUCERS:	Mfr.:	Backpressure: psig		
43		Ratio:	Model:	Nozzles / Size / Rating / Facing / Location		
44		Integral or Separate?	Class:	Inlet		
45				Exhaust		
46		See Driver Specification No.:				
47	T	Performance Curve? *	Certified?	M Serial Number:		
48	E	Curve No.:		I Outline Drawing Number:		
49	S	Hydrotest?	Pressure: psig	S Cross Section Drawing Number:		
50	T	Witness Testing?	Shop Inspection?	C		
51						
52						
53	N	1. Vendor shall clearly state any exceptions to the requirements outlined in this data sheet.				
54	O	2. Pump shall be provided with stainless steel I.D. tags.				
55	T	3. Vendor to complete information marked *.				
56	E	4. Vendor shall provide Goulds Model 2871 EP05or equal.				
57	S	5. Pump shall be equipped with a float-type on-off switch.				
58						
59						
60						

000322

PT/_7/7/98_/[A90spec]-P9009

I.T. CORPORATION	SUMP PUMP SPECIFICATION				IT CORP SPEC. NO. 773481-90-P9010
	NO	BY	DATE	REV.	SHEET 1 OF 1
	D	PMS	5/12/98	CFC DRAFT	PROJECT NAME FDF WPRAP
AREA NO: 90 AREA NAME: YARD & BUILDING SUMPS TAG NOS.: P-9010 EQUIP NAME: HAUL ROAD LIFT STATION SUMP PUMP	F	PMS	7/9/98	CFC DRAFT	JOB NO. 773481
					LOCATION FERNALD, OHIO
					BY PMS / APPR / DATE

1669

1	C	Manufacturer: *			Model No.: *		
2	O	No. of Units: 1 (ONE)			Min. Flow at P.T.: 0 gpm	Normal Flow: 40 gpm	
3	N	Liquid Pumped: Waste water			Max. Flow at P.T.: 50 gpm	Fluid pH:	
4	D	Pumping Temp.: 40-100 oF	Sp. Gr. @ P.T.: 1.00		Suction Press psia	Min.Viscosity @ P.T.: * cP	
5	T	Differential Press.:	Differential Head: Ft.		Vapor Pressure @ P.T.: Ft.	NPSH Available: psig	
6	N	Discharge Press.@ Norm: 20 ft H2O	Discharge Press. @ Max:			NPSH Required (Water): * Ft.	
7	S	Type: Sump pump - submersible			Location: Outdoors		
8		Horizontal or Vertical Arrangement? Vertical			Single or Double Suction? Single		
9	C	CW OR CCW Direction of Rotation Facing Pump Coupling:			Case Design Press.: psig	Max. Allow. W.P.: psig	
10	O	Number of Stages: 1	Speed: rpm		Shut-off Press.: PSI	Vol. Eff. @ Rating: %	
11	N	BARREL:	Split?		Horizontal?	Vertical?	
12	S	IMPELLER:	Type:		Max. Diameter: In.	Min. Diameter: In.	
13	T	Actual Imp. Dia.: In.	Vent and Drain Tapped?		Thrust Bearing Type:	Radial Bearing Type:	
14	R	Nozzles / Size / Rating / Facing / Location			Bearing Lub. Type:		
15	U	Suction			Oiler?	Oiler Type:	
16	C	Discharge * * * *			Coupling Mfr.:	Coupling Model:	
17	T	Vents			Baseplate?	Type Baseplate:	
18	I	Drains			Water Cooling: Csng, Stffg Bx, Brgs, Pdstl, Glnd or none?		
19	O	Cooling H2O			Total Water Req'd: gp	Smothering Gland?	
20	N	Stuffing Box Lubrication: Oil, Grease or None?			Type Packing:	Seal Oil Connection?	
21		MECHANICAL SEAL:	Furnished By:		Manufacturer:	Type:	
22	D	Single or Double?	Inside or Outside?		Balanced or Unbalanced?		
23	E	Rotary Unit:	Seal Ring Mtrl:		Face Material:	Shaft Packing:	
24	T	Insert:	Reversible?		Face Material:		
25	A	Insert Mounting: Clamped, O-Ring or Press Fit?					
26	I	Gland:	Plain?		Carbon Throttle Bushing?		
27	L	Gland Stuffing Box Machined & Tapped for:			Dead End Lub.?	Circulating Lub.?	
28	S	Flushing Seal Faces with Discharge Bypass?			Quenching?	Vent & Drain?	
29		Flushing Seal Faces with External Fluid?			Auxilliary Stuffing Box Required?		
30		Weight of Pump: * lbs.	Weight of Base: lbs.		Weight of Driver: * lbs.	Shipping Weight: * lbs.	
31	M	Casing & Covers: CS	Shaft:		Casing wear Rings:	Shaft Sleeves:	
32	T	Impeller:	Lantern Rings:		Impeller Wear Rings:	Stuffing Box Bushings:	
33	L	Glands:	Gaskets:				
34		Furnished By: Vendor	Elec. or Steam Turbine? Elec.		Direct, Gear, V-Belt or Rope? Direct		
35		ELECTRIC MOTOR:	Mfr.: *		STEAM TURBINE:	Mfr.:	
36		Mounted By: Vendor	Enclosure: *		Mounted By:	Model:	
37	D	Speed: * rpm	Service Factor: *		Horsepower: HP	Water Rates: Lbs/Hr	
38	R	Volts: 115	Temp. Rise: *		Speed rpm	Vacuum (if any):	
39	I	Phase: 1	Insulation: *		Inlet Steam Press.:	Inlet Steam Temp.:	
40	V	Cycles: 60	Frame: *		Normal: psig	Normal: deg. F	
41	E	Nominal Size: * HP	Est. BHP Req'd: * HP		Max.: psig	Max.: deg F	
42	R	SPEED REDUCERS:	Mfr.:		Backpressure: psig		
43		Ratio:	Model:		Nozzles / Size / Rating / Facing / Location		
44		Integral or Separate?	Class:		Inlet		
45					Exhaust		
46		See Driver Specification No.:					
47	T	Performance Curve? *	Certified?		M Serial Number:		
48	E	Curve No.:			I Outline Drawing Number:		
49	S	Hydrotest?	Pressure: psig		S Cross Section Drawing Number:		
50	T	Witness Testing?	Shop Inspection?		C		
51							
52							
53	N	1. Vendor shall clearly state any exceptions to the requirements outlined in this data sheet.					
54	O	2. Pump shall be provided with stainless steel I.D. tags.					
55	T	3. Vendor to complete information marked *.					
56	E	4. Vendor shall provide Goulds Model 2871 EP05or equal.					
57	S	5. Pump shall be equipped with a float-type on-off switch.					
58							
59							
60							

000323

PT/_7/7/98_/[A90spec]-P9010

I.T. CORPORATION	SUMP PUMP SPECIFICATION				IT CORP SPEC. NO. 773481-90-P9011
	NO	BY	DATE	REV.	SHEET 1 OF 1
	D	PMS	5/12/98	CFC DRAFT	PROJECT NAME FDF WPRAP
AREA NO: 90 AREA NAME: YARD & BUILDING SUMPS TAG NOS.: P-9011 EQUIP NAME: RLB DECON WATER SUMP PUMP	F	PMS	7/9/98	CFC DRAFT	JOB NO. 773481
					LOCATION FERNALD, OHIO
					BY PMS / APPR / DATE

1669

1	C	Manufacturer: *		Model No.: *		
2	O	No. of Units: 1 (ONE)		Min. Flow at P.T.: 0 gpm	Normal Flow: 30 gpm	
3	N	Liquid Pumped: Waste water		Max. Flow at P.T.: 50 gpm	Fluid pH:	
4	D	Pumping Temp.: 40-100 oF	Sp. Gr. @ P.T.: 1.00	Suction Press psia	Min.Viscosity @ P.T.: * cP	
5	T	Differential Press.:	Differential Head: Ft.	Vapor Pressure @ P.T.: Ft.	NPSH Available: psig	
6	N	Discharge Press.@ Norm: 27 ft H2O	Discharge Press. @ Max:		NPSH Required (Water): * Ft.	
7	S	Type: Sump pump - submersible		Location: Outdoors		
8		Horizontal or Vertical Arrangement? Vertical		Single or Double Suction? Single		
9	C	CW OR CCW Direction of Rotation Facing Pump Coupling:		Case Design Press.: psig	Max. Allow. W.P.: psig	
10	O	Number of Stages: 1	Speed: rpm	Shut-off Press.: PSI	Vol. Eff. @ Rating: %	
11	N	BARREL:	Split?	Horizontal?	Vertical?	
12	S	IMPELLER:	Type:	Max. Diameter: In.	Min. Diameter: In.	
13	T	Actual Imp. Dia.: In.	Vent and Drain Tapped?	Thrust Bearing Type:	Radial Bearing Type:	
14	R	Nozzles / Size / Rating / Facing / Location		Bearing Lub. Type:		
15	U	Suction		Oiler?	Oiler Type:	
16	C	Discharge * * * *		Coupling Mfr.:	Coupling Model:	
17	T	Vents		Baseplate?	Type Baseplate:	
18	I	Drains		Water Cooling: Csng, Stffg Bx, Brgs, Pdstl, Glnd or none?		
19	O	Cooling H2O		Total Water Req'd: gp	Smothering Gland?	
20	N	Stuffing Box Lubrication: Oil, Grease or None?		Type Packing:	Seal Oil Connection?	
21		MECHANICAL SEAL:	Furnished By:	Manufacturer:	Type:	
22	D	Single or Double?	Inside or Outside?	Balanced or Unbalanced?		
23	E	Rotary Unit:	Seal Ring Mtrl:	Face Material:	Shaft Packing:	
24	T	Insert:	Reversible?	Face Material:		
25	A	Insert Mounting: Clamped, O-Ring or Press Fit?				
26	I	Gland:	Plain?	Carbon Throttle Bushing?		
27	L	Gland Stuffing Box Machined & Tapped for:		Dead End Lub.?	Circulating Lub.?	
28	S	Flushing Seal Faces with Discharge Bypass?		Quenching?	Vent & Drain?	
29		Flushing Seal Faces with External Fluid?		Auxilliary Stuffing Box Required?		
30		Weight of Pump: * lbs.	Weight of Base: lbs.	Weight of Driver: * lbs.	Shipping Weight: * lbs.	
31	M	Casing & Covers: CS	Shaft:	Casing wear Rings:	Shaft Sleeves:	
32	T	Impeller:	Lantern Rings:	Impeller Wear Rings:	Stuffing Box Bushings:	
33	L	Glands:	Gaskets:			
34		Furnished By: Vendor	Elec. or Steam Turbine? Elec.	Direct, Gear, V-Belt or Rope? Direct		
35		ELECTRIC MOTOR:	Mfr.: *	STEAM TURBINE:	Mfr.:	
36		Mounted By: Vendor	Enclosure: *	Mounted By:	Model:	
37	D	Speed: * rpm	Service Factor: *	Horsepower: HP	Water Rates: Lbs/Hr	
38	R	Volts: 115	Temp. Rise: *	Speed rpm	Vacuum (if any):	
39	I	Phase: 1	Insulation: *	Inlet Steam Press.:	Inlet Steam Temp.:	
40	V	Cycles: 60	Frame: *	Normal: psig	Normal: deg. F	
41	E	Nominal Size: * HP	Est. BHP Req'd: * HP	Max.: psig	Max.: deg F	
42	R	SPEED REDUCERS:	Mfr.:	Backpressure: psig		
43		Ratio:	Model:	Nozzles / Size / Rating / Facing / Location		
44		Integral or Separate?	Class:	Inlet		
45				Exhaust		
46		See Driver Specification No.:				
47	T	Performance Curve? *	Certified?	M Serial Number:		
48	E	Curve No.:		I Outline Drawing Number:		
49	S	Hydrotest?	Pressure: psig	S Cross Section Drawing Number:		
50	T	Witness Testing?	Shop Inspection?	C		
51						
52						
53	N	1. Vendor shall clearly state any exceptions to the requirements outlined in this data sheet.				
54	O	2. Pump shall be provided with stainless steel I.D. tags.				
55	T	3. Vendor to complete information marked *.				
56	E	4. Vendor shall provide Goulds Model 2871 EP05or equal.				
57	S	5. Pump shall be equipped with a float-type on-off switch.				
58						
59						
60						

000324

PT/_7/7/98_/[A90spec]-P9011

1669

I.T. CORPORATION	SUMP PUMP SPECIFICATION	IT CORP SPEC. NO. 773481-90-P9012
	NO / BY / DATE / REV.	SHEET 1 OF 1
	D / PMS / 5/12/98 / CFC DRAFT	PROJECT NAME FDF WPRAP
AREA NO: 90 AREA NAME: YARD & BUILDING SUMPS TAG NOS.: P-9012 EQUIP NAME: LABORATORY SUMP PUMP	F / PMS / 7/9/98 / CFC DRAFT	JOB NO. 773481
		LOCATION FERNALD, OHIO
		BY PMS / APPR / DATE

1	C	Manufacturer: *		Model No.: *		
2	O	No. of Units: 1 (ONE)		Min. Flow at P.T.: 0 gpm	Normal Flow: 30 gpm	
3	N	Liquid Pumped: Waste water		Max. Flow at P.T.: 50 gpm	Fluid pH:	
4	D	Pumping Temp.: 40-100 oF	Sp. Gr. @ P.T.: 1.00	Suction Press psia	Min.Viscosity @ P.T.: * cP	
5	T	Differential Press.:	Differential Head: Ft.	Vapor Pressure @ P.T.: Ft.	NPSH Available: psig	
6	N	Discharge Press.@ Norm: 26 ft H2O	Discharge Press. @ Max:		NPSH Required (Water): * Ft.	
7	S	Type: Sump pump - submersible		Location: Outdoors		
8		Horizontal or Vertical Arrangement? Vertical		Single or Double Suction? Single		
9	C	CW OR CCW Direction of Rotation Facing Pump Coupling:		Case Design Press.: psig	Max. Allow. W.P.: psig	
10	O	Number of Stages: 1	Speed: rpm	Shut-off Press.: PSI	Vol. Eff. @ Rating: %	
11	N	BARREL:	Split?	Horizontal?	Vertical?	
12	S	IMPELLER:	Type:	Max. Diameter: In.	Min. Diameter: In.	
13	T	Actual Imp. Dia.: In.	Vent and Drain Tapped?	Thrust Bearing Type:	Radial Bearing Type:	
14	R	Nozzles / Size / Rating / Facing / Location		Bearing Lub. Type:		
15	U	Suction		Oiler?	Oiler Type:	
16	C	Discharge * * * *		Coupling Mfr.:	Coupling Model:	
17	T	Vents		Baseplate?	Type Baseplate:	
18	I	Drains		Water Cooling: Csng, Stffg Bx, Brgs, Pdstl, Glnd or none?		
19	O	Cooling H2O		Total Water Req'd: gp	Smothering Gland?	
20	N	Stuffing Box Lubrication: Oil, Grease or None?		Type Packing:	Seal Oil Connection?	
21		MECHANICAL SEAL:	Furnished By:	Manufacturer:	Type:	
22	D	Single or Double?	Inside or Outside?	Balanced or Unbalanced?		
23	E	Rotary Unit:	Seal Ring Mtrl:	Face Material:	Shaft Packing:	
24	T	Insert:	Reversible?	Face Material:		
25	A	Insert Mounting: Clamped, O-Ring or Press Fit?				
26	I	Gland:	Plain?	Carbon Throttle Bushing?		
27	L	Gland Stuffing Box Machined & Tapped for:		Dead End Lub.?	Circulating Lub.?	
28	S	Flushing Seal Faces with Discharge Bypass?		Quenching?	Vent & Drain?	
29		Flushing Seal Faces with External Fluid?		Auxilliary Stuffing Box Required?		
30		Weight of Pump: * lbs.	Weight of Base: lbs.	Weight of Driver: * lbs.	Shipping Weight: * lbs.	
31	M	Casing & Covers: CS	Shaft:	Casing wear Rings:	Shaft Sleeves:	
32	T	Impeller:	Lantern Rings:	Impeller Wear Rings:	Stuffing Box Bushings:	
33	L	Glands:	Gaskets:			
34		Furnished By: Vendor	Elec. or Steam Turbine? Elec.	Direct, Gear, V-Belt or Rope? Direct		
35		ELECTRIC MOTOR:	Mfr.: *	STEAM TURBINE:	Mfr.:	
36		Mounted By: Vendor	Enclosure: *	Mounted By:	Model:	
37	D	Speed: * rpm	Service Factor: *	Horsepower: HP	Water Rates: Lbs/Hr	
38	R	Volts: 115	Temp. Rise: *	Speed rpm	Vacuum (if any):	
39	I	Phase: 1	Insulation: *	Inlet Steam Press.:	Inlet Steam Temp.:	
40	V	Cycles: 60	Frame: *	Normal: psig	Normal: deg. F	
41	E	Nominal Size: * HP	Est. BHP Req'd: * HP	Max.: psig	Max.: deg F	
42	R	SPEED REDUCERS:	Mfr.:	Backpressure: psig		
43		Ratio:	Model:	Nozzles / Size / Rating / Facing / Location		
44		Integral or Separate?	Class:	Inlet		
45				Exhaust		
46		See Driver Specification No.:				
47	T	Performance Curve? *	Certified?	M	Serial Number:	
48	E	Curve No.:		I	Outline Drawing Number:	
49	S	Hydrotest?	Pressure: psig	S	Cross Section Drawing Number:	
50	T	Witness Testing?	Shop Inspection?	C		
51						
52						
53	N	1. Vendor shall clearly state any exceptions to the requirements outlined in this data sheet.				
54	O	2. Pump shall be provided with stainless steel I.D. tags.				
55	T	3. Vendor to complete information marked *.				
56	E	4. Vendor shall provide Goulds Model 2871 EP05or equal.				
57	S	5. Pump shall be equipped with a float-type on-off switch.				
58						
59						
60						

000325

PT/_7/7/98_/[A90spec]-P9012

I.T. CORPORATION	SUMP PUMP SPECIFICATION				IT CORP SPEC. NO. 773481-90-P9013
	NO	BY	DATE	REV.	SHEET 1 OF 1
	D	PMS	5/12/98	CFC DRAFT	PROJECT NAME FDF WPRAP
AREA NO: 90 AREA NAME: YARD & BUILDING SUMPS TAG NOS.: P-9013 EQUIP NAME: GCS/WTS BUILDING NORTH SUMP PUMP	F	PMS	7/9/98	CFC DRAFT	JOB NO. 773481
					LOCATION FERNALD, OHIO
					BY PMS / APPR / DATE

1669

1	C	Manufacturer: *		Model No.: *		
2	O	No. of Units: 1 (ONE)		Min. Flow at P.T.: 0 gpm	Normal Flow: 35 gpm	
3	N	Liquid Pumped: Waste water		Max. Flow at P.T.: 50 gpm	Fluid pH:	
4	D	Pumping Temp.: 40-100 oF	Sp. Gr. @ P.T.: 1.00	Suction Press psia	Min.Viscosity @ P.T.: * cP	
5	T	Differential Press.:	Differential Head: Ft.	Vapor Pressure @ P.T.: Ft.	NPSH Available: psig	
6	N	Discharge Press.@ Norm: 24 ft H2O	Discharge Press. @ Max:		NPSH Required (Water): * Ft.	
7	S	Type: Sump pump - submersible		Location: Outdoors		
8		Horizontal or Vertical Arrangement? Vertical		Single or Double Suction? Single		
9	C	CW OR CCW Direction of Rotation Facing Pump Coupling:		Case Design Press.: psig	Max. Allow. W.P.: psig	
10	O	Number of Stages: 1	Speed: rpm	Shut-off Press.: PSI	Vol. Eff. @ Rating: %	
11	N	BARREL:	Split?	Horizontal?	Vertical?	
12	S	IMPELLER:	Type:	Max. Diameter: In.	Min. Diameter: In.	
13	T	Actual Imp. Dia.: In.	Vent and Drain Tapped?	Thrust Bearing Type:	Radial Bearing Type:	
14	R	Nozzles / Size / Rating / Facing / Location		Bearing Lub. Type:		
15	U	Suction		Oiler?	Oiler Type:	
16	C	Discharge * * * *		Coupling Mfr.:	Coupling Model:	
17	T	Vents		Baseplate?	Type Baseplate:	
18	I	Drains		Water Cooling: Csng, Stffg Bx, Brgs, Pdstl, Glnd or none?		
19	O	Cooling H2O		Total Water Req'd: gp	Smothering Gland?	
20	N	Stuffing Box Lubrication: Oil, Grease or None?		Type Packing:	Seal Oil Connection?	
21		MECHANICAL SEAL	Furnished By:	Manufacturer:	Type:	
22	D	Single or Double?	Inside or Outside?	Balanced or Unbalanced?		
23	E	Rotary Unit:	Seal Ring Mtrl:	Face Material:	Shaft Packing:	
24	T	Insert:	Reversible?	Face Material:		
25	A	Insert Mounting: Clamped, O-Ring or Press Fit?				
26	I	Gland:	Plain?	Carbon Throttle Bushing?		
27	L	Gland Stuffing Box Machined & Tapped for:		Dead End Lub.?	Circulating Lub.?	
28	S	Flushing Seal Faces with Discharge Bypass?		Quenching?	Vent & Drain?	
29		Flushing Seal Faces with External Fluid?		Auxilliary Stuffing Box Required?		
30		Weight of Pump: * lbs.	Weight of Base: lbs.	Weight of Driver: * lbs.	Shipping Weight: * lbs.	
31	M	Casing & Covers: CS	Shaft:	Casing wear Rings:	Shaft Sleeves:	
32	T	Impeller:	Lantern Rings:	Impeller Wear Rings:	Stuffing Box Bushings:	
33	L	Glands:	Gaskets:			
34		Furnished By: Vendor	Elec. or Steam Turbine? Elec.	Direct, Gear, V-Belt or Rope? Direct		
35		ELECTRIC MOTOR	Mfr.: *	STEAM TURBINE	Mfr.:	
36		Mounted By: Vendor	Enclosure: *	Mounted By:	Model:	
37	D	Speed: * rpm	Service Factor: *	Horsepower: HP	Water Rates: Lbs/Hr	
38	R	Volts: 115	Temp. Rise: *	Speed rpm	Vacuum (if any):	
39	I	Phase: 1	Insulation: *	Inlet Steam Press.:	Inlet Steam Temp.:	
40	V	Cycles: 60	Frame: *	Normal: psig	Normal: deg. F	
41	E	Nominal Size: * HP	Est. BHP Req'd: * HP	Max.: psig	Max.: deg F	
42	R	SPEED REDUCERS	Mfr.:	Backpressure: psig		
43		Ratio:	Model:	Nozzles / Size / Rating / Facing / Location		
44		Integral or Separate?	Class:	Inlet		
45				Exhaust		
46		See Driver Specification No.:				
47	T	Performance Curve? *	Certified?	M	Serial Number:	
48	E	Curve No.:		I	Outline Drawing Number:	
49	S	Hydrotest?	Pressure: psig	S	Cross Section Drawing Number:	
50	T	Witness Testing?	Shop Inspection?	C		
51						
52						
53	N	1. Vendor shall clearly state any exceptions to the requirements outlined in this data sheet.				
54	O	2. Pump shall be provided with stainless steel I.D. tags.				
55	T	3. Vendor to complete information marked *.				
56	E	4. Vendor shall provide Goulds Model 2871 EP05or equal.				
57	S	5. Pump shall be equipped with a float-type on-off switch.				
58						
59						
60						

000326

PT/_7/7/98_/[A90spec]-P9013

1669

I.T. CORPORATION	SUMP PUMP SPECIFICATION				IT CORP SPEC. NO. 773481-90-P9014
	NO	BY	DATE	REV.	SHEET 1 OF 1
	D	PMS	5/12/98	CFC DRAFT	PROJECT NAME FDF WPRAP
AREA NO: 90 AREA NAME: YARD & BUILDING SUMPS TAG NOS.: P-9014 EQUIP NAME: GCS/WTS BUILDING SOUTH SUMP PUMP	F	PMS	7/9/98	CFC DRAFT	JOB NO. 773481
					LOCATION FERNALD, OHIO
					BY PMS / APPR / DATE

1	C	Manufacturer: *		Model No.: *		
2	O	No. of Units: 1 (ONE)		Min. Flow at P.T.: 0 gpm	Normal Flow: 35 gpm	
3	N	Liquid Pumped: Waste water		Max. Flow at P.T.: 50 gpm	Fluid pH:	
4	D	Pumping Temp.: 40-100 oF	Sp. Gr. @ P.T.: 1.00	Suction Press psia	Min.Viscosity @ P.T.: * cP	
5	T	Differential Press.:	Differential Head: Ft.	Vapor Pressure @ P.T.: Ft.	NPSH Available: psig	
6	N	Discharge Press.@ Norm: 24 ft H2O	Discharge Press. @ Max:		NPSH Required (Water): * Ft.	
7	S	Type: Sump pump - submersible		Location: Outdoors		
8		Horizontal or Vertical Arrangement? Vertical		Single or Double Suction? Single		
9	C	CW OR CCW Direction of Rotation Facing Pump Coupling:		Case Design Press.: psig	Max. Allow. W.P.: psig	
10	O	Number of Stages: 1	Speed: rpm	Shut-off Press.: PSI	Vol. Eff. @ Rating: %	
11	N	BARREL:	Split?	Horizontal?	Vertical?	
12	S	IMPELLER:	Type:	Max. Diameter: In.	Min. Diameter: In.	
13	T	Actual Imp. Dia.: In.	Vent and Drain Tapped?	Thrust Bearing Type:	Radial Bearing Type:	
14	R	Nozzles / Size / Rating / Facing / Location		Bearing Lub. Type:		
15	U	Suction		Oiler?	Oiler Type:	
16	C	Discharge * * * *		Coupling Mfr.:	Coupling Model:	
17	T	Vents		Baseplate?	Type Baseplate:	
18	I	Drains		Water Cooling: Csng, Stffg Bx, Brgs, Pdstl, Glnd or none?		
19	O	Cooling H2O		Total Water Req'd: gp	Smothering Gland?	
20	N	Stuffing Box Lubrication: Oil, Grease or None?		Type Packing:	Seal Oil Connection?	
21		MECHANICAL SEAL:	Furnished By:	Manufacturer:	Type:	
22	D	Single or Double?	Inside or Outside?	Balanced or Unbalanced?		
23	E	Rotary Unit:	Seal Ring Mtrl:	Face Material:	Shaft Packing:	
24	T	Insert:	Reversible?	Face Material:		
25	A	Insert Mounting: Clamped, O-Ring or Press Fit?				
26	I	Gland:	Plain?	Carbon Throttle Bushing?		
27	L	Gland Stuffing Box Machined & Tapped for:		Dead End Lub.?	Circulating Lub.?	
28	S	Flushing Seal Faces with Discharge Bypass?		Quenching?	Vent & Drain?	
29		Flushing Seal Faces with External Fluid?		Auxilliary Stuffing Box Required?		
30		Weight of Pump: * lbs.	Weight of Base: lbs.	Weight of Driver: * lbs.	Shipping Weight: * lbs.	
31	M	Casing & Covers: CS	Shaft:	Casing wear Rings:	Shaft Sleeves:	
32	T	Impeller:	Lantern Rings:	Impeller Wear Rings:	Stuffing Box Bushings:	
33	L	Glands:	Gaskets:			
34		Furnished By: Vendor	Elec. or Steam Turbine? Elec.	Direct, Gear, V-Belt or Rope? Direct		
35		ELECTRIC MOTOR:	Mfr.: *	STEAM TURBINE:	Mfr.:	
36		Mounted By: Vendor	Enclosure: *	Mounted By:	Model:	
37	D	Speed: * rpm	Service Factor: *	Horsepower: HP	Water Rates: Lbs/Hr	
38	R	Volts: 115	Temp. Rise: *	Speed rpm	Vacuum (if any):	
39	I	Phase: 1	Insulation: *	Inlet Steam Press.:	Inlet Steam Temp.:	
40	V	Cycles: 60	Frame: *	Normal: psig	Normal: deg. F	
41	E	Nominal Size: * HP	Est. BHP Req'd: * HP	Max.: psig	Max.: deg F	
42	R	SPEED REDUCERS:	Mfr.:	Backpressure: psig		
43		Ratio:	Model:	Nozzles / Size / Rating / Facing / Location		
44		Integral or Separate?	Class:	Inlet		
45				Exhaust		
46		See Driver Specification No.:				
47	T	Performance Curve? *	Certified?	M Serial Number:		
48	E	Curve No.:		I Outline Drawing Number:		
49	S	Hydrotest?	Pressure: psig	S Cross Section Drawing Number:		
50	T	Witness Testing?	Shop Inspection?	C		
51						
52						
53	N	1. Vendor shall clearly state any exceptions to the requirements outlined in this data sheet.				
54	O	2. Pump shall be provided with stainless steel I.D. tags.				
55	T	3. Vendor to complete information marked *.				
56	E	4. Vendor shall provide Goulds Model 2871 EP05or equal.				
57	S	5. Pump shall be equipped with a float-type on-off switch.				
58						
59						
60						

000327

PT/_7/7/98_/[A90spec]-P9014

I.T. CORPORATION	SUMP PUMP SPECIFICATION	IT CORP SPEC. NO. 773481-90-P9015
	NO / BY / DATE / REV.: F / PMS / 7/9/98 / CFC DRAFT	SHEET 1 OF 1
		PROJECT NAME: FDF WPRAP
AREA NO: 90 AREA NAME: YARD & BUILDING SUMPS TAG NOS.: P-9015 EQUIP NAME: RLB WASH WATER SUMP PUMP		JOB NO. 773481
		LOCATION: FERNALD, OHIO
		BY: PMS / APPR / DATE

1669

1	C	Manufacturer: *		Model No.: *	
2	O	No. of Units: 1 (ONE)		Min. Flow at P.T.: 0 gpm	Normal Flow: 30 gpm
3	N	Liquid Pumped: Waste water		Max. Flow at P.T.: 50 gpm	Fluid pH:
4	D	Pumping Temp.: 40-100 oF	Sp. Gr. @ P.T.: 1.00	Suction Press psia	Min.Viscosity @ P.T.: * cP
5	T	Differential Press.:	Differential Head: Ft.	Vapor Pressure @ P.T.: Ft.	NPSH Available: psig
6	N	Discharge Press.@ Norm: 27 ft H2O	Discharge Press. @ Max:		NPSH Required (Water): * Ft.
7	S	Type: Sump pump - submersible		Location: Outdoors	
8		Horizontal or Vertical Arrangement? Vertical		Single or Double Suction? Single	
9	C	CW OR CCW Direction of Rotation Facing Pump Coupling:		Case Design Press.: psig	Max. Allow. W.P.: psig
10	O	Number of Stages: 1	Speed: rpm	Shut-off Press.: PSI	Vol. Eff. @ Rating: %
11	N	BARREL:	Split?	Horizontal?	Vertical?
12	S	IMPELLER:	Type:	Max. Diameter: In.	Min. Diameter: In.
13	T	Actual Imp. Dia.: In.	Vent and Drain Tapped?	Thrust Bearing Type:	Radial Bearing Type:
14	R	Nozzles / Size / Rating / Facing / Location		Bearing Lub. Type:	
15	U	Suction		Oiler?	Oiler Type:
16	C	Discharge * * * *		Coupling Mfr.:	Coupling Model:
17	T	Vents		Baseplate?	Type Baseplate:
18	I	Drains		Water Cooling: Csng, Stffg Bx, Brgs, Pdstl, Glnd or none?	
19	O	Cooling H2O		Total Water Req'd: gp	Smothering Gland?
20	N	Stuffing Box Lubrication: Oil, Grease or None?		Type Packing:	Seal Oil Connection?
21		MECHANICAL SEAL:	Furnished By:	Manufacturer:	Type:
22	D	Single or Double?	Inside or Outside?	Balanced or Unbalanced?	
23	E	Rotary Unit:	Seal Ring Mtrl:	Face Material:	Shaft Packing:
24	T	Insert:	Reversible?	Face Material:	
25	A	Insert Mounting: Clamped, O-Ring or Press Fit?			
26	I	Gland:	Plain?	Carbon Throttle Bushing?	
27	L	Gland Stuffing Box Machined & Tapped for:		Dead End Lub.?	Circulating Lub.?
28	S	Flushing Seal Faces with Discharge Bypass?		Quenching?	Vent & Drain?
29		Flushing Seal Faces with External Fluid?		Auxilliary Stuffing Box Required?	
30		Weight of Pump: * lbs.	Weight of Base: lbs.	Weight of Driver: * lbs.	Shipping Weight: * lbs.
31	M	Casing & Covers: CS	Shaft:	Casing wear Rings:	Shaft Sleeves:
32	T	Impeller:	Lantern Rings:	Impeller Wear Rings:	Stuffing Box Bushings:
33	L	Glands:	Gaskets:		
34		Furnished By: Vendor	Elec. or Steam Turbine? Elec.	Direct, Gear, V-Belt or Rope? Direct	
35		ELECTRIC MOTOR:	Mfr.: *	STEAM TURBINE:	Mfr.:
36		Mounted By: Vendor	Enclosure: *	Mounted By:	Model:
37	D	Speed: * rpm	Service Factor: *	Horsepower: HP	Water Rates: Lbs/Hr
38	R	Volts: 115	Temp. Rise: *	Speed rpm	Vacuum (if any):
39	I	Phase: 1	Insulation: *	Inlet Steam Press.:	Inlet Steam Temp.:
40	V	Cycles: 60	Frame: *	Normal: psig	Normal: deg. F
41	E	Nominal Size: * HP	Est. BHP Req'd: * HP	Max.: psig	Max.: deg F
42	R	SPEED REDUCERS:	Mfr.:	Backpressure: psig	
43		Ratio:	Model:	Nozzles / Size / Rating / Facing / Location	
44		Integral or Separate?	Class:	Inlet	
45				Exhaust	
46		See Driver Specification No.:			
47	T	Performance Curve? *	Certified?	M Serial Number:	
48	E	Curve No.:		I Outline Drawing Number:	
49	S	Hydrotest?	Pressure: psig	S Cross Section Drawing Number:	
50	T	Witness Testing?	Shop Inspection?	C	
51					
52					
53	N	1. Vendor shall clearly state any exceptions to the requirements outlined in this data sheet.			
54	O	2. Pump shall be provided with stainless steel I.D. tags.			
55	T	3. Vendor to complete information marked *.			
56	E	4. Vendor shall provide Goulds Model 2871 EP05or equal.			
57	S	5. Pump shall be equipped with a float-type on-off switch.			
58					
59					
60					

000328

PT/_7/7/98_/[A90spec]-P9015

I.T. CORPORATION	SUMP PUMP SPECIFICATION				IT CORP SPEC. NO. 773481-90-P9016
	NO	BY	DATE	REV.	SHEET 1 OF 1
	F	PMS	7/9/98	CFC DRAFT	PROJECT NAME FDF WPRAP
AREA NO: 90 AREA NAME: YARD & BUILDING SUMPS TAG NOS.: P-9016 EQUIP NAME: GCS/WTS BUILDING WEST SUMP PUMP					JOB NO. 773481
					LOCATION FERNALD, OHIO
					BY PMS / APPR / DATE

1669

HOLD

1	C	Manufacturer: *			Model No.: *		
2	O	No. of Units: 1 (ONE)			Min. Flow at P.T.: 0 gpm	Normal Flow: 35 gpm	
3	N	Liquid Pumped: Waste water			Max. Flow at P.T.: 50 gpm	Fluid pH:	
4	D	Pumping Temp.: 40-100 oF	Sp. Gr. @ P.T.: 1.00		Suction Press psia	Min.Viscosity @ P.T.: * cP	
5	T	Differential Press.:	Differential Head: Ft.		Vapor Pressure @ P.T.: Ft.	NPSH Available: psig	
6	N	Discharge Press.@ Norm: 24 ft H2O	Discharge Press. @ Max:			NPSH Required (Water): * Ft.	
7	S	Type: Sump pump - submersible			Location: Outdoors		
8		Horizontal or Vertical Arrangement? Vertical			Single or Double Suction? Single		
9	C	CW OR CCW Direction of Rotation Facing Pump Coupling:			Case Design Press.: psig	Max. Allow. W.P.: psig	
10	O	Number of Stages: 1	Speed: rpm		Shut-off Press.: PSI	Vol. Eff. @ Rating: %	
11	N	BARREL:	Split?		Horizontal?	Vertical?	
12	S	IMPELLER:	Type:		Max. Diameter: In.	Min. Diameter: In.	
13	T	Actual Imp. Dia.: In.	Vent and Drain Tapped?		Thrust Bearing Type:	Radial Bearing Type:	
14	R	Nozzles / Size / Rating	Facing	Location	Bearing Lub. Type:		
15	U	Suction			Oiler?	Oiler Type:	
16	C	Discharge * *	*	*	Coupling Mfr.:	Coupling Model:	
17	T	Vents			Baseplate?	Type Baseplate:	
18	I	Drains			Water Cooling: Csng, Stffg Bx, Brgs, Pdstl, Glnd or none?		
19	O	Cooling H2O			Total Water Req'd: gp	Smothering Gland?	
20	N	Stuffing Box Lubrication: Oil, Grease or None?			Type Packing:	Seal Oil Connection?	
21		MECHANICAL SEAL:	Furnished By:		Manufacturer:	Type:	
22	D	Single or Double?	Inside or Outside?		Balanced or Unbalanced?		
23	E	Rotary Unit:	Seal Ring Mtrl:		Face Material:	Shaft Packing:	
24	T	Insert:	Reversible?		Face Material:		
25	A	Insert Mounting: Clamped, O-Ring or Press Fit?					
26	I	Gland:	Plain?		Carbon Throttle Bushing?		
27	L	Gland Stuffing Box Machined & Tapped for:			Dead End Lub.?	Circulating Lub.?	
28	S	Flushing Seal Faces with Discharge Bypass?			Quenching?	Vent & Drain?	
29		Flushing Seal Faces with External Fluid?			Auxilliary Stuffing Box Required?		
30		Weight of Pump: * lbs.	Weight of Base: lbs.		Weight of Driver: * lbs.	Shipping Weight: * lbs.	
31	M	Casing & Covers: CS	Shaft:		Casing wear Rings:	Shaft Sleeves:	
32	T	Impeller:	Lantern Rings:		Impeller Wear Rings:	Stuffing Box Bushings:	
33	L	Glands:	Gaskets:				
34		Furnished By: Vendor	Elec. or Steam Turbine? Elec.		Direct, Gear, V-Belt or Rope? Direct		
35		ELECTRIC MOTOR:	Mfr.: *		STEAM TURBINE:	Mfr.:	
36		Mounted By: Vendor	Enclosure: *		Mounted By:	Model:	
37	D	Speed: * rpm	Service Factor: *		Horsepower: HP	Water Rates: Lbs/Hr	
38	R	Volts: 115	Temp. Rise: *		Speed rpm	Vacuum (if any):	
39	I	Phase: 1	Insulation: *		Inlet Steam Press.:	Inlet Steam Temp.:	
40	V	Cycles: 60	Frame: *		Normal: psig	Normal: deg. F	
41	E	Nominal Size: * HP	Est. BHP Req'd: * HP		Max.: psig	Max.: deg F	
42	R	SPEED REDUCERS:	Mfr.:		Backpressure: psig		
43		Ratio:	Model:		Nozzles / Size / Rating	Facing	Location
44		Integral or Separate?	Class:		Inlet		
45					Exhaust		
46		See Driver Specification No.:					
47	T	Performance Curve? *	Certified?		M Serial Number:		
48	E	Curve No.:			I Outline Drawing Number:		
49	S	Hydrotest?	Pressure: psig		S Cross Section Drawing Number:		
50	T	Witness Testing?	Shop Inspection?		C		
51							
52							
53	N	1. Vendor shall clearly state any exceptions to the requirements outlined in this data sheet.					
54	O	2. Pump shall be provided with stainless steel I.D. tags.					
55	T	3. Vendor to complete information marked *.					
56	E	4. Vendor shall provide Goulds Model 2871 EP05or equal.					
57	S	5. Pump shall be equipped with a float-type on-off switch.					
58							
59							
60							

000329

PT/_7/7/98_/[A90spec]-P9016

I.T. CORPORATION	VERTICAL VESSEL SPECIFICATION 1669	IT CORP. SPEC. NO. 773481 - S5001
		SHEET 1 OF 1
AREA NO: 50		PROJECT NAME FERNALD WPRAP OU1
AREA NAME: GCS SYSTEM		JOB NO. 773481
TAG NO.: S-5001 A / B		LOCATION FERNALD, OHIO
EQUIPMENT NAME: CYCLONE SEPARATOR		

No.	BY	DATE	REV.
D		05/12/98	CFC DRAFT
E	MSD	06/05/98	Draft Issue for EPA Review
F	LAW	07/09/98	DRAFT CFC

BY	APPR	DATE

1		Total Volume: * Gal.	Field Erected? NO	No. Units: 2 (TWO)		
2		Operating Pressure, psig	-0.7, (14.0 psia)			
3		Operating Temperature, deg F	250 - 350			
4		Liquid Specific Gravity	N/A			
5		Contents Lethal?	No			
6		Design Pressure, psig	5			
7	D	Design Temperature, deg.F	500			
8	E	Shell / Heads / Corr. Allow, In.	1/16"	1/16"		
9	S	Shell / Heads / Joint Eff., %				
10	I	Max. Allow. Press. (New&Cold) psig	N/A			
11	G	Limited by	N/A			
12	N	Hydrostatic Test Pressure, psig	N/A			
13		Code: ASME Sect. VIII, Div. I	Stamp: NO			
14	D	Radiograph: N/A	Stress Relieve: N/A			
15	A	Insulation: 3" Thk.External Weatherproof				
16	T	Fireproofing: NONE				
17	A	Sandblast: N/A	Paint: 09900 - Finish 206			
18		MANHOLE: Hinged?	Davited?	Other: Bolted		
19		Type support: CS Chair w/ Galvanized support structure from grade				
20		Platform Clips: NO	Ladder Clips: NO	Insul. Rings: SS Studs		
21		Pipe Supports: N/A				
22		Wind Load: 80 mph, Exp. C (I=1.0)	Seismic: ZONE 1			
23		Weight Empty: * lbs.	Weight Full of Water: * lbs.			

Performance - Each Unit							
Inlet Gas @ 350F		scfm	4685	acfm			
Outlet Gas		scfm	4691	acfm			
Organic Loading-18 lb/hr (99.5% non-condensible)@ 5.7 lb/ft3.							
Steam Loading -7824 lb/hrH2O (vapor) @ 350F(pH-3.5-10.5)							
Inlet Partical loading		gr/ft3	1378	lb/hr			
Outlet Partical loading		gr/ft3	*	lb/hr			
Particle size (micron)	100%	<200	99%	<150	96%	<100	
91% <75	75%	<50	60%	<30	30%	<10	
Particle Density	55	lb/ft3					
Pressure Drop	3	"wc	@ Max. Operating				
Configuration:	Fisher-Klosterman XQ240-21 (or equal)						

24		Item	Thickness	Mat'l Class	Mat'l - Minimum Quality
25		Shell	10 ga.	SS	T304L
26	M	Heads	10 ga.	SS	T304L
27	A	Lining	N/A		
28	T	Scroll	10 ga.	SS	T304L
29	E	Dust Receiver	10 ga.	SS	T304L
30	R	In/Out Transitions	10 ga.	SS	T304L
31	I	Nozzle Necks	SS		304
32	A	Flanges	SS		304
33	L	Coupling	SS		304
34	S	Supports	CS		A36 Galvanized
35		Bolts/Studs	Alloy Steel		A193 Gr B8
36		Nuts	Heavy Hex		A194 Gr 2H
37		Gaskets	A&B 1/8" Full face		DYNEX

38		Service	Mark	No.	Size	Rating	Face	Type
39	N	Flue Gas Inlet	A	1	20"	5#	FF	Note 1
40	O	Flue Gas Outlet	B	1	22"x22"	5#	FF	Note 4
41	Z	Solids Outlet	C	1	7 - 1/2" ID	150#	RF	Flg.
42	Z	Pulse Conn.	D	2	2"	3000#	NPT	Half Cplg.
43	L	Pressure Tap	E	2	1"	3000#	NPT	Half Cplg.
44	E	Removable Top	F	1	28"	10#	FF	Note 4,5
45		Temp. Element	F	1	1"	3000#	NPT	Cplg.

46 1. Tangential entry transition from 21x10 1/2 to 20" diam.
47 2. 12" Clearance required for double dump valves (S-5002A/B) and
48 30" clearance required for Cyclone Solids Transfer Screw (H - 5001 A/B).
49 N 3. Nozzle C is 7 - 1/2" sq. ID w/ plate flange.
50 O 4. 3/8" minimum flange thickness.
51 T 5. 2-1/2" Recessed and flanged removable top.
52 E 6. All dimensions are typical for preliminary design purposes. Vendor to provide
53 S dimensional details (incl. Supports) as required and other information noted by *
54 7. Vendor shall submit a computer analysis of cyclone efficiency for design flow
55 rate conditions and +/- 25% of design flow conditions.

HOLD

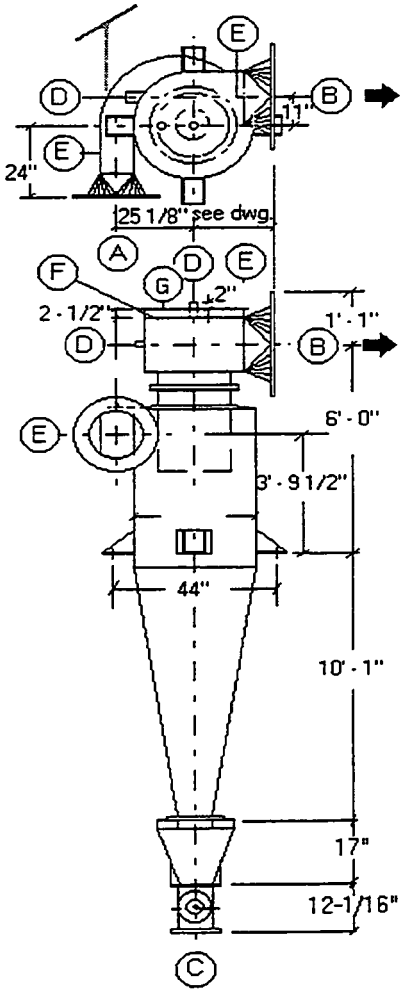

000330

S5001.xls

I.T. CORPORATION	WET ELECTROSTATIC PRECIPITATOR VESSEL SPECIFICATION 1669	IT CORP. SPEC. NO. 773481 - S5004
		SHEET 1 OF 1
		PROJECT NAME FERNALD WPRAP OU1
		JOB NO. 773481
		LOCATION FERNALD, OHIO

NO	BY	DATE	REV.	BY	APPR	DATE
D	JAN	05/12/98	CFC DRAFT			
E	MSD	06/05/98	Draft Issue for EPA Review			
F	JAN	07/09/98	DRAFT CFC			

AREA NO: 50
AREA NAME: GCS SYSTEM
TAG NO.: S - 5004
EQUIPMENT NAME: WET ELECTROSTATIC PRECIPITATOR

1		Total Volume: 21,500 Gal.	Field Erected? NO	No. Units: 1(ONE)		
2		Operating Pressure, psig	-0.7, (14.0 psia)			
3		Operating Temperature, deg F	108			
4		Liquid Specific Gravity	1.03			
5		Contents Lethal?	NO			
6		Design Pressure, psig	+/- 2			
7	D	Design Temperature, deg F	212			
8	E	Shell / Heads / Corr. Allow, In.	1/16"	1/16"		
9	S	Model:	DUCON - Note 1, 2			
10	I	Configuration:	Single Pass, Upflow			
11	G	Wash Liquid Flow: 50 GPM	Sump Capacity:	1500 Gals.		
12	N	High DC Voltage Power Supply,:	Transformer / Rectifier Set, Note 3			
13		Rating:	Primary:	460VAC/3/60	Secondary:	40KVDC
14	D	Ionizing Collection Cell, No. of Tubes	Size:	Length:		
15	A	Power:	Design:	Operating:		
16	T	Insulation: NONE	Fireproofing:	N/A		
17	A	Sandblast: N/A	Paint:	09900 - Finish 205		
18		MANHOLE: Hinged?	Davited?	Other: Bolted		
19		Type support:	Full support from legs to structure.			
20		Platform Clips: NO	Ladder Clips: NO	Insul. Rings: NO		
21		Pipe Supports: N/A				
22		Wind Load: 80 mph, Exp. C (I=1.0)	Seismic:	ZONE 1		
23		Weight Empty: 50000 lbs.	Weight Full of Water:	lbs.		

		Item	Thickness	Mat'l Class	Mat'l - Minimum Quality
24					
25		Shell	0.135"	SS	316
26	M				
27	A				
28	T				
29	E				
30	R				
31	I	Nozzle Necks			
32	A	Flanges			
33	L	Coupling			
34	S	M.H. Cover			
35		Supports			
36		Bolts/Studs	Studs		Alloy
37		Nuts	Heavy Hex		Alloy
38		Gaskets	A&M 1/8" Full face		DYNEX

		Service	Mark	No.	Size	Rating	Face	Type
39	N							
40	O	Upper Ins. Access	A	4	24" x 49"	2#	FF	Flg.
41	Z	Gas Outlet	B	1	42" x 42"	2#	FF	Note 3
42	Z	Lower Ins. Access	C	4	24" x 30"	2#	FF	Flg.
43	L	Gas Inlet	D	1	18" x 96"	2#	FF	Note 3
44	E	Tubes Wash Head.	E	8	1"	3000#	MNPT	Cplg.
45		Fog Headers	F	6	1"	3000#	MNPT	Cplg.
46	S	Lower Access	G	1	24" x 24"	2#	FF	Flg.
47	C	Overflow	H	1	6"	150#	RF	Flg.
48	H	Drain	J	1	6"	150#	RF	Flg.
49	E	Air Purge Window	K	2	25" x 29"	2#	FF	Flg.
50	D	Upper Access	L	1	24" x 30"	2#	FF	Flg.
51	U	Collector Drainage	M	4	1-1/4"	3000#	MNPT	Cplg.
52	L		N					
53	E		O					
54			P					
55			Q					

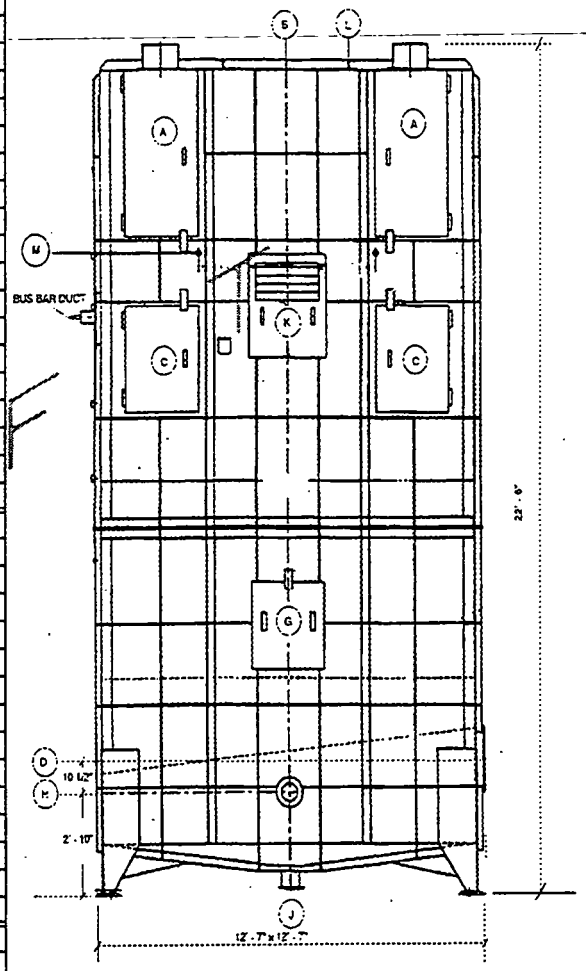

NOTES
1. This is an existing unit originally provided for a gas flow of 41,941 acfm.
2. T/R set is integral to the control panel, and is negative polarity, full wave rectifier,silicon type.
3. Transition required to 22" diameter.
4. Items marked * by Detail Design

000331

S5004.xls

I.T. CORPORATION	AIR PRE-FILTER SPECIFICATION				IT CORP. SPEC. NO. 773481-S7003		
	NO	BY	DATE	REV.	SHEET 1 OF 1		
	D	KKK	5/12/98	CFC DRAFT	PROJECT NAME FERNALD WPRAP OU-1		
PROJECT: FERNALD WPRAP AREA: UTILITIES TAG NO.: S-7003A,B EQUIPMENT: AIR PRE FILTER	E	BAH	6/5/98	DRAFT ISSUE FOR EPA REVIEW	JOB NO. 773481		
					LOCATION FERNALD, OH		
	F	BAH	7/9/98	DRAFT CFC	BY	APPR	DATE 5/98

Process Data:	
Fluid:	Compressed Air
Design Pressure:	200 psig
Design Temperature:	400 deg F
Max. Pressure	150 psig
Pressure Drop	1 psi
Normal Flow Rate:	350 SCFM
Minimum Flow Rate:	300 SCFM
Max Flow Rate:	850 SCFM
Particulate Removal:	
Type:	Coalescing
Oil:	0.01 ppm
Efficiency:	99.90%
Particulate Removal:	0.3 to 0.6 microns
Design Data:	
Manufacturer:	PNEUMATECH
Model:	FIG C-250-85, G6 GRADE ELEMENT
Inlet/Oulet	4" 150#
Weight	*
No. of Units	2
Size	*
Filter:	
Material of Construction?	Woven glass media
Replacable Cartridges?	Yes
Drain Type	Elec./Auto
Diff. Press gage?	Yes
Ambient Conditions:	
Equipment Location:	Indoors
Ambient Temp:	10/110 deg F
Wind Load:	N/A
Seismic Zone:	1

Notes:

* *Information to be supplied by vendor.*

AREA70F.XLS

I.T. CORPORATION	AIR AFTER FILTER SPECIFICATION				IT CORP. SPEC. NO. 773481-S7004		
	NO	BY	DATE	REV.	SHEET 1 OF 1		
	D	KKK	5/12/98	CFC DRAFT	PROJECT NAME FERNALD WPRAP OU-1		
PROJECT: FERNALD WPRAP AREA: UTILITIES TAG NO.: S-7004A,B EQUIPMENT: AIR AFTER FILTER	E	BAH	6/5/98	DRAFT ISSUE FOR EPA REVIEW	JOB NO. 773481		
					LOCATION FERNALD, OH		
	F	BAH	7/9/98	DRAFT CFC	BY	APPR	DATE 5/98

Process Data:	
Fluid:	Compressed Air
Design Pressure:	200 psig
Design Temperature:	400 deg F
Max. Pressure	150 psig
Pressure Drop	1 psi
Normal Flow Rate:	250 SCFM
Minimum Flow Rate:	200 SCFM
Max Flow Rate:	300 SCFM
Particulate Removal:	
Type:	Pleated
Microns	0.9
Efficiency	99%
Design Data:	
Manufacturer:	PNEUMATECH
Model:	PGP-130-20, G-6 GRADE ELEMENT
Inlet/Outlet	1.5" NPT
Weight	*
No. of Units	2
Size	*
Filter:	
Material of Construction?	*
Replacable Cartridges?	Yes
Drain Type	Manual
Condition Indic.	Yes
Ambient Conditions:	
Equipment Location:	indoors
Ambient Temp:	10/110 deg F
Wind Load:	N/A
Seismic Zone:	1

Notes:

* Information to be supplied by vendor.

I.T. CORPORATION	AIR AFTER FILTER SPECIFICATION				IT CORP. SPEC. NO. 773481-S7007		
	NO	BY	DATE	REV.	SHEET 1 OF 1		
	D	KKK	5/12/98	CFC DRAFT	PROJECT NAME FERNALD WPRAP OU-1		
PROJECT: FERNALD WPRAP AREA: UTILITIES TAG NO.: S-7007A,B EQUIPMENT: AIR AFTER FILTER	E	BAH	6/5/98	DRAFT ISSUE FOR EPA REVIEW	JOB NO. 773481		
					LOCATION FERNALD, OH		
	F	BAH	7/9/98	DRAFT CFC HOLD	BY	APPR	DATE 5/98

Process Data:	
Fluid:	Compressed Air
Design Pressure:	200 psig
Design Temperature:	400 deg F
Max. Pressure	150 psig
Pressure Drop	1 psi
Normal Flow Rate:	350 SCFM
Minimum Flow Rate:	300 SCFM
Max Flow Rate:	450 SCFM
Particulate Removal:	
Type:	Pleated
Microns	0.9
Efficiency	99%
Design Data:	
Manufacturer:	*
Model:	*
Inlet/Outlet	*
Weight	*
No. of Units	2
Size	*
Filter:	
Material of Construction?	*
Replacable Cartridges?	Yes
Drain Type	Manual
Condition Indic.	Yes
Ambient Conditions:	
Equipment Location:	indoors
Ambient Temp:	10/110 deg F
Wind Load:	N/A
Seismic Zone:	1

Notes:

* Information to be supplied by vendor.

I.T. CORPORATION	VERTICAL TANK SPECIFICATION 1669	IT CORP. SPEC. NO. 773481 - T5001
		SHEET 1 OF 1
		PROJECT NAME FERNALD WPRAP OU1
		JOB NO. 773481
		LOCATION FERNALD, OHIO

NO	BY	DATE	REV.
D		05/12/98	CFC DRAFT
E	MSD	06/05/98	Draft Issue for EPA Review
F	JAN	07/09/98	DRAFT CFC

BY	APPR	DATE

AREA NO: 50
AREA NAME: GCS SYSTEM
TAG NO.: T-5001
EQUIPMENT NAME: SCRUBBER SUMP TANK

1		Total Volume: 3,700 Gal.	Field Erected? NO	No. Units: 1(ONE)	
2		Operating Pressure, psig	-0.7, (14.0 psia)		
3		Operating Temperature, deg F	210		
4		Liquid Specific Gravity	1.03		
5		Contents Lethal?	NO		
6		Design Pressure, psig	+/- 2		
7	D	Design Temperature, deg F	600		
8	E	Shell / Heads / Corr. Allow, In.	1/16"	1/16"	
9	S	Shell / Heads / Joint Eff., %			
10	I	Max. Allow. Press. (New&Cold) psig	N/A		
11	G	Limited by	N/A		
12	N	Hydrostatic Test Pressure, psig	N/A		
13		Code: ASME Sect. VIII	Stamp: NO		
14	D	Radiograph: N/A	Stress Relieve: N/A		
15	A	Insulation: N/A			
16	T	Fireproofing: NONE			
17	A	Sandblast: N/A	Paint: N/A		
18		MANHOLE: Hinged?	Davited?	Other: Bolted	
19		Type support: Full support from structure to grade at body chairs			
20		Platform Clips: NO	Ladder Clips: NO	Insul. Rings: NO	
21		Pipe Supports: N/A			
22		Wind Load: 80 mph, Exp. C (I=1.0)	Seismic: ZONE 1		
23		Weight Empty: * lbs.	Weight Full of Water: * lbs.		

		Item	Thickness	Mat'l Class	Mat'l - Minimum Quality
24					
25		Shell	1/4"	SS	304
26	M				
27	A				
28	T				
29	E				
30	R				
31	I	Nozzle Necks	SS		304
32	A	Flanges	SS		304
33	L	Coupling			
34	S	M.H. Cover	SS		304
35		Supports	SS		304
36		Bolts/Studs	Studs		Alloy
37		Nuts	Heavy Hex		Alloy
38		Gaskets	1/8" Full face		DYNEX

		Service	Mark	No.	Size	Rating	Face	Type
39	N							
40	O	Gas Inlet	A	1	30 3/4"	5#	FF	Note 4
41	Z	Gas Outlet	B	1	30"	5#	FF	Note 4
42	Z	Pump Suction	C	1	4"	150#	RF	Flg.
43	L	Drain	D		Not used			Note 6
44	E	Inspection	E	1	8"	150#	RF	Flg.
45		Water Fill	F	1	2"	150#	RF	Flg.
46	S	Level Gage	G	2	3"	150#	RF	Flg.
47	C	Solids Activation	H	1	1"	150#	RF	Flg.
48	H	Org. Pump Suction	J	1	1"	150#	RF	Flg.
49	E	Blowdown Recycle	K	1	2"	150#	RF	Flg.
50	D	Recirculation	L	5	3"	150#	RF	Flg.
51	U	Access	M	2	24"	15#	FF	Note 4
52	L		N					
53	E		O					
54			P					
55			Q					

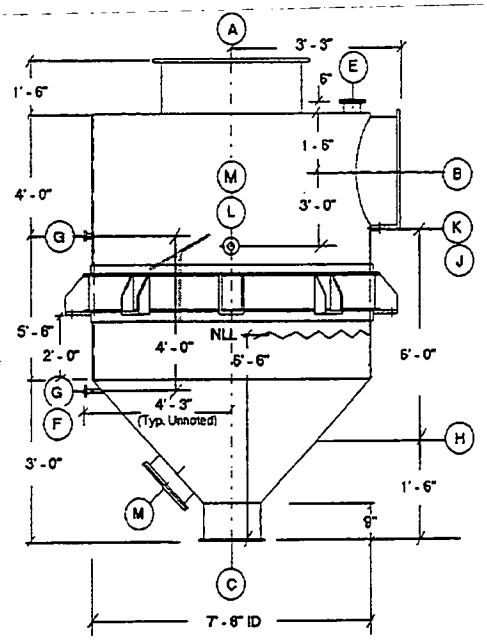

NOTES

1. Nozzle A to support 8500 lbs. And match V-5001.
2. Nozzle L orientation per project drawing and be angled down from horizontal approximately 15 degrees.
3. Vessel thickness includes corrosion allowance.
4. 1/2" minimum flange thickness.
5. Items marked * by Detail Design
6. Drain provided in outlet piping to pump suction.

000335

T5001.xls

I.T. CORPORATION	VERTICAL TANK SPECIFICATION 1669	IT CORP. SPEC. NO. 773481 - T5002
		SHEET 1 OF 1

NO	BY	DATE	REV.
D	JAN	05/12/98	CFC DRAFT
E	MSD	06/05/98	Draft Issue for EPA Review
F	JAN	06/12/98	Issued for Preliminary Design

PROJECT NAME: FERNALD WPRAP OU1

JOB NO.: 773481

LOCATION: FERNALD, OHIO

BY	APPR	DATE

AREA NO: 50
AREA NAME: GCS SYSTEM
TAG NO.: T-5002
EQUIPMENT NAME: SUBCOOL QUENCH SUMP TANK

1		Total Volume: 9,600 Gal.	Field Erected? NO		No. Units: 1(ONE)	
2		Operating Pressure, psig		-0.7, (14.0 psia)		
3		Operating Temperature, deg F		210		
4		Liquid Specific Gravity		1.03		
5		Contents Lethal?		NO		
6		Design Pressure, psig		+/- 2		
7	D	Design Temperature, deg F		600		
8	E	Shell / Heads	Corr. Allow, In.	1/16"	1/16"	
9	S	Shell / Heads	Joint Eff., %			
10	I	Max. Allow. Press. (New&Cold) psig		N/A		
11	G	Limited by		N/A		
12	N	Hydrostatic Test Pressure, psig		N/A		
13		Code: ASME Sect. VIII		Stamp:	NO	
14	D	Radiograph: N/A		Stress Relieve:	N/A	
15	A	Insulation: N/A				
16	T	Fireproofing: NONE				
17	A	Sandblast: SSPC-SP6		Paint: 09900 - Finish 205		
18		MANHOLE: Hinged?	Davited?	Other: Bolted		
19		Type support: Full support from structure to grade at body chairs				
20		Platform Clips: NO	Ladder Clips: NO	Insul. Rings: NO		
21		Pipe Supports: N/A				
22		Wind Load: 80 mph, Exp. C (I=1.0)		Seismic: ZONE 1		
23		Weight Empty: * lbs.		Weight Full of Water: * lbs.		

		Item	Thickness	Mat'l Class	Mat'l - Minimum Quality
24					
25		Shell	5/16"	CS	A36, A283C
26	M	Heads	5/16"	CS	A36, A283C
27	A				
28	T				
29	E				
30	R				
31	I	Nozzle Necks		CS	A53B, A36
32	A	Flanges		CS	
33	L	Coupling			
34	S	M.H. Cover		CS	
35		Supports		CS	A36
36		Bolts/Studs		Studs	Alloy
37		Nuts			Alloy
38		Gaskets		1/8" Full face	DYNEX

		Service	Mark	No.	Size	Rating	Face	Type
39	N							
40	O	Gas Inlet	A	1	5'-9 3/4"	15#	FF	Note 4
41	Z	Gas Outlet	B	1	22"	15#	FF	Flg.
42	Z	Pump Suction	C	1	12"	150#	RF	Flg.
43	L	Overflow	D	1	4"	150#	RF	Flg.
44	E	Inspection	E	1	8"	150#	RF	Flg.
45		Water Fill	F	1	4"	150#	RF	Flg.
46	S	Level Gage	G	2	3"	150#	RF	Flg.
47	C	Spare w/ blind	H	1	6"	150#	RF	Flg.
48	H	Org. Pump Suction	J	1	2"	150#	RF	Flg.
49	E	Spare w/ blind	K	1	3"	150#	RF	Flg.
50	D	Recirculation	L	5	4"	150#	RF	Flg.
51	U	Access	M	4	24"	15#	FF	Flg.
52	L		N					
53	E		O					
54			P					
55			Q					

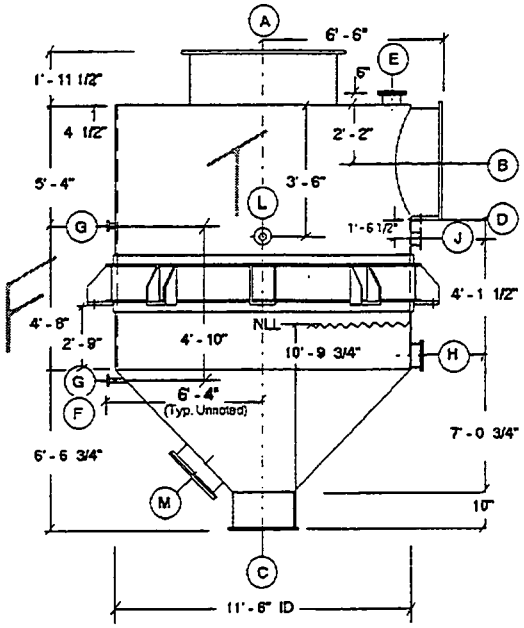

NOTES

1. Nozzle A to support 11000 lbs. And match V-5002.
2. Nozzle L orientation per project drawing and be angled down from horizontal 10 degrees.
3. Vessel thickness includes corrosion allowance.
4. 6' - 11" OD x 5' - 10 5/8" ID w/ 84-3/4" diam. Holes on 6' - 9" BC
5. Existing vessel per MES dwg. D-130316-20-101 to be modified as shown.
6. Items marked * by Detail Design.

I.T. CORPORATION	VERTICAL TANK SPECIFICATION 1669	IT CORP. SPEC. NO. 773481 - T5006
		SHEET 1 OF 1
		PROJECT NAME FERNALD WPRAP OU1
		JOB NO. 773481
		LOCATION FERNALD, OHIO

NO	BY	DATE	REV.
D	JAN	05/12/98	CFC DRAFT
E	MSD	06/05/98	Draft Issue for EPA Review
F	JAN	07/09/98	DRAFT CFC

BY	APPR	DATE

AREA NO: 50
AREA NAME: GCS SYSTEM
TAG NO.: T-5006
EQUIPMENT NAME: WESP OVERFLOW TANK

1		Total Volume: 1,480 Gal.	Field Erected? No	No. Units: 1(ONE)		
2		Operating Pressure, psig	Atmospheric			
3		Operating Temperature, deg F	100			
4		Liquid Specific Gravity	1.05			
5		Contents Lethal?	NO			
6		Design Pressure, psig	N/A			
7	D	Design Temperature, deg F	400			
8	E	Shell / Heads / Corr. Allow, In.	1/16"	1/16"		
9	S	Shell / Heads / Joint Eff., %				
10	I	Max. Allow. Press. (New&Cold) psig	N/A			
11	G	Limited by	N/A			
12	N	Hydrostatic Test Pressure, psig	N/A			
13		Code: ASME Sect. VIII	Stamp: NO			
14	D	Radiograph: N/A	Stress Relieve: N/A			
15	A	Insulation: N/A				
16	T	Fireproofing: N/A				
17	A	Sandblast: SSPC - SP6	Paint: Inorganic Zinc 8 mils DFT			
18		MANHOLE: Hinged?	Davited?	Other: N/A		
19		Type support: Free Standing				
20		Platform Clips: NO	Ladder Clips: NO	Insul. Rings: NO		
21		Pipe Supports: N/A				
22		Wind Load: 80 MPH	Seismic: ZONE 1			
23		Weight Empty: * lbs.	Weight Full of Water: * 4900 lbs.			
24		Item	Thickness	Mat'l Class	Mat'l - Minimum Quality	
25		Shell	1/4"	CS	A36	
26	M					
27	A					
28	T					
29	E					
30	R					
31	I	Nozzle Necks	CS		A36	
32	A	Flanges	CS			
33	L	Coupling				
34	S	M.H. Cover	CS			
35		Supports	CS		A36	
36		Bolts/Studs	Studs		Alloy	
37		Nuts	Heavy Hex		Alloy	
38		Gaskets				

		Service	Mark	No.	Size	Rating	Face	Type
39	N							
40	O	WESP Overflow	A	1	6"	N/A	N/A	Note 1
41	Z	Pump Suction	B	1	4"	150#	RF	Flg.
42	Z	Makeup Water	C	1	1"	150#	RF	Flg.
43	L	Drain	D	1	1-1/2"	150#	RF	Flg.
44	E	Overflow	E	1	4"	150#	RF	Flg.
45		Fill Connection	F	1	1"	150#	RF	Flg.
46	S	Level	G	1	3"	150#	RF	Flg.
47	C							
48	H							
49	E							
50	D							
51	U							
52	L							
53	E							
54								
55								

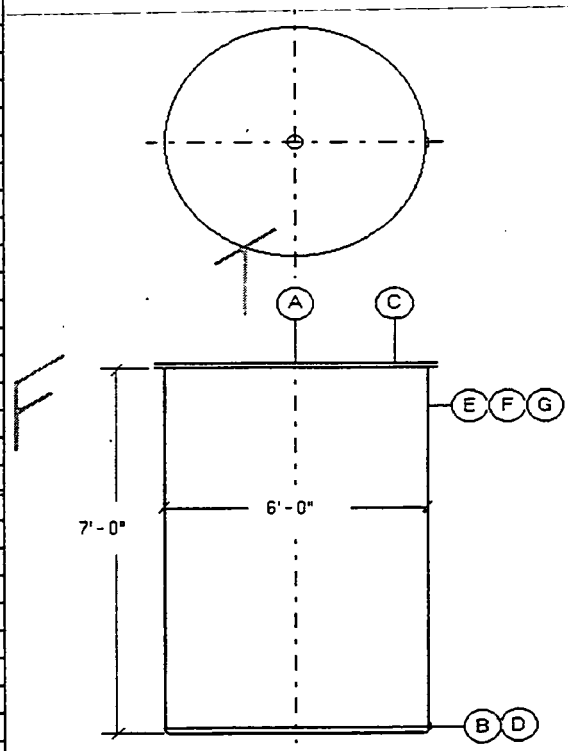

NOTES

000337

T5006.xls

I.T. CORPORATION	HORIZANTAL TANK SPECIFICATION	IT CORP. SPEC. NO. 773481-T6001
		SHEET 1 OF 1
AREA NO: 60		PROJECT NAME FERNALD WPRAP OU1
AREA NAME: PROCESS BLOWDOWN PRETREATMENT		JOB NO. 773481
TAG NO.: T-6001		LOCATION FERNALD, OHIO
EQUIPMENT NAME: PRIMARY CLARIFIER		BY / APPR / DATE

N	BY	DATE	REV.
D	PA	05/12/98	CFC DRAFT
E	MS	6/5/98	Draft Issue for EPA Review
F	WC	7/9/98	DRAFT CFC

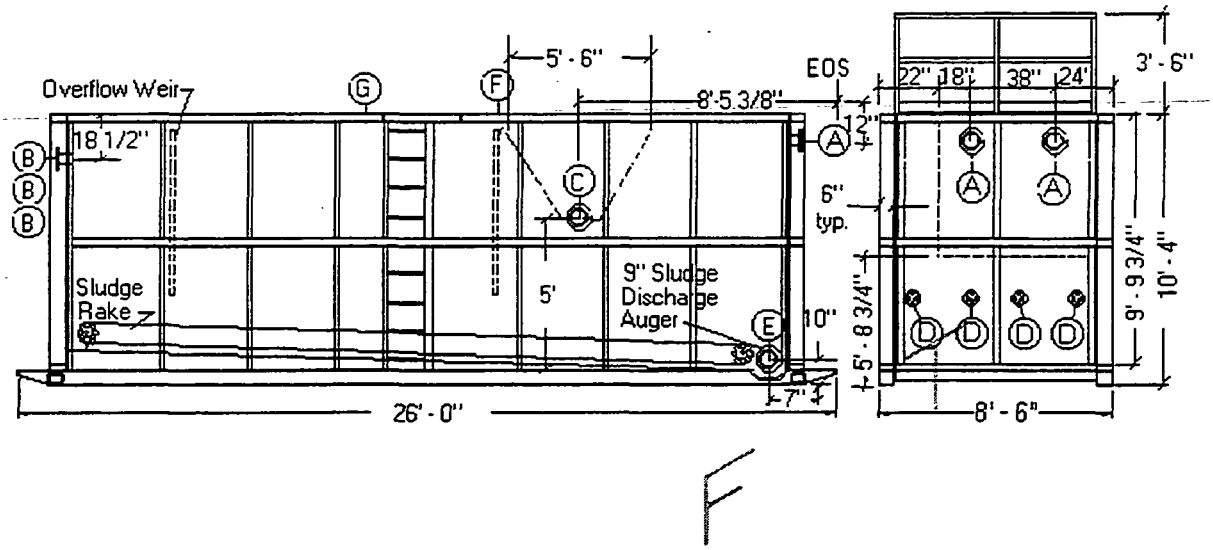

	Item	Thickness	Mat'l Class	Mat'l - Minimum Quality
MATERIALS	Shell	11 Ga.	CS	A36
	Internals	11 Ga.	CS	A36
	External Stiffener	11 Ga.	CS	A36
	Nozzle Necks		CS	A53
	Flanges		CS	A105
	Coupling			
	M.H. Cover			
	Supports		CS	A36
	Bolts/Studs		Studs	Alloy
	Nuts		Haevy Hex	Alloy
	Gaskets		1/8" Full Fac	Viton

NOZZLES	Service	Mark	No.	Size	Rating	Face	Type
	Clarifer Influent	A	1	2"	150#	RF	Flg.
	Clarifier Effluent	B	1	3"	150#	RF	Flg.
	Org Cond Outlet	C	1	6"	150#	RF	Flg.
	Sample Manifold	D	4	3"	150#	RF	Flg. W/Blind
	Bottoms Sldg Outle	E	1	3"	150#	RF	Flg.
	Vent	F	1	4"	150#	RF	Flg.
	Level Switch	G	1	2"	150#	RF	Flg.

DESIGN DATA				
Total Volume: 12000 Gal.			Field Erected?	No
No. Units:			1 (One)	
Operating Pressure, psig:			Atmospheric	
Operating Temperature, °F:			150	
Liquid Specific Gravity			1.1	
Contents Lethal?			NO	
Design Pressure, psig:			2	
Design Temperature, °F:			250	
Shell / Heads	Corr. Allow. - in.:		1/16"	1/16"
Shell / Heads	Joint eff. %		N/A	N/A
Max. Allow. Press. (New & Cold)psig:			N/A	
Limited by:			N/A	
Hydrostatic Test Pressure:			N/A	
Code:	ASME Sec V111&1X		Stamp:	Not Required
Radiograp	10% Of Shell Welds		Stress Relieve:	NO
Insulation:	N/A		Fireproofing	N/A
Sandblast:	Yes		Paint:	09900 - Finish 205
Type Suppoprt	Skid Rails			
Manhole:	Davited:	YES	Other:	Handle
Pltform Cli N	Ladder Clips:	YES	Insul. Rings:	
Pipe Supports:				
Wind Load 80 mph, Exp. C (I=1.0)			Seismic:	Zone 1
Weight Empty: * lbs.			w / Water: *	lbs.

NOTES

1. Items Marked with * By Detail Design
2. Bottoms Sludge Rake And Organic Condensate Rake To Be Included.

T6001.xls

1669

I.T. CORPORATION	HORIZANTAL TANK SPECIFICATION				I.T. CORP. SPEC. NO. 773481-T6002
	N	BY	DATE	REV.	SHEET 1 OF 1
	D	PA	05/12/98	CFC DRAFT	PROJECT NAME FERNALD WPRAP OU1
AREA NO: 60	E	MS	6/5/98	Draft Issue for EPA Review	JOB NO. 773481
AREA NAME: PROCESS BLOWDOWN PRETREATMENT					LOCATION FERNALD, OHIO
TAG NO.: T-6002	F	WC	7/9/98	DRAFT CFC	BY / APPR / DATE
EQUIPMENT NAME: SECONDARY CLARIFIER					

HOLD

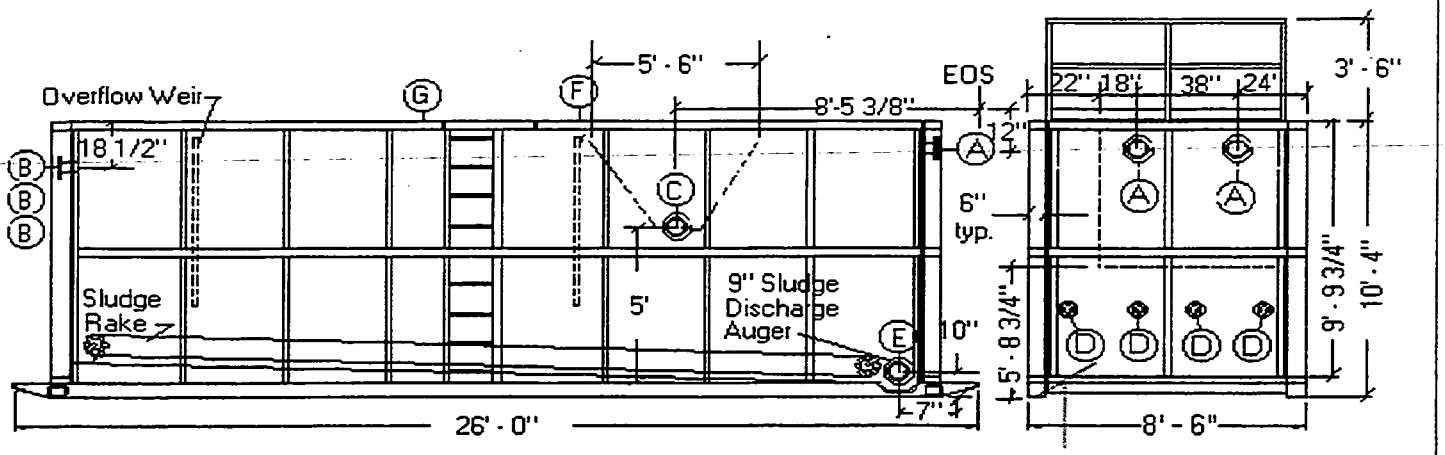

	Item	Thickness	Mat'l Class	Mat'l - Minimum Quality
MATERIALS	Shell	11 Ga.	CS	A36
	Internals	11 Ga.	CS	A36
	External Stiffener	11 Ga.	CS	A36
	Nozzle Necks		CS	A53
	Flanges		CS	A105
	Coupling			
	M.H. Cover			
	Supports		CS	A36
	Bolts/Studs		Studs	Alloy
	Nuts		Haevy Hex	Alloy
	Gaskets		1/8" Full Face	Viton

	Service	Mark	No.	Size	Rating	Face	Type
NOZZLES	Clarifer Influent	A	1	2"	150#	RF	Flg.
	Clarifier Effluent	B	1	3"	150#	RF	Flg.
	Org Cond Outlet	C	1	2"	150#	RF	Flg.
	Sample Manifold	D	4	3"	150#	RF	Flg. W/Blind
	Bottoms Sldg Outlet	E	1	3"	150#	RF	Flg.
	Vent	F	1	4"	150#	RF	Flg.
	Level Switch	G	1	2"	150#	RF	Flg.

Total Volume: 12,000 Gal.			Field Erected? No	
No. Units:			1 (One)	
Operating Pressure, psig:			Atmospheric	
Operating Temperature, °F:			150	
Liquid Specific Gravity			1.1	
Contents Lethal?			NO	
DESIGN Design Pressure, psig:			2	
DESIGN Design Temperature, °F:			250	
DESIGN Shell	Heads	Corr. Allow. - in.:	1/16"	1/16"
DESIGN Shell	Heads	Joint eff. %	N/A	N/A
DESIGN Max. Allow. Press. (New & Cold)psig:			N/A	
DESIGN Limited by:			N/A	
Hydrostatic Test Pressure:			N/A	
DATA Code:	ASME Sec V111&1X		Stamp: Not Required	
DATA Radiograph	10% Of Shell Welds		Stress Relieve: NO	
DATA Insulation:	N/A		Fireproofing: N/A	
DATA Sandblast:	Yes		Paint: 09900 - Finish 205	
Type Suppoprts:	Skid Rails			
Manhole:	Davited: YES		Other: Handle	
Pitform Clip NO	Ladder Clips: YES		Insul. Rings:	
Pipe Supports:				
Wind Load: 80 mph, Exp. C (I=1.0)			Seismic: Zone 1	
Weight Empty: * lbs.	w / Water: * lbs.			

NOTES

1. Items Marked with * By Detail Design
2. Bottoms Sludge Rake And Organic Condensate Rake To Be Included.

000339

T6001.xls

I.T. CORPORATION

VERTICAL TANK

No.	BY	DATE	REV.
D	PA	05/12/98	CFC DRAFT
E	MSD	06/05/98	Draft Issue for EPA Review
F	WC	07/09/98	DRAFT CFC

IT CORP SPEC. NO. **773481-T6003**

SHEET 1 OF 1

PROJECT NAME **FERNALD WPRAP OU1**

JOB NO. **773481**

LOCATION **FERNALD, OHIO**

BY	APPR	DATE

AREA NO: 60
AREA NAME: PROCESS BLOWDOWN PRETREATMENT
TAG NO.: T-6003
EQUIPMENT NAME: ORGANIC CONDENSATE SURGE CONTAINER

DESIGN DATA

1	Total Volume: 300 Gals.	Field Erected? NO	No. Units: 1 (one)
2	Operating Pressure, in. w.c.	Atmospheric	
3	Operating Temperature, °F	150	
4	Contents Lethal?	NO	
5	Design Pressure, psi	1 psig pos	
6	Design Temperature, °F	250	
7	Vessel Content:	ORGANIC CONDENSATE	
8	Organic Condensate Density,lb/ft3	45	
9	Design Organic Condensate Flow,gpm	15	
10			
11			
12			
13			
14	Shell Corrosion Allowance:	1/16"	
15	Code: API 650	Stamp: Not Required	
16	Radiograph: 10% of shell welds	Stress Relieve: NO	
17	Type Supports: Free Standing From Grade w/ bottom flange		
18	Insulation: N/A		
19	Sandblast: YES	Paint: 09900 - Finish 205	
20	Manhole: Hinged? NO	Davited? YES	Other: HANDLE
21	Platform Clips: NO	Ladder Clips: YES	Insul. Rings:
22	Pipe Supports: By Detail Design		
23	Wind Load: 80 mph, Exp. C (I=1.0)	Seismic: Zone 1	
24	Weight Empty: * lbs	Loaded Weight * lbs	

MATERIALS

	Item	Thickness	Mat'l Class	Mat'l - Minimum Quality
25				
26	Shell	1/4"	CS	A36
27	Heads	1/4"	CS	A36
28				
29				
30				
31				
32			*	
33	Nozzle Necks		A-53	CS
34	Flanges		A-105	CS
35	M.H. Cover		A-36	CS
36	Supports		A-36	CS
37	Bolts/Studs		Studs	CS
38	Nuts		Heavy Hex	Alloy
39	Gaskets			Viton

NOZZLES

	Service	Mark	No.	Size	Rating	Face	Type
40							
41	Org Cond Inlet	A	1	3"	150#	RF	Flg.
43	Org Cond Inlet	B	1	2"	150#	RF	Flg.
	Vapor Vent	C	1	4"	150#	RF	Flg
44	Level Gage	D	2	1"	150#	RF	Flg.
45	Access	E	1	24"	150#	RF	Flg
47	Org. Cond. Outlet	F	2	2"	150#	RF	Flg
48	Level Transmitter	G	1	3"	150#	RF	Flg
49	Drain	H	1	2"	150#	RF	Flg
50							
51							
52							

NOTES

53
54 1. Items marked with * by Detail Design
55 2. To be constructed per Modern Welding Company 300 gals tank or Equivalent
56 3. The bottom of the nozzle H flange should be 1/2" above grade.
57
58
59

HOLD

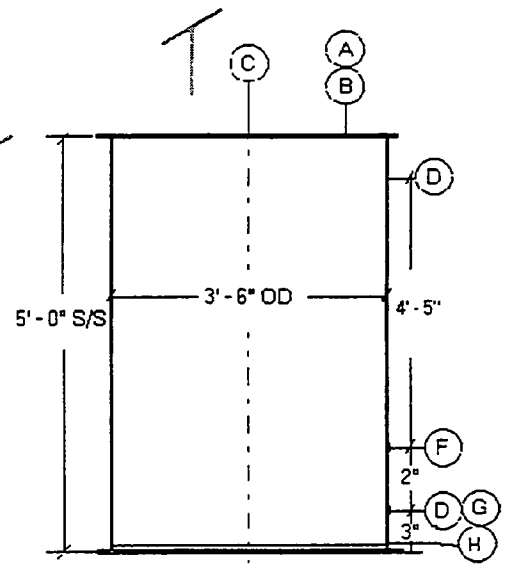

T6003.xls

I.T. CORPORATION

VERTICAL TANK

No.	BY	DATE	RE REV.
D	PA	05/12/98	CFC DRAFT
E	MSD	06/05/98	Draft Issue for EPA Review
F	WC	07/09/98	DRAFT CFC

IT CORP SPEC. NO. 773481-T6004
SHEET 1 OF 1
PROJECT NAME: FERNALD WPRAP OU1
JOB NO. 773481
LOCATION: FERNALD, OH.
BY | APPR | DATE

AREA NO: 60
AREA NAME: PROCESS BLOWDOWN PRETREATMENT
TAG NO.: T-6004
EQUIPMENT NAME: ORGANIC CONDENSATE STORAGE TANK

1	DESIGN DATA	Total Volume: 1000	Field Erected? NO	No. Units: 1 (One)	
2		Operating Pressure, in. w.c.	ATMOSPHERIC		
3		Operating Temperature, °F	150		
4		Contents Lethal?	NO		
5		Design Pressure, psi	1 psig pos		
6		Design Temperature, °F	250		
7		Vessel Content:	ORGANIC CONDENSATE		
8		Organic Condensate Density,lb/ft3	45		
9					
10					
11					
12					
13					
14		Shell Corrosion Allowance:	1/16"		
15		Code: API 650	Stamp: Not Required		
16		Radiograph: 10% of shell welds	Stress Relieve: NO		
17		Type Supports: Free Standing From Grade w/ bottom flange			
18		Insulation: N/A			
19		Sandblast: YES	Paint: 09900 - Finish 205		
20		Manhole: Hinged? NO	Davited? YES	Other: HANDLE	
21		Platform Clips: NO	Ladder Clips: YES	Insul. Rings:	
22		Pipe Supports: By Detail Design			
23		Wind Load: 80 mph, Exp. C (I=1.0)	Seismic: Zone 1		
24		Weight Empty: * lbs	Loaded Weight * lbs		

		Item	Thickness	Mat'l Class	Mat'l - Minimum Quality
25	MATERIALS				
26		Shell	1/4"	CS	A36
27		Heads	1/4"	CS	A36
28					
29					
30					
31					
32					
33		Nozzle Necks		CS	A53
34		Flanges		CS	A105
35		M.H. Cover		CS	A36
36		Supports		CS	A36
37		Bolts/Studs		Studs	CS
38		Nuts		Heavy Hex	Alloy
39		Gaskets			Viton

		Service	Mark	No.	Size	Rating	Face	Type
40	NOZZLES							
41		Filtrate Influent	A	1	2"	150#	RF	Flg.
43		Pump Suctions	B	5	2"	150#	RF	Flg.
44		Vapor Vent	C	1	4"	150#	RF	Flg.
45		Level Gage	D	2	1"	150#	RF	Flg
46		Inspection	E	2	10"	150#	RF	Flg
48		Drain	F	1	2"	150#	RF	Flg
49		Level Transmitter	G	1	2"	150#	RF	Flg
50								
51								
52								

53 NOTES
1. Items marked with * by Detail Design
54 2. Level gage/transmitter nozzles are located 1" above the bottom weld and 1" below the
55 top weld of the cylindrical section.
56 3. To be constructed per Modern Welding Company 1000 gal. tank or equivalent.
57 4. Of the 5 multiple(B) suctions, top nozzle to be 6" below the top weld, bottom nozzle to
58 be 6"' above tank bottom (other suction nozzles spaced equi distance between)
59 5. The bottom of nozzle F flange to be 1/2" above grade.
60

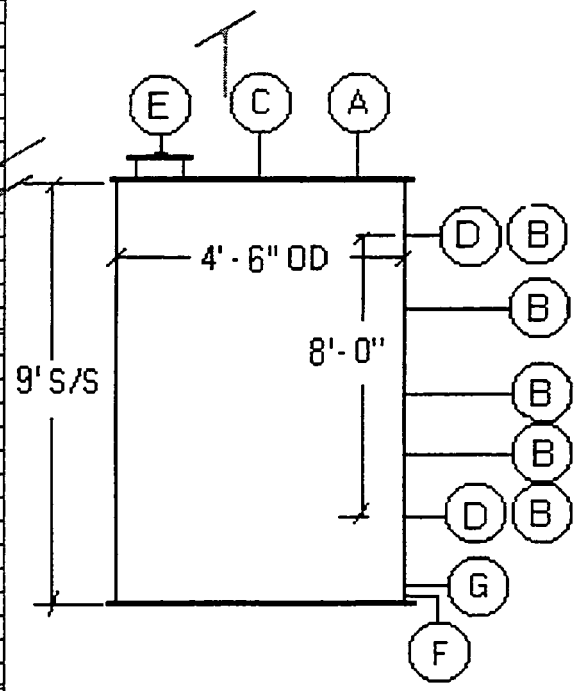

T6004.xls

I.T. CORPORATION

HORIZANTAL TANK SPECIFICATION

No.	BY	DATE	REV.
D	PA	05/12/98	CFC DRAFT
E	MSD	06/05/98	Draft Issue for EPA Review
F	JAN	07/09/98	DRAFT CFC

IT CORP. SPEC. NO. 773481-T6005

SHEET 1 OF 1

PROJECT NAME: FERNALD WPRAP OU1

JOB NO. 773481

LOCATION: FERNALD,OH

BY	APPR	DATE

AREA NO: 60
AREA NAME: PROCESS BLOWDOWN PRETREATMENT
TAG NO.: T-6005
EQUIPMENT NAME: SLUDGE MIX TANK

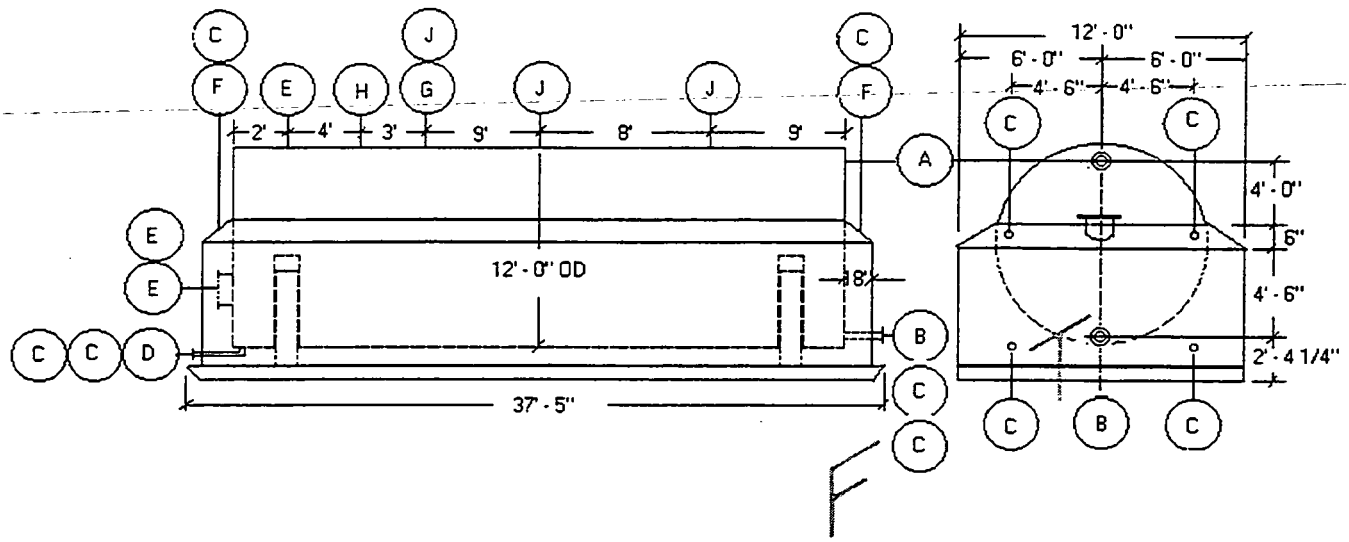

	Item	Thickness	Mat'l Class	Mat'l - Minimum Quality
MATERIALS	Shell	1/4"	CS	A36
	Internals	NA	CS	A36
	External Stiffener	•	CS	A36
	Nozzle Necks		CS	A53B
	Flanges		CS	A105
	Coupling		CS	
	M.H. Cover		CS	
	Supports		CS	
	Bolts/Studs		Studs	Alloy
	Nuts		Haevy Hex	Alloy
	Gaskets		1/8" Full Face	

NOZZLES	Service	Mark	No.	Size	Rating	Face	Type
	Inlet	A	1	2"	150#	RF	Flg.
	Effluent	B	1	3"	150#	RF	Flg.
	Dike Drain, Vent	C	4	2"	3000#	RF	w/plg.
	Vessel Drain	D	1	2"	150#	RF	Flg.
	Access	E	3	24"	Fab.	FF	Flg.
	Dike Inspection	F	2	10"	Fab.	FF	Flg.
	Level Trans Nozzle	G	1	3"	150#	RF	Flg.
	Vessel Vent	H	1	2"	150#	RF	Flg.
	Mixer (M-6003)	J	3	8"	150#	RF	Flg.

Total Volume	20000 Gal.		Field Erected?	No
No. Units:	One			
Operating Pressure, psig:			Atmospheric	
Operating Temperature, °F:			150	
Liquid Specific Gravity			1.2	
Contents Lethal?			NO	
DESIGN Design Pressure, psig:			0.5	
DESIGN Design Temperature, °F:			200	
DESIGN Shell / Heads / Corr. Allow. - in.:			1/16"	1/16"
DESIGN Shell / Heads / Joint eff. %			N/A	N/A
DESIGN Max. Allow. Press. (New & Cold)psig:			N/A	
DESIGN Limited by:			N/A	
Hydrostatic Test Pressure:			N/A	
DATA Code:	API 650		Stamp: Not Required	
DATA Radiograph:	N/A		Stress Relieve: NO	
DATA Insulation:	N/A		Firepro N/A	
DATA Sandblast:	Yes		Paint: 09900 - Finish 205	
Type Suppoprts:			ASTM A-36 CS	
Manhole:			Other: No	Other: Handle
Pltform Clips: NO	Ladder Clips: YES		Insul. Rings:	
Pipe Supports:				
Wind Load: 80 mph, Exp. C (I=1.0)			Seismic Zone 1	
Weight Empty: 37,000 lbs.	Operating Wt. 250,000 lbs.			

NOTES

1. Existing Tank (Maloney Crawford Dwg. W-0251)
2. Per Detail Design

T6005.xls

1669

I.T. CORPORATION

VERTICAL TANK

No.	BY	DATE	REV.
D	PA	05/12/98	CFC DRAFT
E	MSD	06/05/98	Draft Issue for EPA Review
F	WC	07/09/98	DRAFT CFC

IT CORP SPEC. NO. 773481-T6006

SHEET 1 OF 1

PROJECT NAME: FERNALD WPRAP OU1

JOB NO. 773481

LOCATION: Fernald, OH.

BY	APPR	DATE

AREA NO: 60
AREA NAME: PROCESS BLOWDOWN PRETREATMENT
TAG NO.: T-6006 A/B
EQUIPMENT NAME: FILTRATE STORAGE TANK

1	DESIGN DATA	Total Volume: 12500 Gals.	Field Erected? NO	No. Units: 2 (Two)	
2		Operating Pressure, in. w.c.	ATMOSPHERIC		
3		Operating Temperature, °F	150		
4		Contents Lethal?	NO		
5		Design Pressure, psi	1 psig pos		
6		Design Temperature, °F	250		
7		Vessel Content:	FILTRATE FROM FILTER PRESS		
8		Filtrate Density.lb/ft3	1.1		
9					
10					
11					
12					
13					
14		Shell Corrosion Allowance:	1/16"		
15		Code: API 650	Stamp: Not Required		
16		Radiograph: 10% of shell welds	Stress Relieve: NO		
17		Type Supports: Free Standing From Grade w/ bottom flange			
18		Insulation: N/A			
19		Sandblast: YES	Paint: 09900 - Finish 205		
20		Manhole: Hinged? NO	Davited? YES	Other: HANDLE	
21		Platform Clips: NO	Ladder Clips: YES	Insul. Rings:	
22		Pipe Supports: By Detail Design			
23		Wind Load: 80 mph, Exp. C (I=1.0)	Seismic: Zone 1		
24		Weight Empty: * lbs	Loaded Weight	lbs	

		Item	Thickness	Mat'l Class	Mat'l - Minimum Quality
25	MATERIALS				
26		Shell	3/8"	CS	A36
27		Heads	3/8"	CS	A36
28					
29					
30					
31					
32					
33		Nozzle Necks		CS	A53
34		Flanges		CS	A105
35		M.H. Cover		CS	A36
36		Supports		CS	A36
37		Bolts/Studs		Studs	CS
38		Nuts		Heavy Hex	Alloy
39		Gaskets			Viton

		Service	Mark	No.	Size	Rating	Face	Type
40	NOZZLES							
41		Filtrate Inlet	A	1	3"	150#	RF	Flg.
43		Pump Suctions	B	5	3"	150#	RF	Flg.
44		Vapor Vent	C	1	4"	150#	RF	Flg.
45		Level Gage	D	2	1"	150#	RF	Flg
46		Access	E	2	24"	API 650	RF	Flg
48		Org. Cond. Return	F	1	2"	150#	RF	Flg
49		Level Transmitter	G	1	3"	150#	RF	Flg
50		Drain	H	1	3"	150#	RF	Flg
51								
52								

53 NOTES

54 1. Items marked with * by Detail Design
55 2. Level gage nozzles are located 1" above the bottom weld and 1" below the
56 top weld of the cylindrical section.
57 3. To be constructed per Modern Welding Company 12,500 gal. tank or Equivalent.
58 4. Of the 5 multiple(B) suctions, top nozzle to be 6" below the top weld, bottom nozzle to
59 be 2' above the drain (other suction nozzles spaced equi distance between.)
60

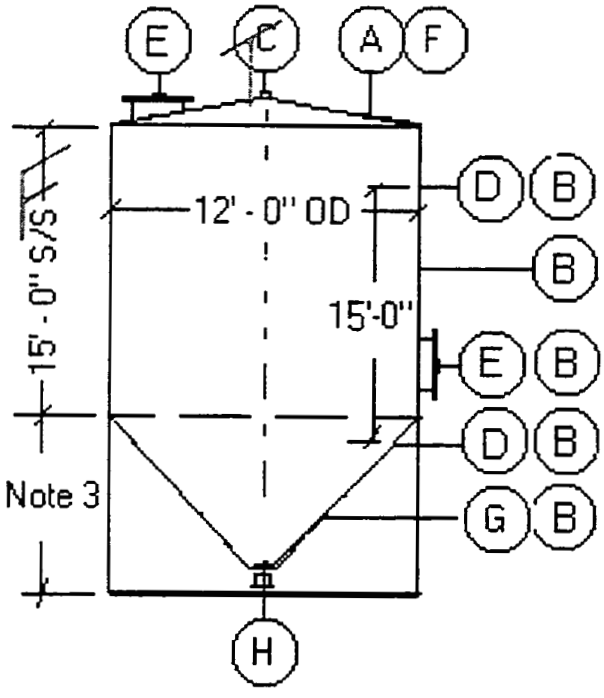

000343

T6006.xls

1669

I.T. CORPORATION	VERTICAL TANK				IT CORP SPEC. NO. 773481-T6008
	No.	BY	DATE	REV.	SHEET 1 OF 1
	D	PA	05/12/98	CFC DRAFT	PROJECT NAME FERNALD WPRAP OU1
AREA NO: 60	E	MSD	06/05/98	Draft Issue for EPA Review	JOB NO. 773481
AREA NAME: PROCESS BLOWDOWN PRETREATMENT					LOCATION FERNALD, OH.
TAG NO.: T-6008	F	WC	07/09/98	DRAFT CFC	BY / APPR / DATE
EQUIPMENT NAME: CLARIFIER SURGE TANK					

1		Total Volume: 3384 als.	Field Erected? NO	No. Units: 1 (one)	
2		Operating Pressure, in. w.c.		Atmospheric	
3		Operating Temperature, °F		150 to 250	
4		Contents Lethal?		NO	
5		Design Pressure, psi		1 psig pos	
6		Design Temperature, ° F		350	
7		Vessel Content:		Clarified Water	
8	D	Blowdown water density,lb/ft3		69	
9	E	Design Liquid Residence Time,Hrs		0.5	
10	S	Design Blowdown Flow Rate,Gpm		100	
11	I	Design Bottoms Sludge Flow,Gpm		100	
12	G				
13	N				
14		Shell Corrosion Allowance:		1/16"	
15	D	Code: API 650		Stamp: Not Required	
16	A	Radiograph: 10% of shell welds		Stress Relieve: NO	
17	T	Type Supports: Free Standing From Grade w/ bottom flange			
18	A	Insulation: N/A			
19		Sandblast: YES		Paint: 09900 - Finish 205	
20		Manhole: Hinged? NO	Davited? YES	Other: HANDLE	
21		Platform Clips: NO	Ladder Clips: YES	Insul. Rings:	
22		Pipe Supports: By Detail Design			
23		Wind Load: 80 mph, Exp. C (I=1.0)		Seismic: Zone 1	
24		Weight Empty: * lbs	Loaded Weight	lbs	

		Item	Thickness	Mat'l Class	Mat'l - Minimum Quality
25					
26		Shell	1/4"	CS	A36
27	M	Heads	1/4"	CS	A36
28	A				
29	T				
30	E				
31	R				
32	I				
33	A	Nozzle Necks		CS	A53
34	L	Flanges		CS	A105
35	S	M.H. Cover		CS	A36
36		Supports		CS	A36
37		Bolts/Studs		Studs	CS
38		Nuts		Heavy Hex	Alloy
39		Gaskets			Viton

		Service	Mark	No.	Size	Rating	Face	Type
40								
41		Clarified Water inlet	A	1	3"	150#	RF	Flg.
43	N	Clarified Water Outlet	B	1	3"	150#	RF	Flg.
44	O	Vapor Vent	C	1	6"	150#	RF	Flg.
45	Z	Level Gage	D	2	1"	150#	RF	Flg
46	Z	Access	E	2	24"	API 650	FF	Flg
47	L	Fill Connection	F	1	1-1/2"	150#	RF	Flg
48	E	Level Transmitter	G	1	3"	150#	RF	Flg
49	S	Pump Return	H	1	2"	150#	RF	Flg
50		Drain	J	1	2"	150#	RF	Flg
51								
52								

53		
54	N	1. Items marked with * by Detail Design
55	O	2. To be constructed per Modern Welding Company 3000 gals tank or Equivalent
56	T	3. The bottom of the nozzle J flange should be 1/2" above grade.
57	E	4. Existing Tank #20 to be refurbished per project specification.
58	S	
59		

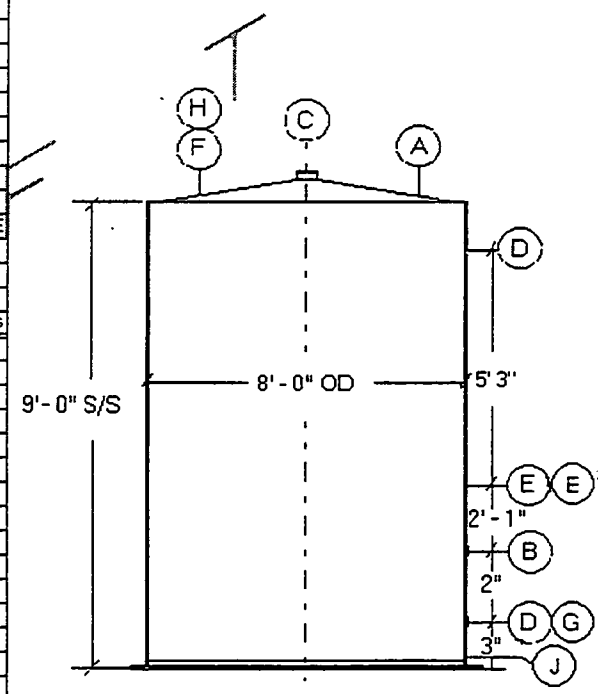

000344

T6008.xls

1669

I.T. CORPORATION	VERTICAL TANK				IT CORP SPEC. NO. 773481-T6009
	No.	BY	DATE	REV.	SHEET 1 OF 1
	D	PA	05/12/98	CFC DRAFT	PROJECT NAME FERNALD WPRAP OU1
AREA NO: 60	E	MSD	06/05/98	Drafft Issue for EPA Review	JOB NO. 773481
AREA NAME: PROCESS BLOWDOWN PRETREATMENT	F	WC	07/09/98	DRAFT CFC	LOCATION FERNALD, OH.
TAG NO.: T-6009					BY / APPR / DATE
EQUIPMENT NAME: PRECOAT TANK					

1		Total Volume: 1200 Gals.	Field Erected? NO	No. Units: 1 (One)	
2		Operating Pressure, in. w.c.	Atmospheric		
3		Operating Temperature, °F	Ambient		
4		Contents Lethal?	NO		
5		Design Pressure, psi	1 psig pos		
6		Design Temperature, °F	250		
7		Vessel Content	Precoat Solution		
8	D	Precoat Solution Density,lb/ft3	75		
9	E				
10	S				
11	I				
12	G				
13	N				
14		Shell Corrosion Allowance:	NA	NA	
15	D	Code: NA	Stamp:	NA	
16	A	Radiograph: NA	Stress Relieve:	NO	
17	T	Type Supports:	ASTM A-36 c.s. structural frame for clarifier piping		
18	A	Insulation:	N/A		
19		Sandblast: NA	Paint:	NA	
20		Manhole: Hinged? NO	Davited? NO	Other: HANDLE	
21		Platform Clips: NO	Ladder Clips: YES	Insul. Rings:	
22		Pipe Supports: NA			
23		Wind Load: 80 mph, Exp. C (I=1.0)	Seismic: Zone 1		
24		Weight Empty: * lbs	Loaded Weight * lbs		

		Item	Thickness	Mat'l Class	Mat'l - Minimum Quality
25					
26		Shell	*	Plastic	Polypropylene
27	M	Heads	*	Plastic	Polypropylene
28	A				
29	T				
30	E				
31	R				
32	I				
33	A	Nozzle Necks		CS	Polypropylene
34	L	Flanges		CS	Polypropylene
35	S	M.H. Cover		CS	Polypropylene
36		Supports		CS	A36
37		Bolts/Studs		Studs	Alloy
38		Nuts		Heavy Hex	Alloy
39		Gaskets			Viton

		Service	Mark	No.	Size	Rating	Face	Type
40								
41		Filter Press Return	A	1	3"	150#	RF	Flg.
42		Pump Suctions	B	3	3"	150#	RF	Flg.
43	N	Level Gage	C	2	1"	150#	RF	Flg
44	O	Drain	D	1	2"	150#	RF	Flg
45	Z	Level Transmitter	E	1	3"	150#	RF	Flg
46	Z		F					
47	L		G					
48	E		H					
49	S		J					
50								
51								
52								

53

54 N 1. Items marked with * by Detail Design

55 O 2. A 36" Wide Platform is required for access to top manway for loading of precoat material.

56 T and support of M-6004 (Tank Mixer)

57 E 3. The bottom of Nozzle D flange to be 1/2" above grade.

58 S 4. Exixting Tank #17.

59

60

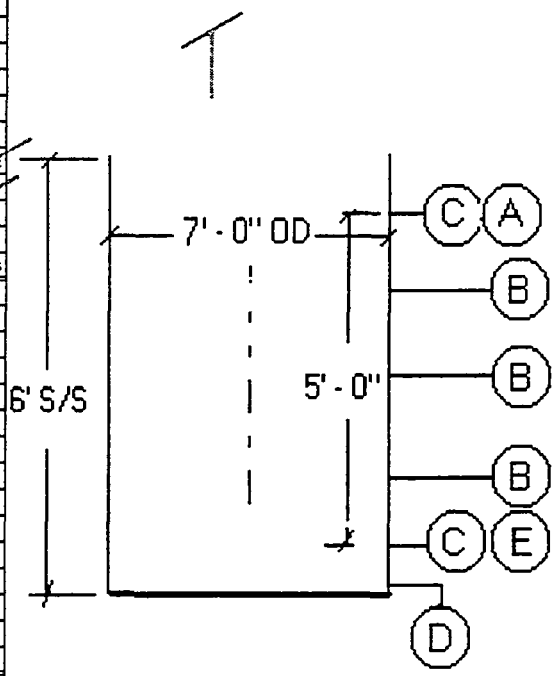

000345

T6009.xls

I.T. CORPORATION	VERTICAL TANK SPECIFICATION	1669	IT CORP SPEC. NO. 773481-65-T6501

NO	BY	DATE	REV.
D	PMS	05/12/98	CFC DRAFT
E	MSD	06/05/98	Draft Issue for EPA Review
F	JAN	07/09/98	DRAFT CFC

SHEET 1 OF 1

PROJECT NAME: FERNALD WPRAP OU1

JOB NO.: 773481

LOCATION: FERNALD, OHIO

BY	APPR	DATE
JAN		

AREA NO: 65
AREA NAME: WATER TREATMENT SYSTEM
TAG NO.: T-6501
EQUIPMENT NAME: WTS INFLUENT TANK

1		Total Volume: 5450 Gals.	Field Erected? NO	No. Units: 1		
2		Operating Pressure, in. w.c.	Atmospheric			
3		Operating Temperature, deg F	Ambient			
4		Contents Lethal?	NO			
5		Design Pressure, psi	Atmospheric			
6		Design Temperature, deg F	Ambient			
7		Vessel Content:	Waste Water			
8	D	Water density,lb/ft3	62.4			
9	E	Design Liquid Residence Time,Mins	20			
10	S	Design Pump Out Flow Rate,Gpm	250			
11	I	Top	None			
12	G	Bottom	Flat			
13	N					
14		Shell Corrosion Allowance:	1/16"			
15	D	Code: ASTM D3299	Stamp: Not Required			
16	A	Radiograph: N/A	Stress Relieve: NO			
17	T	Type Supports: Free Standing				
18	A	Insulation: N/A				
19		Sandblast: N/A	Paint: Epoxy			
20		Manhole: No Hinged? NO	Davited? No	Other:		
21		Platform Clips: NO	Ladder Clips: YES	Insul. Rings:		
22		Pipe Supports:				
23		Wind Load80 mph, Exp. C (I=1.0)	Seismic: Zone 1			
24		Weight Empty: 1521 lbs	Fully Loaded Weight 47,000 lbs			
25		Item	Thickness	Mat'l Class	Mat'l - Minimum Quality	
26		Shell	.235"	FRP	Isophthalic Polyester Resin	
27	M	Floor	.25"	FRP	Isophthalic Polyester Resin	
28	A	Lining / Backup	10 mil/100 mil		C Glass surface veil / Resin	
29	T	Exterior			White P/N 17248	
30	E					
31	R					
32	I					
33	A	Nozzle Necks	A-53		CS	
34	L	Flanges	A-105		CS	
35	S	M.H. Cover	A-36		CS	
36		Supports	A-36		CS	
37		Bolts/Studs	Studs		CS	
38		Nuts	Heavy Hex		Alloy	
39		Gaskets				

		Service	Mark	No.	Size	Rating	Face	Type
40								
41		Inlet	A	1	4"	25#	RF	Note 1
43	N	Drain	B	1	2"	25#	RF	Note 1
44	O	Pump Return	C	1	4"	25#	RF	Note 1
45	Z	Pump Suction	D	1	4"	25#	RF	Note 1
46	Z	Pump Return	E	1	3"	25#	RF	Note 1
47	L	Level Transmitter	F	1	2"	25#	RF	Note 1
48	E		G					
49	S		H					
50			J					
51			K					
52			L					

53		1. All flanges 25# rating with 150# drilling.
54	N	2. Existing Open Top Tank (Tankinetics Inc. Dwg. 7383-03)
55	O	3. Tank to be refurbished per project specification.
56	T	
57	E	
58	S	
59		

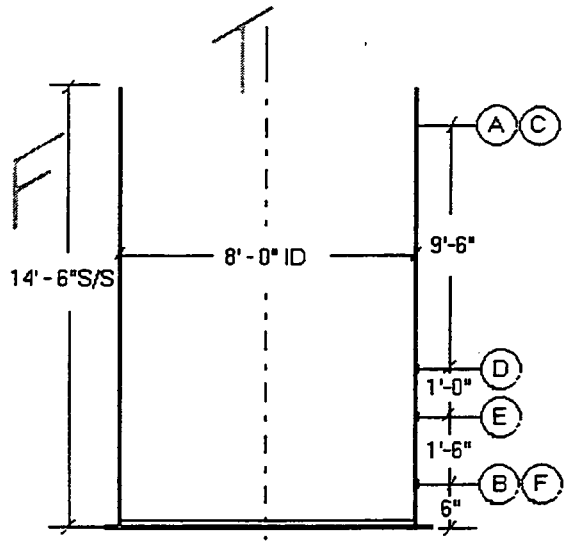

000346

PT/_7/7/98_/[A65spec]-T6501

1669

LT. CORPORATION	INCLINED PLATE CLARIFIER SPECIFICATION				LT CORP SPEC. NO. 773481-65-T6504
	NO	BY	DATE	REV.	SHEE 1 OF 1
	D	PMS	05/12/98	CFC DRAFT	PROJECT NAME FERNALD WPRAP OU1
AREA NO: 65 AREA NAME: WATER TREATMENT SYSTEM TAG NO.: T-6502/T-6503/T-6504 EQUIPMENT NAME: FLASH MIX TANK/ FLOCCULATION TANK/ INCLINED PLATE CLARIFIER	E	MSD	06/05/98	Draft Issue for EPA Review	JOB NO. 773481
	F	PMS	07/09/98	DRAFT CFC	LOCATION FERNALD, OHIO BY PMS / APPR / DATE

1	DESIGN DATA	Total Volume: Gals.	Field Erected? PARTIALLY	No. Units: 1	
2		Operating Pressure, in. w.c.	Atmospheric		
3		Operating Temperature, deg F	Ambient		
4		Treatment Rate, GPM	250		
5		Flash Tank dimensions	36"x36"x60" high		
6		Flocculation Tank Dimensions	8'-0" diam x 72" high		
7		Clarifier Surface Area, sq ft	4480		
8		Horizontal Projected Area, sq ft	2500		
9		Settling Area (80%), sq ft	2056		
10		Plates	224 @ 2'x10'		
11		Clarifier Empty Weight, lbs	22,500		
12		Clarifier Operating Weight, lbs	154,000		
13		Flash/Floc Tank Empty Weight, lbs	4,000		
		Flash/Floc Tank Operating Weight, lbs	27,000		
14		Shell Corrosion Allowance:	1/16"		
15		Code:	Stamp: Not Required		
16		Radiograph:	Stress Relieve: NO		
17		Type Supports:			
18		Insulation: N/A			
19		Sandblast: YES	Paint: Epoxy		
20		Manhole: YES Hinged? NO	Davited? NO	Other: BOLTED	
21		Platform: NO	Ladder: NO	Insul. Rings: NO	
22		Pipe Supports:			
23		Wind Load:	Seismic:		

		Item	Thickness	Mat'l Class	Mat'l - Minimum Quality
24	MATERIALS				
25		Shell	1/4"	CS	A36
26					
27					
28					
29					
30					
31					
32		Nozzle Necks	A-53		CS
33		Flanges	A-105		CS
34		M.H. Cover	A-36		CS
35		Supports	A-36		CS
36		Bolts/Studs	Studs		CS
37		Nuts	Heavy Hex		Alloy
38		Gaskets			

		Service	Mark	No.	Size	Rating	Face	Type
39	NOZZLES							
40			A					
42			B					
43			C					
44			D					
45			E					
46			G					
47			H					
48			J					
49			K					
50			L					
51			M					

52
53 NOTES 1. Existing Tanks (ACS ENVIRONMENTAL DWG ACS-375-FM1)
54 2. Tank to be refurbished per project specification.
55
56
57
58

000347

PT/_7/7/98_/[A65spec]-T-6504

I.T. CORPORATION	VERTICAL TANK SPECIFICATION 1669				I.T. CORP SPEC. NO. 773481-65-T6506
	NO	BY	DATE	REV.	SHEET 1 OF 1
	D	PMS	05/12/98	CFC DRAFT	PROJECT NAME FERNALD WPRAP OU1
AREA NO: 65 AREA NAME: WATER TREATMENT SYSTEM TAG NO.: T-6506 EQUIPMENT NAME: CLARIFIER OVERFLOW TANK	E	MSD	06/05/98	Draft Issue for EPA Review	JOB NO. 773481
	F	JAN	07/09/98	DRAFT CFC	LOCATION FERNALD, OHIO BY / APPR / DATE

1	DESIGN DATA	Total Volume: 5939 Gals.	Field Erected? NO	No. Units: 1 (One)	
2		Operating Pressure, in. w.c.	Atmospheric		
3		Operating Temperature, deg F	Ambient		
4		Contents Lethal?	NO		
5		Design Pressure, psi	Atmospheric		
6		Design Temperature, deg F	Ambient		
7		Vessel Content:	Waste Water		
8		Water density,lb/ft3	62.4		
9		Design Liquid Residence Time,Mins	20		
10		Design Pump Out Flow Rate,Gpm	250		
11		Top	None		
12		Bottom	Flat		
13					
14		Shell Corrosion Allowance:	1/16"		
15		Code:	Stamp: Not Required		
16		Radiograph:	Stress Relieve: NO		
17		Type Supports:			
18		Insulation: N/A			
19		Sandblast: N/A	Paint:		
20		Manhole: Hinged? NO	Davited? NO	Other: HANDLE	
21		Platform Clips: NO	Ladder Clips: NO	Insul. Rings: N/A	
22		Pipe Supports:			
23		Wind Load: 80 mph, Exp. C (I=1.0)	Seismic: Zone 1		
24		Weight Empty: * lbs	Loaded Weight * lbs		

		Item	Thickness	Mat'l Class	Mat'l - Minimum Quality
25	MATERIALS				
26		Shell	*	*	*
27		Bottom	*	*	*
28					
29					
30					
31					
32					
33		Nozzle Necks			
34		Flanges			
35		M.H. Cover			
36		Supports			
37		Bolts/Studs			
38		Nuts	Heavy Hex		Alloy
39		Gaskets			

		Service	Mark	No.	Size	Rating	Face	Type
40	NOZZLES							
41		Inlet	A	1	8"	N/A	FF	Flg.
43		Drain	B	1	2 1/2"	N/A	NPT	Thrd. W/plg.
44		Effluent	C	1	6"	N/A	Stud	Flg.w/bld.
45		Vessel Vent	D	1	2"	N/A	FF	Flg.
46		Inspection	E	1	15"	N/A	FF	Flg.
47			G					
48			H					
49			J					
50			K					
51			L					
52			M					

53	NOTES	
54		
55		1. Existing Tank #36
56		2. Tank to be refurbished per project specification.
57		
58		
59		

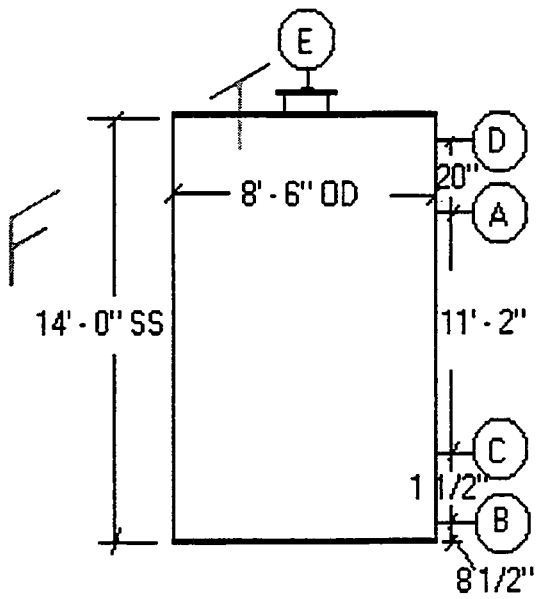

000348

PT/_7/7/98_/[A65spec]-T6506

I.T. CORPORATION

VERTICAL TANK SPECIFICATION 1669

NO	BY	DATE	REV.
D	PMS	05/12/98	CFC DRAFT
E	MSD	06/05/98	Draft Issue for EPA Review
F	JAN	07/09/98	DRAFT CFC

IT CORP SPEC. NO. 773481-65-T6507

SHEE 1 OF 1

PROJECT NAME: FERNALD WPRAP OU1

JOB NO. 773481

LOCATION: FERNALD, OHIO

BY	APPR	DATE

AREA NO: 65
AREA NAME: WATER TREATMENT SYSTEM
TAG NO.: T-6507
EQUIPMENT NAME: EFFLUENT TANK

1	DESIGN DATA	Total Volume: 20,000 Gals.	Field Erected? NO	No. Units: 1 (One)	
2		Operating Pressure, in. w.c.	Atmospheric		
3		Operating Temperature, deg F	Ambient		
4		Contents Lethal?	NO		
5		Design Pressure, psi	Atmospheric		
6		Design Temperature, deg F	Ambient		
7		Vessel Content:	Waste Water		
8		Water density,lb/ft3	62.4		
9		Design Liquid Residence Time,Mins	45 (min)		
10		Design Pump Out Flow Rate,Gpm	500 (max)		
11		Top	Cone		
12		Bottom	Flat		
13					
14		Shell Corrosion Allowance:	1/16"		
15		Code: API 650	Stamp: Not Required		
16		Radiograph: N/A	Stress Relieve: NO		
17		Type Supports: Free Standing			
18		Insulation: N/A			
19		Sandblast: SSPC - SP6	Paint: 09900 - Finish 205		
20		Manhole: Hinged? Yes	Davited? No	Other: HANDLE	
21		Platform Clips: NO	Ladder Clips: YES	Insul. Rings:	
22		Pipe Supports:			
23		Wind Load: 80 mph, Exp. C (I=1.0)	Seismic: Zone 1		
24		Weight Empty: 12,200 lbs	Fully Loaded Weight 182,000 lbs		

		Item	Thickness	Mat'l Class	Mat'l - Minimum Quality
25	MATERIALS				
26		Shell	1/4"	CS	A36
27		Bottom	1/4"	CS	A36
28					
29					
30					
31					
32					
33		Nozzle Necks	CS		A-53
34		Flanges	CS		A-105
35		M.H. Cover	CS		A-36
36		Supports	CS		A-36
37		Bolts/Studs	Studs		CS
38		Nuts	Heavy Hex		Alloy
39		Gaskets			

		Service	Mark	No.	Size	Rating	Face	Type
40	NOZZLES							
41		Inlet	A	1	4"	150#	RF	Flg.
43		Pump Suction	B	1	6"	150#	RF	Flg.
44		Access	C	2	24"	Fab.	FF	Flg.
45		Level Transmitter	D	1	1"	150#	RF	Flg.
46		Vessel Vent	E	1	4"	150#	RF	Flg.
47			F					
48			G					
49			H					
50			J					
51			K					
52			L					

53 NOTES
54 1. Existing Tank (Hoener Equip. Dwg. 7021 C)
55 2. Tank to be refurbished per project specification.
56
57
58
59

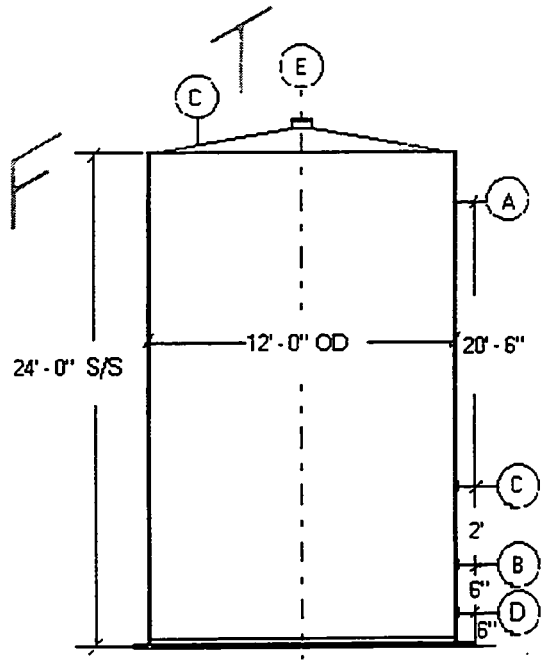

000349

PT/_7/7/98_/[A65spec]-T6507

I.T. CORPORATION	VERTICAL TANK SPECIFICATION 1669	IT CORP SPEC. NO. 773481-65-T6508

NO	BY	DATE	REV.
D	PMS	05/12/98	CFC DRAFT
E	MSD	06/05/98	Draft Issue for EPA Review
F	JAN	07/09/98	DRAFT CFC

SHEE 1 OF 1

PROJECT NAME: FERNALD WPRAP OU1

JOB NO.: 773481

LOCATION: FERNALD, OHIO

BY	APPR	DATE
JAN		

AREA NO: 65
AREA NAME: WATER TREATMENT SYSTEM
TAG NO.: T-6508
EQUIPMENT NAME: TEMPORARY HOLDING TANK

1	DESIGN DATA	Total Volume: 20,000 Gals.	Field Erected? NO	No. Units: 1 (One)	
2		Operating Pressure, in. w.c.	Atmospheric		
3		Operating Temperature, deg F	Ambient		
4		Contents Lethal?	NO		
5		Design Pressure, psi	Atmospheric		
6		Design Temperature, deg F	Ambient		
7		Vessel Content:	Waste Water		
8		Water density,lb/ft3	62.4		
9		Design Liquid Residence Time,Mins	45 (min)		
10		Design Pump Out Flow Rate,Gpm	500 (max)		
11		Top	Cone		
12		Bottom	Flat		
13					
14		Shell Corrosion Allowance:	1/16"		
15		Code: API 650	Stamp: Not Required		
16		Radiograph: N/A	Stress Relieve: NO		
17		Type Supports: Free Standing			
18		Insulation: N/A			
19		Sandblast: SSPC - SP6	Paint: 09900 - Finish 205		
20		Manhole: Hinged? No	Davited? No	Other: Handle	
21		Platform Clips: NO	Ladder Clips: YES	Insul. Rings:	
22		Pipe Supports:			
23		Wind Load: 80 mph, Exp. C (I=1.0)	Seismic: Zone 1		
24		Weight Empty: 12,200 lbs	Fully Loaded Weight 182,000 lbs		

		Item	Thickness	Mat'l Class	Mat'l - Minimum Quality
25	MATERIALS				
26		Shell	1/4"	CS	A36
27		Bottom	1/4"	CS	A36
28					
29					
30					
31					
32					
33		Nozzle Necks	CS		A-53
34		Flanges	CS		A-105
35		M.H. Cover	CS		A-36
36		Supports	CS		A-36
37		Bolts/Studs	Studs		CS
38		Nuts	Heavy Hex		Alloy
39		Gaskets			

		Service	Mark	No.	Size	Rating	Face	Type
40	NOZZLES							
41		Inlet	A	1	1-1/2"	150#	RF	Flg.
43		Pump Suction	B	1	4"	150#	RF	Flg.
44		Access	C	2	24"	Fab.	FF	Flg.
45		Level Transmitter	D	1	1"	150#	RF	Flg.
46		Vessel Vent	E	1	4"	150#	RF	Flg.
47			F					
48			G					
49			H					
50			J					
51			K					
52			L					

53 NOTES
54 1. Existing Tank (Hoener Equip. Dwg. 7021 C)
55 2. Tank to be refurbished per project specification.
56
57
58
59

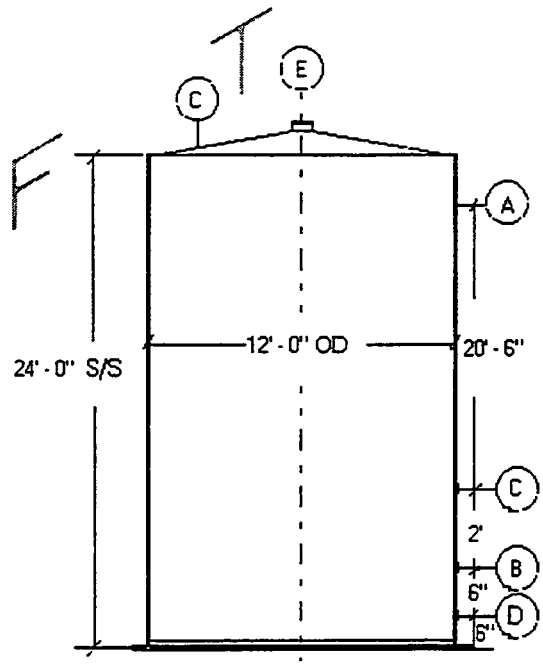

000350

PT/_7/7/98_/(A65spec)-T6508

1669

I.T. CORPORATION	INSTRUMENT AIR DRYER SPECIFICATION				IT CORP. SPEC. NO. 773481-T7002		
	NO	BY	DATE	REV.	SHEET 1 OF 1		
	D	KKK	5/12/98	CFC DRAFT	PROJECT NAME FERNALD WPRAP OU-1		
PROJECT: FERNALD WPRAP AREA: UTILITIES TAG NO.: T-7002A,B EQUIPMENT: INSTRUMENT AIR DRYER	E	BAH	6/5/98	DRAFT ISSUE FOR EPA REVIEW	JOB NO. 773481		
	F	BAH	7/9/98	DRAFT CFC	LOCATION FERNALD, OH		
					BY	APPR	DATE 5/98

Process Data Inlet:	
Fluid to Dryer:	Air
Design Pressure:	200 psig
Design Temperature:	200 deg F
Operating Temperature	120 deg F max.
Operating Pressure	150 psig
Moisture Content	Saturated 100% RH
Specific Gravity	1.0
Specific Heat	0.21
Process Data Outlet:	
Dewpoint at Operating Conditions	-40 deg F
Operating Pressure	150 psig
Pressure Drop	10 psig
Design Data:	
Manufacturer:	PNEUMATECH
Model:	PES-200
Type:	Heat Regenerative
Weight	1840 lbs (Approx.)
No. of Units	Two
Desiccant:	Spherical Shaped Activated Aluminum
Purge:	20 SCFM
Cycle Time:	4 Hours (Min)
Size	74"x41"x85" (Approx)
Utilities:	
Heat Source	6 KW
Enclosure	NEMA 4
Temp. Range:	
Power Requirements	
Volts	460
Phase	3
Cycle	60
Ambient Conditions:	
Equipment Location:	Outdoors
Ambient Temp:	10/110 deg F
Wind Load:	N/A
Seismic Zone:	1

Notes: Pre and after filters required.
* Information to be supplied by vendor.

What is the design flowrate

000351

AREA70F.XLS

I.T. CORPORATION	INSTRUMENT AIR DRYER SPECIFICATION				IT CORP. SPEC. NO. 773481-T7003		
	NO	BY	DATE	REV.	SHEET 1 OF 1		
	D	KKK	5/12/98	CFC DRAFT	PROJECT NAME FERNALD WPRAP OU-1		
PROJECT: FERNALD WPRAP AREA: UTILITIES TAG NO.: T-7003A,B EQUIPMENT: INSTRUMENT AIR DRYER	E	BAH	6/5/98	DRAFT ISSUE FOR EPA REVIEW	JOB NO. 773481		
	F	BAH	7/9/98	DRAFT CFC HOLD	LOCATION FERNALD, OH		
					BY	APPR	DATE 5/98

Process Data Inlet:	
Fluid to Dryer:	Air
Design Pressure:	200 psig
Design Temperature:	200 deg F
Operating Temperature	120 deg F max.
Operating Pressure	150 psig
Moisture Content	Saturated 100% RH
Specific Gravity	1.0
Specific Heat	0.21
Process Data Outlet:	
Dewpoint at Operating Conditions	-40 deg F
Operating Pressure	150 psig
Pressure Drop	10 psig
Design Data:	
Manufacturer:	*
Model:	*
Type:	Heat Regenerative
Weight	1840 lbs (Approx.)
No. of Units	Two
Desiccant:	Spherical Shaped Activated Aluminum
Purge:	20 SCFM
Cycle Time:	4 Hours (Min)
Size	74"x41"x85" (Approx)
Utilities:	
Heat Source	6 KW
Enclosure	NEMA 4
Temp. Range:	
Power Requirements	
Volts	460
Phase	3
Cycle	60
Ambient Conditions:	
Equipment Location: Outdoors	Indoors
Ambient Temp:	10/110 deg F
Wind Load:	N/A
Seismic Zone:	1

Notes: Pre and after filters required.
* Information to be supplied by vendor.

I.T. CORPORATION

VESSEL SPECIFICATION

1669

NO	BY	DATE	REV.
D	KKK	5/12/98	CFC DRAFT
E	BAH	6/5/98	DRAFT ISSUE FOR EPA REVIEW
F	BAH	7/9/98	DRAFT CFC HOLD

IT CORP. SPEC. NO. 773481-T7005

SHEET 1 OF 1

PROJECT NAME: FERNALD WPRAP

JOB NO. 773481

LOCATION: Fernald, OH

BY	APPR	DATE
		5/98

AREA NO: 70
AREA NAME: UTILITIES
TAG NO.: T-7005
EQUIPMENT NAME: LIQUID NITROGEN STORAGE SYSTEM

1		Total Volume:	Field Erected? YES	No. Units: 1(ONE)	
2		Operating Pressure psig	250		
3		Operating Temperature, deg F			
4		Liquid Specific Gravity			
5		Design Pressure psig			
6		Design Temperature deg. F			
7	D	Vessel Contents	Liquid Nitrogen		
8	E	Hydrostatic Test psig	Per Code		
9	S	Shell	Heads Corr. Allow in.	1/16	1/16
10	I	Shell	Heads Joint Eff. %		
11	G	National Board Number			
12	N	Type Supports			
13					
14	D	Code: ASME VIII DIV 1	Stamp:		
15	A	Radiograph:	Stress Relieve:		
16	T	Insulation:			
17	A	Fireproofing:			
18		Sandblast: SSPC-SP7	Paints Per Spec. 09900		
19		MANHOLE: Hinged?	Davited?	Other:	
20		Platform Clips: N/R	Ladder Clips: N/R	Insul. Rings: N/R	
21		Support Structure:			
22		Wind Load:	Seismic: ZONE 1		
23		Weight Empty: lbs.	Weight Full of Nitrogen: lbs.		

		Item	Thickness	Mat'l Class	Mat'l - Minimum Quality
24					
25		Shell	in		
26	M	Heads	in		
27	A	Lining	in		
28	T		in		
29	E		in		
30	R		in		
31	I	Nozzle Necks			
32	A	Flanges			
33	L	Coupling			
34	S	M.H. Cover			
35		Supports			
36		Bolts/Studs			
37		Nuts			
38		Gaskets			

		Service	Mark	No.	Size	Rating	Face	Type
39								
40	N	Inlet Bottom	A	1	2"	300#	RF	FLG
41	O	Outlet	B	1	2"	300#	RF	FLG
42	Z	Pressure Indicator	C	1	1"	3000#	NPT	CPLG
43	Z	Level Indicator	D	1	1"	3000#	NPT	CPLG
44	L	Inlet Top	E	1	2"	300#	RF	FLG
45	E	Drain	F	1	2	300#	RF	FLG
46			G	1				
47			H	1				
48			I					
49			J					
50			K					
51			L					
52			M					
53			N					
54								

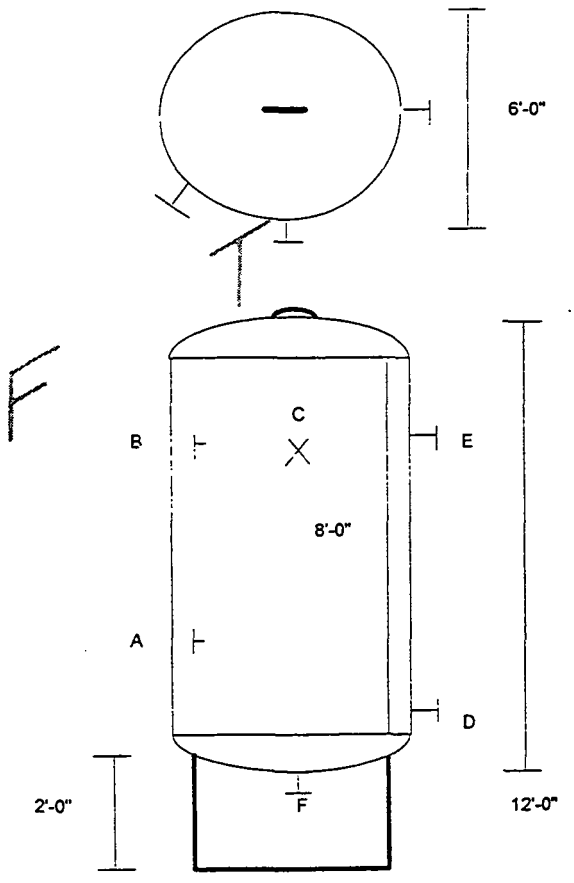

HOLD

I.T. CORPORATION

VESSEL SPECIFICATION 1669

NO	BY	DATE	REV.
F	BAH	7/9/98	DRAFT CFC HOLD
2			
3			

IT CORP. SPEC. NO. 773481-T7010

SHEET 1 OF 1

PROJECT NAME: FERNALD WPRAP

JOB NO. 773481

LOCATION: Fernald, OH

BY	APPR	DATE
		7/98

AREA NO: 70
AREA NAME: UTILITIES
TAG NO.: T-7010
EQUIPMENT NAME: CAUSTIC TANK

1		Total Volume: 1,480 Gal.	Field Erected? YES	No. Units: 1(ONE)	
2		Operating Pressure psig	ATM		
3		Operating Temperature, deg F	150 MAX		
4		Liquid Specific Gravity	1.20		
5		Design Pressure psig	15		
6		Design Temperature deg. F	200		
7	D	Vessel Contents	20% Caustic		
8	E	Hydrostatic Test psig	Per Code		
9	S	Shell / Heads Corr. Allow in.			
10	I	Shell / Heads Joint Eff. %			
11	G	National Board Number			
12	N	Type Supports			
13					
14	D	Code:	Stamp:		
15	A	Radiograph:	Stress Relieve:		
16	T	Insulation:			
17	A	Fireproofing:			
18		Sandblast:	Points		
19		MANHOLE: Hinged? YES	Davited? NO	Other:	
20		Platform Clips:	Ladder Clips:	Insul. Rings:	
21		Support Structure: N/R			
22		Wind Load: 80 mph	Seismic: ZONE 1		
23		Weight Empty: lbs.	Weight Full of Water: lbs.		

		Item	Thickness	Mat'l Class	Mat'l - Minimum Quality
24					
25		Shell	in		Fiberglass
26	M	Heads	in		Fiberglass
27	A	Lining	in		
28	T		in		
29	E		in		
30	R		in		
31	I	Nozzle Necks			
32	A	Flanges			
33	L	Coupling			
34	S	M.H. Cover			
35		Supports			
36		Bolts/Studs	A-193-B7		
37		Nuts	A-194-2H		
38		Gaskets			

		Service	Mark	No.	Size	Rating	Face	Type
39								
40	N	Drain	A	1	2"	300#	NPT	CPLG
41	O	Outlet	B	1	2"	150#	RF	FLG
42	Z	Return	C	1	2"	150#	RF	FLG
43	Z	PI	D	1	1"	300#	NPT	CPLG
44	L	Overflow	E	1	2"	300#	NPT	CPLG
45	E	LI	F	1	2"	150#	RF	FLG
46			G					
47			H					
48			J					
49			K					
50			L					
51			M					
52			N					
53			P					
54			S					
55		Nozzle to be Plugged or Blinded **						

HOLD

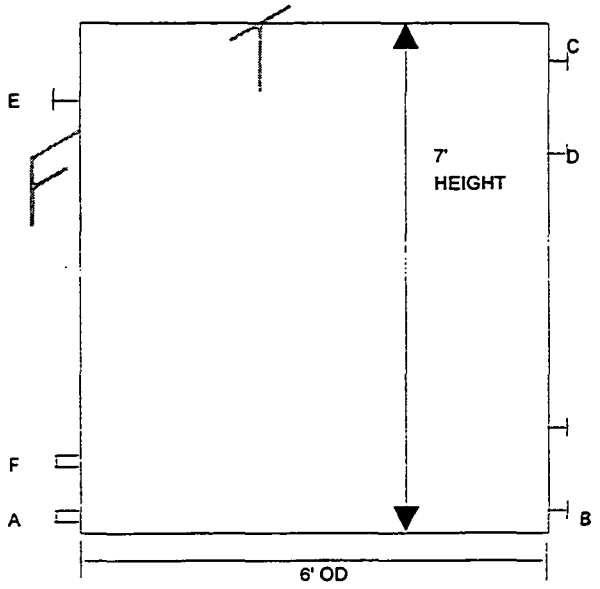

AREA70F.XLS

000354

I.T. CORPORATION

VESSEL SPECIFICATION 1669

NO	BY	DATE	REV.
F	BAH	7/9/98	DRAFT CFC HOLD
2			
3			

IT CORP. SPEC. NO. 773481-T7011

SHEET 1 OF 1

PROJECT NAME: FERNALD WPRAP

JOB NO. 773481

LOCATION: Fernald, OH

BY	APPR	DATE
		7/98

AREA NO: 70
AREA NAME: UTILITIES
TAG NO.: T-7011
EQUIPMENT NAME: ACID TANK

1		Total Volume: 24,000 Gal.	Field Erected? YES	No. Units: 1(ONE)	
2		Operating Pressure psig	ATM		
3		Operating Temperature, deg F	150 MAX		
4		Liquid Specific Gravity	1.20		
5		Design Pressure psig	5		
6		Design Temperature deg. F	200		
7	D	Vessel Contents	20-30% AcidCaustic		
8	E	Hydrostatic Test psig	Per Code		
9	S	Shell	Heads Corr. Allow in.		
10	I	Shell	Heads Joint Eff. %		
11	G	National Board Number			
12	N	Type Supports			
13					
14	D	Code:	Stamp:		
15	A	Radiograph:	Stress Relieve:		
16	T	Insulation:			
17	A	Fireproofing:			
18		Sandblast:	Points		
19		MANHOLE: Hinged? YES	Davited? NO	Other:	
20		Platform Clips:	Ladder Clips:	Insul. Rings:	
21		Support Structure: N/R			
22		Wind Load: 80 mph	Seismic: ZONE 1		
23		Weight Empty: lbs.	Weight Full of Water: lbs.		

		Item	Thickness	Mat'l Class	Mat'l - Minimum Quality
24					
25		Shell	in		Fiberglass
26	M	Heads	in		Fiberglass
27	A	Lining	in		
28	T		in		
29	E		in		
30	R		in		
31	I	Nozzle Necks			
32	A	Flanges			
33	L	Coupling			
34	S	M.H. Cover			
35		Supports			
36		Bolts/Studs	A-193-B7		
37		Nuts	A-194-2H		
38		Gaskets			

		Service	Mark	No.	Size	Rating	Face	Type
39								
40	N	Drain	A	1	2"	300#	NPT	CPLG
41	O	Outlet	B	1	2"	150#	RF	FLG
42	Z	Return	C	1	2"	150#	RF	FLG
43	Z	PI	D	1	1"	300#	NPT	CPLG
44	L	Overflow	E	1	2"	300#	NPT	CPLG
45	E	LI	F	1	2"	150#	RF	FLG
46			G					
47			H					
48			J					
49			K					
50			L					
51			M					
52			N					
53			P					
54			S					
55		Nozzle to be Plugged or Blinded **						

HOLD

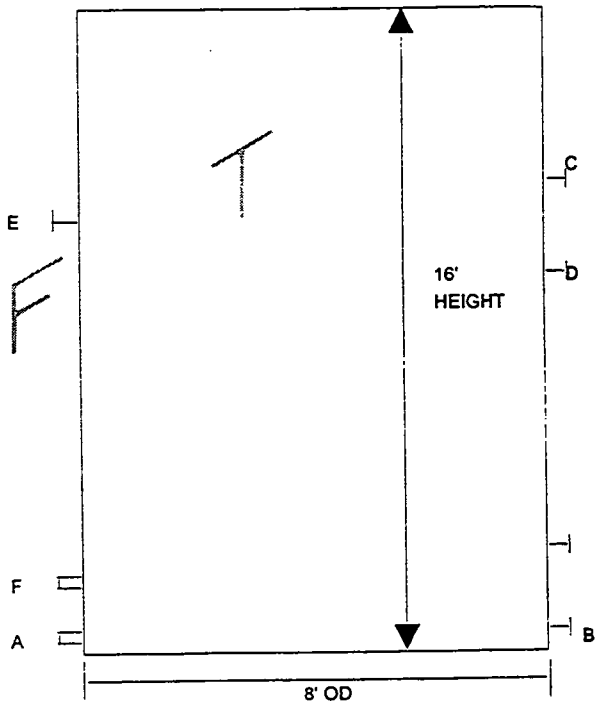

000355

AREA70F.XLS

I.T. CORPORATION

VERTICAL TANK SPECIFICATION

1669

NO	BY	DATE	REV.
D	PMS	05/12/98	CFC DRAFT
F	PMS	07/09/98	CFC DRAFT

IT CORP SPEC. NO. 773481-90-T9002

SHEET 1 OF 1

PROJECT NAME: FDF WPRAP

JOB NO. 773481

LOCATION: FERNALD, OHIO

BY	APPR	DATE
PMS		

AREA NO: 90
AREA NAME: YARD & BUILDING SUMPS
TAG NO.: T-9002
EQUIPMENT NAME: MATERIAL HANDLING BLDG COLLECTION TANK

1		Total Volume: 2000 Gals.	Field Erected? NO	No. Units: 1	
2		Operating Pressure, in. w.c.		Atmospheric	
3		Operating Temperature, deg F		Ambient	
4		Contents Lethal?		NO	
5		Design Pressure, psi		Atmospheric	
6		Design Temperature, deg F		Ambient	
7		Vessel Content:		Waste Water	
8	D	Water density,lb/ft3		62.4	
9	E	Design Liquid Residence Time,Mins		30	
10	S	Design Pump Out Flow Rate,Gpm		50	
11	I	Top		None	
12	G	Bottom		Flat	
13	N				
14		Shell Corrosion Allowance:		1/16"	
15	D	Code:		Stamp: Not Required	
16	A	Radiograph:		Stress Relieve: NO	
17	T	Type Supports: Free Standing			
18	A	Insulation: N/A			
19		Sandblast: YES		Paint: YES	
20		Manhole: Hinged?	Davited?	Other:	
21		Platform Clips: NO	Ladder Clips: YES	Insul. Rings:	
22		Pipe Supports:			
23		Wind Load:	Seismic:		
24		Weight Empty: * lbs	Loaded Weight * lbs		

		Item	Thickness	Mat'l Class	Mat'l - Minimum Quality
25					
26		Shell	*		STEEL
27	M	Bottom	*		STEEL
28	A				
29	T				
30	E				
31	R				
32	I				
33	A	Nozzle Necks			STEEL
34	L	Flanges			STEEL
35	S	M.H. Cover			
36		Supports			
37		Bolts/Studs			
38		Nuts			
39		Gaskets			

		Service	Mark	No.	Size	Rating	Face	Type
40								
41		Outlet	A	1	3"	n/a	flat	Flg.
43	N	Drain	B	1	3"	n/a	flat	Flg.
44	O		C					
45	Z		D					
46	Z		E					
47	L		G					
48	E		H					
49	S		J					
50			K					
51			L					
52			M					

53		
54	N	1. Items marked with * to be filled in by Vendor
55	O	2. Tank to be configured for ease of transport and installtion
56	T	
57	E	
58	S	
59		

HOLD

1

F

R

000356

PT/_7/7/98_/[A90spec]-T9002

I.T. CORPORATION	VERTICAL VESSEL SPECIFICATION 1669	IT CORP. SPEC. NO. 773481 - V5001
		SHEET 1 OF 1
		PROJECT NAME FERNALD WPRAP OU1
		JOB NO. 773481
		LOCATION FERNALD, OHIO

NO	BY	DATE	REV.
D		05/12/98	CFC DRAFT
E	MSD	6/5/98	Draft Issue for EPA Review
F	JAN	7/9/98	DRAFT CFC

BY	APPR	DATE

AREA NO: 50
AREA NAME: GCS SYSTEM
TAG NO.: V-5001
EQUIPMENT NAME: SCRUBBER CONTACTOR

1		Total Volume: 125 Gal.	Field Erected? NO	No. Units: 1(ONE)		
2		Operating Pressure, psig	-0.7, (14.0 psia)			
3		Operating Temperature, deg F	210			
4		Liquid Specific Gravity	1.05			
5		Contents Lethal?	NO			
6		Design Pressure, psig	+/- 2			
7	D	Design Temperature, deg F	600			
8	E	Shell / Heads / Corr. Allow, In.	1/16"			
9	S	Shell / Heads / Joint Eff., %				
10	I	Max. Allow. Press. (New&Cold) psig	N/A			
11	G	Limited by	N/A			
12	N	Hydrostatic Test Pressure, psig	N/A			
13		Code: ASME Sect. VIII	Stamp: NO			
14	D	Radiograph: N/A	Stress Relieve: N/A			
15	A	Insulation: N/A				
16	T	Fireproofing: NONE				
17	A	Sandblast: N/A	Paint: N/A			
18		MANHOLE: NONE Hinged?	Davited?	Other:		
19		Type support: Full support from bottom flange				
20		Platform Clips: NO	Ladder Clips: NO	Insul. Rings: NO		
21		Pipe Supports: Four req'rd to support 300 lb. each lug - Note 4				
22		Wind Load: 80 mph, Exp. C (I=1.0)	Seismic: ZONE 1			
23		Weight Empty: 500 lbs.	Weight Full of Water: 1550 lbs.			
24		Item	Thickness	Mat'l Class	Mat'l - Minimum Quality	
25		Shell	1/4"	SS	304	
26	M	Heads				
27	A					
28	T					
29	E					
30	R					
31	I	Nozzle Necks	SS		304	
32	A	Flanges	SS		304 - Note 7	
33	L	Coupling				
34	S	M.H. Cover				
35		Supports	SS		304	
36		Bolts/Studs			Alloy	
37		Nuts	Heavy Hex		Alloy	
38		Gaskets	A&B 1/8" Full face		DYNEX	

		Service	Mark	No.	Size	Rating	Face	Type
39	N							
40	O	Flue Gas Inlet	A	1	30"	5#	FF	Note 7
41	Z	Flue Gas Outlet	B	1	30"	5#	FF	Note 7
42	Z	Recirculation	C	6	3"	150#	RF	Flg.
43	L							
44	E							

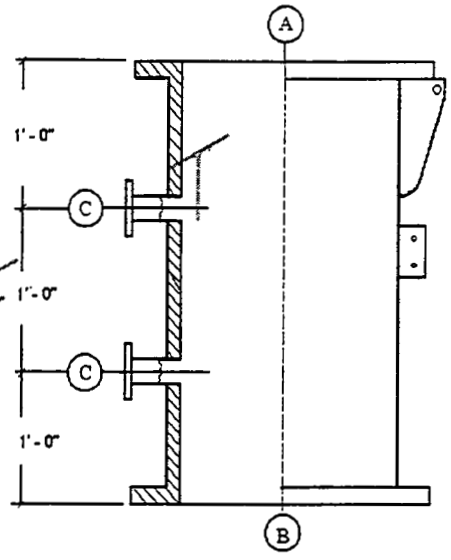

45		1. Nozzle A flange OD to match Nozzle B on Weir (WX - 5001) and supports 3500 lbs.
46	N	2. Nozzle B Flange OD to match Nozzle A on Quench Sump Tank (T - 5001) and support 5500 lbs.
47	O	3. Nozzle C orientation per project drawing and angled down 15 degrees from horizontal. (Each row of three to be equally spaced and offset)
48	T	4. Manifold pipe supports w / two 3/4" diam. Bolt holes.
49	E	5. Vessel thickness includes corrosion allowance.
50	S	6. Two lifting lugs @ 180 degrees apart w / a 1 - 3/16" diameter hole in each lug.
51		7. Flange thickness to be 1/2" minimum.
52		
53		
54		
55		

000357

V5001.xls

I.T. CORPORATION	VERTICAL VESSEL SPECIFICATION 1669	IT CORP. SPEC. NO. 773481 - V5002
		SHEET 1 OF 1
		PROJECT NAME FERNALD WPRAP OU1
		JOB NO. 773481
		LOCATION FERNALD, OHIO

NO	BY	DATE	REV.
D	JAN	05/12/98	CFC DRAFT
E	MSD	06/05/98	Draft Issue for EPA Review
F	JAN	07/09/98	DRAFT CFC

BY	APPR	DATE

AREA NO: 50
AREA NAME: GCS SYSTEM
TAG NO.: V-5002
EQUIPMENT NAME: SUB COOL QUENCH

1		Total Volume: 1,250 Gal.	Field Erected NO	No. Units 1(ONE)		
2		Operating Pressure, psig	-0.7, (14.0 psia)			
3		Operating Temperature, deg F	200			
4		Liquid Specific Gravity	1.03			
5		Contents Lethal?	NO			
6		Design Pressure, psig	+/- 2			
7	D	Design Temperature, deg F	400			
8	E	Shell / Heads / Corr. Allow, In.	1/16"	1/16"		
9	S	Shell / Heads / Joint Eff., %				
10	I	Max. Allow. Press. (New&Cold) psig	N/A			
11	G	Limited by	N/A			
12	N	Hydrostatic Test Pressure, psig	N/A			
13		Code: ASME Sect. VIII	Stamp: NO			
14	D	Radiograph: N/A	Stress Relieve: N/A			
15	A	Insulation: N/A				
16	T	Fireproofing: NONE				
17	A	Sandblast: SSPC-SP6 Ext.	Paint: 09900 - Finish 206			
18		MANHOLE: NONE Hinged?	Davited?	Other:		
19		Type support:	Full support from bottom flange - Note 2			
20		Platform Clips: NO	Ladder Clips: NO	Insul. Rings: NO		
21		Pipe Supports:	Four req'rd to support 300 lb. each lug - Note 2			
22		Wind Load: 80 mph, Exp. C (I=1.0)	Seismic: ZONE 1			
23		Weight Empty: * lbs.	Weight Full of Water: * lbs.			

		Item	Thickness	Mat'l Class	Mat'l - Minimum Quality
24					
25		Shell	1/4"	CS	A36, A283C
26	M	Heads	1/4"	CS	A36, A283C
27	A	Lining			
28	T	Exterior Surface			
29	E				
30	R				
31	I	Nozzle Necks	CS		A106B
32	A	Flanges	CS		A36 - Note 3
33	L	Coupling			
34	S	M.H. Cover			
35		Supports	CS		A36
36		Bolts/Studs	Studs		Alloy
37		Nuts	Heavy Hex		Alloy
38		Gaskets	1/8" Full face		DYNEX

		Service	Mark	No.	Size	Rating	Face	Type
39	N							
40	O	Flue Gas Inlet	A	1	2' - 6"	5#	FF	Note 1
41	Z	Flue Gas Outlet	B	1	5' - 9"	5#	FF	Note 3
42	Z	Recirculation	C	18	3"	150#	RF	Flg.
43	L							
44	E							

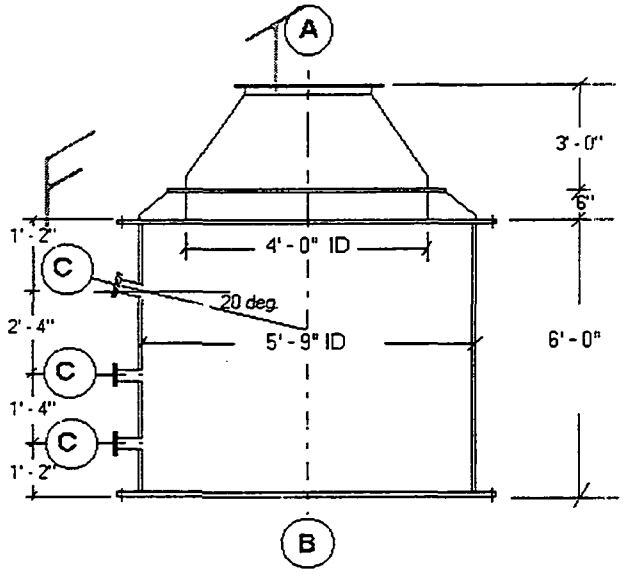

45	N	1. Nozzle B Flg. - 6' - 11" OD x 3/4" Thk. W/ 84 - 3/4" diam. Holes on 81" B.C.
46	O	2. Manifold pipe support as per equipment dwg.
47	T	3. 1/2" minimum flange thickness.
48	E	4. Nozzle orientation per project drawing.
49	S	5. Vessel thickness includes corrosion allowance.
50		6. Items marked * by Detail Design.
51		
52		
53		
54		

V5002.xls

000358

I.T. CORPORATION

SPECIALTY EQUIPMENT SPECIFICATION

NO	BY	DATE	REV.
D		05/12/98	CFC DRAFT
E	MSD	06/05/98	Draft Issue for EPA Review
F	JAN	07/09/98	DRAFT CFC

IT CORP. SPEC. NO. **773481 - VX5001**

SHEET 1 OF 1

PROJECT NAME **FERNALD WPRAP OU1**

JOB NO. **773481**

LOCATION **FERNALD, OHIO**

BY	APPR	DATE

AREA NO: 50
AREA NAME: MSD SYSTEM
TAG NO.: VX-5001
EQUIPMENT NAME: SCRUBBER INSERT

1		Total Volume: N/A Gal.	Field Erected Yes	No. Units 1(ONE)		
2		Operating Pressure, psig	-0.7, (14.0 psia)			
3		Operating Temperature, deg F	210			
4		Liquid Specific Gravity	1.03			
5		Contents Lethal?	NO			
6		Design Pressure, psig	N/A			
7	D	Design Temperature, deg F	400			
8	E	Shell / Heads / Corr. Allow, In.	1/16"	1/16"		
9	S	Shell / Heads / Joint Eff., %				
10	I	Max. Allow. Press. (New&Cold) psig	N/A			
11	G	Limited by	N/A			
12	N	Hydrostatic Test Pressure, psig	N/A			
13		Code: N/A	Stamp: NO			
14	D	Radiograph: N/A	Stress Relieve: N/A			
15	A	Insulation: N/A				
16	T	Fireproofing: NONE				
17	A	Sandblast: N/A	Paint: N/A			
18		MANHOLE: NONE	Hinged?	Davited?	Other:	
19		Type support:	Full support from top flange			
20		Platform Clips: NO	Ladder Clips: NO	Insul. Rings: NO		
21		Pipe Supports: N/A				
22		Wind Load: N/A Indoors	Seismic: ZONE 1			
23		Weight Empty: 750 lbs.	Weight Full of Water: N/A lbs.			

		Item	Thickness	Mat'l Class	Mat'l - Minimum Quality
24					
25		Shell	3/16"	SS	304
26	M				
27	A				
28	T				
29	E				
30	R				
31	I	Nozzle Necks	SS		304
32	A	Flanges	SS		304
33	L	Coupling			
34	S	M.H. Cover			
35		Supports	SS		304
36		Bolts/Studs	Studs		Alloy
37		Nuts	Heavy Hex		Alloy
38		Gaskets	A&B 1/8" Full face		DYNEX

		Service	Mark	No.	Size	Rating	Face	Type
39	N							
40	O	Flue Gas Inlet	A	1	30"	Spl	FF	Note 2
41	Z							
42	Z							
43	L							
44	E							

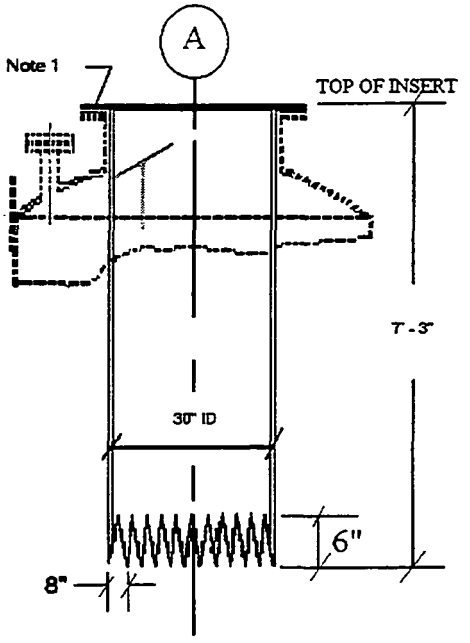

45 1. Flange A to match Scrubber Sump Tank (V - 5001) w/ full face gasket on top and bottom surfaces.
46 2. 3/16" minimum flange thickness.
47
48
49
50
51
52
53
54
55

NOTES

VX5001.xls

1669

I.T. CORPORATION	SPECIALTY EQUIPMENT SPECIFICATION	IT CORP. SPEC. NO. 773481 - VX5002

NO	BY	DATE	REV.
D	JAN	05/12/98	CFC DRAFT
E	MSD	6/5/98	Draft Issue for EPA Review
F	JAN	7/9/98	DRAFT CFC

SHEET 1 OF 1

PROJECT NAME: FERNALD WPRAP OU1

JOB NO. 773481

LOCATION: FERNALD, OHIO

BY	APPR	DATE

AREA NO: 50
AREA NAME: GCS SYSTEM
TAG NO.: VX-5002
EQUIPMENT NAME: QUENCH INSERT

1		Total Volume: N/A Gal.	Field Erected? Yes	No. Units 1(ONE)		
2		Operating Pressure, psig	-0.7, (14.0 psia)			
3		Operating Temperature, deg F	100			
4		Liquid Specific Gravity	1.03			
5		Contents Lethal?	NO			
6		Design Pressure, psig	N/A			
7	D	Design Temperature, deg F	400			
8	E	Shell / Heads / Corr. Allow, In.	1/16"			
9	S	Shell / Heads / Joint Eff., %				
10	I	Max. Allow. Press. (New&Cold) psig	N/A			
11	G	Limited by	N/A			
12	N	Hydrostatic Test Pressure, psig	N/A			
13		Code: N/A	Stamp: NO			
14	D	Radiograph: N/A	Stress Relieve: N/A			
15	A	Insulation: N/A				
16	T	Fireproofing: NONE				
17	A	Sandblast: N/A	Paint: 09900 - Finish 206			
18		MANHOLE: NONE Hinged?	Davited?	Other:		
19		Type support: Full support from top flange				
20		Platform Clips: NO	Ladder Clips: NO	Insul. Rings: NO		
21		Pipe Supports: N/A				
22		Wind Load: 80 mph, Exp. C (I=1.0)	Seismic: ZONE 1			
23		Weight Empty: 1900 lbs.	Weight Full of Water: N/A lbs.			
24		Item	Thickness	Mat'l Class	Mat'l - Minimum Quality	
25		Shell	1/4"	CS	A36	
26	M					
27	A					
28	T					
29	E					
30	R					
31	I	Nozzle Necks	CS		A36	
32	A	Flanges	CS		A36	
33	L	Coupling				
34	S	M.H. Cover				
35		Supports	SS		304	
36		Bolts/Studs			Alloy	
37		Nuts	Heavy Hex		Alloy	
38		Gaskets	A&B 1/8" Full face		DYNEX	

		Service	Mark	No.	Size	Rating	Face	Type
39	N							
40	O	Flue Gas Inlet	A	1	5' - 9"	N/A	FF	Note 1
41	Z							
42	Z							
43	L							
44	E							

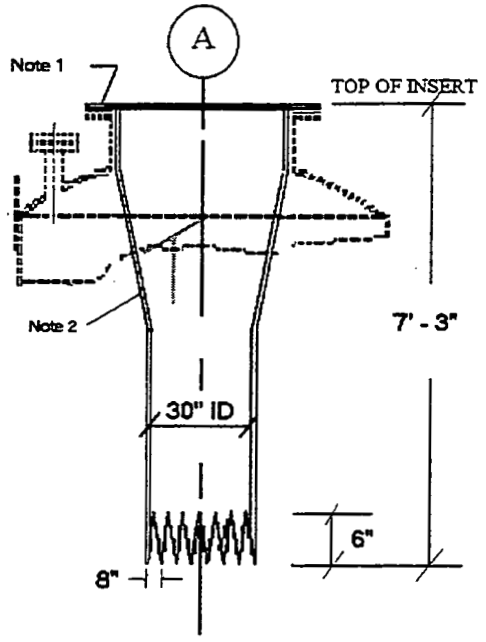

45 NOTES
1. 6' - 11" OD flg. X 5' - 9" ID w/ 84 3/4" diameter holes. (Match V-5002) w/ full face gasket top and bottom
46 2. 17 degree transition angle.
47
48
49
50
51
52
53
54

VX5002.xls

000360

I.T. CORPORATION	VAPORIZER SPECIFICATION				IT CORP. SPEC. NO. 773481-V7001		
	NO	BY	DATE	REV.	SHEET 1 OF 1		
	D	KKK	5/12/98	CFC DRAFT	PROJECT NAME FERNALD WPRAP OU-1		
PROJECT: FERNALD WPRAP AREA: UTILITIES TAG NO.: V-7001 EQUIPMENT: AIR HEATED NITROGEN VAPORIZER	E	BAH	6/5/98	DRAFT ISSUE FOR EPA REVIEW	JOB NO. 773481		
					LOCATION FERNALD, OH		
	F	BAH	7/9/98	DRAFT CFC HOLD	BY	APPR	DATE 5/98

Process Data:

Fluid:	Liquid Nitrogen
Design Pressure:	40 psig Supply
Max. Pressure	250 psig
Normal Flow Rate:	175 SCFM
Min Flow Rate:	90 SCFM
Max Flow Rate:	350 SCFM
Fluid Temp:	
Fluid Spec Gravity:	

Design Data:

Manufacturer:	*
Model:	*
I.D.	*
Weight	*
No. of Units	1
Size	*
Power Consumption	None
Materials of Construction:	
Tube:	
Cover:	
Reinforcement:	
Temp. Range:	

Ambient Conditions:

Equipment Location:	Outdoors
Ambient Temp:	-10/100 deg F
Wind Load:	80 mph
Seismic Zone:	1

Notes:

- Information to be supplied by vendor.

I.T. CORPORATION	VAPORIZER SPECIFICATION				IT CORP. SPEC. NO. 773481-V7002		
	NO	BY	DATE	REV.	SHEET 1 OF 1		
	D	KKK	5/12/98	CFC DRAFT	PROJECT NAME FERNALD WPRAP		
PROJECT: FERNALD WPRAP AREA: UTILITIES TAG NO.: V-7002 EQUIPMENT: AIR HEATED NITROGEN VAPORIZER	E	BAH	6/5/98	DRAFT ISSUE FOR EPA REVIEW	JOB NO. 773481		
					LOCATION FERNALD, OH		
	F	BAH	7/9/98	DRAFT CFC HOLD	BY	APPR	DATE 5/98

Process Data:	
Fluid:	Liquid Nitrogen
Design Pressure:	40 psig Supply
Max. Pressure	250 psig
Normal Flow Rate:	175 SCFM
Min Flow Rate:	90 SCFM
Max Flow Rate:	350 SCFM
Fluid Temp:	
Fluid Spec Gravity:	
Design Data:	
Manufacturer:	*
Model:	*
I.D.	*
Weight	*
No. of Units	1
Size	*
Power Consumption	None
Materials of Construction:	
Tube:	
Cover:	
Reinforcement:	
Temp. Range:	
Ambient Conditions:	
Equipment Location:	Outdoors
Ambient Temp:	-10/100 deg F
Wind Load:	80 mph
Seismic Zone:	1

Notes:

* Information to be supplied by vendor.

AREA70F.XLS

I.T. CORPORATION	COOLING TOWER SPECIFICATION	IT CORP. SPEC. NO. 773481-W5001
		SHEET 1 OF 1
		PROJECT NAME FERNALD WPRAP OU1
AREA NO: 50 AREA NAME: GCS SYSTEM TAG NO.: W - 5001 EQUIPMENT NAME: COOLING TOWER		JOB NO. 773481
		LOCATION FERNALD, OHIO

NO	BY	DATE	REV.
D	JAN	5/12/98	CFC DRAFT
E	MSD	6/5/98	Draft Issue for EPA Review
F	JAN	7/9/98	DRAFT CFC

BY	APPR	DATE

E 1669

1		Manufacturer:	Marley - Note 1
2		Model:	9041NC
3		Quantity:	1 (One)
4		Max. Water Flowrate, gpm	2450
5		Operating Temperature, deg F	85 - 115
6	P	Operating Time, hrs/d	24 continuous
7	R	Capacity, tons/hr	
8	O	Contents Lethal?	No
9	C		
10	E	Configuration:	Mechanical Draft
11	S		
12	S		
13			
14			
15	D		
16	A		
17	T		
18	A		
19		Inlet Flowrate:	
20		Water Temperature, F:	85
21		Flowrate, GPM:	1600
22		Pressure, PSIG:	50
23		Outlet Flowrate:	
24		Water Temperature, F:	103
25		Flowrate, GPM:	1600
26		Pressure, PSIG:	0
27			

28		Item	Equipment Drawing No.
29		1. Standard Outlet Piping Plans	91-41446 Rev C
30	D	2. Ladder & Handrail detail	91-41453 Rev B
31	E	3. Ladder Extension & Safety Cage	91-41454 Rev A
32	S	4. Condiuit Installation	91-41458 Rev N/A
33	I	5. Schematic & Inlet Piping Details	91-41485 Rev B
34	G	6. Supporting Steel (Typical)	91-41497 Rev C
35	N	7. Fan: RPM 384 Size: 122-H3-9 Pitch: 48	
36		8. Driveshaft type:	6Q
37		9. Serial No.	032103-NC9041GM-92
38		Wind Load: 80 mph, Exp. C (I=1.0)	Seismic: ZONE 1

39	M	Mfgr:	Existing	Type"	Electric
40	O	Speed:	1800 / 900 RPM	HP:	60 / 15
41	T	Volts:	460	Enclosure:	TEFC
42	O	Phase:	3	Service Factor:	1.2
43	R	Cycles:	60 Hz	Drive:	V - belt
44		Motor: Two Speed		Frame:	365T

45		Item	Thickness	Mat'l Class	Mat'l - Minimum Quality
46	M	Housing	Std.		Std.
47	A	Supports	See Project Dwg.		•
48	T	Bolts/Studs	A-307		GR C
49	R	Nuts	Steel		Heavy Hex.
50	L	Gaskets	•		•
51		Paint			
52					

53		1. This Cooling Tower is existing equipment manufactured by the
54		Marley Cooling Tower Co. (Mission, Kansas 66202)
55		
56	N	
57	O	
58	T	
59	E	
60	S	
61		
62		
63		
64		
65		
66		
67		
68		

F

T

W5001.xls

I.T. CORPORATION	SPECIALTY EQUIPMENT SPECIFICATION	IT CORP. SPEC. NO. 773481-WX5001
		SHEET 1 OF 1
		PROJECT NAME FERNALD WPRAP OU1
AREA NO: 50		JOB NO. 773481
AREA NAME: GCS SYSTEM		LOCATION FERNALD, OHIO
TAG NO.: WX-5001		
EQUIPMENT NAME: SCRUBBER WEIR		

NO	BY	DATE	REV.
D		05/12/98	CFC DRAFT
E	MSD	6/5/98	Draft Issue for EPA Review
F	JAN	7/9/98	DRAFT CFC

BY	APPR	DATE

1669

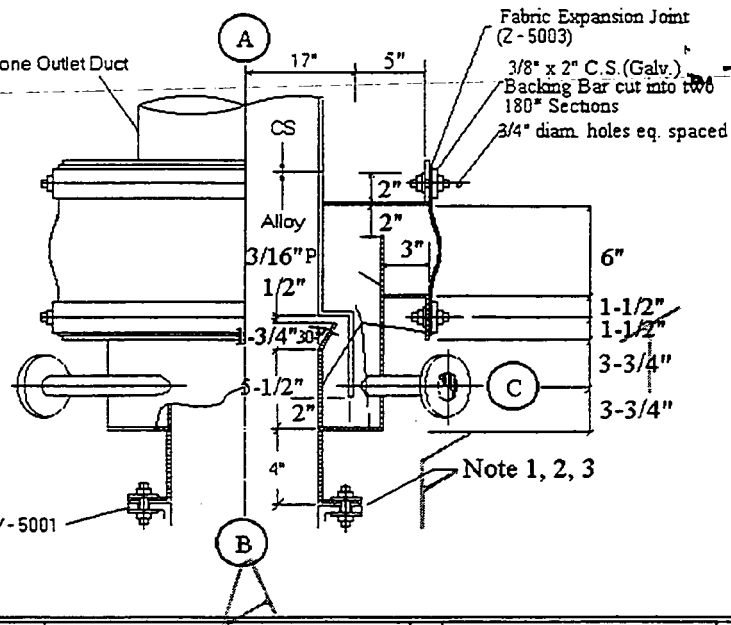

	Item	Thickness	Mat'l Class	Mat'l - Minimum Quality
MATERIALS	Shell	11 GA.	SS	304
	Internals	11 GA.	SS	304
	External Stiffener	11 GA.	SS	304
	Nozzle Necks	SS		304
	Flanges	SS		304
	Coupling	None		
	M.H. Cover			
	Supports			
	Bolts/Studs	Studs		Alloy
	Nuts	Haevy Hex		Alloy
	Gaskets	1/8" Full Face		DYNEX

	Service	Mark	No.	Size	Rating	Face	Type
NOZZLE	Flue Gas Inlet	A	1	30"	2#	Spl	N/A
	Flue Gas Outlet	B	1	30"	5#	FF	Note 4,5
	Recycle Water	C	4	1"	150#	RF	Flg.

DATA				
Total Volume:	20 Gal.	Field Erected?	No	
No. Units:	One			
Corrosion Allowance		1/16"		
Design Pressure		+ / - 2 Psig		
Operating Pressure		- .7 psig (14.0 psia)		
Design Temperature		600 F		
Operating Temperature, deg F		210 F		
Liquid Specific Gravity		1.05		
Contents Lethal?		No		
Max. Allow. Press. (New & Cold)		N/A		
Code:	N/A	Stamp:	N/A	
Radiograph:	N/A	Stress Relieve:		
Insulation:	N/A			
Fireproofing:	N/A			
Sandblast:	N/A	Paint:	N/A	
MANHOLE: N/A	Hinged?	Davited?	Other:	
Platform Clips:	NO			
Ladder Clips:	NO	Insul. Rings:	NO	
Supports:	From Flange			
Wind Load:	80 MPH Exp. C (I=1.0)			
Seismic:	ZONE 1			
Weight Empty:	* lbs.			
Weight Full of Water:	* lbs.			

NOTES

1. Thickness including corrosion allowance to exist after machining
2. B face surface to be machined true +/ - 1/32" and flat +/- 1/32" at any point
3. Top edge of weir to be machined + 1/64" / -0.0 of B facing
4. Facing to match OD of flange (facing bolt hole diameter to be 1/8" > than flange drilling)
5. 1/4" minimum flange thickness.
6. Items marked with * by Detail Design

000364

WX5001.xls

I.T. CORPORATION	STACK SPECIFICATION 1669	IT CORP. SPEC. NO. 773481 - X5001

NO	BY	DATE	REV.
D	JAN	05/12/98	CFC DRAFT
E	MSD	06/05/98	Draft Issue for EPA Review
F	JAN	07/09/98	DRAFT CFC

SHEET 1 OF 1

PROJECT NAME: FERNALD WPRAP OU1

JOB NO. 773481

LOCATION: FERNALD, OHIO

BY	APPR	DATE

AREA NO: 50
AREA NAME: GCS SYSTEM
TAG NO.: X-5001
EQUIPMENT NAME: THERMAL OXIDIZER

1		Total Volume: 1,670 Gal.	Field Erected? Yes	No. Units: 1(ONE)		
2		Operating Pressure, psig	0.03, (0.8" WC)			
3		Operating Temperature, deg F	1600 Internal / 350 Shell			
4		Liquid Specific Gravity	N/A			
5		Contents Lethal?	NO			
6		Design Pressure, psig	+/- 2			
7	D	Design Temperature, deg F	2500 Internal / 500 Shell			
8	E	Shell / Heads / Corr. Allow, In.	1/16"	1/16"		
9	S	Shell / Heads / Joint Eff., %				
10	I	Max. Allow. Press. (New&Cold) psig	N/A			
11	G	Limited by	N/A			
12	N	Hydrostatic Test Pressure, psig	N/A			
13		Code: ASME Sect. VIII	Stamp: NO			
14	D	Radiograph: N/A	Stress Relieve: N/A			
15	A	Insulation: Internal Refractory - Shop Installed				
16	T	Fireproofing: NONE				
17	A	Sandblast: SSPC - SP6 Ext. Surface	Paint: 09900 - Finish 206			
18		MANHOLE: Hinged?	Davited?	Other: Bolted		
19		Type support: Free Standing				
20		Platform Clips: Yes	Ladder Clips: Yes	Insul. Rings: NO		
21		Pipe Supports: N/A				
22		Wind Load: 80 mph, Exp. C (I=1.0)	Seismic: ZONE 1			
23		Weight Empty: * lbs.	Weight Full of Water: N/A lbs.			

		Item	Thickness	Mat'l Class	Mat'l - Minimum Quality
24					
25		Shell	3/8"	SS	304
26	M				
27	A				
28	T				
29	E				
30	R				
31	I	Nozzle Necks	SS		304
32	A	Flanges	CS		
33	L	Coupling	SS		304
34	S	M.H. Cover			
35		Supports	CS		A36
36		Bolts/Studs	Studs		Alloy
37		Nuts	Heavy Hex		Alloy
38		Gaskets	1/8"		High Temp. (Non Asbestos)

		Service	Mark	No.	Size	Rating	Face	Type
39	N							
40	O	Gas Outlet	A	1	2' - 8"	N/A	Round	Note 3
41	Z	Gas Inlet (F-5001)	B	1	2' - 8"	N/A	Round	Open
42	Z	Sample	C	4	4"	150#	RF	Flg.w/Bld.
43	L	Temp. Element	D	2	1"	150#	RF	Flg.
44	E		E					
45			F					
46	S		G					
47	C		H					
48	H		J					
49	E							
50	D							
51	U							
52	L							
53	E							
54								
55								

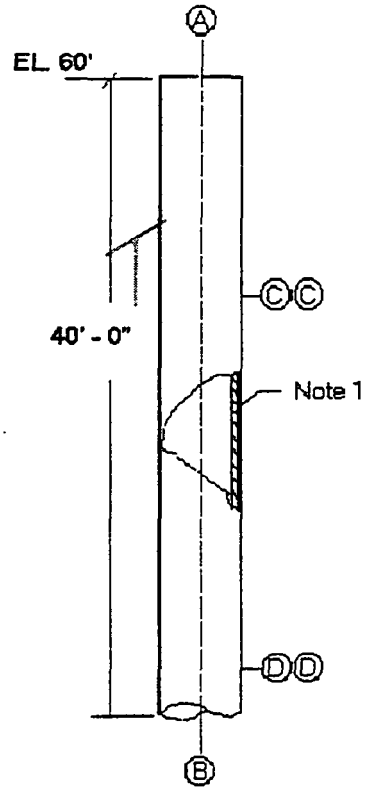

NOTES

1. 2 - 1" Thk. Layers of Inswool HP Blanket (2400)
2. All Blanket material to be anchored with 309 SS pins on 9" centers.
3. Stack to be field welded to F - 5001 and designed for a one piece lift.
4. Nozzle projection to be 8" unless noted.
5. 360 degree sampling platform at 35' El. To access sample ports at 40' Elevation.
6. Stepoff platform at 22' El. To access thermocouples at 25' Elevation.
7. Caged ladder to grade w/ heat shield.

000365

X5001.xls

1669

I.T. CORPORATION	SPECIALTY EQUIPMENT SPECIFICATION	IT CORP. SPEC. NO. 773481 - Z5009
		SHEET 1 OF 1
AREA NO: 50		PROJECT NAME FERNALD WPRAP OU1
AREA NAME: GCS SYSTEM		JOB NO. 773481
TAG NO.: Z-5009		LOCATION FERNALD, OHIO
EQUIPMENT NAME: FLAME ARRESTER		BY / APPR / DATE

NO	BY	DATE	REV.
D	JAN	05/12/98	CFC DRAFT
E	MSD	06/05/98	Draft Issue for EPA Review
F	JAN	07/09/98	DRAFT CFC

1	DESIGN DATA	No. Units:		1 (One)
2		Type	Note 3	IN-Line Flame Arrester
3		Purpose		Flashback Protection
4		Chemical Classifications		Organic Vapors (Group D) in
5				Steam and Inert gas
6		Operating Pressure	PSIG	0.18
7		DesignPressure	PSIG	150
8		Test Pressure / Body	PSIG	400
9		Test Method		UL, USCG
10		Operating Temperature	F	100
11		Design Temperature / Body	F	600
12		Max. Flow Rate - Upset Condition	cfh	180000
13		Design Operational Flow Rate	cfh	40000
14		Normal Flow Rate	cfh	25000
15		Pressure Drop - Upset	in. WC	3.5
16		Pressure Drop - Design	in. WC	0.3
17		Pressure Drop - Normal	in. WC	0.1

		Item	Thk.	Mat'l Cls	Mat'l - Minimum Quality
18	MATERIALS				
19		Item	Thk.	Mat'l Cls	Mat'l - Minimum Quality
20		Pipe Size	3/16"	CS	A36
21		Body	*	CS	A36
22		Element	STD.	SS	316
23			*		
24			*		
25			*		
26					
27					
28					
29					
30					
31					
32					

		Service	Mark	No.	Size	Rating	Face	Type
33	NOZZLE	Service	Mark	No.	Size	Rating	Face	Type
34		Gas Inlet	A	1	24"	Note 2	FF	Flg.
35		Gas Outlet	B	1	24"	Note 2	FF	Flg.
36		Temp. Element	C	1	3/4"	3000#	NPT	Cplg.
37			D					
38			E					
39			F					
40			G					
41			H					

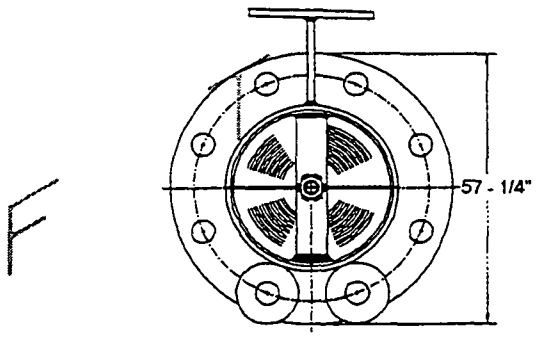

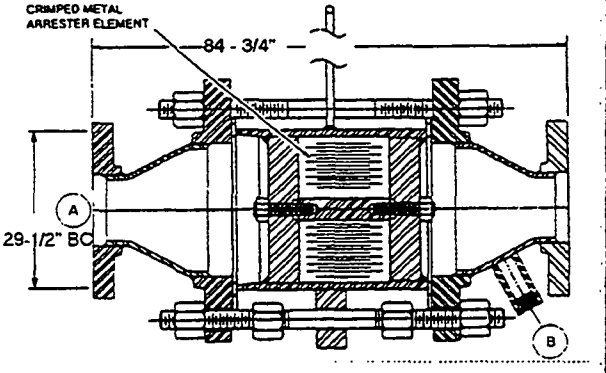

NOTES

1. Exterior CS surfaces painted per Spec. 09900 - Finish 205
2. 24" ID x 29-1/2" BC w/ 20 - 1-3/8" diameter bolt holes.
3. Protectoseal 25024C (or equal)

000366

Z5009.xls

SECTION 09900

PAINTING, GENERAL

PART 1 GENERAL

1.1 SECTION INCLUDES:

This specification provides guidance for selection, surface preparation, and application of paint for the piping, equipment, structural steel, etc., associated with the equipment being supplied.

The equipment will be operated in areas with ambient conditions that may be classified as "severe". Paint systems and application techniques shall be specified to meet these severe classification requirements.

All surface preparation and painting of steel surfaces shall conform to the procedure outlined in the Steel Structures Painting Council Application Specification SSPC-PA-1 and Surface Preparation Specification SSPC-SP-1 through 10, except as modified in this Specification.

Safety color coding shall be applied for identifying and marking physical hazards in accordance with the requirements of the Occupational Safety and Health Act, Subpart J, Section 1910.144.

1.2 RELATED SECTIONS

1.3 REFERENCES, CODES, AND STANDARDS

A. SSPC-PA-1 - Steel Structures Painting Council Application Specification - Shop, Field and Maintenance Painting

B. SSPC-SP-1 - Solvent Cleaning

C. SSPC-SP-3 - Power Tool Cleaning

D. SSPC-SP-6 - Commercial Blast Cleaning

E. SSPC-SP-7 - Brush-Off Blast Cleaning

F. SSPC-SP-10 - Near-White Blast Cleaning

G. OSHA Subpart J, Section 1910.144 - Identification and marking of physical hazards.

1.4 SUBMITTALS

A. The manufacturer's current printed product description, material safety data sheets (MSDS) and technical data sheets for each coating system. Detailed mixing, thinning and application instructions, minimum and maximum application temperature, and curing and drying times between coats for epoxy, moisture-curing polyurethane, and liquid glaze coatings.

B. The names, quantity represented, and intended use for the proprietary brands of materials proposed to be substituted for the specified materials when the required quantity of a particular paint type is 50 gallons or less.

C. Certificate stating that paints contain no mercurial mildewcide or insecticide. Certificate stating that paints proposed for use contain no lead. Certificate stating that paints proposed for use meet the VOC regulations of the local Air Pollution Control Districts having jurisdiction over the geographical area in which the project is located.

1.5 PACKAGING, LABELING, AND STORING

Paints shall be in sealed containers that legibly show the designated name, formula or specification number, batch number, color, quantity, date of manufacture, manufacturer's formulation number, manufacturer's directions including any warnings and special precautions, and name of manufacturer. Pigmented paints shall be furnished in containers not larger than 5 gallons. Paints and thinner shall be stored in accordance with the manufacturer's written directions and as a minimum stored off the ground, under cover, with sufficient ventilation to prevent the buildup of flammable vapors, and at temperatures between 40 and 95°F.

1.6 ENVIRONMENTAL CONDITIONS

Unless otherwise recommended by the paint manufacturer, the ambient temperature shall be between 45 and 95°F when applying coatings other than water-thinned, epoxy, and moisture-curing polyurethane coatings. Water-thinned coatings shall be applied only when ambient temperature is between 50 and 90°F. Epoxy and moisture-curing polyurethane coatings shall be applied only within the minimum and maximum temperatures recommended by the coating manufacturer. Moisture-curing polyurethane shall not be applied when the relative humidity is below 30 percent.

000368

PART 2 PRODUCTS

2.1 PAINT

The term "paint" as used herein includes emulsions, enamels, paints, stains, varnishes, sealers, cement-emulsion filler, and other coatings, whether used as prime, intermediate, or finish coat.

A. Paint shall conform to the respective specifications listed for use in the painting schedules at the end of this section, except when the required amount of a material of a particular color is 50 gallons or less, an approved first-line proprietary paint material with similar intended usage and paint type to that specified may be used. Additional requirements are as follows:

B. Colors shall be as selected from Table 1 and Table 2.

C. Paints containing lead shall not be used.

D. Paints containing zinc chromate or strontium chromate pigments shall not be used.

E. Paints shall comply with applicable state and local laws enacted to insure compliance with Federal Clean Air Standards. Materials shall conform to the restrictions of the local air pollution control authority. When the materials specified in the painting schedule do not meet the applicable VOC content limitations, the Contractor shall notify the Contracting Officer prior to commencing the work.

PART 3 EXECUTION

3.1 PROTECTION OF AREAS NOT TO BE PAINTED

Items not to be painted which are in contact with or adjacent to painted surfaces shall be removed or protected prior to surface preparation and painting operations. Items removed prior to painting shall be replaced when painting is completed. Following completion of painting, workmen skilled in the trades involved shall reinstall removed items. Surfaces contaminated by coating materials shall be restored to original condition.

3.2 SURFACE PREPARATION

A. Surfaces to be painted shall be clean and free of foreign matter before application of paint or surface treatments. Oil and grease shall be removed with clean cloths and cleaning solvents prior to mechanical cleaning. Cleaning solvents shall be of low toxicity with a flashpoint in excess of 100°F. Cleaning shall be

programmed so that dust and other contaminants will not fall on wet, newly painted surfaces. Exposed ferrous metals, such as nail heads on or in contact with surfaces to be painted with water-thinned paints, shall be spot-primed with a suitable corrosion-inhibitive primer capable of preventing flash rusting and compatible with the coating specified for the adjacent areas.

Sandblasting or cleaning shall be so scheduled that all surfaces prepared in this manner during a given day can be coated with the appropriate primer or finish coat as required by the Paint Application Schedule (Table 1)r as indicated on specifications and drawings.

B. Ferrous surfaces including those that have been shop-coated shall be solvent-cleaned. Surfaces that contain loose rust, loose millscale, and other foreign substances shall be cleaned mechanically with power tools according to SSPC SP 3 or by sandblasting according to SSPC SP 6, 7, or 10. Shop-coated ferrous surfaces shall be protected from corrosion by treating and touching up corroded areas immediately upon detection. Surfaces shall be cleaned in accordance with coatings manufacturers specifications, or as per Table 1.

C. Galvanized, aluminum and aluminum-alloy, lead, copper, and other nonferrous metal surfaces shall be solvent-cleaned in accordance with SSPC SP 1.

D. Previously painted surfaces damaged during construction and specified to be repainted shall be thoroughly cleaned of all grease, dirt, dust or other foreign matter. Blistering, cracking, flaking and peeling or other deteriorated coatings shall be removed. Slick surfaces shall be roughened. Damaged areas shall be repaired with suitable material to match adjacent undamaged areas. Edges of chipped paint shall be feather-edged and sanded smooth. Rusty metal surfaces shall be cleaned according to SSPC requirements. Solvent, mechanical, or chemical cleaning methods shall be used to provide surfaces suitable for painting. New, proposed coatings shall be compatible with existing coatings. If existing surfaces are glossy, the gloss shall be reduced.

3.3 HAND AND SOLVENT CLEANING

A. Loose millscale, loose rust, weld flux and splatter, loose paint spalled and loose masonry, etc., shall be removed by brushing, scrapping, chipping, or a combination of these methods.

B. Stratified rust or scale shall be removed by chipping or hammering. Oil and grease shall be removed by solvent, which shall be applied by brushes or rags. After solvent cleaning, surfaces shall be wiped with clean rags or brushes and followed by a fresh water rinse.

000370

3.4 POWER TOOL CLEANING

A. Power wire brushes, power impact tools, power grinders and sanders, and rotary scalers can be used to remove loose millscale, rust, paint, and weld flux and splatter.

B. Oil, grease, and dirt shall first be removed by solvent cleaning.

C. All power equipment shall be used in such a manner that no burrs or sharp edges and cuts are left on the surface. Smudges left by power brushes or other surface contamination shall be removed by solvent and then rinsed.

3.5 SANDBLASTING

A. Before sandblasting, oil or grease shall be removed by solvent cleaning and excessive rust shall preferably be removed by chipping tools ~~or~~ scrapping.

B. Gray metal sandblasting shall be done whenever possible for all general purpose cleaning preparatory to painting new steel structures and equipment.

C. Commercial or gray metal sandblasting shall result in a surface having a gray color and may be somewhat streaked or mottled in appearance. The sandblasted surface shall be free of rust, millscale, oil, paint, or other surface contaminants.

D. Brush-off sandblasting shall be done whenever possible, preparatory to repainting or spot patching steel structures or equipment. Brush-off sandblasting shall result in a surface free from loose millscale, loose paint, and rust. Tight millscale or tightly adhering paint need not be removed.

E. Sandblasting shall be done with clean, dry silica sand of a maximum particle size no larger than that passing through 16-mesh screen. Adequate separators and moisture traps shall be provided to insure the blast air that is free of detrimental amounts of condensed water or oil. Dust or residue from blasting shall be removed by blowing, brushing, or vacuuming. For immersion application clean to SSPC-SP10 or as recommended by coating/liner manufacturer.

F. Under no circumstances shall a sandblasted surface be allowed to remain exposed overnight without primer application.

3.6 MIXING AND THINNING

A. When thinning is approved as necessary to suit surface, temperature, weather conditions, or application methods, paints may be thinned in accordance with the manufacturer's directions. When thinning is allowed, paints shall be thinned

immediately prior to application with not more than 1 pint of suitable thinner per gallon. The use of thinner shall not relieve the Contractor from obtaining complete hiding, full film thickness, or required gloss. Thinning shall not cause the paint to exceed local limits on volatile organic compounds. Paints of different manufacturers shall not be mixed.

B. Two-component systems shall be mixed in accordance with manufacturer's instructions. Any thinning of the first coat to ensure proper penetration and sealing shall be as recommended by the manufacturer for each type of substrate.

3.7 APPLICATION

A. Painting practices shall comply with applicable state and local laws enacted to insure compliance with Federal Clean Air Standards. At the time of application, paint shall show no signs of deterioration. Uniform suspension of pigments shall be maintained during application.

B. Each coat of paint shall be applied so dry film shall be of uniform thickness and free from runs, drops, ridges, waves, pinholes or other voids, laps, brush marks, and variations in color, texture, and finish. Hiding shall be complete. Rollers for applying paints and enamels shall be of a type designed for the coating to be applied and the surface to be coated. Special attention shall be given to insure that all edges, corners, crevices, welds, and rivets receive a film thickness equal to that of adjacent painted surfaces.

C. Paint shall be applied in a uniform layer with overlapping at the edge of the spray pattern.

D. The painter shall take the necessary precautions to prevent fly spray from settling on other equipment, walks, piping, etc. Drop cloths or other protective covering or shields shall be used as necessary.

E. When painting non-sandblasted surfaces, or when repainting, each prime coat and each succeeding coat of paint shall be at least 1 mil thick when dry. Total minimum dry film thickness (MDFT) shall be 5 mils.

F. When required, dry film thickness shall be measured by use of an Elcometer film thickness gauge as manufactured by Gardner Laboratory, Inc.

G. Wet film thickness shall be measured by use of Nordsen wet film thickness gauge as manufactured by Nordsen Corporation.

000372

H. Paint shall be allowed to dry for a time specified by the paint manufacturer before additional coats are applied.

I. Paints shall not be applied on surfaces when the surrounding atmospheric temperature is below 40°F or above 100°F; if surfaces are wet or damp from water or condensation; if the relative humidity is above 85 percent; when the wind velocity is such that dust and dirt may be deposited in the wet paint film; or when the wind will interfere with painting.

J. Various surfaces shall be primed and painted in accordance with the Paint Application Schedule (Table 1). Paint vendors shall be selected in accordance with the Paint Materials Table (Table 2).

3.8 VENTILATION

Adequate ventilation shall be provided during paint application. Respirators shall be worn by all persons engaged in spray painting. Adjacent inhibited areas shall be protected by approved precautionary measures.

3.9 TIMING

Surfaces that have been cleaned, pretreated, and otherwise prepared for painting shall be given a coat of the specified first coat as soon as practical after such pretreatment has been completed, but prior to any deterioration of the prepared surface. Sufficient time shall elapse between successive coats to permit proper drying. This period shall be modified as necessary to suit weather conditions. Oil-based or oleoresinous solvent-type paints shall be considered dry for recoating when the paint feels firm, does not deform or feel sticky under moderate pressure of the thumb, and the application of another coat of paint does not cause the undercoat to lift or lose adhesion. Manufacturer's instructions for application, curing and drying time between coats of two-component systems shall be followed.

Table 1 - Paint Application Schedule

Item	Surface Prep	Primer	MDFT	Finish	MDFT
1.0 Safety Colors					
a. Fire Equipment	Hand clean	101	2.5	201	5
b. Caution	Hand clean	101	2.5	202	5
c. Safety/First Aid	Hand clean	101	2.5	203	5
d. Automatic Start	Hand clean	101	2.5	204	5
2.0 Pressure Vessels, Heat Exchanger, Pipe and Hand Valves					
a. Non-insulated	Sandblast	101	2.5	~~205~~	5
b. Insulated	Sandblast	101	2.5	--	--
3.0 Ducting					
a. Non-insulated	Sandblast	101	2.5	205	5
b. Insulated	Sandblast	101	2.5	--	--
c. Over 180°F	Sandblast	101	--	205	2
4.0 Storage Tanks					
a. Non-insulated	Sandblast	101	2.5	205	5
b. Insulated	Sandblast	101	2.5	--	--
5.0 Fired Heaters, Boilers, Stacks, Mufflers, SCCs					
a. Under 180°F	Sandblast	101	2.5	205	5
b. Over 180°F	Sandblast	--	--	206	2
6.0 Structural Members and Assemblies					
a. Pipe Supports	Sandblast	101	2.5	205	5
b. Ladders and Cages	Hot Dipped	Galvanized			
c. Stair Treads, Grating	Hot Dipped	Galvanized			
d. Supports, Skids	Sandblast	101	2.5	205	5
e. Electrical Starter Racks	Sandblast	101	2.5	205	5
f. Local Control Panels	Manufacturers Standard/No Finish Paint Required				

Item	Surface Prep	Primer	MDFT	Finish	MDFT
7.0 Instrumentation					
a. Control Valves	Manufacturers Standard/No Finish Paint Required				
b. Process Controls	Manufacturers Standard/No Finish Paint Required				
c. Tubing	Manufacturers Standard/No Finish Paint Required				
8.0 Equipment					
a. Pumps	Manufacturers Standard			205	5
b. Motors	Manufacturers Standard			205	5
c. Fans/Blowers	Manufacturers Standard			205	5
d. Conveyors	Sandblast	101	2.5	205	5
e. Compressors	Sandblast	101	2.5	205	5
f. Kilns	Sandblast	--	--	206	2
g. FRP	Gel coat shall contain UV inhibitor and pigmented light gray to match Ameron GR-3 Pearl Gray				
h. Transformers	Manufacturers Standard/No Finish Paint Required				
I. Buildings	Manufacturers Standard/final coat should be light gray to match Ameron GR-3, Pearl Gray				
j. Generators	Sandblast	101	2.5	205	5

Table 2 - Paint Materials

Number	Color	Manufacturer's Brand
101	Gray-Green	Ameron, Dimetcote 9 HS Pittsburgh, EP-91-168/169, Inorganic Zinc Primer Sherman Williams, Zinc Clad I, Inorganic Zinc Primer Devoe, Catha-Coat 302, Inorganic Zinc Primer
201	Red	Ameron, Amercoat 385, Safety Red Polyamide-epoxy Pittsburgh, 97-10, Safety Red Polyamide-epoxy Sherman Williams, B62 A 213, High Solids Epoxy Devoe, Devran 224, High Build Epoxy
202	Yellow	Ameron, Amercoat 385, Safety Yellow Polyamide-epoxy Pittsburgh, 97-13, Safety Yellow Polyamide-epoxy Sherman Williams, B62 A 213, High Solids Epoxy Devoe, Devran 224, High Build Epoxy
203	Green	Ameron, Amercoat 385, Safety Green Polyamide-epoxy Pittsburgh 97-8, Safety Green Polyamide-epoxy Sherman Williams, B62 A 213, High Solids Epoxy Devoe, Devran 224, High Build Epoxy
204	Blue	Ameron, Amercoat 385, Safety Blue Polyamide-epoxy Pittsburgh, 97-11, Safety Blue Polyamide-epoxy Sherman Williams, B62 A 213, High Solids Epoxy Devoe, Devran 224, High Build Epoxy
205	Light Gray*	Ameron, Amerlock 385, High Solids Epoxy Pittsburgh, EP-161/169, High Solids Epoxy Sherman Williams, B62 A 213, High Solids Epoxy Devoe, Devran 224, High Build Epoxy
206	Aluminum	Ameron, Amercoat 892HS, High Heat Silicone Pittsburgh, Speedhide 6-220, High Heat Silicone Sherman Williams, Silver Brite, High Heat Silicone Devoe, HT-10, Silicone High Heat Coating

*Color shade to match Ameron GR-3, Pearl Gray.

-- End of Section --

000376

SECTION 11110

DRYER FEED SYSTEM

PART 1 GENERAL

1.1 SECTION INCLUDES

This specification provides the minimum design criteria, equipment specifications, and instrument specifications necessary to obtain firm quotes for the Dryer Feed System.

There will be two dryer systems, therefore duplicate Dryer Feed Systems will be required. The following equipment shall be included as part of the scope of supply:

A. Belt Feed Conveyor (H-1002A&B), Including Belt Scale (Z-1001A&B)

B. Feeder Transition Hopper and Slide Gate (T-2001A&B)

C. Dryer Feed Screw (H-2001A&B)

D. Hydraulic Power Unit (D-2001A&B)

E. Equipment supports, and guards as specified in this Section

F. All other equipment including, but not limited to, shaft seals and gasketing, piping, local instrumentation, as specified in this Section.

1.2 RELATED SECTIONS

The following IT specifications are attached as appendices and are considered a part of this specification:

Section 09900 - Painting General

Section 13310 - Noise Level Specification

Section 15170 - Motors

Section 16900 - Instrumentation and Control.

Division 16 - Electrical.

1.3 REFERENCES, CODES, AND STANDARDS

The Seller shall comply with the following codes and standards as applicable to the design, fabrication, assembly, and testing of all goods, materials, and equipment furnished under this specification. The Seller shall also comply with the requirements of all applicable codes, standards, statutes, and regulations. In the event of conflict between regulations, the more stringent shall apply.

A. American National Standards Institute (ANSI)
B. American Society of Mechanical Engineers (ASME)
C. American Society of Testing Materials (ASTM)
D. American Welding Society (AWS)
E. Conveyor Equipment Manufacturers Association (CEMA)
F. Ohio Department of Transportation (ODOT)
G. Instrument Society of America (ISA)
H. National Electric Code (NEC)
I. National Electric Manufacturers' Association (NEMA)
J. National Fire Protection Association (NFPA)
K. Occupational Safety and Health Administration (OSHA) of 1970 and all amendments and regulations.

All materials shall be new and high quality. Items that are not covered by the above specifications and codes shall be furnished in accordance with the individual manufacturer's standards. These items shall be indicated as such in the seller's proposal.

1.4 SYSTEM DESCRIPTION

This specification discusses the minimum design criteria, equipment specifications, and instrument specifications necessary to obtain firm quotes for the proposed dryer feed system equipment.

A. The scope of supply included in this specification is the Belt Feed Conveyor, Feeder Transition Hopper and Slide Gate, and Dryer Feed Screw, including Hydraulic Power Unit.

B. Certain instrumentation and control cabinets, as specified herein, shall be provided by the Seller. Interconnecting field wiring, and PLC system for process control will be furnished by others.

C. Electrical motors shall be provided by the Seller. Motor starters and interconnecting field wiring, etc., will be furnished and installed by others.

000378

D. Data and information are submitted for quotation to establish minimum acceptable design requirements and to provide reference data for engineering of the system. Their inclusion, however, does not imply, nor shall it be construed that IT has designed the equipment or components covered by this inquiry. It shall be the responsibility of the Seller to ensure that the equipment has been designed, fabricated, and shop-tested in accordance with all IT specifications, engineering codes, standards, and government regulations applicable to the specified service.

E. The Seller shall furnish all labor, materials, drawings, tools, transportation, and equipment necessary to design, engineer, fabricate, furnish, and deliver the job site. The system's completeness and working ability may be demonstrated with a field performance test before final acceptance by IT, The Seller shall supply the necessary startup and erection assistance to adjust, test, and demonstrate the performance of the feed system described herein. Startup and erection assistance will be provided in accordance with Seller's quoted field service rates by means of a separate service agreement which is not to be included in the equipment supply scope of work

F. The following items shall not be included as part of the scope of supply except as noted:

1. Motor starters.
2. Lighting.
3. Local control panels (Except for Hydraulic Power Unit).
4. Operating personnel.
5. Power and external control wiring from motor control center and control panels to local panels.
6. Material unloading and storage at the jobsite.
7. Concrete pad, foundations, and anchor bolts.
8. Field assembly and erection. Except Seller shall provide complete erection and installation instructions and Seller shall quote per diem rate for field service personnel.
9. All utilities.
10. Field performance testing.

1.5 SUBMITTALS

A. Bid Documents

Sketches, diagrams, and other supporting material listed below shall be submitted with the proposal. Seller shall provide the following data in its entirety with the bid documents:

1. Make, model, and weight of each piece of equipment
2. Major component cost information
3. Delivery schedule
4. Point of manufacture
5. Detailed scope of work with list of exceptions to inquiry defined scope
6. Equipment outline dimensions with interface points shown
7. Descriptive literature for all equipment furnished
8. Materials of construction
9. General arrangement drawings plan and elevation
10. Motor list with manufacturer, hp, rpm, frame, and type
11. All utility requirements
12. List of any Technical Exceptions to the Specification
13. Experience list of similar applications during the previous three years, including at least two references.

B. Drawings and Manuals

The following drawings, data, and manuals shall be submitted after award of purchase order but prior to delivery of equipment:

1. Anchor bolt location and loading drawing for foundation design

000380

2. Structural calculations for support structures

3. Detailed control schematics, wiring diagrams, and description of equipment furnished by the supplier

4. Assembly drawings on the equipment; drawings shall show space required for service and maintenance

5. Detailed arrangement and cross-section drawings including physical dimensions, support structure, equipment mounting arrangements and details, component interfaces, walkways, ladders, accessway, and foundation requirements including point loadings and anchor bolt details, etc., shall be submitted for review and approval

6. Operation and maintenance manuals

7. Installation instructions

8. Nondestructive testing documentation

9. Completed instrument data sheets including instrument ranges, serial numbers, etc.

10. List of ship-loose items and erection description.

Items 1, 2, 3, 4, and 5 to be supplied within six weeks of receipt Seller's purchase order. Items 6, 7, 8, 9, and 10 to be supplied two weeks prior to shipment.

C. Submittal Format

Drawings and data submitted for approval shall be in the form two blue lines for sizes larger than 11 by 17 inches. Smaller sizes may be actual catalog cuts or good photography. Final CERTIFIED drawings must be submitted as three stamped drawings and on CAD media in Autocad (Release 14) format.

D. Drawings and Manuals

All operation and maintenance manuals, installation instructions, and storage instructions shall be submitted in ten bound copies.

E. Spare Parts and Special Tools

After purchase order award, the Seller shall supply a list of recommended spare parts, special tools and fixtures for field assembly and maintenance of the system. The list shall include the following information:

1. Quantity - The number of spare parts or components the System Fabricator recommends to ensure continued operation for one year and five years.

2. Item - Description of spare part component.

3. Where used - Name of equipment item spare part component is used on.

4. Manufacturer's Part No. - Item manufacturer's part number or model number. This must be original manufacturer's part number and not a number assigned by Fabricator.

5. Manufacturer - Name of company that manufactured the component part.

6. Tag No. - Buyer's piping and instrumentation diagram (P&ID) Tag No. that identified equipment item spare part is used on.

7. Fabricator's No. - System Fabricator's equipment identification number used to identify equipment item on their drawings.

8. Price - Price at which Buyer will purchase component part from System Fabricator.

9. Delivery - Time required from purchase order to delivery of component part from System Fabricator to Buyer.

1.6 QUALITY ASSURANCE

A. All workmanship shall be in accordance with and equal to the best shop practices recognized within the industry.

B. Vendor shall provide all quality control procedures, inspections, and testing to the extent necessary to assure that all work is performed in accordance with this specification.

C. Inspections that IT deems necessary will be made at the following times:

1. During fabrication at SELLER's shop.

2. After fabrication at SELLER's shop.

3. Upon receipt at IT facilities.

000382

4. After installation at job site.

D. Inspections will cover the following areas:

1. Workmanship.

2. Materials of construction.

3. Transit damage.

4. Handling damage.

E. Inspection conditions.

1. The inspector must have complete access to the entire piece or pieces of equipment.

2. The vendor will furnish a qualified person to assist and accompany the IT inspector during the entire inspection.

1.7 SERVICE AND WARRANTY

A. The Seller shall provide the services of erection and startup advisers at the construction site to advise IT field personnel and to ensure that all of the equipment that the Seller supplies is properly installed and commissioned. The scope of these services shall include, but not be limited to, the following:

- Inspection and dimensional check of foundations
- Installation and alignment of conveyor belts, drives, and motors
- Preoperational testing of conveyor drives and control systems
- Controls and instrumentation functions.

B. Seller shall warrant all goods furnished against defects in material and/or workmanship for a period of twelve (12) months from initial operation or eighteen (18) months after shipment, whichever first occurs. Seller shall repair or replace defective goods at no cost to the Buyer.

1.8 DELIVERIES, STORAGE, AND HANDLING

A. Store in a clean, dry place and protect from weather prior to shipment. Provide protection from weather and damage during transit.

B. Loose items, if any, shall be tagged and delivered in a standard commercial package.

PART 2 PRODUCTS

2.1 MATERIAL

A. All materials furnished or incorporated in the fabrication shall be new. Materials shall comply with the following requirements and specifications. Materials required, but not specified below, shall be those best suited for the intended use considering service, function, strength, and durability. Materials containing asbestos shall not be used without prior review by IT.

B. If, in the opinion of the Seller, some other material or materials are better suited for the intended service conditions, supplier shall submit full information and obtain the IT Engineer's written concurrence for the proposed alternative material. Seller shall certify that materials used are compatible with intended service and environmental conditions.

C. The materials used in the equipment construction shall conform to the following ASTM standards:

ASTM A48	Iron castings
ASTM - A447-50 Type 11 or A-297-HK	Stainless steel castings
ASTM A167	316-L stainless steel plate
ASTM A325	High strength bolts
ASTM A307	Assembly
ASTM A536	Ductile iron castings
ASTM A36	Structural steel

2.2 DESIGN BASIS AND PERFORMANCE CRITERIA

The solid feed system will be an operating unit of an indirect fired rotary dryer for radioactive waste. The system will be installed at the U.S. Department of Energy s (DOE) Fernald Environmental Management Project (FEMP). The FEMP is a DOE-owned contractor-operated facility, located about 18 miles northwest of Cincinnati Ohio. Complete containment, spill prevention, equipment decontamination, and maintenance convenience are very important criteria to incorporate in the design of the system. Typical FEMP wastes include: contaminated soils, filter cake, salts, sludges, lime, and general debris in the form of shredded metal, wood, rock, etc.

Waste solids will be pretreated (e.g., classified, shredded, blended, and stockpiled by IT Corporation [IT]) in the feed preparation area to the extent required by the solid

000384

feed equipment. Pretreatment costs would be minimized by selecting a solid feed system capable of handling a wide range of solid waste characteristics such as stickiness, moisture, abrasiveness, and varying particle size (maximum 4 inches). The solid feed will be fed by a front end loader into an live bottom feed hopper and mass flow twin screw feeder (H-1001). The feed screw will be hydraulically driven for variable flow control and fixed maximum torque. The screw feeder will discharge onto a feed belt conveyor (H-1002). The conveyor shall be electrically driven and will run at a constant speed and will be equipped with a single idler weigh belt scale. The weight of the feed material and the speed of the conveyor will be measured and the feed rate will be calculated. The feed rate will be compared with a set point feed rate and a feed back loop will adjust the screw feed rate until the feed rate matches the set point. The tail portion of the feed belt conveyor will be located inside of a building, and the head end of the covneyor will be located outdoors. The portion of the conveyor in the building will be uncovered, and the portion outside the building will be totally enclosed. The weigh belt will discharge into a screw feeder (H-1003). The screw feeder will be hydraulically driven for variable speed control and fixed maximum torque. Depending on the moisture content, the cohesive and adhesive strength of the material can cause the material to bridge in the hopper. Therefore, the screw speed will be manually adjusted to maintain a feed rate that will meet or exceed the feed rate of the material being delivered to it to prevent an accumulation of material in the screw feed hopper.

A. The design conditions are specified to serve as a guide for the supplier and are not intended to give complete details. The Seller shall be responsible for correction of errors caused by deviation from design conditions or details shown in IT's drawings and specifications, unless these deviations are called to the attention of IT in writing and IT makes written acceptance of such deviation.

B. Utilizing feed preparation equipment (not within this scope of supply), a stock-pile of pre sized solid feed (4-inch and less) will be available to ensure uninterrupted feed supply to the solid feed system. The solid feed system shall be capable of handling the feed characterized.

C. The system will be designed for outdoor service and a continuous duty of 24 hours a day, 350 days per year.

D. Materials of construction shall be selected by Seller, unless specified herein.

E. The feed system shall be designed for ease of maintenance. Provisions shall be made for access to all moving parts for inspection, maintenance, and material clean out. Additional entry points and low point drains/plugs shall be included for decontaminating equipment with water and/or solvents.

F. The following shall be considered as typical feed material characteristics:

Description	Particle Size (inch)	Moisture (weight %) (wet basis)	Design Processing Rate (ton/hr)
Blended soil, lime, filter cake, wood chips, debris, hydrated salts	<4	15-67% 40% avg.	50 ton/hr (25 ton/hr each side)

1. The density may range from 70 to 130 pounds/cubic foot with overall average moisture range of 40 percent (wet basis); material angle of repose 40 to 45 degrees.
2. The bulk of material to be processed has an average density of 90 pounds/cubic foot and moisture level of 40 percent by weight (wet basis).
3. Testing indicates that the material has high cohesive and adhesive strength at the design moisture. Therefore, the wall angles of storage or feed hoppers should be vertical or negatively sloped.

G. Site conditions and utilities are as follows:

1. Electrical Power Supply
   - Main bus: 480 volts AC, 60 Hertz (Hz), 3 phase
   - Normal lighting: 120 volts AC, 60 Hz, 1 phase
   - Normal control: 120 volts AC, 60 Hz, 1 phase
   - Emergency lighting and control: 120 volts AC, 60 Hz, 1 phase
   - Instrumentation: 24 VDC, 4 to 20 milliamp (ma) input and output for analog signals; 120 volts AC for discrete contacts.
2. Compressed Air Supply
   - Instrument air (all compressed air): 80 to 120 psig at -40 F dew point.
3. Process Water Supply
   - Process water: 25 to 50 psig at 40 to 110°F.
4. Environmental Conditions
   The equipment shall be designed and fabricated to be operated or otherwise withstand the environmental conditions set forth below:
   - Ambient temperature -10 to +110 F
   - Wind force: 80 miles per hour (mph) maximum, I = 1.15
   - Seismic: Zone I, I = 1.25
   - Altitude: 578 feet above sea level.

2.4 SPECIFIC DESIGN REQUIREMENTS

A. Belt Feed Conveyor (H-1002A&B)

000386

The conveyor will receive feed material from the discharge of the mass flow screw feeder (H-1001A&B, provided by others). The interface chute with the mass flow feeder will be the Sellers responsibility.

1. Duty – The conveyor shall be constant speed, rated for 25 tph capacity. Typical feed rate will be 11 to 15 ton/hr.
2. Description – The conveyor shall be a heavy-duty, 24" belt conveyor troughed at 35 degrees. The conveyor shall include head, carrying, and tail sections complete with 35 degree carrying idlers, training idlers, and return idlers. Conveyor shall include a gravity take-up system. Support bents shall be provided as necessary to support the conveyor.
3. Special Features - The feed end of the conveyor will be in a building and shall be uncovered. The head end of the conveyor will be outdoors, and will be totally enclosed, with a top cover and a bottom catch pan. The enclosed portion of the conveyor shall be air-tight, with no tolerance for dust leakage. As an option, the bottom catch pan will be equipped with an AR plate liner and a low profile drag conveyor mechanism which will be operated periodically in order to clear the bottom catch pan and move belt spillage material into the belt charge hopper. It is estimate that the drag mechanism will be operated once every four hours for five minutes at a time.
4. Dimensions and Elevations – The attached drawing nos. D-10-40-001 and 002 provide overall lengths and elevations for conveyors H-1002A&B. Please note that H-1002B is longer than H-1002A.
5. Belt Pulleys – The head pulley shall be herringbone lagged. The tail pulley shall be self-cleaning. The take-up pulleys shall be drum type. All belt pulleys shall be mounted with compression hubs and externally lubricated bearings.
6. Troughing Idlers – All troughing idlers shall be 35-degree 5-inch diameter CEMA Class C spaced on 48 inch centers with greased bearings.
7. Return Idlers – All return idlers shall be 5-inch CEMA Class C spaced on 120 inch centers with greased/sealed for life bearings. Return idlers shall be rubber disc type.
8. Conveyor Belt – Belt shall be mildew and fungus resistant vitrile belt, 24 inches wide, 3-ply (3/16 inch cover by 1/16 inch back), 285 PIW minimum rating with a heavy duty mechanical splice.
9. Skirtboards – Skirtboards with rubber lip shall be provided at the loading point extending approximately 10 feet.
10. Belt Cleaner – A quality spring loaded type belt scraper system shall be provided at the discharge end of the conveyor.

11. Conveyor Top Cover - The portion of the conveyor located outdoors shall be enclosed by an air-tight cover (The portion of the conveyor located indoors will not be covered). The cover shall be constructed of 7 gauge carbon steel and may be rectangular or semicircular in cross section. The top cover shall be constructed in 10 ft. long sections, with flanged ends. The cover sections shall be flanged and bolted to the conveyor near the conveyor midsection. Each cover section shall include lifting lugs to aid in installation and removal. All flanged joints shall include gaskets to eliminate air leakage. Head pulley shaft penetrations shall be through stuffing boxes.
12. Bottom Catch Pan– The outdoor portion of the conveyor shall be equipped with a dust-tight bottom catch pan to collect all material which falls off the bottom of the conveyor belt. The bottom pan shall be constructed of ¼" c.s., and shall be rectangular in cross section. The bottom pan shall be provided in 20 ft. long sections, with flanged ends and bolted to the conveyor frame.
13. Bottom Pan Drag Conveyor – Seller shall provide a priced option for fitting the Bottom Catch Pan with a Drag Flight Mechanism. The Drag Flight shall be designed to periodically move material up the inclined bottom pan and into the belt conveyor discharge chute. The bottom and lower side-walls of the bottom catch pan shall be lined with ¼" thick AR 235 plate. The chain and flight attachment shall be Codema style "BT" or similar.
14. Shafts – Seller shall recommend size of all shafts. Sizing shall be based on heavy starting and bending loads created by the motor/reducer. Shaft deflection to be less than 0.0075 in/ft of width between conveyor bearing centers. Material shall be at least AISI C1018 carbon steel.
15. Drives – Drive motors shall be 1750 rpm, 460 V, 3 phase TEFC motors with Class II drive. Drives to include shaft-mounted gear reducer, V-belt sheaves, and belt guard in compliance with OSHA standards.
16. Walkway – No walkway is required.
17. Supports – Conveyor supports shall be provided as follows:
    a. Support at tail end
    b. Conveyor supports at intermediate sections shall be located approximately where shown on drawings D-10-40-001 & 002. Maintenance access is required between supports.
    c. Bent material and size to be determined by Seller
    d. Conveyor head end support shall be behind feed platform, as shown in drawings D-10-40-001 & 002.
18. Instrumentation – The following instrumentation shall be installed on the covneyor:

000388

a. Emergency pull cords and switches along the length of the conveyor inside the building.
b. Conveyor Belt Scale (Z-1001A&B) shall be provided, consisting of a Ramsey Series 10-20 belt scale, Ramsey Model 60-12 speed sensor, and a Ramsey Model 2101 Integrator. The integrator shall include an Analog I/O Board B to provide 4-20 mA DC output signals for feed rate and belt speed to IT's PLC. The belt scale and speed sensor shall be mounted on the conveyor by Seller. The belt scale shall be mounted on the open portion of the conveyor inside the building. The Integrator shall be shipped loose for installation by IT. The range of the belt scale shall be 0 – 25 ton/hr.

B. Dryer Screw Feeder (H-2001A&B)

The feed screw will receive feed material in the feed screw hopper from the belt feed conveyor (H-1002A&B).

1. Duty – The dryer feed screw shall be variable speed, rated for 25 tph capacity. Typical feed rate will be 11 to 15 ton/hr. The dryer feed screw shall be designed to provide uniform flow of solid feed to the dryer and ability to seal against a negative pressure differential in the dryer of 2 inches water gauge. The feed screw shall be capable of 10:1 turndown in rotational speed, and be equipped with reversing capability. Dryer design shall take into account potential for reduced capacity and increased stresses due to material buildup on the screws. Hydraulic power unit design, drive components, and shafting shall be selected based on running with 100% full trough at maximum bulk density.
2. Description – The feed screw shall consist of two counter-rotating, 18" diameter screws located in a housing. The housing and screws are not jacketed nor water cooled. The feed screw shall be powered by a hydraulic motor. The hydraulic motor and hydraulic power unit, as well as a local power unit control panel shall be provided by SELLER. The feed screw shall be in general accordance with drawing D-20-40-1. Each screw shall have one drive-end bearing and one discharge end bearing, with no intermediate bearings.
3. Special Features – The entire feed screw shall be mounted on rails for ease of removal and maintenance. The rails shall be 100 lb ASCE rail, provided by others. The carriage and wheels shall provided by SELLER. The wheels shall be 6" diameter minimum. The feed screw shall be counterweighted so that there is no vertical load on the dryer mounting plate (Dwg. D-20-40-1, Item #14) with the feeder full of material. The material conditions used for purposes of this design shall be material full to the top of the screws, at 90 lb/ft3 density.

4. Overall Dimensions – Drawing D-20-40-1 provides approximate dimensions. Screw feeder shall provide an insertion length of 11'-6", as shown on the drawing. The nominal screw length shall be 17'-6".
5. Screw Design – The screws shall be 18" outside diameter, with a 6" schedule 160 pipe shaft. Pipe shaft shall be ASTM A-106 Grade A. The flighting shall be solid, AR-360, ½" thick, stepped pitch, continuously welded both sides. Helicoid flighting is preferred, but sectional flighting is acceptable. SELLER shall specify whether sectional or helical flighting is being provided. Flighting pitch shall be 9" in the feed trough section, continuing two feet into the shroud (approx. 6 ft. long). Flighting pitch shall be 12" at the discharge end (approx. 11'-6" long).
6. Stub Shafts – Feed and discharge end stub shafts shall be constructed of AISI C1018 C.S. The stub shafts shall be attached to the screws via bolted connections for ease of change-out. Stub shaft diameter and length shall be determined by SELLER.
7. Main Bearings – Feed end bearings shall consist of cartridge block, greased roller bearings, Rexnord Heavy Duty 5000 Series or similar. Discharge end bearings shall be self lubricated, ball and socket flanged bearings, Dodge Solidlube LT Series or similar. Double discharge end bearings shall be provided for each shaft, as depicted on Drawing D-20-40-01. There shall be no intermediate hanger bearings.
8. Housing - Screw feeder housing shall be constructed of 304L SS, ¼" thickness. The housing shall be constructed in two bolt-up sections, with the joint located just downstream of the feed chute opening. Clearance between the screw and the housing shall be approximately ½".
9. Rear Clean Out Box – The screw feeder shall be equipped with a rear clean-out box consisting of a 10" long compartment through which the screw stub shaft penetrates. This compartment shall be equipped with a bottom cleanout door. The rear shaft seals will be located on the back plate of this compartment. The purpose of this compartment is to minimize solids contact with the rear shaft seals.
10. Timing Gears – Timing gears shall consist of AISI 4140 C.S., flame hardened to 55-60 Rockwell C, minimum.
11. Drive System – Drive sprocket, drive chain, and gear box shall be sized and provided by SELLER, based on the conditions provided in item 1, and based on a 1.5 service factor.

000390

12. Hydraulic Power Unit – SELLER shall provide two separate Hydraulic Power Units, each sized to operate one screw feeder. Power requirements shall be based on the Duty provided above in Article 1. Hydraulic power unit will be located at grade, directly below the feed screw. Feed screw centerline elevation will be approximately 13' above grade. SELLER shall provide a pre-assembled, shop-tested Power Unit, including electric motor, hydraulic pump and reservoir, filters, valves, and interconnecting hydraulic tubing. SELLER shall also provide a NEMA control panel, as described in Article 2.4.C. Hydraulic lines and hoses connecting the hydraulic power unit and the Feed Screw shall be sized and specified by SELLER, but provided by others.

2.3 FABRICATION

A. Bolt holes in structures shall be drilled or punched. Burning of holes will not be permitted.

B. Flange bolt holes shall straddle normal centerline of unit.

C. Nozzles and flanged joints 6 inches or smaller shall be fabricated with flat-face flanges having a machined face. Facing shall be suitable for type of gasket used. Seller shall state types and materials of gaskets used subject to IT review and approval.

D. Seller shall lubricate external bolting with a metallic-base waterproof lubricant to prevent galling in use and aqueous corrosion during testing, shipping, and storage. Lubricant shall be applied to the full length of the thread.

E. Seller shall furnish covers, bolts, and gaskets for covered openings and shall furnish screwed plugs of similar material for couplings.

F. Welding
   1. Seller shall be responsible for, but shall not be limited to, the following concerning welded components:
      - Weld appearance
      - Dimensional accuracy
      - Removal of all weld splatter
      - Prevention of flaws such as cracks, porosity, unfilled craters.
   2. Seller shall be responsible for, but shall not be limited to, the following concerning inspection of the work during welding:
      - Welding process
      - Cleaning
      - Joint preparation
      - Filler metal

- Qualified welding procedure
- All welding by AWS or ASME code certified welders
- Nondestructive testing.

3. All welding shall meet the visual inspection requirements of the appropriate sections in the latest edition of the structural welding code of the AWS.

2.4 ELECTRICAL AND CONTROLS

A. Motors and Electrical Equipment

1. All motors shall be 3-phase 460-volt (VAC) totally enclosed fan cooled (TEFC). Control voltage is to be either 24V direct current (DC) or 120V alternating current (AC). All motors shall be provided based on a 1.15 service factor, unless otherwise specified. All motors and electrical equipment furnished under this specification shall be in accordance with Specification for Motors, Section 15170.
2. Electrical area is "unclassified."

B. Instrumentation and Controls

1. Seller shall provide only the instrumentation and controls detailed in this specification. All Seller-provided instrumentation shall be in accordance with Instrument and Control Specification, Section 16900.
2. Instrumentation shall be electronic utilizing 4 to 20 ma, 24 VDC for analog signals and 120 VAC for discrete signals.

C. Control Panel

The Seller shall include a NEMA 4 control panel completely assembled, tested and clearly labeled, for the hydraulic power unit only. The control panel shall be designed to provide variable speed and reversing features for the screw feeder. The panel shall be equipped with a "Hand/Off/Auto" position switch and status lights to allow and indicate local or remote operation. The control panel shall also be equipped with a "Forward/Reverse" switch, a speed selector dial, and a "Jog" button, which will only be operable when in "Hand" mode. Remote operation will be done by IT's PLC, and will be forward only. IT will provide a 120 V control signal for starting the hydraulic pump, a 120V control signal for starting rotation of the Screw Feeder, and a 4-20 mA signal for adjusting the Screw Feeder speed. The panel shall include panel heaters. Motor starters will be provided by IT and will be located in MCC enclosure.

2.5 LABELING

A. Each item shall have a manufacturer's standard nameplate permanently attached at a location which is easily readable. The nameplate shall contain the following information as applicable.

1. Description (Provided by IT)

000392

2. Number/tag number (Provided by IT)
3. Manufacturer's name
4. Capacity
5. Utilities
6. Date of manufacture
7. Purchase order.

PART 3

3.1 ASSEMBLY AND TESTING

A. All equipment shall be shipped and assembled to the maximum practical extent consistent with shipping limitations.

B. Shop tests, where applicable, will be witnessed by IT. IT requires at least 7 days notice and a conformation 48 hours before starting each test.

C. IT requires an operational demonstration of both Screw Feeders, with their respective Hydraulic Power Units in the shop prior to shipment. The demonstration shall consist of running the Screw Feeders empty in forward over their specified speed range, and in reverse.

3.2 SURFACE PREPARATION AND COATING

A. All motors, drive units, and subsupplier-furnished standard items may be shop-primed and factory-finished with the subsupplier's standard coating.

B. All items shall be cleaned and coated by the supplier except for machine-finished surfaces and corrosion-resistant surfaces. Machined surfaces of ferrous metals, including threaded holes, that will be exposed shall be cleaned and coated with an acceptable rust-preventive compound.

C. Where interior coatings are not required, the interior surface shall be thoroughly cleaned to remove all mill scale, spatter, and other debris and deposits that may come loose in service.

D. All ferrous surfaces and structural steel shall be sandblasted and primed.

E. Refer to Paint Specification, Section-09900 for complete surface preparation, priming, and finish coat application details including exterior hot surfaces. Finish color shall be Number 205, Light Gray for cold surface and Number 206 for hot surfaces.

3.3 FIELD PERFORMANCE TEST

A. The Seller shall have full responsibility for compliance with the requirements of the specifications contained herein. Review and/or approval of drawings, data, or specifications by IT with regard to general design and controlling dimensions does not constitute acceptance of any designs, materials, or equipment that will not fulfill the functional or performance requirements established herein.

B. After the feed system equipment has been installed, and after the Seller has inspected the installation and certified that it is in accordance with the Seller's recommendations, the performance test will be conducted by IT at a time to be mutually agreed upon. The test will be performed by IT in the presence of the supplier.

D. Faulty performance, if determined by IT to be due to supplier furnished items or service, shall be corrected to IT's satisfaction at Seller's expense within a negotiated time.

E. The field performance detailed test plan shall be mutually agreed upon between Seller and IT prior to testing. The detailed test plan shall include the following elements:

1. The performance test shall include at least three hours of operation of the Dryer Feed System at a feed rate of up to 25 ton/hr, as determined by the belt scale. A surrogate, non-contaminated material will be used for the performance test. Appendix A provides details of the surrogate material.

-End of Section-

000397

SECTION 11112

DRYER PRODUCT HANDLING SYSTEM

PART 1 GENERAL

1.1 SECTION INCLUDES

This specification discusses the minimum design criteria, equipment specifications, instrument specifications, and process control requirements necessary to obtain firm quotes for the dried product handling system, as well as to identify any limitations imposed by the equipment.

There will be two dryer systems operating in paralell requiring dual Dryer Product Handling Systems. The following shall be included as a minimum as part of the scope of supply of the dried product handling system:

1. Drag Flight Conveyor with intergral Discharge Chute (H-3001)
2. Double Dump Valve (H-3002)
3. Pug Mill (H-3003)
4. Drives.
5. Local control panel.
6. Equipment supports, platforms, ladders, handrails, and guards.
7. All other equipment including, but not limited to, seals and gasketing, local instrumentation, skid wiring and conduit, and controls within the equipment boundaries.
8. All the instrumentation, controls, and equipment as identified on the P&IDs.
9. Refer to Equipment Data Sheets:
   773481-H3001
   773481-H3002
   773481-H3003

1.2 RELATED SECTIONS

The following IT specifications are attached as appendices and are considered a part of this specification:

Section 09900 - Painting General

Section 13310 - Noise Level Specification

Section 15170 - Motors

Section 16900 - Instrumentation and Control

Division 16 - Electrical.

1.3 REFERENCES, CODES, AND STANDARDS

The Seller shall comply with the following codes and standards as applicable to the design, fabrication, assembly, and testing of all goods, materials, and equipment furnished under this specification. The Seller shall also comply with the requirements of all applicable codes, standards, statutes, and regulations. In the event of conflict between regulations, the more stringent shall apply.

A. American National Standards Institute (ANSI)
B. American Society of Mechanical Engineers (ASME)
C. American Society of Testing Materials (ASTM)
D. American Welding Society (AWS)
E. Conveyor Equipment Manufacturers Association (CEMA)
F. Ohio Department of Transportation (ODOT)
G. Instrument Society of America (ISA)
H. National Electric Code (NEC)
I. National Electric Manufacturers' Association (NEMA)
J. National Fire Protection Association (NFPA)
K. Occupational Safety and Health Administration (OSHA) of 1970 and all amendments.

All materials shall be new and high quality. Items that are not covered by the above specifications and codes shall be furnished in accordance with the individual manufacturer's standards. These items shall be indicated as such in the seller's proposal.

1.4 SYSTEM DESCRIPTION

This specification discusses the minimum design criteria, equipment specifications, instrument specifications, and process control requirements necessary to obtain firm

000396

quotes for the proposed solid feed system equipment, as well as to identify any limitations imposed by the equipment.

A. The scope of supply included in this specification is all necessary equipment from the rotary drier discharge chute to the product stock pile, including the drag flight conveyor, discharge chute, and pug mill.

B. The instrumentation and control provided by the Seller should be adequate for good safe industrial operation. Local control cabinets should include terminal strips for tieing in I-O for central control and process monitoring. The central control and process monitoring PLC system will be furnished by others.

C. Local electrical motor start/stop stations with light indicators shall be included with the system. Motor starters and interconnecting field wiring, etc., will be furnished and installed by others.

D. Data and information are contained herein submitted to establish minimum acceptable design requirements and to provide reference data to engineer the system. Their inclusion, however, does not imply, nor shall it be construed that Buyer has designed the equipment or components covered by this inquiry. It shall be the responsibility of the Seller to ensure that the equipment has been designed, fabricated, and tested in accordance with all Buyer specifications hereto attached, engineering codes, standards, and government regulations applicable to the specified service.

E. The Seller shall furnish all labor, materials, drawings, tools, transportation, and equipment necessary to design, engineer, fabricate, furnish, and deliver to the jobsite. The Seller shall supply the necessary startup and erection assistance to adjust, test, and demonstrate the performance of the dried product handling system described herein. The system's completeness and working ability shall be demonstrated with a field performance test before final acceptance by the Buyer.

F. The following items will be furnished by the Buyer and shall not be included as part of the scope of supply except as noted:

1. Motor starters.

2. Lighting.

3. Operating personnel, other than supervisory for startup and testing.

4. Power and external control wiring from motor control center and control panels to local panels.

5. Material unloading and storage at the jobsite.

6. Concrete pad, foundations, and anchor bolts.

7. Field assembly and erection. Except Seller must provide complete erection and installation instructions and Seller must quote per diem rate for field service personnel.

8. All utilities.

9. Field performance testing.

1.5 SUBMITTALS

A. Bid Documents

Sketches, diagrams, and other supporting material listed below shall be submitted with the proposal. Seller shall provide the following data in its entirety with the bid documents:

1. Make, model, and weight of each piece of equipment

2. Major component cost information

3. Delivery schedule

4. Point of manufacture

5. Detailed scope of work with list of exceptions to inquiry defined scope

6. Equipment outline dimensions with interface points shown

7. Descriptive literature for all equipment furnished

8. Materials of construction

9. General arrangement drawings plan and elevation

10. Motor list with manufacturer, hp, rpm, frame, and type

11. All utility requirements summarized in tabular form

000398

12. Recommended spare parts, special tools and fixtures for field assembly (lifting slings, spreader bars, etc.) and maintenance of the system with pricing for one year and five years of operations. A detailed description of the spare parts, special tools and fixtures shall be supplied after the purchase order award.

B. Drawings and Manuals

The following drawings, data, and manuals shall be submitted after award of purchase order but prior to delivery of equipment:

1. Anchor bolt location and loading drawing for foundation design

2. Structural calculations for support structures

3. Detailed control schematics, wiring diagrams, and description of equipment furnished by the supplier

4. Assembly drawings on the equipment; drawings shall show space required for service and maintenance

5. Detailed arrangement and cross-section drawings including physical dimensions, support structure, equipment mounting arrangements and details, component interfaces, walkways, ladders, accessway, and foundation requirements including point loadings and anchor bolt details, etc., shall be submitted for review and approval

6. Operation and maintenance manuals

7. Installation instructions

8. Nondestructive testing documentation

9. Completed instrument data sheets including instrument ranges, serial numbers, etc.

10. List of ship-loose items and erection description.

Items 1, 2, 3, 4, and 5 to be supplied within six weeks of receipt Seller's purchase order. Items 6, 7, 8, 9, and 10 to be supplied two weeks prior to shipment.

C. Submittal Format

Drawings and data submitted for approval shall be in the form of one reproducible (sepia or other transparency) and two blue lines for sizes larger than 11 by 17 inches. Smaller sizes may be actual catalog cuts or good photography. Final CERTIFIED drawings must be submitted as mylars or on CAD media in Autocad (Release 13 or 14) format.

D. Drawings and Manuals

All operation and maintenance manuals, installation instructions, and storage instructions shall be submitted in ten bound copies.

E. Spare Parts and Special Tools

After purchase order award, the Seller shall supply a list of recommended spare parts, special tools and fixtures for field assembly and maintenance of the system. The list shall include the following information:

1. Quantity - The number of spare parts or components the System Fabricator recommends to ensure continued operation for one year and five years.

2. Item - Description of spare part component.

3. Where used - Name of equipment item spare part component is used on.

4. Manufacturer's Part No. - Item manufacturer's part number or model number. This <u>must</u> be original manufacturer's part number and <u>not</u> a number assigned by Fabricator.

5. Manufacturer - Name of company that manufactured the component part.

6. Tag No. - Buyer's piping and instrumentation diagram (P&ID) Tag No. that identified equipment item spare part is used on.

7. Fabricator's No. - System Fabricator's equipment identification number used to identify equipment item on their drawings.

8. Price - Price at which Buyer will purchase component part from System Fabricator.

9. Delivery - Time required from purchase order to delivery of component part from System Fabricator to Buyer.

000400

1.6 QUALITY ASSURANCE

A. All workmanship shall be in accordance with and equal to the best shop practices recognized within the industry.

B. Vendor shall provide all quality control procedures, inspections, and testing to the extent necessary to assure that all work is performed in accordance with this specification.

C. Inspections that IT deems necessary will be made at the following times:

1. During fabrication at SELLER's shop.
2. After fabrication at SELLER's shop.
3. Upon receipt at IT facilities.
4. After installation at job site.

D. Inspections will cover the following areas:

1. Workmanship.
2. Materials of construction.
3. Transit damage.
4. Handling damage.

E. Inspection conditions.

1. The inspector must have complete access to the entire piece or pieces of equipment.
2. The vendor will furnish a qualified person to assist and accompany the IT inspector during the entire inspection.

1.7 SERVICE AND WARRANTY

A. The Seller shall provide the services of erection and startup advisers at the construction site to advise IT field personnel and to ensure that all of the equipment that the Seller supplies is properly installed and commissioned. The scope of these services shall include, but not be limited to, the following:

- Inspection and dimensional check of foundations

- Installation and alignment of conveyor, drives, and motors
- Preoperational testing of conveyor drives and control systems
- Controls and instrumentation functions.

B. All equipment provided shall be warranted by the manufacturer including parts and labor.

1.8 DELIVERIES, STORAGE, AND HANDLING

A. Store in a clean, dry place and protect from weather prior to shipment. Provide protection from weather and damage during transit.

B. Loose items, if any, shall be tagged and delivered in a standard commercial package.

PART 2 PRODUCTS

2.1 PROCESS DESCRIPTION

A. Bulk waste material will be dried in a rotary dryer from an average moisture of 40% (wet basis). It will be dried to its optimum moisture for compaction of 10% (wet basis) on average.

The rotary dryer is maintained under a negative pressure to prevent fugitive emissions. The dried product shall gravity discharge out of the dryer into a discharge chute and onto a drag flight conveyor (H-3001). A column of material shall be maintained in the discharge chute that will provide an air seal to prevent air infiltration from the product handling system back into the rotary dryer. The chute shall be supported by the drag flight conveyor and will be connected to the dryer breaching discharge flange with an expansion joint. The feed rate into the chute will be governed by the feed rate into the dryer. The discharge rate out of the chute shall be governed by the speed of the drag flight conveyor. The drag flight conveyor speed shall vary to maintain a set material weight in the chute. The throughput will vary from 2 tph to 15 tph depending upon material properties and conditions in the feed system and the dryer.

B. The drag flight conveyor (H-3001) shall have an inclined section that will elevate the dried product and discharge it into a Pug Mill (H-3003) where any large agglomerations will be broken and blended to insure consistent material properties. Material will be discharged from the Pug Mill to the floor where it will be transported by front end loader for further blending or disposal. The discharge elevation shall allow access for the front end loader.

000402

2.2 WASTE CHARACTERISTICS

A. The characteristics of the dried product from the rotary dryer will be waste solids including: soil, filter cake, lime, hydrated salts and shredded debris. The chloride content of the waste is high (3% by weight) and should be considered in the material selection. A shredder system (supplied by others) will reduce all of the bulk solids to a particle size of minus 4 inches. The bulk density will range between 90 lb/ft^3 and 200 lb/ft^3. The average bulk density will be 100 lb/ft^3 and 10% moisture (wet basis). The bulk temperature of the dried product will range between 200°F to 250° during normal operation. During process shut down the last heel of material discharging from the dryer will likely be dry and dusty. It is anticipated that the material temperature will approach the temperature of the dryer and will range from 600°F to 800°.

2.3 SPECIFIC DESIGN REQUIREMENTS

A. General

1. The design conditions are specified to serve as a guide for the Seller.

2. Local control cabinets should include terminal strips for tieing in I-O to the central control system (CCS). The CCS (PLC based) will be furnished by others. Space shall be provided on the control skid for mounting remote terminal unit cabinets for the CCS.

3. The system shall be designed for continuous outdoor service. The system shall operate 24 hours a day, 350 days per year.

4. The equipment will be shipped to the site as large components. It shall be assembled in the largest units possible for ease of erection and to minimize site-specific preparation and foundations. The system and its components shall be shop assembled as completely as possible.

5. Materials of construction shall be selected by Seller and shall be suitable for the operating service as defined in this specification.

6. The system shall be designed for ease of maintenance. Provisions shall be made for access to all internal parts for inspection, maintenance, and material clean out. Additional entry points and low point drains/plugs shall be included for decontaminating equipment with steam, water and/or liquids. Lifting lugs shall be

provided where appropriate for lifting, loading, off-loading, and assembly of the equipment at the jobsite.

7. Electrical Power Supply

   a. Main bus: 480 volts AC, 60 Hertz (Hz), 3 phase

   b. Control: 120 volts AC, 60 Hz, 1 phase

   c. Instrumentation: 24 V DC, 4 to 20 milliamp (ma) input and output for analog signals; 120 volts AC for discrete contacts.

8. Environmental Conditions - The equipment will be located outdoors and shall be designed and fabricated, to withstand the environmental conditions set forth below:

   a. Ambient temperature: 12 to 92°F

   b. Wind force: 80 mph basic wind speed
      Exposure "C"
      Importance Factor 1.15.

   c. Seismic: Zone 1, Importance Factor 1.25.

   d. Altitude: 580 feet above sea level.

9. All bearings shall have a minimum 50,000 hour B-10 life.

10. Seller shall design, provide detailed and checked shop drawings and design calculations, fabricate, assemble, and deliver equipment and accessories to make a complete job as called for in this specification.

11. All speed reducers shall have an American Gear Manufacturer's Association (AGMA) service factor of 1.75 and couplings shall be a minimum of 1.75.

12. Noise levels shall meet requirements of Section 13310 - Noise Level Specification.

B. Platforms and Ladders

1. A platform shall be provided for access and servicing the drive of the drag flight conveyor. The deck shall be accessible from the ground level by a caged ladder.

2. Deck Construction - Deck flooring shall be 3/16 by 1 inch galvanized bar grating.

3. Handrails - Handrails 42 inches high with center bar and kick plate designed in conformance with OSHA standards shall be provided around each platform.

4. Ladders - All ladders shall be designed and installed to comply with OSHA standards. The ladders and cage shall be galvanized after fabrication and designed to bolt to the supporting structure, where required. A safety bar or chain shall be provided at the ladder entrance.

2.4 LABELING

A. Each item shall have a manufacturer's standard nameplate permanently attached at a location that is easily readable. The nameplate shall contain the following information, as applicable:

1. Item description.
2. Item number/tag number.
3. Manufacturer's name.
4. Purchase order number.
5. Date of manufacture.
6. Capacity.

2.5 FABRICATION

A. Bolt holes in structure members shall be drilled or punched. Burning of holes will not be permitted.

B. Flange bolt holes shall straddle normal centerline of unit.

C. Nozzles and flanged joints 152 mm (6 inches) or smaller shall be fabricated with flat-face flanges. Facing shall be suitable for type of gasket used. Seller shall state types and materials of gaskets used subject to Buyer review and approval.

D. Seller shall lubricate external bolting with a metallic-base waterproof lubricant to prevent galling in use and aqueous corrosion during testing, shipping, and storage. Lubricant shall be applied to the full length of the thread.

E. Seller shall furnish covers, bolts, and gaskets for covered openings and shall furnish screwed plugs of similar material for couplings.

F. Welding

1. Seller's responsibilities shall include, but shall not be limited to, the following concerning welded components:

- Weld appearance
- Dimensional accuracy
- Removal of all weld splatter
- Prevention of flaws such as cracks, porosity, unfilled craters.

2. Seller shall be responsible for, but shall not be limited to, the following concerning inspection of the work during welding:

- Welding process
- Cleaning
- Joint preparation
- Filler metal
- Qualified welding procedure
- All welding by AWS or ASME code certified welders
- Nondestructive testing.

3. All welding shall meet the inspection requirements of the appropriate sections in the latest edition of the structural welding code of the AWS.

4. Any material or workmanship that is rejected by the Buyer or by his designated representative shall be replaced or repaired promptly by the Seller to the satisfaction of Buyer.

5. All production and repair welding shall be in accordance with the latest issue of the Structural Welding Code of the AWS D1.1-90.

6. All welders shall be qualified in accordance with the requirements of the latest issue for the structural welding code of the AWS.

000406 G. Machinery guards.

1. Guards shall be provided for all rotating shafts, pinch points, etc. per OSHA requirements.

2. Removable machinery guards that are large or difficult to handle, regardless of total weight, must be equipped with handles.

H. Inspection

1. Supplemental to the inspection by the Seller and prior to shipment, a Buyer's representative will inspect the system. Seller shall notify seller in writing when the system or key components of the system are available and ready for inspection.

2. Inspection and approval by the Buyer's agent shall not relieve the Seller from compliance with these specifications.

I. Lubrication

1. Seller shall be responsible for providing a recommended lubrication list for each piece of equipment. The lubrication systems shall be complete and operable systems with all controls and appurtenances furnished.

2. Lubrication systems for rollers and gear boxes must be designed for conditions specified. Seller shall supply Buyer with all drawings and information required to describe the recommended lubrication systems.

PART 3 EXECUTION

3.1 MOTORS AND ELECTRICAL EQUIPMENT

A. All motors shall be 3-phase 480-volt (VAC) totally enclosed fan cooled (TEFC). Control voltage is to be either 24V direct current (DC) or 120V alternating current (AC). All motors shall be provided based on a 1.15 service factor. All motors and electrical equipment furnished under this specification shall be in accordance with Specification for Motors, Section 15170.

B. Area Electrical classification for this equipment is unclassified.

3.2 INSTRUMENTATION AND CONTROLS

A. The Seller shall provide the basic design for instrumentation and control (I&Cs) systems where required by this specification, and shall also provide general criteria establishing quality and characteristics of hardware. All Seller-provided instrumentation shall be in accordance with Section 16900 - Instrumentation and Control.

B. Instrumentation shall be electronic utilizing 4 to 20 mA, 24 VDC for analog signals and 120 VAC for discrete signals.

C. The Seller shall include a NEMA 4 control panel completely assembled, tested and clearly labeled for each major piece of equipment. The control panel shall be designed to incorporate the entire control logic/sequence, however should the scope of supply include additional equipment the supplier may include other logic/sequence operations in one panel. If hardwired logic/sequence operation is used, then supervisory input-output terminals must be provided to interface with the central control system. Each panel shall report the status of the equipment on the face of the panel by means of status lights, and analog displays. Each panel shall provide means of manual override of the control system and have an emergency shutdown (ESD) Pull Button. Provide relay wired to terminal block for remote mounted emergency shut-down. Provide alarm package with test button and indicating lights which indicate control circuit is energized and system is running, and will sound an audible alarm and light an alarm beacon upon detection of system malfunction. Each panel shall contain panel heaters. Motor starters will be located in MCC building.

3.3 MATERIALS

A. All materials furnished or incorporated in the fabrication shall be new. Materials shall comply with the following requirements and specifications. Materials required, but not specified below, shall be those best suited for the intended use considering service, function, strength, and durability. Materials containing asbestos shall not be used without prior approval of Buyer.

B. If, in the opinion of the Seller, some other material or materials are better suited for the intended service conditions, Supplier shall submit full information and obtain the Buyer's written concurrence for the proposed alternative material. Seller shall certify that materials used are compatible with intended service and environmental conditions.

C. The materials used shall conform to ASTM standards.

3.4 SURFACE PREPARATION AND COATING

A. All motors and subsupplier-furnished standard items may be shop-primed and factory-finished with the subsupplier's standard coating. All such items shall be identified in the Seller's cleaning and coating procedures.

B. All items not included in Paragraph A shall be cleaned and coated by the Seller except for machine-finished surfaces and corrosion-resistant surfaces. Machined surfaces of ferrous metals, including threaded holes, that will be exposed shall be cleaned and coated with an acceptable rust-preventive compound.

C. Where interior coatings are not required, the interior surface shall be thoroughly cleaned to remove all mill scale, spatter, and other debris and deposits that may come loose in service.

D. All ferrous surfaces and structural steel shall be primed. All fabricated carbon steel shall be sandblasted and primed.

E. Refer to Section 09900 - Painting for complete surface preparation, priming, and finish coat application details including exterior hot surfaces. Finish color shall be Number 205, Light Gray for cold surface and Number 206 for hot surfaces.

3.5 ASSEMBLY AND TESTING

A. All equipment shall be shipped, assembled to the maximum practical extent consistent with shipping limitations.

B. Shop tests, where applicable, may be witnessed by Buyer; however, Buyer may elect to waive witnessing any of these tests. Buyer requires at least 5 days notice and a confirmation 48 hours before starting each test.

3.6 SERVICE REPRESENTATIVE

A. The Seller shall provide the services of erection and startup advisers at the construction site to advise Buyer field personnel and to ensure that all of the equipment that the Seller supplies is properly installed and commissioned. The scope of these services shall include, but not be limited to, the following:

1. Inspection and dimensional check of foundations.

2. Installation and alignment of seals, drive gears, and motors.

3. Controls and instrumentation checkout.

4. Equipment startup.

B. The bid shall include an allowance for 1 weeks field support at the jobsite. The bid shall also include all travel and temporary living expenses for the field service personnel.

3.7 FIELD PERFORMANCE TEST

A. The Seller shall have full responsibility for compliance with the requirements of the specifications contained herein. Review and/or approval of drawings, data, or specifications by Buyer with regard to general design and controlling dimensions does not constitute acceptance of any designs, materials, or equipment that will not fulfill the functional or performance requirements established herein.

B. After the system has been installed, and after the Seller has inspected the installation and certified that it is in accordance with the Seller's recommendations, a performance test will be conducted by the Buyer at a time to be mutually agreed upon with the Seller. The tests will be performed by Buyer in the presence of the Seller.

C. Faulty performance or any other defects, if determined by the Buyer to be due to seller-furnished items or service, shall be corrected to Buyer's satisfaction at Seller's expense within a negotiated time.

D. The field performance test shall be established prior to award.

1. The bid shall include an allowance for a field service representative to witness the performance test.

2. The costs associated with per diem, travel and temporary living expenses for the field service personnel shall be included with the bid as a seperate line item.

3.8 WARRANTY

Seller shall warrant all goods furnished against defects in material and/or workmanship for a period of twelve (12) months from initial operation or eighteen (18) months after shipment, whichever first occurs. Seller shall repair or replace defective goods at no cost to the Buyer.

-End of Section-

000410

Section 11182
Rotary Dryer Specification

DRAFT

Operable Unit 1
Revision E

IT Corporation
312 Directors Drive
Knoxville, TN 37923

DRAFT

000412

SECTION 11182
INDIRECT DRYER FINAL PURCHASE SPECIFICATION
TABLE OF CONTENTS

PAGE

PART 1 GENERAL . . . 1
1.1 SECTION INCLUDES . . . 1
1.2 ORDER OF PRECEDENCE . . . 1
1.3 PROJECT SCHEDULE . . . 1
1.4 REFERENCES, CODES, AND STANDARDS . . . 1
A. General: . . . 1
B. Reference Specifications (Sections) and Documents . . . 2
C. Codes and Standards: . . . 2
1.5 SUBMITTALS . . . 3
A. Requirements . . . 3
B. Approval Drawings . . . 3
C. Burner Piping Schematic Drawings: . . . 4
D. Certified Drawings . . . 4
E. Assembly drawings . . . 5
F. Installation, Operating & Maintenance (IOM) Manuals . . . 5
G. Miscellaneous Submittals . . . 6
1.6 QUALITY ASSURANCE . . . 6
A. Quality Assurance Program Requirements . . . 6
B. Shop Inspections / Acceptance Test . . . 7
1.7 SELLER'S SUBSTITUTIONS . . . 8
A. SELLER's Responsibility . . . 8
B. IT's Responsibility . . . 8

PART 2 PRODUCTS . . . 9
2.1 MATERIALS AND EQUIPMENT . . . 9
A. Responsibilities for Materials and Equipment: . . . 9
B. Materials and Equipment to be provided by SELLER: . . . 9
C. Services to be Provided by Seller: . . . 10
D. Items to be Provided by IT: . . . 10
E. Fasteners: . . . 11
2.2 TECHNICAL REQUIREMENTS . . . 11
A. General: . . . 11
B. System Description: . . . 11
C. Operating Conditions and Requirements: . . . 13
D. Mechanical Requirements . . . 15
E. Control and Instrumentation Requirements: . . . 24
F. Electrical Requirements: . . . 27
G. Structural Requirements: . . . 27
H. Design Interfaces: . . . 28
2.3 MATERIALS OF CONSTRUCTION . . . 29
2.4 FABRICATION REQUIREMENTS . . . 29
A. General: . . . 29

SECTION 11182
INDIRECT DRYER FINAL PURCHASE SPECIFICATION
TABLE OF CONTENTS

PAGE

B. Welding: 29
C. Refractories: 30

PART 3 EXECUTION 31
3.1 SHOP ASSEMBLY 31
3.2 TESTING AND INSPECTION 31
A. General: 31
B. Integrated Plan: 31
C. Witnessing and Notification: 31
D. Pre-Planned Inspections and Tests: 32
E. Proposed Procedures: 32
F. Weld Inspection: 32
G. Weld Repair Procedures: 32
3.3 EQUIPMENT IDENTIFICATION 32
3.4 FINISH AND PAINTING 33
3.5 PRODUCT DELIVERY AND ACCEPTANCE 33
A. Packaging: 33
B. SELLER's Instructions: 34
C. Receiving Inspection: 34
D. Handling and Storage: 34
3.6 ERECTION AND INSTALLATION 34
3.7 PERFORMANCE GUARANTEE TEST METHODS 35

000414

SECTION 11182
Rotary DRYER FINAL PURCHASE SPECIFICATION

PART 1 GENERAL

1.1 SECTION INCLUDES

This specification defines the overall engineering, design, fabrication/manufacturing, shop testing, packaging, delivery, and field testing of the Rotary dryer system, complete with all necessary equipment, controls, and instrumentation.

This specification is prepared to be used as a support document with the Subcontract Agreement between the SELLER, ABB Air Preheater, Inc. (ABB) and the BUYER, International Technology Corporation (IT)

1.2 ORDER OF PRECEDENCE

In the event of any conflicts between the referenced Specifications and Drawings, the following Order of Precedence shall apply. (Lowest item number shall prevail.)

Specification Section 11182, Rev. E A
IT P&ID Drawings No.'s
IT reference specifications listed in Section 1.4B of this specification
Codes and Standards listed in Section 1.4C of this specification

1.3 PROJECT SCHEDULE

The major project schedule milestones are as follows:

Order	Day 1
Preparation of General Arrangement and Layouts	Week 1 thru 6
Customer Approval of General Arrangement & Layouts	Weeks 7 & 8
Receipt of Approved G.A. and Layout	End Week 8
Engineering of Assemblies, Electricals & Burner Schematics	Weeks 9 thru 20
Orders Placed for Vendor Components	Weeks 11 thru 20
Prefab, Fabrication and Assembly	Weeks 14 thru 28
Final Assembly and Checkout	Weeks 29 & 30
First Unit Ready to Ship	End of Week 30
Second Unit Ready to Ship	End of Week 32

1.4 REFERENCES, CODES, AND STANDARDS

A. General:
Equipment and materials of construction shall conform to the requirements of

this specification and to the SELLER's standard or recommended design for the intended service. Equipment shall conform to this specification, and to acceptable industry standards of engineering, design, and workmanship.

The intent of this specification is to define all the requirements for the entire Rotary dryer system for contractual purposes. The specification requirements for equipment/components and material are intended to establish a minimum level of supply and should not be construed as limiting the SELLER in offering higher grade equipment/components and material which will provide comparable service, based on prior notification and approval by IT.

B. Reference Specifications (Sections) and Documents: Specifications and documents listed below are part of this specification.
   1. Section 09900 - Painting General (As detailed in Article 3.4)
   2. Section 13310 - Noise Level Specification (Not applicable to Knockers)
   3. Section 15170 - Motors
   4. Section 16900 - Instrumentation and Control (As modified)
   5. Supporting Information:
      Pit Waste Characterization Data (Appendix A)
      Dryer Burner System A & B, P&ID, Dwg. Nos.
      Dryer System A & B, P&ID, Dwg. Nos.

C. Codes and Standards:
   SELLER shall comply with the codes and standards referenced in this paragraph.
   1. American Bearing Manufacturers Association (ABMA):
      a. All applicable standards.
   2. American Gear Manufacturers Association (AGMA):
      a. All applicable standards
   3. American Society of Mechanical Engineers (ASME):
      a. ASME Section VIII
         Unfired Pressure Vessels
         ASME Section IX
         Welder Qualifications and Procedures
   4. International Conference of Building Officials (ICBO)
      a. Uniform Building Code (UBC), Sections 2330-2338; Earthquake Design
   5. International Society for Measurement and Control (ISA)
      a. ISA S-5.1-84
         Symbols and Identification (Applies only to Dryer P&ID; does not apply to burner piping schematics)
   6. National Electrical Manufacturers Association (NEMA):
      a. NEMA 250-91

Enclosures for Electrical Equipment

7. National Fire Prevention Association (NFPA):
   a. NFPA 86, 1995 Edition
      Standards for Ovens and Furnaces
8. Occupational Safety and Health Administration (OSHA):
   a. 29 CFR 1910.23
      Guarding of Floor and Wall Openings and Holes
   b. 29 CFR 1910 Subpart O
      Machinery and Machine Guarding (applicable sections only)
9. Steel Structures Painting Council (SSPC):
   a. All applicable standards

1.5 SUBMITTALS

A. Requirements:
SELLER shall submit records, data, drawings, and documentation as requested and scheduled in accordance with the requirements specified below.
The SELLER shall maintain documents attesting to this procurement as records. The records shall be retrievable and protected against damage or loss.

All records generated as a result of this order, but not required to be submitted, must be stored and maintained in accordance with the SELLER's QA Program. IT reserves the right to have access to the files for the retention time specified by the SELLER in the SELLER's QA Program.

The SELLER shall prepare a transmittal sheet (listing all documents and number of pages) and attach this sheet to each set of documentation. Each set of documentation shall list IT's purchase order number, project number, and equipment piece number, and be consecutively numbered. (This applies to drawing and manual transmittals only).

B. Approval Drawings:
All drawings, except electrical drawings, shall be Autocad 14 format. Electrical drawings will be provided in Autocad 13 or DXF format. All drawings will be E-mailed to IT's Findlay office. All arrangement drawings shall be drawn to scale.

1. General Arrangement Drawings providing elevation views of the dryers, including dimensional call-outs of overall length and width, centerline to centerline distances for support piers, discharge breech opening centerline location relative to discharge end support piers, and feed breech face to furnace distance.

Layout drawings providing plan and elevation views of both dryers, including dimensional call-outs of overall height, stack elevation, platform elevations, and approximate combustion air blower and burner piping rack envelope locations.

General Arrangement and Layout drawings shall provide detail of Interface points, including opening dimensions, bolt hole patterns, centerline locations and elevations. Interface points include feed breech screw conveyor opening, discharge breech bottom chute, discharge breech top process gas exit opening, and Nitrogen purge connections on feed and discharge end seals. IT will provide input for location and dimension of Interface points.

3. Piping and Instrumentation Diagram (P&ID) showing all instruments and motors with recommended interlocks, excluding the burner train. , piping, and valves provided with the dryer system. Instrument numbers shall match those provided on IT's preliminary P&ID. IT will provide ABB its preliminary P&ID's for the dryer in electronic format.
4. Utility requirements:
   a. Nitrogen seal purge rate (scfm, psig)

C. Burner Piping Schematic Drawings:
The SELLER shall expeditiously provide burner piping schematics to IT for prompt review. The burner piping schematics will show instruments, piping, and valves, including line sizes. Drawings will not be according to ISA format. Instrument numbers shall match those provided on IT's preliminary P&ID. IT will provide ABB its preliminary P&ID for the burners in electronic format.

D. Certified Drawings:
The SELLER shall submit "Certified for Construction" drawings, including Final General Arrangement Drawings, Anchor Bolt Location / Foundation Loading Drawings, Main Support Frame Drawings, and Panel Drawings as outlined in this section. All drawings listed herein (Article 1.5.D) shall be stamped by a professional engineer licensed in the State of Ohio, except for the Panel Drawings. These drawings shall be submitted as two sets of prints and in electronic format on floppy disk. Mechanical drawings shall be submitted as "D" size prints and in Autocad 14 format. Panel drawings shall be submitted as "B" size prints and in Autocad 13 or DXF format.

Final General Arrangement Drawings: Final G.A. drawings, after approval by IT, shall be submitted as Certified Drawings.

2. Anchor Bolt Location / Foundation Loading Drawings:

000418

Certified drawings shall be provided which show anchor bolt location and magnitude and location of all static and dynamic loads from all major equipment for IT's use in designing piers and foundations. These drawings shall:

Indicate sizes, spacing, and locations of anchor bolt holes in component baseplates

State wind and seismic design parameters on the drawings.

Include tabulation of vertical loads and lateral forces (static, dynamic, wind and seismic) at each baseplate location.

Main Support Fame Drawing:

Certified drawing(s) of the Main Support Frame shall be submitted. Drawing(s) shall include overall dimensions and sizes of the main structural members, including typical welded and bolted connection details.

Flame Safety Panel Drawings:

Certified drawings shall be submitted for the Burner Flame Safety Panels. These drawings shall show location and legend for all door-mounted pushbuttons and status lights, and show panel interior layout. Burner Flame Safety Panel wiring termination drawing shall also be provided as a Certified drawing.

E. Assembly drawings:

The SELLER shall prepare assembly drawings that include the information and specifications, relating to the assembly and secondary assemblies, necessary to inspect, assemble, and install the Rotary dryer unit. The drawings shall specify dimensions. These drawings shall have a bill of materials with a reference to shop drawings needed for installation of that assembly. Drawings may be supplemented by specifications and/or data sheets which are cross-referenced.

Electrical wiring schematics shall be provided to allow field installation of interconnecting between burner piping rack marshalling cabinets, burner flame safety panels, and burners

F. Installation, Operating & Maintenance (IOM) Manuals:

The SELLER shall prepare bound IOM manuals which shall contain, assembly drawings, anchor bolt drawings, sequence of operation, mechanical spare parts list, general erection instructions, bolt torque settings, fastener identification markings, lubrications specifications, lube manufacturer cross reference, recommended lubrication schedule, sub vendor drawings and literature, and a manual flow sheet.

The manuals shall be submitted to IT for review and approval 2 weeks prior to the shipment-ready date of the first dryer. The SELLER shall furnish 10 bound copies of the manuals to IT. One manual will be sent to IT for review of completeness prior to distribution of all 10 copies.

Preliminary sections of the manual shall be provided to IT for training purposes on or before 9/1/98. These sections include:
Equipment specifications, including vendor models and make numbers (where known)
System general installation instructions, including training of the rotary cylinder and other standard procedures.
Normal Startup, Shutdown, and Standard Operating Procedures.
Emergency Procedures
Troubleshooting Procedures
Standard Maintenance Procedures

G. Miscellaneous Submittals:
1. Material Safety Data Sheets (MSDS) on paints and rust inhibitors.

2. Mill Test Reports for Cylinder Plate:
Submit reports indicating structural strength, destructive, and non-destructive test analysis for each batch of steel from each supplier.

3. Mill Test Reports for 304L SS:
Submite certificate of chemical analysis and physical properties typical for 304L SS from seller's inventory used on dryers.

4. QA Program:
The SELLER shall make available its QA Program as specified in Article 1.6.

1.6 QUALITY ASSURANCE

A. Quality Assurance Program Requirements:
1. The SELLER shall maintain a Quality Assurance Program. Documentation shall be made available to IT for review at the Concordia shop prefabrication meeting. If of the QA program are required, they shall be made available at additional negotiated cost.
2. The Quality Assurance Program shall include the following items:
a. Design Control:
Seller shall have a program to identify control measures used to ensure that design requirements, including quality standards, are

000420

defined and verified as applicable and are accurately represented in drawings, specifications, and procedures.

b. Instructions, Procedures, and Drawings: The SELLER's activities affecting quality shall be prescribed by and performed in accordance with documented instructions, procedures, or drawings. These documents include criteria for acceptance.

c. Document Control:
Control the preparation, issue, and exchange of documents that specify quality requirements or prescribe activities affecting quality to ensure that correct documents are employed.

d. Inspection:
Plan and execute inspections to verify conformance to purchase order quality and technical requirements. These inspections shall be documented.

e. Test Control:
Plan and execute tests verifying conformance of an item or process according to written procedures which contain the test requirements and acceptance limits. These tests shall be documented.

f. Control of Test and Measuring Equipment: Control and calibrate all tools, gauges, instruments, and other devices used for activities affecting quality.

g. Inspection, Test, and Operating Status: Provide for the identification of acceptance status of items procured by tagging or marking, or documents traceable to the item required by the specifications.

h. Control of Nonconforming Items:
Seller shall have a procedure for control of items or processes that do not conform to procurement document requirements. Nonconformances shall be controlled to prevent inadvertent installation or use, and shall be documented.

i. Quality Assurance Records:
Generate, compile, and maintain all program records that furnish documentary evidence of quality.

j. Handling, Storage, and Shipping:
Seller shall have procedures to control requirements specified in Article 3.5 (Packaging and Delivery).

k. Corrective Action:
Seller shall have procedures to implement corrective actions.

B. Shop Inspections / Acceptance Test:

1. IT intends to make at least three shop visits / inspections during

fabrication of the rotary dryer system. The visits are as follows:

a. Welding procedures review meeting prior to start of cylinder assembly.
b. Witness of Total Indicated Runout (TIR) test.
c. Witness of Flame Safety Panel test.

2. Successful completion of TIR and flame safety panel testing (both attended and unattended by IT) shall be confirmed by issuing signed copies of the test results to IT.
3. Acceptance testing at site:
   Final inspection and acceptance at the FEMP will be in accordance with this specification and the following:
   a. Acceptance testing and inspection shall take place at the FEMP site with IT and the SELLER present in accordance with the requirements specified in Article 3.7.

1.7 SELLER'S SUBSTITUTIONS

A. SELLER's Responsibility:
The SELLER is to submit in writing to IT exceptions or proposed changes to this specification. Each exception or proposed change shall:
1. Identify the item (component) as specified in this specification.
2. Identify the proposed change / alternate and rationale for the change.

B. IT's Responsibility:
All deviations from this specification or substitutions offered by the SELLER will be expeditiously evaluated by IT. Approved exceptions will ultimately result in revision to the specification to incorporate the exception.

PART 2 PRODUCTS

2.1 MATERIALS AND EQUIPMENT

A. Responsibilities for Materials and Equipment:

1. All deliverable materials and equipment as identified herein (Article 2.1, Paragraph B), shall be the responsibility of the SELLER. The SELLER is also responsible for the quality and compliance of the work of the SELLER's suppliers.

2. The SELLER shall be responsible for all engineering, design, fabrication, assembly, inspection, TIR, Flame Safety Panel, and cylinder NDE Testing, and packaging and loading of all materials and equipment.

B. Materials and Equipment to be provided by SELLER:

Item Number	Description
1.	Rotary rotary dryer system with furnace complete with refractory and breechings. Two completely independent dryers shall each be sized for 50% of the design throughput. Rotary dryers shall be mounted on unitized frames which support the trunnion bases, drive bases, furnace, and breechings.
2.	Burner piping and instrumentation rack(s) for natural gas service complete with supply pipeline headers (air and gas), manifolds with instrumentation, and flame safety controls per set of burners per zone, fittings, structural frame, and supports
3.	One flame safety panel for each dryer for safe starting and operation of burners
4.	One Combustion-air supply fan for each dryer
5.	Electric motors: a. Rotary dryer drive motor b. Rotary dryer auxiliary drive motor c. Combustion-air supply fan drive motor

6. Maintenance platform and ladder (as described in Article 2.2.d.13)
7. Combustion air supply ductwork, except interconnecting duct between combustion blower and air header.
8. Dryer furnace stacks

C. Services to be Provided by Seller:

1. Host a minimum of two design review meetings at Lisle Engineering Office in order to insure timely resolution of design and interface issues.
2. Host pre-fabrication meeting at Concordia shop facility to review welding and other fabrication procedures. Host witness of TIR test, witness of flame safety panel functional testing, and up to two additional visits.

Provide Technical Services at the service rates quoted in Section 4.6 of ABB Proposal No. 10609, Rev. 1, for installation, checkout, testing, and startup assistance.

D. Items to be Provided by IT:

1. All utilities and piping to the Rotary rotary dryer burner piping and instrumentation skid (instrument air, process air, natural gas, water, drain, purge gas).
2. Dryer feeder.
3. Product discharge conveyor from the Rotary rotary dryer product discharge flange.
4. Process off-gas ductwork and support from the Rotary rotary dryer discharge head to the process off-gas treatment area.
5. Electrical power supplies and field wiring.
6. Unloading and storage of assemblies and subassemblies, installation of Rotary dryer system.
7. Concrete foundations and support pillars for the following items:
   a. Rotary rotary dryer system.
   b. Burner piping and instrumentation skids.
   c. Combustion-air supply fans.
   d. Maintenance platforms, walkways, and structures.
8. Control Room.

000424

E. Fasteners:

1. The SELLER is hereby given notice that the Fastener Quality Act of 1990 applies to the provision of fasteners. The SELLER certifies that suspect or counterfeit fasteners are not being provided or incorporated as part of an end item for delivery under this purchase order. The SELLER shall provide certification of specification conformance to IT upon request and agree to comply with all record keeping requirements by law.

2.2 TECHNICAL REQUIREMENTS

A. General:
The SELLER shall furnish all deliverable items identified in Article 2.1, Paragraphs B and C, to conform with the design requirements specified in this section.

The SELLER shall provide a proven design, to incorporate all concepts defined in the specification. All piping and flanges and fittings supplied with this equipment shall conform to requirements stipulated in the piping specifications. All structural components shall be provided in accordance with the structural requirements specified in Article 2.2, Paragraph G.

B. System Description:
Wastes removed from pits at Fernald Operable Unit 1 (OU1) will be dried in an Rotary rotary dryer system. This system shall consist of (1) two externally heated rotating cylinders (rotary dryers) to receive and dry wastes while advancing material from the feed head toward the discharge, (2) a multiple-zone furnace surrounding each rotary cylinder to generate heating gases by combusting natural gas, (3) a natural gas and air supply system to the burners, and (4) burner management system. The combustion gases produced in each zone of the furnace by a set of burners will be controlled by IT's PLC to set the rotary dryer shell at a nominal temperature of 1400°F to meet thermal performance requirements. The rotary dyer shall be designed for continuous operation with a shell temperature range between 1200 and 1600°F. The rotary shell material of construction shall consist of Incoloy 800 HT, as specified by IT.

NOTE: The selection of Incoloy 800 HT for the rotary dryer shell was made by IT based on Pit Waste Characterization Data (Appendix A). SELLER bears no responsibility for corrosive attack of the 800 HT shell from feed material or deposits. SELLER otherwise provides full warranty for physical integrity of

the rotary shell.

The Rotary dryer system shall be designed to receive and process wet waste material of various moisture contents depending on the type of feed waste as defined by the Pit Waste Characterization Data (Appendix A). Feed waste material will be received as screened waste with a maximum dimension of 4 inches. Screened material will be fed into the rotary dryer via an auger type feeder. This feeder will be purchased by IT and specified to meet dryer requirements.

The rotary dryer system shall consist of a cylindrical shell rotated with a variable speed drive (drive furnished by IT). The shell shall be supported at each end with no intermediate supports.

The rotating cylinder shall be heated externally by a furnace, enclosing the rotary cylinder, with adequate length and diameter to provide adequate heat transfer to evaporate the required moisture from the waste feed. Heat energy for the Rotary drying shall be produced in four furnace zones by a set of four burners located in each zone, using natural gas as fuel for combustion. The burners shall be low NO_x generating burners (North American Mfg. Co. "Tempest" burner). Burners shall be operated with adjustable primary air/fuel ratio, and adequate turn down to control the flame temperature so the rotating cylinder does not exceed its allowable shell temperature. Exit gases from each furnace zone shall be vented to atmosphere via individual stacks mounted atop the furnace. The stacks shall extend 20 feet above the furnace cover. It is permissible to stabilize the stacks by using guy-wires attached to the furnace cover.

Heat energy from each furnace zone shall be Rotaryly transferred into the material advancing inside the rotating shell. This heat transfer from the furnace will take place through convection, conduction, and radiation. To ensure better mixing of the material inside, the shell shall be equipped with a means to agitate the bed of material. Agitating flights shall be welded inside the shell along the entire heated length. Evaporated water shall be swept from the dryer with a controlled flow of air and/or nitrogen in a co-current fashion, and it shall be discharged at the solids exit end of the dryer.

The dryer shall be equipped with feed and discharge end knockers to continuously remove fouled material from the dryer shell. The waste may foul due to plasticity (stickiness) at critical moisture contents. Dryer sizing does **not** account for potential fouling in the dryer.

000426

Seller is not responsible for fouling or process material buildup on the cylinder interior.

Waste material continuously fed into the dryer will advance through the heated section, where it will be heated up to 200-250 degrees F. The discharge soil temperature is measured by means of a product thermocouple which is cantilevered off of the discharge breech, and is designed to drag in the rotary cylinder solids bed near the end of the furnace section. Due to the heat transferred into the material, water will be evaporated, and some small amounts of organics contained in the waste will be vaporized. Sweep air / nitrogen flowing co-currently with the advancing waste will carry off the vapors.

Dried material with the 10 percent (wet basis) final moisture content will leave the heated section. Dried material will fall by gravity through the discharge breech chute for further handling by IT.

C. Operating Conditions and Requirements:
Each rotary dryer shall be sized for 50% of the design capacity.

Equipment shall be designed to meet the following minimal criteria:

1. Process Design Criteria:
   a. Particle size distribution: 100 percent <4 inches; 80 percent <200 mesh
   b. Feed moisture content: 30 to 200 percent (all moisture contents expressed on a dry basis [lbs water/lbs dry solids] x 100 percent). The average moisture content is estimated to be 67% on a dry basis (40% on a wet basis). Dryer system design and performance are based on Article 2.2.C.g.
   c. Bulk density of feed material: 70 lbs/ft^3 minimum, 130 lbs/ft^3 maximum, 90 lb/ft^3 nominal.
   d. Bulk density of dried solids: 90 lbs/ft^3 minimum, 130 lbs/ft^3 maximum.
   e. Feed composition: For details of pit waste composition, see Appendix A, Section 2.0.
   f. Plasticity data: see Appendix A, Section 6.0.

   Feed rate: The dryer system shall be capable of processing a base quantity of at least 23 tph of the feed described in Appendix A at 37.4% wet basis moisture content (59.7% dry basis) with a product moisture content of 10 percent (wet basis). The dryer shall also be capable of processing up to 30 tph of feed with a moisture content of 31 % (wet basis) with a product moisture content of 10 percent (wet basis). For each moisture content, the dryer system shall be

able to evaporate moisture at a rate of 7.0 tph.

Feed temperature: ambient (see Article 2.2, Paragraph C, Subparagraph 2).

Dried product temperature: 150-250 °F (operating).

Heat transfer: Rotary.

Dried product moisture content: 10 percent (wet basis), as a minimum design criteria.

Process off-gas: Temperature, 250-700 °F, with a typical temperature of 350 °F.

Sweep air / nitrogen: Ambient temperature 60°F; Volume, maximum = 300 scfm at 1 in. w.c. negative pressure in the dryer sweep air, including nitrogen purge and air leakage at dryer seals, feed, and discharge. The maximum air in leakage through both feed and discharge end dryer seals shall not exceed 100 scfm at a 1 in. w.c. negative pressure.

Rotary dryer shell temperature: Typical = 1400 °F. Maximum = 1600

Temperature of outer furnace shell, design: 125 °F, based on 1600 °F hot face temperature and no wind. Burner penetrations sight port and thermocouple penetration areas and area where the cylinder penetrates the furnace end wall will be hotter. Furnace end walls could also be hotter due to re-radiation of heat from the cylinder

Combustion gas outlet temperature: 1675 °F maximum.

Combustion air temperature: Ambient.

Natural gas characteristics: heating value = 1,027 Btu/ft^3; pressure = 47 psig; availability = 833 scfm in 6-inch pipeline; composition = CH_4 - 96 percent, C_2H_6 - 1.9 percent, N_2 - 0.036 percent, C_nH_n - 2.064 percent.

Dryer waste capacity: The dryer shall be designed to allow a minimum of a 50 minute residence time for waste in the dryer at the design feed rate (see item g.)

Compressed air characteristics: 80 psig,

2. General:

The Rotary dryer system shall be operated at the FEMP site at Fernald, Ohio. The Rotary dryer system will be located outdoors and subject to weather-related temperature variations, wind, wind-driven rain, and earthquake loading criteria. Conductive surfaces that exceed 125 °F, shall be insulated where possible. Nonconductive surfaces such as insulation plastic should stay at or below 150 °F, or a protective guard shall be supplied to keep personnel from contacting such surfaces. The SELLER has noted that several areas of the calciner will potentially exceed 125 °F, these include the feed and discharge breechings, the cylinder shell

(particularly at the discharge end), and areas of penetration on the furnace casing. Provisions to ensure personnel do not contact these hot surfaces, such as lagging of the breechings and guarding of the cylinder and furnace casing, are not the Seller's responsibility or in the Seller's scope

The following are the environmental and operating conditions:

a. Ambient conditions outside (summer, winter):
   Summer:
   Dry bulb temperature: 92 °F
   Wet bulb temperature: 78 °F
   Winter:
   Dry bulb temperature: -1 °F
b. Plant elevation: 578 feet above sea level
c. The system shall be designed for operation in seismic zone 1 as defined in the Uniform Building Code.
d. Operating schedule:
   Operating days/week - 7
   Operating shifts/day - 3
   Operating hours/shift - 8
e. Operating modes:
   1) Normal
      The facility is operated at the normal flow rate as specified in Article 2.2, Paragraph C, Subparagraph 1.g.
   2) Hot idle
      The facility is idled below operating temperatures, and not drying feed. All burners either shut off or set to low fire mode.
   3) Heat-up
      The facility is started by heating up the system, from cold status to the thermal conditions of normal operations.
   4) Cool down
      The facility is cooled down from any of the above operating modes to ambient conditions.
   5) Normal shutdown
   6) Emergency shutdown
   7) Restart after normal shutdown
   8) Restart after emergency shutdown
f. Fire protection:
   The Rotary dryer burner system shall comply with the applicable sections of NFPA 86.

D. Mechanical Requirements
   1. Rotary Dryer Cylinder

a. General:
The shell shall be built of Incoloy 800HT plate, rolled into a circle, and welded in sections with circumferential joints as required. The shell sections shall have one longitudinal joint per circle. The feed end of the cylinder is provided with a retaining ring and spiral flights to minimize back spillage. Agitating flights are featured along the remaining length of the furnace section to agitate the material and promote even heat transfer to the material bed. The discharge end of the cylinder has no flights and is equipped with a dam ring. The cylinder is reinforced with thicker plate sections in the areas of the riding rings and girt gear.

b. Welding:
All welds on the cylinder shall be per ASME Section IX and all inspection shall be per ASME Section VIII.

c. Overall Size:
90" O.D. x 59' total nominal cylinder length, with 45' heated section.

d. Construction:
Cylinder constructed of ½" thick Incoloy 800HT plate, rolled and welded, except feed and discharge reinforced sections which are 1-1/8" thick Incoloy 800HT. End dams and all flights shall be constructed of Incoloy 800HT.

e. Agitating Flights:
Agitating flights shall consist of 800HT plate, 12" long X 3" tall. The flights extend throughout the 45 ft. long heated zone. The first 10 feet are perpendicular to the shell and are center-welded both sides to the cylinder. The remaining 35 feet of flighting is reclined at an angle of approximately 60 degrees from the cylinder radius and is center-welded to the cylinder on one side. The flight welds shall be 10% dye check tested; welds to be ground smooth, not flush.

f. Tolerances:
Cylinder deflection shall not exceed 0.10" at the point of maximum movement between the supports. Total Indicated Run-out (TIR) at sealing surfaces shall not exceed 0.06" longitudinally and 0.45" radially under operating conditions.

2. Cylinder Knockers:
Two bands featuring ball type knockers shall be supplied and mounted on the cylinder O.D. between the riding ring and the furnace casing. The

bands are adjustable for mounting the knockers in phase or out of phase, as well as being capable of deactivating individual or all knockers on a given band . The purpose of these ball type knockers is to help to keep process material from building up on the interior of the cylinder. Eight knockers per band, Carbon steel construction.

Riding Rings:

a. General:
Qty. two riding rings for each rotating cylinder are off-set mounted on support chairs and are secured to the reinforced areas of the cylinder. The rings are aligned so that they are mutually parallel and normal to the axis of the cylinder.

Size:
124" O.D. x 9 in. face width

c. Construction:
Riding rings are ASTM A-551 seamless, forged and rolled steel, 0.7% to 0.85% carbon, completely machined. Support chairs are steel alloy plate, equally-spaced to circumference, welded to reinforced areas of the cylinder.

4. Trunnion Rolls:
a. General:
Two rolls are mounted on a trunnion base under each riding ring (four trunnion rolls per rotary cylinder). Each roll is mounted on a shaft, the ends of which are journaled in bearings.

b. Size:
24 " O.D. x 10 in. face width for feed end and 18 in. face width for disch. end.

c. Construction:
Roll constructed of C-1045 forged steel, completely machined, tread hardened. Shafts constructed of C-1141 hot rolled steel. Two tapered roller bearings per trunnion roll (eight bearings per rotary cylinder).

d. Trunnion Bases:
Bases consist of a machined bearing mounting plate supported by wide-flange beams and gusseted with plates. Adjusting lugs are also provided for proper adjustment of rolling components.

e. Trunnion Roll Guards:
Four guards enclose pinch points between riding ring and trunnion rolls, and feature guides with graphite blocks for trunnion roll and riding surface lubrication.

5. Thrust Rolls:
a. General:
To restrict the longitudinal movement of the cylinder, a thrust roll is mounted on each side of the riding ring located adjacent to the cylinder rive. Each thrust roll has a tapered side face, and is bearing mounted, which in turn is supported by a fixed shaft. Each shaft is integral with an adjustable bracket bolted to the trunnion base. Two thrust rolls per rotary cylinder.

b. Size:
18" O.D.

c. Construction:
Roll constructed of C-1045 forged steel, completely machined, tread hardened. Shafts constructed of C-1141 hot rolled steel. Two tapered roller bearings (Timken or equal) per thrust roll (four bearings per rotary cylinder). Top of thrust roll has dust-proof spherical cap. Lower end of hub is closed with a labyrinth grease seal. Thrust roll brackets constructed of welded carbon steel.

6. Girt Sprocket, Drive Sprocket, and Drive Chain:
a. General:
The girt sprocket is positioned on the feed end of the cylinder and is bolted to a mounting plate welded to the cylinder. The sprocket is split into segments. Sprocket mount permits expedient removal and reversal for extended life. The drive sprocket is mounted on the low speed shaft of a reducer. A standard roller chain is used to turn the cylinder. A drive guard totally encloses the drive and girt sprockets with attachments to the main support frame.

Size:
56 cut teeth for girt sprocket and 10 cut teeth for drive sprocket

Construction:
Sprockets are carbon steel plate machined. Chain is standard finished roller chain #R01306, single strand.

Cylinder Drive:

The cylinder is rotated by a variable speed drive consisting of an electric motor coupled via an overrunning clutch to the primary high speed shaft of a parallel shaft reducer. The variable speed drive and motor shall be suitable for starting a fully-loaded rotary shell. The low speed shaft of the reducer drives the jack shaft and pinion sprocket assembly, which in turn drives a chain which is wrapped around the cylinder Girt Sprocket to rotate the cylinder. Reduction ratio allows for a maximum cylinder operating speed of 3.0 RPM and a minimum speed of 0.5 RPM.

In the event of a power failure, a backup electric motor is provided which is connected to IT's Emergency Power Supply. This allows cylinder rotation to be maintained until power is restored or until the cylinder has adequately cooled to prevent warping.

The backup motor is coupled to a high speed shaft on a secondary reducer. This reducer is provided to allow the backup motor to drive the cylinder at 0.5 rpm. The secondary reducer is connected by an over-running clutch coupling to a second high speed shaft on the main drive reducer. This arrangement allows the main motor to sit idle while the secondary drive is in operation. All components are assembled on the main drive base sub-frame.

Motor:
75 HP, U.S. Motors or equal, 460 volts, 3 phase, 60 Hz, 1750 rpm, high efficiency, 10:1 invertor duty, with NEMA shaft extension

Emergency Drive Motor:
25 HP, U.S. Motors or equal, 460 volts, 3 phase, 60 Hz, 1750 rpm, high efficiency

Primary Reducer:
75 HP (thermal rating) Falk, parallel shaft reducer, Class II gearing, electric fan cooled. Service factor of 1.5, based on motor nameplate horsepower.

Secondary Reducer:
25 hp Falk, concentric shaft reducer, Class II gearing.

Coupling & Guard:
Falk, or equal

Over Running Clutches
Formsprang, or equal

g. Emergency Handcrank
An engageable (spring loaded) handcrank is connected to a shaft extension on the main drive motor. This will permit rotation and prevent cylinder distortion in the event that both the main and emergency drives fail.

8. Feed Breeching:
General:
A circular breeching encloses the feed end of the cylinder and is complete with a flanged bolted manway, breeching cleanout plate, sight glass, opening for Purchaser supplied feed screw, purge connection, 1-1/2" flanged connection, seal mounting assembly, and supports for attachment to the main frame.

Construction:
304L SS in process contact areas, 1/4 " thick. Structural supports shall be carbon steel. Sight glass shall be Tate Jones or equal.

Discharge Breeching
General:
A circular breeching encloses the discharge end of the cylinder and is complete with a flanged vent connection, product thermocouple mount, sight glass, hoppered bottom, cylinder access plate, sight glass, grab sample port, seal mounting assembly, and supports for attachment to the main frame. Hoppered bottom discharge chute shall be offset toward material carrying side of cylinder such that one wall of the chute is vertical.

Size:
Breeching shall be 2' total depth. Discharge flange shall be 5' above grade.

Construction:
304L SS in process contact areas, 1/4 "thick. Structural supports shall be carbon steel. Sight glass shall be Tate Jones or equal.

Rotary Seals:
General:
The seal assemblies shall be designed for a normal pressure differential

000434

across the seal of 2 inches W.C. and shall accommodate the longitudinal and radial expansion based on operating conditions. The maximum air in leakage through both the feed and discharge end seals shall not exceed 100 scfm at 1 in. w.c. negative pressure.

Both the feed and discharge breechings provided with adjustable spring actuated, flex-type seals. The spring-loaded assembly is mounted on the breeching face with the opposing end fixed to a floating seal ring mounting plate, which in turn has a seal ring mounted to it. The assembly, in turn, bears against a fixed seal ring which is mounted to the cylinder. The fixed seal ring is fitted to accept a low-volume purge of nitrogen to mitigate fouling of the seals. Recommended seal purge is 80 scfh.

Both feed and discharge breechings fitted with flex element liner with necessary fittings to purge the liner area with nitrogen to mitigate particulate build-up and acid gas condensation. Recommended liner purge flow rate is 40-80 scfm per seal.

Construction:
Flex element consists of 3 layers of gas-tight, high temperature, abrasion resistant materials. Temperature rating is 800°F. Internal liner sleeves constructed of 316L SS. Floating seal ring mounting plate constructed of carbon steel, machined. Fixed seal ring constructed of carbon steel, machined. Floating seal ring constructed of segmented graphite

11. Main Frame Assembly:
The furnace, trunnion bases, rotary cylinder, and breeching assemblies will be shop-mounted on a unitary frame. The cylinder drive base will have to be field mounted and welded to the main frame assembly. The main frame will be constructed of carbon steel. The main frame will be supported by two concrete piers (by IT), one located at each trunnion base centerline, and by a mid-span structural support frame. The structural support frame shall be provided by SELLER.

Furnace:
General:
The furnace consists of a 45 foot long, insulation lined, steel casing through which the cylinder projects. Furnace arranged in four zones to accommodate four burners per zone, uniformly spaced along on the side of furnace casing. Casing fabricated in boltable section for connection in the shop. Design features include horizontal split line, lifting lugs on each section of the furnace casing, adjustable end seals, four stub-stack

connections, three zone walls, and cradle support for attachment to the furnace support frame. One Tate-Jones sight glass with air purge fitting is included for each furnace zone.

Casing:
Casing shall consist of 7 gauge steel plate, welded, flanged an bolted sections.

Insulation:
Furnace top and bottom are lined with 9" thickness of ceramic fiber. Insulating board and block construction is utilized at the end walls. Lining features necessary clips, anchors, etc. for proper integrity and long life. Blanket insulation selected to provide approximate theoretical skin temperature of 123 °F at a 1600 °F hot face and no wind.

Furnace Seals:
Ceramic insulation board backed by carbon steel segments, bolted.

Exhaust Stacks:
Four exhaust stacks are included for each dryer, one per zone. The stacks are 20' tall and 35" in diameter, constructed of 304L SS. The stacks feature manually adjustable draft control dampers, grounding lugs, and guy wires.

13. Maintenance Walkway:

A maintenance walkway shall be provided along one side of the Rotary Dryer. The walkway shall be 60 ft. long x 3 ft. 6 in. wide. The preferred support arrangement is to cantilever the walkway off the main frame. If this is not possible, support legs to grade shall be provided. The walkway shall include galvanized ladders, cages, stair treads, and grating (Spec. Section 09900).

Combustion System:
General:
The cylinder of the dryer is Rotaryly heated by a series of tangentially fired high velocity, low Nox burners. The burners are located along one side of the furnace casing and are arranged for zonal control. The burners are designed to fire natural gas.

Burners:
Qty. 16 burners per dryer. Each burner rated at nominal 2.0 MMBtu/hr for

000436

a maximum installed gross capacity of 32 MMBtu/hr per dryer. Burner shall be North American Mfg. Co. "Tempest", Model No. 4442-7. Burners shall be capable of operating over a 10:1 turndown ratio. Burner shall be equipped with direct spark ignition. Each burner shall also equipped with a self-checking UV flame detector, ignition transformer, flex connectors for air and gas connection, and limiting orifice gas valve with orifice metering system.

Burners design parameters are as follows:

(1) Air capacity at 70 degrees F (not firing): 453 scfm
(2) Air capacity at 70 degrees F, stoichiometric: 388 scfm
(3) Burner tile pressure drop (not firing, max air flow): 15 o.s.i.
(4) Maximum percent excess air (for flame stability): 2000%
(5) Maximum percent excess fuel (for flame stability): 30%
(6) Flame length, stoichiometric: 48 inches
(7) Flame diameter, stoichiometric. 12 inches

c. Burner Train Pre-piped Rack:
Combustion system piping components, including all valves and instrumentation, will be pre-piped onto racks, including both gas and combustion air piping, in accordance with NFPA 86 and NFPA 85C. Valves and instrumentation shall be arranged to allow easy access for maintenance and replacement. Means for supporting the pre-piped rack from grade or from existing structural members shall be provided for by the SELLER.

Natural gas piping shall consist of Schedule 40 carbon steel, with 150 lb fittings. 2" diameter and below shall be threaded. Natural gas piping larger than 2" shall be welded. Combustion air piping main header shall consist of 1/8" thick wall carbon steel fabricated duct, with Schedule 40 carbon steel distribution piping. Main header connections shall be fabricated flanges with a nominal rating of 50 psi. All piping shall be shop pressure tested at 1.5 times maximum operating pressure.

There will be two racks per dryer, with each rack supplying two zones (eight burners). The components on each rack will be shop-wired to a NEMA 4 marshalling cabinet mounted on the rack. Interconnecting field wiring between the marshalling cabinets and the flame safety panels is by IT. The following components are located on the pre-piped racks;

<u>Gas Train Components on Pre-Piped Rack (Quantities are total per dryer):</u>

Qty. 1 - Main shutoff ball valve, with locking handle

Qty. 1 - Y-type strainer
Qty. 1 - Pressure reducing regulator
Qty. 2 - Gas pressure switch (high and low)
Qty. 1 - Turbine flow meter
Qty. 4 - Needle valves
Qty. 1 - 0-60 psi pressure gauge
Qty. 1 - 0-5 psi pressure gauge
Qty. 2 - Automatic safety shutoff valves (Maxon)
Qty. 1 - Solenoid vent valve
Qty. 4 - Dowstream auto fuel blocking valves (one per zone)
Qty. 16 - Ratio regulator valves with bypass
Qty. 21 - Various ball valves
Qty 1 - Relief Valve

Combustion Air Supply Components on Pre-piped Rack (Quantities are total per dryer):

Qty. 4 - Electronic valve actuators, Honeywell or equal
Qty. 4 - Butterfly valves with bracket and linkage for actuator motor
Qty. 1 - Pressure switch
Qty. 1 - Orifice plate
Qty. 1 - Differential pressure switch
Qty. 16 - Manual butterfly valves
Qty. 16 - Valves

d. Combustion-air Supply Fan:
One fan shall be supplied for each dryer. Each fan shall be designed to deliver 40% excess volume over the design flow rate of the combustion system at high fire operating at a 10% excess air:fuel ratio. Each fan capacity shall be 7700 cfm at 20 osi static pressure. The fans shall be supplied with a single speed, 60 hp motor and an inlet filter/silencer. The fan shall be a North American Mfg. Co. Model 2320-37/1-T60D. The fan shall be furnished as a complete unit, including motor, guard, and mounting base. The foundation will be supplied by IT per SELLER's requirements.

15. Arrangement requirements:
The two dryers will be located parallel to each other, and be mirror image units, with the burners located between the dryers.

E. Control and Instrumentation Requirements:
1. Specific Requirements
a. Flame Safety Panel

000438

SELLER shall provide a separate burner flame safety panel for each dryer. The burner flame safety panels shall be a Nema 4 panel for outdoor installation, and shall include an air conditioning unit. Each burner flame safety panel shall be designed to allow local or remote (control room) starting of all burners. Each burner flame safety panel shall include burner flame relays, and all circuitry required to be in compliance with NFPA 86. All furnace and dryer process gas temperature control will be performed by IT using IT's PLC.

The burner start circuit shall include the following devices:

Natural gas high pressure switch
Natural gas low pressure switch
Burner loss of flame
Furnace zone high-high temperature switch (hard-wired excess temperature limit controller)
Combustion air supply fan running
Combustion air low pressure switch
Purge timer
IT PLC interlock for: Dryer rotation, Furnace temperature, Process induced draft fan operating.

The burner flame safety panels shall provide door-mounted status indication which includes "Limits complete", " Purge Complete", and "Flame Failure" for each zone and/or burner as appropriate.

Each burner flame safety panel shall allow a 24" vertical x 36" horizontal area for IT's PLC I/O rack and adjacent terminal strips. Installation and all wiring of PLC I/O rack will be done by IT. This I/O rack will be used to read all dryer thermocouples, monitor on/off status of burners, monitor pressure switches, and allow remote burner starting. Additional, other locally mounted instrumentation wiring, unrelated to SELLERS scope of supply, will be terminated in this panel in the area allotted for IT's PLC I/O rack.

Each burner flame safety panel equipment will also include the following:
Qty 16 - Flame relays, including required amplifiers, sub-bases, four with displays mounted on the cabinet face, display covers, and remote reset buttons
Qty 4 - Honeywell, or equal, UDC-2000 High Temperature Limit Controllers
Qty 1 - Alarm relay and horns

Dryer Instrumentation and Control:

Seller shall provide sixteen dual element thermocouples equally spaced down the length of each furnace in order to monitor rotary cylinder external shell temperature. These thermocouples will be field - wired by IT to IT's PLC I/O located in the burner flame safety panels.
Each furnace zone will be set up to have its own temperature control, based on the operator-selected thermocouple (one of four possible thermocouples in each zone).

Additionally, a dual element thermocouple shall be provided for each stack. These thermocouples will be field-wired, by IT, to the dedicated high temperature limit controller located in the burner flame safety panel.

A dual element material product temperature thermocouple shall be mounted from the discharge breeching and extend into the material bed at the discharge end of the dryer furnace. This thermocouple will be field-wired by IT to IT's PLC I/O located in the burner flame safety panel.

A motion sensor shall be provided to monitor rotary cylinder rotational speed. This motion sensor will be field-wired by IT to IT's PLC I/O rack .

SELLER-provided instrumentation for mounting on the dryers is as follows (Quantities are per dryer):

Qty. 16 - Shell temperature thermocouples - Type "K" dual element complete with screw head, alloy mounting tube, refractory sheath, and adjustable flange mounting.

Qty. 4 - Zonal flue gas thermocouples (Stack-mount) - Type "K" dual element , complete with screw head, alloy mounting tube, and adjustable flange mounting.

Qty. 1 - Product temperature thermocouple - Type "K" dual element , complete with screw head and alloy mounting tube.

Qty. 1 - Motion sensor, MC Technologies or equal.

2. General Requirements:
   a. Locally mounted transmitters shall be two-wire, loop powered configuration, with 4 to 20 MADC output signal. Accuracy ± 1.5

000440

percent of full scale. Transmitters will be field-wired by IT. No transmitters are currently in Seller's supply.

b. Remote instruments used to provide operator information shall be equipped with digital readouts, 3-1/2 digits minimum.

c. Direct reading instruments (i.e., pressure gauges, thermometers, etc.) shall be analog display, 4-1/2-inch dial, black letters on white background, phenolic case and polycarbonate lens. Accuracy ± 5 percent of full scale.

d. Temperature sensors shall be thermocouples selected based on the estimated operating/process temperature to be measured. Shell thermocouples are to be mounted in Seller's standard protective tubes. All other thermocouples shall be installed with protecting wells, unless the intended use is the monitoring of surface temperatures.

3. Installation Requirements:

a. Horizontal runs of instrument impulse lines shall be sloped at 1/4 inch per foot. Installations sensing liquids and condensing gases and vapors shall have impulse lines sloping down to the instrument. All other installations shall have lines sloping up to the instrument.

b. Instruments directly connected to the process by impulse lines shall be installed with process isolation valves to facilitate maintenance and calibration of the instruments without shutdown of the dryer or its support equipment and utilities.

c. All instruments and sensors in Seller's scope of supply will have affixed a permanent stainless steel tag with IT's identification number (tag number) engraved in 1/4-inch-high letters (minimum). The tag may be affixed to the instrument by adhesive, screws, or stainless steel wire.

e. One Tate-Jones or equal sight port, with purge connection, per zone shall be installed on the sidewall of the Rotary dryer system to observe burner operation.

F. Electrical Requirements:

1. See Motor Specification 15170

G. Structural Requirements:

1. The rotary dryer and associated equipment support stations will be supported and anchored on concrete foundations (provided by IT), which are capable of resisting all vertical and unbalanced horizontal loads and forces emanating from the equipment. The SELLER shall be responsible for providing information concerning the location, magnitude, and

direction of all equipment forces with verifiable calculations, retained by SELLER.

2. Information shall be provided indicating the expected amount (in inches) and direction of thermal expansion for dryer cylinder.
3. Equipment/structural design shall provide for loads as specified below:
   a. Platforms and walkways, live load: 75 psf.
   b. Wind load: Velocity pressure shall be calculated using equation 3 of ASCE 7-93, using V = 80 mph basic wind speed and I = 1.15. Design wind pressures and forces shall be in accordance with ASCE 7-93, Table 4.
   c. Seismic load: Use provisions of the Uniform Building Code, using Seismic Zone 1 and Importance Factor 1.25. W (total seismic load) shall include all normal operating contents, piping, and attachments.
   d. Anchor bolt location and loading drawings shall state the vertical loads and lateral forces used (wind and seismic) in the design.
4. Materials of construction:
   Seller shall state material specifications on Certified main frame drawing.

H. Design Interfaces:

This section identifies the interface, interaction, or interconnection points expected for the Rotary rotary dryer system.

1. Mechanical interfaces:
   Mechanical interfaces required within the Rotary dryer system shall be provided in accordance with the requirements of this specification.
   Gas supply line header on the burner piping rack , inlet flange.
   Feed breeching, dryer feeder inlet flange.
   Feed breeching, nitrogen purge connection
   Feed and discharge breeching seals, nitrogen purge connections
   Discharge breeching, product discharge flange.
   Discharge breeching, process off-gas discharge flange.

2. Structural Interfaces:
   The Rotary dryer assembly and its supporting base frame shall be supplied by the SELLER. To support this assembly, reinforced concrete foundations and pillars will be supplied by IT. Structural support for platforms, burner gas and air racks, and the dryer intermediate frame support shall also be supplied by the SELLER.
   a. Rotary rotary dryer system, main support frame.
   b. Burner piping and instrumentation racks, support structure.
   c. Combustion-air supply fan, base frame.
   d. Maintenance platforms, as defined in Article 2.2.d.13.

000442

3. Electrical Interfaces:
   Interfaces between IT and SELLER include the Rotary Dryer Main Drive, Emergency Drive, Combustion Air fans, and the Flame Safety Panel.

4. Instrumentation and Controls:
   Interfaces between IT and SELLER include burner flame safety panel, rotary dryer thermocouples, rotary dryer motion sensor, and natural gas turbine flowmeter.

2.3 MATERIALS OF CONSTRUCTION

All materials shall be new. Materials shall be provided as specified elsewhere in this document.

2.4 FABRICATION REQUIREMENTS

A. General:
The Rotary dryer system shall be fabricated with materials, welding processes, and refractory fabrication techniques listed herein, and machined and assembled to conform with approved SELLER drawings.

B. Welding:
Prior to fabrication, welding procedures and welder qualifications shall be submitted to IT for approval. Welding procedures for the dryer rotating cylinder (shell) shall be qualified to conform with the requirements of ASME Section IX.

1. Welder Qualification:
   Within the previous 12 months, welders and welding operators shall be qualified to the actual procedures used in fabrication. For carbon steel, welders shall be qualified per ASME Section IX.

2. Fabrication:
   The edges and surfaces of the parts to be welded may be cut to shape and size by mechanical means such as machining, shearing, or grinding, or by oxygen or arc cutting. After oxygen or arc cutting, all slag and molten material shall be removed by mechanically grinding the edge back a minimum of 1/16 inch of parent material before welding. All groove welds shall have complete penetration and all welds shall have complete fusion with the base metal.

3. Equipment and Tools:

All tools and equipment used on carbon steel shall be free of contamination and foreign matter that would be detrimental to fabrication. Wire brush material shall be compatible with the base metal. Grinding wheels shall be resin bonded.

4. Filler Metal:
Filler metals for structural steel shall conform to applicable ASME codes. Filler metals for alloy steel shall be specified in accordance with the steel alloy manufacturer's instructions.

Controlled storage and handling of electrodes, fluxes, and other welding materials shall be maintained. Coated electrodes that have been open or unheated in excess of 8 hours shall be used only if they are oven heated in accordance with electrode manufacturer's recommendations.

C. Refractories:
The furnace insulating blanket shall be installed in SELLER's fabrication shop.

DRAFT

000444

PART 3 EXECUTION

3.1 SHOP ASSEMBLY

The SELLER shall assemble the dryer subassemblies on the dryer main frame in order to "run-in" the seals and in order to perform TIR testing. Major components to be assembled are as follows:

Cylinder Assembly
Furnace Assembly
Trunnion Base Assemblies
Feed Breech Assembly
Discharge Breech Assembly
Main Frame Assembly
Cylinder Drive Assembly

The dryer will ship as an assembled unit, with the exception of the Cylinder Drive Assembly which will be removed prior to shipment. Burner racks, combustion blowers, flame safety panels, and other components shall be shipped separately.

3.2 TESTING AND INSPECTION

A. General:
The SELLER's quality control department shall be responsible for ensuring that the equipment components and accessories are shop inspected during fabrication and sub-assemblies functionally tested prior to shipment to prove compliance with the requirements of this specification. Inspection and test reports shall be available for IT's review at SELLER's Concordia shop.

B. Integrated Plan:
The SELLER shall submit and maintain a detailed plan with schedule for manufacturing, inspection, and testing. The plan shall be submitted to IT for approval prior to fabrication. IT reserves the right to designate "source inspection hold points" which shall be incorporated into the plan. The hold points shall define the specific operations in the fabrication or inspection sequence that are to be witnessed by IT. IT acknowledges that additional hold points may impact the delivery schedule.

C. Witnessing and Notification:
IT reserves the right to witness the shop inspection and tests, as set forth in Article 2.1.C.2 and, therefore, shall have access to the SELLER's facilities during fabrication, inspection, and testing of equipment or components. The SELLER shall notify IT at least 7 calendar days prior to dates on which inspection or tests at the SELLER's plant, or at the site during installation, are

to be performed to maintain the SELLER's manufacturing or shipping schedule.

D. Pre-Planned Inspections and Tests:
IT, at its discretion, will witness the following tests (with two possible additional visits allowed for):

1. Rotary Cylinder TIR testing
2. Burner Flame Safety Panel testing

E. Proposed Procedures:
The SELLER shall submit proposed TIR and Flame Safety Panel test procedures, at IT's request.

F. Weld Inspection:
Weld inspection procedures and Non-destructive Examination (NDE) welding inspector qualifications shall be submitted to IT for approval.

Dryer Rotary Cylinder Shell:
All welds shall be 100% visually inspected. 10% of each welder's welds, for the shell only, shall be radiographed for the full length. All shell weld intersections shall be radiographed to clearly show at least 2 inches each side of the intersection. Inspection reports shall be traceable to each weld joint. The SELLER shall ensure that the methods of inspection meet the steel suppliers' special instructions given for welding on components that will be subjected to cyclic temperature conditions. All NDE shall be performed in accordance with the requirements of ASME Section VIII.

2. NDE Welding Inspector Qualifications:
The NDE inspectors shall be qualified to ASNT procedures.

G. Weld Repair Procedures:
All weld defects shall be repaired in accordance with SELLER'S repair procedures. The welds shall then be rewelded and the repaired welds shall be completely retested in conformance with the approved testing method.

3.3 EQUIPMENT IDENTIFICATION

Seller's equipment shall be identified with a 16-gage stainless steel tag measuring not less than 2 inches by 4 inches, stamped with the equipment tag number. Letters and numbers shall be a minimum of 1/4-inch high for readability. The tag shall be prominently displayed and shall be permanently affixed to the equipment. The

000446

equipment numbers shall be provided by IT.

3.4 FINISH AND PAINTING

A. Dryer system paint specifications are as follows:
Low heat paint on carbon steel (e.g. main frame, trunnion bases, supports):

Preparation:	SSPC-SP-6-85
First Coat:	Inorganic Zinc Primer (See Spec. 09900, Paint No. 101)
Second Coat:	Light Gray Epoxy (See Spec. 09900, Paint No. 205)

2. Low heat paint on carbon steel safety devices (e.g. guards, handrails):

Preparation:	SSPC-SP-6-85
First Coat:	Inorganic Zinc Primer (See Spec. 09900, Paint No. 101)
Second Coat:	Safety Yellow Epoxy (See Spec. 09900, Paint No. 202)

3. High heat paint on carbon steel (e.g. furnace) (per SELLER's standard):

Preparation:	SSPC-SP-6-85
First Coat:	Sherwin Williams KEM HI-TEMP Primer
Second Cost:	Sherwin Williams KEM HI-TEMP Silver

All paint application and thicknesses per manufacturer's instructions.

Incoloy 800HT and stainless steel shall be excluded from receiving special coatings. Finished carbon steel surfaces, such as trunnion rolls, riding rings, and thrust rolls are shipped with one coat of rust inhibitor which must be removed by IT prior to operation. Vendor-supplied items such as bearings, motors, reducers, solenoid valves, etc., will be supplied with manufacturer's standard paint.

3.5 PRODUCT DELIVERY AND ACCEPTANCE

A. Packaging:
1. Preparation for Packaging:
All materials shall be cleaned to remove all chips, slag, weld spatter, and all visible oil and grease prior to shipment.
2. Packaging:
Boxes, crates, and packages containing the equipment shall be clearly labeled with the name of the equipment, tag number, weight, pick-up points, and any other information required to properly identify and safely handle the items prior to and during shipping. The components shall be packaged and protected to prevent corrosion, entrance of foreign matter,

damage, and loss during shipment. All openings exposed to the elements shall be covered, capped, or plugged to prevent ingress of foreign material during shipment and storage. Exposed screw threads shall be protected with plastic caps or plugs. Breeching openings shall be covered with sheet metal or plywood, and gasketed. Vapor phase inhibitors (VPI paper) shall be used in boxes or crates. The vapor phase inhibitors shall not be used internal to the equipment. All shipments shall be accomplished with an itemized packing list attached to each shipping container.

B. SELLER's Instructions:
The SELLER shall provide recommended storage instructions based on storage location to be communicated by IT.

C. Receiving Inspection:
IT will receive and inspect packages containing the Rotary dryer system components to verify the contents and to check for possible damage during shipment.

D. Handling and Storage:
IT will be responsible for safe handling and storage of the Rotary dryer components (assemblies) in accordance with the supplier's instructions. Multiples shall be stored together in a group lot.

3.6 ERECTION AND INSTALLATION

The Rotary dryer system shall be installed by IT in the plant area designated for the dryer system. The overall site plan will be prepared to meet the SELLER's design requirements. All the foundations and building footings for the facility will be in place at the time of the Rotary dryer installation by IT.

A. The Rotary dryer system installation shall be in accordance with the following:
   1. All components of the Rotary dryer system shall be assembled by IT at the site in accordance with assembly drawings and instructions provided by the SELLER.
   2. IT shall be responsible for all transport, cranes, and equipment for installation and erection of the dryer system.
   3. IT is responsible for coordinating the erection and installation to correspond with other facility construction.
   4. IT is responsible for structural concrete supports and coordination with the SELLER for the interfaces before and during erection.

3.7 PERFORMANCE GUARANTEE TEST METHODS

Details of Performance Guarantee are provided in Appendix C, "Performance Guarantee/Acceptance Test" which is hereby incorporated by reference into this specification.

END OF SECTION

DRAFT

DRAFT

000450

SECTION 13122
PRE-ENGINEERED BUILDINGS
SECTION 1 - GENERAL

1.1 SCOPE

This section covers design, fabrication, and erection of the prefabricated metal buildings for the remedial facilities to be installed as part of the Waste Pit Remedial Action Project in Fernald, Ohio.

The buildings shall be provided complete with all primary and secondary structural framing, bracing, connections, secondary members to support the monorail and bridge crane beam and hangars, full-height partitions, metal wall and roof coverings, flashings, closures, continuous ridge ventilators, translucent roof panels, gutters and downspouts, sealer and caulking, metal trim, fasteners, and other miscellaneous metal building components or accessory items as specifically indicated on the Drawings or in these Specifications.

The buildings shall include rough framing and flashing for doors, windows, and louvers that will be furnished and installed by the Contractor as specified under other sections of these Specifications.

Anchor bolts embedded in the concrete foundation will be furnished and set by others in accordance with the design drawings, these Specifications, and the anchor bolt setting plan of the building manufacturer.

Man-doors, overhead doors, plastic strip curtains, windows, glazing, hardware, and hoisting equipment will be as specified in other sections of these Specifications.

1.2 GENERAL REQUIREMENTS

Building components and accessories furnished and installed under this section shall be fabricated, assembled, and erected in full conformity with the Drawings, Specifications, engineering data, instructions, and recommendations of the pre-engineered building manufacturer.

1.2.1 Coordination

The metal building manufacturer shall coordinate with the Contractor for the shipment, erection, and field quality control of the metal building.

1.2.2 Delivery, Storage, and Handling

All factory finished material shall be properly protected for shipment in accordance with accepted packing standards. Care shall be taken at the job site for proper storing and protec-

tion of the units prior to erection. Any minor damage shall be touched up before installation with color-matched, air-drying paint furnished by the manufacturer; no other finish will be accepted. Any material with significant damage will be replaced at no cost to IT Corporation (IT).

1.3 REFERENCES

The building designs and construction shall comply with all applicable federal, state, and local building codes including, specifically, the Ohio Basic Building Code (OBBC), latest Edition. The building designs shall also comply wholly or in part as specified herein to the Metal Building Manufacturers Association's (MBMA) "Low Rise Building Systems Manual." In case of conflicting requirements, the OBBC shall govern.

1.4 DEFINITIONS

Not used.

1.5 SUBMITTALS

Complete drawings and data shall be furnished showing overhead crane systems installation, anchor bolt locations; construction details; transverse cross-sections; details of roof and wall panel installation; details of the Warehouse mezzanine, stairs, and handrail; location of all openings; details of framed openings; flashing; and gutters and downspouts details. This information shall be submitted two weeks after contract award.

Manufacturer's data, installation procedures, and operation and maintenance manuals for the overhead doors shall be submitted.

Data shall include crane systems data, design loads and load combinations, and all loadings transmitted to the foundations. A letter of design certification, signed by a registered Professional Engineer in the state of Ohio, shall be submitted.

Drawings shall be accompanied by the manufacturer's erection information indicating standard recommendations, erection details, and piece markings.

All submittals shall be issued for approval before being released for construction. All submittals will require the seal of a Professional Engineer registered in the State of Ohio.

Two copies of the operation and maintenance manuals and spare parts lists for the overhead crane systems shall be submitted after installation.

000452

PART 2 - PRODUCTS

2.1 PERFORMANCE AND DESIGN REQUIREMENTS

Minimum design loadings and requirements shall be in accordance with the OBBC and as listed below:

(1) A minimum live load of 20 pounds per square foot (psf) or a snow load shall be applied to the roof as specified in the OBBC. Reduction of load due to tributary loaded area will not be permitted. Roof snow load shall be derived from a ground snow load of 25 psf in accordance with the following design values:

Snow exposure factor (Ce)	0.7
Importance factor	1.0

(2) A bridge crane, consisting of two 2-ton hoists spaced at approximately 25 feet, shall be supported by the main building members at the locations shown within the Railcar Loadout Building. An additional 4-ton monorail will be installed in the Railcar Preparation and Storage Building. The hoist loads shall be applied at any location on the monorail beam and bridge crane system as specified in the MBMA Manual. Vertical deflection without impact shall not exceed 1/450 of the beam span.

(3) Mezzanine loads for the Warehouse building shall be as follows:

Dead Load	By Design
Live Load	125 psf
Stairs and Landings	100 psf

(4) A wind load due to a basic wind speed of 80 miles per hour (mph) shall be applied and proportioned as pressure, suction, and uplift forces in accordance with the OBBC and the following design values.

Wind exposure classification	C
Importance factor	1.0

(5) A seismic force for the building and components shall be derived in accordance with the OBBC Manual.

Anchor bolts and related anchorages shall be designed to resist column and brace reactions from loading combinations. No shear lugs will be permitted beneath base plates.

Future expansion of the buildings is not planned. Endwalls may be post and beam construction.

Metal roof panels shall be Class 90 in accordance with Underwriters Laboratories, Inc.'s "Tests of Wind-Uplift Resistance of Roof Assemblies - UL 580" and shall be listed for Class 90 in Underwriters Laboratories, Inc.'s "Building Materials Directory."

2.2 STRUCTURAL STEEL FRAMING MEMBERS

Structural steel for framing members shall conform to American Society for Testing and Materials (ASTM) A 36. No structural tubing or pipe shall be used, unless noted. High strength bolts shall conform to ASTM A 325 and carbon steel bolts shall conform to ASTM A 307.

2.3 STEEL JOISTS

Open web steel joists and joist girders shall conform to SJI-01, K Series. Longspan steel lists and deep longspan steel joists shall conform to SJI-01, LH Series and SJI-01, DLH Series, respectively.

2.4 STEEL ROOFING AND SIDING

Steel covering shall be zinc-coated steel conforming to ASTM A 446 and shall have a factory color finish on the exposed side. Panels shall be 0.026-inch thick minimum, except when the mid-field of the roof is subject to design wind uplift pressures of 60 psf or greater, or the steel covering is used as a diaphragm, then the entire roof system shall have a minimum thickness of 0.030 inch. All siding panels shall be installed with vertical corrugations.

Length of sheets shall be sufficient to cover the entire length of any unbroken roof slope or the entire height of any unbroken wall surface. Width of sheets with overlapping configurations shall provide not less than 24 inches of coverage in place; width of sheets with interlocking ribs shall provide not less than 12 inches of coverage in place. Design provisions shall be made for thermal expansion and contraction consistent with the type of system to be used. All sheets shall be square cut, except gable endwall sheets may be cut in the shop to correspond to the roof slope and may have a horizontal joint at the eave line.

2.5 OVERHEAD DOORS

Overhead doors shall be industrial type of standard manufacture, fabricated of 0.034-inch or heavier galvanized or aluminum-zinc alloy coated steel. All hardware necessary for the complete installation of the doors shall be furnished. Accessories shall include galvanized steel track, brackets, lifting handles, torsion-spring mechanism, ball bearing rollers, cylinder lock, and weatherstripping. Doors shall be manually operated, except doors over 144 square feet in area shall be both chain-hoist operated and electric motor operated. Electric motor operated overhead doors shall be equipped with a safety edge.

2.6 STANDARD STEEL DOORS AND FRAMES

Hinged doors and frames shall conform to Federal Specification (FS) RR-D0575, "Door, Metal, Sliding and Swinging: Door Frame, Metal (Flush and Semiflush)." Hardware shall conform to BHMA A156.1, "Butts and Hinges;" BHMA A156.2, "Bored and Preassembled Locks and Latches;" BHMA A156.4, "Door Controls - Closers;" BHMA A156.6, "Architectural Door Trim;" and BHMA A156.7, "Template Hinge Dimensions" as applicable to the types scheduled.

Steel door frames shall be neatly mitered and securely welded at the corners with all welds ground smooth. Jambs shall be provided with 2-inch-by-1/4-inch-by-12-inch bent metal adjustable anchors spaced not over 2-feet 6-inches on centers. Provisions shall be made to stiffen the top member for all spans over 3 feet. Continuous door stops shall be made of 1-1/2-by-5/8-inch bars.

2.7 PLASTIC STRIP CURTAINS

The Subcontractor shall provide plastic strip curtains suitable for the intended purpose. These curtains shall be full height with a minimum width of 16 feet.

2.8 TRANSLUCENT ROOF PANELS

Translucent roof panels shall be manufacturer's standard conforming to ASTM D 3841, "Glass-Fiber-Reinforced Polyester Plastic Panels," weighing not less than 8 ounces per square foot. Translucent panels shall measure approximately 10 feet, 3 feet, or the manufacturer's standard, and shall be located a maximum spacing of 30 feet in each direction.

2.9 METAL FABRICATIONS

Miscellaneous plates and shapes for items that do not form a part of the structural steel framework, such as lintels, sill angles, and miscellaneous steel, shall be carbon grade steel conforming to ASTM A 36.

2.10 RIDGE VENTS

The Subcontractor shall provide a 42-inch wide continuous ridge vent for the Material Handling Building and a 30-inch wide continuous ridge vent for the Railcar Loadout Building. These ridge vents shall be as manufactured by Centria, or approved equal. The Subcontractor shall provide the manufacturer's standard 12-inch ridge vents on all other structures.

2.11 STAIRS

Steel stairs shall be complete with structural or formed channel stringers, grating treads with slip-resistant nosing, landings, columns, handrails, and necessary bolts and other fastenings as indicated. Structural steel shall conform to ASTM A 36.

2.12 HANDRAILS AND TOEPLATES

Handrails shall be designed to resist a concentrated load of 200 pounds in any direction at any point of the top of the rail, or 20 pounds per foot applied horizontally to top of the rail, whichever is more severe. Steel handrails and railings, including inserts in concrete, shall be steel pipe conforming to ASTM A 53. Steel railing shall be a minimum of 1½-inch nominal size. Toeplates shall be 5 inches high by ¼-inch thick steel plate.

2.13 GRATINGS

Steel grating shall be designed in accordance with NAAMM-01, "Metal Finishes Manual for Architectural and Metal Products," for bar-type floor gratings and FS RR-G-1602, "Grating Metal, Other Than Bar Type," for floor gratings other than bar types to meet the indicated load requirements. Gratings for treads and landings shall conform to NAAMM-01. Edges shall be banded with bars ¼-inch less in height that bearing bars for grating sizes above ¾ inch. Banding bars shall be flush with the top of bearing grating. Frames shall be of welded steel construction, finished to match the grating.

2.14 PAINTING

Finish of exposed surfaces of wall panels, roof panels, liner panels, flashings, and trim shall be the manufacturer's standard finish. Colors of all panels, trim, and flashings shall be selected from the manufacturer's standard line of colors.

All steel parts which are not specified to be factory finished and which are not zinc coated shall be cleaned and shop primed with fabricator's standard rust-inhibitive primer.

Paint shall conform to Steel Structures Painting Council (SSPC) Paint 25.

Any surface abraded or damaged during fabrication or erection shall be touched up or repainted with manufacturer's recommended paint system. All welds shall be thoroughly cleaned and touched up with a suitable primer.

All factory finished surfaces which have become damaged prior to acceptance of the buildings by IT shall be touched up and repainted as recommended by the manufacturer and to the satisfaction of IT.

000456

PART 3 - EXECUTION

3.1 EXAMINATION

The Subcontractor shall verify lines, levels, and centers before proceeding with field assembly and erection and ensure that dimensions agree with drawings.

DRAFT

3.2 FABRICATION

All primary framing shall be shop fabricated for bolted field assembly. Secondary framing shall have bolted or welded connections. All members shall be accurately shop punched. All framing members shall have an easily visible identifying mark.

Welding shall be in accordance with American Welding Society (AWS) D1.1, Structural Welding Code, latest edition. Welder qualifications shall be in accordance with ASME Section IX.

3.3 ERECTION

The buildings shall be erected by an experienced metal building erector licensed by the building manufacturer. They shall be erected in accordance with the building manufacturer's instructions. Parts shall be plumb and level with a tolerance of 1 in 500. Fasteners shall be installed and tightened in all connections. Structural bolts shall be tightened by the turn-of-nut method as set forth in the American Institute of Steel Construction's (AISC) Manual of Steel Construction.

A copy of the building manufacturer's erection information shall be kept at the erection site at all times, and shall be available to all building trades.

The metal building erector shall be responsible for verifying that the anchor bolts set in the field and the anchor bolt holes in the base plates are at the proper locations prior to starting building erection. If adjustments or corrections are required, they shall be submitted to IT prior to execution.

Roof and wall panels, flashing, closures, and other building components shall be installed and sealed so that watertight construction is obtained. Panels shall be neatly cut and fitted around openings, door and window frames, and other installed accessories. All joints shall be lapped and sealed. Panels shall be securely fastened to structural framing and to each other.

The erector shall be responsible for grouting the column base plates as shown on the drawings and in accordance with the building manufacturer's recommendations.

3.4 FIELD TESTING

The buildings shall be leak tested prior to acceptance. Any leakage discovered shall be corrected and retested.

3.5 PROTECTION

All portions of the buildings shall be protected from damage during fabrication, shipment, site storage, and erection. Damaged parts shall be replaced with undamaged units unless field repairs are authorized by IT.

3.6 CLEANING

After completion of construction, all soiled surfaces shall be cleaned per the manufacturer's instructions and in accordance with the applicable SSPC Specifications.

3.7 WARRANTIES AND CERTIFICATES

The building system, including roofing, siding, and painting, shall be guaranteed in writing based upon the bidder's standard warranty.

Prior to construction, the contractor shall submit a warranty for coverage of workmanship and material.

A written Underwriters Laboratories, Inc. Class 90 certification shall be required from both the erection contractor and the metal building fabricator.

-- End of Section --

DRAFT

SECTION 13200

GENERAL TANKS AND VESSELS

PART 1 GENERAL

1.1 SECTION INCLUDES:

A. This specification describes the general minimum requirements for the materials, planning, assembly, inspection, testing and fabrication of general tanks and vessels.

B. Equipment covered by this specification will operate at pressures not exceeding 15 PSI. ASME codes shall be used as a guide for the design and fabrication.

1.2 RELATED SECTIONS

A. Section 09900 - Painting General
B. Section 15250 - Insulation
C. Division 11 - Equipment
D. Division 15 - Mechanical

1.3 REFERENCE, CODES AND STANDARDS

A. American Petroleum Institute (API)
   1. API STD 12D - Specification for Field Welded Tanks
   2. API STD 12F - Specification for Shop Welded Tanks
   3. API STD 620 - Low Pressure Welded Tanks
   4. API STD 650 - Specification for Welded Tanks

B. American Society of Mechanical Engineers (ASME)
   1. ASME BPVC - Boiler and Pressure Vessel Code

C. American Water Works Association (AWWA)
   1. AWWA D100-79 - Standard for Welded Tanks

D. American Welding Society (AWS)
   1. AWS D1.1 - Structural Welding Code

E. American National Standards Institute (ANSI)

F. American Society for Testing and Materials (ASTM)

G. Steel Structures Painting Council (SSPC)

Where reference is made to specifications, codes, or standards compiled by other agencies or organizations, such reference is made for expediency and standardization and shall hereby be made a part of this specification.

In the event of conflict between other referenced documents or specifications and this specification, this specification shall govern.

1.4 SYSTEM DESCRIPTION

A. Unless noted otherwise, all equipment shall be designed for a wind load of 80 MPH and seismic zone I.

1.5 SUBMITTALS

A. Vendor's drawings must show complete fabrication detail, material used, and include complete welding details showing location, size, and type of vessel weld seams and attachment welds. Drawings shall show Equipment Number, IT Purchase Order Number, and Shipping Weight. All nozzles are to be identified on drawings by letter.

B. ASTM Number or ASME material specification, as appropriate, must be shown on vendor's drawings for all material such as shell, head, nozzle necks, flanges, studs, nuts, etc.

C. Vendor shall provide complete detailed design calculations on 8½-inch by 11-inch sheets. Calculations shall be provided for each complete vessel/tank and all attachments. (Standard items such as ANSI flanges are excluded.)

D. Vendor to submit welding procedures and weld qualification procedures with approval drawings.

E. Miscellaneous: All reports, calculations, correspondence, etc., shall show Equipment Number and IT Purchase Order Number. Vendor's drawings for approval submittal date and equipment delivery date must be completed by the date specified on the order, unless specifically agreed otherwise.

F. Quotations: All quotations shall include thickness of materials used, and shall be based on type materials specified. Alternates or substitutions must have written approval of IT.

1.6 QUALITY ASSURANCE

A. All workmanship shall be in accordance with and equal to the best modern metal shop practices as recognized within the industry.

000462

B. Vendor shall provide all quality control procedures, inspections, and testing to the extent necessary to assure that all work is performed in accordance with this specification.

1.7 DELIVERY, STORAGE, AND HANDLING

A. Vendor to protect all openings for shipment with wood or hardboard secured with light bolts. These covers shall be protected from the weather with tape around edges. Couplings shall be plugged with metal plugs.

B. Vendor shall utilize sufficient means of separation between the parts and materials along with adequate tie-downs to prevent unnecessary distortion or marring of components during the shipping process.

C. Properly reported shortages upon delivery at the job site must be replaced by the vendor at no additional cost.

D. Before shipment, vendor shall prepare and paint all surfaces of all parts and materials except where noted on the drawings. This shall be done in accordance with the paint specification Section 09900 - Painting, number of coats, along with type and color of paint shall be as specified on the drawings.

E. No parts or materials shall be loaded and/or shipped until paint coating has thoroughly dried or cured.

PART 2 PRODUCTS

2.1 PRODUCTS

A. Minimum thickness of nozzle necks (without corrosion allowance), unless specified otherwise, shall be not less than a standard wall for ALL openings.

B. Vendor to install all studs (bolts are not permitted on flanged connections), nuts and NEW gaskets for all completed connections. New gaskets shall be installed in place after a hydro test.

C. All bolt holes are to straddle vessel natural centerlines unless noted otherwise.

D. All welding must be as detailed on drawings approved by IT. All butt joints must be full penetration welds. All attachment welds must be continuous; no staggered welds are acceptable. All nozzle joints must be welded both inside and outside, unless noted otherwise.

2.2 MATERIALS

A. Minimum Thickness of Plate: In no case shall the nominal thickness of plate (excluding corrosion allowance) be less than (a) 3/16 inch for carbon steel or (b) 11-gauge for 316 stainless steel, thickness for other materials shall be determined by design.

B. The vessel, support lugs, saddles, legs, etc. shall be designed in accordance with acceptable engineering practices and applicable codes. Vendor shall indicate compliance by providing appropriate design calculations and basis for design.

C. All threaded studs, nuts etc. shall be coated with "Molycote" or equal.

2.3 FABRICATION

A. All nozzle projections are to be 6 inches unless otherwise shown. All bottom nozzles shall be flush on inside, unless noted otherwise.

B. Provide lifting lugs for handling, unless noted otherwise

C. Weld backing strips shall not be acceptable unless specified otherwise.

D. Whenever practical, threaded connections on vessels should be avoided. If a threaded connection is to be used, use an internally threaded connection no smaller than 1-inch FNPT. The threaded connection shall be a 3000-lb steel coupling or boss of similar proportions to a 3000-lb coupling, welded to the vessel. External threaded nipples are not acceptable.

E. Surface preparation and painting shall meet Section 09900 - Painting

F. Any method selected by vendor for cutting is suitable as long as cut edge is smooth, uniform, and clean from any burrs, sharp edges, or foreign deposits. Cut surfaces shall be within the acceptable tolerances for straightness and roughness as specified by ANSI B46.1.

G. Where possible and practical, sizing and arrangement of plates utilized shall be selected to reduce the quantity and distortion of joint or seam welding.

H. The following minimum requirements shall be maintained in the orientation and placement of assembly seams:
   1. All seams shall be located to clear or minimize the impact with nozzle openings, reinforcing pads, and internally placed supports or components.
   2. Joints in horizontal vessels and ducts shall not be located coincident with or across saddle supports.

000464

3. Where attachment welds are within two shell plate thicknesses of a seam, the weld shall be ground flush and inspected before welding on the attachment.

I. Shells rolled to required contours shall have no flat sections at the end of the plate where started or ended in the rolls. All plates shall be prepared for welding according to AWS D1.1 Section 3, and shall have all edges prepared for the appropriate weld joint configuration.

J. All forming, rolling and bending shall be done by use of pressure tools, and not by percussion blows. All bends shall be free of fractures and excessive thinning.

K. Splicing of plates, sheets, bars, and shapes to form larger or longer material sizes shall be permissible within certain limitations. Splices shall be kept to a reasonable minimum, with joints continuously welded with full penetration so that the splice shall develop full section strength. The finished spliced components shall be free of any distortion or misalignment and within the tolerance for straightness as specified for original materials.

L. Splicing of angle and pipe shapes will not be permissible except where specifically noted and approved on the detail drawings.

M. To limit the amount of distortion when fabricating tank bottoms or cones, the number of plates used shall be kept to a minimum and of nearly equal width.

N. The curvature of any reinforcing pad shall follow the curvature of the vessel or duct so as that the maximum gap at any point shall not exceed 1/16 inch (1.5 mm). Where required, appropriate sized weep holes shall be provided in the reinforcing pad.

O. Nozzles and their flange faces shall be square with the nozzle centerline and bolting holes straddle natural centerlines. Fabricated nozzle flanges shall have smooth flat faces and be in accordance with the ANSI B16.5 standard for dimensions and arrangement for their specified size and rating.

P. All machining, milling, planing, threading, tapping, etc., shall be done in accordance with the dimensions and/or notations on the detail drawings, and within the standards so recognized by the applicable regulatory codes governing such work.

2.4 LABELING

A. All equipment must bear manufacturer's nameplate showing maximum design conditions and manufacturer's serial number.

PART 3 EXECUTION

3.1 ERECTION

A. All parts, pieces, or members that must be handled separately during field erection shall be marked with an identifying part number as an exact indication of their position in the assembly or structure.

3.2 WELDING

A. All welding and preparation on structural support shall be in accordance with the latest edition or revision of the American Welding Society "Structural Welding Code D1.1." All welding and preparation on vessels shall be in accordance with applicable vessel welding codes.

B. Only competent welders fully capable and pre-qualified of performing required welding shall be used. IT reserves the right to require from the vendor a qualification certificate for any or all welders utilized for work governed by this specification.

C. Adequate precautions and methods for minimizing distortion implied by welding of flame cutting must be utilized at all times. Welding, applied for the purpose of relieving stresses and distortion, shall be totally removed by grinding.

D. Weld metal shall not be used to build up the edges of plates that are too short or contain large cavities without written approval from IT.

3.3 INSPECTION, TESTING, AND TRIAL ASSEMBLY

A. All components will be inspected for proper dimensions, configuration, completeness, and adherence to fabrication tolerances. All weld profiles will be 100% visually inspected against defects or deficiencies in accordance to sections 3 or 8 of the AWS D1.1 specification and/or applicable codes. Additional random mechanical and/or nondestructive tests according to section 6 of the AWS D1.1 specification may be made as required, or stipulated by the vendor's own Quality Assurance Program. IT reserves the right to require the testing of any designated weld.

B. Approval by IT's authorized inspector, or waiver of shop inspection by IT, shall not relieve the vendor of the responsibility for furnishing materials and workmanship in accordance with this specification and all other Purchase Documents, nor shall it relieve the vendor of making his own inspections or tests to certify such.

000466

C. When specifically designated in the Purchase Documents, a complete shop trial assembly shall be required. The specified parts shall be assembled in an upright position, sufficiently bolted and match marked in a clear and distinct method to assure for proper alignment and re-assembly during field erection.

D. Hydrostatic or pressure testing may be required of certain components. If so, the procedure and limits will be completely defined within the Purchase Documents.

-End of Section-

DRAFT

DRAFT

SECTION 13201

ASME CODE TANKS AND VESSELS

PART 1 GENERAL

1.1 SECTION INCLUDES

A. This specification describes the general minimum requirements for the materials, planning, assembly, inspection, testing and fabrication of ASME code stamped tanks and vessels.

B. Equipment covered by this specification will operate at pressures exceeding 15 PSI. ASME codes shall be used for the design and fabrication.

1.2 RELATED SECTIONS

A. Section 09900 - Painting General
B. Section 15250 - Insulation

1.3 REFERENCE, CODES AND STANDARDS

A. American Petroleum Institute (API)

B. American Society of Mechanical Engineers (ASME)
   1. ASME BPVC Section VIII - Boiler and Pressure Vessel Code

C. American Welding Society (AWS)
   1. AWS D1.1 - Structural Welding Code

D. American National Standards Institute (ANSI)

E. American Society for Testing and Materials (ASTM)

F. Steel Structures Painting Council (SSPC)

Where reference is made to specifications, codes, or standards compiled by other agencies or organizations, such reference is made for expediency and standardization and shall hereby be made a part of this specification.

In the event of conflict between other referenced documents or specifications and this specification, this specification shall govern.

1.4 SYSTEM DESCRIPTION

A. Unless noted otherwise, all equipment shall be designed for a wind load of 80 MPH and seismic zone I.

1.5 SUBMITTALS

A. Vendor's drawings must show complete fabrication detail, material used, and include complete welding details showing location, size, and type of vessel weld seams and attachment welds. Drawing shall show Equipment Number, IT Purchase Order Number, and Shipping Weight. All nozzles are to be identified on drawing by letter.

B. ASTM Number or ASME material specification, as appropriate, must be shown on vendor's drawings for all material such as shell, head, nozzle necks, flanges, studs, nuts, etc.

C. Vendor shall provide complete detailed design calculations on 8½ inch by 11 inch sheets. Calculations shall be provided for each complete vessel/tank and all attachments. (Standard items such as ANSI flanges are excluded.)

D. Vendor to submit welding procedures and weld qualification procedures with approval drawings.

E. Miscellaneous: All reports, calculations, correspondence, etc., shall show Equipment Number and IT Purchase Order Number. Vendor's drawings for approval submittal date and equipment delivery date must be completed by the date specified on the order, unless specifically agreed otherwise.

F. Quotations: All quotations shall include thickness of materials used, and shall be based on type materials specified. Alternates or substitutions must have written approval of IT.

G. For all ASME vessels, vendor shall provide all code forms. Vendor shall provide all other data reports, including mill test reports, material identification sketch according to UG-77, weld rod information, weld procedures, and weld qualification procedures.

1.6 QUALITY ASSURANCE

A. All workmanship shall be in accordance with and equal to the best modern metal shop practices as recognized within the industry.

000470

B. Vendor shall provide all quality control procedures, inspections, and testing to the extent necessary to assure that all work is performed in accordance with this specification.

1.7 DELIVERY, STORAGE, AND HANDLING

A. Vendor to protect all openings for shipment with wood or hardboard secured with light bolts. These covers shall be protected from the weather with tape around edges. Couplings shall be plugged with metal plugs.

B. Vendor shall utilize sufficient means of separation between the parts and materials along with adequate tie-downs to prevent unnecessary distortion or marring of components during the shipping process.

C. Properly reported shortages upon delivery at the job site must be replaced by the vendor at no additional cost.

D. Before shipment, vendor shall prepare and paint all surfaces of all parts and materials, except where noted on the drawings. This shall be done in accordance with the paint specification Section 09900 - Painting, number of coats, along with type and color of paint shall be as specified on the drawings.

E. No parts or materials shall be loaded and/or shipped until paint coating has thoroughly dried or cured.

PART 2 PRODUCTS

2.1 PRODUCTS

A. Minimum thickness of nozzle necks (without corrosion allowance) unless specified otherwise, shall be not less than standard walls for ALL openings.

B. Vendor to install all studs (bolts are not permitted on flanged connections), nuts and NEW gaskets for all completed connections. New gaskets shall be installed in place after a hydro test.

C. All bolt holes to straddle vessel natural centerlines unless noted otherwise.

D. All welding must be as detailed on drawings approved by IT. All butt joints must be full penetration welds. All attachment welds must be continuous; no staggered welds are acceptable. All nozzle joints must be welded both inside and outside, unless noted otherwise.

2.2 MATERIALS

A. Minimum Thickness of Plate: In no case shall the nominal thickness of plate (excluding corrosion allowance) be less than (a) 1/4 inch for carbon steel or (b) 3/16 inch for 316 stainless steel, thickness for other materials shall be determined by design and applicable codes.

B. The vessel, support lugs, saddles, legs, etc. shall be designed in accordance with acceptable engineering practices and applicable codes. Vendor shall indicate compliance by providing appropriate design calculations and basis for design.

C. All threaded studs, nuts etc. shall be coated with "Molycote" or equal.

2.3 FABRICATION

A. All nozzle projections are to be 6 inches unless otherwise shown. All bottom nozzles shall be flush on inside, unless noted otherwise.

B. Provide lifting lugs for handling, unless noted otherwise

C. Weld backing strips shall not be acceptable unless specified otherwise.

D. Whenever practical, threaded connections on vessels should be avoided. If a threaded connection is to be used, use an internally threaded connection no smaller than 1 inch FNPT. The threaded connection shall be a 3000 lb steel coupling or boss of similar proportions to a 3000 lb coupling, welded to the vessel. External threaded nipples are not acceptable.

E. Surface preparation and painting shall meet Section 09900 - Painting

F. Any method selected by vendor for cutting is suitable as long as cut edge is smooth, uniform, and clean from any burrs, sharp edges, or foreign deposits. Cut surfaces shall be within the acceptable tolerances for straightness and roughness as specified by ANSI B46.1.

G. Where possible and practical, sizing and arrangement of plates utilized shall be selected to reduce the quantity and distortion of joint or seam welding.

H. The following minimum requirements shall be maintained in the orientation and placement of assembly seams:
   1. All seams shall be located so as to clear or minimize the impact with nozzle openings, reinforcing pads, and internally placed supports or components.
   2. Joints in horizontal vessels and ducts shall not be located coincident with or across saddle supports.

000472

3. Where attachment welds are within two shell plate thicknesses of a seam, the weld shall be ground flush and inspected before welding on the attachment.

I. Shells rolled to required contours shall have no flat sections at the end of the plate where started or ended in the rolls. All plates shall be prepared for welding according to AWS D1.1 Section 3, and shall have all edges prepared for the appropriate weld joint configuration.

J. All forming, rolling and bending shall be done by use of pressure tools, and not by percussion blows. All bends shall be free of fractures and excessive thinning.

K. Splicing of plates, sheets, bars, and shapes to form larger or longer material sizes shall be permissible within certain limitations. Splices shall be kept to a reasonable minimum, with joints continuously welded with full penetration so that the splice shall develop full section strength. The finished spliced components shall be free of any distortion or misalignment and within the tolerance for straightness as specified for original materials.

L. Splicing of angle and pipe shapes will not be permissible, except where specifically noted and approved on the detail drawings.

M. In order to limit the amount of distortion when fabricating tank bottoms or cones, the number of plates used shall be kept to a minimum and of nearly equal width.

N. The curvature of any reinforcing pad shall follow the curvature of the vessel or duct so as that the maximum gap at any point shall not exceed 1/16" (1.5 mm). Where required, appropriate sized weep holes shall be provided in the reinforcing pad.

O. Nozzles and their flange faces shall be square with the nozzle centerline and bolting holes straddle natural centerlines. Fabricated nozzle flanges shall have smooth flat faces and be in accordance with the ANSI B16.5 standard for dimensions and arrangement for their specified size and rating.

P. All machining, milling, planing, threading, tapping, etc., shall be done in accordance with the dimensions and/or notations on the detail drawings, and within the standards so recognized by the applicable regulatory codes governing such work.

2.4 LABELING

A. All equipment must bear manufacturer's nameplate showing maximum design conditions and manufacturer's serial number.

PART 3 EXECUTION

3.1 ERECTION

A. All parts, pieces, or members that must be handled separately during field erection shall be marked with an identifying part number as an exact indication of their position in the assembly or structure.

3.2 WELDING

A. All welding and preparation for such shall be in full accordance with the latest edition or revision of the American Welding Society "Structural Welding Code D1.1" for structural and ASME Section VIII - BPVC for vessels.

B. Only competent welders fully capable and pre-qualified of performing required welding shall be used. Vendor to submit qualification certificates for any or all welders utilized for work governed by this specification.

C. Adequate precautions and methods for minimizing distortion implied by welding of flame cutting must be utilized at all times. Welding, applied for relieving stresses and distortion, shall be totally removed by grinding.

D. Weld metal shall not be used to build up the edges of plates that are too short or contain large cavities without written approval from IT.

3.3 INSPECTION, TESTING, AND TRIAL ASSEMBLY

A. All components will be inspected for proper dimensions, configuration, completeness, and adherence to fabrication tolerances. All weld profiles will be inspected against defects or deficiencies according to ASME Section VIII BPVC. IT reserves the right to require the testing of any designated weld.

B. Approval by IT's authorized inspector, or waiver of shop inspection by IT, shall not relieve the vendor of the responsibility for furnishing materials and workmanship in accordance with this specification and all other Purchase Documents, nor shall it relieve the vendor of making his own inspections or tests to certify such.

C. When specifically designated in the Purchase Documents, a complete shop trial assembly shall be required. The specified parts shall be assembled in an upright position, sufficiently bolted and match marked in a clear and distinct method to assure for proper alignment and re-assembly during field erection.

D. Hydrostatic or pressure testing may be required of certain components. If so, the procedure and limits will be completely defined within the equipment data sheets and Purchase Documents.

-End of Section-

DRAFT

DRAFT

SECTION 13203

FIBERGLASS REINFORCED THERMOSET PLASTIC CUSTOM FABRICATED EQUIPMENT SPECIFICATION

PART 1 GENERAL

1.1 SECTION INCLUDES

A. This specification includes all types of fiberglass reinforced thermoset plastic custom fabricated equipment produced by hand lay up, filament winding, or modified methods of construction involving either or both of the foregoing.

B. Deviations from this specification must be identified at the time of inquiry and quotation. After the quotation is made, all points of deviation are to be clearly defined in writing and agreed to by IT and Seller.

C. All clarifications on any points of deviation must be clearly understood by both IT and Seller and put in writing in order to give equal consideration to all quotations.

D. It may be necessary for vendors to furnish some design details at the time of quotation to evaluate their quotation.

Typical items required with quotation include: equipment dimensions, equipment capacity, erection weight, material specifications, fabrication thicknesses, unit prices for (installed) nozzles and airways, separate pricing for testing of physical properties of laminate cut-outs.

1.2 RELATED SECTIONS

Section 09900 - Painting

1.3 REFERENCES, CODES AND STANDARDS

A. ASTM 2563 Level II - Liners
B. ASTM 2563 Level III - Structure
C. ASTM D3299-74 - Tolerances
D. PS 15-69 - Tolerances
E. ASTM E-84 - Tunnel test Fire Retardancy/Smoke
F. ANSI B16.5 - Flanges

1.4 SUBMITTALS

A. Drawings

1. It will be the Seller's responsibility to furnish a complete set of detail drawings for approval upon receipt of the order based on the design criteria specified by IT. The following items are to be included on fabrication drawings submitted to IT for approval:
   a. Name of Customer
   b. Equipment Number and Name
   c. Purchase Order Number
   d. Weights (empty, operating, full of water)
   e. Capacity
   f. Thicknesses (shells, heads, etc.)
   g. Overall length or height
   h. Location, dimension, and detail of all seams, nozzles, and manways
   i. Detail of lifting and hold-down lugs and all other attachments
   j. Design and operating conditions
   k. Material specifications
   l. Laminated description
   m. Fabrication tolerances
   n. Nameplate information.

2. The drawings must show all materials of construction.

3. The drawing must show a cross section giving the sequence and detail of each layer of the laminate buildup. Each layer must be identified with detail materials specifications. This information is necessary as a permanent record so the vessel may be properly maintained in the future.

EXAMPLE

000478

Typical Laminate Sequence

V = 20 Mil Nexus
M = 43 Mil 1½ Oz/Ft^2 Type "E" Glass Mat
R = 33 Mil 24 Oz/Yd^2 Type "E" Glass Woven Roving
E = 43 Mil 1½ Oz/Ft^2 Type "E" Glass Mat Exotherm Layer
U = Gel Coat

Thk	Liner				Structural															Ext
¼"	V	M	M	M	M	R	M													U
⅜"	V	M	M	M	M	R	M	R	M	R										U
½"	V	M	M	M	M	R	M	R	M	R	E	M	R	M						U
⅝"	V	M	M	M	M	R	M	R	M	R	E	M	R	M	R	M	R			U

B. Calculations
1. The Seller is required to furnish a complete set of design calculations for IT approval.
2. The design shall be based on a minimum safety factor of 10 to 1 for pressure and 5 to 1 for vacuum unless otherwise specified.

C. Review
1. IT will review the drawings and the design calculations for approval prior to the start of fabrication.
2. The approval of drawings will not relieve the Seller of any responsibility of design or fabrication for equipment.
3. Manufacturer's current printed product description, material safety data sheets (MSDS) and technical data sheets for each coating system.

1.5 PACKAGING, SHIPPING, AND HANDLING

A. It shall be the Seller's responsibility to assure that the equipment is loaded and secured using sufficient packing, blocking, and tie down as may be required to prevent damage during transit.

B. An inspection will be made by IT for any obvious transit damage prior to unloading.

C. After loading, the Seller will stencil on the surface of the vessel in several

conspicuous places in at least 2-inch high letters:

PLASTIC - HANDLE WITH CARE
FOLLOW ALL HANDLING AND
INSTALLATION INSTRUCTIONS

D. The Seller will attach all of the recommended unloading and handling instructions to the equipment. These instructions are to be read and adhered to by all those handling this equipment.

PART 2 PRODUCTS

2.1 PRODUCTS/CONSTRUCTION

A. All interior surfaces exposed to the process environment shall be constructed of two resin-rich layers of "C" glass veil, or other type surfacing veil if specified, as the exposed surface, followed by two layers of chopped strand mat.

B. Where process fluids attack glass, synthetic surfacing veil such as Nexus or Dynel shall be used. Some services which warrant synthetic veil are: fluorine, fluorides, hydrofluoric acid, sodium hypochlorite, wet chlorine, chlorine dioxide, chlorinated brine, hydrochloric acid, and sodium hydroxide.

C. Construction described in Section 2.1.A shall also apply to flange faces and to all surfaces of internal components such as dip pipes, baffles, etc.

D. All exterior surfaces shall be a minimum of one layer of chopped strand mat followed by one resin-rich layer of "C" glass veil, Nexus, or other type surfacing veil if specified, as the exposed surface liner. The liner shall be fabricated per ASTM 2563 Level II and the structure per ASTM 2563 Level III.

E. In order to ensure that all glass fibers are adequately covered, all surfaces shall contain sufficient resin to present a smooth appearance.

F. All hold-down and lifting lugs shall be reinforced plastic.

2.2 MECHANICAL PROPERTIES

A. The minimum acceptable mechanical properties are:

Flexural Modulus	=	1.0×10^6 PSI
Flexural Strength	=	22,000 PSI

000480

Tensile Modulus	=	1.5×10^6 PSI
Tensile Strength	=	15,000 PSI

B. It will be the Seller's responsibility to use the reinforcing system that will produce the desired laminate strength with the acceptable types of glass reinforcing.

2.3 FABRICATION

A. All cutouts to be marked and kept for inspection by IT or its representatives.

B. All angles that are used as stiffeners must be sandblasted before they are overlaid.

C. All stiffeners must be overlaid on equipment before the mold is pulled.

D. All edges and bolt holes must be resin coated. No exposed glass is permitted.

E. All gaskets used must be one piece and have a durometer of 60 ±5. Material type neoprene or equal.

F. All internal sub-assemblies and overlays must have a corrosion liner on both sides.

G. The fabricator is responsible for proper secondary bonding procedure. The fabricator shall present detail drawings on secondary laminates.

H. All thicknesses shown are minimum.

I. Liner must be cured before structural layers are overlaid.

J. For hand lay-up method, if the structural thickness exceeds ⅜", there must be an exotherm layer added to the structural layer.

K. No more than 4 hours' interruption is allowed between liner and structural, or during exotherm.

L. All outside corners on flanges and equipments must have a minimum of 1" radius.

M. All flange projections to be 6" from inside unless otherwise noted.

N. Minimum corrosion liner thickness is 130 Mil.

O. Any deviation from the specification shall be documented by the Supplier and submitted to IT for approval.

2.4 MATERIAL

A. The resin used shall be of a commercial grade and shall be evaluated as a laminate by test or previous service to be acceptable for the environment.

B. The resin used in the laminate shall be mixed according to the resin manufacturer's instructions.

C. The complete vessel shall be fabricated with the same resin system throughout unless otherwise specified.

D. All resins have an inherent flame retarding ability. In some instances, this can be enhanced by the addition of Antimony Trioxide to the resin formulation. IT policy will aim at using only those resins or formulations with a flame spread rating of 25 or less. This rating is to be determined by the ASTM E-84 Tunnel test. Where chemical environment dictates, the use of a resin with a higher flame-spread rating application must be made to the Corporate Safety Department for approval. In no case shall a resin with a flame-spread rating higher than 80 be used.

E. Resins included in this standard shall have a smoke development rating no greater than 50 per ASTM E-84. Where additional post-fabrication curing is required to obtain said rating, it shall be performed by the fabricator in strict accordance with the resin manufacturer's instructions.

F. The resins used shall not contain fillers except as required for viscosity control or fire retardance. Up to 4 percent by weight of thixotropic agent, which will not interfere with visual inspection, may be added to the resin for viscosity control.

G. A heavily thixotropic thickened resin putty may be used to seal cut ends of joints and to fill voids in fabricated joints only. Antimony compounds or other fire retardant agents (up to 5 percent) may be added for improved fire resistance.

H. Ultraviolet inhibitors shall be incorporated in the final top coat to prevent surface degradation. The amount of stabilizer shall be as per the resin manufacturer's current recommendations.

I. Reinforced plastic equipment shall not be pigmented, painted, or dyed unless specified in the purchase specification. When pigmentation is specified, the

pigment shall be dispersed in the resin used for the finish coat of the laminate. This cover coat shall be applied following equipment inspection.

2.5 GLASS REINFORCING

A. The chemical surfacing veil shall be Type C glass monofilament surfacing mat, having a coupling agent which will provide a suitable bond between the glass reinforcement and the resin.

B. Where the process fluids attack glass, synthetic surfacing veil such as Dynel organic shall be used.

C. Glass mat, cloth, roving or continuous filament may be used as reinforcing agents. All glass reinforcement shall be a commercial grade having a coupling agent which will provide a compatible bond between the glass reinforcement and the resin.

2.6 FLANGES

A. All flanges must be shown in detail and drilling shall be of 150 psi ANSI Spec. No. B 16.5 design unless otherwise specified.

B. The flanges may be constructed by hand lay up. No fab mat shall be used in fabrication of flanges.

C. All nozzles and flanges except on manholes and handholes, unless otherwise specified, shall have conical or plate gussets.

D. Proprietary design flanges, nozzles and gussets may be accepted upon purchaser's approval.

E. Manufacturer must show torque values on drawings to be used on all flange bolting.

F. Full-face gaskets will be used on all flanges.

G. All flange bolt holes shall be back-spot faced for standard flat washers.

H. All mating flanges or flange covers shall be match or template drilled.

I. All edges and bolt holes shall be resin coated. No exposed glass is permitted.

2.7 LABELS AND NAMEPLATE LOCATION

A. Vertical Vessels - Nameplate to be located on shell approximately 12 inches above shell manway. The nameplate will be embedded in the exterior surface of the shell and will have a gel coat of resin to protect from corrosion. It can be made of either paper or stainless steel sheet but must be clearly visible.

B. Horizontal Vessels - To be embedded in center of one of the heads. The nameplate will be embedded in the exterior surface of the shell and will have a gel coat of resin to protect from corrosion. It can be made of either paper or stainless steel sheet but must be clearly visible.

PART 3 EXECUTION

3.1 INSPECTIONS

A. Inspections that IT deems necessary will be made at the following times:

1. During fabrication at Seller's shop.
2. After fabrication at Seller's shop.
3. Upon receipt at IT facilities.
4. After installation at job site.

B. Inspections will cover the following areas:

1. Workmanship.
2. Materials of construction.
3. Transit damage.
4. Handling damage.

C. Inspection conditions.

1. In the inspection area at the fabricator's plant, lights of sufficient intensity will be provided to permit the inspector full view through the laminate. This is to include both general area lighting and portable hand lights.
2. The surfaces of the laminate must be clean and free of all foreign materials to permit the inspector full view of the surfaces.
3. The inspector must have complete access to the entire piece or pieces of equipment.
4. The vendor will furnish a qualified person to assist and accompany the IT inspector during the entire inspection.

D. Acceptance of the equipment will be based on the following areas:

1. Star Crazing Areas: Allowable limits - none, unless they have been ground out and overlaid by sufficient thickness.
2. Pits: Allowable limits - not over 2 pits in any square foot of surface. Pits must be less than 1/8-inch diameter and not over 1/32-inch deep. If either limit on the number or size of pits is exceeded, a suitable repair or repairs

000484

must be made.

3. Air Entrainment - None in the "C" veil glass. Any other location in laminate must not exceed 1/2-inch diameter in size.
4. Dry Spots:
   a. Areas deep in the laminate cannot exceed 3/4-inch diameter.
   b. Both interior and exterior veil surfaces must be free of dry spots.
5. Must meet the required physical properties of the laminate.
6. Required Barcol hardness must be met in 80 percent of the readings and must be acceptable on the test for tackiness. Barcol hardness readings must be 90 percent of the resin manufacturer's minimum hardness requirements. A minimum of 30 readings will be taken, location to be at inspector's discretion.
7. Tolerances and Dimensions - As specified by Seller and approved by IT.
8. Surfaces - Exterior and interior surfaces will be resin rich and will be reinforced with "C" Veil or synthetic surfacing veil as approved by Buyer. Other reinforcing may be used if IT approves or specifies.
9. Glass Fibers - Exposed glass fibers on the surface will not be acceptable.
10. Imbedded Particles - Allowable limits - None.

3.2 SAMPLING

A. Cutouts of the laminate where openings have been made in the equipment will be used for testing the properties of the laminates. If no cutouts are made in the equipment, the Seller will be required to furnish three 12-inch by 12-inch test pieces of the exact laminate using part of the resin mix used in the fabrication. The thickness will be the same as the said piece of equipment.

B. All cutouts and test pieces will be shipped with the equipment to IT for testing of the laminate. All cutouts will be clearly marked as to where they were cut from. Failure of test pieces to meet physical requirements is cause for rejection of the equipment.

C. Cutouts shall be identified with purchase order number, equipment number, vendor, date of manufacture and resin system used.

3.3 TOLERANCES

A. Tolerances for dimensions will be as specified in PS15-69 and/or ASTM D3299-74.

B. Any exceptions to the above tolerances must be specified in detail and shown on all drawings.

3.4 SURFACE HARDNESS CURE

A. The surface hardness on exterior and interior, when taken with a Barcol Hardness Tester, must meet 90 percent of the resin manufacturer's minimum cured hardness.

B. The cure will be checked for tackiness of the surface after being wiped with a cloth dampened with acetone.

C. It may be necessary to post-cure as recommended by the resin manufacturer in order to meet the required Barcol hardness.

-End of Section-

DRAFT

000486

SECTION 13310

NOISE LEVEL SPECIFICATION

PART 1 GENERAL

1.1 SECTION INCLUDES

A. Noise limits and requirements on equipment and additional material required to achieve compliance through noise isolation or control.

1.2 RELATED SECTIONS

A. Section 15170 - Motors
B. Division 11 - Equipment Specifications
C. Division 15 - Mechanical

1.3 REFERENCES, CODES, AND STANDARDS

The publication listed below forms a part of this specification to the extent referenced.

A. Occupational Safety and Health Administration (OSHA).
   1. OSHA 1910.95 Federal Register Vol. 39, N.125, P 23596

1.4 SPECIFIC REQUIREMENTS/SYSTEM DESCRIPTION

A. The maximum permissible sound power levels shall be as defined in OSHA Standard 1910.95 (Federal Register, Vol. 39, N. 125, P. 23596) and summarized as follows:

Duration Per Day, Hours	Sound Level, dB, Slow Response
8	90
6	92
4	95
3	97
2	100
1-1/2	102
1	105
½	110
1/4 or less	115

B. The above noise levels shall not be exceeded for any client employee working within 3 feet of any of the major boundaries of the vendor furnished equipment.

C. The estimated duration of operator exposure for the equipment covered by the specification is provided in Attachment A.

1.5 SUBMITTALS

A. Equipment vendor shall submit estimated sound pressure level data and sound power level data with the proposal for the Vendor's standard unit, defined as including equipment manufactured by the Vendor and equipment purchased from subvendors.

B. The vendor shall submit estimated sound power level data in dB at 3 feet from equipment surface for each item listed in Attachment A.

C. The vendor shall submit predicted sound pressure level data in decibels at 3 feet from equipment surface at the 8 octave band frequencies, defined as follows: 63, 125, 250, 500, 1000, 2000, 4000, and 8000 Hertz.

D. Whenever the estimated sound power level of the Vendor's standard unit exceeds the criteria. The Vendor shall submit with his proposal one of the following:
- Alternate equipment proposals;
- Description of special noise isolation equipment with details of additional cost; or
- Request for IT Corporation to accept the responsibility for any further noise control considerations.

PART 2 PRODUCTS

PART 3 EXECUTION

3.1 APPLICATION

The following information shall be assembled and submitted when Buyer specifies that the vendor must test his equipment for noise level and report sound pressure level data.

A. Description of unit tested, including operating and mounting conditions

000488

B. Description of instrumentation used, including name, make and model number, and calibration data, where applicable

C. Description of test environment, including dimensions of room, location of test unit, materials of construction of walls, ceiling, and floor, and location/type of major noise refraction barriers

D. Locations of microphone with respect to test unit (sketch should be included)

E. Corrections applied to any data and basis for same.

F. Ambient (background) SPL

G. Measurements and deviation of measurements when repeated.

-End of Section-

DRAFT

ATTACHMENT A

Equipment Type	Predicted Operator Exposure (hrs/day)

(To be filled in by Buyer's engineer)

(Typicals include fans, blowers, shredders, and conveyors)

DRAFT

000490

SECTION 13400

WASTEWATER TREATMENT SYSTEM (WTS)

PART 1 GENERAL

1.1 SECTION INCLUDES

A. Wastewater treatment system (WTS) for treatment of wastewater prior to discharge to the BSL for final treatment by the 400-gpm treatment train in the AWWT.

1.2 RELATED SECTIONS

A. Section 09900 - Painting

B. Section 13200 - General Tanks and Vessels

C. Section 13310 - Noise Level Specification

D. Section 15050 - Piping and Accessories

E. Section 15080 - Piping Specialties

F. Section 15150 - Pumps

G. Section 15170 - Motors

H. Section 15250 - Insulation

I. Division 16 - Electrical.

1.3 REFERENCES

NONE

1.4 SYSTEM DESCRIPTION

A. Design Requirements

1. The WTS will be required to treat a wastewater stream that is a combination of water from various project operations to levels within the waste acceptance criteria (WAC) for discharge to the BSL.

2. The system will be sized to handle 250 gpm and will be operated as needed to facilitate site water management.

1.5 SUBMITTALS FOR REVIEW

A. Product Data: Provide data on all components of the WTS including size, material of construction, capacity, etc. in the form of specification sheets and manufacturer literature.

B. Shop Drawings: Equipment drawings indicating general construction, dimensions, process connections, etc. WTS layout drawings indicating plan view and elevations.

C. Design Calculations: For equipment sizing.

D. Manufacturer's Installation Instructions: for instruments and equipment where applicable.

1.6 REGULATORY REQUIREMENTS

A. Conform to applicable codes.

PART 2 PRODUCTS

2.1 PERFORMANCE

A. Refer to PFD D-65-10-001 and Equipment Data Sheets.

PART 3 EXECUTION

3.1 INSTALLATION

A. Install in accordance with manufacturers' instructions and design drawings.

-End of Section-

000492

SECTION 15050

PIPING AND ACCESSORIES

PART 1 GENERAL

1.1 SECTION INCLUDES:

A. Above ground piping, fittings, valves and accessories. This specification consists of notes, references, and an individual piping specification sheet for each pipe service in the project. The piping specifications sheets for each service specify pipe material including the valves, fittings, methods of jointing, lining and coating, if any, service fluid, operating pressure, duration for the completion test, and may indicate by note conditions special to the installation. They also specify the manually operated valves and check valves. Manufacturers' model numbers and product names for piping material, valves, etc., are for reference purposes only and valves shall conform to the specific requirements set forth in the detailed specification sections. Separate sections in this specification deal with requirements for valves, insulation and the like. This specification does not cover equipment to which the piping systems may connect, transmission piping systems, or plumbing.

1.2 RELATED SECTIONS

A. Section 09900 - Painting General
B. Section 15080 - Piping Specialties
C. Section 15250 - Insulation
D. Section 16850 - Electrical Heat Tracing for Freeze Protection

1.3 REFERENCES

A. American Society of Mechanical Engineers (ASME)
   1. ASME A13.1 Scheme for the Identification of Piping Systems.
   2. ASME B16.5 Pipe Flanges and Flanged Fittings.
   3. ASME B31.3 Chemical Plant and Petroleum Refinery Piping.
   4. ASME Boiler and Pressure Vessel Code (BPVC), Section IX.

B. American Society for Nondestructive Testing (ASNT)
   1. ASNT-SNT-TC-1A-92 Recommended Practice, December 1992 Edition.

C. American Welding Society (AWS)

D. American National Standards Institute (ANSI)

E. American Petroleum Institute (API)

F. Manufacturers Standardization Society (MSS)

G. National Electrical Manufacturers Association (NEMA)

H. Occupational Safety and Health Administration (OSHA)

I. Sheet Metal and Air Conditioning Subcontractors' National Association (SMACNA)

J. National Sanitation Foundation (NSF).

1.3 SYSTEM DESCRIPTION/DEFINITIONS

A. Design requirements: The pipe, fittings, valves and accessories shall convey all working fluids between items of process and equipment.

B. Definitions:

- CI - Cast Iron
- CPVC - Chlorinate Polyvinyl Chloride (Plastic)
- CS - Carbon Steel
- EPDM - Ethylene-Propylene Diene-Terpolymer (Rubber)
- ERW - Electrical Resistance Welded
- FF - Flat Face
- FS - Forged Steel
- HDPE - High-Density Polyethylene (Plastic)
- IBBM - Iron Body Bronze Mounted (Seat Rings)
- MAOP - Maximum Allowed Operating Pressure
- NPS - Nominal Pipe Size
- OS&Y - Outside Screw and Yoke
- PP - Polypropylene (Plastic)
- PVC - Polyvinyl Chloride (Plastic)
- PVDF - Polyvinyldene Fluoride (Kynar Plastic)
- RF - Raised Face
- SDR - Standard Dimension Ratio
- SW - Socket Weld
- TFE - Polytetrafluoroethylene (Teflon Plastic)
- WOG - Water, Oil, Gas
- WP - Working Pressure.

1.4 SUBMITTALS

A. When the work is complete, submit two (2) sets of "as built" drawings with all changes marked in red.

B. Submit manufacturer's installation instructions, Product Data, and Shop Drawings

000494

C. Submit manufacturer's descriptive literature, operating instructions, and maintenance and repair data.

D. Certificates of Conformance: Manufacturer shall certify and provide data that indicates that all supplied products meet or exceed specification requirements.

E. Test Procedures: Submit written procedures for all required testing. Test procedures shall include criteria for acceptable performance.

F. Detailed description of packaging materials and procedures including cleaning and closure of all openings.

G. Procedure for repair or replacement of piping failing pressure tests, including flushing procedures.

H. Welder qualification, inspector qualifications, procedure qualification records, and welding procedure specification in accordance with the ASME BPVC, Section IX.

I. Pressure test reports.

1.6 QUALITY ASSURANCE

A. Except where more stringent requirements are specified or indicated, the work shall conform to ASME B31.3.

B. Welding procedures and Qualifications
   1. Welding procedures, welder qualifications, fabrication, assembly, and erection shall be in accordance with ASME B31.3, Chapter V and ASME BPVC, Section IX.
   2. Nondestructive testing personnel qualifications shall be in accordance with ASNT SNT-TC-1A.

C. Fastener Quality Act of 1990. The Fastener Quality Act of 1990 is applicable to all work performed. Counterfeit or suspect fasteners shall not be provided or incorporated as part of this project. The supplier/vendor shall provide written certification of compliance with this requirement and shall comply with all record keeping laws of the Act. Written certification of compliance will be required upon completion of the project and shall be submitted.

1.7 DELIVERY, STORAGE, AND HANDLING

A. Packaging
   1. Packaging shall conform to acceptable industrial practices. Materials shall be cleaned to remove chips, slag, weld spatter, oil, grease, debris,

and other foreign matter prior to packaging for shipment. Pipe spool opening shall be covered, capped, or plugged to prevent ingress of foreign materials during shipment and storage. Tape alone shall not be used for sealing openings. Closures used for covering, capping, or plugging openings shall not be made of polyvinyl chloride (PVC) or other plastics that contain chloride.

B. Shipment and Delivery

1. Return defective or damaged parts to Supplier for repair or replacement so that schedule of this portion of work is not impaired.
2. Identify all documents certifying quality and compliance with Specifications and deliver to Contractor.
3. All furnished materials and equipment shall be delivered clean, undamaged, and in a workable condition.
4. Flanges, pipe, fittings, spool pieces, and valves, whether flanged, screwed, or socket welded, shall be shipped with protective end and/or flange covers.

C. Storage

1. Store items in dry, clean areas, safe from damage.
2. Maintain condition of all storage areas while items are stored.
3. Store pipe and associated accessories off floor or off ground.
4. Store small items and loose materials in clearly labeled, neatly arranged bins.
5. Protect ends of pipe, valves, and fittings from weather and abuse; keep open ends sealed or covered until removed for installation.
6. Store equipment and specialties in safe, clean, dry areas with open ends and pipe connection points covered until removed for installation.

D. Handling

1. Unload, unpack, and handle items with extreme care; use slings, cradles, or other appropriate appurtenances.
2. Transport all items as required from unloading point to storage or installation location; protect components from damage during transportation.
3. Handle items in accordance with special instructions of Manufacturer or Supplier.
4. Replace parts damaged during transportation and handling at no additional cost to Owner so that schedule of this portion of work is not impaired.
5. Protect painted and machined surface where exposed.

000496

PART 2 PRODUCTS

2.1 PRODUCTS/EQUIPMENT

A. Piping Specification

1. Pipe, fittings and valves shall meet the requirements as specified in the attached Piping Specifications.
2. Pipe sizes of 1-1/4 inches, 2-1/2 inches, 3-1/2 inches, and 5 inches are not to be used except at the immediate and direct connection to equipment.

B. Valves shall be manufactured in accordance with the following:

1. Threaded and 2 inch and smaller flanged carbon, stainless and alloy steel valves shall be manufactured in accordance with API-602, including globe and check where applicable, except 150# stainless steel flanged valves may be manufactured to API-603, unless otherwise specified. End connections on threaded valves shall have internally tapered threads per ANSI B2.1. Port opening - reduced or full ports are acceptable unless full port valves are specified.
2. Flanged and butt-weld end carbon and alloy steel valves shall be manufactured in accordance with API-600, including globe and check valves where applicable, except end connections. End connections of flanged carbon, alloy and 150# stainless steel valves shall be manufactured in accordance with ANSI B16.5. Flanged 150# stainless steel valves shall be manufactured in accordance with MSS SP-42 or API-63, including globe and check valves where applicable. Flanged cast-iron valves shall meet the requirements of ANSI B16.1. Copper bearing alloys shall not be used with any carbon or alloy steel valve component.

2.2 MATERIALS

A. Pipe Support

1. Subcontractor shall provide adequate pipe suspension systems in accordance with recognized engineering practices. All piping systems shall have adequate hangers, supports, guides and anchors designed in compliance with the latest requirements of the ASME Code for Pressure Piping, B31.3, Manufacturers Standardization Society Documents MSS-SP-58 and MSS-SP-69. Subcontractor shall provide design for all anchors and special pipe suspension systems.
2. Hangers and supports shall be selected to support the weight of the pipe, fittings and valves, weight of the medium transported or the medium used for testing, whichever is heavier, and the weight of the insulation covering used.

3. Fastener Quality Act of 1990. The Fastener Quality Act of 1990 is applicable to all work performed. Counterfeit or suspect fasteners shall not be provided or incorporated as part of this project. The supplier/vendor shall provide written certification of compliance with this requirement and shall comply with all record keeping laws of the Act. Written certification of compliance will be required upon completion of the project and shall be submitted.

B. Procurement

1. All piping materials shall be procured in accordance with the piping material data sheets.
2. Quarter turn valves shall be used to the maximum extent practical in the liquid and air piping services.
3. For slurry applications (including drains), quarter turn, full port valves shall be used, if practicable.

2.3 FABRICATION

A. Welding

1. Preparation for welds shall be by mechanical means where practical. Flame cut surfaces shall be ground to provide slag-free metal and fit-up equivalent to machining. End preparation for butt welding shall be in accordance with ANSI B16.25.
2. Welded attachments shall be as shown on drawings and shall be welded in accordance with procedures developed by vendor and approved by IT representative.

B. Shop Assembly

1. Surface detects will be considered injurious if the defect extends below the specified minimum wall thickness or more than 1/16 inch in depth. Injurious defects shall be completely removed by grinding. The ground out area shall be repaired by welding if defect removal results in reduction of pipe wall below minimum thickness. The repaired area shall be ground smooth to the pipe contour.
2. Dimensional tolerances shall be in accordance with the Pipe Fabrication Institute (PFI) Standard ES-3 unless otherwise specified.
3. Flange bolt holes shall straddle principal centerlines of equipment and piping unless shown otherwise.
4. Orifice runs shall not contain welds except at the flanges. Pipe ends and bevels at orifice flanges shall be machine-cut and shall be perpendicular to the axis of the pipe. Welds at orifice flanges shall be ground smooth inside. Orifice flanges shall be drilled and tapped for jack screws. Taps shall be oriented as shown on the drawings. Holes drilled into piping for orifice taps shall be smooth and free of burrs.
5. Threading shall be in accordance with ANSI B2.1 Pipe Threads. Pipe joint compounds shall be compatible with the service and/or as

000498

indicated on Piping Specification Sheets. No pipe joint compound shall be used at threaded joints to be back welded. Pipe ends shall be reamed to the full bore of the pipe. Threads shall conform with dimension and limits of size to ANSI B2.1, taper jointing thread. In making up threaded joints, an accepted thread lubricant shall be applied to the male threads only.

6. Non-metallic piping shall be fabricated in accordance with manufacturer's recommendations.

C. Shop/Factory Finish

1. All carbon steel parts shall be prime coated after fabrication.

2.4 SOURCE QUALITY CONTROL

A. Testing

1. Shop testing shall be in accordance with ASME B31.3.

B. Inspection

1. All inspection shall be in accordance with ASME B31.3.

C. Radiography

1. All radiography shall be performed in compliance with the applicable codes and requirements.
2. Where random radiography is required, and a weld is rejected, an additional 20 percent on the welds in the same commodity piping shall be radiographed. If at least one of the additional welds radiographed is rejected, all remaining welds in the same commodity piping shall be assumed to be defective, in which case the remaining welds shall also be radiographed.

D. Magnetic Particle Examination

1. The procedures and acceptance standards for magnetic particle examination shall conform with applicable codes.

E. Liquid Penetrant Examination

1. The procedures and acceptance standards for liquid penetrant examination shall conform with the applicable codes. The penetrant shall be a solvent-removable type.

2.5 LABELING

A. Valve Identification

1. Each valve shall be identified with the unique valve number, as shown on the piping specifications and Piping and Instrumentation Diagrams, embossed on a stainless steel identification tag permanently attached

to the valve by a stainless steel wire. Lettering shall be a minimum of 3.8 inch high. The tags shall not be attached to any part of the valve that may interfere with valve operation.

2. Valve identification tags on insulated valves shall be located outside the insulation jacketing and be easily accessible for inspection.

B. Product Marking

1. All piping materials shall be marked and identified in accordance with the applicable codes.

PART 3 EXECUTION

3.1 INSTALLATION

A. Piping Installation

1. The Subcontractor shall ensure that all piping systems are internally free of dirt or foreign materials before final connection to and start-up of equipment.
2. Cap or plug the ends of, and openings in, all pipe and fittings immediately after placement to exclude all dirt until fixtures and equipment are installed. No piping or equipment shall be concealed or covered until it has been tested and observed by the inspector who shall be notified when the work is ready for inspection. All work shall be completely installed, tested as required by this section, and the state and local codes, and shall be leaktight before inspection is requested. All tests shall be repeated upon request to the satisfaction of those making the inspection.
3. Cut pipe accurately to measurements established at the site, work into place without springing or forcing, and clear all window, doors, and other openings. Ream all piping to remove burrs and install to permit free expansion and contraction without causing damage. Make all changes in direction with fittings.
4. Cover or plug all openings in pipes, apparatus, or equipment at the end of each work day.
5. Grade and level all water piping to provide for proper drainage of the system.
6. Inspect each piece of pipe and each fitting inside and outside to see that no defects or obstructions exist.
7. Cleanly cut pipe and tubing and remove burrs to full diameter of pipe. Excessive reaming will not be permitted. Remove all particles from ends of pipe and clear each section of foreign material before assembling. Cut pipe threads to full depth of die and screw up tight to fully engage thread in fitting. Threads to comply with ANSI B2.1 and be cut with clean sharp dies.

000500

8. Tubing shall be cut square and ream ends to full size of tubing, with all burrs removed. Use adapters where tubing connects to threaded valves or piping.
9. Connections between pipe, fittings, hangers, and equipment of dissimilar metals shall be avoided wherever practical. Wherever such connections are unavoidable, they shall be insulated against direct contact, using at a high grade dielectric insulating material of neoprene, or equal.
10. Do not embed water piping in concrete or conceal below floor slab except where shown.
11. Make pipe runs of full pipe lengths with the minimum of joints.

B. Screwed Pipe Installation

1. Make up with an accepted pipe sealant (dope), and applied to make thread only, covering the entire thread. Leaky joints shall be remade with new material without use of thread cement or caulking.
2. Provide, whether shown or not, for a flexible piping system. Provide unions suitably located to facilitate maintenance and removal of all equipment or apparatus. Install drain valves at all low points of each system to enable complete drainage.
3. Pipe all drains from relief valves, etc., to spill over a floor sink or other acceptable discharge points, and terminate with a plain end (unthreaded pipe) 2 inches above the drain. Rigidly support all drains.
4. Where pressure and drain piping are routed over electrical equipment such as switchboards, motor control centers, and the like, galvanized drain pans shall be provided to prevent liquid from dripping or squirting onto such equipment.

C. Sleeves, Inserts, and Equipment Supports

1. Support piping independently at pumps and tanks so that its weight shall not be supported by the equipment.
2. Unless specified otherwise on construction drawings, all pipes and conduits passing through walls, floors, ceilings, or partitions shall be provided with sleeves having internal diameters 1 inch larger than the outside diameter of the insulated pipes or bare pipes, whichever may be the case. Pipe sleeves for concrete floor penetrations shall extend a minimum 4 inches, preferably 6 inches, above concrete floor surface. Sleeves shall be installed in cone-shaped cutouts and sealed in place.
3. Furnish and install suitable hangers and supports for all horizontal and vertical pipelines. Finished hangers shall be assembled to the degree practical, painted with a primer coat, and all threads coated with suitable grease.
4. Furnish and install anchors and slides as required. Anchors and slides shall be capable of withstanding the forces and movements calculated in load and stress calculations.
5. Chain, wire, or perforated strap hangers shall not be used.

6. No piping shall be hung or supported from other piping or from metal roof deck of buildings or overhangs.
7. Hangers to be supported by vertical expansion bolts shall use self-drilling anchors only. Wedge anchors or sleeve anchors are unacceptable. Vertical expansion bolts shall only be used with prior approval by IT's Site Manager.
8. The shortest leg of all supporting angles shall be installed in the horizontal position.

D. Hanger Spacing

1. Maximum horizontal span for piping shall be in accordance with the following schedule, provided building or support structure can withstand loads:

1. Steel Pipe

Diameter, in.:	½	3/4	1	1-1/2	2	3	4	6	8	10	12
Max. Span, ft:	5	6	7	9	10	12	14	17	19	22	23

Diameter, in.:	14	16	18	20	24
Max. Span, ft:	25	27	28	30	32

2. Metal Tubing

Diameter, in.:	½	3/4	1	1-1/2	2	3	4
Span, ft:	5	6	6	8	9	10	12

3. Polyvinyl-Chloride Pipe (PVC and CPVC)

Diameter, in.:	½	3/4	1	1-1/2	2	3	4	6	8	10	12
Span, ft:	4	4	5	5	6	7	7	9	9	10	10

4. Polyethylene Pipe (HDPE)

Diameter, in.:	1	2	3	4
Max. Span, ft:	3	4	5	5

Hanger spacing shall be per the recommendation of the fitting manufacturer and shall not exceed spacing for steel pipe.

000502

2. Locate hangers as close as possible to concentrated loads and horizontal changes in direction. If this is not possible, reduce spans turning a corner by 25 percent.
3. The first hanger off equipment shall be within ½ span of the equipment.
4. Risers should be supported independently of adjacent horizontal hangers. The maximum length of a riser without independent support that can be supported by adjacent hangers is ½ span. If only one hanger is used on a rise, it should be on the top 1/3 span to add stability.
5. If the riser hanger is located high on the riser, the first hanger off the top of the riser shall be limited to 3/4 span and the first hanger off the bottom to ½ span. If the riser hanger is low, reverse the above rule.
6. Maximum recommended loads for threaded steel hanger rods shall be in accordance with the following schedule:

Diameter, in.:	3/8	½	5/8	3/4	1	1-1/8	1-1/4
Load, lbs.:	610	1130	1810	2710	4960	6230	8000

E. Valve Installation

1. All valves, except instrument line root valves, vents, and drains shall be accessible for operating from floors or regular operating from floors or regular operating platforms wherever possible. If indicated on the drawings, or where installing manually operated valves in inaccessible locations is necessary, the valves shall be furnished and fitted with extension stems or chain wheels.
2. Valve stems shall not be included below the horizontal position unless so shown on the design drawings.
3. Extension stems (hot lines) shall allow for the expansion movements of the lines by using universal joints, or equivalent. Flexible shafts shall not be used without prior approval of the IT representative.
4. Vents and drains may not be shown on drawings, but it is the intent of this Specification that these are to be provided and installed by Contractor at all high and low points in the piping required for complete venting or draining for hydrostatic tests.
5. All vents and drains shall be installed in accordance with the applicable construction drawings.
6. Block valves and bypasses around control valves and metering devices may not be shown on the P&IDs. It is the intent of this specification that these are to be provided and installed by Contractor for all control valves and metering installations. Block valves shall be in accordance with the service specification. The bypass line shall be one size smaller than the main line and shall include a throttling valve suitable

for the service. IT reserves the right to delete block valves and bypasses on a case by case basis during the detailed design phase.

F. Flanged Joints Installation

1. Flanged joints shall be installed and supported so that accurate matching of bolt holes and uniform contact over the entire gasket area is obtained, before the tightening of any flange bolts.
2. Steel flanges, when matching cast iron flanges, shall be of the flat face type to prevent bending stresses in the cast iron flanges.
3. Bolts for flanges with a primary with a primary rating of 600 psi or greater shall be pre-loaded in accordance wit the ASME Boiler and Pressure Vessel Code Section VIII.
4. All steel flanges, flange bolts, etc., shall be in accordance with ANSI B16.5.

3.2 INSTALLATION OF FIELD FABRICATED PIPING

A. Piping Clearances and Spacing

1. The minimum headroom under overhead piping and clearances around equipment shall be as follows:

Item	Clearance
Over main road	21 ft 0 in
Over secondary roads	12 ft 0 in
Over railroads, from top of rail	22 ft 6 in
Railroad, straight track, centerline to adjacent obstruction	8 ft 6 in
Around pumps, aisle between piping	2 ft 6 in
In buildings, overhead obstruction	7 ft 4 in
At grade, in operating areas, overhead obstruction	
Preferred:	9 ft 0 in
Acceptable:	7 ft 4 in
Maintenance access aisles	10 ft 0 in
Ladder width	1 ft 8 in
Stairway width	2 ft 8 in
Walkway space	3 ft 0 in
Operating aisleway	6 ft 0 in
Tank-shell to tank-shell	6 ft 0 in
flammable fluids, floating or cone roof	1/2 diameter
Nonflammable or non-volatile fluids	6 ft 0 in

B. Pipe Spacing

1. The minimum pipe spacing in pipeways shall be (1) flange to pipe plus one inch, (2) flange to insulation plus one inch or (3) flange insulation to pipe insulation plus one inch. Provide additional clearance for lines that move because of expansion or contraction.

000504

3.3 INSTALLATION OF PREFABRICATED PIPING

A. Connections

1. When attaching piping to pump and equipment connections, special care shall be taken that no excessive loads are transmitted to such connections. In the case of welded nozzle connections, allow for shrinkage of the line during welding, in order not to impose excessive stresses on the equipment. In the case of flanged connections, the piping shall be installed and supported so that accurate matching of bolt holes and uniform contact over the entire gasket area is obtained, before tightening the flange bolts.

B. Insulating Flanges

1. Insulating flanges or unions shall be used between dissimilar metals to prevent electrolytic corrosion. Where "above ground" steel pipe is joined to underground cast iron pipe, the transition shall be made with an electrically non-conductive pipe nipple, as specified on the drawings. When the cast iron pipe hub contains a factory applied molded resilient gasket, the steel pipe can be joined directly.

C. Takedown Couplings

1. In erecting the pipe, a sufficient number of screw unions, flanged and plain or grooved end mechanical coupling type joints, shall be used to allow any section or run of pipe to be disconnected without taking down adjacent runs. Flanged and plain or grooved end joints shall be employed on pipelines 3 inches in diameter and larger. The provision of an adequate number of appropriate takedown fittings must be rigidly adhered to whether or not such fittings are indicated on the drawings. Where piping goes through concrete or masonry walls, takedown fittings shall be employed near the wall.

3.4 FIELD QUALITY CONTROL

A. Inspections and Tests

1. Unless specified elsewhere in the specifications, all piping shall be leak tested in accordance with the ASME B31.3. Process Piping Code, latest edition, paragraphs 345.4 and/or 345.5. Pressure test holding time shall be a minimum 1 hour or longer as necessary to make a complete examination of the system being tested.
2. Tests shall be conducted prior to installing heat tracing or pipe insulation.
3. All pressure vessels, equipment, in-line instruments, gauge glasses, flowmeter, and all other pressure parts of instruments shall not be included in these tests if they will be damaged by the test pressure.
4. Equipment that is not to be subjected to the pressure test shall be disconnected from the piping and a pipe spool inserted in its place, or the equipment may be isolated by way of a single line blind.

B. Hydrostatic testing

1. Potable water or other approved fluids shall be used for hydrostatic pressure testing of piping systems in accordance with ASME B31.3.
2. All test pressures shall be maintained a minimum of 1 hour during which time visual examination of joints begins.

C. Pneumatic Testing
1. Pneumatic testing can be used on certain large diameter piping/ducting.
2. Inspection of joints shall be visual with the use of soap. Pressure gauge readings shall take into account ambient temperature changes.

D. Hydrostatic/Pneumatic Test Reports
1. A report for each piping system tested shall contain the following information:
   a. Date of test
   b. Line designation number.
   c. Test fluid.
   d. Type of test.
   e. Pressure applied.
   F. Start time.
   g. Completion time.
   h. Total time at test pressure.
   I. Certification by examiner of acceptability.
   j. Calibration test gauge number and calibration date.
   k. Comments, drawings if any.

3.5 CLEANING

A System Cleaning and Flushing
1. The interior and exterior of all pipe shall be kept clean at all times.
2. After erection and welding of piping, all lines except air shall be flushed with potable water prior to leak testing or hydrostatic testing. Upon completion of flushing, lines shall be drained at all low points.

-End of Section-

000506

DRAFT

APPENDIX A

PIPING SERVICE INDEX
PIPING MATERIAL SPECIFICATION

PIPING SERVICE INDEX
(PRELIMINARY)

Material Specification	Service	Material
A	FO - Fuel Oil SO - Seal Oil	Carbon steel
B	NG - Natural Gas PG - Propane Gas	Carbon Steel
C	S - Steam	Carbon Steel
E	EC - Vent Gas N - Nitrogen Gas	Carbon Steel
G	AA - Ambient Air GA - Atomizing Air PA - Plant/Purge Air	Carbon Steel
H	DW - Potable Water	Galvanized Carbon Steel
J	PS - Polymer Solutions	PVC
K	CW - Cooling Water	Carbon Steel
L	L - Lime Solution	Carbon Steel
N	UW - Utility Water PW - Process Water FW - Fire Water EW - Emergency Water RW - Raw Well Water SW - Seal Water D - Drain (condensate)	Carbon Steel
P	IA - Instrument Air	Galvanized Carbon Steel
Q	AA - Ambient Air DA - Combustion Air	Carbon or Stainless Steel
R	FG - Flue Gas EC - Vent Gas	IT Approval
U	FG - Flue Gas PW - Waste Water	FRP
X	CA - Caustic up to 50%	Carbon Steel
W	PW - Waste Water P - Aqueous Brine Solution	CPVC
Z	WW - Waste Water	FRP
AA	PL - Waste Feed	Carbon Steel

000508

Material Specification	Service	Material
AF	P - Waste Feed PW - Process Water BO - Burner Oil WO - Waste Oil	Carbon Steel
AH	WO - Waste Oil WL - Waste Liquid WS - Waste Solvent	Carbon Steel
BE	HA - Acid	Teflon Lined CS
BG	NG - N. Gas Underground	MDPE
BP	PW - Waste Water/Slurry	FRP
CC	S - High Pressure Steam	Carbon Steel
DA	PL - Waste Feed PW - Process Water	316 SS
DC	PW - Process Water FG - Flue Gas PL - Waste Feed	304 SS
P1	DW - Potable Water PW - Process Water TRW - Treated River Water URW - Untreated River Water	PVC
P2	SW - Service Water PCW - Potentially Contaminated Water SD - Storm Drain SDC - Storm Drain Contaminated	PVC HDPE
P3	PW - Waste Water	PVC
QA	QA - Oxygen Gas	Copper
SB	KW - Sanitary Sewer	PVC
SD	FG - Flue Gas EC - Vent Gas	304 SS
ST	FC - Chemical Feed	316 SS Tubing
UW	FW - Fire Water DW - Potable Water UW - Utility Water PW - Process Water KW - Sanitary Water	HDPE

DRAFT

000510

INTERNATIONAL TECHNOLOGY CORPORATION

Specification No. A
Rev: 0
Date: 12/97

ENGINEERING STANDARD — PIPING MATERIAL SPECIFICATION

PIPE SPECIFICATION - A

Service and Material		FO - No. 2 Fuel Oil SO - Seal Oil	Carbon Steel
Maximum Pressure and Temperature		245 PSIG -20°/250°F	Corr. Allow. 0.00 Code 31.3
Item	**Sizes**	**General Description**	**Tag**
Pipe	1½" & Under 2" thru 6" 8" thru 12"	Schedule 80 ASTM A106-B Seamless Schedule 40 ASTM A53-B Seamless Schedule 30 ASTM A53-B Seamless	
Valves – Gate	1½" & Under 2" & Over	600 lb CS Socket Weld Gate Valve 150 lb RF Flanged CS Gate Valve	VGA-11 VGA-3
Valves – Globe	1½" & Under 2" & Over	600 lb FS Socket Weld Globe Valve 150 lb RF Flanged CS Globe Valve	VGL-8 VGL-5
Valves – Check	1½" & Under 2" & Over	600 lb FS Socket Weld Lift Check Valve 150 lb RF Flanged CS Swing Check Valve	VCH-9 VCH-7
Valves – Ball	2" & Under 3" & Over	1000 lb CS Three-Piece Socket Weld Ball Valve 150 lb RF Flanged CS Ball Valve	VBA-5 VBA-6
Flanges	1½" & Under 2" thru 12"	150 lb RFSW ASTM A105, ANSI B16.5 150 lb RFWN (Std. B) ASTM A105, ANSI B16.5	
Fittings	1½" & Under 2" thru 12"	3000 lb FS Socket Weld ASTM A105, ANSI B16.11 Std. Wt. Butt Weld FS ASTM A234-WPB, ANSI B16.9	
Gaskets	All Sizes	150 lb RF, ⅛" Thick Non-Asbestos, Garlock Style 3300 or equal	
Bolting	All Sizes	ASTM A193-B7 Stud Bolts with ASTM A194-2H Hex Nuts, zinc electroplated	

Notes: See Page 2 for Service, Notes and Branch Reinforcement

PIPE SPECIFICATION - A

BRANCH REINFORCEMENT

Weldolets & Thredolets per ASTM A105

Legend

* - Sockolet or Elbolet

W - Weldolet

P - Reinf. Pad, See STD #1 for Size

T - Weld Tee

Header Sizes (inches)	1≤	1½	2	3	4	6	8	10	12	14	16	18	20	24	30	36
1≤	T															
1½	T	T														
2	*	*	T													
3	*	*	T	T												
4	*	*	P	T	T											
6	*	*	W	P	T	T										
8	*	*	W	W	P	T	T									
10	*	*	W	W	W	P	T	T								
12	*	*	W	W	W	P	P	T	T							
14																
16																
18																
20																
24																
30																
36																
Branch Sizes (inches)	1≤	1½	2	3	4	6	8	10	12	14	16	18	20	24	30	36

PRESS. TEMP. RATING	
TEMP °F	PRESS PSIG MAX.
100	275
200	240
300	210
400	180
500	150

SERVICE	
No. 2 Fuel Oil	FO
Seal Oil	SO

Notes:

1. Cleaning - Blow lines with compressed air.
2. Testing - Test at 1½ times MAOP (max Hydro. Test @ 412 PSIG or max Air Test @ 302 PSIG).

000512

INTERNATIONAL TECHNOLOGY CORPORATION

Specification No. B
Rev: 0
Date: 12/97

ENGINEERING STANDARD — PIPING MATERIAL SPECIFICATION

PIPE SPECIFICATION - B

Service and Material		NG - Natural Gas PG - Propane Gas	Carbon Steel
Maximum Pressure and Temperature		125 PSIG -20°/250°F	Corr. Allow. 0.00 Code 31.3
Item	Sizes	General Description	Tag
Pipe	1½" & Under 2" thru 6" 8" thru 12" 14" thru 16"	Schedule 80 ASTM A106-B Seamless Schedule 40 ASTM A53-B Seamless Schedule 30 ASTM A53-B Seamless Schedule 40 (.375" Wall) ASTM A53-B Seamless	
Valves: Gate	1½" & Under 2" & Over	600 lb CS Screwed Gate Valve 150 lb RF Flanged CS Gate Valve	VGA-22 VGA-3
Valves: Globe	2" & Over	150 lb RF Flanged CS Globe Valve	VGL-16
Valves: Check	1½" & Under 2" & Over	600 lb CS Screwed Lift Check Valve 150 lb RF Flanged CS Swing Check Valve	VCH-16 VCH-7
Valves: Ball	1½" & Under 2" thru 6"	1000 lb CS Screwed Ball Valve 150 lb RF Flanged CS Ball Valve	VBA-17 VBA-18
Flanges	1½" & Under 2" thru 16"	150 lb RF Screwed ASTM A105, ANSI B16.5 150 lb RFWN (Std. B) ASTM A105, ANSI B16.5	
Fittings	1½" & Under 2" & Over	3000 lb F.S. Screwed ASTM A105, ANSI B16.11 Std. Wt. Butt Weld F.S. ASTM A234-WPB, ANSI B16.9	
Gaskets	All Sizes	150 lb RF, ⅛" Thick Non-Asbestos, Garlock Style 3000 or equal	
Bolting	All Sizes	ASTM A193-B7 Stud Bolts with ASTM A194-2H Hex Nuts. Zinc electroplated.	

Notes: See Page 2 for Service, Notes and Branch Reinforcement

PIPE SPECIFICATION - B

BRANCH REINFORCEMENT

Weldolets & Thredolets per ASTM A105

Legend

* - Thredolet or Elbolet

W - Weldolet

P - Reinf. Pad, See STD #1 for Size

T - Weld Tee

Header Sizes (inches)	1≤	1½	2	3	4	6	8	10	12	14	16	18	20	24	30	36
1≤	T															
1½	T	T														
2	*	*	T													
3	*	*	T	T												
4	*	*	¼	T	T											
6	*	*	W	¼	T	T										
8	*	*	W	W	¼	T	T									
10	*	*	W	W	W	⅜	T	T								
12	*	*	W	W	W	⅜	⅜	T	T							
14	*	*	W	W	W	W	⅜	T	T	T						
16	*	*	W	W	W	W	⅜	⅜	T	T	T					
18																
20																
24																
30																
36																

Branch Sizes (inches)

PRESS. TEMP. RATING	
TEMP °F	PRESS PSIG MAX.
100	275
200	240
300	210
400	180
500	150

SERVICE	
Natural Gas	NG
Propane Gas	PG

Notes:

1. Cleaning - Use compressed air to blow line free of all dirt and foreign matter.
2. Testing - Test at 1½ times MAOP (max Hydro. Test @ 187 PSIG or max Air Test @ 137 PSIG).
3. Joint Compound - Leak Lock.
4. Buried pipe 8" and under are to be "X-Tru Coat" covered; 10" and 12" are to be mummy wrapped.

000514

PIPE SPECIFICATION - B

5. Ground cover to be 24" min. to top of pipe or according to local codes and practices, whichever is more stringent.
6. Valve boxes - C.1. telescoping-type, length to suit - Alabama Pipe Co. Figure E-2702 with unmarked cover. Order valves for underground service with 2" square shank adapter. Valves to be well lubricated before installing underground.

DRAFT

DRAFT

INTERNATIONAL TECHNOLOGY CORPORATION

ENGINEERING STANDARD — PIPING MATERIAL SPECIFICATION

PIPE SPECIFICATION - C

Service and Material		150 PSIG Steam	Carbon Steel
Maximum Pressure and Temperature		150 PSIG 358°F	Corr. Allow. 0.00	Code 31.3
Item	Sizes	General Description	Tag
Pipe	1½" & Under 2" thru 6" 8" thru 12"	Schedule 80 Butt Weld Steel ASTM A53 Schedule 40 Seamless Steel ASTM A53, Gr. B Schedule 30 Seamless Steel ASTM A53, Gr. B	
Valves: Gate (Note 5)	1½" & Under 2" & Over	800 lb Socket Welded Forged Steel Gate 150 lb Welded Cast Steel Gate (MAINS) 150 lb Flanged Cast Steel Gate (BRANCH)	VGA-9 VGA-4 VGA-3
Valves: Globe	1½" & Under 2" & Over	150 lb Screwed Bronze Globe 150 lb Flanged Cast Steel Globe	VGL-4 VGL-5
Valves: Check	1½" & Under 2" & Over	200 lb Screwed Bronze Lift Check 150 lb Flanged Cast Steel Swing Check	VCH-4 VCH-7
Valves: Ball	1½" & Under 2" thru 8"	150 lb Screwed Carbon Steel Ball 150 lb Flanged Carbon Steel Ball	VBA-7 VBA-8
Valves: Relief	1½" & Under 2" thru 4"	Screwed Consolidated No. 1471 Flanged Farris 2600	
Valves: Angle	¾" & Under	200 lb Screwed Brass Angle Needle	VNE-1
Flanges	½" thru 12"	150 lb Forged Steel Slip-On ASTM A181, Gr. 1, ANSI B16.5	
Fittings	1½" & Under 2" & Over (Note 1)	300 lb Ductile Iron Screwed ANSI B16.3 Standard Weight Butt Weld Forged Steel ASTM A234, ANSI B16.9	
Gaskets	All Sizes	1/16" Thick Non-Asbestos Garlock Style 3200 or equal	
Bolting	All Sizes	ASTM A307, Gr. B, Hex Head Bolts and Nuts	

Notes: See Page 2

PIPE SPECIFICATION - C

NOTES

1. Fittings:

   Ells: 2" and up, standard weight, long radius steel Butt Weld ANSI B16.9

   Tees: 2" and up miter branch and weld into run may be used

   Reducers: 2" and up swaged pipe may be used

   Bushings: ½" thru 1½" -- 300 lb Outside Hex. Iron ANSI B16.4
   (Do not use one-size reduction.)

   Couplings: ½" thru 1½" Extra Heavy Steel Taper Tapped R.H. Recessed

   Unions: ½" thru 1½", 250 lb. mallable iron scrd. (Code UF-250-3).

2. Cleaning: Blow lines with steam from main.

3. Testing: Up to 4" size test with full line pressure 6" and up hydrostatic test or full-line pressure, depending upon insurance inspection.

4. Joint Compound: Permatex form A Gasket No. 2; Fel Pro C-5A (Copper Based Down Corning "Moly Kote") or Fel Pro C-100 (Molybdenum Disulfide).
   DO NOT USE TEFLON TAPE.

5. All valves in or adjacent to 150 lb steam mains shall be steel body valves with welded bonnets welded into pipe line.

   Gate valves in branches, ½" through 1½" screwed, use 800 lb forged steel TAG VGA-10.

6. Pipe Ends: 1½" and below - thd. & cple.
   2" and above - bevel.

INTERNATIONAL TECHNOLOGY CORPORATION

Specification No. E
Rev: 0
Date: 12/97

ENGINEERING STANDARD — PIPING MATERIAL SPECIFICATION

PIPE SPECIFICATION - E

Service and Material		N - Nitrogen Gas EC - Vent Gas	Carbon Steel
Maximum Pressure and Temperature		150 PSIG -20°/350°F — Corr. Allow. 0.00	Code 31.3
Item	**Sizes**	**General Description**	**Tag**
Pipe	1½" & Under 2" thru 6"	Schedule 80 ASTM A106-B Seamless Schedule 40 ASTM A53-B Seamless	
Valves – Gate	1½" & Under 2" & Over	600 lb CS Screwed Gate Valve 150 lb RF Flanged CS Gate Valve	VGA-22 VGA-3
Valves – Check	1½" & Under 2" & Over	600 lb CS Screwed Lift Check Valve 150 lb RF Flanged CS Swing Check Valve	VCH-16 VCH-7
Valves – Ball	2" & Under 3" & Over	1000 lb CS Screwed Ball Valve 150 lb RF Flanged CS Ball Valve	VBA-17 VBA-6
Flanges	1½" & Under 2" & Over	150 lb RF Screwed ASTM A105, ANSI B16.5 150 lb RFWN (Std. B) ASTM A105, ANSI B16.5	
Fittings	1½" & Under 2" & Over	3000 lb FS Screwed ASTM A105, ANSI B16.11 Std. Wt. Butt Weld FS ASTM A234-WPB, ANSI B16.9	
Gaskets	All Sizes	150 lb RF, ⅛" Thick Non-Asbestos, Garlock Style 3200 or equal	
Bolting	All Sizes	ASTM A193-B7 Stud Bolts with ASTM A194-2H Hex Nuts. Zinc electroplated.	

Notes: See Page 2 for Service, Notes and Branch Reinforcement

PIPE SPECIFICATION - E

BRANCH REINFORCEMENT

Weldolets & Thredolets per ASTM A105

Legend

* - Thredolet or Elbolet

W - Weldolet

P - Reinf. Pad, See STD #1 for Size

T - Weld Tee

Header Sizes (inches)	1≤	1½	2	3	4	6	8	10	12	14	16	18	20	24	30	36
1≤	T															
1½	T	T														
2	*	*	T													
3	*	*	T	T												
4	*	*	W	T	T											
6	*	*	W	W	T	T										
8																
10																
12																
14																
16																
18																
20																
24																
30																
36																
Branch Sizes (inches)	1≤	1½	2	3	4	6	8	10	12	14	16	18	20	24	30	36

PRESS. TEMP. RATING	
TEMP °F	PRESS PSIG MAX.
100	275
200	240
300	210
400	180
500	150

SERVICE	
Nitrogen Gas	N
Vent Gas	EC

Notes:

1. Cleaning - Blow out lines with clean oil-free air.
2. Testing - Test at 1½ times MAOP (165 PSIG max) with oil-free air or nitrogen.
3. Joint Compound - Cylinder Seal, Key Absolute, Reactor Seal No. 15. Do not use any hydrocarbon-based pipe compounds.

000520

INTERNATIONAL TECHNOLOGY CORPORATION

Specification No. G
Rev: 0
Date: 12/97

ENGINEERING STANDARD — PIPING MATERIAL SPECIFICATION

PIPE SPECIFICATION - G

Service and Material		PA Plant Air AA Ambient Air GA Atomizing Air	Carbon Steel
Maximum Pressure and Temperature		125 PSIG -20°/250°F Corr. Allow. 0.00	Code 31.3
Item	Sizes	General Description	Tag
Pipe	1½" & Under 2" thru 6" 8" thru 12"	Schedule 80 ASTM A106-B Seamless Schedule 40 ASTM A53-B Seamless Schedule 30 ASTM A53-B Seamless	
Valves — Gate	1½" & Under 2" & Over	600 lb CS, Screwed Gate Valve 150 lb RF Flanged, CS Gate Valve	VGA-22 VGA-3
Valves — Globe	1½" & Under 2" & Over	800 lb CS, Screwed Globe Valve 150 lb RF Flanged, CS Globe Valve	VGL-15 VGL-16
Valves — Check	1½" & Under 2" & Over	600 lb CS, Screwed Lift Check Valve 150 lb RF Flanged, CS Swing Check Valve	VCH-16 VCH-7
Valves — Ball	1½" & Under 2" & Over	1000 lb CS, Screwed Ball Valve 150 lb RF, Flanged CS Ball Valve	VBA-17 VBA-11
Valves — Needle	½" & Under	4000 lb Carbon Steel Needle Valve	VNE-2
Flanges	1½" & Under 2" thru 12"	150 lb RF Screwed ASTM A105, ANSI B16.5 150 lb RFWN (Std. B) ASTM A105, ANSI B16.5	
Fittings	1½" & Under 2" & Over	3000 lb FS Screwed ASTM A105, ANSI B16.11 Std. Wt. Butt Weld FS ASTM A234-WPB, ANSI B16.9	
Gaskets	All Sizes	150 lbs. RF ⅛" Thick Non-Asbestos, Garlock Style 3200 or equal	
Bolting	All Sizes	ASTM A307 Gr. B Hex Head Bolts and Nuts, galvanized electro- plated	

Notes: See Page 2 for Service, Notes and Branch Reinforcement

PIPE SPECIFICATION - G

BRANCH REINFORCEMENT

Weldolets & Thredolets per ASTM A105

Legend

* - Sockolet or Elbolet

W - Weldolet

P - Reinf. Pad, See STD #1 for Size

T - Weld Tee

Header Sizes (inches)	1≤	1½	2	3	4	6	8	10	12	14	16	18	20	24	30	36
1≤	T															
1½	T	T														
2	*	*	T													
3	*	*	T	T												
4	*	*	¼	T	T											
6	*	*	W	¼	T	T										
8	*	*	W	W	¼	T	T									
10	*	*	W	W	W	⅜	T	T								
12	*	*	W	W	W	⅜	⅜	T	T							
14																
16																
18																
20																
24																
30																
36																

Branch Sizes (inches)

PRESS. TEMP. RATING	
TEMP °F	PRESS PSIG MAX.
100	275
200	240
300	210
400	180
500	150

SERVICE	
Plant Air	PA
Ambient Air	AA
Atomizing Air	GA

Notes:

1. Cleaning - Blow out lines with plant air.
2. Testing - Air test at 1½ times MAOP (137 PSIG max) with plant air or nitrogen.
3. Joint Compounds - Slic-Tite Teflon paste (or equal) or Teflon tape.

000522

INTERNATIONAL TECHNOLOGY CORPORATION

Specification No. H
Rev: 0
Date: 12/97
Page 1 of 3

ENGINEERING STANDARD — PIPING MATERIAL SPECIFICATION

PIPE SPECIFICATION - H

Service and Material		DW - Potable Water (Plant Area)	Galvanized Steel
Maximum Pressure and Temperature		120 PSIG -20°/100°F	Corr. Allow. 0.00 Code 31.3
Item	**Sizes**	**General Description**	**Tag**
Pipe	2" & Under 3" thru 6"	Schedule 80 ASTM A120 Butt Welded Galv. Schedule 40 ASTM A53-B Seamless Galv.	
Valves – Gate	2" & Under 3" & Over	150 lb. Screwed Bronze Gate Valve 125 lb FF Flanged, CI Gate Valve	VGA-7 VGA-2
Valves – Globe	2" & Under 3" & Over	150 lb. Screwed Bronze Globe Valve 125 lb FF Flanged, CI Globe Valve	VGL-4 VGL-1
Valves – Check	2" & Under 3" & Over	150 lb. Screwed Bronze Swing Check Valve 125 lb FF Flanged, CI Swing Check Valve	VCH-3 VCH-6
Valves – Ball	2" & Under 3" & Over	300 lb. Screwed Bronze Ball Valve 150 lb FF Flanged Bronze Ball Valve	VBA-3 VBA-9
Valves – Butterfly	2" thru 6"	150 lb FF Ductile Iron Butterfly Valve	VBU-2
Flanges	2" & Under 3" thru 6"	150 lb FF Screwed ASTM A105 Galv., ANSI B16.5 150 lb FFWN (Std. B) ASTM A105 Galv., ANSI B16.5	
Fittings	2" & Under 3" thru 6"	150 lb Malleable Iron Screwed Galv., ANSI B16.3 Std. Wt. Butt Weld FS ASTM A234-WPB Galv., ANSI B16.9	
Gaskets	All Sizes	150 lb Full-Face ⅛" Thick Red Rubber	
Bolting	All Sizes	ASTM A193-B7 Stud Bolts with ASTM A194-2H Hex Nuts, zinc electroplated	

Notes: See Page 2 for Service, Notes and Branch Reinforcement

PIPE SPECIFICATION - H

BRANCH REINFORCEMENT

Weldolets & Thredolets per ASTM A105

Legend

* - Thredolet or Elbolet

W - Weldolet

P - Reinf. Pad, See STD #1 for Size

T - Weld Tee

Header Sizes (inches)	1≤	1½	2	3	4	6	8	10	12	14	16	18	20	24	30	36
1≤	T															
1½	T	T														
2	T	T	T													
3	*	*	T	T												
4	*	*	W	T	T											
6	*	*	W	W	T	T										
8																
10																
12																
14																
16																
18																
20																
24																
30																
36																

Branch Sizes (inches)

PRESS. TEMP. RATING	
TEMP °F	PRESS PSIG MAX.
100	275
200	240
300	210
400	180
500	150

SERVICE	
Potable Water (Plant Area)	DW

Notes:

1. Cleaning - Flush thoroughly.
2. Testing - Hydro-test at 1½ times MAOP (187 PSIG max).

PIPE SPECIFICATION - H

3. Joint Compounds - Shall be certified non-toxic and approved by the appropriate state plumbing code for potable water. Teflon tape, Teflon paste or other suitable sealing materials may be used when certified in accordance with above.
4. Buried pipe 6" and under are to be "X-Tru Coat" covered.
5. Ground cover to be 24" min. to top of pipe or according to local codes and practices, whichever is more stringent.
6. Valve Boxes - C.1. telescoping type. Length to suit. Alabama Pipe Co., Fig. E-2702, cover marked "water".

DRAFT

DRAFT

INTERNATIONAL TECHNOLOGY CORPORATION

ENGINEERING STANDARD — PIPING MATERIAL SPECIFICATION

PIPE SPECIFICATION - J

Service and Material		PS - Polymer Solutions	PVC
Maximum Pressure and Temperature		See Page 2, Note 1. Temperature not to exceed 140°F	
Item	**Sizes**	**General Description**	**Tag**
Pipe	½" thru 12"	Schedule 80 Polyvinyl Chloride Pipe, Type 1, Grade 1, ASTM D-1784 and D-1785, 10' or 20' lengths.	
Valves: Gate			
Valves: Globe			
Valves: Check	¾" thru 8"	PVC Type 1, Grade 1, 150 lb Flanged Ends. (Pressure varies with temperature and size; see Vendor Catalog.)	VCH-19
Valves:	½" thru 6"	PVC Type 1, 150 lb socket. (Pressure varies with temperature and size; see Vendor Catalog.)	VBA-15
Valves:	2" thru 24"	PVC Type 1, 150 lb Flanged Ends, 2"-6" Lever Operated, 8"-24" Gear Operated. (Pressure varies with temperature and size; see Vendor Catalog.)	VBU-8
Valves: Ball			
Flanges	½" thru 12"	150 lb ASA Std. Drilling, Flat Face, PVC Type 1, Grade 1. Slip Type.	
Fittings	½" - 8"	Socket-Type PVD, Schedule 80, ASTM D-2467. Solvent cement as described in ASTM D-2564.	
Gaskets		⅛" Viton or TFE, Garlock style 3565.	
Bolting		ASTM A-307 Grade B, Hex-Head Bolts and Nuts. Use Washers, both sides.	

Notes: See Page 2 for Notes.

PIPE SPECIFICATION - J

1. Operating Pressure (PSI) at 75°F.

Size	Working Pressure	Size	Working Pressure	Size	Working Pressure
½	850	1½	470	6	280
¾	690	2	400	8	250
1	630	3	370	10	230
1¼	520	4	320	12	230

The above is for socket-end type system, non-shock.

Per plastics piping systems, derate the above working pressure by multiplying by the following factors depending upon working temperature:

70°F	1.00	110°F	0.50
80°F	0.88	120°F	0.40
90°F	0.75	130°F	0.30
100°F	0.62	140°F	0.22

Do not exceed 140°F. Verify valve working pressures depending upon temperature and size to agree with desired system.

2. Clean and Test:

Flush with water. Hydrostatic test to 150 PSIG at 73°F. All adhesive joints to dry 12 hours before testing.

Note: This specification is not adequate for potable water which requires pipe, fittings and valves to comply with the National Sanitation Foundation requirements and more rigorous cleaning measures.

000528

PIPE SPECIFICATION - J

FABRICATION AND INSTALLATION OF RIGID PLASTIC PIPING

3.0 Application

3.1 Saran, Penton, Polyvinyl Chloride, Polypropylene.

4.0 Cutting

4.1 Cutting equipment for rigid plastic pipe is a mitre box and crosscut saw or power saw. This insures square clean-cut pipe ends.

5.0 Threading

5.1 Schedule 80 Pipe - Lighter pipe should not be threaded. Threading of plastic pipe is readily accomplished with standard types of power or hand-threading equipment without the use of thread-cutting oil provided the thread chasers or dies are sharp. For best results, it is suggested that the thread chasers be ground to provide front rake angle of 5 to 10 degrees and that full support for the pipe within the die stock be provided. A tapered wood mandrel approximately 2' long should be inserted into the pipe before threading to prevent distortion of pipe walls and off-center threading.

6.0 Solvent Cementing

6.1 All connecting surfaces should be clean and free of dirt, grease and other foreign matter. Wipe pipe ends and fitting sockets with a cloth moistened with methyl ethyl ketone or acetone. Apply solvent cement to both connecting surfaces making joints as quickly as possible, press pieces together to bottom pipe in socket, then turn one-half turn to distribute cement uniformly. Do not handle for 30 minutes. Do not subject to full operating pressure for 12 hours.

7.0 Threaded Assemblies

7.1 Plastic pipe should be turned into fittings using a Parmalee wrench. Pipe wrenches will cut and mark plastic pipe. Thread lubricant is recommended for use with threaded assemblies. Unless otherwise specified, a Teflon-base compound or Teflon sealant tape shall be used. Avoid thread damage by excessive torque.

8.0 Supporting

All horizontal runs of plastic pipe 2" and smaller must be given full and continuous support. Provide a continuous angle used as a V-trough. Do not anchor pipe to trough as this will prevent it from expanding and contracting with the temperature changes.

DRAFT

000530

PIPE SPECIFICATION - K

Service and Material		CW - Cooling Water, Above Ground	Steel & Iron
Maximum Pressure and Temperature		150 PSIG 180°F Corr. Allow. 0.00"	Code 31.3
Item	**Sizes**	**General Description**	**Tag**
Pipe	1½" & Below 2" thru 6" 8" thru 16" 18" thru 24" (Note 1)	Schedule 40 Butt Weld Steel ASTM A53 Gr. A Schedule 40 Seamless Steel ASTM A53 Gr. B Schedule 30 Seamless Steel ASTM A53 Gr. B ⅜" Wall Seamless Steel ASTM A53 Gr. B	
Valves – Check	2" & Under 3" thru 24"	300 lb Screwed, Malleable Iron 150 lb Wafer, Steel Non-Slam with Buna-N	VCH-14 VCH-13
Valves – Ball	2" & Under	600 lb Forged Steel Bolted Body-Screwed	VBA-4
Valves – Butterfly	3" thru 6" 8" thru 24"	200 lb Ductile Iron, Lug Type Same, except gear operated	VBU-6
Flanges	½" thru 24"	150 lb Raised Face Forged Steel ANSI B16.5 (Flanges mating to Butterfly valves to be weldnecks)	
Fittings	1½" & Below 2" thru 24" (Note 2)	300 lb Ductile Iron Screwed, ANSI B16.9 150 lb Standard Weight Steel Buttweld, ANSI B16.9	
Gaskets	All Sizes	⅛" Thick Red Rubber	
Bolting	All Sizes	ASTM A307 Gr. B, Hex Head Bolts and Nuts	

Notes: See Page 2

PIPE SPECIFICATION - K

NOTES

1. Electric resistance welded may be used instead of seamless 2" thru 24".
2. Fittings:

Reducers:	1½" & Under	150 lb MI Screwed
Couplings:	1½" & Under	Extra Heavy Steel Taper Tapped Recessed
Unions:	1½" & Under	250 lb Black Malleable Iron Screwed
Caps:	1½" & Under	150 lb Malleable Iron Screwed

3. Joint Compound: Tyte-Unite
4. Cleaning: Blow lines with air; flush with water
5. Testing: Hydro-Test at 1½ times MAOP (187 PSIG max)
6. Pipe Ends:

½" thru 1½"	Thd. & Cple.
2" and above	Bevel

DRAFT

000532

INTERNATIONAL TECHNOLOGY CORPORATION

Specification No. L
Rev: 0
Date: 12/97
Page 1 of 2

ENGINEERING STANDARD — PIPING MATERIAL SPECIFICATION

PIPE SPECIFICATION - L

Service and Material		L - Lime Solution	Carbon Steel
Maximum Pressure and Temperature		125 PSIG 0 to 350°F	
Item	**Sizes**	**General Description**	**Tag**
Pipe	¼" thru ⅜" ½" thru 1½" 2" thru 4"	Schedule 80 Seamless Steel ASTM A106 Gr. A Schedule 40 Butt Welded Steel ASTM A53 Schedule 40 Seamless Steel ASTM A53 Gr. B	
Valves: Ball	¼" thru 1½" 2" thru 4"	Jamesbury Fig. 21-2200MT-0 Carbon Steel Screwed Jamesbury Fig. 6150-12-2200MT-1 Carbon Steel Flanged	
Valves: 3-Way Plug	¼" thru 1½" 2" thru 4"	Durco MG432 Class 150 Screwed Steel Durco MG411 Class 150 Flanged Steel	
Flanges	2" thru 4"	150 lb Forged Steel Welding Flange ANSI B16.5 (Slip-on or Weld Neck)	
Fittings	Note 1		
Gaskets	2" thru 4"	1/16" Garlock-Style 3700 Ring-Type or equal	
Bolting	All	ASTM A307 Gr. B, Hex Head Bolts and Nuts	

Notes: See Page 2

PIPE SPECIFICATION - L

NOTES

1. Fittings:

Ells:	¼" thru 1½" 125 lb Cast Iron Screwed, ANSI B16.4 2" thru 4" Std. Wt. Long Radius Steel Butt Weld, ANSI B16.9
Tees:	¼" thru 1½" 125 lb Cast Iron Screwed, ANSI B16.4 2" thru 4" Miter Branch and Weld Into Run
Reducers:	¼" thru 1½" 150 lb Malleable Iron Screwed, ANSI B16.3 2" thru 4" Swaged Pipe
Bushings:	¼" thru 1½" Outside Hex Iron (Do not use one size reduction), ANSI B16.14.
Couplings:	¼" thru 1½" Extra Heavy Steel Taper Tapped RH Recessed
Unions:	¼" thru 1½" 250 lb Malleable Iron Screwed (Code UF250-3) 2" thru 4" Use Flanges
Plugs:	¼" - - - - ¼" Square Head Steel ½" thru 1½" Square Head Cast Iron ANSI B16.14
Caps:	¼" thru 1½" 125 lb Cast Iron Screwed ANSI B16.14 2" thru 4" Std. Wt. Steel Butt Welded ANSI B16.9

2. Joint Compound: Tyte-Unite

3. Cleaning: Blow lines with plant air

4. Testing: Hydrostatic test at 1½ times MAOP (187 PSIG max)

000534

INTERNATIONAL TECHNOLOGY CORPORATION

Specification No. N
Rev: 0
Date: 7/98
Page 1 of 2

ENGINEERING STANDARD — PIPING MATERIAL SPECIFICATION

PIPE SPECIFICATION - N

Service and Material	PW - Process Water [Process] UW - Utility Water [Clean] EW - Emergency Water [Clean] FW - Fire Water [Clean] RW - Raw Well Water [Clean] SW - Seal Water [Clean] D - Drain (Condensate) [Process]		Carbon Steel
Maximum Pressure and Temperature	125 PSIG 250°F	Corr. Allow. 0.00	Code 31.3

Item		Sizes	General Description	Tag
Pipe		1½" & Under 2" thru 6" 8" thru 12" 14" thru 24"	Schedule 90 ASTM A106-B Seamless Schedule 40 ASTM A53-B Seamless Schedule 30 ASTM A53-B Seamless Std. Wt. (⅜" Wall), ASTM A53-B Seamless	
Valves	Gate (Note 5)	1½" & Under 2" & Over	600 lb Screwed CS Gate Valve 125 lb FF Flanged CI Gate Valve	VGA-22 VGA-4
	Globe	1½" & Under 2" thru 14"	800 lb Screwed CS Globe Valve 125 lb FF Flanged CI Globe Valve	VGL-15 VGL-1
	Check	1½" & Under 2" & Over	600 lb Screwed CS Lift Check Valve 150 lb FF Flanged CS Swing Check Valve	VCH-16 VCH-7
	Ball	1½" & Under 2" thru 10"	150 lb Screwed Carbon Steel Ball Valve 150 lb FF Flanged Carbon Steel Ball Valve	VBA-7 VBA-8
	Butterfly	2" thru 6" 8" thru 12"	150 lb FF Ductile Iron Butterfly Valve 150 lb FF Ductile Iron Butterfly Valve	VBU-2 VBU-4
	Needle	¾" & Under	4000 lb Screwed Carbon Steel Needle Valve	VNE-2
Flanges		1½" & Under 2" & Over	150 lb FF Screwed ASTM A105, ANSI B16.5 150 lb FF WN (Std. B.) ASTM A105, ANSI B16.5	
Fittings		1½" & Under 2" & Over	3000 lb F.S. Screwed ASTM A105, ANSI B16.11 Std. Wt. Butt Weld F.S., ASTM A234-WPB, ANSI B16.9	
Gaskets		All Sizes All Sizes	150 lb Full Face ⅛" Thick Teflon, Garlock style 3529 (Process) 150 lb Full Face ⅛" Thick Red Rubber (Clean Service)	
Bolting		All Sizes	ASTM A193-B7 Stud Bolts with ASTM A194-2H Hex Nuts; zinc electroplated	

Notes: See Page 2 for Service, Notes and Branch Reinforcement

PIPE SPECIFICATION - N

BRANCH REINFORCEMENT

Weldolets & Thredolets per ASTM A105

Legend

* - Thredolet or Elbolet
W - Weldolet
P - Reinf. Pad, See STD #1 for Size
T - Weld Tee

Header Sizes (inches)	1≤	1½	2	3	4	6	8	10	12	14	16	18	20	24	30	36
1≤	T															
1½	T	T														
2	*	*	T													
3	*	*	T	T												
4	*	*	½	T	T											
6	*	*	W	½	T	T										
8	*	*	W	W	½	T	T									
10	*	*	W	W	W	⅜	T	T								
12	*	*	W	W	W	⅜	⅜	T	T							
14	*	*	W	W	W	W	⅜	T	T	T						
16	*	*	W	W	W	W	⅜	⅜	T	T	T					
18	*	*	W	W	W	W	W	⅜	⅜	T	T	T				
20	*	*	W	W	W	W	W	⅜	⅜	⅜	T	T	T			
24	*	*	W	W	W	W	W	W	⅜	⅜	⅜	T	T	T		
30																
36																
Branch Sizes (inches)	1≤	1½	2	3	4	6	8	10	12	14	16	18	20	24	30	36

PRESS. TEMP. RATING	
TEMP °F	PRESS PSIG MAX.
100	275
200	240
300	210
400	180
500	150

SERVICE	
Process Water	PW
Emergency Water	EW
Fire Water	FW
Raw Well Water	RW
Seal Water	SW
Drain (Condensate)	D
Utility Water	UW

Notes:

1. Cleaning - Blow lines out with Compressed Air or flush with water.
2. Testing - Hydro Test at 1½ times MAOP (187 PSIG max).
3. Joint Compound - Tyte-Unite, Teflon paste or Teflon tape.
4. Buried pipe 20" and under are to be "X-Tru Coat".
5. Ground cover to be 24" min. to top of pipe or according to local codes and practices, whichever is more stringent.
6. Valve boxes - CI telescoping-type, length to suit. Alabama Pipe Co., Figure E-2702, cover marked "Water".

000536

INTERNATIONAL TECHNOLOGY CORPORATION

Specification No. P
Rev: 0
Date: 12/97

ENGINEERING STANDARD — PIPING MATERIAL SPECIFICATION

PIPE SPECIFICATION - P

Service and Material		IA Instrument Air — Carbon Steel Galvanized	
Maximum Pressure and Temperature		210 PSIG 300°F — Corr. Allow. 0.00	Code 31.3
Item	Sizes	General Description	Tag
Pipe	2" & Under	Schedule 80 ASTM A120 Buttwelded Galvanized	
Valves: Gate	2" & Under	600 lb CS, Screwed Gate Valve	VGA-22
Valves: Globe	2" & Under	600 lb CS, Screwed Globe Valve	VGL-13
Valves: Check	2" & Under	600 lb CS, Screwed Lift Check Valve	VCH-16
Valves: Ball	2" & Under	1000 lb Wog Screwed Ball Valve	VBA-17
Flanges	2" & Under	150 lb RF Screwed ASTM A105, ANSI B16.5 Galvanized	
Fittings	2" & Under	3000 lb FS Screwed ASTM A105 Galvanized, ANSI B16.11	
Gaskets	All Sizes	150 lb RF ⅛" thick non-asbestos; Garlock style 3200 or equal	
Bolting	All Sizes	ASTM A307 Gr. B, Hex Head Bolts and Nuts, galvanized electroplated	

Notes: See Page 2 for Service, Notes and Branch Reinforcement

PIPE SPECIFICATION - P

BRANCH REINFORCEMENT

Weldolets & Thredolets per ASTM A105

Legend

* - Sockolet or Elbolet

W - Weldolet

P - Reinf. Pad, See STD #1 for Size

T - Weld Tee

Header Sizes (inches)	1≤	1½	2	3	4	6	8	10	12	14	16	18	20	24	30	36
1≤	T															
1½	T	T														
2	T	T	T													
3																
4																
6																
8																
10																
12																
14																
16																
18																
20																
24																
30																
36																
Branch Sizes (inches)	1≤	1½	2	3	4	6	8	10	12	14	16	18	20	24	30	36

PRESS. TEMP. RATING	
TEMP °F	PRESS PSIG MAX.
100	275
200	240
300	210
400	180
500	150

SERVICE	
Instrument Air	IA

Notes:

1. Cleaning - Blow out lines with plant air.
2. Testing - Air test at 1½ times MAOP with oil-free air or nitrogen (137 PSIG max).
3. Joint Compounds - Slic-Tite Teflon paste (or equal) or Teflon tape.

INTERNATIONAL TECHNOLOGY CORPORATION

Specification No. Q
Rev: 0
Date: 12/97

ENGINEERING STANDARD — PIPING MATERIAL SPECIFICATION

PIPE SPECIFICATION - Q

Service and Material		AA - Ambient Air DA - Combustion Air	Note 1
Maximum Pressure and Temperature		1 PSIG 150°F	
Item	**Sizes**	**General Description**	**Tag**
Pipe	1½" & Below 2" thru 12" 14" thru 24" 25" thru 36"	Schedule 80 ASTM A106 Seamless Schedule 40 ASTM A53-B-ERW AP1-5L ERW ¼" Wall A-36 Plate, ¼" Thick	
Valves — Ball	1½" & Under	1000 WOG Screwed Ball Valve	VBA-17
Valves — Butterfly	2" & Over	See Note 4	
Flanges	2" thru 12" 14" thru 36"	150 lb RF, WN ASTM A105, ANSI B16.5 Fabricated Flange Per IT Standard	
Fittings	1½" & Below 2" thru 12" 14" thru 36"	3000 lb FS Screwed ASTM A105 Std. Wt. Butt Weld FS ASTM A234 WPB, ANSI B16.9 Fabricated	
Gaskets	2" thru 12" 14" thru 36"	150 lb RF ⅛" Thick Non-Asbestos Garlock-Style 3000 Thermo-Glas Tubular-Style Rope Gasket (#10-828-5)	
Bolting	All Sizes	ASTM A307 Gr. B, Hex Head Bolts and Nuts; zinc electroplated	

Notes: See Page 2

PIPE SPECIFICATION - Q

Ductwork for: Ambient Air - AA and Combustion Air - DA

NOTES

1. Material

   Fabricated ducts shall be constructed of A-36 carbon steel or stainless steel type 316L where otherwise specified.

2. Construction

   Shall be in accordance with the "Accepted Industry Practice for Industrial Duct Construction" and "High Pressure Duct Construction Standards" Manual Series 15D. (Sheet Metal and Air Conditioning Contractors' National Association, Inc., Arlington, VA)

3. Design Pressure and Temperature

   Shall be as specified or otherwise established by the equipment manufacturer for the design conditions.

4. Sizes - All

   Volume flow dampers or butterfly valves shall be as specified or otherwise established by the equipment manufacturer and approved by the IT representative.

INTERNATIONAL TECHNOLOGY CORPORATION

ENGINEERING STANDARD — PIPING MATERIAL SPECIFICATION

PIPE SPECIFICATION - R

Service and Material		FG - Flue Gas EC - Vent Gas	
Maximum Pressure and Temperature			
Item	Sizes	General Description	Tag
Pipe	14" thru 22" 24" & Over	AP1-5L ERW ¼" Wall Fabricated - ¼" Wall A36	
Valves			
Flanges	14" & Over Special	Fabricated Flange Per IT Standard Shop Fabricated FR ½" Plate A36	
Fittings	Special	Shop Fabricated FR ¼" Plate A36	
Gaskets	All Sizes	Thermo-Glas Tubular-Style Rope Gasket (#10-828-5)	
Bolting	All Sizes	A325, Hex Head Bolts and Nuts; zinc electroplated	

Flue Gas Piping and Large Ducts

NOTES

1. Flue gas piping, large ducts, transitions, valving, expansion joints, etc. Necessary to transfer and control flue/vent gas through the various stages of treatment. Shall be designed and specified by the major equipment suppliers with the IT representative's approval.

2. Ducts shall be designed for refractory lining and/or insulation where specified on the drawings.

3. For square ducts, shop fabricate from ¼" plate A36.

PIPE SPECIFICATION - R

IT Standard Flange Data				
Nozzle O.D.	Flange O.D.	Flange Thickness	No. of 3/4" Diameter Holes	Flange B.C.
1'-0"	1'-4"	3/8"	16	1'-2½"
1'-1"	1'-5"	3/8"	16	1'-3½"
1'-2"	1'-6"	3/8"	16	1'-4½"
1'-3"	1'-7"	3/8"	20	1'-5½"
1'-4"	1'-8"	3/8"	20	1'-6½"
1'-5"	1'-9"	3/8"	20	1'-7½"
1'-6"	1'-10"	3/8"	20	1'-8½"
1'-7"	1'-11"	3/8"	24	1'-9½"
1'-8"	2'-0"	3/8"	24	1'-10½"
1'-10"	2'-2"	3/8"	28	2'-0½"
2'-0"	2'-5"	1/2"	28	2'-3"
2'-2"	2'-7'	1/2"	32	2'-5"
2'-4"	2'-9"	1/2"	32	2'-7"
2'-6"	2'-11"	1/2"	36	2'-9"
2'-8"	3'-1"	1/2"	36	2'-11"
2'-10"	3'-3"	1/2"	40	3'-1"
3'-0"	3'-5"	1/2"	40	3'-3"
3'-2"	3'-7"	1/2"	44	3'-5"
3'-4"	3'-9"	1/2"	44	3'-7"
3'-6"	3'-11"	1/2"	48	3'-9"
3'-8"	4'-1"	1/2"	48	3'-11"
3'-10"	4'-3"	1/2"	52	4'-1"
4'-0"	4'-5"	1/2"	52	4'-3"
4'-2"	4'-7"	1/2"	56	4'-5"
4'-4"	4'-9"	1/2"	56	4'-7"
4'-6"	4'-11"	1/2"	60	4'-9"
4'-8"	5'-1"	1/2"	60	4'-11"
4'-10"	5'-3"	1/2"	64	5'-1"

000542

INTERNATIONAL TECHNOLOGY CORPORATION

Specification No. R
Rev: 0
Date: 12/97
Page 3 of 3

ENGINEERING STANDARD — PIPING MATERIAL SPECIFICATION

PIPE SPECIFICATION - R

IT Standard Flange Data				
Nozzle O.D.	Flange O.D.	Flange Thickness	No. of 3/4" Diameter Holes	Flange B.C.
5'-0"	5'-5"	1/2"	64	5'-3"
5'-2"	5'-7"	1/2"	68	5'-5"
5'-4"	5'-9"	1/2"	72	5'-7"
5'-6"	5'-11"	1/2"	72	5'-9"
5'-8"	6'-1"	1/2"	76	5'-11"
5'-10"	6'-3"	1/2"	76	6'-1"
6'-0"	6'-5"	1/2"	80	6'-3"
6'-2"	6'-7"	1/2"	80	6'-5"
6'-4"	6'-9"	1/2"	84	6'-7"
6'-6"	6'-11"	1/2"	84	6'-9"
6'-8"	7'-1"	1/2"	88	6'-11"
6'-10"	7'-3"	1/2"	88	7'-1"
7'-0"	7'-5"	1/2"	92	7'-3"
7'-2"	7'-7"	1/2"	92	7'-5"
7'-4"	7'-9"	1/2"	96	7'-7"
7'-6"	7'-11"	1/2"	96	7'-9"
7'-8"	8'-1"	1/2"	100	7'-11"
7'-10"	8'-3"	1/2"	100	8'-1"
8'-0"	8'-5"	1/2"	104	8'-3"
8'-2"	8'-7"	1/2"	104	8'-5"
8'-4"	8'-9"	1/2"	108	8'-7"
8'-6"	8'-11"	1/2"	112	8'-9"
8'-8"	9'-1"	1/2"	112	8'-11"
8'-10"	9'-3"	1/2"	116	9'-1"
9'-0"	9'-5"	1/2"	116	9'-3"
9'-2"	9'-7"	1/2"	120	9'-5"

DRAFT

000544

PIPE SPECIFICATION - U

Service and Material		FG - Flue Gas PW - Wastewater	FRP
Maximum Pressure and Temperature		150 PSIG 210°F	
Item	Sizes	General Description	Tag
Pipe	1" thru 12" 14" thru 42"	Centricast RB-2530 (or equal) Hetron 980 - Filament Wound or Hand Lay-up	
Valves: Check	4" & Under 6" & Over	150 lb FF Iron Body Teflon Lined Ball Check 150 lb FF Hypalon Lined Ball Check	VCH-21 VCH-25
Valves: Butterfly	2" thru 6"	150 lb. Series Media Mosites Steel Body with Body Lining and Disc Cover of Hypalon. Hand Lever Operation.	VBU-10
Valves: Ball	¾" & Under 1" thru 6"	Hayward True Union Ball Valve (socket ends) 150 lb Series Nil - Cor 300 Graphite/Vinyl Ester Body with TFE Seat, Vinyl Ester Ball. FRP Handle Wafer Type.	VBA-15 VBA-19
Flanges	1" thru 12" 14" thru 42"	Centricast Epoxy Fittings (or equal) Hetron 980 - Special Hand Lay-up	
Fittings	1" thru 12" 14" & Above	150 lb. Series Centricast Epoxy Fittup (or equal) Hetron 980 - Filament Wound or Hand Lay-up	
Gaskets	All Sizes	150 lb Full Face ⅛" Thick, Garlock style CP 3920 or equal	
Bolting	All Sizes	ASTM A193-B7 Stud Bolts with ASTM A194-2H Hex Nuts, zinc electroplated	

NOTES

1. Vendor Reference
2. All FRP flange connections will be made with washers between the flange and the bolt heads and nuts.
3. Cleaning: Blow with plant air or flush with water.
4. Testing: Test water service to 1½ times MAOP (187 PSIG Max).

DRAFT

000546

INTERNATIONAL TECHNOLOGY CORPORATION

Specification No. W
Rev: 0
Date: 12/97
Page 1 of 2

ENGINEERING STANDARD — PIPING MATERIAL SPECIFICATION

PIPE SPECIFICATION - W

Service and Material		P - Aqueous Brine Solutions PW - Incin. Wastewater	CPVC
Maximum Pressure and Temperature		50 PSI (See Notes 1 & 2) 195°F	
Item	**Sizes**	**General Description**	**Tag**
Pipe	4" & Below 6" & Above	Schedule 80 CPVC Pipe, Type IV, Gr. 1 Schedule 80 CPVC Pipe, Type IV, Gr. 1	
Valves: Gate			
Valves: Globe			
Valves: Check	¾" thru 8"	150 lb FF Flanged, PP Swing Check Valve	VCH-20
Valves: Ball	4" & Below 6"	Hayward True Union Ball Valve (Socket Ends) (See Note 2) Hayward True Union Ball Valve (Flanged Ends)	 VBA-15
Valves: Butterfly	2" thru 6"	Damper Type Butterfly Valve fabricated from PVDF	VBU-9
Valves: Diaphragm	2" & Below 3" & Above	Asahi CPVC Body, Teflon Diaphragm (Socket Ends) Asahi CPVC Body, Teflon Diaphragm (Flanged Ends)	VMC-3 VMC-4
Valves: Pinch	1" thru 14"	Full metal body mechanical pinch-type with flange joint ends on both body & EPDM flexible sleeve	VMC-5
Flanges	All Sizes	CPVC Flanges - Slip Type - 150 lb ANSI Standard (Plastics Piping Systems Fig. 0101120)	
Fittings	All Sizes	CPVC Fittings per ASTM F439 for Schedule 80. Solvent Weld Type. Vendor's recommendation & instructions for solvent cementing are to be used.	
Gaskets	All Sizes	150 lb Full Face ⅛" thick, Garlock style CP 3930 or equal	
Bolting	All Sizes	ASTM A193-B7 Stud Bolts with ASTM A194-2H Hex Nuts, zinc electroplated	

Notes: See Page 2

PIPE SPECIFICATION - W

Notes:

1. Max Operating Pressure for CPVC pipe when the operating temperature is 195°F, Schedule 80. Factor used = 0.2

Nominal Size	Socket End	Threaded End	Flanged
½"	170 PSI	84 PSI	(All backwelded)
¾"	138 PSI	68 PSI	
1"	126 PSI	64 PSI	
1½"	94 PSI	48 PSI	
2"	80 PSI	40 PSI	50 PSI
3"	75 PSI	Not Recommended	50 PSI
4"	64 PSI	Not Recommended	50 PSI
6"	56 PSI	Not Recommended	50 PSI
8"	50 PSI	Not Recommended	50 PSI
10" & 12"	46 PSI	Not Recommended	

2. Ball valves 4" and under, CPVC, to have socket-type connections, TFE seat rings, Viton 'O'-Rings. Pressure limited to 50 psig at 195°F.

3. Cleaning: Blow lines out with compressed air or flush with water.

4. Testing: Hydro test at 1½ times MAOP.

000548

INTERNATIONAL TECHNOLOGY CORPORATION

Specification No. X
Rev: 0
Date: 12/97

ENGINEERING STANDARD — PIPING MATERIAL SPECIFICATION

PIPE SPECIFICATION - X

Service and Material		CA - Caustic up to 50%		Carbon Steel
Maximum Pressure and Temperature		150 PSIG 140°F	Tracing Media Not To Exceed 140°F	Corr. Allow. 0.00 / Code 31.3
Item	Sizes	General Description		Tag
Pipe	1½" & Below 2" thru 10"	Schedule 80 ASTM A106-B Seamless Schedule 40 ASTM A53-B Seamless		
Valves – Check	1½" & Under 2" thru 10"	600 lb CS, SW Lift Check Valve 150 lb RF Flanged CS Swing Check Valve		VCH-33 VCH-7
Valves – Ball	1½" & Under 2" thru 10"	1000 lb CS, SW Ball Valve 150 lb RF Flanged CS Ball Valve		VBA-28 VBA-24
Flanges	1½" & Under 2" thru 10"	150 lb RF, SW, ASTM A105, ANSI B16.5 150 lb RF WN (Std. B) ASTM A105, ANSI B16.5		
Fittings	1½" & Under 2" & Over	3000 lb FS, SW, ASTM A105, ANSI B16.11 Std. Wt. Butt Weld FS ASTM A234-WPB, ANSI B16.9		
Gaskets	All Sizes	150 lb RF, ⅛" Thick Garlock Style 3510 or equal		
Bolting	All Sizes	ASTM A193-B7 Stud Bolts with ASTM A194-2H Hex Nuts, zinc electroplated.		

Notes: See Page 2 for Service, Notes and Branch Reinforcement

PIPE SPECIFICATION - X

BRANCH REINFORCEMENT

Weldolets & Sockolets per ASTM A105

Legend

* - Sockolet or Elbolet

W - Weldolet

P - Reinf. Pad, See STD #1 for Size

T - Weld Tee

Header Sizes (inches)	1≤	1½	2	3	4	6	8	10	12	14	16	18	20	24	30	36
1≤	T															
1½	T	T														
2	*	*	T													
3	*	*	T	T												
4	*	*	W	T	T											
6	*	*	W	W	T	T										
8	*	*	W	W	W	T	T									
10	*	*	W	W	W	T	T	T								
12																
14																
16																
18																
20																
24																
30																
36																

Branch Sizes (inches)

PRESS. TEMP. RATING	
TEMP °F	PRESS PSIG MAX.
100	275
200	240
300	210
400	180
500	150

SERVICE	
Up to 50% Caustic	CA

Notes:

1. Cleaning - Flush with water.
2. Testing - Hydrostatic test to 1½ times MAOP (225 PSIG max)
3. Joint Compound - Teflon Tape
4. Bolt Lubricant - Felpro C-5A
5. Welding Procedure - Root pass by the gas shielded tungsten arc process

000550

INTERNATIONAL TECHNOLOGY CORPORATION

Specification No. AA
Rev: 0
Date: 6/98
Page 1 of 2

ENGINEERING STANDARD — PIPING MATERIAL SPECIFICATION

PIPE SPECIFICATION - AA

Service and Material		PL-Waste Feed: Slurry, Liquid	Carbon Steel
Maximum Pressure and Temperature		150 PSIG 150°F Corr. Allow. 0.00	Code 31.3
Item	**Sizes**	**General Description**	**Tag**
Pipe	1½" & Under 2" thru 6" 8" thru 12"	Schedule 80 ASTM A106-B Seamless Schedule 40 ASTM A53-B Seamless Schedule 30 ASTM A53-B Seamless	
Valves – Globe	2" & Under	3000 lb FS Screwed Globe Valve	VGL-7
Valves – Check	1½" & Under 2" thru 12"	600 lb CS Screwed Lift Check Valve 150 lb RF Flanged CS Swing Check Valve	VCH-16 VCH-7
Valves – Ball	1½" & Under 2" thru 10"	1000 lb CS Screwed Ball Valve 150 lb RF Flanged CS Ball Valve	VBA-17 VBA-11
Valves – Needle	1" & Under	4000 lb FS Screwed Needle Valve	VNE-2
Flanges	1½" & Under 2" thru 12"	150 lb RF Screwed ASTM A105, ANSI B16.5 150 lb RFWN (Std. B) ASTM A105, ANSI B16.5	
Fittings	1½" & Under 2" & Over	3000 lb FS Screwed ASTM A105, ANSI B16.5 Std. Wt. Butt Weld FS ASTM A234-WPB, ANSI B16.9	
Gaskets	All Sizes	150 lb RF, ⅛" Thick Garlock Style 3200 or Equal	
Bolting	All Sizes	ASTM A307 Grade B Hex Head Bolts and Nuts, galvanized electroplated	

Notes: See Page 2 for Service, Notes and Branch Reinforcement

PIPE SPECIFICATION - AA

BRANCH REINFORCEMENT

Header Sizes (inches) / Branch Sizes (inches)

	1≤	1½	2	3	4	6	8	10	12	14	16	18	20	24	30	36
1≤	T															
1½	T	T														
2	*	*	T													
3	*	*	T	T												
4	*	*	P	T	T											
6	*	*	W	P	T	T										
8	*	*	W	W	P	T	T									
10	*	*	W	W	W	P	T	T								
12	*	*	W	W	W	P	P	T	T							
14																
16																
18																
20																
24																
30																
36																

Weldolets & Thredolets per ASTM A105

Legend

* - Sockolet or Elbolet

W - Weldolet

P - Reinf. Pad, See STD #1 for Size

T - Weld Tee

PRESS. TEMP. RATING	
TEMP °F	PRESS PSIG MAX.
100	275
200	240
300	210
400	180
500	150

SERVICE	
Waste Feed	PL
Slurry, Liquid	

Notes:

1. Cleaning - Blow lines with plant air.
2. Testing - Hydrostatic test on vessel or piping system with clean water to 1½ design pressure. Vessels or pi which are certified as having been hydrostatically tested need not be retested.
3. Joint compound - Pipe thread sealant tape "Teflon".

000552

PIPE SPECIFICATION - AF

Service and Material		P - Waste Feed PW - Process Water BO - Burner Oil WO - Waste Oil	Carbon Steel
Maximum Pressure and Temperature		740 PSIG 250°F — Corr. Allow. 1/16"	Code 31.3
Item	Sizes	General Description	Tag
Pipe	½" thru 1½" 2" thru 10"	Schedule 80 ASTM A106-B Seamless Schedule 40 ASTM A53-B Seamless	
Valves: Globe	½" thru 1½" 2" thru 10"	600 lb FS Socket Weld Ends 300 lb RF CS Flanged	VGL-8 VGL-23
Valves: Check	½" thru 1½" 2" thru 10"	600 lb FS Socket Weld Ends 300 lb RF CS Flanged	VCH-28 VCH-31
Valves: Ball	½" thru 1½" 2" thru 6" 6" thru 10"	2000 lb CS Socket Weld Ends 300 lb RF CS Flanged - Lever Operated 300 lb RF CS Flanged - Gear Operated	VBA-28 VBA-26 VBA-26
Valves: Needle	½" thru 1"	4000 lb FS Screwed	VNE-2
Flanges	½" thru 1½" 2" thru 10"	300 lb RFSW, ASTM A105, ANSI B16.5 300 lb RFWN, Std. Bore, ASTM A105, ANSI B16.5	
Fittings	½" thru 1½" 2" thru 10"	3000 lb FSSW, ASTM A105, ANSI B16.5 Std. Wt. Butt Weld FS, ASTM A234-WPB, ANSI B16.9	
Gaskets	All Sizes	300 lb RF, ⅛" Thick Non-Asbestos, Garlock style 3300 or equal	
Bolting	All Sizes	ASTM A193-B7 Stud Bolts with ASTM A194-2H Hex Nuts, zinc electroplated.	

Notes: See Page 2 for Service, Notes and Branch Reinforcement

PIPE SPECIFICATION - AF

BRANCH REINFORCEMENT

Weldolets & Sockolets per ASTM A105

Legend

* - Sockolet or Elbolet

W - Weldolet

P - Reinf. Pad, See STD #1 for Size

T - Weld Tee

Header Sizes (inches)	1≤	1½	2	3	4	6	8	10	12	14	16	18	20	24	30	36
1≤	T															
1½	T	T														
2	*	*	T													
3	*	*	T	T												
4	*	*	P	T	T											
6	*	*	W	P	T	T										
8	*	*	W	W	P	T	T									
10	*	*	W	W	W	P	T	T								
12																
14																
16																
18																
20																
24																
30																
36																

Branch Sizes (inches)

PRESS. TEMP. RATING	
TEMP °F	PRESS PSIG MAX.
100	740
750	505

SERVICE	
Sludge Feed	P
Aqueous Feed	P
Burner Oil	BO
Waste Oil	WO
Process Water (H.P.)	PW

Notes:

1. Cleaning - Blow lines out with compressed air and flush with water.
2. Testing - Hydro Test at 1½ times MAOP.

000554

INTERNATIONAL TECHNOLOGY CORPORATION

Specification No. AH
Rev: 0
Date: 12/97

ENGINEERING STANDARD — PIPING MATERIAL SPECIFICATION

PIPE SPECIFICATION - AH

Service and Material		WO - Waste Oil WL - Waste Liquid WS - Waste Solvent	Carbon Steel
Maximum Pressure and Temperature		275 PSIG -20°/250°F — Corr. Allow. 1/16"	Code 31.3
Item	**Sizes**	**General Description**	**Tag**
Pipe	1½" & Under 2" thru 6"	Schedule 80 ASTM A106-B Seamless Schedule 40 ASTM A53-B Seamless	
Valves — Gate	1½" & Under 2" & Over	600 lb CS Socket Weld Gate Valve 150 LB RF Flanged CS Gate Valve	VGA-11 VGA-3
Valves — Globe	1½" & Under 2" & Over	600 lb FS Socket Weld Globe Valve 150 LB RF Flanged CS Globe Valve	VGL-8 VGL-5
Valves — Check	1½" & Under 2" & Over	600 lb FS Socket Weld Lift Check Valve 150 LB RF Flanged CS Swing Check Valve	VCH-9 VCH-7
Valves — Ball	2" & Under 3" & Over	1000 lb CS Three-Piece Socket Weld Ball Valve 150 LB RF Flanged CS Ball Valve	VBA-5 VBA-6
Flanges	1½" & Under 2" thru 6"	150 LB RFSW ASTM A105, ANSI B16.5 150 LB RFWN (Std. B) ASTM A105, ANSI B16.5	
Fittings	1½" & Under 2" thru 6"	3000 LB FS Socket Weld ASTM A105, ANSI B16.11 Std. Wt. Butt Weld FS ASTM A234-WPB, ANSI B16.9	
Gaskets	All Sizes	150 LB RF, ⅛", Garlock Style 3545 or equal	
Bolting	All Sizes	ASTM A307 Gr. B, Hex Head Bolts and Nuts, zinc electroplated	

Notes: See Page 2 for Service, Notes and Branch Reinforcement

PIPE SPECIFICATION - AH

BRANCH REINFORCEMENT

Header Sizes (inches)	1≤	1½	2	3	4	6	8	10	12	14	16	18	20	24	30	36
1≤	T															
1½	T	T														
2	*	*	T													
3	*	*	T	T												
4	*	*	P	T	T											
6	*	*	W	P	T	T										
8	*	*	W	W	P	T	T									
10	*	*	W	W	W	P	T	T								
12	*	*	W	W	W	P	P	T	T							
14																
16																
18																
20																
24																
30																
36																
Branch Sizes (inches)	1≤	1½	2	3	4	6	8	10	12	14	16	18	20	24	30	36

Weldolets & Thredolets per ASTM A105

Legend

* - Sockolet or Elbolet

W - Weldolet

P - Reinf. Pad, See STD #1 for Size

T - Weld Tee

PRESS. TEMP. RATING	
TEMP °F	PRESS PSIG MAX.
100	275
200	240
300	210
400	180
500	150

SERVICE	
Waste Oil	WO
Waste Liquid	WL
Waste Solvent	WS

Notes:

1. Cleaning - Blow lines with 150 lb steam.
2. Testing - Test at 1½ times MAOP (max Hydro. Test @ 412 PSIG or max Air Test @ 302 PSIG).

000556

ENGINEERING STANDARD — PIPING MATERIAL SPECIFICATION

PIPE SPECIFICATION - BE

Service and Material		Chlorinated Waste Organic — Teflon-Lined	
Maximum Pressure and Temperature		150 PSIG (See Note 5.) 300°F	
Item	Sizes	General Description	Tag
Pipe	1" thru 4"	Lined pipe as per Note 1.	
Valves: Gate			
Valves: Globe			
Valves: Check	1" thru 4"	Straight through ball check. Dorè 770 FEP-Lined.	
Valves: Plug	1" thru 6"	"DOW Butterplug". See Note 2. Alternate Dorè 790 EEP-Lined.	
Valves: Ball	1" thru 6"	WKM Dynaseal Ball Valve Series 350 FEP-Lined, Flanged Ends.	
Flanges	All	See Note 3.	
Fittings	All	See Note 4.	
Gaskets	1" thru 4"	⅛" TFE Envelope with Non-Asbestos Filler when Required or Garlock "Envelon" Style 3565	
Bolting	See Note 3.	Regular Unfinished Sq. Hd. Machine Bolt ASTM A-307 Grade B. American Standard "Heavy Series" Semi-Finished Hex nuts ASTM A-307 Grade B.	

Notes:

1.0 Pipe

1.1 Material

1" thru 4" lined pipe to be fabricated from electrical resistance welded carbon steel ASTM A-135 pipe. Pipe to be Schedule 10. External finish to be painted with corrosion-resistant primer.

1.2 Lengths

Available in spool pieces or lengths 10' and 20' long nominal. Actual minimum lengths of these assemblies are 10'-3" and 20'-6".

1.3 Ends

Lined pipe is supplied with plain ends for field flairing for use with Serra-Seal clamps or Serra-Seal flanges.

Spool pieces are supplied with flaired ends for use with Serra-Seal clamps or Serra-Seal flanges.

PIPE SPECIFICATION - BE

1.4 Pipe Lining

Will be Fluoroflex F (FEP) resin.

Will be thickness:

Size	Thickness
1"	.088"
1½"	.088"
2"	.088"
3"	.100"
4"	.120"

2.0 Valves

2.1 Material, Class (Plugs)

Ductile iron valves shall be rated at Class 150 and shall conform to ASTM A-395.

2.2 Valve Lining (Plugs)

Shall be PTFE resin conforming to ASTM D-1457 with a minimum tensile strength of 3000 psi per ASTM D-638 and a minimum ultimate elongation of 250% per ASTM D-638.

Butterplug Valves lined with PTFE shall not be less than 90% of the nominal thickness listed (PTFE Liner):

Size	Thickness
1"	0.100"
1½"	0.100"
2"	0.100"
3"	0.120"
4"	0.136"

Butterplugs are produced by Dow Chemical Co.

3.0 Joints

3.1 Serra-Seal Clamped Piping Joint (Primary)

Consists of two formed mating ends fitted with Serra-Seal rings and a two-piece 'V'-type clamp with two alloy steel ASTM A-193 Grade B5 (Zinc Plated) bolts and hex nuts.

3.2 Serra-Seal Flanged Piping Joint

For use when interfacing with other piping systems, valving, etc.

Standard ANSI Class 150 lb, Ductile iron ASTM A-395. Consists of Resistoflex Serra-Seal split flange(s) with parallel faced seal ring(s) and socket head cap screws. Gasket(s) may or may not be necessary.

000558

PIPE SPECIFICATION - BE

4.0 Fittings

4.1 Fittings will be: 90 degree and 45 degree elbows, tees, crosses, blind flanges, concentric reducers, reducing tees, in sizes 1" through 4" of the Serra-Seal clamped piping series. Fabricated from electrical resistance low carbon steel ASTM A-587 or A-513 Schedule 40 and lined with Teflon (FEP). Exterior to be painted with corrosion-resistant primer. Fittings are vented between liner and casing.

Adapters: Serra-Seal clamp end to female pipe, NPT, are available. These are carbon steel unlined.

5.0 Pressure Temperature Operating Conditions

5.1 Class 150 Serra-Seal Pipe and Fittings (FEP)

100°F	250 psig
150°F	242 psig
200°F	235 psig
300°F	215 psig

6.0 Reference

Serra-Seal products are produced by:

Resistoflex Co.
Roseland, NJ 07068
(201) 226-8800

DRAFT

DRAFT

000560

INTERNATIONAL TECHNOLOGY CORPORATION

Specification No. BG
Revision No. 0
Date: 7/98
Page 1 of 2

ENGINEERING STANDARD — PIPING MATERIAL SPECIFICATION

PIPE SPECIFICATION - BG

Service and Material		NG Natural Gas (Underground) (SDR 17) (See Note 1)	MDPE
Maximum Pressure and Temperature		125 PSIG at 73.4°F (See Note 1) 80°F (See Note 1)	
Item	**Sizes**	**General Description**	**Tag**
Pipe	2" to 14"	Medium density polyethylene, PE 3408 for gas pressure piping per ASTM D2513	
Valves: Gate	2" and over	150 lbs., RF flanged, C.S. Gate Valve	VGA-3
Valves: Check	2" and over	150 lbs., RF flanged, C.S. Swing Check Valve	VCH-7
Valves: Ball	2" and over	150 lbs., RF flanged, C.S. Ball Valve	VBA-6
Joints	2" and over	Butt fusion welded except at flanged connections and valves	
Flanges	2" and over	Medium density polyethylene. same as pipe, molded stub end, with ductile iron backing flange below Backing flange for MDPE stub ends, convoluted back-up ring, Class 150 ANSI drilling, ductile iron per ASTM A536-80 as manufactured by Improved Piping Products, Inc. or equal.	
Fittings		Medium density polyethylene, same material as pipe (See Note 1)	
Gaskets	All Sizes	150 lbs., RF, ⅛" thick, Garlock style CP 3900 or equal	
Bolting	All Sizes	ASTM A307 Gr. B hex head bolts and nuts, galvanized electro-plated	

Notes: See Page 2

PIPE SPECIFICATION - BG

Notes:

1. Pressure rating of pipe and fittings shall be at least 1.5 times maximum design operating pressure for the application.

Pipe Class	Maximum Pressure Rating
SDR 32.5	50 PSIG
SDR 25	60 PSIG
SDR 21	80 PSIG
SDR 17	100 PSIG
SDR 15.5	110 PSIG
SDR 13.6	125 PSIG
SDR 11	160 PSIG
SDR 9	200 PSIG
SDR 7.3	250 PSIG

2. Cleaning - Use compressed air to blow line free of all dirt and foreign matter.

3. Testing - Air test to rated pressure of pipe and hold for one hour.

4. Valve Boxes - C.I. telescoping type, length to suit - Alabama Pipe Co. Figure E-2702 with marked cover "Gas". Order valves for underground service with 2" square shank adapter. Valves to be well lubricated before installing underground.

INTERNATIONAL TECHNOLOGY CORPORATION

ENGINEERING STANDARD — PIPING MATERIAL SPECIFICATION

PIPE SPECIFICATION - BP

Service and Material		Corrosive slurry	Fiberglass
Maximum Pressure and Temperature		100 psi 210°F	
Item	**Sizes**	**General Description**	**Tag**
Pipe	1" - 14"	Filament wound fiberglass pipe with a minimum of 55 mils of 100% pure epoxy resin on I.D. of pipe. Fibercast RB-2530 or approved equal.	
Valves: Ball	1" - 6"	150# graphite/vinyl ester body with TFE seat and vinyl ester ball.	VBA-19
Valves: Pinch	1" - 14"	Full metal body mechanical pinch type with flange joint ends on both body and EPDM flexible sleeve.	VMC-5
Valves: Butterfly	1" - 4"	Valves shall have PVDF (KYNAR) coated ductile iron bodies with Teflon discs and PVDF seats.	VBU-12
Valves: Butterfly	3" - 10"	Valve shall have graphite fiber reinforced vinyl ester body and ester resin disc.	VBU-13
Flanges	1" - 14"	Incorporated with pipe.	
Fittings	1" - 14"	Epoxy resin fittings. Fibercast epoxy fitting or approved equal.	
Gaskets	All Sizes	Gore Tex-Teflon cord.	
Bolting	All Sizes	ASTM SA 193B7 stud bolts. SA 1942H Hex HD nuts.	

Notes: See Page 2

PIPE SPECIFICATION - BP

NOTES

1. Vendor reference:

   DMD Dresser (Nil-Cor Valves) - (Ball and Butterfly Valves)
   Cortrol
   2098 Thomas Road, Suite #5
   Memphis, TN 32134
   901-385-9993

   Red Valve Co., Inc. (Pinch valve)
   P.O. Box 548
   600 North Bell Avenue
   Carnegie, PA 15106
   412-289-0044

   Asahi America (Butterfly valves)
   425 Riverside Avenue
   Medford, MA 02155
   617-391-2353

   Fibercast Company (Pipe and Fittings)
   P.O. Box 968
   Sand Springs, OK 74063
   918-245-6651

2. All FRP flange connections will be made with washers between the flange and the bolt heads and nuts.

3. Cleaning and Testing.

   Blow with plant air. Hydrostatic test to 1½ times MAOP.

4. Service pH range of slurry can peak from 1-13 with normal range of 5-8.

5. Pressure is limited to 100 psi at a temperature of 210°F because of the PVDF (KYNAR) butterfly valve.

000564

INTERNATIONAL TECHNOLOGY CORPORATION

Specification No. CC
Rev: 0
Date: 12/97

ENGINEERING STANDARD — PIPING MATERIAL SPECIFICATION

PIPE SPECIFICATION - CC

Service and Material		High Pressure Steam, Condensate	Steel
Maximum Pressure and Temperature		650 PSIG 600°F	
Item	**Sizes**	**General Description**	**Tag**
Pipe	Up to 1½" 2" thru 4"	Schedule 80 Seamless Carbon Steel ASTM A106 Gr. B Schedule 80 Seamless Carbon Steel ASTM A53 Gr. B	
Valves – Gate	Up to 1½" 2" thru 4"	600 lb Carbon Steel Gate, Socket Weld Ends 600 lb Carbon Steel Gate, Butt Weld Ends	VGA-20 VGA-21
Valves – Globe	Up to 1½" 2" thru 4"	600 lb Carbon Steel Globe, Socket Weld Ends 600 lb Carbon Steel Globe, Butt Weld Ends	VGL-18 VGL-19
Valves – Check	Up to 1½" 2" thru 4"	800 lb Swing Check, Socket Weld Ends 600 lb Swing Check, Butt Weld Ends	VCH-28 VCH-29
Flanges	Thru 4"	600 lb Forged Steel Raised Face Weld Neck ASTM A105, "Bore to Match"	
Fittings	See Notes		
Gaskets	All Sizes	Spiral wound 304SS Flexite Super CG or Veraflex	
Bolting		Studs/Bolts ASTM A193 Gr. B7 with Heavy Hex Nuts ASTM A194 C1.2H	

Notes: See Page 2

PIPE SPECIFICATION - CC

NOTES

1. Nipples, use Schedule 80 Seamless Steel ASTM A106 Gr. B

2. Fittings:

   Ells Tees: 3000 lb Series Socket Weld ASTM A105 up thru 1½".
   2" thru 4" Butt Welding ASTM A234 Gr. WPB to match.

   Reducers: Swage Pipe

   Unions: Do not use.

3. Boiler Piping to carry Power Piping Code Stamp, fabricate in accordance with ASME Sec. I Power Boiler Code latest edition.

4. Threaded items shall be used only for primary connections for temperature wells, pressure connections, orifice flanges, high-point vents and low-point drains.

5. Cleaning: Blow lines with steam from main.

6. Testing: Test with full-line pressure or hydrostatic, depending upon insurance inspection requirements.

DRAFT

000566

INTERNATIONAL TECHNOLOGY CORPORATION

Specification No. DA
Rev: 0
Date: 7/98

ENGINEERING STANDARD — PIPING MATERIAL SPECIFICATION

PIPE SPECIFICATION - DA

Service and Material		PW - Process Water PL - Waste Feed 300 Series Stainless	
Maximum Pressure and Temperature		180 PSIG 400°F	
Item	**Sizes**	**General Description**	**Tag**
Pipe	½" thru 4"	Schedule 40 Seamless Stainless Steel Type 316L Specification ASTM A312 & A530	
Valves: Gate	½" thru 1½" ½" thru 4"	Stainless Steel 316 Screwed Ends Stainless Steel 316 Flanged Ends	VGA-25 VGA-26
Valves: Globe	½" thru 1½" ½" thru 4"	Stainless Steel 316 Screwed Ends Stainless Steel 316 Flanged Ends	VGL-26 VGL-20
Valves: Check	½" thru 1½" ½" thru 4"	Stainless Steel 316 Screwed Ends Stainless Steel 316 Flanged Ends	VCH-23 VCH-35
Valves: Ball	½" thru 1½" ½" thru 4"	Stainless Steel 316 Screwed Ends Stainless Steel 316 Flanged Ends	VBA-20 VBA-33
Valves: Butterfly	3" thru 4"	Stainless Steel 316 Flanged Ends	VBU-11
Flanges	½" thru 4" ½" thru 1½" ½" thru 4"	150 lb ASTM A182 Std. St. Stl. Tp. 316L Stub End w/Stl. Backup 150 lb ASTM A182 Std. St. Stl. Tp. 316L Scrd. R.F. 150 lb ASTM A182 Std. St. Stl. Tp. 316L Slip On. R.F.	
Fittings	½" thru 1½" ½" thru 4"	Screwed -- 150 lb ASTM 351 Std. Scrd. Type 316L 150 lb ASTM 351 Std. Tp. 316L or Schedule 40 Butt Weld in 316L	
Gaskets	All	1/16" Thick Teflon Ring or Gore-Tex Joint Sealant, Garlock Style 3545 or equal	
Bolting	All	Regular Unfinished Sq. Hd. Machine Bolts ASTM A-307 Grade B with American Standard "Heavy Series" Semi-Finished Hex nuts	

Notes:

1. Pipe: For Welding - Beveled Ends
   For Screw-Type Joints - Screwed Ends
2. Fittings: Screwed - 1½" and under -- 150 lb ASTM A351 Standard Scrd. Tp. 316L
   Flanged/Butt Weld - Schedule 40 Butt Weld, or 150 lb ASTM A403 Standard Flgd. 316L
3. Cleaning - Flush thoroughly.
4. Testing - Hydro-test at 1½ times MAOP (187 PSIG max).
5. Pipe Compound - Locktite Pipe Sealant, Teflon tape, or equal.

PIPE SPECIFICATION - DA

BRANCH REINFORCEMENT

Weldolets & Thredolets per ASTM A105

Legend

* - Thredolet or Elbolet

W - Weldolet

P - Reinf. Pad, See STD #1 for Size

T - Weld Tee

Header Sizes (inches)	1≤	1½	2	3	4	6	8	10	12	14	16	18	20	24	30	36
1≤	T															
1½	T	T														
2	T	T	T													
3	*	*	T	T												
4	*	*	W	T	T											
6	*	*	W	W	T	T										
8																
10																
12																
14																
16																
18																
20																
24																
30																
36																
Branch Sizes (inches)	1≤	1½	2	3	4	6	8	10	12	14	16	18	20	24	30	36

PRESS. TEMP. RATING	
TEMP °F	PRESS PSIG MAX.
100	275
200	240
300	210
400	180
500	150

SERVICE	
Process Water	PW
Waste Feed	PL

000568

INTERNATIONAL TECHNOLOGY CORPORATION

ENGINEERING STANDARD — PIPING MATERIAL SPECIFICATION

PIPE SPECIFICATION - DC

Service and Material		FG - Flue Gas PL - Waste Feed PW - Process Water 300 Series Stainless	
Maximum Pressure and Temperature		180 PSIG 400°F	
Item	Sizes	General Description	Tag
Pipe	½" thru 4"	Schedule 40 Seamless Stainless Steel Type 304L Specification ASTM A312 & A530	
Valves: Gate	½" thru 1½" ½" thru 4"	Stainless Steel 304/316 Screwed Ends Stainless Steel 304/316 Flanged Ends	VGA-25 VGA-26
Valves: Globe	½" thru 1½" ½" thru 4"	Stainless Steel 304/316 Screwed Ends Stainless Steel 304/316 Flanged Ends	VGL-26 VGL-20
Valves: Check	½" thru 1½" ½" thru 4"	Stainless Steel 304/316 Screwed Ends Stainless Steel 304/316 Flanged Ends	VCH-23 VCH-35
Valves: Ball	½" thru 1½" ½" thru 4"	Stainless Steel 304/316 Screwed Ends Stainless Steel 304/316 Flanged Ends	VBA-20 VBA-33
Valves: Butterfly	3" thru 4"	Stainless Steel 304/316 Flanged Ends	VBU-11
Flanges	½" thru 4" ½" thru 1½" ½" thru 4"	150 lb ASTM A182 Std. St. Stl. Tp. 304L/316L Stub End w/Stl. Backup 150 lb ASTM A182 Std. St. Stl. Tp. 304L/316L Scrd. R.F. 150 lb ASTM A182 Std. St. Stl. Tp. 304L/316L Slip On. R.F.	
Fittings	½" thru 1½" ½" thru 4"	Screwed -- 150 lb ASTM 351 Std. Scrd. Type 304L 150 lb ASTM 351 Std. Tp. 304L or Schedule 40 Butt Weld in 304L	
Gaskets	All	1/16" Thick Teflon Ring or Gore-Tex Joint Sealant, Garlock Style 3545 or equal	
Bolting	All	Regular Unfinished Sq. Hd. Machine Bolts ASTM A-307 Grade B with American Standard "Heavy Series" Semi-Finished Hex nuts	

Notes:

1. Pipe: For Welding - Beveled Ends
   For Screw-Type Joints - Screwed Ends
2. Fittings: Screwed - 1½" and under -- 150 lb ASTM A351 Standard Scrd. Tp. 304L
   Flanged/Butt Weld - Schedule 40 Butt Weld, or 150 lb ASTM A403 Standard Flgd. 304L
3. Cleaning - Flush thoroughly.
4. Testing - Hydro-test at 1½ times MAOP (187 PSIG max).
5. Pipe Compound - Locktite Pipe Sealant, Teflon tape, or equal.

PIPE SPECIFICATION - DC

BRANCH REINFORCEMENT

Weldolets & Thredolets per ASTM A105

Legend

* - Thredolet or Elbolet

W - Weldolet

P - Reinf. Pad, See STD #1 for Size

T - Weld Tee

Header Sizes (inches)	1≤	1½	2	3	4	6	8	10	12	14	16	18	20	24	30	36
1≤	T															
1½	T	T														
2	T	T	T													
3	*	*	T	T												
4	*	*	W	T	T											
6	*	*	W	W	T	T										
8																
10																
12																
14																
16																
18																
20																
24																
30																
36																

Branch Sizes (inches)

PRESS. TEMP. RATING	
TEMP °F	PRESS PSIG MAX.
100	275
200	240
300	210
400	180
500	150

SERVICE	
Flue Gas	FG
Waste Feed	PL
Process Water	PW

INTERNATIONAL TECHNOLOGY CORPORATION

Specification No. P1
Revision No. 0
Date: February 1995
Page 1 of 1

ENGINEERING STANDARD **PIPING MATERIAL SPECIFICATION**

Service and Material		DW Potable Water (See Note 1) PW Process Water TRW Treated River Water URW Untreated River Water	PVC
Maximum Pressure and Temperature		142 PSIG at 100°F (See Note 2) 140°F at 50 PSIG (See Note 2)	
Item	**Sizes**	**General Description**	**Tag**
Pipe	¾" to 12"	Pipe, Polyvinyl Chloride (PVC) per ASTM D1784, Type 1, Grade 1, Schedule 80	
Valves: Gate	¾" to 12"	125 lb, F.F. Flanged ends, cast iron body, standard trim	VGA-2
Valves: Globe	¾" to 4"	125 lb, F.F. Flanged ends, cast iron body, standard trim	VGL-17
Valves: Check	¾" to 12"	Class 150, wafer-type check, Buna-N Seals, SS trim, cast iron body	VCH-30
Joints	¾" to 12"	Socket cement, except at flanged equipment and valves. Use PVC primer and solvent cement at socket connections.	
Flanges	¾" to 12"	Flange, Class 150 F.F. PVC, Socket Type conforming to ASTM 2467, Type 1, Grade 1, (Schedule 80)	
Fittings	¾" to 12"	Fittings, Socket Type, Polyvinyl Chloride (PVC), conforming to ASTM 2467 (Schedule 80)	
Gaskets	All Sizes	Gasket, 1/16" thick non-asbestos composition, Garlock Blue-Gard Style 3000, Class 150, full face	
Bolting	All Sizes	Hex bolts and nuts ASTM A-307B	

Notes:

1. For potable water use, the pipes and fittings shall be listed by NSF indicating that they have been tested and approved for conveying potable water by the National Sanitation Foundation. Pipe and fittings must bear the NSF seal.

2. Refer to manufacturer, Plastic Piping System, for the working pressures. The service temperature does not exceed 140°F.

3. Hydrostatic test to 150 PSIG at 73°F.

DRAFT

INTERNATIONAL TECHNOLOGY CORPORATION

Specification No. P2
Revision No. 0
Date: February 1995

ENGINEERING STANDARD — **PIPING MATERIAL SPECIFICATION**

Service and Material		SW Service Water PCW Potentially Contaminated Water SD Storm Drain SDC Storm Drain Contaminated	PVC HDPE
Maximum Pressure and Temperature		110 PSIG at 73°F 140°F at 70 PSIG	
Item	**Sizes**	**General Description**	**Tag**
Pipe	2" to 12"	Pipe, polyvinyl chloride (PVC) per ASTM D1784, Type 1, Grade 1, Schedule 80	
	8" to 18"	High density polyethylene, PC 3408, Type 3, Class C, Category 5, Grade P34, Cell Classification of PE 355434C under ASTM D3350, per ASTM D1248, Driscopipe 8600 or equal, SDR 32.5 (51 PSIG @ 73.4°) (See Notes 4 and 5)	
Valves — Gate	2" to 14" (Notes 1 and 2)	Gate Valve, Class 150 F.F. flanged ends, cast iron body, standard trim	VGA-2
Valves — Globe	2" to 4"	Globe Valves, Class 150, F.F. flanged ends, ductile iron	VGL-6
Valves — Check	2" to 14"	Check Valve, Class 150, wafer-type check, cast iron body, Buna-N Seals, SS trim	VCH-13
Valves — Ball	½" to 2"	Ball Valve, Class 150 lbs., PVC Type 1, socket true union.	VBA-15
Valves — Butterfly	6" to 18" (See Note 3)	Butterfly Valve, Class 150, wafer-type, ductile iron.	VBU-1
	6" to 18"	Butterfly Valve, Class 150, lug-type, ductile iron.	VBU-8
Valves — Diaphragm	2" to 3"	Diaphragm Valve, Class 125, F.F. flanged ends straightway pattern, ductile iron	VMC-2
Valves — Pinch	2" to 6"	Pinch Valve, Class 125, F.F. flanged ends, metal body, EPDM flexible sleeve	VMC-5
Joints	2" to 12"	PVC - Socket cement except at flanged equipment and valves. Use PVC primer and solvent cement at socket connections.	
	8" to 18"	High density polyethylene - Butt Fusion Welded except at flanged connections and valves (See Note 5)	

Item	Sizes	General Description	Tag
Flanges	2" to 12"	PVC Flange, Class 150, F.F., PVC, Socket-type conforming to ASTM 2467, Type 1, Grade 1, Schedule 80	
	8" to 18"	High density polyethylene, same as pipe, molded stub end, SDR 11, with ductile iron backing flanged below (See Note 5)	
	8" to 18"	Backing flange for HDPE stub ends, convoluted back up ring, Class 150 ANSI drilling, ductile iron per ASTM A536-80 as manufactured by Improved Piping Products, Inc. (See Note 5)	
Fittings	2" to 12"	Fittings, socket type, polyvinyl chloride (PVC) manufactured from plastic materials and conforming to ASTM 2467, Schedule 80.	
	8" to 18"	High density polyethylene, same material as pipe (See Note 5). Fabrication fittings, SDR 26.	
Gaskets	All Sizes	Gasket, 1/16" thick non-asbestos composition, Garlock Blue-Gard Style 3000, Class 150 full face	
Bolting	All Sizes	Stud bolts, Alloy steel per ASTM A193 Gr. B7, with heavy hex nuts per ASTM A194 Gr. 2H	

Notes:

1. Use only gate valves on pump suction isolation service.
2. Except in pump suctions, use butterfly valves for isolation on 8" and larger.
3. Use butterfly valves for 6" and larger in throttling service.
4. Use on gravity storm drainage piping only (SD and SDC).
5. Field can substitute galvanized corrugated metal pipe (CMP) in lieu of HDPE.

000574

INTERNATIONAL TECHNOLOGY CORPORATION

Specification No. P3
Revision No. 0
Date: February 1995
Page 1 of 1

ENGINEERING STANDARD **PIPING MATERIAL SPECIFICATION**

Service and Material		PW - Waste Water	
Maximum Pressure and Temperature		142 PSIG at 100°F (See Note 1) 140°F at 50 PSIG (See Note 1)	
Item	**Sizes**	**General Description**	**Tag**
Pipe	¾" to 12"	Pipe, Polyvinyl Chloride (PVC) per ASTM D1784, Type 1, Grade 1. Schedule 80 (for all systems except listed below) Schedule 40 (for PDC, SDC, SD & TW).	
Valves: Check	¾" to 8"	Check valve, Class 150 lbs., F.F. flanged ends, PVC Type 1, Grade 1	VCH-19
Valves: Ball	½" to 6"	Ball valve, Class 150 lbs., PVC Type 1 socket true union	VBA-15
Valves: Butterfly	3" to 12"	Butterfly valve, Class 150 lbs., PVC Type 1, weir body, flanged ends	VBU-8
Valves: Diaphragm	¾" to 2"	Diaphragm valve, Class 150, PVC Type 1 weir body, socket ends	VMC-4
Joints	¾" to 12"	Socket cement, except at flanged equipment and valves. Use PVC primer and solvent cement at socket connections.	
Flanges	¾" to 12"	Flange, Class 150, F.F. PVC, Socket Type conforming to ASTM 2467, Type 1, Grade 1 (Schedule 80)	
Fittings	¾" to 12"	Fittings, Socket Type, Polyvinyl Chloride (PVC), manufactured from plastic materials and conforming to ASTM 2467, Schedule 80 (for all systems except listed below)	
Gaskets	¾" and larger	Gasket, 1/16" thick restructured fluorocarbon Garlock Gylon Style 3500, Class 150, full face	
Bolting	All Sizes	Stud bolts, Type 316 S.S., ASTM A193 GrBSM with Type 316 S.S. heavy hex nuts per ASTM A194 Gr8M	

Notes:

1. Refer to manufacturer, Plastic Piping System, for the working pressures. The service temperature does not exceed 140°F.

2. Hydrostatic test to 150 PSIG at 73°F.

3. Provide flange shield covers (SPZ-4A) on all flanged joints on sulfuric acid (SA), sodium hydroxide (SH) and sodium hypochlorite (SHC) service.

DRAFT

ENGINEERING STANDARD — **PIPING MATERIAL SPECIFICATION**

Service and Material		QA Oxygen Gas	Copper
Maximum Pressure and Temperature		300 PSIG 100°F Corr. Allow. 0.00	Code 31.3
Item	**Sizes**	**General Description**	**Tag**
Pipe	⅜" O.D.	O.D. Tube, copper, seamless, .065" wall, straight lengths; ASTM B75 temper H55, UNS No. C12000 or C12200	
	½" - 3⅛" O.D. (See Note 2)	O.D. Copper Water Tube, seamless, straight lengths; ASTM B88 Type L, temper H70, UNS No. C12000 or C12200	
Tubing	⅝" - 2⅛" O.D. (Notes 2,3, & 5)	O.D. copper water tube, seamless, straight lengths; ASTM B88 Type L, temper H55, UNS No. C12000 or C12200	
Valves — Gate	¼" - 2"	Class 200 Bronze, 125 lbs, solid wedge disc, non-rising stem, screwed	VGA-23
Valves — Gate	¼" - 3"	Class 200 Bronze, 125 lbs, solid wedge disc, non-rising stem, silver braze tubing ends	VGA-24
Valves — Globe	¼" - 2"	Class 200 Bronze, 125 lbs, metal disc, screwed	VGL-24
Valves — Globe	¼" - 3"	Class 200 Bronze, 125 lbs, metal disc, silver braze tubing ends	VGL-25
Valves — Ball	¼" - 2"	Class 200, Brass, TFE seats and seals, screwed	VBA-32
Valves — Needle	¼" - ½"	Class 200, Brass Body, integral seat brass stem, screwed	VNE-1
Valves — Check	¼" - 3"	Class 200, Swing Check Valve, brass body, Teflon seat, screwed	VCH-33
Flanges	1" - 3"	Plate Flange, brass, Class 300 with raised face, 125-250 aarh or rms face finish and O.D. female solder (O.D.F.S.) bore or threaded	

Outside Diameter (Inches)	Nominal Size (Inches)	Nominal Wall Thickness
½	⅜	.035
⅝	½	.040
¾	⅝	.042
⅞	¾	.045
1⅛	1	.050
1⅜	1¼	.055
1⅝	1½	.060
2⅛	2	.070
2⅝	2½	.080
3⅛	3	.090

Item	Sizes	General Description	Tag
Fittings	⅜" - 3⅛" O.D.	Coupling, wrought copper, O.D. female or male solder ends (O.D.F.S. or O.D.M.S.); ANSI B16.22	
	⅜" - 3⅛" O.D.	Adapters, wrought copper, O.D. female or male solder end x female or male threaded end; ANSI B16.22	
	⅜" - 3⅛" O.D.	Ell, 90° short radius, wrought copper, O.D. female or male solder ends (O.D.F.S. or O.D.M.S.); ANSI B16.22	
	⅜" - 3⅛" O.D.	Ell, 45° wrought copper, O.D. female or male solder ends (O.D.F.S. or O.D.M.S.); ANSI B16.22	
	⅜" - 1⅛" O.D. (See Note 6)	Union, wrought copper, ground joint, bronze-to-bronze seat, O.D. female solder ends (O.D.F.S.); ANSI B16.22	
	1⅝" - 2⅛" O.D. (See Note 6)	Union, cast bronze, ground joint, bronze-to-bronze seat, O.D. female solder ends (O.D.F.S.); ANSI B16.22	
	⅜" - 3⅛" O.D.	Tee, wrought copper, O.D. female solder ends (O.D.F.S.); ANSI B16.22	
	⅜" - 3⅛" O.D.	Tee, reducing, wrought copper, O.D. female solder ends (O.D.F.S.), small size equals branch; ANSI B16.22	
	⅜" - 3⅛" O.D.	Reducer, concentric, wrought copper, O.D. male solder x O.D. female solder ends (O.D.M.S. x O.D.F.S.); ANSI B16.22	
Gaskets	1" - 3"	Ring, 1/16" thick, Garlock Style 3505 (Gylon blue for oxygen service)	
Bolting	All Sizes	Stud, aluminum, full thread; ASTM B211 2024-T4	
	All Sizes	Washer, Grade 302 stainless steel, plan regular; ANSI B18.22.1 Type B	
	All Sizes	Nut, heavy hex, Grade 304 stainless steel; ASTM A194 Grade 8	

Notes:

1. Bent Tubing

   1.1 Tubing bent to 1.5 diameters of the nominal tube size may be used in lieu of fittings when and where it is indicated on the detail piping drawings.

   1.2 The tube as specified shall be ⅝" to 2⅛" O.D. copper water tube, seamless Type L, temper H55. UNS No. C12000 or C12200, straight lengths, ASTM B88.

2. Air conditioning and refrigeration tubing, seamless, copper, straight lengths, ASTM B280 UNS No. C12000 or C12200; temper 58 is an acceptable substitute.

3. Flanged joints shall be avoided.

4. H55 temper shall be in accordance with that temper as specified in ASTM B75.

000578

5. The term "solder" shall be interpreted as "silver braze". Brazing material shall have melting point above 1000°F (538°C).

6. Unions shall not be used inside cold boxes. 1⅝" and 2⅛" unions shall not be used in any process line containing cryogenic fluids.

7. Spacing of at least 18" is required between oxygen piping and piping containing flammables.

8. All pipe valves and piping specialties must be suitable for oxygen service in accordance with CGA-4.4, "Industrial Practices for Gaseous Oxygen Transmission and Distribution Piping Systems".

9. Piping system must be cleaned and inspected in accordance with CGA-4.1, "Cleaning Equipment for Oxygen Service".

10. The piping system up to the block valves at use points shall be pressure tested with nitrogen or oil-free dry air to 260 psig. The system shall pass a final one-hour standing pressure test at 250 psig.

11. Piping at use points (burner valve trains, etc.) shall be tested at 1½ times the maximum operating pressure with final one-hour standing pressure test at test pressure.

DRAFT

DRAFT

INTERNATIONAL TECHNOLOGY CORPORATION

Specification No. SB
Rev: 0
Date: 7/98
Page 1 of 1

ENGINEERING STANDARD — PIPING MATERIAL SPECIFICATION

PIPE SPECIFICATION - SB

Service and Material		KW - Sanitary Sewer	PVC
Maximum Pressure and Temperature		20 psi 140°F	
Item	Sizes	General Description	Tag
Pipe	4" thru 12"	Pipe, polyvinyl chloride (PVC) plastic sewer per ASTM Spec. D3034 for SDR 35. Bell and Spigot	
Valves			
Flanges			
Fittings		Bell and/or spigot configuration per ASTM D2034 for SDR 35 with rubber rim & gasket.	
Gaskets		⅛"-thick Red Rubber	
Bolting			

NOTES

1. Test pressure should not exceed 1.5 times the MAOP for ½ hour.

DRAFT

ENGINEERING STANDARD — PIPING MATERIAL SPECIFICATION

PIPE SPECIFICATION - SD

Service and Material		FG - Flue Gas EC - Vent Gas	304 SS
Maximum Pressure and Temperature			
Item	Sizes	General Description	Tag
Pipe	14" thru 22" 24" & Over Sq. Ducts	AP1-5L ERW ¼" Wall Fabricated - ¼" Wall A240 (Special) Shop Fab. FR ¼" Plate A240	
Valves			
Valves			
Flanges	14" & Over Special	Fabricated Flange Per IT Standard (attached) Shop Fabricated FR ½" Plate A240	
Fittings	Special	Shop Fabricated FR ¼" Plate A240	
Gaskets	All Sizes	Thermo-Glas Tubular-Style Rope Gasket (#10-828-5)	
Bolting	All Sizes	ASTM A354, Gr. BD, Hex Head Bolts and Nuts; zinc electroplated	

Flue Gas Piping and Large Ducts

NOTES

1. Flue gas piping, large ducts, transitions, valving, expansion joints, etc. Necessary to transfer and control flue/vent gas through the various stages of treatment. Shall be designed and specified by the major equipment suppliers with the IT representative's approval.

2. Ducts shall be designed for refractory lining and/or insulation where specified on the drawings.

3. Construction shall be in accordance with the "Accepted Industry Practice for Industrial Duct Construction" and "High-Pressure Duct Construction Standards" Manual Series 15D (SMACNA).

4. Design Pressure and Temperature shall be as specified or otherwise established by the equipment manufacturer for the design conditions.

5. Volume flow dampers or butterfly valves shall be so specified or otherwise established by the equipment manufacturer and approved by the IT representative.

6. Test with soap suds under standard air pressure.

PIPE SPECIFICATION - SD

IT Standard Flange Data				
Nozzle O.D.	Flange O.D.	Flange Thickness	No. of 3/4" Diameter Holes	Flange B.C.
1'-0"	1'-4"	3/8"	16	1'-2½"
1'-1"	1'-5"	3/8"	16	1'-3½"
1'-2"	1'-6"	3/8"	16	1'-4½"
1'-3"	1'-7"	3/8"	20	1'-5½"
1'-4"	1'-8"	3/8"	20	1'-6½"
1'-5"	1'-9"	3/8"	20	1'-7½"
1'-6"	1'-10"	3/8"	20	1'-8½"
1'-7"	1'-11"	3/8"	24	1'-9½"
1'-8"	2'-0"	3/8"	24	1'-10½"
1'-10"	2'-2"	3/8"	28	2'-0½"
2'-0"	2'-5"	1/2"	28	2'-3"
2'-2"	2'-7'	1/2"	32	2'-5"
2'-4"	2'-9"	1/2"	32	2'-7"
2'-6"	2'-11"	1/2"	36	2'-9"
2'-8"	3'-1"	1/2"	36	2'-11"
2'-10"	3'-3"	1/2"	40	3'-1"
3'-0"	3'-5"	1/2"	40	3'-3"
3'-2"	3'-7"	1/2"	44	3'-5"
3'-4"	3'-9"	1/2"	44	3'-7"
3'-6"	3'-11"	1/2"	48	3'-9"
3'-8"	4'-1"	1/2"	48	3'-11"
3'-10"	4'-3"	1/2"	52	4'-1"
4'-0"	4'-5"	1/2"	52	4'-3"
4'-2"	4'-7"	1/2"	56	4'-5"
4'-4"	4'-9"	1/2"	56	4'-7"
4'-6"	4'-11"	1/2"	60	4'-9"
4'-8"	5'-1"	1/2"	60	4'-11"
4'-10"	5'-3"	1/2"	64	5'-1"

INTERNATIONAL TECHNOLOGY CORPORATION

ENGINEERING STANDARD — PIPING MATERIAL SPECIFICATION

PIPE SPECIFICATION - SD

IT Standard Flange Data				
Nozzle O.D.	Flange O.D.	Flange Thickness	No. of 3/4" Diameter Holes	Flange B.C.
5'-0"	5'-5"	1/2"	64	5'-3"
5'-2"	5'-7"	1/2"	68	5'-5"
5'-4"	5'-9"	1/2"	72	5'-7"
5'-6"	5'-11"	1/2"	72	5'-9"
5'-8"	6'-1"	1/2"	76	5'-11"
5'-10"	6'-3"	1/2"	76	6'-1"
6'-0"	6'-5"	1/2"	80	6'-3"
6'-2"	6'-7"	1/2"	80	6'-5"
6'-4"	6'-9"	1/2"	84	6'-7"
6'-6"	6'-11"	1/2"	84	6'-9"
6'-8"	7'-1"	1/2"	88	6'-11"
6'-10"	7'-3"	1/2"	88	7'-1"
7'-0"	7'-5"	1/2"	92	7'-3"
7'-2"	7'-7"	1/2"	92	7'-5"
7'-4"	7'-9"	1/2"	96	7'-7"
7'-6"	7'-11"	1/2"	96	7'-9"
7'-8"	8'-1"	1/2"	100	7'-11"
7'-10"	8'-3"	1/2"	100	8'-1"
8'-0"	8'-5"	1/2"	104	8'-3"
8'-2"	8'-7"	1/2"	104	8'-5"
8'-4"	8'-9"	1/2"	108	8'-7"
8'-6"	8'-11"	1/2"	112	8'-9"
8'-8"	9'-1"	1/2"	112	8'-11"
8'-10"	9'-3"	1/2"	116	9'-1"
9'-0"	9'-5"	1/2"	116	9'-3"
9'-2"	9'-7"	1/2"	120	9'-5"

DRAFT

000586

INTERNATIONAL TECHNOLOGY CORPORATION

Specification No. ST
Rev: 0
Date: 12/97
Page 1 of 1

ENGINEERING STANDARD — PIPING MATERIAL SPECIFICATION

PIPE SPECIFICATION - ST

Service and Material		FC - Chemical Feed	316 SS Tubing
Maximum Pressure and Temperature		150 PSIG 400°F	
Item	**Sizes**	**General Description**	**Tag**
Tubing	½" OD & Under	Stainless steel tubing, ASTM A269 Type 316L welded, annealed and pickled. Wall thickness .035" all sizes in the specified range.	
Valves: Globe	½" & Under	316 Stainless steel body, Teflon seats, and packing, screwed ends or with swagelok tube fittings	VGL-26 VGL-27
Valves: Check	½" & Under	316 Stainless steel body, swing type, integral Teflon seats, screwed ends. Poppey-type, spring check, 316 stainless steel, swagelok compression fittings.	VCH-35 VCH-36
Valves: Ball	½" & Under	316 Stainless steel body and ball with Teflon seats & seals, FNPT connections or with compression fittings	VBA-20 VBA-30
Valves: Needle	½" & Under	316 Stainless steel body, Teflon packing screwed ends or swagelok compression fittings	VNE-4 VNE-5
Fittings	½" & Under	Swagelok compression ferrule type 316 stainless steel	

Notes:

1. Cleaning: Blow out lines with compressed air or flush with water.
2. Testing: Hydro test at 1½ times MAOP (225 PSIG max)
3. Joint Compound: Teflon tape or Teflon paste

DRAFT

000588

INTERNATIONAL TECHNOLOGY CORPORATION

ENGINEERING STANDARD — PIPING MATERIAL SPECIFICATION

PIPE SPECIFICATION - UW

Service and Material		FW	Fire Water	SDR 9 (Underground)	HDPE
		DW	Potable Water	SDR 17	
		UW	Utility Water	SDR 11	
		PW	Process Water	SDR 11	
		KW	Sanitary Water	SDR 32.5	
Maximum Pressure and Temperature		125 PSIG at 73.4°F (See Note 1) 80°F (See Note 1)			
Item		Sizes	General Description		Tag
Pipe		2" to 14"	High density polyethylene, AWWA C906, PE 3408 for gas pressure piping per ASTM D2513. Material Type III, Class C, Category 5, Grade P34, Cell Class 345434C, under ASTM D3350 per ASTM D1248 (See Note 1)		
Valves	Gate	2" and over	150 lbs., RF flanged, C.S. Gate Valve		VGA-3
	Check	2" and over	150 lbs., RF flanged, C.S. Swing Check Valve		VCH-7
	Ball	2" and over	150 lbs., RF flanged, C.S. Ball Valve		VBA-6
Joints		2" and over	Butt fusion welded except at flanged connections and valves		
Flanges		2" and over	High density polyethylene, same as pipe, molded stub end, with ductile iron backing flange below Backing flange for HDPE stub ends, convoluted backup ring, Class 150 ANSI drilling, ductile iron per ASTM A536-80 as manufactured by Improved Piping Products, Inc. or equal. Conform to AWWA C906.		
Fittings			High density polyethylene, same material as pipe (See Note 1)		
Gaskets		All Sizes	150 lbs., RF, ⅛" thick, Garlock Style 3000 or equal		
Bolting		All Sizes	ASTM A307 Gr. B hex head bolts and nuts, galvanized electroplated		

Notes: See Page 2

PIPE SPECIFICATION - UW

Notes:

1. Pressure rating of pipe and fittings shall be at least 1.5 times maximum design operating pressure for the application.

Pipe Class	Maximum Pressure Rating
SDR 32.5	50 PSIG
SDR 25	60 PSIG
SDR 21	80 PSIG
SDR 17	100 PSIG
SDR 15.5	110 PSIG
SDR 13.6	125 PSIG
SDR 11	160 PSIG
SDR 9	200 PSIG
SDR 7.3	250 PSIG

2. Cleaning - Use compressed air to blow line free of all dirt and foreign matter.

3 Testing - Air test to rated pressure of pipe and hold for one hour for DW, UW, KW, and PW. Hydrostatic test per NFPA 24 for FW.

4. Valve Boxes - C.I. telescoping type, length to suit - Alabama Pipe Co. Figure E-2702 with marked cover. Order valves for underground service with 2" square shank adapter. Valves to be well lubricated before installing underground.

5. Post Indicating Valves shall be UL listed and FM-approved. For line sizes 4" to 14", PIVs shall be AWWA C500 gate valves, flanged ends, Class 150. Post assembly shall show open and shut, handcrank operator aboveground, non-rising stem, and break flange to separate top works without removing valve.

000590

DRAFT

APPENDIX B

VALVE SPECIFICATION

DRAFT

Valve Specifications

Tag	Valve Type
VAN	Angle Valves
VBA	Ball Valves
VBU	Butterfly Valves
VCH	Check Valves
VGA	Gate Valves
VGL	Globe Valves
VMC	Miscellaneous Valves
VNE	Needle Valves
VPL	Plug Type Valves
VTR	Transflo Valves

General Notes on Valves

Preferred makes and types of valves are listed on the individual specification sheets. If some of these are not available, consult the IT Representative for recommended substitutes. Alternative values can be used upon IT's approval.

Valves shall be located to provide easy access from ground or operating platforms. When necessary, valves shall be equipped with extension stems, chain operated "Babbitt" adjustable sprocket rims, or flexible cable type remote valve operating controls. Extended valve handles and/or stems shall be used on pipe lines and equipment that are insulated.

All valves adjacent to towers, tanks, exchangers or vessels shall be bolted directly to the nozzle where possible.

Shut-off valves should be installed on suction and discharge of all pumps except sump type pumps. Suction side valves should be not smaller than line size on centrifugal pumps handling liquids at or near the boiling point. Where service conditions permit, check valves should be installed on discharge of centrifugal pumps discharging against high pressure.

Positive displacement pumps must have relief or back pressure valves installed on the discharge to protect the pumps against shut-off.

Shut-off valves adjacent to control valves shall have full line size unless otherwise noted. Bypass valves shall be Globe or Throttling type. The bypass line and valve shall be one size smaller than the main line size unless otherwise noted on the drawings.

Double shut-off valves with intermediate telltale drip valves may be used when necessary to assure positive shut-off between two lines.

Valves shall be installed so valve stems do not project into walkways or work areas. All valves shall have a rising stem or other indication of whether the valve is open or closed.

000594

Angle Valves

Valve No.	Description	Vendor	Model No.
VAN-1	150 lb SWP @ 500°F 400 lb WOG brass body, integral seat, brass integral needle point rising stem inside screw, screwed bonnet 1" and under, screwed.	Lunkenheimer Crane Stockham Walworth	907-BS 89 3264 3096

DRAFT

Ball Valves

Valve No.	Description	Vendor	Model No.
VBA-1	150 lb ductile iron one-piece ball valve. 150 lb @ 365°F, 275 lb WOG, ductile iron body with carbon steel ball and stem. Teflon seats and seals. 3" through 8", flanged.	Worcester Kitz	G424T-150 150 SCTAM
VBA-2	150 lb ductile iron three piece ball valve. 150 lb @ 365°F, 275 lb WOG, ductile iron body with carbon steel ball and stem. Teflon seats and seals. 1/2" through 8", flanged.	Hills-McCanna Kitz	S151-DI-T-CS 150SCTAM
VBA-3	300 lb bronze two-piece ball valve. 300 lb @ 212°F, 400 lb WOG, bronze body, ball, and stem. Teflon seats and seals. 2" and under, screwed.	Jamesbury Watts Apollo	21-1100MT B-6000 71-100
VBA-4	600 lb carbon steel two-piece ball valve. 600 lb @ 400°F, 600 lb WOG, carbon steel body, ball, and stem. Teflon seats and seals. Alternate forged steel body with 416 stainless steel ball and stem. Glass reinforced Teflon seats. 2" and under, screwed.	Jamesbury Smith Kitz	21-2200-MT 411T-QR Code 49
VBA-5	1000 lb carbon steel three-piece ball valve. 400 lb @ 300°F, carbon steel body, ball, and stem. Filled Teflon seals. 2" and under, socket weld.	Marwin Jamesbury Crane Apollo Watts	823FTRW BWS22MT 2352-TF 83-200 Series C-75
VBA-6	150 lb carbon steel flanged ball valve, with carbon steel body, insert, ball, and stem. Glass filled TFE seat 3" through 6", flanged.	Jamesbury Hills-McCanna Apollo Kitz	5150-11 S151CSRCS 88-100 Series 150 SCTAM
VBA-7	150 lb carbon steel screwed ball valve, with carbon steel body, 316 stainless steel trim, filled TFE seats. 360°F @ 150 psig steam, 1/2" through 2", screwed.	Jamesbury Apollo Watts Marwin	A2236MT 833RTRS
VBA-8	150 lb carbon steel flanged ball valve with carbon steel body, stainless steel trim, graphite seats, 150 lb @ 500°F, 1/2" through 8", flanged.	KTM KTM Kitz	E0132-31FU EO862-31FU 150 SCTB3HM
VBA-9	150 lb bronze flanged ball valve with bronze body and ball, bronze or stainless steel trim, TFE seats and seals. 150 psi at 180°F min., 2" through 10", flanged.	Jamesbury Hills-McCanna Marwin up to 6"	5150-11-1400T S151BRTBR 5666RTT
VBA-10	150 lb ductile iron body, alloy 20 ball with glass filled TFE seats. 1/2" through 3", screwed.	Hills-McCanna Marwin	M502-DI-R-A2 4244RTRS

Ball Valves

Valve No.	Description	Vendor	Model No.
VBA-11	150 lb carbon steel body, alloy 20 ball with glass filled TFE seats. 3/4" through 10", flanged.	Hills-McCanna Marwin	S151CSRA2 5244RTR
VBA-12	150 lb ductile iron body with carbon steel ball and stem. Teflon seats and seals. 1/2" through 2", screwed.	Hills-McCanna Marwin	S152DITCS 4233RTR
VBA-13	150 lb, monel 400 body, monel trim ball valve. Reinforced Teflon seats. 1/2" through 10", flanged.	McCanna Marwin	S151MoRMo 5555RTR
VBA-14	150 lb monel 400 body and trim with reinforced Teflon seats. 1/2" through 10", screwed.	McCanna	S152MoRMo
VBA-15	CPVC (rigid, unplasticized, Type 1, Grade 1, polyvinyl chloride) 150 lb WP at 73°F (working pressure varies with increasing temperature, see vendor's catalog). Seat rings---TFE. Body and stem "O" rings --- Viton. Socket or flanged ends. 1/4" to 6"	Marwin Hayward Full Flo Singe Entry 1/4" to 6" plastics piping systems Fig. 0321323 socket, Fig. 0321333 flanged +GF+ Plastics Systems Type 370 Asahi/America Ball (True Union)	4888VVT-S
VBA-16	1000 lb stainless steel 316 body and trim, Teflon seats, seals, and packing 1/4" through 2" socket weld ends.	Smith Worcester Apollo Marwin	316 TW 466 TSW 86-200 Series 833RTR
VBA-17	1000 lb carbon steel, three piece ball valve, 400 lb at 300°F, carbon steel body, ball, and stem. Filled Teflon seats and seals, 2" and under screwed.	Apollo Watts Marwin	83-100 Series C-7500 823RTR
VBA-18	1000 lb carbon steel, three piece ball valve, 400 lb @ 300°F carbon steel body, stainless steel ball/stem, Teflon seats and seals, flanged, full port. 2" and 3" size.	Apollo Watts Jamesbury Marwin	88-200 Series C-7800-55 6150-11 833FTR-F1
VBA-19	150 lb series, Nil-Cor 300 Graphite/vinyl ester body with TFE seat, vinyl ester ball, Viton seals, stainless steel bolting (mounts to flat faced flanged FRP piping press. 100 psig, temp. 200°F), 6" and below.	Dresser Nil-Cor	300-SR-V-S
VBA-20	800 lb, 316 stainless steel body and ball with Teflon seats and seals. FNPT connections. 2" and below.	Marwin Apollo Watts	833RTR-S 76-100 Series S-8200

A

R

000597

Ball Valves

Valve No.	Description	Vendor	Model No.
VBA-21	150 lb FF 316 stainless steel body and ball with Teflon seats and seals. 2" and below.	Marwin Apollo Watts	5333 RTR 87-100 Series SF-2500
VBA-22	800 lb 316 stainless steel body with Teflon seats and seals, socket weld connections. 1-1/2" size and below.	Apollo Watts Marwin	85-200 Series S-8351 833RTR-W
VBA-23	1000 lb carbon steel body with full port CS ball, Teflon seats and seals, FNPT connections. 1-1/2" and below.	Apollo Watts Marwin	83-500 Series C-7800 833FTRS
VBA-24	150 lb RF carbon steel body with full port CS ball, Teflon seats and seals. 2" size.	Apollo Watts Jamesbury Kitz	88-200 CF-1800 6150-11-2200TT-1 150SCTBZM
VBA-25	150 lb ductile iron body FEP lined, ductile iron ball FEP coated, Teflon seats, full ported, 150 lb ANSI flanged. 6" size and below.	Durco Atomac	AKH3-FEP
VBA-26	300 lb RF carbon steel body with full port carbon steel ball, Teflon seats. Flanged. 2" - 6" lever operated. 8" - 10" gear operated.	Worcester Jamesbury Kitz	Series 83 6300 Series 300 SCTBZM
VBA-27	2000 lbs carbon steel double seal screwed end ball valve 1/4" to 2".	Jamesbury Watts	Style HP22TT C-7380
VBA-28	2250 lb carbon steel body with full port CS ball, Teflon seats and seals, 1000°F @2250 psig, 1/2" to 2", socket weld ends.	Jamesbury Dyna-Quip Marwin	4DX-2200-TT-1 VPE 3233 FTR-W
VBA-29	2250 lb carbon steel body with full port CS ball, Teflon seats and seals, 1000°F @ 2250 psig, 1/2" to 2", screwed ends.	Jamesbury Marwin	4BX-2200-TT-1 3233 FTR-S
VBA-30	3000 lb 316 stainless steel body with full port 316 stainless ball, Teflon seats and seals, 450°F @ 3000 psig, swagelok compression tube fittings.	Whitey Marwin	60 Series 3333 FTR-X
VBA-31			

Ball Valves

Valve No.	Description	Vendor	Model No.
VBA-32	400 lb brass body with full port brass ball, Teflon seats and seals, ASTM A-449 bolts, 250°F @ 400 psig, FPT screwed ends.	Jamesbury Marwin	21-1100TT-0 666FTT-S
VBA-33	150 lb RF 316 stainless steel body and ball with Teflon seats and seals, 4" and below.	Jamesbury	Style 5150 < 2" Style 7150 > 2"

DRAFT

Butterfly Valves

Valve No.	Description	Vendor	Model No.
VBU-1	150 lb ductile iron body, Buna N seat, alum. bronze disc, 316 stainless steel stem; self-lubricating bronze or acetal bushings, lever-operated. Ductile iron handle. 150 lb WOG at 212°F. 2" through 6", wafer body.	Keystone Keystone Centerline Crane ABZ	138/020 100/088 A 21F-BRB 101-468
VBU-2	150 lb alum. bronze resilient seated butterfly. 150 lb WOG at 212°F. Ductile iron body, buna N seat, alum. bronze disc, 316 stainless steel stem, self-lubricating bronze or acetal bushing, lever-operated with throttling plate, lug type drilled and tapped. Ductile iron handle. 2" through 6", Thd. lug-type body.	Keystone Keystone Lunkenheimer Centerline Crane ABZ	129/020 122/088 4734 LT 24N-BRB 102-968
VBU-3	150 lb ductile iron resilient seated butterfly. 150 lb WOG at 70°F. Ductile iron body, buna N seats, self-lubricating seats, 304 stainless steel disc and stem, wrench-operated for on-off service with stop plate and support plate for 5" soil pipe or valve box. 4" through 6", lug-type.	Centerline Keystone ABZ	LT Lug Type tapped series AA for buried lines 2" AMWA nut size 4"-6" 129 Lug Type-tapped series ASA for buried lines 2" AMWA nut size 4"-6" 102-968 w/extension
VBU-4	150 lb alum. bronze resilient seated butterfly, 150 lb WOG at 212°F ductile iron body buna N seat, alum. bronze disc, 304 stainless steel stem, lubricating bronze or acetal bushing, weatherproof gear operator, lugs drilled and tapped. 8" through 12", flanged.	Keystone Keystone Lunkenheimer Centerline Crane Co. ABZ	129/020 122/088 4734-G LT 24N-BRB 102-967 w/extension
VBU-5	150 lb D.I. resilient seated butterfly. 150 lb WOG at 70°F ductile iron body, buna N seats, self-lubricating bronze or acetal bushings, disc 304 stainless steel (rough polish) stem 304 stainless steel 8" through 30", lug type.	Centerline ABZ	LT (lug type) for buried lines CLG-BS Series Warm Gear Operator with 2 AWWA nut with stops and support plate for 5" soil pipe or valve box. 202-967 w/extended stem
VBU-6	200 lb D.I. resilient seated butterfly, ductile iron body and disc, buna N seats, acetal resin bushing lugs drilled and tapped, lever-operated. 3" through 6" lugs, lever-operated; 8" through 24" lugs, gear-operated.	Keystone ABZ	129 102-829

000600

Butterfly Valves

Valve No.	Description	Vendor	Model No.
VBU-7	75 lb to 100 lb CI body with replaceable elastomer seat, elastomer-covered disc. to fit 150 lb flange drilling 2" through 6", lugs - lever operated; 8" through 30" lugs - gear operated.	Keystone Centerline ABZ	99/993 LT Series 102 Series
VBU-8	150 lb PVC type 1, grade 1, flanged butterfly. 150 lb WP at 30 to 70°F. Pressure varies with temperature and size. See vendor's catalog. 2" through 6" lever operated; 8" through 24" gear operated. Flanged ends.	Plastics Piping Systems	Fig. 0701342 (Lever) Fig. 0711342 (Gear)
VBU-9	150 lb polypropylene flanged butterfly. 150 lb WP at -5° to 105°F. Pressure varies with temperature and size. See vendor's catalog. 2" through 6" lever operated. 8" through 24" gear operated. Flanged ends.	Plastics Piping systems Asahi/America	Fig. 0703342 (Lever) Fig. 0713342 (Gear) Type 367
VBU-10	150 lb FF connections, cast steel body, hypalon lining on all wetted parts, (210°F, 100 psig). Mounts to flat-faced flanged FRP piping. Hand-lever operation.	Media Mosites	
VBU-11	150 lb stainless steel type 316 body, single flange type tapped for independent bolting. stainless steel type 316 disc. 17-4 p\PHG SS stem. Teflon stem packing, seal ring and backing ring.	Post-Seal Jamesbury Durco	Fig. 2144-03-01-04 815 L BX2001 Series
VBU-12	Valves shall have KYNAR (PVDF) coated ductile iron bodies with Teflon discs and PVDF seats. Valves shall have a solid Teflon disc and PVDF seat bonded to an EPDM backing cushion. Valves shall be provided with a lever handle. Valves must give bubble-tight seating. Maximum pressure to be 100 psig at 210°F for valves sized 2", 2 1/4", 3", and 4".	Asahi/America Durco	Type 77Z BTW 2000
VBU-13	NIL-COR 300 graphite fiber reinforced vinyl body with Viton seat. Ester resin disc and TFE packing. Maximum pressure to be 100 psig at 250°F up to valve size 10".	Dresser NIL-COR	300-SR-V-S

Check Valves

Valve No.	Description	Vendor	Model No.
VCH-1	125 lb brass screwed check, 125 lb SWP at 406°F, 250 lb WOG bronze body, integral seat, bronze disc, screwed cap. 3" and under, screwed.	Lunkenheimer Crane Walworth Powell	2144 37 34-06 578
VCH-2	150 lb IBBM screwed lift check. 150 lb SWP at 450°F, 250 lb WOG cast-iron body, renewable nickel alloy seat, nickel alloy cone-type disc, screwed bronze cap. 2" and under, screwed.	Lunkenheimer Crane Powell	998 366 1/2 196
VCH-3	150 lb bronze screwed swing check. 150 lb at 500°F, 250 lb WOG Y pattern, bronze body, integral seat, bronze disc, screwed cap. 3" and under, screwed.	Crane Nibco	137 T-433-B
VCH-4	200 lb bronze screwed lift check. 200 lb SWP at 500°F, 400 lb WOG bronze body and disc, union cap. 2" and under, screwed.	Lunkenheimer Powell Crane Walworth	414 116 72
VCH-5	300 lb mal. iron screwed swing check. 300 lb SWP at 550°F, 1000 lb WOG. Mal. iron body, integral seat, mal. iron disc, screwed cap. 2" and under, screwed.	Crane	346 1/2
VCH-6	125 lb IBBm flanged swing check. 125 lb SWP at 450°F, 200 lb WOG in 2" to 12" sizes. Ratings 14" and up, see manufacturer's catalog. Cast-iron body, renewable brass seat, brass faced disc, bolted cap. 24" and under, flanged.	Crane Lunkenheimer Walworth Powell	373 1790 W928 1/2 559
VCH-7	150 lb CS flanged swing check (specify trim). 150 lb SWP at 500°F. Carbon steel body, 13% CR or NI alloy seat, 13% cr. disc, bolted cap. 24" and under, flanged.	Lunkenheimer Crane Walworth Powell Pacific	1572-C 147X 5341F 1561AFE 180-1
VCH-8	150 lb monel flanged swing check. 150 lb WP at 500°F. Monel 400 horizontal swing check, bolted cap. 12" and under, flanged.	Powell Powell Aloyco Pacific Ladish	2342 2633 377 M 1100 5272
VCH-9	600 lb forged steel lift check. 600 lb at 900°F for oil, forged steel body, bolted cap, Exelloy disc and seat. 1-1/2" and under, socket weld.	Crane	
VCH-10	150 lb cast steel swing check. 150 lb at 500°F, WOG, CS body and cap, Exelloy disc and seat, 2" through 8" butt weld.	Crane	

000602

Check Valves

Valve No.	Description	Vendor	Model No.
VCH-11	125 lb bronze solder and 200 WOG non-shock cast bronze ASTM B-62 renewable seat; Y-pattern, comp. disc for WOG soldered ends. Copper to copper Fed. Spec. WW-V-51a Class A Type IV. 1/4" through 2", solder ends.	Nibco Mueller Hammond Stockham Walworth	S-413W V-1007 IB-941 B-306 3406-SJ
VCH-12	150 lb check valve. 300 WOG bronze body, bolted bonnet, renewable seat, comp. disc (Buna N). 3", 4", solder ends.	Nibco	S-433B
VCH-13	150 lb non-slam check. 150 lb spring loaded non-slam check with (buna N) resilient synthetic seal. 2-12" - 275 lb cold WP 316 stainless steel trim. Valve bolts between 125 and 150 lb ANSI flanges. 6" through 16", flanged.	Mission Anderson-Greenwood WECO Mueller	15 BMF (bronze) Iron body, Bronze Trim CV 15 B20 BE 101 BT
VCH-14	300 lb M.I. screwed swing check. 300 lb SWP at 550°F - 1000 lb WOG; M.I. body, integral seat M.I. disc; screwed cap. 1/2" through 2", screwed.	Crane	346 1/2
VCH-15	150 lb CI body with buna N inserts, monel discs and springs. 2" through 24", lugs.	Centerline	CLC
VCH-16	800 lb forged steel screwed lift check. 600 lb at 900°F, forged carbon steel body, 13% chrome stainless steel trim, bolted cap, piston-type horizontal lift check. 1/4" through 2", screwed.	Lunkenheimer Vogt Smith Hancock Crane	2311-W 701 C80 5580S
VCH-17	1500 lb FS screwed horizontal ball check 1500 lb WP at 850°F, forged steel body, stainless steel seat, stainless steel ball, bolted bonnet. 1/2" through 2", screwed.	Edwards Vogt	5532 B-15701
VCH-18	150 lb, cast steel Kynar lined vertical lift check valve. 1" through 8", flanged.	Dow Durco/Atomac	356 ARV2 Series
VCH-19	150 lb PVC Type 1, Grade P, swing check flanged ends, 3/4" through 8". Pressure varies with size and temperature. See vendor's catalog.	Plastics Piping Systems	Fig. 0841342
VCH-20	150 lb PP swing check, flanged ends 3/4" through 8". Pressure varies with size and temperature. See vendor's catalog.	Plastics Piping Systems Asahi/America	
VCH-21	150 lb ductile iron body, Teflon-lined ball check valve, 150 lb FF conns. ball solid. PTFE (max psig @ 400°F).	Peabody-Dore Durco/Atomac	Model 770 E600 Series ARV2 Series

Check Valves

Valve No.	Description	Vendor	Model No.
VCH-22	800 lb forged steel body and cap, stainless steel disc, rating 2000 PSI @ -20° to 100°F socket weld ends 2" and under.	RP&C	F91
VCH-23	800 lb forged steel body and cap, stainless steel disc, rating 2000 PSI @ -20° to 100°F screwed ends 2" and under.	RP&C	F90
VCH-24	Class 150 316SS body and wetted parts, metal disc., swing check valves, socket weld connections 1-1/2" and under.	Ladish	5271
VCH-25	150 lb FF ball check valve, hypalon lined complete with hypalon gaskets for mounting to flat face fiberglass piping. Fluid temp 210°F and 100 psig.	Ramparts	
VCH-26	150 lb series, cast ductile iron body, PVDF lined and solid TFE ball. Flanged ends.	Peabody-Dore	Model E-8010-770
VCH-27	125 lb all iron flanged swing check, 125 lb SWP at 450°F, 200 lb WOG 2"-12", ratings 14" and up. See manufacturer's catalog, CI body, renewable CI seat, CI disc, bolted cap.	Crane Walworth Powell Nibco	373 1/2 W928 1/2 1259 F-918-N
VCH-28	600 lb ASTM A-105 Grade 2 forged carbon steel, swing check (horizontal or vert.) Class 800 socket weld ANSI B16.34, ANSI B16.11 disc and seat ANSI 410.	Vogt Anvil	SWS-74 862-3
VCH-29	600 lb ASTM A-216 Gr. WCB cast carbon steel, swing check (horiz. or vert.) butt weld ends, disc and removable seat AISI 410. Trim SS, 13% CR.	Crane Powell Stockham Walworth	175 1/2x 6061-WE 60-W-1 5350 WE-AA
VCH-30	150 lb series, cast ductile iron check with PTFR lining and solid TFE ball. Flanged ends.	Peabody-Dore Durco/Atomac	Model 770 ARV2 Series
VCH-31	300 lb RF CS flanged swing check, bolted bonnet, 1-1/2" through 12", flanged.	Lunkenheimer Nibco	3072W CS-372-U
VCH-32	125 lb F.F. sleeve check CI body, hypalon sleeve, hypalon-lined body. Rating from 50 psi to 125 psi working pressure. 1" to 20" flanged ends.	Red Valve	Series 33
VCH-33	800 lb forged steel lift check, bolted cap, piston type horizontal lift check. 1/4" through 2", socket weld ends.	Vogt	SW-701
VCH-34	300 lb, bronze, ASTM B62, swing check, Teflon seat, screwed.	Jenkins	Fig 352

Check Valves

Valve No.	Description	Vendor	Model No.
VCH-35	150 lb flanged, cast stainless steel per ASTM A-351 or forget stainless steel per ASTM A-182 and ANSI. Bolter bonnet with Teflon gasket, metal or Teflon dish.		

DRAFT

Gate Valves

Valve No.	Description	Vendor	Model No.
VGA-1	125 lb IBBM OS&Y flanged gate. 125 lb SWP at 450°F, 200 lb WOG 2" through 12". Ratings 14" and up, see manufacturer's catalog. CI body, renewable brass seat, CI brass faced single disc, rising stem, OS&Y, bolted bonnet. 48" and under, flanged.	Lunkenheimer Crane Walworth Powell	1430 465 1/2 W726F 1793
VGA-2	125 lb IBBM OS&Y non-rising stem flanged gate. 125 lb SWP at 450°F, 200 lb WOG 2" through 12". Ratings 14" and up, see manufacturer's catalog. CI body, renewable brass seat, CI brass faced single disc, non-rising stem, bolted bonnet with 2" square operating nut. 48" and under, flanged.	Lunkenheimer Crane	1428 461
VGA-3	150 lb cast steel flanged gate. 150 lb SWP at 500°F (specify trim). Cast carbon steel body, 13% Cr or Ni alloy seat and disc, rising stem, OS&Y bolted bonnet. 36" and under, flanged.	Lunkenheimer Crane Walworth Powell Pacific Vogt Vogt	1512-N 47XUF 5202F 1503 150 353 6068
VGA-4	150 lb cast steel butt weld gate. Long pattern ANSI Standard B16.10. 150 lb SWP at 500°F, cast carbon steel body (specify trim). 13% Cr or Ni alloy seat and disc, rising stem, OS&Y, bolted bonnet. 36" and under, butt weld.	Pacific Lunkenheimer Crane Walworth Powell	150 1-WE 1513 47 1/2 XUF 5202WE
VGA-5	150 lb Monel 400 flanged gate. 150 lb WP at 500°F or 230 lb WP at 100°F, Monel 400 body double disc, ball and socket type rising stem OS&Y, bolted bonnet. Teflon packing. 12" and under, flanged.	Aloyco Powell Pacific Ladish	117 2497 M-8550 8272
VGA-6	150 lb ductile iron flanged gate. 150 lb at 400°F, 100 lb at 650°F. Ductile iron ASTM A445 (60-40-18) 13 Cr stainless steel trim, rising stem OS&Y bolted bonnet. 2" through 24", flanged.	Stockham Walworth	D15-OF-1 W9726F
VGA-7	150 lb bronze screwed gate. 150 lb at 450°F, 300 lb WOG, 150 lb saturated steam WP. Rising stem, double wedge disc, union bonnet gate ASTM B-62 3" and under, screwed.	Crane Lunkenheimer Powell Stockham Walworth	435 UB 3150 2714 B-121 11
VGA-8	200 lb IBBM flanged gate. 200 lb WP on WOG at atmos. temp. iron body, double disc, parallel seat, bronze mounted, inside screw, wide-bonnet flanged, 2" sq. wrench nut, "underwriters Type Valves" 2" through 12", flanged.	Darling	52FM

000606

Gate Valves

Valve No.	Description	Vendor	Model No.
VGA-9	800 lb forged steel socket weld gate. 800 lb at 850°F, forged carbon steel body and bonnet. 13% chrome stainless steel trim, solid wedge disc, inside screw, welded bonnet. 2" and under, socket weld.	Vogt Smith Bonney	SW-2811 890 WL-11-SW
VGA-10	800 lb forged steel, screwed gate. 800 lb at 850°F, forged carbon steel body and bonnet. 13% chrome stainless steel trim, solid wedge disc, inside screw, welded bonnet. 2" and under, screwed.	Vogt Smith Bonney	SW-2811 890 WL-11-SW
VGA-11	600 lb CS socket welding gate valve. 600 lb at 500°F, cast steel body, bonnet, and yoke with Exelloy trim. 1/2" through 2", socket weld. Full port.	Crane Vogt	SW-13111:1S
VGA-12	150 lb CS butt welding gate valve. OS&Y bolted bonnet, flexible wedge disc. 3" through 12", butt welding.	Crane Lunkenheimer	47 1/2 X-F 1751X-WB2
VGA-13	150 lb bras screwed gate valve. 150 lb SWP at 450°F. 300 lb WOG, brass body, integral seat, double disc, rising stem, screwed bonnet. 3" and under, screwed.	Lunkenheimer Crane Powell Walworth	2150 435 514 57
VGA-14	125 lb bronze gate. 200 lb WOG non-shock 125 lb cast bronze ASTM B-63, screwed bonnet, rising stem, split wedge, Fed. Spec. WW-V-54B, Class A., Type III. 1/4" through 3", solder ends.	Mueller Powell Lunkenheimer	V-1026 1821 2131
VGA-15	150 lb Monel screwed gate. 150 lb WP at 500°F or 230 lb WP at 100°F, Monel Alloy 400 body, double disc, bolted bonnet. 1/2" through 3", screwed.	Aloyco Powell Pacific Ladish	110 2496 M-8551 8270
VGA-16	800 lb forged steel screwed gate. 600 lb SWP at 850°F, forged carbon steel body, single disc, stem and seats 11 1/2 to 13% chrome, stainless steel disc, rising stem OS&Y bolted bonnet, reduced ports. 1/2" through 2", screwed.	Vogt Bonney	12111 WL-11-T
VGA-17	150 lb cast steel flanged gate. For oil or oil vapor service, 150 lb at 500°F, cast carbon steel body, 13% Cr or Ni alloy seat and disc rising stem OS&Y bolted bonnet. 1-1/2" through 36", flanged.	Walworth Crane Powell Lunkenheimer Stockham Pacific Nibco	5202F 47XUF 1503 1512 15-OF-1 150 CS-102-U

Gate Valves

Valve No.	Description	Vendor	Model No.
VGA-18	150 lb all iron screwed gate. 150 lb SWP at 450°F. 225 lb WOG. All iron, bolted packing gland, rising stem, OS&Y, bolted bonnet, U-bolt type.	Lunkenheimer Crane Walworth	1683 484 1/2 W775
VGA-19	125 lb all iron flanged gate. 125 lb SWP at 450°F. 175 lb WOG cast iron body, integral seat, cast iron disc, rising stem, bolted flange bonnet, 2" through 6".	Powell Crane Stockham Walworth Nibco	3463 475 1/2 G-624 W727F F-617-ON
VGA-20	800 lb forged steel socket welded gate. 600 lb SWP at 850°F, forged carbon steel body, single disc, stem and seats 11 1/2 to 13% chrome, stainless steel disc, rising stem OS&Y, bolted bonnet, reduced ports. 1/2" through 2" socket, welded.	Vogt Anvil Bonney Smith	SW 12111 825-31551 WL 11 SW 870-OOHOW
VGA-21	600 lb forged or cast carbon steel butt welded gate OS&Y, bolted bonnet, hand wheel operator, 13% chrome stem, stellite surfaced solid wedge disc and seat, Chesterton 1800 or Garlock 1200 PBI packing.	Powell Vogt Nibco	6003-WE BW 373 CS-603-F
VGA-22	600 lb CS screwed gate valve. 600 lb at 500°F cast steel body, bonnet, and yoke with Exelloy trim. 1/2" through 2" screwed. Full port.	Crane	
VGA-23	Class 200, bronze, union bonnet, solid wedge disc, stainless seat ring, rising stem, screwed.	Crane	424
VGA-24	Class 200, bronze, threaded bonnet, solid wedge disc, rising stem, socket weld ends.	Milwaukee Valve	149
VGA-25	Class 200, cast stainless steel threaded sizes 1/4" through 2" rising stem solid wedge disc, union or threaded bonnet. Teflon packing and gasketing.	Ladish Stockham Powell	8275 15-02 RF 1832-A
VGA-26	Class 150, cast stainless steel flanged sized 1/4" through 20" Teflon packing and gasketing.	Ladish Stockham Powell	8275 15-02 RF 2491A-RF

000608

Globe Valves

Valve No.	Description	Vendor	Model No.
VGL-1	125 lb IBBM screwed globe. 125 lb SWP at 450°F. 200 lb WOG CI body, renewable brass seat, brass cone-type disc. Rising stem OS&Y, bolted bonnet. 2" through 14", flanged.	Lunkenheimer Crane Walworth Powell	1123 351 W906 241
VGL-2	150 lb brass screwed globe. 150 lb SWP at 406°F. 300 lb WOG brass body, integral seat, flat composition disc, rising stem, inside screw, union or screwed bonnet. 4" and under, screwed.	Lunkenheimer Crane Walworth Powell	123 7 3095 150A
VGL-3	150 lb IBBM screwed globe. 150 lb SWP at 450°F. 250 lb WOG, CI body, renewable brass seat, plug-type disc, rising stem, inside screw, union bonnet. 2" and under, screwed.	Lunkenheimer Crane	10Z1PS 314 1/2P
VGL-4	150 lb bronze screwed globe. 150 lb SWP at 358°F. Bronze body, stainless steel plug seats and plug-type disc. Rising stem, inside screw, union bonnet. 3" and under, screwed.	Walworth Hancock Crane Lunkenheimer	237P 4420 14 1/2P LQ-600-150
VGL-5	150 lb cast steel flanged globe. 150 lb at 500°F. WP cast carbon steel body, 13% chrome stainless steel trim, OS&Y, bolted bonnet. 1" through 14", flanged.	Crane Powell Pacific Walworth	143X 1531FE 160-1 5275F
VGL-6	125 lb ductile iron flanged globe. 125 lb rising stem, outside screw and yoke. Renewable seat. 2" through 10", flanged.	Stockham Walworth	D-512 W906
VGL-7	3000 lb forged steel screwed globe. 3000 lb at 450°F. Drop forged steel body, chrome stainless steel trim, inside screw, union bonnet. 1/2" through 2", screwed.	Vogt	1871
VGL-8	800 lb forged steel socket welded globe. 780 lb at 800°F, forged steel body plug type disc and seat, bolted bonnet. 1/2" through 2", socket weld.	Vogt Crane	SW-12181
VGL-9	600 lb forged steel butt welded globe. Outside screw and yoke, plug-type disc and seat, union bonnet. 3" and over, butt weld.	Edwards Crane	848Y
VGL-10	125 lb bronze globe valve 200 lb WOG non-shock. 125 lb SWP bronze body, ASTM B-62 screwed, bonnet, integral seat, buna N disc. 1/2" through 3", solder ends.	Nibco-Scott Mueller Stockham	S-211-W 1000 B-14T

Globe Valves

Valve No.	Description	Vendor	Model No.
VGL-11	150 lb Monel flanged globe. 150 lb WP at 500°F or 230 lb at 100°F. Monel 400, rising stem, OS&Y, bolted bonnet. 1/2" through 10", flanged.	Aloyco Powell Powell Pacific Ladish	317 2477A 2629 M-700 7272
VGL-12	150 lb Monel screwed globe. 150 lb WP at 500°F or 230 lb at 100°F. Monel alloy 400, rising stem, OS&Y, bolted bonnet. 1/2" through 3", screwed.	Aloyco Powell Ladish Pacific	310 2476A 7270 M-701
VGL-13	800 lb cast carbon steel screwed globe. (Specify trim). 600 lb SWP at 950°F, cast carbon alloy steel body, cone type 13% Cr disc and seat, rising stem, inside screw, screwed bonnet 1/2" through 2", screwed.	Lunkenheimer Pacific Crane Vogt Forged Steel	1511-W 3661 851
VGL-14	5000 lb forged steel screwed globe. 5000 lb WOG. Forged carbon steel body integral seat, 13% Cr stem, rising stem, inside screw, screwed bonnet. 1/2" through 2", screwed. (to 450°F)	Vogt	9871
VGL-15	800 lb forged steel, OS&Y bolted bonnet, FNPT connections. 1-1/2" and below.	Velan	
VGL-16	150 lb RF cast steel, OS&Y bolted bonnet, 2" size.	Velan	
VGL-17	125 lb all iron flanged globe. 125 lb SWP at 450°F. @200 lb WOG, CI body, renewable CI seat, CI cone type disc, rising stem, OS&Y, bolted bonnet.	Nibco Crane Walworth Powell Stockham	F-718-N 351 1/4 W906 1/2 F 457 G-513
VGL-18	600 lb forged steel socket welded globe. OS&Y, bolted bonnet, renewable seat.	Vogt Smith Anvil	SW12141 G80-OOHOW 830-31551
VGL-19	600 lb cast steel butt welded globe, OS&Y bolted bonnet, handwheel operator, 13% chrome stem, stellite surface disc and seat.	Crane Lunkenheimer Nibco	171 1/XU or XR 6043U CS-633-F
VGL-20	150 lb stainless steel 316 flanged globe. 150 lb raised face east 316 stainless steel globe valve with Teflon packing and bonnet gasket. Integral seat, renewable Teflon seats disc. 1/2" through 12", flanged raised face.	Powell Aloyco	2475A-TD 507

000610

Globe Valves

Valve No.	Description	Vendor	Model No.
VGL-21	150 lb all iron screwed globe. 150 lb SWP at 450°F. 250 lb WOG CI body, renewable CI seat, iron cone type disc, rising stem, inside screw, union bonnet.	Lunkenheimer Crane Walworth Powell	1113 355 1/2 171
VGL-22	600 lb forged steel globe 1/2" - 1-1/2" screwed. Bolted bonnet (rated for 800 lb service).	Walworth	
VGL-23	300 lb RF carbon steel rising stem, renewable seat ring, flanged, 2" through 16".	Williams Walworth	302F 5281F
VGL-24	Class 200, bronze, union bonnet plug type disc, stainless seat ring, screwed.	Crane	212P
VGL-25	Class 200, bronze, threaded bonnet, bronze disc, socket weld ends.	Milwaukee Valve	1502
VGL-26	Class 200, 316 stainless steel, OS&Y pattern, Teflon seats and packing, screwed ends.	Aloyco Ladish	310 7251
VGL-27	Class 2500, 316 stainless steel, Teflon seats and packing, swagelok compression fittings.	Whitey	3N, 6N, 12N Series

D

Miscellaneous Valves

Valve No.	Description	Vendor	Model No.
VMC-1	100 lb brass screwed pet cock. 1/8" through 1/2", screwed.	Crane	700
VMC-2	150 lb Series, cast iron body (neoprene lined and neoprene diaphragm), straight through pattern, FF flanged ends.	Saunders GIE	
VMC-3	CPVC true union socket diaphragm valve, Teflon EPDM standard diaphragm. 2" and below.	ASAHI/America	
VMC-4	150 lb ASA FF CPVC flanged diaphragm valve, Teflon EPDM standard diaphragm. 3" through 6".	Asahi/America	
VMC-5	Class 125 metal body, mechanical pinch type with ANSI B16.1 flange joint ends. Full non-rising stem and handwheel. Manually operated EPDM flexible sleeve. Bevel gears shall be provided on all valves over 6" size. Maximum pressure to be 100 psi at 210°F. Valve sizes 1/2" - 4", use standard sleeve. Valve sizes 5" - 14", use double wall sleeve.	Red Valve RKL	Series 75

R

D

000612

Needle Valves

Valve No.	Description	Vendor	Model No.
VNE-1	200 lb brass screwed needle. 200 lb SWP at 500°F. 400 lb WOG. Brass body, integral seat, brass stem, integral needle point, rising stem, inside screw, screwed bonnet. 3/4" and under, screwed.	Lunkenheimer Stockham Powell Walworth	906 BS B-64 180 3160
VNE-2	4000 lb carbon steel screwed needle. 4000 lb WOG at 150°F. Carbon steel body, integral seat, 12-14% chrome steel stem, screwed bonnet.	RP & C Vogt Lunkenheimer KF Industries	1040A 9871 1728 15-125
VNE-3	10,000 lb carbon steel screwed needle. 10,000 lb WOG at 200°F. Carbon steel body, soft seat with bleed va. 1/2" screwed ends.	KF Industries	17-125
VNE-4	200 lb, 316 stainless steel, swing type, integral Teflon seats, screwed ends.	Powell	1847Y
VNE-5	316 stainless steel body and stem, Teflon packing, swagelok compression fittings.	Whitey Nupro	21 & 22 Series L Series

Plug Type Valves

Valve No.	Description	Vendor	Model No.
VPL-1	125 lb semi-steel flanged plug cock. 1" through 4", flanged.	Nordstrom Powell Walworth	115 2203 1700F
VPL-2	125 lb semi-steel flanged plug cock. 125 lb SWP at 450°F. 200 lb WOG, flanged worm gear operated. 6" through 12", flanged.	Nordstrom Wormgear Operator Powell Walworth	1169 2207G 1707F
VPL-3	150 lb bronze screwed air plug cock. 150 lb WP bronze body and plug with stop lugs, stainless steel spring. 2" and under, screwed.	Lunkenheimer Williams	1571 830
VPL-4	150 lb ductile iron with stainless steel plug, screwed Teflon sleeved plug valve. 150 lb at 400°F ductile iron body with 316 stainless steel plug, Teflon sleeve. Wrench operated. 2" and under, screwed.	Durco Tufline Note: check end to end dim. Unichem	G432&G12 066 15A1HLFL
VPL-5	150 lb ductile iron with stainless steel plug, flanged Teflon sleeved plug valve. 150 lb at 400°F ductile iron body with 316 stainless steel plug, Teflon sleeve. Wrench operated. Gear operated 4" and larger. 12" and under, flanged.	Durco Durco Tufline Tufline Unichem	G-411 G-411H 067 067EG 15A2HLFL
VPL-6	150 lb 316 stainless steel with alloy, 20 plug, flanged Teflon sleeved plug valve. 150 lb at 400°F. 316 stainless steel body with alloy 20 plug. Teflon sleeve. Wrench operated and gear operated - 4" and larger. 12" and under, flanged.	Durco Durco Tufline Tufline Unichem	G411 G411H 067 067EG 15ALNFV
VPL-7	150 lb Monel flanged Teflon sleeve plug valve. 150 lb at 400°F. Monel 400 body and plug, Teflon sleeve, wrench operated, gear operated - 4" and larger.	Durco Durco Tufline Tufline Unichem	G411 G411H 067 067EG 15A288FV
VPL-8	150 lb ductile iron body, Teflon sleeve, alloy 20 plug. 1-1/2" and under, screwed.	Durco Tufline	G411 066
VPL-9	150 lb ductile iron body, Teflon sleeve, alloy 20 plug. 2" through 10", flanged. Gear operated - 4" and larger.	Durco Tufline	G411 067EG
VPL-10	150 lb Monel screwed Teflon sleeve plug valve. 1-1/2" and under, screwed.	Durco Tufline	G4A 066

000611

Plug Type Valves

Valve No.	Description	Vendor	Model No.
VPL-11	300 lb carbon steel plug cock. 300 lb WOG. Carbon steel body and plug, wrench operated. 1/2" through 4", screwed.	Nordstrom Walworth	2024 1760
VPL-12	150 lb carbon steel flanged lubricated plug valve. 150 lb SWP at 500°F. Carbon steel body and plug. ASTM A-216, Grade WCB. Screwed gland. Short pattern, lubricated. Wrench operated. 1" through 4", flanged.	Nordstrom Walworth	19225 1749F
VPL-13	150 lb carbon steel flanged lubricated plug valve. 150 lb at 500°F. Carbon steel body and plug. ASTM A-216, Grade WCB. Bolted gland. Regular pattern, lubricated. Worm gear operated. 6" through 16", flanged.	Nordstrom	1979
VPL-14	125 lb semi-steel screwed plug cock, lubricated plug valve. 125 SWP at 450°F. 200 lb WOG. 1/2" through 3".	Powell Nordstrom Walworth	2202 114 1700

DRAFT

Transflo Valves

Valve No.	Description	Vendor	Model No.
VTR-1	150 lb carbon steel transflo Teflon sleeve. 150 lb at 400°F. Carbon steel body, 3-way sleeve line P.C. for arrangement; see mfg. catalog. Gear operated, 6" and above. 1-1/2" through 10", flanged.	Durco Tufline Tufline	MG-411 037 037EG
VTR-2	150 lb Monel 400 transflo Teflon sleeve. 150 lb at 400°F. Monel 400 body and plug, Teflon sleeve. For arrangement, see vendor catalog. Gear operated 6" and above. 1/2" through 10", flanged.	Durco ~~Tufline~~ Tufline	MG-411 037 037EG

DRAFT

000616

SECTION 15080

PIPING SPECIALTIES

PART 1 GENERAL

1.1 SECTION INCLUDES:

A. This specification establishes the requirements for selection of piping specialties

B. Piping specialties shall be selected in accordance with codes, drawings, job specifications, and other specific requirements.

1.2 RELATED SECTIONS

A. Section 09900 - Painting General
B. Section 15050 - Piping and Accessories
C. Section 15250 - Insulation

1.3 REFERENCES

A. American Society of Mechanical Engineers (ASME)
1. ASME A13.1 Scheme for the Identification of Piping Systems.
2. ASME B16.5 Pipe Flanges and Flanged Fittings.
3. ASME B31.3 Chemical Plant and Petroleum Refinery Piping.
4. ASME Boiler and Pressure Vessel Code (BPVC), Section IX.

B. American Society for Nondestructive Testing (ASNT)
1. ASNT-SNT-TC-1A Recommended Practice, December 1992 Edition.

C. American Society for Testing and Materials (ASTM)

D. American Welding Society (AWS)

E. American National Standards Institute (ANSI)
1. ANSI B31.3 - Chemical Plant and Petroleum Refinery Piping.

1.4 SUBMITTALS

A. Submit manufacturer's installation instructions, Product Data, and Shop Drawings.

B. Submit manufacturer's descriptive literature, operating instructions, and maintenance and repair data.

C. Certificates of Conformance: Manufacturer shall certify and provide data that indicates that all supplied products meet or exceed specification requirements.

D. Test Procedures: Submit written procedures for all required testing. Test procedures shall include criteria for acceptable performance.

E. Detailed description of packaging materials and procedures, including cleaning and closure of all openings.

F. Procedure for repair or replacement of piping failing pressure tests. Including flushing procedures.

G. Welder qualification, inspector qualifications, procedure qualification records, and welding procedure specification in accordance with the ASME BPVC, Section IX.

H. Pressure test reports.

1.6 QUALITY ASSURANCE

A. Except where more stringent requirements are specified or indicated, the work shall conform to ASME B31.3.

B. Welding Procedures and Qualifications
   1. Welding procedures, welder qualifications, fabrication, assembly, and erection shall be in accordance with ASME B31.3, Chapter V and ASME BPVC, Section IX.
   2. Nondestructive testing personnel qualifications shall be in accordance with ASNT SNT-TC-1A.

1.7 DELIVERY, STORAGE, AND HANDLING

A. Packaging
   1. Packaging shall conform to acceptable industrial practices. Materials shall be cleaned to remove chips, slag, weld spatter, oil, grease, debris, and other foreign matter prior to packaging for shipment.

B. Shipment and Delivery
   1. Return defective or damaged parts to Supplier for repair or replacement so that schedule of this portion of work is not impaired.
   2. Identify all documents certifying quality and compliance with Specifications and deliver to Contractor.

C. Storage
   1. Store items in dry, clean areas, safe from damage.
   2. Maintain condition of all storage areas while items are stored.
   3. Store small items and loose materials in clearly labeled, neatly arranged bins.

000618

4. Store equipment and specialties in safe, clean, dry areas with open ends and pipe connection points covered until removed for installation.

D. Handling

1. Unload, unpack, and handle items with extreme care; use slings, cradles, or other appropriate appurtenances.
2. Transport all items as required from unloading point to storage or installation location; protect components from damage during transportation.
3. Handle items in accordance with special instructions of Manufacturer or Supplier.
4. Replace parts damaged during transportation and handling at no additional cost to Owner so that schedule of this portion of work is not impaired.
5. Protect painted and machined surface where exposed.

PART 2 PRODUCTS

2.1 STRAINERS

A. Temporary strainers are to be installed ahead of control valves, meters, traps, and the suction side of pumps before testing. Their presence shall be indicated by tags or other visual means. They are to be removed at the direction of the IT representative.

B. Typical strainer construction is shown in Figure 1. Substitution of other configurations shall be approved by the IT representative.

C. Temporary strainers are not to be installed where permanent basket-type strainers are indicated on the Piping and Instrument Diagrams or before sludge pumps. Permanent basket-type strainers are designated as equipment items.

	A				* Length			
Size	150*	300*	600*	B	C	D	E	F
1½	3⅛	3⅜	3½	1½	1½	2	3	4
2	4	4¼	4¼	1¼	2	4½	6	4¼
3	5¼	5¼	5¼	2¼	3	6½	9¼	5⅝
4	6¼	7	7⅛	3⅝	4	8	11½	7
6	8⅝	9¼	10¼	5⅝	6	8	17	7¼
8	10⅞	12	12⅜	7½	8	14	22	9
10	13¼	14⅛	15½	9⅛	10	14	27	10¼
12	16	16½	17¼	11¼	12	16	32½	11¼

*C - Short *D - Standard *E - Long

Figure 1
TEMPORARY PIPE LINE STRAINER FOR START-UP
OF NEW PROCESS EQUIPMENT

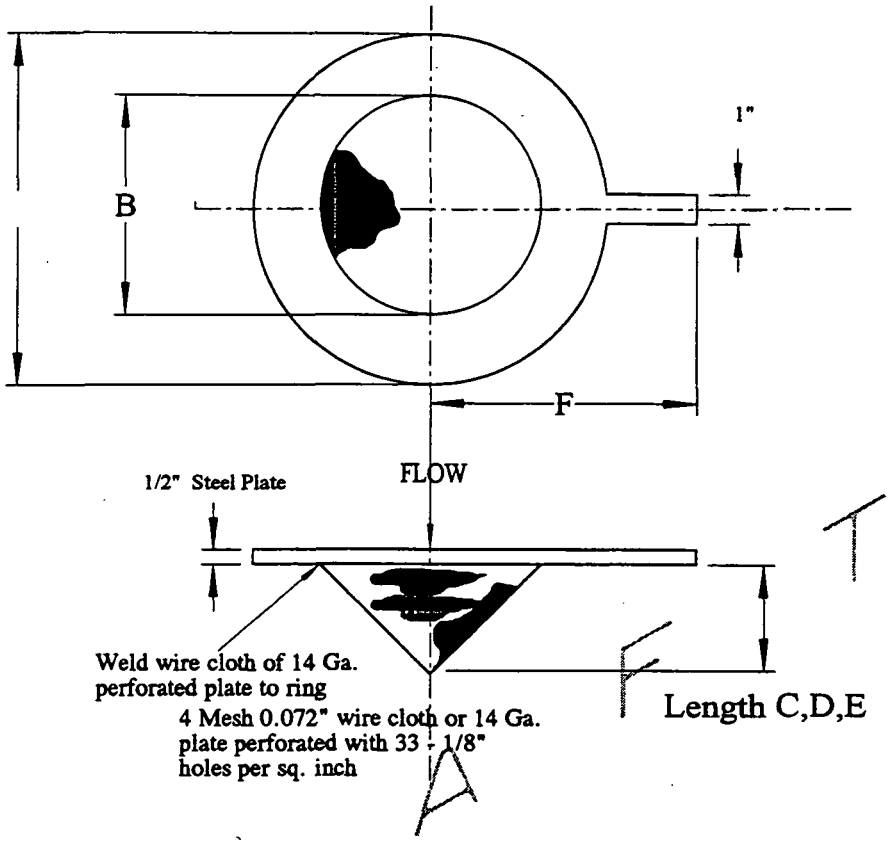

2.2 FLEXIBLE COUPLINGS, EXPANSION JOINTS AND BELLOWS

A. Flexible couplings, expansion joints, and bellows are specially selected or designed pieces of pipe, which are inserted into a piping system to:

- Absorb or permit movements in the system
- Reduce noise
- Isolate mechanical vibration
- Compensate for misalignment
- Isolate dissimilar metals.

B. The use and selection of flexible couplings, expansion joints, and/or bellows shall be at the discretion of the piping designer in conjunction with the IT representative and, if necessary, a vendor applications engineer.

C. The following data are necessary for specifying:

- Flowing medium
- Pressure - working, test

000620

- Temperature - maximum installation

- End connections:
  - Welded ends - size, schedule, and material
  - Flanged ends - size, ANSI rating and facing, and material

- Design movements - axial compression (hot) or expansion (cold) lateral deflection

- List additional features if desired:
  - Internal sleeve - high velocity, temperature, etc.
  - Lifting lugs - above 500 pounds
  - External covers - protect bellows or to permit joint insulation.

D. Typical vendors are: Garlock, Inc., Resistoflex Corporation, and John L. Dore Company.

2.3 FLAME ARRESTERS, CONSERVATION VENTS AND BREATHER VENTS

A. Combination pressure/vacuum relief vents and flame arresters shall be specified and sized by the contractor, or his designee, for the following services:

- Protectoseal Series 830 or equal constructed of stainless-steel 316 (housing, arrester plates, trim, nuts and bolts, etc.) for tank filling/emptying

- Normal operation to act as vent valve relieving nitrogen vapor blanket gas during tank filling (set at 3.0-inch w.c.) and to act as a vacuum relief should there be a nitrogen system failure (set at 0.866-inch w.c. vacuum).

B. Vents with flame arresters shall be specified and sized by the contractor or his designee (to prevent over pressurization of the tank(s) due to failure of the breather vent valve(s) or nitrogen system) at:

- Protectoseal 7800 (steel) (or equal) (set at 5.0-inch w.c.) with flame arrester.

2.4 TRANSFER HOSE AND HOSE FITTINGS

A. This section presents hoses in conjunction with the piping specification and services. Where conflicts or omissions exist, such as a hose rating not complying with a particular service condition or no hose specification for a particular service, etc., the conflict or omission shall be brought to the attention of the IT representative. Hoses shall be as specified in Table 1.

B. Detail design will make certain that hose ends mate to piping stub ends and be provided with the proper fittings. Unless otherwise specified, couplings for hoses 2

inches and larger shall have 150-pound lap joint flanges. Hose under 2 inches will have MNPT-screwed ends.

C. All hoses shall be purchased with end connections fixed and hydrostatically tested by the manufacturer at its recommended test pressure and temperature. A manufacturer's written and signed statement for each individual hose assembly certifying that it has been satisfactorily tested at a specific pressure and temperature shall be furnished to the IT representative. (Exception - drain hoses or vent hoses in nonhazardous service at, or near, atmospheric pressure may be "leak" tested only).

TABLE 1

Spec No.	Service	Transfer Hoses
A	No. 2 fuel oil, seal oil - 120°F, 65 psi	Flexonics Series 860; single braid or equal
B	Natural gas, propane gas, 120°F, 125 psi	Flexonics Series 860; single braid or equal
C	150 psig steam 350°F	Flexonics Series 860 and A6; single braid or equal
D	Process steam process condensate 450°F, 150 psi	Flexonics Series 860 and A6; single braid or equal
E	Nitrogen gas 350°F, 150 psi	Flexonics Series 860 and A6; single braid or equal
F	Boiler feed water	
G	Plant air, ambient air, atomizing air 150°F, 125 psi	Flexonics Series 860 and A6; single braid or equal
H	Potable water 100°F, 125 psi	Flexonics Series 860 and A6; single braid or equal
I	Hydrogen peroxide	Flexonics Series 860 and A6; single braid or equal
J	Polymer solutions	Flexonics Series 860 and A6; single braid or equal
K	Cooling water	Flexonics Series 860 and A6; single braid or equal
L	Lime	
N	DW, EW, FW, HW, SW 180°F, 125 psi	Flexonics Series 860 and A6; single braid or equal
O	Sulfur dioxide	Flexonics Series 860 and A6; single braid or equal
P	Instrument air 120°F, 125 psi	Flexonics Series 860 and A6; single braid or equal
Q	Quench air, combustion air	
R	Flue gas	
S	Sump gas piping	Flexonics Series 860 and A6; single braid or equal
T	High pressure water	Flexonics Series 860 and A6; single braid or equal
U	Incinerator waste liquid and flue gas 210°F, 150 psi	Everflex "C" series Teflon-lined flexible 316L S.S. hose or equal
V	Dowtherm SR-1	Flexonics Series 860 and A6; single braid or equal
X	Aqueous brine solutions	Everflex "C" series Teflon-lined flexible 316L S.S. hose or equal
Y	Up to 50% caustic	Flexonics Series 860 and A6; single braid or equal

000622

Spec No.	Service	Transfer Hoses
Z	Wastewater	Flexonics Series 860 and A6; single braid or equal
AA	Waste feed, slurry liquid	Everflex "C" series Teflon-lined flexible 316L S.S. hose or equal
AB	Phenolic wastes	Flexonics Series 860 and A6; single braid or equal
AC	Commodity chemicals	Flexonics Series 860 and A6; single braid or equal
AD	Waste feed, acid	Everflex "C" series Teflon-lined flexible 316L S.S. hose or equal
AF	Sludge feed, aqueous waste, burner oil, waste oil 100°F, 740 psig	Everflex "C" series Teflon-lined flexible 316L S.S. hose or equal
AG	Reactive hot tars, corrosive reactive hot tars, TDI hot tars (400°F, max)	Everflex "C" series Teflon-lined flexible 316L S.S. hose or equal
BA	Waste feed, chlorinated organics	Everflex "C" series Teflon-lined flexible 316L S.S. hose or equal
BD	Chlorinated organics	Everflex "C" series Teflon-lined flexible 316L S.S. hose or equal
BE	Chlorinated waste organics	Everflex "C" series Teflon-lined flexible 316L S.S. hose or equal
BP	Corrosive slurry	Everflex "C" series Teflon-lined flexible 316L S.S. hose or equal
CA	Hydraulic oil	
CC	High pressure steam, condensate	Flexonics Series 860 and A6; single braid or equal
CL	Propane	Flexonics Series 860 and A6; single braid or equal
DA	Waste feed 400°F, 160 psi	Flexonics Series 860 and A6; single braid or equal
DC	Waste feed	Flexonics Series 860 and A6; single braid or equal
EE	Nitrogen liquid	Flexonics Series 860 and A6; single braid or equal
HH	Drinking water	Flexonics Series 860 and A6; single braid or equal
UA	Wastewater UW	Flexonics Series 860 and A6; single braid or equal

2.5 SEPARATORS

A. Where specified on steam or compressed air lines, etc., separators shall have the following data supplied:

- Design pressure and temperature
- Size and type of line connections
- Material(s) of construction
- Flowing media and flow rate.

PART 3 EXECUTION

3.1 INSTALLATION

A. The Subcontractor shall ensure that all systems are internally free of dirt or foreign materials before final connection to and start-up of equipment.

B. Cap or plug the ends of, and openings in, all fittings immediately after placement to exclude all dirt until fixtures and equipment are installed. No equipment shall be concealed or covered until it has been tested and observed by the inspector who shall be notified when the work is ready for inspection. All work shall be completely installed, tested as required by this section, and the state and local codes, and shall be leaktight before inspection is requested. All tests shall be repeated upon request to the satisfaction of those making the inspection.

3.2 QUALITY CONTROL

A. Inspections and Tests

1. Unless specified elsewhere in the specifications, all piping shall be leak tested in accordance with the ASME B31.3. Process Piping Code, latest edition, paragraphs 345.4 and/or 345.5. Pressure test holding time shall be a minimum 1 hour or longer as necessary to make a complete examination of the system being tested.
2. Tests shall be conducted prior to installing heat tracing or pipe insulation.
3. All pressure vessels, equipment, in-line instruments, gauge glasses, flowmeter, and all other pressure parts of instruments shall not be included in these tests if they will be damaged by the test pressure.
4. Equipment that is not to be subjected to the pressure test shall be disconnected from the piping and a pipe spool inserted in its place, or the equipment may be isolated by way of a single line blind.

B. Hydrostatic testing

1. Potable water or other approved fluids shall be used for hydrostatic pressure testing of piping systems in accordance with ASME B31.3.
2. All test pressures shall be maintained a minimum of 1 hour during which time visual examination of joints begin.

C. Pneumatic Testing

1. Pneumatic testing can be used on certain large diameter piping/ducting.
2. Inspection of joints shall be visual with the use of soap. Pressure gauge readings shall take into account ambient temperature changes.

D. Hydrostatic/Pneumatic Test Reports

000624

1. A report for each piping system tested shall contain the following information:
   a. Date of test
   b. Line designation number

c. Test fluid
d. Type of test
e. Pressure applied
F. Start time
g. Completion time
h. Total time at test pressure
I. Certification by examiner of acceptability
j. Calibration test gauge number and calibration date
k. Comments, drawings, if any.

3.5 CLEANING

A. System Cleaning and Flushing

1. The interior and exterior of all items shall be kept clean at all times.
2. After erection and welding, all lines except air shall be flushed with potable water prior to leak testing or hydrostatic testing. Upon completion of flushing, lines shall be drained at all low points.

-End of Section-

DRAFT

DRAFT

000626

SECTION 15150

PUMPS GENERAL

PART 1 GENERAL

1.1 SECTION INCLUDES

A. Liquid Handling Process Pumps

1.2 RELATED SECTIONS

A. Section 09900 - Painting General
B. Section 13310 - Noise level specification
C. Section 15170 - Motors
D. Division 16 - Electrical

1.3 REFERENCES

A.	ANSI	American National Standards Institute
B.	NEMA MG 1	Motors and Generators
C.	NFPA 70	National Electrical Code

1.4 SYSTEM DESCRIPTION

A. Design Requirements

The pumps will be used to transport liquids to and from the various process equipment.

B. Description

The pumps shall be of the types indicated and specified. The single driving units for the pumps shall be electric motors as indicated and specified.

C. Safety Requirements

Gears, couplings, projecting set-screws, keys, and other rotating parts, so located that any person can come in close proximity thereto, shall be fully enclosed or properly guarded.

D. Nameplates

Pumps and motors shall have a standard nameplate securely affixed in a conspicuous place showing the manufacturer's name, address, type or style, model, serial number, and catalog number. In addition, the nameplate for each pump shall show the capacity in (gpm) at rated speed in rpm and head in feet of water. Nameplate for each electric motor shall show at least the minimum information required by NEMA MG 1. Such other information as the manufacturer may consider necessary to complete identification shall be shown on the nameplate.

E. Electrical Work

Electrical motor driven equipment specified herein shall be provided complete with motors, motor starters, and controls. Electric equipment and wiring shall be in accordance with Electrical Division 16. Electrical characteristics shall be as indicated. Motor starters shall be provided complete with properly sized thermal overload protection in each phase and other appurtenances necessary for the motor control specified. Each motor shall be of sufficient capacity to drive the equipment at the specified capacity without exceeding the nameplate rating of the motor when operating at proper electrical system voltage and frequency. Manual or automatic control and protective or signal devices required for the operation herein specified and any control wiring required for controls and devices but not shown on electrical plans shall be provided under this section of the specifications.

1.5 SUBMITTALS

The following shall be submitted:

A. Manufacturer's descriptive data and technical literature, performance charts and curves for all impeller sizes for a given casing, catalog cuts, and installation instructions. Spare parts data for each different item of material and equipment specified, after approval of the detail drawings and not later than 3 months prior to the date of beneficial occupancy. Data shall include a complete list of parts and supplies, with current unit prices and source of supply.

B. A complete listing of equipment and materials. Drawings containing complete wiring and schematic diagrams and any other details required to demonstrate that the system has been coordinated and will properly function as a unit. Drawings shall show proposed layout and anchorage of equipment

and appurtenances, and equipment relationship to other parts of the work including clearances for maintenance and operation.

C. Proposed diagrams, instructions, and other sheets, prior to posting. Approved wiring and control diagrams showing the complete layout of the entire system, including equipment, piping valves, and control sequence. Condensed operating instructions explaining preventive maintenance procedures, methods of checking the system for normal safe operation, and procedures for safely starting and stopping the system shall be prepared in typed form.

D. Ten complete sets of instructions containing the manufacturer's operating and maintenance instructions for each piece of equipment. Each set shall be permanently bound and shall have a hard cover. Instructions shall include, but not be limited to, the following:

1. Approved wiring and control diagrams.

2. Operating and maintenance instructions for each piece of equipment, including lubrication instructions and troubleshooting guide.

3. Manufacturer's bulletins, cuts, and descriptive data; and parts list and recommended spare parts.

1.6 DELIVERY AND STORAGE

All equipment delivered and placed in storage shall be stored with protection from the weather, humidity and temperature variations, dirt and dust, or other contaminants.

PART 2 PRODUCTS

2.1 MATERIALS AND EQUIPMENT

Materials and equipment shall be suitable for the service intended. Materials and equipment shall be new and unused, except for tests.

A. Pump Service

The pumps shall be utilized for the service as indicated per list in attachment A.

B. Pump Drives

The pumps shall have electric motor drives and shall be directly connected to the driving units through solid shafts or flexible couplings, as appropriate.

C. Piping Connections

The pump suction and discharge shall be provided with flanged connections of suitable size and suitably arranged for piping shown. Pipe flanges shall conform to ANSI and ASME 16.5. Piping shall be installed to preclude the formation of air pockets.

D. Finish

Pump shall have painted or enameled finish as per Section 09900 or per manufacturer's standard with IT approval.

2.2 ELECTRICAL EQUIPMENT

Electrical equipment shall conform to Division 16 - Electrical. Electrical motor driven equipment herein specified shall be provided complete with motors, motor starters, and controls. Motor controls, equipment, and wiring shall be in accordance with NFPA 70.

A. Electric Motors

Each electric motor-driven pump shall be driven by a weather-protected, Type I or II totally-enclosed fan cooled continuous-duty electric motor. Motor shall have a 1.15 service factor. Motors shall be squirrel-cage induction motors having normal-starting-torque and low-starting-current characteristics, and shall be of sufficient size so that the nameplate horsepower rating will not be exceeded throughout the entire published pump characteristic curve. Motor bearings shall provide smooth operations under the conditions encountered for the life of the motor. Adequate thrust bearing shall be provided in the motor to carry the weight of all rotating parts plus the hydraulic thrust and shall be capable of withstanding upthrust imposed during pump starting and under variable pumping head conditions specified. Motors shall be rated 480 volts, 3 phase, 60 Hz and such rating shall be stamped on the nameplate. Motors shall conform to NEMA MG 1.

B. The variable speed motor controller shall convert 460 volt plus 15 percent, minus 5 percent, three phase, 60 Hz (plus or minus 2 Hz) utility power to

adjustable voltage/frequency, three phase, ac power for stepless motor control from 5 percent to 105 percent of base speed.

1. Governing Requirements

Variable speed drives shall conform to the following requirements:

a. Variable speed drive shall comply with 47 CFR 15 regulation of RF1/EM1 emission limits for Class A computing devices. The FCC label of compliance shall be displayed on the variable speed drive.

b. The variable speed drive and options shall comply with the applicable requirements and the standards of the American National Standards Institute (ANSI).

c. Variable speed drive and option design and construction thereof shall comply with all applicable provisions of NFPA 70, Article 43D, Sections A-L.

2. Service

The variable speed drive shall be supplied with the following:

a. One-year parts and labor warranty.

b. A troubleshooting guide to help the building operator determine what steps must be taken to correct any problem that may exist in the system.

3. Basic Features

The variable speed drive shall have the following basic features:

a. Hand/Off/Auto Operation.

b. Manual/Auto speed reference switch.

c. Minimum/maximum adjustable speeds.

d. Speed potentiometer.

e. Auto restart.

f. Linear timed acceleration and deceleration for soft starting/stopping.

g. 3-63 Hz controlled speed range. (Factory set at 15 Hz minimum).

h. Terminal connections for time clock control, fire, smoke, freeze detectors, and EP relay pre-set speed override.

i. Output frequency terminals for remote metering.

4. Protective Circuits and Features

The variable speed drive controller shall include the following protective circuits/features:

a. Current limits to 100 percent design by slowing down motor.

b. Instantaneous Electronic Trip - automatically shutdown motor if current exceed 120 percent of design or phase-to-phase output short circuit occurs.

c. The variable speed drive will restart automatically when input line returns to normal in the event of intermittent power outage or phase loss or overvoltage shutdown.

d. Input power protection shuts down the unit if the following faults occur; low input line voltage or loss of an input phase.

e. Insensitive to incoming power phase.

f. Fast acting current limiting input fuses, (Class J) rated with 200,000 interrupting amperes capability.

g. Isolated 120 volt control circuit and dedicated control transformer.

h. Line-to-line fault protection.

i. Line-to-ground short circuiting and accidental motor grounding protection.

j. Output thermal overload relay trip.

2.3 EQUIPMENT APPURTENANCES

A. Attachments

All necessary bolts, nuts, washers, bolt sleeves, and other types of attachments for the installation of the equipment shall be furnished with the equipment. Bolts shall conform to the requirements of ASTM A 307 and nuts shall be hexagonal of the same quality as the bolts used.

B. Equipment Guards

Equipment driven by open shafts, belts, chains, or gears shall be provided with all-metal guards enclosing the drive mechanism. Guard shall be constructed of galvanized sheet steel or galvanized woven wire or expanded metal set in a frame of galvanized steel members. Guards shall be secured in position by steel braces or straps which will permit easy removal for servicing the equipment. The guards shall conform in all respects to all applicable safety codes and regulations.

C. Shop Painting

All motors, pump casings, and similar parts of equipment customarily finished in the shop shall be thoroughly cleaned, primed, and given two finish coats of paint at the factory in accordance with the recommendations of the manufacturer. Ferrous surfaces not to be painted shall be given a shop coat of grease or other suitable rust-resistant coating.

PART 3 EXECUTION

3.1 INSTALLATION

Each pump and engine shall be installed in accordance with the written instructions of the manufacturer.

3.2 TESTS

After installation of the pumping units and appurtenances is complete, operating tests shall be carried out to assure that the pumping installation operates properly.

3.4 MANUFACTURER'S FIELD SERVICES

The vendor shall obtain the services of a manufacturer's representative experienced in the installation, adjustment, and operation of the equipment specified. The

representative shall supervise the installation, adjustment, and testing of the equipment.

- End of Section -

DRAFT

ATTACHMENT A

FUNCTIONAL SPECIFICATIONS

TAG NO.	DESCRIPTION	SPEC. NO.
P-5001 A/B	SCRUBBER RECIRCULATION PUMPS	773481-P5001
~~P-5005~~	~~SCRUBBER QUENCH ORGANICS PUMP~~	~~773481-P5005~~
P-5002 A/B	SUBCOOL QUENCH RECIRC. PUMPS	773481-P5002
P-5006	SUBCOOL QUENCH ORGANICS PUMP	773481-P5006
P-5003 A/B	COOLING WATER CIRCULATION PUMP	773481-P5003
P-5004 A/B	WESP RECYCLE PUMP	773481-P5004
P-6001 A/B	PRIMARY CLARIFIER SLUDGE PUMP	773481-P6001
P-6002 A/B	SECONDARY CLARIFIER SLUDGE PUMP	773481-P6002
P-6003 A/B	ORGANIC CONDENSATE TRANSFER PUMP	773481-P6003
P-6004	ORGANIC CONDENSATE DISCHARGE PUMP	773481-P6004
P-6005 A/B	FILTER PRESS SLUDGE PUMP	773481-P6005
P-6006 A/B	FILTER DISCHARGE PUMP	773481-P6006
P-6008 A/B	CLARIFIER DISCHARGE PUMP	773481-P6008
P-6501 A/B	CLARIFIER FEED PUMPS	773481-65-P6501
P-6503	CLARIFIER SLUDGE PUMP	773481-65-P6503
P-6504	COAGULANT PUMP	773481-65-P6504
P-6506 A/B	FILTER FEED PUMPS	773481-65-P6506
P-6508 A/B	EFFLUENT PUMPS	773481-65-P6508
P-6509 A/B	TEMPORARY HOLDING TANK TRANSFER PUMPS	773481-65-P6509
P-7010 A/B	CAUSTIC PUMPS	773481-P7010
P-7011 A/B	ACID PUMPS	773481-P7011

P-9001	GRAY WATER SUMP PUMP	773481-90-P9001
P-9002	MHB MIXING PIT SUMP PUMP	773481-90-P9002
P-9003	MHB STORAGE BIN SUMP PUMP	773481-90-P9003
P-9004	MHB FILTER PRESS AREA SUMP PUMP	773481-90-P9004
P-9005	RLB SOUTH SUMP PUMP	773481-90-P9005
P-9006	RLB NORTH SUMP PUMP	773481-90-P9006
P-9007	DRYER PAD SUMP PUMP	773481-90-P9007
P-9008	MHB COLLECTION TANK TRANSFER PUMP	773481-90-P9008
P-9009	TRUCK TURN-AROUND SUMP PUMP	773481-90-P9009
P-9010	TRUCK WASH SUMP PUMP	773481-90-P9010
P-9011	RLB DECON SUMP PUMP	773481-90-P9011
P-9012	LABORATORY SUMP PUMP	773481-90-P9012
P-9013	GCS/WTS BLDG. NORTH SUMP PUMP	773481-90-P9013
P-9014	GCS/WTS BLDG. SOUTH SUMP PUMP	773481-90-P9014
P-9015	RLB WASH WATER SUMP PUMP	773481-90-P9015
P-9016	GCS/WTS BLDG. WEST SUMP PUMP	773481-90-P9016

SECTION 15170

MOTORS, GENERAL

PART 1 GENERAL

1.1 SECTION INCLUDES

Common requirements for electric motors furnished on equipment specified in other sections.

A. Low voltage, three-phase induction motors.

B. Low voltage, single-phase induction motors.

1.2 RELATED SECTIONS

A. Division 16 - Electrical.

B. Section 09900 - Painting General.

C. Section 13310 - Noise Level Specifications.

1.3 REFERENCES

A. American Bearing Manufacturers Association (ABMA):
   1. ABMA 9-90 Load Ratings and Fatigue Life for Ball Bearings.
   2. ABMA 11-90 Load Ratings and Fatigue Life for Roller Bearing.

B. Institute of Electrical and Electronics Engineers (IEEE):
   1. IEEE 112-91 Standard Test Procedure for Polyphase Induction Motors and Generators.

C. National Electrical Manufacturers Association (NEMA):
   1. NEMA MG 1-93 Motors and Generators.
   2. NEMA MG 13-84 Frame Assignments for AC Integral-Horsepower Induction Motors.

D. National Fire Protection Association (NFPA):
   1. NFPA 70-96 National Electrical Code

E. Underwriters Laboratories (UL)

1. UL 674 — UL Standard for Safety Electric Motors and Generators for use in Division 1 Hazardous (Classified) Locations.
2. UL 1836 — UL Standard for Safety for Electric Motors for use in Class 1, Division 2 and Class 2, Hazardous (Classified) Locations.

1.4 SYSTEM DESCRIPTION

A. Provide electric motors as required. Each motor shall be selected especially for its respective driven equipment. Each motor shall be adequate for the full range of the driven equipment's performance.

1.5 SUBMITTALS

A. Product Data: Provide data for motors, including full load amps, NEMA frame size, and additional standard nameplate data. Provide efficiency and power factor for each of 1/2, 3/4, and full load. Include catalog sheets and drawings showing voltage, ratings, impedances, normal and short circuit current ratings, dimensions, and enclosure details.

B. Operation and maintenance data. Include assembly drawings and bearing data, including replacement sizes and lubrication instructions.

C. Certificate of Conformance: Provide statement certifying that the materials supplied meet or exceed contract requirements.

D. Testing Procedures: Submit written procedures for all required testing. Test procedures shall include criteria for acceptable performance.

E. Manufacturer's Installation Instructions. Indicate application conditions and limitations of use stipulated by product testing agency. Include instructions for storage, handling, protection, examination, preparation, installation, and commissioning of products.

F. Recommended Spare Parts Lists: Provide, where applicable.

G. Submit Material Safety Data Sheets for all cutting oils, caulks, sealants, and all similar components.

H. Test Reports. Indicate satisfactory completion of required tests and inspections. Submit results verifying performance in accordance with IEEE 112.

I. Motor Data Sheets. Provide completed motor data sheet (Attachment 1) for each motor provided.

1.6 DELIVERY, STORAGE, AND PROTECTION

A. Protect motors stored on site from weather and moisture by maintenance factors covers and suitable weather-proof covering.

1.7 QUALITY ASSURANCE

A. Conform to NFPA 70 and NEMA MG1.

PART 2 PRODUCTS

2.1 MANUFACTURERS

The listing of equipment suppliers below in no way precludes the offerer from proposing alternate suppliers of any of the equipment to be furnished within the scope of this specification. This list of suppliers is intended to identify the type of equipment and general quality of that equipment that will be included in the offerer's proposal. It is the offerer's responsibility to proposed equipment that is best suited for this project in combined terms of quality and price.

A. Reliance Electric.
B. U.S. Motors.
C. General Electric.
D. Other with IT approval

2.2 EQUIPMENT

A. General Construction and Requirements
   1. Electrical Service: Refer to related sections of the specifications and the drawings for required characteristics.
   2. Motors: Design for continuous operation at a temperature of 40 degrees C ambient, and for temperature rise in accordance with NEMA MG 1 limits for insulation class, service factor, and motor enclosure type. Motors to be controlled by variable frequency drives shall be of a design suitable for this type of operation.
   3. Visible Nameplate: Indicating motor horsepower, voltage, phase, frequency, rpm, full load amps, locked rotor amps, frame size, manufacturer's name and model number, service factor, power factor, serial number, and bearing numbers. Nameplate shall be stainless steel, permanently attached to the motor frame.

4. Electrical Connection: Conduit connection boxes, threaded for conduit and designed to allow for 90 degree step rotation of the conduit entrance. Oversize conduit boxes shall be provided.
5. Motor Service Factor: Furnish motors with service factors required by table in Paragraph d. Motor size in hp shall be selected to serve the driven equipment over its full performance range as though the service factor is 1.0.
6. Motor voltage shall be 115 V, single-phase for motors 1 hp or less. Other motors shall be 460 V, three-phase.
7. Motors drawing less than 250 W that are intended for intermittent service may be germane to equipment manufacturer and need not conform to these specifications.
8. Explosion-Proof Motors: UL approved for hazard classification.

B. Three-Phase - Squirrel Cage Induction Motors
1. Motors shall be 460 V, three-phase, 60 Hz.
2. The motor connection diagram shall be stainless steel, permanently stamped and attached to the motor either inside the conduit box or on the same side as the conduit box.
3. Starting Torque: To be matched to the driven equipment.
4. Starting Current: Not to exceed six times full-load current.
5. Power Output: Locked Rotor Torque, Breakdown or Pullout Torque: NEMA Design B characteristics or as required by the driven equipment.
6. Design, Construction, Testing, and Performance: Conform to NEMA MG 1 for Design B motors.
7. Insulation System: Non-hygroscopic NEMA Class F or better.
8. Testing Procedure: In accordance with IEEE 112, Test Method B. Load test motors to determine freedom from electrical or mechanical defects and for compliance with performance data.
9. Motor Frames: NEMA MG 13 standard T-frames of steel, aluminum, or cast iron with end brackets of cast iron or aluminum with steel inserts.
10. Bearings: Grease lubricated, anti-friction ball bearings with housings equipped with plugged provision for prelubrication, rated for minimum ABMA 9 and 11, L-10 life of 20,000 hours.
11. Sound Power Levels: To NEMA MG 1 and Section 13310.
12. Motors shall be high efficiency type.
13. Motors shall be totally enclosed fan cooled (TEFC).
14. Nominal Efficiency: Meet or exceed value in schedules as given herein at full load and rated voltage when tested in accordance with IEEE 112.
15. Nominal Power Factor: Meet or exceed values in schedules as given herein at full load and rated voltage when tested in accordance with IEEE 112.

C. Performance Schedule: Three-Phase - Energy Efficient, TEFC

000640

HP Factor	RPM (Syn)	NEMA Frame	Minimum Percent Efficiency	Minimum Percent Power Factor
1	1200	145T	81	72
1-1/2	1200	182T	83	65
2	1200	184T	85	68
3	1200	213T	85	63
5	1200	215T	86	66
7-1/2	1200	254T	89	68
10	1200	256T	89	75
15	1200	284T	90	72
20	1200	286T	90	76
25	1200	324T	90	71
30	1200	326T	91	79
40	1200	364T	92	78
50	1200	365T	92	81
60	1200	404T	92	83
75	1200	405T	92	80
100	1200	444T	93	83
125	1200	445T	93	85
1	1800	143T	82	84
1-1/2	1800	145T	84	85
2	1800	145T	84	85
3	1800	182T	87	83

HP Factor	RPM (Syn)	NEMA Frame	Minimum Percent Efficiency	Minimum Percent Power Factor
5	1800	184T	88	83
7-1/2	1800	213T	89	85
10	1800	215T	90	84
15	1800	254T	91	86
20	1800	256T	91	85
25	1800	284T	92	84
30	1800	286T	93	86
40	1800	324T	93	83
50	1800	326T	93	85
60	1800	364T	93	87
75	1800	365T	93	87
100	1800	405T	94	86
125	1800	444T	94	87
150	1800	445T	94	88
200	1800	447T	95	87
1-1/2	3600	143T	82	85
2	3600	145T	82	87
3	3600	182T	82	87
5	3600	184T	85	88
7-1/2	3600	213T	86	86

000642

HP Factor	RPM (Syn)	NEMA Frame	Minimum Percent Efficiency	Minimum Percent Power Factor
10	3600	215T	86	86
15	3600	254T	88	91
20	3600	254T	89	89
25	3600	384T	90	92
30	3600	286T	91	92
40	3600	324T	91	91
50	3600	326T	90	92
60	3600	364T	91	93
75	3600	365T	91	91
100	3600	405T	92	92

For motors not in schedule, provide manufacturer's standard high-efficiency motor.

D. Service Factor Schedule

HP	3600 rpm	1800 rpm	1200 rpm	900 rpm
1/6 - 1/3	1.35	1.35	1.35	1.35
1/2	1.25	1.25	1.25	1.15
3/4	1.25	1.25	1.15	1.15
1	1.25	1.15	1.15	1.15
>1 - 150	1.15	1.15	1.15	1.15

E. Single-phase motors shall conform to the following respective requirements. The driven equipment supplier shall furnish motor starter, motor type, and motor enclosure type suitable for the application.

1. Single-Phase Power - Split-Phase Motors
   a. Starting Torque: Less than 150 percent of full load torque.
   b. Starting Current: Up to seven times full load current.

c. Breakdown Torque: Approximately 200 percent of full load torque.

d. Drip-Proof Enclosure: Class A (50 degrees C temperature rise) insulation, NEMA Service Factor, prelubricated sleeve or ball bearings.

e. Enclosed Motors: Class A (50 degrees C temperature rise) insulation, 1.0 Service Factor, prelubricated sleeve or ball bearings.

2. Single-Phase Power - Permanent-Split Capacitor Motors

a. Starting Torque: Exceeding 1/4 of full load torque.

b. Starting Current: Up to six times full load current.

c. Multiple Speed: Through tapped windings.

d. Open Drip-Proof or Enclosed Air Over Enclosure: Class A (50 degrees C temperature rise) insulation, minimum 1.0 Service Factor, prelubricated sleeve or ball bearings, automatic reset overload protector.

3. Single-Phase Power - Capacitor Start Motors

a. Starting Torque: Three times full load torque.

b. Starting Current: Less than five times full load current.

c. Pull-Up Torque: Up to 350 percent of full load torque.

d. Breakdown Torque: Approximately 250 percent of full load torque.

e. Motors: Capacitor in series with starting winding: provide capacitor-start/capacitor-run motors with two capacitors in parallel with run capacitor remaining in circuit at operating speeds.

f. Drip-Proof Enclosure: Class A (50 degrees C temperature rise) insulation, NEMA Service Factor, prelubricated bearings.

g. Enclosed Motors: Class A (50 degrees C temperature rise).

PART 3 EXECUTION

Not used.

-End of Section-

000644

DRAFT

ATTACHMENT 1

MOTOR DATA SHEET

MOTOR DATA SHEET

Submit for each motor. Mark N/A if not applicable.

1. Driven Equipment Number: _____
2. Driven Equipment Name: _____
3. Motor Manufacturer: _____
4. Quantity: _____
5. Horsepower (hp): _____
6. RPM: _____
7. Voltage: _____
8. Enclosure Type: _____
9. Frame: _____
10. Phase/Frequency: _____
11. 40 degree C ambient insulation: _____
12 Service Factor: _____
13 NEMA Design: _____
14. Space Hunters: _____
15. Full Load Amperes (FLA): _____
16. Locked Rotor Amperes (LRA): _____
17. Efficiency:
    1/2 Load: _____
    3/4 Load: _____
18. Power Factor:
    1/2 Load: _____
    3/4 Load: _____
    Full Load: _____

000646

SECTION 15250

INSULATION SPECIFICATION

PART 1 GENERAL

1.1 SECTION INCLUDES

A. The specification describes the basic requirements for the selection and application of insulation systems for indoor and outdoor service. The temperature range of this specification is up to 1200°F for hot insulation and -60°F for cold insulation. Pipelines requiring insulation are designated on pipe line lists and process and instrument diagrams. Type of insulation is designated on pipeline list.

Equipment insulation is designated on equipment drawings, equipment specifications, and process and instrument diagrams. Type of insulation is designated on equipment list. Instruments requiring insulation shall be so designated on the instrument list or the instrument data summary sheets. Type of insulation shall be the same as that of the process line in which the instrument is installed.

The terms "hot" and "cold" used in this specification refer to temperatures 51°F and above, and 50°F and below.

1.2 RELATED SECTIONS

A. Section 15050 - Piping and Accessories
B. Section 15080 - Piping Specialties

1.3 REFERENCES, CODES AND STANDARDS

A. American Society for Testing and Materials (ASTM)
   1. ASTM B209-93 - Aluminum and Aluminum-Alloy Sheet Plate
   2. ASTM C533-85 - Calcium Silicate Block and Pipe Thermal Insulation
   3. ASTM C552-91 - Cellular Glass Thermal Insulation
   4. ASTM C547 - Mineral Fiber Preformed Pipe Insulation
   5. ASTM C177-63 - Steady State Heat Flux Measurements and Thermal Transmission Properties by Means of the Guarded Hot Plate Apparatus

B. American National Standards Institute (ANSI)

C. American Society of Mechanical Engineers (ASME)

D. Underwriter's Laboratories (UL)

E. Bureau of Mines Report R1 6366 - Rigid Foams for Mines

1.4 SUBMITTALS

A. Certificate of Conformance: Manufacturer shall certify and provide data which indicate that all products supplied meet or exceed specification requirements.

B. Submit product data and installation manuals.

C. Copies of the material manufacturer's Material Safety Data Sheet (MSDS) for all products to be used in the installation shall be submitted. These sheets shall be submitted prior to start of installation work and prior to bringing any insulation material to the site.

1.5 DELIVERY, STORAGE AND HANDLING

A. Insulation Materials

1. Insulation materials shall be identified, inspected, controlled, and protected in a manner that will assure conformance with the referenced codes, standards and manufacturer's recommendations.
2. Care shall be taken in the storage and handling of all insulation material so that contamination by grease, moisture, or other foreign matter does not occur. Insulation materials shall be stored off the ground, protected from the weather, and handled so that physical damage to the insulation material does not occur.

1.6 SEQUENCING AND SCHEDULING

A. Insulation shall not be installed on the equipment or piping system until the system has passed a hydrostatic pressure test.

B. Insulation shall be applied over clean, dry surfaces and tracing.

PART 2 PRODUCTS

2.1 PRODUCTS

000648

A. Symbols - The type of insulation shall be specified for piping and equipment using the following symbols:

Application	Symbol
Heat conservation	HC1 or HC2
Cold conservation	CC
Cold conservation-refrigeration	CCR
Personnel protection	PP1
Antisweat	AS
Severe service	HCF or CCF
Freeze protection	FP

B. Types and Uses of Insulation

1. Types HC1 and HC2 insulations shall be specified for hot surfaces where heat loss must be limited for economic or process control purposes, as follows:

   - Type HC1 - Surface 401°F and over
   - Type HC2 - Surfaces 51°F to 400°F

2. Type CC and CCR insulation shall be specified for cold surfaces where heat gain must be limited for economic or process control purposes.
3. Type PP1 insulation shall be specified for surfaces which normally operate continuously at temperatures in excess of 140°F, for which heat loss need not be limited, but the possibility of human contact exists.
4. Types HC1 and HC2 insulation are to be used for PP1 according to temperature criteria, with thickness as shown in Figure 1. Unless otherwise specified, insulation shall be applied only to that portion of the surface subject to contact by an operator in the normal performance of his duties (up to 7 feet - 0 inches above finished grades on platforms and surfaces, 3 feet - 0 inches horizontally distant from any operating level).
5. Type AS insulation shall be specified for surfaces normally below average ambient temperature where heat gain is not to be limited, but from which the dripping of condensed moisture would create a hazard, constitute a nuisance, or result in corrosive action.

6. Types HCF or CCF are for severe service conditions using cellular glass or foam, ceramic-molded, or factory-fabricated fitted insulation usually with protective aluminum covering.
7. Type FP insulation is for freeze protection. Freeze protection areas are those various portions of systems requiring "some" insulation or heat tracing with minimum insulation to maintain operation when the ambient temperature is at or below the fluid freeze point.

C. Insulation Thickness and Typical Details

1. Insulation thickness shall be based upon the normal operating temperature of a surface, and not upon its design temperature, or temporary start-up or emergency temperatures. For heat- traced lines, selection of insulation thickness shall be based upon the heated medium temperature if this temperature is higher than the normal operating temperature of the line.
2. Insulation details specified herein indicate minimum requirements only.
3. Particular attention shall be paid to the various thicknesses for the different pipe sizes to ensure and provide the necessary clearances between piping, valves, fittings, equipment, ceilings, and adjacent walls.

2.2 GENERAL REQUIREMENTS

A. Installation

1. Insulation shall be applied over clean, dry surfaces that are free from projections. All segments shall be butted together firmly and all vapor barriers shall be sealed against moisture penetration. The application methods shall conform to the particular instructions listed in these specifications unless otherwise indicated by the IT Corporation (IT) representative in writing.
2. The contractor shall be responsible for furnishing insulation of the exact dimensions to fit lines of iron pipe size or tubing size depending on the type of line to be insulated. Full thickness insulation shall be applied on piping extended through sleeves. All equipment in the work areas shall be protected from damage and from exposure to insulation dusts, powders, or pieces of insulation. Particular care shall be given to the protection of pumps, motors, and drives.
3. Insulation shall not be applied to ductwork, piping, or equipment until all testing has been completed.
4. Trowelling of mastics and application of adhesives or Armstrong Insul-color shall not be performed below 40°F without prior written approval of the IT representative.

000650

5. All materials shall be installed in a neat and workmanlike manner, and shall be installed in strict accordance with the manufacturer's recommendations.
6. Insulation on valves, fittings, flanges (including equipment flanges), piping appurtenances, etc., shall be of equal thickness and insulation value to that installed on adjoining pipe. Cover all valves (generally up to packing gland), strainer bodies, flanges, and flash tanks. Insulation for ball valves and plug cocks shall not cover the travel stop pin. Care shall be taken to ensure that all working parts of valves and other mechanical equipment are protected when insulation is applied.
7. All sensing devices, gauges, instruments, relief valves, and other devices that require periodic calibration or maintenance shall be insulated in a manner so that it can be maintained from outside the insulation or the insulation applied in a manner that it can be temporarily removed when maintenance is required.
8. For tubing or cable traced lines, long lag insulation is preferred.

B. Equipment Insulation
1. Manholes and handholds of equipment requiring insulation shall be provided with removable covers.
2. Insulated vessels supported on skirts shall be insulated over the entire exterior of the skirt.

C. Joints
1. Expansion and contraction joints shall be provided for the differential expansion or contraction between the insulation and insulated surface operating at a temperature of 350°F and above, and 0°F and below, respectively.
2. All joints of double layer preformed sections in block insulation shall be staggered.
3. All unavoidable voids between sections of insulation shall be filled with asbestos-free mineral wool for hot applications and fiberglass for cold applications.
4. Staples shall not be used to secure insulating materials having vapor barrier jackets. All openings, joints, laps, and end strips on insulation specified with a vapor barrier shall be sealed against moisture penetration with the vapor barrier cemented in place with adhesive.

D. Insulation Supports
1. Tanks, towers, and other vessels shall be provided with attachments suitable for supporting the insulation. They shall consist of rings, clips, angles, studs, etc.

2. Insulation on vertical lines shall be supported by attaching a support ring to the piping at a maximum spacing of 20 feet. The support ring shall be cut from steel plate.

E. Inspection

1. Inspection of all phases of the installation will be made at random by the IT insulation inspector. Any work that is not in accordance with this specification or not installed in a neat, workmanlike appearance will be noted. Any rework required to have the installation comply with this specification will be solely at the insulation contractor's expense.

DRAFT

000652

2.3 PIPING INSULATION TYPE HC1 (401°F AND ABOVE)

A. Insulation Materials

1. Material shall be asbestos-free calcium silicate molded type sectional insulation.
2. Asbestos-free calcium silicate shall conform to American Society for Testing and Materials (ASTM) Standard C5333.
3. Thickness of insulation for operating temperatures up to 1200°F nominal shall be as shown in Figure 1.

B. Application

1. Insulation shall be applied over clean, dry surfaces. Adjoining sections shall be butted firmly together using single layer applications. Half sections shall be installed with the transverse joints staggered for lines 6 inches and larger. Factory-applied canvas shall be pasted neatly in place with Sealfas Coating 30-36 (Benjamin Foster Company) or approved equal. Coverage shall be 60 square feet per gallon; do not thin.
2. Fittings less than 3 inches nominal size shall be insulated with one roughing layer of asbestos-free mineral-wool-type insulating cement (Keene Super Powerhouse Asbestos-Free or equal) and one finishing layer of asbestos-free insulating cement. Thorough drying of the roughing layer is required. Fitting insulation shall be equal in thickness to the insulation on adjoining piping. Fittings, flanges, and valves 3 inches nominal size and larger shall be covered with fabricated, mitered segments of insulation of the same type and thickness as applied to adjoining piping. The mitered segments shall be cut accurately to assure a snug fit. The segments shall be wired tightly in place with 16-gauge stainless-steel wire. A finishing layer of asbestos-free mineral-wool-type insulating cement (Keene Super Powerhouse Asbestos-Free or equal) shall be applied over the mitered segments.

C. Exterior Finish of Insulation

1. Outdoors -- Over all outdoor piping insulation, apply corrugated or embossed aluminum jacketing with integral vapor barrier liner. Aluminum to be 0.016-inch thickness. Install jackets using 0.5- inch stainless-steel bands and wing seals 12 inches on centers and by vendor's recommended installation procedures.

   Alternate: Jacket material other than aluminum may be used with prior approval of IT representative. Such material(s) must be applied per manufacturer's recommendations.

2. Indoors -- Insulation for pipe fittings, valves, and flanges shall be finished with 8-ounce canvas jackets pasted neatly in place with Sealfas Coating 30-36 or approved equal. A factory applied jacket is also acceptable.

2.4 EQUIPMENT INSULATION TYPE HC1 (401°F AND ABOVE)

A. Insulation Material

1. Materials shall be asbestos-free calcium silicate preformed sections or block insulation conforming to ASTM Standard C533.
2. For insulation thickness see Figure 1. (See equipment drawings and/or flow diagrams for possible exceptions.)

B. Application

1. Insulation shall be applied over clean, dry surfaces. Insulation shall be cut or scored, where necessary, to fit the shape and contour of the equipment. Adjoining sections shall be butted together firmly; joints shall be staggered. The blocks shall be secured firmly in place by 0.5-inch by 0.020-inch stainless-steel bands or 16-gauge galvanized annealed wire spaced not more than 9 inches on centers. Wire cables shall be used, where required, to secure the insulation firmly. One-inch chicken wire shall be wrapped tightly around the bound insulation. A roughing layer of asbestos-free mineral-wool-type insulating cement (Keene Super Powerhouse Asbestos Free or equal) and a finishing layer of asbestos-free insulation cement shall be applied to cover the chicken wire completely.
2. Both ends of the insulation along the shell of vessels and tanks shall extend 2 inches beyond the knuckle radius to help form and hold the insulation on the heads. All voids between the head and shell insulation shall be filled with insulation. All nozzles shall be insulated up to but not including the flanges with the same thickness as on the equipment. The insulation shall be cut back at flanges, manholes, cover plates, and other openings so that the bolts may be removed without disturbing the insulation. Insulation shall not be applied over the name plates but shall be beveled off around them.
3. The use of single-layer molded-type sectional pipe insulation is recommended for insulating heat exchangers where shell diameters are of iron pipe size. Asbestos-free calcium silicate can be used as outlined under piping.

C. Exterior Finish of Insulation

1. Outdoors -- One-inch chicken wire shall be wrapped tightly around the block insulation. A smoothing layer of asbestos-free insulating cement shall be trowel applied over the chicken wire. Coverage shall be complete. After thorough drying, apply 10-by-10 open-weave glass

000654

fabric and two coats of Thermalkote as manufactured by the Flintkote Company to a total thickness of 0.25-inch when dry.

2. Indoors -- A 9-ounce canvas jacket shall be pasted neatly in place with Sealfas Coating 30-36 (Benjamin Foster Company) or approved equal. Surface coverage with Sealfas shall be complete. Coverage shall be 60 square feet/gallon; do not thin. Adequate overlap of canvas shall be provided to accommodate shrinkage. Seams should preferably be located behind equipment.

2.5 PIPING INSULATION TYPE HC2 (51° TO 400°F)

A. Insulation Material

1. Material shall be fiberglass heavy density sectional pipe insulation, single layer, molded type, as manufactured by Owens-Corning Fiberglass Corporation. For thickness refer to Figure 1.
2. Fiberglass shall conform to ASTM Standard C547 and shall have vinyl factory-applied jacket.

B. Application

1. Insulation shall be applied over clean, dry surfaces. Adjoining sections shall be butted together firmly using single-layer applications. Insulation shall be installed according to manufacturer's recommendations.
2. All fittings, valves, and flanges shall be insulated with molded fibrous glass fitting covers (Owens-Corning Fiberglass Corporation) or fabricated mitered segments of piping insulation equal in thickness to the insulation on adjoining piping. Mitered segments, where used, shall be cut accurately to assure a snug fit. The segments and covers shall be wired tightly in place using 16-gauge stainless-steel wire, or approved fiberglass reinforced tape. Fitting covers and mitered segments shall be given a smoothing layer of an approved asbestos-free insulating cement. Fittings smaller than 3 inches nominal size may be insulated with two coats of asbestos-free mineral-wool-type insulating cement.

C. Exterior Finish of Insulation

1. Outdoors -- The exterior finish of Type HC2 insulation outdoors shall be the same as that of Type HC1. See "Exterior Finish of Insulation" in Section 2.3.C.1 for details. In lieu of stainless-steel bands, use 0.5-inch aluminum bands and wing seals 12 inches on center.
2. The exterior finish of Type HC2 insulation indoors shall be a factory applied all-service jacket.

2.6 EQUIPMENT INSULATION TYPE HC2 (51° TO 400°F)

A. Insulation Materials

1. Material shall be fiberglass PF-705 industrial insulation, unfaced, rigid board, as manufactured by Owens-Corning Fiberglass Corporation. Density shall be 6 pounds/cubic foot or 3 pounds/cubic foot with IT representative approval.
2. Thickness shall be 1.5 inches. See drawings and/or flow sheets for possible exceptions.
3. Where insulation is specified in thickness greater than 2 inches, it shall be installed in multiple layer applications. Moisture barrier applications shall be made on the top layer of insulation only, as noted in these specifications.

B. Applications

1. Single layer -- Insulation shall be applied over clean, dry surfaces.
   a. The 24-inch by 43-inch boards shall be cut or scored as necessary to fit the shape and contour of the vessel accurately. Joints shall be staggered throughout and shall be butted tightly after they have been coated with Benjamin Foster 81-33 Fire Resistive Adhesive, 0.0625-inch thick minimum. The applied adhesive must still be tacky when sections are butted together. The 81-33 adhesive shall serve as a joint sealer only; it shall not be used as filler material at poorly fitted joints. Straight shell insulation shall be secured firmly in place by 0.5-inch by 0.020-inch stainless-steel bands spaced not more than 9 inches on centers.
   b. Vessel heads shall be insulated with cut or mitered sections set inside the overlapping side wall insulation. The overlap shall be equal to the thickness of the head insulation, to help form and hold the insulation on the heads. Field-cut segments shall be accurately fitted, particularly at nozzles and manholes. Apply 81-33 adhesive as the joint sealer as described above. All voids between equipment surfaces and insulation shall be packed firmly with light density fiberglass. The head insulation shall be secured by 16-gauge copper wire on 6-inch centers. Cables, encircling the vessel shell near both heads, shall serve as tie-points for the wire. They shall be 0.125-inch diameter, minimum and shall be galvanized or cadmium plated steel. The wires shall be looped at all intersections to tighten the head insulation firmly. Wires and bands shall be pulled sufficiently tight so that they are set solidly in the insulation surface. Insulation shall not be applied over the nameplates, but beveled off around them.

000656

c. Nozzles shall be covered up to but not including the flanges with insulation of the same thickness as on the vessel. Legs and supports shall be insulated to a minimum of 8 inches from the main insulation surface. Check drawings for additional requirements that may be listed for insulating support legs.

d. For indoor equipment only, 1-inch chicken wire shall be wrapped tightly around the bound insulation, followed by a roughing layer of asbestos-free mineral-wool-type insulating cement (Keene Super Powerhouse or equal), and a smoothing layer of asbestos-free insulating cement. The roughing and smoothing layers shall cover the chicken wire completely. Thorough drying of the roughing layer is required.

2. Double Layers -- Application shall be similar to that described above for single layer except that:
   a. Joint sealer shall be used for the top layer of insulation only.
   b. Joints for the top layer of insulation shall be staggered with respect to joints for the bottom layer.
   c. Chicken wire (for indoor equipment only) shall be wrapped around the bound insulation of the top layer, followed by the roughing and smoothing layers of cement.
   d. Second layer head insulation shall extend out to the top of the second layer shell insulation. Side and end joints shall be staggered over joints of preceding layer so that no two joints coincide.
   e. Insulation shall be applied at nozzles in a manner that will permit drainage and the removal of bolts.

3. Joints for both layers shall be butted tightly. The 81-33 adhesive shall serve as a joint sealer only (for the top layer of insulation); it shall not serve as a filler material for poorly fitted joints.

C. Exterior Finish of Insulation

1. Tank heads and shells outdoors -- Chicken wire wrapping and cement applications shall not be provided for outdoor equipment, unless required for cosmetic reasons. Apply a tack coat of vinyl acrylic mastic by trowel at the rate of 4 gallons/100 square feet. Insulation must be dry before mastic application. Embed open-weave white glass fabric cloth into the wet tack coat and smooth out to avoid wrinkles. Cover with the mastic at the rate of 8 gallons/100 square feet; apply before the tack coat has set through. Complete coverage is required. Proper and complete flashing shall also be required.

2. Tank heads and shells indoors -- Apply a tack coat of Benjamin Foster Tite-Fit Coating 30-35 for vapor barrier protection. Do not thin; apply at t he rate of 4 gallons/100 square feet. Surface coverage must be complete. Embed 8-ounce canvas jacket into the wet tack coat. Provide adequate overlap of canvas (3 inches minimum) to accommodate shrinkage. Seams should preferably be located behind equipment.

   Wherever insulation is terminated, flash at least 3 inches by embedding a 4-inch-wide strip of No. 20 open-weave glass fabric cloth into wet tack coat.

   Allow the 30-35 tack coat to dry for at least 24 hours. Apply a finish coat of Benjamin Foster Sealfas Coating 30-36 over the dry canvas at the rate of 50 square feet/gallon; do not thin.

3. Tank shells - outdoors and indoors -- in lieu of the foregoing shell coverings, vendor may apply aluminum sheet with IT representative approval.

2.7 PIPING INSULATION TYPE CC (-60° TO +50°F)

A. Insulation Materials

1. Material shall be rigid, fluorocarbon blown, polyurethane foam (rated self-extinguishing, single-layer, molded type sectional pipe insulation).
2. The polyurethane foam insulation shall have a density of 2 pounds/cubic foot and a nominal K factor of 0.15 British thermal unit (Btu)/hour square foot, °F/inch at 75°F in service (bare). It shall conform to the Bureau of Mines Report R1 6366 (Rigid Foams for Mines) for flame penetration and thermal deformation testing.
3. ASTM Standard D1692-68 shall not be used as the criterion for evaluating the flammability of plastic foams for this specification. Where plastic foam is used, it is to be regarded as a combustible material and must be protected by adequate fire control systems, such as sprinklers.
4. Acceptable materials include the following or approved equal:
   - Armstrong ARMALOK as manufactured by Armstrong Cork Company.
   - Gold Bond Green Zer-O-Ce, as manufactured by National Gypsum Company (request 2 pounds/cubic foot density)
5. Thickness - Thickness of "fluorocarbon blown" foam (K-0.15) shall be as listed below for the indicated temperature ranges. Insulation shall be iron pipe size or tubing size depending on the type of line to be insulated.

000658

Nominal Thickness of Insulation, Inches

Temperature Range °F	Pipe Sizes				
	To 1-1/4"	1-1/2"-3"	3-1/2"-6"	8"-12"	14"-18"
50 to 41	1/2	3/4	1	1	1
40 to 21	3/4	1	1	1	1-1/2
20 to 0	1	1	1-1/2	1-1/2	1-1/2
-1 to -30	1-1/2	2	2	2	2-1/2
-31 to -60	1-1/2	2	2	2-1/2	2-1/2

All above thicknesses are referred to 90°F ambient and 80 percent relative humidity.

B. Application

1. Insulation shall be applied over clean, dry surfaces. Adjoining sections shall be butted together tightly after the surfaces have been coated with Benjamin Foster 81-33 Fire Resistive Adhesive, 0.0625-inch thick minimum. The applied adhesive must still be tacky when sections are butted together. Butt joints shall be staggered by starting from a fitting with one section full length and mating section cut to half length. The longitudinal joints shall be maintained in a straight line along the length of piping and positioned at the top and bottom of the piping.
2. Ends of pipe insulation (where insulation terminates on a pipe line) shall be sealed off and flashed with a fire resistant vapor barrier mastic. Mastics to be used are listed under Section 2.7.C.4, "Exterior Finish of Insulation." The insulation shall be sealed to the pipe surface at all flanges, valves, and fittings, and at intervals of more than 21 feet on continuous runs, by the fire resistive adhesive.
3. Insulation shall be wired in place with 16-gauge stainless-steel wire or recommended system from insulation vendor. The wiring shall be spaced not more than 9 inches on centers. Wiring in place shall start approximately 1 inch from the ends of each section. Wires shall be pulled sufficiently tight so as to be embedded in the insulation surface. Twisted ends of the wire shall also be embedded so as not to puncture subsequent covering.
4. Fittings, flanges, and valves shall be insulated with molded fitting covers of the same material and thickness as the pipe insulation. Fitting covers shall be supplied in half sections. Fitting covers shall be installed and sealed first, pipe insulation shall be butted to and sealed to the covers. Benjamin Foster 31-33 Fire Resistive Adhesive shall be used throughout

as the joint sealer and adhesive on polyurethane insulation. All mating faces of fitting covers shall be sealed.

5. After sealing, fitting covers shall be secured with wires at each end; large covers shall be secured with additional wires. Valves shall be insulated up to and including the bonnet; however, packing glands shall be exposed. Seal where the valve stem protrudes through the insulation. Voids which may exist between the insulation and flanged valves or flanged fittings shall be filled with shreds of the same material as the insulation.
6. The integrity of the insulation shall not be disturbed at points of support.

C. Exterior Finish of Insulation

1. Straight Runs of Piping
   a. Outdoors - Jacketing shall be the same as described in Section 2.3.C.1. Nothing shall be permitted to pierce the jacket or vapor barrier at any point.
   b. Indoors - Jacketing shall be the same as described in Section 2.3.C.2. Nothing shall be permitted to pierce the jacket or vapor barrier at any point.
   c. Underground - Straight runs underground shall be finished using 15-pound tar paper as an inner jacket, unless otherwise indicated on the drawings. All joints shall be overlapped 3 inches minimum with longitudinal laps facing downward (4 o'clock position for inner jacket, 8 o'clock position for outer jacket). Joints for both jackets shall be sealed completely with a climatized waterproof mastic roofing cement. Both jackets shall be fastened securely with 14-gauge copper wire spaced not more than 8 inches on centers. Nothing shall be permitted to pierce the jacket at any point. Staples are not to be used.

      A sand bed and cover 6 inches minimum thickness all around shall serve as protection for insulated lines underground.

      Note: For severe underground conditions the use of a prefabricated conduit system shall be considered.
2. Fittings, Flanges, and Valves -- Covers for fittings, flanges, and valves shall have a tack coat application of vapor barrier mastic, followed by a white glass fabric wrapping, as listed below, and a finish application of vapor barrier mastic (over the glass fabric wrapping only).
   a. Outdoors and Indoors - All sizes - No. 20 open-weave white glass fabric wrapping

000660

3. In all cases the fabric wrapping shall be embedded in the tack coat and securely fastened. A 2-inch minimum overlap shall extend over straight runs of adjoining pipe insulation. Coverage shall be complete. Insulation at the tops of strainer bodies shall be removable, but shall be sealed and finished effectively against moisture penetration.

4. The following vapor barrier mastics, all Benjamin Foster, shall be used in the areas indicated. Coverages listed are minimum. The materials shall not be thinned. They shall be stored and applied in strict conformance with the manufacturer's temperature limitations.
   - Indoors: 30-35 Tite-Fit Coating, white fire resistive, brush applied.
     Tack Coat: 2 gallons
     Finish Coat: 2 gallons per 100 square feet
   - Outdoors: 60 to 35 Fire Resistive C. I. Mastic, aluminum, trowel applied (use with aluminum covering).
     Tack Coat: 4 gallons per square feet
     Finish Coat: 8 gallons per 100 square feet

2.9 EQUIPMENT INSULATION TYPE CC (-60° TO +50°F)

A. Insulation Materials
   1. Material shall be rigid, fluorocarbon blown, polyurethane foam (rate self-extinguishing) board insulation.
   2. The polyurethane foam shall have a density of 2 pounds/cubic foot and a nominal K factor of 0.15 Btu/hour square foot °F/inch at 75°F in service (bare). It shall conform to Bureau of Mines Report RI 6366 (Rigid Foams for Mines) for flame penetration and thermal deformation testing.
   3. ASTM Standard D1692-68 shall not be used as the criterion for evaluating the flammability of plastic foams for this specification. Where plastic foam is used it is to be regarded as a combustible material and must be protected by adequate fire control systems, such as sprinklers.
   4. Acceptable materials may be obtained from:
      - Armstrong Cork Company
      - Gold Bond Green Zer-O-Cel, as manufactured by national Gypsum Company (request 2 pound/cubic foot density)
   5. Thickness - Thickness of "fluorocarbon blown" foam (K-0.15) shall be as listed below for the indicated temperature ranges:

Temperature Range, °F	Insulation Thickness, Inches
50 to 41	1
40 to 21	2

-1 to -30	2-1/2
-31 to -60	3

All above thicknesses are referred to 90°F ambient and 80 percent relative humidity.

B. Application

1. Insulation shall be applied over clean, dry surfaces. Curved segments of single layer thickness shall be used for insulating cylindrical surfaces. Equipment diameters shall be specified when ordering curved segments to assure a tight fit of insulation to the vessel straight shell. Where required, the last segment in each row shall be field cut for final fit around the circumference. Flat board forms shall be used for rectangular shaped tanks and may be substituted for curved segments on vessels 12-foot diameter or more.
2. Joints shall be staggered throughout and shall be tightly butted after they have been coated with Benjamin Foster 81-33 Fire Resistive Adhesive, 0.0625-inch thick minimum. The applied adhesive must still be tacky when sections are butted together.
3. Vessel heads shall be insulated with flat block insulation set inside the overlapping side wall insulation. Field cut segments shall be accurately fitted, particularly at nozzles and manholes. Apply adhesive per above. All voids shall be covered up to but not including the flanges with insulation of the same thickness as on the vessel. Legs and supports shall be insulated to a minimum of 8 inches from the main insulation surface. Additional requirements may be listed for support legs. Support bottom head insulation temporarily with spot-applied adhesive.
4. Apply a tack coat of Benjamin Foster Tite-Fit Coating 30-35 for vapor barrier protection. Do not thin; apply at a rate of 4 gallons/100 square feet. Surface coverage must be complete. Embed 8-ounce canvas jacketing into the wet tack coat. Provide adequate overlap of canvas (3-inch minimum) to accommodate shrinkage. Seams should preferably be located behind equipment.

C. Exterior Finish of Insulation

1. Tank heads and shells outdoors -- Chicken wire wrapping and cement applications shall not be provided for outdoor equipment, unless required for cosmetic reasons. Apply a tack coat of vinyl acrylic mastic by trowel at the rate of 4 gallons/100 square feet. Insulation must be dry before mastic application. Embed open-weave white glass fabric cloth into the wet tack coat and smooth out to avoid wrinkles. Cover with the mastic at

000662

the rate of 8 gallons/100 square feet; apply before the tack coat has set through. Complete coverage is required. Proper and complete flashing shall also be required.

2. Tank heads and shells indoors -- Apply a tack coat of Benjamin Foster Tite-Fit Coating 30-35 for vapor barrier protection. Do not thin; apply at the rate of 4 gallons/100 square feet. Surface coverage must be complete. Embed 8-ounce canvas jacket into the wet tack coat. Provide adequate overlap of canvas (3 inches minimum) to accommodate shrinkage. Seams should preferably be located behind equipment. Wherever insulation is terminated, flash at least 3 inches by embedding a 4-inch-wide strip of No. 20 open-weave glass fabric cloth into wet tack coat. Allow the 30-35 tack coat to dry for at least 24 hours. Apply a finish coat of Benjamin Foster Sealfas Coating 30-36 over the dry canvas at the rate of 50 square feet/gallon; do not thin.
3. Tank shells - outdoors and indoors -- in lieu of the foregoing shell coverings, vendor may apply aluminum sheet with IT representative approval.

2.9 PIPING INSULATION TYPE CCR (-20° TO +50°F) (REFRIGERATION LINES ONLY)

A. Insulation Materials

1. Material shall be flexible foam plastic, closed cell pipe (or sheet) insulation, Armstrong STANDARD ARMAFLEX or approved equal.
2. Material shall have a density of 5.7 pounds/cubic foot and a nominal K factor of 0.27 maximum Btu/hour square foot/°F/inch at 75°F in service (bare), when tested by ASTM C177-63. Water vapor permeability shall be 0.15 per inch or less when tested by ASTM C355-64 water method.
3. ASTM Standard D1692-68 shall not be used as the criterion for evaluating the flammability of plastic foams for this specification. Where plastic foam is used, it is to be regarded as a combustible material and must be protected by adequate fire control systems, such as sprinklers.
4. Thickness of STANDARD ARMAFLEX insulation shall be as listed below for the indicated temperature ranges. This material shall be used for refrigerant lines or for condensation (sweating) protection only. It is not to be used over electrical steam tracing. Insulation shall be pipe or tubing size depending on the type of line to be insulated.

Nominal Thickness of Insulation, Inches

Temperature Range °F	Pipe Sizes				
	To 1-1/4	1-1/2"-3	3-1/2"-6"	8"-12"	14"-18"
50 to 31	1	1	1-1/2	1-1/2	1-1/2
40 to 21	1-1/2	1-1/2	1-1/2	1-1/2	2
20 to 0	1-1/2	1-1/2	2	2	2
-1 to -30	2	2-1/2	2-1/2	2-1/2	3

All above thicknesses are referred to 90°F ambient and 80 percent relative humidity.

B. Application

1. Insulation shall be applied over clean, dry surfaces.
2. STANDARD ARMAFLEX insulation shall be slipped on the pipe before connection wherever possible, and the butt joints shall be sealed with Armstrong 520 Adhesive. (Note: Small amounts of powdered lubricant may enter pipe or tubing if left open. Plug open end of pipe or tubing before slipping on ARMAFLEX.) Where the slip-on technique is not possible, the STANDARD ARMAFLEX insulation shall be slit and applied to the pipe, and the longitudinal seams and butt joints shall be staggered and sealed with 520 Adhesive.
3. Fitting cover insulation shall be fabricated and installed according to the manufacturer's recommended procedures. Sweat fittings shall be insulated with miter-cut pieces of STANDARD ARMAFLEX pipe insulation the same size as on adjacent piping. Screwed fittings shall be insulated with sleeved fitting covers fabricated from miter-cut pieces of STANDARD ARMAFLEX pipe insulation according to the manufacturer's sleeving size recommendations and shall be overlapped and sealed to the adjacent pipe insulation. Weld pipe fittings 6-inch IPS through 10-inch IPS shall be insulated with STANDARD ARMAFLEX sheet insulation conforming to template patterns recommended by the manufacturer. All valves shall be insulated with STANDARD ARMAFLEX pipe and sheet insulations. All joints and miter-cut pieces shall be sealed with 520 Adhesive.
4. At outside carrying hanger locations, use load-bearing wooden blocks having the same thickness as the adjacent insulation. All joints and seams shall be sealed with two coats of 520 Adhesive.

000664

C. Exterior Finish of Insulation
1. Straight Runs of Piping
a. Outdoors: Jacketing shall be the same as described in Section 2.3.C.1. Nothing shall be permitted to pierce the jacket or vapor barrier at any point.
b. Indoors: No additional jacketing required.
2. Fittings, Flanges, and Valves
~~a. To be field fabricated from Armaflex or equal.~~

2.10 EQUIPMENT INSULATION TYPE CCR (-60° TO +50°F) (REFRIGERANT EQUIPMENT ONLY)

A. Insulation Materials
1. Material shall be Fiberglass PF-705 industrial insulation, foil faced, rigid board, as manufactured by Owens-Corning Fiberglass Corporation. Density shall be 6 pounds/cubic foot. Compressive strength at 10 percent deformation shall be 350 pounds per square foot (psf).

2. Thickness of fiberglass insulation shall be as listed below for the indicated temperature ranges:

Temperature Range, °F	Insulation Thickness, Inches
50 to 41	1-1/2
40 to 21	2
20 to 0	2-1/2
-1 to -30	3
-31 to -60	-31 to -60

All above thicknesses are referred to 90°F ambient and 80 percent relative humidity.

B. Applications
1. Single Layer
a. Insulation shall be applied over clean, dry surfaces. The 24-inch by 48-inch boards shall be cut or scored as necessary to fit the shape and contour of the vessel accurately. Joints shall be staggered throughout and shall be butted tightly after they have been located with Benjamin Foster 81-33 Fire Resistive Adhesive,

0.0625- inch thick minimum. The applied adhesive must still be tacky when sections are butted together. The 81-33 adhesive shall serve as s joint sealer only; it shall not be used as filler material at poorly fitted joints. Straight shell insulation shall be secured firmly in place by 0.5-inch by 0.020-inch stainless-steel bands spaced not more than 9 inches on centers.

b. Vessel heads shall be insulated with cut or mitered sections set inside the overlapping side wall insulation. The overlap shall be equal to the thickness of the head insulation, to help form and hold the insulation on the heads. Field cut segments shall be accurately fitted, particularly at nozzles and manholes. Apply 81-33 adhesive as the joint sealer as described above. All voids between equipment surfaces and insulation shall be packed firmly with light density fiberglass. The head insulation shall be secured by 16-gauge copper wire on 6-inch centers. Cables, encircling the vessel shell near both heads, shall serve as tie-points for the wire. They shall be 0.125-inch diameter minimum and shall be galvanized or cadmium plated steel. The wires shall be looped at all intersections to tighten the head insulation firmly. Wires and bands shall be pulled sufficiently tight so that they are set solidly in the insulation surface. Insulation shall not be applied over nameplates but beveled off around them.

c. Nozzles shall be covered up to but not including the flanges with insulation of the same thickness as on the vessel. Legs and supports shall be insulated to a minimum of 8 inches from the main insulation surface. Check drawings for additional requirements that may be listed for insulating support legs.

d. For indoor equipment only, 1-inch chicken wire shall be wrapped tightly around the bound insulation, followed by a roughing layer of asbestos-free mineral-wool-type insulating cement (Keene Super Powerhouse or equal) and a smoothing layer of asbestos-free insulating cement. The roughing and smoothing layers shall cover the chicken wire completely. Thorough drying of the roughing layer is required.

2. Double Layers

a. Application shall be similar to that described above for single layer except that:

b. Joint sealer shall be used for the top layer of insulation only.

c. Joints for the top layer of insulation shall be staggered with respect to joints for the bottom layer.

000666

d. Chicken wire (for indoor equipment only) shall be wrapped around the bound insulation of the top layer, followed by the roughing and smoothing layers of cement.

e. Second layer head insulation shall extend out to the top of the second layer shell insulation. Side and end joints shall be staggered over joints of preceding layer so that no two joints coincide.

f. Insulation shall be applied at nozzles in a manner which will permit drainage and removal of bolts.

3. Joints for both layers shall be butted tightly. The 81-33 adhesive shall serve as a joint sealer only (for the top layer of insulation); it shall not serve as filler material for poorly fitted joints.

C. Exterior Finish of Insulation

1. Tank heads and shells outdoors -- Chicken wire wrapping and cement applications shall not be provided for outdoor equipment, unless required for cosmetic reasons. Apply a tack coat of vinyl acrylic mastic by trowel at the rate of 4 gallons/100 square feet. Insulation must be dry before mastic application. Embed open-weave white glass fabric cloth into the wet tack coat and smooth out to avoid wrinkles. Cover with the mastic at the rate of 8 gallons/100 square feet; apply before the tack coat has set through. Complete coverage is required. Proper and complete flashing shall also be required.
2. Tank heads and shells indoors -- Apply a tack coat of Benjamin Foster Tite-Fit Coating 30-35 for vapor barrier protection. Do not thin; apply at the rate of 4 gallons/100 square feet. Surface coverage must be complete. Embed 8-ounce canvas jacket into the wet tack coat. Provide adequate overlap of canvas (3 inches minimum) to accommodate shrinkage. Seams should preferably be located behind equipment. Wherever insulation is terminated, flash at least 3 inches by embedding a 4-inch-wide strip of No. 20 open-weave glass fabric cloth into wet tack coat. Allow the 30-35 tack coat to dry for at least 24 hours. Apply a finish coat of Benjamin Foster Sealfas Coating 30-36 over the dry canvas at the rate of 50 square feet/gallon; do not thin.
3. Tank shells - outdoors and indoors -- in lieu of the foregoing shell coverings, vendor may apply aluminum sheet with IT representative approval.

2.11 PIPING INSULATION TYPE AS (25° TO 150°F)

A. Insulation Materials

1. For roof drains, materials shall be either one-piece Fiberglass pipe insulation with fiberglass reinforced plastic (FRP) flame retardant jacket as manufactured by Owens-Corning Fiberglass Corporation or approved equal glass fiber pipe insulation in one-piece molded sections with all-service jacket.
2. For lines other than roof drains, material shall be fiberglass heavy density sectional pipe insulation, vinyl jacket with Self Sealing Lap, as manufactured by Owens-Corning Fiberglass Corporation.
3. Insulation shall be 1-inch thick and shall be iron pipe size or tubing size depending on the type of line to be insulated.

B. Application

1. Insulation shall be applied over clean, dry surfaces. Adjoining sections shall be butted together firmly with joints staggered.
2. For roof drains
   a. After placing the one-piece molded sections of the pipe, the longitudinal laps shall be sealed with Sealfas Coating 30-35 (Benjamin Foster Company). Sealfas shall be applied to cover the lap and its mating surface completely. The wiring shall be spaced not more than 9 inches on centers. Wiring and circumferential joints shall be covered with 3-inch-wide butt strips coated with a self-sealing adhesive. The strips shall be of the same laminated material and finish as the jacket on adjoining piping.
   b. Bell ends of cast iron fittings shall be insulated with 1-inch thick layers of fiberglass faced duct wrap blanket insulation or approved equal fine fiberglass blanket with foil scrim kraft. Minimum density shall be 1 pound/cubic foot. The first layer shall be wrapped tightly to the shape of the fitting and secured in place with wrapping twine, spiraled on. Fold and tuck in the blanket as required for a neat fit. The second layer shall be applied in a similar manner, but shall have a 3-inch minimum overlap of aluminum foil extending over and secured to the adjoining piping. This shall be followed with an approved one-coat insulating cement, covering the fitting and overlap completely.
3. For lines other than roof drains.
   a. After the heavy density sectional insulation with self-sealing lap has been placed on the pipe, remove the release paper, starting from an inside corner. The adhesive must be kept clean after the paper has been removed. Seal the longitudinal lap immediately,

000668

starting from the center of each section and working towards the ends. Seal the lap with the blunt edge of an insulation knife using firm, uniform pressure. Rub several times making certain that the edge of the lap is sealed down. Circumferential joints shall be sealed with a 3-inch-wide butt tape coated with the same self-sealing adhesive. Fittings of iron pipe size and tubing size shall be insulated with molded fibrous glass fitting covers or mitered segments of pipe insulation equal in thickness to the insulation on adjoining piping. Mitered segments, where used, shall be cut accurately to assure a snug fit. The segments and covers shall be wired tightly in place using 16-gauge stainless-steel wire. Fitting covers and mitered segments shall be given a smoothing layer of an approved one-coat insulating cement.

b. Fittings 2.5 inch nominal size and smaller may be insulated with two coats of asbestos-free mineral wool all-purpose insulating cement. Overall thickness shall be equal to that of adjoining insulation. All cracks in the insulating cement application shall be repaired.

C. Exterior Finish of Insulation

1. Straight runs of concealed piping -- No additional finish shall be required over the white vinyl jacket.
2. Straight runs of exposed piping -- No additional finish shall be required over the white vinyl jacket.
3. All fittings -- Fittings shall be finished with 6-ounce canvas jacket pasted neatly in place with Sealfas Coating 30-36; do not thin. The canvas jacket shall overlap adjoining applications.
4. Ends of insulation -- Seal all ends of insulation (where insulation terminates a pipe line) with an approved one-coat cement, an embedded No. 20 open-weave white glass fabric wrapping and 6-ounce canvas jacket pasted on with Sealfas 30-36.

D. Special Application

1. Antisweat insulation for piping under laboratory benches -- Armaflex or approved equal may be substituted as the antisweat insulation (in tight quarters only) under laboratory benches. Specify as iron pipe size or tubing size when ordering. Straight runs and fittings shall be insulated. Installation is to be according to manufacturer's instructions.

2.12 EQUIPMENT INSULATION TYPE AS (25° TO 150°F)

A. Insulation Material

1. Material shall be rigid, fluorocarbon blown, polyurethane foam (rated Nonburning) board insulation, or equal.
2. The polyurethane foam shall have a density of 2 pounds/cubic foot and a nominal K factor of 0.15 Btu/hour square foot-°F/inches at 75°F in service (bare). It shall conform to Bureau of Mines Report RI 6366 (Rigid Foams for Mines) for flame penetration and thermal deformation testing.
3. ASTM Standard D1692-68 shall not be used as a criterion for evaluating the flammability of plastic foams for this specification. Where plastic foam is used, it is to be regarded as a combustible material and must be protected by adequate fire control systems, such as sprinklers.

   Alternate materials and application of those materials applied according to the vendor's recommendations may be used with approval of the IT representative.
4. Thickness shall be 1 inch.

B. Application

1. Insulation shall be applied over clean, dry surfaces. Curved segments of single-layer thickness shall be used for insulating cylindrical surfaces unless otherwise indicated. (Curved segments are preferred over double beveled lagging.) Equipment diameters shall be specified when ordering curved segments to assure a tight fit of insulation to the vessel straight shell. Where required, the last segment in each row shall be field cut for final fit around the circumference. Flat board forms shall be used for rectangular shaped tanks and may be substituted for curved segments on vessels of 12-foot-diameter or more.
2. Joints shall be staggered throughout and shall be tightly butted after they have been coated with Benjamin Foster 81-33 Fire Resistive Adhesive 0.0625-inch thick minimum. The applied adhesive must still be tacky when sections are butted together.
3. Vessel heads shall be insulated using flat block insulation set inside the overlapping side wall insulation. Field cut segments shall be accurately fitted, particularly at nozzles and manholes. Apply adhesives as above. All voids shall be filled with shreds of the insulation of the same thickness as on the vessel.

C. Exterior Finish of Insulation

1. Apply a tack coat of Benjamin Foster Tite-Fit Coating 30-35. Do not thin; apply at the rate of 4 gallons/100 square feet. Surface coverage shall be complete. Embed an 8 ounce canvas jacket into the wet tack coat.

Provide adequate overlap of canvas (3 inches minimum) to accommodate shrinkage. Wherever insulation is terminated, flash at least 3 inches by embedding a 4-inch-wide strip of No. 20 open-weave white glass fabric cloth into the wet tack coat. Allow the 30-35 tack coat to dry for at least 24 hours. Apply a finish coating of Benjamin Foster Sealfas Coating 30-36 over the dry canvas at the rate of 50 square feet/gallon.

2.13 PIPING AND EQUIPMENT INSULATION FOR SEVERE SERVICE TYPE HCF OR CCF (-60° TO 800°F)

A. Insulation Materials

1. material shall be of the foamed glass type. Foam-glass insulation in the required form of flat blocks, curved segments, head segment, beveled lags, or molded sectional pipe as manufactured by Pittsburgh Corning Production.
2. for insulation thickness see Figures 2 and 3. See Equipment Drawings and/or flow diagrams for possible exceptions.

B. Application

1. Equipment drawings and flow sheets shall indicate where foamed glass insulation is required. Conditions in areas where weatherproofing, corrosive atmospheres, chemical spillage, fire resistance, etc., are of concern, shall dictate requirements.
2. Instruments and all running equipment in the work area where foamed glass is being applied are to be protected.
3. For hot application apply insulation as described in general requirements and under Type HC1 insulation. See Sections 2.3 through 2.6 with the following exceptions:
   a. One-half-inch-wide, 0.020-inch stainless-steel strapping and 14-gauge stainless-steel wire shall be used for securing insulation.
   b. A joint sealer is not required.
   c. Chicken wire shall not be used. Aluminum jacketing shall be used.
   d. Voids between equipment, piping, and insulation shall be filled with Type HC2 fiberglass.
   e. Piping in manholes-Condensate 1-inch thickness; Steam 2-inch minimum thickness.
4. For cold applications apply insulation as described in general requirements and under Type CC insulation, Sections 2.7 through 2.8 with the following exceptions:
   a. One-half-inch-wide, .020-feet stainless-steel strapping and 18-gauge stainless-steel wire shall be used for securing insulation.

b. Chicken wire shall not be used. A glass-fabric membrane finish described in Section 2.6.C.1 shall be used indoors and outdoors.

c. Voids between equipment, piping, and insulation are to be filled with Type CC polyurethane.

2.14 PIPING INSULATION FOR FREEZE PROTECTION TYPE FP (-20° TO 150°F)

A. Insulation Material

1. Material shall be fiberglass heavy density sectional pipe insulation, single layer, molded type, or approved equal. Thickness shall be 1.5 inch and shall have a vinyl factory-applied jacket.

B. Application

1. Insulation shall be installed according to the manufacturer's recommendations.
2. All piping designed for freeze protection insulation is to be traced and aboveground.
3. Insulation shall be applied over clean, dry surfaces and tracing.
4. Adjoining sections shall be butted together firmly with joints staggered.
5. All fittings, valves, and flanges shall be insulated with molded fibrous glass fitting covers (Owens-Corning Fiberglass Corp. or equal) or fabricated mitered segments of piping insulation equal in thickness to the insulation on adjoining piping. Mitered segments, where used, shall be cut accurately to assure a snug fit. The segments and covers shall be wired tightly in place using 16-gauge stainless-steel wire, or approved fiberglass reinforced tape. Fitting covers and mitered segments shall be given a smoothing layer of an approved asbestos-free insulating cement. Fittings smaller than 3 inches nominal size may be insulated with two coats of asbestos-free mineral-wool-type insulating cement.

C. Exterior Finish of Insulation

1. Outdoors -- The exterior finish of Type FP insulation outdoors shall be the same as that of Type HC1. See "Exterior Finish of Insulation" in Section 2.3.C for details. In lieu of stainless-steel bands, use 0.5-inch aluminum bands and wing seals 12 inches on center.
2. Indoors -- The exterior finish of Type FP insulation indoors shall be a factory applied all-service jacket.

000672

2.15 EQUIPMENT INSULATION FOR FREEZE PROTECTION TYPE FP (-20° TO 150°F)

A. Insulation Materials

1. Material shall be Fiberglass FP-705 industrial insulation, unfaced, rigid board, as manufactured by Owens-Corning Fiberglass Corporation. Density shall be 6 pounds/cubic foot or 3 pounds/cubic foot with IT representative approval.
2. Thickness shall be 1.5 inch. See drawings and/or flow sheets for possible exceptions.
3. Where insulation is specified in thickness greater than 1.5 inch, it shall be installed in multiple layer applications if necessary. Moisture barrier applications shall be made on the top layer of insulation only, as noted in these specifications.

B. Applications

1. Single layer
   a. Insulation shall be applied over clean, dry surfaces. The 24-inch by 43-inch boards shall be cut or scored as necessary to fit the shape and contour of the vessel. Joints shall be staggered throughout and shall be butted tightly after they have been coated with Benjamin Foster 81-33 Fire Resistive Adhesive, 0.0625-inch thick minimum. The applied adhesive must still be tacky when sections are butted together. The 81-33 adhesive shall serve as a joint sealer only; it shall not be used as filler material at poorly fitted joints. Straight shell insulation shall be secured firmly in place by 0.5-inch by 0.020-inch stainless-steel bands spaced not more than 9 inches on centers.
   b. Vessel heads shall be insulated with cut or mitered sections set inside the overlapping side wall insulation. The overlap shall be equal to the thickness of the head insulation, to help form and hold the insulation on the heads. Field cut segments shall be accurately fitted, particularly at nozzles and manholes. Apply 81-33 adhesive as the joint sealer as described above. All voids between equipment surfaces and insulation shall be packed firmly with light density fiberglass. The head insulation shall be secured by 16-gauge copper wire on 6-inch centers. Cables, encircling the vessel shell near both heads, shall serve as tie-points for the wire. They shall be 1/8 inch diameter, minimum, and shall be galvanized or cadmium plated steel. The wires shall be looped at all intersections to tighten the head insulation firmly. Wires and bands shall be pulled sufficiently tight so that they are set solidly in

the insulation surface. Insulation shall not be applied over name-plates, but beveled off around them.

c. Nozzles shall be covered up to but not including the flanges with insulation of the same thickness as on the vessel. Legs and supports shall be insulated to a minimum of 8 inches from the main insulation surface. Check drawings for additional requirements that may be listed for insulating support legs.

d. For indoor equipment only, 1-inch chicken wire shall be wrapped tightly around the bound insulation, followed by a roughing layer of asbestos-free mineral-wool-type insulating cement (Keene Super Powerhouse or equal), and a smoothing layer of asbestos-free insulating cement. The roughing and smoothing layers shall cover the chicken wire completely. Thorough drying of the roughing layer is required.

2. Double Layers -- Application shall be similar to that described above for single layer except that:

a. Joint sealer shall be used for the top layer of insulation only.

b. Joints for the top layer of insulation shall be staggered with respect to the joints for the bottom layer.

c. Chicken wire (for indoor equipment only) shall be wrapped around the bound insulation of the top layer, followed by the roughing and smoothing layers of cement.

d. Second layer head insulation shall extend out to the top of the second layer shell insulation. Side and end joints shall be staggered over joints of preceding layer so that no two joints coincide.

e. Insulation shall be applied at nozzles in a manner which will permit drainage and the removal of bolts.

3. Joints for both layers shall be butted tightly. The 81-33 adhesive shall serve as a joint sealer only (for the top layer of insulation); it shall not serve as a filler material for poorly fitted joints.

C. Exterior Finish of Insulation

1. Tank heads and shells outdoors -- Chicken wire wrapping and cement applications shall not be provided for outdoor equipment, unless required for cosmetic reasons. Apply a tack coat of vinyl acrylic mastic by trowel at the rate of 4 gallons/100 square feet. Insulation must be dry before mastic application. Embed open-weave white glass fabric cloth into the wet tack coat and smooth out to avoid wrinkles. Cover with the mastic at the rate of 8 gallons/100 square feet; apply before the tack coat has set

000674

through. Complete coverage is required. Proper and complete flashing shall also be required.

2. Tank heads and shells indoors -- Apply a tack coat of Benjamin Foster Tite-Fit Coating 30-35 for vapor barrier protection. Do not thin; apply at the rate of 4 gallons/100 square feet. Surface coverage must be complete. Embed 8-ounce canvas jacket into the wet tack coat. Provide adequate overlap of canvas (3 inches minimum) to accommodate shrinkage. Seams should preferably be located behind equipment. Wherever insulation is terminated, flash at least 3 inches by embedding a 4-inch-wide strip of No. 20 open-weave glass fabric cloth into wet tack coat. Allow the 30-35 tack coat to dry for at least 24 hours. Apply a finish coat of Benjamin Foster Sealfas Coating 30-36 over the dry canvas at the rate of 50 square feet/gallon; do not thin.

PART 3 EXECUTION

3.1 INSULATION

A. Insulation shall be applied over clean, dry surfaces that are free from projections. All segments shall be butted together firmly and all vapor barriers shall be sealed against moisture penetration. The application methods shall conform to the particular instructions listed in these specifications unless otherwise indicated by the IT Corporation (IT) representative in writing.

B. The subcontractor shall be responsible for furnishing insulation of the exact dimensions to fit lines of iron pipe size or tubing size depending on the type of line to be insulated. Full thickness insulation shall be applied on piping extended through sleeves. All equipment in the work areas shall be protected from damage and from exposure to insulation dusts, powders, or pieces of insulation. Particular care shall be given to the protection of pumps, motors, and drives.

C. Insulation shall not be applied to ductwork, piping, or equipment until all testing has been completed.

D. Troweling of mastics and application of adhesives or Armstrong Insulcolor shall not be performed below 40°F without prior written approval of the IT representative. Fill all joints and seams to form smooth surface.

E. All materials shall be installed in a neat and workmanlike manner, and shall be installed in strict accordance with the manufacturer's recommendations.

F. Insulation on valves, fittings, flanges (including equipment flanges), piping appurtenances, etc., shall be of equal thickness and insulation value to that installed on adjoining pipe. Cover all valves (generally up to packing gland), strainer bodies, flanges, and flash tanks. Insulation for ball valves and plug cocks shall not cover the travel stop pin. Care shall be taken to ensure that all working parts of valves and other mechanical equipment are protected when insulation is applied.

G. All sensing devices, gauges, instruments, relief valves, and other devices that require periodic calibration or maintenance shall be insulated in a manner so that it can be maintained from outside the insulation or the insulation applied in a manner that it can be temporarily removed when maintenance is required.

H. For tubing or cable traced lines, long lag insulation is preferred.

3.2 EQUIPMENT INSULATION

A. Manholes and handholds of equipment requiring insulation shall be provided with removable covers. Removable covers may be fabricated from segments of block insulation or from preformed sectional pipe covering and premolded components. A removable cover shall be of the same material as the adjoining pipe insulation.

B. Insulated vessels supported on skirts shall be insulated over the entire exterior of the skirt.

3.3 JOINTS

A. Expansion and contraction joints shall be provided for the differential expansion or contraction between the insulation and insulated surface operating at a temperature of 350°F and above, and 0°F and below, respectively.

B. All joints of double layer preformed sections in block insulation shall be staggered.

C. All unavoidable voids between sections of insulation shall be filled with asbestos-free mineral wool for hot applications and fiberglass for cold applications.

D. Staples shall not be used to secure insulating materials having vapor barrier jackets. All openings, joints, laps, and end strips on insulation specified with

a vapor barrier shall be sealed against moisture penetration with the vapor barrier cemented in place with adhesive.

3.4 INSULATION SUPPORTS

A. Tanks, towers, and other vessels shall be provided with attachments suitable for supporting the insulation. They shall consist of rings, clips, angles, studs, etc.

B. Insulation on vertical lines shall be supported by attaching a support ring to the piping at a maximum spacing of 20 feet. The support ring shall be cut from steel plate.

3.5 INSPECTION

A. Inspection of all phases of the installation will be made at random by the IT insulation inspector. Any work that is not in accordance with this specification or not installed in a neat, workmanlike appearance will be noted. Any rework required to have the installation comply with this specification will be solely at the insulation subcontractor's expense.

-End of Section-

DRAFT

ATTACHMENT A

FIGURES

Figure 1 - Insulation Thickness, Types HC1, HC2, and PP1 Insulation

Figure 2 - Insulation Thickness, Type HCF

Figure 3, Insulation Thickness, Type CCF

DRAFT

000678

Type HC1, HC2, & PP1 Insulation (Nominal Thickness, Inches)																		
	Fluid Temperature, Inches																	
Nom. Pipe Size, Inches	Up to 175	175 to 225	226 to 275	276 to 325	326 to 375	376 to 425	726 to 475	476 to 525	526 to 575	576 to 625	626 to 675	676 to 725	726 to 775	776 to 825	826 to 875	876 to 900	901 to 1000	1001 to 1100	1101 to 1200
1/2"																			
3/4"																			
1"			1"																
1-1/2"																			
2"													1- 1/2"						
2-1/2"																			
3"																			
4"																			
6"													2"						
8"																			
10"																			
12"													2- 1/2"						
14"																			
16"															3"				
30" to Up																			
Vessel & Equip															3- 1/2"		4"		
Type PP1	1"											1- 1/2"					2"		2-1/2"

Note: For operating temperatures in excess of 900°F, insulation shall be double layer construction. For 2" and larger lines, in accordance with the following table:

Total Insulation Thickness	Layer Thickness
2"	1" inside, 1" outside
2-1/2"	1" inside, 1-1/2" outside
3"	1-1/2" inside, 1-1/2" outside
3-1/2"	1-1/2" inside, 2" outside
4"	2" inside, 2" outside

FIGURE 1

000679

1669

000680

INSULATION THICKNESS, TYPES HC1, HC2, AND PP1 INSULATION

Type HCF Molded and Block Insulation Cellular Glass for Hot Piping and Equipment Nominal Thickness, Inches							
	Fluid Temperature - Degrees Fahrenheit						
Nom. Pipe Size, Inches	50 to 300	301 to 400	401 to 500	501 to 600	601 to 700	701 to 800	
1/2"							
3/4"							
1"		1"			2"	2-1/2"	
1-1/2"							
2"			1-1/2"		2-1/2"		
3"							
4"			2"	2-1/2"	3"		
6"							
8"						3-1/2"	
10"	1-1/2"	2"					
12" to 36"							
36" to 48"			2-1/2"	3"	3-1/2"	4"	
Over 48"							
Vessel & Equip							

Note: Through 24" diameter, use molded pipe insulation. Above 24" diameter, use segmented block, shaped to fit contour.

FIGURE 2

INSULATION THICKNESS, TYPE HCF

Type CCF Molded and Block Insulation Cellular Glass for Cold Piping and Equipment Nominal Thickness, Inches							
	Fluid Temperature - Degrees Fahrenheit						
Nom. Pipe Size Inches	50 to 40	39 to 20	19 to 0	-1 to -20	-19 to -40	-39 to -60	
1/2"	1"		1-1/2"			2-1/2"	
1"			2"				
1-1/2"				2-1/2"	3"		
2"							
3"							
4"							
6"				3"	3-1/2"		
8"	1-1/2"		2-1/2"			4"	
10"							
12"							
14"					4"	4-1/2"	
16"				3-1/2"			
18"							
20"							
24"			3"				
30"							
Over 30"				4"	4-1/2"	5-1/2"	
Vessel & Equip							

Note: All insulation for lines 2" and up shall be double layer construction. Layers shall be equally thick or, if the total thickness cannot be divided equally, the outer layer shall be 1/2" thicker than the inside layer.

FIGURE 3

INSULATION THICKNESS, TYPE CCF

000682

SECTION 15712

COOLING TOWER

PART 1 GENERAL

1.1 SECTION INCLUDES

A. Cooling tower.
B. Controls.
C. Ladder and handrails.

1.2 RELATED SECTIONS

A. Section 09900 - Painting General

B. Section 13310 - Noise Level Specification

C. Section 15050 - Piping and Accessories

D. Section 15080 - Piping Specialties

E. Section 15150 - General Pumps

F. Section 15170 - Motors.

G. Division 16 - Electrical.

1.3 REFERENCES

A. ABMA 9 - Load Rating and Fatigue Life for Ball Bearings.

B. ABMA 11 - Load Rating and Fatigue Life for Roller Bearings.

C. ASME PTC-23 - Atmospheric Water-Cooling Equipment.

D. Cooling Tower Institute (CTI) ATC-105 - Acceptance Test Code for Water Cooling Towers.

E. Cooling Tower Institute (CTI) - Certification Standard STD-201.

F. IEEE - Institute of Electrical and Electronics Engineers

G. ANSI - American National Standards Institute

H. OSHA - Occupational Safety and Health Association

I. ASTM - American Society for Testing Materials

J. NEMA - National Electrical Manufacturers Association

K. AWS - American Welding Society

L. UL - Underwriters Laboratories

M. NEC - National Electric Code

1.4 PERFORMANCE REQUIREMENTS

A. The cooling tower system is designed to provide cooling for the heat exchangers in the process. Cooling water from the cooling tower will be provided to all heat exchangers in the process. All blow down from the cooling towers will be pumped to Area 90 for treatment. The system consists of the following components:
   1. Cooling tower with fan and motor.
   2. Basin with level control.
   3. Control panel.

1.5 SUBMITTALS

A. Shop Drawings: Indicate suggested structural steel supports including dimensions, sizes, and locations for mounting bolt holes.

B. Product Data: Provide rated capacities, dimensions, weights and point loadings, accessories, required clearances, electrical requirements and wiring diagrams, and location and size of field connections. Submit schematic indicating capacity controls.

C. Submit manufacturer's installation instructions.

D. Manufacturer's Certificate: Certify that cooling tower performance, based on CTI ATC-105, CTI STD-201 or ASME PTC-23, meet or exceed specified requirements, and submit performance curve plotting leaving water temperature against wet bulb temperature.

E. Operation and Maintenance Data: Include start-up instructions, maintenance data, parts lists, controls, and accessories.

000684

F. Spare Part Lists: One year operation spare parts list, and five year operation spare parts list.

1.6 QUALITY ASSURANCE

A. Manufacturer Qualifications: Before shipment the manufacturer shall conduct a comprehensive shop performance test on the entire system just as it will be used in the field. The system shall not be shipped until it is proven to function correctly. Complete documentation shall be provided as proof of the inspection and performance test. The documentation shall be signed and dated.

B. The manufacturer shall have full responsibility for compliance with the requirements of the specifications contained herein. Before shipment the manufacturer shall conduct a thorough inspection of all equipment. Any inconsistencies must be corrected before shipment.

1.7 REGULATORY REQUIREMENTS

A. Products Requiring Electrical Connection: Listed and classified by Underwriters Laboratories Inc. and suitable for the purpose specified and indicated.

1.8 DELIVERY, STORAGE, AND PROTECTION

A. Factory assemble entire unit. For shipping, disassemble into large sub-assemblies to minimize field work required for re-assembly.

B. Comply with manufacturer's installation instructions for rigging, unloading, and transporting units.

1.9 WARRANTY

A. The cooling tower manufacturer shall certify that the tower supplied will meet the specified performance conditions when the tower is installed according to plans. If, because of a suspected thermal performance deficiency, the Owner chooses to conduct an on-site thermal performance test under the supervision of a qualified, disinterested third party in accordance with CTI or ASME standards during the first year of operation; and if the tower fails to perform within the limits of the test tolerance; then the cooling tower manufacturer will pay for the cost of the test and will make such corrections as are appropriate

and agreeable to the Owner to compensate for the performance deficiency.

B. Provide a five year warranty labor and materials to include coverage for corrosion resistance of cooling tower structure, cooling tower package, fan drive, and motor.

1.10 LABELING

A. Provide label(s) with the following information:

Drawing Code	CT-1	CT-2	CT-3	CT-4
Location				
Manufacturer				
Model Number				
Cooling Capacity				
Water Flow Rate				
Entering Water Temp				
Leaving Water Temp				
Entering Air WB Temp				
External Static Pressure				
Number of Fan Motors				
Motor Size				
Heaters No. and Type				

PART 2 PRODUCTS

2.1 MANUFACTURERS

A. Baltimore Air Coil
B. Marley
C. Imeco
D. Other: With IT approval.

2.2 MANUFACTURED UNITS

A. Provide units for outdoor use, factory assembled, sectional, cross flow, vertical discharge, induced draft type, with sump, fan, surface sections, drift eliminators, and motor.

2.3 STEEL TOWERS

000686

A. Framework and Casing: Galvanized steel with sheets installed vertically with waterproof flanges.

B. Louvers: Corrugated glass reinforced polyester.

C. Fan: Multi blade, cast aluminum fixed pitch, axial type.
   1. Drive: Geared, right angle drive with ABMA 9 or ABMA 11 L-10 life expectancy of 40,000 hours bearings and drive shaft equipped with non-lubricated flexible couplings.
   2. Motor: Two speed (1800/900 rpm) with special moisture protection, mounted on welded steel frame in fan deck. Refer to Section 15170.
   3. Drive shaft: One piece, non lubricate, full floating design with stainless steel shaft and bushings.

D. Fan Cylinder: One piece, welded steel, hot dipped galvanized fan assembly.

E. Fan Guard: One piece, welded steel rod and wire guard, hot dipped galvanized after fabrication.

F. Access: Large access doors at both ends of tower to eliminators and air plenum.

G. Safety: Safety railings, and ladder with safety cage from grade to fan deck.

H. Distribution Basin: Open, gravity type distribution basin utilizing weirs and plastic metering orifices, with flow control valves.

I. Fill: Self supporting fluted polyvinyl chloride plastic.

J. Drift Eliminators: Two or three pass polyvinyl chloride plastic to limit drift loss to a maximum of 0.1 percent of total water circulated.

K. Collection Basin: Galvanized steel with depressed center section, designed to support tower, with cleanout and drain fitting, 8 gage (4 mm), 1/4 inch (7 mm) mesh strainer, side outlet sump, overflow.

L. Float Valves: Brass or bronze balanced piston type make-up valve with plastic or copper float.

M. Hardware, nuts, bolts, and washers: Galvanized steel.

N. Finish: Steel components shall be G210 hot dipped galvanized steel.

O. Accessories

1. Electric Immersion Heaters: In collection basin; suitable to maintain temperature of water in basin at 42 degrees F (5 degrees C) when outside temperature is 0 degrees F (-17 degrees C) and wind velocity is 15 mph (25 kph); immersion thermostat and low level control to operate heaters on low temperature.
2. Vibration Cut Out Switch: Mechanical equipment shall be provided with a vibration cut out switch to protect against damage due to excessive vibration

2.4 PERFORMANCE

A. Capacity:
See attached data sheets.

B. External Static Pressure: .
See attached data sheets.

2.5 ELECTRICAL CHARACTERISTICS AND COMPONENTS

A. Electrical Characteristics:
See attached data sheets.

B. Motor: Refer to Section 15170.

C. Disconnect Switch: Factory mount disconnect switch in control panel.

PART 3 EXECUTION

3.1 INSTALLATION

A. Install in accordance with manufacturer's instructions.

B. Connect make-up water piping with flanged or union connections to tower. Pitch to tower. Refer to Section 15050.

C. Connect overflow, bleed, and drain, to storm sewer.

3.2 FIELD QUALITY CONTROL

A. Test for capacity under actual operating conditions in accordance with CTI ATC-105 and verify specified performance.

000688

3.3 MANUFACTURER'S FIELD SERVICES

A. Inspect tower after installation and submit report prior to start-up, verifying installation is in accordance with specifications and manufacturer's recommendations.

B. Supervise rigging, hoisting, and installation.

C. Start-up tower in presence of and instruct Owners operating personnel.

-End of Section-

DRAFT

ATTACHMENT
Performance Requirements

1. System shall be suitable for continuous operation
2. Capacity:

A) Water flow :	1,600 gpm
B) Entering Temperature:	103°F
C) Leaving Temperature:	85°F
D) Entering Air WB Temperature:	78°F

3. Electrical Characteristics and Components

A) Fan HP	60 HP
B) Power	480 volts 3 phase 60 Hz

4. Refer to Spec. No. 773481-W5001

DRAFT

000690

SECTION 15750

GAS STREAM REHEATER

PART 1 GENERAL

1.1 SECTION INCLUDES

A. Gas Stream Reheater to bring the relative humidity of the exhaust of the wet electro-static precipitator well below saturation upstream of a HEPA filtration system.

1.2 RELATED SECTIONS

A. Section 09900 - Painting General
B. Section 13200 - General Tanks and Vessels
C. Division 16 - Electrical.

1.3 REFERENCES, CODES, AND STANDARDS

A. American Society of Mechanical Engineers (ASME) :
   1. ASME Boiler and Pressure Vessel Code (BPVC), Section IX.
   2. ASME Section VIII.

B. American Society for Testing and Materials (ASTM):
   1. ASTM A36/A36M Standard Specification for Structural Steel.

C. American Welding Society (AWS).

D. Uniform Building Code (UBC).

E. National Electric Code (NEC).

F. Underwriters Laboratories (UL)

1.4 SYSTEM DESCRIPTION

A. Design Requirements
The Gas reheater will be required to increase the bulk gas stream temperature to change the relative humidity of the gas stream.

1.5 SUBMITTALS

A. Shop Drawings: Indicate dimensions; sizes; weights and point loadings;

material thickness, and locations, sizes.

B. Product Data: Provide data indicating rated capacities and accessories.

C. Manufacturer's Installation Instructions: Indicate assembly and installation instructions sufficient to facilitate efficient assembly.

D. Design Calculations: For material thickness and supports for wind, seismic and snow loadings, for determination of diameters and entry dimensions, for evaluation of wear and erosion.

E. Operation and Maintenance Data: Include operation and maintenance instructions and spare parts list (10 copies).

F. Certificate: Certify that the equipment meets or exceeds the requirements of this specification.

G. Spare parts list for 1-year and 5-year operation.

1.6 DELIVERY, STORAGE AND HANDLING

A. Store in a clean, dry place and protect from weather prior to shipment. Provide protection from weather and damage during transient.

B. Loose items, if any, shall be tagged and delivered in a standard commercial package.

1.7 WARRANTY

A. Warranty: The gas stream reheater shall be warranted by the manufacturer including parts and labor.

PART 2 PRODUCTS

2.1 EQUIPMENT

A. Manufacturers
   1. Watlow Electric
   2. Reheat Co., Inc.
   3. Thermal Circuits
   4. Industrial Engineering & Equipment Co. (INDEECO)

B. Process off gases consisting of air, water vapor, organic compounds and trace concentrations of particulate will exit a wet electro-static precipitator saturated

000692

at the exit temperature. The gas stream is to be treated by passing through a HEPA filtration system and Thermal Oxidizer. Prior to passing through the HEPA, the gas stream must be reheated above the dew point so that condensation will not occur on the HEPA surfaces. The gas stream temperature must be controlled within a narrow range.

The gas stream reheater shall be electrically heated. The outlet shall be equipped with an electronic hygrometer (optional) to monitor the relative humidity of the gas stream. The Reheater shall be designed to be intrinsically safe, non sparking, non arcing with no open coils. Heater elements shall be coated with an inert material such as ceramic or other material to prevent direct contact with gas stream.

The reheater housing shall be designed for access to allow cleaning of element surfaces.

C. Materials: Manufacturer's selection of interior materials shall be consistent with this application. Exterior parts shall be carbon steel or approved substitute. Flanged connections shall be 150 lb class or per IT Standard Flange Data (Attached). Structural steel supports shall be in accordance with ASTM A36/A36M.

D. Welding: Shall be in accordance with ASME BPVC Section IX or VIII and AWS.

E. Performance Requirements -
   1. System shall be suitable for continuous operation
   2. The Reheater shall provide at a minimum, the capability to increase the bulk temperature of the gas stream by 20°F.

F. All equipment shall be provided with lifting and hold down lugs.

G. Static pressure taps shall be provided to check the pressure drop across the system and calibrate the control system pressure transducers.

H. Equipment/structural design shall provide for loads as specified below:
   1. Platforms and walkways, live load: 75 psf.
   2. Wind load: 80 mph basic wind speed
      Exposure "C"
      Importance Factor 1.15.

   3. Seismic load: Use provisions of the Uniform Building Code, using Seismic Zone 1 and Importance Factor 1.25. W (total seismic load)

shall include all normal operating contents, piping and attachments.

4. Shop drawings shall state the vertical loads and lateral forces used (wind and seismic) in the design.

2.2 FABRICATION

A. Prior to shipment, the equipment shall be cleaned of all dirt, dust, grease, grime, weld spatter, and other foreign materials. All burrs and sharp edges shall be ground smooth. Exterior surfaces of steel components shall be primed and painted in accordance with the manufacturer's standard finish. Open-end connections shall be sealed to prevent the entrance of foreign material.

2.3 LABELING

A. Each item shall have a manufacturer's standard nameplate permanently attached at a location which is easily readable. The nameplate shall contain the following information, as applicable:

1. Item description.
2. Item number/tag number.
3. Manufacturer's name.
4. Purchase order number.
5. Date of manufacture.
6. Capacity.

PART 3 EXECUTION

3.1 ERECTION/INSTALLATION

A. Install equipment in accordance with manufacturer's instructions and design drawings.

3.2 FIELD QUALITY ASSURANCE

A. Tests: Perform leak testing to ensure that there are no air leaks into the reheater system. Perform pressure drop and temperature rise testing across the system to insure conformance with this specification. If the results are unsatisfactory, the Subcontractor shall adjust or replace the equipment to meet the specification requirements and retest the equipment.

-End-of-Section

ATTACHMENT
SPECIFIC DESIGN CRITERIA

Criterion	*Specification*
Inlet Conditions	
Total Mass Flow Rate	2,318 lbs/hr
Oxygen Mass Flow Rate	156 lbs/hr
Nitrogen Mass Flow Rate	2,039 lbs/hr
Water Vapor Mass Flow Rate	100 lbs/hr
Volatile Organic Mass Flow Rate	22 lbs/hr
Temperature	108 °F
Volumetric Flow Rate	599 ACFM @ 108 °F
Outlet Conditions	
Temperature Increase	20 °F
Pressure Drop Across System	Not to Exceed 1 in. w.c. @ 600 ACFM
Relative Humidity	Less than 45% maximum
Design Pressure	-20 in. w.c.
Heat Generation Rate	12,000 Btu/hr minimum
Specification	
Equipment Spec. No.	773481-E5003

DRAFT

SECTION 15751

QUENCH HEAT EXCHANGERS

PART 1 GENERAL

1.1 SECTION INCLUDES

A. Dual (redundant) Plate and Frame heat exchangers
B. Accessories and trim.

1.2 RELATED SECTIONS

A. Section 09900 - Painting General
B. Section 13200 - General Tanks and Vessels
C. Section 13201 - ASME Code Tanks and Vessels

1.3 REFERENCES, CODES, AND STANDARDS

A. American Society of Mechanical Engineers (ASME) :
   1. ASME Boiler and Pressure Vessel Code (BPVC), Section IX.

B. American Society for Testing and Materials (ASTM):
   1. ASTM A36/A36M Standard Specification for Structural Steel.

C. American Welding Society (AWS):

1.4 SYSTEM DESCRIPTION

A. Design Requirements
   1. The heat exchanger will be required to lower the temperature of the quench recirculation process water to increase the temperature differential between the process off-gas and the quenching solution.

1.5 SUBMITTALS

A. Shop Drawings: Indicate dimensions; sizes; weights and point loadings; material thickness, and locations, sizes.

B. Product Data: Provide data indicating rated capacities and accessories.

C. Design Data: Indicate in sufficient detail to verify that heat exchanger meets or exceeds specified requirements.

D. Manufacturer's Installation Instructions: Indicate assembly and installation instructions sufficient to facilitate efficient assembly.

E. Design Calculations: For material thickness and supports for wind, seismic and snow loadings, for determination of diameters and entry dimensions, for evaluation of wear and erosion in tubes/plates, for determination of effective heat transfer prior to discharge.

F. Operation and Maintenance Data: Include operation and maintenance instructions and spare parts list (10 copies).

G. Certificate: Certify that the equipment meets or exceeds the requirements of this specification.

1.6 DELIVERY, STORAGE AND HANDLING

A. Store in a clean, dry place and protect from weather prior to shipment. Provide protection from weather and damage during transit.

B. Loose items, if any, shall be tagged and delivered in a standard commercial package.

1.7 WARRANTY

A. Warranty: The heat exchanger shall be warranted by the manufacturer including parts and labor.

PART 2 PRODUCTS

2.1 EQUIPMENT (PLATE AND FRAME TYPE HEAT EXCHANGER)

A. Manufacturer
   1. Alfa Laval
   2. Tranter
   3. ITT Fluid Handling
   4. Plate Concepts

B. Frames: Carbon steel with baked epoxy enamel paint, stainless steel side bolts and shroud.

C. Plates: Stainless steel.

D. Gaskets: TBD

E. Nozzles: TBD

000698

2.2 PERFORMANCE

A. All equipment shall be provided with lifting and hold down lugs.

B. Static pressure taps shall be provided to check the pressure drop across the system and calibrate the control system pressure transducers.

C. Equipment/structural design shall provide for loads as specified below:
1. Platforms and walkways, live load: 75 psf.
2. Wind load: 80 mph basic wind speed
   Exposure "C"
   Importance Factor 1.15
3. Seismic load: Use provisions of the Uniform Building Code, using Seismic Zone 1 and Importance Factor 1.25. W (total seismic load) shall include all normal operating contents, piping and attachments.
4. Shop drawings shall state the vertical loads and lateral forces used (wind and seismic) in the design.

D. Refer to Equipment Specification No. 773481-E5002.

2.3 FABRICATION

A. Prior to shipment, the equipment shall be cleaned of all dirt, dust, grease, grime, weld spatter, and other foreign materials. All burrs and sharp edges shall be ground smooth. Exterior surfaces of steel components shall be primed and painted in accordance with the manufacturer's standard finish. Open-end connections shall be sealed to prevent the entrance of foreign material.

2.4 LABELING

A. Each item shall have a manufacturer's standard nameplate permanently attached at a location which is easily readable. The nameplate shall contain the following information, as applicable:
1. Item description.
2. Item number/tag number.
3. Manufacturer's name.
4. Purchase order number.
5. Date of manufacture.
6. Capacity.

PART 3 EXECUTION

3.1 ERECTION/INSTALLATION

A. Install equipment in accordance with manufacturer's instructions and design drawings.

3.2 FIELD QUALITY ASSURANCE

A. Tests: Perform leak and hydrostatic testing in accordance with ASME BPVC to ensure that there are no leaks in the heat exchanger system. Perform pressure drop and heat transfer testing across the heat exchanger system to insure conformance with this specification. If the results are unsatisfactory, the Subcontractor shall adjust or replace the equipment to meet the specification requirements and retest the equipment.

-End of Section-

DRAFT

SECTION 15860

INDUCED DRAFT FANS

PART 1 GENERAL

1.1 SECTION INCLUDES

A. ID Fans,
B. Vacuum control via VFD or inlet vane dampers
C. Inlet and outlet silencers as needed to meet noise specs.
D. Motor and drive assemblies.

1.2 RELATED SECTIONS

A. Section 09900 - Painting General
B. Section 13310 - Noise Level Specification
C. Section 15050 - Piping and Accessories
D. Section 15080 - Piping Specialties
E. Section 15170 - Motors.
F. Division 16 - Electrical

1.3 REFERENCES

A. ABMA STD 9 - Load Ratings and Fatigue Life for Ball Bearings.

B. ABMA STD 11 - Load Ratings and Fatigue Life for Roller Bearings.

C. AMCA 99 - Standards Handbook.

D. AMCA 210 - Laboratory Methods of Testing Fans for Rating.

E. AMCA 261 - Directory of Products Licensed to Use the AMCA Certified Ratings Seal.

F. AMCA 300 - Reverberant Room Method for Sound Testing of Fans.

G. SMACNA - Sheet Metal and Air Conditioning Contractors National Association.

1.4 SYSTEM DESCRIPTION

A. Design Requirements

The ID Fans will be required to provide sufficient motive force to maintain a vacuum (negative pressure) in the dryers, as well as to provide the necessary pressure differential across the gas cleaning system.

1.5 SUBMITTALS FOR REVIEW

A. Product Data: Provide data on centrifugal fans and accessories including fan curves with specified operating point(s) clearly plotted, power, RPM, sound power levels for both fan inlet and outlet at rated capacity, and electrical characteristics and connection requirements.

B. Shop Drawings: Indicate assembly of centrifugal fans and accessories including fan curves with specified operating point(s) clearly plotted, sound power levels for both fan inlet and outlet at rated capacity, and electrical characteristics and connection requirements.

C. Manufacturer's Instructions: Indicate installation instructions.

D. Maintenance Data: Include instructions for lubrication, motor and drive replacement, spare parts list, and wiring diagrams.

E. Certificate: Certify that the equipment meets or exceeds the requirements of this specification.

F. Spare parts list for one year and five year operation.

1.6 WARRANTY

A. Warranty: The ID Fans and their accessory components shall be warranted by the manufacturer including parts and labor.

1.7 DELIVERY, STORAGE, AND PROTECTION

A. Protect motors, shafts, and bearings from weather and construction dust.

PART 2 PRODUCTS

2.1 PERFORMANCE

A. Induced Draft Fans

1. Performance Ratings: Conform to AMCA 210.
2. Sound Ratings: Tested to AMCA 300 and in accordance with Section 13310.
3. Fabrication: Conform to AMCA 99.

000702

4. Altitude: 580 ft. Above sea level.
5. Service: Process Exhaust Gas.
6. Temperature: See attached data sheets.
7. Static and Dynamic Balance: Eliminate vibration or noise transmission to occupied areas.
8. Flow: See attached data sheets.

9. Static Pressure: See attached data sheets.
10. Motors:
    1. Refer to Division 16 for electrical requirements.
    2. Type: TEFC. Refer to Section 15170.

2.2 WHEELS AND INLETS

A. Backward Inclined: Steel construction with smooth curved inlet flange, heavy back plate, backwardly curved blades welded or riveted to flange and back plate; cast iron (or cast steel) hub riveted to back plate and keyed to shaft with set screws.

B. Forward Curved: Galvanized steel construction with inlet flange, back plate, shallow blades with inlet and tip curved forward in direction of airflow, mechanically secured to flange and back plate; steel hub swaged to back plate and keyed to shaft with set screws.

C. Radial: Steel construction with inlet flange, heavy reinforced back plate, plate blades with reinforcing gussets and wearing strips welded or riveted to back plate and flange; cast iron (or cast steel) hub riveted to back plate and keyed to shaft with set screws.

2.3 HOUSINGS

A. Heavy gage steel, spot welded for AMCA 99 Class I and II fans, and continuously welded for Class III, adequately braced, designed to minimize turbulence with spun inlet bell and shaped cut-off.

B. Factory finish before assembly to manufacturer's standard.

C. Provide bolted construction with horizontal flanged split housing, where indicated.

2.4 BEARINGS AND DRIVES

A. Bearings: Heavy duty pillow block type, self-aligning, grease-lubricated ball bearings, with ABMA 9 (L-10 life at 50,000 hours or L-50 life at 100,000 hours) or roller bearings, with ABMA 11, (L-10 life at 120,000 hours or L-50 life at 400,000 hours).

B. Shafts: Hot rolled steel, ground and polished, with keyway, protectively coated with lubricating oil, and shaft guard.

C. V-Belt Drives: Cast iron or steel sheaves, dynamically balanced, keyed. Variable and adjustable pitch sheaves for motors 15 hp and under, selected so required rpm is obtained with sheaves set at mid-position. Fixed sheave for 20 hp and over, matched belts, and drive rated as recommended by manufacturer or minimum 1.5 times nameplate rating of the motor.

D. Belt Guards: Fabricate to SMACNA Standard; 0.106 inch thick, 3/4 inch diamond mesh wire screen welded to steel angle frame or equivalent, prime coated. Secure to fan or fan supports without short circuiting vibration isolation, with provision for adjustment of belt tension, lubrication, and use of tachometer with guard in place.

2.5 ACCESSORIES

A. Variable Frequency Drive: Locate in NEMA 4 control panel with Hand - Off-Auto Switch. (Optional)

B. Adjustable Inlet Vanes: Steel construction with blades supported at both ends or cantilevered with two permanently lubricated bearings, variable mechanism out of air stream terminating in single control lever with control shaft for double width fans and locking quadrant. (Optional)

C. Discharge Dampers: Parallel or opposed blade heavy duty steel damper assembly with blades constructed of two plates formed around and welded to shaft, channel frame, sealed ball bearings, with blades linked out of air stream to single control lever. (Optional)

D. Inlet/Outlet Screens: Galvanized steel welded grid.

E. Access Doors: Shaped to conform to scroll, with quick opening latches and gaskets.

PART 3 EXECUTION

3.1 INSTALLATION

A. Install fans with resilient mountings and flexible electrical leads.

B. Install flexible connections between fan inlets and discharge ductwork. Ensure metal bands of connectors are parallel with minimum one inch flex between ductwork and fans while running.

C. Provide fixed sheaves required for final air balance.

D. Provide safety screen where moving parts are exposed.

E. Do not operate fans in normal operation until ductwork is clean, filters are in place, bearings are lubricated, and the fans have been test run under observation.

3.2 SCHEDULES

A. Drawing Code (F-1)

1. Manufacturer _____
2. Model _____
3. Fan Type _____
4. Wheel Type _____
5. Class _____
6. Arrangement _____
7. Size _____
8. Air Flow Capacity _____
9. Static Pressure _____
10. Drive _____
11. Motor hp _____
    a. Electrical Characteristics _____
12. Discharge Sound Power
    a. 1st Octave _____
    b. 2nd Octave _____
    c. 3rd Octave _____
    d. 4th Octave _____
    e. 5th Octave _____
    f. 6th Octave _____
    g. 7th Octave _____
    h. 8th Octave _____
13. Inlet Sound Power
    a. 1st Octave _____

b. 2nd Octave _____
c. 3rd Octave _____
d. 4th Octave _____
e. 5th Octave _____
f. 6th Octave _____
g. 7th Octave _____
h. 8th Octave _____

14. Accessories
a. _____
b. _____

END OF SECTION

DRAFT

000706

ATTACHMENT
Performance Requirements

1. System shall be suitable for continuous operation
2. Capacity:

A) Flow :	4000 acfm
B) Static Pressure:	32 in. w.c.
C) Maximum Temperature:	140°F
D) Entering Gas Temperature:	128°F

3. Electrical Characteristics and Components

A) Motor HP	TBD
B) Power	480 volts 3 phase 60 Hz
C) Turndown Ratio	5 to 1

DRAFT

DRAFT

SECTION 15863

HEPA SYSTEM

PART 1 GENERAL

1.1 SECTION INCLUDES

A. HEPA Filter System

1.2 RELATED SECTIONS

A. Section 09900 - Painting General
B. Section 13200 - General Tanks and Vessels
C. Section 15250 - Insulation.

1.3 REFERENCES, CODES, AND STANDARDS

A. American Society for Testing and Materials (ASTM):
1. ASTM A36/A36M Standard Specification for Structural Steel.

B. American Welding Society (AWS):

C. American Society of Civil Engineers (ASCE)

D. Uniform Building Code (UBC)

1.4 SYSTEM DESCRIPTION

A. The HEPA filter system will be required to serve as the final particulate filter from the exhaust gas of a rotary dryer. The off gas from the dryer will be saturated, condensed, scrubbed, filtered through a wet electrostatic filter and reheated prior to entering the final particulate filter. The final particulate filter system shall consist of an insulated cabinet for housing prefilter, intermediate filter, and HEPA filter sections.

1.5 SUBMITTALS

A. Shop Drawings: Indicate dimensions; sizes; weights and point loadings; material thickness, and locations, sizes.

B. Product Data: Provide data indicating rated capacities and accessories.

C. Manufacturer's Installation Instructions: Indicate assembly and installation

instructions sufficient to facilitate efficient assembly.

D. Design Calculations: For material thickness and supports for positive pressure, wind, and seismic loadings, for determination of plenum dimensions, for determination of face velocity and frontal area, and for determination of filter replacement frequency.

E. Operation and Maintenance Data: Include operation and maintenance instructions and spare parts list. (10 copies)

F. Certificate: Certify that the equipment meets or exceeds the requirements of this specification.

G. Spare parts list for 1 year and 5 year operation.

1.6 DELIVERY, STORAGE AND HANDLING

A. Store in a clean, dry place and protect from weather prior to shipment. Provide protection from weather and damage during transit.

B. Loose items, if any, shall be tagged and delivered in a standard commercial package.

1.7 WARRANTY

A. Warranty: The HEPA filtration system shall be warranted by the manufacturer including parts and labor.

PART 2 PRODUCTS

2.1 EQUIPMENT

A. HEPA filter system consisting of an insulated cabinet for housing prefilter, intermediate filter, and HEPA filter sections. The system shall be designed for outdoor service. The cabinet shall provide side access for filter replacement. The cabinet, doors, and seals shall be designed to seal against 12" wc positive pressure. Static pressure taps, and magnehelics gages shall be provided for reading differential pressure across each filter bank. Filter system shall be designed to allow on-line maintenance of redundant filter bank.

B. Insulation: 2" thick mineral wool, 4 lb density

C. Collection Efficiency: The overall collection efficiency of the system shall

000710

exceed 99.97 percent at the mass diameter of 0.3 microns and particle density of 120 lbs/ft^3.

D. Materials: Manufacturer's selection

E. Welding: All weld joints and seams shall be continuously welded. All weld joints shall be visually inspected for cracks, underfill, incomplete fusion, overlaps, surface porosity, gas pockets, crevices, crater pits and depressions. All joints and seams shall be ground smooth, and all burrs and sharp edges removed. All welding procedures, welders and welder operators shall be qualified in accordance with ASME Boiler and Pressure Vessel Code, Section IX.

F. All equipment shall be provided with lifting and hold down lugs.

G. Static pressure taps shall be provided to check pressure drop across the system.

H. Equipment/structural design shall provide for loads as specified below:

1. Wind load: 80 mph basic wind speed
   Exposure "C"
   Importance Factor 1.15
2. Seismic load: Seismic Zone 1 and Importance Factor 1.25. W (total seismic load) shall include all normal operating contents, piping and attachments.
3. Shop drawings shall state the vertical loads and lateral forces used (wind and seismic) in the design.

2.2 FABRICATION

A. Prior to shipment, the equipment shall be cleaned of all dirt, dust, grease, grime, weld spatter, and other foreign materials. All burrs and sharp edges shall be ground smooth. Exterior surfaces of steel components shall be primed and painted in accordance with Section 09900 - Painting or the manufacturer's standard finish with IT approval. Areas to be insulated shall have support rings as per Section 15250 - Insulation.

2.3 LABELING

A. Each item shall have a manufacturer's standard nameplate permanently attached at a location which is easily readable. The nameplate shall contain the following information, as applicable:

1. Item description.
2. Item number/Tag number.
3. Manufacturer's name.
4. Purchase order number.
5. Date of manufacture.
6. Capacity.

PART 3 EXECUTION

3.1 ERECTION/INSTALLATION

A. Install equipment in accordance with manufacturer's instructions and design drawings.

3.2 FIELD QUALITY ASSURANCE

A. Tests: Perform leak testing to ensure that there are no air leaks in the system. If the results are unsatisfactory, the Subcontractor shall adjust or replace the equipment to meet the specification requirements and retest the equipment.

-End of Section-

DRAFT

000712

ATTACHMENT
SPECIFIC DESIGN CRITERIA

Performance Requirements -

1. System shall be suitable for continuous operation
2. Operating Condition
   a) Volumetric flow rate: 690 - 1,500 ACFM
   b) Temperature: 100 - 140 °F
   c) Relative humidity 43%
   d) Pressure: -12 in. w.c.
   e) Solids loading
      Minimum 0.024 lbs/hr
      Maximum 8 lbs/hr
3. Design Condition:
   a) Volumetric flow rate: 690 ACFM.
      System shall be designed for 1,000 CFM HEPA filters, but 2,000 CFM HEPA will be used
   b) Temperature: 200 °F
   c) Pressure: ±10 in. w.c.
4. Design Pressure: ±20 in. w.c.
5. Particle size distribution:

Particle Size Distribution to HEPA	
Size Range (microns)	Percent in Range
<100	0.004
50	0.037
20	0.507
10	0.734
6	12.233
3	22.860
<1	63.626

6. Refer to Equipment Spec. No. 773481-FX5004.

DRAFT

SECTION 15883

CYCLONE SYSTEM

PART 1 GENERAL

1.1 SECTION INCLUDES

A. Cyclonic Separation System

1.2 RELATED SECTIONS

A. Section 09900 - Painting General
B. Section 13200 - General Tanks and Vessels
C. Section 15250 - Insulation

1.3 REFERENCES, CODES, AND STANDARDS

A. American Society of Mechanical Engineers (ASME):
   1. ASME Boiler and Pressure Vessel Code (BPVC), Section IX.

B. American Society for Testing and Materials (ASTM):
   1. ASTM A36/A36M Standard Specification for Structural Steel.

C. American Welding Society (AWS):

D. American Society of Civil Engineers (ASCE)

E. Uniform Building Code (UBC)

1.4 SYSTEM DESCRIPTION

A. Design Requirements

The cyclonic separation system will be required to remove particulate matter from the exhaust gas of the rotary dryer.

1.5 SUBMITTALS

A. Shop Drawings: Indicate dimensions; sizes; weights and point loadings; material thickness, and locations, sizes.

B. Product Data: Provide data indicating rated capacities and accessories.

C. Manufacturer's Installation Instructions: Indicate assembly and installation instructions sufficient to facilitate efficient assembly.

D. Design Calculations: For material thickness and supports for wind, seismic and snow loadings, for determination of diameters and entry dimensions, for evaluation of wear and erosion in cylinders, for determination of effective number of turns prior to discharge.

E. Operation and Maintenance Data: Include operation and maintenance instructions and spare parts list. (10 copies)

F. Certificate: Certify that the equipment meets or exceeds the requirements of this specification.

G. Spare parts list for 1-year and 5-year operation.

1.6 DELIVERY, STORAGE AND HANDLING

A. Store in a clean, dry place and protect from weather prior to shipment. Provide protection from weather and damage during transit.

B. Loose items, if any, shall be tagged and delivered in a standard commercial package.

1.7 WARRANTY

A. Warranty: The cyclonic separator system shall be warranted by the manufacturer including parts and labor.

PART 2 PRODUCTS

2.1 EQUIPMENT

A. Manufacturers
   1. Entech Environmental Systems, Inc.
   2. Flex-Kleen Corp.
   3. Beckhart & Hiester, Inc.
   4. Other Approved by IT.

B. A Cyclone Separator System consisting of two single cyclones configured for separate inlets. The diameter of each cyclone will be sized to accommodate the set of operating conditions and flow rates attached to this specification.

000716

C. Dust Transport: Each cyclone will be equipped with an airtight rotary valve which will be designed to mate with a screw conveyor to be supplied by others.

D. Collection Efficiency: The overall collection efficiency of the system shall exceed 90 percent at the mass mean diameter of 12 microns and particle density of 120 lbs/ft^3.

E. Materials: Manufacturer's selection of a hardened steel for abrasive dust service. Flanged connections shall be 150 lb. class. Structural steel supports shall be in accordance with ASTM A36/A36M.

F. Welding: Shall be in accordance with ASME BPVC Section IX and AWS.

H. All equipment shall be provided with lifting and hold down lugs.

I. Static pressure taps shall be provided to check the pressure drop across the system and calibrate the control system pressure transducers.

J. Equipment/structural design shall provide for loads as specified below:
   1. Platforms and walkways, live load: 75 psf.
   2. Wind load: 80 mph basic wind speed
      Exposure "C"
      Importance Factor 1.15
   3. Seismic load: Seismic Zone 1 and Importance Factor 1.25. W (total seismic load) shall include all normal operating contents, piping and attachments.
   4. Shop drawings shall state the vertical loads and lateral forces used (wind and seismic) in the design.

2.2 FABRICATION

A. Prior to shipment, the equipment shall be cleaned of all dirt, dust, grease, grime, weld spatter, and other foreign materials. All burrs and sharp edges shall be ground smooth. Exterior surfaces of steel components shall be primed and painted in accordance with Section 09900 - Painting General or the manufacturer's standard finish with IT approval. Open-end connections shall be sealed to prevent the entrance of foreign material. Areas to be insulated shall have support rings per Section 15250 - Insulation.

2.3 LABELING

A. Each item shall have a manufacturer's standard nameplate permanently attached at a location which is easily readable. The nameplate shall contain the following information, as applicable:
   1. Item description.
   2. Item number/Tag number.
   3. Manufacturer's name.
   4. Purchase order number.
   5. Date of manufacture.
   6. Capacity.

Part 3 EXECUTION

3.1 ERECTION/INSTALLATION

A. Install equipment in accordance with manufacturer's instructions and design drawings.

3.2 FIELD QUALITY ASSURANCE

A. Tests: Perform leak testing to ensure that there are no air leaks in the cyclone system. Perform pressure drop and solids removal testing across the cyclone system to insure conformance with this specification. If the results are unsatisfactory, the Subcontractor shall adjust or replace the equipment to meet the specification requirements and retest the equipment.

-End of Section-

000718

Attachment
Specific Design Criteria

Performance Requirements -

1. System shall be suitable for continuous operation
2. Inlet Conditions (for each cyclone):
   a. Operating Condition 1
      1) Mass flow rate: 10,400 lbs/hr
      2) Temperature: 350 °F
      3) Solids 1,400 lbs/hr

3. Particulate Removal Requirement
   a. Solids removal: 620 lbs/hr
   b. Pressure drop across system not to exceed 3 in. w.c.
4. Design Pressure: 5 psig.
5. Particle size distribution:

Particle Size Distribution of Rotary Dryer Carryover		
Size Range (microns)	Cumulative Percent Less Than	Percent in Range
<100	100	17
50	83	20
20	63	16
10	47	14
6	33	16
3	17	11
<1	6	6

3. Refer to Equipment Spec. No. 773481-S5001.

DRAFT

000720

SECTION 15885

CYCLONE TRANSFER SCREW

PART 1 GENERAL

1.1 SECTION INCLUDES

A. Cyclone Transfer Screw

1.2 RELATED SECTIONS

A. Section 09900 - Painting General
B. Section 13310 - Noise Level Specification
C. Section 15270 - Motors
D. Section 15250 - Insulation
E. Division 16 - Electrical

1.3 REFERENCES, CODES, AND STANDARDS

A. American Society of Mechanical Engineers (ASME) :
   1. ASME Boiler and Pressure Vessel Code (BPVC), Section IX.

B. American Society for Testing and Materials (ASTM):
   1. ASTM A36/A36M Standard Specification for Structural Steel.

C. American Welding Society (AWS):

D. American Society of Civil Engineers (ASCE)

E. Uniform Building Code (UBC)

1.4 SYSTEM DESCRIPTION

A. The cyclone transfer screw conveyor will convey hot, dry, fine particulate collected from the cyclone separator and convey it to a single discharge point. The cyclone is the first stage particulate collection of the gas cleaning system on an indirect fired rotary dryer. The overall length of the conveyor is approx. 15 to 30 feet. A double dump valve will be located at the discharge of the cyclone. The screw conveyor will discharge back into the drag flight conveyor of the rotary dryer to be blended with dried material.

1.5 SUBMITTALS

A. Shop Drawings: Indicate dimensions; sizes; weights and point loadings; material thickness, and locations, sizes.

B. Product Data: Provide data indicating rated capacities and accessories.

C. Manufacturer's Installation Instructions: Indicate assembly and installation instructions sufficient to facilitate efficient assembly.

D. Design Calculations: For material thickness and supports for wind and seismic loadings, for determination of screw diameter, loading and horsepower.

E. Operation and Maintenance Data: Include operation and maintenance instructions and spare parts list. (10 copies)

F. Certificate: Certify that the equipment meets or exceeds the requirements of this specification.

G. Spare parts list for 1 year and 5 year operation.

1.6 DELIVERY, STORAGE AND HANDLING

A. Store in a clean, dry place and protect from weather prior to shipment. Provide protection from weather and damage during transit.

B. Loose items, if any, shall be tagged and delivered in a standard commercial package.

1.7 WARRANTY

A. Warranty: The Cyclone Transfer Screw shall be warranted by the manufacturer including parts and labor.

PART 2 PRODUCTS

2.1 EQUIPMENT

A. Cyclone Transfer Screw Conveyor - The conveyor will convey hot, dry, fine particulate collected from the cyclone separator and discharge it to a single discharge point. The conveyor shall be insulated to prevent condensation in the screw conveyor (refer to section 15250).

B. Air Lock - Double dump valves located on the cyclone discharge. Under normal operating conditions the valve will seal against a negative pressure at the valve inlet and will discharge to atmospheric pressure.

C. Materials: Manufacturer's selection of a hardened steel for abrasive dust service. Flanged connections shall be 150 lb class. Structural steel supports shall be in accordance with ASTM A36/A36M.

D. Welding: Shall be in accordance with ASME BPVC Section IX and AWS.

E. Performance Requirements -
   1. System shall be suitable for continuous operation
   2. System shall be capable of handling a wide range of particle sizes

F. All equipment shall be provided with lifting and hold down lugs.

G. Equipment/structural design shall provide for loads as specified below:
   1. Platforms and walkways, live load: 75 psf.
   2. Wind load: 80 mph basic wind speed
      Exposure "C"
      Importance Factor 1.15.
   3. Seismic load: Use provisions of the Uniform Building Code, using Seismic Zone 1 and Importance Factor 1.25. W (total seismic load) shall include all normal operating contents, piping and attachments.
   4. Shop drawings shall state the vertical loads and lateral forces used (wind and seismic) in the design.

2.2 FABRICATION

A. Prior to shipment, the equipment shall be cleaned of all dirt, dust, grease, grime, weld spatter, and other foreign materials. All burrs and sharp edges shall be ground smooth. Exterior surfaces of steel components shall be primed and painted in accordance with Section 09900 - Painting or the manufacturer's standard finish with IT approval. Open-end connections shall be sealed to prevent the entrance of foreign material. Areas to be insulated shall have support rings as per Section 15250 - Insulation.

2.3 LABELING

A. Each item shall have a manufacturer's standard nameplate permanently attached at a location which is easily readable. The nameplate shall contain the following information, as applicable:

1. Item description.
2. Item number/Tag number.
3. Manufacturer's name.
4. Purchase order number.
5. Date of manufacture.
6. Capacity.

PART 3 EXECUTION

3.1 ERECTION/INSTALLATION

A. Install equipment in accordance with manufacturer's instructions and design drawings.

3.2 FIELD QUALITY ASSURANCE

A. Tests: Perform leak testing at temperature to ensure that there are no air leaks in the conveyor system. If the results are unsatisfactory, the Subcontractor shall adjust or replace the equipment to meet the specification requirements and retest the equipment.

-End of Section-

ATTACHMENT
SPECIFIC DESIGN CRITERIA

Criterion	*Specification*
General	Continuous operation
Mass Flow Rate	600 to 1,200 lbs/hr
Temperature	700 °F
Design Pressure	Atm/Normal operating pressure is -7 iwc
Particle Size Distribution	(See below)

Particle Size Distribution of Rotary Dryer Carryover		
Size Range (microns)	Cumulative Percent Less Than	Percent in Range
<100	100	17
50	83	20
20	63	16
10	47	14
6	33	16
3	17	11
<1	6	6

Refer to Equipment Spec. No. 773481-H5001 & 773481-H5002.

DRAFT

SECTION 15930

SPRAY QUENCH

PART 1 GENERAL

1.1 SECTION INCLUDES

A. Subcool Spray Quench for the condensation and removal of water vapor from the exhaust gases of the rotary dryer.

1.2 RELATED SECTIONS

A. Section 09900 - Painting General
B. Section 13200 - General Tanks and Vessels
C. Section 15050 - Piping and Accessories
D. Section 16900 - Instrumentation and Controls
E. Division 16 - Electrical.

1.3 REFERENCES, CODES, AND STANDARDS

A. American Society for Testing and Materials (ASTM):
   1. ASTM A36/A36M - Standard Specification for Structural Steel.

B. American Welding Society (AWS)

C. Uniform Building Code (UBC).

1.4 SYSTEM DESCRIPTION

A. Design Requirements

The spray quench system will be required to quench, remove water vapor and particulate carryover from the exhaust gas of the rotary dryer.

1.5 SUBMITTALS

A. Shop Drawings: Indicate dimensions; sizes; weights and point loadings; material thickness, and locations, sizes.

B. Product Data: Provide data indicating rated capacities and accessories.

C. Manufacturer's Installation Instructions: Indicate assembly and installation instructions sufficient to facilitate efficient assembly.

D. Design Calculations: For material thickness and supports for wind, seismic and snow loadings. Calculations shall be provided for determination of diameter of the quench chamber, the design and geometry of packing material (if applicable), drain size.

E. Operation and Maintenance Data: Include operation and maintenance instructions and spare parts list (10 copies).

F. Certificate: Certify that the equipment meets or exceeds the requirements of this specification.

G. Spare parts list for one year and five year operation.

1.6 DELIVERY, STORAGE AND HANDLING

A. Store in a clean, dry place and protect from weather prior to shipment. Provide protection from weather and damage during transit.

B. Loose items, if any, shall be tagged and delivered in a standard commercial package.

1.7 WARRANTY

A. Warranty: The Quench and its accessory components shall be warranted by the manufacturer including parts and labor.

PART 2 PRODUCTS

2.1 EQUIPMENT

A. Manufacturers
   1. Atomizing Systems, Inc.
   2. Other approved by IT.

B. The gas stream exiting the rotary dryer must be quenched to remove water vapor, particulate carryover and large molecular weight organic species. The quenching will be accomplished through the use of a spray quench chamber. The quench chamber shall be designed so that water sprays inject into the quenching chamber. The injected water will collect heat from the gas stream, and exit through a heat exchanger. The heat exchanger will remove the collected heat and return the water for recirculation into the quench chamber. The heat transferred in the heat exchanger will be released to the atmosphere by a cooling tower.

000728

The Exterior of the quench chamber will be constructed of carbon steel or other material suitable for this application. The interior surfaces shall be constructed of an appropriate material for this application, and shall be resistant to high temperature water vapor, acid gas corrosion and particulate abrasion.

The quench shall be designed with an entrance duct in which multiple nozzles will be mounted to provide initial cooling of the gas stream as it enters the quench (optional). The quench shall be designed to operate with a nominal pressure drop of not more than 2" w.c. The diameter and length of the quenching chamber shall be sized to allow sufficient residence time to transfer the sensible heat from entering steam into the water sprays.

The quench shall be designed so that fluids can be drained for winterization and maintenance. The quench chamber shall be equipped with access doors for maintenance and repair. The access doors shall measure at a minimum 3' x 3'.

C. Liquid Discharge: The quench will incorporate a drain designed to resist clogging and allow for manual flushing as required to keep the drain path free of buildup.

D. Quenching Capacity: The Spray Quench shall be capable of sub-cooling the gas stream by removing both latent and sensible heat from entering steam. The system will be capable to recirculating water into the spray nozzles for the purpose of quenching the gas stream and providing continuous flushing of the interior surfaces.

E. Materials: manufacturer's selection of materials for the frame and internals shall be resistant to chloride salts, acid gas concentrations and organic compounds. Flanged connections shall be 150 lb class. Structural steel supports shall be in accordance with ASTM A36/A36M.

F. Welding: Shall be in accordance with ASME BPVC Section IX and AWS.

G. Performance Requirements -
   1. System shall be suitable for continuous operation.
   2. See attachment for specific performance requirements.

H. All equipment shall be provided with lifting and hold down lugs.

I. Static pressure taps shall be provided to check the pressure drop across the system.

J. Equipment/structural design shall provide for loads as specified below:
   1. Platforms and walkways, live load: 75 psf.
   2. Seismic load: Use provisions of the Uniform Building Code, using Seismic Zone 1 and Importance Factor 1.25. W (total seismic load) shall include all normal operating contents, piping and attachments.
   3. Shop drawings shall state the vertical loads and lateral forces used (wind and seismic) in the design.

2.2 FABRICATION

A. Prior to shipment, the equipment shall be cleaned of all dirt, dust, grease, grime, weld spatter, and other foreign materials. All burrs and sharp edges shall be ground smooth. Exterior surfaces of steel components shall be primed and painted in accordance with the manufacturer's standard finish. Open-end connections shall be sealed to prevent the entrance of foreign material.

2.3 LABELING

A. Each item shall have a manufacturer's standard nameplate permanently attached at a location which is easily readable. The nameplate shall contain the following information, as applicable:
   1. Item description.
   2. Item number/tag number.
   3. Manufacturer's name.
   4. Purchase order number.
   5. Date of manufacture.
   6. Capacity.

PART 3 EXECUTION

3.1 ERECTION/INSTALLATION

A. Install equipment in accordance with manufacturer's instructions and design drawings.

3.2 FIELD QUALITY ASSURANCE

A. Tests: Perform leak testing to quantify the amount of in leakage during normal operation. If the results are unsatisfactory, the Subcontractor shall adjust or replace the equipment to meet the specification requirements and retest the equipment.

-End of Section-

DRAFT

ATTACHMENT
SPECIFIC DESIGN CRITERIA

Criterion	*Specification*
General	
Spray nozzle recirculation flow rate	1,600 gpm (minimum)
Heat transfer rate from steam to water sprays	24 MMBtu/hr
Design pressure	+/- 2 psig
Inlet	
Mass flow rate	17,700 lbs/hr
Volumetric flow rate	7,700 to 17,000 ACFM @ 225°F
Temperature	180 to 225°F
Solids	160 lbs/hr
Semi-volatile organics	35 lbs/hr
Humidity	80% by volume @ inlet temperature
Outlet	
Mass flow rate	2,500 lbs/hr
Volumetric flow rate	600 to 1,200 ACFM @ 100°F
Temperature	100 to 180°F
Solids	5 lbs/hr
Semi-volatile organics	20 lbs/hr
Humidity	Saturated at outlet temperature

Refer to Equipment Spec. No.773481-G5004
773481-G5005
773481-G5006
773481-G5007
773481-T5002
773481-V5002
773481-VX5002

000732

SECTION 15933

SPRAY SCRUBBER

PART 1 GENERAL

1.1 SECTION INCLUDES

A. Spray Scrubber for the condensation and removal of large particulate from the exhaust gases of the rotary dryers.

1.2 RELATED SECTIONS

A. Section 09900 - Painting General
B. Section 13200 - General Tanks and Vessels
C. Section 15050 - Piping and Accessories
D. Section 16900 - Instrumentation and Controls
E. Division 16 - Electrical.

1.3 REFERENCES, CODES, AND STANDARDS

A. American Society for Testing and Materials (ASTM):
   1. ASTM A36/A36M - Standard Specification for Structural Steel.

B. American Welding Society (AWS)

C. Uniform Building Code (UBC).

1.4 SYSTEM DESCRIPTION

A. Design Requirements

The spray scrubber system will be required to quench, remove water vapor and large particulate carryover from the exhaust gas of the rotary dryer.

1.5 SUBMITTALS

A. Shop Drawings: Indicate dimensions; sizes; weights and point loadings; material thickness, and locations, sizes.

B. Product Data: Provide data indicating rated capacities and accessories.

C. Manufacturer's Installation Instructions: Indicate assembly and installation instructions sufficient to facilitate efficient assembly.

D. Design Calculations: For material thickness and supports for wind, seismic and snow loadings. Calculations shall be provided for determination of diameter of the chamber, the design and geometry of packing material (if applicable), drain size.

E. Operation and Maintenance Data: Include operation and maintenance instructions and spare parts list (10 copies).

F. Certificate: Certify that the equipment meets or exceeds the requirements of this specification.

G. Spare parts list for one year and five year operation.

1.6 DELIVERY, STORAGE AND HANDLING

A. Store in a clean, dry place and protect from weather prior to shipment. Provide protection from weather and damage during transient.

B. Loose items, if any, shall be tagged and delivered in a standard commercial package.

1.7 WARRANTY

A. Warranty: The Scrubber and its accessory components shall be warranted by the manufacturer including parts and labor.

PART 2 PRODUCTS

2.1 EQUIPMENT

A. Manufacturers
   1. Atomizing Systems, Inc.
   2. ABB Inc.
   3. Other approved by IT.

B. The gas stream exiting the rotary dryer must be scrubbed to remove water vapor, large particulate carryover and large molecular weight organic species. This will be accomplished through the use of a spray scrubber contactor chamber. The chamber shall be designed so that water sprays inject into the scrubber chamber. The injected water will collect heat, particulate and organics from the gas stream, and will be blowndown to the process blowdown pretreatment system.

000734

The Exterior of the scrubber chamber will be constructed of carbon steel or other material suitable for this application. The interior surfaces shall be constructed of an appropriate material for this application, and shall be resistant to high temperature water vapor, acid gas corrosion and particulate abrasion.

The scrubber shall be designed to operate with a nominal pressure drop of not more than 2" w.c. The diameter and length of the scrubber chamber shall be sized to allow sufficient residence time to transfer the sensible heat from entering steam into the water sprays.

The scrubber sump shall be designed so that fluids can be drained for winterization and maintenance. The scrubber sump shall be equipped with access doors for maintenance and repair. The access doors shall measure at a minimum 3' x 3'.

C. Liquid Discharge: The scrubber will incorporate a drain designed to resist clogging and allow for manual flushing as required to keep the drain path free of buildup.

D. Capacity: The scrubber shall be capable of bringing the entering gas stream to adiabatic saturation through the removal of latent heat from entering steam. The system will be capable to recirculating water into the spray nozzles for the purpose of quenching and scrubbing the gas stream and providing continuous flushing of the interior surfaces.

E. Materials: manufacturer's selection of materials for the frame and internals shall be resistant to chloride salts, acid gas concentrations and organic compounds. Flanged connections shall be 150 lb class. Structural steel supports shall be in accordance with ASTM A36/A36M.

F. Welding: Shall be in accordance with ASME BPVC Section IX and AWS.

G. Performance Requirements -
   1. System shall be suitable for continuous operation.
   2. See attachment for specific performance requirements.

H. All equipment shall be provided with lifting and hold down lugs.

I. Static pressure taps shall be provided to check the pressure drop across the system.

J. Equipment/structural design shall provide for loads as specified below:
   1. Platforms and walkways, live load: 75 psf.

2. Seismic load: Use provisions of the Uniform Building Code, using Seismic Zone 1 and Importance Factor 1.25. W (total seismic load) shall include all normal operating contents, piping and attachments.
3. Shop drawings shall state the vertical loads and lateral forces used (wind and seismic) in the design.

2.2 FABRICATION

A. Prior to shipment, the equipment shall be cleaned of all dirt, dust, grease, grime, weld spatter, and other foreign materials. All burrs and sharp edges shall be ground smooth. Exterior surfaces of steel components shall be primed and painted in accordance with the manufacturer's standard finish. Open-end connections shall be sealed to prevent the entrance of foreign material.

2.3 LABELING

A. Each item shall have a manufacturer's standard nameplate permanently attached at a location which is easily readable. The nameplate shall contain the following information, as applicable:
1. Item description.
2. Item number/tag number.
3. Manufacturer's name.
4. Purchase order number.
5. Date of manufacture.
6. Capacity.

PART 3 EXECUTION

3.1 ERECTION/INSTALLATION

A. Install equipment in accordance with manufacturer's instructions and design drawings.

3.2 FIELD QUALITY ASSURANCE

A. Tests: Perform leak testing to quantify the amount of in leakage during normal operation. If the results are unsatisfactory, the Subcontractor shall adjust or replace the equipment to meet the specification requirements and retest the equipment.

-End of Section-

000736

ATTACHMENT
SPECIFIC DESIGN CRITERIA

Criterion	*Specification*
General	
Spray nozzle recirculation flow rate	200 gpm (minimum)
Heat transfer rate from steam to water sprays	4 MMBtu/hr
Static design pressure	-40 in. w.c.
Inlet	
Mass flow rate	20,000 lbs/hr
Volumetric flow rate	10,000 to 20,000 ACFM @ 345°F
Temperature	345 to 575°F
Solids	1,600 lbs/hr
Semi-volatile organics	100 lbs/hr
Humidity	80% by volume @ inlet temperature
Outlet	
Mass flow rate	17,700 lbs/hr
Volumetric flow rate	7,700 to 17,700 ACFM @ 207°F
Temperature	180 to 225°F
Solids	160 lbs/hr
Semi-volatile organics	35 lbs/hr
Humidity	Saturated at outlet temperature

Refer to Equipment Spec. No.773481-G5001
773481-G5002
773481-G5003
773481-V5001
773481-T5001
773481-VX5001
773481-WX5001

DRAFT

SECTION 15934

WET ELECTROSTATIC PRECIPITATOR

PART 1 GENERAL

1.1 SECTION INCLUDES

A. Wet electrostatic precipitator (WESP) system for the removal of sub-micron particulate and organic aerosols from the exhaust gas stream of the rotary dryer.

1.2 RELATED SECTIONS

A. Section 09900 - Painting General
B. Section 13200 - General Tanks and Vessels
C. Section 15050 - Piping and Accessories
D. Section 15173 - Motors
E. Section 15950 - Instrumentation and Controls
F. Division 16.

1.3 REFERENCES, CODES, AND STANDARDS

A. American Society for Testing and Materials (ASTM):
   1. ASTM A36/A36M Standard Specification for Structural Steel.

B. American Welding Society (AWS)

C. National Electric Code (NEC)

D. American Society of Mechanical Engineers (ASME)

E. American Society of Civil Engineers (ASCE)

F. Uniform Building Code (UBC).

1.4 SYSTEM DESCRIPTION

A. Design Requirements
The WESP system will be required to remove particulate matter and organic aerosols from the exhaust gas of the rotary dryer.

1.5 SUBMITTALS

A. Shop Drawings: Indicate dimensions; sizes; weights and point loadings; material thickness, and locations, sizes.

B. Product Data: Provide data indicating rated capacities and accessories.

C. Manufacturer's Installation Instructions: Indicate assembly and installation instructions sufficient to facilitate efficient assembly.

D. Design Calculations: For material thickness and supports for wind, seismic and snow loadings. Calculations shall be provided for determination of plate area, collector length, overall collection efficiency, and drift velocity.

E. Operation and Maintenance Data: Include operation and maintenance instructions and spare parts list. (10 copies)

F. Certificate: Certify that the equipment meets or exceeds the requirements of this specification.

G. Spare parts list for one year and five year operation.

1.6 DELIVERY, STORAGE AND HANDLING

A. Store in a clean, dry place and protect from weather prior to shipment. Provide protection from weather and damage during transient.

B. Loose items, if any, shall be tagged and delivered in a standard commercial package.

1.7 WARRANTY

A. Warranty: The WESP and its accessory components shall be warranted by the manufacturer including parts and labor.

PART 2 PRODUCTS

2.1 EQUIPMENT

A. Manufacturers
   1. FLS miljo Inc. (AirPol)
   2. ABB Inc.
   3. Beltran Inc.

000740

B. The WESP will be housed in, at a minimum, 3/16" plate with appropriate material of construction for this application. The WESP will be supplied with bolted access doors, one (1) in the upper section for access to the high voltage frame and flushing header and one (1) in the lower section for access to the bottom drain. Each door is to include safety key interlocks and measure 3 foot square, at a minimum.

A WESP inlet gas distribution device is required to perform distribution and straightening of the gases prior to entering the collecting tubes. Straightening only devices such as egg crating, turning vanes and/or cyclonic action devices are not acceptable.

The WESP internal high voltage support frame shall span the insulators located in the insulator compartments and shall be designed to suspend the rigid discharge electrodes into each collecting tube. The construction shall be structural tubing and material selection shall be appropriate for this application and include all necessary discharge electrode alignment hardware.

The discharge electrodes shall be rigid type, meaning no bottom weights, lower alignment and/or lower support frame is required. Corona intensity devices with proper size and spacing to prevent current suppression and/or electrical interference shall be placed along the length of each discharge electrode.

The quantity, diameter and effective length of the collecting electrodes shall be determined by the required removal efficiency as stated in the specifications. The selection is to also include the purge air volume in addition to the inlet process gas volume.

The collecting electrodes shall be round tubes and bundled together in each WESP module. The geometric relationship between the collecting tube and discharge electrode shall be uniform, the gap between the tubes and discharge electrodes will be equal dimensions on all sides.

The WESP outlet is to be designed to eliminate re-entrainment of collected material during all phases of operation, i.e: normal operation and intermittent flushing. The use of mesh pad mist eliminators is not acceptable.

The outlet is to include a bolted door for access to the bottom drain and for checking electrode alignment. Each door is to include safety key interlocks and measure a minimum 3-foot square.

Bolted construction is required for the WESP vessel shell sections and the internals are to be installed prior to shipment, thereby, resulting in a flange to flange module delivered to the site.

Each WESP module is to include a flushing system for removal of the collected material on an intermittent or continuous basis. The flushing system is to include an internal header with hydraulic spray nozzles, field valving consisting of isolation ball valve/pressure regulator/ solenoid valve/pressure gauge and flip-flop type timer or timing PLC logic located in the 120 V control panel. The spray nozzles are to be strategically located for full coverage of each collecting internal surface area.

The flushing operation shall be automatic with a manual over-ride and the timer or timing logic is to be field adjustable in frequency and duration. Flushing mode of operation is to be on-line meaning the high voltage is to remain energized.

The transformer rectifier (T/R) shall be properly sized to generate the proper secondary DC voltage (kV) and current (mA) for the WESP module. One (1) T/R is to be supplied per module. The T/R supplier shall be a U. S. based manufacturer maintaining control over all aspects of the design, production, service and spare parts. The T/R set shall be Silicone or Mineral Oil liquid immersed type suitable for outdoor installation.

All electrical connections to the T/R set shall terminate in either a NEMA 4 or NEMA 3R low voltage junction box which is to be mounted on the side of the tank. A NEMA 3R box shall be used when the current limiting reactor is located in the low voltage junction box in order to provide adequate ventilation/cooling.

All WESP vessel flanges and high voltage bus flanges shall include two (2) stainless steel straps or clips. Each strap or clip must bolt across the mating flanges. Paint removal is required at all areas where the flanges are painted.

The WESP supplier shall include a NEMA 4 control panel completely assembled, tested and clearly labeled. The control panel shall be designed to incorporate the entire WESP 120 V control logic/sequence, however, should the scope of supply include additional gas cleaning equipment, the supplier may include other logic/sequence operations in one (1) panel.

The 120 V control panel shall include, at a minimum, the following:

1. Individual insulator temperature controllers with indication.

000742

2. Automatic flushing timer with adjustable frequency and duration capability. Flushing mode of operation indication shall also be supplied.
3. Irrigation system energization/de-energization with indication lights.
4. Purge blower energization/de-energization with indication lights.
5. Indication of high voltage status.
6. Visual and audible alarm indication due to failure of critical items, i.e: purge blower, T/R, recycle pump, etc...
7. Audible alarm silence without the loss of the visual alarm indication.
8. Alarm reset.

C. Liquid Discharge: The WESP will incorporate a drain designed to resist clogging and allow for manual flushing as required to keep the drain path free of buildup.

D. Collection Efficiency: The overall collection efficiency of the system shall exceed 99.9 percent across the entire particle size distribution.

E. Materials: manufacturer's selection of materials for the frame and internals shall be resistant to chloride salts. Flanged connections shall be 150 lb class. Structural steel supports shall be in accordance with ASTM A36/A36M.

F. Welding: Shall be in accordance with ASME BPVC Section IX and AWS.

G. All equipment shall be provided with lifting and hold down lugs.

H. Static pressure taps shall be provided to check the pressure drop across the system.

I. Equipment/structural design shall provide for loads as specified below:
1. Roof, live load: 20 psf
2. Platforms and walkways, live load: 75 psf.
3. Wind load: 80 mph basic wind speed
   Exposure "C"
   Importance Factor 1.15
4. Seismic load: Use provisions of the Uniform Building Code, using Seismic Zone 1 and Importance Factor 1.25. W (total seismic load) shall include all normal operating contents, piping and attachments.
5. Shop drawings shall state the vertical loads and lateral forces used (wind and seismic) in the design.

2.2 FABRICATION

A. Prior to shipment, the equipment shall be cleaned of all dirt, dust, grease, grime, weld spatter, and other foreign materials. All burrs and sharp edges

shall be ground smooth. Exterior surfaces of steel components shall be primed and painted in accordance with Section 09900 - Painting or the manufacturer's standard finish approved by IT. Open-end connections shall be sealed to prevent the entrance of foreign material.

2.3 LABELING

A. Each item shall have a manufacturer's standard nameplate permanently attached at a location which is easily readable. The nameplate shall contain the following information, as applicable:
   1. Item description.
   2. Item number/Tag number.
   3. Manufacturer's name.
   4. Purchase order number.
   5. Date of manufacture.
   6. Capacity.

PART 3 EXECUTION

3.1 ERECTION/INSTALLATION

A. Install equipment in accordance with manufacturer's instructions and design drawings.

3.2 FIELD QUALITY ASSURANCE

A. Tests: Perform leak testing to quantify the amount of in leakage during normal operation. Perform pressure drop and solids removal testing across the WESP to insure conformance with this specification. If the results are unsatisfactory, the Subcontractor shall adjust or replace the equipment to meet the specification requirements and retest the equipment.

-End of Section-

000744

ATTACHMENT
Performance Requirements

1. System shall be suitable for continuous operation
2. Inlet Conditions:
   a. 1) Mass flow rate: 15,275 lbs/hr
      2) Temperature: 80°F
      3) Solids: 7.5 lbs/hr
      4) Organic aerosol: 82.7 lb/hr
      5) Volumetric flow rate: 3,600 acfm
3. Particulate Removal Requirement
   a. Solids removal: 7.5 lbs/hr
   b. Pressure drop across system: not to exceed 2 in. w.c.
4. Design Pressure: -60 in. w.c.
5. Particle size distribution:

Particle Size Distribution of Rotary Dryer Carryover		
Size Range (microns)	Cumulative Percent Less Than	Percent in Range
<100	100	.004
50	99.9+	.037
20	99.8	0.5
10	99.45	0.7
6	98.76	12.2
3	86.56	22.8
<1	63.75	63.6

Refer to Equipment Spec. No 773481-S5004

DRAFT

SECTION 15939

STACK

PART 1 GENERAL

1.1 SECTION INCLUDES

A. General Stacks

1.2 RELATED SECTIONS

A. Section 09900 - Painting General
B. Section 13200 - General Tanks and Vessels
C. Section 13202 - FRP Equipment

1.3 REFERENCES

A. UBC - Uniform Building Code.

B. NFPA 82 - Standard on Incinerators: Waste and Linen Handling Systems and Equipment.

C. UL 441 - Standard for Gas Vents.

1.4 SYSTEM DESCRIPTION

A. Design Requirements

1. The Stack will conduct gases from the burners to the atmosphere.
2. Design stack for windload: 80 mph basic wind speed
   Exposure "C"
   Importance Factor 1.15
   Seismic Load: Seismic Zone 1
   Importance Factor 1.25
3. Materials: CS or FRP
4. Connections: As required for CEM systems and emission testing requirements on Vent Stack. Refer to equipment specification sheets.

1.5 SUBMITTALS FOR REVIEW

A Shop Drawings: Indicate general construction, dimensions, weights, and supports. Submit layout drawings indicating plan view and elevations.

B. Product Data: Provide data including dimensions and weights, and connection requirements.

C. Submit manufacturer's installation instructions: Indicate assembly, support details, and connection requirements.

D. Manufacturer's Certificate: Certify that stack meets or exceeds specified requirements.

1.6 QUALITY ASSURANCE

A. Manufacturer Qualifications: Company specializing in manufacturing the Products specified in this section with minimum three years experience.

B. Installer Qualifications: Company specializing in performing the work of this section with minimum three years experience.

C. Design stack under direct supervision of a Professional Structural Engineer experienced in design of this Work and licensed at the place where the Project is located.

1.7 REGULATORY REQUIREMENTS

A. Emission Testing Requirements on Vent Stack are expected to include the following, as required:

1. Method 5 (M-5) sampling train.
2. Modified Method 5 (MM-5) sampling train.
3. VOST
4. Method 8 sampling train.
5. Method 15 semi-continuous GC.
6. Method 114 for radionuclides and radon.
7. CEM/CAM

000748

PART 2 PRODUCTS

2.1 PERFORMANCE

A. Vent Stack
   1. See Equipment Spec. No. 773481-X5001

PART 3 EXECUTION

3.1 INSTALLATION

A. Install in accordance with manufacturer's instructions.
B. Install concrete inserts for support of stack in coordination with formwork.
C. Level and plumb stack.

-End of Section-

DRAFT

DRAFT

SECTION 15940

THERMAL OXIDIZER

PART 1 GENERAL

1.1 SECTION INCLUDES

A. Thermal Oxidizer system for the removal of residual non-condensable organics from the exhaust gas stream of the rotary dryer.

B. Vent Stack for conveyance of flue gas to the atmosphere.

1.2 RELATED SECTIONS

A. Section 09900 - Painting General
B. Section 13200 - General Tanks and Vessels
C. Section 15050 - Piping and Accessories
D. Section 15950 - Instrumentation and Controls

1.3 REFERENCES, CODES, AND STANDARDS

A. American Society for Testing and Materials (ASTM):
   1. ASTM A36/A36M Standard Specification for Structural Steel.

B. American Welding Society (AWS)

C. National Electric Code (NEC)

D. American Society of Mechanical Engineers (ASME)

E. American National Standards Institute (ANSI)

F. Uniform Building Code (UBC).

G. National Electric Manufacturers Association (NEMA)

H. National Fire Protection Association (NFPA)

I. NFPA 82- Standards on Incinerators: Waste and Linen Handling Systems and Equipment.

J. Ul 441-Standards for Gas Vents.

1.4 SYSTEM DESCRIPTION

A. Design Requirements

1. The Thermal Oxidizer system will be required to remove residual organic vapors from the exhaust gas of the rotary dryer. A Vent Stack will conduct flue gas from the Thermal Oxidizer to the atmosphere

2.	Design for windload:	80 mph basic wind speed Exposure "C" Importance Factor 1.15
	Seismic Load	Seismic Zone 1 Importance Factor 1.25
3.	Materials:	CS and Refractory
4.	Connections	As required for CAM system and emission testing requirements

1.5 PERFORMANCE

A. Refer to Equipment Spec. No. 773481-F5001
773481-G5008
773481-X5001

1.6 SUBMITTALS

A. Shop Drawings: Indicate dimensions; sizes; weights and point loadings; material thickness, and locations, sizes.

B. Product Data: Provide data indicating rated capacities and accessories.

C. Manufacturer's Installation Instructions: Indicate assembly and installation instructions sufficient to facilitate efficient assembly.

D. Design Calculations: For material thickness and supports for wind, seismic and snow loadings. Calculations shall be provided for determination of fuel consumption, power consumption, and heating efficiency.

E. Operation and Maintenance Data: Include operation and maintenance instructions and spare parts list. (10 copies)

F. Certificate: Certify that the equipment meets or exceeds the requirements of this specification.

G. Spare parts list for one year and five year operation.

1.7 DELIVERY, STORAGE AND HANDLING

A. Store in a clean, dry place and protect from weather prior to shipment. Provide protection from weather and damage during transient.

B. Loose items, if any, shall be tagged and delivered in a standard commercial package.

1.8 WARRANTY

A. Warranty: The Thermal Oxidizer, Vent Stack, and accessory components shall be warranted by the manufacturer including parts and labor.

PART 2 PRODUCTS

2.1 FABRICATION

A. Prior to shipment, the equipment shall be cleaned of all dirt, dust, grease, grime, weld spatter, and other foreign materials. All burrs and sharp edges shall be ground smooth. Exterior surfaces of steel components shall be primed and painted in accordance with Section 09900 - Painting or the manufacturer's standard finish approved by IT. Open-end connections shall be sealed to prevent the entrance of foreign material if applicable.

2.3 LABELING

A. Each item shall have a manufacturer's standard nameplate permanently attached at a location which is easily readable. The nameplate shall contain the following information, as applicable:

1. Item description.
2. Item number/Tag number.
3. Manufacturer's name.
4. Purchase order number.
5. Date of manufacture.
6. Capacity.

PART 3 EXECUTION

3.1 ERECTION/INSTALLATION

A. Install equipment in accordance with manufacturer's instructions and design drawings.

B. Install concrete inserts for support of Thermal Oxidizer and Vent Stack in coordination with form work.

C. Level and plumb stack.

-End of Section-

DRAFT

ATTACHMENT
Performance Requirements

1. Thermal Oxidizer and Stack shall be suitable for continuous operation
2. Capacity:

A) Service:	Flue Gas
B) Inlet Flow :	600 acfm
C) Outlet Flow:	4800 acfm
D) Maximum Temperature:	2200°F
E) Operating Temperature:	1600°F
F) Rating:	15 MMBTU/hr
G) Fuel:	Natural Gas
H) Stack Height:	60 feet

DRAFT

DRAFT

SECTION 16900

INSTRUMENTATION AND CONTROL

PART 1 GENERAL

1.1 SECTION INCLUDES

A. This specification describes the instrumentation equipment and installation for skid-mounted and packaged process units and field installed instruments. The work shall include installation of all instruments.

B. The instrumentation system shall be completely installed, wired, tested, and ready for operation after cable and wire connections are made to external power and devices by others.

C. The client-furnished instrumentation drawings are complementary documents to this specification. Any items shown as part of the packaged equipment on those drawings shall be furnished and installed whether itemized in this specification or not.

1.2 RELATED SECTIONS

A. Division 16 - Electrical
Section 16050 - Basic Materials and Methods
B. Section 16111 - Conduit
C. Section 16130 - Boxes
D. Section 16141 - Wiring Devices
E. Section 16160 - Equipment Cabinets and Enclosures
F. Section 16960 - Electrical Testing

1.3 REFERENCES, CODES, AND STANDARDS

Electrical systems on packaged equipment units shall be designed, installed, and tested in accordance with the most recently issued regulations, standards, recommended practices, and/or codes covering the intended application as issued by or contained in the following:

ANSI- (Series C) American National Standards Institute
API - RP500 A, B, C American Petroleum Institute
IEEE- Institute of Electrical and Electronics Engineers
IES - Illuminating Engineering Society

NEC - National Electric Code
NEMA - National Electrical Manufacturers' Association
NESC - National Electrical Safety Code
NFPA - National Fire Protection Association
NETA - National Electrical Testing Association.

Any additional codes, regulations, and/or standards that are specifically referenced in this specification shall also be followed.

In the event of conflict(s) among the various regulations, standards, recommended practices, and/or codes for any application, the most stringent requirement(s) shall apply.

1.4 SUBMITTALS

A. Instrument Equipment List
   1. Contractor shall use IT's tag numbers in all final documentation.
   2. If the Contractor has supplied any instrumentation that is not supplied by IT, the Contractor shall provide documentation for each instrument which includes as a minimum:
      a. Manufacturer
      b. Model number
      c. Scale range
      d. Calibration range
      e. Set point
      f. Process conditions
      g. Electrical area classification rating
      h. Materials of construction
      I. Instruction, installation and maintenance manuals
      j. Spare parts lists.

B. Instrument Tagging
   1. Contractor shall tag all instruments with a 316 stainless steel tag stamped with the IT tag number. The tag shall be affixed to the instrument with stainless steel drive pins or stainless steel wire in such a manner that it need not be removed to install, remove, or service the instrument.

1.7 PREPARATION FOR SHIPMENT

A. Ship Loose Components
   1. All loose components shall be removed, tagged, and packaged for shipment by Contractor prior to shipment. Instructions for reassembly shall be provided.

000758

B. Enclosures

1. Prior to shipment, Contractor shall ensure that all instrumentation conduit connections are tight and that enclosure doors are bolted shut.
2. Instrumentation panels including motor starters, circuit breakers, and control panels shall receive special attention to ensure against damages caused by transit.
3. All enclosures shall have "water guard" desiccant installed prior to shipment in order to minimize corrosion due to moisture for a minimum period of 6 months.

C. Preparation for Shipment

1. Instrumentation and instrumentation equipment subject to damage in transit shall be removed, tagged, and packaged to avoid damage. All openings or cable ends exposed as a result of such removal shall be properly identified and protected for shipment.
2. Conduit openings and cable ends shall be protected with conduit plugs, fittings, or duct tape.
3. Loose instruments shall be packed in shipping crates that are dust tight, moisture resistant, and substantial enough to prevent damage to the equipment from shipment and warehouse handling. Shipping containers shall be clearly marked with the IT instrument tag number.
4. Instruments which are subject to damage during shipping shall be dismounted and packaged in the manufacturer's original shipping container. Shipping containers shall be clearly marked with the IT instrument tag numbers. All separately boxed instruments shall be shown on the bill of lading.

D. Instrument Mounting

1. IT desires to minimize the amount of field installation of packaged instrumentation. The Contractor shall mount, pipe, tube and wire all instruments to the maximum extent possible. Items which cannot be installed for shipping purposes shall be shipped loose for field assembly.

E. Approval for Shipment

1. Approval to ship the unit shall be provided when all acceptance test punch list items have been resolved to the satisfaction of IT.

PART 2 PRODUCTS

2.1 MATERIALS OF CONSTRUCTION

All materials, devices, and equipment used for the electrical systems shall be listed, labeled, and/or certified for the intended application by one or more of the following:

CSA - Canadian Standards Association
FM - Factory Mutual
UL - Underwriters Laboratories, Inc.

2.2 FABRICATION

A. Rigid Conduit

1. Conduits used for electrical installations shall be heavy wall, rigid, steel conduit, which shall bear the UL label. The minimum size conduit used shall be 3/4-inch inside diameter.
2. All threaded conduit and fittings shall be made up tight without exposed threads. Threads shall be coated with an approved metal oxide paint or threaded lubricant for weatherproof joint.
3. Conduits shall be installed parallel with or at right angles to the structural steel. Field-bent conduit shall have a minimum radius of eight times the internal diameter. The radius of bends shall be taken as the radius of the curve of the inner edge of the elbow. The conduit shall maintain a uniform circular cross-section throughout the bends. Standard radius factory made bends are also acceptable.
4. Drains shall be installed at all low points of vertical or long horizontal runs of conduit. All horizontal conduits shall be sloped for drainage. Drains shall be Crouse-Hinds Type ECD15 or IT-approved equal.
5. Fittings and box covers shall be installed with the cover opening in the vertical plane or downward in the horizontal plane. Access and removal of cover openings shall not be blocked by other skid obstructions.
6. Insulating bushings shall be installed to protect wires and cables entering boxes and enclosure except where insulation protection is provided as part of the entrance connection.
7. Unions shall be installed as required to facilitate the removal of equipment for maintenance.
8. Rigid conduit shall be supported in accordance with NEC Article 346-12.
9. There shall be no more than the equivalent of four quarter bends (360 degrees total) between pull points.
10. Conduits shall be swabbed clean prior to pulling wire and cables. A wire lubricant can be used when required to aid pulling of wire and cable. Approved lubricants are Burndy "Slikon" and Ideal "Wire Lube" or "Yellow 77."
11. Conduit entry into j-boxes, control panels, motor starters, and other enclosures shall enter through the bottom of each enclosure to prevent water entry. All unused taps shall be equipped with recessed head conduit plugs. All spare conduit shall be terminated with a coupling and plug, or capped, as required.

000760

12. All conduits shall be spaced a minimum of 12 inches to the side of, or 24 inches above, any hot line, fitting, or vessel above 130°F unless an insulating barrier is provided.

B. Flexible Conduit

1. Liquid-tight flexible metal conduit shall have moisture and oil resistance polyvinyl chloride (PVC) outer jacket extruded over galvanized steel flexible conduit. Conduit fittings shall be Crouse-Hinds type LT or approved equal. The maximum length of flexible conduit shall be 36 inches. Properly sized terminating fittings with ground lugs shall be used on the flexible conduit. A bonding jumper of green insulated THW stranded copper conductor, sized in accordance with Section 250 of the NEC, shall be spiraled around the flexible conduit.
2. Liquid-tight flexible conduit shall be minimum 3/4-inch for power circuits and minimum ½-inch for final connection to solenoid valves, transmitters, and miscellaneous instruments.

C. Wire Installation

1. Sufficient lengths of cable, wire, etc., shall be pulled into the panels, J-boxes, etc., to permit making a neat arrangement. Wire shall be secured in a manner to avoid tension on conductors or terminals. Sharp bends over conduit bushings shall not be permitted. Outer jackets of multi-conductor cables shall be removed as required to properly train and terminate the conductors.
2. Cables and wires shall be identified at each end and in J-boxes with identifying numbers called for on drawings and on conduit and cable schedule.
3. All wire connectors and terminals for instrument wiring shall be of the compression type with nylon insulating sleeves. Terminals shall have spade lugs, unless otherwise approved by the client. Connections shall be made only in approved junction boxes in which terminal blocks have been mounted. Wire nuts shall not be used. Crimped butt spikes shall not be used.
4. All wiring, whether for power or control shall be installed in conduit.
5. Conductors used for power and lighting service shall be No. 12 AWG minimum size. Control circuit conductors shall be No. 14 AWG minimum size. Instrumentation and thermocouple circuits shall be sized in accordance with the instrument or thermocouple manufacturer's recommendations, but in no case shall they be smaller than No. 18 AWG.
6. Separate conduits shall be provided for each of the following electrical systems:
   Power circuits (AC)
   Power circuits (DC)

Control, alarm, and shutdown circuits
Milliamp and/or millivolt instrumentation circuits.

D. Instrumentation Wire
1. Instrumentation signal wire for 4-20 m ADC current loops shall be no. 18 AWG minimum 2-conductor shielded, Belden 8760, or approved equal.
2. All wiring shall be neatly bundled and secured in place after installation.

E. Mounting Hardware
1. Contractor shall install all hardware as required to support panels, junction boxes, enclosures, receptacles, conduit, and cable tray. This hardware shall include one-hole straps, U-bolts, galvanized unistrut, unistrut pipe straps, bolts, nuts, washers, etc.

F. Miscellaneous
1. Wire pulling lubricant shall be used when required to aid pulling of wire and cable. Approved lubricants are Burndy "Slikon" and Ideal "Wire Lube" or "Yellow 77".

2.4 LABELING

A. Wire Color Code
1. Color code for 120 VAC control conductors shall be as follows:
120 VAC control - Yellow
120 VAC hot - Black
120 VAC neutral - White
Ground - Green
2. Color code for instrumentation conductors consisting of 2-conductor shielded cable for 4-20 mADC analog signals shall be as follows:
Positive 24 VDC - Black
Negative 24 VDC - White
3. Color code for 24 VDC power conductors shall be as follows:
Positive 24 VDC - Red
Negative 24 VDC - White
4. Color code for thermocouple extension wire shall be as follow:
Type K:Positive - Yellow
Negative - Red
Type R:Positive - Black
Negative - Red
Type J:Positive - White
Negative - Red

B. Labels

1. All metal enclosed instrumentation devices shall be clearly identified with engraved plastic or stainless steel nameplates securely attached to each enclosure with stainless steel screws.

2. Wire markers shall be Raychem heat shrink or sleeve type, or approved equal.

C. Valve Tagging

1. The following information shall be supplied permanently attached (pinned) and visible when the valve is in service and fully insulated:
   a. Manufacturer's name
   b. Manufacturer's serial number
   c. Maximum body pressure rating
   d. Body material
   e. Bench setting for spring operating range
   f. Trim material and size
   g. Valve action and diaphragm operating pressure range.

D. Instrument Loop Numbering

1. All instruments shall be assigned instrument numbers supplied by IT. These numbers shall be used to identify all instrumentation on specifications, flowsheets, correspondence, location drawings, piping drawings, and electrical drawings.

PART 3 EXECUTION

3.1 GENERAL

A. Installation

1. Instrumentation shall be installed in such a manner as to minimize the detrimental effects of dust, precipitation, sunlight, humidity, and temperature extremes on instrumentation equipment, components, and fittings.
2. Instrumentation shall be installed in such locations and in such a manner as to provide accessibility for adjustments, calibration, replacements, service and repairs, and to reduce chances that equipment may be exposed to damage or excessive heat.

B. Workmanship

1. Contractor shall perform the instrumentation installation with certified instrument technicians skilled in the crafts involved and using proper tools for the work. The work shall be performed in a manner acceptable to IT.

C. Exceptions

1. Contractor shall inform IT of any exceptions taken to these specifications or to referenced codes, standards, or IT drawings. Any exceptions taken to this specification shall be specifically noted in writing.

D. Design Discrepancies

In the event of discrepancies among design documents, the Contractor shall inform IT in writing for a clarification or resolution.

3.2 INSTALLATION REQUIREMENTS

A. Positioners

1. Positioners and their accessories shall be bolted to the actuator top works and tubing connections completed. The tubing and fittings shall be 316 SS. Pneumatic operated positioners shall have an instrument air loading gauge and necessary positioner output gages. Positioners that require supply air regulation shall be furnished complete with filter, pressure regulator (50 to 100 psig inlet pressure) and regulated air pressure gage.

B. Control Valves

1. Control valves shall be installed so that they are readily accessible from grade or platforms. Whenever possible control valves shall be installed with stems oriented vertically above the body.

C. Field Mounting

1. Brackets and posts for instrument mounting shall be designed and located to provide at least 2 feet area access for maintenance from walkways. Instruments shall be mounted in the orientation required by the manufacturer and in compliance with API RP 550 latest edition. Field instruments shall not be mounted on handrails, process equipment or piping.

D. Tubing

1. Tubing shall be stainless steel for single runs and for bundles. Connections shall be made with stainless steel compression fittings as manufactured by Swagelok or approved equal.
2. Instrument air supply tubing shall be 3/8" OD with .035" wall thickness, 316 SS seamless tubing.
3. Close coupled instrument air transmission signals between pneumatic transmitter and controllers shall be 1/4" OD with .035" wall thickness, 316 SS seamless tubing.
4. Instrument air tubing fittings shall be 316 SS compression type, Swagelok or approved equal.

000764

5. Tubing runs shall be installed in raceway or supported in channel. Supporting channel shall be connected to skid structural supports. Equipment and piping systems shall not be used for channel or tubing supports. Plastic, nylon, or other tie wraps shall not be used to support or fasten tubing.
6. Tubing shall be sloped towards the process taps for pressure instruments. The minimum slope is 1/8" to 1/4" per foot. This is intended to eliminate measurement errors due to condensation buildup.

E. Process Connections
1. Process tubing shall be ½" OD with .035" wall thickness, 316 SS seamless tubing. Process tubing fittings shall be 316 SS compression type, Swagelok, or approved equal.

3.3 FIELD QUALITY ASSURANCE

A. Calibration
1. Standard calibration and alignment of all instruments shall be performed by the Contractor after installation on skid. Calibration and alignment will be rechecked after the equipment is installed in the field. Calibration reports shall be included in equipment documentation by Contractor.

3.4 INSPECTION AND TESTING

A. General Requirements
1. Testing of the skid and/or field instrumentation installation by Contractor shall be conducted to determine that instruments, materials, devices, equipment, wiring, and installation meet requirements as outlined in these specifications and per the instrumentation drawings.
2. Testing shall ensure that the instrumentation installation is wired per the instrumentation wiring diagrams and according to applicable codes and customary practices.
3. The following instrumentation equipment, components, and materials shall be tested or inspected as required:
   a. Wire terminations to Control Panels and Remote Terminal Units (RTUs)
   b. Wire terminations to junction boxes
   c. Labels.
4. IT shall have access to inspect the instrumentation work in progress. Contractor shall perform instrumentation installation work in such a manner as to provide accessibility of work in progress.
5. Contractor shall furnish all labor, materials, supplies, and test instruments for conducting tests.

6. IT shall be notified a minimum of 10 days in advance that the instrumentation installation is complete and that the instrumentation system is ready for testing.
7. Contractor shall furnish qualified individuals to perform the test and troubleshoot any problems that may arise.
8. Testing by Contractor shall be performed in the presence of IT Corporation personnel or IT Corporation's representative.
9. Where tests indicate defective materials, installation or wiring, Contractor shall promptly correct the problem.

B. Operational Testing

1. Contractor shall check all terminations for loose connections and ensure that contacts and working parts are correctly aligned and free from dust and foreign matter. This shall be done before any operational tests are performed.
2. Contractor shall provide AC or DC instrumentation power as required and shall perform operational tests of the instrumentation system. Control circuits shall be checked for proper sequencing and operation by use of push buttons and selector switches.
3. Ensure that all legend plates are securely fastened and that inscription agrees with the drawings. Remove incorrect nameplates and replace with correct nameplates.
4. Ensure that all cables and wires are identified with wire markers at each end with identifying numbers as called for on the drawings and on the conduit and cable schedule.
5. Ensure that all instruments, alarm equipment, and motor control circuits are functional.
6. Ensure that all instruments are adequately supported.

-End of Section-

000766

1669

Waste Pits Remedial Action Project
(WPRAP)
Utility Plans for Portable Structures

***

PREPARED
for
Fluor Daniel Fernald, Inc.
Fernald, Ohio

FDF Subcontract No. 98SC000001

***

PREPARED
by
IT Corporation
2790 Mosside Boulevard
Monroeville, PA 15146-2790

IT Project No. 773481

***

Revision 0
Issue Date: August 25, 1998

Drawing List

1669

Drawing No.	Rev. No.	Description
M-70-02-001	0	Site Utilities Plan
B-00-02-114	0	Administrative Area Utility Plan

DRAWING NUMBER 773481-B10

1669

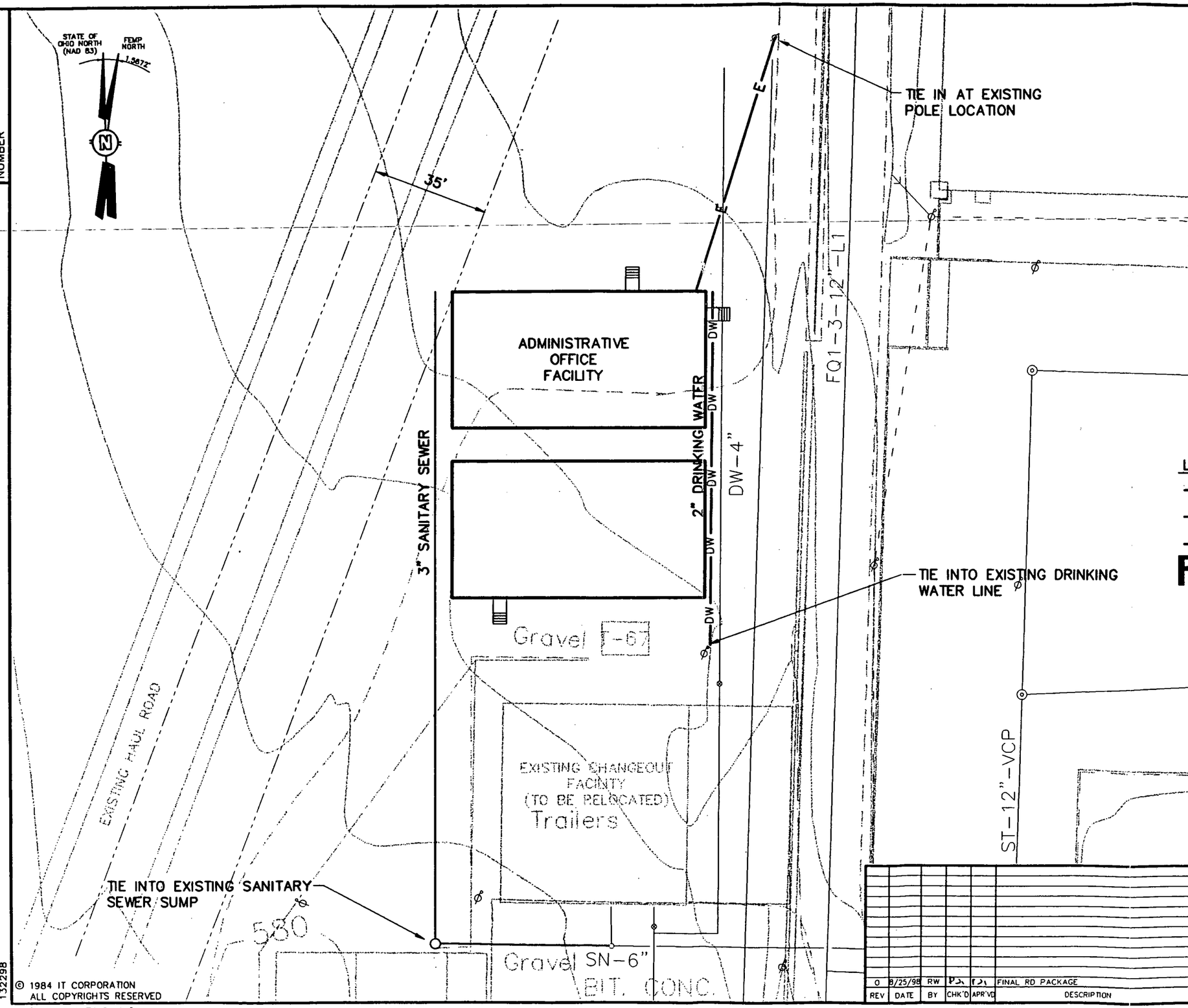

LEGEND:

—DW— PROPOSED POTABLE WATER LINE

—SN— PROPOSED SANITARY SEWER LINE

— E — PROPOSED ELECTRICAL LINE

FOR INFORMATION ONLY
-NOT FOR CONSTRUCTION-

SCALE
0 30 60 FEET

000770

REV	DATE	BY	CHK'D	APR'VD	DESCRIPTION
0	8/25/98	RW	PJ	PJ	FINAL RD PACKAGE

FLUOR DANIEL FERNALD
WASTE PITS REMEDIAL ACTION PROJECT (WPRAP)
FERNALD, OHIO
FDF SUBCONTRACT NO. 98SC000001

PROJECT NAME
WASTE PITS REMEDIAL ACTION PROJECT (WPRAP)

TITLE
ADMINISTRATIVE AREA UTILITY PLAN

INTERNATIONAL TECHNOLOGY CORPORATION
... Creating a Safer Tomorrow

DESIGNED BY	PJI	CHECKED BY	PJI	1/9/98	REVISION
DRAWN BY	BAK	APPROVED BY	PJI	8/25/98	0
DATE	23 DECEMBER 97	DWG. SCALE	1"=30'		
IT PROJECT NO	773481	DRAWING NO.	B-00-02-114		

8-17-98
3:53 PM
132298

© 1984 IT CORPORATION
ALL COPYRIGHTS RESERVED

"Do Not Scale This Drawing"

1669

Waste Pits Remedial Action Project (WPRAP) Point Source Emissions Data

***

PREPARED
for
Fluor Daniel Fernald, Inc.
Fernald, Ohio

FDF Subcontract No. 98SC000001

***

PREPARED
by
IT Corporation
2790 Mosside Boulevard
Monroeville, PA 15146-2790

IT Project No. 773481

***

Revision 0
Issue Date: August 25, 1998

000771

Record of Issue/Revisions

1669

Date	Rev. No.	Description of Issue/Revision
1-9-98	A	Original Issue of Draft
2-13-98	B	Draft Issue for EPA Review
3-25-98	C	Draft Issue for FDF Review
N/A	D	Not Issued
6-5-98	E	Draft Issue for EPA Review
8-25-98	0	Final

000772

Table of Contents

1669

Record of Issue/Revisions i
List of Tables iii
List of Acronyms/Abbreviations iv
1.0 Introduction 1
1.1 Point Source Stack Actual Emissions Estimates 2
1.1.1 Rotary Dryer Off-Gas 2
1.1.2 Furnace Off-Gas 5
1.1.3 Cooling Tower 5
1.1.4 Laundry Facility 6
1.1.5 Respirator Wash Facility 6
1.1.6 On-site Laboratory 6
2.0 Area Source Emissions 8
2.1 Radon 8
2.2 Combustion Pollutants 8

000773

List of Tables

Table Number	Title
1-1	Waste Feed Blend Scheme for Each OU1 Operation Phase
1-2	Emissions Data for Semi-Volatile Organics
1-3	Emissions Data for Volatile Organic Compounds (VOCs)
1-4	Emissions Data for Regulated Toxic Metals
1-5	Radon Content of Stack Gases from OU1 Blend Batches
1-6	Rotary Dryer Potential Emissions for VOCs, CO and Particulate
1-7	Combined Emissions Estimate for Furnace Stack
1-8	Emissions Estimate from Laundry Facility
1-9	Emission Estimate from Onsite Laboratory
2-1	Emissions Estimate for Railcar Loadout and Waste Preparation Building Equipment

000774

List of Acronyms/Abbreviations

AASHTO	American Association of State Highway Transportation Officials
ABMA	American Bearing Manufacturers Association
ACGIH	American Conference of Government Industrial Hygienists
ACI	American Concrete Institute
ACM	Asbestos Containing Material
ACOE	United States Army Corps of Engineers
AFBMA	Anti-Friction Bearing Manufacturers Association
AGMA	American Gear Manufacturers Association
AISC	American Institute of Steel Construction
ALARA	As Low As Reasonably Achievable
ALTER	Accelerated Life Testing and Environmental Research Facility
AMCA	Air Movement and Control Association
ANS	American Nuclear Society
ANSI	American National Standards Institute
APC	Air Pollution Control
API	American Petroleum Institute
ARAR	Applicable or Relevant and Appropriate Requirement.
ARI	American Refrigeration Institute
ASCE	American Society of Civil Engineers
ASHRAE	American Society of Heating, Refrigeration and Air Conditioning Engineers
ASME	American Society of Mechanical Engineers
ASNT	American Society of Nondestructive Testing
ASTM	American Society for Testing and Materials
AWS	American Welding Society
AWWA	American Water Works Association
AWWT	Advanced Wastewater Treatment
BAT	Best Available Technology
BSL	Biodenitrification Surge Lagoon
CAM	Continuous Air Monitor
CBR	California Bearing Ratio
CDF	Commercial Disposal Facility
CEM	Continuous Emissions Monitor
CEMA	Conveyor Equipment Manufacturers Association

000775

List of Acronyms/Abbreviations (Continued)

CERCLA	Comprehensive, Environmental Response, Compensation, and Liability Act
CFR	Code of Federal Regulations
COC	Constituent of Concern
CPT	Cone Penetrometer Test
CRSI	Concrete Reinforcing Steel Institute
CRU	CERCLA/RCRA Unit
CWA	Clean Water Act of 1977, as amended
D&D	Decontamination and Dismantlement
DAC	Derived Air Concentration
DCD	Design Criteria Document
DEEP	Dewatering Excavation Evaluation Program
DOE	United States Department of Energy
DOE-NV	United States Department of Energy - Nevada Office of Operations
DOT	United States Department of Transportation
EJMA	Expansion Joint Manufacturers Association
ERDA	Energy Research and Development Administration
F	Fahrenheit
FDF	Fluor Daniel Fernald, Inc.
FEMP	Fernald Environmental Management Project
FERMCO	Fernald Environmental Restoration Management Corporation
FFCA	Federal Facilities Compliance Agreement
fpm	feet per minute
FS	Feasibility Study
FSAR	Final Safety Analysis Report
ft^2	square foot (feet)
GCS	Gas Cleaning System
GFCI	Ground Fault Circuit Interrupter
GLC	Ground Level Concentration
gpm	gallons per minute
HEPA	High Efficiency Particulate Air (filter)
hr	hour
HVAC	Heating, Ventilation, and Air Conditioning
IEEE	Institute of Electrical and Electronics Engineers

000776

List of Acronyms/Abbreviations (Continued)

IES	Illuminating Engineers Society
ID	Induced Draft
IPC	Inclined Plate Clarifier
ISA	International Society for Measurement and Control
IT	IT Corporation
kg	kilogram
kV	kilovolt
kVA	kilovolt-ampere
kW	kilowatt
lb	pound
LLRW	Low Level Radioactive Wastes
m^2	square meter
MAGLC	Maximum Allowable Ground Level Concentration
MAWC	Maximum Average Waste Concentration
MBMA	Metal Building Manufacturers Association
MCC	Motor Control Center
MEI	Maximally Exposed Individual
MHB	Material Handling Building
µCi/cc	microcurie per cubic centimeter
mrem	millirem
MSS	Manufacturers Standardization Society
NAD	North American Datum
NEC	National Electric Code
NEMA	National Electrical Manufacturers Association
NESHAP	National Emission Standards for Hazardous Air Pollutants
NETA	National Electrical Testing Association
NFC	National Fuel Code
NFPA	National Fire Protection Association
NP	Nonplastic
NPDES	National Pollutant Discharge Elimination System
NPH	Natural Phenomenal Hazard
NTS	Nevada Test Site
OAC	Ohio Administrative Code

000777

List of Acronyms/Abbreviations (Continued)

OBBC	Ohio Basic Building Code
ODOT	Ohio Department of Transportation
OEPA	Ohio Environmental Protection Agency
OSDF	On Site Disposal Facility
OSHA	Occupational Safety and Health Administration
OU	Operable Unit
PC	Performance Category
PCB	Polychlorinated Biphenyl
pcf	pounds per cubic foot
pCi/L	picoCuries per liter
PFD	Process Flow Diagram
PID	Photoionizing Detector
PLC	Programmable Logic Controller
PPE	Personal Protective Equipment
psf	pounds per square foot
psi	pounds per square inch
psig	pounds per square inch gauge
PTI	Permit to Install
PTO	Permit to Operate
PVC	Polyvinyl Chloride
QAP	Quality Assurance Plan
RCRA	Resource Conservation and Recovery Act
RD	Remedial Design
RI	Remedial Investigation
RLB	Railcar Loadout Building
ROD	Record of Decision
SAE	Society of Automotive Engineers
SCS	Soil Conservation Service
scfm	standard cubic feet per minute
SDI	Steel Deck Institute
sec	second
SJI	Steel Joist Institute
SMACNA	Sheet Metal and Air Conditioning Contractors National Association

000778

List of Acronyms/Abbreviations (Continued)

SPT	Standard Penetration Test
SSC	Structure, System and Component
STD	Standard (DOE)
SWM	Solid Waste Management
SWPPP	FERMCO Storm Water Pollution Prevention Plan
TBC	To Be Considered
TBP	Tributyl Phosphate
TEMA	Tubular Exchanger Manufacturers Association
TOC	Total Organic Carbon
TOU	Thermal Oxidizer Unit
TSDF	Waste Treatment, Storage or Disposal Facility
UBC	Uniform Building Code
UCRL	University of California Research Laboratory
UL	Underwriters Laboratory
USCS	Unified Soil Classification System
USEPA	United States Environmental Protection Agency (EPA)
V	Volt
WAC	Waste Acceptance Criteria
WESP	Wet Electrostatic Precipitator
WPRAP	Waste Pits Remedial Action Project
WTS	IT Corporation Wastewater Treatment System
yd^3	cubic yard
yr	year

000779

1.0 Introduction

The Operable Unit 1 remediation system will include two thermal rotary dryer units and their associated common air pollution control system. The rotary dryers will be designed as indirect heat transfer units, and will be used to thermally remove moisture from the waste feed stream. The incoming waste feed will be blended using materials from the six OU1 waste pits (Waste Pits 1-6), the Burn Pit and the Clearwell. Each of these waste pits contain contaminated soils, sludges and liquids. These waste pits will be mechanically excavated, and the waste materials will be transferred to a waste processing area. The waste received from the waste pits will either be blended and sent directly to the railcar loadout building, or will be blended and fed to the rotary dryers. The rotary dryers will remove moisture from the waste feed and discharge it as part of the rotary dryer exhaust gas stream.

The materials which become entrained in the rotary dryer off-gases will come directly from the blended waste feed materials and any resulting chemical decomposition or reaction inside the rotary dryers. The amount of pollutants in the rotary dryer off-gases will depend on the proposed blend scheme, and the mass contribution from each waste pit to the total mass of pollutant in the waste feed stream

In addition to the rotary dryer off-gases, airborne pollutants will be emitted from the rotary dryer furnaces, onsite laboratory, onsite laundry facility, and from activities in the material handling building and the railcar loadout building. The furnace off-gases will contain products of combustion of natural gas. The furnace off-gas emissions will be exhausted to the atmosphere via individual port stacks.

Air pollutant emissions have been estimated for each pollution point source mentioned above. The emissions were estimated by using CIS and RI/FS waste pit composition data, as well as results from bench-scale and pilot-scale design verification testing. The RI/FS and CIS data sets indicated the average, minimum and maximum pollutant concentrations in the wastes. These wastes included inorganic, organic (including semivolatile and volatile), metal and radionuclide materials. For each speciated pollutant its corresponding emissions were calculated using the highest concentration data available from the RI/FS or CIS data sets.

Potential emissions of CO, particulate and total VOCs were estimated from the design verification test results and USEPA emission factors for external combustion sources fired on

natural gas fuel.

FDF will perform site-wide air dispersion modeling calculations for the purpose of determining stack emission limits based on the maximum allowable ground level concentration (MAGLC) at the fence line for air borne contaminants of concern. The estimated point source emissions will be compared against the FDF air modeling based stack limits as an initial evaluation of the process design. Stack testing will be performed on the rotary dryer off-gas to further verify compliance with the fenceline limits. Stack performance testing details will be provided with the RA package.

1.1 Point Source Stack Actual Emissions Estimates

1.1.1 Rotary Dryer Off-Gas

As part of the design of the OU1 drying process, the rotary dryer off-gases will require treatment before being discharged to the atmosphere. As such, the rotary dryer off-gases will be treated in the common gas cleaning system (GCS) where entrained pollutants in the off-gas will be captured and removed. Rotary dryer off-gas theoretical emissions estimates for the speciated data available from the RI/FS and CIS data sets have been developed as described in the following section.

Speciated Emissions - The speciated emissions estimate considers only the regulated compounds for which speciated data was available from the RI/FS or CIS. Using these data, the rotary dryer off-gas pollutant composition will vary for each operation phase due to the altering of the waste feed blend. There are 19 proposed operation phases, with each phase having a unique waste blending scheme. Table 1-1 indicates the proposed blend scheme for each phase, and the mass contribution from each waste pit. In addition to the indicated waste blend amounts, material from the OU1 Contaminated Soil Stockpile will be used as supplemental bulk material to assist in meeting the waste feed composition criteria.

For each speciated pollutant its corresponding hourly emission rate was calculated using the average, minimum and maximum concentration data available from the RI/FS or CIS data sets. It was conservatively assumed that the complete amount of each pollutant was released to the rotary dryer off-gases for each blend scheme and operation phase. This assumption resulted in the worst case air pollution emissions for each operation phase.

The rotary dryer off-gas pollutants will be controlled using several air pollution control devices. These GCS devices are designed to collect and remove certain pollutants from the gas stream (i.e. VOCs, particulate, etc.). The attached tables (Tables 1-2 through 1-4) indicate the estimated hourly emissions from the rotary dryer off-gas, after the GCS system (controlled). Annual emissions can be estimated using information in Table 1-1 by prorating the proposed operation schedule sequentially for the operational phases.

The control efficiency of each GCS device varies according to the pollutant present in the gas stream. Additionally, the assumed particulate carryover (as a percentage of the waste feed) will vary with the waste feed rates. The table below details the estimated design control efficiency for each GCS device for the corresponding pollutant at the maximum design hourly feed rate.

GCS Device	Control Efficiency for:			
	Organics (semi-volatile)	Volatile Organic Compounds (VOCs)	Particulate	Carbon Monoxide
Cyclone	0%	0%	45%	0%
Scrubber	15%	10%	90%	0%
Subcool Quench	60%	0%	95%	0%
Wet Electrostatic Precipitator (WESP)	1%	0%	99.9%	0%
HEPA Filter	0%	0%	99.9%	0%
Thermal Oxidizer	97.5%	97%	0%	95%

Radon that is emitted from the rotary dryer has been assumed to be fully emitted with no removal effects from the GCS devices. Emissions of Radon-222 from the rotary dryer units have been estimated using the final RI/FS data for radium in the waste pit feed, the proposed blending schemes, the maximum rotary dryer feed rate, and the design exhaust gas flow rate from the exhaust stack. The maximum radon emission rates and concentrations in the rotary dryer exhaust gas stream are shown in Table 1-5.

Total Hydrocarbons, CO and Particulate Emissions - Process emissions monitoring was performed as part of design verification testing activities using composite samples of archived pit waste. The testing used both bench-scale and pilot-scale equipment to simulate the actual system design. Emissions of total hydrocarbons(THCs), carbon monoxide (CO) and other

targeted pollutants of concern were measured for each test scenario. The test emissions were measured after gas stream quenching but before final control (carbon adsorption or thermal oxidation). Measured emission rates for THC, CO, and particulates, as well as the specifically measured organics, are presented in Table 1-6.

The purpose of this table is to present the worst case, potential emissions of targeted pollutants from the rotary dryer process. Results from specific design verification test runs were selected in order to estimate the maximum potential emissions of THCs, CO and other pollutants of concern. The first data column (Pre-TOU) represents the maximum measured pollutant emissions, normalized to a feed rate of 23 tons per hour, emitted from the dryer process after passing through the GCS, but before entering the TOU. The remaining (Post-TOU) estimates are calculated emissions using both the measured test data from the first data column, the TOU control efficiency, and estimated emissions from natural gas combustion in the TOU (see Table 1-6 notes). The potential emissions are estimated based on full, continuous process operation.

The estimated emissions of THCs, CO, particulate and benzene from the combustion of natural gas in the thermal oxidizer (at 3 MMBtu/hr) were calculated using AP-42 emission factors, and are included in the reported (Post-TOU) estimates. The worst case control efficiency of the thermal oxidizer has been estimated at 95% for the control of both THCs and carbon monoxide. Total hydrocarbon estimates represent C1-C3 light hydrocarbons, and can contain non-regulated hydrocarbons not classified as VOCs. However, due to the low molecular weight of these hydrocarbons, they cannot be effectively controlled by vapor phase carbon, but can be effectively controlled using the TOU.

Particulate emissions were estimated by assuming a percentage of the feed material as carryover, and applying control efficiencies for each component in the GCS. Estimated particulate emissions from natural gas combustion, using AP-42 emission factors, were combined with the particulate mass rate entering the thermal oxidizer to obtain the final particulate mass emission rates.

The rotary dryer off-gases, after routing through the GCS, will be discharged through a stack 60 feet in height, with a discharge diameter of approximately 26 inches. The gases will exhaust at a temperature of approximately 1,600 degrees Fahrenheit at a volumetric flow rate of 4,807 actual cubic feet per minute (acfm). Using this stack information, and the estimated emissions rates in

Table 1-2 and Table 1-6, preliminary FDF sitewide air modeling results indicate that the MAGLC based stack emission limits will not be exceeded.

1.1.2 Furnace Off-Gas

The rotary dryers will be indirectly heated using energy from the combustion of natural gas, and each unit will be rated at 32 MMBtu/hr heat input (total of 64 MMBtu/hr heat input). The combustion of these fuels will generate pollutants in the form of products of incomplete combustion including:

- carbon monoxide (CO),
- oxides of nitrogen (NOx as NO2),
- sulfur dioxide (SO2),
- particulate matter (combined filterable and condensable, as PM-10),
- volatile organic compounds.

Trace amounts of the following hazardous air pollutants may also be emitted in the furnace off-gas emissions:

- formaldehyde,
- mercury,
- benzene,
- polycyclic aromatic hydrocarbons.

These emissions were estimated using USEPA document AP-42 guidance for external combustion of natural gas. Additionally, a 30 percent reduction in NOx emissions was calculated due to the low-NOx burners which have been incorporated as part of the rotary dryer design in accordance with Ohio EPA guidance for best available technology (BAT). The total emission estimates, both actual and potential-to-emit, from all furnace stacks are shown in Table 1-7.

1.1.3 Cooling Tower

The GCS system cooling tower will emit water vapor and water droplets (from evaporation and drift, respectively). Any particulate matter emissions will be a result of the total dissolved solids in the windage (drift) losses from the cooling tower exhaust. However, the particulate will be entrained in large water droplets that will tend to settle to ground before evaporation. Therefore, particulate emissions as airborne PM-10 will be negligible.

1.1.4 Laundry Facility

The on-site laundry facility will be used to wash and dry worker clothing. The emissions from the laundry facility are estimated based on the use of wet wash machines and five commercial gas clothes dryers. Exhaust from each clothes dryer will be ducted to a common exhaust header, filtered through a lint filter and then through a HEPA filter prior to discharge to the atmosphere.

Airborne emissions from the laundry facility will be discharged from the clothes dryer exhaust system. Contaminants that are not removed in the wet wash cycle are carried over to the clothes dryer cycle. These pollutants were then conservatively assumed to be discharged from the heated clothes dryers. The estimated emissions of the remaining pollutants, after the wash cycle, are shown in Table 1-8.

1.1.5 Respirator Wash Facility

Emissions from the onsite respirator wash facility are estimated based on the handling of the respirators, the use of an automatic wet wash machine and two electrically heated respirator dryer machines. Respirators will be washed through multiple cycles in the wash machine. The respirators will then be transferred to the respirator dryers for final drying before being placed back in service. The respirator dryers are vented to the outside atmosphere.

There will be limited airborne emissions from the respirator wash facility, primarily due to the generated material from the respirator handling prior to the wash cycle. Some contaminants may become airborne (as dust), while the remaining contaminants present on the "dirty" respirators will be removed in the wash cycles, and carried out in the liquid stream to the grey water tank. However, emissions of volatiles, semi-volatiles and particulate metals are expected to be insignificant, and are not presented.

1.1.6 On-site Laboratory

Emissions from the on-site laboratory can result from several sources. These sources can include the samples themselves, the use of reagents or the combustion of fuels. The analyses of the samples will be performed on both pre-treated and treated materials. These materials can consist of solids (soils), liquids (water effluents) and gases (ventilation). The method of analyses for each of these material streams is detailed in the project sampling and analysis plans and procedures.

Emissions from the laboratory operations have been estimated based on the type of analysis required for the materials. Only those analyses that have the capability of producing airborne pollutant emissions were considered. These included the moisture and density analyses, wherein the samples must be heated to remove moisture. It was assumed that during the heating process, any organics present in the samples would evolve and be released to the ventilation system. However, the toxic metals were assumed to remain in the samples due to the relatively low temperatures to which the samples would be subjected during the moisture removal procedures.

Because of the nature of the sample locations, emissions were estimated in two different manners. For those samples collected at the newly exposed pit excavations, as well as the Material Handling Building, the emissions were estimated based on the release of all pollutants to the atmosphere using the maximum specific pollutant concentrations. This estimate is highly conservative, and the actual emissions are projected to be significantly lower because the various organics will evolve at a wide range of temperatures, with the heavier organics requiring temperatures above that required to remove moisture.

For those sample taken from the blend area, the blend schemes must be taken into account to accurately estimate the total mass fraction contributed from each waste pit. The total pollutant mass contribution was calculated against the total blend mass, which resulted in an overall concentration for each pollutant for each phase. The sample was then assumed to be a homogenous blend with the same concentrations. Using this blend concentration, the total mass of each pollutant available for release during the analytical procedures was estimated to be released from the samples. For ease of calculation, each sample was conservatively assumed to be one kilogram in mass. The total emissions estimated for the pollutants for each phase are shown in Table 1-9.

2.0 Area Source Emissions

Radon and heavy equipment diesel engine emissions will be present in the railcar loadout and waste preparation buildings. Estimated emissions of these pollutants are shown in Table 2-1. These pollutants will be area source emissions due to the open air design of the buildings. Additional discussion of these emissions is given in section 5.0 of the Pre-Operational Environmental Control Plan and section 5.1 of the Excavation Plan. The Operational Environmental Control Plan, which is part of the future Remedial Action submittal, will also address fugitive emissions.

2.1 Radon

Radon is continuously generated from the decay of radium present in the waste feed materials, as well as the treated materials. Radon will diffuse from the waste storage and blend piles in the waste preparation and loadout buildings. The estimated radon concentrations (as Radon-222) in the building will vary according to operation phase. Area radon emissions were conservatively estimated using the highest Radium concentration data (Operation Phase 2), and assuming the following:

- the radon from the waste material in the railcar loadout building can escape into the building before substantial decay;
- because of the wet conditions of the rotary dryer feed material, only 10% of the radon in the blending area can escape;
- the inventory for drying and blending is 11,400 tons;
- the loadout area inventory is 3,600 tons;
- total waste material present is 15,000 tons.

2.2 Combustion Pollutants

The remaining pollutants will originate from the diesel engines required to operate the material handling machines (i.e. front loaders, trackhoes, etc.). The emissions have been estimated based on vendor supplied data (Caterpillar 938, 162 hp diesel engines). These emissions have been assumed to be uncontrolled, and the engine operating at full horsepower capacity. These emissions, along with the radon emissions, were used to estimate pollutant concentrations in the buildings so that work practices can be implemented to ensure pollutant concentrations will not exceed their respective OSHA PELs.

TABLES

Table 1-1
Waste Feed Blend Scheme for Each OU1 Operation Phase

Operation Phase	Pit Contribution to Phase									
	Planned Operation Schedule (days)	Pit 1 (tons)	Pit 2 (tons)	Pit 3 (tons)	Pit 4 (tons)	Pit 5 (tons)	Pit 6 (tons)	Burn Pit (tons)	Clearwell (tons)	OU1 Soil Stockpile
1	9			2,469						1,783
2	268	72,453	5,390	51,026						
3	85			23,538						17,341
4	88	18,207		24,196						
5	175		19,256	24,690	40,150					
6	29			8,065						5,672
7	41		7,766	11,193	753					
8	59			12,180			16,222			
9	101			43,145		5,200				
10	65					3,350				27,876
11	14					700	6,040			
12	93				4,768	2,100		37,961		
13	10					500		4,314		
14	105				47,657	2,900				
15	1					50				486
16	30				12,943	1,550				
17	56					2,869				23,987
18	18				1,757	31,926			3,791	
19	13				125				6,040	

Table 1-2
Emissions Data for Semi-Volatile Organics

Organics	Controlled Dryer Exhaust Emissions from Exhaust Stack (lb/hr) Per Phase																				
	I			II			III			IV			V			VI			VII		
Polltuant	avg	min	max	avg	min	max	avg	min	max	avg	min	max	avg	min	max	avg	min	max	avg	min	max
4,4-DDT	-	-	-	-	-	-	-	-	-	-	-	-	-	-	-	-	-	-	-	-	-
Aroclor-1221	-	-	-	3.00e-04	2.18e-05	1.31e-03	-	-	-	2.29e-04	1.66e-05	9.98e-04	-	-	-	-	-	-	-	-	-
Aroclor-1242	-	-	-	-	-	-	-	-	-	-	-	-	7.22e-05	4.31e-05	1.91e-04	-	-	-	5.77e-06	3.45e-06	1.53e-05
Aroclor-1248	2.78e-04	2.25e-05	1.08e-03	1.01e-03	5.08e-05	2.99e-03	2.76e-04	2.23e-05	1.07e-03	8.74e-04	3.31e-05	2.72e-03	9.51e-04	1.84e-04	2.37e-03	3.10e-04	2.30e-05	1.10e-03	6.55e-04	2.65e-04	1.91e-03
Aroclor-1254	2.31e-04	2.20e-05	7.64e-04	1.23e-03	6.94e-05	3.35e-03	2.29e-04	2.18e-05	7.58e-04	1.04e-03	6.32e-05	2.91e-03	5.43e-04	1.53e-04	1.64e-03	2.57e-04	2.25e-05	7.82e-04	2.60e-04	3.29e-05	8.48e-04
Aroclor-1260	-	-	-	7.56e-04	2.09e-04	1.70e-03	-	-	-	5.77e-04	1.60e-04	1.30e-03	-	-	-	-	-	-	-	-	-
2,4,5-Trichlorophenol	-	-	-	-	-	-	-	-	-	-	-	-	-	-	-	-	-	-	-	-	-
2,4-Dichlorophenol	-	-	-	-	-	-	-	-	-	-	-	-	6.81e-05	4.25e-05	4.25e-04	-	-	-	5.45e-06	3.40e-06	3.40e-05
2,4-Dinitrophenol	-	-	-	-	-	-	-	-	-	-	-	-	3.25e-04	8.69e-06	2.03e-03	-	-	-	2.60e-05	6.95e-07	1.63e-04
2,6-Dinitrotoluene	8.66e-05	9.67e-05	2.25e-04	5.90e-05	6.59e-05	1.53e-04	8.58e-05	9.59e-05	2.23e-04	8.51e-05	9.50e-05	2.21e-04	4.38e-05	4.89e-05	1.14e-04	9.63e-05	9.89e-05	2.30e-04	8.46e-05	9.45e-05	2.20e-04
2-Chlorophenol	-	-	-	1.43e-05	3.56e-06	4.70e-05	-	-	-	-	-	-	7.84e-05	1.95e-05	2.57e-04	-	-	-	1.35e-04	4.03e-05	4.42e-04
2-Methylnaphthalene	-	-	-	9.45e-05	3.23e-05	3.22e-04	-	-	-	3.78e-05	1.66e-05	1.50e-04	3.39e-04	1.35e-04	8.95e-04	-	-	-	4.31e-04	1.25e-04	1.21e-03
3-Methylphenol	-	-	-	5.09e-05	9.14e-06	1.96e-04	-	-	-	3.89e-05	6.98e-06	1.50e-04	3.66e-05	1.77e-05	8.69e-05	-	-	-	2.93e-06	1.42e-06	6.95e-06
3,3-Dichlorobenzidine	-	-	-	9.03e-05	2.83e-05	2.39e-04	-	-	-	6.90e-05	2.16e-05	1.83e-04	-	-	-	-	-	-	-	-	-
4-Chloro-3-methylphenol	-	-	-	1.43e-05	3.72e-06	4.70e-05	-	-	-	-	-	-	1.44e-04	3.06e-05	6.82e-04	-	-	-	1.40e-04	4.29e-05	4.76e-04
4-Methylphenol	-	-	-	1.45e-05	3.08e-06	4.70e-05	-	-	-	-	-	-	1.26e-04	8.34e-05	3.44e-04	-	-	-	1.40e-04	4.01e-05	4.49e-04
4-Nitroaniline	-	-	-	4.08e-05	3.89e-05	1.28e-04	-	-	-	-	-	-	2.23e-04	2.13e-04	7.00e-04	-	-	-	3.84e-04	4.40e-04	1.21e-03
4-Nitrophenol	-	-	-	6.70e-05	3.08e-06	2.27e-04	-	-	-	-	-	-	3.67e-04	1.68e-05	1.24e-03	-	-	-	6.31e-04	3.48e-05	2.14e-03
Acenaphthene	-	-	-	1.45e-04	1.30e-06	6.96e-04	-	-	-	-	-	-	9.24e-04	2.32e-05	4.16e-03	-	-	-	1.38e-03	1.59e-05	6.59e-03
Acenaphthylene	7.99e-05	2.16e-05	2.25e-04	6.88e-05	1.65e-05	2.00e-04	7.92e-05	2.14e-05	2.23e-04	7.85e-05	2.12e-05	2.21e-04	1.19e-04	2.07e-05	3.71e-04	8.89e-05	2.21e-05	2.30e-04	2.13e-04	4.13e-05	6.62e-04
Anthracene	6.05e-05	2.92e-05	2.25e-04	4.80e-04	3.70e-05	2.21e-03	6.00e-05	2.90e-05	2.23e-04	9.45e-05	4.10e-05	3.11e-04	2.44e-03	6.80e-05	1.14e-02	6.74e-05	2.99e-05	2.30e-04	3.78e-03	4.31e-05	1.86e-02
Benzo(a)anthracene	9.04e-05	8.09e-05	2.25e-04	5.39e-04	7.44e-05	2.38e-03	8.97e-05	8.03e-05	2.23e-04	1.17e-04	9.35e-05	3.11e-04	2.65e-03	1.20e-04	1.25e-02	1.01e-04	8.28e-05	2.30e-04	4.26e-03	9.51e-05	2.01e-02
Benzo(a)pyrene	8.78e-05	6.30e-05	2.25e-04	5.14e-04	7.52e-05	2.21e-03	8.71e-05	6.24e-05	2.23e-04	1.23e-04	8.51e-05	3.11e-04	2.65e-03	1.01e-04	1.16e-02	9.78e-05	6.44e-05	2.30e-04	3.94e-03	8.64e-05	1.86e-02
Benzo(b)fluoranthene	9.68e-05	1.03e-04	2.25e-04	4.36e-04	8.57e-05	2.36e-03	9.60e-05	1.03e-04	2.23e-04	1.31e-04	1.11e-04	2.99e-04	2.21e-03	1.16e-04	1.27e-02	1.08e-04	1.06e-04	2.30e-04	3.17e-03	1.41e-04	2.01e-02
Benzo(g,h,l)perylene	8.40e-05	3.60e-05	2.25e-04	2.68e-04	3.51e-05	8.33e-04	8.33e-05	3.57e-05	2.23e-04	8.25e-05	3.54e-05	2.21e-04	1.28e-03	1.50e-04	4.26e-03	9.35e-05	3.68e-05	2.30e-04	2.07e-03	1.60e-04	6.66e-03
Benzo(k)fluoranthene	-	-	-	3.02e-04	3.34e-05	1.33e-03	-	-	-	3.69e-05	2.33e-05	8.98e-05	1.70e-03	7.70e-05	7.33e-03	-	-	-	2.41e-03	3.79e-05	1.15e-02
Benzoic Acid	2.90e-04	9.89e-06	1.10e-03	4.02e-04	3.05e-05	1.92e-03	2.88e-04	9.81e-06	1.09e-03	4.13e-04	2.42e-05	1.81e-03	4.85e-04	5.38e-05	2.52e-03	3.23e-04	1.01e-05	1.13e-03	6.44e-04	6.64e-05	3.13e-03
Chrysene	9.07e-05	8.32e-05	2.25e-04	4.74e-04	8.12e-05	1.89e-03	9.00e-05	8.25e-05	2.23e-04	1.38e-04	9.24e-05	3.11e-04	2.32e-03	1.13e-04	9.81e-03	1.01e-04	8.51e-05	2.30e-04	3.40e-03	2.01e-04	1.55e-02
DI-n-butyl phthalate	6.98e-05	2.09e-05	2.25e-04	1.05e-04	3.39e-05	3.75e-04	6.92e-05	2.07e-05	2.23e-04	1.08e-04	3.43e-05	3.71e-04	1.34e-04	4.68e-05	6.81e-04	7.77e-05	2.14e-05	2.30e-04	1.30e-04	4.03e-05	4.98e-04
Di-n-octyl phthalate	-	-	-	8.39e-05	4.04e-05	2.28e-04	-	-	-	5.26e-05	2.49e-05	1.38e-04	1.75e-04	6.84e-05	4.42e-04	-	-	-	1.48e-04	9.00e-05	4.57e-04
Dibenzo(a,h)anthracene	-	-	-	8.74e-05	1.05e-05	3.24e-04	-	-	-	-	-	-	5.26e-04	6.96e-05	1.88e-03	-	-	-	8.27e-04	1.20e-04	3.06e-03
Dibenzofuran	-	-	-	1.22e-04	1.26e-06	5.83e-04	-	-	-	-	-	-	8.03e-04	2.50e-05	3.51e-03	-	-	-	1.16e-03	1.57e-05	5.52e-03
Diethyl phthalate	2.90e-04	3.37e-05	9.67e-04	2.13e-04	2.48e-05	7.06e-04	2.88e-04	3.34e-05	9.59e-04	2.85e-04	3.31e-05	9.50e-04	2.92e-04	4.33e-05	1.17e-03	3.23e-04	3.45e-05	9.89e-04	4.27e-04	5.44e-05	1.42e-03
Fluoranthene	9.44e-05	2.70e-05	2.25e-04	1.79e-03	5.58e-05	8.31e-03	9.36e-05	2.68e-05	2.23e-04	1.50e-04	5.31e-05	3.87e-04	1.02e-02	5.93e-05	4.69e-02	1.05e-04	2.76e-05	2.30e-04	1.57e-02	5.82e-05	7.52e-02
Fluorene	-	-	-	2.11e-04	2.43e-06	1.00e-03	-	-	-	-	-	-	1.39e-03	4.29e-05	6.13e-03	-	-	-	2.00e-03	2.98e-05	9.51e-03
Ideno(1,2,3-cd)pyrene	8.30e-05	2.92e-05	2.25e-04	2.14e-04	2.54e-05	8.98e-04	8.23e-05	2.90e-05	2.23e-04	8.16e-05	2.87e-05	2.21e-04	9.93e-04	1.19e-04	4.62e-03	9.24e-05	2.99e-05	2.30e-04	1.57e-03	9.68e-05	7.27e-03
Isophorone	7.62e-05	4.95e-05	2.11e-04	5.20e-05	3.37e-05	1.44e-04	7.56e-05	4.90e-05	2.10e-04	7.49e-05	4.86e-05	2.08e-04	3.85e-05	2.50e-05	1.07e-04	8.48e-05	5.06e-05	2.16e-04	7.45e-05	4.84e-05	2.07e-04
N-Nitrosodiphenylamine	-	-	-	1.44e-05	2.75e-06	4.70e-05	-	-	-	-	-	-	7.91e-05	1.51e-05	2.57e-04	-	-	-	1.36e-04	3.11e-05	4.42e-04
Naphthalene	-	-	-	1.12e-04	1.05e-05	3.72e-04	-	-	-	-	-	-	7.69e-04	6.91e-05	2.54e-03	-	-	-	1.07e-03	1.20e-04	3.55e-03
Pentachlorphenol	2.75e-04	1.42e-04	6.52e-04	2.46e-04	1.10e-04	6.71e-04	2.72e-04	1.40e-04	6.47e-04	2.70e-04	1.39e-04	6.41e-04	4.58e-04	1.45e-04	1.57e-03	3.06e-04	1.45e-04	6.67e-04	8.17e-04	2.91e-04	2.77e-03
Phenanthrene	8.86e-05	1.73e-05	2.25e-04	1.54e-03	3.45e-05	6.67e-03	8.78e-05	1.72e-05	2.23e-04	2.53e-04	3.31e-05	6.20e-04	8.02e-03	3.78e-05	3.59e-02	9.86e-05	1.77e-05	2.30e-04	1.21e-02	3.65e-05	5.69e-02
Phenol	-	-	-	7.45e-05	8.98e-05	2.43e-04	-	-	-	4.64e-05	6.65e-05	1.50e-04	1.20e-04	7.24e-05	3.44e-04	-	-	-	1.33e-04	3.57e-05	4.49e-04
Pyrene	9.09e-05	2.47e-05	2.25e-04	9.86e-04	1.05e-04	4.40e-03	9.01e-05	2.45e-05	2.23e-04	1.37e-04	9.08e-05	3.71e-04	5.07e-03	9.42e-05	2.39e-02	1.01e-04	2.53e-05	2.30e-04	8.23e-03	4.62e-05	3.85e-02
trans 1,2-dichloroethane	-	-	-	-	-	-	-	-	-	-	-	-	2.40e-05	1.11e-05	5.92e-05	-	-	-	1.92e-06	8.87e-07	4.73e-06
Tributyl phosphate	-	-	-	3.40e-03	7.21e-04	6.07e-03	-	-	-	2.32e-03	4.66e-04	4.16e-03	1.31e-02	9.48e-03	1.68e-02	-	-	-	4.31e-03	1.97e-03	7.01e-03
bis(2-Ethylhexyl) phthalat	9.09e-05	2.47e-05	2.47e-04	1.36e-04	4.02e-05	4.12e-04	9.01e-05	2.45e-05	2.45e-04	1.35e-04	3.41e-05	3.93e-04	2.54e-04	8.75e-05	8.81e-04	1.01e-04	2.53e-05	2.53e-04	2.35e-04	1.45e-04	7.24e-04

Table 1-2
Emissions Data for Semi-Volatile Organics

Organics	Controlled Dryer Exhaust Emissions from Exhaust Stack (lb/hr) Per Phase																				
	VIII			IX			X			XI			XII			XIII			XIV		
Polltuant	avg	min	max	avg	min	max	avg	min	max	avg	min	max	avg	min	max	avg	min	max	avg	min	max
4,4-DDT	-	-	-	-	-	-	-	-	-	-	-	-	-	-	-	-	-	-	-	-	-
Aroclor-1221	-	-	-	-	-	-	-	-	-	-	-	-	-	-	-	-	-	-	-	-	-
Aroclor-1242	-	-	-	-	-	-	-	-	-	-	-	-	6.33e-05	9.76e-06	2.20e-04	5.00e-05	1.73e-07	1.87e-04	1.42e-04	8.50e-05	3.77e-04
Aroclor-1248	2.06e-04	1.66e-05	7.97e-04	4.56e-04	4.83e-05	1.79e-03	2.84e-05	1.37e-05	1.29e-04	2.74e-05	1.33e-05	1.25e-04	1.95e-04	1.89e-05	5.42e-04	7.58e-05	1.34e-05	3.12e-04	1.23e-03	1.20e-04	2.81e-03
Aroclor-1254	2.13e-04	3.42e-05	7.06e-04	4.03e-04	4.76e-05	1.43e-03	4.78e-05	1.37e-05	2.58e-04	1.13e-04	4.14e-05	4.71e-04	9.14e-04	4.56e-05	2.92e-03	8.91e-04	2.16e-05	2.92e-03	8.66e-04	2.88e-04	2.62e-03
Aroclor-1260	-	-	-	-	-	-	-	-	-	-	-	-	-	-	-	-	-	-	-	-	-
2,4,5-Trichlorophenol	-	-	-	-	-	-	-	-	-	-	-	-	-	-	-	-	-	-	-	-	-
2,4-Dichlorophenol	-	-	-	-	-	-	-	-	-	-	-	-	1.52e-05	9.47e-06	9.47e-05	-	-	-	1.34e-04	8.39e-05	8.39e-04
2,4-Dinitrophenol	-	-	-	-	-	-	-	-	-	-	-	-	7.25e-05	1.94e-06	4.53e-04	-	-	-	6.43e-04	1.72e-05	4.01e-03
2,6-Dinitrotoluene	6.39e-05	7.14e-05	1.66e-04	1.33e-04	1.49e-04	3.46e-04	-	-	-	-	-	-	-	-	-	-	-	-	-	-	-
2-Chlorophenol	-	-	-	-	-	-	-	-	-	-	-	-	-	-	-	-	-	-	-	-	-
2-Methylnaphthalene	-	-	-	-	-	-	-	-	-	-	-	-	1.40e-04	4.02e-05	3.50e-04	1.26e-04	2.43e-05	3.23e-04	1.83e-04	1.53e-04	4.01e-04
3-Methylphenol	-	-	-	-	-	-	-	-	-	-	-	-	8.16e-06	3.95e-06	1.94e-05	-	-	-	7.23e-05	3.50e-05	1.72e-04
3,3-Dichlorobenzidine	-	-	-	-	-	-	-	-	-	-	-	-	-	-	-	-	-	-	-	-	-
4-Chloro-3-methylphenol	-	-	-	-	-	-	-	-	-	-	-	-	1.47e-05	2.27e-06	9.47e-05	-	-	-	1.30e-04	2.01e-05	8.39e-04
4-Methylphenol	-	-	-	-	-	-	-	-	-	-	-	-	1.03e-05	1.48e-05	1.94e-05	-	-	-	9.16e-05	1.31e-04	1.72e-04
4-Nitroaniline	-	-	-	-	-	-	-	-	-	-	-	-	-	-	-	-	-	-	-	-	-
4-Nitrophenol	-	-	-	-	-	-	-	-	-	-	-	-	-	-	-	-	-	-	-	-	-
Acenaphthene	-	-	-	-	-	-	-	-	-	-	-	-	1.76e-04	1.51e-04	4.39e-04	1.56e-04	1.56e-04	3.82e-04	2.56e-04	3.18e-05	6.93e-04
Acenaphthylene	5.90e-05	1.59e-05	1.66e-04	1.23e-04	3.32e-05	3.46e-04	-	-	-	-	-	-	-	-	-	-	-	-	-	-	-
Anthracene	4.47e-05	2.16e-05	1.66e-04	9.31e-05	4.49e-05	3.46e-04	-	-	-	-	-	-	3.35e-04	1.58e-04	1.15e-03	2.95e-04	1.56e-04	1.08e-03	4.96e-04	9.49e-05	1.20e-03
Benzo(a)anthracene	6.68e-05	5.98e-05	1.66e-04	1.39e-04	1.24e-04	3.46e-04	-	-	-	-	-	-	5.14e-04	8.20e-05	2.26e-03	4.99e-04	6.94e-05	2.19e-03	3.77e-04	1.46e-04	1.72e-03
Benzo(a)pyrene	6.49e-05	4.65e-05	1.66e-04	1.35e-04	9.68e-05	3.46e-04	-	-	-	-	-	-	4.02e-04	9.19e-05	1.48e-03	3.35e-04	8.33e-05	1.35e-03	7.59e-04	1.17e-04	1.75e-03
Benzo(b)fluoranthene	7.15e-05	7.64e-05	1.66e-04	1.49e-04	1.59e-04	3.46e-04	-	-	-	-	-	-	7.92e-04	1.58e-04	3.39e-03	7.46e-04	1.56e-04	3.33e-03	7.73e-04	9.12e-05	2.12e-03
Benzo(g,h,l)perylene	6.20e-05	2.66e-05	1.66e-04	1.29e-04	5.53e-05	3.46e-04	-	-	-	-	-	-	2.66e-04	7.55e-05	1.05e-03	2.61e-04	6.25e-05	1.01e-03	1.71e-04	1.46e-04	8.39e-04
Benzo(k)fluoranthene	-	-	-	-	-	-	-	-	-	-	-	-	3.01e-04	1.25e-04	1.79e-03	2.45e-04	1.18e-04	1.73e-03	6.22e-04	1.20e-04	1.35e-03
Benzoic Acid	2.14e-04	7.31e-06	8.14e-04	4.46e-04	1.52e-05	1.69e-03	-	-	-	-	-	-	3.01e-05	4.94e-06	1.81e-04	-	-	-	2.66e-04	4.38e-05	1.61e-03
Chrysene	6.70e-05	6.14e-05	1.66e-04	1.39e-04	1.28e-04	3.46e-04	-	-	-	-	-	-	5.99e-04	7.17e-05	2.71e-03	5.48e-04	7.29e-05	2.67e-03	7.19e-04	2.55e-05	1.64e-03
Dl-n-butyl phthalate	5.15e-05	1.54e-05	1.66e-04	1.21e-04	3.45e-05	4.25e-04	1.41e-05	2.33e-06	7.89e-05	1.36e-05	2.25e-06	7.64e-05	7.14e-05	2.42e-05	2.90e-04	6.72e-05	2.03e-05	2.46e-04	1.37e-04	5.60e-05	8.82e-04
Di-n-octyl phthalate	-	-	-	-	-	-	-	-	-	-	-	-	7.04e-05	2.77e-05	2.05e-04	5.25e-05	2.32e-05	1.73e-04	1.84e-04	5.11e-05	3.65e-04
Dibenzo(a,h)anthracene	-	-	-	-	-	-	-	-	-	-	-	-	1.06e-05	2.68e-06	2.31e-05	-	-	-	9.38e-05	2.37e-05	2.04e-04
Dibenzofuran	-	-	-	-	-	-	-	-	-	-	-	-	1.64e-04	1.52e-04	3.75e-04	1.42e-04	1.56e-04	3.23e-04	2.62e-04	3.58e-05	6.20e-04
Diethyl phthalate	2.14e-04	2.49e-05	7.14e-04	4.46e-04	5.18e-05	1.49e-03	-	-	-	-	-	-	2.44e-04	2.99e-05	1.73e-03	2.43e-04	2.78e-05	1.73e-03	1.29e-04	3.25e-05	8.39e-04
Fluoranthene	6.97e-05	1.99e-05	1.66e-04	1.45e-04	4.15e-05	3.46e-04	-	-	-	-	-	-	1.37e-03	1.09e-04	5.99e-03	1.18e-03	1.08e-04	5.55e-03	2.28e-03	6.20e-05	6.57e-03
Fluorene	-	-	-	-	-	-	-	-	-	-	-	-	2.27e-04	2.36e-05	6.97e-04	1.86e-04	1.80e-05	5.90e-04	4.60e-04	5.84e-05	1.24e-03
Ideno(1,2,3-cd)pyrene	6.13e-05	2.16e-05	1.66e-04	1.28e-04	4.49e-05	3.46e-04	-	-	-	-	-	-	2.19e-04	6.57e-05	8.16e-04	2.11e-04	5.20e-05	7.63e-04	1.81e-04	1.46e-04	8.39e-04
Isophorone	5.63e-05	3.65e-05	1.56e-04	1.17e-04	7.60e-05	3.25e-04	-	-	-	-	-	-	-	-	-	-	-	-	-	-	-
N-Nitrosodiphenylamine	-	-	-	-	-	-	-	-	-	-	-	-	-	-	-	-	-	-	-	-	-
Naphthalene	-	-	-	-	-	-	-	-	-	-	-	-	2.72e-04	6.81e-05	1.75e-03	2.52e-04	6.94e-05	1.73e-03	3.07e-04	2.26e-05	9.85e-04
Pentachlorphenol	2.03e-04	1.05e-04	4.82e-04	4.22e-04	2.18e-04	1.00e-03	-	-	-	-	-	-	4.52e-04	3.93e-04	8.52e-04	4.78e-04	4.16e-04	9.02e-04	-	-	-
Phenanthrene	6.54e-05	1.28e-05	1.66e-04	1.36e-04	2.66e-05	3.46e-04	-	-	-	-	-	-	1.28e-03	5.37e-05	5.58e-03	1.10e-03	5.20e-05	5.20e-03	2.09e-03	4.01e-05	5.84e-03
Phenol	-	-	-	1.57e-05	8.33e-06	7.91e-05	1.57e-05	8.31e-06	7.89e-05	1.52e-05	8.04e-06	7.64e-05	1.02e-04	4.89e-05	2.67e-04	1.05e-04	4.24e-05	3.02e-04	9.63e-05	1.18e-04	2.14e-04
Pyrene	6.71e-05	1.83e-05	1.66e-04	1.40e-04	3.80e-05	3.46e-04	-	-	-	-	-	-	1.05e-03	9.52e-05	4.96e-03	1.04e-03	8.33e-05	4.86e-03	5.96e-04	1.46e-04	3.28e-03
trans 1,2-dichloroethane	-	-	-	-	-	-	-	-	-	-	-	-	5.35e-06	2.47e-06	1.32e-05	-	-	-	4.74e-05	2.19e-05	1.17e-04
Tributyl phosphate	-	-	-	-	-	-	-	-	-	-	-	-	2.47e-03	1.98e-03	2.97e-03	-	-	-	2.19e-02	1.75e-02	2.63e-02
bis(2-Ethylhexyl) phthalat	1.83e-04	1.09e-04	3.84e-04	1.70e-04	4.15e-05	4.76e-04	3.02e-05	3.49e-06	9.55e-05	2.11e-04	1.46e-04	4.08e-04	7.28e-04	3.16e-05	3.33e-03	7.55e-04	3.11e-05	3.46e-03	2.71e-04	3.62e-05	1.04e-03

Table 1-2
Emissions Data for Semi-Volatile Organics

Organics	Controlled Dryer Exhaust Emissions from Exhaust Stack (lb/hr) Per Phase														
	XV			XVI			XVII			XVIII			XIX		
Pollutant	avg	min	max	avg	min	max	avg	min	max	avg	min	max	avg	min	max
4,4-DDT	-	-	-	-	-	-	-	-	-	-	-	-	-	-	-
Aroclor-1221	-	-	-	-	-	-	-	-	-	-	-	-	-	-	-
Aroclor-1242	-	-	-	1.35e-04	8.06e-05	3.58e-04	-	-	-	1.19e-05	8.97e-06	3.17e-05	5.01e-05	4.77e-05	1.33e-04
Aroclor-1248	2.47e-05	1.19e-05	1.12e-04	1.18e-03	1.21e-04	2.72e-03	2.82e-05	1.36e-05	1.28e-04	2.93e-04	1.25e-04	1.17e-03	9.81e-05	1.05e-04	1.84e-04
Aroclor-1254	4.15e-05	1.19e-05	2.24e-04	8.44e-04	2.80e-04	2.61e-03	4.76e-05	1.36e-05	2.56e-04	4.37e-04	1.28e-04	2.20e-03	1.70e-04	5.61e-05	3.33e-04
Aroclor-1260	-	-	-	-	-	-	-	-	-	-	-	-	-	-	-
2,4,5-Trichlorophenol	-	-	-	-	-	-	-	-	-	1.49e-04	1.33e-04	2.98e-04	1.44e-03	1.29e-03	2.88e-03
2,4-Dichlorophenol	-	-	-	1.27e-04	7.95e-05	7.95e-04	-	-	-	6.69e-06	4.18e-06	4.18e-05	2.89e-06	1.81e-06	1.81e-05
2,4-Dinitrophenol	-	-	-	6.09e-04	1.63e-05	3.80e-03	-	-	-	3.20e-05	8.53e-07	2.00e-04	1.38e-05	3.69e-07	8.64e-05
2,6-Dinitrotoluene	-	-	-	-	-	-	-	-	-	-	-	-	-	-	-
2-Chlorophenol	-	-	-	-	-	-	-	-	-	-	-	-	-	-	-
2-Methylnaphthalene	-	-	-	1.73e-04	1.45e-04	3.80e-04	-	-	-	9.10e-06	7.62e-06	2.00e-05	3.93e-06	3.30e-06	8.64e-06
3-Methylphenol	-	-	-	6.85e-05	3.32e-05	1.63e-04	-	-	-	3.60e-06	1.74e-06	8.53e-06	1.56e-06	7.54e-07	3.69e-06
3,3-Dichlorobenzidine	-	-	-	-	-	-	-	-	-	-	-	-	-	-	-
4-Chloro-3-methylphenol	-	-	-	1.23e-04	1.90e-05	7.95e-04	-	-	-	6.46e-06	9.98e-07	4.18e-05	2.79e-06	4.32e-07	1.81e-05
4-Methylphenol	-	-	-	8.68e-05	1.24e-04	1.63e-04	-	-	-	4.56e-06	6.54e-06	8.53e-06	1.97e-06	2.83e-06	3.69e-06
4-Nitroaniline	-	-	-	-	-	-	-	-	-	-	-	-	-	-	-
4-Nitrophenol	-	-	-	-	-	-	-	-	-	-	-	-	-	-	-
Acenaphthene	-	-	-	2.42e-04	3.01e-05	6.57e-04	-	-	-	1.27e-05	1.58e-06	3.45e-05	5.50e-06	6.83e-07	1.49e-05
Acenaphthylene	-	-	-	-	-	-	-	-	-	-	-	-	-	-	-
Anthracene	-	-	-	4.70e-04	8.99e-05	1.14e-03	-	-	-	4.51e-05	2.23e-05	1.15e-04	2.08e-04	1.73e-04	5.57e-04
Benzo(a)anthracene	-	-	-	3.57e-04	1.38e-04	1.63e-03	-	-	-	3.90e-05	1.27e-05	1.40e-04	2.04e-04	5.62e-05	5.68e-04
Benzo(a)pyrene	-	-	-	7.19e-04	1.11e-04	1.66e-03	-	-	-	6.03e-05	3.21e-05	1.42e-04	2.35e-04	2.57e-04	5.69e-04
Benzo(b)fluoranthene	-	-	-	7.32e-04	8.64e-05	2.01e-03	-	-	-	6.14e-05	3.08e-05	1.60e-04	2.39e-04	2.56e-04	5.77e-04
Benzo(g,h,I)perylene	-	-	-	1.62e-04	1.38e-04	7.95e-04	-	-	-	2.68e-05	1.63e-05	9.66e-05	1.81e-04	9.04e-05	5.49e-04
Benzo(k)fluoranthene	-	-	-	5.89e-04	1.14e-04	1.28e-03	-	-	-	5.43e-05	3.22e-05	1.22e-04	2.40e-04	2.57e-04	5.60e-04
Benzoic Acid	-	-	-	2.52e-04	4.15e-05	1.52e-03	-	-	-	1.33e-05	2.18e-06	7.99e-05	5.73e-06	9.42e-07	3.45e-05
Chrysene	-	-	-	6.81e-04	2.42e-05	1.56e-03	-	-	-	5.46e-05	4.17e-06	1.37e-04	1.98e-04	2.86e-05	5.66e-04
DI-n-butyl phthalate	1.23e-05	2.02e-06	6.86e-05	1.36e-04	5.42e-05	8.74e-04	1.40e-05	2.32e-06	7.86e-05	1.46e-04	2.59e-05	7.35e-04	2.74e-04	4.67e-05	6.63e-04
Di-n-octyl phthalate	-	-	-	1.74e-04	4.84e-05	3.46e-04	-	-	-	9.15e-06	2.54e-06	1.82e-05	3.96e-06	1.10e-06	7.85e-06
Dibenzo(a,h)anthracene	-	-	-	8.89e-05	2.25e-05	1.94e-04	-	-	-	4.67e-06	1.18e-06	1.02e-05	2.02e-06	5.10e-07	4.40e-06
Dibenzofuran	-	-	-	2.48e-04	3.39e-05	5.88e-04	-	-	-	1.30e-05	1.78e-06	3.09e-05	5.63e-06	7.69e-07	1.33e-05
Diethyl phthalate	-	-	-	1.22e-04	3.08e-05	7.95e-04	-	-	-	2.64e-05	1.77e-05	9.66e-05	1.97e-04	1.56e-04	5.49e-04
Fluoranthene	-	-	-	2.16e-03	5.88e-05	6.22e-03	-	-	-	1.60e-04	2.93e-05	4.48e-04	4.98e-04	2.55e-04	1.32e-03
Fluorene	-	-	-	4.36e-04	5.53e-05	1.18e-03	-	-	-	2.29e-05	2.90e-06	6.17e-05	9.89e-06	1.26e-06	2.67e-05
Ideno(1,2,3-cd)pyrene	-	-	-	1.72e-04	1.38e-04	7.95e-04	-	-	-	2.77e-05	1.78e-05	9.66e-05	1.85e-04	1.06e-04	5.49e-04
Isophorone	-	-	-	-	-	-	-	-	-	-	-	-	-	-	-
N-Nitrosodiphenylamine	-	-	-	-	-	-	-	-	-	-	-	-	-	-	-
Naphthalene	-	-	-	2.91e-04	2.14e-05	9.34e-04	-	-	-	1.53e-05	1.13e-06	4.90e-05	6.60e-06	4.87e-07	2.12e-05
Pentachlorphenol	-	-	-	-	-	-	-	-	-	-	-	-	-	-	-
Phenanthrene	-	-	-	1.98e-03	3.80e-05	5.53e-03	-	-	-	1.29e-04	5.68e-06	3.73e-04	2.91e-04	3.65e-05	9.22e-04
Phenol	1.36e-05	7.22e-06	6.86e-05	9.90e-05	1.15e-04	2.41e-04	1.56e-05	8.27e-06	7.86e-05	1.29e-04	7.16e-05	6.35e-04	1.89e-06	2.43e-06	3.69e-06
Pyrene	-	-	-	5.64e-04	1.38e-04	3.11e-03	-	-	-	5.39e-05	1.09e-05	2.18e-04	2.48e-04	3.88e-05	6.02e-04
trans 1,2-dichloroethane	-	-	-	4.50e-05	2.07e-05	1.11e-04	-	-	-	2.36e-06	1.09e-06	5.81e-06	1.02e-06	4.71e-07	2.51e-06
Tributyl phosphate	-	-	-	2.07e-02	1.66e-02	2.49e-02	-	-	-	1.09e-03	8.71e-04	1.31e-03	4.71e-04	3.77e-04	5.65e-04
bis(2-Ethylhexyl) phthalat	2.62e-05	3.03e-06	8.31e-05	2.71e-04	3.60e-05	1.03e-03	3.01e-05	3.47e-06	9.51e-05	2.66e-04	3.72e-05	8.34e-04	1.35e-04	7.66e-05	2.75e-04

Table 1-3
Emissions Data for Volatile Organic Compounds (VOCs)

VOC	Controlled Dryer Exhaust Emissions from Exhaust Stack (lb/hr) Per Phase																				
	I			II			III			IV			V			VI			VII		
Pollutant	avg	min	max	avg	min	max	avg	min	max	avg	min	max	avg	min	max	avg	min	max	avg	min	max
1,1,1-Trichloroethane	1.55e-05	1.44e-06	1.23e-04	9.61e-05	9.26e-05	2.70e-04	1.54e-05	1.43e-06	1.22e-04	7.46e-05	6.54e-05	2.49e-04	1.37e-04	1.15e-04	3.54e-04	1.73e-05	1.48e-06	1.25e-04	9.55e-05	9.53e-05	3.11e-04
1,1-Dichloroethane	-	-	-	4.60e-06	1.66e-06	2.42e-05	-	-	-	3.20e-06	1.07e-06	1.76e-05	2.97e-05	2.61e-06	2.02e-04	-	-	-	6.01e-06	3.03e-06	2.69e-05
1,1-Dichloroethene	-	-	-	4.15e-06	3.80e-06	1.74e-05	-	-	-	2.40e-06	2.67e-06	8.53e-06	7.72e-06	2.89e-06	4.07e-05	-	-	-	9.67e-06	3.62e-06	5.93e-05
1,2-Dichloroethane	-	-	-	4.94e-07	3.12e-07	1.04e-06	-	-	-	-	-	-	4.55e-06	3.49e-06	1.04e-05	-	-	-	4.80e-06	3.67e-06	1.02e-05
1,2-Dichloroethylene	-	-	-	-	-	-	-	-	-	-	-	-	1.16e-05	1.78e-06	6.52e-05	-	-	-	9.31e-07	1.42e-07	5.22e-06
1,4-Dioxane	-	-	-	1.12e-03	4.91e-05	4.40e-03	-	-	-	8.39e-04	2.24e-05	3.33e-03	1.33e-04	1.08e-04	2.11e-04	-	-	-	2.29e-04	2.23e-04	3.62e-04
2-Butanone	2.60e-03	2.60e-03	2.60e-03	3.74e-03	3.35e-03	4.62e-03	2.58e-03	2.58e-03	2.58e-03	3.95e-03	3.67e-03	4.58e-03	2.12e-03	1.97e-03	2.45e-03	2.89e-03	2.66e-03	2.66e-03	3.83e-03	3.78e-03	4.40e-03
2-Hexanone	7.36e-06	4.33e-06	2.60e-05	1.01e-05	5.72e-06	3.18e-05	7.30e-06	4.29e-06	2.58e-05	1.04e-05	5.85e-06	3.46e-05	1.43e-05	7.67e-06	4.23e-05	8.19e-06	4.43e-06	2.66e-05	1.61e-05	1.20e-05	4.73e-05
3-Chloropropene	-	-	-	-	-	-	-	-	-	-	-	-	2.67e-06	1.78e-06	7.12e-06	-	-	-	2.14e-07	1.42e-07	5.69e-07
4-Methyl-2-pentanone	6.82e-06	2.16e-06	2.60e-05	8.22e-06	3.57e-06	2.61e-05	6.76e-06	2.15e-06	2.58e-05	9.42e-06	3.73e-06	3.19e-05	1.26e-05	2.28e-06	6.24e-05	7.59e-06	2.21e-06	2.66e-05	7.40e-06	2.21e-06	2.93e-05
Acetone	2.92e-04	4.33e-06	8.66e-04	3.51e-04	5.54e-05	9.19e-04	2.89e-04	4.29e-06	8.58e-04	3.91e-04	3.52e-05	1.08e-03	4.04e-04	2.75e-04	9.65e-04	3.25e-04	4.43e-06	8.86e-04	4.45e-04	1.56e-04	1.14e-03
Benzene	-	-	-	3.95e-07	2.08e-07	1.09e-06	-	-	-	-	-	-	4.73e-06	4.10e-06	1.43e-05	-	-	-	3.93e-06	2.59e-06	1.09e-05
Carbon Tetrachloride	-	-	-	2.10e-06	1.40e-06	5.59e-06	-	-	-	1.60e-06	1.07e-06	4.27e-06	1.78e-06	1.19e-06	4.74e-06	-	-	-	1.42e-07	9.49e-08	3.80e-07
Carbon Disulfide	-	-	-	-	-	-	-	-	-	-	-	-	1.88e-06	1.78e-06	4.74e-06	-	-	-	1.50e-07	1.42e-07	3.80e-07
Chlorobenzene	-	-	-	-	-	-	-	-	-	-	-	-	-	-	-	-	-	-	-	-	-
Chloroethane	-	-	-	-	-	-	-	-	-	-	-	-	5.60e-06	6.52e-06	2.08e-05	-	-	-	4.48e-07	5.22e-07	1.66e-06
Chloroform	-	-	-	8.68e-05	4.68e-05	1.68e-04	-	-	-	6.63e-05	3.57e-05	1.28e-04	2.75e-04	2.37e-05	7.71e-04	-	-	-	2.20e-05	1.90e-06	6.17e-05
Ethylbenzene	-	-	-	6.24e-05	3.04e-05	1.86e-04	-	-	-	4.27e-05	2.13e-05	1.28e-04	3.96e-05	1.54e-05	1.19e-04	-	-	-	6.19e-05	2.84e-05	1.78e-04
Isobutyl Alcohol	-	-	-	-	-	-	-	-	-	-	-	-	4.06e-05	1.01e-05	1.42e-04	-	-	-	3.25e-06	8.07e-07	1.14e-05
Methylene Chloride	3.03e-04	3.03e-04	3.03e-04	3.23e-04	3.13e-04	4.87e-04	3.00e-04	3.00e-04	3.00e-04	3.79e-04	3.72e-04	4.90e-04	6.93e-04	3.20e-04	1.61e-03	3.37e-04	3.10e-04	3.10e-04	4.36e-04	4.06e-04	6.70e-04
Styrene	-	-	-	-	-	-	-	-	-	-	-	-	1.84e-06	1.78e-06	4.74e-06	-	-	-	1.48e-07	1.42e-07	3.80e-07
Tetrachloroethene	-	-	-	-	-	-	-	-	-	-	-	-	1.68e-04	1.90e-04	3.14e-04	-	-	-	1.34e-05	1.52e-05	2.52e-05
Toluene	-	-	-	6.39e-05	2.79e-05	1.68e-04	-	-	-	4.88e-05	2.13e-05	1.28e-04	6.33e-05	3.56e-05	1.90e-04	-	-	-	5.07e-06	2.85e-06	1.52e-05
Total Xylenes	-	-	-	8.51e-06	1.09e-05	1.87e-05	-	-	-	-	-	-	6.89e-05	6.15e-05	2.39e-04	-	-	-	8.19e-05	1.24e-04	1.87e-04
Trichloroethene	-	-	-	-	-	-	-	-	-	-	-	-	4.72e-05	1.19e-06	1.25e-04	-	-	-	3.78e-06	9.49e-08	9.97e-06
Trichlorofluoromethane	-	-	-	-	-	-	-	-	-	-	-	-	2.67e-06	1.19e-06	8.30e-06	-	-	-	2.14e-07	9.49e-08	6.64e-07
Vinly Chloride	-	-	-	2.04e-05	2.23e-05	3.69e-05	-	-	-	-	-	-	1.16e-04	1.29e-04	2.11e-04	-	-	-	1.92e-04	2.53e-04	3.48e-04

Table 1-3
Emissions Data for Volatile Organic Compounds (VOCs)

VOC	Controlled Dryer Exhaust Emissions from Exhaust Stack (lb/hr) Per Phase																				
	VIII			IX			X			XI			XII			XIII			XIV		
Polltuant	avg	min	max	avg	min	max	avg	min	max	avg	min	max	avg	min	max	avg	min	max	avg	min	max
1,1,1-Trichloroethane	1.15e-05	1.07e-06	9.06e-05	2.39e-05	2.22e-06	1.88e-04	-	-	-	-	-	-	2.26e-05	1.80e-05	5.07e-05	3.62e-06	2.23e-06	8.91e-06	1.70e-04	1.41e-04	3.75e-04
1,1-Dichloroethane	-	-	-	-	-	-	-	-	-	-	-	-	3.41e-05	7.63e-06	1.59e-04	2.96e-05	7.79e-06	1.22e-04	5.42e-05	2.34e-06	3.86e-04
1,1-Dichloroethene	-	-	-	-	-	-	-	-	-	-	-	-	4.17e-06	6.58e-06	9.87e-06	3.90e-06	6.68e-06	8.91e-06	4.36e-06	2.34e-06	1.29e-05
1,2-Dichloroethane	-	-	-	-	-	-	-	-	-	-	-	-	4.09e-06	6.71e-06	9.47e-06	3.90e-06	6.68e-06	8.91e-06	3.64e-06	3.51e-06	9.37e-06
1,2-Dichloroethylene	-	-	-	-	-	-	-	-	-	-	-	-	2.59e-06	3.96e-07	1.45e-05	-	-	-	2.30e-05	3.51e-06	1.29e-04
1,4-Dioxane	-	-	-	-	-	-	-	-	-	-	-	-	-	-	-	-	-	-	-	-	-
2-Butanone	2.42e-03	2.29e-03	3.27e-03	3.99e-03	3.99e-03	3.99e-03	-	-	-	7.88e-04	5.90e-04	2.12e-03	1.55e-04	8.69e-05	4.34e-04	1.50e-04	7.79e-05	4.45e-04	1.17e-04	1.17e-04	1.17e-04
2-Hexanone	5.43e-06	3.20e-06	1.92e-05	1.13e-05	6.65e-06	3.99e-05	-	-	-	-	-	-	7.19e-06	2.50e-06	1.96e-05	6.27e-06	2.23e-06	1.67e-05	1.13e-05	3.51e-06	3.40e-05
3-Chloropropene	-	-	-	-	-	-	-	-	-	-	-	-	5.95e-07	3.96e-07	1.59e-06	-	-	-	5.27e-06	3.51e-06	1.41e-05
4-Methyl-2-pentanone	5.03e-06	1.60e-06	1.92e-05	1.05e-05	3.33e-06	3.99e-05	-	-	-	-	-	-	9.29e-06	6.58e-06	2.67e-05	7.66e-06	6.68e-06	1.67e-05	1.82e-05	2.34e-06	9.72e-05
Acetone	2.16e-04	3.20e-06	6.39e-04	7.19e-04	6.95e-05	2.17e-03	2.70e-04	6.26e-05	8.40e-04	2.61e-04	6.06e-05	8.13e-04	2.03e-04	9.04e-05	5.55e-04	3.11e-04	7.85e-05	9.24e-04	4.82e-04	4.43e-04	1.19e-03
Benzene	-	-	-	-	-	-	-	-	-	-	-	-	5.72e-07	6.61e-07	1.85e-06	-	-	-	5.07e-06	5.86e-06	1.64e-05
Carbon Tetrachloride	-	-	-	-	-	-	-	-	-	-	-	-	3.96e-07	2.64e-07	1.06e-06	-	-	-	3.51e-06	2.34e-06	9.37e-06
Carbon Disulfide	-	-	-	-	-	-	-	-	-	-	-	-	3.45e-06	1.45e-06	9.47e-06	3.21e-06	1.11e-06	8.91e-06	3.71e-06	3.51e-06	9.37e-06
Chlorobenzene	-	-	-	-	-	-	-	-	-	-	-	-	3.29e-06	2.10e-06	8.42e-06	3.48e-06	2.23e-06	8.91e-06	-	-	-
Chloroethane	-	-	-	-	-	-	-	-	-	-	-	-	1.25e-06	1.45e-06	4.62e-06	-	-	-	1.11e-05	1.29e-05	4.10e-05
Chloroform	-	-	-	-	-	-	-	-	-	-	-	-	6.13e-05	5.29e-06	1.72e-04	-	-	-	5.43e-04	4.68e-05	1.52e-03
Ethylbenzene	-	-	-	-	-	-	-	-	-	-	-	-	1.41e-04	2.11e-04	2.88e-04	1.48e-04	2.23e-04	3.01e-04	7.48e-06	3.51e-06	3.28e-05
Isobutyl Alcohol	-	-	-	-	-	-	-	-	-	-	-	-	9.05e-06	2.25e-06	3.17e-05	-	-	-	8.02e-05	1.99e-05	2.81e-04
Methylene Chloride	4.96e-04	4.22e-04	9.19e-04	4.98e-04	4.71e-04	5.50e-04	3.20e-05	5.60e-06	8.40e-05	4.58e-04	3.17e-04	1.17e-03	1.40e-04	3.62e-05	3.86e-04	5.11e-05	1.32e-05	1.44e-04	9.66e-04	2.37e-04	2.62e-03
Styrene	-	-	-	-	-	-	-	-	-	-	-	-	4.11e-07	3.96e-07	1.06e-06	-	-	-	3.64e-06	3.51e-06	9.37e-06
Tetrachloroethene	1.03e-02	5.46e-04	2.06e-02	-	-	-	-	-	-	1.61e-02	8.57e-04	3.23e-02	1.87e-04	2.21e-04	3.44e-04	1.59e-04	1.89e-04	2.89e-04	3.32e-04	3.75e-04	6.21e-04
Toluene	-	-	-	-	-	-	-	-	-	-	-	-	1.15e-04	6.05e-05	2.84e-04	1.07e-04	5.57e-05	2.56e-04	1.25e-04	7.03e-05	3.75e-04
Total Xylenes	-	-	-	-	-	-	-	-	-	-	-	-	2.54e-04	2.11e-04	9.67e-04	2.63e-04	2.23e-04	9.91e-04	4.41e-05	3.51e-06	2.69e-04
Trichloroethene	2.34e-04	1.21e-04	6.60e-04	-	-	-	-	-	-	3.67e-04	1.89e-04	1.04e-03	1.42e-05	6.58e-06	3.62e-05	3.90e-06	6.68e-06	8.91e-06	9.32e-05	2.34e-06	2.46e-04
Trichlorofluoromethane	-	-	-	-	-	-	-	-	-	-	-	-	5.95e-07	2.64e-07	1.85e-06	-	-	-	5.27e-06	2.34e-06	1.64e-05
Vinly Chloride	-	-	-	-	-	-	-	-	-	-	-	-	7.48e-06	4.61e-06	1.79e-05	6.82e-06	3.34e-06	1.67e-05	9.11e-06	1.29e-05	1.87e-05

Table 1-3
Emissions Data for Volatile Organic Compounds (VOCs)

VOC	Controlled Dryer Exhaust Emissions from Exhaust Stack (lb/hr) Per Phase														
	XV			XVI			XVII			XVIII			XIX		
Polltuant	avg	min	max	avg	min	max	avg	min	max	avg	min	max	avg	min	max
1,1,1-Trichloroethane	-	-	-	1.61e-04	1.33e-04	3.55e-04	-	-	-	8.45e-06	6.99e-06	1.86e-05	3.65e-06	3.02e-06	8.06e-06
1,1-Dichloroethane	-	-	-	5.13e-05	2.22e-06	3.66e-04	-	-	-	2.70e-06	1.16e-07	1.92e-05	1.17e-06	5.04e-08	8.31e-06
1,1-Dichloroethene	-	-	-	4.13e-06	2.22e-06	1.22e-05	-	-	-	2.17e-07	1.16e-07	6.41e-07	9.37e-08	5.04e-08	2.77e-07
1,2-Dichloroethane	-	-	-	3.45e-06	3.33e-06	8.88e-06	-	-	-	1.81e-07	1.75e-07	4.66e-07	7.83e-08	7.56e-08	2.02e-07
1,2-Dichloroethylene	-	-	-	2.18e-05	3.33e-06	1.22e-04	-	-	-	1.14e-06	1.75e-07	6.41e-06	4.94e-07	7.56e-08	2.77e-06
1,4-Dioxane	-	-	-	-	-	-	-	-	-	-	-	-	-	-	-
2-Butanone	-	-	-	1.11e-04	1.11e-04	1.11e-04	-	-	-	5.82e-06	5.82e-06	5.82e-06	2.52e-06	2.52e-06	2.52e-06
2-Hexanone	-	-	-	1.07e-05	3.33e-06	3.22e-05	-	-	-	5.60e-07	1.75e-07	1.69e-06	2.42e-07	7.56e-08	7.30e-07
3-Chloropropene	-	-	-	4.99e-06	3.33e-06	1.33e-05	-	-	-	2.62e-07	1.75e-07	6.99e-07	1.13e-07	7.56e-08	3.02e-07
4-Methyl-2-pentanone	-	-	-	1.72e-05	2.22e-06	9.21e-05	-	-	-	9.03e-07	1.16e-07	4.83e-06	3.90e-07	5.04e-08	2.09e-06
Acetone	2.35e-04	5.45e-05	7.30e-04	5.89e-04	4.51e-04	1.54e-03	2.69e-04	6.24e-05	8.36e-04	2.30e-03	6.30e-04	6.96e-03	1.40e-03	1.09e-03	2.45e-03
Benzene	-	-	-	4.80e-06	5.55e-06	1.55e-05	-	-	-	2.52e-07	2.91e-07	8.15e-07	1.09e-07	1.26e-07	3.53e-07
Carbon Tetrachloride	-	-	-	3.33e-06	2.22e-06	8.88e-06	-	-	-	1.75e-07	1.16e-07	4.66e-07	7.56e-08	5.04e-08	2.02e-07
Carbon Disulfide	-	-	-	3.52e-06	3.33e-06	8.88e-06	-	-	-	1.85e-07	1.75e-07	4.66e-07	7.99e-08	7.56e-08	2.02e-07
Chlorobenzene	-	-	-	-	-	-	-	-	-	-	-	-	-	-	-
Chloroethane	-	-	-	1.05e-05	1.22e-05	3.88e-05	-	-	-	5.50e-07	6.41e-07	2.04e-06	2.38e-07	2.77e-07	8.82e-07
Chloroform	-	-	-	5.15e-04	4.44e-05	1.44e-03	-	-	-	2.70e-05	2.33e-06	7.57e-05	1.17e-05	1.01e-06	3.27e-05
Ethylbenzene	-	-	-	7.09e-06	3.33e-06	3.11e-05	-	-	-	3.72e-07	1.75e-07	1.63e-06	1.61e-07	7.56e-08	7.05e-07
Isobutyl Alcohol	-	-	-	7.60e-05	1.89e-05	2.66e-04	-	-	-	3.99e-06	9.90e-07	1.40e-05	1.73e-06	4.28e-07	6.05e-06
Methylene Chloride	2.78e-05	4.87e-06	7.30e-05	9.31e-04	2.27e-04	2.52e-03	3.18e-05	5.57e-06	8.36e-05	3.68e-04	1.12e-04	9.21e-04	6.67e-04	5.47e-04	1.27e-03
Styrene	-	-	-	3.45e-06	3.33e-06	8.88e-06	-	-	-	1.81e-07	1.75e-07	4.66e-07	7.83e-08	7.56e-08	2.02e-07
Tetrachloroethene	-	-	-	3.14e-04	3.55e-04	5.88e-04	-	-	-	1.65e-05	1.86e-05	3.09e-05	7.14e-06	8.06e-06	1.34e-05
Toluene	-	-	-	1.18e-04	6.66e-05	3.55e-04	-	-	-	6.22e-06	3.49e-06	1.86e-05	2.69e-06	1.51e-06	8.06e-06
Total Xylenes	-	-	-	4.18e-05	3.33e-06	2.55e-04	-	-	-	2.19e-06	1.75e-07	1.34e-05	9.49e-07	7.56e-08	5.79e-06
Trichloroethene	-	-	-	8.83e-05	2.22e-06	2.33e-04	-	-	-	4.63e-06	1.16e-07	1.22e-05	2.00e-06	5.04e-08	5.29e-06
Trichlorofluoromethane	-	-	-	4.99e-06	2.22e-06	1.55e-05	-	-	-	2.62e-07	1.16e-07	8.15e-07	1.13e-07	5.04e-08	3.53e-07
Vinly Chloride	-	-	-	8.63e-06	1.22e-05	1.78e-05	-	-	-	4.53e-07	6.41e-07	9.32e-07	1.96e-07	2.77e-07	4.03e-07

Table 1-4
Emissions Data for Regulated Toxic Metals

Particulate Metals	Controlled Dryer Exhaust Emissions from Exhaust Stack (lb/hr) Per Phase																				
	I			II			III			IV			V			VI			VII		
Polltuant	avg	min	max	avg	min	max	avg	min	max	avg	min	max	avg	min	max	avg	min	max	avg	min	max
Anitmony	2.38e-09	5.66e-10	4.67e-09	5.32e-09	1.09e-09	1.24e-08	2.36e-09	5.61e-10	4.63e-09	5.00e-09	1.02e-09	1.14e-08	8.42e-09	1.30e-09	2.31e-08	2.65e-12	5.79e-13	4.77e-12	4.79e-09	5.90e-10	8.86e-09
Arsenic	6.64e-07	5.07e-10	2.73e-06	4.54e-07	6.64e-10	1.87e-06	6.59e-07	5.03e-10	2.71e-06	6.53e-07	5.47e-10	2.69e-06	3.41e-07	1.76e-09	1.39e-06	7.40e-10	5.19e-13	2.80e-09	6.58e-07	5.07e-10	2.69e-06
Beryllium	6.44e-10	8.82e-11	1.76e-09	8.35e-10	1.66e-10	2.23e-09	6.38e-10	8.74e-11	1.75e-09	8.69e-10	1.46e-10	2.41e-09	1.82e-09	2.27e-10	4.73e-09	7.16e-13	9.02e-14	1.80e-12	1.53e-09	8.88e-11	3.31e-09
Cadmium	9.79e-10	1.62e-10	2.84e-09	1.35e-09	1.90e-10	3.32e-09	9.70e-10	1.60e-10	2.81e-09	1.45e-09	2.04e-10	3.79e-09	1.44e-09	2.50e-10	3.91e-09	1.09e-12	1.65e-13	2.90e-12	1.45e-09	1.63e-10	3.58e-09
Chromium	9.03e-09	2.11e-09	1.72e-08	1.49e-08	2.78e-09	3.79e-08	8.96e-09	2.09e-09	1.70e-08	1.48e-08	2.72e-09	3.57e-08	3.81e-08	4.47e-09	1.07e-07	1.01e-11	2.16e-12	1.76e-11	2.01e-08	2.12e-09	3.81e-08
Cobalt	1.72e-09	6.32e-10	3.73e-09	5.92e-09	1.86e-09	1.36e-08	1.71e-09	6.27e-10	3.69e-09	2.69e-09	8.87e-10	6.20e-09	2.32e-08	6.41e-09	5.55e-08	1.92e-12	6.46e-13	3.81e-12	3.44e-08	6.42e-10	7.78e-08
Lead	2.77e-08	1.01e-09	6.15e-08	2.28e-08	1.93e-09	5.23e-08	2.75e-08	9.98e-10	6.10e-08	2.82e-08	1.26e-09	6.53e-08	3.07e-08	6.74e-09	5.69e-08	3.09e-11	1.03e-12	6.29e-11	5.19e-08	1.10e-09	9.82e-08
Manganese	6.93e-07	2.51e-08	1.48e-06	5.42e-07	2.47e-08	1.29e-06	6.87e-07	2.48e-08	1.47e-06	7.28e-07	2.81e-08	1.66e-06	5.68e-07	7.03e-08	1.17e-06	7.72e-10	2.56e-11	1.52e-09	7.62e-07	2.78e-08	1.62e-06
Mercury	1.17e-10	8.82e-12	3.75e-10	9.63e-11	1.70e-11	2.91e-10	1.16e-10	8.74e-12	3.72e-10	1.21e-10	1.41e-11	3.85e-10	1.21e-10	3.31e-11	3.02e-10	1.30e-13	9.02e-15	3.83e-13	1.98e-10	9.25e-12	4.99e-10
Nickel	1.00e-08	1.62e-09	3.70e-08	1.27e-08	2.47e-09	3.91e-08	9.95e-09	1.60e-09	3.67e-08	1.12e-08	1.88e-09	3.99e-08	3.26e-08	6.65e-09	8.26e-08	1.12e-11	1.65e-12	3.79e-11	4.89e-08	1.63e-09	1.24e-07

Table 1-4
Emissions Data for Regulated Toxic Metals

Particulate Metals	Controlled Dryer Exhaust Emissions from Exhaust Stack (lb/hr) Per Phase																				
	VIII			IX			X			XI			XII			XIII			XIV		
Polltuant	avg	min	max	avg	min	max	avg	min	max	avg	min	max	avg	min	max	avg	min	max	avg	min	max
Anitmony	1.76e-09	4.18e-10	3.45e-09	4.02e-09	9.28e-10	8.37e-09	3.65e-10	5.84e-11	1.20e-09	3.53e-10	5.65e-11	1.16e-09	2.55e-09	8.97e-10	6.70e-09	1.45e-09	8.73e-10	3.18e-09	1.22e-08	9.14e-10	3.84e-08
Arsenic	4.94e-07	1.62e-09	2.02e-06	1.03e-06	2.67e-09	4.24e-06	1.30e-08	1.89e-09	3.80e-08	1.74e-08	3.79e-09	4.55e-08	7.61e-09	1.59e-09	2.09e-08	1.46e-08	2.61e-09	4.12e-08	7.37e-09	1.22e-09	2.11e-08
Beryllium	6.15e-10	1.37e-10	1.71e-09	1.12e-09	1.50e-10	3.02e-09	1.26e-10	1.49e-11	3.04e-10	3.41e-10	1.28e-10	9.41e-10	5.91e-10	6.64e-11	2.53e-09	4.48e-10	7.12e-11	2.11e-09	2.09e-09	6.40e-11	6.20e-09
Cadmium	8.35e-10	1.56e-10	2.98e-09	1.57e-09	2.67e-10	4.59e-09	6.92e-11	1.90e-11	2.31e-10	2.43e-10	7.51e-11	1.62e-09	8.24e-10	7.36e-11	4.32e-09	7.44e-10	7.51e-11	4.19e-09	1.41e-09	1.14e-10	4.27e-09
Chromium	7.74e-09	1.93e-09	1.71e-08	1.55e-08	3.59e-09	2.95e-08	1.63e-09	3.53e-10	3.03e-09	3.26e-09	9.31e-10	9.78e-09	1.29e-08	1.89e-09	3.13e-08	7.78e-09	2.02e-09	1.33e-08	5.68e-08	1.54e-09	1.81e-07
Cobalt	3.15e-09	2.35e-09	4.63e-09	2.96e-09	1.11e-09	6.32e-09	3.16e-10	1.36e-10	5.97e-10	3.25e-09	3.08e-09	3.53e-09	5.50e-09	8.11e-10	1.46e-08	5.15e-09	8.91e-10	1.32e-08	7.16e-09	3.71e-10	2.21e-08
Lead	2.50e-08	2.67e-09	5.36e-08	4.47e-08	2.35e-09	9.77e-08	2.07e-09	8.01e-10	3.20e-09	9.09e-09	3.79e-09	1.59e-08	1.82e-08	2.02e-09	3.21e-08	1.98e-08	2.23e-09	3.47e-08	5.83e-09	3.11e-09	9.25e-09
Manganese	5.24e-07	2.06e-08	1.12e-06	1.09e-06	4.32e-08	2.35e-06	2.47e-08	4.70e-09	6.43e-08	4.22e-08	7.77e-09	9.77e-08	9.75e-08	2.39e-08	2.88e-07	7.38e-08	1.80e-08	2.57e-07	3.63e-07	8.34e-08	7.05e-07
Mercury	8.63e-11	6.51e-12	2.77e-10	1.94e-10	1.90e-11	6.00e-10	1.47e-11	5.43e-12	2.44e-11	1.42e-11	5.26e-12	2.37e-11	7.06e-11	1.68e-11	1.48e-10	7.88e-11	1.89e-11	1.60e-10	3.53e-11	1.72e-11	8.70e-11
Nickel	8.65e-09	1.75e-09	3.10e-08	1.71e-08	2.84e-09	6.03e-08	1.72e-09	3.53e-10	3.35e-09	3.61e-09	1.21e-09	9.03e-09	1.15e-08	1.97e-09	2.65e-08	1.18e-08	2.16e-09	2.66e-08	1.09e-08	1.13e-09	2.84e-08

Table 1-4
Emissions Data for Regulated Toxic Metals

Particulate Metals	Controlled Dryer Exhaust Emissions from Exhaust Stack (lb/hr) Per Phase														
	XV			XVI			XVII			XVIII			XIX		
Polltuant	avg	min	max	avg	min	max	avg	min	max	avg	min	max	avg	min	max
Anitmony	3.17e-10	5.08e-11	1.04e-09	1.17e-08	8.94e-10	3.70e-08	3.63e-10	5.81e-11	1.19e-09	3.61e-09	5.19e-10	1.18e-08	1.34e-09	1.31e-10	4.78e-09
Arsenic	1.13e-08	1.64e-09	3.30e-08	1.34e-08	2.08e-09	3.86e-08	1.30e-08	1.88e-09	3.78e-08	1.04e-07	1.52e-08	3.03e-07	4.06e-09	1.88e-09	7.34e-09
Beryllium	1.09e-10	1.30e-11	2.64e-10	2.04e-09	6.80e-11	6.02e-09	1.25e-10	1.49e-11	3.03e-10	1.14e-09	1.29e-10	2.83e-09	4.07e-10	7.56e-11	1.26e-09
Cadmium	6.02e-11	1.65e-11	2.01e-10	1.37e-09	1.17e-10	4.16e-09	6.89e-11	1.89e-11	2.30e-10	6.61e-10	1.71e-10	2.13e-09	4.51e-10	1.51e-10	9.82e-10
Chromium	1.41e-09	3.07e-10	2.63e-09	5.46e-08	1.63e-09	1.73e-07	1.62e-09	3.51e-10	3.01e-09	1.69e-08	3.16e-09	3.54e-08	1.29e-08	2.83e-09	2.81e-08
Cobalt	2.74e-10	1.18e-10	5.19e-10	6.94e-09	4.18e-10	2.13e-08	3.14e-10	1.35e-10	5.95e-10	3.05e-09	1.19e-09	6.16e-09	2.01e-09	9.61e-10	3.66e-09
Lead	1.80e-09	6.96e-10	2.79e-09	6.54e-09	3.34e-09	1.03e-08	2.06e-09	7.98e-10	3.19e-09	1.98e-08	6.79e-09	3.33e-08	3.05e-08	2.96e-09	7.31e-08
Manganese	2.15e-08	4.08e-09	5.59e-08	3.56e-07	8.13e-08	6.99e-07	2.46e-08	4.68e-09	6.41e-08	2.94e-07	5.04e-08	7.98e-07	7.88e-07	8.95e-08	2.47e-06
Mercury	1.27e-11	4.72e-12	2.12e-11	4.06e-11	1.90e-11	9.44e-11	1.46e-11	5.41e-12	2.43e-11	1.49e-10	4.90e-11	2.54e-10	2.98e-10	4.99e-11	5.47e-10
Nickel	1.49e-09	3.07e-10	2.92e-09	1.12e-08	1.24e-09	2.85e-08	1.71e-09	3.51e-10	3.34e-09	1.54e-08	3.26e-09	3.09e-08	1.21e-08	3.97e-09	2.88e-08

Table 1-5
Radon Content of Stack Gases from OU1 Blended Batches
Based on Blending Plan in BAFO Final and Final RI/FS Concentration Data

Oper. Phase	KTons Pit 1	KTons Pit 2	KTons Pit 3	KTons Pit 4	KTons Pit 5	KTons Pit 6	KTons Burn	Ktons Clear	Total KTons Phase	Ra in Phase pCi/g	Rn in Efflu't pCi/Hr	Efflu't Rn Cn pCi/L
1			2.5						4.2	102	2.79e+09	437.9
2	72.4	5.4	51.0						129	115	3.12e+09	490.5
3			23.5						40.9	98.8	2.69e+09	422.6
4			24.2						42.4	98.2	2.67e+09	419.8
5			24.7	40.2					84.1	61.7	1.68e+09	263.9
6			8.1						13.7	102	2.77e+09	434.9
7			11.2	0.8					19.7	98.7	2.69e+09	422.3
8			12.2			16.2			28.4	76.1	2.07e+09	325.5
9					5.2				48.3	9.04	2.46e+08	38.68
10					3.4				31.2	9.15	2.49e+08	39.15
11					0.7				6.7	8.78	2.39e+08	37.53
12				4.8	2.1		38.0		44.8	18.9	5.15e+08	80.89
13					0.5				4.8	8.75	2.38e+08	37.42
14				47.6	2.9				50.6	26.8	7.31e+08	114.7

Table 1-5
Radon Content of Stack Gases from OU1 Blended Batches
Based on Blending Plan in BAFO Final and Final RI/FS Concentration Data

Oper. Phase	KTons Pit 1	KTons Pit 2	KTons Pit 3	KTons Pit 4	KTons Pit 5	KTons Pit 6	KTons Burn	Ktons Clear	Total KTons Phase	Ra in Phase pCi/g	Rn in Efflu't pCi/Hr	Efflu't Rn Cn pCi/L
15					0.05				0.5	8.4	2.29e+08	35.92
16					1.6				14.5	9.27	2.52e+08	39.64
17					2.9				26.8	9.09	2.48e+08	38.87
18				1.8				3.8	37.5	8.62	2.35e+08	36.87
19				0.1					6.2	0.38	1.03e+07	1.614

Notes: Radium assumed to be insignificant in Subsoil, OU1 Contaminated Soil Stockpile, and covers. Data for radium in Pits 5, 6, and clearwell are from RI Draft dated Oct. 12, 1993 (Table 4-5); remainder are from final RI Report (same table).

Pit 1 = 50.6 pCi/g Avg; Pit 2 = 437 pCi/g Avg; Pit 3 = 172 pCi/g Avg; Pit 4 = 23.4 pCi/g Avg; Pit 5 = 84 pCi/g Avg; Pit 6 = 3.9 pCi/g Avg; Burn Pit = 14.7 pCi/g Avg; Clearwell = 74 pCi/g Avg.

No CIS data available for radium.

Feed to rotary dryer @ 30 tons/hr.

Table 1-6
Rotary Dryer Potential Emissions for VOCs, CO and Particulate

Pollutant	Emissions			
	Pre-TOU (lb/hr)	Pre-TOU (tons/yr)	Post-TOU (lb/hr)	Post-TOU (tons/yr)
CO*	9.08	39.8	0.517	2.26
PM-10*	0.000013	0.000057	0.0360	0.158
Total Hydrocarbons (THC)*	46.0	201	2.32	10.2
Benzene*	0.20	0.90	0.01	0.045
Toluene**	0.80	3.5	0.040	0.17
Ethylbenzene**	0.60	2.6	0.030	0.13
Styrene**	0.24	1.0	0.012	0.052
Iso-propylbenzene**	0.044	0.19	0.0022	0.0096
Bromoethane**	0.20	0.90	0.010	0.045
Dibenzofuran**	0.014	0.060	0.00069	0.0030
Naphthalene**	0.63	2.8	0.032	0.14
Phenanthrene**	0.023	0.10	0.0012	0.0050
Chlorobenzene**	0.0030	0.013	0.00015	0.00065
Tetrachloroethene**	0.0025	0.011	0.00013	0.00055

*Note - Pre-TOU indicates emissions entering the thermal oxidizer unit after passing through previous GCS devices. The Pre-TOU emissions for these pollutants are based on measured emissions from the Design Verification Tests (see Section 1.1.1). The Post-TOU emissions for these pollutants combine the measured emissions (after controls) with the estimated (AP-42) emissions for natural gas combustion, and are calculated values based on full, continuous operation of the dryer process and the TOU. Total hydrocarbon estimates represent C1-C3 light hydrocarbons, and can contain non-regulated hydrocarbons not classified as VOCs.

**Note - The Pre-TOU emissions for these pollutants are based on measured emissions from the Design Verification Tests (see Section 1.1.1). The Post-TOU emissions for these pollutants are calculated values based on full, continuous operation of the dryer process.

Table 1-7
Combined Emissions Estimate for Furnace Stacks
(Combustion Emissions for Natural Gas)

Pollutant	Emissions			
	Actual (lb/hr)	Actual (tons/yr)	Potential (lb/hr)	Potential (tons/yr)
NOx*	3.13E+00	9.40E+00	3.13E+00	1.37E+01
CO	1.12E+00	3.36E+00	1.12E+00	4.90E+00
SO2	9.59E-05	2.88E-04	9.59E-05	4.20E-04
PM-10	4.38E-01	1.31E+00	4.38E-01	1.92E+00
Total VOC	8.90E-02	2.67E-01	8.90E-02	3.90E-01
Benzene	3.56E-03	1.07E-02	3.56E-03	1.56E-02
Formaldehyde	2.82E-03	8.45E-03	2.82E-03	1.23E-02
Total PAH	2.08E-05	6.23E-05	2.08E-05	9.09E-05
Mercury	3.63E-04	1.09E-03	3.63E-04	1.59E-03

Note: NOx emissions were calculated using a 30% reduction due to use of low-NOx burners in the furnace design.

Table 1-8
Emissions Estimate from Laundry Facility

Compound	1st Screen	2nd Screen	Maximum Concentration Pit Soil ug/kg	Emsn Conc mg/m^3	Emsn Rate lbs./hr	Emsn Limit lbs./hr
Hydrogen Flouride	Removed					
Hydrogen Chloride	Removed					
Nitric Acid	Removed					
Sulfuric Acid	Removed					
Ammonia	Removed					
Nitrogen Dioxide	Removed					
Sulfer Dioxide	Removed					
Carbon Dioxide	Removed					
1,1,1-Trichloroethane	Removed					
1,1,2,2-Tetrachloroethane	Removed					
1,1-Dichloroethane	Removed					
1,1-Dichloroethene	Removed					
1,2-Dichloroethylene	Removed					
1,4-Dioxane	Removed					
2,4-Dinitrotoluene	Removed					
2-Butanone	Removed					
2-Hexanone	Pass	Removed				
2-Methylnaphthalene	Pass	Pass	7000	2.34E-03	9.35E-05	19.64
4,4 DDT	Pass	Pass	1600	5.34E-04	2.14E-05	0.55
Acetone	Removed					
Benzene	Removed					
Carbon Disulfide	Removed					
Carbon Tetrachloride	Removed					
Chlorobenzene	Removed					
Chloroform	Removed					
Dichlorodifluoromethane	Removed					
Dichloromethane	Removed					
Diethyl Phthalate	Pass	Removed				
Ethylbenzene	Pass	Pass	360	1.20E-04	4.81E-06	2369.62
Hexachloroethane	Pass	Removed				
Isobutyl alcohol	Removed					
Isophorone	Pass	Removed				
Hethylene Chloride	Removed					
Naphthalene	Pass	Pass	16000	5.34E-03	2.14E-04	28.4
Pentachlorophenol	Pass	Pass	2600	8.68E-04	3.47E-05	0.27
Phenol	Removed					
Styrene	Pass	Removed				
Tetrachloroethene	Removed					
Toluene	Removed					
Total Xylene	Removed					
Tributyl Phosphate	Removed					
Trans-1,2-Dichloroethene	Removed					
Trichloroethene	Removed					
Trichlorofluoromethane	Removed					
Vinyl Chloride	Removed					

Assumptions:

1) Each dryer operates at max. flow rate (cfm) =	2000
2) Max. capacity dry clothing per washer (lbs.) =	50
3) Pit Soil on clothing to washer =	25% by wt.
4) Carry over factor from washer to dryer =	0.1
5) Release fraction from dryer =	100%
6) Drying time per load of laundry (min.) =	30
7) Dryers operate constantly during each hour =	5

Table 1-9
Emissions Estimate from Onsite Laboratory

	Total Emissions from Samples (per Operation Phase)																		
	1	2	3	4	5	6	7	8	9	10	11	12	13	14	15	16	17	18	19
Polltuant	lb/hr	lb/hr	lb/hr	lb/hr	lb/hr	lb/hr	lb/hr	lb/hr	lb/hr	lb/hr	lb/hr	lb/hr	lb/hr	lb/hr	lb/hr	lb/hr	lb/hr	lb/hr	lb/hr
1,1,1-Trichloroethane	5.92e-07	2.18e-06	5.91e-07	1.34e-06	2.50e-06	5.95e-07	2.43e-06	5.36e-07	7.09e-07	-	-	8.13e-07	3.34e-08	1.37e-06	-	1.34e-06	-	7.39e-07	3.89e-07
1,1-Dichloroethane	-	1.66e-07	-	1.04e-07	1.14e-06	-	8.26e-07	-	-	-	-	1.25e-06	4.60e-07	1.41e-06	-	1.38e-06	-	7.62e-07	1.48e-08
1,1-Dichloroethene	-	3.31e-07	-	5.04e-08	3.61e-07	-	3.94e-07	-	-	-	-	5.94e-08	3.34e-08	4.71e-08	-	4.59e-08	-	2.54e-08	4.92e-10
1,2-Dichloroethane	-	4.59e-08	-	-	8.02e-08	-	7.98e-08	-	-	-	-	5.21e-08	3.34e-08	3.43e-08	-	3.34e-08	-	1.85e-08	3.58e-10
1,2-Dichloroethylene	-	-	-	-	3.58e-07	-	2.52e-07	-	-	-	-	2.68e-07	-	4.71e-07	-	4.59e-07	-	2.54e-07	4.92e-09
1,4-Dioxane	-	2.32e-05	-	1.97e-05	2.00e-06	-	2.27e-06	-	-	-	-	-	-	-	-	-	-	-	-
2-Butanone	1.25e-05	3.29e-05	1.25e-05	2.44e-05	2.09e-05	1.26e-05	2.43e-05	1.79e-05	1.50e-05	-	7.94e-06	1.87e-06	1.67e-06	4.28e-07	-	4.17e-07	-	2.31e-07	7.94e-06
2-Hexanone	1.25e-07	2.66e-07	1.25e-07	1.78e-07	3.11e-07	1.26e-07	3.20e-07	1.13e-07	1.50e-07	-	-	1.32e-07	6.27e-08	1.24e-07	-	1.21e-07	-	6.69e-08	8.07e-08
3-Chloropropene	-	-	-	-	3.91e-08	-	2.75e-08	-	-	-	-	2.93e-08	-	5.14e-08	-	5.01e-08	-	2.77e-08	5.36e-10
4-Methyl-2-pentanone	1.25e-07	1.52e-07	1.25e-07	1.62e-07	3.73e-07	1.26e-07	3.14e-07	1.13e-07	1.50e-07	-	-	2.64e-07	6.27e-08	3.55e-07	-	3.46e-07	-	1.92e-07	8.31e-08
Acetone	4.18e-06	6.41e-06	4.17e-06	5.51e-06	6.94e-06	4.20e-06	7.25e-06	3.78e-06	2.04e-05	1.54e-05	1.53e-05	1.65e-05	1.57e-05	1.74e-05	1.52e-05	1.80e-05	1.54e-05	3.20e-05	1.14e-05
Benzene	-	4.82e-08	-	-	1.02e-07	-	9.66e-08	-	-	-	-	3.41e-08	-	6.00e-08	-	5.84e-08	-	3.23e-08	6.26e-10
Carbon Tetrachloride	-	2.76e-08	-	2.52e-08	2.61e-08	-	1.83e-08	-	-	-	-	1.95e-08	-	3.43e-08	-	3.34e-08	-	1.85e-08	3.58e-10
Carbon Disulfide	-	-	-	-	2.61e-08	-	1.83e-08	-	-	-	-	5.21e-08	3.34e-08	3.43e-08	-	3.34e-08	-	1.85e-08	3.58e-10
Chlorobenzene	-	-	-	-	-	-	-	-	-	-	-	3.26e-08	3.34e-08	-	-	-	-	-	-
Chloroethane	-	-	-	-	1.14e-07	-	8.01e-08	-	-	-	-	8.54e-08	-	1.50e-07	-	1.46e-07	-	8.08e-08	1.56e-09
Chloroform	-	8.27e-07	-	7.56e-07	4.23e-06	-	2.98e-06	-	-	-	-	3.17e-06	-	5.57e-06	-	5.43e-06	-	3.00e-06	5.81e-08
Ethylbenzene	-	1.65e-06	-	7.56e-07	1.07e-06	-	1.17e-06	-	-	-	-	1.17e-06	1.13e-06	1.20e-07	-	1.17e-07	-	6.46e-08	1.25e-09
Isobutyl Alcohol	-	-	-	-	7.82e-07	-	5.49e-07	-	-	-	-	5.85e-07	-	1.03e-06	-	1.00e-06	-	5.54e-07	1.07e-08
Methylene Chloride	1.46e-06	3.80e-06	1.46e-06	2.59e-06	9.85e-06	1.47e-06	8.18e-06	4.72e-06	3.29e-06	1.54e-06	5.63e-06	7.05e-06	1.77e-06	1.09e-05	1.52e-06	1.07e-05	1.54e-06	1.01e-05	5.39e-06
Styrene	-	-	-	-	2.61e-08	-	1.83e-08	-	-	-	-	1.95e-08	-	3.43e-08	-	3.34e-08	-	1.85e-08	3.58e-10
Tetrachloroethene	-	-	-	-	1.73e-06	-	1.21e-06	1.00e-04	-	-	1.21e-04	2.35e-06	1.09e-06	2.27e-06	-	2.21e-06	-	1.22e-06	2.37e-08
Toluene	-	8.27e-07	-	7.56e-07	1.04e-06	-	7.32e-07	-	-	-	-	1.72e-06	9.61e-07	1.37e-06	-	1.34e-06	-	7.39e-07	1.43e-08
Total Xylenes	-	8.27e-07	-	-	1.72e-06	-	1.63e-06	-	-	-	-	4.18e-06	3.72e-06	9.85e-07	-	9.60e-07	-	5.31e-07	1.03e-08
Trichloroethene	-	-	-	-	6.84e-07	-	4.81e-07	3.22e-06	-	-	3.89e-06	5.45e-07	3.34e-08	8.99e-07	-	8.76e-07	-	4.85e-07	9.39e-09
Trichlorofluoromethane	-	-	-	-	4.56e-08	-	3.20e-08	-	-	-	-	3.41e-08	-	6.00e-08	-	5.84e-08	-	3.23e-08	6.26e-10
Vinly Chloride	-	1.63e-06	-	-	1.98e-06	-	2.22e-06	-	-	-	-	1.00e-07	6.27e-08	6.85e-08	-	6.68e-08	-	3.69e-08	7.15e-10
4,4-DDT	-	8.73e-06	-	5.04e-06	3.79e-06	-	4.30e-06	-	-	-	-	-	-	-	-	-	-	-	-
Aroclor-1221	-	2.07e-05	-	1.89e-05	-	-	-	-	-	-	-	-	-	-	-	-	-	-	-
Aroclor-1242	-	-	-	-	3.37e-06	-	2.37e-06	-	-	-	-	4.72e-06	2.26e-06	4.43e-06	-	4.32e-06	-	3.19e-06	1.49e-06
Aroclor-1248	1.67e-05	6.05e-05	1.67e-05	4.81e-05	5.14e-05	1.68e-05	4.88e-05	1.51e-05	2.76e-05	7.57e-06	7.54e-06	2.76e-05	9.80e-06	3.93e-05	7.47e-06	3.89e-05	7.56e-06	3.08e-05	1.24e-05
Aroclor-1254	1.18e-05	5.52e-05	1.18e-05	5.27e-05	3.18e-05	1.19e-05	2.73e-05	1.29e-05	2.93e-05	1.51e-05	1.78e-05	6.22e-05	4.73e-05	4.36e-05	1.49e-05	4.35e-05	1.51e-05	4.28e-05	1.10e-05
Aroclor-1260	-	2.69e-05	-	2.46e-05	-	-	-	-	-	-	-	-	-	-	-	-	-	-	-
2,4,5-Trichlorophenol	-	-	-	-	-	-	-	-	-	-	-	-	-	-	-	-	-	1.84e-05	3.32e-05
2,4-Dichlorophenol	-	-	-	-	7.49e-06	-	5.26e-06	-	-	-	-	5.61e-06	-	9.85e-06	-	9.60e-06	-	5.31e-06	1.03e-07
2,4-Dinitrophenol	-	-	-	-	3.58e-05	-	2.52e-05	-	-	-	-	2.68e-05	-	4.71e-05	-	4.59e-05	-	2.54e-05	4.92e-07
2,6-Dinitrotoluene	3.48e-06	3.08e-06	3.47e-06	3.46e-06	2.85e-06	3.50e-06	3.46e-06	3.15e-06	4.17e-06	-	-	-	-	-	-	-	-	-	2.20e-06
2-Chlorophenol	-	6.66e-06	-	-	7.86e-06	-	8.91e-06	-	-	-	-	-	-	-	-	-	-	-	-
2-Methylnaphthalene	-	2.10e-05	-	2.84e-06	2.47e-05	-	2.65e-05	-	-	-	-	6.47e-06	3.89e-06	4.71e-06	-	4.59e-06	-	2.54e-06	4.92e-08
3-Methylphenol	-	3.10e-06	-	2.84e-06	1.53e-06	-	1.08e-06	-	-	-	-	1.15e-06	-	2.01e-06	-	1.96e-06	-	1.08e-06	2.10e-08
3,3-Dichlorobenzidine	-	3.79e-06	-	3.47e-06	-	-	-	-	-	-	-	-	-	-	-	-	-	-	-
4-Chloro-3-methylphenol	-	6.66e-06	-	-	1.53e-05	-	1.42e-05	-	-	-	-	5.61e-06	-	9.85e-06	-	9.60e-06	-	5.31e-06	1.03e-07
4-Methylphenol	-	6.66e-06	-	-	9.39e-06	-	9.99e-06	-	-	-	-	1.15e-06	-	2.01e-06	-	1.96e-06	-	1.08e-06	2.10e-08
4-Nitroaniline	-	1.81e-05	-	-	2.14e-05	-	2.43e-05	-	-	-	-	-	-	-	-	-	-	-	-
4-Nitrophenol	-	3.22e-05	-	-	3.79e-05	-	4.30e-05	-	-	-	-	-	-	-	-	-	-	-	-
Acenaphthene	-	9.88e-05	-	-	1.23e-04	-	1.36e-04	-	-	-	-	9.11e-06	4.60e-06	8.14e-06	-	7.93e-06	-	4.39e-06	8.49e-08
Acenaphthylene	3.48e-06	9.74e-06	3.47e-06	3.46e-06	1.07e-05	3.50e-06	1.24e-05	3.15e-06	4.17e-06	-	-	-	-	-	-	-	-	-	2.20e-06

Table 1-9
Emissions Estimate from Onsite Laboratory

	Total Emissions from Samples (per Operation Phase)																		
	1	2	3	4	5	6	7	8	9	10	11	12	13	14	15	16	17	18	19
Pollutant	lb/hr	lb/hr	lb/hr	lb/hr	lb/hr	lb/hr	lb/hr	lb/hr	lb/hr	lb/hr	lb/hr	lb/hr	lb/hr	lb/hr	lb/hr	lb/hr	lb/hr	lb/hr	lb/hr
Anthracene	3.48e-06	2.81e-04	3.47e-06	5.16e-06	3.39e-04	3.50e-06	3.80e-04	3.15e-06	4.17e-06	-	-	2.07e-05	1.30e-05	1.41e-05	-	1.38e-05	-	1.10e-05	8.46e-06
Benzo(a)anthracene	3.48e-06	3.04e-04	3.47e-06	5.16e-06	3.70e-04	3.50e-06	4.14e-04	3.15e-06	4.17e-06	-	-	3.71e-05	2.63e-05	2.01e-05	-	1.96e-05	-	1.42e-05	8.52e-06
Benzo(a)pyrene	3.48e-06	2.81e-04	3.47e-06	5.16e-06	3.44e-04	3.50e-06	3.83e-04	3.15e-06	4.17e-06	-	-	2.76e-05	1.63e-05	2.06e-05	-	2.00e-05	-	1.45e-05	8.53e-06
Benzo(b)fluoranthene	3.48e-06	3.03e-04	3.47e-06	4.94e-06	3.74e-04	3.50e-06	4.16e-04	3.15e-06	4.17e-06	-	-	5.32e-05	4.01e-05	2.48e-05	-	2.42e-05	-	1.68e-05	8.57e-06
Benzo(g,h,I)perylene	3.48e-06	9.95e-05	3.47e-06	3.46e-06	1.24e-04	3.50e-06	1.38e-04	3.15e-06	4.17e-06	-	-	1.74e-05	1.21e-05	9.85e-06	-	9.60e-06	-	8.71e-06	8.42e-06
Benzo(k)fluoranthene	-	1.74e-04	-	1.70e-06	2.15e-04	-	2.39e-04	-	-	-	-	2.94e-05	2.09e-05	1.58e-05	-	1.54e-05	-	1.19e-05	6.28e-06
Benzoic Acid	1.71e-05	6.01e-05	1.70e-05	3.08e-05	6.35e-05	1.71e-05	6.70e-05	1.54e-05	2.04e-05	-	-	1.07e-05	-	1.88e-05	-	1.84e-05	-	1.02e-05	1.10e-05
Chrysene	3.48e-06	2.35e-04	3.47e-06	5.16e-06	2.88e-04	3.50e-06	3.21e-04	3.15e-06	4.17e-06	-	-	4.23e-05	3.22e-05	1.93e-05	-	1.88e-05	-	1.38e-05	8.52e-06
Dl-n-butyl phthalate	3.48e-06	9.85e-06	3.47e-06	6.30e-06	1.47e-05	3.50e-06	1.36e-05	3.15e-06	8.81e-06	4.64e-06	4.62e-06	1.20e-05	6.67e-06	1.43e-05	4.58e-06	1.42e-05	4.64e-06	1.72e-05	9.73e-06
Di-n-octyl phthalate	-	9.52e-06	-	2.62e-06	1.11e-05	-	1.12e-05	-	-	-	-	4.47e-06	2.09e-06	4.28e-06	-	4.17e-06	-	2.31e-06	4.47e-08
Dibenzo(a,h)anthracene	-	4.59e-05	-	-	5.60e-05	-	6.27e-05	-	-	-	-	1.37e-06	-	2.40e-06	-	2.34e-06	-	1.29e-06	2.50e-08
Dibenzofuran	-	8.27e-05	-	-	1.03e-04	-	1.15e-04	-	-	-	-	7.93e-06	3.89e-06	7.28e-06	-	7.09e-06	-	3.92e-06	7.60e-08
Diethyl phthalate	1.50e-05	1.99e-05	1.49e-05	1.49e-05	2.76e-05	1.50e-05	2.90e-05	1.35e-05	1.79e-05	-	-	2.60e-05	2.09e-05	9.85e-06	-	9.60e-06	-	8.71e-06	1.57e-05
Fluoranthene	3.48e-06	1.13e-03	3.47e-06	6.61e-06	1.39e-03	3.50e-06	1.55e-03	3.15e-06	4.17e-06	-	-	1.09e-04	6.69e-05	7.71e-05	-	7.51e-05	-	4.91e-05	1.65e-05
Fluorene	-	1.42e-04	-	-	1.79e-04	-	1.98e-04	-	-	-	-	1.52e-05	7.11e-06	1.46e-05	-	1.42e-05	-	7.85e-06	1.52e-07
Ideno(1,2,3-cd)pyrene	3.48e-06	1.09e-04	3.47e-06	3.46e-06	1.35e-04	3.50e-06	1.50e-04	3.15e-06	4.17e-06	-	-	1.46e-05	9.20e-06	9.85e-06	-	9.60e-06	-	8.71e-06	8.42e-06
Isophorone	3.28e-06	2.89e-06	3.27e-06	3.25e-06	2.68e-06	3.29e-06	3.25e-06	2.96e-06	3.92e-06	-	-	-	-	-	-	-	-	-	2.07e-06
N-Nitrosodiphenylamine	-	6.66e-06	-	-	7.86e-06	-	8.91e-06	-	-	-	-	-	-	-	-	-	-	-	-
Naphthalene	-	5.28e-05	-	-	7.11e-05	-	7.69e-05	-	-	-	-	2.69e-05	2.09e-05	1.16e-05	-	1.13e-05	-	6.23e-06	1.21e-07
Pentachlorphenol	1.01e-05	4.11e-05	1.01e-05	1.00e-05	4.62e-05	1.01e-05	5.30e-05	9.14e-06	1.21e-05	-	-	1.06e-05	1.09e-05	-	-	-	-	-	6.39e-06
Phenanthrene	3.48e-06	8.61e-04	3.47e-06	1.10e-05	1.06e-03	3.50e-06	1.18e-03	3.15e-06	4.17e-06	-	-	1.00e-04	6.27e-05	6.85e-05	-	6.68e-05	-	4.20e-05	1.21e-05
Phenol	-	9.76e-06	-	2.84e-06	9.39e-06	-	9.99e-06	-	4.64e-06	4.64e-06	4.62e-06	8.18e-06	7.34e-06	6.44e-06	4.58e-06	6.60e-06	4.64e-06	8.84e-06	2.10e-08
Pyrene	3.48e-06	5.80e-04	3.47e-06	6.30e-06	7.10e-04	3.50e-06	7.92e-04	3.15e-06	4.17e-06	-	-	7.90e-05	5.85e-05	3.85e-05	-	3.76e-05	-	2.42e-05	8.72e-06
Tributyl phosphate	-	1.76e-04	-	7.88e-05	3.40e-04	-	2.85e-04	-	-	-	-	1.76e-04	-	3.08e-04	-	3.00e-04	-	1.66e-04	3.22e-06
bis(2-Ethylhexyl) phthalate	3.83e-06	1.31e-05	3.82e-06	6.64e-06	1.98e-05	3.85e-06	1.89e-05	6.62e-06	1.02e-05	5.61e-06	9.40e-06	5.14e-05	4.61e-05	1.69e-05	5.54e-06	1.69e-05	5.61e-06	1.72e-05	5.47e-06

Table 2-1
Emissions Estimate for Railcar Loadout and Waste Preparation Building Equipment
(Combustion Emissions for One (1) 162 Horsepower Diesel Engine)

Combustion Pollutant	Emissions	
	(lb/hr)	(tons/yr)
NOx*	2.09	6.26
CO*	0.189	0.566
SOx	0.333	0.999
PM-10*	0.0911	0.273
TSP*	0.0911	0.273
CO2*	202	605
Aldehydes	0.0746	0.224
VOC*	0.0904	0.271
Benzene	0.00106	0.00317
Toluene	0.000464	0.00139
Xylenes	0.000323	0.000970
Radionuclide Pollutant	Maximum Emissions (Phase 2) (pCi/hr)	Maximum Concentration (Phase 2) (pCi/l)
Radon-222	3.79E+09	46.4

*Note: The combustion emissions for these pollutants are from vendor supplied emissions test results. The emissions are estimated only for one (1) 162 Horsepower engine. In order to calculate total emissions, the results above must be multiplied by the number of active units of this size present in each building.

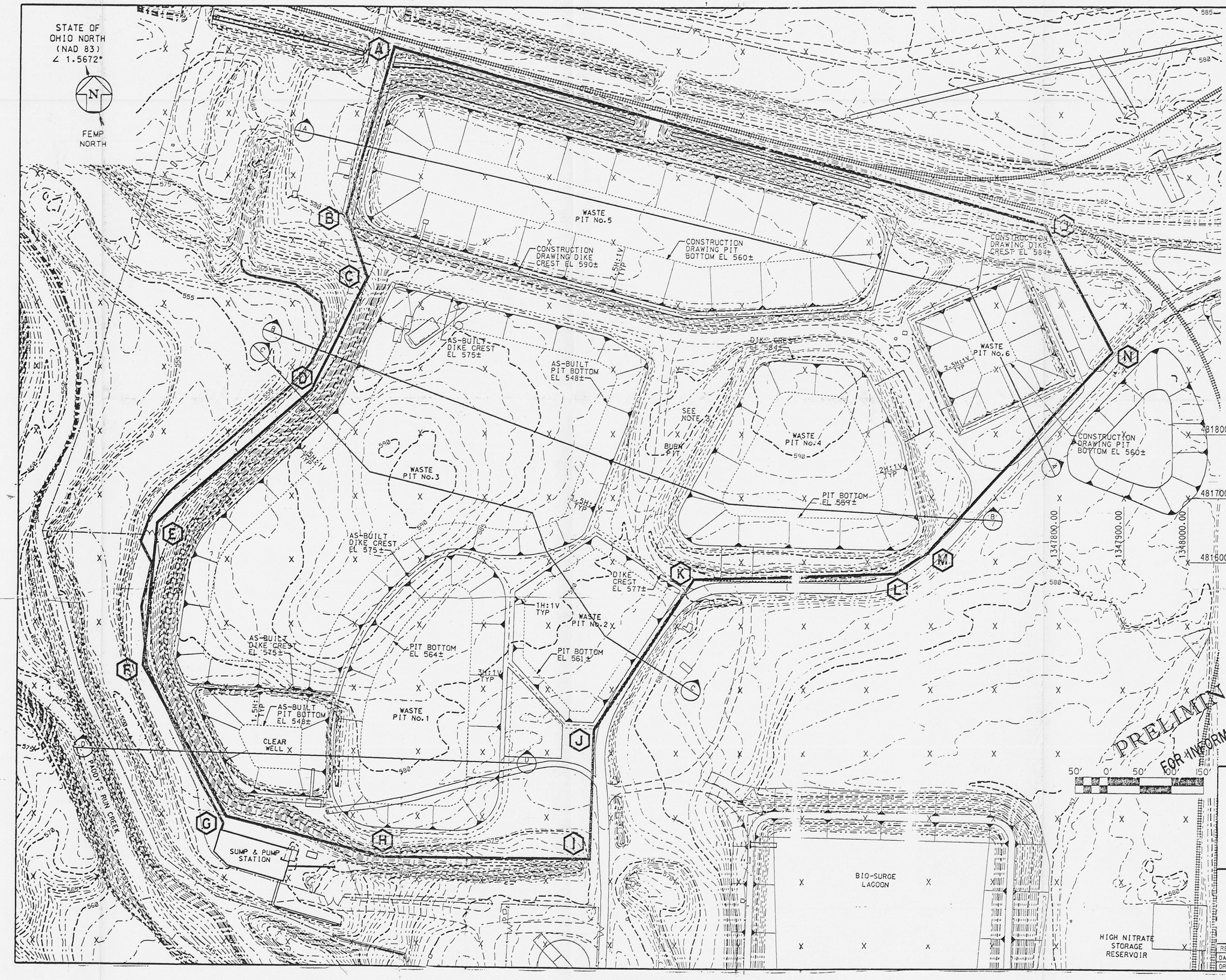

NOTES

1. EXISTING CONDITIONS SHOWN ON THIS DRAWING WERE PREPARED FROM FEMP SITE PROVIDED DATA FROM THE DOCUMENTS LISTED BELOW.

   EXISTING SITE DATA SOURCE (IN PLANT FILES)
   AERIAL TOPOGRAPHY, 1992
   FEMP CADD GRID/UTILITY DRAWINGS
   FEMP CONTRACTOR PROJECT DESIGN DOCUMENTS

2. THE GEOMETRIC CONFIGURATIONS, THE LINER THICKNESSES, AND THE BOTTOM ELEVATIONS OF THE WASTE PITS WERE DETERMINED FROM THE BEST AVAILABLE DATA AT THIS TIME. THIS DATA WAS GATHERED FROM CONSTRUCTION, AS-BUILT, SURVEY, AND FEASIBILITY STUDY DRAWINGS (3/31/92, REV 1), AND FROM THE EXISTING PLANT ENGINEERING FILES.
   THE DIKE CREST SHOWN AROUND THE WASTE PITS REPRESENTS THOSE BUILT AT THE TIME OF CONSTRUCTION. MOST OF THE DIKES HAVE BEEN BURIED WITH COVER MATERIAL OF DIFFERENT THICKNESSES.

3. THE GEOMETRIC CONFIGURATION OF THE BURN PIT HAS BEEN DETERMINED FROM THE SITE AS-BUILT SURVEY. THE BURN PIT DIKE, DEPTH AND SLOPES OF THE BURN PIT ARE NOT KNOWN.

SITE RESTORATION COORDINATES

	STATE PLANAR (NAD83) EASTING	NORTHING
A	1346758.29	482405.43
B	1346684.10	482140.94
C	1346717.51	482042.54
D	1346630.35	481866.02
E	1346390.53	481657.41
F	1346369.85	481434.11
G	1346502.03	481197.09
H	1346745.14	481135.22
I	1347067.68	481135.03
J	1347073.29	481337.83
K	1347226.54	481572.73
L	1347543.67	481581.43
M	1347595.46	481615.46
N	1347880.70	481926.73
O	1347776.00	482126.21

LEGEND

- WASTE PIT AREA BOUNDARY
- PIT OUTLINE COVERED
- PIT OUTLINE DIKE
- PIT OUTLINE BOTTOM
- SLOPE
- MAJOR CONTOUR
- FENCE
- RAILROAD
- PAVED ROAD
- GRAVEL ROAD

000195

FOR CROSS SECTIONS SEE FIGURE C.5-2

FERNALD ENVIRONMENTAL RESTORATION MANAGEMENT CORPORATION
FERMCO
Fernald Environmental Management Project
U.S. DEPARTMENT OF ENERGY

WASTE PIT REMEDIAL ACTION PROJECT

WASTE PITS EXCAVATION LIMIT

SCALE: 1" = 150'-0"

RES #2964
DATE 5/21/96
DRAWN S.J.SMOCK

FIGURE 2-1

1669

NOTES:

1. EXISTING CONDITIONS SHOWN ON THIS DRAWING WERE PREPARED FROM FEMP SITE PROVIDED DATA FROM THE DOCUMENTS LISTED BELOW.

   EXISTING SITE DATA SOURCE (IN PLANT FILES)
   AERIAL TOPOGRAPHY 1992
   FEMP CADD GRID/UTILITY DRAWINGS
   FEMP CONTRACTOR PROJECT DESIGN DOCUMENTS

2. THE GEOMETRIC CONFIGURATIONS, THE LINER THICKNESSES, AND THE BOTTOM ELEVATIONS OF THE WASTE PITS WERE DETERMINED FROM THE BEST AVAILABLE DATA AT THIS TIME. THIS DATA WAS GATHERED FROM CONSTRUCTION, AS-BUILT, SURVEY, AND FEASIBILITY STUDY DRAWINGS (REV 1), ALONG WITH ENGINEERING FILES AND THE 1992 AERIAL TOPOGRAPHY.

3. BECAUSE OF INADEQUATE INFORMATION, THE BURN PIT AREA LOCATED BETWEEN WASTE PITS 3 AND 4 IS SHOWN AS SOIL MIXED WITH WASTE. SHAPE DENOTES GENERALIZED CONFIGURATION.

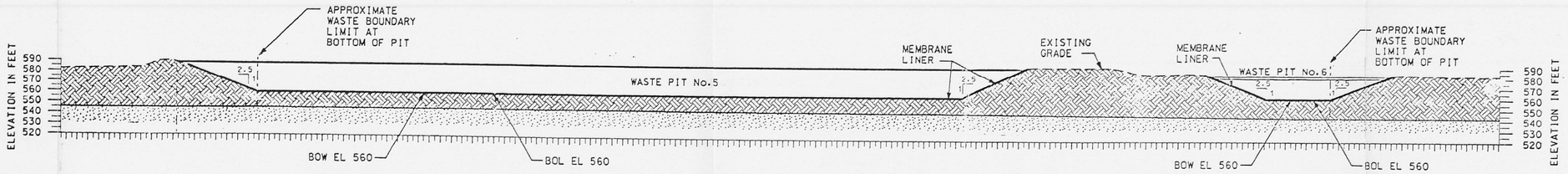

SECTION A
21A-5500-G-00248

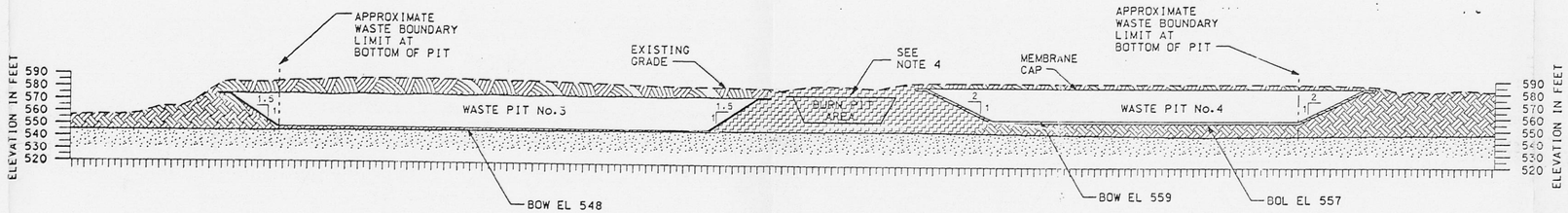

SECTION B
21A-5500-G-00248

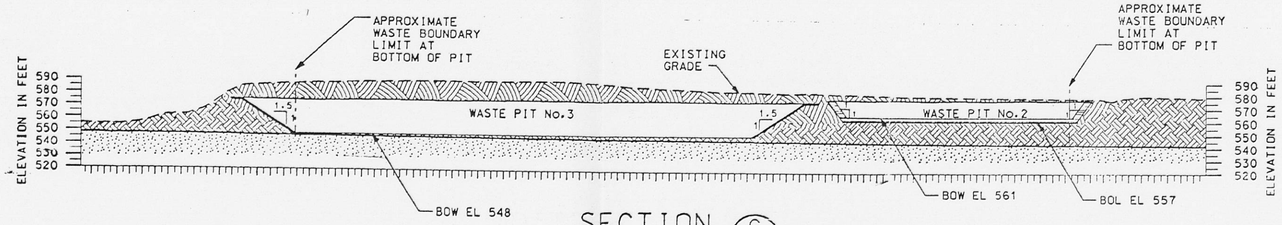

SECTION C
21A-5500-G-00248

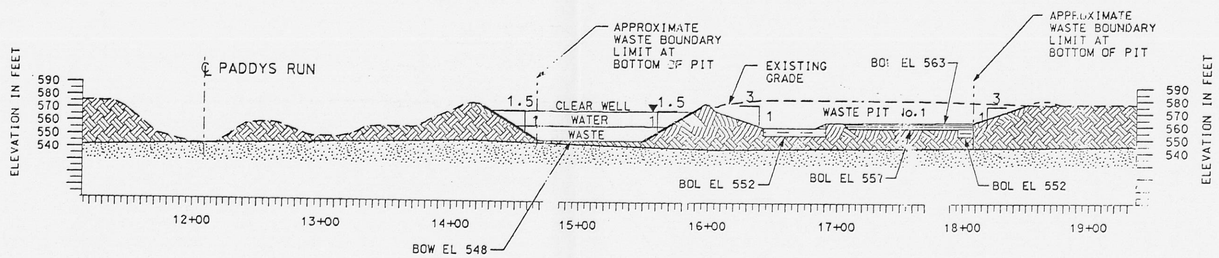

SECTION D
21A-5500-G-00248

LEGEND

BOW	BOTTOM OF WASTE OR TOP OF LINER
BOL	BOTTOM OF LINER
	GLACIAL OVERBURDEN
	CLAY LINER
	FILL SOIL
	SAND AND/OR GRAVEL
	SOIL MIXED WITH WASTE
	WASTE

000196

0' 125'

PRELIMINARY

FOR INFORMATION ONLY

FERNALD ENVIRONMENTAL RESTORATION MANAGEMENT CORPORATION
FERMCO
Fernald Environmental Management Project
U.S. DEPARTMENT OF ENERGY

WASTE PIT REMEDIAL ACTION PROJECT
WASTE PIT CROSS SECTIONS
SCALE: 1" = 125'-0"

RES #2664	
DATE 7/21/96	FIGURE 2-2
DRAWN S.J.SNOCK	

DRAWING NUMBER 773481-M53

1669

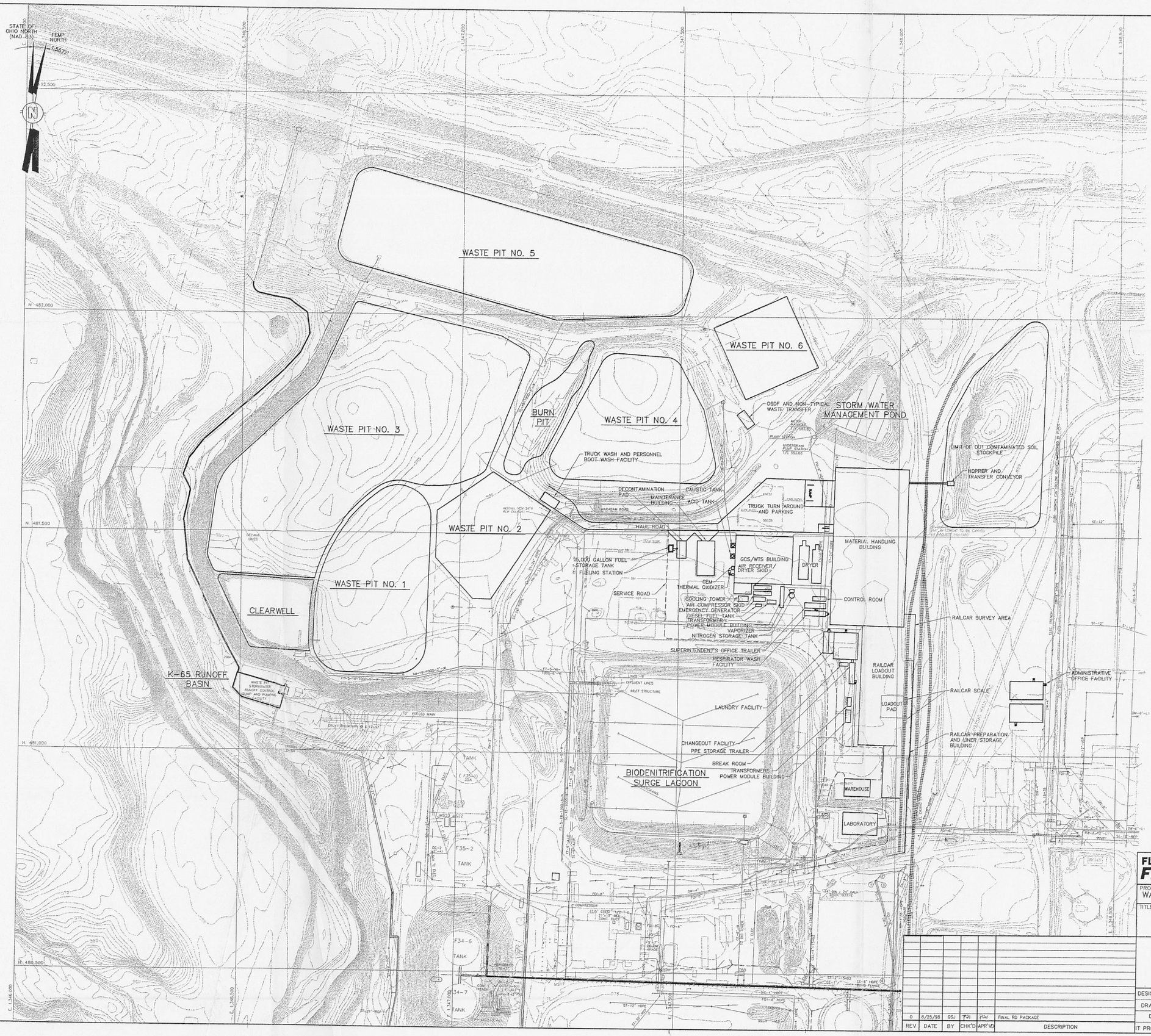

FOR INFORMATION ONLY
-NOT FOR CONSTRUCTION-

000226

REV	DATE	BY	CHK'D	APR'VD	DESCRIPTION
0	8/25/98	GSJ	PJI	PJI	FINAL RD PACKAGE

FLUOR DANIEL FERNALD

WASTE PITS REMEDIAL ACTION PROJECT (WPRAP)
FERNALD, OHIO
FDF SUBCONTRACT NO. 98SC000001

PROJECT NAME
WASTE PITS REMEDIAL ACTION PROJECT (WPRAP)

TITLE
OVERALL SITE FACILITIES MAP

INTERNATIONAL TECHNOLOGY CORPORATION
... Creating a Safer Tomorrow

DESIGNED BY	PJI	CHECKED BY	PJI	1/9/98	REVISION
DRAWN BY	B. A. KUMPF	APPROVED BY	PJI	8/26/98	0
DATE	29 DECEMBER 97	DWG. SCALE	1"=80'		
IT PROJECT NO	773481	DRAWING NO.	M-00-02-007		

28 MAY 98
TCD
XREF: SITECOND

1669

DRAWING NUMBER 773481-M27

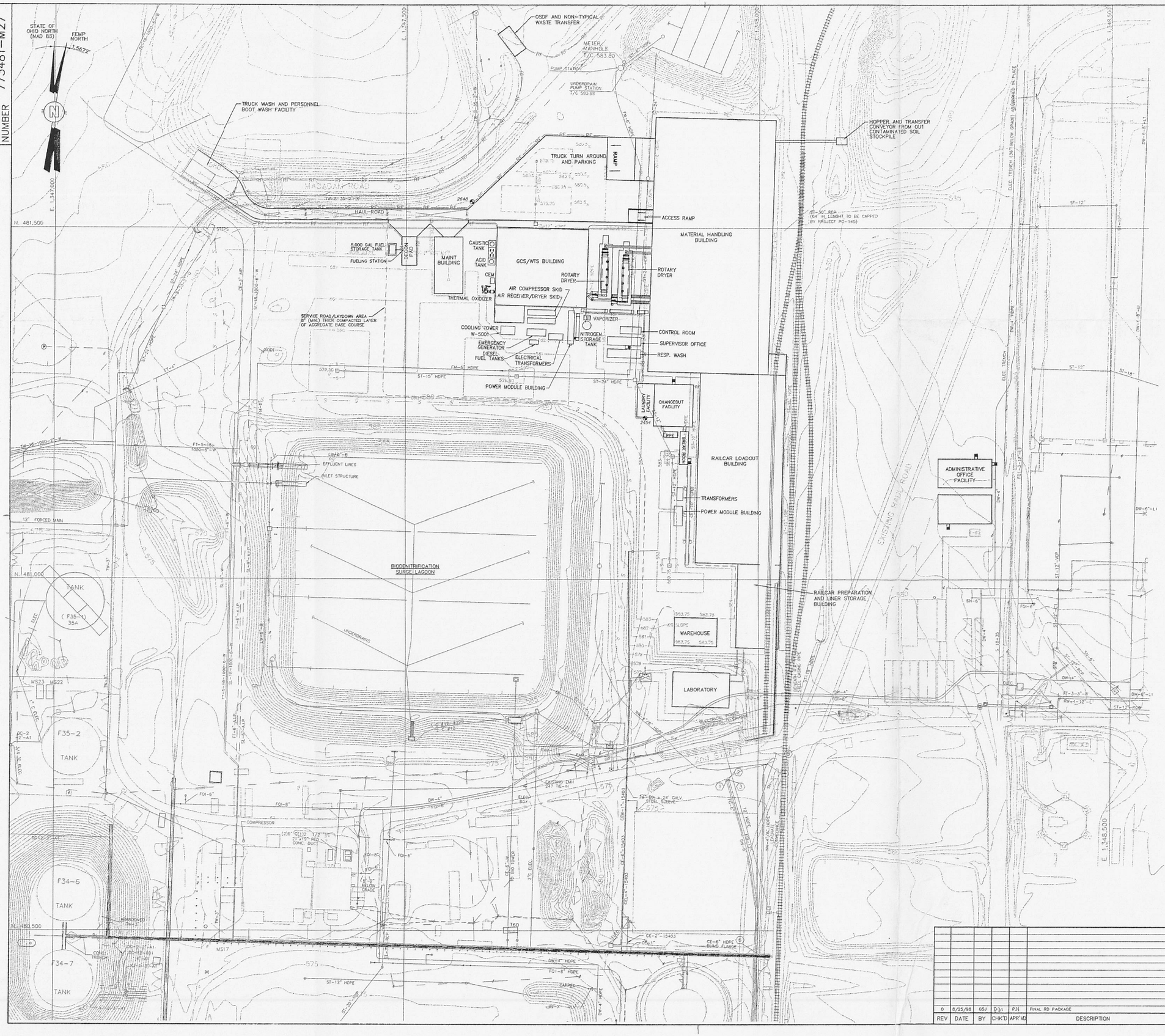

FOR INFORMATION ONLY
-NOT FOR CONSTRUCTION-

LEGEND:
— CF — CONSTRUCTION FENCE
— RF — RADIOLOGICAL FENCE

000227

REV	DATE	BY	CHK'D	APR'VD	DESCRIPTION
0	8/25/98	GSJ	PJI	PJI	FINAL RD PACKAGE

FLUOR DANIEL FERNALD

WASTE PITS REMEDIAL ACTION PROJECT (WPRAP)
FERNALD, OHIO
FDF SUBCONTRACT NO. 98SC000001

PROJECT NAME
WASTE PITS REMEDIAL ACTION PROJECT (WPRAP)

TITLE
SITE FACILITIES LAYOUT

INTERNATIONAL TECHNOLOGY CORPORATION
... Creating a Safer Tomorrow

DESIGNED BY	PJI	CHECKED BY	PJI	1/9/98	REVISION
DRAWN BY	B. A. KUMPF	APPROVED BY	PJI	8/25/98	0
DATE	19 DECEMBER 97	DWG. SCALE	1"=50'		
IT PROJECT NO.	773481	DRAWING NO.	M-00-02-002		

4/20/98
8:20 AM
XREF: EXISTING

DRAWING NUMBER 773481-M100

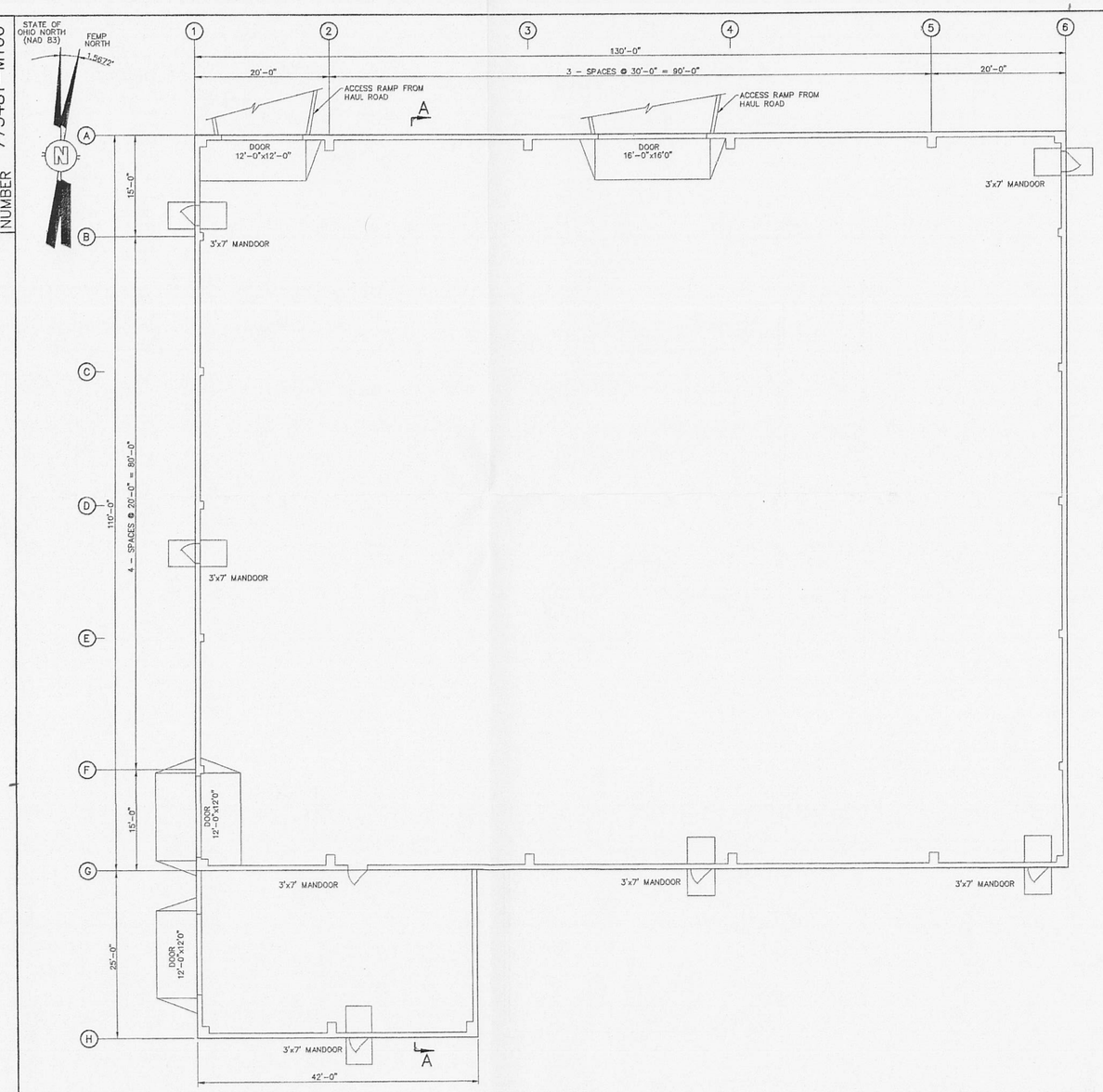

PLAN

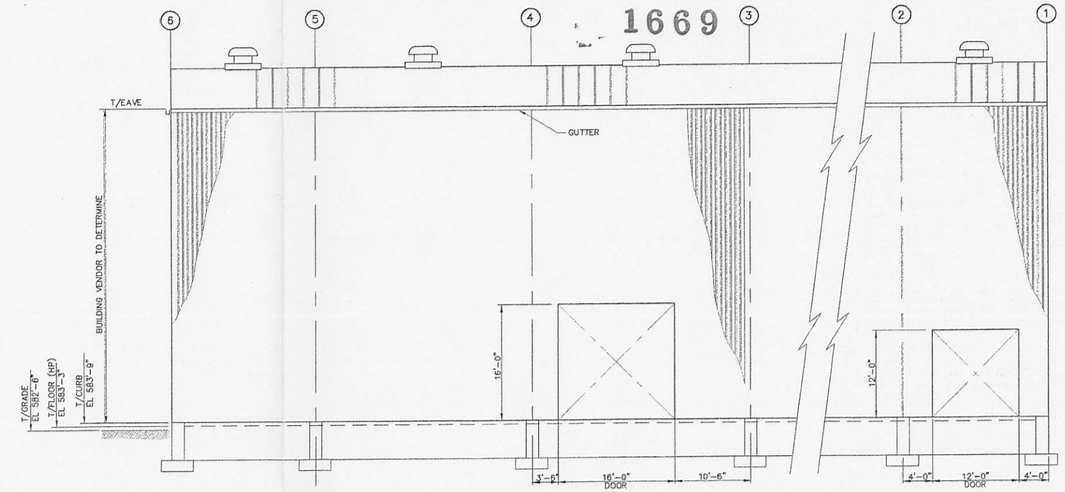

NORTH ELEVATION

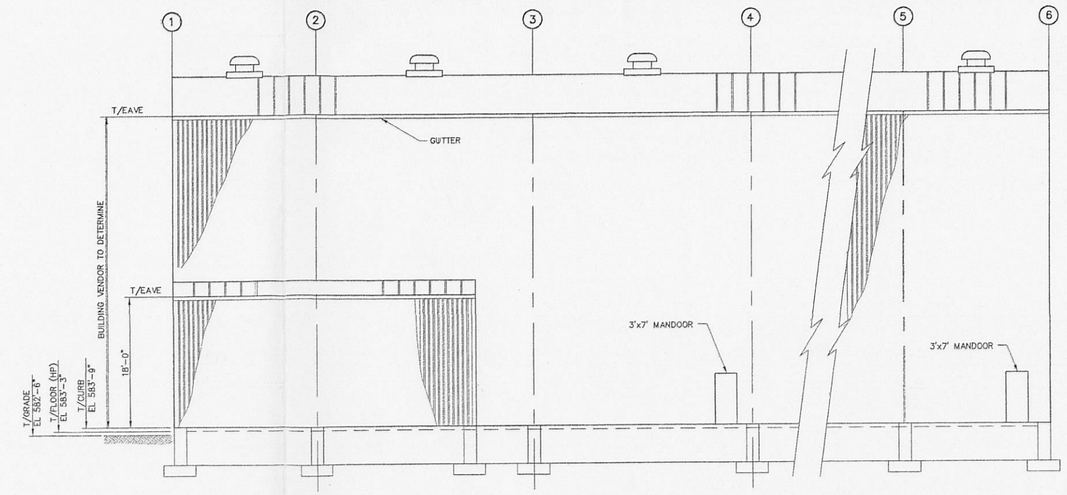

SOUTH ELEVATION

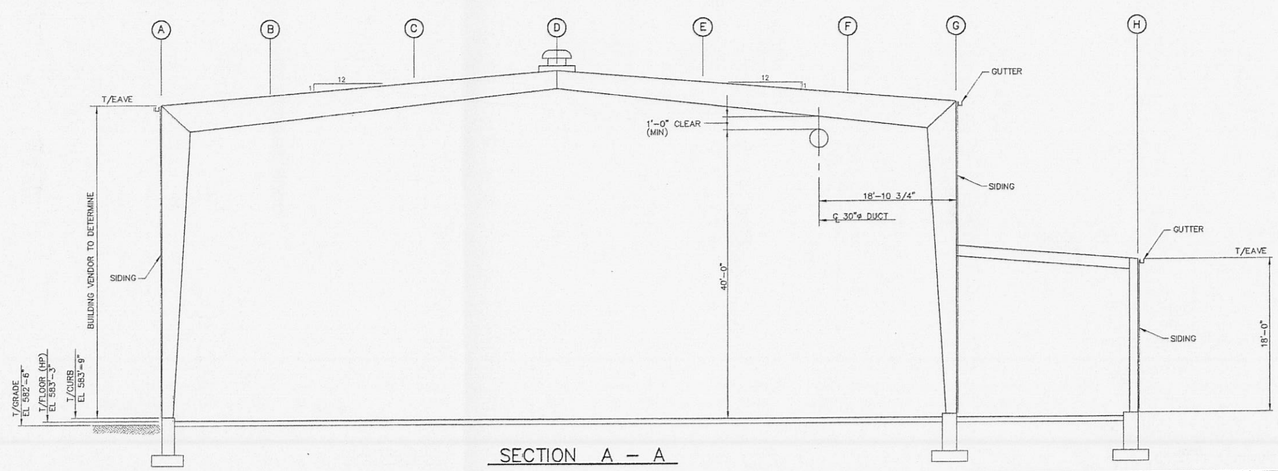

SECTION A – A

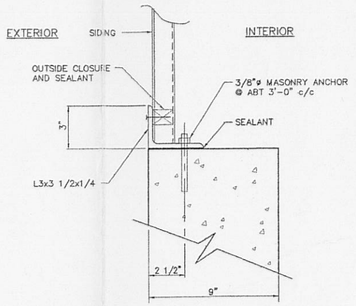

TYPICAL CURB ANGLE DETAIL

SCALE: 3" = 1'-0"

FOR INFORMATION ONLY
-NOT FOR CONSTRUCTION-

VENDOR NOTE:

BUILDING VENDOR TO SUPPLY 6 ROOF EXHAUST FANS @ 15,000 CFM AND THE NECESSARY LOUVRE AREA.

REFERENCE DWG'S.

M-15-02-002 BUILDING GENERAL ARRANGEMENT - PLAN

000230

REV	DATE	BY	CHK'D	APR'VD	DESCRIPTION
0	8/25/98	GSJ	PJI	PJI	FINAL RD PACKAGE

FLUOR DANIEL FERNALD

WASTE PITS REMEDIAL ACTION PROJECT (WPRAP)
FERNALD, OHIO
FDF SUBCONTRACT NO. 98SC000001

PROJECT NAME: WASTE PITS REMEDIAL ACTION PROJECT (WPRAP)

TITLE: GCS/WTS BUILDING GENERAL ARRANGEMENT PLAN, ELEVATIONS AND SECTION

INTERNATIONAL TECHNOLOGY CORPORATION

... Creating a Safer Tomorrow

DESIGNED BY	PJI	CHECKED BY	PJI	8/27/98	REVISION
DRAWN BY	STRITMATTER	APPROVED BY	PJI	8/27/98	0
DATE	5-5-98	DWG. SCALE	1/8"=1'-0"		
IT PROJECT NO.	773481	DRAWING NO.	M-00-02-112		

5/23/98

DRAWING NUMBER 773481-M3

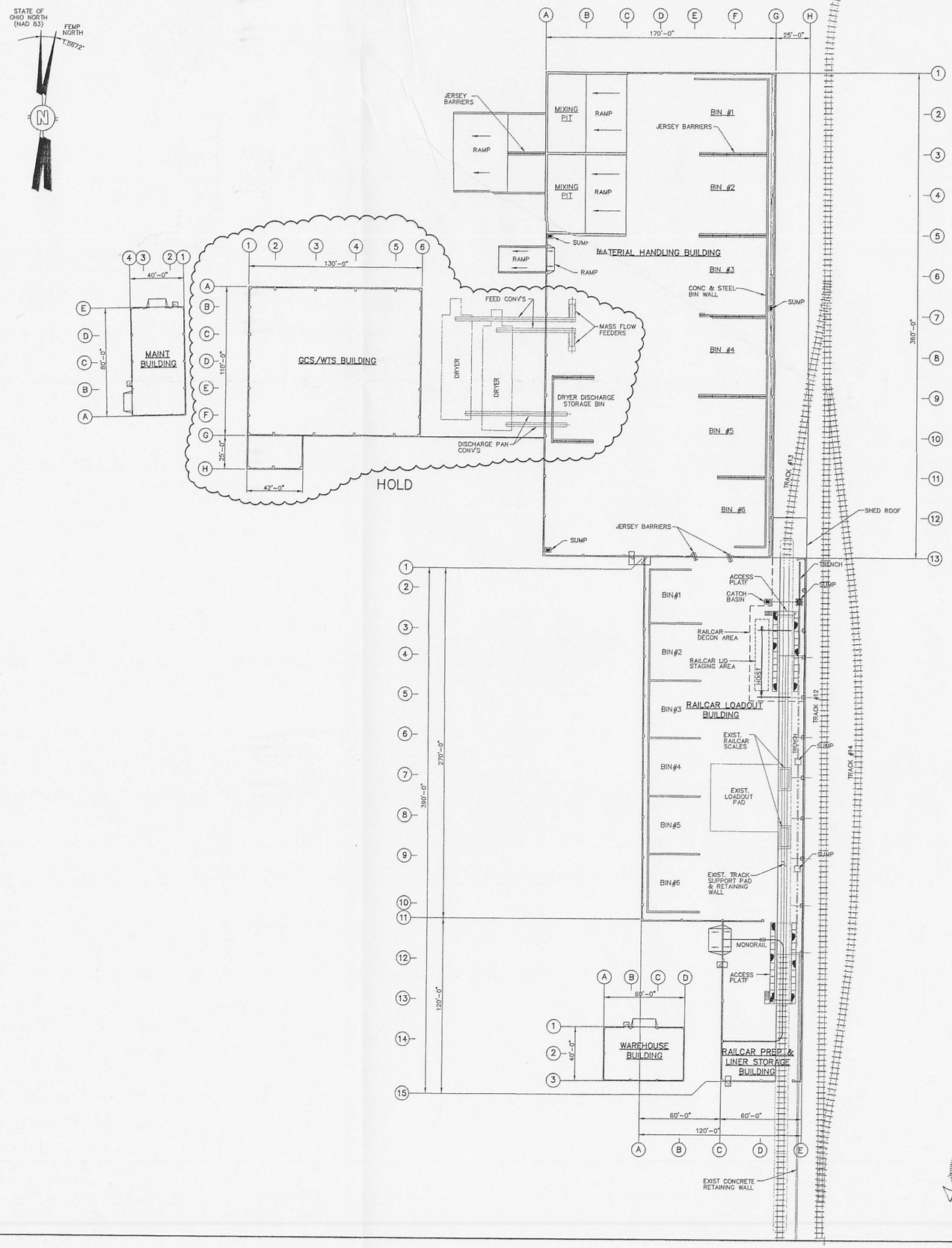

GENERAL BUILDING NOTES

1. THE BUILDING VENDOR SHALL PROVIDE DESIGN, FABRICATION, AND ERECTION SERVICES FOR THE PREENGINEERED BUILDING AND FOUNDATION.
2. THE APPLICABLE BUILDING CODE IS THE OHIO BASIC BUILDING CODE (OBBC), LATEST EDITION AND THE METAL BUILDING MANUFACTURES ASSOCIATION (MBMA) "1996 LOW RISE BUILDING SYSTEM MANUAL". WHERE CONFLICTS ARISE OBBC SHALL GOVERN.
3. THE STRUCTURE IS TO BE DESIGNED FOR THE FOLLOWING LOADING CRITERIA:

DEAD LOAD	AS CALCULATED
ROOF LIVE LOAD	20 PSF
WIND LOAD	
BASIC WIND	80 MPH
EXPOSURE	C
IMPORTANCE FACTOR	1.0
SNOW LOAD	
GROUND SNOW LOAD	25 PSF
SNOW EXPOSURE FACTOR	0.7
IMPORTANCE FACTOR	1.0
SEISMIC	PER OBBC

4. THE BUILDING VENDOR SHALL SUBMIT DESIGN DRAWINGS AND CALCULATIONS BEARING THE SEAL OF A PROFESSIONAL ENGINEER REGISTERED IN THE STATE OF OHIO FOR APPROVAL.
5. MONORAIL SHALL HAVE A 4 TON CAPACITY.
6. BRIDGE CRANE SHALL CONSIST OF 2-2 TON HOISTS.

1669

FOR INFORMATION ONLY

REFERENCE DWG'S.

M-15-02-002	MATERIAL HANDLING BUILDING GENERAL ARRANGEMENT - PLAN
M-15-02-003	MATERIAL HANDLING BUILDING GENERAL ARRANGEMENT- ELEVATIONS AND SECTIONS
M-35-02-001	RAILCAR LOADOUT & RAILCAR PREP/LINER STORAGE BUILDING GENERAL ARRANGEMENT - PLAN
M-35-02-002	RAILCAR LOADOUT & RAILCAR PREP/LINER STORAGE BUILDING GENERAL ARRANGEMENT - ELEVATIONS AND SECTIONS
M-00-02-110	WAREHOUSE BUILDING - PLAN, ELEVATIONS, AND SECTION
M-00-02-111	MAINTENANCE BUILDING - PLAN, ELEVATIONS, AND SECTION
M-00-02-112	GCS/WTS BUILDING - PLAN AND ELEVATIONS

HOLD

000231

REV.	DATE	BY	CHK'D	APR'VD	DESCRIPTION
1	7/14/98	GSJ	PJI	DCH	REVISED PER FDF COMMENTS
0	6/19/98	JES	PJI	DCH	CERTIFIED FOR CONSTRUCTION

FLUOR DANIEL FERNALD

FLUOR DANIEL FERNALD ENVIRONMENTAL MANAGEMENT PROJECT FERNALD, OHIO

FDF SUB CONTRACT NO. 98SC000001

PROJECT NAME: WASTE PITS REMEDIAL ACTION PROJECTS (WPRAP)

TITLE: PRE-ENGINEERED BUILDINGS GENERAL ARRANGEMENT PLAN

INTERNATIONAL TECHNOLOGY CORPORATION

... Creating a Safer Tomorrow

DESIGNED BY	JES	CHECKED BY	PJI	6/19/98	REVISION
DRAWN BY	JES	APPROVED BY	DCH	6/19/98	
DATE	12-12-97	DWG. SCALE	1/32" = 1'-0"		1
IT PROJECT NO.	773481	DRAWING NO.	M-15-02-001		

10 JUNE 98
1020

DRAWING NUMBER 773481-M4

1669

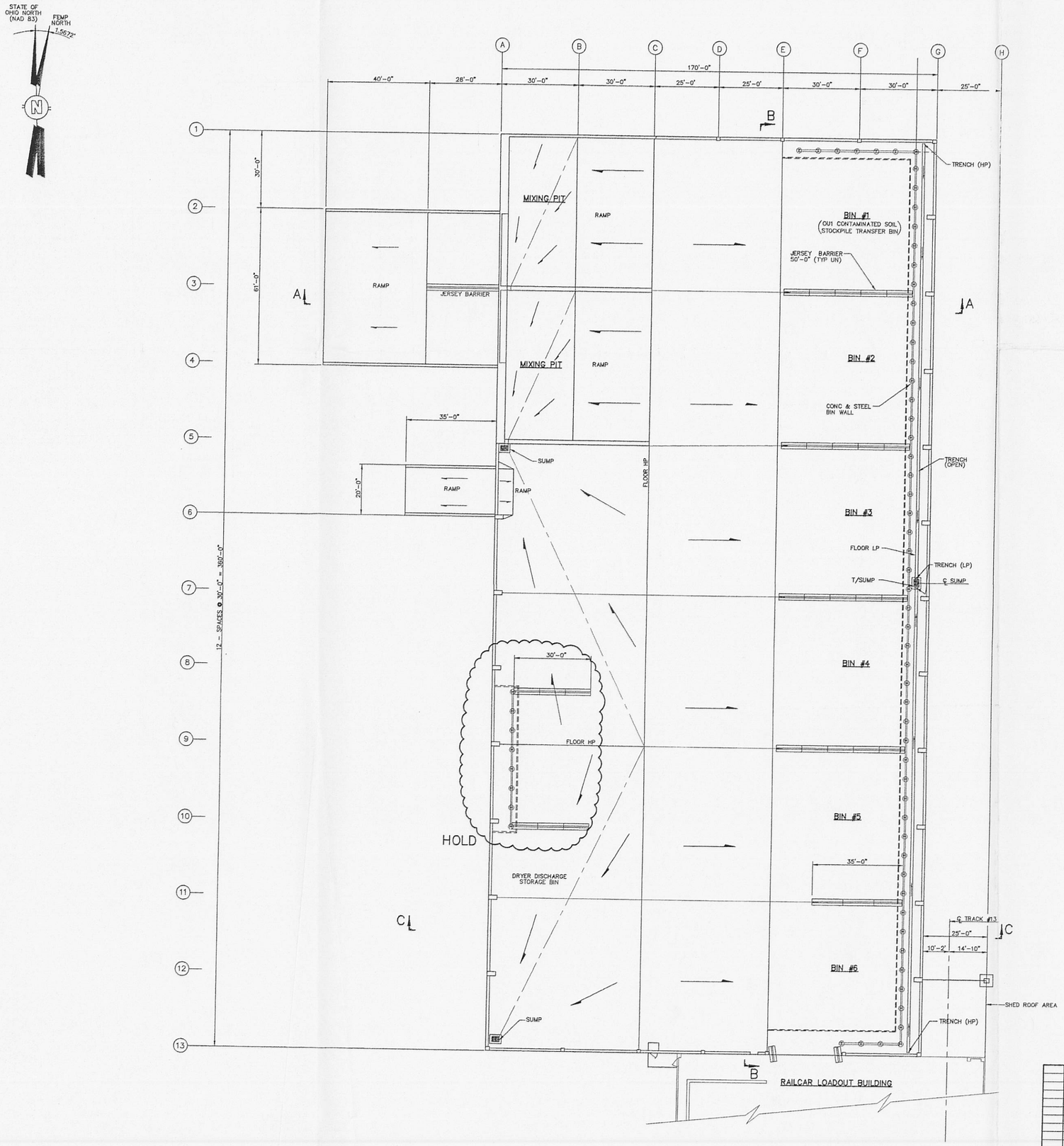

FOR INFORMATION ONLY

REFERENCE DWG'S.

M-15-02-001	PRE-ENGINEERED BUILDINGS GENERAL ARRANGEMENT - PLAN
M-15-02-003	MATERIAL HANDLING BUILDING GENERAL ARRANGEMENT - ELEVATIONS & SECTIONS
M-15-81-001	MATERIAL HANDLING BUILDING FLOOR SLAB/COLUMN FOUNDATION - PLAN
M-35-02-001	RAILCAR LOADOUT AND RAILCAR PREP/LINER STORAGE BUILDINGS GENERAL ARRANGEMENT - PLAN

000232

STATE OF OHIO DANIEL C. JENKINS REGISTERED PROFESSIONAL ENGINEER

REV	DATE	BY	CHK'D	APR'VD	DESCRIPTION
0	6/19/98	JES	PJI	DCH	CERTIFIED FOR CONSTRUCTION

FLUOR DANIEL FERNALD

FLUOR DANIEL FERNALD ENVIRONMENTAL MANAGEMENT PROJECT FERNALD, OHIO

FDF SUB CONTRACT NO. 98SC000001

PROJECT NAME: WASTE PITS REMEDIAL ACTION PROJECTS (WPRAP)

TITLE: MATERIAL HANDLING BUILDING GENERAL ARRANGEMENT PLAN

INTERNATIONAL TECHNOLOGY CORPORATION

... Creating a Safer Tomorrow

DESIGNED BY	JES	CHECKED BY	PJI	6/19/98
DRAWN BY	JES	APPROVED BY	DCH	6/19/98
DATE	12-26-97	DWG. SCALE	1/16"=1'-0"	
IT PROJECT NO.	773481	DRAWING NO.	M-15-02-002	

REVISION 0

10 JUNE 98 14:53

DRAWING NUMBER 773481-M5

1669

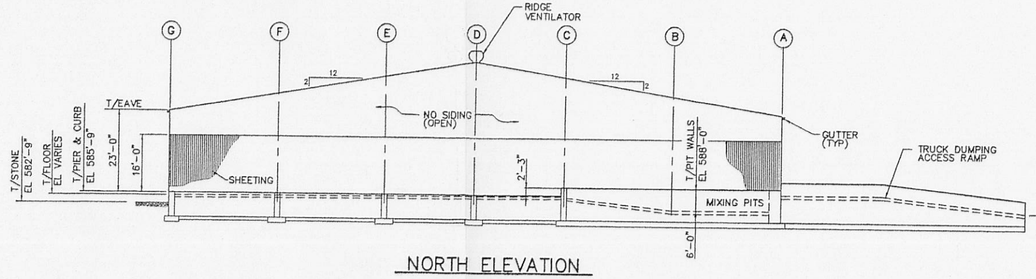

NORTH ELEVATION

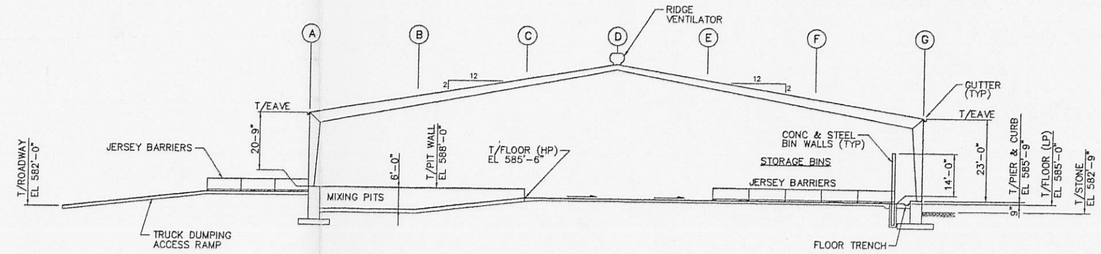

SECTION A – A

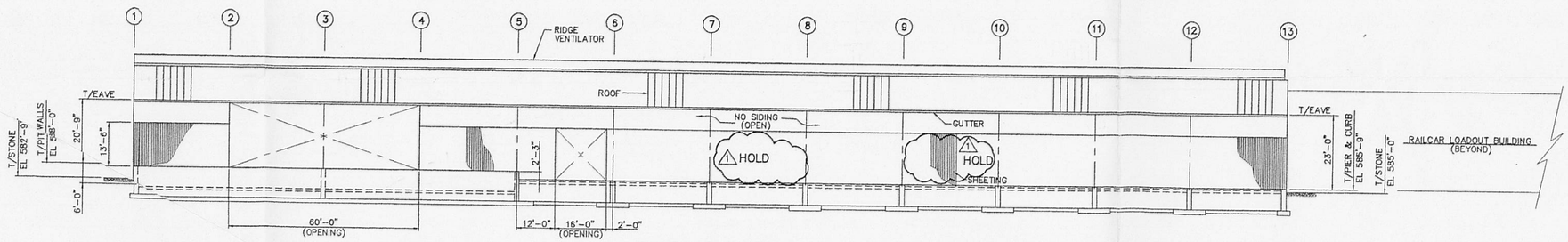

WEST ELEVATION

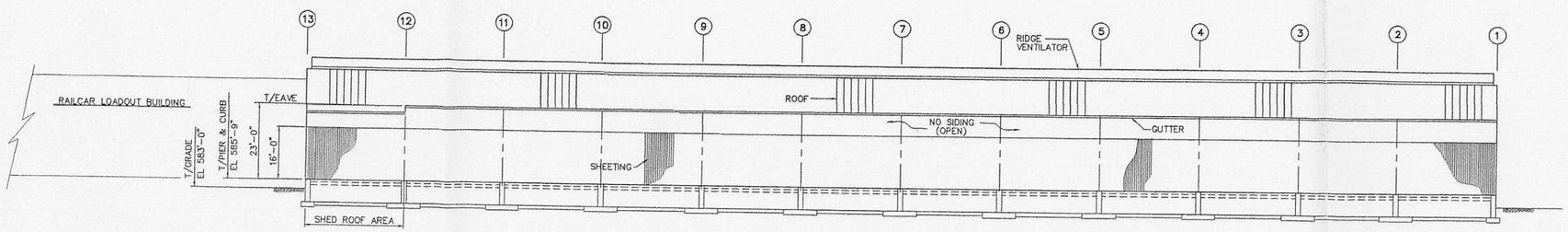

EAST ELEVATION

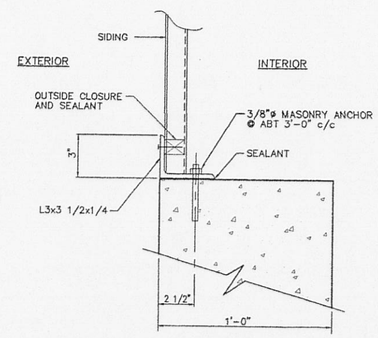

TYPICAL CURB ANGLE DETAIL

SCALE: 3" = 1'-0"

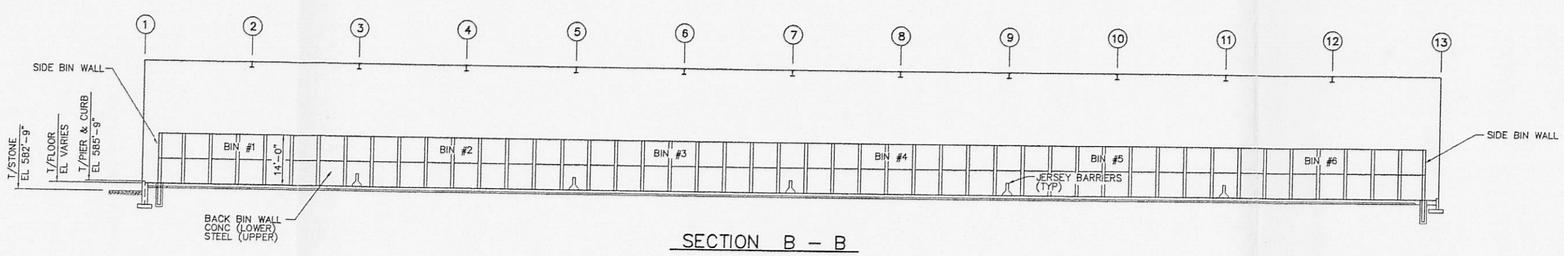

SECTION B – B

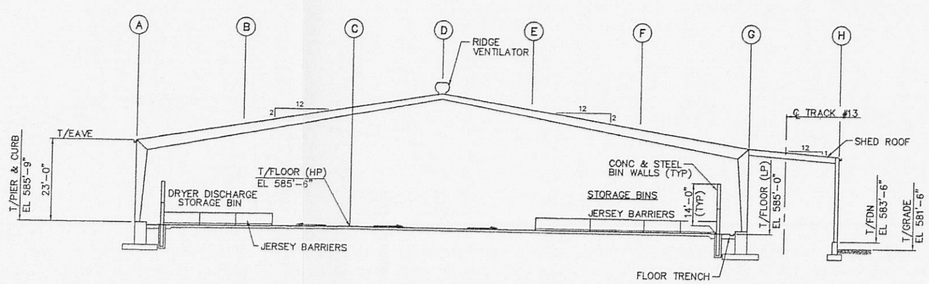

SECTION C – C

FOR INFORMATION ONLY

REFERENCE DWG'S.

M-15-02-002 MATERIAL HANDLING BUILDING GENERAL ARRANGEMENT – PLAN

000233

STATE OF OHIO DANIEL C. HSU E-7844 REGISTERED PROFESSIONAL ENGINEER

REV	DATE	BY	CHK'D	APR'VD	DESCRIPTION
1	7/14/98	GSJ	PJI	DCH	REVISED PER FDF COMMENTS
0	6/19/98	JES	PJI	DCH	CERTIFIED FOR CONSTRUCTION

FLUOR DANIEL FERNALD

FLUOR DANIEL FERNALD ENVIRONMENTAL MANAGEMENT PROJECT FERNALD, OHIO

FDF SUB CONTRACT NO. 98SC000001

PROJECT NAME: WASTE PITS REMEDIAL ACTION PROJECTS (WPRAP)

TITLE: MATERIAL HANDLING BUILDING GENERAL ARRANGEMENT ELEVATIONS AND SECTIONS

INTERNATIONAL TECHNOLOGY CORPORATION

... Creating a Safer Tomorrow

DESIGNED BY	JES	CHECKED BY	PJI	6/19/98	REVISION
DRAWN BY	JES	APPROVED BY	DCH	6/19/98	
DATE	12-12-97	DWG. SCALE	1/16"=1'-0"		1
T PROJECT NO.	773481	DRAWING NO.	M-15-02-003		

10 JUNE 98 15:35

DRAWING NUMBER 773481-M6

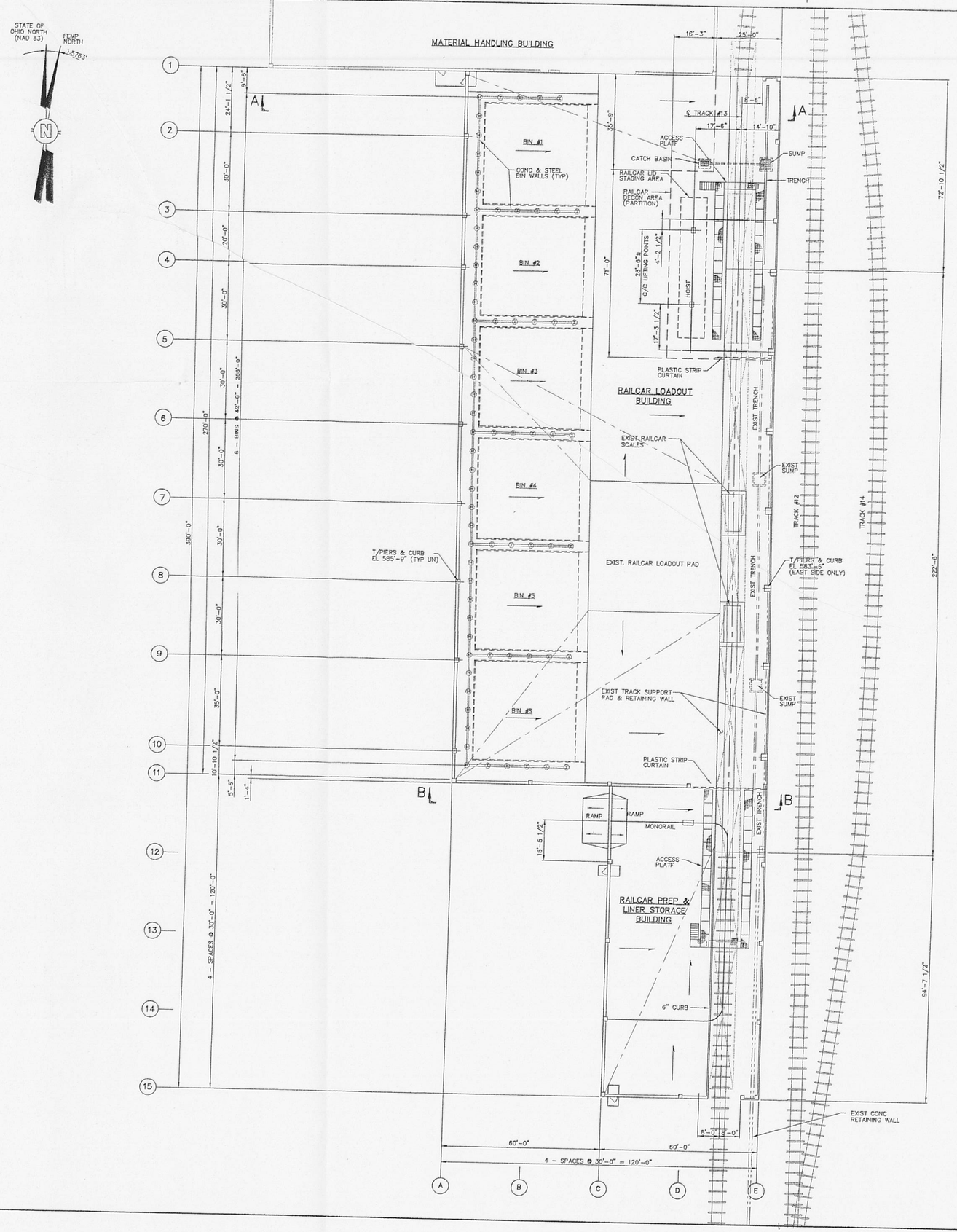

1669

FOR INFORMATION ONLY

REFERENCE DWG'S.

M-15-02-001	PRE-ENGINEERED BUILDINGS GENERAL ARRANGEMENT - PLAN
M-15-02-003	MATERIAL HANDLING BUILDING GENERAL ARRANGEMENT - ELEVATIONS AND SECTIONS
M-35-02-002	RAILCAR LOADOUT AND RAILCAR PREP/LINER STORAGE BUILDINGS GENERAL ARRANGEMENT - ELEVATIONS AND SECTIONS
M-35-81-001	RAILCAR LOADOUT AND PREP/LINER BUILDING FLOOR SLAB/COLUMN FOUNDATION - PLAN
M-15-02-002	MATERIAL HANDLING BUILDING GENERAL ARRANGEMENT - PLAN

000234

STATE OF OHIO DANIEL HSU REGISTERED PROFESSIONAL ENGINEER

REV	DATE	BY	CHK'D	APR'VD	DESCRIPTION
1	7/14/98	GSJ	PJJ	DCH	REVISED PER FDF COMMENTS
0	6/19/98	JES	PJJ	DCH	CERTIFIED FOR CONSTRUCTION

FLUOR DANIEL FERNALD

FLUOR DANIEL FERNALD ENVIRONMENTAL MANAGEMENT PROJECT FERNALD, OHIO

FDF SUB CONTRACT NO. 98SC000001

PROJECT NAME: WASTE PITS REMEDIAL ACTION PROJECTS (WPRAP)

TITLE: RAILCAR LOADOUT & RAILCAR PREP/LINER STORAGE BUILDINGS GENERAL ARRANGEMENT PLAN

INTERNATIONAL TECHNOLOGY CORPORATION

... Creating a Safer Tomorrow

DESIGNED BY	JES	CHECKED BY	PJJ	6/19/98
DRAWN BY	JES	APPROVED BY	DCH	6/19/98
DATE	12-12-97	DWG. SCALE	1/16"=1'-0"	
T PROJECT NO	773481	DRAWING NO.	M-35-02-001	

REVISION: 1

10 JUNE 98 14:00

DRAWING NUMBER 773481-M7

1669

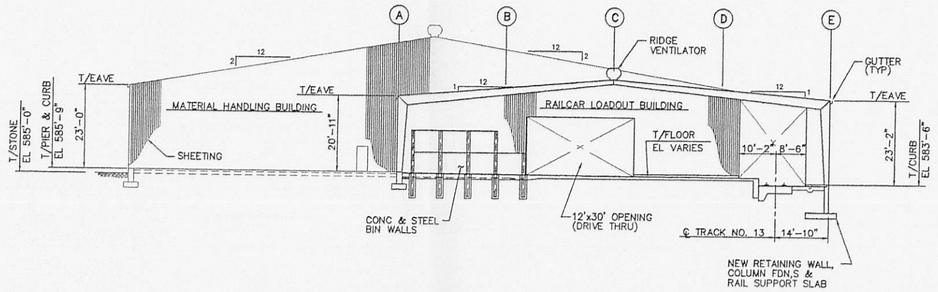

SECTION A – A

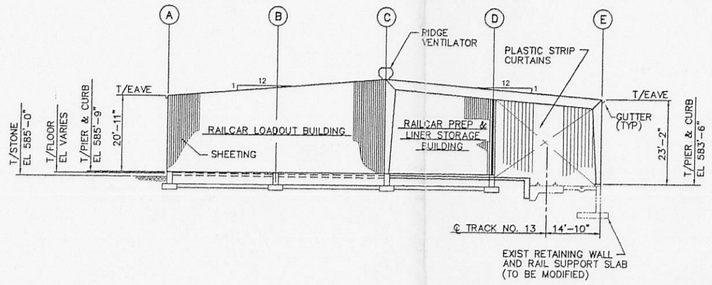

SECTION B – B

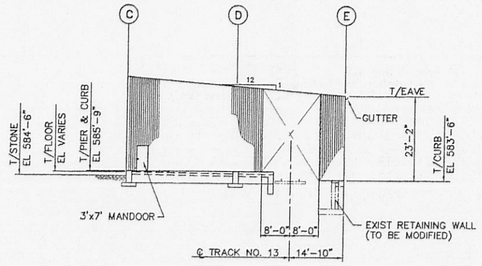

SOUTH ELEVATION

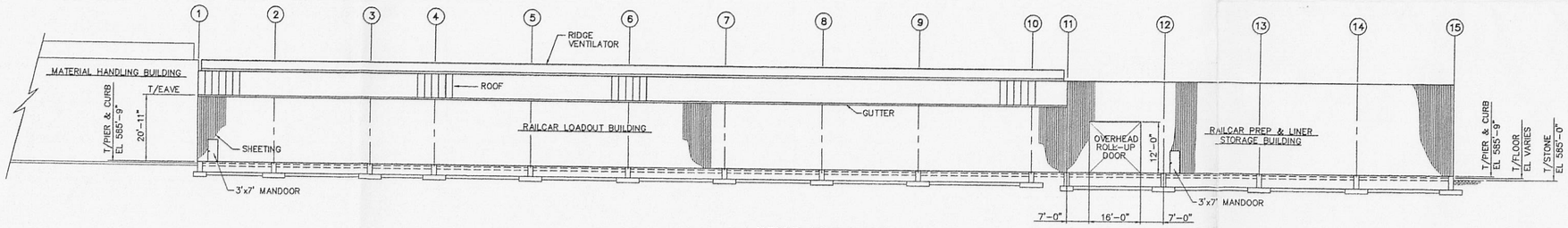

WEST ELEVATION

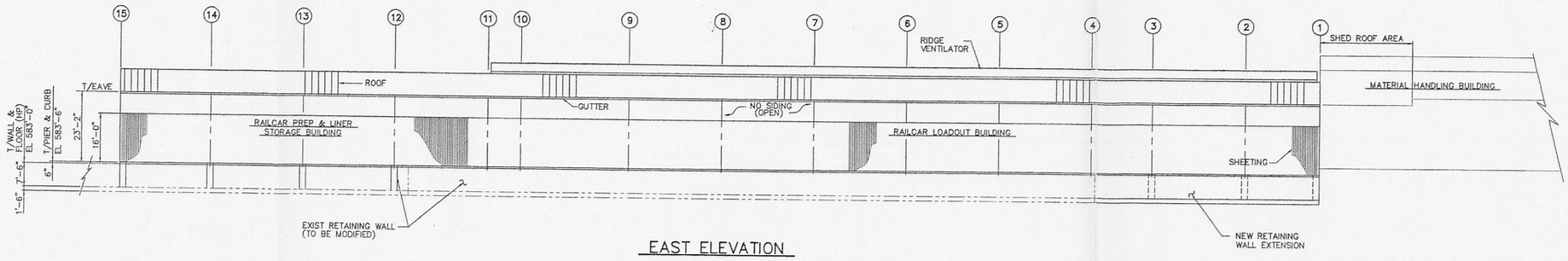

EAST ELEVATION

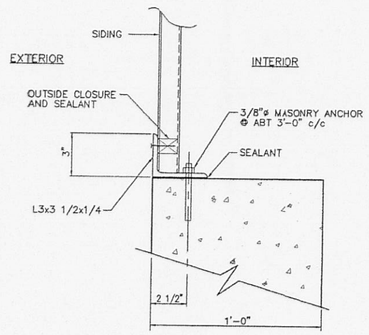

TYPICAL CURB ANGLE DETAIL

SCALE: 3" = 1'-0"

FOR INFORMATION ONLY

REFERENCE DWG'S.

M-35-02-001 RAILCAR LOADOUT AND RAILCAR PREP/LINER STORAGE BUILDINGS GENERAL ARRANGEMENT – PLAN

000235

REV	DATE	BY	CHK'D	APR'VD	DESCRIPTION
0	6/19/98	JES	PJI	DCH	CERTIFIED FOR CONSTRUCTION

FLUOR DANIEL FERNALD

FLUOR DANIEL FERNALD ENVIRONMENTAL MANAGEMENT PROJECT FERNALD, OHIO

FDF SUB CONTRACT NO. 98SC000001

PROJECT NAME: WASTE PITS REMEDIAL ACTION PROJECTS (WPRAP)

TITLE: RAILCAR LOADOUT & RAILCAR PREP/LINER STORAGE BUILDINGS GENERAL ARRANGEMENT ELEVATIONS AND SECTIONS

INTERNATIONAL TECHNOLOGY CORPORATION

... Creating a Safer Tomorrow

DESIGNED BY	JES	CHECKED BY	PJI	6/19/98	REVISION
DRAWN BY	JES	APPROVED BY	DCH	6/19/98	
DATE	12-13-97	DWG. SCALE	1/16"=1'-0"		0
IT PROJECT NO.	773481	DRAWING NO.	M-35-02-002		

10 JUNE 98
15:00

DRAWING NUMBER 773481-M29

1669

FOR INFORMATION ONLY
-NOT FOR CONSTRUCTION-

000769

LEGEND:

- PROPOSED PIPE CORRIDOR
- POST INDICATOR VALVE
- FIRE HYDRANT
- GAS SERVICE ISOLATION VALVE
- WATER SERVICE ISOLATION VALVE
- BLOW OFF

REV	DATE	BY	CHK'D	APR'VD	DESCRIPTION
0	8/25/98	GSJ	PJI	PJI	FINAL RD PACKAGE

FLUOR DANIEL FERNALD — WASTE PITS REMEDIAL ACTION PROJECT (WPRAP) FERNALD, OHIO FDF SUBCONTRACT NO. 98SC000001

PROJECT NAME: WASTE PITS REMEDIAL ACTION PROJECT (WPRAP)

TITLE: SITE UTILITIES PLAN

INTERNATIONAL TECHNOLOGY CORPORATION
... Creating a Safer Tomorrow

DESIGNED BY	PJI	CHECKED BY	PMS	6/19/98	REVISION
DRAWN BY	B. A. KUMPF	APPROVED BY	PJI	8/25/98	0
DATE	19 DECEMBER 97	DWG. SCALE	1"=50'		
IT PROJECT NO	773481	DRAWING NO.	M-70-02-001		