4-402.20

1807

FINAL WORK PLAN FOR SILOS 1 AND 2 PROOF OF PRINCIPLE TESTING

***

Prepared for:

Fluor Daniel Fernald, Inc.
Fernald, Ohio

***

Prepared by:

International Technology Corporation
2790 Mosside Boulevard
Monroeville, PA 15146-2790

IT Project No. 775743

Approved by: _____ Date: 10/7/98
Paul Lear, IT Project Manager

Approved by: E. Olgers for _____ Date: 10/7/98
Ernest Stine, IT Principle Investigator

Approved by: E. Olgers for _____ Date: 10/7/98
Stuart Shealy, IT Project Engineer

***

REVISION 0

Issue Date: October 5, 1998

E-1807

FINAL WORK PLAN FOR SILOS 1 AND 2 PROOF OF PRINCIPLE TESTING

***

Prepared for:

Fluor Daniel Fernald, Inc.
Fernald, Ohio

***

Prepared by:

A - Conforms to the Subcontract Requirements.
B - Minor Comment - Incorporate and Resubmit.
C - Revise and Resubmit.
Sig: _____ Date: 10-8-98

International Technology Corporation
2790 Mosside Boulevard
Monroeville, PA 15146-2790

IT Project No. 775743

Approved by: _____ Date: 10/7/98
Paul Lear, IT Project Manager

Approved by: E. Olgers for _____ Date: 10/7/98
Ernest Stine, IT Principle Investigator

Approved by: E. Olgers for _____ Date: 10/7/98
Stuart Shealy, IT Project Engineer

***

REVISION 0

Issue Date: October 5, 1998

TABLE OF CONTENTS–WORK PLAN

1807

List of Tables iii
List of Figures iv
List of Acronyms/Abbreviations v

1.0 Introduction 1-1
1.1 Project Description 1-1
1.1.1 Formulation Development 1-2
1.1.2 Process Demonstration 1-2
1.2 Test Objectives 1-4
1.3 Challenges to the Full-Scale Process 1-6
1.4 Process Control 1-7
1.5 Applicability to Full-Scale Processing 1-7
2.0 Treatment Technology Description 2-1
2.1 Dewatering 2-1
2.2 Stabilization 2-1
2.3 Treatment Description 2-1
2.3.1 Dewatering System Feed Tank 2-2
2.3.2 Batch Pre-treatment 2-2
2.3.3. Slurry Transfer 2-2
2.3.4 Filter Press 2-3
2.3.5 Batch Stabilization Mixer 2-4
3.0 Proof of Principle Treatment Recipe Development 3-1
4.0 Testing and Date Rationale 4-1
4.1 Overview of Rationale for Sampling Points and Sampling Frequency 4-1
4.1.1 Surrogate Slurry Preparation 4-1
4.1.2 Formulation Development Testing 4-1
4.1.3 Demonstration Testing 4-1
4.2 Identification and Rationale for Analytical Methods 4-1
4.2.1 Surrogate Slurry Preparation 4-1
4.2.2 Formulation Development Testing 4-2
4.2.3 Demonstration Testing 4-2
5.0 Process Design and Testing Configuration 5-1
5.1 Discussion of Design/Configuration 5-1
5.1.1 Description of Operations and Equipment 5-1
5.1.1.1 Formulation Development Testing 5-1
5.1.1.2 Demonstration Testing 5-2
5.1.2 Pretreatment Requirements 5-5
5.1.3 Testing Methodology 5-6
5.1.4 Secondary Testing Requirements 5-6
5.2 Test Procedures 5-7
5.2.1 Surrogate Slurry Preparation 5-7
5.2.1.1 Formulation Development 5-7
5.2.1.2 Demonstration Testing 5-7
5.2.2 Formulation Development Test Procedures 5-8
5.2.2.1 Slurry Dewatering 5-8
5.2.2.2 Formulation Development 5-8
5.2.3 Demonstration Test Procedures 5-8
5.2.3.1 Slurry Dewatering 5-8
5.2.3.2 Stabilization 5-9
5.3 Process Control Procedures 5-9
5.3.1 Control Limits 5-9
5.3.1.1 Surrogate Slurry Preparation 5-9
5.3.1.2 Formulation Development and Demonstration Testing 5-9
5.3.2 Operating Parameters 5-9
5.3.2.1 Surrogate Slurry 5-9
5.3.2.2 Formulation Development 5-10

000003

5.3.2.3 Demonstration Testing 5-10
5.3.3 Monitoring Frequency 5-10
5.3.3.1 Surrogate Slurry Preparation 5-10
5.3.3.2 Formulation Development 5-10
5.3.3.3 Demonstration Testing 5-10
5.4 Test Logs 5-11
5.4.1 Formulation Development Log 5-11
5.4.2 Demonstration Testing Log 5-11
5.5 Video Tapes 5-11
6.0 Equipment and Material 6-1
6.1 Equipment 6-1
6.1.1 Formulation Development 6-1
6.1.2 Demonstration Testing 6-1
6.2 Materials 6-1
6.2.1 Surrogate Slurry Reagents 6-1
6.2.2 Dewatering Agents 6-2
6.2.3 Stabilization Reagents 6-2
7.0 Sampling, Data Collection, and Analysis Plan 7-1
7.1 Sampling Points and Data Requirements 7-1
7.1.1 Surrogate Reagents 7-1
7.1.2 Surrogate Composition 7-2
7.1.3 Surrogate Slurry Dewatering for Formulation Development 7-3
7.1.4 Formulation Development Testing 7-3
7.1.5 Surrogate Slurry Dewatering for Demonstration Testing 7-4
7.1.6 Process Demonstration 7-5
7.2 Sampling Logs 7-6
7.3 Sample Chain of Custody 7-7
7.4 Analytical Laboratory Logs 7-7
7.5 Analytical Laboratory Procedures 7-7
8.0 Data Management 8-1
8.1 Control of Data 8-1
8.2 Data Review and Verification 8-1
8.3 Data Reporting 8-1
9.0 Data Analysis, Evaluation, and Interpretation 9-1
9.1 Mass and Energy Balance – Primary Waste Stream 9-1
9.2 Mass and Energy Balance – Secondary Waste Stream 9-2
9.3 Data Evaluation 9-2
9.3.1 Waste Loading 9-2
9.3.2 Bulking Factor 9-3
9.4 Data Interpretation 9-3
10.0 Health and Safety 10-1
11.0 Waste Stream Management 11-1
11.1 Regulatory Issues Specific to the Testing Facility 11-1
12.0 Reports 12-1
12.1 Weekly Teleconferences 12-1
12.2 Written Weekly Reports 12-1
12.3 Final Report 12-1
13.0 Schedule 13-1
13.1 Milestones 13-1
13.2 Duration 13-1
13.3 Hold Points 13-1
13.4 Witnessing Visits 13-1
14.0 Management and Staffing 14-1
14.1 Project Management 14-1
14.1.1 Project-Based Staffing Approach 14-1
14.1.2 Project Organization 14-1
14.1.3 Clearly Defined Roles and Responsibilities 14-1

14.1.4 Project Management and Control System 14-2
14.1.5 Project Evaluation System 14-3
14.1.6 Communications with Fluor Daniel Fernald 14-3
14.2 Staffing 14-4
14.2.1 Project Team 14-4
14.2.2 Project Team Roles and Responsibilities 14-4
14.3 Training 14-8
14.3.1 Work Plan Training 14-8
14.3.2 QA/QC Testing Plan Training 14-8
15.0 Regulatory Compliance 15-1
15.1 Licenses 15-1
15.2 Permits 15-1

Appendix A – Facility Chemical Hygiene Plan
Appendix B – IT Pilot-Scale Review Checklist
Appendix C – Intent to Perform Treatability Testing Letters

List of Tables

Table	Title	
Table 1.1	Performance Criteria for the Treated Surrogate	1-6
Table 3.1	Stabilization Formulations for the Proof-of-Processing Testing	3-1
Table 4.1	Surrogate Preparation Sampling and Analysis Summary	4-1
Table 4.2	Formulation Development Sampling and Analysis Summary	4-2
Table 4.3	Formulation Development Sampling and Analysis Summary	4-2
Table 5.1	Stabilization Formulations for the Proof-of-Processing Testing	5-2
Table 5.2	Testing Methodology	5-6
Table 5.3	Formulation Development Dewatering Sampling and Analysis Summary	5-7
Table 5.4	Surrogate Preparation Parameters	5-10
Table 6.1	Reagents Required for Surrogate Slurry Preparation	6-2
Table 7.1	Surrogate Compound Specifications	7-2
Table 7.2	Surrogate Preparation Sampling and Analysis Summary – Each Batch	7-2
Table 7.3	Formulation Development Dewatering Sampling and Analysis Summary	7-3
Table 7.4	Formulation Development Sampling and Analysis Summary	7-4
Table 7.5	Process Demonstration Dewatering Sampling and Analysis Summary	7-5
Table 7.6	Process Demonstration Sampling and Analysis Summary	7-6
Table 13.1	Key Milestones for Proof of Principle Testing	13-1
Table 14.1	Project Specific Training Matrix	14-8

List of Figures

Figure	Title	
1-1	Fernald OU4 Silos 1&2 Proof of Principle Flowchart	1-3
1-2	Fernald OU4 Silos 1&2 Proof of Principle Flowchart	1-5
5-1	IT's Environmental Technology Development Center	5-3
5-2	Process Flow Diagram Demonstration Testing	5-4
7-1	Analysis Request and Chain of Custody Record	7-8
13-1	Fernald OU4 Silos 1&2 Proof of Principle Schedule	13-2
14-1	Silos 1&2 Proof of Principle Organization Chart	14-2

List of Acronyms/Abbreviations

1807

AEA	Atomic Energy Act
ANS	American Nuclear Society
ANSI	American National Standards Institute
ASME	American Society of Mechanical Engineers
ASTM	American Society for Testing and Materials
BDAT	Best Demonstrated Available Technology
CFR	Code of Federal Regulations
CHP	Chemical Hygiene Plan
Ci	Curies
DOE	U.S. Department of Energy
EPA	U.S. Environmental Protection Agency
ETDC	Environmental Technology Development Center
FDF	Fluor Daniel Fernald, Inc.
FEMP	Fernald Environmental Management Project
g/cm^3	Grams per cubic centimeter
H&S	Health and safety
ID	Identification
IT	IT Corporation
JSA	Job safety analyses
kg	Kilograms
LDR	Land Disposal Restrictions
(M)ANS	Modified American Nuclear Society Test Procedure
NQA	National Quality Association
OSHA	Occupational Safety and Health Administration
OU4	Operable Unit 4
PMCS	Program Management and Control System
psi	Pounds per square inch
QA	Quality assurance
QA/QC	Quality assurance/quality control
QAM	Quality Assurance Manual
QC	Quality control
Pb	Lead
Ra	Radium
RCRA	Resource Conservation and Recovery Act
RFP	Request for Proposal
ROD	Record of Decision
rpm	Revolutions per minute
RSR	Radiological safety requirements
SOP	Standard Operating Procedures
TC	Toxicity characteristics
TCLP	Toxicity characteristic leaching procedure
TDL	Technology Development Laboratory
Th	Thorium
UCS	Unconfined Compressive Strength
UTS	Universal Treatment Standards
WBS	work breakdown structure
wt%	weight percent

000007

1.0 INTRODUCTION

1.1 PROJECT DESCRIPTION

1807

IT's Proof of Principle Demonstration for the Silos Project for the Fernald Environmental Management Project (FEMP) involves the testing of Portland cement-based stabilization treatment to evaluate its potential use for the treatment of the Silos 1 and 2 residuals. Silos 1 and 2, which are components of Operable Unit 4 (OU4) at the FEMP, were constructed in 1951 and used for storage of radium-bearing residue from uranium ore processing. Silo 1 contains approximately 3,300 cubic meters of residue and Silo 2 contains approximately 2,800 cubic meters of residue. The composition of the residues in Silo 1 and 2 is primarily a wet, gray, silty clay with an average moisture content of 30 weight percent (wt %). The residues in the two silos contain in excess of 3,700 Curies (Ci) of radium (Ra)-226, 1,900 Ci of lead (Pb)-210, and 600 Ci of thorium (Th)-230. The residues also contain 129.8 tons of barium, 913 tons of lead, and 2.86 tons of arsenic. The silos residue is classified as a byproduct material as defined under Section 11(e)(2) of the Atomic Energy Act (AEA) of 1954, as amended. Under this classification, it is excluded from regulation as solid or hazardous waste under the Resource Conservation and Recovery Act (RCRA). However, available analyses of the residue indicate that the levels of leachable lead are in excess of the RCRA Toxicity Characteristic Leaching Procedure (TCLP) limits. Therefore, the OU4 Record of Decision (ROD) identified certain requirements of RCRA as relevant and appropriate, including the requirement that the residue be treated such that it no longer exhibits a hazardous characteristic.

IT believes that a treatment system that can dewater and stabilize the Silos 1 and 2 residuals will produce a treated material which no longer exhibits a hazardous characteristic and will be acceptable for potential disposal options selected by FDF. The full-scale process will involve dewatering of the Silos 1 and 2 residuals slurry, to minimize the volume of material to be stabilized, followed by the stabilization of the dewatered filter cake material. The final treated product would be a moist, soil-like material. The full-scale dewatering system would involve tanks to hold the Silos 1 and 2 residuals slurry and to amend the slurry as necessary to facilitate dewatering, pumps to transfer the slurry into the filter press, holding tanks for the filter press effluent, a filter press to dewater the slurry, and covered conveyors to transfer the moist filter cake to the batch mixer. The full-scale stabilization system would consist of a batch mixer to mix the filter cake and the stabilization reagents, silo to hold and meter the stabilization reagents into the batch mixer, and a metal box filling system to fill and cover the metal boxes. Containment of dust and radon emissions from the dewatering and stabilization equipment would be accomplished by an air handling system which would consist of HEPA filtration and activated carbon adsorption.

The only differences (dimensions, motor horsepower rating, pump size, etc) between the equipment selected for the Proof of Principle Demonstration testing and the full-scale processing equipment are related to the increased capabilities of the full-scale dewatering and stabilization equipment. The suppliers of the Proof of Principle Demonstration testing equipment (JWI and Maxcrete) manufacture and market existing full-scale equipment.

The IT Proof of Principle Demonstration for Portland cement-based stabilization will involve formulation development and Process Demonstration to produce a material that no longer exhibits a hazardous characteristic.

000008

1807

1.1.1 Formulation Development

The formulation development for the three surrogates (i.e., S1, S2, and demonstration surrogates) to be used in the Proof of Principle Demonstration will involve preparing small portions (2.0 kilograms [kg]) of the Silos 1 and 2 slurries (30 wt % solids). These slurries will be dewatered to minimize the amount of slurry material to be stabilized. Testing will be done to identify the chemical additive required, if necessary, to dewater the 30 wt % solids slurry. The dewatered filter cake should have approximately 50-60 wt % solids. The bulk of the slurry will then be dewatered. The filter cake produced by the dewatering will be mixed with varying amounts of Portland cement and other chemical additives, and water if necessary, to produce a stabilized waste form.

A flow chart for the laboratory-scale formulation development is shown in Figure 1.1. The treated material from each formulation will be transferred to a one 1-quart jar and two 2-inch diameter by 4-inch high rigid plastic right cylinder molds and one 25mL graduated cylinder. The quart jar from each formulation will be sent to a Fluor Daniels Fernald (FDF)-approved laboratory for TCLP testing. The graduated cylinder will be used for free standing liquids testing using a Modified American Nuclear Society [(M)ANS] 55.1. The molds will be cured for 7 and 14 days and then subjected to unconfined compressive strength (UCS) testing (American Society of Mechanical Engineers [ASTM] C39). See Sections 4 and 7 for further discussions on samples to be collected.) Based on the TCLP and UCS results, additional formulations may be made and tested as needed to develop two treatment formulations for each surrogate wastes: one formulation to meet the present RCRA Toxicity Characteristic (TC) limits and one formulation to meet the proposed RCRA Universal Treatment Standards (UTS).

These formulations will be used to treat additional portions of the dewatered demonstration, Silo 1 and Silo 2 waste. This additional treated material will be placed into the appropriate cylinder and cube molds. The molded samples will be submitted to Fluor Daniels Fernald (FDF) for durability testing.

1.1.2 Process Demonstration

For the Process Demonstration, IT Corporation (IT) will utilize a 5 cubic foot JWI filter press to dewater the 30 wt % solids slurry and a Mini-Maxcrete mixer to mix the dewatered filter cake with the reagents, according to the treatment formulation that meets the TC limits on the demonstration surrogate. A flow chart for the Process Demonstration is shown in Figure 1.2. IT will treat ten 60-gallon batches of the demonstration surrogate per 24 hour period. Based on an assumed density of 1.3 – 1.5 grams per cubic centimeter (g/cm^3) for the demonstration surrogate, the ten 60-gallon batches per day will equal approximately 3,000 – 3,400 kg of the demonstration surrogate waste. Over the course of the 72-hour demonstration, thirty treatment batches will be produced.

Three portions (700 gallons each) of the 30 wt % solids demonstration slurry will be made in 1,000 gallon polypropylene tanks a minimum of two days prior to the process demonstration. Each 60-gallon batch during the Process Demonstration will be amended in accordance with the Proof of Principle Demonstration, pumped into a 5 cubic foot chamber filter press, and dewatered. The Mini-Maxcrete mixer will be charged with the filter cake material produced from

Figure 1.1
Fernald OU4 Silos 1&2 Proof of Principle

1807

Laboratory-Scale Formulation Development

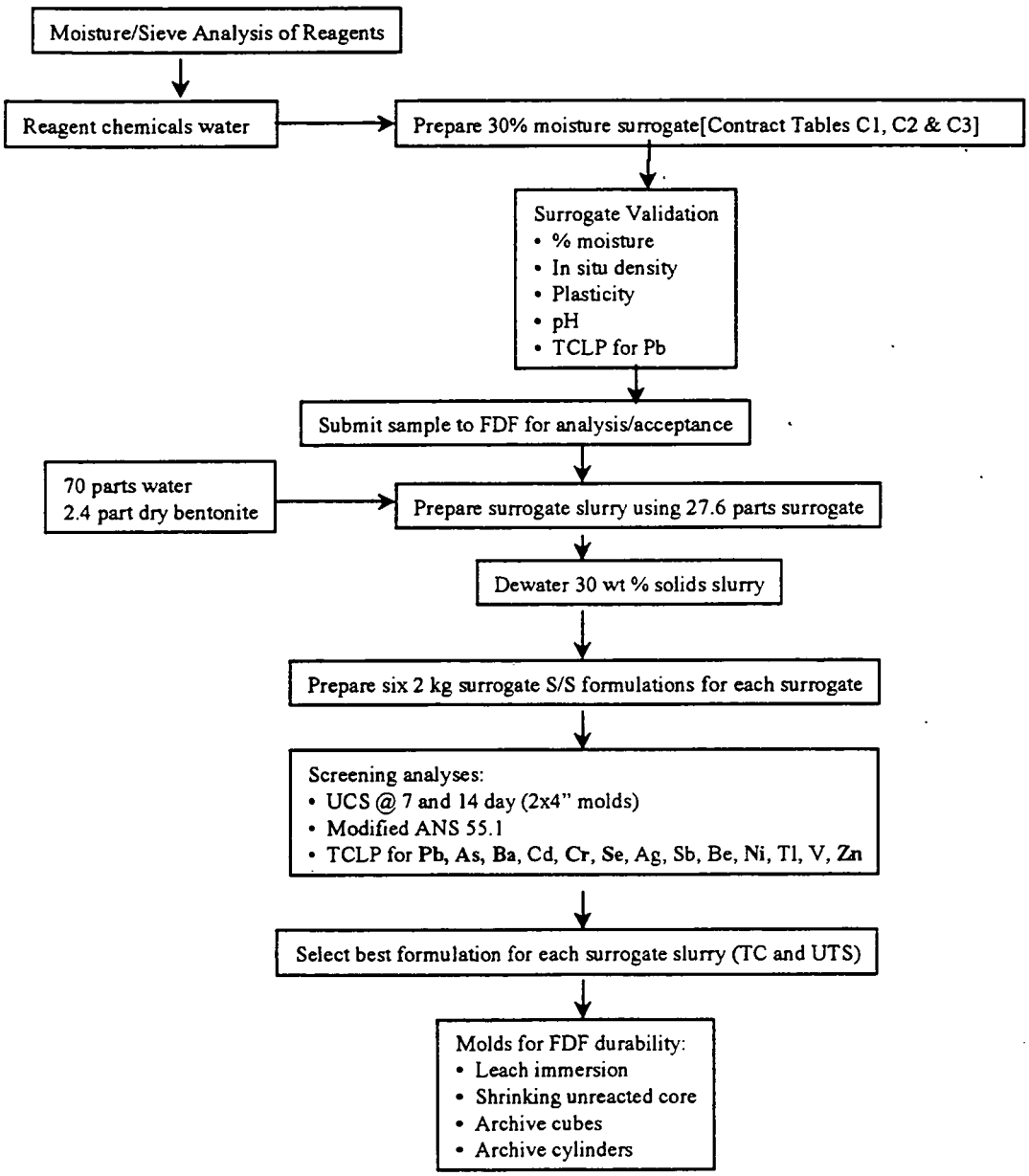

L:\TDL\SILO1&2\WORKPLAN\LABSCPOP.PPT

000010

the 60 gallons of the demonstration surrogate slurry. Based on the weight of the filter cake produced from the dewatering of the slurry material, the required amount of Portland cement and other reagents, based on the formulation developed for the demonstration slurry, will be weighed out and added to the mixer. Mixing time will be determined by visual observation of the stabilized/solidified product during the mixing to assess homogeneity of the product. After a visually homogeneous stabilized/solidified product is produced, the treated material will be allowed to exit the mixer and will be collected in a polyethylene lined 85 gallon polypropylene drum.

Grab samples (three 1 quart jars) of the stabilized/solidified product from each treatment batch will be obtained for appearance (visual homogeneity and monolithic nature), TCLP, UCS, free standing liquid (M)ANS 55.1) testing, and sample archive from the 85 gallon drum immediately after it is discharged from the mixer. Additionally, 20 kg of treated material from three random batches will be placed into the appropriate cylinder and cube molds and submitted to FDF for durability testing. (See Sections 4 and 7 for further details on samples to be collected.)

The secondary wastestreams from the Process Demonstration will be the filtrate from the dewatering and the stabilized waste material. The Process Demonstration filtrates from the dewatering steps should have a pH value in the range of 9 to 10, total suspended solids of less than 50 mg/L, and less than 0.1 ppm of most metals of concern. In the full-scale system, bag filtration could be used to remove suspended solids and produce a filtrate which is suitable for discharge to the AWWT. If required for full-scale treatment, ion exchange could be added to polish the filtrate prior to discharge. The stabilized waste product will be a moist, soil-like material. The contaminants in the stabilized waste product will be immobilized, allowing the stabilized waste product to meet the RCRA UTS. The stabilized waste product should be suitable for land disposal.

Since the surrogate demonstration materials do not contain radon and the equipment used for the Process Demonstration does not have the same size or geometry as the full-scale equipment, simulation of air handling/gas control containment was not included as part of IT's Proof of Principle Demonstration. For the conceptual design of the full-scale processing system, all processing systems (dewatering, stabilization, and metal box filling) would have gas control containment for the handling of dust and radon emissions from these system operations. The collected air would flow through HEPA filtration units to remove particulates and activated carbon to remove radon. The particulates captured by the air handling/gas control containment system would also be a secondary waste and would have to be reintroduced to the Silos 1 and 2 residue slurry for treatment.

1.2 TEST OBJECTIVES

The Proof of Principle Demonstration will provide data which demonstrates that the cement stabilization treatment process can produce a treated surrogate material which meets the performance criteria (Table 1-1). The data collected from the Proof of Principle Demonstration shall be presented in a final report, which will also provide design data for a proposed layout of a full-scale remediation facility and a process flow diagram for the primary waste stream. The

1807

Figure 1.2
Fernald OU4 Silos 1&2 Proof of Principle

Demonstration Scale

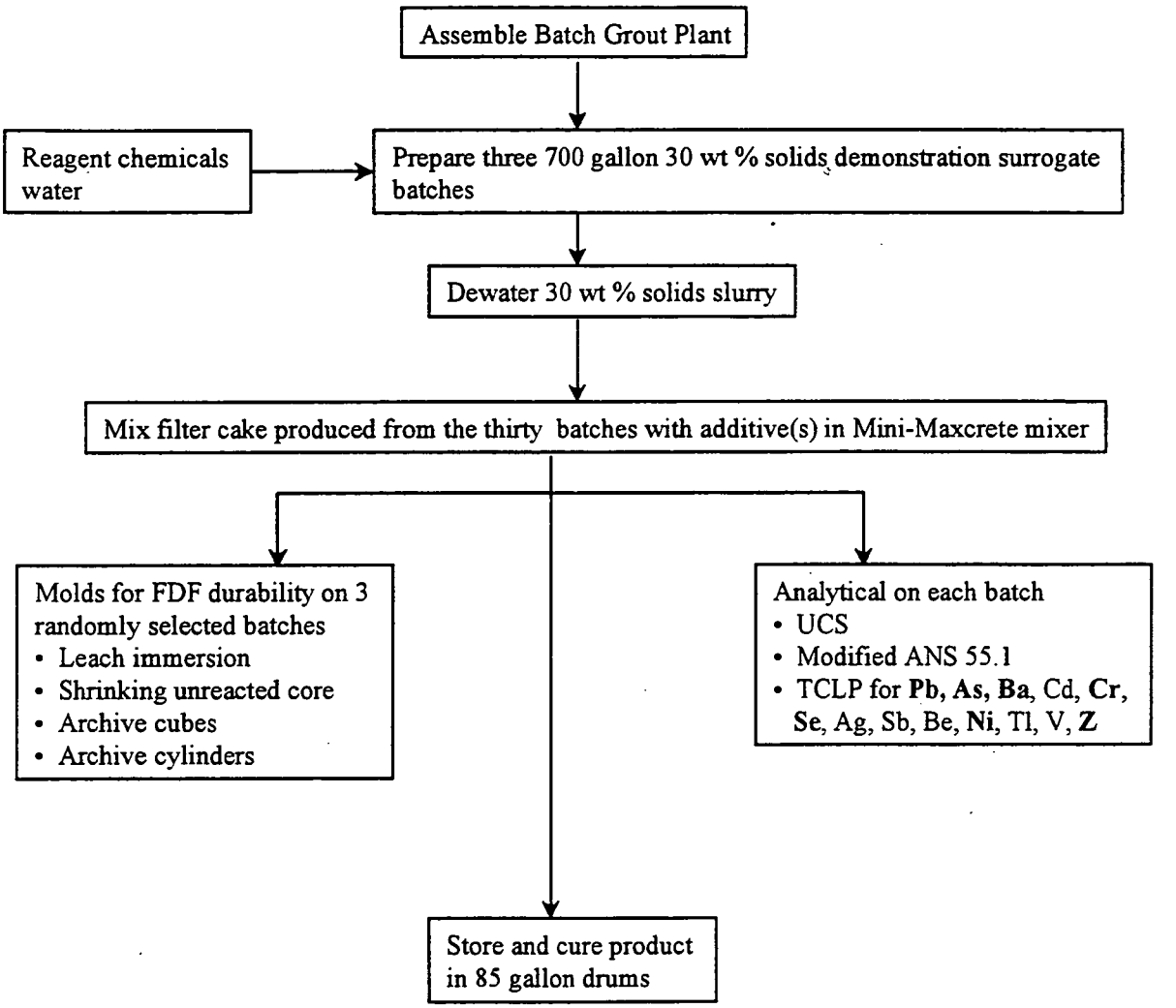

000012

results of this Demonstration will provide technology-specific information on the performance, safety, reliability, implementability, cost, and schedule for the full-scale remediation of the Silos 1 and 2 residues.

1807

Table 1.1
Performance Criteria for the Treated Surrogate

Parameter	Criteria
Appearance	Uniform and homogenous with no lumps or pockets of unmixed waste
Compressive Strength	At least 50 psi per ASTM C39
Free Liquids	No free standing liquids per (M)ANS 55.1
TCLP	Less than 50% of the RCRA TCLP
Dusting/Particulate	No more than 1 wt % of less than 10 micrometer diameter particles or 15 wt % of less than 200 micrometer diameter particles
RCRA Characteristics	Not exhibiting a RCRA characteristic of a hazardous waste as defined by 40 CFR 261(C) nor be listed as a hazardous waste

1.3 CHALLENGES FOR FULL-SCALE PROCESS

The major process challenge for the dewatering of the Silo 1 and 2 residuals will be to produce a homogeneous dewatered material for the stabilization treatment. Consistent feed to the filter press operations are required for the production of homogeneous filter cake material. The high clay content of Silos 1 and 2 residuals may produce lumps and pockets of aggregated material within the 30 wt% solids slurry. IT will utilize high speed, high shear mixers to thoroughly dispose the aggregated materials, homogenize the slurry and required dewatering chemicals, if required, prior to the dewatering process.

The major process challenge for the stabilization of the dewatered Silo 1 and 2 residuals will be to produce a homogeneous treated material. Effective chemical stabilization requires the production of a homogeneous treated material. However, the high clay content of Silos 1 and 2 residuals may produce lumps and pockets of aggregated material within the dewatered material. The equipment utilized for mixing the dewatered material with the reagents must be capable of producing high shear mixing. The Maxcrete mixers have sufficient power and paddle configuration to produce high shear mixing of the slurry and the reagents.

The Proof of Principle demonstration will be used to evaluate the production of a uniform and homogeneous treated material when the demonstration slurry is mixed with the specified stabilization reagents. The mixing time required for the production of a uniform and homogeneous treated material will be verified during the Proof of Principle demonstration.

The major chemical challenge for the stabilization of the Silo 1 and 2 residuals will be the effective chemical fixation of the lead. Analysis of available samples by FDF has indicated that the Silo 1 and 2 residuals have TCLP-leachable lead levels in excess of the RCRA hazardous characteristic level. The stabilization of lead with alkaline materials must be carefully planned. The solubility of lead as a function of pH yields a U-shaped curve. The minimum lead solubility occurs within a pH range of 8.0 to 10.5. The leachablity of lead increases dramatically at pH values below 8 and above 11. Therefore, stabilization formulations which yield a TCLP extract pH in the range of 8.0 to 10.5 have minimal TCLP-leachable lead. Overuse of alkaline reagents in stabilization formulations can result in TCLP extract pH levels exceeding 10.5, leading to high levels of TCLP-leachable lead. To compensate for the potential overuse of alkaline reagents in the

stabilization formulations for Silos 1 and 2 residuals, the addition of triple superphosphate will be explored. Triple superphosphate, a common agricultural fertilizer, promotes the formulation of lead phosphate which is insoluble at pH values above 4.0. The addition of triple superphosphate to stabilization formulations alleviates problems associated with the overuse of alkaline stabilization reagents. The use of triple superphosphate in the stabilizaiton formulations for the Silo 1 and 2 residuals should also reduce the amount of Portland cement required for the stabilization of those waste materials. This will result in a lower bulking factor and will reduce off-site transportation and disposal costs.

1807

1.4 PROCESS CONTROLS

Process controls for full-scale processing which must be determined from the formulation development and Process Demonstration testing include:

- types and amounts of dewatering agents required for to achieve liquid/solid separation of the slurry,
- dewatering processing rate,
- suspended solids content of the dewatered filtrate,
- solids content and bulk density of the dewatered filter cake,
- types and amounts of stabilization reagents to immobilize the contaminants in the dewatered filter cake, and
- characteristics (TCLP leachability, free liquids, UCS) of the final stabilized products.

1.5 APPLICABILITY TO FULL-SCALE PROCESSING

For the Demonstration Testing, IT will utilize a 5 cubic foot JWI filter press. JWI manufactures filter presses ranging in size from 1 to 200 cubic feet. IT has completed over 100 projects where filter presses of various sizes have been used to minimize waste volume. IT will also utilize a Mini-Maxcrete mixer to mix batches of the dewatered demonstration surrogate waste with the reagents. This equipment was chosen because IT would propose using batch treatment during the full-scale stabilization process. Typically, a batch mixer, such as the Maxon Industries Maxcrete would be used during a batch stabilization treatment process. The Mini-Maxcrete mixer, a smaller version of the Maxcrete, would be used during the Process Demonstration to develop operational and processing information for the stabilization treatment of the dewatered Silos 1 and 2 slurry material. Since the only differences (dimensions, motor horsepower ratings, motor size, etc) between the Mini-Maxcrete mixer and the full-scale Maxcrete mixers are related to the increased capacities of the full-scale Maxcrete mixers, the Demonstration Testing results would be applicable to the scale-up of a batch stabilization system capable of treating the Silo 1 and 2 residuals.

Besides the differences in equipment size, the Demonstration Testing varies slightly from the full-scale processing system which would be used to treat the Silo 1 and 2 residuals. First, the filter press would be placed above the batch mixer to allow the dewatered filter cake to fall directly into the stabilization mixer. Second, the stabilization mixer would be mounted on weigh cells to

determine the weight of filter cake in each batch during the full-scale processing. Third, the full-scale processing equipment would be completely enclose and automated. The enclosure of the equipment would allow complete capture of radon and/or dust emissions from the Silo 1 and 2 residuals, while the automation of the equipment would reduce worker exposure to radiation. An air handling system, consisting of HEPA and carbon filtration units and blowers, would be used to keep the enclosure under negative pressure and to remove the dust and radon from air pulled through the enclosure. Fourth, the sampling of the treated material would be accomplished remotely in the full-scale processing system, again to minimize worker exposure to radiation. Fifth, the dry reagents for stabilization and dewatering would be stored in silos and conveyed into the mixer or mix tank by screw augers. Finally, cameras and remote sensors would be employed in place of visual observation to minimize worker exposure to radiation. the The added of the system within approximately 36 months.

JWI filter presses typically 100 or 200 cubic feet in capacity. One 100 cubic foot filter presses could produce over 50 cubic yards of dewatered filter cake material per day. Approximately 17,000 gallons (84 cubic yards) of 30 wt % solids slurry I would be dewatered to produce the 100 cubic yards of filter cake. The Maxon Industries Maxcrete mixers have a capacity of 10 cubic yards per batch. At a production rate of eight 8 cubic yard batches per day, the mixer could handle the output of the filter press.

The Process Demonstration testing would also determine the optimal waste loading and bulking factors associated with stabilization of the dewatered 30 wt % solids slurry. This will allow accurate determination of waste loading during full-scale processing of the Silo 1 and 2 residuals. The amount of treated material produced by the full-scale processing could also be projected by the bulking factors calculated from the Process Demonstration testing.

2.0 TREATMENT TECHNOLOGY DESCRIPTION

The objective of the Proof of Principle test program is to demonstrate that dewatering followed by Portland cement-based stabilization is an effective and suitable treatment process for the Silo 1 and 2 residues. The testing is designed to not only demonstrate the chemistry of the treatment process, but to employ test equipment that is representative of critical unit operations that will be used in the full-scale system. The performance of the Proof of Principle Demonstration equipment will be scaleable to the commercial units for these critical operations and data from the test will be applicable to the design of the full-scale system.

There are some operations in the full-scale system which do not need be replicated in the Proof of Principle Demonstration. These are operations such as bulk conveyance of stabilization reagents (Portland cement), automated-remote operation of dewatering equipment and control of radon emissions, that either are widely practiced in industry or are not required due to the use of a non-radioactive, surrogate slurry in the test. Additives transport and metering will be automated to the extent that proves that the process can be operated without direct human interactions.

2.1 DEWATERING

Dewatering, or liquid/solid separation, processes minimize solid waste volume by the separation of free liquid from the waste material. Minimizing the solid waste volume typically results in minimizing the amount of material requiring treatment and/or disposal.

The surrogate residue slurry (approximately 30 wt % solids) will be dewatered in a filter press. Filter press dewatering is the most robust dewatering methodology and has been used to reduce the volume of low level radioactive waste material for off-site disposal. Volume and weight reductions on the order of 50 percent are common for filter press dewatering. The filter press dewatering of the slurry should produce a filter cake material with approximately 50 to 60 percent solids and a filter press effluent.

2.2 STABILIZATION

Stabilization, or chemical fixation, involves converting mobile or leachable waste contaminants into their least mobile, soluble, or toxic form. Stabilization/solidification has been shown to be a robust, cost-effective treatment technology for metals-contaminated waste materials and is considered the Best Demonstrated Available Technology (BDAT) for most of the metal-contaminated wastes.

The filter cake material will be stabilized in a batch mixer. The filter cake, Portland cement, and other stabilization additives if necessary, will be thoroughly mixed in the batch mixer, producing a homogeneous treated material. The stabilized treated material will meet the performance criteria listed in Table 1.1.

2.3 TREATMENT DESCRIPTION

The following sections describe IT's conceptual process for the full-scale system and discuss how the Proof of Principle Demonstration will relate to design of this process.

2.3.1 Dewatering System Feed Tank

For the full-scale system, IT anticipates that the silo residues will be transferred from the interim storage facility to the treatment process as a pumpable slurry, with a solids content of approximately 30 percent. This slurry will be received into an agitated storage tank that will provide surge capacity for feeding the dewatering equipment. This tank (or tanks if multiple units are required) will be functionally equivalent to the slurry mix tanks in the Proof of Principle test system. The storage tank will be designed with a cone or sloped bottom and the agitator will have a large diameter impeller running at 200 to 300 rpm. The agitator impeller will be fabricated out of an abrasion resistant alloy or coated with a rubber compound. If a tank diameter greater than 12 feet is required, multiple agitators will be used. Shielding will be provided around the tank and between the tank and the agitator(s) during full-scale treatment. In the Proof of Principle demonstration, a surrogate slurry will be formulated in mix tanks and held for 48 hours. These tanks are functionally equivalent to the dewatering system feed tanks, are very similar in design and will provide mixing performance information that can be scaled to full-size.

The slurry from the interim storage facility could be stabilized at its "as received" water content, but final waste volume as well as transportation/disposal costs would be very high. Based on past treatability experience with the silo residues and on other similar wastes, it is expected that the optimum solids content for the stabilization system will be 50 to 60 percent. This provides only enough water for adequate hydration of the stabilization reagents and results in minimum final waste volume. In both the full-scale and Proof of Principle Demonstration systems, the 30 percent solids slurry will be dewatered in a filter press.

2.3.2 Batch Pre-treatment

The slurry may be pre-treated with lime or other coagulants to improve filtration performance. If pre-treatment is effective the slurry will be pumped from the dewatering system feed tanks to batch pre-treatment tanks. A batch pre-treatment system will be used because of the difficulty of measuring and controlling the feed rate of 30 percent solids slurry to a continuous pre-treatment reactor. The batch pre-treatment reactor will be a 1000 to 2000 gallon tank mounted on load cells. It will have a variable speed agitator that can be run at higher speeds to flash mix reagents and at slower speeds to maintain solids in suspension while allowing fine particles to coagulate. It will be charged to a set weight of slurry and pre-treatment reagents will be added. Liquid reagents will be added by metering pumps from tanks and powders by weigh belt feeders from hoppers. The reagent doses, order of addition and reaction procedure will be developed during the Proof of Principle laboratory testing. In the Proof of Principle Demonstration, the pre-treatment will be conducted in small-scale batch tanks that will be identical and scaleable to the full-scale system. After pre-treatment the slurry will be fed to the filter press.

2.3.3 Slurry Transfer

Pumping the slurry between the feed tanks, pre-treatment tanks and the filter press will be complicated by the high slurry density (solids content) and presence of significant sand fractions in the slurry. The pumps and piping will be designed for a flow velocity that is high enough to keep the sand particles suspended. The piping and equipment layout will minimize changes in flow velocity and direction and long radius sweeps will be used instead of standard pipe elbows. Flush and vent connections will be provided at critical locations and drains (connected to a sump) will

be installed at appropriate low points. Flush and drain connections will be automated and will be operable from the control room. Most of the valves in the system will be butterfly or slide gates, which minimize disturbance to slurry flow. Manual line-displacement plug valves will be used for sample points and for diversion lines on recirculation loops.

1807

Pumping the slurry between tanks is easier to accomplish in a full-scale system at higher flow rates than at low flow in a test. At lower flow rates required in demonstration-scale test systems the flow velocities required to maintain sand particles in suspension can result in pipe sizes that are too small for high-solids content slurries. For the Proof of Principle Demonstration, one inch diameter, rubber hose will be used for slurry transfer lines. This will not be directly scaleable to the commercial system but will give a qualitative feel for the difficulty of pumping the slurry.

The slurry will be transferred from the dewatering system feed tank to the batch pre-treatment reactors by a centrifugal slurry pump. This pump will run continuously, pumping slurry from the bottom of the feed tank, to the reactors and back to the top of the feed tank. Automated valves will fill the pre-treatment reactors as needed. After pre-treatment the slurry will be fed to the filter press. Selection of this pump depends on the filtration pressure required to produce a 50 to 60 percent solids filter cake. If the slurry dewaters rapidly at low pressure (less than 50 psig) a centrifugal slurry pump, with a recirculation loop, may be used. It is more likely that a positive displacement pump will be required. Diaphragm, piston and progressive cavity pumps will be evaluated during detail engineering. The pressure requirements for dewatering and the density, viscosity and abrasive character of the slurry will all influence pump selection.

For the Proof of Principle Demonstration, an air-driven diaphragm pump will be used for slurry transfer. At the flow rates used in the demonstration tests, there are few low flowrate, slurry pumps. The performance of the diaphragm pump during the Proof of Principle Demonstration will be considered in the selection of the equipment for full-scale operation.

2.3.4 Filter Press

In the full-scale system the slurry will be dewatered on a recessed plate filter press. Two units may be used if the filtration batch cycle can not be matched to the stabilization mixer cycle time. The filter press is expected to easily achieve a 50 to 60 percent solids filter cake. The filter press will be mounted above the batch stabilization mixer and the filter cake will drop directly into the mixer. This eliminates a solids transfer system, which is desirable from cost, maintenance, reliability and ALARA perspectives.

The filter press will be designed for remote operation during each of the phases of the filtration cycle. It will go through the feed cycle, air blow the cake and then automatically open, shift plates and drop the cake. During the filtration or feed cycle there will be a drip basin underneath the press that will be hydraulically shifted so that the cake can drop into the stabilization mixer. The press will be installed in a small room that is designed to contain any drips, leaks or sprays and can be remotely washed-down prior to operator entry. The drip basin and containment room will drain to a sump. The press will be designed so that all maintenance and repair activities can be conducted after the press has been cleared of solids. Filtrate from the press will be collected in a tank and will be discharged to the Fernald AWWTS. If necessary it will be treated to remove radionuclides, metals and fine solids prior to discharge.

000018

A small recessed plate filter press will be used in the Proof of Principle Demonstration. The filtration rate and cake solids data from this small press will be directly scaleable to the full size unit. The transfer of the cake will be manual and not representative but will provide sufficient information to assure incorporation into a full-scale design. This has been agreed upon due to significant cost and safety issues.

1807

2.3.5 Batch Stabilization Mixer

A batch pugmill will be used to mix the dewatered filter cake with the stabilization reagents. This equipment will provide the intense mixing and shear required to disperse the reagents into the cake. The pugmill will be mounted on load cells that will be used to weigh the cake dropped into the mill and to control the addition of stabilization reagents. Dry stabilization reagents (Portland cement, lime, fly ash) will be stored in silos or hoppers and charged into the mixer using screw conveyors. Any liquid reagents (water, plasticizer) will be stored in tanks and pumped into the mixer. The reagent doses, addition order and mix times will be determined during the Proof of Principle laboratory testing and will be adjusted as needed during operation.

After the reagent addition and mixing is complete the batch will be dumped into the final waste container. This is accomplished by hydraulically opening a hatch in the bottom of the mixer and slowly turning the mixer blades. This will move the mix to the hatch where it will drop down a short chute into the waste boxes. Vibrators will be installed on the chute to ensure that the mix drops into the box. If possible the mixer batch size will be matched to the waste box volume. If this is not possible, a video camera will be used to monitor and dumping and filling operation and prevent overfilling the boxes. The mixer hydraulic drive will be equipped with a "bumping" control to facilitate this operation. The waste boxes will be vibrated to maximize fill and final waste density.

After the boxes are filled they will be mechanically conveyed to a cure room, where they will be covered and held for 24 to 48 hours. After cure they will be inspected for liquid bleed and the lids will be installed remotely. The cure room will be designed with high air turnover to minimize build-up of radon gas. After the boxes are sealed they will be held until analysis indicates that they meet treatment criteria and then released into the staging area.

The Maxon Mini-Maxcrete® mixer, used in the Proof of Principle Demonstration, is a smaller version of the mixers that will be used in the full-scale system. The mix times derived from the Proof of Principle Demonstration are scaleable to the larger units. For the Proof of Principle Demonstration, the filter cake will be collected in a hopper and then dumped into the mixer. This adequately simulates the full-scale system operation of dropping the cake down a chute from the filter press into the mixer. The dry reagents will be dropped into the Mini-Maxcrete® from small addition hoppers. Since batch addition of dry reagents to stabilization mixers is a common commercial practice, it was not necessary to completely simulate the reagent materials handling system, only that the reagents can be added to the mixer remotely.

The mix from the Mini-Maxcrete® will be dumped into drums. This operation is similar to what is proposed for the full-scale system. The fluidity required for the mix can be judged from observation of the drum filling operation.

000019

3.0 PROOF OF PRINCIPLE TREATMENT RECIPE DEVELOPMENT

A flow chart for the laboratory-scale formulation development is shown in Figure 1.1. The surrogate slurries (demonstration, Silo1 and Silo 2) used for formulation testing will be made in 10-gallon containers at least two days prior to formulation development testing. Analysis of the chemicals, moisture content, and sieve testing results will be submitted to FDF two weeks before the demonstration slurries are made. Samples of the formulation development slurries will be sent to FDF prior to formulation development testing.

The 30 wt % solids slurries for the three surrogate waste materials will be dewatered using a laboratory-scale filter press. Preliminary dewatering testing will be conducted on small 100 mL portions of the 30 wt % solid slurries to determine the most effective dewatering agent for minimizing the amount of dewatered filter cake material. Based on these preliminary dewatering tests, the remaining portions of the 30 wt % solids slurry material from each of the three surrogate waste materials will be dewatered. The filter cakes, produced by the dewatering of each of the three surrogate slurries, will be used in the stabilization formulation development tests.

The formulations to be tested in the Proof of Principle testing are summarized in Table 3.1.

Table 3.1
Stabilization Formulations for the Proof-of-Process Testing

Dewatered Surrogate Slurry	Formulation Number	Portland Cement	Triple Superphosphate
		Mix Ratio[1]	
Demonstration Surrogate	1	0.10	--
	2	0.10	0.02
	3	0.20	--
	4	0.20	0.02
	5	0.40	--
	6	0.40	0.02
Silo 1 Surrogate	1	0.10	--
	2	0.10	0.02
	3	0.20	--
	4	0.20	0.02
	5	0.40	--
	6	0.40	0.02
Silo 2 Surrogate	1	0.10	--
	2	0.10	0.02
	3	0.20	--
	4	0.20	0.02
	5	0.40	--
	6	0.40	0.02

[1] Mix Ratio =[(weight reagent)/(weight waste)]

The objective of the formulations listed in Table 3.1 is to optimize the waste loading in order to achieve the desired performance criteria while maximizing waste loading in the final treated material.

Each formulation will start with 2.0 kg of dewatered surrogate slurry waste material. The waste material will be transferred into a five quart mixing bowl. Portland cement and other chemical additives will be added to the waste material based on the formulation information listed in Table 3.1. Water will be added as necessary to promote the mixing of the waste and the reagents and to produce a flowable paste or moist, soil-like final treated material. The volume of water used for each formulation will be recorded. The waste, reagents, and water will be blended in a planetary mixer (KitchenAid Model KSMC50S or equivalent) at 30-40 revolutions per minute (rpm) for 60 seconds.

The treated material from each formulation will be transferred to a one 1-quart jar and two 2-inch diameter by 4-inch high rigid plastic right cylinder molds and one graduated cylinder. The quart jar from each formulation will be sent to an FDF-approved laboratory for TCLP testing. The graduated cylinder will be used for free standing liquids testing ((M)ANS 55.1). The remaining two molds will be cured for 14 and 28 days and then subjected to UCS testing (ASTM C39). (See Sections 4 and 7 for additional details on samples to be collected.)

Based on the TCLP and UCS results, additional formulations may be made and tested as needed to develop two treatment formulations for each surrogate wastes: one formulation to meet the present RCRA TC limits and one formulation to meet the proposed RCRA UTS.

The optimum formulations derived from the aforementioned testing will be used to treat additional portions of the dewatered 30 wt % solids slurries of the demonstration, Silo 1, and Silo 2 surrogates. This additional treated material will be placed into the appropriate cylinder and cube molds. The molded samples will be submitted to FDF for durability testing.

4.0 TESTING AND DATA RATIONALE

4.1 OVERVIEW OF RATIONALE FOR SAMPLING POINTS AND SAMPLING FREQUENCY

1807

4.1.1 Surrogate Slurry Preparation

Each batch of 70 wt % solids surrogate slurry will be sampled for moisture, density, plastic limit, pH, TCLP lead, and FDF verification testing. This sampling frequency ensures that each batch of the surrogate slurry meets the moisture, density, plastic limit, and TCLP lead requirements prior to use in Formulation Development or Process Demonstration testing.

4.1.2 Formulation Development Testing

For the Proof of Principle Formulation Development, each formulation will be sampled for TCLP, UCS, and free liquids testing. This sampling frequency will allow the results from each formulation to be compared to the performance criteria for the treated material.

Additional sample material will be produced from the prescribed formulation for each surrogate slurry. These samples will be provided to FDF for durability testing.

4.1.3 Demonstration Testing

For the Proof of Principle Demonstration Testing, the final treated material from each 60 gallon batch will be sampled for appearance, TCLP, UCS, and free liquids testing. This sampling frequency will generate sufficient data to assess the efficacy and reliability of the stabilization process.

4.2 IDENTIFICATION AND RATIONALE FOR ANALYTICAL METHODS

4.2.1 Surrogate Slurry Preparation

Samples of each batch of the 70 wt % solids surrogate slurry will be collected and tested for moisture, density, plastic limit, and TCLP lead. The analytical methodology for these tests, along with the rational for their selection, is listed in Table 4.1.

Table 4.1
Surrogate Preparation Sampling and Analysis Summary
Each Batch (at 30 wt % Moisture)

Analysis	Method	Rationale for Selection	Total Number of Samples
Moisture	ASTM D2216	Standard method for slurries/soils	3-1 per slurry
In-situ Density	EM-1110-2-1906	Standard method for slurries/liquids	3-1 per slurry
pH	SW-846 Method 9045	Standard method for wastes	3-1 per slurry
Plastic Limit	ASTM D4318	Standard methodology	3-1 per slurry
TCLP for Pb	SW-846 Methods 1311 & 6010A	Regulatory-specified methodology	3-1 per slurry

000022

4.2.2 Formulation Development Testing

1807

For the Proof of Principle Formulation Development, each formulation will be subjected to TCLP, UCS, and free liquids testing. Additional samples will be provided to FDF for durability testing. The analytical methodology for these tests, along with the rational for their selection, is listed in Table 4.2.

Table 4.2
Formulation Development Sampling and Analysis Summary

Analysis	Method	Rationale for Selection	Total Number of Samples
TCLP/UTS metals	SW-846 Methods 1311 & 6010A	Regulatory-specified methodology	18-6 per slurry
UCS	ASTM D2166	Standard method for stabilized soils/sludges	18-6 per slurry
Free Liquid	(M)ANS 55.1	Standard method for stabilized rad wastes	18-6 per slurry
FDF Analyses: Leach Immersion SUC Leach Test Wet/Dry Testing	**FDF:** ANSI 16.1 SUC Leach Test ASTM D4843-88	Specified by FDF	6-2 per slurry

4.2.3 Demonstration Testing

For the Proof of Principle Demonstration Testing, each stabilization batch will be sampled for appearance, TCLP, UCS, and free liquids testing. The analytical methodology for these tests, along with the rationale for their selection, is listed in Table 4.3.

Table 4.3
Demonstration Testing Sampling and Analysis Summary

Analysis	Method	Rationale for Selection	Total Number of Samples
Appearance	Visual	Standard for stabilized material	30-1 per batch
TCLP/UTS metals	SW-846 Methods 1311 & 6010A	Regulatory-specified methodology	30-1 per batch
UCS	ASTM D2166	Standard method for stabilized soils/sludges	30-1 per batch
Free Liquid	(M)ANS 55.1	Standard method for stabilized rad wastes	30-1 per batch
FDF Analyses: Leach Immersion SUC Leach Test Wet/Dry Testing	**FDF:** ANSI 16.1 SUC Leach Test ASTM D4843-88	Specified by FDF	3 random batches

000023

5.0 PROCESS DESIGN AND TESTING CONFIGURATION

1807

5.1 DISCUSSION OF DESIGN/CONFIGURATION

5.1.1 DESCRIPTION OF OPERATIONS AND EQUIPMENT

5.1.1.1 Formulation Development Testing

A flowchart for the laboratory-scale formulation is given in Figure 1-1. The formulation development testing will require approximately 80 kg of the 30 wt % solids slurry for each of the three surrogate waste slurries. In accordance with Appendix C of Section C of the contract, the feed slurry for the process demonstration will be made up a minimum of two days prior to starting this phase of the testing. Analysis of the chemicals to be used, along with the moisture and sieve results, will have been submitted to FDF two weeks before the slurries are made. Samples of the slurries will be obtained and shipped to FDF.

These 30 wt % solid slurries will be made up in small plastic tanks and allowed to equilibrate for at least 24 hours. These slurries will be dewatered and the resulting filter cake material will be used as the feed material for the stabilization formulation matrix. The results of the formulation development tests will be used to select the formulation for the demonstration tests.

Prior to production of the filter cake for the formulation matrix tests, preliminary dewatering testing will be conducted on small 100 mL portions of the 30 wt % solid slurries. These dewatering tests will be conducted in a laboratory-scale vacuum filter and will determine the effect of adding polymer, coagulants and/or filter aid on the slurry filtration rate and the moisture content of the dewatered slurry. Based on these preliminary dewatering tests, the remaining portions of the 30 wt % solids slurry material from each of the three surrogate waste materials will be amended as necessary and dewatered using a bench-scale filter press. The filter cakes, produced by the dewatering of each of the three surrogate slurries, will be used in the stabilization formulation development tests.

The formulations to be tested in the Proof of Principle testing are summarized in Table 5.1. The objective of the formulations listed in Table 5.1 is to optimize the waste loading in order to achieve the desired performance criteria while maximizing waste loading in the final treated material.

Each formulation will start with 2.0 kg of dewatered surrogate slurry waste material. The filter cake material will be transferred into a 5 quart mixing bowl. Portland cement and other chemical additives will be added to the waste material based on the formulation information listed in Table 5.1. Water will be added as necessary to promote the mixing of the waste and the reagents and to produce a flowable paste or moist, soil-like final treated material. The volume of water used for each formulation will be recorded. The waste, reagents, and water will be blended in a planetary mixer (KitchenAid Model KSMC50S or equivalent) at 30-40 rpm for 60 seconds. The treated material from each formulation will be transferred to a one 1-quart jar, two 2-inch diameter by 4-inch high rigid plastic right cylinder molds, and one graduated cylinder. The quart jar from each

000024

formulation will be sent to an FDF-approved laboratory for TCLP testing. The graduated cylinder will be used for free standing liquids testing ((M)ANS 55.1). The remaining two molds will be cured for 14 and 28 days and then subjected to UCS testing (ASTM C39).

1807

Table 5.1
Stabilization Formulations for the Proof-of-Process Testing

Dewatered Surrogate Slurry	Formulation Number	Portland Cement	Triple Superphosphate
		Mix Ratio[1]	
Demonstration Surrogate	1	0.10	--
	2	0.10	0.02
	3	0.20	--
	4	0.20	0.02
	5	0.40	--
	6	0.40	0.02
Silo 1 Surrogate	1	0.10	--
	2	0.10	0.02
	3	0.20	--
	4	0.20	0.02
	5	0.40	--
	6	0.40	0.02
Silo 2 Surrogate	1	0.10	--
	2	0.10	0.02
	3	0.20	--
	4	0.20	0.02
	5	0.40	--
	6	0.40	0.02

[1] Mix Ratio =[(weight reagent)/(weight waste)]

If the TCLP and UCS results do not meet the performance requirements, additional formulations may be made and tested as needed to develop two treatment formulations for each surrogate wastes: one formulation to meet the present RCRA TC limits and one formulation to meet the proposed RCRA UTS.

These formulations will be used to treat additional portions of the dewatered 30 wt % solids slurries of the demonstration, Silo 1, and Silo 2 wastes. This additional treated material will be placed into the appropriate cylinder and cube molds. The molded samples will be submitted to FDF for durability testing.

5.1.1.2 Demonstration Testing

The Demonstration Testing will be conducted at IT's Environmental Technology Development Center (Figure 5-1). A process flow diagram for the Demonstration Testing is given in Figure 5-2. In accordance with Appendix C of Section C of the Contract, the feed slurry for the process demonstration will be made up a minimum of two days prior to starting this phase of the testing.

Figure 5-1
IT's Environmental Technology Development Center

1807

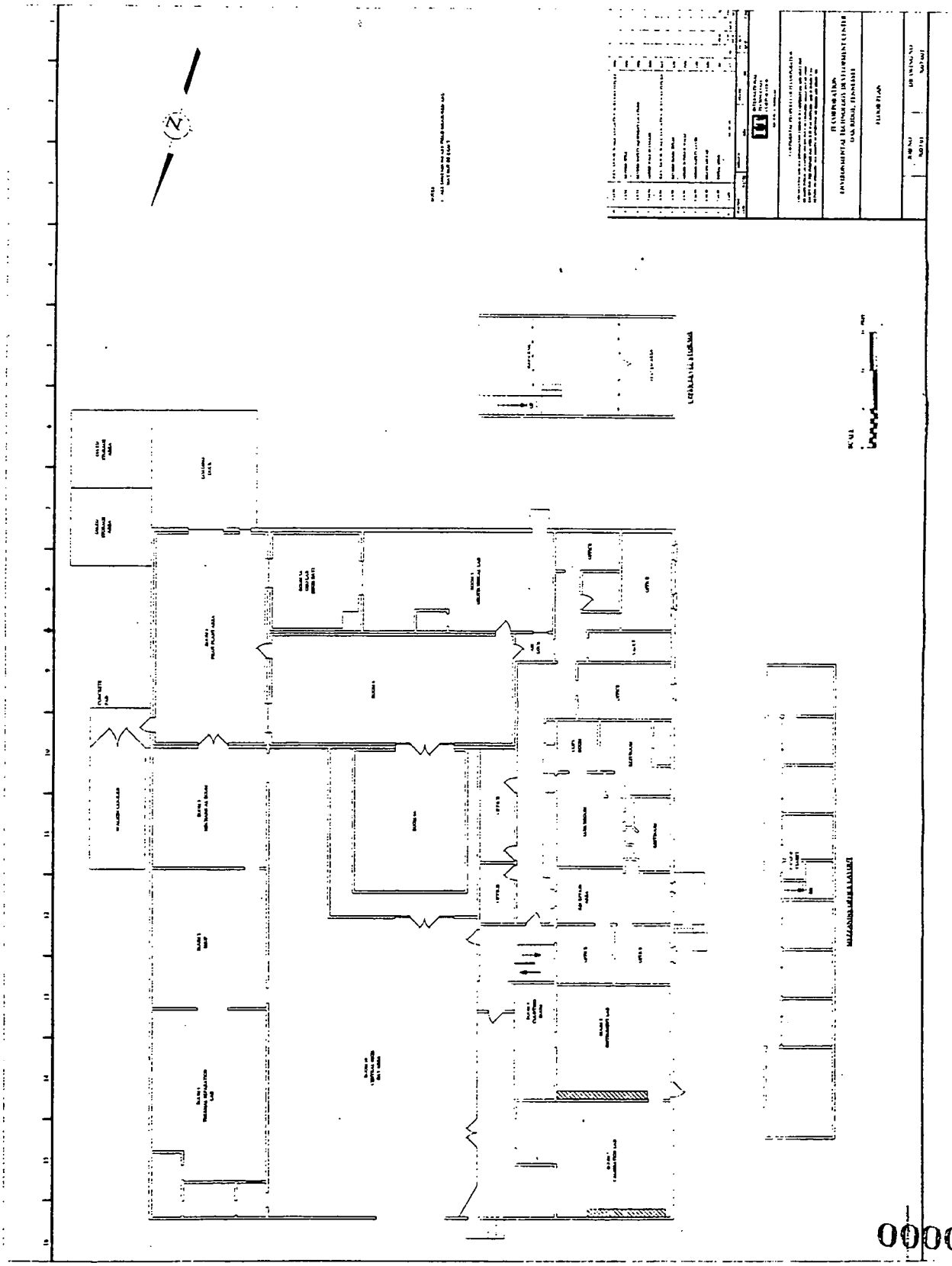

000026

1807

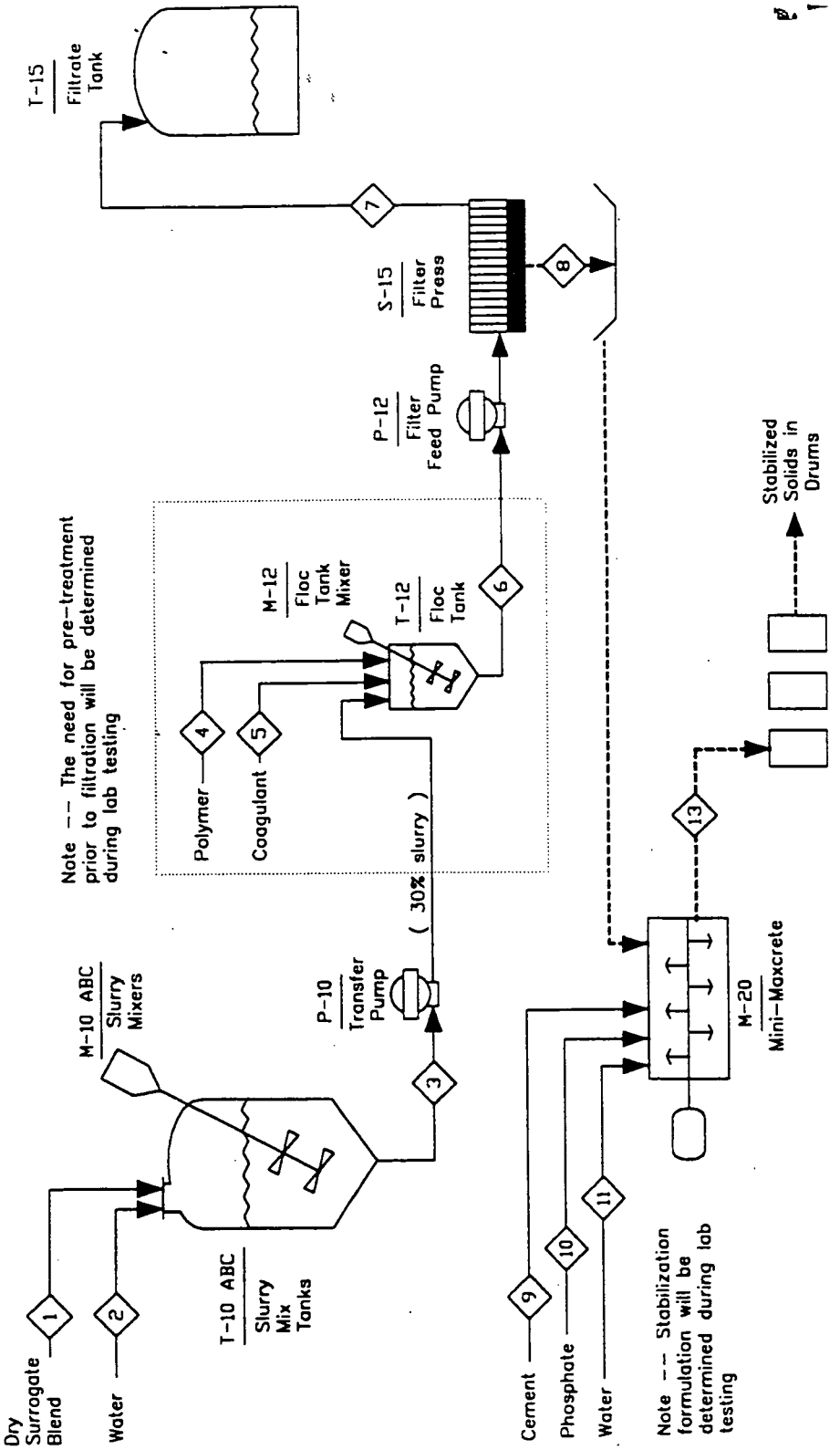

Figure 5-2
Process Flow Diagram
Demonstration Testing

000027

Analysis of the chemicals to be used, along with the moisture and sieve results, will have been submitted to FDF two weeks before the demonstration slurries are made. Samples of the demonstration slurry will be obtained and shipped to FDF. Three 700 gallon batches of the demonstration slurry will be made in separate 1,000 gallon polypropylene tanks. A mixer will be provided for each tank. Each 700 gallon batch will suffice for one days production during the process demonstration. The slurry will be dewatered to produce a filter cake that will be stabilized in the batch mixer.

Prior to dewatering, the slurries will be amended by the addition of polymer, coagulant, or filter aid, in accordance with the Proof of Principle dewatering tests. The slurry will be pumped from the slurry tank into a batch tank, amended with dewatering agent, and pumped into a five cubic foot JWI recessed chamber filter press. The filtrate will drain from the press and be collected in a small collection tank. When the press is full, it will be opened and the filter cake will drop into a bin.

A Mini-Maxcrete mixer will be used to mix the dewatered filter cake and the stabilization reagents. The Mini-Maxcrete mixer will be charged with 300 to 350 pounds of the filter cake material. Based on the weight of the filter cake produced from the dewatering of the slurry material the required amount of Portland cement and other reagents, using the formulation developed for the demonstration slurry, will be weighed out and added to gated feed hoppers located on top of the mixer. The Mini-Maxcrete mixer is equipped with a single mixing shaft with twenty-four attached paddles. Mixing time will be determined by visual observation of the stabilized/solidified product during the mixing to assess homogeneity of the product. After a visually homogeneous stabilized/solidified product is produced, the treated material will be allowed to exit the mixer and will be collected in a lined polyethylene 85 gallon polypropylene drum.

Grab samples (three 1-quart jars) of the stabilized/solidified product from each treatment batch will be obtained for appearance (visual homogeneity and monolithic nature), TCLP, UCS, free standing liquid ((M)ANS 55.1) testing, and sample archive from the 85 gallon drum immediately after it is discharged from the mixer. Additionally, 20 kg of treated material from three random batches will be placed into the appropriate cylinder and cube molds and submitted to FDF for durability testing.

5.1.2 PRE-TREATMENT REQUIRMENTS

The surrogate slurries used for Formulation Development and Demonstration testing will be made at least two days prior to use in testing. Chemical analysis, moisture content, and sieve testing results for the reagents used to develop the surrogate slurries will be submitted to FDF two weeks before the slurries are made.

Each batch of 70 wt % solids surrogate slurry will be sampled for moisture, density, plastic limit, TCLP lead, and FDF verification testing. This sampling frequency ensures that each batch of the surrogate slurry meets the moisture, density, plastic limit, and TCLP lead requirements prior to use in formulation development or process demonstration testing.

5.1.3 TESTING METHODOLOGY

1807

The testing methodology for the surrogate preparation, formulation development testing and demonstration testing operations are listed in Table 5.2.

Table 5.2
Testing Methodology

Surrogate Preparation	
Analysis	**Method**
Moisture	ASTM D2216
In-situ Density	EM-1110-2-1906
Plastic Limit	ASTM D4318
pH	SW-846 Method 9045
TCLP for Pb	SW-846 Methods 1311 & 6010A
Formulation Development	
Analysis	**Method**
TCLP/UTS metals	SW-846 Methods 1311 & 6010A
UCS	ASTM D2166
Free Liquid	(M)ANS 55.1
FDF Analyses: Leach Immersion SUC Leach Test Wet/Dry Testing	**FDF:** ANSI 16.1 SUC Leach Test ASTM D4843-88
Demonstration Testing	
Analysis	**Method**
Appearance	Visual
TCLP/UTS metals	SW-846 Methods 1311 & 6010A
UCS	ASTM D2166
Free Liquid	(M)ANS 55.1
FDF Analyses: Leach Immersion SUC Leach Test Wet/Dry Testing	**FDF:** ANSI 16.1 SUC Leach Test ASTM D4843-88

5.1.4 SECONDARY TESTING REQUIREMENTS

The filtrate from the dewatering of the 30 wt % solids slurries will be assessed for further treatment prior to discharge. The analysis required for this assessment is given in Table 5.3

000029

1807

Table 5.3
Formulation Development Dewatering Sampling and Analysis Summary

Sample	Frequency	Analysis	Method
Filter Cake	Each batch	Percent moisture	ASTM D2216
		Bulk density	ASTM D5057
Filtrate	One batch per surrogate type	Total dissolved solids (TDS)	Std. Methods (16th) 209B
		Total suspended solids (TSS)	Std. Methods (16th) 209C

5.2 TEST PROCEDURES

5.2.1 SURROGATE SLURRY PREPARATION

5.2.1.1 Formulation Development

The surrogate slurry preparation for the Formulation Development will be conducted in a laboratory fume hood. The dry chemical reagents will be weighed out and placed in a suitably sized container. When all powdered chemicals, other than the organic reagents, have been added to the container, the chemicals will be well blended and all lumps will be broken. The organic reagents will be added while blending is continued, allowing the organic chemical to completely mix with the dry chemicals and become adsorbed by them.

Sufficient water, amounting to 30 percent of the total weight of the surrogate slurry material, will be added and blended thoroughly with the other reagents. Samples for surrogate slurry validation testing and analysis should be obtained from the final blended 70 wt % solids surrogate slurry. The weight of the samples removed should be recorded.

An amount of bentonite equal to 8.7 percent of the solids remaining in the 70 wt % solids slurry after sampling will be weighed out. An amount of water, calculated to increase the amount of water in the final surrogate slurry to 70 percent of the total slurry weight, will also be weighed out. The bentonite will then be mixed into the additional water and the hydrated bentonite/water mixture blended into the remaining 70 wt % solids surrogate slurry. The resulting 30 wt % solids surrogate slurry will then be thoroughly mixed for a minimum of 24 hours prior to formulation development testing.

5.2.1.2 Demonstration Testing

The calculated amount of water will be added into a high speed, high shear mixing tank. While stirring, the calculated amount of bentonite will be added and blended for 24 hours to allow thorough blending and hydration. In a separate container, the organic reagents will be added and blended into the fine silica in a fume hood. The dry chemicals will be weighed out, in a fume hood, and added to the bentonite/water mixture under sufficient agitation to keep all chemicals suspended. The organic reagent/fine silica mix will be added and the surrogate slurry material blended for a minimum of 24 hours.

000030

1807

5.2.2 FORMULATION DEVELOPMENT TEST PROCEDURES

5.2.2.1 Slurry Dewatering

Approximately 10 gallons of 30 wt % solids slurry will be amended with the recommended dosage of the dewatering agent and mixed for 10 minutes under low shear mixing. The slurry, amended with the dewatering agent, will be pumped, in 2 gallon batches, into a bench-scale filter press using a one-half inch diaphragm pump. The press has 12-inch polypropylene plates, polyester filter clothes, and a capacity of six liters of filter cake per batch. The air supply used to operate the diaphragm pump will be set to a maximum air pressure of 100 pounds per square inch (psi). When effluent flow from the filter press ceases, the press will be depressurized and the filter cake removed. The filter cakes, produced by each of the surrogate slurries, will be used in the formulation development tests.

5.2.2.2 Formulation Development

Each formulation will start with 2.0 kg of dewatered surrogate slurry waste material. The waste material will be transferred into a five quart mixing bowl. Portland cement and other chemical additives will be added to the filter cake material based on the formulation information listed in Table 5.1. Water will be added as necessary to promote the mixing of the waste and the reagents and to produce a flowable paste or moist, soil-like final treated material. The volume of water used for each formulation will be recorded. The waste, reagents, and water will be blended in a planetary mixer (KitchenAid Model KSMC50S or equivalent) at 30-40 rpm for 60 seconds.

5.2.3 DEMONSTRATION TEST PROCEDURES

5.2.3.1 Slurry Dewatering

Prior to dewatering, the 30 wt % solids surrogate slurry in the day tanks will be pumped into a batch tank, in 60 gallon batches, using an air-driven diaphragm pump. Polymer, coagulant, and/or filter aid will be added in accordance with the dewatering tests run as part of the formulation development testing. Any dry additives will be added manually to a gated feed hopper located on top of the tank. Polymer will be dispersed into a 0.1 percent solution and pumped into the batch tank using a peristaltic pump. The amended slurry will be mixed for 15 minutes under low shear mixing and pumped from the batch tank into the pilot-scale filter press using an air-driven diaphragm pump.

The five cubic foot JWI recessed chamber filter press will be fed from the batch tank until the filtrate flow stops or the feed pump stalls out, which indicates that the press chambers are full. The drive air to the diaphragm pump, and therefore the filter press feed pressure, will be set at 100 psi. The filtrate will drain from the press into a small collection tank. The filter press feed line will be air blown to remove filtrate hold-up. After the press is depressurized, the hydraulic system will then be used to open the press, the plates will be separated, and the filter cake will fall out into a collection bin.

000031

5.2.3.2 Stabilization

The filter cake from the dewatering of the demonstration surrogate slurry will be collected in a product bin and weighed. A forklift will be used to dump the filter cake into the Mini-Maxcrete mixer. Based on the weight of the filter cake (approximately 300-350 pounds), the required amount of Portland cement and other reagents, based on the formulation developed for the demonstration slurry, will be weighed out and added to the gated feed hoppers located above the mixer.

The Mini-Maxcrete mixer will be started and allowed to mix the filter cake and the reagents. After 10 minutes, the mixer will be turned off and visual observation of the stabilized/solidified product will be made to assess homogeneity of the product and to determine if an additional 10 minutes of mixing is required. After a visually homogeneous stabilized/solidified product is produced, the mixer will be hydraulically tilted and the treated material will be allowed to exit the mixer. The treated material exiting the mixer will be collected in a polyethylene lined 85-gallon polypropylene drum.

5.3 PROCESS CONTROL PROCEDURES

5.3.1 CONTROL LIMITS

5.3.1.1 Surrogate Slurry Preparation

All reagents used in the preparation of the surrogate slurries will be at least 95 percent pure. The tolerance of the surrogate recipes is ± 1 wt % relative for those chemicals consisting of more than 0.5 wt % of the recipe and ± 10 wt % relative for those chemicals consisting of less than 0.5 wt % of the recipe.

5.3.1.2 Formulation Development and Demonstration Testing

All dewatering or stabilization reagents will be of known commercial quality. The tolerances of the dewatering and stabilization reagents is ± 1 wt % relative of their desired usage.

5.3.2 OPERATING PARAMETERS

5.3.2.1 Surrogate Slurry

Samples of each batch of the 70 wt % solids surrogate slurry will be collected and tested for moisture, density, plastic limit, and TCLP lead. The operational parameters for the surrogate slurries are listed in Table 5.4. The prescribed method for adjustments to the surrogate slurry recipe to within the operating parameters is also given in Table 5.4.

1807

Table 5.4
Surrogate Preparation Parameters (at 70 wt % Solids)

Analysis	Parameter Range	Adjustment Method
Moisture	30±2 wt % of total weight	Add water or air-dry
In-situ Density	1.78±0.1 g/cm^3 for demonstration surrogate 1.57±0.1 g/cm^3 for Silo 1 surrogate 1.78±0.1 g/cm^3 for Silo 2 surrogate	Check particle size and quality of reagents. Contact FDF
Plastic Limit	45 to 55 wt % (dry weight basis)	Increase amount of fume silica and decrease the amount of silica
pH	9.0 to 10.0 s.u.	Contact FDF for additional information
TCLP for Pb	650 to 850 ppm Lead at a pH 9	Contact FDF for additional information

5.3.2.2 Formulation Development

The applied pressure during dewatering of the 30 wt % solids slurry will not exceed 100 psi .

The planetary mixer (KitchenAid Model KSMC50S or equivalent) used to mix the dewatered slurry and stabilization reagents will be operated at 30-40 rpm for 60 seconds.

5.3.2.3 Demonstration Testing

The applied pressure during dewatering of the 30 wt % solids slurry will not exceed 100 psi .

The mixing time and effort for the mini-Maxcrete mixer will be adjusted based on visual observation of the homogeniety of the treated material.

5.3.3 MONITORING FREQUENCY

5.3.3.1 Surrogate Slurry Preparation

Each batch of surrogate slurry will be tested for the parameters listed in Table 5.4.

5.3.3.2 Formulation Development

For each batch of surrogate slurry dewatered, the applied pressure will be monitored and recorded.

For each formulation, the mixing speed and time will be monitored and recorded.

5.3.3.3 Demonstration Testing

For each batch of surrogate slurry dewatered, the applied pressure will be monitored and recorded.

000033

For each batch of filter cake stabilized, the mixing speed and time will be monitored and recorded.

1807

5.4 TEST LOGS

5.4.1 FORMULATION DEVELOPMENT LOG

A laboratory logbook will be assigned for recording data, notes, and observations during the formulation development testing. Each logbook page will be sequentially numbered.

5.4.2 DEMONSTRATION TESTING LOG

A logbook will be assigned for recording data, notes, and observations during the Demonstration testing. Each logbook page will be sequentially numbered.

5.5 VIDEO TAPES

The entire 72 hours of the Demonstration testing will be videotaped to create a visual record. The video camera will record the date and time to verify the 72-hour time span. Since multiple video tapes will be utilized, each video tape used will be sequentially numbered and labeled with the date, time start and time end.

000034

6.0 EQUIPMENT AND MATERIAL

6.1 EQUIPMENT

1807

6.1.1 FORMULATION DEVELOPMENT

The equipment for the formulation development testing will be a bench-scale recessed chamber filter press, a planetary mixer (KithchenAid Model KSMC50S or equivalent), and molds, forms and containers for the treated material.

6.1.2 DEMONSTRATION TESTING

The equipment utilized for the Demonstration testing will include

- three 1000 gallon day tanks,
- three agitators for the day tanks,
- a two-inch diaphragm pump,
- a one-inch diaphragm pump
- a five cubic foot JWI filter press,
- a filter cake collection bin and
- a Mini-Maxcrete mixer.

The 1000 gallon day tanks are flat-bottomed, open-top polyethylene tanks that are used to store the 3 batches of surrogate slurry for the demonstration tests. They have bottom valves and are stirred by one horsepower agitators mounted on brackets above the tank. A two-inch air driven diaphragm pump is used to transfer slurry between tanks. The one-inch air driven diaphragm pump feeds the slurry to the filter press.

The filter press is a five cubic foot capacity recessed plate press. The plates are polypropylene and the filter cloths are polyester. The plate has a manual hydraulic closure mechanism driven by a Vickers hydraulic drive pump. The filter cake collection bin is a carbon steel box that sits under the press. It has a hinged frame and fork channels that facilitate dumping the cake into the Mini-Maxcrete mixer. The Mini-Maxcrete is a 31-inch diameter by six-foot paddle mixer that has working capacity for a 20 cubic foot batch of stabilized solids. The paddle mixer is driven by a hydraulic unit. The mixer is dumped by using hydraulic cylinders to tilt it on its longitudinal axis and open the end plate.

6.2 MATERIALS

6.2.1 SURROGATE SLURRY REAGENTS

The reagent required for the preparation of the surrogate and Silo 1 and 2 slurry materials are listed in Table 6.1. These reagents will be at least 95 percent pure. Chemical analysis, moisture content, and sieve testing results for these reagents will be forwarded to FDF two weeks prior to preparing the slurries.

Tap water will be used for the preparation of the surrogate slurries.

000035

6.2.2 DEWATERING AGENTS

- 1807

The dewatering agents used for the dewatering of the 30 wt % solids slurries will include alum, ferric chloride, hydrated lime, and diatomaceous earth. These dewatering agents will be of known commercial quality.

6.2.3 STABILIZATION REAGENTS

Portland cement and triple superphosphate will be used as stabilization reagents. These reagents will be of known commercial quality.

Table 6.1
Reagents Required for Surrogate Slurry Preparation

Reagent	Demonstration Surrogate	Silo 1 Surrogate	Silo 2 Surrogate
Al_2O_3			X
Na_2HAsO_4	X		X
$BaSO_4$	X	X	X
$CaCO_3$			X
Na_2CrO_4	X	X	X
Fe_2O_3	X	X	X
$K_2(CO_3)_2$		X	
KNO_3			X
MgO		X	
$MgCO_3$		X	X
$Mg_3(PO_4)_2$	X	X	X
Na_2CO_3		X	
$NaNO_3$	X	X	X
NiO	X	X	X
PbO	X		
$PbCO_3$	X	X	X
$PbSO_4$	X	X	X
Na_2SeO_3	X	X	X
Coarse SiO_2	X	X	X
Fine SiO_2	X	X	X
Fume Silica	X	X	X
V_2O_5	X	X	X
ZnO	X	X	X
Tributyl Phosphate	X		X
Kerosene	X		X
Diatomaceous Earth	X	X	X
(NaK) ($AlSi_3O_8$)	X	X	X

000036

7.0 SAMPLING, DATA COLLECTION AND ANALYSIS PLAN

1807

The Proof of Principle data needs include:

- treatment recipes for the three surrogate formulas,
- waste loading/bulking factors,
- technology-specific treatment/processing parameters,
- treatment mass and energy balance,
- treatment product characteristics,
- secondary waste composition and volumes, and
- give assurance that the K-65 residues can be safely, routinely, and effectively handled and controlled in a full-scale process to make the desired treated product with limited exposure to the workers and environment.

The formulation development phase of the Proof of Principle testing will provide the treatment recipes for the three surrogate formulas, the waste loading/bulking factors, and the characteristics of the treated product. The process demonstration will confirm the waste loading/bulking factors and the characteristics of the treated product and will also confirm the technology-specific treatment parameters, the treatment mass and energy balance, and the secondary waste composition and volumes.

Sampling points and data collection needs are established around unit operations to support material balance calculations and characterization requirements as outlined in Appendix F of the contract. Two unit operations; dewatering of surrogate slurry and stabilization of the dewatered surrogate, will be performed in both the formulation development testing and the process demonstration phases of the project. In addition to sampling and analysis requirements for process operations, sampling and analysis of each batch of prepared surrogate is required to verify that requirements are met prior to surrogate use.

7.1 SAMPLING POINTS AND DATA REQUIRMENTS

7.1.1 SURROGATE REAGENTS

The specification for the surrogate reagents is listed in Table 7.1. IT will purchase chemicals that are at least 95 percent pure. Surrogate reagents will preferably have composition and sieve analysis results provided by the supplier. If moisture and sieve information is not provided by the supplier, IT will perform percent moisture by ASTM D2216 and sieve analysis by ASTM D422 on the reagent. This information will be provided to FDF one week prior to use of a reagent.

000037

1807

Table 7.1
Surrogate Compound Specifications

Item	Requirement
Purity of Chemicals	If purchased as "technical grade" or "in bulk," shall be at least 95% pure.
Particle Size of Silica Coarse Silica Fine Silica Fume Silica (surface area)	 60 to 80 mesh - approximately 250 to 175 micron < 200 mesh or < 75 microns 200 to 250 m^2/gram
Particle Size of non-water soluble chemicals	Shall be < 100 micron
Particle Size of soluble chemicals	Is unrestricted
Assays of the bulk material	Any impurities greater than 1% shall be identified.

7.1.2 SURROGATE COMPOSITION

Samples of each batch of surrogate prepared will be collected and tested for moisture, density, plasticity, and TCLP Pb to confirm that the surrogate mix approximates the behavior of the actual silo residues. The analytical methodology for these tests are listed in Table 7.2.

Table 7.2
Surrogate Preparation Sampling and Analysis Summary - Each Batch
(at 70 wt% solids)

Analysis	Method	Requirement
Moisture	ASTM D2216	30 ± 2 wt% requirement
Insitu Density	EM-1110-2-1906	1.75 ± 0.1 g/cm^3 requirement for demonstration surrogate 1.57± 0.1 g/cm^3 requirement for Silo 1 surrogate 1.73± g/cm^3 requirement for Silo 2 surrogate
pH	SW-846 Method 9045	9.0 to 10.0 s.u. requirement
Plasticity	ASTM D4318	Plastic limit of 45-50 wt% moisture (dry weight basis) requirement
TCLP for Pb	SW-846 Methods 1311 & 6010A	650 to 850 ppm Pb leached
1 kg sample submitted to FDF for verification analyses (optional FDF collection or witness of sample collection)		

000038

7.1.3 SURROGATE SLURRY DEWATERING FOR FORMULATION DEVELOPMENT

Surrogate slurries will undergo dewatering by filtration to minimize waste volume for stabilization. Dewatering tests will be performed to investigate additives and filtering conditions which will provide the optimum filter cake for minimization of stabilized waste. For the dewatering tests, volume of water obtained per weight or volume of surrogate slurry treated and rate of water separation will be used to assess performance of methods. The optimum dewatering method will be used to generate filter cake for formulation development tests for each surrogate. Weights of surrogate slurries, additives, surrogate filter cakes and water removed during filtration will be recorded for each batch of slurry that is dewatered for use in formulation testing. Samples will be collected to obtain additional data as shown in Table 7.3.

Water samples collected for metals analysis will be preserved by acidification to a pH of less than two by addition of nitric acid.

Table 7.3

Formulation Development Dewatering Sampling and Analysis Summary

Sample	Frequency	Analysis	Method
Filter Cake	Each batch	Percent moisture	ASTM D2216
		Bulk density	ASTM D5057
Filtrate	One batch per surrogate type	Total dissolved solids (TDS)	Std. Methods (16th) 209B
		Total suspended solids (TSS)	Std. Methods (16th) 209C

7.1.4 FORMULATION DEVELOPMENT TESTING

Formulation development samples will be prepared using the dewatered surrogate filter cakes in accordance with the testing plan and will have tests performed on them as summarized in Table 7.4. Data, which will be collected and recorded for each formulation, will include:

- Weights of surrogate filter cake,
- Weights of all additives,
- Temperature rise after formulation mixing, and
- Bulk Density.

Temperature rise measurements will be made on each formulation immediately after treatment. Temperature rise will be measured by recording the air temperature with a thermocouple and then placing the thermocouple at least 3 inches into the stabilized material and recording the temperature after 5 minutes.

000039

Table 7.4
Formulation Development Sampling and Analysis Summary

Formulation Sample	Frequency	Analysis	Method	Rationale
1 Quart Jar	Each formulation	TCLP - UTS reg. metals	SW-846 Methods 1311 & 6010A	Determine RCRA characteristics
2" dia. x 4" mold - 7 day cure	Each formulation	UCS	ASTM C39	Compressive strength ≥ 50 psi requirement. Bulking factor determination.
2" dia. x 4" mold - 14 day cure	Each formulation	UCS	ASTM C39	Compressive strength ≥ 50 psi requirement. Bulking factor determination.
Graduated Cylinder	Each formulation	Free Liquid	(M)ANS 55.1	"No liquids" requirement
60 forms: 6/2x4 cyl 6/1x1 cyl. 12/2x2 cube 36/2x4 cyl	For each surrogate optimum TC and UTS formulation (6 total)	FDF Analyses: Leach Immersion SUC Leach Test Archive	FDF: ANSI 16.1 SUC Leach	Durability testing and Archive

7.1.5 SURROGATE SLURRY DEWATERING FOR PROCESS DEMONSTRATION

The demonstration surrogate slurry will undergo dewatering using a filter press to minimize waste volume for stabilization. Dewatering of the slurry will be performed in batches. The optimum dewatering method from formulation development testing will be used to generate filter cake for use in the process demonstration. Weights of surrogate slurries, additives, surrogate filter cakes and water removed during filtration will be recorded for each batch of slurry that is dewatered. Volumes of surrogate slurry for each batch and water produced will also be recorded. These measurements will provide data for process mass balance calculations. The cycle times for the dewatering of each batch of slurry will also be recorded to provide data on dewatering process rates. Samples will be collected to obtain additional data as shown in Table 7.5. Results of these tests will characterize surrogate material which will undergo stabilization and secondary waste (water) produced in the process.

000040

Water samples collected for metals analysis will be preserved by acidification to a pH of less than two by addition of nitric acid.

Table 7.5
Process Demonstration Dewatering Sampling and Analysis Summary

Sample	Frequency	Analysis	Method
Filter Cake	Each batch	Percent moisture	ASTM D2216
		Bulk density	ASTM D5057
Filtrate	Composite of a minimum of 5 batches	Total dissolved solids (TDS)	Std. Methods (16th) 209B
		Total suspended solids (TSS)	Std. Methods (16th) 209C
		Total UTS reg. metals	SW-846 6010A
		Nitrate	EPA 300.0
		pH	ASTM D4972

7.1.6 PROCESS DEMONSTRATION

Process demonstration samples will be taken from stabilized material prepared using the dewatered demonstration surrogate and the optimum formulation developed during formulation testing. Each batch of surrogate treated will have the following data collected and recorded on batch processing sheets:

- Weights of surrogate slurry
- Weights of all additives
- Temperature rise
- Processing time
- Weight of treated material
- Height of treated material in the 85 gallon drum

Temperature rise measurements will be made on each batch of the stabilized material immediately, 1 hour, 4 hours 8 hours and 24 hours after treatment. Temperature rise will be measured by recording the air temperature with a thermocouple and then placing the thermocouple at least 6 inches into the stabilized material and recording the temperature after 5 minutes.

Processing time for the stabilization of the dewatered demonstration surrogate will be determine by recording the start and end time for the stabilization process.

Samples of stabilized surrogate will also be collected and have tests performed on them as summarized in Table 7.6.

Table 7.6
Process Demonstration Sampling and Analysis Summary

Treated Surrogate Sample	Frequency	Analysis	Method	Rationale
1 Quart Jar	Each batch (30 total)	Appearance	Visual	Visual homogeneity and monolithic nature
1 Quart Jar	Each batch (30 total)	TCLP - UTS reg. metals	SW-846 Methods 1311 & 6010A	Determine RCRA characteristics
2" dia. x 4" mold - 7 day cure	Each batch (30 total)	UCS	ASTM C39	Compressive strength ≥ 50 psi requirement. Bulking factor determination.
2" dia. x 4" mold - 14 day cure	Each batch (30 total)	UCS	ASTM C39	Compressive strength ≥ 50 psi requirement. Bulking factor determination.
Graduated Cylinder	Each batch (30 total)	Free Liquid	(M)ANS 55.1	"No liquids" requirement
60 forms: 6/2x4 cyl 6/1x1 cyl. 12/2x2 cube 36/2x4 cyl + 31-liter samples	Three (3) batches at random	FDF Analyses: Leach Immersion SUC Leach Test Archive	FDF: ANSI 16.1 SUC Leach Test	Durability testing and Archive

7.2 SAMPLING LOGS

During formulation development, project specific laboratory notebooks will be used to record testing details and observations. This documentation will be augmented by the use of formulation preparation data forms. These forms will be used to collect weights of surrogate and additives used to prepare the formulation along with temperature rise and pocket penetrometer readings.

A sampling log will be established in the project specific laboratory notebook to record information on every sample prepared for testing during formulation development. The information recorded in the log will include the following:

000042

- Unique identifying sample number
- Date collected
- Name of person collecting the sample
- Description of sample
- Reason for sample

Project specific laboratory notebooks will be established for use as sample logs during process demonstration. Information about each sample collected for testing will be recorded in the sample logs. Information to be recorded will be the same as that specified above for formulation development.

7.3 SAMPLE CHAIN OF CUSTODY

A strict chain of custody record shall be maintained for all samples generated and submitted for analysis. The IT facilities where the Proof of Principle testing will be conducted are controlled-access facilities, with multiple secured sample storage areas.

Sample transfers external to the IT treatability facility will be accompanied by an IT combined Analysis Request and Chain of Custody Record (see Figure 7.1). Samples transferred to TDL's Analytical Department or ETDC's Geotechnical Laboratory will also be accompanied by an Analysis Request and Chain of Custody Record. Instructions for completing the form are on the back of the form.

Copies of all Analysis Request and Chain of Custody Records will be maintained in the project file.

7.4 ANALYTICAL LABORATORY LOGS

Analytical laboratory logs used for the analysis or testing of samples will be maintained by the laboratories performing the tests according to standard operating procedures (SOPs).

7.5 ANALYTICAL LABORATORY PROCEDURES

Analytical laboratory procedures will be as specified in the sampling and analysis tables (Tables 7.3 through 7.6).

1807

Figure 7.1
Copy of IT's Analysis Request and Chain of Custody Record

INTERNATIONAL TECHNOLOGY CORPORATION

ANALYSIS REQUEST AND CHAIN OF CUSTODY RECORD*

Reference Document No. 426811
Page 1 of ___

White: To accompany samples Yellow: Field copy *See back of form for special instructions.

Project Name/No. 1
Sample Team Members 2
Profit Center No. 3
Project Manager 4
Purchase Order No. 6
Required Report Date 11

Samples Shipment Date 7
Lab Destination 8
Lab Contact 9
Project Contact/Phone 12
Carrier/Waybill No. 13

Bill to: 5
Report to: 10

ONE CONTAINER PER LINE

Sample Number 14	Sample Description/Type 15	Date/Time Collected 16	Container Type 17	Sample Volume 18	Pre-servative 19	Requested Testing Program 20	Condition on Receipt 21	Disposal Record No. 22

Special Instructions: 23

Possible Hazard Identification: 24
Non-hazard ☐ Flammable ☐ Skin Irritant ☐ Poison B ☐ Unknown ☐

Sample Disposal: 25
Return to Client ☐ Disposal by Lab ☐ Archive ____ (mos.)

Turnaround Time Required: 26
Normal ☐ Rush ☐

QC Level: 27
I. ☐ II. ☐ III. ☐ Project Specific (specify): ____

1. Relinquished by 28 (Signature/Affiliation)	Date: Time:	1. Received by 28 (Signature/Affiliation)	Date: Time:
2. Relinquished by (Signature/Affiliation)	Date: Time:	2. Received by (Signature/Affiliation)	Date: Time:
3. Relinquished by (Signature/Affiliation)	Date: Time:	3. Received by (Signature/Affiliation)	Date: Time:

Comments: 29

MCA 31591

000044

8.0 DATA MANAGEMENT

Data management for the Proof of Principle testing will include control of data, review of analytical and testing results, and manual compilation, organization and entry of data into Excel spreadsheets for presentation and analysis.

8.1 CONTROL OF DATA

Sampling logs and laboratory notebooks will be controlled as per the laboratory SOP's TDL1503, "Analytical Logbook Recording Procedures," and TDL1504, "Laboratory Notebook Recording Procedures."

All data collected, including supplier/manufacturer information, data collection forms/sheets and laboratory analytical reports, will be sent to the project file. The project manager will have control of the project file.

8.2 DATA REVIEW AND VERIFICATION

Data obtained from sampling logs, laboratory notebooks, data collection forms/sheets and testing laboratories will be reviewed for correctness and reasonableness prior to use. Data from commercial laboratories will also be reviewed with respect to laboratory internal Quality Control (QC) results to assess quality of data to assure data quality objectives are met and determine any data qualification needs.

One hundred percent (100%) of data transcriptions will be checked.

All calculations performed by software will be verified independently.

8.3 DATA REPORTING

Data collected for each batch of surrogate prepared will be grouped and tabulated for summary presentation and examination.

Data for dewatering testing during formulation development will be organized by grouping results for each method tested. The data for methods tested will be tabulated for comparison of results. Similarly, data for stabilization formulation testing will be grouped for each surrogate type by formulation and tabulated for comparison of results.

Dewatering results for process demonstration will be grouped for each batch tested. Data collected during stabilization process demonstration will be divided into process data and final waste characteristics and grouped for each batch treated. The stabilization process data for each batch will be tabulated separately for mass balance determinations.

Key process data from the batches will also be tabulated for summary presentation, examination and overall process variable/performance determination. The final stabilized waste characteristics for the batches will also be tabulated for summary presentation, examination and overall process waste characteristics determination. Similarly, final waste characteristics for the batches of wastewater produced will be tabulated for summary presentation, examination and overall process secondary waste characterization.

9.0 DATA ANALYSIS, EVALUATION, AND INTERPRETATION

1807

Data analysis, evaluation and interpretation will include data management procedures and processing of data to generate treatment and process performance indicators, and performance trends as a function of key variables. Performance indicators that will be calculated from data collected are waste loading and waste bulking factors. Other performance indicators are final waste characteristics including; UCS results, UTS metal concentrations in TCLP leachates. Mass balance calculations for the process will also be performed. Data evaluation will also include assessment of results from multiple batch processing for consistent representation of the overall process. Data interpretation will also include review and examination of testing results to select optimum treatment methods and stabilization formulations for use in the process demonstration.

9.1 MASS AND ENERGY BALANCE – PRIMARY WASTE STREAM

Mass balance involving the primary waste stream will be performed using weights of surrogate slurry feed, water removed in dewatering steps, additives and stabilized waste product from data collected during the process demonstration.

Mass balance around the dewatering process will be accomplished by comparing the total weight of surrogate slurry and additives used to the total weight of water removed and filter cake produced for each batch treated.

Total weight (surrogate slurry + additives) = Total weight (water + filter cake)

The ratio of the total weight of water removed and filter cake to the total weight of surrogate slurry and additives is used to calculate the percentage of mass balance closure in the following expression.

Percent closure = (Total wt. (water + filter cake)/Total wt. (surr. slurry + additives)) x 100%

Mass balance around the stabilization process will be accomplished by comparing the total weight of surrogate filter cake and additives (including water) to the weight of the final stabilized waste product obtained for each batch treated. The percent closure of the mass balance around the stabilization process is given by the following expression.

Percent Closure = Total weight of stabilized waste product/Total weight (surrogate filter cake + additives)

The energy balance for the dewatering and stabilization process is very simple. The only significant energy terms will be the energy consumption by the mixing apparatus and the heat release of the stabilization reagents. In order to complete an energy balance for the primary waste stream, the amperage drawn by the mixer motors will be measured. In addition, the temperature of the stabilized product will be measured in the mini-Maxcrete and in the final stabilized waste form. This data will be used to perform an energy balance of the primary wate treatment process.

000046

The energy balance will follow the form of the mass balance and will show the temperature of the process streams and significant energy inputs.

1807

The mass and energy balance data will be presented in the form of an overall process flow sheet that will summarize the mass quantities, energy inputs, and temperatures for all process flow streams

9.2 MASS AND ENERGY BALANCE – SECONDARY WASTE STREAM

Mass balance involving the secondary waste stream will be performed using weights of surrogate slurry feed, water produced in dewatering steps, additives and weights of stabilized waste product as described for the dewatering process for the primary waste stream.

An energy balance for the secondary waste streams will be performed. This will be summarized in the overall process flow sheet.

9.3 DATA EVALUATION

Data obtained from sampling logs, laboratory notebooks, data collection forms/sheets and testing laboratories will be reviewed for correctness and reasonableness prior to use. Results from commercial laboratories will also be reviewed with respect to laboratory internal QC results to assess quality of data to assure data quality objectives are met and determine any data qualification needs.

Formulation development results will be evaluated for consistency with expected trends with key variables.

Data from process demonstration will be evaluated by comparing processing parameters and characterization results from the different batches processed. Processing data to be compared will include; volume of water produced, processing time, temperature rise, and time of set. Waste characterization data to be compared will include; waste loading, UCS results and UTS metal concentrations in TCLP leachates. Data is expected to be predictable, based on formulation development results, reproducible, and provide consistent results within a reasonable variation. Where possible, results from batch treatments will be evaluated statistically to determine mean values and standard deviations.

9.3.1 WASTE LOADING

Waste (surrogate loading is to be calculated using the following expression:

$$Waste\ Loading = [(WDW)/(WDW+Water+Additives)]*100\ wt\ \%$$

where: Waste Dry Weight (WDW) = Dry Surrogate + Dry Bentonite Weights.

000047

In this calculation, water is defined to include the water component of the silos residue, the water added during retrieval and transferring, and water added during stabilization processing, less the water removed by dewatering. Dry weight is defined as the weight of the surrogate waste at 105°C.

9.3.2 BULKING FACTOR

1807

The bulking factor shall be determined as the resulting treated surrogate volume (representing the volume of the treated silo residues) divided by the corresponding volume of the untreated surrogate (representing the in situ volume of the silo residues). The volume of the untreated surrogate is determined using the previously determined in situ density, ρ_i. The bulking factor shall be calculated as follows:

$$V_I = 0.30 * M_{si} \div \rho_i$$

$$BF = (V_f \div V_I) * 100\%$$

where:
- BF = Bulking Factor
- V_I = Specific volume of the 70 wt % solids surrogate slurry mixture
- V_f = Specific volume of the treated surrogate
- ρ_i = In situ density (previously) determined
- M_{si} = Mass of the 30 wt % solids slurry before treatment

9.4 DATA INTERPRETATION

Data interpretation will be performed by senior technical personnel on the project. Interpretation will be aided by the generation of performance indicators and variable relationships so that trends may be determined. Data trends are used to predict effects on performance due to changes in key variables or operating conditions.

The data obtained from testing of dewatering methods during formulation development will be interpreted by comparing the rate and total quantity of water obtained per unit quantity of surrogate slurry treated at established filtering conditions. Optimum dewatering methods will provide the highest rate and quantity of water removal while minimizing the amount and cost of additives.

Treatment criteria for evaluation of formulations are the following:

- Uniform and homogeneous appearance,
- Dusting/particulate (no more than 1 wt% less than 10 micron or 15 wt% less than 200 micron diameter particles),
- UCS of at least 50 psi per ASTM C39,
- No free liquids per (M)ANS 55.1,
- 28-day TCLP leachate metal concentrations less than 50 percent of the RCRA limit,
- Does not exhibit a RCRA Characteristic.

000048

Beyond these criteria, formulations will also be evaluated for TCLP concentration of metals versus the proposed UTS limits.

1807

Interpretation of data from formulation development testing will involve examination of testing results to determine formulations which provide assurance that treatment criteria will be met while maximizing waste loading/minimizing waste bulking.

Data from the process demonstration will be interpreted by comparing processing parameters and characterization results from the different batches processed. Results are expected to be reproducible and provide consistent results within a reasonable variation.

000049

10.0 HEALTH AND SAFETY

The Proof of Principle testing will be conducted under IT's existing health and safety (H&S) program. This program complies with:

- Tennessee Department of Environment and Conservation, Division of Solid Waste Management, regulations

- Tennessee State Regulations for Protection Against Radiation

- Occupational Safety and Health (OSHA) standard for laboratories (29 CFR 1910.1450).

The formulation development and demonstration testing will be conducted under the requirements of the facility Chemical Hygiene Plan (CHP). The CHP is designed to ensure that laboratory operations are conducted safely and in accordance with the requirements of the OSHA standard for laboratories (Occupational Exposures to Hazardous Chemicals in Laboratories OSHA 1910.1450). A copy of the Table of Contents for the CHP is attached (Appendix A). The CHP defines basic safe work practices, training, medical surveillance, hazard communication, emergency procedures, inspections, and record keeping requirements. The CHP serves as the umbrella under which routine laboratory operations are conducted, and it provides a basis for project-specific requirements as well.

The primary health and safety concern will be respirable dust. All of the Formulation Development and Demonstration Testing will be conducted inside of buildings, allowing for the removal and capture of any dust emissions. Engineering controls such as local ventilation and fume hood will be used to reduce worker exposure whenever possible when dusty reagents must be handled. Appropriate personal protective equipment (PPE) will also be used when engineering controls are not sufficient to minimize work exposure to dust.

The pilot-scale Demonstration also requires a formal pilot-scale review. The review is conducted by the project manager, technical experts, and health & safety/radiation safety personnel. The Pilot-Scale Review Checklist supporting documentation serves as the basis for the review and approval. A copy of the Pilot-Scale Review Checklist is included in Appendix B.

The only potential off-gas from the stabilized material will be water vapor, so air monitoring will not be employed during the Demonstration Testing.

11.0 WASTE STREAM MANAGEMENT

1807

11.1 REGULATORY ISSUES SPECIFIC TO THE TESTING FACILITY

All surrogate and Silo 1 and 2 slurry materials prepared for the formulation development and Demonstration testing, with the exception of 1L samples provided to FDF, will be treated during the testing. The treated residuals from the testing should meet the RCRA Land Disposal Restrictions (LDR) and will be disposed in a local Subtitle D facility. All secondary wastes generated will also be disposed of in a similar fashion.

In the event that a hazardous waste material is generated during testing which can not be treated to meet the RCRA Land Disposal Restrictions (LDR), that material will be shipped to an off-site facility for treatment and disposal. IT's TDL and ETDC both have EPA Identification numbers (TND000770479 and TND981933120, respectively).

000051

12.0 REPORTS

1807

12.1 WEEKLY TELECONFERENCES

Weekly teleconferences involving FDF and IT project personnel will be held to provide testing status and progress. Minutes of the weekly teleconference will be included as part of the weekly written report.

12.2 WRITTEN WEEKLY REPORTS

Weekly reports detailing safety issues, current activities attempted during the period, results of attempted activities, schedule, status of the project relative to the work plan, general issues, conclusions from attempted activities, plans for the next two weeks, action items, and minutes of the previous teleconference. The weekly report is due to FDF prior to the weekly teleconference.

12.3 FINAL REPORT

A draft of the final report will be submitted for FDF's review and concurrence. The final report will include, but is not limited to,

- Description of testing
- Results of testing runs, including failures
- Downtime durations and causes, and corrective actions
- Chemical/physical characterization data for untreated surrogate slurries and treated residue
- Results of preliminary lab tests
- Conditions of experiments
- Observations
- Volume of treated surrogate produced
- Volume of secondary waste produced and required treatment
- Samples collected, conditions, and analytical data packages, log books
- Interpretation of results
- The prescribed recipes/formulas with recommended allowable constituent variation
- Graphs showing interrelated key parameters
- Safety issues associated with the process
- Reliability of the process
- Challenges associated with scale up to the full-scale remediation facility
- Implementation
- Schedule elements for the full-scale remediation facility
- Cost elements for the full-scale remediation facility
- Conclusions

000052

The final report outline will be:

1807

1.0 Executive Summary
Includes Description of the Proof of Principle Testing and results.

2.0 Proof of Principle Test Description
Includes Test Description, project quality assurance, and test objectives and rationale.

3.0 Test Process Design and Procedures
Includes sample preparation, additives, formulation, methods for determining optimal formulations, test system description, offgas system description, wastewater treatment system description, equipment and materials to be used, and test procedures.

4.0 Sampling and Analysis
Includes characterization of untreated surrogates and methods for analysis used on treated surrogate, wastewater, offgas, and any other secondary waste streams.

5.0 Results and Discussion
Presents leachability and other key data, problems encountered, recommended formulation, waste loading, etc.

6.0 Design Data
The discussion of the full-scale design data shall include an outline strategoy/method for developing the design data with a general description of the proposed full-scale design. Discussion shall include the correlation between the data generated by the Proof of Principle Testing and the design data for the Full-Scale Remediation Facility. Tables, graphs, figures, essential to the understanding of the strategy/method and description shall be presented and clearly labeled. Key assumptions shall be identified and justified as well as possible sources of errors.

Technical issues such as waste loadings, sulfate control, and lead and barium leachability, and bulking factors shall be discussed. Items that shall be presented include processability, viscosities, rate of mixing (torque, shear, RPM, bubbling, etc.), measurements unique to the primary process line (i.e., conductivity, for joule heated melters) and robustness. Tables clearly presenting the material and energy balance shall accompany tables listing equipment and specifications (including metallury requirements), and process flow diagrams for the primary process line.

7.0 Conclusions
Based on test results provided cost elements as specified. Provide a tentative schedule and design data and information as specified.

Attachments
Telephone conversation logs, Testing Reports, Analytical Data Packages, Sampling Logs, Sample Chain of Custody Forms, Analytical Laboratory Logs.

000053

13.0 SCHEDULE

1807

13.1 MILESTONES

The key milestones for the Proof of Principle Testing are listed in Table 13.1 and shown in Figure 13.1.

Table 13.1
Key Milestones for Proof of Principle Testing

Activity	Activity Duration (weeks)	Project Duration (weeks)
Award Contact	0	0
Prepare Work Plan and QA/QC Plan	6	6
FDF Review and Comment on Work Plan and QA/QC Plan	4	10
Address FDF Comments on Work Plan and QA/QC Plan	2	12
FDF Review and Comment on Re-submitted Work Plan QA/QC Plan	2	14
Address Final Comments	1	15
FDF Reviews and Approves Work Plan and QA/QC Plan	2	17
Perform Proof of Principle Testing	14	31
Prepare and Submit Draft Final Report w/ Testing Documentation, Analytical Data Packages, and Archived Samples	8	39
FDF Review of Draft Final Report	4	43
Address FDF Comments on Draft Final Report	1	44
Submit Final Report	1	45
Perform Presentation of Final Report	1	46

13.2 DURATION

The total duration of the Proof of Principle contract is 48 weeks. The total duration of IT'S Proof of Principle Testing is 46 weeks. The duration of each activity of the testing is given in Table 13.1.

13.3 HOLD POINTS

The hold points for the Proof of Principle Testing are:

- Final review and approval of the Work Plan and Testing Quality assurance/Quality Control (QA/QC) Plan,
- Review of testing data from 70 wt % demonstration surrogate and Silos 1 and 2 surrogate slurries,
- Review of results from Formulation Development testing, and
- Review of the Demonstration Testing data.

13.4 WITNESSING VISITS

IT will allow FDF project personnel to visit the TDL facility during the Formulation Development testing and the EDTC facility during the Demonstration Testing.

000054

Figure 13.1
Fernald OU4 Silos 1&2 Proof of Principle Schedule

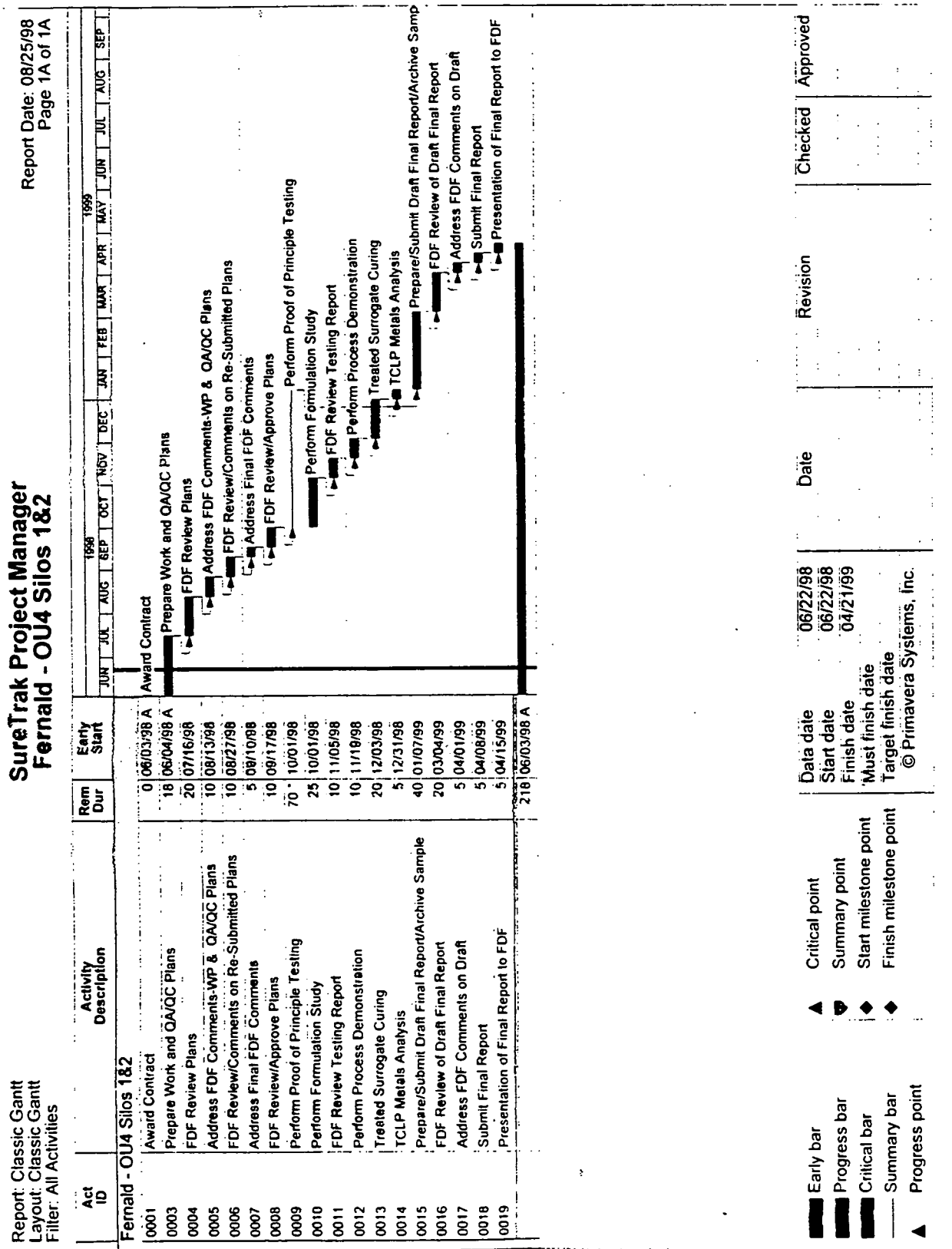

000055

14.0 MANAGEMENT AND STAFFING

1807

14.1 PROJECT MANAGEMENT

IT's approach to the management of this project is based on the project specific approach, makeup, and structure of several key project management elements:

- Staffing Approach – project based
- Project organization
- Clearly defined roles and responsibilities
- Project management tools (Project Management Control System)
- Project evaluation
- Client communication
- Subcontractor management

These elements combine to form the basic system with which IT manages projects.

14.1.1 PROJECT-BASED STAFFING APPROACH

Through this approach, only those staff necessary and sufficient for proper execution of a project will be assigned, thus providing maximum control of resources and costs. Resource pools of qualified personnel with experience in the technical aspects of this project provide a flexible basis for quick project response. The duration of assignment of any one staff member working on a particular project will be controlled to meet task requirements.

14.1.2 PROJECT ORGANIZATION

The organizational chart for the Proof of Principle testing is displayed in Figure 14.1. IT's designated authority for this program will be the Project Manager who is fully qualified and will serve as FDF's single point of contact with authority to commit IT resources. The Project Manager is supported by IT's Corporate Management as well as a team of technical specialists in the areas of stabilization and stabilization testing, and analytical and engineering support. In addition, project support will be provided by qualified QA/QC and H&S personnel. The Project Manager will assure that IT resources are provided to meet project needs. IT will subcontract an FDF approved laboratory to provide analytical services.

14.1.3 CLEARLY DEFINED ROLES AND RESPONSIBILITIES

The roles and responsibilities for key personnel assigned to the project are clearly defined in Section 14.2. It is critical that qualified personnel have defined roles and assigned responsibilities to assure that project activities are conducted as prescribed. For the project, senior technical personnel experienced in dewatering and stabilization Proof of Principle testing and application of dewatering and stabilization methods to full-scale remediation, are available for technical support. The Principal Investigator reports directly to the Project Manager. Task Managers for specific project activities as well as technical or administrative support areas are assigned to assume responsibilities for management of tasks. These Task Managers report directly to the Principal Investigator on project–related issues. Other staff personnel are assigned as needed by the Project

1807

Figure 14.1

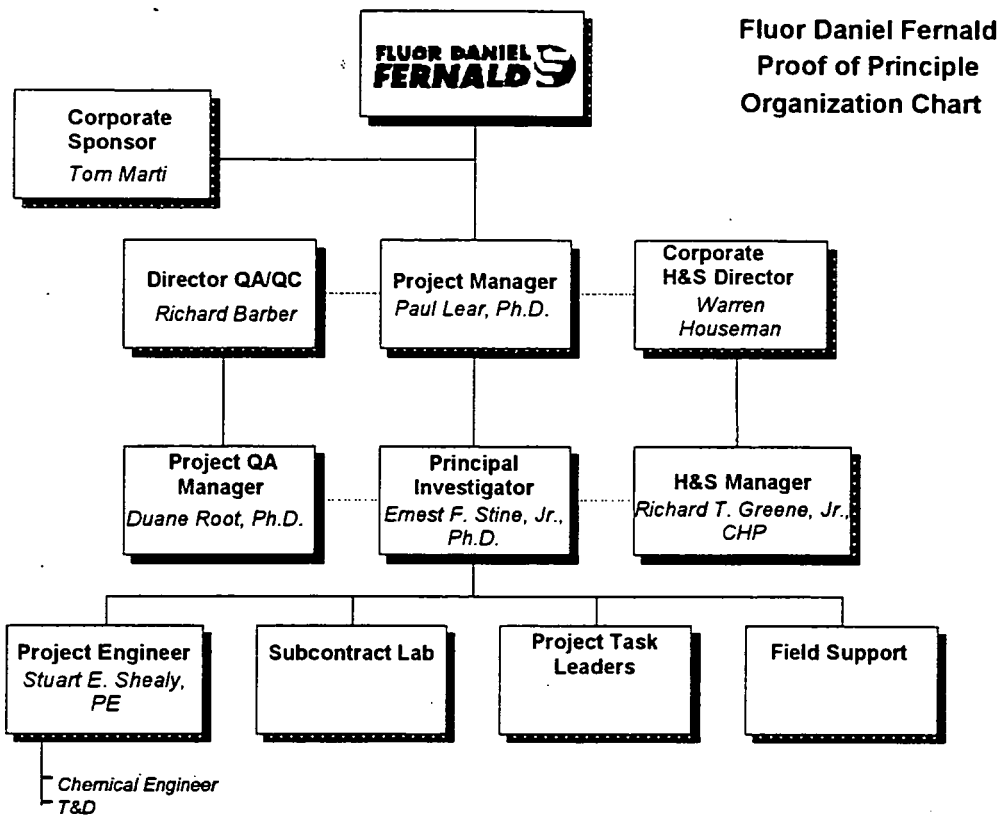

Manager to perform tasks and will report directly to the Principal Investigator on issues related to the project. The subcontract laboratory will provide analytical services as agreed upon by the laboratory and IT, and will ultimately report to the IT Principal Investigator.

14.1.4 PROGRAM MANAGEMENT AND CONTROL SYSTEM

Through its ongoing environmental support service contracts at other Department of Energy (DOE) facilities, IT has automated systems to manage the full scope of performance measurement activities for this project. The key to IT's project management approach is the implementation in our Program Management and Control System (PMCS) which is nationally integrated across all IT functional groups. This proven, DOE-compliant management system provides: (1) project cost controls, accounts payable, accounts receivable, project accounting, and payroll through our VISION job tracking system; and (2) performance cost schedule control through Primavera software. The PMCS receives data and inputs from multiple sources and consolidates, verifies, formats, and produces the information necessary for successful project management. IT's PMCS is built upon more than 18 years of experience in managing and controlling more than 800 cost reimbursable projects at DOE facilities. This proven system is compliant with DOE Order 4700.1, DOE Notice 4700.5, and DOE Order 1332. IT will use this system to plan, monitor, and analyze the technical, cost, and schedule performance of project tasks; to develop corrective measures (if unanticipated conditions are encountered); and to provide timely and accurate response and feedback to FDF. An important control feature of our PMCS is that no project can be linked into the system without the up-front input of detailed budget data at the lowest work breakdown structure (WBS) level. This budget information can then be used with the project

schedule in Primavera to forecast financial and resource allocation requirements. IT also has the capability to download PMCS data into a client-specified management and reporting system, as evidence by our use of the DOE-directed MicroFrame system in our Las Vegas office.

14.1.5 PROJECT EVALUATION SYSTEM

- 1807

IT uses performance measurement to: develop meaningful performance measures in the project planning stage; apply performance measurements consistent with project content and risk; and apply benchmarking criteria at the total contract level to promote high-quality performance. Accurate, meaningful determination of performance status are key to the effective management of technical programs. The first step toward managing our own effort under this contract was to implement a PMCS that requires our Project Manager to plan the work so that appropriate and meaningful measures of performance are established prior to project initiation. Performance status will be assessed by comparing the actual performance against the planned measures. This technique will be applied to work performed by IT, as appropriate. The goal of this action is to promote accountability and cost effectiveness by designing project-specific standards against which to measure, monitor, and improve progress. Benchmarking provides a framework for identifying measures of performance, identifying management actions to achieve improved performance, and then measuring performance against the benchmark. The key to success is to identify those management actions that have produced the best level of internal performance and then adapt the best practices to this project.

Independent QA assessments by FDF may be performed, at their discretion, to compare the actual performance against the planned measurements.

14.1.6 COMMUNICATION WITH FLUOR DANIEL FERNALD (FDF)

For communication between IT and FDF, our Project Manager will communicate regularly with his FDF counterpart. He will actively solicit input and feedback from FDF management on technical, managerial, and performance issues. Our administrative and technical staff will interact on a regular basis with their FDF counterparts to ensure that project objectives are being carried out. Discussions can occur individually and through scheduled teleconferences. We encourage informal communication between our staff and FDF at all time. In effect, project management will maintain a "proactive" policy with respect to communication with FDF personnel to ensure common objectives and speedy issue resolution.

Formal communication will consist of project deliverables and other documents covering cost, schedule, quality, and technical performance, as specified by the contract. Informal status reports on our activities will be provided to FDF as desired.

Weekly reports detailing safety issues, current activities attempted during the period, results of attempted activities, schedule, status of the project relative to the work plan, general issues, conclusions from attempted activities, plans for the next two weeks, action items, and minutes of the previous teleconference. The weekly report is due to FDF prior to the weekly teleconference.

000058

14.2 STAFFING

1807

14.2.1 PROJECT TEAM

The qualifications of the Project Teams are briefly summarized below.

- **Project Manager, P. Lear, Ph.D.** – Dr. Lear has performed hundreds of bench- and pilot-scale treatability studies. He has 11 years of extensive hands-on experience with full-scale treatment, including stabilization using Portland cement.

- **Principal Investigator, E. Stine, Ph.D.** – Dr. Stine has over 20 years of experience. Currently, Dr. Stine manages the treatability testing group for the development and implementation of processes for the minimization, recovery, or destruction of hazardous and toxic chemicals.

- **Project QA Manager, D. Root, Ph.D.** – Dr. Root has over 20 years experience and serves as the QC officer for large bench- and pilot-scale testing projects at IT's TDL and ETDC.

- **Health and Safety Manager, R. Greene, CHP** – Mr. Greene has over 19 years experience in health physics, including the development and supervision of programs.

- **Project Enginner, S. Shealy, P.E.** – Mr. Shealy has over 20 years experience in the development, design, and commercialization of chemical processes including pilot-scale systems for plant environments.

14.2.2 PROJECT TEAM ROLES AND RESPONSIBILITIES

The following section presents the roles and responsibilities of the Silos 1 and 2 Proof of Principal team. It includes a brief job description and the responsibility and authority of each member of the project team.

IT's corporate philosophy and culture holds each and every member of a project team responsible for performing his/her duties in a safe and quality manner. Key personnel for the Proof of Principle Project have been selected for their exemplary performance on similar projects and for their commitment to provide a work environment in which safety and quality are paramount.

Project Manager, P. Lear , Ph.D

The IT Project Manager, Dr. Paul Lear, has the overall responsibility for the successful, safe, and cost-effective management of the project. The Project Manager has complete authority over all project resources. He will serve as the primary point of contact with FDF's OU4 Silo 1 and 2 Project Manager and Contract Administrator. The Project Manager is responsible for interfacing with the various FDF Team Leaders and for managing the day-to-day project activities such as planning, organizing, scheduling, directing, coordinating, and controlling project resources and budget. The Project Manager is also responsible for all reporting requirements for the project, both technical and cost, and will prepare and submit progress reports in accordance with FDF specifications. The Project Manager has authority to make corporate commitments that are