UNITED STATES
DEPARTMENT OF ENERGY
FERNALD ENVIRONMENTAL MANAGEMENT PROJECT

REMEDIATION AREA 1, PHASE II
SEWAGE TREATMENT PLANT EXCAVATION PACKAGE

CONTRACT NO. FSC622
FDF PROJECT NO. 20712

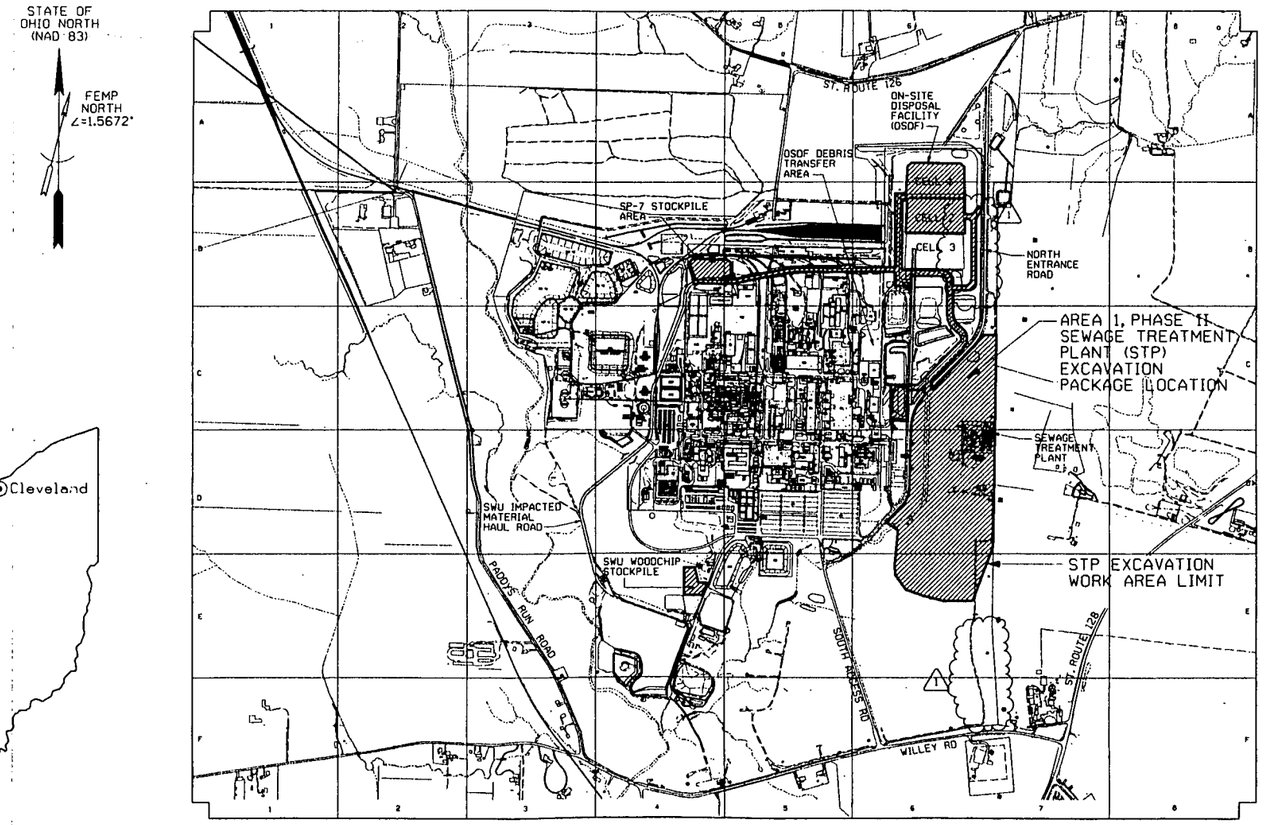

PARSONS

The Ralph M. Parsons Company • Parsons Main, Inc. • Engineering-Science, Inc.

ARCHITECTS - ENGINEERS
CINCINNATI, OHIO

600' 0' 600' 1200'
GRAPHIC SCALE: 1"=600'

NOTES

2108

RELATED DWG NO.	DRAWING TITLE	SHEET NO.
92X-5900-X-00489	DRAWING INDEX	X0002
92X-5900-X-00490	LEGEND AND GENERAL NOTES	X0003

000001

INFORMATION ONLY

REV. NO.	ISSUE OR REVISION PURPOSE - DESCRIPTION	TL	PM	REVD BY
1	REVISED PER DCN: 20712-013 AND 014	3/24/99	3/24/99	3/29/99
0	CERTIFIED FOR CONSTRUCTION	FMP 10/7/98	CS 10/7/98	FMP 10/7/98
		INITIALS AND DATE		

UNITED STATES DEPARTMENT OF ENERGY
FERNALD ENVIRONMENTAL MANAGEMENT PROJECT

THIS DRAWING PREPARED BY
PARSONS
THE RALPH M. PARSONS CO. - PARSONS MAIN, INC. - ENGINEERING-SCIENCE, INC.
CINCINNATI, OHIO

PROJECT NAME
REMEDIATION AREA 1, PHASE II
SEWAGE TREATMENT PLANT EXCAVATION PACKAGE

DRAWING TITLE
PROJECT TITLE SHEET

DRAWN BY	DATE	TECHNICAL LEAD	DATE	CHECKED BY	DATE
J.G. ASHWORTH	8/14/98	F.M. PARTON, JR.	8/14/98	F.M. PARTON, JR.	8/14/98
PLANT/BLDG NO.		FLOOR		SCALE 1"=600'	CLASS
SUBMITTED FOR 30% ISSUE		SUBMITTED FOR 60% ISSUE		SUBMITTED FOR 90% ISSUE	
TECH LEAD N/A		TECH LEAD N/A		TECH LEAD N/A	
DATE		DATE		DATE	

PO NUMBER	FDF PROJECT NO.	DRAWING INDEX CODE NO.	SHEET NO.	REV. NO.
TOP-021	20712	92X-5900-X-00488	X0001	1

2108

INDEX OF DRAWINGS

INDEX CODE NO.	DRAWING NO.	SHEET NO.	REVISION NO.	DRAWING TITLE	REMARKS
	92X-5900-X-00488	X0001	1	PROJECT TITLE SHEET	
	92X-5900-X-00489	X0002	1	DRAWING INDEX	
	92X-5900-X-00490	X0003	1	LEGEND AND GENERAL NOTES	
	92X-5900-G-00486	G0001	1	CIVIL - EXISTING CONDITIONS PLAN	
	92X-5900-G-00492	G0002	1	CIVIL - MASTER KEY PLAN	
	92X-5900-G-00463	G0003	1	CIVIL - SITE PREP & GENERAL UTILITY REMOVAL PLAN	
	92X-5900-G-00458	G0004	1	CIVIL - GENERAL EXCAVATION PLAN	
	92X-5900-G-00434	G0005	1	CIVIL - ABOVE WAC EXCAVATION AND STP AREA UTILITY REMOVAL PLAN	
	92X-5900-G-00503	G0006	1	CIVIL - STP DEEP EXCAVATION PLAN	
	92X-5900-G-00504	G0007	1	CIVIL - TRAP RANGE AREA PLAN	
	92X-5900-G-00505	G0008	1	CIVIL - SP-7 STOCKPILE	
	92X-5900-G-00506	G0009	1	CIVIL - STP BACKFILL BORROW AREA	VOID PER DCN 20712-013
	92X-5900-G-00493	G0010	1	CIVIL - TRAFFIC ROUTES	
	92X-5900-G-00517	G0011	1	CIVIL - TRANSFER LINE PLAN & PROFILE	
	92X-5900-G-00507	G0012	1	CIVIL - PHASE I STP EXCAVATION DEWATERING SYSTEM	
	92X-5900-G-00508	G0013	1	CIVIL - PHASE II STP EXCAVATION DEWATERING SYSTEM	
	92X-5900-G-00498	G0014	1	CIVIL - DETAIL SHEET	
	92X-5900-G-00509	G0015	1	CIVIL - CROSS SECTIONS - SHEET 1 OF 3	
	92X-5900-G-00510	G0016	1	CIVIL - CROSS SECTIONS - SHEET 2 OF 3	
	92X-5900-G-00516	G0017	1	CIVIL - CROSS SECTIONS - SHEET 3 OF 3	
	92X-5900-G-00487	G0018	1	CIVIL - MATERIAL TRACKING PLAN	
	92X-5900-G-01002	G0019	0	CIVIL - UTILITY REMOVAL METHODS	
	92X-5900-E-00472	E0001	1	ELECTRICAL - SINGLE LINE DIAGRAM & PANEL SCHEDULES	
	92X-5900-E-00471	E0002	0	ELECTRICAL - ELEMENTARY DIAGRAMS	CREATED UNDER TOP-012
	92X-5900-E-00519	E0003	0	ELECTRICAL - INTERCONNECTION DIAGRAMS AND DETAILS	CREATED UNDER TOP-012
	92X-5900-E-00473	E0004	1	ELECTRICAL - POWER PLAN	
	92X-5900-E-00478	E0005	1	ELECTRICAL - ELEVATIONS AND DETAILS	
	92X-5900-E-01003	E0006	0	ELECTRICAL - PLAN AND SCHEDULES	
	92X-5900-E-01022	E0007	0	ELECTRICAL - POLE ELEVATIONS	
	92X-5900-E-01023	E0008	0	ELECTRICAL - POLE ELEVATIONS	
	92X-5900-E-01024	E0009	0	ELECTRICAL - MATERIAL LIST AND STANDARD DETAILS	
	92X-5900-N-00464	N0001	0	MECHANICAL PROCESS - PIPING AND INSTRUMENTATION DIAGRAM - SYMBOLS AND LEGEND	CREATED UNDER TOP-012
	92X-5900-N-00502	N0002	0	MECHANICAL PROCESS - PIPING AND INSTRUMENTATION DIAGRAM - WATER COLLECTION AND TRANSFER SYSTEM	CREATED UNDER TOP-012

NOTES

1. DRAWING NUMBERS ARE FOR FILE REFERENCE. DRAWINGS ARE ORDERED BY SHEET NUMBER.
2. REFER TO THE TECHNICAL REFERENCE DOCUMENTS FOR INFORMATION ON FOUNDATIONS AND UNDERGROUND UTILITIES. TECHNICAL REFERENCE DOCUMENTS CONSIST OF DESIGN AND AS-BUILT DRAWINGS OF STP BUILDINGS AND UTILITIES. CONTRACTOR SHALL OBTAIN CONVERSION VALUES BETWEEN THE FEMP COORDINATE SYSTEM (SHOWN ON THE TECHNICAL REFERENCE DOCUMENT) AND NAD 1983 COORDINATE SYSTEM FROM THE CONSTRUCTION MANAGER.

RELATED DWG NO.	DRAWING TITLE	SHEET NO.
92X-5900-X-00488	PROJECT TITLE SHEET	X0001
92X-5900-X-00490	LEGEND AND GENERAL NOTES	X0003

INFORMATION ONLY 000002

REV. NO.	ISSUE OR REVISION PURPOSE - DESCRIPTION	FL	PM	REVD BY
1	REVISED PER DCN: 20712-001,002,003,004,005, 006,009,010,011,012,013,014,015,016,017,018,019, 020,021,022,024	3/30/99	3/30/99	CS
0	CERTIFIED FOR CONSTRUCTION	FMP 10/7/98	CS 10/7/98	FMP 10/7/98

INITIALS AND DATE

UNITED STATES DEPARTMENT OF ENERGY
FERNALD ENVIRONMENTAL MANAGEMENT PROJECT

THIS DRAWING PREPARED BY
PARSONS
THE RALPH M. PARSONS CO. - PARSONS MAIN, INC. - ENGINEERING-SCIENCE, INC.
CINCINNATI, OHIO

PROJECT NAME
REMEDIATION AREA 1, PHASE II
SEWAGE TREATMENT PLANT EXCAVATION PACKAGE

DRAWING TITLE
DRAWING INDEX

DRAWN BY	DATE	TECHNICAL LEAD	DATE	CHECKED BY	DATE
J.G. ASHWORTH	8/14/98	F.M. PARTON,JR.	8/14/98	F.M. PARTON,JR.	8/14/98

PLANT/BLDG NO.	FLOOR	SCALE	CLASS
		NONE	

SUBMITTED FOR 307 ISSUE	SUBMITTED FOR 807 ISSUE	SUBMITTED FOR 807 ISSUE
TECH LEAD N/A	TECH LEAD N/A	TECH LEAD N/A
DATE	DATE	DATE

PO NUMBER	TOP PROJECT NO.	DRAWING INDEX CODE NO.	SHEET NO.	REV. NO.
TOP-021	20712	92X-5900-X-00489	X0002	1

GENERAL LEGEND

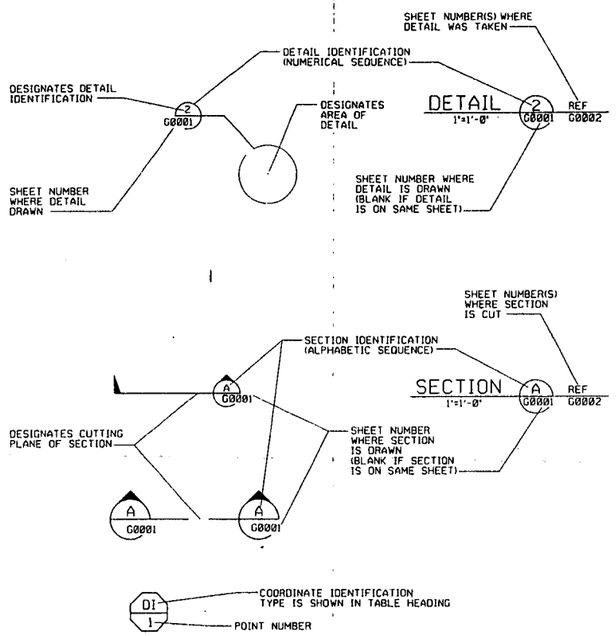

UTILITY SYMBOLS

EXISTING		PROPOSED
------ ST ------	STORM SEWER	
------ FG ------	FUEL GAS	
------ DW ------	DRINKING WATER	
------ FT ------	WASTEWATER EFFLUENT	
------ E ------	UNDERGROUND ELECTRICAL	
------ G ------	ELECTRIC GROUND	
------ GW ------	GROUND WATER	
------ WW ------	WASTE WATER	
------ SN ------	SANITARY SEWER	
------ SD ------	SUBDRAIN (TILES)	
------ OE ------	OVERHEAD ELECTRICAL	—— OE ——

PIPE MATERIAL LEGEND

PIPE CODE	DESCRIPTION
CI	SEAMLESS STEEL
C.I.	CAST IRON
L1	CAST IRON
L3	CAST IRON
N1	VITRIFIED CLAY OR CONCRETE
V	SEAMLESS STEEL
W	SEAMLESS STEEL
VCP	VITRIFIED CLAY PIPE

GRADING SYMBOLS

EXISTING		PROPOSED
X 584.9	SPOT ELEVATION	X 585.4
584	CONTOUR - MINOR	584
585	CONTOUR - MAJOR	585
(TOE)	SLOPE INDICATOR	(TOE)

ABBREVIATIONS

APPROX	APPROXIMATE	MH	MANHOLE
ASTM	AMERICAN SOCIETY FOR TESTING AND MATERIALS	MTL	MATERIAL TRACKING LOCATION
AWWT	ADVANCED WASTE WATER TREATMENT	NO.	NUMBER
CG&E	CINCINNATI GAS & ELECTRIC COMPANY	NTS	NOT TO SCALE
CM	CONSTRUCTION MANAGER	OSDF	ON-SITE DISPOSAL FACILITY
CONC	CONCRETE	OU	OPERABLE UNIT
CS	CARBON STEEL	PC	POINT OF CURVATURE
DIM	DIMENSION	PRV	PRESSURE REDUCING VALVE
EL	ELEVATION	PT	POINT OF TANGENCY
ELEC	ELECTRIC	R	RADIUS
EXIST	EXISTING	REF	REFERENCE
FB	FLAT BOTTOM	RI	REMEDIAL INVESTIGATION
FDF	FLUOR DANIEL FERNALD	SHT	SHEET
FEMP	FERNALD ENVIRONMENTAL MANAGEMENT PROJECT	SMH	STORM SEWER MANHOLE
FIG	FIGURE	SMTA	SPECIAL MATERIAL TRANSFER AREA
FRL	FINAL REMEDIATION LEVEL	SP	STOCK PILE
FS	FEASIBILITY STUDY	STP	SEWAGE TREATMENT PLANT
HDPE	HIGH DENSITY POLYETHYLENE	SWRB	STORMWATER RETENTION BASIN
H	HORIZONTAL	SWU	SOUTHERN WASTE UNIT
INV	INVERT	Tc-99	TECHNITIUM - 99
KV	KILOVOLT	TYP	TYPICAL
LCS	LEACHATE CONVEYANCE SYSTEM	UV	ULTRA VIOLET
MAX	MAXIMUM	V	VERTICAL
MIN	MINIMUM	WAC	WASTE ACCEPTANCE CRITERIA

SYMBOLS LEGEND

EXISTING		PROPOSED
	POST INDICATOR VALVE (PIV)	
	FIRE HYDRANT (FH)	
	MANHOLE (MH)	
OR	CATCH BASIN (CB)	
	POWER OR LIGHT POLE	
	ELECTRICAL MANHOLE	
	GATE VALVE	
1313	SOIL BORING	
11503	MONITORING WELL	
11503	ABANDONED MONITORING WELL	
E	EXTRACTION WELL	
	SURFACE DRAINAGE FLOW	
	ACCESS CORRIDOR	
	GRAVEL SURFACE	
	ASPHALTIC CONCRETE PAVING	
	CONCRETE PAD	
	RAILROAD	
	BUILDING/TRAILER	
	TREE LINE	
	DECIDUOUS TREE	
	CONIFEROUS TREE	
	CENTERLINE DRAINAGE DITCH	
	RIVER/CREEK	
	TO BE REMOVED	
—S—S—	SILT FENCE	—S—S—
	ELECTRICAL TRANSFORMER	
	TRANSMISSION TOWER	
	HEADWALL	
	BENCH MARK	
	CHAIN LINK/CATTLE FENCE	
—xxx—xxx—	CERTIFICATION ROPE FENCE	
—xx—xx—	CONSTRUCTION/WIND BARRIER FENCE	—xx—xx—
1	RADIOLOGICAL CONTROL FENCE	
	SIGN	
	BOLLARD/GUARD POST	
PB	ELECTRICAL PULL BOX	
	REDUCER	
	DOUBLE GATE	
	SINGLE GATE	
	UTILITY REMOVAL LIMIT	
	FEMP PROPERTY LINE	
	EASEMENT	
	LEAD CONTAMINATED SOIL BOUNDARY	
	DUST CONTROL/LIMITS OF WORK	
	STP DEEP EXCAVATION BOUNDARY	
	DUMPED ROCK	
	COMPACTED CLAY SUBGRADE	
	ABOVE WAC MATERIAL BOUNDARY	
1	DIGESTER SLUDGE	

2108

NOTES

GENERAL NOTES

1. EXISTING TOPOGRAPHY PREPARED BY PARSONS FROM DIGITAL MAPPING BY PHOTOGRAMMETRIC METHODS FROM AERIAL PHOTOGRAPHY PROVIDED BY WOOLPERT CONSULTANTS FLOWN APRIL 1997. OTHER SOURCES OF EXISTING INFORMATION SHOWN ON DRAWINGS WERE PROVIDED BY FDF. THESE SOURCES INCLUDE: EXISTING SITE DATA SOURCE (IN PLANT FILES), FEMP CADD GRID/UTILITY DRAWINGS AND FEMP CONTRACTOR PROJECT DESIGN DOCUMENTS.
2. HORIZONTAL CONTROL SHOWN ON THE DRAWINGS IS BASED UPON NORTH AMERICAN DATUM 1983 (NAD 83). SEE SHEET G0001 FOR PROJECT SURVEY CONTROL.
3. VERTICAL CONTROL SHOWN ON THE DRAWINGS IS BASED UPON NATIONAL GEODETIC VERTICAL DATUM 1929 (NGVD 29). SEE SHEET G0001 FOR PROJECT SURVEY CONTROL.
4. REFERENCES TO SECTIONS (E.G. SEE SECTION 02285) ARE TO THE CONTRACT TECHNICAL SPECIFICATION SECTIONS.
5. SITE PREPARATION DETAILS AND CONTOURS SHOWN IN THIS PACKAGE WERE BASED ON THE PREVIOUSLY PREPARED SITE PREPARATION DESIGN DRAWINGS. ACTUAL CONSTRUCTION MAY DIFFER FROM WHAT IS SHOWN IN THIS PACKAGE. FACILITIES IN AIPII CONSTRUCTED DURING SITE PREPARATION INCLUDE BUT ARE NOT LIMITED TO CONVEYANCE CHANNEL, DITCHES, AND SEDIMENT BASIN. CONTRACTOR SHALL VERIFY EXISTING CONDITIONS AND NOTIFY THE CM IN WRITING OF ANY DEVIATIONS PRIOR TO INITIATING ANY WORK IN THIS AREA.
6. EXCAVATION/REMEDIATION CONTOURS SHOWN ARE APPROXIMATE AND ARE BASED ON A COMBINATION OF FDF 3-D MODELED FRL DEPTH OF CONTAMINATION AND THE DEPTH OF FOUNDATIONS FROM AS-BUILT DRAWINGS.
7. GEOLOGICAL AND CROSS SECTION INFORMATION TAKEN FROM (FEMP) OU-5 RI, OU-5 FS, GEOTECHNICAL REPORTS, PRE-DESIGN SAMPLING AND FEMP 3-D CADD MODEL. THE OU-5 RI, FS, AND GEOTECHNICAL REPORTS ARE AVAILABLE FROM FDF FOR REVIEW UPON REQUEST. ACTUAL GEOLOGICAL CONDITIONS AND DEPTHS SHOWN MAY VARY AND SHALL BE DETERMINED IN THE FIELD DURING CONSTRUCTION. FIELD ADJUST THE EXCAVATION DEPTHS AS REQUIRED TO REMOVE IMPACTED MATERIAL.
8. LOCATION AND DEPTH OF EXISTING UTILITIES ARE APPROXIMATE. FDF WILL MARK ALL UTILITIES IN FIELD. IF SIZE, MATERIAL, LOCATION, OR DEPTH ARE DIFFERENT OR IF UNKNOWN UNCHARTED UTILITIES ARE DISCOVERED, INFORM THE CONSTRUCTION MANAGER BEFORE PROCEEDING. TYPICAL UTILITY EXCAVATION DETAIL ON SHEET G0014.
9. DIMENSIONS SHOWN ON THE CONSTRUCTION DRAWINGS TAKE PRECEDENCE OVER SCALED DIMENSIONS.
10. FIGURED DIMENSIONS AND/OR ELEVATIONS MARKED THUS (+/-) SHALL BE VERIFIED IN THE FIELD BEFORE START OF CONSTRUCTION.
11. MAINTAIN AND PROTECT UTILITY MARKINGS.
12. MANY ASPHALT AND AGGREGATE ROAD SURFACES WITHIN THE WORK AREA WILL BE EXCAVATED BY OTHERS PRIOR TO THE START OF THIS CONTRACT. VERIFY EXISTING CONDITIONS PRIOR TO INITIATING WORK. 1

RELATED DWG NO.	DRAWING TITLE	SHEET NO.
92X-5900-X-00488	PROJECT TITLE SHEET	X0001
92X-5900-X-00489	DRAWING INDEX	X0002
92X-5900-G-00486	EXISTING CONDITIONS PLAN	G0001
92X-5900-G-00498	DETAIL SHEET	G0014

000093

INFORMATION ONLY

REV. NO.	ISSUE OR REVISION PURPOSE - DESCRIPTION	TL	PM	REVD BY
		DETAILS AND DATE		
1	REVISED PER DCN: 20712-002, 009	10/7/98	10/7/98	10/7/98
0	CERTIFIED FOR CONSTRUCTION	FMP 10/7/98	CS 10/7/98	FMP 10/7/98

UNITED STATES DEPARTMENT OF ENERGY
FERNALD ENVIRONMENTAL MANAGEMENT PROJECT

THIS DRAWING PREPARED BY
PARSONS
THE RALPH M. PARSONS CO. - PARSONS MAIN, INC. - ENGINEERING-SCIENCE, INC.
CINCINNATI, OHIO

PROJECT NAME
REMEDIATION AREA 1 - PHASE II
SEWAGE TREATMENT PLANT EXCAVATION PACKAGE

DRAWING TITLE
LEGEND AND GENERAL NOTES

DRAWN BY	DATE	TECHNICAL LEAD	DATE	CHECKED BY	DATE
J.G. ASHWORTH	8/14/98	F.M. PARTON,JR.	8/14/98	F.M. PARTON,JR.	8/14/98

PLANT/BLDG. NO.	FLOOR	SCALE	CLASS
		NONE	

SUBMITTED FOR 30% ISSUE	SUBMITTED FOR 60% ISSUE	SUBMITTED FOR 90% ISSUE
TECH LEAD N/A	TECH LEAD N/A	TECH LEAD N/A
DATE	DATE	DATE

PO NUMBER	TOP PROJECT NO.	DRAWING INDEX CODE NO.	SHEET NO.	REV. NO.
TOP-021	20712	92X-5900-X-00490	X0003	1

2108

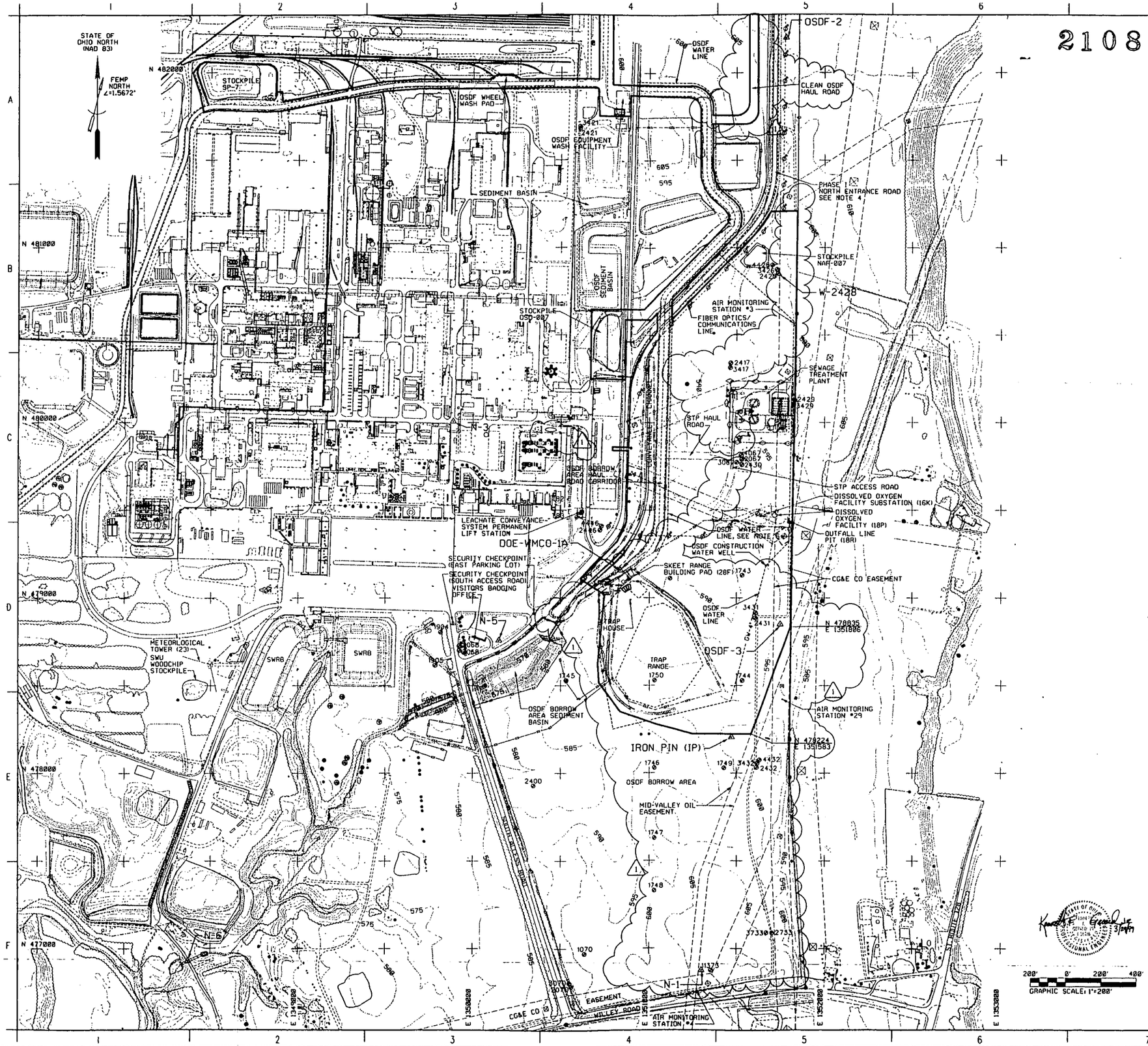

NOTES

1. FOR UTILITIES SEE SHEETS G0003 AND G0005.
2. BORINGS AND WELLS LOCATIONS SHOWN WERE PROVIDED BY FDF. ADDITIONAL WELLS AND BORINGS OUTSIDE THE WORK AREA NOT SHOWN.
3. THERE SHALL BE NO WORK PERFORMED OR EQUIPMENT TO ENTER THE MID-VALLEY OIL EASEMENT WITHOUT WRITTEN AUTHORIZATION FROM THE CONSTRUCTION MANAGER.
4. CONTOURS SHOWN ALONG THE PHASE I NORTH ENTRANCE ROAD RELOCATION WERE DEVELOPED FROM CFC DRAWINGS. AS-BUILT CONDITIONS MAY BE DIFFERENT. CONTRACTOR SHALL VERIFY EXISTING CONDITIONS AND NOTIFY THE CONSTRUCTION MANAGER IN WRITING OF ANY DEVIATIONS PRIOR TO INITIATING ANY WORK IN THIS AREA.
5. 1
6. EXISTING OSDF WATER LINE IS ON TOP-OF-GROUND AND IS SHOWN IN APPROXIMATE LOCATION ONLY. VERIFY ACTUAL LOCATION PRIOR TO CONSTRUCTION.

BENCHMARK INFORMATION

BENCHMARK	NORTHING	EASTING	ELEVATION	REMARKS
N-1	476876.20	1351301.43	607.88	EXISTING
N-3	480007.25	1349803.72	579.44	EXISTING
N-5	478758.71	1350146.60	580.37	EXISTING
N-6	476928.55	1348369.68	551.99	EXISTING
IRON PIN (IP)	478205.58	1351472.81	603.32	EXISTING
DOE-WMCO-1A	479157.59	1350835.05	585.57	EXISTING
W-2428	480850.13	1351732.75	600.79	EXISTING
OSDF-2	482199.94	1351779.16	615.82	EXISTING
OSDF-3	478850.42	1351749.33	595.61	EXISTING

RELATED DWG NO.	DRAWING TITLE	SHEET NO.
92X-5900-X-00489	DRAWING INDEX	X0002
92X-5900-X-00490	LEGEND AND GENERAL NOTES	X0003
92X-5900-G-00463	SITE PREP AND GENERAL UTILITY PLAN	G0003
92X-5900-G-00434	ABOVE WAC EXCAVATION AND STP AREA UTILITY REMOVAL PLAN	G0005

INFORMATION ONLY

000004

REV. NO.	ISSUE OR REVISION PURPOSE - DESCRIPTION	IL	PM	REVIS BY DETAILS AND DATE
1	REVISED DCN: 20712-002, 013, 014	[illegible] 3/30/01	CS 3/30/01	[illegible] 3/30/01
0	CERTIFIED FOR CONSTRUCTION	FMP 10/7/98	CS 10/7/98	FMP 10/7/98

UNITED STATES DEPARTMENT OF ENERGY
FERNALD ENVIRONMENTAL MANAGEMENT PROJECT

THIS DRAWING PREPARED BY
PARSONS
THE RALPH M. PARSONS CO. - PARSONS MAIN, INC. - ENGINEERING-SCIENCE, INC.
CINCINNATI, OHIO

PROJECT NAME
REMEDIATION AREA 1, PHASE II
SEWAGE TREATMENT PLANT EXCAVATION PACKAGE

DRAWING TITLE
CIVIL
EXISTING CONDITIONS PLAN

DRAWN BY	DATE	TECHNICAL LEAD	DATE	CHECKED BY	DATE
J.G. ASHWORTH	8/14/98	F.M. PARTON, JR.	8/14/98	S. HAW	8/14/98
PLANT/BLDG NO.		FLOOR		SCALE 1"=200'	CLASS

SUBMITTED FOR 30% ISSUE	SUBMITTED FOR 60% ISSUE	SUBMITTED FOR 90% ISSUE
TECH LEAD N/A	TECH LEAD N/A	TECH LEAD N/A
DATE	DATE	DATE

PO NUMBER	TOP PROJECT NO.	DRAWING INDEX CODE NO.	SHEET NO.	REV. NO.
TOP-021	20712	92X-5900-G-00486	G0001	1

2108

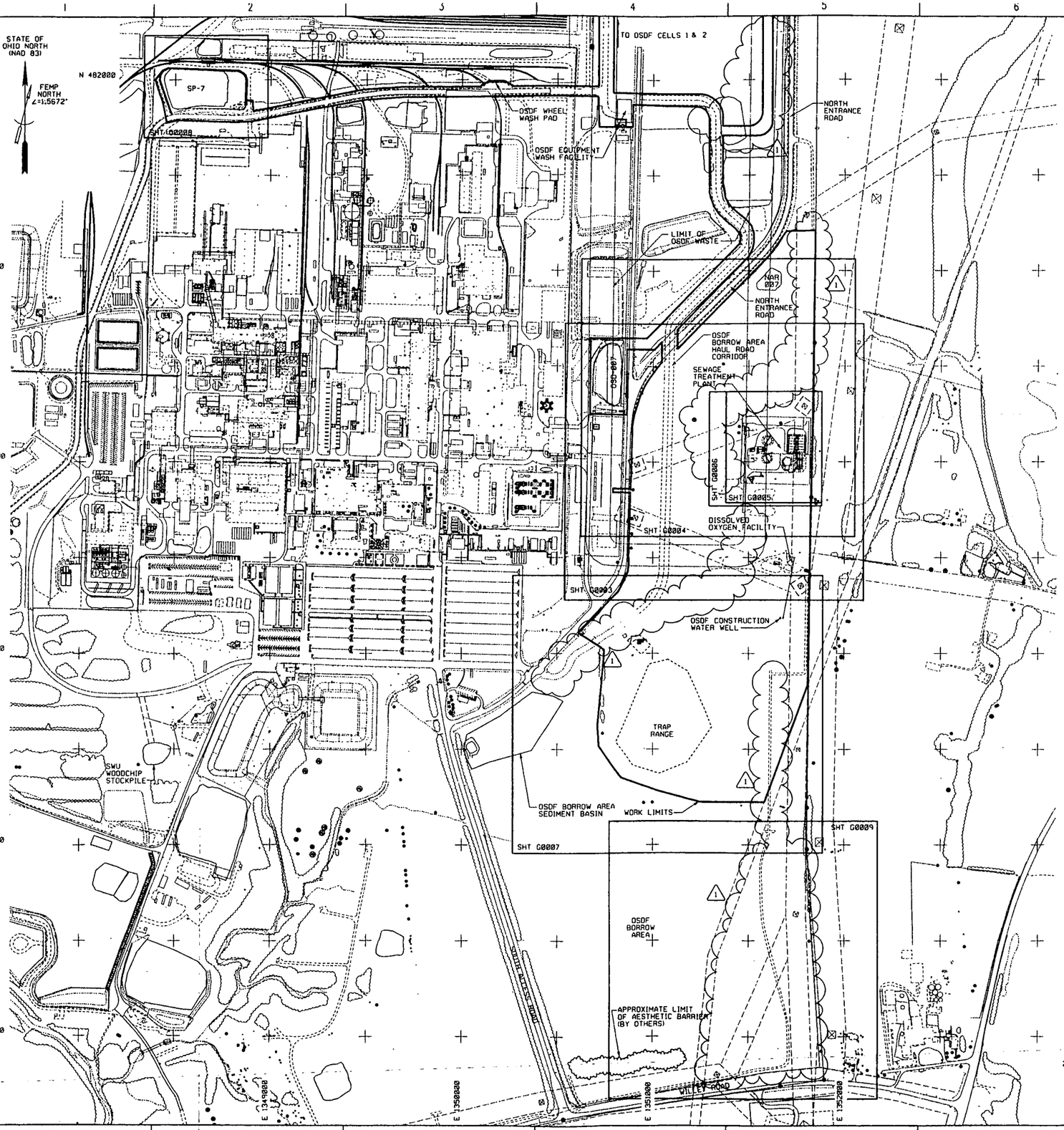

NOTES

1. FOR EXISTING CONDITIONS SEE SHEET G0001. FOR EXISTING UTILITIES SEE SHEETS G0003 AND G0005.

RELATED DWG NO.	DRAWING TITLE	SHEET NO.
92X-5900-X-00489	DRAWING INDEX	X0002
92X-5900-X-00490	LEGEND AND GENERAL NOTES	X0003
92X-5900-G-00486	EXISTING CONDITIONS PLAN	G0001
92X-5900-G-00463	SITE PREP & GENERAL UTILITY REMOVAL PLAN	G0003
92X-5900-G-00458	GENERAL EXCAVATION PLAN	G0004
92X-5900-G-00434	ABOVE VAC EXCAVATION AND STP AREA UTILITY REMOVAL PLAN	G0005
92X-5900-G-00503	STP DEEP EXCAVATION PLAN	G0006
92X-5900-G-00504	TRAP RANGE AREA PLAN	G0007
92X-5900-G-00506	STP BACKFILL BORROW AREA	G0009

INFORMATION ONLY

000005

REV. NO.	ISSUE OR REVISION PURPOSE - DESCRIPTION	IL	PM	REVD BY
		INITIALS AND DATE		
1	REVISED PER DCN 20712-002,013, 014	[illegible] 3/30/99	CS 3/30/99	[illegible] 3/30/99
0	CERTIFIED FOR CONSTRUCTION	FMP 10/7/98	CS 10/7/98	FMP 10/7/98

UNITED STATES DEPARTMENT OF ENERGY
FERNALD ENVIRONMENTAL MANAGEMENT PROJECT

THIS DRAWING PREPARED BY
PARSONS
THE RALPH M. PARSONS CO. - PARSONS MAIN, INC. - ENGINEERING-SCIENCE, INC.
CINCINNATI, OHIO

PROJECT NAME
REMEDIATION AREA 1, PHASE II
SEWAGE TREATMENT PLANT EXCAVATION PACKAGE

DRAWING TITLE
CIVIL
MASTER KEY PLAN

DRAWN BY	DATE	TECHNICAL LEAD	DATE	CHECKED BY	DATE
J.G. ASHWORTH	8/14/98	F.M. PARTON, JR.	8/14/98	F.M. PARTON, JR.	8/14/98
PLANT/BLDG. NO.		FLOOR		SCALE 1"=200'	CLASS
SUBMITTED FOR 30% ISSUE		SUBMITTED FOR 60% ISSUE		SUBMITTED FOR 90% ISSUE	
TECH LEAD N/A		TECH LEAD N/A		TECH LEAD N/A	
DATE		DATE		DATE	

PO NUMBER	TOP PROJECT NO.	DRAWING INDEX CODE NO.	SHEET NO.	REV. NO.
TOP-021	20712	92X-5900-G-00492	G0002	1

2108

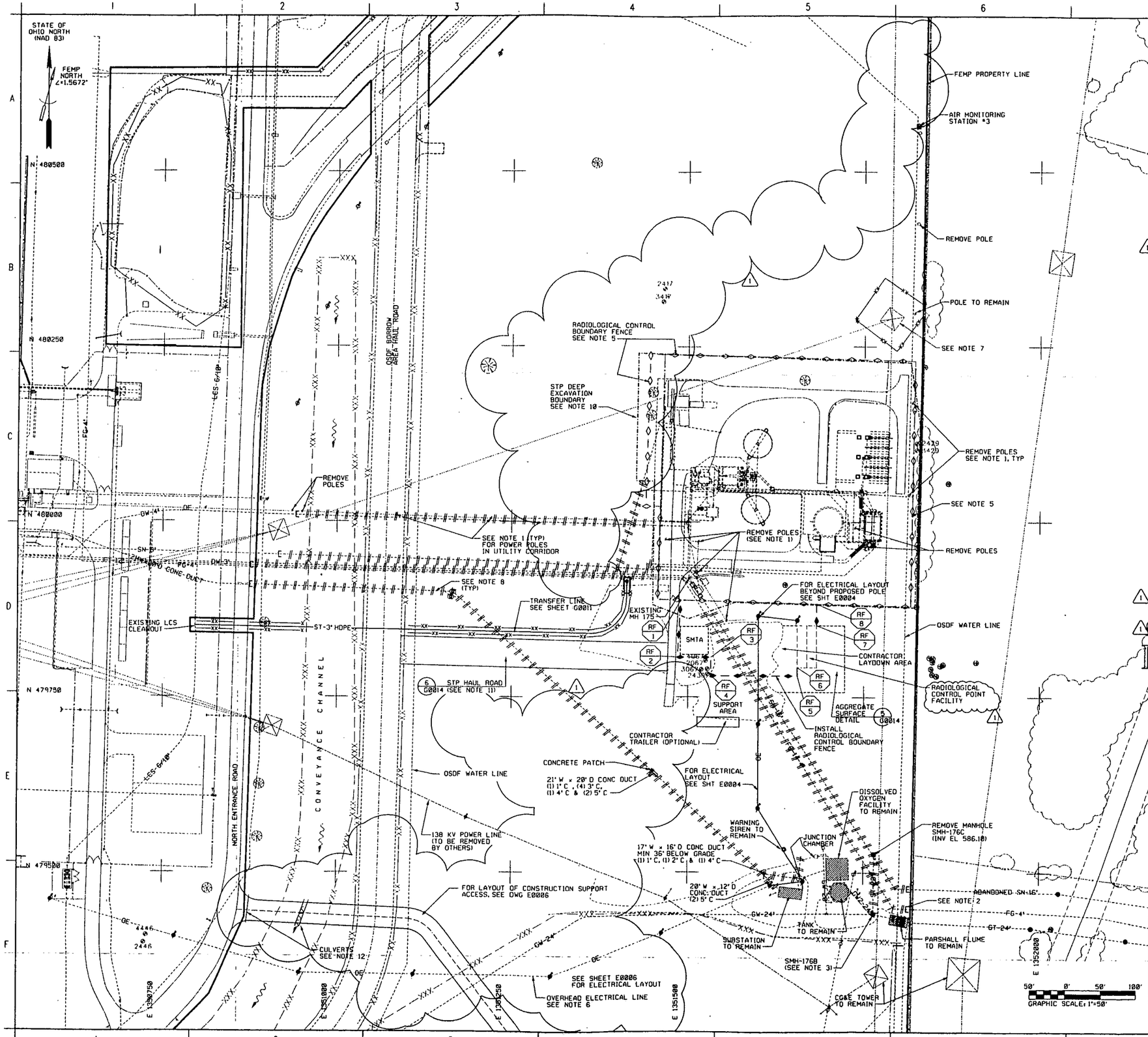

NOTES

1. REMOVE THE REMAINDER OF THE POLES WHICH WERE CUT OFF APPROXIMATELY 2' ABOVE GRADE.
2. EXISTING UTILITIES TO BE REMOVED HAVE BEEN CUT, PURGED, AND CAPPED. UTILITY LINES SHALL BE REMOVED PER SECTION 02205. CG&E HAS CUT, PURGED AND CAPPED THE FUEL GAS LINE (FG-4") AT THE PROPERTY LINE. CONTRACTOR TO REMOVE LINE TO CG&E CAP.
3. SEAL OPENING IN MANHOLE 176B PRIOR TO REMOVAL OF ST-20" IN ACCORDANCE WITH SECTION 02205.
4. LOCATIONS GIVEN FOR RADIOLOGICAL CONTROL FENCE ARE APPROXIMATE AND MAY BE FIELD ADJUSTED WITH APPROVAL FROM CONSTRUCTION MANAGER.
5. THE INITIAL RADIOLOGICAL CONTROL BOUNDARY SHALL GENERALLY FOLLOW THE EXISTING STP CHAIN LINK FENCE AS SHOWN ON THIS DRAWING. AFTER REMOVAL OF UTILITIES AND 6' STRIPPING AREAS OUTSIDE STP AREA, AND EXCAVATION OF ABOVE WAC MATERIALS, (INCLUDING DIGESTER SLUDGE AND SLUDGE CAKE), RADIOLOGICAL CONTROL BOUNDARY SHALL BE MOVED TO THE LOCATION SHOWN ON SHEET G0004. AFTER THE NEW RADIOLOGICAL CONTROL BOUNDARY FENCE IS SET UP, REMOVE THE STP CHAIN LINK FENCE.
6. LOCATION OF OVERHEAD ELECTRICAL LINE SHOWN IS APPROXIMATE, FIELD VERIFY LOCATION PRIOR TO THE START OF WORK.
7. SEE SHEET G0004 FOR OPERATIONAL REQUIREMENTS AROUND CG&E TOWER.
8. FOR TYPICAL UTILITY CONDITIONS AND TYPICAL UTILITY PIPE REMOVAL, SEE DETAILS ON SHEET G0019.
9. SOME ABOVE GROUND STRUCTURES AND FACILITIES IN STP AREA HAVE BEEN REMOVED. SEE SHEET G0005 AND TECHNICAL REFERENCE DRAWINGS FOR DESCRIPTIONS OF FORMER FACILITIES.
10. FOR LOCATION OF STP DEEP EXCAVATION BOUNDARY AND 6' STRIPPING AREA, SEE SHEET G0004.
11. STP HAUL ROAD TO BE CONSTRUCTED BY OTHERS AT THE APPROXIMATE LOCATION SHOWN PRIOR TO BEGINNING OF THIS PROJECT. SEE SHEET G0014 FOR DETAILS OF CONSTRUCTION AND MINIMUM REQUIREMENTS FOR MAINTAINING SURFACE OF CERTIFIED SOIL. REMOVE STP HAUL ROAD AT THE END OF PROJECT. HANDLE SOIL SURFACE MATERIAL AS IMPACTED MATERIAL IN ACCORDANCE WITH SECTION 02205.
12. FOR INFORMATION ON CULVERTS FOR CONSTRUCTION SUPPORT ACCESS SEE SECTIONS 02150 AND 02206.

RADIOLOGICAL CONTROL FENCE COORDINATES (RF), SEE NOTE 4			
POINT	NORTHING	EASTING	DESCRIPTION
1	479886	1351490	MEET EXIST FENCE
2	479807	1351485	BEND
3	479807	1351533	BEND
4	479781	1351533	BEND
5	479781	1351655	BEND
6*	479792	1351655	MEET TRAILER
7*	479852	1351683	MEET TRAILER
8	479883	1351683	MEET EXIST FENCE

* APPROXIMATE

RELATED DWG NO.	DRAWING TITLE	SHEET NO.
92X-5900-X-00489	DRAWING INDEX	X0002
92X-5900-X-00490	LEGEND AND GENERAL NOTES	X0003
92X-5900-G-00458	GENERAL EXCAVATION PLAN	G0004
92X-5900-G-00434	ABOVE WAC EXCAVATION AND STP AREA UTILITY REMOVAL PLAN	G0005
92X-5900-G-00517	TRANSFER LINE PLAN & PROFILE	G0011
92X-5900-G-00498	DETAIL SHEET	G0014
92X-5900-G-01002	CIVIL - UTILITY REMOVAL METHODS	G0019
92X-5900-E-00473	ELECTRICAL - POWER PLAN	E0004
92X-5900-E-01003	ELECTRICAL- PLAN AND SCHEDULES	E0006

INFORMATION ONLY

000006

REV. NO.	ISSUE OR REVISION PURPOSE - DESCRIPTION	TL	PM	REVIEW BY
1	REVISED PER DCN: 20712-002, 004, 017, 018	3/18/99	CS 3/18/99	3/18/99
0	CERTIFIED FOR CONSTRUCTION	FMP 10/7/98	CS 10/7/98	FMP 10/7/98

INITIALS AND DATE

UNITED STATES DEPARTMENT OF ENERGY
FERNALD ENVIRONMENTAL MANAGEMENT PROJECT

THIS DRAWING PREPARED BY
PARSONS
THE RALPH M. PARSONS CO. - PARSONS MAIN, INC. - ENGINEERING-SCIENCE, INC.
CINCINNATI, OHIO

PROJECT NAME
REMEDIATION AREA 1, PHASE II
SEWAGE TREATMENT PLANT EXCAVATION PACKAGE

DRAWING TITLE
CIVIL
SITE PREP & GENERAL UTILITY REMOVAL PLAN

DRAWN BY	DATE	TECHNICAL LEAD	DATE	CHECKED BY	DATE
J.G. ASHWORTH	8/14/98	F.M. PARTON, JR.	8/14/98	F.M. PARTON, JR.	8/14/98

PLANT/BLDG. NO. — FLOOR — SCALE 1"=50' — CLASS

SUBMITTED FOR 30% ISSUE	SUBMITTED FOR 60% ISSUE	SUBMITTED FOR 90% ISSUE
TECH LEAD K. GERARD	TECH LEAD N/A	TECH LEAD K. GERARD
DATE 6/28/97	DATE	DATE 11/19/97

PO NUMBER	FDF PROJECT NO.	DRAWING INDEX CODE NO.	SHEET NO.	REV. NO.
TOP-021	20712	92X-5900-G-00463	G0003	1

2108

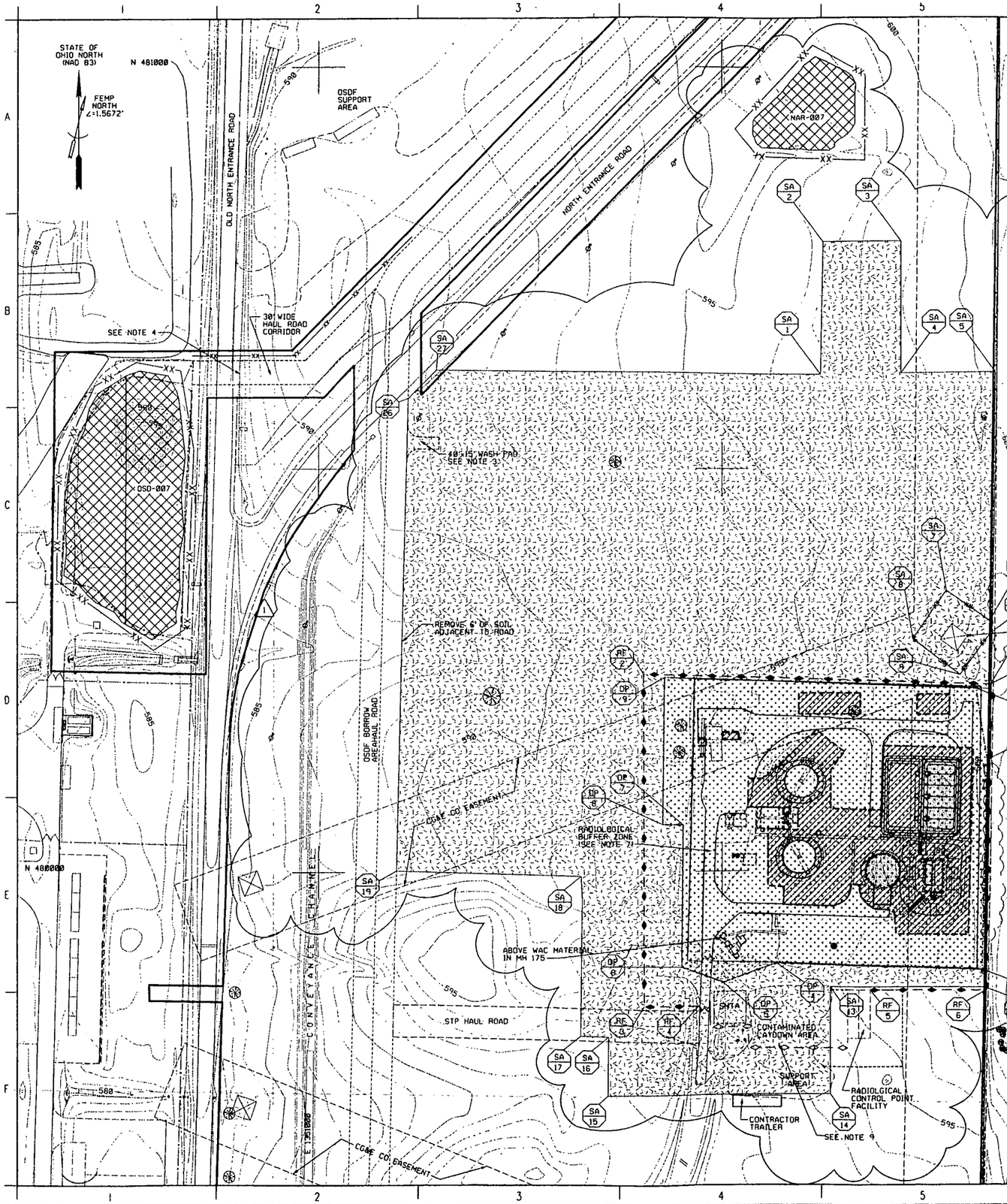

STP DEEP EXCAVATION BOUNDARY (DP)			
POINT	NORTHING	EASTING	DESCRIPTION
1	480227	1351815	STP DEEP EXCAVATION BOUNDARY
2	480138	1351829	STP DEEP EXCAVATION BOUNDARY
3	479878	1351822	STP DEEP EXCAVATION BOUNDARY
4	479885	1351567	STP DEEP EXCAVATION BOUNDARY
5	479862	1351501	STP DEEP EXCAVATION BOUNDARY
6	479882	1351450	STP DEEP EXCAVATION BOUNDARY
7	480058	1351452	STP DEEP EXCAVATION BOUNDARY
8	480058	1351426	STP DEEP EXCAVATION BOUNDARY
9	480241	1351428	STP DEEP EXCAVATION BOUNDARY

FOR COORDINATE LOCATIONS OF ABOVE WAC AREA BOUNDARIES, SEE SHEET G0005.

6' STRIPPING AREA BOUNDARY (SA)			
POINT	NORTHING	EASTING	DESCRIPTION
1	480617	1351622	CORNER 6" STRIPPING AREA
2	480782	1351626	CORNER 6" STRIPPING AREA
3	480782	1351721	CORNER 6" STRIPPING AREA
4	480618	1351722	CORNER 6" STRIPPING AREA
5	480620	1351838	CORNER 6" STRIPPING AREA
6	480311	1351832	CORNER 6" STRIPPING AREA
7	480348	1351778	CORNER 6" STRIPPING AREA
8	480289	1351737	CORNER 6" STRIPPING AREA
9	480244	1351795	CORNER 6" STRIPPING AREA
10	480295	1351832	CORNER 6" STRIPPING AREA
11	480229	1351831	CORNER 6" STRIPPING AREA
12	479856	1351825	CORNER 6" STRIPPING AREA
13	479856	1351634	CORNER 6" STRIPPING AREA
14	479724	1351634	CORNER 6" STRIPPING AREA
15	479722	1351359	CORNER 6" STRIPPING AREA
16	479795	1351360	CORNER 6" STRIPPING AREA
17	479796	1351325	CORNER 6" STRIPPING AREA
18	479994	1351326	CORNER 6" STRIPPING AREA
19	480002	1351097	CORNER 6" STRIPPING AREA
20			NOT USED
21			NOT USED
22			NOT USED
23			NOT USED
24			NOT USED
25			NOT USED
26	480588	1351112	CORNER 6" STRIPPING AREA
27	480623	1351146	CORNER 6" STRIPPING AREA

RADIOLOGICAL CONTROL FENCE COORDINATES (RF) SEE NOTE 5			
POINT	NORTHING	EASTING	DESCRIPTION
1	480232	1351833	BEND
2	480246	1351403	BEND
3	479833	1351403	BEND
4	479833	1351471	GATE
5	479852	1351683	MEET TRAILER
6	479852	1351827	BEND

NOTES

1. REMOVE SOIL WITHIN THE 6' STRIPPING AREA AS IMPACTED MATERIAL IN ACCORDANCE WITH SPECIFICATION SECTION 02205.
2. INSTALL CONSTRUCTION FENCE 25' FROM CG&E TOWER. WITHIN THIS BUFFER, USE LIGHT EQUIPMENT TO PERFORM 6" STRIPPING. HEAVY EQUIPMENT IS NOT PERMITTED WITHIN THIS AREA.
3. FIELD LOCATE WASH PAD AS DIRECTED BY CONSTRUCTION MANAGER. USE WASH PAD TO WASH TRUCKS WHEN HAULING MATERIAL FROM NAR-007 AND 6" STRIPPING AREAS NORTH OF STP HAUL ROAD. REMOVE WASH PAD AT COMPLETION OF STP EXCAVATION PROJECT.
4. INSTALL 24" CMP IN EXISTING DITCH. INSTALL RAMP FROM OLD NORTH ENTRANCE ROAD OVER CULVERT TO OSDF BORROW AREA HAUL ROAD. INSTALL CONSTRUCTION FENCE ALONG NORTH SIDE OF ACCESS CORRIDOR FROM OLD NORTH ENTRANCE ROAD TO OSDF BORROW AREA HAUL ROAD TO PROVIDE SEGREGATION FROM OSDF SUPPORT AREA. REMOVE CONSTRUCTION FENCE AT COMPLETION OF OSD-007 EXCAVATION. RESTORE ANY DISTURBED FENCES IN THIS AREA TO PRECONSTRUCTION CONDITION
5. LOCATIONS GIVEN FOR RADIOLOGICAL CONTROL FENCE MAY BE FIELD ADJUSTED WITH APPROVAL FROM CONSTRUCTION MANAGER.
6. NEW RADIOLOGICAL CONTROL FENCE SHALL BE INSTALLED AND STP FENCE REMOVED BEFORE START OF STP DEEP EXCAVATION.
7. EXISTING ASPHALT PAVEMENT AREAS SHALL BE USED AS A LOADING BUFFER AREA AS DIRECTED BY CONSTRUCTION MANAGER.
8. REMOVAL OF DIGESTER SLUDGE AND RELATED EXCAVATION OF ABOVE WAC-T6-99 SOIL FOR SLUDGE STABILIZATION SHALL TAKE PRIORITY OVER OTHER EXCAVATIONS WITHIN THE STP.
9. MAINTAIN EXISTING GRAVEL IN SUPPORT AREA. PERFORM 6" STRIPPING IN THIS AREA UPON COMPLETION OF EXCAVATION ACTIVITIES.

EXCAVATION TYPES:

1. ABOVE WAC - MATERIAL (SEE SHEET G0005)
3. ABOVE WAC - DIGESTER SLUDGE (SEE SHEET G0005)
4. STP DEEP EXCAVATION (SEE SHEET G0006)
5. 6" STRIPPING AREA (SEE NOTE 1)
6. STOCKPILES - NAR-007 & OSD-007
7. LEAD CONTAMINATED SOIL (SEE SHEET G0007)
8. UTILITY REMOVALS - OUTSIDE STP AREA (SEE SHEET G0003) IN STP AREA (SEE SHEET G0005)

RELATED DWG NO.	DRAWING TITLE	SHEET NO.
92X-5900-X-00489	DRAWING INDEX	X0002
92X-5900-X-00490	LEGEND AND GENERAL NOTES	X0003
92X-5900-G-00463	SITE PREP & GENERAL UTILITY REMOVAL PLAN	G0003
92X-5900-G-00434	ABOVE WAC EXCAVATION AND STP AREA UTILITY REMOVAL PLAN	G0005
92X-5900-G-00503	STP DEEP EXCAVATION PLAN	G0006
92X-5900-G-00504	TRAP RANGE AREA PLAN	G0007

000007
INFORMATION ONLY

REV. NO.	ISSUE OR REVISION PURPOSE - DESCRIPTION	TL	PM	REVD BY
1	REVISED PER DCN: 20712-002, 004, 006, 009, 010, 012, 017, 022	9/9/99	9/9/99 CS	
0	CERTIFIED FOR CONSTRUCTION	FMP 10/7/98	CS 10/7/98	FMP 10/7/98

INITIALS AND DATE

UNITED STATES DEPARTMENT OF ENERGY
FERNALD ENVIRONMENTAL MANAGEMENT PROJECT

THIS DRAWING PREPARED BY
PARSONS
THE RALPH M. PARSONS CO. - PARSONS MAIN, INC. - ENGINEERING-SCIENCE, INC.
CINCINNATI, OHIO

PROJECT NAME
REMEDIATION AREA 1 - PHASE II
SEWAGE TREATMENT PLANT EXCAVATION PACKAGE

DRAWING TITLE
CIVIL
GENERAL EXCAVATION PLAN

DRAWN BY	DATE	TECHNICAL LEAD	DATE	CHECKED BY	DATE
J.G. ASHWORTH	8/14/98	F.M. PARTON, JR.	8/14/98	F.M. PARTON, JR.	8/14/98
PLANT/BLDG. NO.		TEOOR		SCALE 1"=50'	CLASS

SUBMITTED FOR 30% ISSUE	SUBMITTED FOR 90% ISSUE	SUBMITTED FOR 90% ISSUE
TECH LEAD N/A	TECH LEAD N/A	TECH LEAD K. GERARD
DATE	DATE	DATE 11/19/97

PO NUMBER	FOR PROJECT NO.	DRAWING INDEX CODE NO.	SHEET NO.	REV. NO.
TOP-021	20712	92X-5900-G-00458	G0004	1

2108

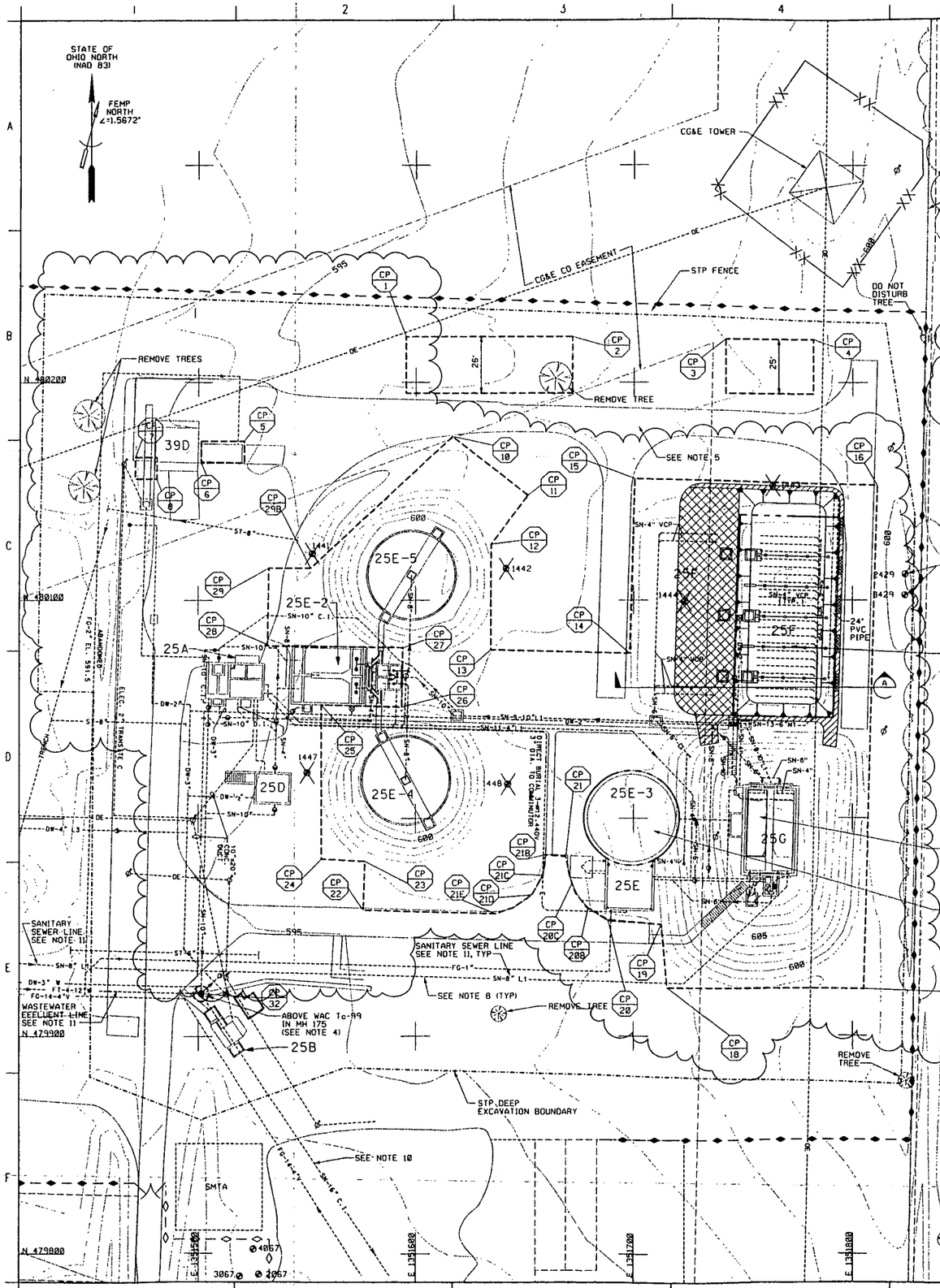

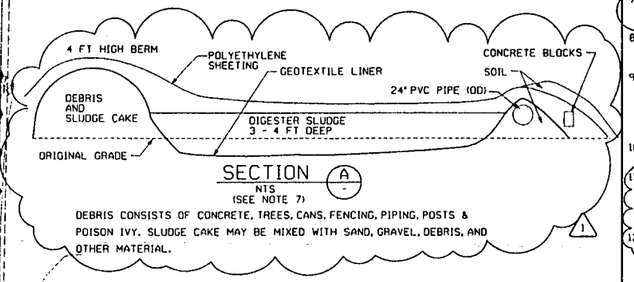

SECTION A
NTS
(SEE NOTE 7)

DEBRIS CONSISTS OF CONCRETE, TREES, CANS, FENCING, PIPING, POSTS & POISON IVY. SLUDGE CAKE MAY BE MIXED WITH SAND, GRAVEL, DEBRIS, AND OTHER MATERIAL.

ABOVE WAC EXCAVATION AREA COORDINATE POINTS (CP)			
POINT	NORTHING	EASTING	DESCRIPTION
1	480221	1351595	CORNER, Tc-99
2	480221	1351672	CORNER, Tc-99
3	480220	1351742	CORNER, Tc-99
4	480220	1351792	CORNER, Tc-99
5	480173	1351521	CORNER, EXCAVATE 4'
6	480163	1351501	CORNER, EXCAVATE 4'
7	480166	1351470	CORNER, EXCAVATE 4'
8	480155	1351481	CORNER, EXCAVATE 4'
9	NOT USED		
10	480175	1351617	CORNER, Tc-99
11	480148	1351652	CORNER, Tc-99
12	480126	1351635	CORNER, Tc-99
13	480077	1351635	CORNER Tc-99
14	480076	1351698	CORNER, Tc-99
15	480156	1351700	CORNER, Tc-99
16	480154	1351811	CORNER, Tc-99
17	479922	1351805	CORNER, Tc-99
18	479922	1351715	CORNER, Tc-99
19	479951	1351713	CORNER, Tc-99
20	479953	1351688	CORNER, Tc-99
20B	479958	1351679	CORNER, Tc-99
20C	479970	1351672	CORNER, Tc-99
21	479982	1351669	CORNER, Tc-99
21B	479983	1351668	CORNER, Tc-99
21C	479974	1351659	CORNER, Tc-99
21D	479965	1351654	CORNER, Tc-99
21E	479956	1351637	CORNER, Tc-99
22	479958	1351576	CORNER, Tc-99
23	479980	1351577	CORNER, Tc-99
24	479981	1351557	CORNER, Tc-99
25	480062	1351557	CORNER, Tc-99
26	480051	1351594	CORNER, Tc-99
27	480070	1351595	CORNER, Tc-99
28	480080	1351592	CORNER, Tc-99
29	480115	1351533	CORNER, Tc-99
29B	480115	1351552	CORNER, Tc-99
30	NOT USED		
31	NOT USED		
32	±479920	±1351901	MH 175

SEWAGE TREATMENT PLANT LEGEND	
BLDG. NO.	DESCRIPTION
25A	CHLORINATION BUILDING
25B	SEWER SAMPLER BUILDING
25D	U.V. DISINFECTION BUILDING
25E	DIGESTER CONTROL BUILDING
25E-2	FINAL SEDIMENTATION TANKS
25E-3	DIGESTER
25E-4	TRICKLING FILTER
25E-5	TRICKLING FILTER
25F	SLUDGE DRYING BEDS
25G	PRIMARY SEDIMENTATION TANK
39D	INCINERATOR DOCK

SEE NOTE 1

GRAPHIC SCALE: 1"=20'

NOTES

1. SOME AT GRADE FEATURES HAVE BEEN REMOVED BY OTHERS. SEE PART 6 FOR REMAINING FACILITIES TO BE REMOVED. SEE TECHNICAL REFERENCE DOCUMENT FOR DRAWINGS OF EXISTING FACILITIES. FOR DEPTH AND SIZE OF FOUNDATIONS, BELOW GRADE WALLS, UTILITIES ETC.
2. ALL AT GRADE AND BELOW GRADE FEATURES (FOUNDATIONS, UTILITIES, ETC.) WITHIN STP DEEP EXCAVATION BOUNDARY ARE TO BE REMOVED. STP FENCE, CONCRETE SLABS AND FOUNDATIONS SHALL BE REMOVED IN ACCORDANCE WITH SECTION 02205. REMOVE ALL UNDERGROUND UTILITIES WITHIN STP DEEP EXCAVATION BOUNDARY. SIZE MATERIAL TO MEET OSDF PHYSICAL WAC.
4. SEDIMENTS LOCATED WITHIN MH 175 SHALL BE REMOVED AS ABOVE-WAC MATERIAL AND HAULED TO SP-7. THE MANHOLE ITSELF SHALL BE REMOVED AND MANAGED AS IMPACTED DEBRIS IN ACCORDANCE WITH SECTION 02205.
5. EXISTING ASPHALT PAVEMENT SHALL BE USED AS A BUFFER AREA FOR LOADING PURPOSES IN ACCORDANCE WITH SECTION 02205.
6. PROTECT EXISTING MONITORING WELLS IN ACCORDANCE WITH SECTION 02100.
7. PLAN VIEW AND CROSS SECTION OF SLUDGE DRYING BEDS TAKEN FROM VISUAL OBSERVATION. VERIFY CONDITION OF SLUDGE DRYING BEDS PRIOR TO EXCAVATING IN ACCORDANCE WITH SECTION 02205.
8. WHERE UTILITY REMOVAL IS DEEPER THAN STP DEEP EXCAVATION, EXCAVATE BELOW UTILITY LINE 6 INCHES. TRENCH SIDE SLOPES SHALL BE 2' HORIZONTAL TO 1' VERTICAL.
9. ABOVE WAC DIGESTER SLUDGE HAS BEEN PLACED IN EAST SLUDGE DRYING BED AND WEST CHAMBER OF PRIMARY SEDIMENTATION BASIN. SOME ABOVE WAC DIGESTER SLUDGE REMAINS IN DIGESTER. THE ABOVE WAC SLUDGE CAKE AND ABOVE WAC DIGESTER SLUDGE ARE SEPARATED BY A GEOTEXTILE. EXCAVATE AND TRANSPORT IN ACCORDANCE WITH SECTION 02205.
10. FOR EXTENT OF UTILITY LINE REMOVAL BEYOND STP DEEP EXCAVATION. SEE SHEET G0003.
11. ALL SANITARY SEWER LINES WITHIN STP DEEP EXCAVATION BOUNDARY. THE SN-8" LINE THAT DISCHARGES INTO THE STP, AND THE FT-12" LINE THAT DISCHARGES INTO MH 175 SHALL BE REMOVED AS ABOVE-WAC DEBRIS. ABOVE-WAC DEBRIS SHALL BE SIZED TO MEET CRITERIA SPECIFIED IN SECTION 02205.
12. EXCAVATIONS SHALL BE EXECUTED IN ACCORDANCE WITH SECTION 02205.

RELATED DWG NO.	DRAWING TITLE	SHEET NO.
92X-5900-X-00489	DRAWING INDEX	X0002
92X-5900-X-00490	LEGEND AND GENERAL NOTES	X0003
92X-5900-G-00463	SITE PREP & GENERAL UTILITY REMOVAL PLAN	G0003

000008

INFORMATION ONLY

REV. NO.	ISSUE OR REVISION PURPOSE - DESCRIPTION	TL	PM	REVIS BY
1	REVISED PER DCN: 20712-009, 015, 016, 017, 019, 020, 022	KG 3/24/99	CS 3/24/99	3/24/99
0	CERTIFIED FOR CONSTRUCTION	FMP 10/7/98	CS 10/7/98	FMP 10/7/98
		INITIALS AND DATE		

UNITED STATES DEPARTMENT OF ENERGY
FERNALD ENVIRONMENTAL MANAGEMENT PROJECT

THIS DRAWING PREPARED BY
PARSONS
THE RALPH M. PARSONS CO. - PARSONS MAIN, INC. - ENGINEERING-SCIENCE, INC.
CINCINNATI, OHIO

PROJECT NAME
REMEDIATION AREA 1, PHASE II
SEWAGE TREATMENT PLANT EXCAVATION PACKAGE

DRAWING TITLE
CIVIL
ABOVE WAC EXCAVATION AND STP AREA
UTILITY REMOVAL PLAN

DRAWN BY	DATE	TECHNICAL LEAD	DATE	CHECKED BY	DATE
J.G. ASHWORTH	8/14/98	F.M. PARTON, JR.	8/14/98	F.M. PARTON, JR.	8/14/98
PLANT/BLDG. NO.		FLOOR		SCALE 1"=20'	CLASS

SUBMITTED FOR 30% ISSUE	SUBMITTED FOR 60% ISSUE	SUBMITTED FOR 90% ISSUE
TECH LEAD K. GERARD	TECH LEAD N/A	TECH LEAD K. GERARD
DATE 6/20/97	DATE	DATE 11/19/97

PO NUMBER	FOR PROJECT NO.	DRAWING INDEX CODE NO.	SHEET NO.	REV. NO.
TOP-021	20712	92X-5900-G-00434	G0005	1

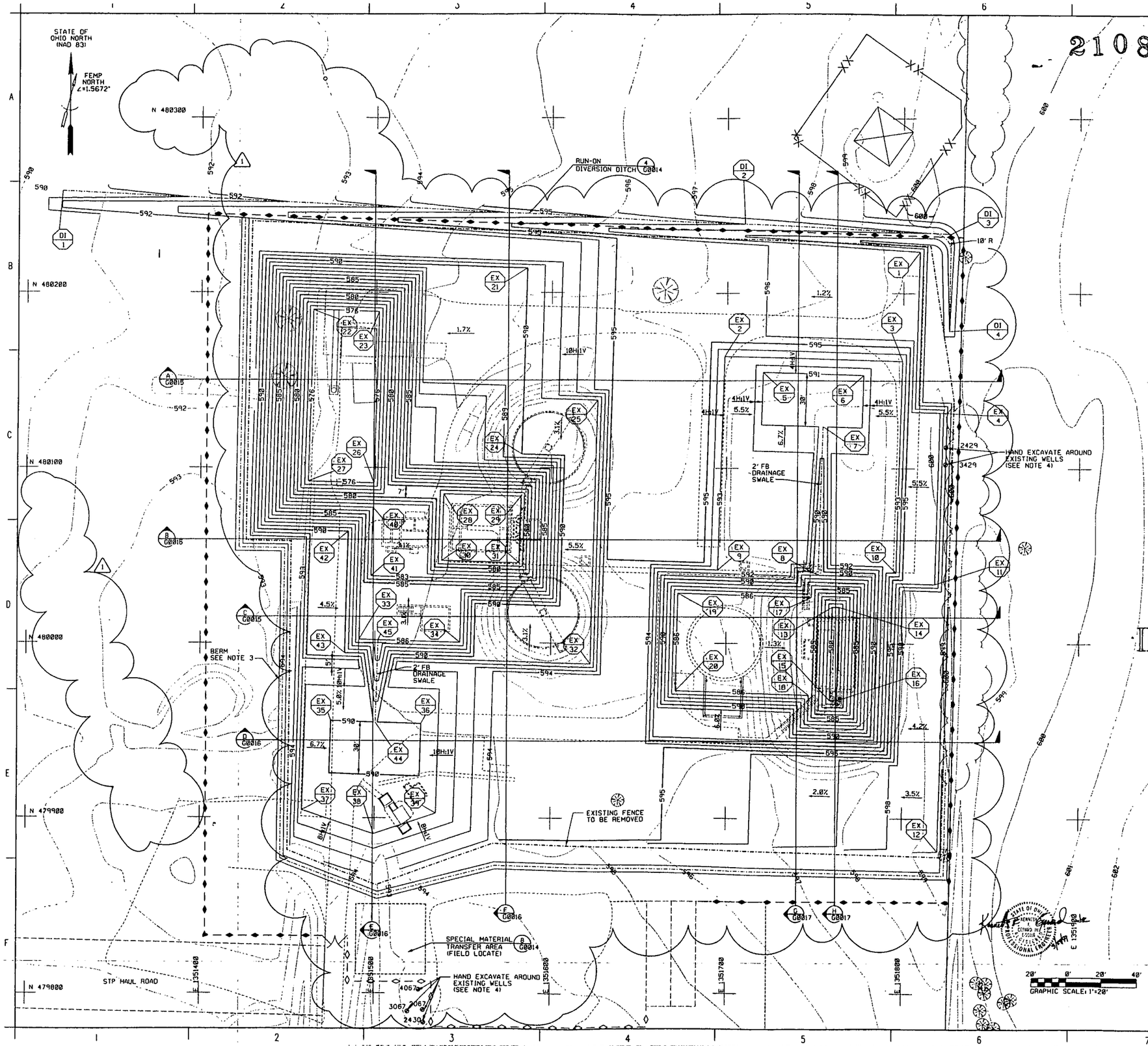

2108

NOTES

1. EXCAVATION CONTOURS SHOWN ARE APPROXIMATE AND ARE BASED ON FDF MODELED FAL DEPTH OF CONTAMINATION AND DEPTH OF FOUNDATIONS FROM TECHNICAL REFERENCE DRAWINGS. EXCAVATE TO CONTOURS SHOWN.
2. ALL SLOPES SHALL BE 2H:1V UNLESS OTHERWISE NOTED.
3. COMPLETE 6" STRIPPING PRIOR TO CONSTRUCTING BERM. FIELD LOCATE BERM AROUND PERIMETER OF DEEP EXCAVATION. BERM SHALL BE A MINIMUM 18" HIGH. STABILIZE BERM BY SEEDING OR APPLYING CRUSTING AGENT AFTER CONSTRUCTION.
4. HAND EXCAVATE WITHIN 5' OF MONITORING WELLS. MAINTAIN EXISTING PADS. HAND EXCAVATE FROM PADS ON A MINIMUM 1.5H TO 1V SLOPE.

RUN-ON DIVERSION DITCH COORDINATES (DI)

POINT	NORTHING	EASTING	ELEVATION	DESCRIPTION
1	480258	1351320	590.0	CENTERLINE DITCH
2	480240	1351710	596.0	CENTERLINE DITCH
3	480234	1351827	-	POINT OF INTERSECTION
4	480178	1351826	598.0	CENTERLINE DITCH

STP EXCAVATION COOR. (EX)

PT	NORTHING	EASTING	EL
1	480224	1351809	597.0
2	480164	1351699	593.0
3	480161	1351800	593.0
4	480132	1351821	596.0
5	480155	1351720	591.0
6	480153	1351777	591.0
7	480124	1351754	590.3
8	480039	1351752	589.0
9	480042	1351695	593.0
10	480041	1351796	593.0
11	480034	1351818	596.0
12	479881	1351820	599.0
13	480021	1351760	580.0
14	480021	1351764	580.0
15	479968	1351759	580.0
16	479968	1351763	580.0
17	480026	1351748	586.0
18	479971	1351747	586.0
19	480029	1351672	586.0
20	479973	1351671	586.0
21	480214	1351586	590.0
22	480190	1351463	576.0
23	480189	1351502	576.0
24	480108	1351583	590.0
25	480139	1351626	591.0

STP EXCAVATION COOR. (EX)

PT	NORTHING	EASTING	EL
26	480091	1351499	576.0
27	480092	1351461	576.0
28	480085	1351399	576.0
29	480084	1351583	578.0
30	480047	1351538	578.0
31	480046	1351582	578.0
32	479988	1351622	591.0
33	480002	1351491	586.0
34	480000	1351548	586.0
35	479955	1351475	590.0
36	479954	1351526	590.0
37	479904	1351458	591.0
38	479891	1351500	591.0
39	479903	1351535	591.0
40	480077	1351499	583.0
41	480038	1351498	583.0
42	480064	1351484	590.0
43	479994	1351483	590.0
44	479955	1351500	589.8
45	480002	1351502	586.0

RELATED DWG NO.	DRAWING TITLE	SHEET NO.
92X-5900-X-00489	DRAWING INDEX	X0002
92X-5900-X-00490	LEGEND AND GENERAL NOTES	X0003
92X-5900-G-00498	DETAIL SHEET	G0014
92X-5900-G-00509	CROSS SECTIONS - SHEET 1 OF 3	G0015
92X-5900-G-00510	CROSS SECTIONS - SHEET 2 OF 3	G0016
92X-5900-G-00516	CROSS SECTIONS - SHEET 3 OF 3	G0017

INFORMATION ONLY

000009

REV. NO.	ISSUE OR REVISION PURPOSE - DESCRIPTION	R	PM	REVIEW BY
1	REVISED PER OCN: 20712-002, 011, 017	[illegible] 9/29/99	ES 9/29/99	[illegible] 9/29/99
0	CERTIFIED FOR CONSTRUCTION	FMP 10/7/98	CS 10/7/98	FMP 10/7/98

INITIALS AND DATE

UNITED STATES DEPARTMENT OF ENERGY
FERNALD ENVIRONMENTAL MANAGEMENT PROJECT

THIS DRAWING PREPARED BY
PARSONS
THE RALPH M. PARSONS CO. - PARSONS MAIN, INC. - ENGINEERING-SCIENCE, INC.
CINCINNATI, OHIO

PROJECT NAME
REMEDIATION AREA 1, PHASE II
SEWAGE TREATMENT PLANT EXCAVATION PACKAGE

DRAWING TITLE
CIVIL
STP DEEP EXCAVATION PLAN

DRAWN BY	DATE	TECHNICAL LEAD	DATE	CHECKED BY	DATE
J.G. ASHWORTH	07/31/98	F.M. PARTON	08/14/98	F.M. PARTON	08/14/98

PLANT/BLDG. NO. | FLOOR | SCALE 1"=20' | CLASS

SUBMITTED FOR 30% ISSUE	SUBMITTED FOR 60% ISSUE	SUBMITTED FOR 90% ISSUE
TECH LEAD N/A	TECH LEAD N/A	TECH LEAD N/A
DATE	DATE	DATE

PO NUMBER	FOR PROJECT NO.	DRAWING INDEX CODE NO.	SHEET NO.	REV. NO.
TOP-021	20712	92X-5900-G-00503	G0006	1

2108

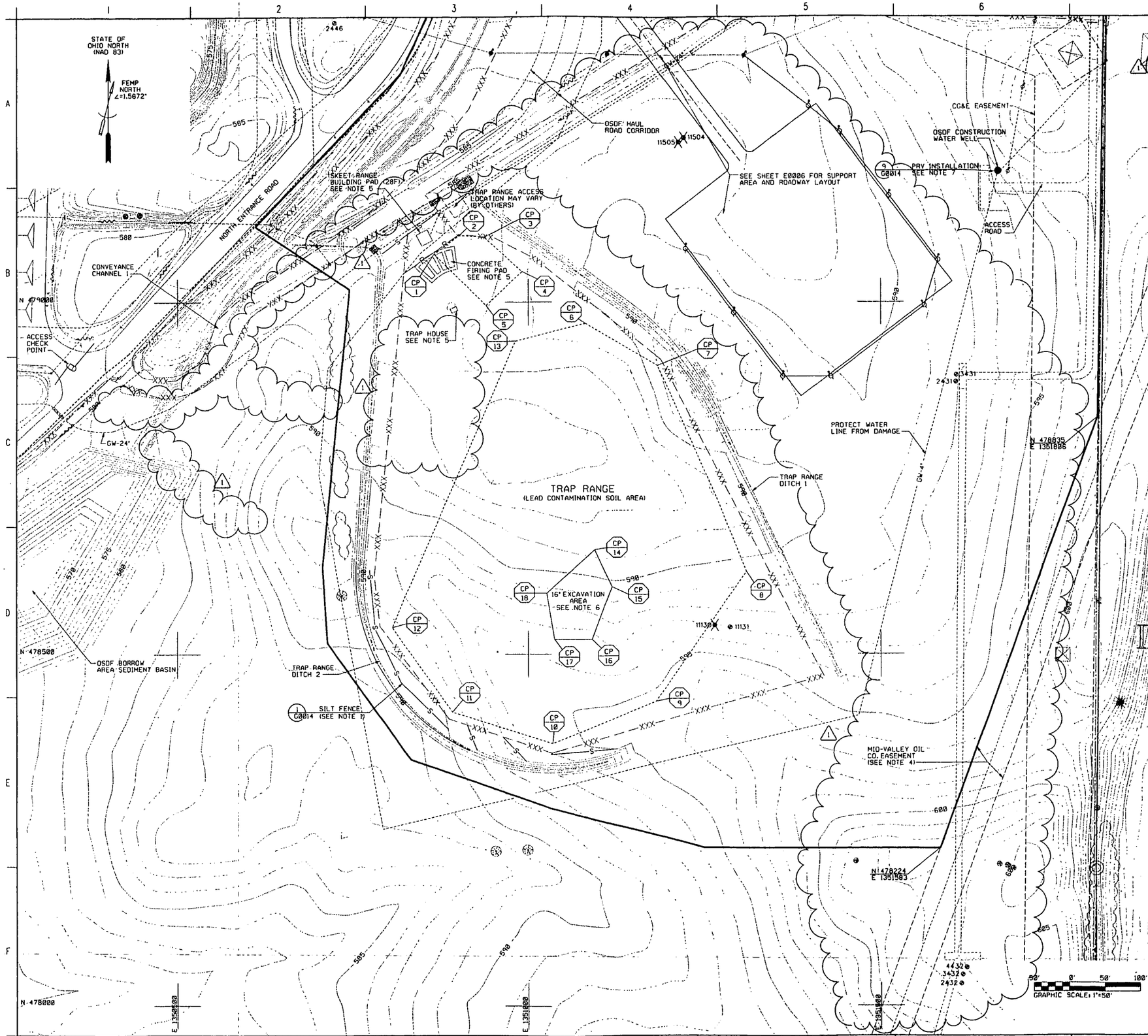

NOTES

1. SILT FENCE LOCATIONS SHOWN ARE APPROXIMATE. ADD AND OR ~~ADJUST TO MEET FIELD CONDITIONS.~~
2. LEAD CONTAMINATED SOIL, WHICH HAS BEEN STABILIZED IN-SITU BY OTHERS SHALL BE EXCAVATED AS OPTIONAL WORK.
3. CONTRACTOR SHALL MAINTAIN TRAP RANGE DITCHES 1 & 2, CONSTRUCTION FENCE AND ALL EROSION AND SEDIMENT CONTROLS AROUND TRAP RANGE.
4. THERE SHALL BE NO WORK PERFORMED OR EQUIPMENT TO ENTER THE MID-VALLEY OIL EASEMENT WITHOUT WRITTEN AUTHORIZATION FROM THE CONSTRUCTION MANAGER.
5. TRAP RANGE BUILDINGS AND FOUNDATIONS SHALL BE REMOVED AS OPTIONAL WORK.
6. EXCAVATION OF IN-SITU STABILIZED LEAD SOIL SHALL BE TO A DEPTH OF 18' MIN EXCEPT WITHIN AREA DESIGNATED. EXCAVATION DEPTH WITHIN THIS AREA SHALL BE 16' MIN.
7. INSTALLATION OF PRV IS AN OPTION TO THE CONTRACTOR AND SHALL BE APPROVED BY THE CONSTRUCTION MANAGER.

LEAD CONTAMINATED SOIL
EXCAVATION AREA COORDINATE POINTS (CP)

POINT	NORTHING	EASTING	DESCRIPTION
1	479069	1350866	CORNER
2	479095	1350902	CORNER
3	479093	1350937	CORNER
4	479044	1350991	CORNER
5	478995	1350940	CORNER
6	478969	1351081	CORNER
7	478910	1351183	CORNER
8	478617	1351310	CORNER
9	478432	1351181	CORNER
10	478373	1351034	CORNER
11	478418	1350892	CORNER
12	478538	1350807	CORNER
13	478945	1350982	CORNER
14	478648	1351094	CORNER, 16' EXCAVATION AREA
15	478596	1351119	CORNER, 16' EXCAVATION AREA
16	478521	1351090	CORNER, 16' EXCAVATION AREA
17	478521	1351038	CORNER, 16' EXCAVATION AREA
18	478587	1351026	CORNER, 16' EXCAVATION AREA

RELATED DWG NO.	DRAWING TITLE	SHEET NO.
92X-5900-X-00489	DRAWING INDEX	X0002
92X-5900-X-00490	LEGEND AND GENERAL NOTES	X0003
92X-5900-G-00506	STP BACKFILL BORROW AREA	G0009
92X-5900-G-00498	DETAIL SHEET	G0014

000010

INFORMATION ONLY

REV. NO.	ISSUE OR REVISION PURPOSE - DESCRIPTION	A	B	REVD BY
1	REVISED DCN 20712-001, 002, 013, 018	KM 3/30/99	CS 3/31/99	KM 3/30/99
0	CERTIFIED FOR CONSTRUCTION	FMP 10/7/98	CS 10/7/98	FMP 10/7/98

INITIALS AND DATE

UNITED STATES DEPARTMENT OF ENERGY
FERNALD ENVIRONMENTAL MANAGEMENT PROJECT

THIS DRAWING PREPARED BY
PARSONS
THE RALPH M. PARSONS CO. - PARSONS MAIN, INC. - ENGINEERING-SCIENCE, INC.
CINCINNATI, OHIO

PROJECT NAME
REMEDIATION AREA 1 - PHASE II
SEWAGE TREATMENT PLANT EXCAVATION PACKAGE

DRAWING TITLE
CIVIL
TRAP RANGE AREA PLAN

DRAWN BY	DATE	TECHNICAL LEAD	DATE	CHECKED BY	DATE
J.G. ASHWORTH	8/14/98	F.M. PARTON, JR.	8/14/98	F.M. PARTON, JR.	8/14/98

PLANT/BLDG. NO. | FLOOR | SCALE 1"=50' | CLASS

SUBMITTED FOR 30% ISSUE	SUBMITTED FOR 60% ISSUE	SUBMITTED FOR 90% ISSUE
TECH LEAD N/A	TECH LEAD N/A	TECH LEAD N/A
DATE	DATE	DATE

PO NUMBER	FOR PROJECT NO.	DRAWING INDEX CODE NO.	SHEET NO.	REV. NO.
TOP-021	20712	92X-5900-G-00504	G0007	1

2108

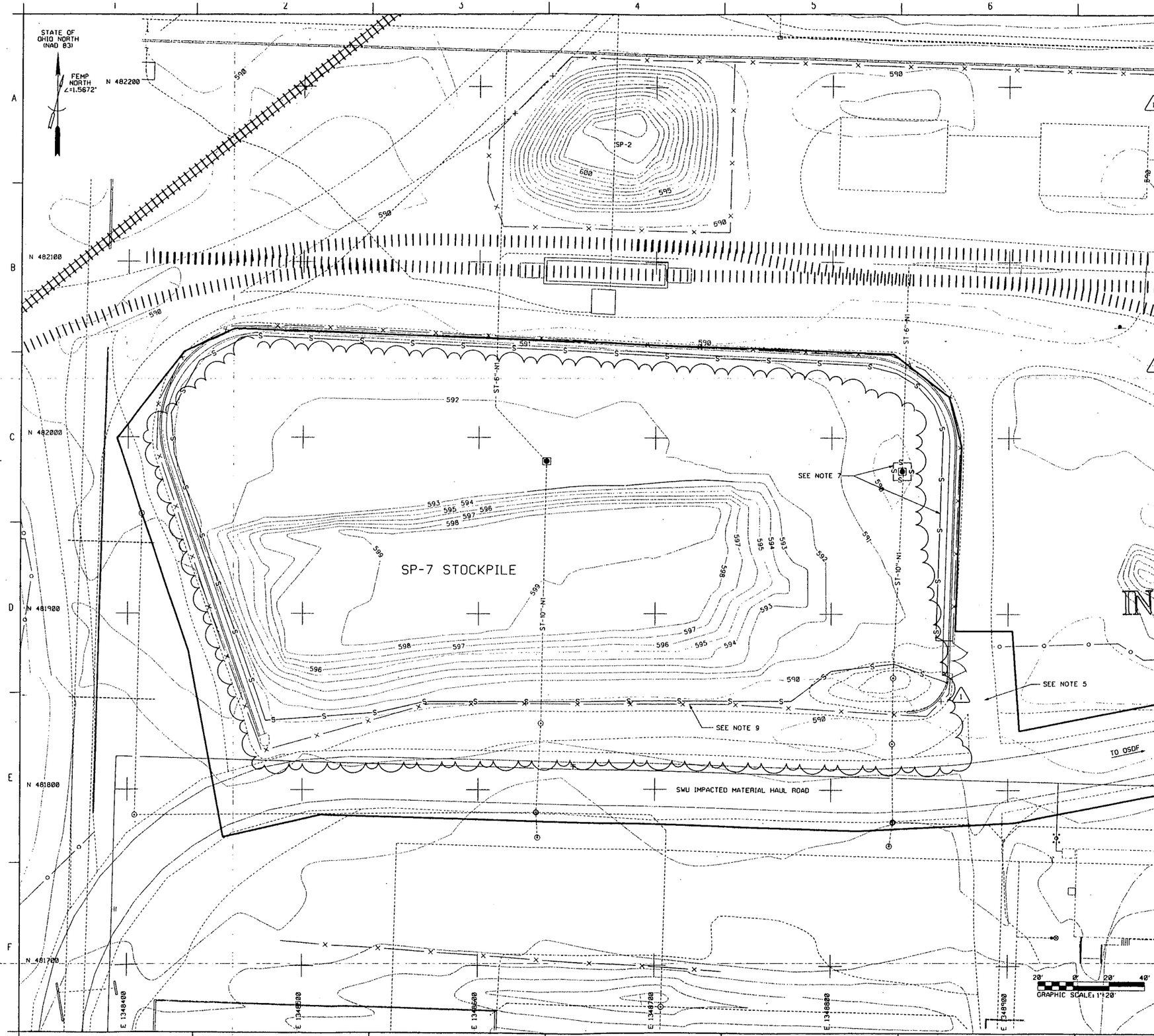

NOTES

1. EXISTING TOPOGRAPHY BASED ON EXISTING CONDITIONS AS OF AUGUST 1998. ADDITIONAL MATERIAL HAS BEEN PLACED WITHIN SP-7. VERIFY EXISTING CONDITIONS PRIOR TO BEGINNING EXCAVATION.
2.
3.
4.
5. PRIOR TO ENTERING SWU IMPACTED MATERIAL HAUL ROAD FROM SP-7 STOCKPILE AREA, VEHICLES MUST BE VISIBLY CLEAN OF MUD AND DIRT. USE WHEEL WASH EQUIPMENT AND/OR UNLOADING TECHNIQUES AS NECESSARY.
6. ALL SLOPES ARE 2H:1V UNLESS NOTED OTHERWISE.
7. SILT FENCE TO BE INSTALLED AROUND EXISTING CATCH BASIN/GRATE PRIOR TO PLACING ABOVE-WAC MATERIAL AT SP-7.
8.
9. EXISTING CHAIN LINK FENCE IS A RADIOLOGICAL CONTROL BOUNDARY. AREA WITHIN FENCE IS A SOIL CONTAMINATED AREA. AREA OUTSIDE FENCE IS A BUFFER AREA.
10. WATER SOURCE FOR SP-7 STOCK PILE AREA LOCATED AT FIRE HYDRANT (N 482252, E 1348754). CONTRACTOR TO RUN FLEXIBLE HOSE FROM FIRE HYDRANT TO SP-7 STOCK PILE.

RELATED DWG NO.	DRAWING TITLE	SHEET NO.
92X-5900-X-00489	DRAWING INDEX	X0002
92X-5900-X-00490	LEGEND AND GENERAL NOTES	X0003

000011

INFORMATION ONLY

REV. NO.	ISSUE OR REVISION PURPOSE - DESCRIPTION	TL	PM	REVIEW BY
1	REVISED PER OCN: 20712-021	3/29/99	CS 3/29/99	
0	CERTIFIED FOR CONSTRUCTION	FMP 10/7/98	CS 10/7/98	FMP 10/7/98

INITIALS AND DATE

UNITED STATES DEPARTMENT OF ENERGY
FERNALD ENVIRONMENTAL MANAGEMENT PROJECT

THIS DRAWING PREPARED BY
PARSONS
THE RALPH M. PARSONS CO. - PARSONS MAIN, INC. - ENGINEERING-SCIENCE, INC.
CINCINNATI, OHIO

PROJECT NAME
REMEDIATION AREA 1, PHASE II
SEWAGE TREATMENT PLANT EXCAVATION PACKAGE

DRAWING TITLE
CIVIL
SP-7 STOCKPILE

DRAWN BY	DATE	TECHNICAL LEAD	DATE	CHECKED BY	DATE
J.G. ASHWORTH	7/31/98	F.M. PARTON, JR.	8/14/98	F.M. PARTON, JR.	8/14/98

PLANT/BLDG. NO.	FLOOR	SCALE	CLASS
		1"=20'	

SUBMITTED FOR 30% ISSUE	SUBMITTED FOR 60% ISSUE	SUBMITTED FOR 90% ISSUE
TECH LEAD N/A	TECH LEAD N/A	TECH LEAD N/A
DATE	DATE	DATE

PO NUMBER	TOP PROJECT NO	DRAWING INDEX CODE NO	SHEET NO	REV. NO
TOP-021	20712	92X-5900-G-00505	G0008	1

2108

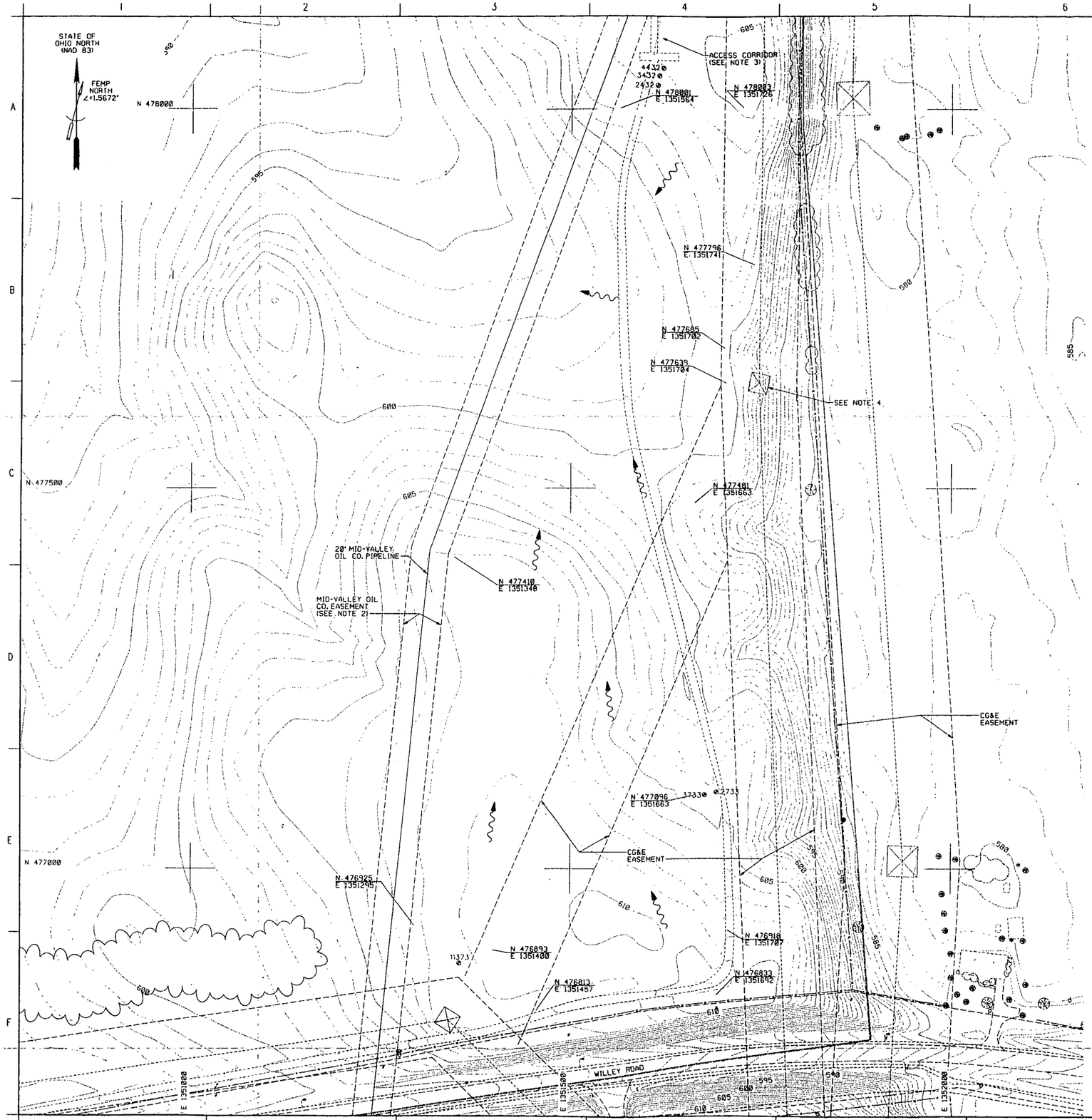

NOTES

1. DEVELOP STP BACKFILL BORROW AREA IN ACCORDANCE WITH SPECIFICATION SECTION 2206 AND BORROW AREA DEVELOPMENT PLAN.
2. THERE SHALL BE NO WORK PERFORMED OR EQUIPMENT TO ENTER THE MID-VALLEY OIL EASEMENT WITHOUT WRITTEN AUTHORIZATION FROM THE CONSTRUCTION MANAGER.
3. ACCESS CORRIDOR SHALL BE FIELD LOCATED BY CONTRACTOR IN APPROXIMATE LOCATION SHOWN ON THIS SHEET AND SHEET G0007 TO BEST FACILITATE ACCESS TO AND FROM STP BACKFILL BORROW AREA.
4. NO WORK SHALL OCCUR WITHIN 25' OF THE CG&E TOWER LEGS.

VOID DRAWING

PER DCN: 20712-013

RELATED DWG NO.	DRAWING TITLE	SHEET NO.
92X-5900-X-00489	DRAWING INDEX	X0002
92X-5900-X-00490	LEGEND AND GENERAL NOTES	X0003
92X-5900-G-00504	TRAP RANGE AREA PLAN	G0007

000012

INFORMATION ONLY

REV. NO	ISSUE OR REVISION PURPOSE - DESCRIPTION	TL	PM	REVD BY
1	VOID PER DCN: 20712-013 REVISED PER DCN: 20712-002	3/24/99	CS 3/24/99	3/24/99
0	CERTIFIED FOR CONSTRUCTION	FMP 10/7/98	CS 10/7/98	FMP 10/7/98

INITIALS AND DATE

UNITED STATES DEPARTMENT OF ENERGY

FERNALD ENVIRONMENTAL MANAGEMENT PROJECT

THIS DRAWING PREPARED BY

PARSONS

THE RALPH M. PARSONS CO. - PARSONS MAIN, INC. - ENGINEERING-SCIENCE, INC.
CINCINNATI, OHIO

PROJECT NAME

REMEDIATION AREA 1, PHASE II
SEWAGE TREATMENT PLANT EXCAVATION PACKAGE

DRAWING TITLE

CIVIL
STP BACKFILL BORROW AREA

DRAWN BY	DATE	TECHNICAL LEAD	DATE	CHECKED BY	DATE
J.G. ASHWORTH	07/31/98	F.M. PARTON, JR.	8/14/98	F.M. PARTON, JR.	8/14/98

PLANT/BLDG NO.	FLOOR	SCALE	CLASS
		1"=50'	

SUBMITTED FOR 30% ISSUE	SUBMITTED FOR 60% ISSUE	SUBMITTED FOR 90% ISSUE
TECH LEAD	TECH LEAD	TECH LEAD
DATE	DATE	DATE

GRAPHIC SCALE: 1"=50'

PO NUMBER	FOR PROJECT NO.	DRAWING INDEX CODE NO.	SHEET NO.	REV. NO.
TOP-021	20712	92X-5900-G-00506	G0009	1

2108

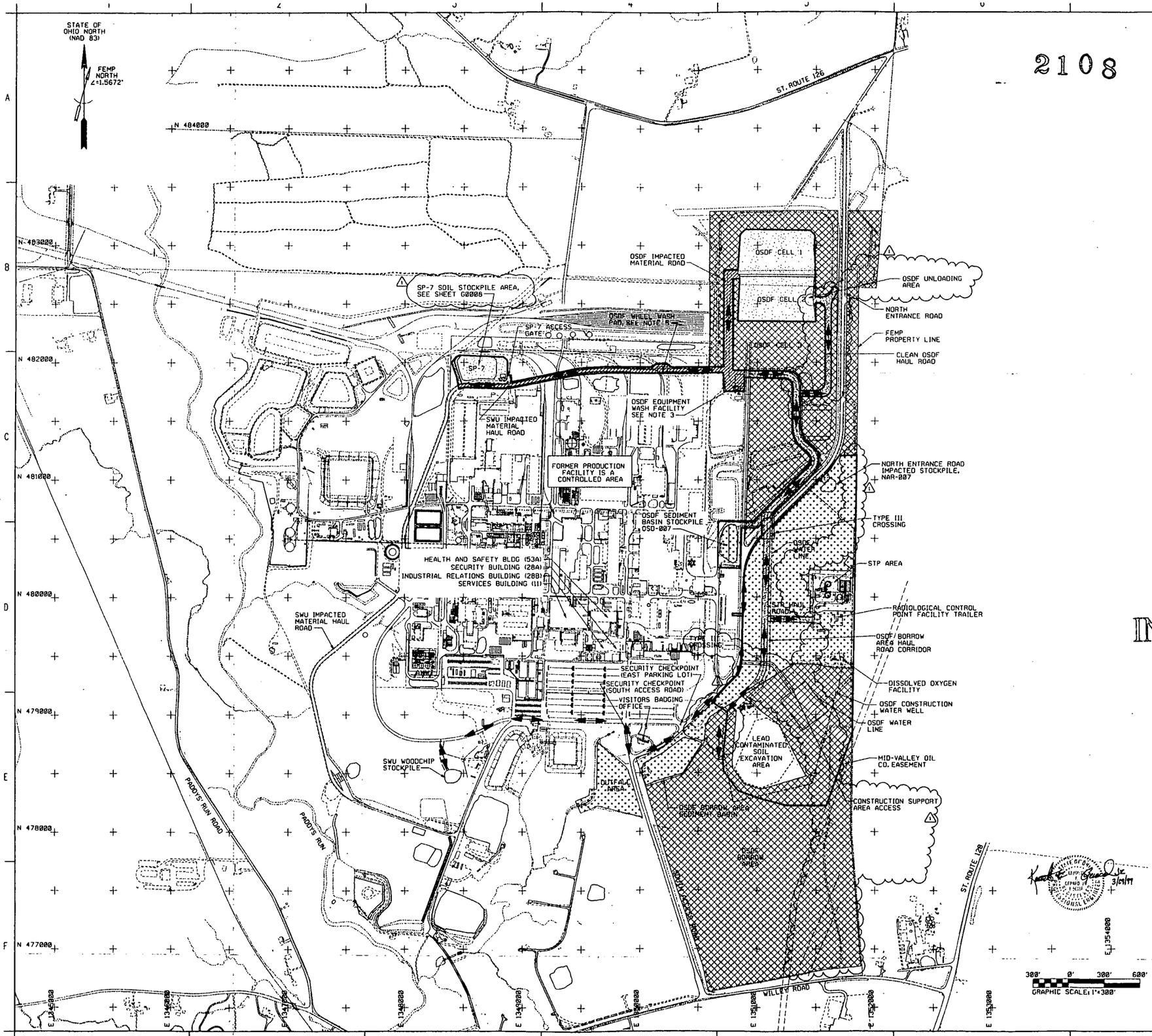

NOTES

1. VEHICLES SHALL NOT CROSS OVER THE CERTIFICATION LIMITS AS INDICATED BY THE CERTIFICATION ROPE EXCEPT WHERE SHOWN. SEE SHT G0001 FOR CERTIFICATION ROPE FENCE LOCATIONS AND PART 6 FOR CERTIFICATION AREA ACCESS REQUIREMENTS.
2. INTERNAL ROUTES AND TRAFFIC PATTERNS WITHIN PROJECT AREA TO BE DETERMINED BY CONTRACTOR AND TO BE SHOWN ON THE CONTRACTORS TRAFFIC PLAN SUBMITTAL.
3. USE THE OSDF EQUIPMENT WASH FACILITY TO WASH EQUIPMENT TRAVELING FROM SWU IMPACTED MATERIAL HAUL ROAD OR OSDF IMPACTED MATERIAL ROAD.
4. PERFORM DUST CONTROL WITHIN THE DUST CONTROL/WORK LIMITS. MATERIAL STOCKPILES, ACCESS ROADS, AND OTHER AREAS OF WORK SPECIFIED IN PART 6 AND TECHNICAL SPECIFICATIONS OF THE CONTRACT DOCUMENTS.
5. CONTRACTOR MUST USE OSDF WHEEL WASH PAD PRIOR TO ENTERING SWU IMPACTED MATERIAL HAUL ROAD.
6. OSDF BORROW AREA HAUL ROAD, STP HAUL ROAD AND CLEAN OSDF HAUL ROAD ARE CONSTRUCTED USING NON-CERTIFIED AREAS WITH MATERIAL FROM CERTIFIED AREAS. 1
7. SEE PART 6 AND PART 8 FOR WHEEL WASHING AND OTHER REQUIREMENTS TO GO FROM DIFFERENT CONTAMINATED, CONTROLLED, UNCONTROLLED, CERTIFIED, NONCERTIFIED AND OTHER AREAS.

LEGEND:

- IMPACTED MATERIAL HAUL ROAD
- ROAD CONSTRUCTED WITH CERTIFIED MATERIAL
- CERTIFIED AREA
- CONTROLLED AREA
- CONTAMINATED AREA
- UNCONTROLLED AREA
- LIMITS OF WORK AREA AND CONTRACTOR DUST CONTROL LIMITS (SEE NOTE 4)
- HAUL ROUTE

RELATED DWG NO.	DRAWING TITLE	SHEET NO.
92X-5900-X-00489	DRAWING INDEX	X0002
92X-5900-X-00490	LEGEND AND GENERAL NOTES	X0003
92X-5900-G-00486	EXISTING CONDITIONS PLAN	G0001
92X-5900-G-00505	SP-7 STOCKPILE	G0008

INFORMATION ONLY

000013

REV. NO.	ISSUE OR REVISION PURPOSE - DESCRIPTION	RL INITIALS AND DATE	PM INITIALS AND DATE	REVIEW BY INITIALS AND DATE
1	REVISED PER DCN: 20712-002, 013, 014, 018	[illegible] 3/19/99	CS 3/19/99	[illegible]
0	CERTIFIED FOR CONSTRUCTION	FMP 10/7/98	CS 10/7/98	FMP 10/7/98

UNITED STATES DEPARTMENT OF ENERGY
FERNALD ENVIRONMENTAL MANAGEMENT PROJECT

THIS DRAWING PREPARED BY
PARSONS
THE RALPH M. PARSONS CO. - PARSONS MAIN, INC. - ENGINEERING-SCIENCE, INC.
CINCINNATI, OHIO

PROJECT NAME
REMEDIATION AREA 1, PHASE II
SEWAGE TREATMENT PLANT EXCAVATION PACKAGE

DRAWING TITLE
CIVIL
TRAFFIC ROUTES

DRAWN BY	DATE	TECHNICAL LEAD	DATE	CHECKED BY	DATE
J.G. ASHWORTH	8/14/98	F.M. PARTON, JR.	8/14/98	F.M. PARTON, JR.	8/14/98

PLANT/BLDG NO.	FLOOR	SCALE	CLASS
		1"=300'	

SUBMITTED FOR 30% ISSUE	SUBMITTED FOR 60% ISSUE	SUBMITTED FOR 90% ISSUE
TECH LEAD N/A	TECH LEAD N/A	TECH LEAD N/A
DATE	DATE	DATE

PO NUMBER	TOP PROJECT NO.	DRAWING INDEX CODE NO.	SHEET NO.	REV. NO.
TOP-021	20712	92X-5900-G-00493	G0010	1

2108

TRANSFER LINE COORDINATES (TL)			
POINT	NORTHING	EASTING	DESCRIPTION
1	479851	1350795	EXISTING CLEANOUT
2	479841	1351362	PC, R=50'
3	479890	1351413	PT
4	479915	1351413	PIPE SUPPORT LOCATION

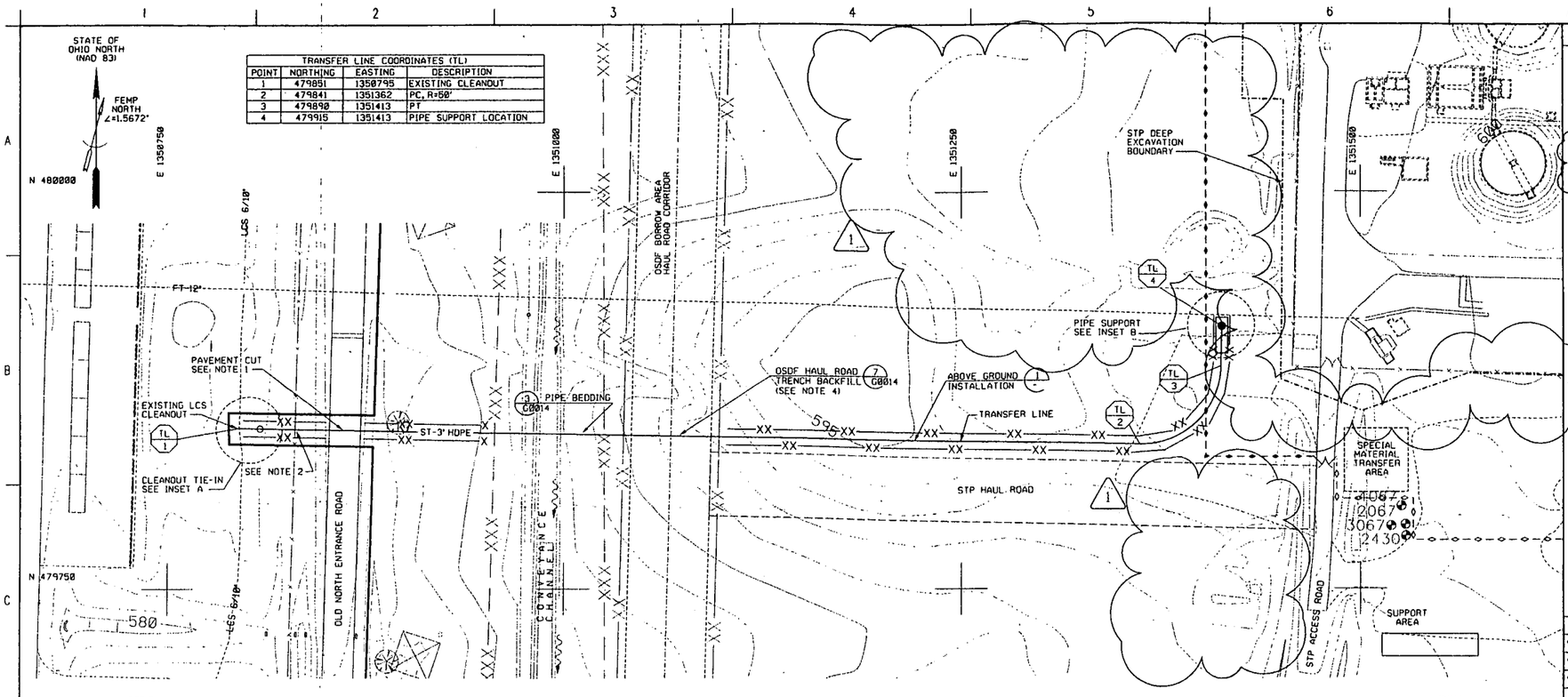

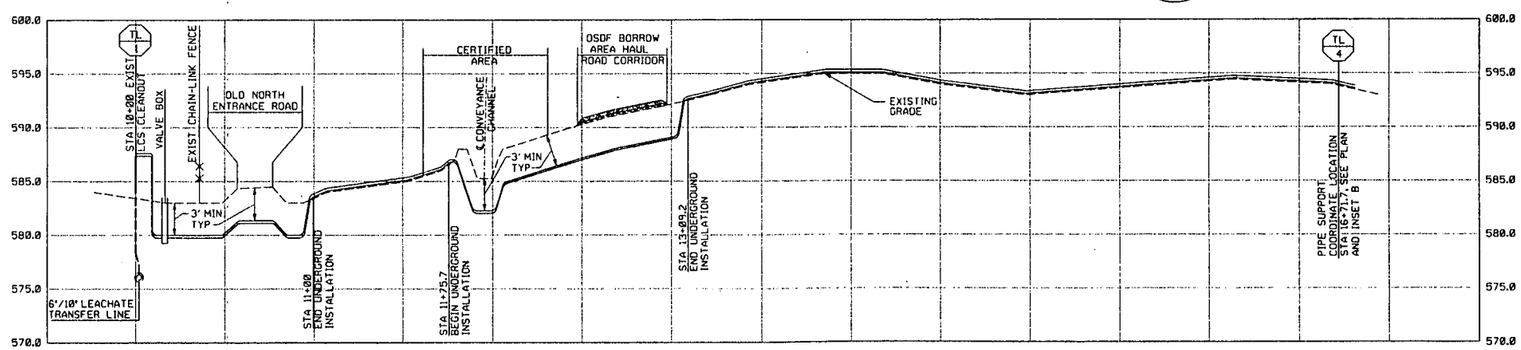

TRANSFER LINE PROFILE

SCALE: 1"=30' HORIZ
1"=5' VERT

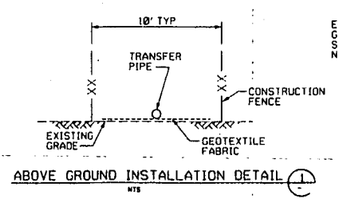

ABOVE GROUND INSTALLATION DETAIL 1 C
NTS

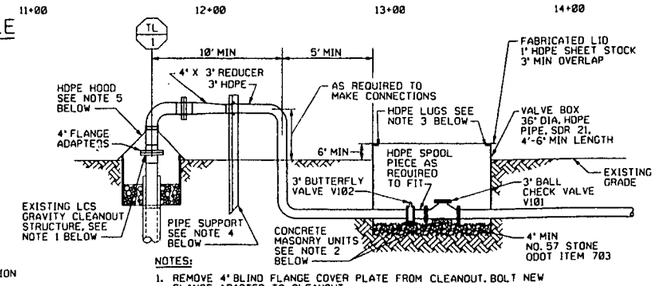

NOTES:

1. REMOVE 4" BLIND FLANGE COVER PLATE FROM CLEANOUT. BOLT NEW FLANGE ADAPTER TO CLEANOUT.
2. USE STANDARD SIZED CONCRETE MASONRY UNITS AS REQUIRED FOR SUPPORT.
3. HDPE LUGS SHALL BE 1" X 1" X 1", 4 TOTAL, EQUALLY SPACED AROUND PERIFERY OF LID. LOCATE LUGS APPROXIMATELY ½" FROM INSIDE FACE OF PIPE AND EXTRUSION WELD TO BOTTOM OF LID.
4. DETAIL FOR PIPE SUPPORT SHALL BE AS SHOWN FOR CS SCHEDULE 40 PIPE IN INSET B, EXCEPT GRINNEL UBOLT HANGER SHALL BE SIZED TO ACCOMMODATE HDPE PIPE.
5. FABRICATE HDPE HOOD OUT OF 60 MIL MIN. HDPE SHEET STOCK. CUT TO FIT AND CLAMP TO PIPE RISER USING SERIES 300 STAINLESS STEEL SCREW OR BAND CLAMPS.

INSET A
NTS

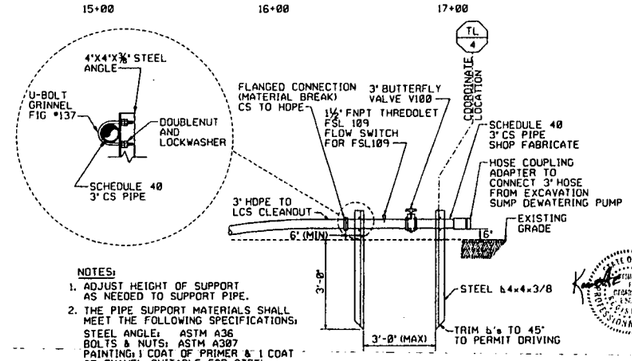

NOTES:

1. ADJUST HEIGHT OF SUPPORT AS NEEDED TO SUPPORT PIPE.
2. THE PIPE SUPPORT MATERIALS SHALL MEET THE FOLLOWING SPECIFICATIONS:
   STEEL ANGLE: ASTM A36
   BOLTS & NUTS: ASTM A307
   PAINTING: 1 COAT OF PRIMER & 1 COAT OF ENAMEL SUITABLE FOR STEEL

INSET B
NTS

30' 0' 30' 60'
GRAPHIC SCALE: 1"=30'

NOTES

1. SAWCUT EXISTING ASPHALT PAVEMENT AS NECESSARY TO INSTALL TRANSFER LINE. PATCH PAVEMENT TO MATCH EXISTING PAVEMENT THICKNESS.
2. REMOVE EXISTING FENCE AS NECESSARY FOR INSTALLATION OF PIPE. REPAIR AND/OR REPLACE FENCE AFTER INSTALLATION AS DIRECTED BY THE CONSTRUCTION MANAGER.
3. BURIAL DEPTHS SHOWN ARE TO TOP OF PIPE.
4. AFTER BACKFILLING TRENCH TO ORIGINAL EXISTING GRADE, REPAIR OSDF HAUL ROAD BY PLACING NEW GEOTEXTILE FABRIC ON GRADE AND COVERING BY A MINIMUM OF 1' OF FILL MATERIAL PER SECTION 02206.

1

RELATED DWG NO.	DRAWING TITLE	SHEET NO.
92X-5900-X-00489	DRAWING INDEX	X0002
92X-5900-X-00498	LEGEND AND GENERAL NOTES	X0003
92X-5900-G-00498	DETAIL SHEET	G0014

INFORMATION ONLY

000014

REV. NO.	ISSUE OR REVISION PURPOSE - DESCRIPTION	TL	PM	REVD BY
		INITIALS AND DATE		
1	REVISED PER DCN: 20712-002, 013	KM 3/24/99	CS 3/24/99	FMP 3/24/99
0	CERTIFIED FOR CONSTRUCTION	FMP 10/7/98	CS 10/7/98	FMP 10/7/98

UNITED STATES DEPARTMENT OF ENERGY
FERNALD ENVIRONMENTAL MANAGEMENT PROJECT

THIS DRAWING PREPARED BY
PARSONS
THE RALPH M. PARSONS CO. - PARSONS MAIN, INC. - ENGINEERING-SCIENCE, INC.
CINCINNATI, OHIO

PROJECT NAME
REMEDIATION AREA 1, PHASE II
SEWAGE TREATMENT PLANT EXCAVATION PACKAGE

DRAWING TITLE
CIVIL
TRANSFER LINE PLAN & PROFILE

STATE OF OHIO KEITH I. GRAUL 61675 REGISTERED PROFESSIONAL ENGINEER

DRAWN BY	DATE	TECHNICAL LEAD	DATE	CHECKED BY	DATE
J.G. ASHWORTH	8/24/98	F.M. PARTON, JR.	09/01/98	F.M. PARTON, JR.	09/01/98
PLANT/BLDG. NO. —		FLOOR —		SCALE 1"=30'	CLASS —

SUBMITTED FOR 30% ISSUE	SUBMITTED FOR 90% ISSUE	SUBMITTED FOR 100% ISSUE
TECH LEAD	TECH LEAD	TECH LEAD
DATE	DATE	DATE

PO NUMBER	FDF PROJECT NO.	DRAWING INDEX CODE NO.	SHEET NO.	REV. NO.
TOP-021	20712	92X-5900-G-00517	G0011	1

2108

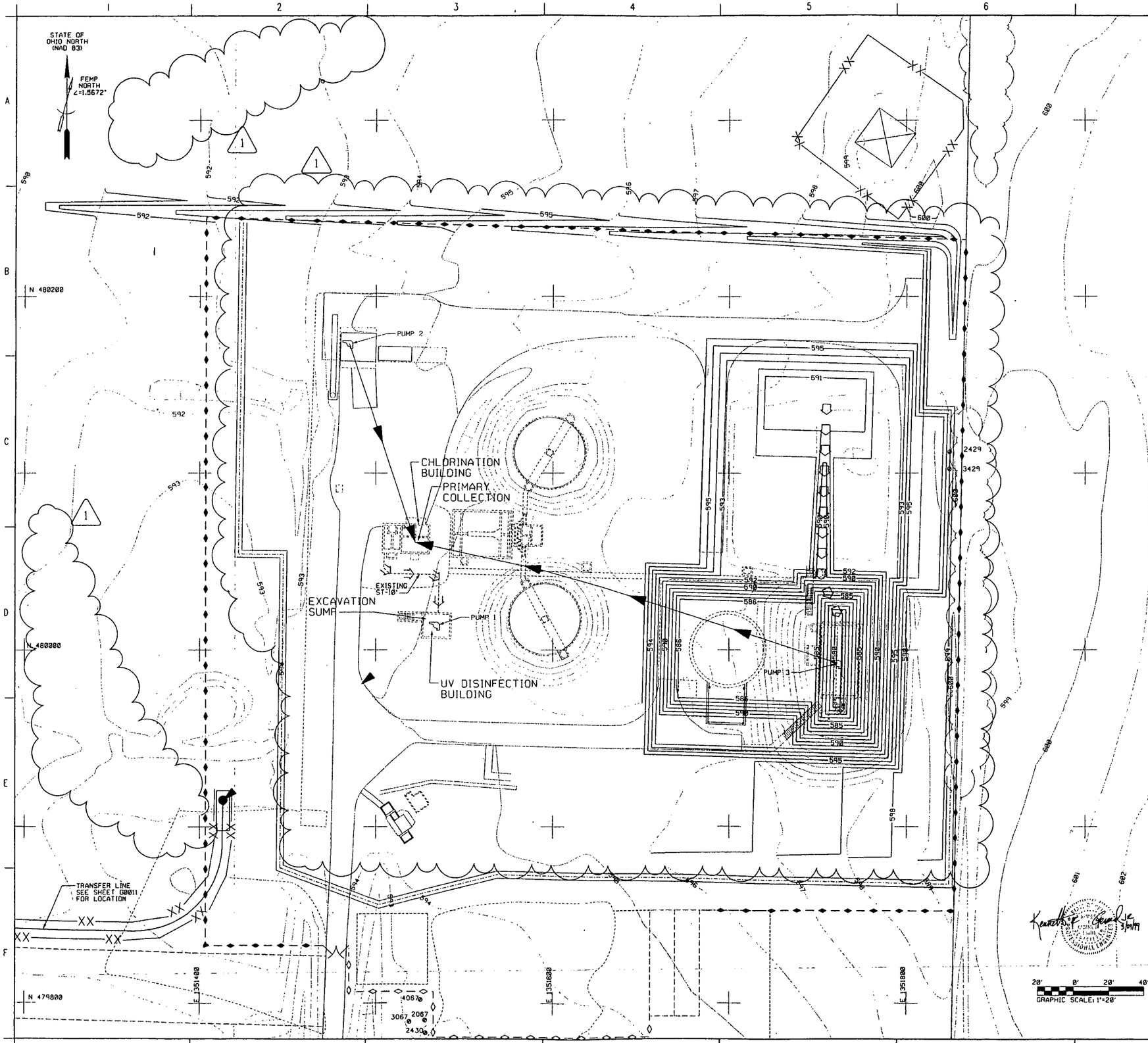

NOTES

1. SEAL AND/OR PLUG ALL OPENINGS TO MAKE UV BUILDING WATER TIGHT. INSTALL PRIMARY COLLECTION SUMP PUMP IN THE UV BUILDING PRIOR TO ANY ABOVE WAC EXCAVATION AND REMOVAL.
2. INSTALL EXCAVATION PUMPS IN REMOTE STP EXCAVATIONS THAT PUMP INTO CHLORINATION BUILDING. UTILIZE EXISTING PIPES TO CONVEY FLOW FROM CHLORINATION BUILDING TO UV BUILDING DURING PHASE I.
3. WHERE POSSIBLE ALL SURFACE WATER IN STP EXCAVATION AREA SHALL BE GRADED TO DRAIN INTO EXCAVATION SUMP DURING INITIAL ABOVE WAC EXCAVATION OPERATIONS. PONDED WATER IN EXCAVATIONS SHALL BE MOVED BY EXCAVATION PUMPS AS DESCRIBED IN NOTE 2.
4. SEQUENCE EXCAVATION TO MAINTAIN EXISTING PAVEMENT (AND BUFFER AREAS FOR LOADING) AS LONG AS POSSIBLE. THE SEQUENCE OF CONSTRUCTION WILL BE IN ACCORDANCE WITH EXCAVATION WORK PLAN.
5. MAINTAIN SUMP PUMP IN UV BUILDING UNTIL EXCAVATION OF PHASE II EXCAVATION SUMP PUMP LOCATION (AS PER SHEET G0013) IS CONSTRUCTED.

PUMPED FLOW

GRAVITY FLOW

RELATED DWG NO.	DRAWING TITLE	SHEET NO.
92X-5900-X-00489	DRAWING INDEX	X0002
92X-5900-X-00490	LEGEND AND GENERAL NOTES	X0003
9XX-5900-G-00517	TRANSFER LINE PLAN & PROFILE	G0011
92X-5900-G-00508	PHASE II STP EXCAVATION DEWATERING SYSTEM	G0013

INFORMATION ONLY

000015

REV. NO.	ISSUE OR REVISION PURPOSE - DESCRIPTION	TL	PW	REVIS BY
1	REVISED PER DCN: 20712-002, 011	KJ 3/19/99	RS 3/19/99	FMP 3/19/99
0	CERTIFIED FOR CONSTRUCTION	FMP 10/7/98	CS 10/7/98	FMP 10/7/98

INITIALS AND DATE

UNITED STATES DEPARTMENT OF ENERGY
FERNALD ENVIRONMENTAL MANAGEMENT PROJECT

THIS DRAWING PREPARED BY
PARSONS
THE RALPH M. PARSONS CO. - PARSONS MAIN, INC. - ENGINEERING-SCIENCE, INC.
CINCINNATI, OHIO

PROJECT NAME
REMEDIATION AREA 1, PHASE II
SEWAGE TREATMENT PLANT EXCAVATION PACKAGE

DRAWING TITLE
CIVIL
PHASE I STP EXCAVATION
DEWATERING SYSTEM

DRAWN BY	DATE	TECHNICAL LEAD	DATE	CHECKED BY	DATE
T.J. BROWN	8/14/98	F.M. PARTON, JR.	8/14/98	F.M. PARTON, JR.	8/14/98

PLANT/BLDG NO.	FLOOR	SCALE	CLASS
		1"=20'	

SUBMITTED FOR 30% ISSUE	SUBMITTED FOR 60% ISSUE	SUBMITTED FOR 90% ISSUE
TECH LEAD N/A	TECH LEAD N/A	TECH LEAD N/A
DATE	DATE	DATE

PO NUMBER	FEF PROJECT NO	DRAWING INDEX CODE NO	SHEET NO.	REV. NO
TOP-021	20712	92X-5900-G-00507	G0012	1

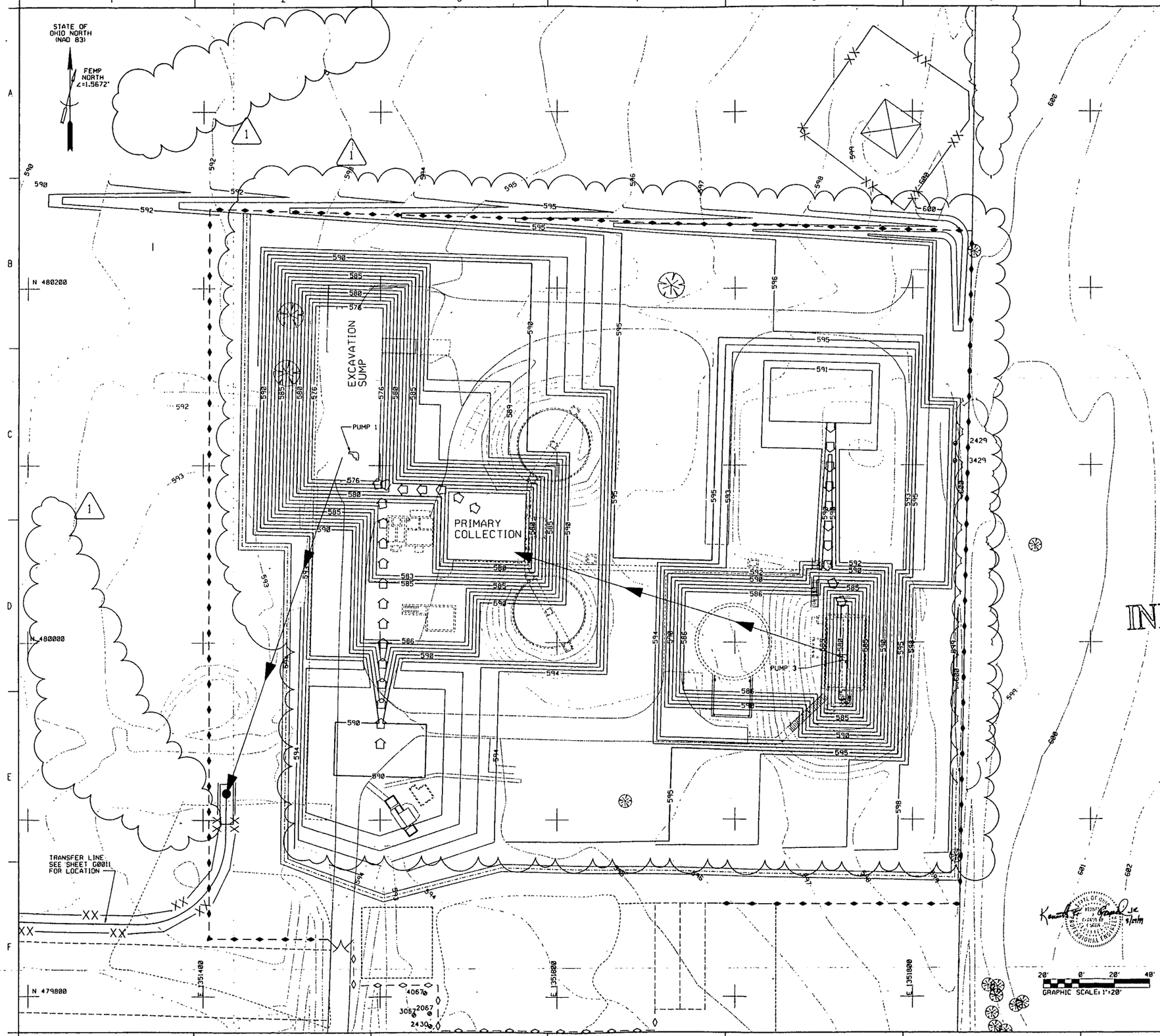

NOTES

1. CONTOURS INDICATED AS PROPOSED ARE USED TO CONVEY DEWATERING CONCEPT. CONTRACTOR SHALL SEQUENCE EXCAVATION AND DEWATERING PER THE APPROVED EXCAVATION WORK PLAN IN ACCORDANCE WITH SECTION 02205.

2108

PUMPED FLOW

GRAVITY FLOW

RELATED DWG NO.	DRAWING TITLE	SHEET NO.
92X-5900-X-00489	DRAWING INDEX	X0002
92X-5900-X-00490	LEGEND AND GENERAL NOTES	X0003
92X-5900-G-00517	TRANSFER LINE PLAN & PROFILE	G0011

INFORMATION ONLY

00000E

REV. NO.	ISSUE OR REVISION PURPOSE - DESCRIPTION	TL	PM	REVIS BY
1	REVISED PER DCN: 20712-002, 011			
0	CERTIFIED FOR CONSTRUCTION	FMP 10/7/98	CS 10/7/98	FMP 10/7/98

INITIALS AND DATE

UNITED STATES DEPARTMENT OF ENERGY
FERNALD ENVIRONMENTAL MANAGEMENT PROJECT

THIS DRAWING PREPARED BY
PARSONS
THE RALPH M. PARSONS CO. - PARSONS MAIN, INC. - ENGINEERING-SCIENCE, INC.
CINCINNATI, OHIO

PROJECT NAME
REMEDIATION AREA 1, PHASE II
SEWAGE TREATMENT PLANT EXCAVATION PACKAGE

DRAWING TITLE
CIVIL
PHASE II STP EXCAVATION
DEWATERING SYSTEM

DRAWN BY	DATE	TECHNICAL LEAD	DATE	CHECKED BY	DATE
T.J. BROWN	8/14/98	F.M. PARTON, JR.	8/14/98	F.M. PARTON, JR.	8/14/98

PLANT/BLDG. NO.	FLOOR	SCALE	CLASS
		1"=20'	

SUBMITTED FOR 30% ISSUE	SUBMITTED FOR 60% ISSUE	SUBMITTED FOR 90% ISSUE
TECH LEAD N/A	TECH LEAD N/A	TECH LEAD N/A
DATE	DATE	DATE

PO NUMBER	TOP PROJECT NO.	DRAWING INDEX CODE NO.	SHEET NO.	REV. NO.
TOP-021	20712	92X-5900-G-00508	G0013	1

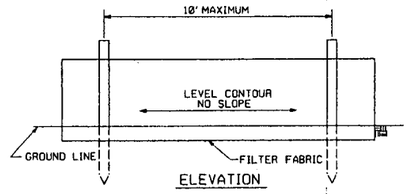

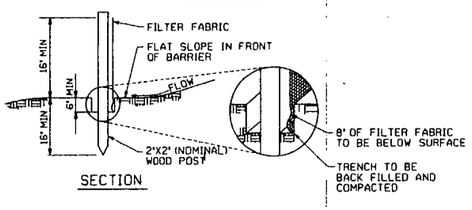

SILT FENCE DETAIL (1 / G0014) REF G0007

NTS

SEE SHEET G0019

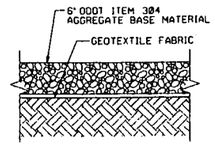

AGGREGATE SURFACE DETAIL (5 / G0014) REF G0003, E0006

NTS

CERTIFIED CLEAN SOIL ROAD SURFACE, 6" MIN, SEE NOTES BELOW

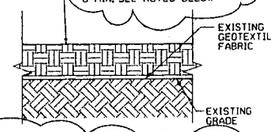

NOTE:

1. CONSTRUCT CLEAN OSDF HAUL ROAD.
2. MAINTAIN 6" MIN THICKNESS ROAD SURFACE CONSISTING OF CERTIFIED CLEAN SOIL (OR SCREENER REJECT MATERIAL) OBTAINED FROM THE OSDF BORROW AREA FOR BOTH ROADS.

STP / CLEAN OSDF HAUL ROADS (6 / G0014) REF G0003

NTS

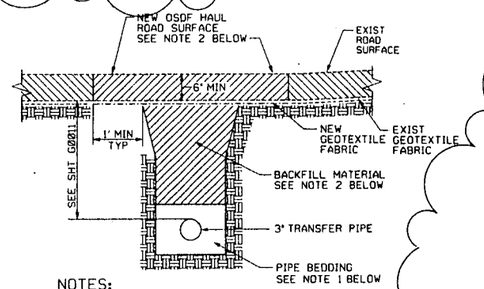

NOTES:

1. SEE DETAIL 3, THIS SHEET FOR TRENCHING AND PIPE BEDDING DETAILS.
2. NEW OSDF HAUL ROAD SURFACE AND TRENCH BACKFILL MATERIAL SHALL BE FROM OSDF BORROW AREA.

OSDF HAUL ROAD TRENCH BACKFILL (7 / G0014) REF G0011

NTS

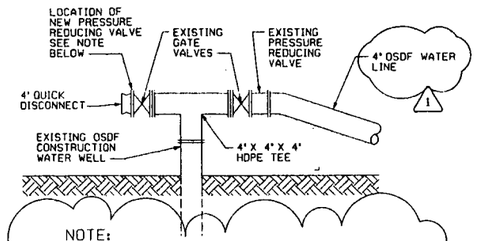

NOTE:

INSTALL NEW 4" PRESSURE REDUCING VALVE (PRV) BETWEEN GATE VALVE AND QUICK DISCONNECT. CONNECTIONS ARE BOLTED-FLANGED CONNECTIONS. PRV SHALL BE A CLA-VAL CO., MODEL NO. 90-01/690-01 PRESSURE REDUCING VALVE, OR EQUAL AS A MINIMUM. AFTER INSTALLATION OF PRV, REINSTALL QUICK DISCONNECT. (OPTIONAL)

PRV INSTALLATION (9 / G0014) REF G0007

NTS

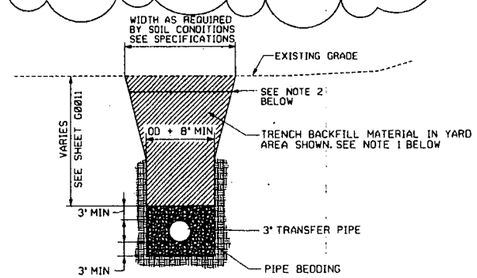

NOTES:

1. WHERE TRANSFER LINE CROSSES ASPHALT PAVEMENT, TRENCH FILL MATERAL SHALL BE ODOT ITEM 304, FULL DEPTH.
2. WHERE TRANSFER LINE CROSSES ASPHALT PAVEMENT, REPLACE PAVEMENT WITH EQUAL THICKNESS IN ACCORDANCE WITH ODOT ITEM 252.

PIPE BEDDING DETAIL (3 / G0014) REF G0011

NTS

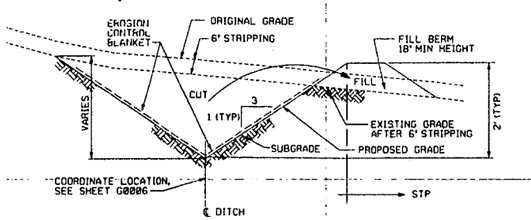

RUN-ON DIVERSION DITCH DETAIL (4 / G0014) REF G0006

NTS

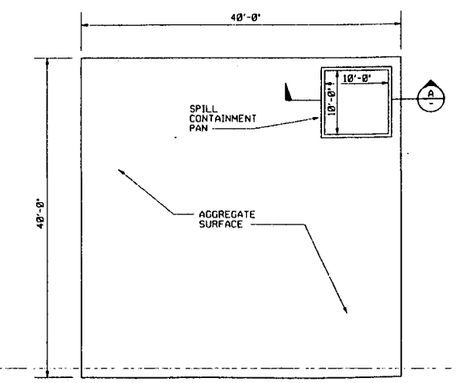

SPECIAL MATERIAL TRANSFER AREA DETAIL (8 / G0014) REF G0006

NTS

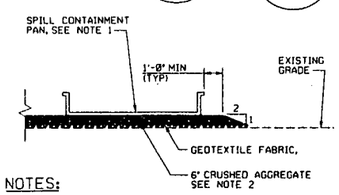

NOTES:

1. SPILL CONTAINMENT PAN SHALL BE DURABLE METAL APPROXIMATELY 10 FOOT-BY 4 INCHES-IN-DIMENSION, LEAK-PROOF, RESISTANT-TO-THE EFFECTS OF EXPOSURE TO THE ELEMENTS (OR APPROVED EQUAL).
2. AGGREGATE SURFACE SHALL BE ODOT ITEM 304.

SECTION (A / -)

NTS

NOTES

2108

RELATED DWG NO.	DRAWING TITLE	SHEET NO.
92X-5900-X-00489	DRAWING INDEX	X0002
92X-5900-X-00490	LEGEND AND GENERAL NOTES	X0003
92X-5900-G-00463	SITE PREP & GENERAL UTILITY REMOVAL PLAN	G0003
92X-5900-G-00503	STP DEEP EXCAVATION PLAN	G0006
92X-5900-G-00504	TRAP RANGE AREA PLAN	G0007
92X-5900-G-00517	TRNASFER LINE PLAN & PROFILE	G0011
92X-5900-G-01002	UTILITY REMOVAL METHODS	G0019
92X-5900-E-01003	ELECTRICAL - PLAN AND SCHEDULES	E0006

INFORMATION ONLY

000017

REV. NO.	ISSUE OR REVISION PURPOSE - DESCRIPTION	TL	PM	REVIEW BY
		INITIALS AND DATE		
1	REVISED PER DCN: 20712-003, 013	KG 3/19/99	CS 3/19/99	FMP 3/19/99
0	CERTIFIED FOR CONSTRUCTION	FMP 10/7/98	CS 10/7/98	FMP 10/7/98

UNITED STATES DEPARTMENT OF ENERGY
FERNALD ENVIRONMENTAL MANAGEMENT PROJECT

THIS DRAWING PREPARED BY
PARSONS
THE RALPH M. PARSONS CO. - PARSONS MAIN, INC. - ENGINEERING-SCIENCE, INC.
CINCINNATI, OHIO

PROJECT NAME
REMEDIATION AREA 1, PHASE II
SEWAGE TREATMENT PLANT EXCAVATION PACKAGE

DRAWING TITLE
CIVIL
DETAIL SHEET

DRAWN BY	DATE	TECHNICAL LEAD	DATE	CHECKED BY	DATE
J.G. ASHWORTH	8/14/98	F.M. PARTON, JR.	8/14/98	F.M. PARTON, JR.	8/14/98
PLANT/BLDG. NO.		FLOOR		SCALE: NONE	CLASS

SUBMITTED FOR 30% ISSUE	SUBMITTED FOR 60% ISSUE	SUBMITTED FOR 90% ISSUE
TECH LEAD N/A	TECH LEAD N/A	TECH LEAD N/A
DATE	DATE	DATE

PO NUMBER	FOR PROJECT NO.	DRAWING INDEX CODE NO.	SHEET NO.	REV. NO.
TOP-021	20712	92X-5900-G-00498	G0014	1

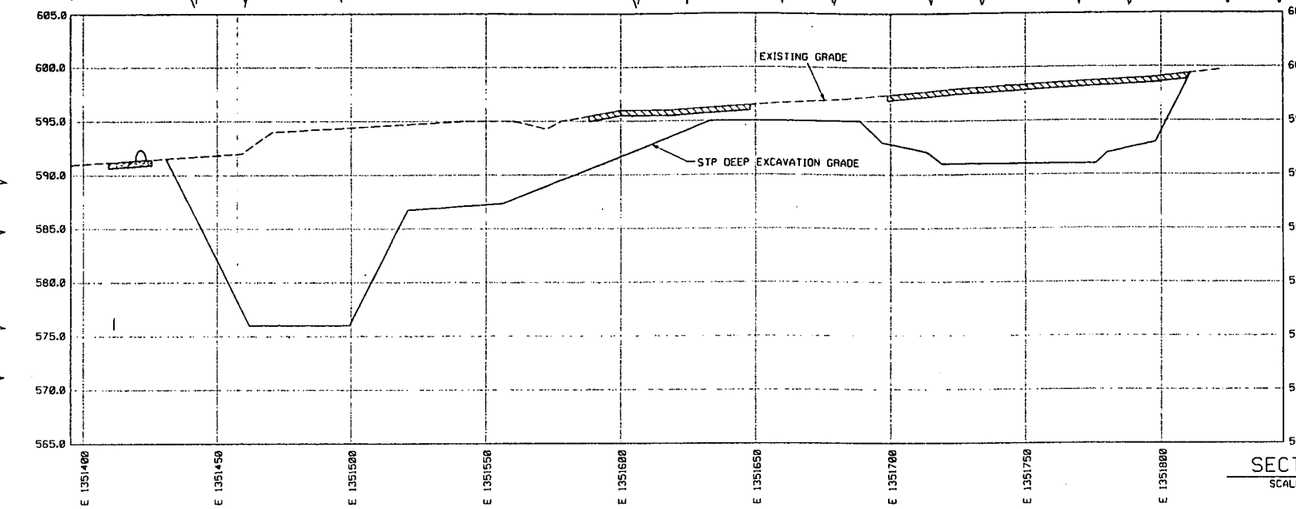

SECTION @ N 480150 (A) REF G0015 G0006

SCALE: HOR. 1"=20' VER. 1"=5'

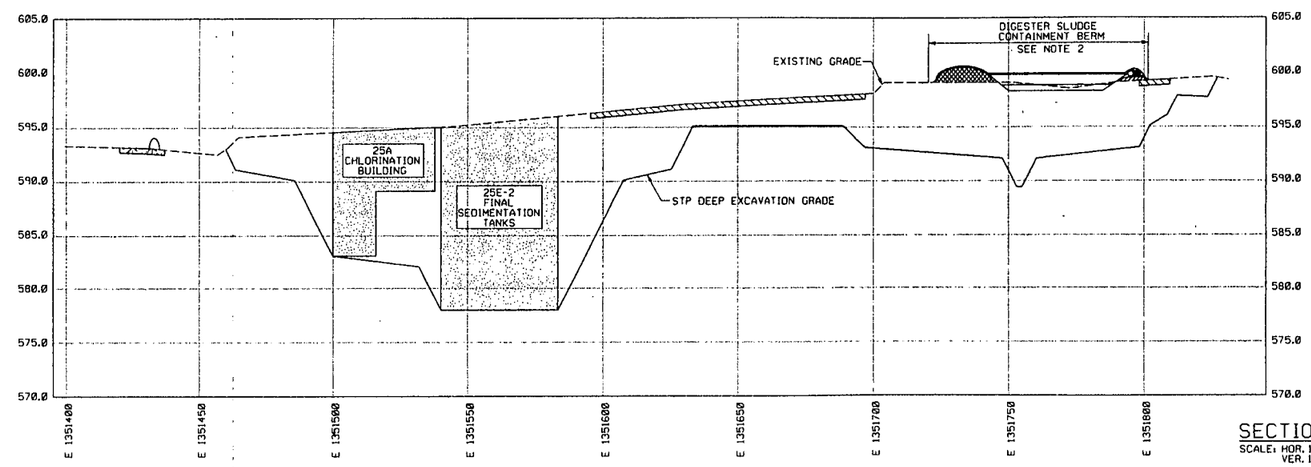

SECTION @ N 480059 (B) REF G0015 G0006

SCALE: HOR. 1"=20' VER. 1"=5'

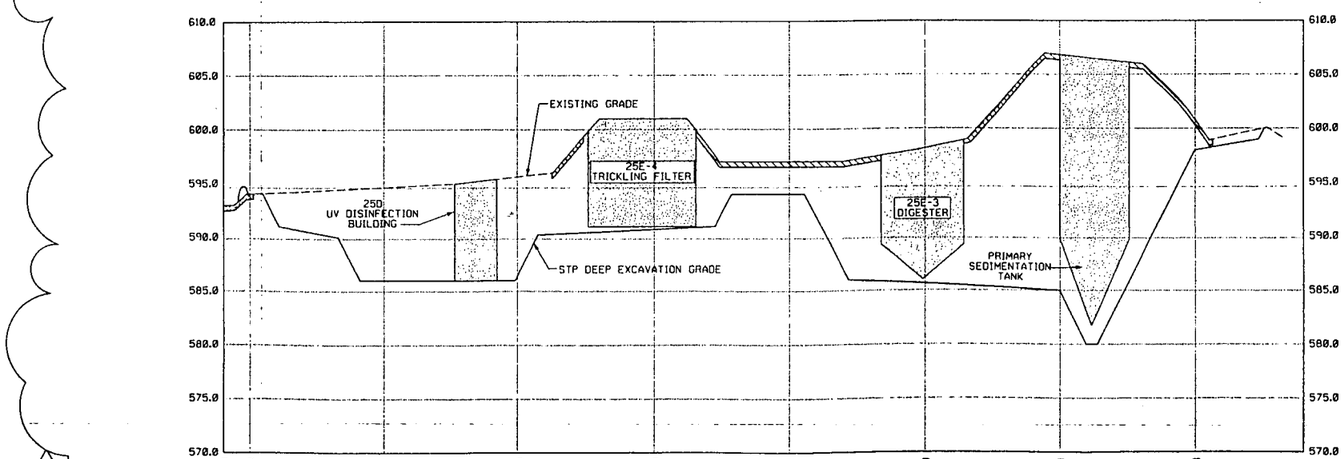

SECTION @ N 480015 (C) REF G0015 G0006

SCALE: HOR. 1"=20' VER. 1"=5'

NOTES

1. STRUCTURES SHOWN ARE APPROXIMATE IN LOCATION AND DEPTH. SEE TECHNICAL REFERENCE DRAWINGS FOR ACTUAL LOCATIONS.
2. SEE SHEET G0005 FOR DETAILS OF THE DIGESTER SLUDGE CONTAINMENT BERM ON TOP OF THE EAST SLUDGE DRYING BED AND FOR GENERAL EXCAVATION GUIDANCE.

2108

LEGEND

- ABOVE WAC EXCAVATION
- 6' STRIPPING AREA
- EXISTING STRUCTURE

RELATED DWG NO.	DRAWING TITLE	SHEET NO.
92X-5900-X-00489	DRAWING INDEX	X0002
92X-5900-X-00498	LEGEND AND GENERAL NOTES	X0003
92X-5900-G-00434	ABOVE WAC EXCAVATION AND STP AREA UTILITY REMOVAL PLAN	G0005
92X-5900-G-00503	STP DEEP EXCAVATION PLAN	G0006

000038

INFORMATION ONLY

REV. NO.	ISSUE OR REVISION PURPOSE - DESCRIPTION	TL	PM	REVIS BY
1	REVISED PER DCN:20712- 011	3/4/99	CS 3/4/99	3/4/99
0	CERTIFIED FOR CONSTRUCTION	FMP 10/7/98	CS< 10/7/98	FMP 10/7/98

DETAILS AND DATE

UNITED STATES DEPARTMENT OF ENERGY
FERNALD ENVIRONMENTAL MANAGEMENT PROJECT

THIS DRAWING PREPARED BY
PARSONS
THE RALPH M. PARSONS CO. - PARSONS MAIN, INC. - ENGINEERING-SCIENCE, INC.
CINCINNATI, OHIO

PROJECT NAME
REMEDIATION AREA 1, PHASE II
SEWAGE TREATMENT PLANT EXCAVATION PACKAGE

DRAWING TITLE
CIVIL
CROSS SECTIONS - SHEET 1 OF 3

DRAWN BY	DATE	TECHNICAL LEAD	DATE	CHECKED BY	DATE
J.G. ASHWORTH	07/31/98	F.M. PARTON, JR.	8/14/98	F.M. PARTON, JR.	8/14/98
PLANT/BLDG. NO. —		FLOOR —		SCALE 1"=20'	CLASS

SUBMITTED FOR 30% ISSUE	SUBMITTED FOR 60% ISSUE	SUBMITTED FOR 90% ISSUE
TECH LEAD N/A	TECH LEAD N/A	TECH LEAD N/A
DATE	DATE	DATE

PO NUMBER	FDF PROJECT NO.	DRAWING INDEX CODE NO.	SHEET NO.	REV. NO.
TOP-021	20712	92X-5900-G-00509	G0015	1

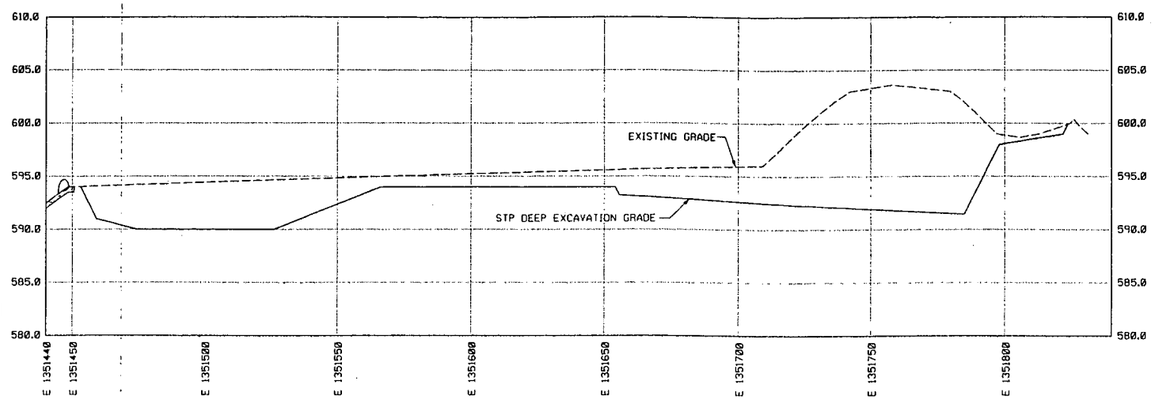

SECTION @ N 479944 (D / G0016) REF G0006

SCALE: HOR. 1"=20' VER. 1"=5'

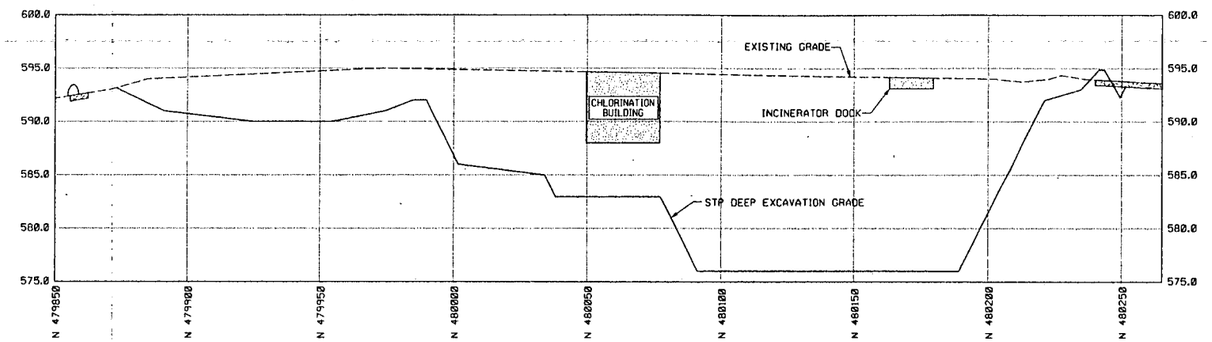

SECTION @ E 1351499 (E / G0016) REF G0006

SCALE: HOR. 1"=20' VER. 1"=5'

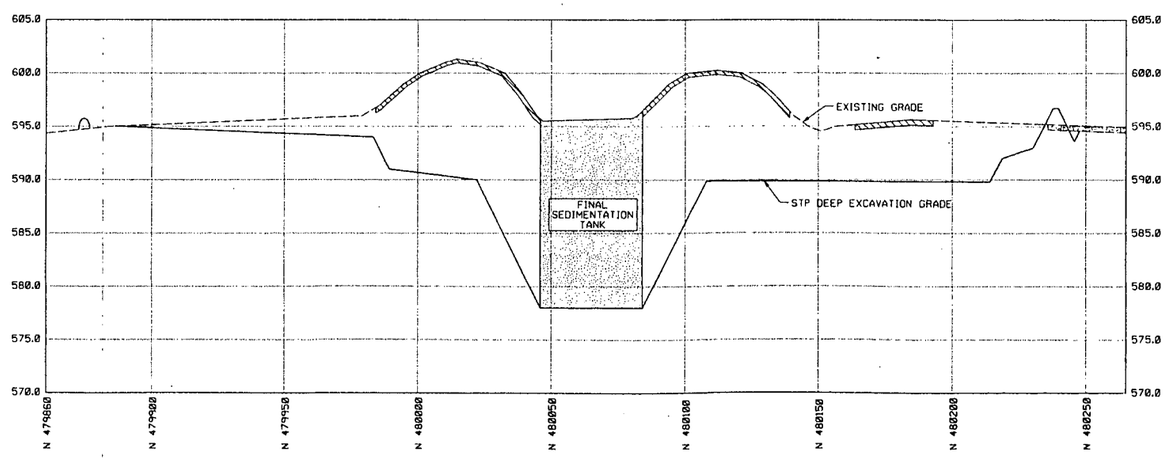

SECTION @ E 1351575 (F / G0016) REF G0006

SCALE: HOR. 1"=20' VER. 1"=5'

NOTES

1. STRUCTURES SHOWN ARE APPROXIMATE IN LOCATION AND DEPTH. SEE TECHNICAL REFERENCE DRAWINGS FOR ACTUAL LOCATIONS.
2. SEE SHEET G0005 FOR GENERAL EXCAVATION GUIDANCE.

2108

LEGEND

- ABOVE WAC EXCAVATION
- 6" STRIPPING AREA
- EXISTING STRUCTURE

RELATED DWG NO.	DRAWING TITLE	SHEET NO.
92X-5900-X-00489	DRAWING INDEX	X0002
92X-5900-X-00490	LEGEND AND GENERAL NOTES	X0003
92X-5900-G-00503	STP DEEP EXCAVATION PLAN	G0006
92X-5900-G-00434	ABOVE WAC EXCAVATION AND STP AREA UTILITY REMOVAL PLAN	G0005

INFORMATION ONLY

000019

REV. NO.	ISSUE OR REVISION PURPOSE - DESCRIPTION	TL	PM	REVD BY
1	REVISED PER DCN: 20712-009, 011	KA 3/14/99	CS 3/14/99	3/14/99
0	CERTIFIED FOR CONSTRUCTION	FMP 10/7/98	CS 10/7/98	FMP 10/7/98

INITIALS AND DATE

UNITED STATES DEPARTMENT OF ENERGY
FERNALD ENVIRONMENTAL MANAGEMENT PROJECT

THIS DRAWING PREPARED BY
PARSONS
THE RALPH M. PARSONS CO. - PARSONS MAIN, INC. - ENGINEERING-SCIENCE, INC.
CINCINNATI, OHIO

PROJECT NAME
REMEDIATION AREA 1, PHASE II
SEWAGE TREATMENT PLANT EXCAVATION PACKAGE

DRAWING TITLE
CIVIL
CROSS SECTIONS - SHEET 2 OF 3

DRAWN BY	DATE	TECHNICAL LEAD	DATE	CHECKED BY	DATE
J.G. ASHWORTH	07/31/98	F.M. PARTON, JR.	8/14/98	F.M. PARTON, JR.	8/14/98

PLANT/BLDG NO. | FLOOR | SCALE 1"=20' | CLASS

SUBMITTED FOR 30% ISSUE: TECH LEAD N/A, DATE
SUBMITTED FOR 60% ISSUE: TECH LEAD N/A, DATE
SUBMITTED FOR 90% ISSUE: TECH LEAD N/A, DATE

PO NUMBER	FDF PROJECT NO.	DRAWING INDEX CODE NO.	SHEET NO.	REV. NO.
TOP-021	20712	92X-5900-G-00510	G0016	1

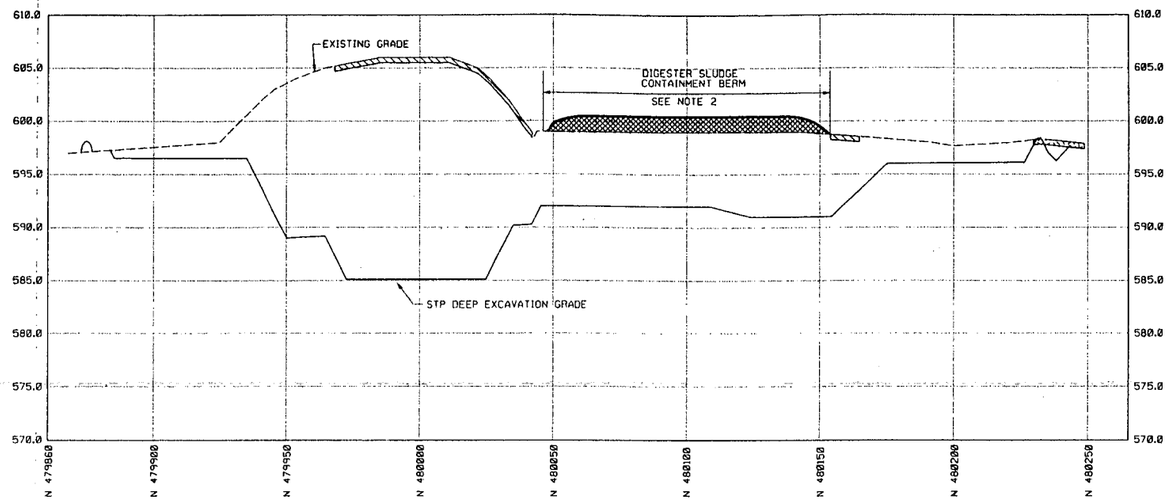

SECTION @ E 1351740 (G / G0017) REF G0006

SCALE: HOR. 1"=20'
VER. 1"=5'

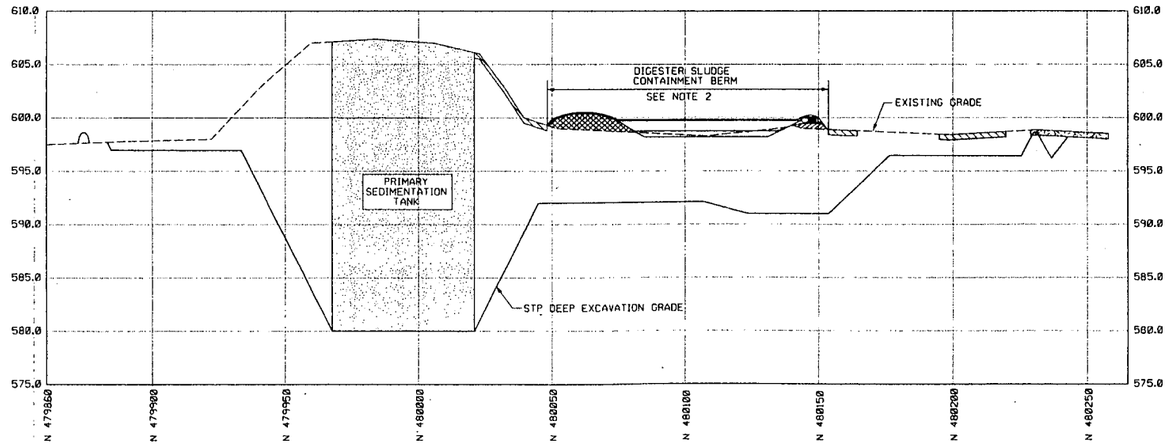

SECTION @ E 1351762 (H / G0017) REF G0006

SCALE: HOR. 1"=20'
VER. 1"=5'

NOTES

1. STRUCTURES SHOWN ARE APPROXIMATE IN LOCATION AND DEPTH. SEE TECHNICAL REFERENCE DRAWINGS FOR ACTUAL LOCATIONS.
2. SEE SHEET G0005 FOR DETAILS OF THE DIGESTER SLUDGE CONTAINMENT BERM ON TOP OF THE EAST SLUDGE DRYING BED AND FOR GENERAL EXCAVATION GUIDANCE.

2108

LEGEND

- ABOVE WAC EXCAVATION
- 6" STRIPPING AREA
- EXISTING STRUCTURE

RELATED DWG NO.	DRAWING TITLE	SHEET NO.
92X-5900-X-00489	DRAWING INDEX	X0002
92X-5900-X-00490	LEGEND AND GENERAL NOTES	X0003
92X-5900-G-00434	ABOVE WAC EXCAVATION AND STP AREA UTILITY REMOVAL PLAN	G0005
92X-5900-G-00503	STP DEEP EXCAVATION PLAN	G0006

INFORMATION ONLY
000020

REV. NO.	ISSUE OR REVISION PURPOSE - DESCRIPTION	INITIALS AND DATE: TL	PM	REVD BY
1	REVISED PER DCN: 20712-089, 011	3/19/99	3/19/99	
0	CERTIFIED FOR CONSTRUCTION	FMP 10/7/98	CS 10/7/98	FMP 10/7/98

UNITED STATES DEPARTMENT OF ENERGY
FERNALD ENVIRONMENTAL MANAGEMENT PROJECT

THIS DRAWING PREPARED BY
PARSONS
THE RALPH M. PARSONS CO. - PARSONS MAIN, INC. - ENGINEERING-SCIENCE, INC.
CINCINNATI, OHIO

PROJECT NAME
REMEDIATION AREA 1, PHASE II
SEWAGE TREATMENT PLANT EXCAVATION PACKAGE

DRAWING TITLE
CIVIL
CROSS SECTIONS - SHEET 3 OF 3

DRAWN BY	DATE	TECHNICAL LEAD	DATE	CHECKED BY	DATE
J.G. ASHWORTH	07/31/98	F.M. PARTON, JR.	8/14/98	F.M. PARTON, JR.	8/14/98

PLANT/BLDG. NO. — FLOOR — SCALE: 1"=20' — CLASS

SUBMITTED FOR 30% ISSUE	SUBMITTED FOR 60% ISSUE	SUBMITTED FOR 90% ISSUE
TECH LEAD N/A	TECH LEAD N/A	TECH LEAD N/A
DATE	DATE	DATE

PO NUMBER	TOP PROJECT NO.	DRAWING INDEX CODE NO.	SHEET NO.	REV. NO.
TOP-021	20712	92X-5900-G-00516	G0017	1

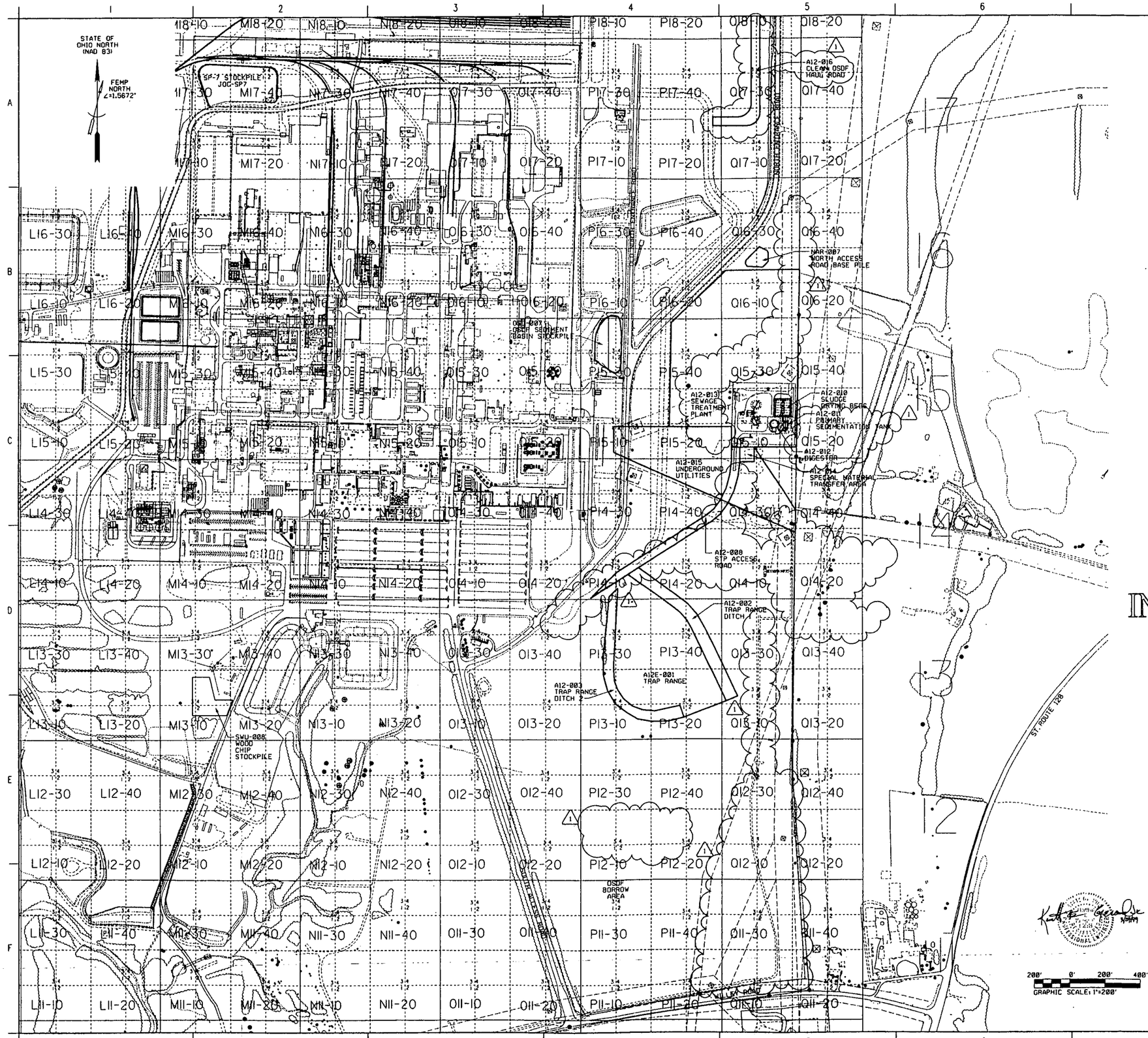

NOTES

1. PROVIDE CONSTRUCTION MANAGER WITH A WRITTEN SUMMARY OF THE QUANTITY, MATERIAL TYPE, SOURCE LOCATION (MTL), AND DESTINATION LOCATION (MTL) OF ALL MATERIALS MOVED BETWEEN MTL'S DAILY. SOIL MOVED WITHIN A MTL DOES NOT NEED TO BE TRACKED.
2. THE MATERIAL TYPES WILL BE TOPSOIL, SOIL, DEBRIS (CONCRETE, GRAVEL, WOOD, METAL, ASPHALT, REMOVED STRUCTURES), WOODCHIPS, CLEARING AND GRUBBING MATERIAL.
3. MATERIAL SOURCE LOCATIONS ARE SHOWN ON THIS DRAWING.
4. D16-20 - TYPICAL FDF MATERIAL TRACKING DESIGNATION.
5. SEE SHT G0008 FOR ABOVE WAC SP-7 STOCKPILE AREA.

2108

RELATED DWG NO.	DRAWING TITLE	SHEET NO.
92X-5900-X-00489	DRAWING INDEX	X0002
92X-5900-X-00490	LEGEND AND GENERAL NOTES	X0003
92X-5900-G-00505	SP-7 STOCK PILE	G0008

INFORMATION ONLY

000021

REV. NO.	ISSUE OR REVISION PURPOSE - DESCRIPTION	TL	PM	REVD BY
1	REVISED PER DCN: 20712-002, 013	KA 3/10/99	CS 3/10/99	FMP 3/10/99
0	CERTIFIED FOR CONSTRUCTION	FMP 10/7/98	CS 10/7/98	FMP 10/7/98

INITIALS AND DATE

UNITED STATES DEPARTMENT OF ENERGY
FERNALD ENVIRONMENTAL MANAGEMENT PROJECT

THIS DRAWING PREPARED BY
PARSONS
THE RALPH M. PARSONS CO. - PARSONS MAIN, INC. - ENGINEERING-SCIENCE, INC.
CINCINNATI, OHIO

PROJECT NAME
REMEDIATION AREA 1, PHASE II
SEWAGE TREATMENT PLANT EXCAVATION PACKAGE

DRAWING TITLE
CIVIL
MATERIAL TRACKING PLAN

DRAWN BY	DATE	TECHNICAL LEAD	DATE	CHECKED BY	DATE
J.G. ASHWORTH	8/14/98	F.M. PARTON, JR.	8/14/98	F.M. PARTON, JR.	8/14/98
PLANT/BLDG. NO.		FLOOR		SCALE 1"=200'	CLASS

SUBMITTED FOR 30% ISSUE	SUBMITTED FOR 80% ISSUE	SUBMITTED FOR 90% ISSUE
TECH LEAD N/A	TECH LEAD N/A	TECH LEAD N/A
DATE	DATE	DATE

PO NUMBER	FOR PROJECT NO.	DRAWING INDEX CODE NO.	SHEET NO.	REV. NO.
TOP-021	20712	92X-5900-G-00487	G0018	1

NOTES

2108

① CONTRACTOR EXCAVATES SIX (6) INCHES OF SURFACE SOIL ABOVE UTILITY LINE(S) AND DISPOSITIONS IN THE OSDF.

② CONTRACTOR EXCAVATES SUBSURFACE SOIL (BACKFILL) FROM ABOVE THE PIPE BEDDING AND STOCKPILES IT UPGRADIENT OF THE UTILITY TRENCH.

③ CONTRACTOR EXCAVATES THE PIPE BEDDING MATERIAL AND PIPE, PLUS OVER-EXCAVATES PER CONSTRUCTION DRAWINGS.

④ CONTRACTOR STOCKPILES PIPE BEDDING AS IMPACTED MATERIAL ALONG SIDE OF AND DOWNGRADIENT OF THE EXCAVATION. CONTRACTOR MAINTAINS A 6' MIN. FLAT SURFACE ON THE IMPACTED MATERIAL STOCKPILE TO FACILITATE HPGe MONITORING.

⑤ PIPE IS VISUALLY INSPECTED. PIPE WITH VISIBLE PROCESS RESIDUE MASS IS MANAGED AS CONTAMINATED DEBRIS AND PLACED IN CONTAINERS FOR OFF-SITE DISPOSAL. PIPE WITH NO VISIBLE RESIDUE MASS IS SIZE REDUCED AND SENT TO OSDF.

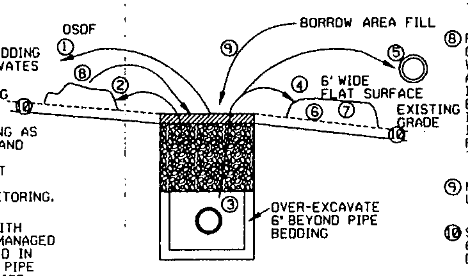

⑥ FDF SAMPLES PIPE BEDDING MATERIAL FOR WAC ATTAINMENT AND DIRECTS THE CONTRACTOR TO DISPOSITION THE MATERIAL IN EITHER THE OSDF OR SP-7 STOCKPILE, PENDING SAMPLE RESULTS.

⑦ FDF SAMPLES THE LAST BUCKET REMOVED FROM THE TRENCH BOTTOM FOR FRL WITH THE ASSISTANCE OF CONTRACTOR EQUIPMENT.

⑧ PRIOR TO OBTAINING FRL RESULTS, THE CONTRACTOR BACKFILLS THE TRENCH WITH SUBSURFACE SOIL EXCAVATED FROM ABOVE THE PIPE BEDDING. CONTRACTOR IS CAREFUL NOT TO OVER-EXCAVATE INTO EXISTING SURFACE SOIL. IF FRL RESULTS INDICATE THAT AN AREA OF THE TRENCH IS ABOVE FRL, THE CONTRACTOR SHALL RE-EXCAVATE THAT LOCATION TO REMOVE THE APPROPRIATE MATERIAL.

⑨ MATERIAL FROM THE OSDF BORROW AREA IS USED TO BACKFILL THE TRENCH TO GRADE.

⑩ SURROUNDING SURFACE SOIL IS STRIPPED TO 6' BELOW ORIGINAL GRADE PER CONSTRUCTION DRAWINGS.

METHOD 1: PROCESS PIPING WITHIN PROPOSED 6" STRIPPING AREAS

NTS

① CONTRACTOR EXCAVATES SIX (6) INCHES OF SURFACE SOIL ABOVE UTILITY LINE(S) AND DISPOSITIONS IN THE OSDF.

② CONTRACTOR EXCAVATES SUBSURFACE SOIL (BACKFILL) FROM ABOVE THE PIPE BEDDING AND STOCKPILE IT UPGRADIENT OF THE UTILITY TRENCH.

③ CONTRACTOR EXCAVATES THE PIPE BEDDING MATERIAL AND PIPE, PLUS OVER-EXCAVATES PER CONSTRUCTION DRAWINGS.

④ CONTRACTOR STOCKPILES PIPE BEDDING ADJACENT TO THE EXCAVATION.

⑤ PIPE IS VISUALLY INSPECTED. NON-PROCESS PIPE SHOULD HAVE NO VISIBLE RESIDUE MASS. SIZE REDUCE AND SEND TO OSDF.

⑥ FDF SAMPLES PIPE BEDDING MATERIAL FOR WAC ATTAINMENT AND DIRECTS THE CONTRACTOR TO DISPOSITION THE MATERIAL IN EITHER THE OSDF OR SP-7 STOCKPILE, PENDING SAMPLE RESULTS.

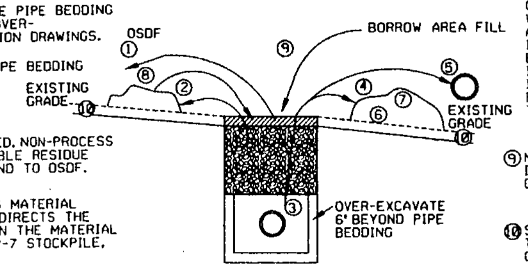

⑦ FDF SAMPLES THE LAST BUCKET REMOVED FROM THE TRENCH BOTTOM FOR FRL WITH THE ASSISTANCE OF CONTRACTOR EQUIPMENT.

⑧ PRIOR TO OBTAINING FRL RESULTS, THE CONTRACTOR BACKFILLS THE TRENCH WITH SUBSURFACE SOIL EXCAVATED FROM ABOVE THE PIPE BEDDING. CONTRACTOR IS CAREFUL NOT TO OVER-EXCAVATE INTO EXISTING SURFACE SOIL. IF FRL RESULTS INDICATE THAT AN AREA OF THE TRENCH IS ABOVE FRL, THE CONTRACTOR SHALL RE-EXCAVATE THAT LOCATION TO REMOVE THE APPROPRIATE MATERIAL.

⑨ MATERIAL FROM THE OSDF BORROW AREA IS USED TO BACKFILL THE TRENCH TO GRADE.

⑩ SURROUNDING SURFACE SOIL IS STRIPPED TO 6' BELOW ORIGINAL GRADE PER CONSTRUCTION GRADING.

METHOD 3: NON-PROCESS PIPING WITHIN PROPOSED 6" STRIPPING AREAS

NTS

① CONTRACTOR EXCAVATES SIX (6) INCHES OF SURFACE SOIL ABOVE UTILITY LINES(S).

② CONTRACTOR SPREADS EXCAVATED SURFACE SOIL ADJACENT TO, AND UPGRADIENT OF, THE UTILITY EXCAVATION. THE SPREAD MATERIAL SERVES AS A PAD FOR STOCKING SUBSURFACE SOIL (BACKFILL) EXCAVATED FROM ABOVE THE PIPE BEDDING.

③ CONTRACTOR EXCAVATES SOIL (BACKFILL) FROM ABOVE THE PIPE BEDDING AND MANAGES AS NON-IMPACTED MATERIAL.

④ CONTRACTOR TEMPORARILY STOCKPILES THE SUBSURFACE SOIL (BACKFILL) ONTO THE SURFACE SOIL PAD.

⑤ CONTRACTOR EXCAVATES THE PIPE BEDDING MATERIAL AND PIPE, PLUS OVER-EXCAVATES PER CONSTRUCTION DRAWINGS.

⑥ CONTRACTOR STOCKPILES PIPE BEDDING AS IMPACTED MATERIAL ALONG SIDE OF AND DOWN-GRADIENT OF THE EXCAVATION. CONTRACTOR MAINTAINS A 6' MIN. FLAT SURFACE ON THE STOCKPILE TO FACILITATE HPGe MONITORING.

⑦ PIPE IS VISUALLY INSPECTED. PIPE WITH VISIBLE PROCESS RESIDUE MASS IS MANAGED AS CONTAMINATED DEBRIS AND PLACE IN CONTAINERS FOR OFF-SITE DISPOSAL. PIPE WITH NO VISIBLE RESIDUE MASS IS SIZE REDUCED AND SENT TO OSDF.

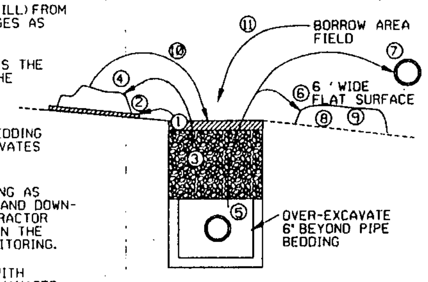

⑧ FDF SAMPLES PIPE BEDDING MATERIAL FOR WAC ATTAINMENT AND DIRECTS THE CONTRACTOR TO DISPOSITION THE MATERIAL IN EITHER THE OSDF OR SP-7 STOCKPILE, PENDING SAMPLE RESULTS. THE CONTRACTOR OVER-EXCAVATES 6" WHEN REMOVING THE STOCKPILE.

⑨ FDF SAMPLES THE LAST BUCKET REMOVED FROM THE BOTTOM FOR FRL WITH THE ASSISTANCE OF CONTRACTOR EQUIPMENT.

⑩ PRIOR TO OBTAINING FRL RESULTS, THE CONTRACTOR BACKFILLS THE TRENCH WITH SUBSURFACE SOIL EXCAVATED FROM ABOVE THE PIPE BEDDING. THE CONTRACTOR LEAVES THE SURFACE SOIL PAD THAT THIS MATERIAL WAS STOCKPILED ON IN PLACE. IF FRL RESULTS INDICATE THAT AN AREA OF THE TRENCH IS ABOVE FRL, THE CONTRACTOR SHALL RE-EXCAVATE THE LOCATION TO REMOVE THE APROPRIATE MATERIAL.

⑪ MATERIAL FROM THE OSDF BORROW AREA IS USED TO BACKFILL THE TRENCH TO GRADE.

⑫ SURROUNDING SURFACE SOIL AND REMAINING SURFACE SOIL AND REMAINING SURFACE SOIL PAD (STEP 2) ARE CERTIFIED IN PLACE.

METHOD 2: PROCESS PIPING OUTSIDE OF 6" STRIPPING AREAS

NTS

① CONTRACTOR EXCAVATES SIX (6) INCHES OF SURFACE SOIL ABOVE UTILITY LINE(S).

② CONTRACTOR SPREADS EXCAVATED SURFACE SOIL ADJACENT TO, AND UPGRADIENT OF THE UTILITY EXCAVATION. THE SPREAD MATERIAL SERVES AS A PAD FOR STOCKPILING SUBSURFACE SOIL (BACKFILL) EXCAVATED FROM ABOVE THE PIPE BEDDING.

③ CONTRACTOR EXCAVATES SUBSURFACE SOIL (BACKFILL) FROM ABOVE THE PIPE BEDDING AND MANAGES AS NON-IMPACTED MATERIAL.

④ CONTRACTOR TEMPORARILY STOCKPILES THE SUBSURFACE SOIL (BACKFILL) ONTO THE SURFACE SOIL PAD.

⑤ CONTRACTOR EXCAVATES THE PIPE BEDDING MATERIAL AND PIPE, PLUS OVER-EXCAVATES PER CONSTRUCTION DRAWINGS.

⑥ CONTRACTOR STOCKPILES PIPE BEDDING ADJACENT TO THE EXCAVATION.

⑦ PIPE IS VISUALLY INSPECTED. NON-PROCESS PIPE SHOULD HAVE NO VISIBLE RESIDUE MASS. PIPE IS SIZE REDUCED AND SENT TO OSDF.

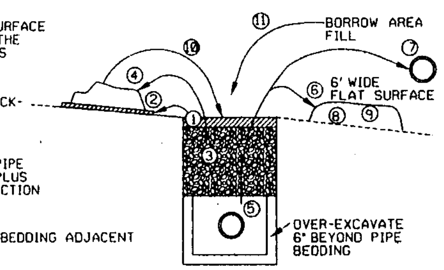

⑧ FDF SAMPLES PIPE BEDDING MATERIAL FOR WAC ATTAINMENT AND DIRECTS THE CONTRACTOR TO DISPOSITION THE MATERIAL IN EITHER THE OSDF OR SP-7 STOCKPILE. PENDING SAMPLE RESULTS. CONTRACTOR OVER-EXCAVATES 6" WHEN REMOVING THE STOCKPILE.

⑨ FDF SAMPLES THE LAST BUCKET REMOVED FROM THE TRENCH BOTTOM FOR FRL WITH THE ASSISTANCE OF CONTRACTOR EQUIPMENT.

⑩ PRIOR TO OBTAINING FRL RESULTS, THE CONTRACTOR BACKFILLS THE TRENCH WITH SUBSURFACE SOIL EXCAVATED FROM ABOVE THE PIPE BEDDING. THE CONTRACTOR LEAVES THE SURFACE SOIL PAD THAT THIS MATERIAL WAS STOCKPILED ON IN PLACE. IF FRL RESULTS INDICATE THAT AN AREA OF THE TRENCH IS ABOVE FRL, THE CONTRACTOR SHALL RE-EXCAVATE THAT LOCATION TO REMOVE THE APPROPRIATE MATERIAL.

⑪ MATERIAL FROM THE OSDF BORROW AREA IS USED TO BACKFILL THE TRENCH TO GRADE.

⑫ SURROUNDING SURFACE SOIL AND REMAINING SURFACE SOIL PAD (STEP 2) ARE CERTIFIED IN PLACE.

METHOD 4: NON-PROCESS PIPING OUTSIDE OF PROPOSED 6" STRIPPING AREAS

NTS

000022

RELATED DWG NO.	DRAWING TITLE	SHEET NO.
92X-5900-X-00489	DRAWING INDEX	X0002
92X-5900-X-00490	LEGEND AND GENERAL NOTES	X0003
92X-5900-G-00463	SITE PREP & GENERAL UTILITY REMOVAL PLAN	G0003
92X-5900-G-00503	STP DEEP EXCAVATION PLAN	G0006
92X-5900-G-00504	TRAP RANJE AREA PLAN	G0007
92X-5900-G-00517	TRNASFER LINE PLAN & PROFILE	G0011

INFORMATION ONLY

SUMMARY OF UNDERGROUND UTILITIES OUTSIDE OF STP DEEP EXCAVATION

UTILITY I.D.	UTILITY TYPE	UTILITY DESCRIPTION	PROCESS PIPING	6" STRIPPING	EXCAVATION METHOD
SN-8" -L1	SANITARY	FORCE MAIN FROM THE FORMER PRODUCTION AREA TO THE STP	YES	YES/NO	METHOD 1 & 2
• FT-4-12" W	EFFLUENT	EFFLUENT LINE FROM FORMER PRODUCTION AREA TO THE STP	YES	YES/NO	METHOD 1
• FG-14-4"V (1)	FUEL GAS	SECTION FROM FORMER PRODUCTION AREA TO THE STP	NO	YES/NO	METHOD 1
• DW 3" W	DRINKING WATER	FROM FORMER PRODUCTION AREA TO STP, TO BE EXCAVATED IN COMMOM TRENCH WITH FT-4-12" W	NO	YES/NO	METHOD 1
DW-4" -L3	DRINKING WATER	FROM FORMER PRODUCTION AREA TO STP	NO	YES	METHOD 3
SN-16" C1	SANITARY	STP DISCHARGE LINE TO THE RIVER FROM STP TO PROPERTY LINE	NO	NO	METHOD 4
FG-14-4"V (2)	FUEL GAS	SECTION SOUTH OF STP TO PRORERTY LINE	NO	NO	METHOD 4
21" W×20" D CONC DUCT	ELECTRICAL	FROM DO SUBSTATION TO FORMER PRODUCTION AREA	NO	YES/NO	METHOD 3 & 4
17" W×16" D CONC DUCT	ELECTRICAL	IMMEDIATELY NORTH OF DO SUBSTATION	NO	NO	METHOD 4
19" SQ. CONC DUCT	ELECTRICAL	IMMEDIATELY NORTH OF DO SUBSTATION	NO	NO	METHOD 4
20" W×12" D CONC DUCT	ELECTRICAL	NORTHWEST OF DO SUBSTATION	NO	NO	METHOD 4
ST-20"	STORM	LINK BETWEEN MANHOLE 176C AND 176B	NO	NO	METHOD 4

• UTILITIES TO BE EXCAVATED IN A COMMON TRENCH

REV. NO.	ISSUE OR REVISION PURPOSE - DESCRIPTION	TL	PM	REVD BY
0	CERTIFIED FOR CONSTRUCTION, ADDED PER DCN: 20712-003, MODIFIED PER DCN: 013		3/29/99	

INITIALS AND DATE

UNITED STATES DEPARTMENT OF ENERGY

FERNALD ENVIRONMENTAL MANAGEMENT PROJECT

THIS DRAWING PREPARED BY

PARSONS

THE RALPH M. PARSONS CO. - PARSONS MAIN, INC. - ENGINEERING-SCIENCE, INC.

CINCINNATI, OHIO

PROJECT NAME

REMEDIATION AREA 1, PHASE II

SEWAGE TREATMENT PLANT EXCAVATION PACKAGE

DRAWING TITLE

CIVIL

UTILITY REMOVAL METHODS

DRAWN BY	DATE	TECHNICAL LEAD	DATE	CHECKED BY	DATE
D. REED	2/1/99	K. GERARD	3/24/99	K. GERARD	2/22/99
PLANT/BLDG. NO.		FLOOR		SCALE NONE	CLASS

SUBMITTED FOR 30% ISSUE	SUBMITTED FOR 60% ISSUE	SUBMITTED FOR 90% ISSUE
TECH LEAD N/A	TECH LEAD N/A	TECH LEAD N/A
DATE	DATE	DATE

PO NUMBER	FDF PROJECT NO.	DRAWING INDEX CODE NO.	SHEET NO.	REV. NO.
TOP-021	20712	92X-5900-G-01002	G0019	0

2108

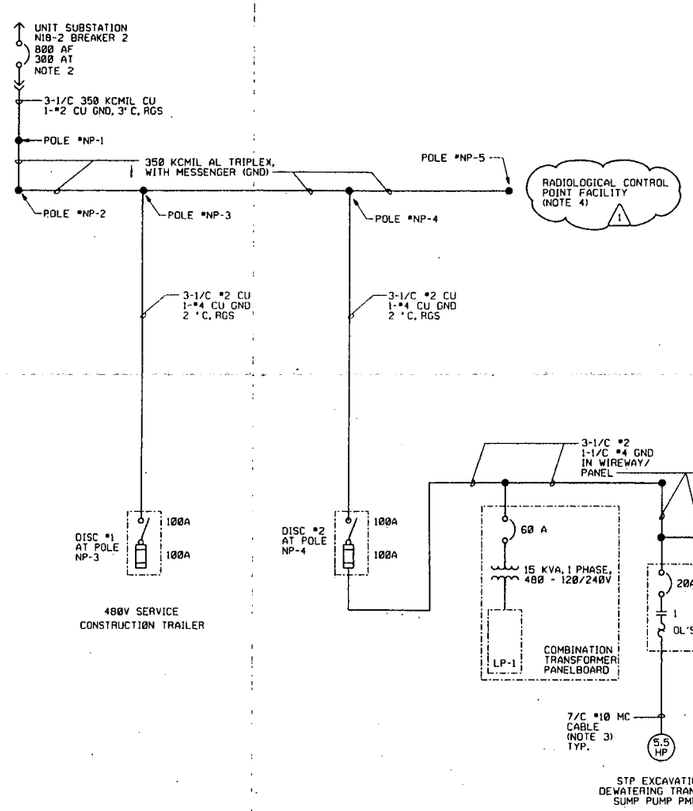

LIGHTING PANEL LP-1

VOLTAGE : 240/120V, 1 PHASE
MAIN BKR : 80 AMPS
MOUNTING : SURFACE

REMARKS : 1. * INDICATES 6MA GFCI CLASS A, ** INDICATES 30MA GFCI CLASS B
2. LIGHTING PANEL LP-1 HAS BEEN SIZED TO INCLUDE 12 KW OF HEAT TRACING (FUTURE).

DIRECTORY	WATTS LOAD L1	WATTS LOAD L2	CKT NO	WIRE SIZE	BKR AMPS		BKR AMPS	WIRE SIZE	CKT NO	WATTS LOAD L1	WATTS LOAD L2	DIRECTORY
FSL102	20		1	12	20	L1 L2 / 80 A MAIN	30		2			SPARE
POLE MTD HPS LIGHT		250	3	12	20	*	30		4			SPARE
120 VAC RECEPTACLE	160		5	12	20	**	30		6			
SPACE			7						8			SPACE
SPACE			9						10			SPACE
SPACE			11						12			SPACE
SPACE			13						14			SPACE
SPACE			15						16			SPACE
SPACE			17						18			SPACE
SPACE			19						20			SPACE
SUB-TOTALS	180	250				NEUTRAL BUS						SUB-TOTALS
	L1	L2								L1	L2	

TOTAL WATTS L1 : 180 TOTAL WATTS L2 : 250 TOTAL WATTS : 430

1

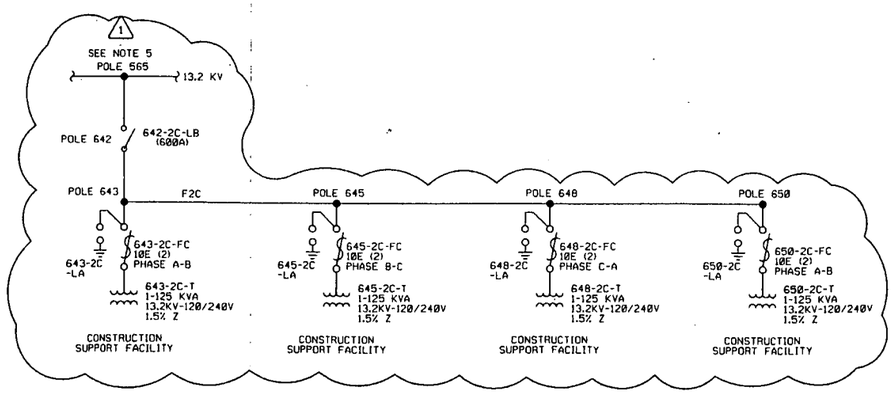

NOTES

1. FOR POWER PLAN, SEE DRAWING 92X-5900-E-00473, E0004.
2. PLACE BREAKER IN EXISTING CUBICLE ABOVE BREAKER FEEDING THE D. D. BUILDING MOTOR CONTROL CENTER.
3. CABLE INCLUDES WIRING FOR PMP-1 MOISTURE DETECTOR AND HIGH BEARING TEMPERATURE INTERLOCKS.
4. COIL ADEQUATE CABLE AT POLE FOR EXTENSION TO WEATHERHEAD ON RADIOLOGICAL CONTROL POINT FACILITY. (SEE SPECIFICATION 20712-TS-002, SECTION 13126.)
5. CONTINUATION OF 13.2 KV ELECTRICAL SYSTEM IS SHOWN ON DRAWING 96X-5900-E-00358 (NOT REQUIRED FOR THIS CONTRACT).

1

LEGEND:

- FUSED DISCONNECT SWITCH
- COMBINATION STARTER
- TRANSFORMER
- CIRCUIT BREAKER
- DISCONNECT SWITCH
- CONTACTOR
- OVERLOAD RELAY

RELATED DWG NO.	DRAWING TITLE	SHEET NO.
92X-5900-X-00489	DRAWING INDEX	X0002
92X-5900-E-00473	POWER PLAN	E0004
44A-5500-E-00369	ELECTRICAL INSTALLATION OF T-108	
1 96X-5900-E-00358	SEQUENCED - 13.2 KV AERIAL DISTRIBUTION SINGLE LINE DIAGRAM	E0002

INFORMATION ONLY

~~000023~~

REV. NO.	ISSUE OR REVISION PURPOSE - DESCRIPTION	TL	PM	REVW BY
1	REVISED PER DCN: 20712-018, -024 ADDED CONST. SUPPORT FAC. ONE LINE DIAG., DELETED REC. CKTS	9/23/99	CS 9/24/99	9/24/99
0	CERTIFIED FOR CONSTRUCTION	TPF 10/7/98	CS 10/7/98	TPF 10/7/98
		INITIALS AND DATE		

STATE OF OHIO JAMES L. COOPER E-56602 REGISTERED ARCHITECT/ENGINEER PROFESSIONAL ENGINEER

UNITED STATES DEPARTMENT OF ENERGY
FERNALD ENVIRONMENTAL MANAGEMENT PROJECT

THIS DRAWING PREPARED BY
PARSONS
THE RALPH M. PARSONS CO. - PARSONS MAIN, INC. - ENGINEERING-SCIENCE, INC.
CINCINNATI, OHIO

PROJECT NAME
REMEDIATION AREA 1, PHASE II

DRAWING TITLE
ELECTRICAL
SINGLE LINE DIAGRAM & PANEL SCHEDULES

DRAWN BY	DATE	TECHNICAL LEAD	DATE	CHECKED BY	DATE
J. SAYATOVIC	09/29/97	T. FERRELL	11/04/97	J. L. COOPER	10/30/97
PLANT/BLDG. NO.		FLOOR		SCALE NONE	CLASS

SUBMITTED FOR 30% ISSUE	SUBMITTED FOR 60% ISSUE	SUBMITTED FOR 90% ISSUE
TECH LEAD N/A	TECH LEAD N/A	TECH LEAD
DATE	DATE	DATE

PO NUMBER	TOP PROJECT NO.	DRAWING INDEX CODE NO.	SHEET NO.	REV. NO.
TOP-021	20712	92X-5900-E-00472	E0001	1

EQUIPMENT NAME : STP EXCAVATION DEWATERING TRANSFER SUMP PUMP
EQUIPMENT NO. : PMP-1
S/L SHT. NO. : E0001
PLAN SHT. NO. : E0004
PREFIX WIRE NUMBERS WITH PMP1-

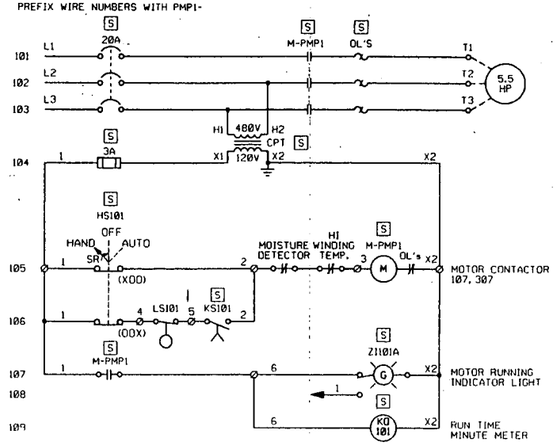

EQUIPMENT NAME : EXCAVATION PUMP 2
EQUIPMENT NO. : PMP-2
S/L SHT. NO. : E0001
PLAN SHT. NO. : E0004
PREFIX WIRE NUMBERS WITH PMP2-

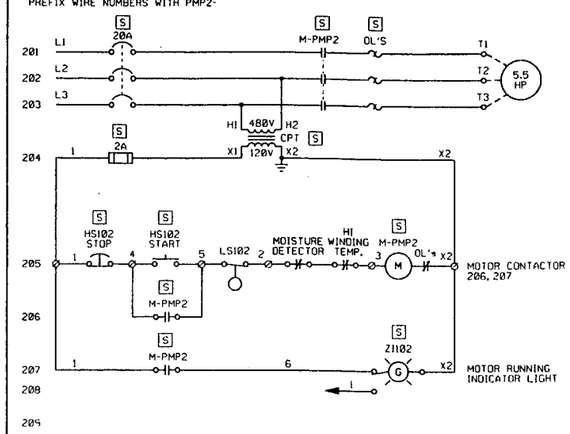

EQUIPMENT NAME : EXCAVATION PUMP 3
EQUIPMENT NO. : PMP-3
S/L SHT. NO. : E0001
PLAN SHT. NO. : E0004
PREFIX WIRE NUMBERS WITH PMP3-

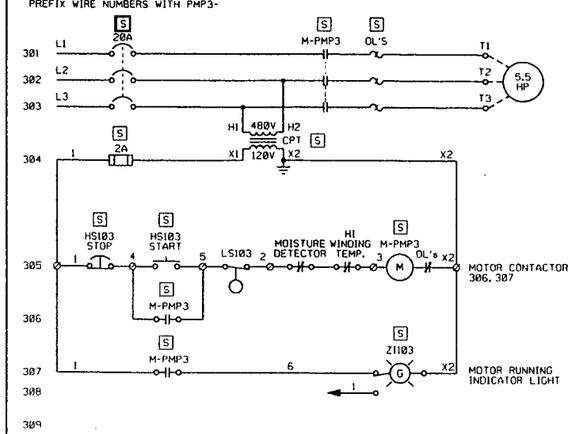

STP EXCAVATION DEWATERING TRANSFER SUMP PUMP CONTROL CIRCUIT

PREFIX WIRE NUMBERS WITH STP-

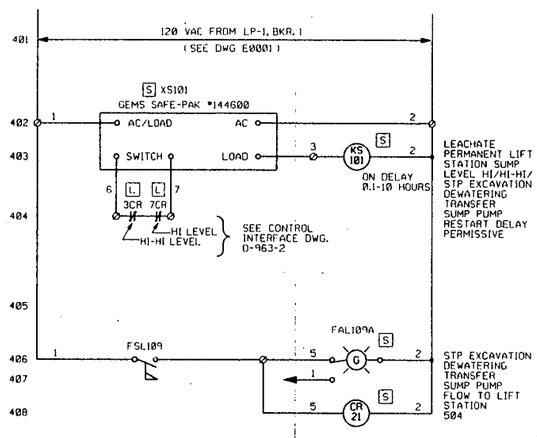

LEACHATE PERMANENT LIFT STATION CONTROL CIRCUIT

PREFIX WIRE NUMBERS WITH PLS-

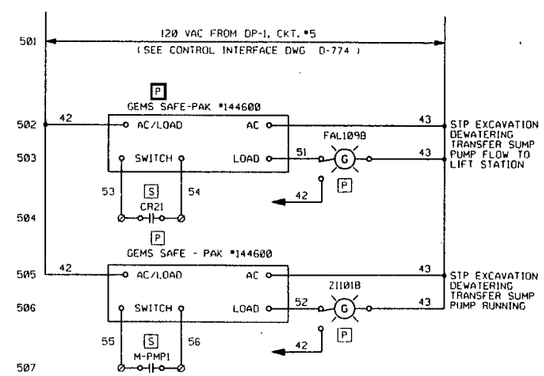

NOTES

1. UNLESS OTHERWISE NOTED, ALL DEVICES ARE LOCATED LOCAL (AT EQUIPMENT).
2. UNLESS OTHERWISE NOTED, ALL DEVICES SHOWN OR INDICATED ON THIS DRAWING ARE TO BE FURNISHED AND INSTALLED BY THE CONTRACTOR.

2108

LEGEND:

- [L] LEACHATE PERMANENT LIFT STATION LEVEL CONTROL PANEL
- [P] LEACHATE PERMANENT LIFT STATION PUMP CONTROL PANEL
- [S] STP PUMP CONTROL PANEL
- Ø TERMINAL INSIDE STP PUMP CONTROL PANEL

RELATED DWG NO.	DRAWING TITLE	SHEET NO.
92X-5900-X-00489	DRAWING INDEX	X0002
92X-5900-E-00472	SINGLE LINE DIAGRAM & PANEL SCHEDULES	E0001
92X-5900-E-00519	INTERCONNECTION DIAGRAMS AND DETAILS	E0003
92X-5900-E-00473	POWER PLAN	E0004
D-963-2	CONTROL INTERFACE, INC. - PERMANENT LIFT STATION LEVEL CONTROL PANEL	
D-774	CONTROL INTERFACE, INC. - PERMANENT LIFT STATION PUMP CONTROL PANEL	

INFORMATION ONLY
000024

REV. NO	ISSUE OR REVISION PURPOSE - DESCRIPTION	INITIALS AND DATE: DR	PM	REVD BY
0	CERTIFIED FOR CONSTRUCTION	10/7/98	10/7/98	10/7/98

UNITED STATES DEPARTMENT OF ENERGY
FERNALD ENVIRONMENTAL MANAGEMENT PROJECT

THIS DRAWING PREPARED BY
PARSONS
THE RALPH M. PARSONS CO. - PARSONS MAIN, INC. - ENGINEERING-SCIENCE, INC.
CINCINNATI, OHIO

PROJECT NAME
REMEDIATION AREA 1, PHASE II

DRAWING TITLE
ELECTRICAL
ELEMENTARY DIAGRAMS

DRAWN BY	DATE	TECHNICAL LEAD	DATE	CHECKED BY	DATE
J. SAYATOVIC	09/29/97	T. FERRELL	11/04/97	J. L. COOPER	10/30/97

PLANT/BLDG NO | FLOOR | SCALE: NONE | CLASS

SUBMITTED FOR 90% ISSUE: TECH LEAD N/A, DATE
SUBMITTED FOR 60% ISSUE: TECH LEAD N/A, DATE
SUBMITTED FOR 90% ISSUE: TECH LEAD, DATE

PO NUMBER	FDF PROJECT NO	DRAWING INDEX CODE NO	SHEET NO	REV NO
TOP-012	00-90701	92X-5900-E-00471	E0002	0

2108

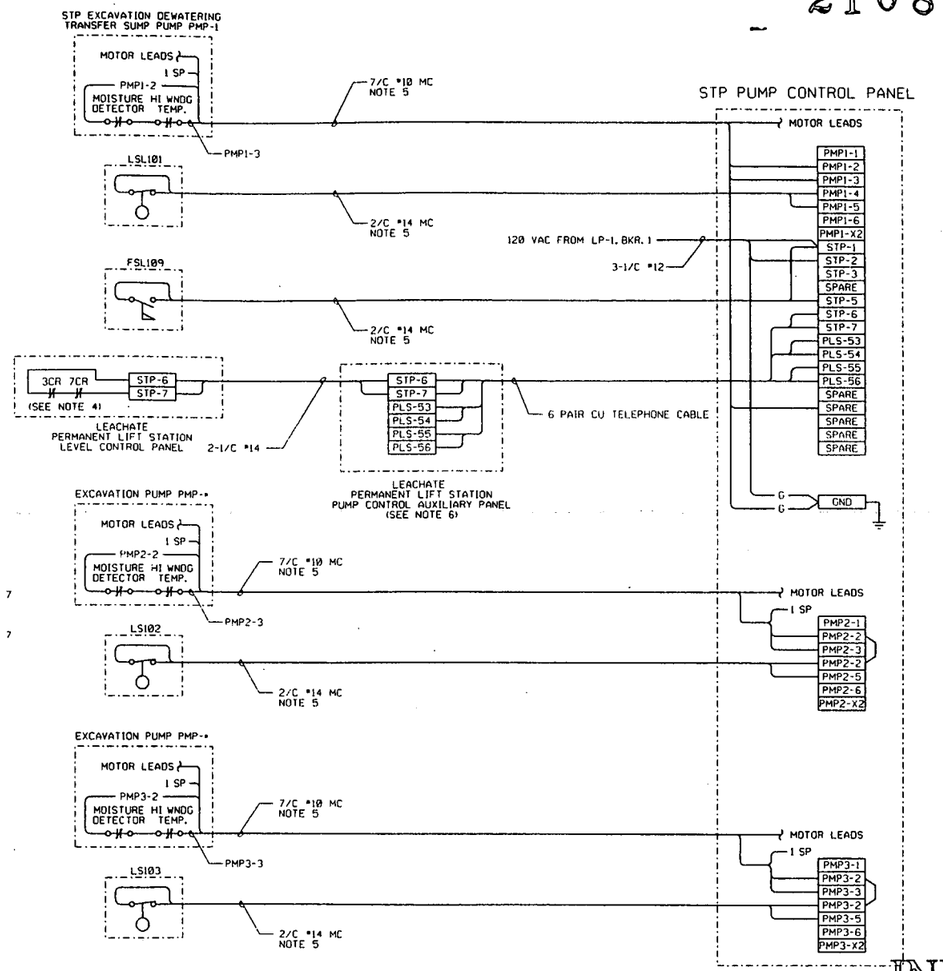

TAG	FIRST LINE	SECOND LINE	THIRD LINE	
K0101	STP EXCAVATION DEWATERING	TRANSFER SUMP PUMP	PMP-1 RUN TIME	
ZI101A	STP EXCAVATION DEWATERING	TRANSFER SUMP PUMP	PMP-1 RUNNING	
ZI101B	STP EXCAVATION DEWATERING	TRANSFER SUMP PUMP	PMP-1 RUNNING	SEE NOTE 7
FAL109A	STP EXCAVATION DEWATERING	TRANSFER SUMP FLOW	TO LIFT STATION	
FAL109B	STP EXCAVATION DEWATERING	TRANSFER SUMP FLOW	TO LIFT STATION	SEE NOTE 7
HS101	STP EXCAVATION DEWATERING	TRANSFER SUMP PUMP	PMP-1 CONTROL	
ZI102	EXCAVATION PUMP		PMP-2 RUNNING	
HS102	EXCAVATION PUMP		PMP-2 CONTROL	
ZI103	EXCAVATION PUMP		PMP-3 RUNNING	
HS103	EXCAVATION PUMP		PMP-3 CONTROL	

NAMEPLATE SCHEDULE
(SEE NOTE 2)

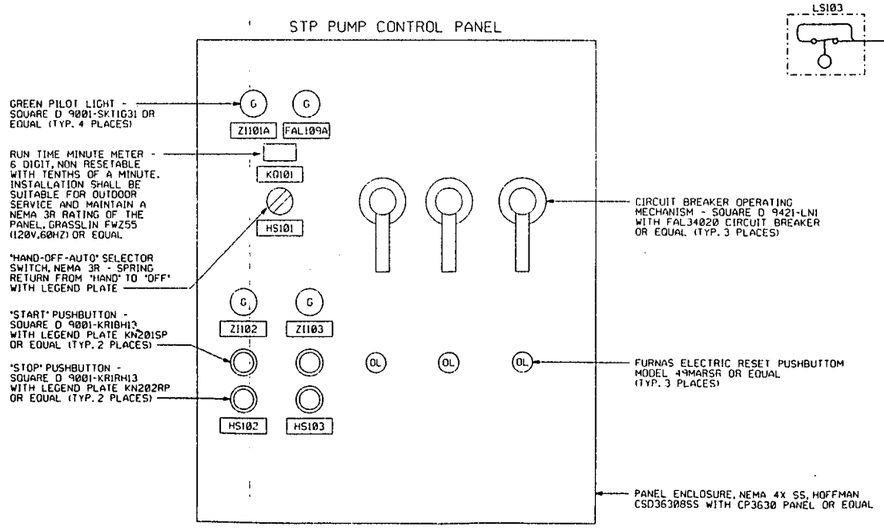

DETAIL D3 REF
NTS E00519 E00473

NOTES

1. ALL TERMINAL BLOCKS SHOWN ON THIS DRAWING ARE TO BE SUPPLIED BY CONTRACTOR. TERMINAL BLOCKS SHALL BE 600V, 30A, NEMA TYPE G, BOX LUG TERMINATION TYPE.
2. NAMEPLATES SHALL BE 1" x 3" WITH BLACK LETTERING ON WHITE BACKGROUND, FOR SCREW FASTENING TO DOOR.
3. CONTROL PANEL SHALL INCLUDE THE FOLLOWING ADDITIONAL DEVICES MOUNTED ON THE INSIDE BACK PANEL (NOT SHOWN):
   A) GEMS SAFE-PAK #144600
   B) CR21 (SQUARE D 8501-X020-V02)
   C) KS101 (SQUARE D 9050-FS15)
   D) QTY. 3 STARTERS, FURNAS ELECTRIC MODEL 14DP32AA71 WITH OVERLOAD ELEMENTS OR EQUAL
   E) QTY. 3 CONTROL TRANSFORMERS (150 VA), FERN ELECTRIC B-150 OR EQUAL
   F) POWER TERMINAL BLOCK, MARATHON 1423570 OR EQUAL
   G) FUSE BLOCK, 250V 30A (3), BUSS R250030-3PR WITH 2A FUSE, FRNR-2A OR EQUAL
4. CONTRACTOR SHALL INSTALL 2 INSTANTANEOUS, CONVERTIBLE CONTACT BLOCKS TO EXISTING RELAYS 3CR & 7CR. FOR REFERENCE SEE CONTROL INTERFACE DRAWING D-963-2.
5. GROUND CABLE ARMOR.
6. SEE ELEVATION E2, DRAWING 92X-5900-E-00473 FOR AUXILIARY PANEL DETAIL.
7. NAMEPLATE IS FOR EXISTING LEACHATE PERMANENT LIFT STATION PUMP CONTROL PANEL. SEE ELEVATION E2, DRAWING 92X-5900-E-00473. MATCH EXISTING NAMEPLATE STYLE.

RELATED DWG NO.	DRAWING TITLE	SHEET NO.
92X-5900-X-00489	DRAWING INDEX	X0002
92X-5900-E-00472	SINGLE LINE DIAGRAM & PANEL SCHEDULES	E0001
92X-5900-E-00471	ELEMENTARY DIAGRAMS	E0002
92X-5900-E-00473	POWER PLAN	E0004
D-963-2	CONTROL INTERFACE, INC. - PERMANENT LIFT STATION LEVEL CONTROL PANEL	
D-774	CONTROL INTERFACE, INC. - PERMANENT LIFT STATION PUMP CONTROL PANEL	

009025

INFORMATION ONLY

REV NO.	ISSUE OR REVISION PURPOSE - DESCRIPTION			
0	CERTIFIED FOR CONSTRUCTION	JPJ 10/30/98 TL	CA 10/30/98 PM	JPJ 10/30/98 REVIEWED BY

DETAILS AND DATE

UNITED STATES DEPARTMENT OF ENERGY
FERNALD ENVIRONMENTAL MANAGEMENT PROJECT

THIS DRAWING PREPARED BY
PARSONS
THE RALPH M. PARSONS CO. - PARSONS MAIN, INC. - ENGINEERING-SCIENCE, INC.
CINCINNATI, OHIO

PROJECT NAME
REMEDIATION AREA 1, PHASE II

DRAWING TITLE
ELECTRICAL
INTERCONNECTION DIAGRAMS AND DETAILS

DRAWN BY	DATE	TECHNICAL LEAD	DATE	CHECKED BY	DATE
S. STEVENS	08/28/98	T. FERRELL	11/04/97	J. L. COOPER	11/04/97

PLANT/BLDG. NO. | FLOOR | SCALE: NONE | CLASS

SUBMITTED FOR 30% ISSUE	SUBMITTED FOR 60% ISSUE	SUBMITTED FOR 90% ISSUE
TECH LEAD N/A	TECH LEAD N/A	TECH LEAD T. FERRELL
DATE	DATE	DATE 11/04/97

STATE OF OHIO — COOPER E-58821 — REGISTERED PROFESSIONAL ENGINEER

PO NUMBER	TOP PROJECT NO	DRAWING INDEX CODE NO	SHEET NO	REV NO
TOP-012	00-90701	92X-5900-E-00519	E0003	0

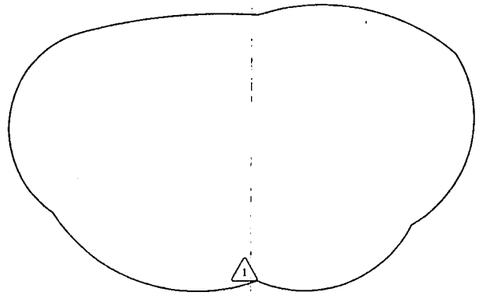

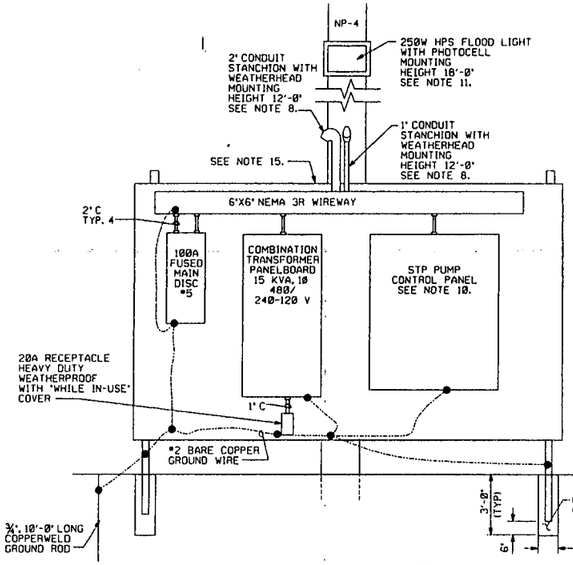

ELEVATION E1 REF
NTS E00473 E00478

FACING NORTH
POLE NP-4

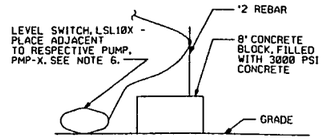

DETAIL 3 REF
NTS

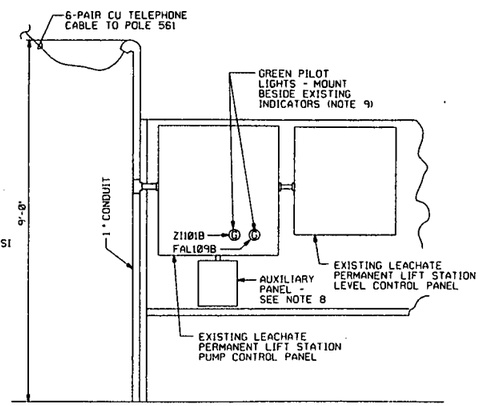

ELEVATION E2
NTS

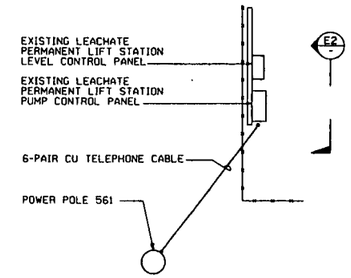

DETAIL 1 REF
NTS

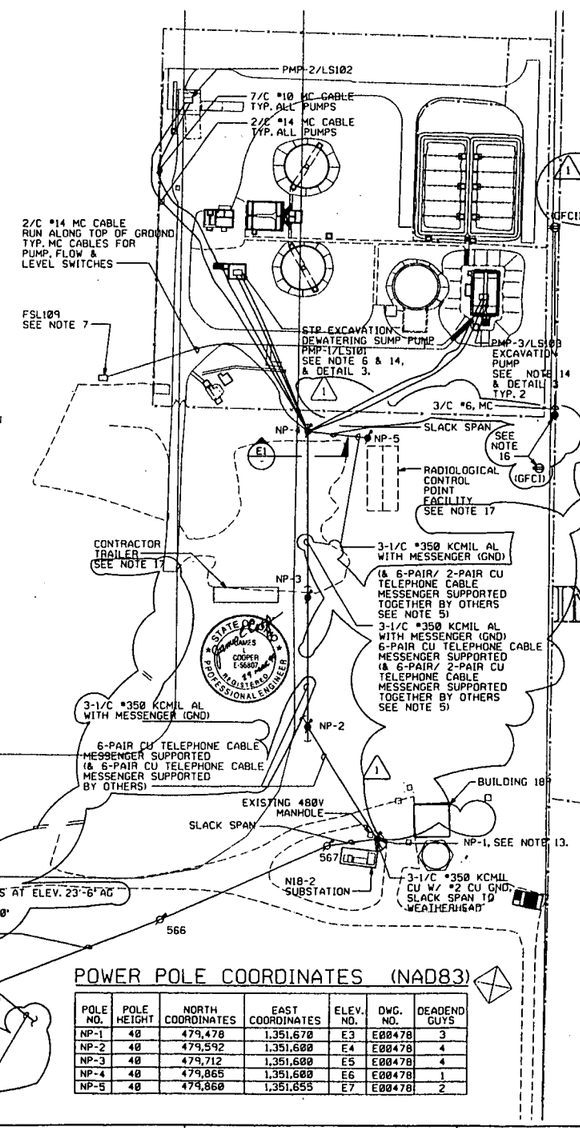

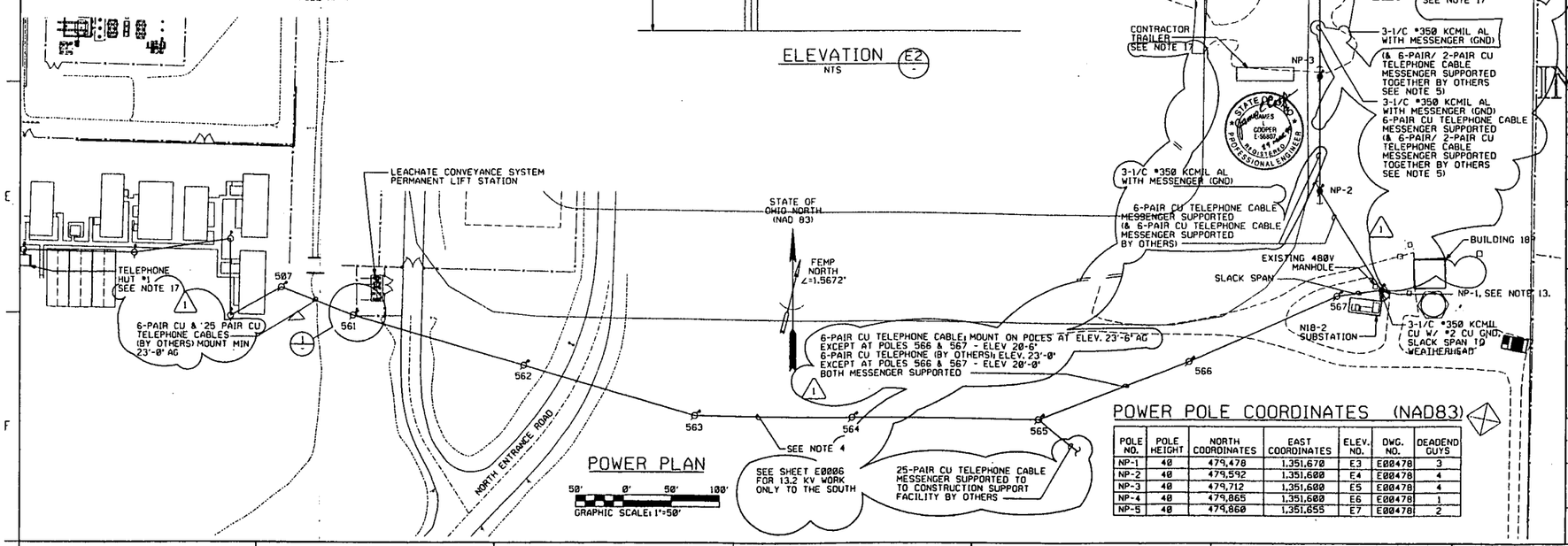

POWER PLAN
50' 0' 50' 100'
GRAPHIC SCALE: 1"=50'

POWER POLE COORDINATES (NAD83)

POLE NO.	POLE HEIGHT	NORTH COORDINATES	EAST COORDINATES	ELEV. NO.	DWG. NO.	DEADEND GUYS
NP-1	40	479,478	1,351,670	E3	E00478	3
NP-2	40	479,592	1,351,600	E4	E00478	4
NP-3	40	479,712	1,351,600	E5	E00478	4
NP-4	40	479,865	1,351,600	E6	E00478	1
NP-5	40	479,860	1,351,655	E7	E00478	2

NOTES

1. ALL CONDUIT IS 3/4" RIGID GALVANIZED UNLESS OTHERWISE NOTED.
2. CONDUCTOR CLEARANCES OVER ROADS AND OTHER GRADES SHALL BE A MINIMUM OF 18 FEET.
3.
4. 13.2 KV ELECTRICAL LINE ON POLES WILL BE IN PLACE UNDER CONSTRUCTION DURING REMEDIATION AREA 1, PHASE II PROJECT EXECUTION.
5. TELEPHONE CABLE (BY OTHERS) ROUTE 6-PAIR TO RADIOLOGICALLY CONTROLLED FACILITY & ROUTE 2-PAIR CABLE BACK TO CONTRACTOR TRAILER FOR CABLE JACKET INTEGRITY.
6. LSL101 - LSL103 MAGNETROL T10-5104-020 W/ ACCESSORY KIT 89-5209-001, OR EQUAL. INSTALL FOR MIN. DEADBAND OF 18 INCHES. INSTALL PMP-X/LSL10X AS A UNIT AT EACH LOCATION.
7. FURNISH FSL109 - DWYER MODEL V4-SS-2-4 WITH ALL 316SS PARTS, OR EQUAL.
8. HINGED COVER PANEL, NEMA 3R, 10"x8"x6" DEEP, WITH REAR PANEL FOR MOUNTING 2 SAFE-PAK RELAYS (GEMS #144600) AND TERMINAL BLOCK.
9. FURNISH AND INSTALL GREEN PILOT LIGHT - SQUARE D 9001-SK11G31, OR EQUAL.
10. FOR STP PUMP CONTROL PANEL LAYOUT SEE DETAIL 03 ON DRAWING 92X-5900-E-00519.
11. AIM NORTH FOR MAXIMUM COVERAGE, WITNESSED BY CONSTRUCTION MANAGER.
12.
13. PROBE FOR UNDERGROUND DUCTBANK OR OTHER UTILITIES PRIOR TO SETTING POLES. ALSO CONFIRM LOCATION OF UNDERGROUND UTILITIES TO BE REMOVED AND THAT POLE LOCATIONS DO NOT CONFLICT.
14. ALLOW FOR SUFFICIENT CABLE FOR OTHER EXCAVATION DEWATERING SUMP LOCATIONS. (SEE G0012 & G0013.)
15. ROUTE CABLE AS IN NOTE 16; TAP EXISTING CIRCUIT FOR AIR MONITORING STATION 3 (SEE DWG 00X-5500-E-01053).
16. TAP EXISTING AIR MONITORING CIRCUIT ALONG FENCE. SUPPORT MC CABLE EVERY 10 FEET MINIMUM WITH GALVANIZED FRAMING CHANNEL, 3 FEET ABOVE GRADE; ATTACH WITH CONDUIT STRAP TO CHANNEL. ADD JB FOR MC CABLE AND SPLICE TO ONE FOOT OF #12 WIRE AT EACH RECEPTACLE. DRIVE CHANNEL MIN. 3'-0" BELOW GRADE.
17. PROVIDE 1" RGS WEATHERHEAD FOR TELEPHONE SERVICE BY OTHERS.

LEGEND

- EXISTING POWER POLE(S)
- NEW POWER POLE(S)
- GUY ANCHOR & GUY WIRE(S) ASSEMBLY
- (GFCI) 120V. WP RECEPTACLE WITH "WHILE IN USE" COVER (GFCI INDICATES GFCI 30 mA)

RELATED DWG NO.	DRAWING TITLE	SHEET NO.
92X-5900-X-00489	DRAWING INDEX	X0001
92X-5900-E-00472	SINGLE LINE DIAGRAM & PANEL SCHEDULES	E0001
92X-5900-E-00519	INTERCONNECTION DIAGRAMS AND DETAILS	E0003
92X-5900-E-00478	ELEVATIONS AND DETAILS	E0005
92X-5900-E-01003	PLAN & SCHEDULES	E0006

000026

INFORMATION ONLY

REV. NO.	ISSUE OR REVISION PURPOSE - DESCRIPTION	TL	PM	REVIEW BY
1	REVISED PER DCN: 21712-002,004,018 & -024; ADD REF E6 & TEL MASTS; DELETE MONITOR CKTS.	TPF 10/7/98	CS 10/7/98	TPF 10/7/98
0	CERTIFIED FOR CONSTRUCTION	TPF 10/7/98	CS 10/7/98	TPF 10/7/98

INITIALS AND DATE

UNITED STATES DEPARTMENT OF ENERGY
FERNALD ENVIRONMENTAL MANAGEMENT PROJECT

THIS DRAWING PREPARED BY
PARSONS
THE RALPH M. PARSONS CO. - PARSONS MAIN, INC. - ENGINEERING-SCIENCE, INC.
CINCINNATI, OHIO

PROJECT NAME
REMEDIATION AREA 1, PHASE II

DRAWING TITLE
ELECTRICAL

DRAWN BY	DATE	TECHNICAL LEAD	DATE	CHECKED BY	DATE
J. SAYAIOVIC	10/03/97	T. FERRELL	11/4/97	J.L. COOPER	10/30/97

PLANT/BLDG NO. | FLOOR | SCALE 1" = 50' | CLASS

SUBMITTED FOR 30% ISSUE	SUBMITTED FOR 60% ISSUE	SUBMITTED FOR 90% ISSUE
TECH LEAD N/A	TECH LEAD N/A	TECH LEAD T. FERRELL
DATE	DATE	DATE 11/19/97

PO NUMBER	FEP PROJECT NO.	DRAWING INDEX CODE NO.	SHEET NO.	REV. NO.
TOP-021	20712	92X-5900-E-00473	E0004	1

2108

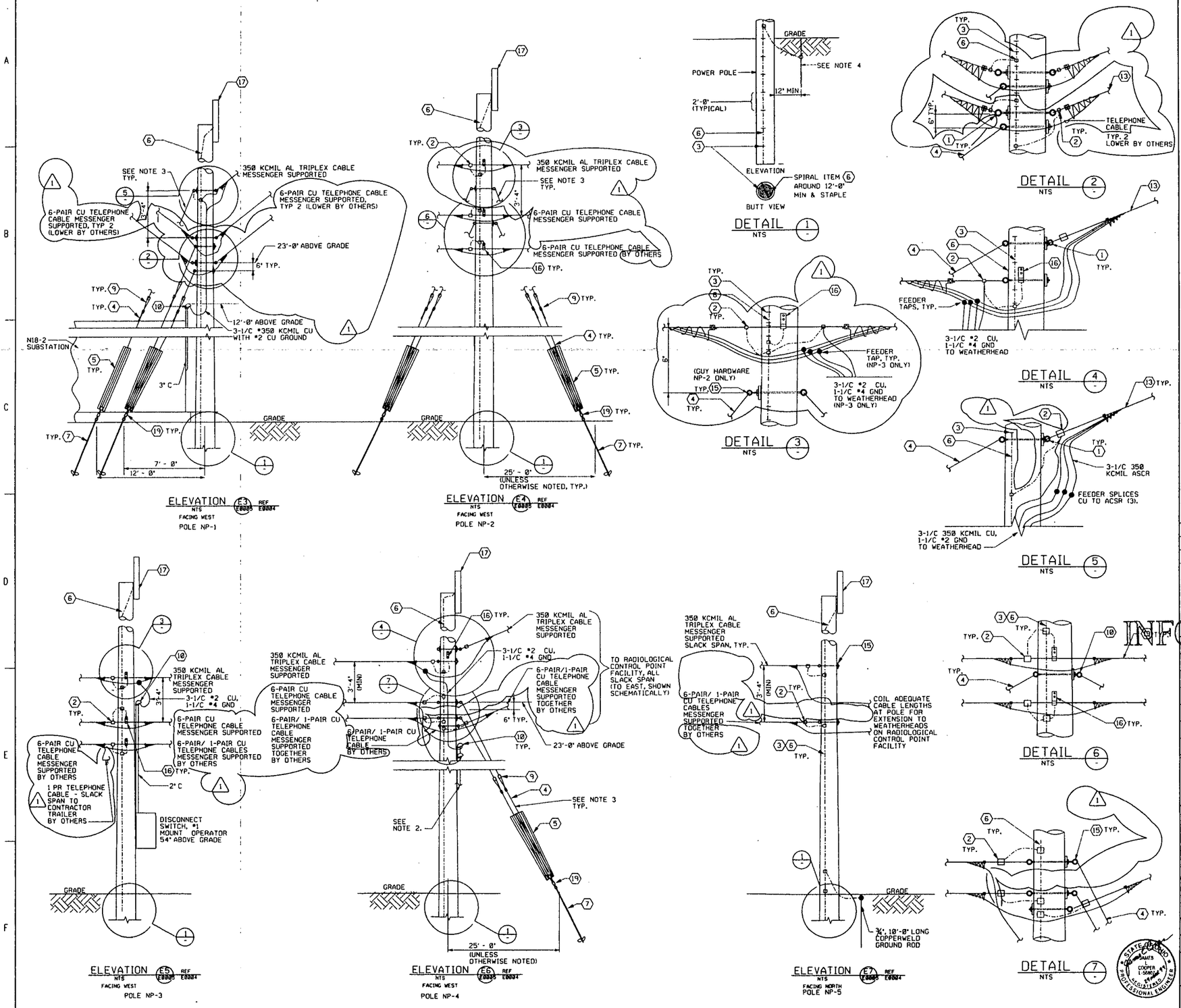

NOTES

1. FIELD ROUTE CONDUIT AND SUPPORT WITH FRAMING CHANNEL APPROXIMATELY EVERY 8 FEET.
2. FOR CONTINUATION SEE ELEVATION VIEW E1 ON DRAWING 92X-5900-E-00473, E0004.
3. SET GUYS IN LINE WITH CABLES ON DEADENDS. SEE DRAWING 92X-5900-E-00473, E0003 FOR ALIGNMENT ANGLES.
4. GROUND ROD IS TYPICAL FOR POLES NP-1, 2, & 4 ONLY.

POLE MATERIAL LIST

1. EYE BOLT, OVAL EYE TYPE, FOR DEAD-END, 5/8" DIA., WITH ONE SQUARE NUT, ADDITIONAL NUTS, WASHERS, AND LENGTH AS REQUIRED WITH APPROPRIATE THIMBLE AND CLAMPS.
2. GUY GRIP, FOR MESSENGER WIRE, PREFORMED WIRE TYPE AND GROUND CLAMP
3. STAPLE, COPPERCLAD, 1 1/2" LONG.
4. 5/8" DIA. GALVANIZED STEEL STRUCTURAL ROPE WITH A MINIMUM BREAKING STRENGTH OF 30,000 lbs.
5. GUY WIRE MARKER, HALF ROUND, 2" WIDE, 84" LONG, W/ REQ'D HARDWARE, UV RESISTANT.
6. #4 AWG, BARE SOLID COPPER GROUND CONDUCTOR.
7. 12" DIA. HELICAL SCREW TYPE GUY ANCHOR WITH MINIMUM PULLOUT CAPACITY OF 23000 POUNDS.
8. 1/2" THREADED ROD WITH NUTS, LENGTH AS REQUIRED.
9. GUY STRAIN INSULATOR, ANSI CLASS 54-4, FOR 5/8" GUY WIRE.
10. WEATHERHEAD
11. GROUND WIRE CLAMP, USED TO ATTACH STATIC WIRE TO BAYONET
12. STATIC WIRE SUPPORT, CORNER BAYONET TYPE
13. 3/8" DIAMETER, 7 X 8 STRANDED CONSTRUCTION, GALVANIZED STEEL STRAND.
14. 1 5/8" X 1 5/8", 12 GA, GALVANIZED STEEL FRAMING CHANNEL WITH PIPE CLAMPS.
15. EYE BOLT, OVAL EYE TYPE, FOR DEAD-END, 5/8" DIA., WITH ONE THIMBLEYE NUT, ADDITIONAL NUTS, WASHERS, AND LENGTH AS REQUIRED WITH APPROPRIATE THIMBLE AND CLAMPS.
16. CLAMP, SUSPENSION, FOR 3/8" MESSENGER AND 5/8" BOLT, WASHER, AND NUTS AS REQUIRED.
17. POLE BAYONET, STRAIGHT, MIN. 4'-0"
18. PLASTIC INSULATING BUSHING
19. CLAMP, PARALLEL GROOVE GUY, FOR 5/8" GUY WIRE

RELATED DWG NO.	DRAWING TITLE	SHEET NO.
92X-5900-X-00489	DRAWING INDEX	X0002
92X-5900-E-00473	POWER PLAN	E0003

000027

INFORMATION ONLY

REV. NO.	ISSUE OR REVISION PURPOSE - DESCRIPTION	TL INITIALS AND DATE	PM INITIALS AND DATE	REVIEW BY INITIALS AND DATE
1	REVISED PER DCN 20712-024	9/19/99	EG 9/20/99	JLC 9/21/99
0	CERTIFIED FOR CONSTRUCTION	TPF 10/7/98	CS 10/7/98	TPF 10/7/98

UNITED STATES DEPARTMENT OF ENERGY
FERNALD ENVIRONMENTAL MANAGEMENT PROJECT

THIS DRAWING PREPARED BY
PARSONS
THE RALPH M. PARSONS CO. - PARSONS MAIN, INC. - ENGINEERING-SCIENCE, INC.
CINCINNATI, OHIO

PROJECT NAME
REMEDIATION AREA 1, PHASE II

DRAWING TITLE
ELECTRICAL
ELEVATIONS AND DETAILS

DRAWN BY	DATE	TECHNICAL LEAD	DATE	CHECKED BY	DATE
J. SAYATOVIC	10/24/97	T. FERRELL	11/4/97	J. L. COOPER	10/30/97
PLANT/BLDG. NO.		FLOOR		SCALE: NONE	CLASS
SUBMITTED FOR 30% ISSUE: TECH LEAD N/A, DATE		SUBMITTED FOR 60% ISSUE: TECH LEAD N/A, DATE		SUBMITTED FOR 90% ISSUE: TECH LEAD T. FERRELL, DATE 11/04/97	

PO NUMBER	FEP PROJECT NO.	DRAWING INDEX CODE NO.	SHEET NO.	REV. NO.
TOP-021	20712	92X-5900-E-00478	E0005	1

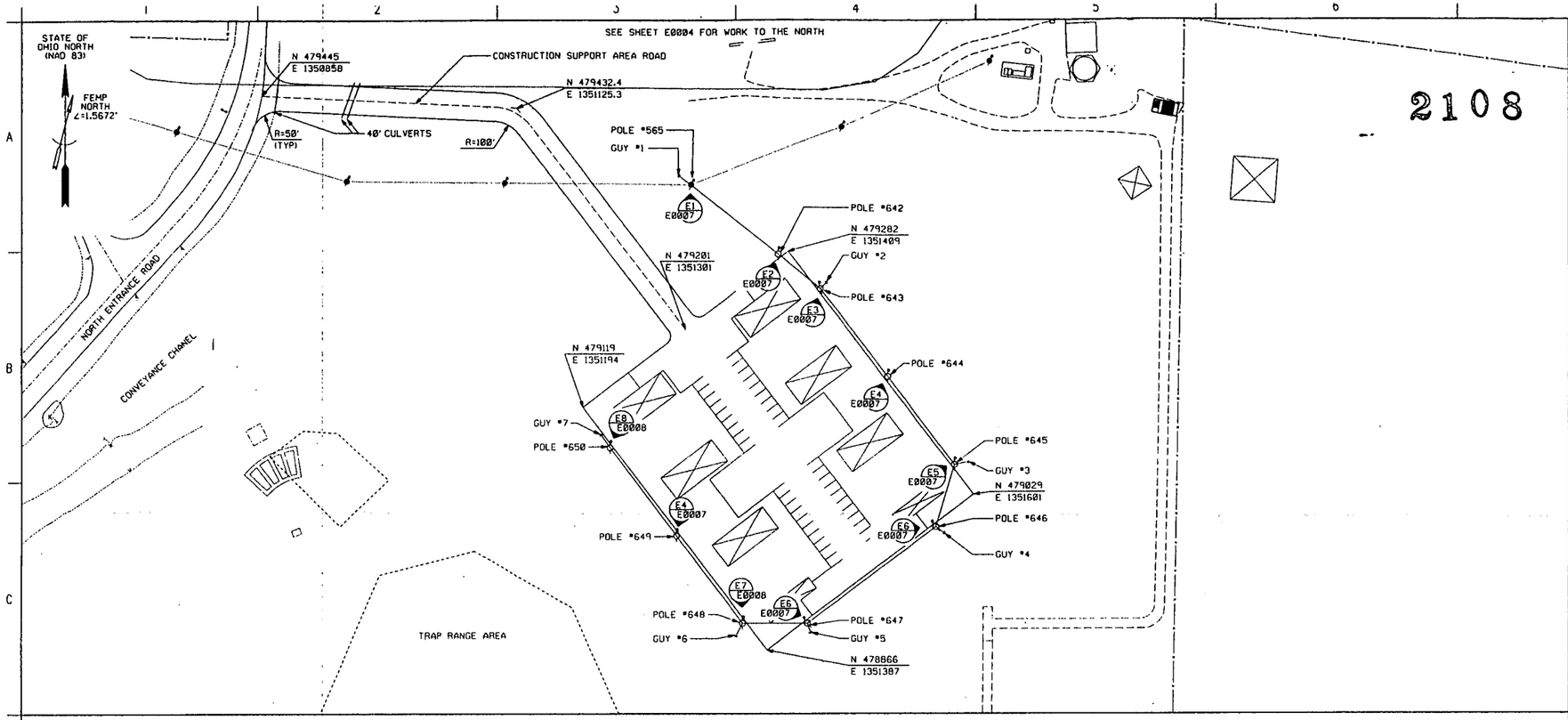

NOTES

1. MAINTAIN MINIMUM CLEARANCES ON 13.2KV BARE AERIAL CONDUCTORS: PHASE TO PHASE = 20", PHASE TO GROUND = 16". WHERE NOT POSSIBLE, MAINTAIN 6' TO GUY FEATURES (ANSI C2, TABLE 235-6), 7' PHASE TO GROUND (NFPA 70, TABLE 710-33, USING 13.8KV COLUMN), AND 12' PHASE TO PHASE. 480V CONDUCTORS OVER ROADS = 23'-0". ALL CONDUCTORS OVER BUILDINGS = 8'-0". OTHER CLEARANCES ON OVERHEAD SERVICE(S) IN ACCORDANCE WITH ANSI C2, NATIONAL ELECTRICAL SAFETY CODE.
2. GUY ANCHOR DISTANCES FROM POLE, GIVEN IN THE GUY ASSEMBLY SCHEDULE, ARE A MINIMUM. PLACEMENT OF ANCHOR CLOSER MAY EXCEED DESIGN LIMITS OF THE ASSEMBLY.
3. TRAILER LOCATIONS SHOWN ARE APPROXIMATE.
4. LOCATE TRAILERS TO FEMP STANDARDS FOR SPACING BETWEEN TRAILERS. SUBMIT TRAILER LOCATION PLAN TO CONSTRUCTION MANAGER FOR APPROVAL. ALL TRAILER LOCATIONS MUST BE APPROVED BY CONSTRUCTION MANAGER PRIOR TO INSTALLATION.

LEGEND

- EXISTING POWER POLE(S)
- NEW POWER POLE(S)
- GUY ANCHOR & GUY WIRE(S) ASSEMBLY
- EXISTING 13.2KV 3 PHASE OVERHEAD POWER LINE
- NEW 13.2KV 3 PHASE OVERHEAD POWER LINE

POLE SCHEDULE (NAD83)

POLE NO.	POLE HEIGHT	POLE STATUS	COORDINATES NORTHING	COORDINATES EASTING	POLE ELEVATION(S) SHT. NO.	POLE ELEVATION(S) ELEV. NO.	GUY ASSEMBLY NUMBERS	SERVICE(S) ON POLE 13.2KV FOR 3C	13.2KV FOR 2C	13.2KV FOR 2/3C	ELECTRICAL EQUIPMENT ON POLE: LIGHTNING ARRESTER(S)	FUSED CUTOUT(S)	FUSE SIZE(S)	LOAD BREAK(S)	TRANSFORMER(S)	* - KVA SIZE	NOTES
565	55'	EXIST.	479,352	1,351,307	E0007	E1	1		✓								
642	55'	NEW	479,279	1,351,398	E0007	E2			✓					642-2C-LB			
643	55'	NEW	479,243	1,351,442	E0007	E3	2		✓		643-2C-LA	643-2C-FC	2-10E		643-2C-T	1-125	PHASE A-B TRANSFORMER CONNECTION
644	55'	NEW	479,152	1,351,512	E0007	E4			✓								
645	55'	NEW	479,060	1,351,581	E0007	E5	3		✓		645-2C-LA	645-2C-FC	2-10E		645-2C-T	1-125	PHASE B-C TRANSFORMER CONNECTION
646	55'	NEW	478,995	1,351,562	E0007	E6	4		✓								
647	55'	NEW	478,894	1,351,429	E0007	E6	5		✓								
648	55'	NEW	478,894	1,351,361	E0008	E7	6		✓		648-2C-LA	648-2C-FC	2-10E		648-2C-T	1-125	PHASE C-A TRANSFORMER CONNECTION
649	55'	NEW	478,985	1,351,292	E0007	E4			✓								
650	55'	NEW	479,077	1,351,223	E0008	E8	7		✓		650-2C-LA	650-2C-FC	2-10E		650-2C-T	1-125	PHASE A-B TRANSFORMER CONNECTION

GUY ASSEMBLY SCHEDULE

GUY NO.	POLE NO.	ANCHOR FROM POLE	ANCHOR COORDINATES NORTHING	ANCHOR COORDINATES EASTING	GUY WIRE(S) ATTACHMENT AT POLE ELEV.(S) (GUY POSITIONS +/- 6")						NOTES
1	565	16'	479,362	1,351,294	50'-06"	37'-03"	'-- "	'-- "	'-- "	'-- "	
2	643	18'	479,258	1,351,449	50'-06"	43'-03"	'-- "	'-- "	'-- "	'-- "	
3	645	15'	479,063	1,351,596	50'-06"	43'-03"	'-- "	'-- "	'-- "	'-- "	
4	646	11'	478,988	1,351,571	50'-06"	43'-03"	'-- "	'-- "	'-- "	'-- "	
5	647	11'	478,883	1,351,433	50'-06"	43'-03"	'-- "	'-- "	'-- "	'-- "	
6	648	15'	478,880	1,351,354	50'-06"	43'-03"	'-- "	'-- "	'-- "	'-- "	
7	650	17'	479,091	1,351,213	50'-06"	43'-03"	'-- "	'-- "	'-- "	'-- "	

CABLE STRINGING TABLE

SPANS FROM POLE	TO POLE	LEN.	38° F SAG SPAR. IN.	38° F SAG STATIC IN.	58° F SAG SPAR. IN.	58° F SAG STATIC IN.	78° F SAG SPAR. IN.	78° F SAG STATIC IN.	98° F SAG SPAR. IN.	98° F SAG STATIC IN.
565	642	117'	16	16	20	18	23	21	26	23
642	643	57'	4	4	5	4	5	5	6	5
643	644	115'	15	16	19	18	22	20	25	22
644	645	115'	15	16	19	18	22	20	25	22
645	646	68'	5	6	7	6	8	7	9	8

SPANS FROM POLE	TO POLE	LEN.	38° F SAG SPAR. IN.	38° F SAG STATIC IN.	58° F SAG SPAR. IN.	58° F SAG STATIC IN.	78° F SAG SPAR. IN.	78° F SAG STATIC IN.	98° F SAG SPAR. IN.	98° F SAG STATIC IN.
646	647	167'	32	33	40	38	47	42	53	46
647	648	68'	5	6	7	6	8	7	9	8
648	649	115'	15	16	19	18	22	20	25	22
649	650	115'	15	16	19	18	22	20	25	22

POLE MOUNTED TRANSFORMER CONNECTIONS

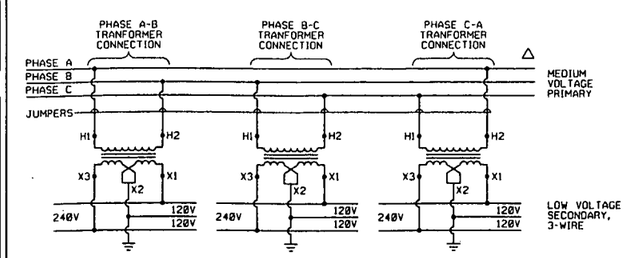

NOTES:
1. ALL PRIMARY JUMPERS TO BE #2 AWG SOFT DRAWN SOLID COPPER.
2. INSTALLER SHALL CONFIRM DESIGNATIONS WITH SUPPLIER INFORMATION.

RELATED DWG NO.	DRAWING TITLE	SHEET NO.
92X-5900-X-00489	DRAWING INDEX	X0001
92X-5900-E-00472	SINGLE LINE DIAGRAM & PANEL SCHEDULES	E0001
92X-5900-E-00473	POWER PLAN	E0004
92X-5900-E-01022	POLE ELEVATIONS	E0007
92X-5900-E-01023	POLE ELEVATIONS	E0008
92X-5900-E-01024	MATERIAL LIST AND STANDARD DETAILS	E0009

000028

INFORMATION ONLY

STATE OF OHIO REGISTERED PROFESSIONAL ENGINEER

REV. NO.	ISSUE OR REVISION PURPOSE - DESCRIPTION	INITIALS AND DATE		REVIEW BY
0	CERTIFIED FOR CONSTRUCTION, ADDED PER DCN: 20712-018	3/29/99	3/29/99	3/30/99

UNITED STATES DEPARTMENT OF ENERGY
FERNALD ENVIRONMENTAL MANAGEMENT PROJECT

THIS DRAWING PREPARED BY
PARSONS
THE RALPH M. PARSONS CO. - PARSONS MAIN, INC. - ENGINEERING-SCIENCE, INC.
CINCINNATI, OHIO

PROJECT NAME
REMEDIATION AREA I, PHASE II

DRAWING TITLE
ELECTRICAL
PLAN AND SCHEDULES
CONTRACTOR SUPPORT AREA

DRAWN BY	DATE	TECHNICAL LEAD	DATE	CHECKED BY	DATE
L. N. HAGAMAN	02/24/99	T. FERRELL			

PLANT/BLDG. NO.	FLOOR	SCALE	CLASS
		1" = 50'-0"	

SUBMITTED FOR 30% ISSUE	SUBMITTED FOR 90% ISSUE	SUBMITTED FOR 90% ISSUE
TECH LEAD N/A	TECH LEAD N/A	TECH LEAD N/A
DATE N/A	DATE N/A	DATE N/A

PO NUMBER	TOP PROJECT NO.	DRAWING INDEX CODE NO.	SHEET NO.	REV. NO.
TOP-21	20712	92X-5900-E-01003	E0006	0

2108

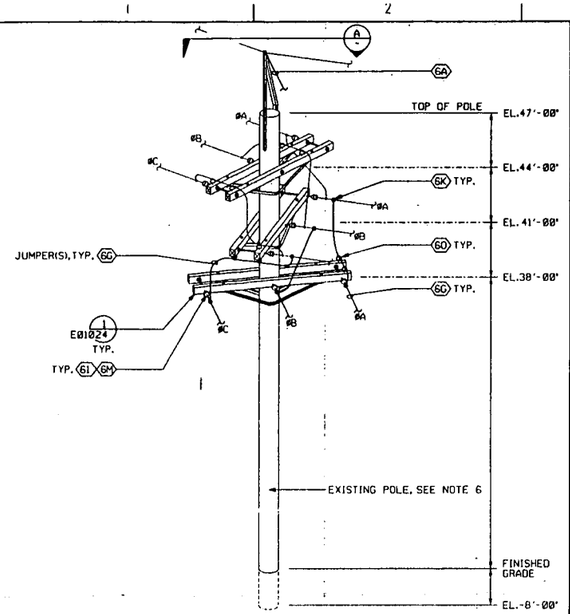

ELEVATION E1 (E0007) REF E0006 POLE 565 (EXISTING)

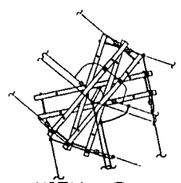

VIEW A NTS

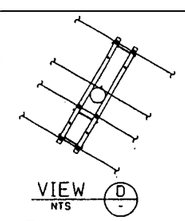

VIEW D NTS

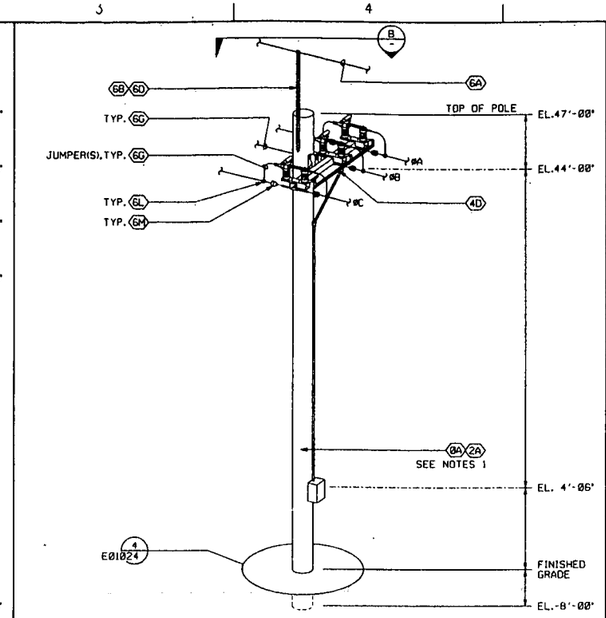

ELEVATION E2 (E0007) REF E0006 POLE 642

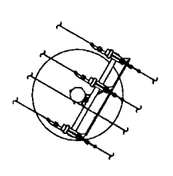

VIEW B NTS

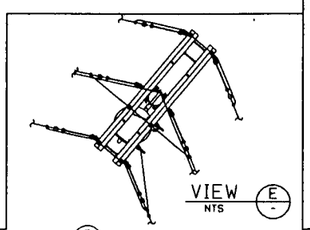

VIEW E NTS

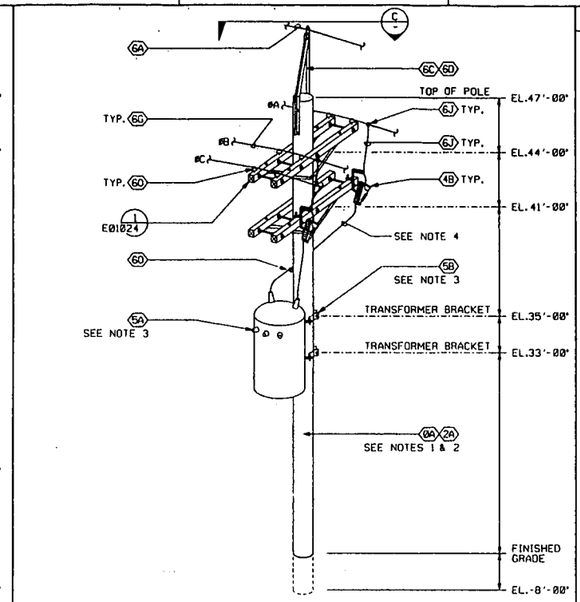

ELEVATION E3 (E0007) REF E0006 POLE 643

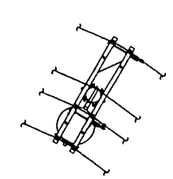

VIEW C NTS

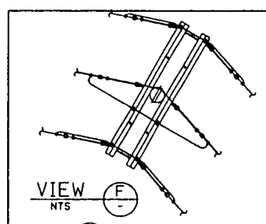

VIEW F NTS

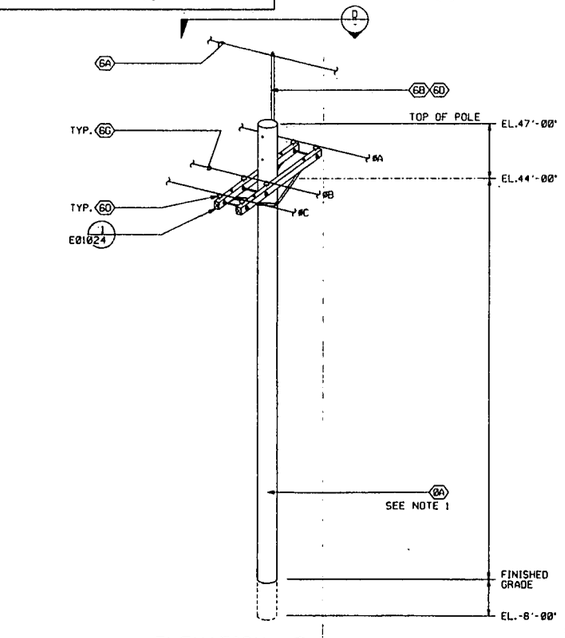

ELEVATION E4 (E0007) REF E0006 POLES 644 & 649

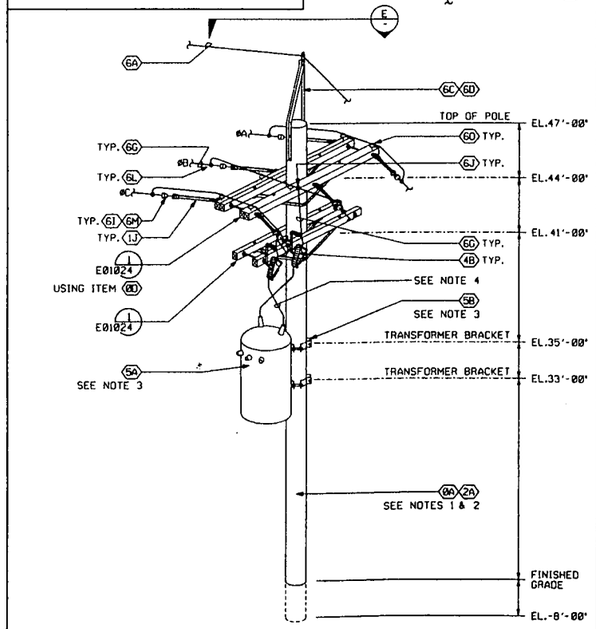

ELEVATION E5 (E0007) REF E0006 POLE 645

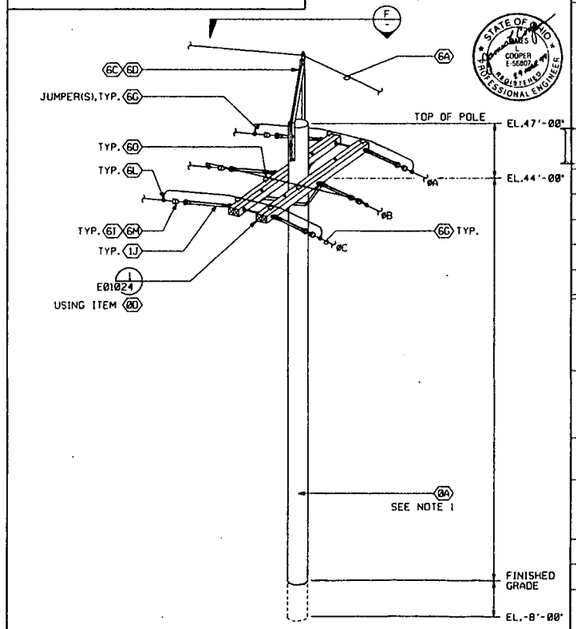

ELEVATION E6 (E0007) REF E0006 POLES 646 & 647

STATE OF OHIO — COOPER E-56004 — REGISTERED PROFESSIONAL ENGINEER

NOTES

1. SEE DETAIL 2 ON DWG.# 92X-5900-E-01024 FOR GROUNDING ITEMS FOR POLE GROUNDING SYSTEM.
2. SEE DETAIL 3 ON DWG.# 92X-5900-E-01024, SHEET E0009 FOR GUYING ITEMS FOR POLE. SEE "GUY ASSEMBLY SCHEDULE" ON DWG.# 92X-5900-E-01003, SHEET E0006 FOR ANCHOR LOCATION(S)/GUY WIRE(S) ATTACHMENTS IN RELATION TO THE POLE.
3. GROUND INDIVIDUAL TRANSFORMERS AND MOUNTING BRACKETS TO POLE GROUNDING SYSTEM. SEE DETAIL 2 ON DWG.# 92X-5900-E-01024, SHEET E0009.
4. SEE "POLE MOUNTED TRANSFORMER CONNECTIONS" ON DWG.# 92X-5900-E-01003, SHEET E0006 FOR PRIMARY WIRE SIZES AND CONNECTIONS.
5. POLE ELEVATIONS REPRESENT A GENERAL CONCEPT/PICTORIAL VIEW OF THE MAJORITY OF ITEMS LOCATED ON THE POLE. THE INTENT OF THE "POLE ELEVATION" IS TO DEFINE THE MAJOR COMPONENTS, COMPONENT ELEVATIONS, AND THEIR ORIENTATION TO EACH OTHER. THE POLE ELEVATIONS ARE NOT INTENDED TO BE USED AS A WIRING GUIDE FOR FINAL CIRCUIT CONNECTION OF ELECTRICAL EQUIPMENT.
6. MAINTAIN CLEARANCES TO EXISTING GUYING. GUYS ARE BISECTOR TO SOUTHEAST.

LEGEND:

#X - ELECTRICAL PHASE ID, X EQUALS PHASE A, B, OR C

XX - ITEM TAG FOR AERIAL MATERIAL OR EQUIPMENT, SEE DWG. #92X-5900-E-01024, SHEET E0009

RELATED DWG NO.	DRAWING TITLE	SHEET NO.
92X-5900-X-00489	DRAWING INDEX	X0002
92X-5900-E-00472	SINGLE LINE DIAGRAM & PANEL SCHEDULES	E0001
92X-5900-E-01003	PLAN AND SCHEDULES	E0006
92X-5900-E-01024	MATERIAL LIST AND STANDARD DETAILS	E0009

000029

INFORMATION ONLY

REV NO.	ISSUE OR REVISION PURPOSE - DESCRIPTION	INITIALS AND DATE		
0	CERTIFIED FOR CONSTRUCTION. ADDED PER DCN: 20712-018	3/18/99	3/19/99	3/18/99
		IT	PM	REVD BY

UNITED STATES DEPARTMENT OF ENERGY
FERNALD ENVIRONMENTAL MANAGEMENT PROJECT

THIS DRAWING PREPARED BY
PARSONS
THE RALPH M. PARSONS CO. - PARSONS MAIN, INC. - ENGINEERING-SCIENCE, INC.
CINCINNATI, OHIO

PROJECT NAME
REMEDIATION AREA I, PHASE II

DRAWING TITLE
ELECTRICAL
POLE ELEVATIONS
CONTRACTOR SUPPORT AREA

DRAWN BY	DATE	TECHNICAL LEAD	DATE	CHECKED BY	DATE
L.N. HAGAMAN	02/26/99	T. FERRELL			
PLANT/BLDG. NO.		FLOOR		SCALE NONE	CLASS
SUBMITTED FOR 30% ISSUE		SUBMITTED FOR 60% ISSUE		SUBMITTED FOR 90% ISSUE	
TECH LEAD N/A		TECH LEAD N/A		TECH LEAD N/A	
DATE N/A		DATE N/A		DATE N/A	

PO NUMBER	FOR PROJECT NO.	DRAWING INDEX CODE NO.	SHEET NO	REV. NO.
TOP-021	20712	92X-5900-E-01022	E0007	0

2108

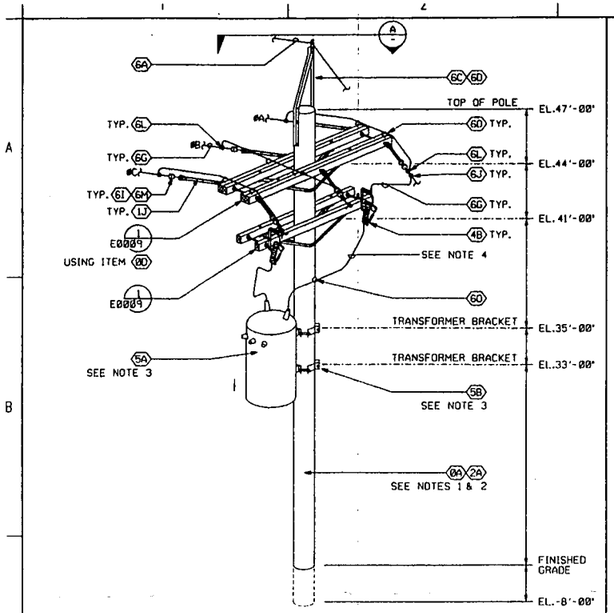

ELEVATION E7 (E0008) REF E0006 POLE 648
NTS

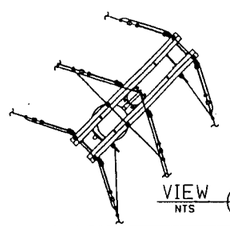

VIEW A
NTS

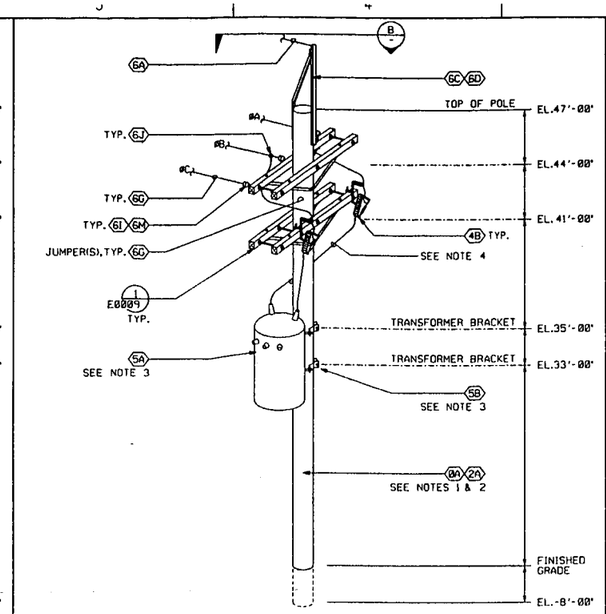

ELEVATION E8 (E0008) REF E0006 POLE 650
NTS

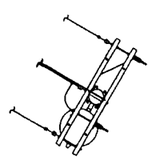

VIEW B
NTS

NOTES

1. SEE DETAIL 2 ON DWG.# 92X-5900-E-01024, SHEET E0009 FOR GROUNDING ITEMS FOR POLE GROUNDING SYSTEM.
2. SEE DETAIL 3 ON DWG.# 92X-5900-E-01024, SHEET E0009 FOR GUYING ITEMS FOR POLE. SEE 'GUY ASSEMBLY SCHEDULE' ON DWG.# 92X-5900-E-01003, SHEET FOR ANCHOR LOCATION(S)/GUY WIRE(S) ATTACHMENTS IN RELATION TO THE POLE.
3. GROUND INDIVIDUAL TRANSFORMERS AND MOUNTING BRACKETS TO POLE GROUNDING SYSTEM. SEE DETAIL 2 ON DWG.# 92X-5900-E-01024, SHEET E0009.
4. SEE 'POLE MOUNTED TRANSFORMER CONNECTIONS' ON DWG.# 92X-5900-E-01003, SHEET E0006 FOR PRIMARY WIRE SIZES AND CONNECTIONS.
5. POLE ELEVATIONS REPRESENT A GENERAL CONCEPT/PICTORIAL VIEW OF THE MAJORITY OF ITEMS LOCATED ON THE POLE. THE INTENT OF THE 'POLE ELEVATION' IS TO DEFINE THE MAJOR COMPONENTS, COMPONENT ELEVATIONS , AND THEIR ORIENTATION TO EACH OTHER. THE POLE ELEVATIONS ARE NOT INTENDED TO BE USED AS A WIRING GUIDE FOR FINAL CIRCUIT CONNECTION OF ELECTRICAL EQUIPMENT.

LEGEND:

#X - ELECTRICAL PHASE ID, X EQUALS PHASE A, B, OR C

⟨XX⟩ - ITEM TAG FOR AERIAL MATERIAL OR EQUIPMENT, SEE DWG. #92X-5900-E-01024, SHEET E0009

RELATED DWG NO.	DRAWING TITLE	SHEET NO.
92X-5900-X-00489	DRAWING INDEX	X0002
92X-5900-E-00472	SINGLE LINE DIAGRAM & PANEL SCHEDULES	E0001
92X-5900-E-01003	PLAN AND SCHEDULES	E0006
92X-5900-E-01024	MATERIAL LIST AND STANDARD DETAILS	E0009

000030

INFORMATION ONLY

REV. NO.	ISSUE OR REVISION PURPOSE - DESCRIPTION		PM	REVD BY
			INITIALS AND DATE	
0	CERTIFIED FOR CONSTRUCTION, ADDED PER DCN: 20712-018	9/29/99 9/29/99 JGC	GS 9/29/99	JGC 9/29/99

STATE OF OHIO JAMES A. COOPER E-56807 REGISTERED PROFESSIONAL ENGINEER

UNITED STATES DEPARTMENT OF ENERGY
FERNALD ENVIRONMENTAL MANAGEMENT PROJECT

THIS DRAWING PREPARED BY
PARSONS
THE RALPH M. PARSONS CO. - PARSONS MAIN, INC. - ENGINEERING-SCIENCE, INC.
CINCINNATI, OHIO

PROJECT NAME
REMEDIATION AREA I, PHASE II

DRAWING TITLE
ELECTRICAL
POLE ELEVATION

DRAWN BY	DATE	TECHNICAL LEAD	DATE	CHECKED BY	DATE
L. N. HAGAMAN	03/04/99	T. FERRELL			
PLANT/BLDG. NO.		FLOOR		SCALE NONE	CLASS
SUBMITTED FOR 30% ISSUE		SUBMITTED FOR 60% ISSUE		SUBMITTED FOR 90% ISSUE	
TECH LEAD N/A		TECH LEAD N/A		TECH LEAD N/A	
DATE N/A		DATE N/A		DATE N/A	

PO NUMBER	TOP PROJECT NO.	DRAWING INDEX CODE NO.	SHEET NO.	REV. NO.
TOP-021	20712	92X-5900-E-01023	E0008	0

MATERIAL LIST

ITEM TAG	POLE MATERIAL ITEMS
0A	WOODEN POLE - ANSI 05.1, CLASS 2, SOUTHERN PINE, PENTACHLOROPHENOL TREATED TO 12 lbs/ft³, AWPA C4. SEE 'POLE SCHEDULE' FOR REQUIRED LENGTH.
0B	WOODEN CROSSARM - 3½" X 4½" X 6'-0", SOUTHERN PINE, PENTACHLOROPHENOL TREATED TO 8 lbs/ft³.
0C	WOODEN CROSSARM - 3½" X 4½" X 8'-0", SOUTHERN PINE, PENTACHLOROPHENOL TREATED TO 8 lbs/ft³.
0D	WOODEN CROSSARM - 3¾" X 4¾" X 10'-0", SOUTHERN PINE, PENTACHLOROPHENOL TREATED TO 8 lbs/ft³.
0E	CROSSARM ANGLE BRACE - 63" LONG X 18" DROP, HOT DIP GALVANIZED ASTM A675 (2 PIECE BRACES ARE ACCEPTABLE).

ITEM TAG	HARDWARE ITEMS
1A	DOUBLE ARMING ⅝" BOLT - FULL THREAD, HOT DIP GALVANIZED. LENGTH AS REQUIRED.
1B	⅝" MACHINE BOLT - ANSI C135.1, LENGTH AS REQUIRED, HOT DIP GALVANIZED.
1C	SQUARE WASHER - FOR ⅝" BOLT, HOT DIP GALVANIZED.
1D	ROUND WASHER - FOR ⅝" BOLT, HOT DIP GALVANIZED.
1E	SPRING LOCK WASHER - FOR ⅝" BOLT, HOT DIP GALVANIZED.
1F	SQUARE NUT - FOR ⅝" BOLT, HOT DIP GALVANIZED.
1G	EYENUT - ANSI C135.1, FOR ⅝" BOLT, HOT DIP GALVANIZED.
1H	THIMBLE EYENUT - FOR ⅝" BOLT, HOT DIP GALVANIZED.
1J	ASSEMBLY, EXTENSION LINK 20", WITH END CLEVIS, ANCHOR SHACKLE AND EYENUT, ALL HOT DIP GALVANIZED, PLUS CLEVISES FOR DOUBLE ARMING BOLT ATTACHMENT.
1K	CROSSARM GAIN - 3" X 4", TEETH ON BOTH SIDES, HOT DIP GALVANIZED.

ITEM TAG	GROUNDING ITEMS
2A	GROUND ROD - ¾" DIAMETER X 10' LONG, COPPERWELD.
2B	GROUND ROD CLAMP (FOR GROUND WIRE CONNECTION) - ¾" DIA., BRONZE OR BRASS.
2C	GROUND CONDUCTOR - #2 AWG, BARE SOLID COPPER, SOFT DRAWN.
2D	GROUND CONDUCTOR - #4 AWG, BARE SOLID COPPER, SOFT DRAWN.
2E	GROUND STAPLE - COPPERCLAD, 1½" LONG.
2F	GROUNDING CLAMP - WIRE TO WIRE.
2G	POLE BOTTOM GROUND PLATE - COPPER (OR COIL GROUND WIRE ON POLE BOTTOM)

ITEM TAG	GUYING ITEMS
3A	GUY ANCHOR SYSTEM - HELIX SCREW TYPE, GALVANIZED STEEL, ASTM A36/36M WITH MINIMUM PULLOUT CAPACITY OF 23,000 lbs. FOR SOIL WITH BLOW COUNT OF 10, MID-STRENGTH INSTALLATION TORQUE SERIES, EYENUT TO ACCOMMODATE UP TO THREE GUY WIRES.
3B	GUY WIRE - ½" DIA. STRAND, CLASS A OR B GALVANIZED, ASTM A475 1 X 7 EXTRA HIGH STRENGTH CONSTRUCTION, MINIMUM TENSILE STRENGTH OF 26,000 lbs.
3C	DEADEND GRIP - PREFORMED TWISTED LOOP, CLASS A OR B GALVANIZED, SIZED FOR GUY WIRE.
3D	GUY STRAIN INSULATOR - ⅝" SIZE, ANSI C29.4 CLASS 54-1.
3E	FIBERGLASS GUY STRAIN INSULATOR - 16,000 LBS. RATING, HOT-DIPPED GALVANIZED CLEVIS-THIMBLE-EYE FITTINGS, LENGTH AS REQUIRED.
3F	¾" THIMBLEYE ANGLE BOLT (LENGTH AS REQUIRED), WASHER, SPRING LOCK WASHER, NUT, HOT DIP GALVANIZED, MINIMUM TENSILE STRENGTH OF 18,000 lbs.
3G	GUY WIRE MARKER - HALF ROUND UV RESISTANT YELLOW PLASTIC, 2" WIDE X 96" LONG, WITH MOUNTING HARDWARE.
3H	GUY STATIC ATTACHMENT - THIMBLEYES(2) WITH ROD SIZED FOR BAYONET HOLE, HOT DIP GALVANIZED.

ITEM TAG	ELECTRICAL SWITCH ITEMS
4A	CUTOUT SWITCH/ARRESTER COMBINATION UNIT, FOR CROSSARM MOUNTING; CUTOUTS, ANSI C37.42, LOAD BREAK, UNLESS EXISTING, DROPOUT TYPE, 110 KV BIL, SEE SINGLE LINE FOR RATINGS, SEE ITEM TAG 4E BELOW FOR ARRESTER REQUIREMENTS.
4B	FUSED CUTOUT SWITCH/ARRESTER COMBINATION UNIT, FOR CROSSARM MOUNTING; CUTOUTS, ANSI C37.42, LOAD BREAK, UNLESS EXISTING, DROPOUT TYPE, 110 KV BIL, FUSES, TYPE K, SEE SINGLE LINE FOR RATINGS, SEE ITEM TAG 4E BELOW FOR ARRESTER TYPE AND RATING.
4C	LOAD BREAK SWITCH, FOR CROSSARM MOUNTING; ANSI C37.30, 110 KV BIL, FUSES, WHERE REQUIRED, TYPE K. SEE SINGLE LINE FOR RATINGS.
4D	LOAD BREAK SWITCH, FOR CROSSARM MOUNTING, HORIZONTAL, S & C CAT. # 147432-D-S2; ANSI C37.30, 110 KV BIL, FUSES, WHERE REQUIRED, TYPE K; SEE SINGLE LINE FOR RATINGS.
4E	ARRESTER, DIRECT CONNECTED, 9 KV, IEEE C62.1, RISER POLE TYPE, METAL OXIDE VALVE W/CROSSARM MOUNTING HARDWARE.
4F	SWITCH NAMEPLATE - ¼" BAKELITE SIGN MATERIAL SIZED FOR NUMBER OF CHARACTERS, BLACK LETTERS ON WHITE BACKGROUND WITH MOUNTING HOLES SIZED FOR ¼" BOLTS SET AT BOTH ENDS. MOUNT THE NAMEPLATE AT EYE LEVEL NEAR OPERATING HANDLE. SEE DETAIL 5.

ITEM TAG	TRANSFORMER ITEMS
5A	TRANSFORMER - POLE MOUNTED, SEE SINGLE LINE FOR RATINGS AND QUANTITIES. ANSI C57.12.20, 1 PHASE, OIL FILLED, 125 KV BIL, 65°C OVER 30°C RISE, EXTERNALLY OPERATED CHANGER FOR TWO EACH 2½% ABOVE AND BELOW NORMAL VOLTAGE TAPS.
5B	POLE MOUNTED EQUIPMENT BRACKET FOR SINGLE TRANSFORMER - DOUBLE-BANDED, HEAVY DUTY CLUSTER MOUNT, HIGH-STRENGTH STEEL GALVANIZED OR ALUMINUM, WITH GROUNDING LUG. SIZED FOR ITEM 5A ABOVE.
5C	POLE MOUNTED EQUIPMENT BRACKET FOR THREE TRANSFORMERS - DOUBLE-BANDED, HEAVY DUTY CLUSTER MOUNT, HIGH-STRENGTH STEEL GALVANIZED OR ALUMINUM, WITH GROUNDING LUG. SIZED FOR ITEM 5A ABOVE.

ITEM TAG	STATIC LINE, CABLE(S) AND INSULATOR ITEMS
6A	STATIC LINE - ⅜" DIA. STRAND, CLASS A OR B GALVANIZED, 1 X 7 HIGH STRENGTH CONSTRUCTION, MINIMUM TENSILE STRENGTH OF 10,000 LBS.
6B	STATIC LINE BAYONET - STRAIGHT, 66" LENGTH, HOT DIP GALVANIZED.
6C	STATIC LINE BAYONET - CORNER, 66" LENGTH, HOT DIP GALVANIZED.
6D	STATIC LINE CLAMP - HOT DIP GALVANIZED J-BOLT DESIGNED TO FIT INTO TWO HOLES AT TOP OF BAYONET.
6E	13.2KV AERIAL CABLE - 336.4KCMIL ACSR 'MERLIN', ASTM B232.
6G	13.2KV AERIAL CABLE - #2 AWG ACSR 'SPARROW', ASTM B232.
6I	DEADEND CLAMP - ALUMINUM, STRAIGHT-LINE, SIZED FOR AERIAL CABLE.
6J	CABLE TO CABLE CONNECTOR USED FOR XFMR PRIMARY CONNECTION TO OVERHEAD - COMPRESSION STIRRUP (ALUM., SIZED FOR AERIAL CABLE) WITH MECHANICAL HOT LINE CLAMP (ALUM., SIZED FOR STIRRUP AND TAP CABLE). USE SILICON-BRONZE BOLTING MATERIALS.
6K	CABLE TO CABLE CONNECTOR USED FOR MAIN LINE TAPS TO BRANCH CIRCUITS - ALUMINUM MECHANICAL NON-CRIMP REMOVABLE CONNECTOR, SIZED FOR CABLES. USE SILICON-BRONZE BOLTING MATERIALS.
6L	CABLE TO CABLE CONNECTOR USED FOR MAIN LINE CONNECTIONS - ALUMINUM COMPRESSION CONNECTOR, SIZED FOR CABLES. USE SILICON-BRONZE BOLTING MATERIALS.
6M	SUSPENSION INSULATOR - CLEVIS TYPE, STEEL HARDWARE, ANSI C29.2, CLASS 52-9, 2 REQUIRED FOR 13.2KV SERVICE. OTHER INSULATOR ARRANGEMENTS SUITABLE FOR 15KV SERVICE MAY BE SUBMITTED FOR APPROVAL.
6O	STRAIGHT PIN/INSULATOR/ASSEMBLY, FOR WOOD CROSSARM - FLAT BASE LONG SHANK TYPE, MOUNTING HARDWARE, HOT DIP GALVANIZED; PIN INSULATOR - 14.4KV, GLAZED PORCELAIN, ANSI C29.5, CLASS 55-5, "F" NECK; ARMOR ROD - SIZED AND LENGTH AS REQUIRED BY AERIAL CABLE SIZE/SUPPORT(S); TIE WIRE - TYPE (COPPER OR ALUMINUM), SIZED AND LENGTH AS REQUIRED BY AERIAL CABLE SIZE/SUPPORT(S). SEAL WITH SILICON PUTTY WHEN NOT MOUNTED UPRIGHT.
6P	CORNER ANGLE PIN/INSULATOR/PREFORMED ARMOR ROD/TIE WIRE ASSEMBLY. CORNER ANGLE PIN FOR WOOD CROSSARM - MOUNTING HARDWARE, HOT DIP GALVANIZED; PIN INSULATOR - 14.4KV, GLAZED PORCELAIN, ANSI C29.5, CLASS 55-5, "F" NECK; ARMOR ROD - SIZED AND LENGTH AS REQUIRED BY AERIAL CABLE SIZE/SUPPORT(S); TIE WIRE - TYPE (COPPER OR ALUMINUM), SIZED AND LENGTH AS REQUIRED BY AERIAL CABLE SIZE/SUPPORT(S). SEAL WITH SILICON PUTTY WHEN NOT MOUNTED UPRIGHT.
6Q	POLE TOP PIN/INSULATOR/ASSEMBLY. POLE TOP PIN - C135.22, 15" LENGTH, MOUNTING HARDWARE FOR WOOD POLE, HOT DIP GALVANIZED; PIN INSULATOR - 14.4KV, GLAZED PORCELAIN, ANSI C29.5, CLASS 55-5, "F" NECK; ARMOR ROD - SIZED AND LENGTH AS REQUIRED BY AERIAL CABLE SIZE/SUPPORT(S); TIE WIRE - TYPE (COPPER OR ALUMINUM), SIZED AND LENGTH AS REQUIRED BY AERIAL CABLE SIZE/SUPPORT(S). SEAL WITH SILICON PUTTY WHEN NOT MOUNTED UPRIGHT.
6S	CABLE TERMINATION - SIZED FOR INSULATED CABLE WITH CROSSARM MOUNTING HARDWARE.

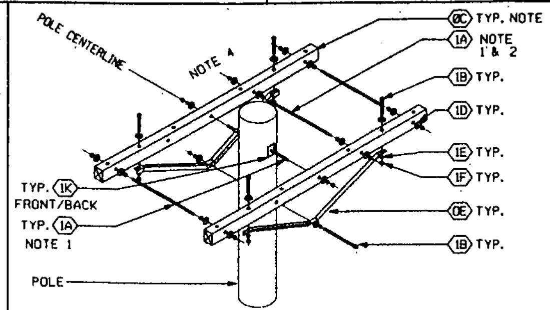

NOTES

1. PROVIDE ADEQUATE LENGTH OF THREAD TO FACILITATE THE ADDITION OF FUTURE EYENUTS ON END OF BOLT.
2. PROVIDE ITEM 1A WITH REQUIRED HARDWARE WHEN "OFFSET" IS NEEDED.
3. 0D REPLACES 0C WHERE NOTED. WHEN CROSSARMS ARE DOUBLED UP, (NOTED "2 PER SIDE") ADJUST LENGTH OF 1A TO ACCOMMODATE.
4. USE STANDARD CROSSARM DRILL HOLE SPACINGS.

DETAIL 1 (E0009) REF E0007 E0008
CROSSARMS & MOUNTING ITEMS
NTS

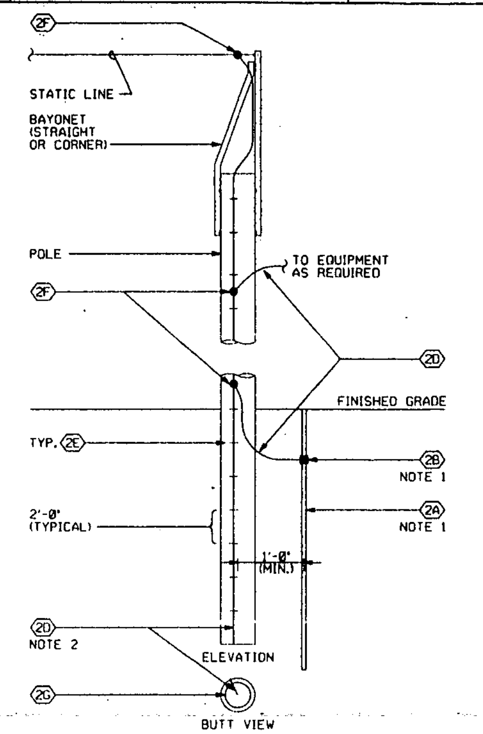

NOTES

1. INSTALL ITEMS 2A & 2B ONLY WHEN CALLED OUT ON THE POLE ELEVATION.
2. LOCATE ITEM 2D FOR MAXIMUM CLEARANCE TO NEAREST 13.2KV BARE AERIAL CONDUCTOR(S). ALWAYS LOCATE ON OPPOSITE SIDE OF POLE FROM OFF-CENTER MIDDLE PHASE FEATURES.

DETAIL 2 (E0009) REF E0007 E0008
POLE GROUNDING SYSTEM
NTS

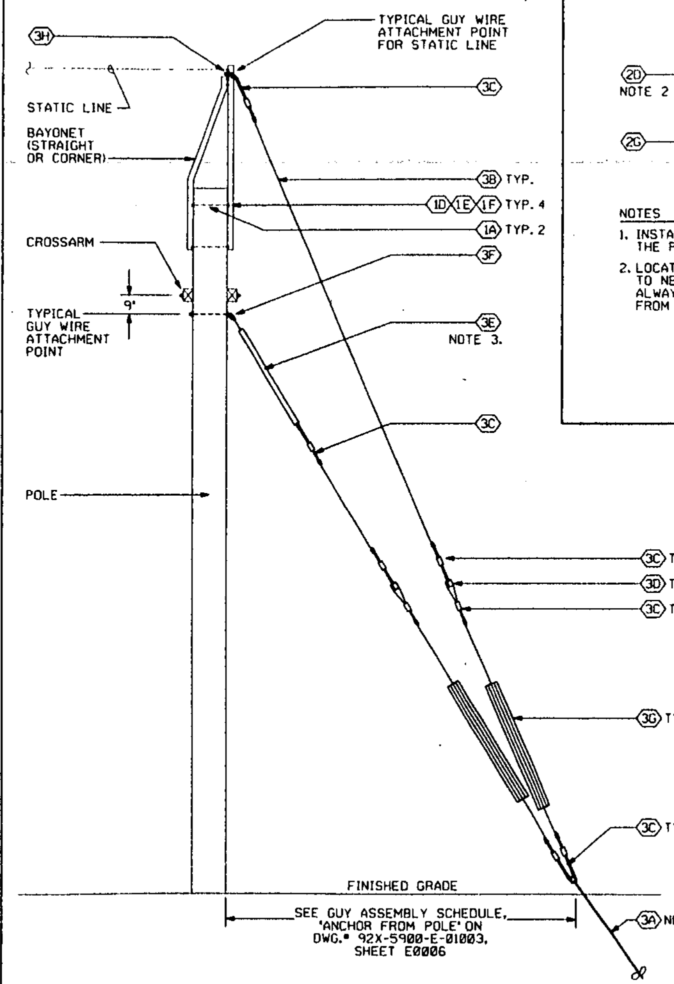

NOTES

1. INSTALL SOIL ANCHORS ACCORDING TO MANUFACTURER'S INSTRUCTIONS. FOR REQUIRED PULLOUT SOIL, ASSUME MINIMUM BLOW COUNT OF 10. (ASTM D1586).
2. PRIOR TO INSTALLATION OF EARTH ANCHORS, VERIFY LOCATION OF NEARBY UNDERGROUND UTILITIES AND PUSH SMALL DIAMETER STEEL SOIL PROBE THROUGH AREA TO VERIFY THAT NO UNDERGROUND OBSTRUCTIONS ARE PRESENT.
3. INSTALL GUY STRAIN INSULATORS (FIBERGLASS ROD TYPE) TO MAINTAIN LINE TO GROUND CLEARANCE TO ANY CONDUCTIVE PART OF THE GUY ASSEMBLY. USE MINIMUM 4 FOOT INSULATOR, IN SERIES IF REQUIRED.

DETAIL 3 (E0009) REF E0007 E0008
GUYING SYSTEM
NTS

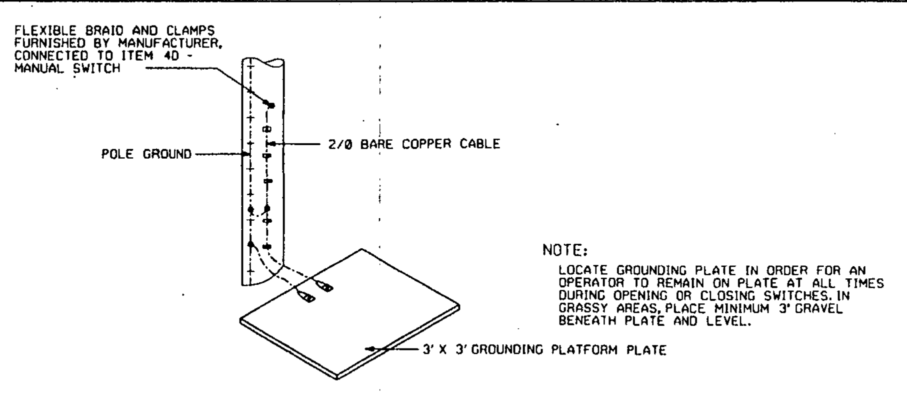

NOTE:
LOCATE GROUNDING PLATE IN ORDER FOR AN OPERATOR TO REMAIN ON PLATE AT ALL TIMES DURING OPENING OR CLOSING SWITCHES. IN GRASSY AREAS, PLACE MINIMUM 3" GRAVEL BENEATH PLATE AND LEVEL.

DETAIL 4 (E0009) REF E0006
GROUNDING PLATE SYSTEM
NTS

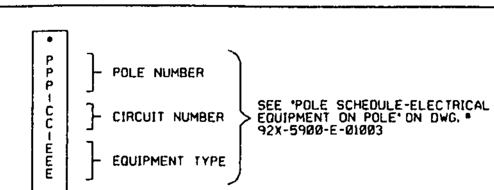

DETAIL 5 (E0009)
EQUIP. NAMEPLATE LETTERING
NTS

NOTES

2108

LEGEND:

(XX) - ITEM TAG FOR AERIAL MATERIAL OR EQUIPMENT.

RELATED DWG NO.	DRAWING TITLE	SHEET NO.
92X-5900-X-00489	DRAWING INDEX	X0002
92X-5900-E-01003	PLAN AND SCHEDULES	E0006
92X-5900-E-01022	POLE ELEVATIONS	E0007
92X-5900-E-01023	POLE ELEVATIONS	E0008

INFORMATION ONLY

000031

REV. NO.	ISSUE OR REVISION PURPOSE - DESCRIPTION	INITIALS AND DATE		
0	CERTIFIED FOR CONSTRUCTION, ADDED PER DCN: 20712-018	[signature]		[signature]

STATE OF OHIO JAMES L. COOPER E-56807 REGISTERED PROFESSIONAL ENGINEER

UNITED STATES DEPARTMENT OF ENERGY
FERNALD ENVIRONMENTAL MANAGEMENT PROJECT

THIS DRAWING PREPARED BY
PARSONS
THE RALPH M. PARSONS CO. - PARSONS MAIN, INC. - ENGINEERING-SCIENCE, INC.
CINCINNATI, OHIO

PROJECT NAME: REMEDIATION AREA I, PHASE II

DRAWING TITLE: ELECTRICAL MATERIAL LIST AND STANDARD DETAILS CONTRACTOR SUPPORT AREA

DRAWN BY	DATE	TECHNICAL LEAD	DATE	CHECKED BY	DATE
L. N. HAGAMAN	02/26/99	T. FERRELL			

PLANT/BLDG. NO.	FLOOR	SCALE	CLASS
		NOT TO SCALE	

SUBMITTED FOR 30% ISSUE	SUBMITTED FOR 60% ISSUE	SUBMITTED FOR 90% ISSUE
TECH LEAD N/A	TECH LEAD N/A	TECH LEAD N/A
DATE N/A	DATE N/A	DATE N/A

PO NUMBER	FDF PROJECT NO.	DRAWING INDEX CODE NO.	SHEET NO.	REV. NO.
TOP-021	20712	92X-5900-E-01024	E0009	0

PIPING VALVES

CONFIGURATIONS FOR VALVE TYPE

ANGLE STRAIGHT 3-WAY 4-WAY

VALVE TYPES (STRAIGHT CONFIG.)

- AIR RELEASE VALVE
- AIR AND VACUUM VALVE
- BACKPRESSURE REGULATOR
- BACKFLOW PREVENTER
- BALL
- BLOWDOWN
- BUTTERFLY/DAMPER
- CHECK, SWING TYPE
- CHECK, WAFER TYPE
- DELUGE
- DIAPHRAGM
- DIFFERENTIAL PRESSURE REGULATOR
- FLOAT
- FOOT
- GATE
- GLOBE
- HOSE
- KNIFE
- NEEDLE
- PINCH
- PRESSURE REGULATOR
- PLUG
- SAFETY RELIEF
- SLIDING GATE
- STOP CHECK
- VACUUM

PIPING SEGMENT BREAKS

- CONSTRUCTION REQUIREMENTS
- INSULATION REQUIREMENTS
- PIPING MATERIAL REQUIREMENTS
- UNDERGROUND ROUTING (SHADED AREA INDICATES DIRECTION OF UNDERGROUND)

PIPING FITTINGS

- BASKET STRAINER - SINGLE
- BASKET STRAINER - DUPLEX
- CAP
- CONCENTRIC REDUCER
- CONE STRAINER
- ECCENTRIC REDUCER
- EXPANSION FLANGE
- EXPANSION JOINT
- FILTER
- FLANGE
- FLEXIBLE HOSE
- HOSE CONNECTION
- HOSE QUICK COUPLING
- MECHANICAL COUPLING
- ORIFICE
- ORIFICE UNION
- PLUG
- REDUCING FLANGE
- STEAM TRAP
- SUMP STRAINER
- TEMPORARY STRAINER
- Y-STRAINER

PIPING SYMBOLOGY

- PRIMARY PIPING
- SECONDARY PIPING
- EXISTING PIPING
- FLEXIBLE HOSE
- FUTURE PIPING
- TIE-IN POINT

EQUIPMENT SYMBOLS

- AGITATOR (MIXER)
- CENTRIFUGAL BLOWER
- (AREA NAME) DEFINED BOUNDRY
- HORIZONTAL CENTRIFUGAL PUMP
- (SYSTEM NAME) PACKAGED SYSTEM BOUNDRY
- SUBMERSIBLE TURBINE PUMP
- SUMP PUMP WITH MOTOR

PIPING LINE NUMBER FORMAT

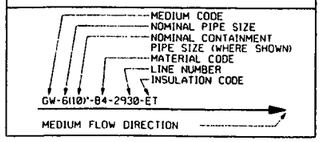

ABBREVIATIONS

AC	AIR TO CLOSE
AG	AGITATOR
AO	AIR TO OPEN
ARV	AIR RELEASE VALVE
AVV	AIR AND VACUUM VALVE
AWWT	ADVANCED WASTEWATER TREATMENT FACILITY
BLW	BLOWER
BTU	BRITISH THERMAL UNIT
CFM	CUBIC FEET/MINUTE
CO	CLEAN OUT
CU FT	CUBIC FEET
ECC	ECCENTRIC
EF	EXHAUST FAN
FC	FAIL CLOSED
FO	FAIL OPEN
GPH	GALLONS PER HOUR
GPM	GALLONS PER MINUTE
GV	GRAVITY VENTILATOR
HDPE	HIGH DENSITY POLYETHYLENE
IA	INSTRUMENT AIR
KW	KILOWATT
LB/HR	POUNDS PER HOUR
MATL	MATERIAL
MED	MEDIUM
MS	MIST ELIMINATOR
NC	NORMALLY CLOSED
NO	NORMALLY OPEN
PIV	POST INDICATOR VALVE
PMP	PUMP
RED	REDUCER
RH	RELATIVE HUMIDITY
SCFM	STANDARD CUBIC FEET/MINUTE
SCR	STRAINER
SFES	SOUTH FIELD EXTRACTION SYSTEM
SWRB	STORMWATER RETENTION BASIN
TBD	TO BE DETERMINED
TF	TOP FLAT
TNK	TANK
TYP	TYPICAL
UH	UNIT HEATER
1	SOLENOID VALVE COMMON PORT
2	SOLENOID VALVE NORM. OPEN PORT
3	SOLENOID VALVE NORM. CLOSED PORT
ID	INJECTION DEMONSTRATION
SPO	SOUTH PLUME OPTIMIZATION

PIPING SPECIFICATIONS

FLOWING MEDIUM	MED. CODE	MATL. CODE
BACK WASH	BW	T
BLOWER AIR	BA	A
CHILLED WATER	CHS, CHR	A
CHLORINE	CL	B1
CONDENSATE	LC	W, T
CONDENSER WATER	CWS, CWR	A
COOLING WATER	WS, WR	A
DRAIN	DR	A, T
DRINKING WATER	DW	W, B4, C1
FILTRATE EFFLUENT	FT	A
FLOCCULANT	FL	A
FLUSH WATER	FW	T
FORCE MAIN	FM	M
GROUND WATER	GW	A, B, B4, M
INSTRUMENT AIR	IA	T
MELTER OFF-GAS	OG	T
NITRIC ACID	AN	T1
PERCHED GND WATER	PGW	B
PHOSPHORIC ACID	PAPH	T1
PLANT AIR	PA	W
POLISHED WATER	PW	A
PROCESS WATER	TW, TWX1	A, B4
PROCESS WASTEWATER	CE	A
RAW WATER	RW	A
RECYCLE WATER	RC	T, B2
SCRUBBER RECYCLE	RSL	T
SLURRY	SL	T
SODIUM CARBONATE	SC	A
SODIUM HYDROXIDE	NA	T
SODIUM SILICATE	SS	A
STORM WATER	ST	A, A7, B4
SULFURIC ACID	SB	T1
SUMP DISCHARGE	SU	T
THICKENER OVERFLOW	TO	T
VACUUM	V	A
VENTILATION AIR	VE	T, A
WASTE WATER	WW	A, T, B4

MATL. CODE	DESCRIPTION
A	A53 SEAMLESS CARBON STEEL
A7	CORRUGATED METAL PIPE
B	PVC
B1	PVDF
B2	PVDF, 100PSI
B3	CPVC
B4	HDPE
B5	CORRUGATED HDPE
C1	CLASS 150, COPPER TUBING
L	FIBERGLASS REINFORCED PLASTIC
M	DUCTILE IRON
T	304L, STAINLESS STEEL
T1	316L, STAINLESS STEEL
W	A53, GR. A, GALVANIZED STEEL

INSUL. CODE	DESCRIPTION
ET	ELECTRIC TRACED AND INSULATED
IC	ANTI-CONDENSATION INSULATION
ST	STEAM TRACED AND INSULATED

NOTES

2108

INFORMATION ONLY

REF DWG NO.	DRAWING TITLE	SHEET NO.
92X-5900-X-00489	DRAWING INDEX	X0002

000062

STATE OF OHIO — CONRAD J. COPPER — REGISTERED PROFESSIONAL ENGINEER

STATE OF OHIO — OSCAR W. CARLVIN JR. — REGISTERED PROFESSIONAL ENGINEER — 10/6/98

INSTRUMENT ACTUATOR LABELS

- BALL FLOAT
- CAPACITY SENSOR
- DIAPHRAGM
- DISPLACING FLOAT
- DUAL ACTION PISTON
- DUAL SOLENOID
- MANUAL
- MOTOR
- PILOT
- SINGLE ACTION PISTON
- SINGLE SOLENOID
- SINGLE SOLENOID WITH RESET

INSTRUMENT DEVICE TAG TYPES

- IN-LINE TAG WITH LEADER LINE
- LOCAL MOUNTED DEVICE
- FRONT OF PANEL MOUNTED DEVICE
- FRONT OF PANEL MOUNTED DEVICE AUXILLARY LOCATION
- REAR OF PANEL MOUNTED DEVICE
- REAR OF PANEL MOUNTED DEVICE AUXILLARY LOCATION
- SHARED DISPLAY COMPUTER CONTROL AND OPERATOR INTERFACE

EXAMPLE OF TAG CALLOUTS

- INSTRUMENT TAG TYPE
- LETTERS OF INSTRUMENT IDENT.
- LOOP NUMBER SUFFIX
- LOOP NUMBER
- SPECIAL DESIGNATION

MISC. INSTRUMENTATION SYMBOLS

- INTERLOCK
- DIAPHRAGM SEAL
- INSTRUMENT AIR SUPPLY

INSTRUMENT IN-LINE DEVICES

- AVERAGING PITOT
- FLOW NOZZLE
- FLUME
- MAGNETIC FLOW METER
- ORIFICE PLATE
- POSITIVE DISPLACEMENT
- PROPELLER
- STRAIGHTING VANE
- SILENCER
- THERMOWELL
- TRAP
- ULTRASONIC FLOW METER
- VARIABLE AREA FLOW METER
- VENTURI
- VORTEX SHEDDING FLOW METER
- WEIR
- TARGET/VANE OPERATED FLOW SWITCH

INSTRUMENT SIGNAL LINES

- CONNECT TO PROCESS
- MECHANICAL LINK
- ELECTRIC BINARY
- PNEUMATIC BINARY
- GUIDED ELECTROMAG OR SONIC
- SOFTWARE/DATA LINK
- CAPILLARY
- ELECTRIC
- PNEUMATIC
- HYDRAULIC
- UNGUIDED ELECTROMAG OR SONIC
- UNDEFINED

INSTRUMENT SPECIAL DESIGNATIONS

DESIGNATION	FUNCTION / ABBREVATION
C	CLOSED
DIF	DIFFERENTIAL
EX	EXISTING INSTRUMENTATION
H	HIGH
HH	HIGH HIGH
HL	HIGH LOW
HOA	HAND-OFF-AUTO
IA	IN-AUTO
I/I	CURRENT TO CURRENT
I/O	INPUT/OUTPUT
I/P	CURRENT TO PNEUMATIC TREANSDUCER
L	LOW
LL	LOW LOW
LOR	LOCAL-OFF-REMOTE
O	OPEN
OA	ON-OFF
OCA	OPEN-CLOSED-AUTO
R	RUNNING
S/S	START/STOP
Y	UNDETERMINED COMPUTING RELAY

LETTERS OF INSTRUMENT IDENTIFICATION

LETTER	1ST LETTER	2ND LETTER	3RD OR 4TH LETTER
	MEASURED OR INITIATING VARIABLE	MODIFIER	READ OUT OR PASSIVE FUNCTION
A	ANALYSIS	ALARM	ALARM
B	BURNER FLAME	----	----
C	CAMERA	CONTROLLER	CLOSED
D	DENSITY	DIFFERENTIAL	----
E	VOLTAGE	ELEMENT	ELEMENT
F	FLOW RATE	RATIO (FRACTION)	----
G	GAGING (D/M)	VIEWING DEVICE	GLASS
H	HAND (MANUAL)	----	----
I	CURRENT (ELEC)	INDICATE	INDICATE
J	POWER	SCAN	----
K	TIME	----	----
L	LEVEL	LIGHT	LOW
M	MOIST. OR HUMIDITY	----	----
N	----	----	----
O	OBSERVATION	ORIFICE	OPEN
P	PRESSURE OR VACUUM	----	POINT (TEST)
Q	QUANTITY OR EVENT	TOTALIZER	----
R	RESTRICTIVE	RECORDER	RECORDER
S	SPEED OR FREQUENCY	SAFETY/SWITCH	SWITCH
T	TEMPERATURE	TRANSMITTER	TRANSMITTER
U	USER'S GUIDE	----	MULTIFUNCTION
V	VISCOSITY	----	VENT. VALVE
W	WEIGHT OR FORCE	WELL	----
X	UNCLASSIFIED	---	UNCLASSIFIED
Y	RELAY	RELAY	----
Z	POSITION	----	----

FUNCTION LABELS

SYMBOLS	DESCRIPTION
	AVERAGING
	BIAS MINUS
	BIAS PLUS
	BIAS PLUS/MINUS
	DERIVATIVE
	DIVIDING
	INTEGAL
	MULTIPLYING
	PROPORTIONAL
	RAISE TO POWER
	REVERSE ACTION
	ROOT EXTRACT
	SUMMING

REV NO	ISSUE OR REVISION PURPOSE - DESCRIPTION	DRAWN	CHECKED	APPR.
0	CERTIFIED FOR CONSTRUCTION	10/6/98	10/7/98	10/6/98
		TL	PM	REVD BY
		INITIALS AND DATE		

UNITED STATES DEPARTMENT OF ENERGY

FERNALD ENVIRONMENTAL MANAGEMENT PROJECT

THIS DRAWING PREPARED BY

PARSONS

THE RALPH M. PARSONS CO. - PARSONS MAIN, INC. - ENGINEERING-SCIENCE, INC.
CINCINNATI, OHIO

PROJECT NAME: REMEDIATION AREA 1, PHASE II

DRAWING TITLE: MECHANICAL PROCESS PIPING AND INSTRUMENTATION DIAGRAM SYMBOLS AND LEGEND

DRAWN BY	DATE	TECHNICAL LEAD	DATE	CHECKED BY	DATE
D.L. LEGASPI	10/3/97	O.W. CARLSON	5/12/98	S. GHANTOUS	10/11/97

PLANT/BLDG NO	FLOOR	SCALE	CLASS
		NONE	

SUBMITTED FOR 30% ISSUE	SUBMITTED FOR 60% ISSUE	SUBMITTED FOR 90% ISSUE
TECH LEAD N/A	TECH LEAD N/A	TECH LEAD N/A
DATE	DATE	DATE

PO NUMBER	TOP PROJECT NO	DRAWING INDEX CODE NO	SHEET NO.	REV NO
TOP-012	20712	92X-5900-N-00464	N0001	0

2108

EXCAVATION PUMPS
INSTRUMENT TAG NO. CHART

PUMP	HS*	LS*	ZI*
PMP-2	102	102	102
PMP-3	103	103	103

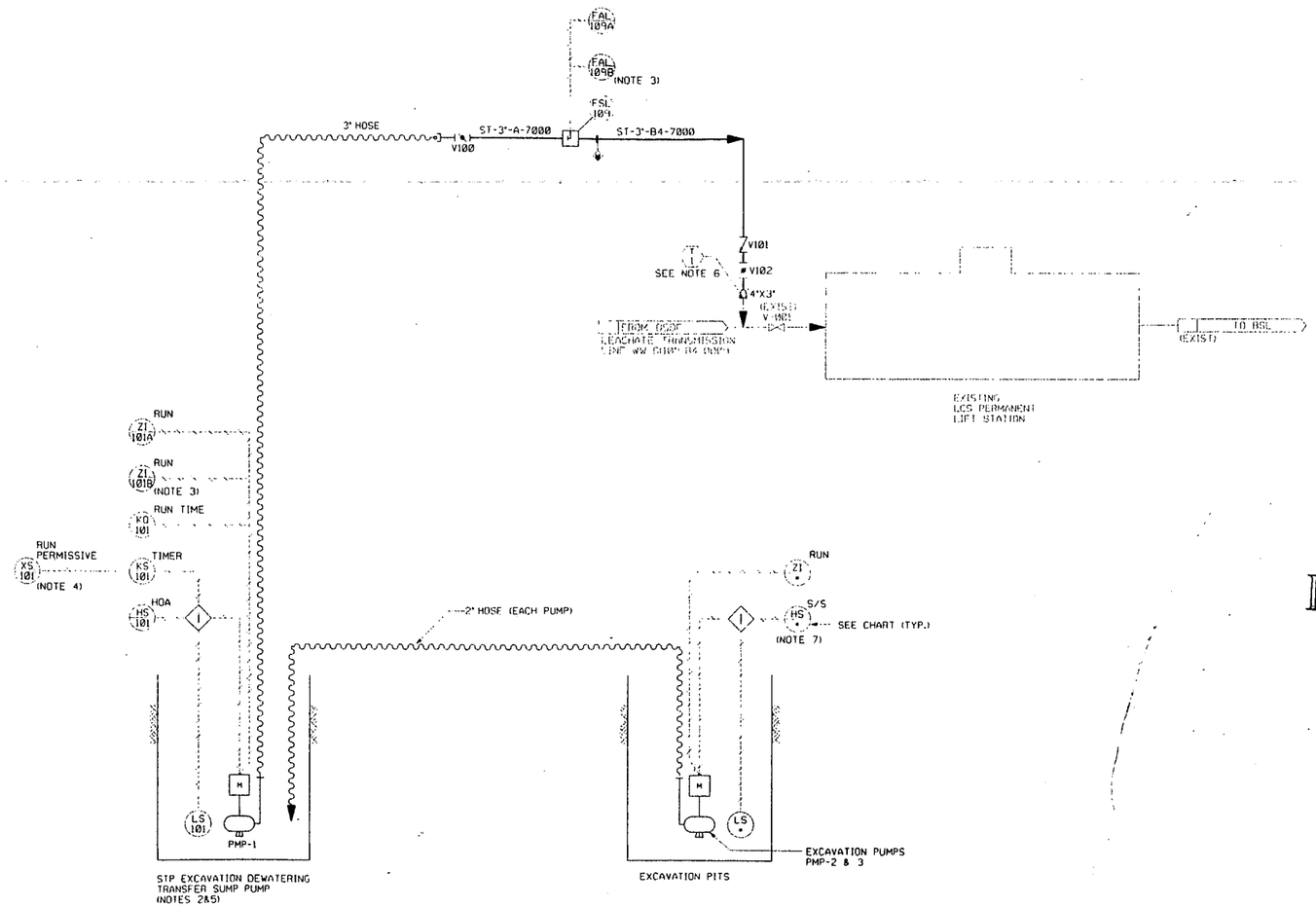

NOTES

1. PIPING SYSTEM MUST BE DRAINED DURING FREEZING WEATHER.
2. POSITION PUMP TO MINIMIZE SILT ENTRAINMENT.
3. DEVICE IS TO BE LOCATED AT LEACHATE CONVEYANCE SYSTEM PERMANANT LIFT STATION PUMP CONTROL PANEL.
4. THIS LEVEL SWITCH DEVICE WHICH IS LOCATED AT THE PERMANENT LIFT STATION LEVEL CONTROL PANEL IS ALSO USED TO CLOSE THE LEACHATE CONVEYANCE SYSTEM MOTOR OPERATED VALVE V-001.
5. INITIAL LOCATION OF STP EXCAVATION DEWATERING TRANSFER SUMP IS PLANNED AT THE FORMER UV BUILDING.
6. TIE IN IS AT END OF 4" CLEAN-OUT.
7. HS102 AND HS103 EACH REPRESENT A PAIR OF PUSHBUTTONS - ONE LABELED 'START' AND THE OTHER LABELED 'STOP'.

LAST VALVE NUMBER	V102

REF DWG NO.	DRAWING TITLE	SHEET NO.
92X-5900-X-00489	DRAWING INDEX	X0002
92X-5900-N-00464	P & ID SYMBOLS AND LEGEND	N0001

000033

INFORMATION ONLY

REV. NO.	ISSUE OR REVISION PURPOSE - DESCRIPTION			REVD BY
0	CERTIFIED FOR CONSTRUCTION	DPC 10/6/98	CS 10/7/98	PMC 10/6/98
		INITIALS AND DATE		

UNITED STATES
DEPARTMENT OF ENERGY
FERNALD ENVIRONMENTAL MANAGEMENT PROJECT

THIS DRAWING PREPARED BY
PARSONS
THE RALPH M. PARSONS CO. - PARSONS MAIN, INC. - ENGINEERING-SCIENCE, INC.
CINCINNATI, OHIO

PROJECT NAME
REMEDIATION AREA 1, PHASE II

DRAWING TITLE
MECHANICAL PROCESS
PIPING AND INSTRUMENTATION DIAGRAM
WATER COLLECTION AND TRANSFER SYSTEM

DRAWN BY	DATE	TECHNICAL LEAD	DATE	CHECKED BY	DATE
D. PIPKIN	4/16/98	D.W. CARLSON	5/12/98	D.G. KNIGHT	5/6/98
PLANT/BLDG NO		FLOOR		SCALE NONE	CLASS
SUBMITTED FOR 30% ISSUE		SUBMITTED FOR 60% ISSUE		SUBMITTED FOR 90% ISSUE	
TECH LEAD N/A		TECH LEAD N/A		TECH LEAD N/A	
DATE		DATE		DATE	

STATE OF OHIO DOUGLAS W. CARLSON, JR. 60198 REGISTERED PROFESSIONAL ENGINEER 10/6/98

STATE OF OHIO DAVID G. KNIGHT E-50795 REGISTERED PROFESSIONAL ENGINEER

PO NUMBER	FOR PROJECT NO.	DRAWING INDEX CODE NO.	SHEET NO.	REV. NO.
TOP-012	20712	92X-5900-N-00502	N0002	0