2292

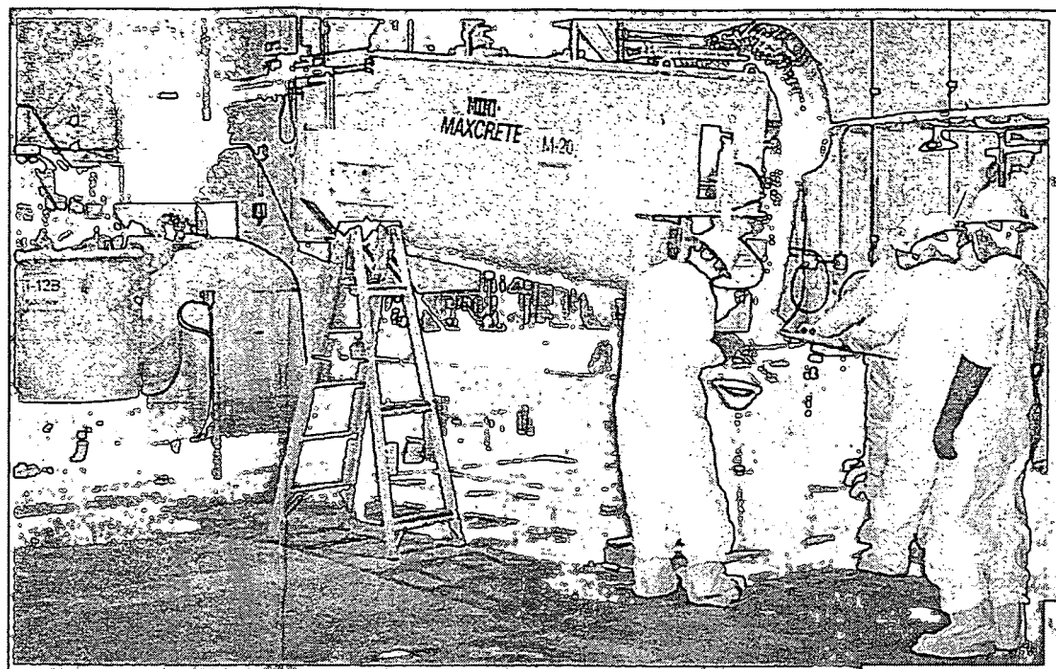

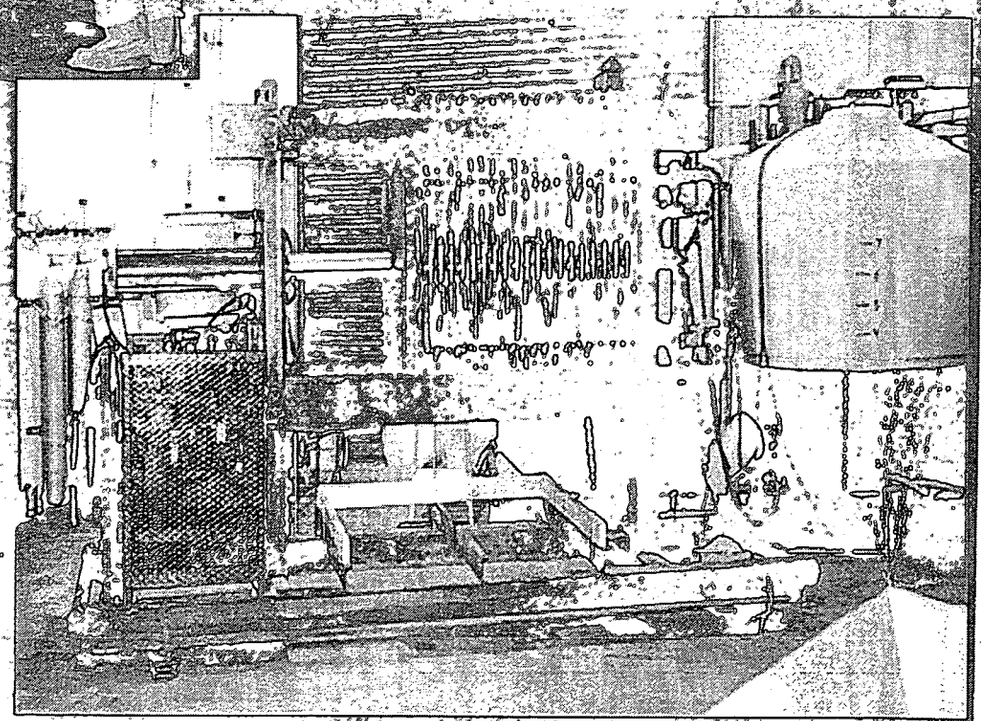

Fernald Operable Unit 4, Silos 1 and 2 Proof of Principle Demonstration Final Report May 14, 1999

IT CORPORATION
A Member of The IT Group

000001

FINAL REPORT FOR SILOS 1 AND 2 PROOF OF PRINCIPLE TESTING

***

Prepared for:

Fluor Daniel Fernald, Inc.
Fernald, Ohio

[✓] A - Conforms to the Subcontract Requirements
[ ] B - Minor Comment - Incorporate and Resubmit
[ ] C - Revise and Resubmit
Sig: Date: 5-3-99

***

Prepared by:

International Technology Corporation
2790 Mosside Boulevard
Monroeville, PA 15146-2790

IT Project No. 775743

Approved by: Date: 5/14/99
Paul Lear, IT Project Manager

Approved by: Ernest F. Stine Jr Date: 5-14-99
Ernest Stine, IT Principle Investigator

Approved by: Stuart B Shealy Date: 5/14/99
Stuart Shealy, IT Project Engineer

***

REVISION 0

Issue Date: May 14, 1999

TABLE OF CONTENTS– FINAL REPORT

List of Tables iii
List of Figures iv
List of Acronyms/Abbreviations v

1.0 Executive Summary 1-1
1.1 Formulation Development 1-2
1.2 Process Demonstration 1-3
1.3 Proof of Principle Demonstration Results 1-4
1.4 Design of Full-Scale Treatment System 1-5
2.0 Proof of Principle Test Description 2-1
2.1 Test Description 2-1
2.1.1 Formulation Development 2-3
2.1.2 Process Demonstration 2-3
2.2 Test Objectives 2-7
2.3 Rationale for Sampling Points and Sampling Frequency 2-8
2.3.1 Surrogate Slurry Preparation 2-8
2.3.2 Formulation Development 2-8
2.3.3 Process Demonstration 2-8
2.4 Identification and Rationale for Analytical Methods 2-9
2.4.1 Surrogate Slurry Preparation 2-9
2.4.2 Formulation Development 2-9
2.4.3 Process Demonstration 2-9
3.0 Test Process Design and Procedures 3-1
3.1 Formulation Development Testing 3-1
3.1.1 Slurry Preparation 3-1
3.1.2 Slurry Dewatering 3-3
3.1.3 Stabilization Formulation Development 3-4
3.2 Process Demonstration 3-4
3.2.1 Slurry Preparation 3-4
3.2.2 Slurry Dewatering 3-6
3.2.3 Filter Cake Stabilization 3-7
3.3 Testing Methodology 3-8
3.4 Process Control Procedures 3-8
3.4.1 Control Limits 3-8
3.4.2 Operating Parameters 3-10
3.4.3 Monitoring Frequency 3-10
3.5 Test Logs 3-11
3.5.1 Formulation Development Log 3-11
3.5.2 Process Demonstration Log 3-11
3.6 Video Tape 3-11
4.0 Sampling and Analysis 4-1
4.1 Formulation Development 4-1
4.1.1 Surrogate Composition 4-1
4.1.2 Dewatering of 30 wt % Solids Slurries 4-3
4.1.3 Stabilization Formulation Development 4-5
4.2 Process Demonstration 4-12
4.2.1 Surrogate Slurry Dewatering 4-12
4.2.2 Stabilization of Filter Cake Material 4-14
4.2.3 Mass Balance 4-17
5.0 Results 5-1
5.1 Formulation Development 5-1
5.1.1 Surrogate Composition 5-1
5.1.2 Dewatering of 30 wt % Solids Slurries 5-2
5.1.3 Stabilization Formulation Development 5-3
5.2 Process Demonstration 5-6
5.2.1 Surrogate Slurry Dewatering for Process Demonstration 5-6

5.2.2 Stabilization for Process Demonstration 5-7
5.2.3 Mass Balance 5-8
5.2.4 Mechanical Aspects of Process Demonstration 5-9
5.3 Proof of Principle Demonstration Results 5-9
6.0 Design Data 6-1
6.1 Scale Up 6-2
6.1.1 Feed Slurry 6-2
6.1.2 Batch Treatment Tanks 6-3
6.1.3 Dewatering 6-4
6.1.4 Stabilization Mixer 6-4
6.1.5 Waste Boxes 6-4
6.1.6 Operation and Maintenance 6-6
6.2 Process Flow Diagrams and Mass Balances 6-7
6.3 Waste Box Flow 6-7
6.3.1 Waste Box Fill Operations 6-7
6.3.2 Waste Box Rework Operations 6-8
6.4 Facility Arrangement Drawings 6-9
6.5 System Design Descriptions 6-10
6.5.1 Slurry Pretreatment System 6-11
6.5.2 Dewatering and Stabilization 6-12
6.5.3 Reagent Addition System 6-14
6.5.4 Filtrate and Water Treatment 6-15
6.5.5 Building Ventilation and Radon Control 6-16
6.6 Priced Equipment List 6-20
7.0 Conclusions 7-1
7.1 Key Results 7-1
7.1.1 Formulation Development 7-1
7.1.2 Process Demonstration 7-2
7.2 Scale Up and Full-Scale Design 7-4
7.3 Implementation 7-5
7.3.1 Cost 7-5
7.3.2 Schedule 7-7

Appendix A – Design Drawings
Appendix B – Test Logs
Appendix C – IT Testing Reports
Appendix D – Sample Chain of Custody Forms
Appendix E – Analytical Data Packages
Appendix F – Telephone Conversation Logs
Appendix G – Stabilization Summary

List of Tables

Table	Title	
Table 1.1	Selected Stabilization Formulations for Each Surrogate Material	1-2
Table 2.1	Performance Criteria for the Treated Surrogate	2-7
Table 2.2	Surrogate Preparation Sampling and Analysis Summary	2-9
Table 2.3	Formulation Development Sampling and Analysis Summary	2-10
Table 2.4	Process Demonstration Sampling and Analysis Summary	2-10
Table 3.1	Composition of the 70 wt % Surrogates	3-2
Table 3.2	Composition of the 30 wt % Solids Slurry	3-2
Table 3.3	Stabilization Formulations of the Formulation Development Testing	3-5
Table 3.4	Composition of the 30wt % Solids Surrogate for Process Development	3-6
Table 3.5	Projected Slurry Amendment for Process Demonstration Dewatering	3-7
Table 3.6	Projected Stabilization Reagents for Process Demonstration Stabilization	3-8
Table 3.7	Testing Methodology	3-9
Table 3.8	Surrogate Control Parameters (at 70 wt % Solids)	3-10
Table 4.1	Analysis of 70 wt % Solids Surrogate Materials	4-1
Table 4.2	Effect of Magnesium Phosphate Reduction on TCLP-Leachable Lead	4-2
Table 4.3	Effect of Silo 2 Surrogate Composition on TCLP-Leachable Lead	4-2
Table 4.4	Analysis of 70 wt % Solids Demonstration Surrogate Material	4-3
Table 4.5	Filter Cake Analysis for Initial Formulation Development Testing	4-4
Table 4.6	Filtrate Analysis for Initial Formulation Development Testing	4-4
Table 4.7	Filter Cake Analysis for Final Formulation Development Testing	4-4
Table 4.8	Filtrate Analysis for Final Formulation Development Testing	4-5
Table 4.9	Stabilization Formulations for Initial Formulation Development Testing	4-5
Table 4.10	Results for Stabilization Formulations for Initial Formulation Development Testing	4-6
Table 4.11	TCLP Results for Initial Formulation Development on Silo 1 Surrogate	4-7
Table 4.12	TCLP Results for Initial Formulation Development on Silo 2 Surrogate	4-7
Table 4.13	TCLP Results for Initial Formulation Development on Demonstration Surrogate	4-8
Table 4.14	Stabilization Formulations for Final Formulation Development Testing	4-9
Table 4.15	Results for Stabilization Formulations for Final Formulation Development Testing	4-10
Table 4.16	TCLP Results for Final Formulation Development on Silo 1 Surrogate	4-10
Table 4.17	TCLP Results for Final Formulation Development on Silo 2 Surrogate	4-11
Table 4.18	TCLP Results for Final Formulation Development on Demonstration Surrogate	4-11
Table 4.19	Process Information from Each Process Demonstration Dewatering Batch	4-12
Table 4.20	Process Measurements for Each Process Demonstration Dewatering Batch	4-13
Table 4.21	Filtrate Metals Results for the Process Demonstration Filtrate	4-13
Table 4.22	Processing Information for Process Demonstration Stabilization Batches	4-15
Table 4.23	Process Measurements for Process Demonstration Stabilization Batches	4-15
Table 4.24	Liquid Bleed and UCS Results for Process Demonstration Stabilization Batches	4-16
Table 4.25	TCLP Results for the Process Demonstration Stabilization Batches	4-16
Table 4.26	Process Demonstration Dewatering Mass Balance	4-17
Table 4.27	Process Demonstration Stabilization Mass Balance	4-17
Table 5.1	Selected Stabilization Formulations for Each Surrogate Material	5-6
Table 5.2	Statistical Analysis of the Filter Cake Production Parameters for the 11 Batches	5-7
Table 6.1	Full-Scale Treatment System Design Basis Data	6-3
Table 6.2	Process Equipment List	6-20
Table 7-1	Mass Balance Summary	7-5
Table 7-2	Project Cost Components	7-6
Table 7-3	Operating Costs for Full-Scale Treatment	7-6

List of Figures

Figure	Title	
2-1	IT Proof of Principle Demonstration Process	2-2
2-2	Process Flow Diagram for Formulation Development	2-4
2-3	Process Flow Diagram for Process Demonstration	2-6
6-1	Full View of Shipping Container	6-5
7-1	Schedule for Full-Scale Implementation	7-6

List of Acronyms/Abbreviations

AEA	Atomic Energy Act
ALARA	As Low As Reasonably Achievable
ANS	American Nuclear Society
ASTM	American Society for Testing and Materials
AWWT	Advanced Waste Water Treatment
CCS	Computer Control System
cfm	Cubic feet per minute
Ci	Curies
CFR	Code of Federal Regulations
CONOPS	Conduct of Operations
DOT	Department of Transportation
FATLC	Fernald Atomic Trade Labor Council
FDF	Fluor Daniel Fernald, Inc.
FEMP	Fernald Environmental Management Project
g	Grams
gpm	Gallons per minute
HEPA	High-efficiency particulate air
hp	Horsepower
ID	Identification
IT	IT Corporation
kg	Kilograms
L	Liter
LDR	Land Disposal Restrictions
(M)ANS	Modified American Nuclear Society
OU4	Operable Unit 4
pCi	Picocuries
PEL	Permissible Exposure Limit
ppm	Parts per million
psi	Pounds per square inch
psig	Pounds per square inch (gauge)
Pb	Lead
Ra	Radium
RCRA	Resource Conservation and Recovery Act
RCS	Radon control system
ROD	Record of Decision
rpm	Revolutions per minute
scfm	Standard cubic feet per minute
SOT	System operability testing
TC	Toxicity characteristics
TCLP	Toxicity characteristic leaching procedure
TDS	Total Dissolved Solids
Th	Thorium
TSS	Total Suspended Solids
TVS	Tank vent system
UCS	Unconfined Compressive Strength
UTS	Universal Treatment Standards
wt %	weight percent

1.0 EXECUTIVE SUMMARY

IT Corporation's (IT) Proof of Principle Testing in support of the Fernald Environmental Management Project (FEMP) Operable Unit 4 (OU4) Silos Project was conducted between September 1998 and February 1999 at IT's facilities in Knoxville, and Oak Ridge, TN. The Demonstration successfully met the objective of the project, which was to demonstrate the dewatering followed by Portland cement-based stabilization treatment of the nonradioactive Silos 1 and 2 surrogate material. The treated material met all of the criteria (i.e., appearance, compressive strength, no free liquids, Toxicity Characteristic Leaching Procedure (TCLP) leachability, and dusting/particle size).

Silos 1 and 2 were constructed in 1951 and used for storage of radium-bearing residue from uranium ore processing. Silo 1 contains approximately 3,640 cubic meters of residue and Bentogrout™ and Silo 2 contains approximately 3,150 cubic meters of residue and Bentogrout™. The silos material is classified as a byproduct material as defined under Section 11(e)(2) of the Atomic Energy Act (AEA) of 1954, as amended. Under this classification, it is excluded from regulation as solid or hazardous waste under the Resource Conservation and Recovery Act (RCRA). However, available analyses of the residue indicate that the levels of leachable lead are in excess of the RCRA Toxicity Characteristic (TC) limits. Because the Nevada Test Site (NTS) Waste Acceptance Criteria (WAC) requires that a waste not exhibit a hazardous characteristic, the Silos 1 and 2 residue must be treated to stabilize the leachable lead so that they no longer exhibit a hazardous characteristic.

IT's treatment system was designed to dewater and stabilize the Silos 1 and 2 residuals, producing a treated material which no longer exhibits a hazardous characteristic and which will be acceptable for potential disposal options selected by Fluor Daniel Fernald, Inc. (FDF). The Proof of Principle Testing was performed to provide data that indicates whether the IT treatment process would produce a treated surrogate that meets the specified performance objectives. The performance objectives for the treated surrogate were:

- Appearance — The treated surrogate residue shall appear uniform and homogeneous to non-magnified vision;
- Compressive Strength — Compressive strengths of at least 50 pounds per square inch (psi) (per ASTM C109);
- No Liquids — Contain no free-standing liquids per American Nuclear Society (ANS) 55.1;
- TCLP — Passing concentrations shall be less than 50% of the RCRA limits; and
- Dusting/Particulate — Contain no more than 1 wt % of less-than-10 micrometer-diameter particles or 15 weight percent (wt %) of less-than-200 micrometer-diameter particles.

The IT Proof of Principle Testing for Portland cement-based stabilization involved two phases: Formulation Development and Process Demonstration.

000008

1.1 FORMULATION DEVELOPMENT

The Formulation Development for the three nonradioactive surrogates (i.e., S1, S2, and Demonstration surrogates) used in the Proof of Principle Testing involved the preparation of 30 wt % solids slurries. These 30 wt % solids slurries were dewatered to minimize the amount of slurry material to be stabilized. The dewatered filter cake had approximately 50-55 wt % solids. The filter cake produced by the dewatering was mixed with varying amounts of Portland cement, other chemical additives, and water if necessary, to produce a stabilized waste form.

The objective of the Formulation Development was to select two stabilization formulations for each surrogate material; one to produce a treated material which meets the RCRA TC limits, and one to produce a treated material which meets the RCRA Universal Treatment Standards (UTS). All of the other performance criteria listed above were met for these formulations. Table 1.1 contains the selected formulations for both the RCRA TC limits (S1-T, S2-T, and SO-T) and the RCRA UTS (S1-U, S2-U, SO-D). The waste loading and bulking factor for each selected formulation are also included in Table 1.1.

Table 1.1
Selected Stabilization Formulations for Each Surrogate Material

Surrogate	Recipe Name	Portland Cement	Hydrated Lime	Triple Superphosphate	Ferrous Sulfate	Waste Loading	Bulking Factor (%)
		Reagent Mix Ratio[A]					
Silo 1	S1-T	0.10	0.05	0.02	0.01	0.44[B]	241[C]
	S1-U	0.125	--	0.02	0.01	0.44	237
Silo 2	S2-T	0.10	0.05	0.02	0.01	0.40	265
	S2-U	0.125	--	0.02	0.01	0.40	263
Demonstration	SO-D	0.10	0.05	0.02	0.01	0.43	249
	SO-U	0.10	0.05	0.02	0.01	0.43	249

[A] Mix ratio = [(weight reagent)/(weight filter cake)].
[B] Every 1 ton of final treated material contains 0.44 tons of in-place silo residue solids.
[C] 2.41 ft^3 of final treated material solids produced for every 1 ft^3 of in-place silo waste material solids.

The basis of the design used for the formulations was to produce a moist, soil-like treated material which would meet the TC leaching criteria while slowly developing the required compressive strength. The stabilization reagent addition levels were tailored to produce a treated material which had low TCLP-leachable metals levels. The formulations contain both Portland cement and triple superphosphate, both of which have been demonstrated to immobilize lead. The consistency of the treated material was selected to optimize waste loading, while producing a handleable and compactable material. The optimized waste loading would reduce the amount of treated waste produced. Making the material compactable would allow optimal usage of container volume, as void space could be minimized. The slow strength development would allow the treated material to be handled and reprocessed, if necessary, as a moist, soil-like material as opposed to a monolithic block of concrete.

000009

A concern in the development of the stabilization formulations for the surrogate materials was the reagents used for their compositions. Many of the reagents used in the surrogate materials are known to have both adverse and beneficial effects on stabilization. For examples, the carbonates and phosphate compounds were shown to greatly decrease the level of TCLP-leachable lead, leading to modification of the surrogate composition to correct for that effect. The high concentrations of lead have been shown to adversely affect the setting and strength development of Portland cement. Fumed silica at low levels can decrease the permeability of stabilized material. At higher levels, the gelling properties of fumed silica and its capacity to remove calcium ions from the matrix inhibit the setting and strength development of Portland cement.

1.2 PROCESS DEMONSTRATION

For the Process Demonstration, IT utilized a 10 cubic foot Durco filter press to dewater the 30 wt % solids slurry and a Mini-Maxcrete mixer to mix the dewatered filter cake with the reagents, according to the treatment formulation that meets the TC limits on the demonstration surrogate (SO-D). The only differences (dimensions, motor horsepower rating, pump size, etc) between the equipment selected for the Proof of Principle Process Demonstration and the full-scale processing equipment are related to the increased capabilities and automation of the full-scale dewatering and stabilization equipment. The suppliers of the Proof of Principle Process Demonstration equipment (Durco and Maxcrete) manufacture and market existing full-scale equipment. A number of existing manufacturers make and market similar full-scale dewatering and stabilization equipment.

The Process Demonstration involved the treatment (dewatering and stabilization) of eleven 180-gallon batches of 30 wt % solids Demonstration surrogate material. The 30 wt % solids slurry was prepared in three 1,000-gallon tanks, each containing approximately 700 gallons of slurry. Dewatering of the Process Demonstration slurry produced filter cake material of consistent quality and solids content. The filter cake appearance, weight, moisture content, and bulk density of the eleven batches of filter cake material were very consistent from batch to batch.

The stabilization of the filter cake produced a homogeneous and consistent treated material. The processing time of 15 minutes in the Mini-Maxcrete provide sufficient high shear mixing to produce a treated material with a homogeneous appearance and consistency. The stabilized material was conveyed out of the side-discharge Mini-Maxcrete mixer without any guide or chute. During full-scale treatment, a mixer with a bottom discharge should be employed to optimize discharge of the treated material. The addition of water during the stabilization of the filter cake material was not required during the Process Demonstration to produce a handleable material and would not be required during for full-scale treatment. However, the addition of water (or recycled filtrate) during stabilization could be easily added to the full-scale treatment system. During the Process Demonstration, the treated material was compacted into the drums using moderate vibratory action supplied by placing the drum on a pallet, lifting the drum several inches and rapidly lowering the drum onto the floor with a forklift. The raising and lowering of the drum was done several times. During full-scale treatment, a hydraulic compactor should be

used to maximize the loading of the treated material into the container. A hydraulic compactor is selected for the full-scale treatment since it is standard industrial equipment and should have excellent mechanical reliability.

The temperature rise measurements for each stabilization batch were similar and indicated that a temperature rise of 5-10°C can be expected during full-scale treatment. Temperature increases in this range are common for moist, soil-like treated material. The temperature rise should decrease by 50% within 24 hours after treatment. The temperature rise was not sufficient to cause any off-gassing or evolution of steam. No liquid bleed occurred from the stabilized material, indicating that no free liquids would be associated with the stabilized material. The lack of liquid bleed and the low temperature rise for the stabilized material indicates that the containers can be sealed immediately after treatment during full-scale processing. Placement of a pad of adsorbent material, such as bentonite, on the stabilized material may be necessary prior to sealing the container during full-scale treatment to eliminate condensation within the container.

The bulk density of the treated material, estimated from the weight and total volume of stabilized material in a drum from each batch, averaged 1.49 g/cm^3 (93.1 lb/ft^3) and had a coefficient of variability of 1.9%. The bulk density includes any void space within the treated material but, does not include any free board in the waste drum. This indicates that the stabilized material can be effectively and consistently compacted into the appropriate container during full-scale treatment.

The Unconfined Compressive Strength (UCS) data indicated that the stabilized material from each of the eleven batches met the strength requirement of 50 psi. Analysis of the TCLP data indicate that treated material from all eleven batches met the TC limits for the RCRA metals. Additionally, ten of the eleven batches met the UTS limits for all metals, with the exception of chromium. Only Batches 2, 5, 6 and 7 met the UTS limits for chromium (0.60 mg/L)

1.3 PROOF OF PRINCIPLE DEMONSTRATION RESULTS

The results of the Proof of Principle Demonstration for the Silos project at FEMP demonstrate that IT's system to dewater and stabilize the Silos 1 and 2 residuals produced a treated material which does not exhibit a RCRA hazardous characteristic and which would be acceptable for potential disposal options selected by FDF.

The full-scale process developed from the Proof of Principle Demonstration will involve dewatering of the Silos 1 and 2 residuals slurry, to minimize the volume of material to be stabilized, followed by the stabilization of the dewatered filter cake material. This full-scale process will use commercially available off-the-shelf equipment. If changes are required during full-scale processing, the batch treatment proposed for full-scale treatment can easily be modified or optimized to adjust to changing conditions in material composition and/or material handling properties.

The final treated product would be a moist, clay/silt soil-like material. This material can be placed into any container selected by FDF for the final disposal. Based on the results for the

Process Demonstration, the waste loading for the final treated material would be 0.40, while the bulking factor would be 241%.

1.4 DESIGN OF FULL-SCALE TREATMENT SYSTEM

The Process Demonstration was conducted at roughly a 10% scale to the proposed full-scale treatment system and provided a sound basis for the design. Since both the Process Demonstration and conceptual systems utilize batch treatment processes, scale-up is simple and reliable. IT's treatment system employs commercially-available production equipment (screw augers, filter press, pugmill-type mixer, *etc.*), which is routinely used for stabilization. The full-scale treatment system contains no proprietary or single-vendor-supplied equipment.

The full-scale treatment system designed is essentially identical to that used for the Process Demonstration, though with significant automation of the equipment, and the results of that testing provided key parameters for the conceptual design. As in the Process Demonstration, the full-scale treatment system is based on batch treatment of the silo solids. The general process flow is as follows:

- The solids will be retrieved from the temporary storage tanks using centrifugal slurry pumps.
- Solids will be transferred to the system as a slurry containing 10 to 30 % solids (10% solids will be used for the design)
- All of the slurry will be conditioned with ferrous sulfate and hydrated lime and dewatered in an automated recessed chamber filter press. The filter cake will be dumped directly into the stabilization mixer. Filtrate will be returned to the retrieval system.
- Filter cake (wet cake) will be mixed with Portland cement, hydrated lime, triple superphosphate and ferrous sulfate to chemically fix lead, chromium and other RCRA metals into non-leachable species.
- The stabilized solids will be placed and compacted into Department of Transportation (DOT) 7A boxes., An adsorbent pad will be placed on top of the treated material and the boxes will immediately be sealed to reduce radon emanation, and conveyed into the 24-hr curing area. The 24-hr curing area has enough room for two days operations (i.e., 12 to 14 waste boxes.) The heat released by the curing process will result in a maximum temperature rise of 5 to 8°C in the stabilized waste.
- The sealed waste boxes will be stored for 2 weeks until they are transferred to FDF to arrange shipment for disposal.
- Though most of the filtrate will be recycled to suspend solids retrieved from Silos 1 and 2, a water treatment system will be used to treat filtrate for metals and radionuclides. Treated water will be discharged to the Advanced Wastewater Treatment (AWWT) System.

The treatment system will be housed in a building that will include separate areas for the process equipment, storage of sealed boxes of waste, and other necessary operations. The building will include three ventilation systems: one for the process tanks, filter press, and stabilization mixer which vents into the existing Radon Control System (RCS), one system for the high radon areas of the process (e.g., area surrounding the filter press and stabilization mixer, and rework area), and one system for low radon areas of the process. The RCS is part of the Silos 1 and 2 waste retrieval system. The high radon areas ventilation system will be HEPA filtration combined with dehumidification and carbon adsorption. The ventilation system for the low radon areas will involve HEPA filtration only.

The system was designed with full attention to as low as reasonably achievable (ALARA) principles and to minimize radon release. The full-scale treatment system was designed to include the flexibility to adjust to changes in the solids slurry and treated waste parameters.

2.0 PROOF OF PRINCIPLE TEST DESCRIPTION

2.1 TEST DESCRIPTION

IT's Proof of Principle Demonstration involved the testing of dewatering followed by Portland cement-based stabilization treatment to evaluate the potential use of this technology for the treatment of the Silos 1 and 2 residuals. Silos 1 and 2, which are components of OU4 at the FEMP, were constructed in 1951 and used for storage of radium-bearing residue from uranium ore processing. Silo 1 contains approximately 3,300 cubic meters of residue and Silo 2 contains approximately 2,800 cubic meters of residue. The composition of the residues in Silos 1 and 2 is primarily a wet, gray, silty clay with an average moisture content of 30 weight percent (wt %). The residues in the two silos contain in excess of 3,700 Curies (Ci) of radium (Ra)-226, 1,900 Ci of lead (Pb)-210, and 600 Ci of thorium (Th)-230. The residues also contain 129.8 tons of barium, 913 tons of lead, and 2.86 tons of arsenic. The silos' residue is classified as a byproduct material as defined under Section 11(e)(2) of the AEA of 1954, as amended. Under this classification, it is excluded from regulation as solid or hazardous waste under RCRA. However, available analyses of the residue indicate that the levels of leachable lead are in excess of the RCRA TC limits. Because the NTS WAC requires that a waste not exhibit a hazardous characteristic, the Silo 1 and 2 residue will be treated to stabilize the leachable lead so that it no longer exhibits the hazardous characteristic.

IT's treatment system (Figure 2-1) was designed to dewater and stabilize the Silos 1 and 2 non-radioactive surrogate, producing a treated material which no longer exhibits a hazardous characteristic and which will be acceptable for potential disposal options selected by FDF. The full-scale process will involve dewatering of the Silos 1 and 2 residuals slurry, to minimize the volume of material to be stabilized, followed by the stabilization of the dewatered filter cake material. The final treated product would be a moist, clay/silt soil-like material. The full-scale dewatering system would involve tanks to hold the Silos 1 and 2 residuals slurry and to amend the slurry as necessary to facilitate dewatering, pumps to transfer the slurry into the filter press, holding tanks for the filter press effluent, a filter press to dewater the slurry. Since the percent solid contents of the Silos 1 and 2 material in the temporary storage tanks and the filter cake are both approximately 50 wt % and in the IT process, the filtrate will be recycled to slurry the Silos 1 and 2 material, the system is therefore water neutral. At the end of the stabilization project, a water treatment system will be used to treat filtrate for metals and radionuclides to meet the AWWT requirements. This final filtrate will be a secondary waste stream. The full-scale stabilization system would consist of a batch mixer to mix the filter cake and the stabilization reagents, silos to hold and meter the stabilization reagents into the batch mixer, and a metal box filling system to fill and cover the metal boxes. Containment of dust and radon emissions from the dewatering and stabilization equipment would be accomplished by an air handling system which would consist of HEPA (high efficiency particulate air) filtration and activated carbon adsorption.

The only differences between the equipment selected for the Proof of Principle Demonstration testing and the full-scale processing equipment are related to the increased capabilities and automation of the full-scale dewatering and stabilization equipment. The suppliers of the Proof of Principle Demonstration testing equipment (Durco and Maxcrete) manufacture and market

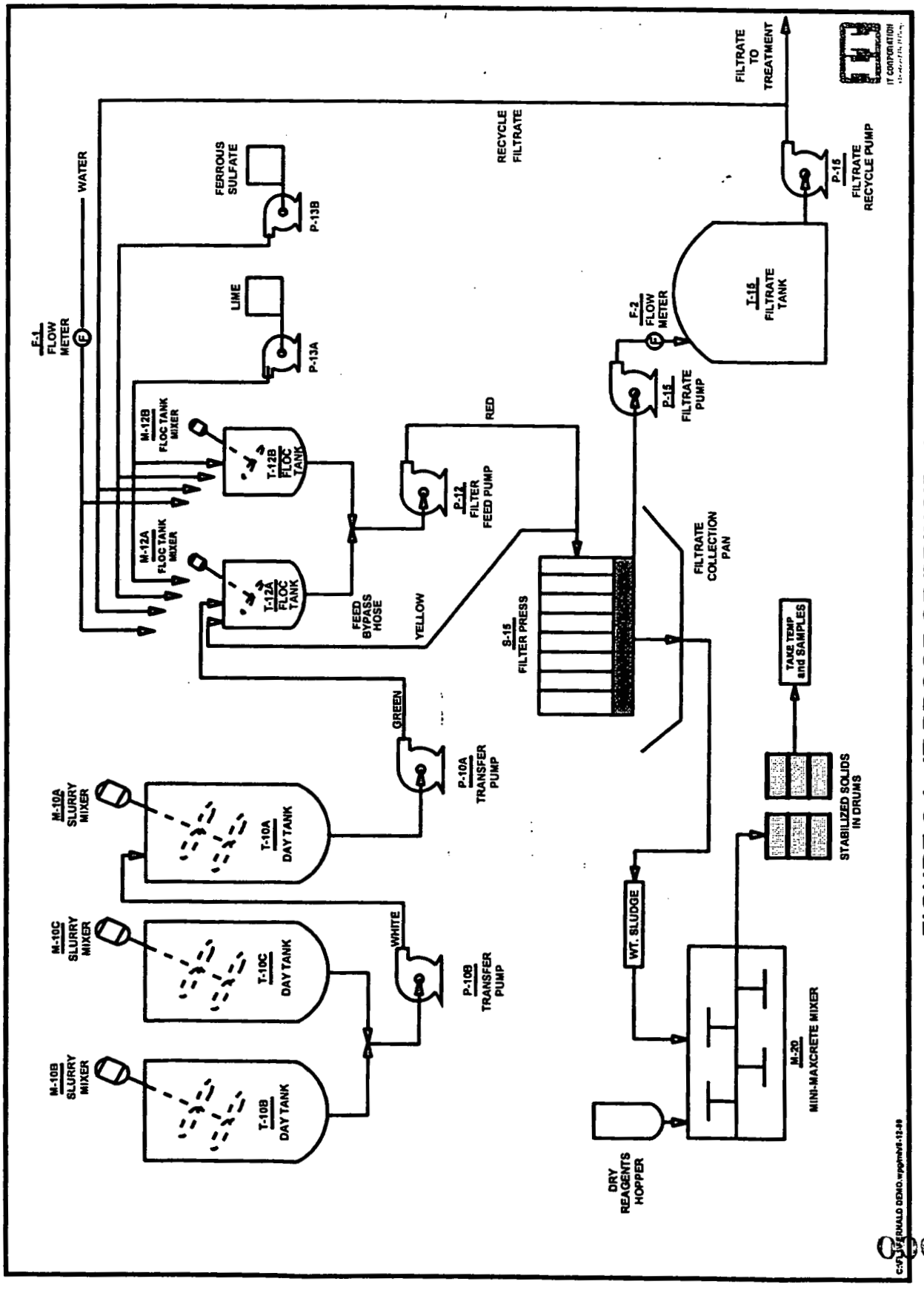

FIGURE 2.1. IT PROOF OF PRINCIPAL DEMONSTRATION PROCESS

000015

existing full-scale equipment. A number of existing manufacturers make and market similar full-scale dewatering and stabilization equipment

The IT Proof of Principle Demonstration for Portland cement-based stabilization involved two phases: Formulation Development and Process Demonstration.

2.1.1 Formulation Development

The Formulation Development for the three surrogates (i.e., S1, S2, and demonstration surrogates) used in the Proof of Principle Demonstration involved the preparation of 30 wt % solids slurries. These 30 wt % solids slurries were dewatered to minimize the amount of slurry material to be stabilized. The dewatered filter cake had approximately 50-55 wt % solids. The filter cake produced by the dewatering was mixed with varying amounts of Portland cement and other chemical additives, and water if necessary, to produce a stabilized waste form.

A flow chart for the laboratory-scale Formulation Development is shown in Figure 2.2. The treated material from each formulation was transferred to a one 1-quart jar and two 2-inch diameter by 4-inch high rigid plastic right cylinder molds and one 250-mL graduated cylinder. The quart jar from each formulation was sent to a FDF-approved laboratory for TCLP testing. The graduated cylinder was used for free standing liquids testing using a Modified ANS [(M)ANS] 55.1. The molds were cured for 14 and 28 days at ambient temperature and then subjected to UCS testing (American Society for Testing and Materials [ASTM] C109). The analytical methods and number of samples for the Formulation Development are described in Section 2.4.

Based on the TCLP and UCS results, additional formulations were made and tested as needed to develop two treatment formulations for each surrogate waste: one formulation to meet the present RCRA TC limits and one formulation to meet the RCRA UTS limits. These formulations were used to treat additional portions of the dewatered demonstration, Silos 1 and Silo 2 surrogates. This additional treated material was placed into the 2-inch by 2-inch cube molds. The molded samples were submitted to FDF for archiving.

2.1.2 Process Demonstration

For the Process Demonstration, IT utilized a 10 cubic foot Durco filter press to dewater the 30 wt % solids slurry and a 1-cubic yard Mini-Maxcrete mixer to mix the dewatered filter cake with the reagents, according to the treatment formulation that met the TC limits on the demonstration surrogate. A flow chart for the Process Demonstration is shown in Figure 2.3. IT treated eleven 180-gallon batches of the Demonstration surrogate over the course of the 72-hour Demonstration. Over 2,600 kilograms (kg) of slurry were treated per day during the Process Demonstration.

Three portions (700 gallons each) of the 30 wt % solids Demonstration slurry were made in 1,000 gallon polypropylene tanks two weeks prior to the Process Demonstration. During the Process Demonstration, each 180-gallon batch of slurry was diluted with either water or recycled filtrate, amended in accordance with the Formulation Development testing results, pumped into the 10-cubic foot recessed chamber filter press, and dewatered. The Mini-Maxcrete mixer was

Figure 2.2
Process Flow Diagram for Formulation Development

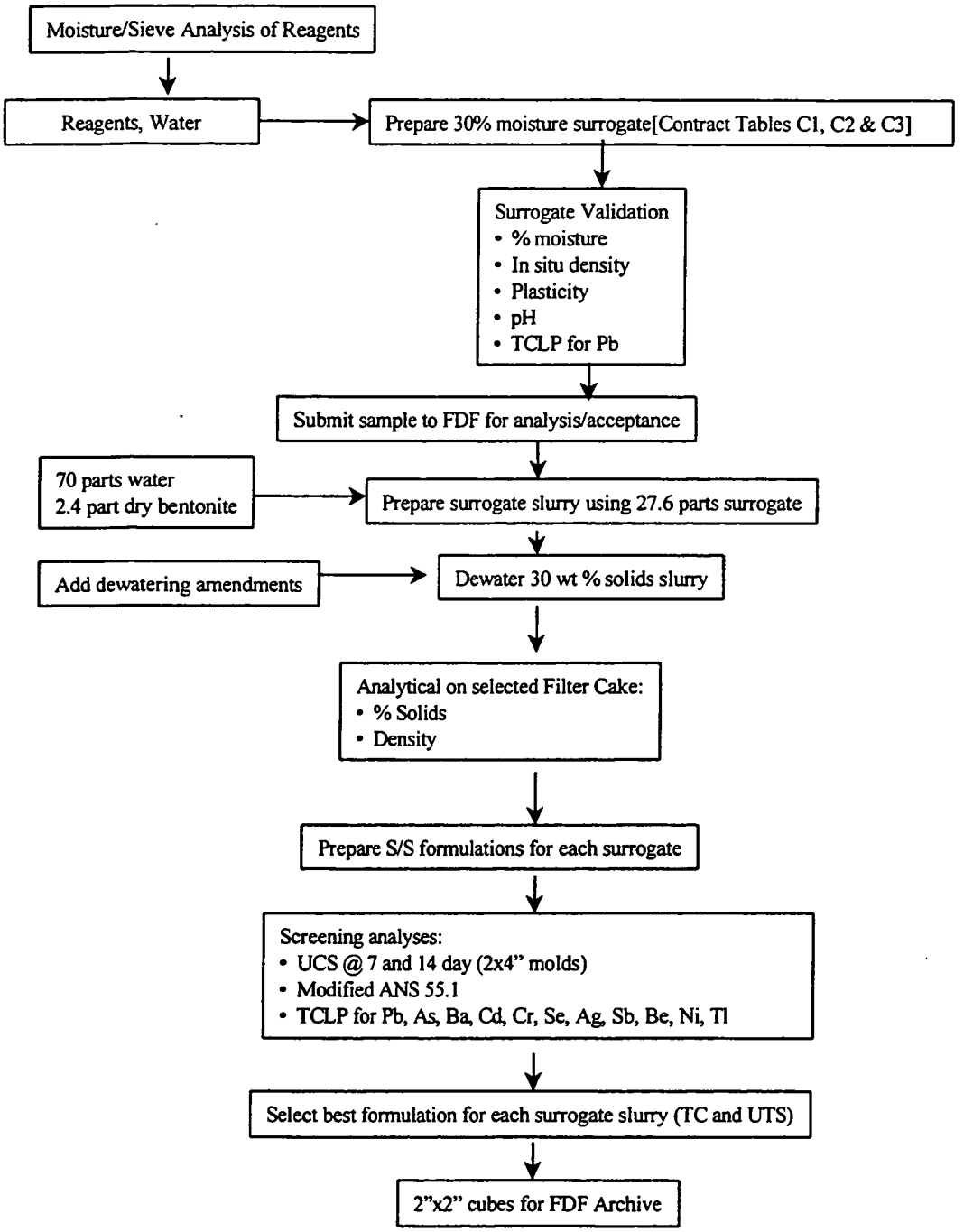

L:\TDL\SILO1&2\WORKPLAN\LABSCPOP.PPT

000017

charged with the filter cake material produced from the dewatering of the amended demonstration surrogate slurry. Based on the weight of the filter cake produced from the dewatering of the slurry material and the formulation developed for the Demonstration surrogate slurry, the required amount of Portland cement and other stabilization reagents were weighed out and added to the mixer. The filter cake and stabilization reagents were mixed in the mixer for 15 minutes. The treated material was allowed to exit the mixer and was collected in a polyethylene-lined 85-gallon drum.

Grab samples of the stabilized/solidified product from each treatment batch were obtained for appearance (visual homogeneity and monolithic nature), TCLP, UCS, free standing liquid ((M)ANS 55.1) testing, and sample archive from the 85-gallon drum immediately after it is discharged from the mixer.

The secondary wastestreams from the Process Demonstration were the filtrate from the dewatering and particulates captured in the air handling/gas control containment system. The Process Demonstration filtrates from the dewatering steps had a pH value in the range of 12 to 12.5, total suspended solids of less than 50 mg/L, and high levels of lead and selenium. In the full-scale system, the filtrate could be recycled back to suspend more solids retrieved from Silo 1 and 2 or treated and discharged to the AWWT facility. The treatment consisting of bleach addition, pH adjustment, precipitation, settling, and bag filtration could be used to remove the residual metals and suspended solids, producing a filtrate which would be suitable for discharge to the AWWT facility. If required for full-scale treatment, ion exchange with both cationic and anionic resins could be added to further reduce the level of metals in the filtrate prior to discharge. The captured particulates would be disposed with the spent HEPA filters.

The final stabilized waste product was a moist, clay/silt soil-like material, which slowly developed greater than 50 psi compressive strength. The contaminants in the stabilized waste product are immobilized, allowing the stabilized waste product to meet the RCRA TC. The stabilized waste product will be suitable for land disposal.

The surrogate demonstration materials did not contain radon and the equipment used for the Process Demonstration did not have the same size or geometry as the full-scale equipment. Therefore, simulation of air handling/gas control containment was not included as part of IT's Proof of Principle Demonstration. For the conceptual design of the full-scale processing system, all processing systems (dewatering, stabilization, and metal box filling) will have gas control containment for the handling of dust and radon emissions from these system operations.

The gas control containment includes three ventilation systems: one for the process tanks, filter press, and stabilization mixer which vents into the existing Radon Control System (RCS), one system for the high radon areas of the process (e.g., the process and curing areas), and one system for low radon areas of the process. The RCS is part of the Silos 1 and 2 waste retrieval system. The latter two ventilation systems will be HEPA filtration combined with dehumidification and carbon adsorption and HEPA filter respectively. Also in order to minimize radon levels in the high radon areas, the inner bags in the waste boxes will be closed and the lids sealed before moving the boxes to the 24-hr curing area. In the latter two ventilation systems, the collected air flows through HEPA filtration units to remove particulates.

000018

Figure 2.3
Process Flow Diagram for Process Demonstration

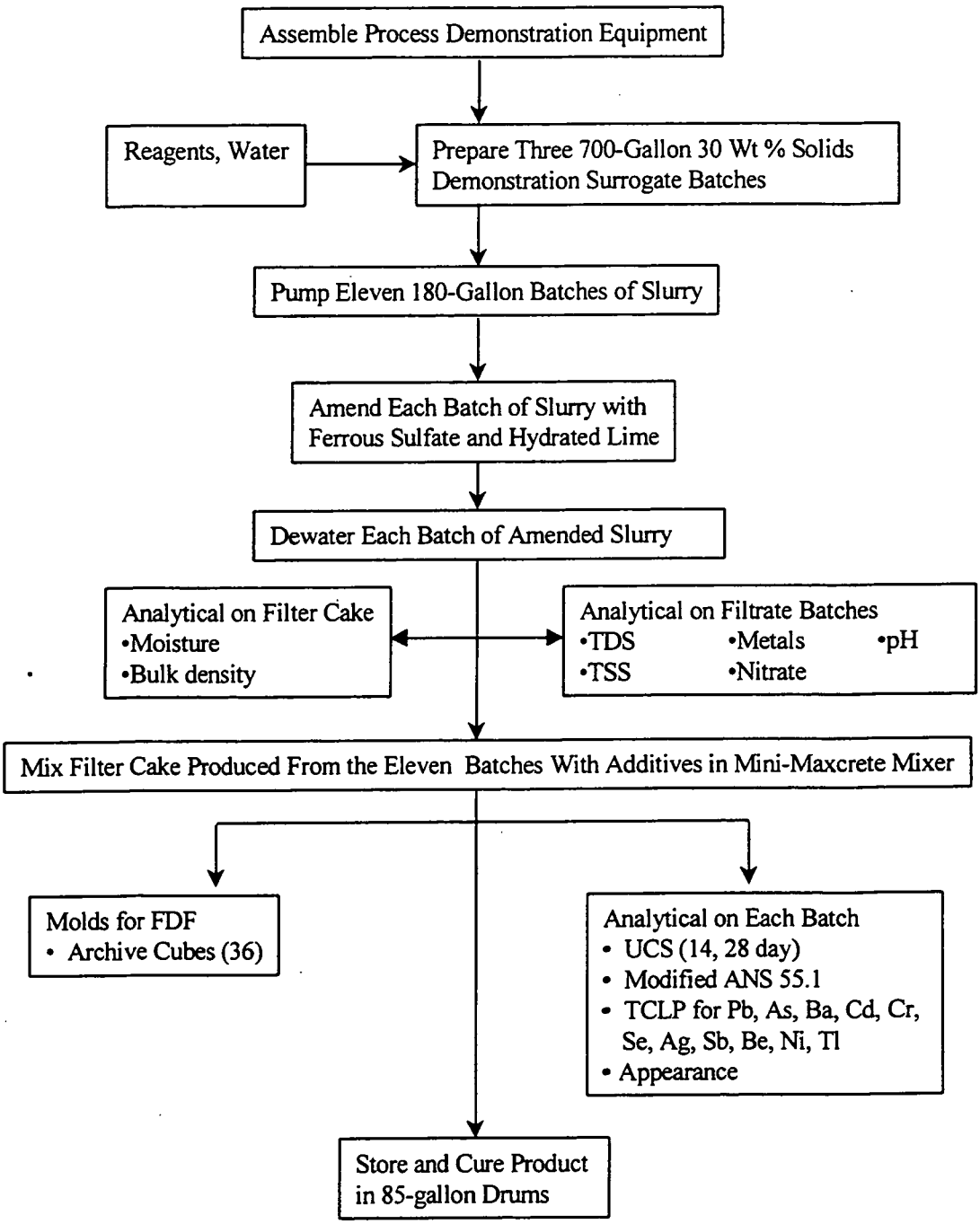

L:\TDL\SILO1&2\WORKPLAN\LABSCPOP.PPT

000019

The particulates captured by the air handling/gas control containment systems will also be a secondary waste and will be disposed of with the spent HEPA filters.

2.2 TEST OBJECTIVES

The objective of the Proof of Principle Demonstration was to provide data which demonstrates that dewatering followed by Portland cement-based stabilization treatment can produce a treated surrogate material which meets the performance criteria (Table 2.1). The data and results collected from the Proof of Principle Demonstration provide technology-specific information on the performance, safety, reliability, implementability, cost, and schedule for the full-scale remediation of the Silos 1 and 2 residues.

Table 2.1
Performance Criteria for the Treated Surrogate

Parameter	Criteria
Appearance	Uniform and homogenous with no lumps or pockets of unmixed waste.
Compressive Strength	At least 50 psi per ASTM C109.
Free Liquids	No free standing liquids per (M)ANS 55.1.
TCLP	Less than 50% of the RCRA TC Criteria.
Dusting/Particulate	No more than 1 wt % of less than 10 micrometer diameter particles or 15 wt % of less than 200 micrometer diameter particles.
RCRA Characteristics	Neither exhibit a RCRA characteristic of a hazardous waste as defined by 40 Code of Federal Regulations (CFR) 261(C) nor be listed as a hazardous waste.

Another objective of the Proof of Principle Demonstration was to demonstrate the efficacy of the process controls for full-scale processing. The process controls determined from the Formulation Development and Process Demonstration testing included:

- types and amounts of dewatering agents required to achieve liquid/solid separation of the 30 wt % solids slurry,
- dewatering processing rate,
- dissolved and suspended solids content of the dewatered filtrate,
- metal and nitrate content of the dewatered filtrate,
- solids content and bulk density of the dewatered filter cake,

000020

- types and amounts of stabilization reagents to immobilize the contaminants in the dewatered filter cake, and
- characteristics (TCLP leachability, free liquids, UCS) of the final stabilized products.

The Process Demonstration was required to determine the optimal waste loading and bulking factors associated with stabilization of the dewatered 30 wt % solids slurry. This objective allows the accurate determination of waste loading during full-scale processing of the Silo 1 and 2 residuals. The amount of treated material produced by the full-scale processing could also be projected by the bulking factors calculated from the Process Demonstration testing.

2.3 RATIONALE FOR SAMPLING POINTS AND SAMPLING FREQUENCY

2.3.1 Surrogate Slurry Preparation

Each batch of 70 wt % solids surrogate slurry was sampled for moisture, density, plastic limit, pH, TCLP lead, and FDF verification testing. This sampling frequency ensured that each batch of the surrogate slurry met the moisture, density, plastic limit, and TCLP lead requirements prior to use in Formulation Development or Process Demonstration testing.

2.3.2 Formulation Development

For the Proof of Principle Formulation Development, the treated material from each formulation was sampled for TCLP, UCS, and free liquids testing. This sampling frequency allowed the results from each formulation to be compared to the performance criteria for the treated material.

Additional sample material was produced for the prescribed formulations for each surrogate slurry. These samples were provided to FDF for archiving.

2.3.3 Process Demonstration

For the Proof of Principle Process Demonstration, the filter cake, produced from each 180-gallon batch of 30 wt % solids Demonstration surrogate slurry, was analyzed for solids content and bulk density. The filtrate produced from the dewatering of each 180-gallon batch was analyzed for total dissolved solids (TDS), total suspended solids (TSS), pH, metals, and nitrate content. The final treated material from the stabilization of each batch of filter cake was sampled for appearance, TCLP, UCS, and free liquids testing. This sampling frequency generated sufficient data to assess the efficacy and reliability of the dewatering and stabilization processes.

2.4 IDENTIFICATION AND RATIONALE FOR ANALYTICAL METHODS

2.4.1 Surrogate Slurry Preparation

Samples of each batch of the 70 wt % solids surrogate slurry were collected and tested for moisture, density, plastic limit, and TCLP lead. The analytical methodology for these tests, along with the rational for their selection, is listed in Table 2.2.

2.4.2 Formulation Development

For the Proof of Principle Formulation Development, each formulation was subjected to TCLP, UCS, and free liquids testing. Additional samples were provided to FDF for archiving. The analytical methodology for these tests, along with the rational for their selection, is listed in Table 2.3.

2.4.3 Process Demonstration

For the Proof of Principle Process Demonstration, each stabilization batch was sampled for appearance, TCLP, UCS, and free liquids testing. The analytical methodology for these tests, along with the rationale for their selection, is listed in Table 2.4.

Table 2.2
Surrogate Preparation Sampling and Analysis Summary
Each Batch (at 30 wt % Moisture)

Analysis	Method	Rationale for Selection	Total Number of Samples
Moisture	ASTM D2216	Standard method for slurries/soils	4 samples [A]
In-situ Density	EM-1110-2-1906	Standard method for slurries/liquids	4 samples
pH	SW-846 Method 9045	Standard method for wastes	4 samples
Plastic Limit	ASTM D4318	Standard methodology	4 samples
TCLP for Pb	SW-846 Methods 1311 & 6010A	Regulatory-specified methodology	4 samples

[A] 1 sample for each original 30 wt % moisture surrogate sample plus one additional 30 wt % moisture Demonstration surrogate sample.

Table 2.3
Formulation Development Sampling and Analysis Summary

Analysis	Method	Rationale for Selection	Total Number of Samples
TCLP/UTS metals	SW-846 Methods 1311 & 6010A	Regulatory-specified methodology	38 samples
UCS	ASTM D2166	Standard method for stabilized soils/sludges	76 samples
Free Liquid	(M)ANS 55.1	Standard method for stabilized rad wastes	38 samples
Archiving	Not specified	Specified by FDF	432 cubes

Table 2.4
Process Demonstration Sampling and Analysis Summary

Analysis	Method	Rationale for Selection	Total Number of Samples
Appearance	Visual	Standard for stabilized material	11 samples
TCLP/UTS metals	SW-846 Methods 1311 & 6010A	Regulatory-specified methodology	11 samples
UCS	ASTM D2166	Standard method for stabilized soils/sludges	22 samples
Free Liquid	(M)ANS 55.1	Standard method for stabilized rad wastes	11 samples
Archiving	Not specified	Specified by FDF	396 cube molds

3.0 TEST PROCESS DESIGN AND PROCEDURES

3.1 FORMULATION DEVELOPMENT TESTING

A flowchart for the laboratory-scale Formulation Development was given in Figure 2-2.

3.1.1 Slurry Preparation

3.1.1.1 Initial Formulation Development

Initial Formulation Development was completed on a 30 wt % solids slurry for each of the Demonstration, Silo 1, and Silo 2 surrogates. However, due to the low TCLP-leachable lead values obtained for these slurries, final Formulation Development testing was done on a second set of 30 wt % solids slurries (See Section 3.1.1.2 for more details).

The Formulation Development testing required approximately 72 kg of the 30 wt % solids slurry for each of the three surrogate waste slurries. The 30 wt % solids feed slurry for the initial Formulation Development testing was made by mixing the amounts of reagents listed in Table 3.1. Certificates of Analysis of the chemicals used, along with the moisture and sieve results, was submitted to FDF before the slurries were made. The kerosene and tributyl phosphate were mixed with the fine silica, while the remaining dry reagents were mixed together. The organic/fine silica mix was then mixed with the other dry reagents. This blended material mixed with sufficient water to produce a 70 wt % solids material. Samples of the 70 wt % solids material for the each surrogate were obtained and shipped to FDF for verification testing.

After the samples of the 70 wt % solids material were taken, bentonite, in an amount equal to 8.7 % (dry weight basis) of the weight of the remaining dry reagents, and water, sufficient to produce a final slurry of 30 wt % solids, were then mixed and the bentonite allowed to hydrate overnight (Table 3.2). Following the hydration of the bentonite, the reagent mixture was added to the bentonite/water slurry.

3.1.1.2 Surrogate Composition Modification

The 70 wt % solids surrogates produced for the initial formulation development had low levels of TCLP-leachable lead (Section 4.1.1.1). Reduction of the magnesium phosphate levels in the Silo 1 and Demonstration surrogates and the magnesium phosphate, magnesium carbonate, and calcium carbonate levels in the Silo 2 surrogate was attempted to increase the TCLP-leachable lead. 100 gram (g) samples of the 70 wt % solids surrogates were made, combining the reagents listed in Table 3.1 in the appropriate ratios. Additional coarse silicate was substituted for the reduced magnesium phosphate, magnesium carbonate, or calcium carbonate. The modified surrogate samples were analyzed for TCLP-leachable lead. The TCLP results are summarized in Tables 4.2 and 4.3.3.1.1.3 Final Formulation Development

The 30 wt % solids feed slurry for the Demonstration surrogate for the final Formulation Development testing was made by mixing the amounts of reagents listed in Table 3.1. Analysis of the chemicals to be used, along with the moisture and sieve results, were submitted to FDF before the slurries are made. The kerosene and tributyl phosphate were mixed with the fine silica,

Table 3.1
Composition of 70 wt % Surrogates

Compound	Moisture Content (%)	Initial Formulation Development Surrogate			Final Formulation Development Surrogate
		Silo 1	Silo 2	Demonstration	Demonstration
		Amount in 70 wt % Material (g)			
Al_2O_3	0.02	--	182.3	--	--
Na_2HasO_4	0.04	--	78.8	38.38	57.47
$BaSO_4$	0.13	2,327.5	1,532.0	1,842.86	2,764.3
$CaCO_3$	0.17	--	865.5	--	--
Na_2CrO_4	0.01	18.06	13.5	60.78	91.21
Fe_2O_3	0.12	601.55	1,403.5	567.75	851.5
KNO_3	0.10	--	81.1	--	--
MgO	0.50	128.92	--	--	--
$MgCO_3$	1.11	166.11	593.9	--	--
$Mg_3(PO_4)_2$	0.02	381.15	390.1	528.88	476.0
$NaNO_3$	0.01	112.51	159.8	238.41	357.8
NiO	0.05	103.64	83.3	96.76	145.3
PbO	0.07	1,125.7	803.9	1,276.7	1,915.0
$PbCO_3$	0.42	942.33	103.9	1,491.75	2,236.9
$PbSO_4$	0.01	1,417.6	906.9	596.36	894.5
Na_2SeO_3	0.02	29.38	22.5	33.85	50.71
Coarse SiO_2	0	4,734.8	4,753.8	4,482.0	7,040.3
Fine SiO_2	0	4,339.5	4,127.0	4,252.7	6,378.8
Fumed silica	0.4	2,102.6	2,103.8	2,043.3	3,090.4
V_2O_5	0	20.32	20.3	20.32	30.45
ZnO	0	2.31	2.35	2.29	3.38
Tributyl Phosphate	0.11	--	207.2	207.2	310.8
Kerosene	0	--	207.0	207.0	310.5
Diatomaceous Earth	0	330.78	996.8	411.63	617.7
Feldspar	0.01	3,661.2	2,988.5	4,122.6	6,183.6
Water	--	9,624.5	9,657.0	9,632.0	14,447.1

Table 3.2
Composition of the 30 wt % Solids Slurry

Parameter	Initial Formulation Development			Final Formulation Development
	Silo 1	Silo 2	Demonstration	Demonstration
70 wt % Solids Material (g) {Table 3.1}	32,070.5	32,284.8	32,158.5	48,253.8
Verification Samples (g)	3,372.8	3,372.6	3,381.4	5,000.0
Remaining 70 wt % Solids Material (g)	28,697.7	28,912.2	28,777.12	43,253.8
Dry Solids in Remaining 70 wt % Solids Material	20,088.4	20,238.5	20,143	30,277.7
Dry Bentonite Required (g)	1,746.3	1,759.9	1,751.7	2,632.8
Bentonite Added (g)[A]	1,914.3	1,928.6	1,919.6	2,879.6
Additional Water (g)	42,172.0	42,487.2	42,288.7	63,568.3
Total 30 wt % Solids Slurry (g)	72,784.0	73,328.0	72,985.5	109,702

[A] Adjusted for the moisture content of the bentonite

000025

while the remaining dry reagents were mixed together. The organic/fine silica mixture was then mixed with the other dry reagents and this blended material mixed with sufficient water to

produce a 70 wt % solids material. Samples of the 70 wt % solids material for the Demonstration surrogate were obtained and shipped to FDF for verification testing.

After samples of the 70 wt% solids material were taken, Bentonite, in an amount equal to 8.7% (dry weight basis) of the weight of the remaining dry reagents, and water, sufficient to produce a final slurry of 30 wt % solids, were mixed and the bentonite allowed to hydrate overnight (Table 3.2). Following the hydration of the bentonite, the reagent mixture was added to the bentonite/water slurry.

For the final Formulation development on the Silo 1 and 2 surrogates, FDF supplied the reagents. The bentonite (1,740 g) was mixed into 50.82 liters (L) of water. The bag of reagents, containing 20.0 kg, supplied for each surrogate slurry was individually blended and added to the water/bentonite slurry. Since FDF supplied the reagents, verification testing was not required for these surrogates.

3.1.2 Slurry Dewatering

These 30 wt % solid slurries were made up in small plastic tanks and allowed to equilibrate for at least 2 days prior to any dewatering.

3.1.2.1 Initial Formulation Development

Approximately 15 L aliquots of 30 wt % solids slurry were amended with 90 g of hydrated lime and mixed for 5 minutes under low shear mixing. The slurry, amended with the dewatering agent, was pumped into a bench-scale recessed chamber filter press using a one-half inch diaphragm pump. The press had 12-inch polypropylene plates, polyester filter cloth, and a capacity of 10 L of filter cake per batch. The air supply used to operate the diaphragm pump was set to a maximum air pressure of 100 pounds per square inch (gauge) (psig). When effluent flow from the filter press ceased, the press was depressurized and the filter cake removed.

The filter cake produced was analyzed for total solids content and bulk density. The filtrate collected was analyzed for TSS and TDS. The filter cake, produced by each of the surrogate slurries, was used in the stabilization formulation development tests.

3.1.2.2 Final Formulation Development

Approximately 15 L aliquots of 30 wt % solids slurry were diluted with 5 L of water and mixed. The diluted slurries were amended with the 45 g of technical grade ferrous sulfate heptahydrate and 90 g of hydrated lime and mixed for 5 minutes under low shear mixing. The ferrous sulfate was added to reduce the hexavalent chromium present in the slurry. The diluted and amended slurry was pumped into a bench-scale recessed filter press using a one-half inch diaphragm pump.

The press had 12-inch polypropylene plates, polyester filter cloth, and a capacity of 10 L of filter cake per batch. The air supply used to operate the diaphragm pump was set to a maximum air pressure of 100 psig. The filtrate was collected in a drip pan located below the filter press.

When effluent flow from the filter press ceased, the press was depressurized and the filter cake removed.

The filter cake product was analyzed for total solids content and bulk density. The filtrate collected was analyzed for TSS and total dissolved solids TDS. The filter cake, produced by each of the surrogate slurries, was used in the stabilization formulation development tests.

3.1.3 Stabilization Formulation Development

The formulations tested in the Proof of Principle testing are summarized in Table 3.3. The objective of the formulations listed in Table 3.2 was to optimize the waste loading in order to achieve the desired performance criteria while maximizing waste loading in the final treated material.

Each formulation started with 2.0 kg of dewatered surrogate slurry waste material. The filter cake material was transferred into a 5-quart mixing bowl. Portland cement and other chemical additives were added to the waste material based on the formulation information listed in Table 3.3. The dewatered material and reagents were blended in a planetary mixer (KitchenAid Model KSMC50S or equivalent) at 30-40 revolutions per minute (rpm) for 1-4 minutes. The treated material from each formulation was transferred to a 1-quart jar, two 2-inch diameter by 4-inch high rigid plastic right cylinder molds, and one 250-mL graduated cylinder. The quart jar from each formulation was sent to an FDF-approved laboratory for TCLP testing. The graduated cylinder was used for free standing liquids testing. The remaining two molds were cured at ambient laboratory temperature for 14 and 28 days and then subjected to UCS testing.

The TCLP and UCS results were used to select two treatment formulations for each surrogate wastes: one formulation to meet the present RCRA TC limits and one formulation to meet the proposed RCRA UTS.

These selected formulations were used to treat additional portions of the dewatered 30 wt % solids slurries of the Demonstration, Silo 1, and Silo 2 surrogates. This additional treated material was compacted into 2-inch x 2-inch cube molds. Thirty-six cube molds were made for both formulations from each of the three slurries. The molded samples were submitted to FDF for archiving.

3.2 PROCESS DEMONSTRATION

The process flow diagram for the Process Demonstration is given in Figure 2.1.

3.2.1 Slurry Preparation

Three 700-gallon batches of the 30 wt % solids surrogate slurry for the Process Demonstration were produced using the amounts of the reagents listed in Table 3.4. The reagents for each batch were weighed out and transferred into 39 separate bags. The organic reagents were added to the fine silica and then transferred into the bags. The water for each slurry batch was added to separate 1,000-gallon polypropylene tanks. A mixer was provided for each tank. Bentonite was

Table 3.3
Stabilization Formulations for the Formulation Development Testing

Dewatered Surrogate Slurry	Formulation Number	Portland Cement	Hydrated Lime	Calcium Sulfate[1]	Class F Fly Ash	Ferrous Sulfate[2]	Triple Superphosphate[3]
		Mix Ratio[4]					
Demonstration Surrogate	1	0.10	--	--	--	0.01	--
	2	0.10	--	--	--	0.01	0.02
	3	0.20	--	--	--	0.01	--
	4	0.20	--	--	--	0.01	0.02
	5	0.40	--	--	--	0.01	--
	6	0.40	--	--	--	0.01	0.02
	7	0.20	--	0.05	--	0.01	0.02
	8	0.15	--	0.05	--	0.01	0.02
	9	0.15	0.05	--	--	0.01	0.02
	10	0.15	--	--	0.10	0.01	0.02
	11	0.15	--	--	0.05	0.01	0.02
	12	0.10	0.05	--	--	0.01	0.02
Silo 1 Surrogate	1	0.10	--	--	--	0.01	--
	2	0.10	--	--	--	0.01	0.02
	3	0.20	--	--	--	0.01	--
	4	0.20	--	--	--	0.01	0.02
	5	0.40	--	--	--	0.01	--
	6	0.40	--	--	--	0.01	0.02
	7	0.10	0.05	--	--	0.01	0.02
	8	0.10	--	--	--	0.01	0.02
	9	0.10	--	--	0.05	0.01	0.02
	10	0.10	--	--	0.10	0.01	0.02
	11	0.10	--	0.05	--	0.01	0.02
	12	0.125	--	--	--	0.01	0.02
	13	0.125	0.05	--	--	0.01	0.02
Silo 2 Surrogate	1	0.10	--	--	--	0.01	--
	2	0.10	--	--	--	0.01	0.02
	3	0.20	--	--	--	0.01	--
	4	0.20	--	--	--	0.01	0.02
	5	0.40	--	--	--	0.01	--
	6	0.40	--	--	--	0.01	0.02
	7	0.10	0.05	--	--	0.01	0.02
	8	0.10	--	--	--	0.01	0.02
	9	0.10	--	--	0.05	0.01	0.02
	10	0.10	--	--	0.10	0.01	0.02
	11	0.10	--	0.05	--	0.01	0.02
	12	0.125	--	--	--	0.01	0.02
	13	0.125	0.05	--	--	0.01	0.02

[1] $CaSO_4 \bullet 0.05H_2O$
[2] Technical grade ferrous sulfate heptahydrate.
[3] Agricultural grade fertilizer (0-46-0)
[4] Mix Ratio =[(weight reagent)/(weight filter cake)].

000028

Table 3.4
Composition of 30 wt % Solids Surrogates for Process Development

Compound	Moisture Content (%)	Batch 1	Batch 2	Batch 3
		Amount in 30 wt % Material (kg)		
Na_2HAsO_4	0.04	1.56	1.56	1.56
$BaSO_4$	0.13	75.22	75.22	75.22
Na_2CrO_4	0.01	2.48	2.48	2.48
Fe_2O_3	0.12	23.17	23.17	23.17
$Mg_3(PO_4)_2$	0.02	13.38	13.38	13.38
$NaNO_3$	0.01	9.74	9.74	9.74
NiO	0.05	3.95	3.95	3.95
PbO	0.07	52.1	52.11	52.11
$PbCO_3$	0.42	60.9	60.87	60.87
$PbSO_4$	0.01	24.30	24.34	24.34
Na_2SeO_3	0.02	0.92	0.92	0.92
Coarse SiO_2	0	191.1	191.1	191.1
Fine SiO_2	0	171.9	171.9	171.9
Fumed silica	0.4	85.73	85.3	85.4
V_2O_5	0	0.83	0.83	0.83
ZnO	0	0.09	0.09	0.09
Tributyl Phosphate	0.11	8.5	8.5	8.5
Kerosene	0	8.5	8.5	8.5
Diatomaceous Earth	0	16.81	16.81	16.81
Feldspar	0.01	168.3	168.3	168.3
Bentonite	8.6	87.3	87.3	87.3
Water	--	2,322	2,322	2,322

then added to the water and allowed to stir and hydrate for 5 days. The previously prepared bags of reagent for each batch were then added to the appropriate water/bentonite slurry. Additional water (~10 gallons) was added to each slurry while transferring the dry reagents to the bentonite/water slurry. The Process Demonstration surrogate slurries were allowed to mix overnight and samples of the slurry were obtained and shipped to an FDF-designated laboratory. The slurries were allowed to mix for two weeks prior to the Process Demonstration.

3.2.2 Slurry Dewatering

Prior to dewatering, 180-gallon batches of slurry were pumped into flocculation tanks. The slurry in the flocculation tanks was mixed with 90 gallons of water or recycled filtrate. The diluted slurry was then amended by the addition of ferrous sulfate and hydrated lime, at 0.05 and 0.10 pounds per gallon of slurry, respectively (Table 3.5). These reagents were slurried in water and pumped into the slurry. The amended slurry was mixed for 5 minutes under low shear mixing after the addition of each reagent.

000029

The final amended slurry was pumped from the flocculation tanks into the 10 cubic foot Durco recessed chamber filter press using an air-driven 2-inch diameter diaphragm pump. The filter press contained 21 plates covered with 50-70 cubic feet per minute (cfm) filter cloth. The solids in the amended slurry collected in the recessed chambers between the plates as the filtrate moved through the filter cloth. The drive air to the diaphragm pump was set at 125 psig, but the final pressure for each dewatering run was between 80 and 100 psig. Filtrate drained from the press and was collected in a small collection tank and periodically pumped over into the filtrate collection tank. When all the amended slurry for each batch was pumped into the press, the filter cake was blown down for 60 minutes. After blowdown, the press was depressurized and the plates were separated. The filter cake fell out of the chambers and into the collection bin. During the Process Demonstration, eleven 180-gallon batches of slurry were amended and dewatered.

The filter cake produced from each dewatering batch was analyzed for total solids content and bulk density. The filtrate from each dewatering batch was analyzed for pH, TDS, TSS, metals, and nitrates.

Table 3.5
Projected Slurry Amendment for Process Demonstration Dewatering

Batch	Volume of Slurry (gallons)	Volume of Water or Recycled Filtrate (gallons)	Total Ferrous Sulfate Added (lb)	Total Hydrated Lime Added (lb)
1	180	90	9.0	18.0
2	180	90	9.0	18.0
3	180	90	9.0	18.0
4	180	90	9.0	18.0
5	180	90	9.0	18.0
6	180	90	9.0	18.0
7	180	90	9.0	18.0
8	180	90	9.0	18.0
9	180	90	9.0	18.0
10	180	90	9.0	18.0
11	180	90	9.0	18.0

3.2.3 Filter Cake Stabilization

The filter cake from the dewatering of the Demonstration surrogate slurry was collected in a product bin and weighed. A forklift was used to dump the filter cake into the Mini-Maxcrete mixer. Based on the weight of the filter cake (approximately 950-1050 pounds), the required amount of Portland cement and other reagents, the formulation developed for the Demonstration slurry, was weighed out (Table 3.6). The reagents were placed in the gated feed hopper located above the mixer and discharged into the mixer.

000030

The Mini-Maxcrete mixer was started and allowed to mix the filter cake and the reagents. The 15 minute mixing time was sufficient to produce a homogeneous stabilized/solidified product. After the mixing time, the discharge gate of the mixer was opened and the treated material was

allowed to exit the mixer. The treated material exiting the mixer was collected in a polyethylene lined 85-gallon steel drums. As the treated material was discharged, the mixer was hydraulically tilted to allow the treated material to exit the mixer.

Grab samples of the stabilized/solidified product from each treatment batch were obtained for appearance (visual homogeneity and monolithic nature), TCLP, UCS, free standing liquid ((M)ANS 55.1) testing, and sample archiving from the 85-gallon drum immediately after it was discharged from the mixer. Additionally, treated material from each batch were placed into the appropriate cube molds and submitted to FDF for sample archiving.

Table 3.6
Projected Stabilization Reagents for Process Demonstration Stabilization

Batch	Filter Cake (lb)	Portland Cement (lb)	Hydrated Lime (lb)	Triple Superphosphate (lb)	Ferrous Sulfate Heptahydrate (lb)
1	950	95	47.5	18	9.5
2	950	95	47.5	18	9.5
3	950	95	47.5	18	9.5
4	950	95	47.5	18	9.5
5	950	95	47.5	18	9.5
6	950	95	47.5	18	9.5
7	950	95	47.5	18	9.5
8	950	95	47.5	18	9.5
9	950	95	47.5	18	9.5
10	950	95	47.5	18	9.5
11	950	95	47.5	18	9.5

3.3 TESTING METHODOLOGY

The testing methodology for the surrogate preparation, Formulation Development testing, and Process Demonstration testing operations are listed in Table 3.7.

3.4 PROCESS CONTROL PROCEDURES

3.4.1 Control Limits

3.4.1.1 Surrogate Slurry Preparation

All reagents used in the preparation of the surrogate slurries were at least 95 percent pure. The tolerance of the surrogate recipes were ± 1 wt % relative for those chemicals consisting of more than 0.5 wt % of the recipe and ± 10 wt % relative for those chemicals consisting of less than 0.5 wt % of the recipe.

000031

Table 3.7
Testing Methodology

Surrogate Preparation		
Material	**Analysis**	**Method**
70 wt % Solids Surrogate	Moisture	ASTM D2216
	In-situ Density	as specified
	Plastic Limit	ASTM D4318
	pH	SW-846 Method 9045
	TCLP for Pb	SW-846 Methods 1311 & 6010A
Formulation Development		
Material	**Analysis**	**Method**
Filter Cake	Solids Content	ASTM D2216
	Bulk Density	ASTM D5057
Filtrate	Total Dissolved Solids	Standard Methods (16) 209B
	Total Suspended Solids	Standard Methods (16) 209C
Stabilized Material	TCLP/UTS metals	SW-846 Methods 1311 & 6010A
	UCS	ASTM D2166
	Free Liquid	(M)ANS 55.1
Demonstration Testing		
Material	**Analysis**	**Method**
Filter Cake	Solids Content	ASTM D2216
	Bulk Density	ASTM D5057
Filtrate	Total Dissolved Solids	Standard Methods (16) 209B
	Total Suspended Solids	Standard Methods (16) 209C
	pH	SW-846 Method 9045
	UTS Metals	SW-846 Methods 6010A
	Nitrates	EPA Method 300
Stabilized Material	Appearance	Visual
	TCLP/UTS metals	SW-846 Methods 1311 & 6010A
	UCS	ASTM D2166
	Free Liquid	(M)ANS 55.1

3.4.1.2 Dewatering and Stabilization

All dewatering or stabilization reagents were of known commercial quality. The tolerances of the dewatering and stabilization reagents were ± 1 wt % relative of their desired usage.

000032

3.4.2 Operating Parameters

3.4.2.1 Surrogate Slurry

Samples of the 70 wt % solids surrogate slurries produced during the initial and final Formulation Development were collected and tested for moisture, density, plastic limit, and TCLP lead. The operational parameters for the surrogate slurries are listed in Table 3.8.

Table 3.8
Surrogate Control Parameters (at 70 wt % Solids)

Analysis	Parameter Range
Moisture	30±2 wt % of total weight
In-situ Density	1.78±0.1 g/cm^3 for Demonstration surrogate 1.78±0.1 g/cm^3 for Silo 1 surrogate 1.78±0.1 g/cm^3 for Silo 2 surrogate
Plastic Limit	45 to 55 wt % (dry weight basis)
pH	9.0 to 10.0 s.u.
TCLP for Pb	650 to 850 ppm Lead at a pH 9

3.4.2.2 Formulation Development

The applied pressure during dewatering of the 30 wt % solids slurry did not exceed 100 psig.

The planetary mixer (KitchenAid Model KSMC50S or equivalent) used to mix the dewatered slurry and stabilization reagents was operated at 30-40 rpm for 1-4 minutes.

3.4.2.3 Process Demonstration

The applied pressure during dewatering of the 30 wt % solids slurry did not exceed 100 psi.

The mixing speed and time for the mini-Maxcrete mixer was adjusted to between 6 and 12 rpm for 15 minutes.

3.4.3 Monitoring Frequency

3.4.3.1 Surrogate Slurry Preparation

The 70 wt % solids surrogates were tested for the parameters listed in Table 3.7.

3.4.3.2 Formulation Development

For each batch of surrogate slurry dewatered, the applied pressure was monitored and recorded. The filter cake and filtrate were analyzed for the parameters listed in Table 3.7

000033

For each formulation, the mixing speed and time was monitored and recorded. The stabilized material for each formulation was analyzed for the parameters listed in Table 3.7.

3.4.3.3 Demonstration Testing

For each batch of surrogate slurry dewatered, the applied pressure was monitored and recorded. The filter cake and filtrate were analyzed for the parameters listed in Table 3.7

For each batch of filter cake stabilized, the mixing time was monitored and recorded. The stabilized material for each formulation was analyzed for the parameters listed in Table 3.7.

3.5 TEST LOGS

3.5.1 Formulation Development Log

A laboratory logbook was assigned for recording data, notes, and observations during the Formulation Development testing. Each logbook page was sequentially numbered.

3.5.2 Process Demonstration Log

A logbook was assigned for recording data, notes, and observations during the Process Demonstration. Each logbook page was sequentially numbered.

3.6 VIDEO TAPES

The entire 72 hours of the Process Demonstration was videotaped to create a visual record. Four video cameras were used to record the Process Demonstration from different angles. The date and time was recorded on the tape to verify the 72-hour time span.

000034

4.0 SAMPLING AND ANALYSIS

4.1 FORMULATION DEVELOPMENT

4.1.1 Surrogate Composition

4.1.1.1 Initial Formulation Development Testing

During the initial Formulation Development testing, samples of the 70 wt % solids surrogate materials were collected and tested for moisture, density, plasticity, and TCLP Pb to confirm that the surrogate mix approximates selected chemical and physical characteristics of the actual silos residues. The results are summarized in Table 4.1.

Table 4.1
Analysis of 70 wt % Solids Surrogate Materials

Analysis	Requirement	Surrogate Material		
		Demonstration	Silo 1	Silo 2
Moisture (% wwb[A])	30±2	30.5	29.5	30.6
In situ Density (g/cm^3)	Various[B]	1.81	1.67	1.68
pH (s.u.)	9.0 to 10.0	8.31	9.13	8.93
Plasticity (% moisture dwb[C])	45-55	53.3	50.5	58.7
Pb TCLP (mg/L)	650 to 850	17.2	231	22

[A] wwb = wet weight basis.
[B] 1.78±0.1 for Demonstration, 1.57±0.1 for Silo 1 and 1.73±0.1 for Silo 2 surrogate.
[C] dwb = dry weight basis.

All of the 70 wt % solid surrogates had moisture and in-situ density results which met the requirements. However, the pH values for the Demonstration and Silo 2 surrogates were below the required range. Also, the Silo 2 surrogate material required a slightly higher moisture content (on a dry weight basis) to reach its plastic limit. None of the surrogate materials have TCLP-leachable lead values that were close to the requirement for this parameter. Therefore, testing was conducted to modify the surrogate composition.

4.1.1.2 Modification of the Surrogate Composition

At FDF's suggestion, the amount of magnesium phosphate in the Silo 1, Silo 2, and Demonstration surrogate compositions was modified to determine its effect of on the TCLP-leachable lead. Additional coarse silica was added to compensate for the removal of magnesium phosphate. The surrogate material produced was subjected to TCLP testing for lead after curing periods ranging from none (immediate) to 7 days. For the Silo 2 surrogate, adjustments had to be made to the amounts of calcium carbonate and magnesium carbonate in the surrogate composition to produce a surrogate composition with the required TCLP-leachable lead level. The effect of surrogate composition on TCLP-leachable lead is summarized in Table 4.2 and 4.3

Table 4.2
Effect of Magnesium Phosphate Reduction on TCLP-Leachable Lead

Surrogate Material	$Mg_3(PO_4)_2$ Reduction (%)	TCLP Pb (mg/L)			
		Immediate	1 Day	2 Day	7 Day
Silo 1	20	--	223	--	--
	30	--	354	--	--
	40	--	389	--	--
	50	475	523	--	381
	60	559	--	--	--
	70	621	--	--	--
	80	681	--	--	--
	90	845	--	--	--
	100	810	--	--	--
Demonstration	15	419	--	--	--
	20	514	509	--	448
	25	556	--	--	--
	30	565	634	572	--
	40	810	718	--	--
	50	846	736	--	857

Table 4.3
Effect of Silo 2 Surrogate Composition on TCLP-Leachable Lead

Surrogate Material	$Mg_3(PO_4)_2$ Reduction (%)	$CaCO_3$ Reduction (%)	$MgCO_3$ Reduction (%)	TCLP Lead (mg/L)[A]
Silo 2	20	0	0	<6
	30	0	0	<6
	40	0	0	<6
	50	0	0	<6
	60	0	0	<6
	80	0	0	<6
	100	0	0	<6
	100	100	0	219
	100	0	100	24.5
	100	100	100	877
	90	100	70	794
	33	100	100	206

[A] Immediate cure time

000036

4.1.1.3 Final Formulation Development Testing

During the final Formulation Development testing, samples of the 70 wt % solids demonstration surrogate were collected and tested for moisture, density, plasticity, and TCLP Pb to confirm that the surrogate mix approximated the behavior of the actual silo residues. The results are summarized in Table 4.4.

Table 4.4
Analysis of 70 wt % Solids Demonstration Surrogate Material

Analysis	Requirement	Result
Moisture (% wwb[A])	30±2	30.0
In situ Density (g/cm^3)	1.78±0.1	1.81
pH (s.u.)	9.0 to 10.0	9.21
Plasticity (% moisture dwb[B])	45-55	42.8
Pb TCLP (mg/L)	650 to 850	733[C]

[A] wwb = wet weight basis.
[B] dwb = dry weight basis.
[C] Average of 4 measurements.

The 70 wt% solids demonstration surrogate used in the final Formulation Development testing met the requirements, with the exception of the lower moisture content for plasticity. For the Silo 1 and Silo 2 surrogates, FDF supplied the reagents, preweighed and combined, with instructions for producing the 30 wt % solids slurry directly. Therefore, no testing of the 70 wt % solids surrogates was required.

4.1.2 Dewatering of 30 wt % Solids Slurries

4.1.2.1 Initial Formulation Development

For the initial Formulation Development testing, portions of the 30 wt % solid slurries were amended with hydrated lime at a rate of 0.1 pounds per gallon. The amended slurries were then pumped into the bench-scale recessed chamber filter press and dewatered. Run times on the order of 60 minutes were used and the maximum pressure for each batch in the filter press was 100 psi. The filter cake produced by the dewatering was firm, high in solids, and easily released from the filter cloth. The filtrates produced were clear of suspended solids, but yellow in color. The source of the yellow color was hexavalent chromium. The results for the dewatering of the 30 wt % solids slurries for the initial Formulation Development are summarized in Tables 4.5 and 4.6.

4.1.2.2 Final Formulation Development Testing

For the final Formulation Development testing, portions of the 30 wt % solid slurries were diluted 1:0.5 volume/volume (v/v) with water to reduce their viscosity and improve their pumpability. The diluted slurries were then amended with ferrous sulfate and hydrated lime at rates of 0.05 and 0.1 pounds per gallon of undiluted slurry, respectively. The amended slurries

000037

were pumped into the bench-scale recessed chamber filter press and dewatered. Run times on the order of 60 minutes were used and the maximum pressure for each batch was 100 psi.

Table 4.5

Filter Cake Analysis for Initial Formulation Development Testing

Surrogate	Batch	Moisture (%)	Bulk Density (g/cm^3)
Demonstration	1	45.0	1.71
	2	48.8	1.57
Silo 1	1	47.1	1.64
	2	43.2	1.64
Silo 2	1	39.1	1.55
	2	41.4	1.52

Table 4.6

Filtrate Analysis for Initial Formulation Development Testing

Surrogate	Batch	Total Dissolved Solids (ppm)	Total Suspended Solids (ppm)
Demonstration	1	6,264	<5
	2	6,146	<5
Silo 1	1	6,255	68
	2	7,151	42
Silo 2	1	6,872	54
	2	7,146	29

The filter cake produced by the dewatering was firm, high in solids, and easily released from the filter cloth. Even though the 30 wt % solids slurries used in the final Formulation Development were diluted before amendment and dewatering, the solids content of the filter cake was similar to that from the initial Formulation Development. The filtrates produced were clear of suspended solids and had no color. The lack of yellow color indicated that the ferrous sulfate successfully reduced the hexavalent chromium to trivalent chromium. The results for the dewatering of the 30 wt % solids slurries for the final Formulation Development are summarized in Tables 4.7 and 4.8.

Table 4.7

Filter Cake Analysis for Final Formulation Development Testing

Surrogate	Batch	Moisture (%)	Bulk Density (g/cm^3)
Demonstration	1	46.9	1.74
	2	47.2	1.70
Silo 1	1	51.0	1.50
	2	48.8	1.50
Silo 2	1	42.1	1.41
	2	47.8	1.48

000038

Table 4.8

Filtrate Analysis for Final Formulation Development Testing

Surrogate	Batch	Total Dissolved Solids (ppm)	Total Suspended Solids (ppm)
Demonstration	1	10,171	24
	2	8,752	23
Silo 1	1	10,213	<5
	2	8,477	23
Silo 2	1	7,635	24
	2	9,858	49

4.1.3 Stabilization Formulation Development

4.1.3.1 Initial Formulation Development Testing

Formulation Development samples were prepared using the dewatered surrogate filter cakes from the initial Formulation Development testing. The formulations used are summarized in Table 4.9.

Table 4.9
Stabilization Formulations for Initial Formulation Development Testing

Surrogate	Formulation Number	Filter Cake (g)	Portland Cement (g)	Triple Super Phosphate (g)	Ferrous Sulfate Heptahydrate (g)	Water (g)
Silo 1	1174-35-01	2000	200	0	20	450
	1174-36-01	2000	200	40	20	450
	1174-37-01	2000	400	0	20	450
	1174-38-01	2000	400	40	20	450
	1174-39-01	2000	800	0	20	450
	1174-40-01	2000	800	40	20	450
Silo 2	1174-41-01	2000	200	0	20	0
	1174-42-01	2000	200	40	20	0
	1174-43-01	2000	400	0	20	0
	1174-44-01	2000	400	40	20	0
	1174-45-01	2000	800	0	20	150
	1174-46-01	2000	800	40	20	150
Demonstration	1174-47-01	2000	200	0	20	0
	1174-48-01	2000	200	40	20	0
	1174-49-01	2000	400	0	20	0
	1174-50-01	2000	400	40	20	0
	1174-51-01	2000	800	0	20	0
	1174-52-01	2000	800	40	20	0

Additional water was only added to the filter cake from the Silo 1 surrogate. For the Silo 2 and demonstration surrogate, additional water was not needed to produce a treated material with a moist, soil-like consistency.

Temperature rise measurements were made on each formulation immediately after treatment. Temperature rise was measured by recording the air temperature with a thermocouple and then placing the thermocouple at least three (3) inches into the stabilized material and recording the temperature after 5 minutes. The treated material was then placed into a number of molds and sample jars. The treated material from each formulation was analyzed for bulk density, liquid bleed, UCS after 7 and 14 days of curing at ambient laboratory temperature, and TCLP-leachable metals. These results are summarized in Tables 4.10 through 4.13.

Table 4.10
Results for Stabilization Formulations for Initial Formulation Development Testing

Surrogate	Formulation Number	Temperature Rise (°C)	Bulk Density (g/cm³)	Liquid Bleed (mL)	7 Day UCS (psi)	14 Day UCS (psi)
Silo 1	1174-35-01	3.2	1.37	0	nd	8.8
	1174-36-01	3.2	1.48	0	nd	4.9
	1174-37-01	4.9	1.43	0	123	274
	1174-38-01	6.6	1.43	0	41.0	159
	1174-39-01	4.9	1.53	0	527	877
	1174-40-01	7.0	1.52	0	356	725
Silo 2	1174-41-01	3.3	1.33	0	63.4	121
	1174-42-01	7.3	1.38	0	79.1	130
	1174-43-01	5.4	1.42	0	110	226
	1174-44-01	7.3	1.40	0	142	259
	1174-45-01	7.2	1.61	0	561	>900
	1174-46-01	7.9	1.58	0	301	591
Demonstration	1174-47-01	4.2	1.40	0	10.4	15.4
	1174-48-01	4.8	1.48	0	18.3	19.9
	1174-49-01	6.0	1.53	0	ss	103
	1174-50-01	7.9	1.55	0	29.4	87.9
	1174-51-01	7.7	1.64	0	405	>900
	1174-52-01	9.2	1.68	0	53.8	>900

nd = not determined, sample too soft.
ss = sample broke upon removal from mold.

The temperature rise increased with increasing Portland cement addition. However, the temperature rise was not significant enough to cause any off-gassing or evolution of steam. The bulk densities of the stabilized materials were consistent with the expected range for the stabilization of filter cake material. No liquid bleed occurred from the stabilized material, indicating that no free liquids would be associated with the stabilized material. The UCS data indicated that the formulations with low Portland cement addition had trouble producing the

required UCS of 50 psi with the Silo 1 and Demonstration surrogate. Based on the UCS rise for the formulation between 7 and 14 days of curing, it was not likely that these formulations would have reached 50 psi within 28 days of curing.

Table 4.11
TCLP Results for Initial Formulation Development on Silo 1 Surrogate

Formulation Number			1174-35-01	1174-36-01	1174-37-01	1174-38-01	1174-39-01	1174-40-01
Parameter	**TC Limit (mg/L)**	**UTS Limit (mg/L)**	**TCLP Result (mg/L)**					
Silver	5.0	0.14	0.00083	0.0016	0.0025	0.0018	<0.0005	0.0016
Arsenic	5.0	--	0.0033	<0.0028	<0.0028	<0.0028	0.0047	<0.0028
Barium	100.0	21.0	0.200	0.199	0.272	0.292	1.93	2.25
Beryllium	--	1.22	<0.0001	<0.0001	<0.0001	<0.0001	<0.0001	<0.0001
Cadmium	1.0	0.11	0.00042	0.00043	<0.0004	<0.0004	<0.0004	0.00054
Chromium	5.0	0.60	0.0214	0.0225	0.200	0.163	0.040	0.0388
Mercury	0.2	0.025	<0.0001	<0.0001	<0.0001	<0.0001	<0.0001	0.00015
Nickel	--	11.0	0.0018	<0.0015	<0.0015	0.0016	<0.0015	<0.0015
Lead	5.0	0.75	1.26	0.0305	1.18	6.03	9.61	6.85
Antimony	--	1.15	<0.0035	<0.0035	<0.0035	<0.0035	<0.0035	<0.0035
Thallium	--	0.20	0.0032	<0.0028	<0.0028	<0.0028	<0.0028	<0.0028
Selenium	1.0	5.7	0.74	0.359	0.0902	0.0816	0.0466	0.0467
TCLP Fluid	--	--	1	1	1	1	1	1
TCLP Final pH	--	--	7.11	7.61	6.18	8.14	6.17	7.17

Table 4.12
TCLP Results for Initial Formulation Development on Silo 2 Surrogate

Formulation Number			1174-41-01	1174-42-01	1174-43-01	1174-44-01	1174-45-01	1174-46-01
Parameter	**TC Limit (mg/L)**	**UTS Limit (mg/L)**	**TCLP Result (mg/L)**					
Silver	5.0	0.14	0.0016	0.0017	0.0015	0.0019	<0.0005	<0.0005
Arsenic	5.0	--	0.128	0.118	0.0339	0.0377	0.0146	0.0144
Barium	100.0	21.0	0.135	0.136	0.177	0.172	1.33	0.39
Beryllium	--	1.22	<0.0001	<0.0001	<0.0001	<0.0001	<0.0001	<0.0001
Cadmium	1.0	0.11	<0.0004	0.0056	<0.0004	0.00053	<0.0004	<0.0004
Chromium	5.0	0.60	0.350	0.193	0.27	0.344	0.689	0.158
Mercury	0.2	0.025	<0.0001	<0.0001	0.00029	<0.0001	<0.0001	<0.0001
Nickel	--	11.0	<0.0015	0.0022	<0.0015	0.0017	<0.0015	<0.0015
Lead	5.0	0.75	0.0929	0.002	2.15	0.923	3.64	2.52
Antimony	--	1.15	0.0042	0.0084	<0.0035	<0.0035	<0.0035	<0.0035
Thallium	--	0.20	<0.0028	<0.0028	<0.0028	<0.0028	<0.0028	<0.0028
Selenium	1.0	5.7	0.29	0.275	0.0716	0.0876	0.0507	0.0359
TCLP Fluid	--	--	1	1	1	1	1	1
TCLP Final pH	--	--	7.86	7.62	6.11	7.26	6.76	6.94

000041

Table 4.13
TCLP Results for Initial Formulation Development on Demonstration Surrogate

Formulation Number			1174-47-01	1174-48-01	1174-49-01	1174-50-01	1174-51-01	1174-52-01
Parameter	TC Limit (mg/L)	UTS Limit (mg/L)	TCLP Result (mg/L)					
Silver	5.0	0.14	0.0021	<0.0005	0.0019	0.00081	0.00081	0.00098
Arsenic	5.0	--	0.0154	0.0244	0.0075	0.008	0.0089	0.0089
Barium	100.0	21.0	0.266	0.175	0.302	0.244	0.438	0.316
Beryllium	--	1.22	<0.0001	<0.0001	<0.0001	<0.0001	<0.0001	<0.0001
Cadmium	1.0	0.11	<0.0004	<0.0004	0.00099	<0.0004	<0.0004	<0.0004
Chromium	5.0	0.60	0.373	0.655	0.463	0.693	0.501	0.582
Mercury	0.2	0.025	<0.0001	<0.0001	<0.0001	<0.0001	<0.0001	<0.0001
Nickel	--	11.0	<0.0015	<0.0015	<0.0015	<0.0015	<0.0015	<0.0015
Lead	5.0	0.75	5.87	0.178	25.9	9.73	26.1	20.6
Antimony	--	1.15	<0.0035	<0.0035	<0.0035	<0.0035	<0.0035	<0.0035
Thallium	--	0.20	<0.0028	<0.0028	<0.0028	<0.0028	<0.0028	<0.0028
Selenium	1.0	5.7	0.453	0.623	0.124	0.130	0.064	0.0609
TCLP Fluid	--	--	1	1	1	1	1	1
TCLP Final pH	--	--	7.11	6.56	6.41	7.61	7.82	7.14

In general, the stabilization formulations with a 0.10 mix ratio [(weight reagent)/(weight filter cake)] of Portland cement produced treated material with low levels of TCLP-leachable lead. Stabilization formulations with 0.10 mix ratio of Portland cement, a 0.01 mix ratio of ferrous sulfate, and a 0.02 mix ratio of triple superphosphate generally produced treated material with even lower levels of TCLP-leachable lead.

4.1.3.2 Final Formulation Development Testing

Formulation Development samples were prepared using the dewatered surrogate filter cakes from the final Formulation Development testing. The initial stabilization Formulation Development results suggested that low TCLP levels were associated with the low Portland cement addition level, especially when triple superphosphate was added. However, the low Portland cement addition also resulted in low UCS results. Additional reagents (hydrated lime, calcium sulfate, and Class F fly ash) were considered for the final Formulation Development testing. These reagents were added to increase the UCS on low Portland cement addition levels, while also further reducing the TCLP levels. The formulations used for the final Formulation Development testing are summarized in Table 4.14.

000042

Table 4.14
Stabilization Formulations for Final Formulation Development Testing

Surrogate	Formulation Number	Surrogate (g)	Portland Cement (g)	Hydrated Lime (g)	Calcium Sulfate (g)	Class F Fly Ash (g)	Triple Super Phosphate (g)	Ferrous Sulfate (g)	Water (g)
Silo 1	1179-52-01	2000	200	100	--	--	40	20	0
	1179-53-01	2000	200	--	--	--	40	20	0
	1179-54-01	2000	200	--	--	100	40	20	0
	1179-55-01	2000	200	--	--	200	40	20	0
	1179-56-01	2000	200	--	100	--	40	20	0
	1179-57-01	2000	250	--	--	--	40	20	0
	1179-58-01	2000	250	100	--	--	40	20	0
Silo 2	1179-59-01	2000	200	100	--	--	40	20	0
	1179-60-01	2000	200	--	--	--	40	20	0
	1179-61-01	2000	200	--	--	100	40	20	0
	1179-62-01	2000	200	--	--	200	40	20	0
	1179-63-01	2000	200	--	100	--	40	20	0
	1179-64-01	2000	250	--	--	--	40	20	0
	1179-65-01	2000	250	100	--	--	40	20	0
Demonstration	1174-86-01	2000	400	--	100	--	40	20	0
	1174-87-01	2000	300	--	100	--	40	20	0
	1174-88-01	2000	300	100	--	--	40	20	0
	1174-89-01	2000	300	--	--	200	40	20	0
	1174-90-01	2000	300	--	--	100	40	20	0
	1174-91-01	2000	200	100	--	--	40	20	0

Temperature rise measurements were made on each formulation immediately after treatment. Temperature rise was measured by recording the air temperature with a thermocouple and then placing the thermocouple at least 3 inches into the stabilized material and recording the temperature after 5 minutes. The treated material was then placed into a number of molds and sample jars. The treated material from each formulation was analyzed for bulk density, liquid bleed, UCS after 14 and 28 days of curing at ambient laboratory temperature, and TCLP-leachable metals. These results are summarized in Table 4.15 through 4.18.

The temperature rise for the formulations was minimal and was not significant enough to cause any off-gassing or evolution of steam. The bulk densities of the stabilized material were consistent with expected range for stabilized filter cake material. No liquid bleed occurred from the stabilized material, indicating that no free liquids would be associated with the stabilized material. The UCS data indicated that most of the formulations for the final Formulation Development testing produced treated material which met the required UCS of 50 psi.

000043

Table 4.15
Results for Stabilization Formulations for Final Formulation Development Testing

Surrogate	Formulation Number	Temperature Rise (°C)	Bulk Density (g/cm³)	Liquid Bleed (mL)	14 Day UCS (psi)	28 Day UCS (psi)
Silo 1	1179-52-01	0	1.56	0	83.2	nd
	1179-53-01	3	1.54	0	16.0	27.5
	1179-54-01	2	1.55	0	16.7	34.4
	1179-55-01	2	1.57	0	28.1	33.3
	1179-56-01	2	1.56	0	27.8	41.2
	1179-57-01	2	1.55	0	54.7	110.7
	1179-58-01	3	1.56	0	172	nd
Silo 2	1179-59-01	3	1.56	0	>300	nd
	1179-60-01	3	1.52	0	104	nd
	1179-61-01	4.5	1.55	0	97.1	nd
	1179-62-01	4	1.55	0	106	nd
	1179-63-01	4	1.55	0	122	nd
	1179-64-01	4	1.54	0	163	nd
	1179-65-01	4	1.56	0	>300	nd
Demonstration	1174-86-01	6	1.66	0	>300	nd
	1174-87-01	4	1.62	0	196	nd
	1174-88-01	5	1.57	0	>300	nd
	1174-89-01	7	1.60	0	102	nd
	1174-90-01	5	1.59	0	139	nd
	1174-91-01	4	1.57	0	38.2	63.9

nd = not determined, earlier result meet UCS criteria.

Table 4.16
TCLP Results for Final Formulation Development on Silo 1 Surrogate

Formulation Number			1174-52-01	1174-53-01	1174-54-01	1174-55-01	1174-56-01	1174-57-01	1174-58-01
Parameter	TC Limit (mg/L)	UTS Limit (mg/L)	TCLP Result (mg/L)						
Silver	5.0	0.14	<0.002	<0.0004	<0.0004	<0.0004	<0.0004	<0.0004	<0.0004
Arsenic	5.0	--	0.0087	0.0045	0.0074	0.0076	0.0364	0.0045	0.0039
Barium	100.0	21.0	0218	0.213	0.168	0.222	0.426	0.201	0.284
Beryllium	--	1.22	<0.0025	<0.0005	<0.0005	<0.0005	<0.0005	<0.0005	<0.0005
Cadmium	1.0	0.11	0.0202	0.0198	0.015	0.0155	0.0229	0.0144	0.0193
Chromium	5.0	0.60	0.111	0.0068	0.0032	0.0134	0.0044	0.174	0.175
Mercury	0.2	0.025	<0.0001	<0.0001	<0.0001	<0.0001	<0.0001	<0.0001	<0.0001
Nickel	--	11.0	0.0105	0.293	0.0148	0.0604	0.434	0.0022	0.0025
Lead	5.0	0.75	0.110	1.880	0.120	0.626	5.760	0.0878	0.147
Antimony	--	1.15	<0.005	<0.001	<0.001	0.001	0.0022	<0.001	<0.001
Thallium	--	0.20	<0.012	<0.0024	<0.0024	<0.0024	<0.0024	<0.0024	<0.0024
Selenium	1.0	5.7	0.529	0.282	0.528	0.394	0.326	0.576	0.239
TCLP Fluid	--	--	2	2	2	2	2	2	2
TCLP Final pH	--	--	10.37	5.73	5.47	5.51	5.26	11.02	10.20

000044

Table 4.17
TCLP Results for Final Formulation Development on Silo 2 Surrogate

Formulation Number			1174-59-01	1174-60-01	1174-61-01	1174-62-01	1174-63-01	1174-64-01	1174-65-01
Parameter	TC Limit (mg/L)	UTS Limit (mg/L)	TCLP Result (mg/L)						
Silver	5.0	0.14	<0.0004	<0.002	<0.0004	<0.002	<0.002	<0.002	<0.0004
Arsenic	5.0	--	0.149	0.0135	0.0407	0.0616	0.0471	0.112	0.151
Barium	100.0	21.0	0.196	0.0582	0.371	0.398	0.162	0.235	0.362
Beryllium	--	1.22	<0.0005	<0.0005	<0.0005	<0.0025	<0.0025	<0.0025	<0.0005
Cadmium	1.0	0.11	0.0201	0.0239	0.0202	0.0236	0.0231	0.0205	0.0168
Chromium	5.0	0.60	0.110	0.0134	0.0068	0.0098	0.0058	0.0591	0.129
Mercury	0.2	0.025	<0.0001	<0.0001	<0.0001	<0.0001	<0.0001	<0.0001	<0.0001
Nickel	--	11.0	0.0409	0.768	0.463	0.642	0.522	0.0591	0.0229
Lead	5.0	0.75	0.391	160	13.10	55.30	13.70	0.507	0.461
Antimony	--	1.15	0.002	<0.005	<0.001	<0.005	<0.005	<0.005	0.0021
Thallium	--	0.20	<0.0024	<0.012	<0.0024	<0.012	<0.012	<0.012	<0.0024
Selenium	1.0	5.7	0.460	0.198	0.310	0.301	0.292	0.502	0.424
TCLP Fluid	--	--	2	2	2	2	2	2	2
TCLP Final pH	1.0	5.7	10.85	4.67	5.02	4.77	4.80	10.35	10.58

Table 4.18
TCLP Results for Final Formulation Development on Demonstration Surrogate

Formulation Number			1174-86-01	1174-87-01	1174-88-01	1174-89-01	1174-90-01	1174-91-01
Parameter	TC Limit (mg/L)	UTS Limit (mg/L)	TCLP Result (mg/L)					
Silver	5.0	0.14	<0.0004	<0.008	<0.004	<0.0004	<0.004	<0.0004
Arsenic	5.0	--	0.102	0.0766	0.0803	0.0052	0.155	0.0284
Barium	100.0	21.0	1.16	0.940	1.21	0.277	1.19	0.156
Beryllium	--	1.22	0.0035	0.0063	0.0033	0.00027	0.0036	0.0003
Cadmium	1.0	0.11	0.0404	0.0299	0.0469	0.0099	0.0315	0.0156
Chromium	5.0	0.60	0.675	1.72	0.448	0.813	0.878	0.519
Mercury	0.2	0.025	<0.0001	<0.0001	<0.0001	<0.0001	<0.0001	<0.0001
Nickel	--	11.0	0.140	0.115	0.133	<0.0007	0.122	<0.0007
Lead	5.0	0.75	341	666	301	4.41	381	0.0114
Antimony	--	1.15	0.0276	<0.034	<0.017	0.0028	<0.017	0.0019
Thallium	--	0.20	<0.0029	<0.058	<0.029	<0.0029	<0.029	<0.0029
Selenium	1.0	5.7	0.350	0.306	0.324	0.303	0.364	0.689
TCLP Fluid	--	--	2	2	2	1	2	1
TCLP Final pH	--	--	4.68	4.43	5.04	10.69	4.56	9.70

In general, the stabilization formulations with low (<0.125) cement additional levels produced treated material which had low levels of TCLP-leachable lead. Stabilization formulations with 0.10 mix ratio of Portland cement, 0.05 mix ratio hydrated lime, 0.01 mix ratio ferrous sulfate

000045

and a 0.02 mix ratio of triple superphosphate generally produced treated material which met the RCRA TC limits and were close to meeting the UTS.

4.2 PROCESS DEMONSTRATION

4.2.1 Surrogate Slurry Dewatering

Dewatering of the Process Demonstration slurry was performed on eleven batches, each containing 180 gallons of slurry. The dewatering method from Formulation Development testing was used to generate filter cake for use in the stabilization portion of the Process Demonstration. Table 4.19 lists the volume of surrogate slurry, weight of additives, cycle times, weight of filter cake material and water removed during filtration of each batch of slurry that was dewatered. Typically, the maximum pressure of the filter press during dewatering was 80 psig.

Table 4.19
Process Information from Each Process Demonstration Dewatering Batch

Batch	Volume of Slurry (gal)	Weight of Ferrous Sulfate Heptahydrate (lb)	Weight of Hydrated Lime (lb)	Cycle Time[1] (min)	Weight of Filter Cake (lb)	Volume of Filtrate (gal)
1	180	4.5	18	60	990.2	207.2
2	180	9	18	60	910.4	166.6
3	180	9	18	60	967.2	213.0
4	180	9	18	60	963.8	219.1
5	180	9	18	60	947.6	200.0
6	180	9	18	60	1005.6	222.0
7	180	9	18	60	1016	223.1
8	180	9	18	60	997.6	172.7
9	180	9	18	60	1029.4	248.4
10	180	9	18	60	1031.4	222.8
11	180	9	18	60	1010	203.5

[1]Cycle time does not include the 60 minute cake blowdown.

Samples of the filter cake and filtrate from each batch were obtained. The filter cake was analyzed for moisture content and bulk density, while the filtrate was analyzed for TDS, TSS, pH, nitrate, and UTS metals. The results are summarized in Table 4.20 and 4.21.

The moisture content of the filter cake material produced during the Process Demonstration was similar to those for the filter cake produced during Formulation Development testing. However, the bulk density of the filter cake material produced during the Process Demonstration was lower than those for the filter cake produced during Formulation Development. The difference in bulk density may be due to differences in the scale of the equipment and to the difference in final pressure achieved during dewatering. The bench-scale filter press was fed with the same size pump and line as was the 10-cubic yard filter press used for the Process Demonstration. The final pressure for the bench-scale filter press was 100 psig, while only 80 psig was typically seen during the Process Demonstration. Overall, the bulk density of the filter cake should have no

effect on the treatment process as a whole and the mass balances generated for the process will use the filter cake bulk density derived from the Process Demonstration.

Table 4.20
Process Measurements from Each Process Demonstration Dewatering Batch

Batch	Filter Cake		Filtrate			
	Moisture (%)	Bulk Density (g/cm^3)	TDS (ppm)	TSS (ppm)	pH (s.u.)	Nitrate (ppm)
1	51.7	1.42	8,224	2.5	12.30	1,810
2	54.8	1.39	8,399	1.0	12.30	1,862
3	47.4	1.37	8,773	<1.0	12.22	1,658
4	47.4	1.33	9,607	20.5	12.28	1,822
5	52.9	1.28	9,680	31.5	12.25	1,911
6	50.6	1.38	8,627	6.5	12.17	1,935
7	49.4	1.39	9,999	39.5	12.25	1,887
8	49.4	1.39	10,431	2.0	12.31	2,254
9	48.9	1.35	9,619	<1.0	12.31	2,054
10	46.8	1.37	10,376	11.5	12.15	2,155
11	44.2	1.49	10,370	20.0	12.09	2,166

Table 4.21
Filtrate Metals Results for the Process Demonstration Filtrate

Batch	Antimony	Arsenic	Barium	Beryllium	Cadmium	Chromium	Copper	Iron
	Level in Filtrate (mg/L)							
1	<0.200	<0.177	0.240	<0.005	<0.0027	5.39	<0.010	<0.100
2	<0.200	<0.177	0.180	<0.005	<0.0027	<0.280	<0.010	<0.100
3	<0.200	<0.177	0.200	<0.005	<0.0027	<0.280	<0.010	<0.100
4	<0.200	<0.177	<0.004	<0.005	<0.0027	0.400	<0.010	<0.100
5	<0.200	<0.177	<0.004	<0.005	<0.0027	<0.280	<0.010	<0.100
6	<0.200	<0.177	0.220	<0.005	<0.0027	0.320	<0.010	<0.100
7	<0.200	<0.177	0.250	<0.005	<0.0027	<0.280	<0.010	<0.100
8	<0.200	<0.177	0.270	<0.005	<0.0027	<0.280	<0.010	<0.100
9	<0.200	<0.177	0.210	<0.005	<0.0027	<0.280	<0.010	<0.100
10	<0.200	<0.177	0.220	<0.005	<0.0027	<0.280	<0.010	<0.100
11	<0.200	<0.177	0.170	<0.005	<0.0027	0.125	<0.010	<0.100
Batch	Lead	Nickel	Selenium	Silver	Thallium	Vanadium	Zinc	
	Level in Filtrate (mg/L)							
1	241	<0.031	11.2	<0.017	<0.724	<0.056	0.023	
2	171	<0.031	9.50	<0.017	<0.724	<0.056	0.020	
3	260	<0.031	10.2	<0.017	<0.724	<0.056	0.028	
4	383	<0.031	9.85	<0.017	<0.724	<0.056	0.025	
5	312	<0.031	9.71	<0.017	<0.724	<0.056	0.023	
6	204	<0.031	8.12	<0.017	<0.724	<0.056	0.013	
7	340	<0.031	9.92	<0.017	<0.724	<0.056	0.028	
8	298	<0.031	9.43	<0.017	<0.724	<0.056	0.037	
9	219	<0.031	9.35	<0.017	<0.724	<0.056	0.024	
10	215	<0.031	10.4	<0.017	<0.724	<0.056	0.019	
11	209	<0.031	10.3	<0.017	<0.724	<0.056	0.025	

000047

Physically, the filter cake material released well from the filter cloth. Little to no material hung up on the cloth. The filter cake material was also friable and easily crumbed when handled.

The filtrate from the Process Demonstration, with the exception of the initial batch, was clear and free of solids. The initial batch, due to its lower ferrous sulfate amendment level, was lightly yellow in color. The higher ferrous sulfate addition level used in the other dewatering batches was sufficient to reduce the hexavalent chromium in the filtrate. The TDS and TSS levels in the Process Demonstration filtrate were similar to those reported for the Formulation Development testing filtrates. The low TSS indicates that the dewatering process removed most of the bentonite fines from the water phase.

The filtrate from the Process Demonstration had a high pH and high levels of lead and selenium. The lead levels are an artifact of the high pH values, since lead forms a soluble oxyanion at high pHs. In the full-scale system, the filtrate could be recycled back to suspend more solids retrieved from Silo 1 and 2 or treated and discharged to the AWWT. Conventional water treatment can be used to remove the lead and selenium from the filtrate prior to discharge to the AWWT. The addition of bleach and barium chloride and the adjustment of the filtrate pH to 7 – 8 with phosphoric acid precipitated lead phosphate and barium selenate. This treatment reduced the lead and selenium level of the composite filtrate sample to less and 0.10 and 0.2 mg/L, respectively. The precipitate can be settled and supernatant will be run through bag filters and, if necessary, an anion exchange resin. The settled sludge can be recycled back into the process prior to dewatering. Similarly, the backwash water from the bag filters and resin bed can also be recycled.

4.2.2 Stabilization of Filter Cake Material

Each batch of filter cake was stabilized in the Mini-Maxcrete. Table 4.22 summarizes the weight of filter cake, the weights of reagents, and the weight of treated material collected for each stabilization batch. Table 4.23 lists the stabilization processing information from each batch. This includes processing time, temperature rise, and density of treated material. The bulk density calculation was made on full 85 drums of material, assuming that the volume of the full drum was 1.05 times its listed capacity. The bulk density includes any void space within the compacted treated material. Temperature rise measurements were made on each batch of the stabilized material immediately, 1 hour, 4 hours, 8 hours, and 24 hours after treatment.

Samples of stabilized surrogate were collected from each batch of stabilized material. These samples were subjected to liquid bleed, pH, UCS and TCLP testing. The results are summarized in Tables 4.24 and 4.25.

The stabilized material from the Process Development was a homogeneous material. The stabilized material was conveyed out of the side-discharge Mini-Maxcrete mixer without any guide or chute. The addition of water during stabilization may increase the slump of the stabilized material as was demonstrated in Batch 5. Recycled filtrate could be used for this task. During full-scale treatment, a mixer with a bottom discharge should be employed to optimize

discharge of the treated material. During the Process Demonstration, the treated material was compacted into the drums, using moderate vibratory action supplied by lifting and lowering the drum with a forklift. During full-scale treatment, a compactor should be used to maximize the loading of the treated material into the container.

The treated material did not produce any liquid bleed and developed greater than 50 psi over the 28-day curing period. The treated material met the RCRA TC limits for all metals.

Table 4.22
Processing Information for Process Demonstration Stabilization Batches

Batch	Weight Filter Cake (lb)	Weight Portland Cement (lb)	Weight Hydrated Lime (lb)	Weight Ferrous Sulfate (lb)	Weight Triple Superphosphate (lb)	Weight Water (lb)
1	990.2	99.0	49.5	9.9	19.8	--
2	910.4	91.6	45.8	9.2	18.3	--
3	967.2	96.7	48.3	9.7	19.4	--
4	963.8	96.3	48.2	9.6	19.3	--
5	947.6	95.0	47.5	9.8	19.0	117.6
6	1005.6	100.6	50.2	10.6	21.2	--
7	1016	101.6	50.8	10.2	21.2	--
8	977.6	97.8	48.9	9.8	19.6	--
9	1029.4	102.9	51.5	10.3	20.6	--
10	1031.4	103.4	51.7	10.3	20.7	--
11	1010	101.0	50.5	10.1	20.2	--

Table 4.23
Processing Measurements for Process Demonstration Stabilization Batches

Batch	Processing Time (min)	Temperature Rise (°C)					Bulk Density (g/cm^3)[A]
		Immediate	1 hour	4 hours	8 hours	24 hours	
1	15	7	7.5	6	6	3	1.48
2	15	6	7	7	6	3	1.46
3	15	7	6.5	6.5	6.5	5.5	1.52
4	15	5.5	5.5	5	6	4	1.51
5	15	6.5	5.5	6	6.5	3.5	1.46
6	15	6.5	6	7	6	5.5	1.47
7	15	7	7	7	5.5	6	1.51
8	15	7	5	5.5	5.5	4	1.44
9	15	7.5	7	7	5	4.5	1.50
10	15	7.5	8	6	6	4	1.51
11	15	7	7	5.5	4	4	nd

[A] Determined from weight of full drums assuming 11.93 ft^3 volume per full drum.

000019

Table 4.24
Liquid Bleed, pH, and UCS Results for Process Demonstration Stabilization Batches

Batch	Liquid Bleed (mL)	pH	14 Day UCS (psi)	28 Day UCS (psi)
1	0	11.41	57.9	>300
2	0	11.27	69.0	>300
3	0	11.34	65.6	>300
4	0	11.43	13.8	77.9
5	0	11.69	108	>300
6	0	11.40	35.7	92.2
7	0	11.34	9.5	63.0
8	0	11.34	63.9	>300
9	0	11.14	56.0	>300
10	0	11.21	49.4	>300
11	0	11.25	13.8	73.7

Table 4.25
TCLP Results for the Process Demonstration Stabilization Batches

Batch	1	2	3	4	5	6	7	8	9	10	11
Parameter	TCLP Level (mg/L)										
Antimony	0.0268	0.011	0.0129	<0.005	<0.005	<0.005	0.006	0.0097	0.0106	0.0098	<0.005
Arsenic	0.0737	0.0881	0.0554	0.0387	0.0453	0.0693	0.0437	0.0425	0.0216	0.0320	0.0326
Barium	0.473	0.445	0.287	0.704	0.557	0.436	0.578	0.362	0.400	0.427	0.438
Beryllium	<.0025	<.0025	<.0025	<.0025	<.0025	<.0025	<.0025	<.0025	<.0025	<.0025	<.0025
Cadmium	0.0193	0.0214	0.019	0.0204	0.0191	0.0217	0.0206	0.0201	0.0206	0.019	0.0209
Chromium	1.020	0.502	0.800	0.729	0.217	0.597	0.534	0.686	0.642	0.716	0.661
Lead	0.250	2.240	0.0288	0.0069	0.0688	0.0737	0.0874	0.0122	0.0792	0.184	0.0151
Mercury	<.0001	<.0001	<.0001	.00014	<.0001	<.0001	<.0001	<.0001	<.0001	<.0001	<.0001
Nickel	<0.004	<0.004	<0.004	0.0112	0.0077	<0.004	<0.004	<0.004	<0.004	<0.004	<0.004
Selenium	0.338	0.401	0.351	0.311	0.329	0.354	0.250	0.302	0.270	0.246	0.304
Silver	<0.002	<0.002	<0.002	<0.002	<0.002	<0.002	<0.002	<0.002	<0.002	<0.002	<0.002
Thallium	<0.012	<0.012	<0.012	<0.012	<0.012	<0.012	<0.012	<0.012	<0.012	<0.012	<0.012
TCLP Fluid	2	2	2	2	2	2	2	2	2	2	2
TCLP Final pH Thallium	7.17	9.11	7.46	10.00	10.60	9.03	10.59	8.83	8.00	10.33	10.49

000050

4.2.3 Mass Balance

A mass balance was done for both the dewatering and stabilization processes for the Process Demonstration. The mass balances are summarized in Tables 4.26 and 4.27. For the dewatering process, the total material out of the process (filtrate + filter cake) was 186.5 pounds less than the process inputs (slurry, water, recycled filtrate, and reagents). For the stabilization process, the treated material produced by the process was 47.1 pounds less than the process inputs (filter cake and reagents)

Table 4.26

Process Demonstration Dewatering Mass Balance

Batch	Slurry	Water	Recycled Filtrate	Reagents	Total Input	Filter Cake	Filtrate	Total Output	Delta (out-in)
	Weight (lb)								
1	1,756.4	539.6	0	22.5	2,318.5	990.2	1,728.0	2,718.2	399.7
2	1,831.5	578.0	0	27.0	2,436.5	910.4	1,389.4	2,299.8	-136.7
3	1,756.4	291.9	750.6	27.0	2,852.9	967.2	1,776.4	2,743.6	-109.3
4	1,756.4	329.4	750.6	27.0	2,863.4	963.8	1,827.3	2,791.1	-72.3
5	1,756.4	255.2	750.6	27.0	2,789.2	947.6	1,668.0	2,615.6	-173.6
6	1,760.7	448.7	750.6	27.0	2,987.0	1,005.6	1,851.5	2,857.1	-129.9
7	1,771.4	106.8	750.6	27.0	2,655.8	1,016.0	1,860.7	2,876.7	220.9
8	1,786.4	184.3	750.6	27.0	2,748.3	977.6	1,440.3	2,417.9	-330.4
9	1,786.4	385.3	750.6	27.0	2,949.3	1,029.4	2,071.7	3,101.1	151.8
10	1,771.4	315.3	750.6	27.0	2,864.3	1,031.4	1,858.2	2,889.6	25.3
11	1,771.4	190.2	750.6	27.0	2,739.2	1,010.0	1,697.2	2,707.2	-32
Total	19,504.9	3,624.6	6,755.4	292.5	30,204.4	10,849.2	19,168.7	30,017.9	-186.5

Table 4.27

Process Demonstration Stabilization Mass Balance

Batch	Filter Cake	Portland Cement	Hydrated Lime	Ferrous Sulfate Heptahydrate	Triple Super phosphate	Water	Total Input	Treated Material Output	Delta (out-in)
	Weight (lb)								
1	990.2	99.0	49.5	9.9	19.8	--	1,168.4	1,101.8	-66.6
2	910.4	91.6	45.8	9.2	18.3	--	1,075.3	1,096.9	21.6
3	967.2	96.7	48.3	9.7	19.4	--	1,141.3	1,175.2	33.9
4	963.8	96.3	48.2	9.6	19.3	--	1,137.1	1,121.4	-15.7
5	947.6	95.0	47.5	9.8	19.0	117.6	1,236.5	1,077.5	-159.0
6	1,005.6	100.6	50.2	10.6	21.2	--	1,188.2	1,273.8	85.6
7	1,016.0	101.6	50.8	10.2	21.2	--	1,199.8	1,227.0	27.2
8	977.6	97.8	48.9	9.8	19.6	--	1,153.7	1,073.2	-80.5
9	1,029.4	102.9	51.5	10.3	20.6	--	1,214.7	1,251.0	36.3
10	1,031.4	103.4	51.7	10.3	20.7	--	1,217.5	1,214.0	-3.5
11	1,010.0	101.0	50.5	10.1	20.2	--	1,191.8	1,265.4	73.6
Total	10,849.2	1,085.9	542.9	109.5	219.3	117.6	12,924.3	12,877.2	-47.1

5.0 RESULTS

5.1 FORMULATION DEVELOPMENT

5.1.1 Surrogate Composition

5.1.1.1 Formulation Development Testing

The testing results for the initial Formulation Development are reported in Table 4.1. During the initial Formulation Development testing, all of the 70 wt % solid surrogates had moisture and in-situ density results which met the requirements. However, the pH values for the Demonstration and Silo 2 surrogates were below the required range. Also, the Silo 2 surrogate material required a slightly higher moisture content (on a dry weight basis) to reach its plastic limit. None of the surrogate materials have TCLP-leachable lead values that were close to the requirement for this parameter. Therefore, testing was conducted to modify to surrogate composition.

5.1.1.2 Modification of the Surrogate Composition

At FDF's suggestion, the amount of magnesium phosphate in the surrogate compositions was modified to determine its effect of on the TCLP-leachable lead. Additional coarse silica was added to compensate for the removal of magnesium phosphate. For the Silo 1 and Demonstration surrogate materials, reduction in the magnesium phosphate levels would increase the TCLP-leachable lead result (Table 4.2). Reduction of magnesium phosphate levels in these surrogates (90% and 40%, respectively) would increase the TCLP-leachable lead into the acceptable range of 650-850 ppm.

For the Silo 2 surrogate, substituting all of the magnesium phosphate with coarse sand was not sufficient to increase the TCLP-leachable lead level to within the acceptable range (Table 4.3). Adjustments also had to be made to the amounts of calcium carbonate and magnesium carbonate in the surrogate composition to produce a surrogate composition with the required TCLP-leachable lead level. Reductions of 90%, 100%, and 70% of the magnesium phosphate, calcium carbonate, and magnesium phosphate levels, respectively, in the Silo 2 surrogate material was required to produce a TCLP-leachable lead level in the acceptable range.

Based on the results, FDF requested that a 38% reduction in the magnesium phosphate level of the Demonstration surrogate be used for further Formulation Development and Process Demonstration work. FDF agreed to supply the pre-weighed reagents for the Silo 1 and Silo 2 surrogates for further Formulation Development work.

5.1.1.3 Final Formulation Development Testing

For the final Formulation Development testing, the 70 wt % solids Demonstration surrogate met the acceptance criteria for moisture, density, pH, and TCLP-leachable lead (Table 4.4). However, the moisture content at plasticity was slightly low. For the Process Demonstration, FDF suggested increasing the fumed silica level in the Demonstration surrogate by 2% and decreasing the coarse silica level by a commensurate amount.

000052

For the Silo 1 and Silo 2 surrogates, FDF supplied the reagents, preweighed and combined, with instructions for producing the 30 wt % solids slurry directly. Therefore, testing of the 70 wt % solids surrogates was not required.

5.1.2 Dewatering of 30 wt % Solids Slurries

5.1.2.1 Initial Formulation Development

For the initial Formulation Development testing, high solids filter cake was produced by the dewatering of the amended 30 wt % solid slurries. The hydrated lime, which was added to the 30 wt % solids slurries at a rate of 0.1 pounds per gallon, formed a calcium and metal hydroxide gel which coagulated the solids. When the amended slurries were then pumped into the bench-scale recessed chamber filter press and dewatered at a maximum pressure of 100 psig, the liquid phase (filtrate) was readily separated from the solid phase (filter cake).

The filter cake material produced by the dewatering had an average moisture content of 44.1% (Table 4.5). Based on this moisture content and the level of the lime addition, the dewatering of every 1 kg of 30 wt % solids slurry would result in 561.5 g of filter cake. The reduction in weight due to dewatering was 43.9%. The filter cake materials easily separated from the filter cloth when the dewatering runs were terminated.

The filtrates produced by the dewatering were clear of suspended solids, but yellow in color (Table 4.6). The source of the yellow color was hexavalent chromium. To minimize the level of hexavalent chromium in the filtrate, further dewatering work involved the amendment of the 30 wt % solids with ferrous sulfate to reduce the hexavalent chromium.

5.1.2.2 Final Formulation Development Testing

For the final Formulation Development testing, the 30 wt % solid slurries were amended with ferrous sulfate and hydrated lime at a rates of 0.05 and 0.1 pounds per gallon, respectively. The ferrous sulfate was added to reduce the hexavalent chromium to trivalent chromium. The trivalent chromium is much less toxic and less soluble under alkaline conditions than the hexavalent form. The trivalent chromium would precipitate out as chromium hydroxide during the lime amendment.

The filter cake material produced by the dewatering had an average moisture content of 47.3% (Table 4.7). Based on this moisture content and the level of the lime addition, the dewatering of every 1 kg of 30 wt % solids slurry would result in 610.3 g of filter cake. The reduction in weight due to dewatering was 39%. Though the 30 wt % solid slurries were diluted with water prior to amendment and dewatering during final Formulation Development, the solids content of the filter cake produced was similar to those for the initial Formulation Development. The filter cake materials easily separated from the filter cloth when the dewatering runs were terminated.

The filtrates produced were clear of suspended solids and had no color (Table 4.8).

5.1.3 Stabilization Formulation Development

The reagent information and testing results for all formulations used during stabilization formulation development are summarized in Appendix g. The results are discussed below.

5.1.3.1 Initial Formulation Development Testing

For the Initial Formulation Development testing, the formulations utilized varying amounts of Portland cement with triple superphosphate and ferrous sulfate. The major chemical challenge for the stabilization was the effective chemical fixation of the lead. The stabilization of lead with alkaline materials must be carefully planned. The solubility of lead, as a function of pH, yields a U-shaped curve. The minimum lead solubility occurs within a pH range of 8.0 to 10.5. The leachability of lead increases dramatically at pH values below 8 and above 11. Therefore, stabilization formulations which yield a TCLP extract pH in the range of 8.0 to 10.5 have minimal TCLP-leachable lead. Determination of the amount of Portland cement addition required to produce a treated material with a TCLP extract pH in the range of 8 to 10.5 was key to the development of successful stabilization formulations. Triple superphosphate was used in the formulations to further minimize TCLP-leachable lead levels in the stabilized material by the formation of very low solubility phosphates. The ferrous sulfate was added to reduce the leachability of chromium for the stabilization formulations.

Additionally, the basis of the design used for the formulations, listed in Table 4.9, was to produce a moist, clay/silt soil-like treated material which would slowly develop the required compressive strength. The consistency of the treated material was selected to optimize waste loading, while producing a compatible material. The optimized waste loading would reduce the amount of treated waste produced. Making the material compatible would allow optimal usage of container volume as void space could be minimized. The slow strength development would allow the treated material to be handled and reprocessed, if necessary, as a moist, clay/silt soil-like material as opposed to a monolithic block of concrete.

The stabilized material produced for each formulation was a uniform and homogeneous material with a moist clay/silt soil-like consistency. There was no dusting or particulate release from the stabilized material, due to its moist consistency. The temperature rise measurements indicated that stabilized material had a temperature rise on the order of 3 to 9°C (Table 4.10). Temperature rises in this range are common for moist, soil-like treated material. The temperature rise increased with increasing Portland cement addition. However, the temperature rise was not significant enough to cause any out-gassing or evolution of steam. No liquid bleed occurred from the stabilized material, indicating that no free liquids would be associated with the stabilized material. The UCS data indicated that the formulations with low Portland cement addition had trouble producing the required UCS of 50 psi for the Silo 1 and Demonstration surrogate. Based on the UCS increases for these formulations between 7 and 14 days of curing, it was not likely that these formulations would have reached 50 psi within 28 days of curing.

The TCLP results indicated that at least one formulation for each of the surrogate materials would produce a treated material which met the RCRA TC requirements (Tables 4.11 through 4.13). This formulation would often meet the RCRA UTS. In general, the stabilization formulations with a 0.10 mix ratio [(weight reagent)/(weight waste)] of Portland cement and a

mix ratio of 0.01 mix ratio ferrous sulfate produced treated material had low levels of TCLP-leachable lead. Stabilization formulations with 0.10 mix ratio of Portland cement, a 0.01 mix ratio of ferrous sulfate, and a 0.02 mix ratio of triple superphosphate generally had lower levels of TCLP-leachable lead. Typically, the final pH of the TCLP extract for these successful formulations was within the range of 8.0 to 11.5, where most RCRA metals are at or near their minimum solubility.

A concern in the development of the stabilization formulations for the surrogate materials was the reagents used for their compositions. Many of the reagents used in the surrogate materials are known to have both adverse and beneficial effects on stabilization. For examples, the carbonates and phosphate compounds were shown to greatly decrease the level of TCLP-leachable lead, leading to modification of the surrogate composition to correct for that effect. The high concentrations of lead have been shown to adversely affect the setting and strength development of Portland cement. Fumed silica at low levels can decrease the permeability of stabilized material. At higher levels, the gelling properties of fumed silica and its capacity to remove calcium ions from the matrix inhibit the setting and strength development of Portland cement.

The fact that a number of formulations used in the initial Formulation Development had unsuccessful TCLP or UCS results should not be viewed negatively. The initial Formulation Development was designed to develop the treatment envelope. If a majority of the formulations employed produce successful results, a reliable and controllable treatment envelope would not have been determined. The fact that at least one formulation for each surrogate material would produce a treated material which meet the RCRA TC limits and/or UTS indicates that a precise definition of the treatment envelope can be developed.

The objective of the Formulation Development was to select a two stabilization formulations for each surrogate material; one to produce a treated material which meets the RCRA TC limits, and one to produce a treated material which meets the RCRA UTS. Due to the low TCLP-leachable lead levels in the Silo 1, Silo 2, and Demonstration surrogates used in the initial Formulation Development, none of formulations were selected for this purpose.

5.1.3.2 Final Formulation Development Testing

The initial stabilization Formulation Development results suggested that low TCLP levels were associated with the low Portland cement addition level, especially when triple superphosphate was added. However, the low Portland cement addition also resulted in low UCS results (Table 4.10). Additional reagents (hydrated lime, calcium sulfate, and Class F fly ash) were considered for the final Formulation Development testing. These reagents were added to increase the UCS on low Portland cement addition levels, while also further reducing the TCLP levels (tables 4.15 through 4.18). The hydrated lime is very effective at overcoming the deleterious effect of the silica fume on the production of strength of the stabilized material. The formulations selected for the final Formulation Development testing are listed in Table 4.14.

The stabilized material produced for each formulation was a uniform and homogeneous material with a moist soil-like consistency. There was no dusting or particulate release from the stabilized material, due to its moist consistency. The temperature rise measurements indicated that

stabilized material had a temperature rise on the order of 2 to 7°C (Table 4.15). Temperature rises in this range are common for moist, soil-like treated material. The temperature rise increased with increasing Portland cement addition. Since lower Portland cement addition levels were used in the final Formulation Development testing than in the initial testing, lower temperature rises were seen for these formulations. The temperature rise was not significant enough to cause any out-gassing or evolution of steam. No liquid bleed occurred from the stabilized material, indicating that no free liquids would be associated with the stabilized material. The UCS data indicated that most of the formulation met the required UCS of 50 psi (Table 4.15). A few of the formulations for the Silo 1 surrogate with low Portland cement addition had trouble producing the required UCS of 50 psi, but the other formulations for this surrogate produced adequate strength.

The TCLP results indicated that at least one formulation for each surrogate material would produce a treated material which met both the RCRA TC and UTS criteria (Tables 4.16 through 4.18). In general, the stabilization formulations with a 0.10 mix ratio of Portland cement, a 0.05 mix ratio of hydrated lime, a 0.02 mix ratio of triple superphosphate, and a 0.01 mix ratio ferrous sulfate produced treated material with very low levels of TCLP-leachable lead and chromium. Stabilization formulations with a 0.125 mix ratio of Portland cement, a 0.01 mix ratio of ferrous sulfate, and a 0.02 mix ratio of triple superphosphate also produced treated material with low levels of TCLP-leachable lead and chromium. Typically, the final pH of the TCLP extract for these successful formulations was within the range of 8.0 to 11.5, where most metals are at or near their minimum solubility.

The fact that a number of formulations used in the final Formulation Development had unsuccessful TCLP results should not be viewed negatively. The final Formulation Development was designed to confirm and to further refine the treatment envelope from the initial Formulation Development. If a majority of the formulations employed produced successful results, a reliable and controllable treatment envelope would not have been determined. The fact that one or two of the formulations for each surrogate material would produce a formulation which meets the RCRA TC limits and/or UTS indicates that a precise definition of the treatment envelope can be developed.

The objective of the Formulation Development was to select two stabilization formulations for each surrogate material; one to produce a treated material which meets the RCRA TC limits, and one to produce a treated material which meets the RCRA UTS. Table 5.1 contains the selected formulations for both the RCRA TC limits (S1-T, S2-T, and SO-D) and the RCRA UTS (S1-U, S2-U, SO-U).

Table 5.1
Selected Stabilization Formulations for Each Surrogate Material

Surrogate	Recipe Name	Portland Cement	Hydrated Lime	Triple Superphosphate	Ferrous Sulfate	Waste Loading	Bulking Factor
		Reagent Mix Ratio					
Silo 1	S1-T	0.10	0.05	0.02	0.01	0.44	241
	S1-U	0.125	--	0.02	0.01	0.44	237
Silo 2	S2-T	0.10	0.05	0.02	0.01	0.40	265
	S2-U	0.125	--	0.02	0.01	0.40	263
Demonstration	SO-D	0.10	0.05	0.02	0.01	0.43	249
	SO-U	0.10	0.05	0.02	0.01	0.43	249

The waste loading and bulking factor for each selected formulation are also included in Table 5.1. Waste (surrogate) loading was calculated using the following expression:

$$\text{Waste Loading} = [(WDW)/(WDW+Water+Additives)]*100 \text{ wt } \%$$

where: Waste Dry Weight (WDW) = Dry Surrogate + Dry Bentonite Weights.

In this calculation, water was defined to include the water component of the silo residues, the water added during retrieval and transferring, and the water added during stabilization processing, less the water removed by dewatering. Dry weight was defined as the weight of the surrogate waste at 105°C. The bulking factor was determined as the resulting treated surrogate volume (representing the specific volume of the treated silo residues) divided by the corresponding volume of the untreated surrogate (representing the in situ volume of the silo residues). The volume of the untreated surrogate was determined using the previously determined in situ density, ρ_i. The bulking factor was calculated as follows:

$$V_I = 0.30 * M_{si} \div \rho_i$$

$$BF = (V_f \div V_I) * 100\%$$

where: BF = Bulking Factor
V_I = Specific volume of the 70 wt % solids surrogate slurry mixture
V_f = Specific volume of the treated surrogate
ρ_i = In situ density (previously) determined
M_{si} = Mass of the 30 wt % solids slurry before treatment.

5.2 PROCESS DEMONSTRATION

5.2.1 Surrogate Slurry Dewatering for Process Demonstration

Dewatering of the Process Demonstration slurry produced filter cake material of consistent quality and solids content (Table 4.20). Table 5.2 lists the average, standard deviation, and coefficient of variation for the weight, moisture content, and bulk density of the eleven batches of filter cake material. The low coefficients of variation indicate that the filter cake production was very consistent from batch to batch.

000057

Table 5.2
Statistical Analysis of the Filter Cake Production Parameters for the 11 Batches

Filter Cake Parameter	Average	Standard Deviation	Coefficient of Variation
Weight	988.1 lb	37.34 lb	3.78%
Moisture Content	49.4 %	3.00 %	6.08%
Bulk Density	1.38 g/cm^3	0.05 g/cm^3	3.81%

The filtrate produced by the dewatering of the Process Demonstration slurry was also consistent (Table 4.20). The TDS level for the filtrate slightly increased after the third batch, due to recirculation of the filtrate as dilution water for the slurry. As filtrate was consistently recirculated as the dilution water, the TDS was in the range of 9,000 to 10,400 ppm. The TSS and nitrate content of the filtrate fluctuated similarly, due to the recirculation of filtrate as dilution water. The low TSS indicates that the dewatering process removed most of the bentonite fines from the water phase. The pH of the filtrate was consistently 12.1 and 12.35 for all eleven batches.

Only lead and selenium were detected at appreciable levels in the filtrate (Table 4.21). The lead levels are an artifact of the high pH values, since lead forms a soluble oxyanion at pHs greater than 11. In the full-scale system, the filtrate could be recycled back to suspend more solids retrieved from Silos 1 and 2 or treated and discharged to the AWWT. Conventional water treatment can be used to remove the lead and selenium from the filtrate prior to discharge to the AWWT. The addition of bleach, barium chloride, and the adjustment of the filtrate pH to 7 – 8 with phosphoric acid precipitated lead phosphate and barium selenate. The treated filtrate met the AWWT discharge criteria for lead and selenium. The precipitate can be settled in a clarifier, while the clarified water would be run through bag filters and, if necessary, an anion exchange resin. The sludge from the clarifier can be recycled back into the process prior to dewatering. Similarly, the backwash water from the bag filters and resin bed can also be recycled. The initial filtrate batch, due to its lower ferrous sulfate amendment level, had an elevated chromium level and was lightly yellow in color. The higher ferrous sulfate addition level used in the other dewatering batches was sufficient to reduce the chromium content in the filtrate.

5.2.2 Stabilization for Process Demonstration

The reagent information and testing results for all Process Demonstration stabilization batches are summarized in Appendix G. The stabilization of the filter cake produced a homogeneous and consistent treated material. The processing time of 15 minutes in the Mini-Maxcrete provide sufficient high shear mixing to produce a treated material with a homogeneous appearance and consistency. The stabilized material was conveyed out of the side-discharge Mini-Maxcrete mixer without any guide or chute. The addition of water during stabilization may increase the handleability of the stabilized material. Recycled filtrate could be used for this task. During full-scale treatment, a mixer with a bottom discharge should be employed to optimize discharge of the treated material. During the Process Demonstration, the treated material was compacted into the drums, using moderate vibratory action supplied by lifting and lower the drum with a forklift. During full-scale treatment, a compactor should be used to maximize the loading of the treated material into the container.

The temperature rise measurements for each stabilization batch were similar and indicated that a temperature rise of 5-10°C can be expected during full-scale treatment (Table 4.23). Temperature rises in this range are common for moist, soil-like treated material. The temperature rise should decrease by 50% within 24 hours after treatment. The temperature rise was not significant enough to cause any out-gassing or evolution of steam. The lids were loosely placed on the drums of stabilized material immediately after treatment. When these lids were removed approximately 1 week later to inspect the stabilized material, condensation on the lids was noted. This indicates that the placement of a pad of adsorbent material, such as bentonite, on the stabilized material may be necessary prior to sealing the container during full-scale treatment.

No liquid bleed occurred from the stabilized material, indicating that no free liquids would be associated with the stabilized material (Table 4.24). The lack of liquid bleed and the low temperature rise for the stabilized material indicates that the containers can be sealed immediately after treatment during full-scale processing.

The bulk density of the treated material, estimated from the weight and total volume of stabilized material in a full drum from each batch, averaged 1.49 g/cm^3 (93.1 lb/ft^3) and had a coefficient of variability of 1.9% (Table 4.23). The bulk density included any void space within the treated material. The similarity of the average bulk density for the treated material produced during the Process Demonstration to the bulk densities for treated material compacted into molds during the Formulation Development (Tables 4.10 and 4.15) indicates that the stabilized material can be effectively and consistently compacted into the appropriate container during full-scale treatment.

The pH values of the stabilized material from each batch were less than 12. This indicates that the treated material would not exhibit a RCRA characteristic for corrosivity due to a pH of greater than 12.5.

The UCS data indicated that the stabilized material from each batch met the strength requirement of 50 psi (Table 4.24). The lower UCS values for some of the batches appeared to be related to voids present in the molded samples. The TCLP data indicate that treated material from all batches met the TC limits for the RCRA metals (Table 4.25). Additionally, ten of the batches met the UTS limits for all metals with the exception of chromium. Only Batches 2, 5, 6, and 7 met the UTS limits for chromium (0.60 mg/L).

5.2.3 Mass Balance

Mass balances were performed using weights of surrogate slurry feed, water removed in dewatering steps, additives, and stabilized material from the Process Demonstration. The mass balance around the dewatering process compared the total weight of surrogate slurry, water, recycled filtrate and additives added during the process to the total weight of filtrate removed and filter cake produced for each batch treated. The results in Table 4.26 indicate that each dewatering batch had an acceptable mass balance. Overall, the total weight of process inputs was only 186.5 pounds greater than the process outputs. The ratio of the total weight of filtrate removed and filter cake to the total weight of surrogate slurry, water, recycled filtrate, and additives was used to calculate the percentage of mass balance closure. For the dewatering process, the percent closure was 99.4%.

The mass balance around the stabilization process was accomplished by comparing the total weight of surrogate filter cake and additives (including water) to the weight of the final stabilized waste product obtained for each batch treated. The results in Table 4.27 indicate that each stabilization batch had an acceptable mass balance. The ratio of total weight of the stabilized waste to the total weight of the filter cake and additives was used to calculate the percentage of mass balance closure. For the stabilization process, the percent closure was 99.6%.

5.2.4 Mechanical Aspects of Process Demonstration

During the Process Demonstration, few mechanical problems were encountered. Each of these problems is discussed below.

At the start of the Process Demonstration, the slurry tank feed pump (P-10) pressure-locked when air pressure was supplied. This lock-up was due to P-10 being the only piece of machinery utilizing the air pressure lines at that time. The pressure line to P-10 was depressurized and air pressure was slowly re-applied to P-10. P-10 immediately began operating.

Minor problems were encountered in transferring the stabilized material from the Mini-Maxcrete mixer to the 85-gallon drums. The moist clay/silt soil-like consistency of the stabilized material caused it to fall in large clumps from the side-discharge of the Mini-Maxcrete. Proper design of a chute or the addition of water or recycled during mixing would have eliminated this problem.

At the completion of the Process Demonstration, small amounts of sand and mineral matter were found in the diaphragms of the pumps. This was even after flushing of the pumps. This sand buildup could affect the long-term operation and maintenance of the pumps.

The draining the last bit of slurry from each 1,000 gallon tank produced a heel of sand and mineral matter in the bottom of each tank. The volume of the heel appeared to be 10-20 gallons. Though the bottoms were conical, the fitting for the 2" pipe on the bottom of the tank left a ½" lip in the very bottom of the tank. The heel built up around this lip.

Each of these problems was addressed in the design of the full-scale treatment system (Section 6).

5.3 PROOF OF PRINCIPLE DEMONSTRATION RESULTS

Overall, the results of Proof of Principle Demonstration for the Silos project at FEMP indicate that IT's system to dewater and stabilize the Silos 1 and 2 residuals produced a treated material which does not exhibit a RCRA hazardous characteristic and which would be acceptable for potential disposal options selected by FDF.

The full-scale process developed from the Proof of Principle Demonstration will involve dewatering of the Silos 1 and 2 residuals slurry, to minimize the volume of material to be

stabilized, followed by the stabilization of the dewatered filter cake material. This full-scale process will involve commercially available equipment.

The final treated product would be a moist, clay/silt soil-like material. This material can be placed into any container selected by FDF for the final disposal. Based on the results for the Process Demonstration, the waste loading for the final treated material would be 0.40, while the bulking factor would be 241%.

6.0 DESIGN DATA

This section presents both the design basis for the proposed conceptual design for stabilization to the Silo 1 and 2 residues as well as a detailed discussion of the design and operation of the system. The design basis relates the results of the Formulation Development and Process Demonstration to the design of the full-scale system. The process design for the full-scale system is presented in a series of flow sheets and key design and operation issues are explained further in the text.

The proposed full-scale process is essentially identical to that used for the Process Demonstration and the results of that testing provided key parameters for the conceptual design. As in the Process Demonstration, the full-scale treatment system is based on batch treatment of the silo solids. The general process flow is as follows:

- The solids will be retrieved from the temporary storage tanks using centrifugal slurry pumps.
- Solids will be transferred to the system, as a slurry containing 10 to 30 wt % solids (10 wt % solids will be used for the conceptual design mass balance).
- All of the slurry will be conditioned with ferrous sulfate and hydrated lime and dewatered in an automated recessed chamber filter press. Filtrate will be returned to the retrieval system.
- Filter cake (wet cake) will be mixed with Portland cement, hydrated lime, triple superphosphate and ferrous sulfate to chemically fix lead, chromium and other RCRA metals into non-leachable species.
- The stabilized solids will be placed and compacted into DOT 7A which are then sealed to reduce radon emanation. The sealed waste boxes will be held in the 24-hr curing area. The heat released by the curing process will result in a maximum temperature rise of 5 to 8 C in the stabilized waste.
- The waste boxes will be stored for 2 weeks until they are transferred to FDF for shipment for disposal.
- Though most filtrate will be recycled to suspend solids retrieved from Silos 1 and 2, a water treatment system will be used to treat filtrate for metals and radionuclides prior to discharge to the AWWT system.

The treatment system will be housed in a building that will include separate areas for the process tanks, open waste operations, storage of sealed boxes of waste, and other necessary functions. The building will include three ventilation systems; one for the process tanks, filter press, and stabilization mixer which vents into the existing Radon Control System (RCS), one system for the high radon areas of the process (e.g., area surrounding the filter press and stabilization mixer, and rework area), and one system for low radon areas of the process.

The system was designed with full attention to ALARA issues and to minimize radon release. The system was also designed to include the flexibility to adjust to changes in the solids slurry and treated waste parameters.

6.1 SCALE UP AND DESIGN

The Process Demonstration was conducted at roughly a 10 % scale to the proposed treatment system and provided a sound basis for the design. Since both the Process Demonstration and conceptual systems utilize batch treatment processes, scale-up is simple and reliable. Several of the key design and scale-up parameters are discussed in the following paragraphs.

6.1.1 Feed Slurry

The feed slurry for the Process Demonstration consisted of a surrogate mixture of sand, other minerals, bentonite and heavy metal salts. This slurry was formulated by FDF to mimic the chemical and, to some extent, physical properties of the mixture of Silos 1 and 2 residues and Bentogrout™, that will be retrieved from the temporary storage tanks. The surrogate slurry contained 28% solids and developed some body or viscosity due to the fine particle size of many of the solids and the presence of the bentonite. The three tanks, each containing 700 gallons of slurry, were readily mixed by normal agitation with a 1 horsepower (hp) mixer (1.42 hp/1000 gallons). The slurry was readily pumpable using air driven diaphragm pumps, although sand may cause plugging during full-scale processing. To avoid sand plugging, the full-scale design incorporates more powerful mixers in the slurry tanks, recirculation loops for the slurry transfer piping, piping that is sized to maintain a linear velocity of 7 to 10 ft/sec, and an automated line flushing system for the slurry transfer lines. The automated line flushing system will flush the lines during shut downs.

In the proposed treatment system, the feed slurry will be received at 10 to 30 wt % solids. Addition of a settling tank to increase the solids content fed to the treatment system was considered. This would have entailed feeding the settler underflow to the feed slurry tanks and returning the overflow to the retrieval system. The settler overflow would have contained bentonite and Silos 1 and 2 residue fines, that would be returned to and accumulate in the retrieval system. These fines would have to eventually be recovered by filtration. Since the Process Demonstration indicated that the slurry (including the fines) is filtered at a high rate, there is no additional cost to filter everything at once. It is easier to avoid the presumably difficult clay filtration, and filter the slurry as received, at 10 wt % solids. In addition, loss of the bentonite and fines to the clarifier overflow would change the properties of the feed to the treatment system. This would have some effect on the chemical and physical properties of the feed slurry and filter cake and, consequently, would introduce some uncertainty as to the validity of the Process Demonstration data used in the treatment system design. Accordingly, the settler was not incorporated into the flowsheet.

The lower solids and density of the slurry proposed by FDF will probably result in more rapid settling of sand in tanks and lines. The design addresses the settling of sand by increasing mixing power and adding recirculation loops for all slurry transfer lines. In addition, linear velocities in slurry transfer lines will be maintained in the range of 7 to 10 feet per second. These design elements give the system flexibility in handling fluctuations in the slurry solids and

density. Slurry density for the 10 wt % solids slurry was estimated from that of the 28 wt % solids Process Demonstration slurry used in the Process Demonstration and is shown in Table 6.1.

6.1.2 Batch Treatment Tanks

Ferrous sulfate and hydrated lime will be added to the slurry in the batch treatment tanks. These reagents will reduce the lead and chromium levels in the filtrate and improve the physical characteristics of the filter cake. In the Process Demonstration, it was necessary to add recycle filtrate to the batch treatment tanks to lower the density and viscosity of the treated slurry. With the lower solids content of the feed slurry this will not be necessary. Solids content of the batch treatment tanks in the proposed system will be 10 wt % which is close to but a little lower than the 18% solids used in the Process Demonstration. This is not expected to result in any operating problems, since variation in the solids content from 20 wt % to 30 wt % during Formulation Development did not affect the properties of the filter cake produced by the dewatering process (see Tables 4.5 and 4.7). The hydrated lime and ferrous sulfate doses for the full-scale process will be as used during the Process Demonstration and are shown in Table 6.1. The hydrated lime and ferrous sulfate doses are based on the solid content of the slurry not the volume or weight of the slurry.

Table 6.1

Full-Scale Treatment System Design Basis Data

Parameter	Value
Feed Slurry	
Silo 1 and 2 Residues, dry basis	9735 tons
BentoGrout, dry basis	220 tons
Slurry solids, total suspended	10 wt %
Slurry specific gravity	1.066
Batch Treatment Additives	
Ferrous sulfate heptahydrate (lb/lb slurry solids)	0.0177
Hydrated lime, high calcium (lb/lb slurry solids)	0.0364
Filtration	
Filter cake solids	50.1%
Filter cake density	86.0 lb/ft^3
Stabilization	
Ferrous sulfate heptahydrate (lb/lb filter cake)	0.01
Triple superphosphate (lb/lb filter cake)	0.02
Hydrated lime, high calcium (lb/lb filter cake)	0.05
Portland cement (lb/lb filter cake)	0.10
Waste Boxes	
Waste density, compacted in box	93.1 lb/ft^3
Waste box fill capacity	125.1 ft^3

000064

6.1.3 Dewatering

During the Process Demonstration, the conditioned slurry from the batch treatment tanks was readily dewatered in the recessed chamber filter press. For the design, the filtration cycle time was adjusted to account for the lower feed slurry density. In addition, during the Process Demonstration, the filter cake was dumped into a hopper that was subsequently dumped into the stabilization mixer. In the proposed design the filter cake drops directly into the mixer. Filter cake density and solids content for the design are from the Process Demonstration and are shown in Table 6.1.

6.1.4 Stabilization Mixer

The formulation mix ratios shown in Table 6.1 are based on weight of additive to weight of filter cake. In the proposed design the filter cake drops directly into the stabilization mixer that is located on load cells to measure the weight of filter cake. The amounts of stabilization additives can be rapidly adjusted to varying filter cake weights since the weight of the filter cake will be measured for each batch treated.

Both the filter cake and the final mix of filter cake and stabilization reagents were fairly heavy and tended to form large, somewhat plastic lumps in the mixer. The final treated waste form was therefore not a fluid grout or dry friable, soil-like material. It resembled a damp, silt/clay soil-like material. The single shaft mixer used in the Process Demonstration test was effective, but a twin shaft design was selected for the conceptual design. This mixer will provide more intense mixing and better transfer of the final waste out of the mixer into the waste boxes. The mixer has the flexibility to add water or recycled filtrate during mixing, if necessary, to improve the handleability of the treated waste.

6.1.5 Waste Boxes

For the Process Demonstration, the stabilized filter cake was dumped into 85-gallon steel drums. The drums were filled in 3 to 4 lifts, which were settled by "bouncing" the drums up and down using a forklift. This technique does not scale well to the full size 21,000-pound boxes. In the conceptual design, a hydraulic press will be used to provide moderate compaction of the stabilized filter cake.

The waste box (Figure 6.1) is designed to provide enough shielding that the external dose, based on average solids activity, is less than 70 millirem/hour. The boxes are constructed of 1.25-inch thick steel plate and are equipped with a bolted lid that is sealed with a rubber gasket. Forklift channels are installed on the bottom of the waste box. The filled waste boxes will have a gross weight of 20,500 to 20,800 pounds. This will allow for 2 boxes per truckload.

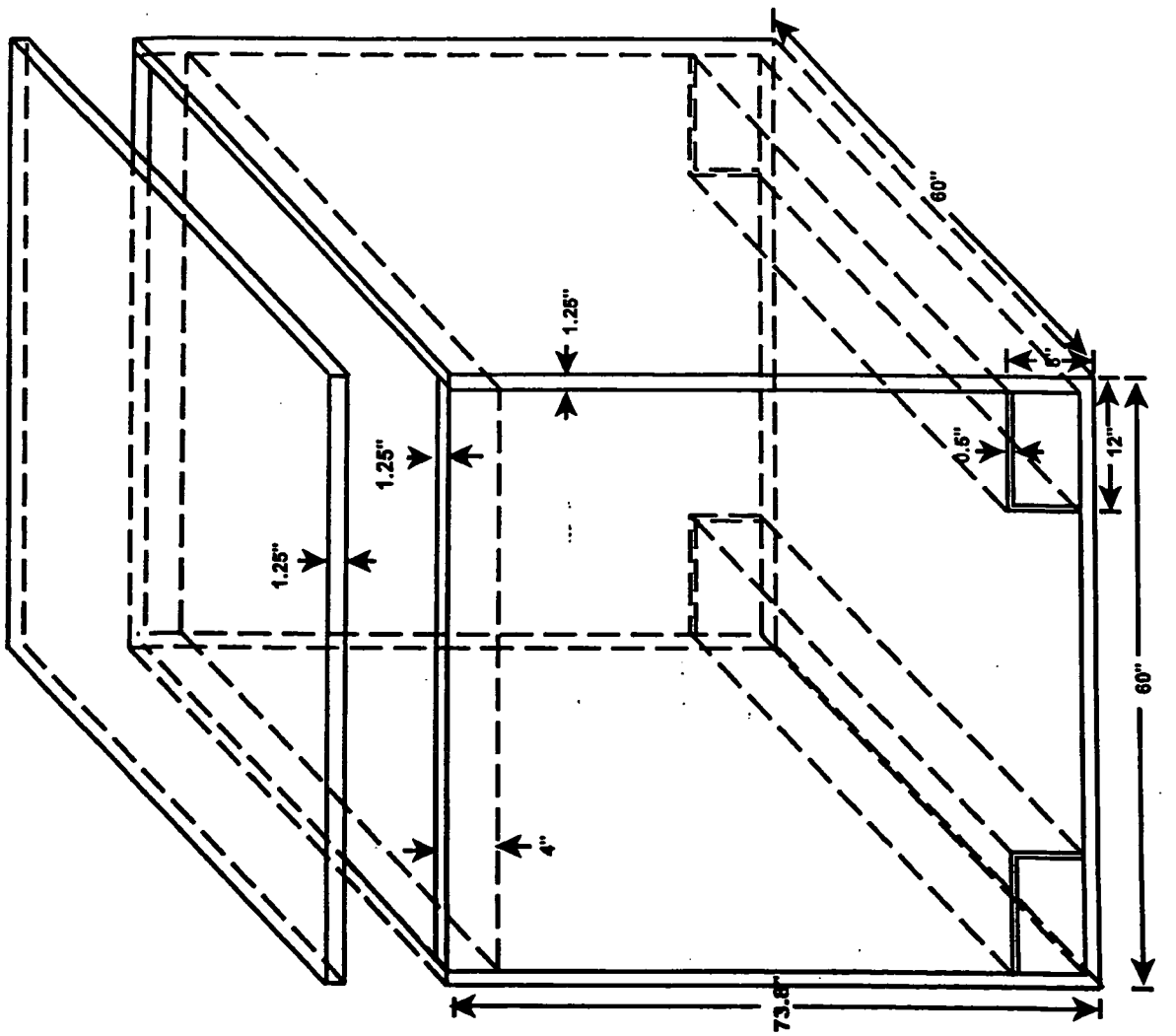

FIGURE 6.1. FULL VIEW OF SHIPPING CONTAINER

000036

6.1.6 Operation and Maintenance

The stabilization facility is designed to treat the Silo 1 and 2 material over a 3-year operating period. This 3-year period does not include construction, training and start-up activities. The stabilization system has been sized to treat the silo material in 105 weeks, operating two 8- hour shifts, five days per week. The system will therefore need to attain an operating factor of 67% or better to meet the 3-year operations schedule. This should be readily achievable with the proposed system.

The system design incorporates a number of measures for increasing the operating factor. Online spares are provided for most pumps and blowers. Piping design will include recirculation loops and automated flush connections for slurry lines. The feeders and conveyors for addition of stabilization reagents are oversized. The stabilization mixer will also have the capacity to increase batch volume by 20 to 30%. The filter press frame will allow for addition of 25% more plates. These two provisions allow the stabilization batch size and consequently the daily production rate to be increased, and gives the plant the flexibility to compensate for lower than expected operating factor. The 5-day per week, 2-shift schedule also allows for maintenance or "catch-up" production to be scheduled on off shifts.

Operator training is also critical to enhanced operational reliability. After mechanical and electrical check-out are complete, the stabilization system will be operated on a clean surrogate slurry. This surrogate test will allow for operator training and system commissioning. Training will be conducted on normal operations and maintenance related activities.

The routine or expected maintenance requirements of the major process units will have a significant effect on the operating factor. These units include the slurry feed tank agitators, the slurry feed pumps, the filter feed pumps and the stabilization mixer. Although the slurry feed tank mixers should not require major maintenance over the 3-year project life, the most likely problems would be bearing failure and erosion of the impellers. Bearing replacement would shut the mixer down for 2 to 3 days, while replacing the impeller would take 4 to 5 days. Spare parts inventory will include a full bearing set and one impeller. The plant could run at lower rate with one slurry feed tank shutdown.

The slurry feed pumps will require routine maintenance. The impeller and rubber lining will require replacement every 10 to 16 months. These pumps are provided with flushed seals, which should run for at least 6 to 8 months without replacement. Since these pumps are provided with online spares, this should have a minimal effect on production rate. Spare parts inventory will include complete wet ends for these pumps as well as replacement seal kits.

The filter press feed pumps are progressive cavity units. If these pumps are run dry or flow is lost, the sand in the slurry can cause premature failure due to stator wear. The recirculation loops and line flush connections designed into the piping should minimize this problem. Even so pump failure can be expected every 10 to 12 months. These pumps are also provided with flushed seals, which should run for at least 6 to 8 months without replacement. Since these pumps are provided with online spares, this should have a minimal effect on production rate. Spare parts inventory will include complete wet ends as well as replacement seal kits.

Since the silo solids are primarily silts and fine sands, blinding of the filter clothes should be a minimal problem. The clothes on the filter press will last for 3 to 6 months. Changing the clothes is a manual operation that will be accomplished after the filter press has been cleaned to remove silo material and reduce radon in the press room. This operation will require plant shutdown for 2 to 3 days.

The stabilization mixer is a rugged reliable unit. Maintenance on this unit will consist of replacing belts and bearings in the drive system and replacement of the paddle blades. This can all be accomplished in a yearly 1 week shutdown.

Waste box handling equipment includes the roller conveyor system, the manipulator arm and two overhead cranes. This equipment is instrumented for remote operation but can be accessed for maintenance and repair. The system components will have a very high mechanical reliability and an appropriate level of redundancy will be provided in the control functions. The spare parts inventory will include an extensive collection of control boards and hydraulic components.

6.2 PROCESS FLOW DIAGRAMS AND MASS BALANCE

The process flow diagrams and mass balance for the stabilization system are shown on Drawings D-00-10-001 through D-00-10-005 (Appendix A). These drawings show the sub-systems for: Slurry Pre-Treatment, Dewatering and Stabilization, Reagent Addition, Filtrate and Water Treatment and Building Ventilation and Radon Control. The design and operation of each of these stabilization system components is discussed in some detail in the Section 6.5.

6.3 WASTE BOX FLOW

The equipment and operations for dewatering and stabilizing the Silos 1 and 2 residues and filling the waste boxes are depicted in the process flow diagrams and described in some detail in Section 6.5. This section describes the operations and management of the waste boxes. A sketch showing the design and dimensions of the waste box is in Figure 6.1.

6.3.1 Waste Box Fill Operations

Clean, empty waste boxes are received from the supplier into a gravel storage pad. Each box and its lid are marked with a unique serial number and bar code. A forklift transfers the boxes to the clean container staging area, where it is fitted with a plastic liner, weighed on the Box Scales (H-8004), and placed on the Waste Box Conveyor, H-2001. The plastic liner extends out of the box and serves to keep solids off of the outside of the box. Waste Box Conveyor H-2001 moves the box, through an airlock into the stabilization room and places it under the discharge chute of the stabilization mixer. The discharge dam on the mixer is lowered and the mixer blades are started at low speed. They are used to push the treated material out of the mixer into the waste box. The mixer discharge speed is controlled by the operator, who closely monitors the procedure by video camera. The operator has the flexibility to close the discharge gate and add water or recycled filtrate to the stabilized material, if necessary, to improve the handleability of the treated waste. The waste box is filled to about 30% full. The mixer blades are reversed to pull the treated material away from the discharge chute.

000068

Waste Box Conveyor H-2001 moves the waste box to a position below the Waste Compactor, K-2001. K-2001 is a hydraulic compactor that will increase the loading of the treated material into the waste container. The compactor is a ram that is used to flatten and compact the clumps of soft and plastic soil-like treated material. A hydraulic ram type compactor is selected for the full-scale treatment since it is standard industrial equipment and should have excellent mechanical reliability. A concrete vibrator or a pulsating compactor system that will potentially compacted the waste to higher density materials was not chosen due to their expected higher downtime than the hydraulic ram.

The 5-ton capacity hydraulic press of K-2001 uses a 48-inch square steel plate to effect moderate compaction of the solids in the waste box. The compaction does not result in removal of all voids from the waste but does significantly increase the bulk density of the final treated waste. As indicated in Table 6.1 the treated waste material will be compacted to 93.1 lb/ ft^3 (wet weight basis) by the compaction effort. The bulk density includes any void space within the treated material but, does not include any free board in the waste box.

After the first lift is compacted in the waste box, the box is returned to the mixer discharge chute and another lift of treated material is added to the box. This lift is again compacted and the procedure is repeated until the box is full to within 4 inches from the top. For the conceptual design, the box filling and compaction time is allotted 40 to 45 minutes per batch treated. At this point the box is full. The waste box is conveyed to the observation station where the appearance of the stabilized material and box fill height is inspected. A manipulator (Z-2001) controlled from the operator station is used to collect a sample of the treated material for analysis. This sample is passed through the airlock into the hood of the onsite laboratory.

The operator inspects the treated material in the waste box for free water using a video camera. A manipulator (Z-2001) is then used to pull the plastic liner into the box. The manipulator is also used to place an adsorbent pad on top of the treated material to adsorb any condensation that collects in the waste box as the treated waste cools. The box is index under overhead crane (H-2001) which places the lid on the waste box. The manipulator (Z-2001) then uses a tensioner to bolt the lid into place. The lid has a rubber gasket and the sealed box is essentially gas tight. The box is indexed for transfer into the 24-hr curing area. An overhead crane, H-2002, picks up the box, using a 4 point grappling frame, and places it into the 24-hr curing room grid. This operation is conducted by video monitoring. The treated material in the waste boxes are allowed to cure for 24 hours. After curing in the 24-hr curing area, the box is surveyed, and any loose contamination on the exterior of the box is removed. The waste box then goes through and airlock into the storage bay. A second survey confirms that the box is free of smearable contamination and an overhead crane moves it into the storage grid. The mass of the sealed waste box is measured with hoist with a load cell built into it (H-8005). The sealed boxes are held for 2 weeks until they are transferred to FDF to arrange for shipment for disposal. A forklift is used to load the boxes onto trucks for transportation to the disposal facility .

6.3.2 Waste Box Rework Operations

000069

When sampling and analytical results indicate that a box of stabilized waste does not meet treatment criteria, it will be reprocessed in the rework room. The waste box will be retrieved

from the 24-hour curing room using the H-8001 conveyor system. It will be staged through the airlock and placed under the overhead crane. This crane will lift the box off of the conveyor and move it into the rework area . Since analytical results are obtained from the onsite laboratory within 24 hours of filling the box, the waste will not have time to harden and will resemble a dense moist soil. Based on the TCLP results, the correct reagents can be selected to fixate the specific metals that exceed the regulatory requirements.

In the rework area the lid is first removed from the box. The manipulator arm is then used to remove the adsorbent pad and loose plastic liner from the top of the box. A second waste box (recovery box) is then placed next to the off-spec box. The rework area contains a hydraulic bucket, similar to that on a backhoe, that is used to remove the waste from the first box into the recovery box. As the waste is transferred into the recovery box, a fluid grout containing a mixture of stabilization reagents will also be added to the recovery box and mixed into the waste using the hydraulic bucket. The recovery grout will be formulated and mixed into small portable hoppers in the clean box staging area and transferred into the rework area, using the waste box conveyor and overhead crane. The manipulator arm will be used to keep the plastic liner out of the recovery box. When the first recovery box is full, it will be sampled, lidded and a second recovery box staged in the rework area. This box will be also filled with waste and grout.

The manipulator arm will then be used to clean the rework area and the exterior of the waste boxes using a HEPA vacuum and high pressure water. The empty box will be lidded and used for the next rework operation. The recovery boxes will be allowed to cure for 24 to 48 hours, opened and inspected for bleed and sealed, after an adsorbent pad is placed on top of the waste. They will be transferred back to the waste box conveyor system when analytical results indicate that treatment criteria are met.

6.4 FACILITY ARRANGEMENT DRAWINGS

The Facility Arrangement drawings (Drawings D-90-02-001 and 002 [Appendix A]) show the layout for the Stabilization Process Building. The building is divided into several different areas, primarily delineated by potential for airborne radon and potential dose rate. There is the clean area for raw materials, the container storage area for sealed boxes, the process area with tanks that are closed to the room and the stabilization room where the filter cake and stabilized solids are open to the room. These areas are separated by walls, doors and for the high radon stabilization area, airlocks. In addition the building ventilation systems are designed and operated to maintain the stabilization room ("radon room") at negative pressure with respect to the rest of the building. Radon levels in all but the latter area should be below worker exposure limits (4pCi/L).

The stabilization building is, except for a 30-foot by 52-foot second level for the filter press, a one level high bay building that is roughly 180 feet by 125 feet. Where appropriate, as shown on the drawings, concrete walls provide shielding but much of the building is standard steel frame with sheet panel exterior. The building provides staging areas for clean boxes, lids and liners, includes space for 12 to 14 boxes to cure for 24 hours and storage space for 84 filled and sealed waste boxes. A control room with observation windows to the waste box lidding and sealing operation is provided, as is a lab with storage space for archive samples. Process tanks, wastewater treatment, dewatering and stabilization and waste box handling equipment are

contained in their separate areas. The building ventilation systems, HEPA filters, radon abatement units and blowers, are located in a shed located alongside the building.

All raw material tanks, bins, conveyors and feeders are in the "clean room," except for the lime and Portland cement silos, which are outside the building. The hydrated lime, Portland cement, triple superphosphate, and ferrous sulfate are all fed onto a single conveyor that transfers the additives into the stabilization mixer. This conveyor passes through the dividing wall between the clean room and the stabilization room. The conveyor is sealed to minimize the potential for leakage. The process utility systems are also located in this area.

The process tanks that are used to store and treat the slurry are contained in a second area. These tanks are sealed and vented to the existing radon control system (RCS), and radon leakage into the process area will be minimal. The slurry tanks are surrounded by block walls for shielding and are provided with additional pads that reduce the dose to operators performing maintenance activities on the tank mixers and slurry pumps. The design for the batch treatment tanks is similar. A building vent system pulls 4,000 to 6,000 standard cubic feet per minute (scfm) from this area. Sumps are provided to collect any leaks or spills and the building is designed to provide secondary containment for the tanks.

The filter press, stabilization mixer, waste box conveyor and rework room are contained within a third plant area. During the operation of this equipment, the filter cake and stabilized waste are open to the room. This results in elevated radon levels in this area. A separate vent system with radon removal is designed to keep radon in this part of the plant below 30 picoCuries/L (pCi/L). In order to minimize radon levels in this areas, the inner bags in the waste boxes will be closed and the lid sealed before moving the boxes to the 24-hr curing area.

6.5 SYSTEM DESIGN DESCRIPTIONS

The batch treatment system is operated 5- days per week, 2-shifts per day . The treatment system was sized to treat the Silo 1 and 2 residues, as a 10 wt % solids slurry, over the course of 3 years at a 67% equipment availability. This means that over the course of the week operating period, the system is required to operate at design rate for 105, 5-day weeks.

The mass balance is based on the assumption that approximately 44,000 gallons per day of 10 wt % solids slurry are pumped to the system. This slurry is pretreated in 20 batches of 2,200 gallons each (10 batches in 2 treatment tanks) and dewatered to produce a total of 902 cubic feet of filter cake per day. This requires 10 filter press runs of the 90 cubic foot filter press. The filter cake is then processed in 10 batches to produce a total of 984 cubic feet of stabilized solids per day. The 984 cubic feet of stabilized solids will be placed and compacted into an average of 7.9 waste boxes per day. The waste box internal fill volume with four inch free board is 125.1 ft^3. These waste boxes of treated material are sealed, cured and held for shipment to the final disposal site. The following subsections discuss the key parts of the treatment system.

000071

6.5.1 Slurry Pre-Treatment System

This system consists of the slurry feed tanks and batch treatment tanks and their associated equipment. This system is used to receive the slurry from the retrieval system, to provide batch surge capacity and homogenization of the slurry, and to amend the slurry prior to dewatering.

The first components of the slurry pre-treatment system are the two Slurry Feed Tanks, T-1001/1002. These carbon steel tanks are 16-foot diameter by 22.5-foot straight side with dished heads. They have a working capacity of approximately 22,000 gallons each. Both tanks are mixed with a single agitator, M-1001/1002. These 60 hp mixers have extended shafts that reach to within 36 inches of the tank bottom and have 9-foot diameter slant blade turbines. The mixers run at 56 rpm; the shaft and turbine are constructed of carbon steel. The tanks are fitted with 4 baffles to improve agitation.

T-1001/1002 are operated as batch feed tanks. Slurry is pumped into the tanks from the retrieval system and pumped out to the batch pre-treatment tanks. Each tank will receive 22,000 gallons of slurry per day. Slurry is pumped into the tanks from the retrieval system at 150 to 400 gallons per minute (gpm). Level indicators, backed up by level switches, are used to control the tank filling operation. The tanks are filled to within 2 feet of full and, in order to keep the agitator covered and maintain mixing of the slurry, are only emptied to a slurry level of 6 feet. The tanks are vented to the existing RCS. The slurry density or solids content in each tank is continuously monitored using a nuclear density meter. The solids content of the slurry must be measured to adjust batch charge volume to the treatment tanks and the reagent dose.

The Slurry Feed Pumps, P-1010/1012 A&B, transfer the slurry from the Slurry Feed Tanks to the Batch Treatment Tanks, T-1010/1012. These pumps are special centrifugal pumps designed for high solids slurry service. They are rubber-lined to minimize the abrasive effect of the sand in the slurry. In order to prevent plugging of the slurry lines, the pumps continuously recirculate slurry from the feed tanks to the treatment tanks and back to the feed tanks. The slurry lines are designed with a velocity of 8 feet/second to prevent settling of sand in the lines. The piping design also includes long radius bends, full port valves and other features for minimization of plugging.

The carbon steel Batch Treatment Tanks, T-1010/1012, are 8-foot diameter by 8-foot straight side, with conical bottoms. They are vented to the RCS and mixed by M-1010/1012. These mixers are low speed (40 rpm) paddle mixers designed for the thick, treated slurry. The first step in the pre-treatment process is to transfer 2,200 gallons of slurry from the feed tanks to the treatment tanks. A level indicator and level switches are used to control the charge volume. Ferrous sulfate solution (40% ferrous sulfate) is then added to the slurry and allowed to react with any soluble hexavalent chromium for 10 minutes. A hydrated lime slurry, at 10% hydrated lime, is then added and mixed for an additional 5 minutes. The treated slurry can then be fed to the filter press. One batch of treated slurry from each treatment tank should provide enough solids to fill the filter press. Batch charge volume to the treatment tanks will be adjusted to ensure that the press is filled.

The Filter Feed Pumps, P-1010/1012A/B, feed the slurry from the batch tanks (T-1010 and T-1012) to the filter press. These are progressive cavity pumps and can deliver 140 gpm at a

pressure of 100 psig. After each batch treatment tank is emptied, the tank, filter feed pump, and feed line will be rinsed with recycle filtrate. This is designed to flush solids from the line and eliminate plugging. The recycled filtrate is from the Recycle Filtrate Tank (T-4001). The filtrate from T-4001 is pumped by P-4001A/B and filtered (S-4001A/B) prior to being recycled to the outlet line of T-1010 and T-1012. A recycle line from the filter press to T-1010 and T-1012 are also provided.

6.5.2 Dewatering and Stabilization

This system includes the filter press, batch mixer and waste box conveyor. This system is used to dewater the treated slurry, mix the additives with the filter cake and fill the waste boxes.

The Filter Press, S-2001, is an automated plate filter press with a cake capacity of 90 cubic feet. The press is fitted with automatic plate shifters and a mechanism for "bumping" the plates. This is designed to remove any cake stuck to the filter cloths. The filter cloths are polypropylene and are calendered on the filtration side to reduce adherence of solids to the cloth. Underneath the press is a "drip" pan that collects any slurry or filtrate that leaks from the plates. The drip pan will almost always be dry and pneumatic cylinders will pull it to the side of the press prior to dropping the filter cake. The drip pan will be drained into a closed sump located in the filter room and returned to the slurry system.

The Filter Feed Pumps can deliver 140 gpm of slurry at 100 psig. This filtration pressure should generate a filter cake with a solids content of 50 wt %. When all of the slurry from the batch treatment tanks is fed to the press, the plates will be full. The filter press and filter cake will be "blown" with air at 40 to 60 psig. This will remove additional water from the cake and push all the filtrate out of the press. When this is complete the filter cake will be dumped into the mixer. The plates are opened by the filter press hydraulics. The plate shifters spread the plates and allow the cake to fall through a steel chute into the mixer. The plates are bumped, inspected by video camera and the press is closed.

During the filtration cycle, the filtrate drains into T-2001, Filtrate Receiver. This is a carbon steel tank, 4-foot diameter by 6-foot straightside with a working capacity of 600 gallons. P-2001, the Filtrate Transfer Pump, pumps most of the filtrate to the waste retrieval system. Some filtrate is transferred to the recycle filtrate tank in the water treatment system. P-2001 is a 200 gpm centrifugal pump that is operated off of level control in T-2001. The Filtrate Receiver tank will be vented to the existing RCS. The filter press air blow-down will go to the RCS by way of the Filtrate Receiver tank.

The Mixer, M-2001, is a twin shaft pugmill that is 5-foot wide by 8-foot long and 6-foot high. Though a single shaft pugmill was used in the Process Demonstration, most larger capacity pugmills use twin shafts. The twin shaft arrangement still provides high shear mixing like the single shaft, but requires less horsepower. Each of the two shafts has 12 paddle blades for mixing. Each shaft or mixer blade has a separate hydraulic drive and control system. The mixer blades can be counter-rotated for mixing or run in the same direction. The mixer runs about half full. At one end of the mixer, there is a discharge dam that retains the solids in the mixer. When the mix cycle is complete, the discharge dam is lowered by a hydraulic cylinder. This allows the solids to be pushed out of the mixer. The mixer is mounted on load cells, which are used to

determine the weight of the filter cake, which is used by the process control computer in the batch mix program. The amounts of stabilization additives can be rapidly adjusted to varying filter cake weights since the weight of the filter cake is measured for each batch treated. The stabilization mixer is vented into the existing RCS.

After the filter cake is dumped into the mixer, the paddles are started and the ferrous sulfate, triple superphosphate, hydrated lime and Portland cement are added to the filter cake. All the additives are transferred from their respective storage hoppers to weigh belt feeders, lifted onto the Additive Conveyor, M-2005, and dropped into the mixer. The ferrous sulfate is added first and mixed for 5 minutes. It is followed by the triple superphosphate, which is also mixed for 5 minutes. The lime and Portland cement are added together and the entire solid mass is mixed for 15 minutes. After this mix cycle is complete the waste is ready to be dumped into boxes. The reagent addition and mixing cycles are controlled by the batch mix program in the process control computer.

Clean, empty waste boxes are fitted with a plastic liner, weighed, and placed on the Waste Box Conveyor, H-2001. The plastic liner extends out of the box and serves to keep solids off of the outside of the box. H-2001 moves the box under the discharge chute of the mixer. The discharge dam on the mixer is lowered and the mixer blades are started at low speed. They are used to push the waste out of the mixer into the waste box. The mixer discharge speed is controlled by the operator, who closely monitors the procedure by video camera. If the treated material appears too sticky or clumped to discharge, the operator can close the discharge dam, add water, and remix the treated material until a suitable material for discharge is produced. The waste box is filled to about 30% full. The mixer blades are reversed to pull the waste away from the discharge chute.

H-2001 moves the waste box to a position below the Waste Compactor, K-2001. This 5-ton capacity hydraulic press uses a 48-inch square steel plate to effect moderate compaction of the solids in the waste box. The compaction does not result in removal of all voids from the waste but does significantly increase the bulk density of the final waste. As indicated in Table 6.1 the treated waste material will be compacted to 93.1 lb/ ft^3 (wet weight basis) by the compaction effort. For the conceptual design, the box filling and compaction time is allotted 40 to 45 minutes per batch treated.

After the first lift is compacted, the box is returned to the mixer discharge chute and another lift of waste is added to the box. This lift is again compacted and the procedure is repeated until the box is full to within 4 inches from the top. At that point, the box is full. The operator inspects the waste for free water using a video camera. The design has one manipulator (Z-2001). This manipulator is used to fold the plastic box liner over the treated waste. The manipulator then places an adsorbent pad on top of the waste to adsorb any condensation that may collects on top of the treated waste as it cools. The conveyor (H-2001) indexes the waste box to a different position where a an overhead crane (H-2003) with remote 4 point grappling frame places the lid on the box. The lidded waste box is indexed under Z-2001 which uses a tensioner to bolt the lid into place. The lid has a rubber gasket and the sealed box is essentially gas tight. The sealed box is transferred through the airlock into the 24-hr curing room using the roller conveyors, H-2001 and H-8001. This operation is conducted by video monitoring. After approximately 24-hour cure time, the boxes are indexed to a third position where they are surveyed. They then go to a final

station where a second survey confirms that the box is free of smearable contamination. A box hoist, equipped with load cells (H-8005) lifts the box to provide access to the bottom and to record final box weight. The roller conveyor moves the box into the warehouse where an overhead crane moves it into the storage bay. The sealed waste boxes will be stored for 2 weeks until they are transferred to FDF to arrange shipment for disposal.

6.5.3 Reagent Addition Systems

The reagent addition system consists of the hoppers, silos and tanks that are used to store the chemicals used to treat the Silos 1 and 2 solids. It also includes the conveyors and weigh belt feeders used to transfer the additives to the mixer system. All of the reagent addition system components are on the clean side of the stabilization system building and are not exposed to radon or other radionuclides.

The Triple Superphosphate Hopper, T-3001, and the Ferrous Sulfate Hopper, T-3002, are used to hold these granular reagents, which are delivered in super sacks. The ferrous sulfate supplied to the stabilization mixer is dry material, while ferrous sulfate solution is used to amend the slurry prior to dewatering. They are both 5-foot by 5-foot by 4-foot high with 60 degree cone bottoms. T-3002 has a plastic liner for protection from ferrous sulfate acid corrosion. Both hoppers have rotary valves to feed solids into Conveyors, H-3001 and H-3002, which lift the additives onto Weigh Belt Feeders, F-3001 and F-3002. The weigh belt feeders control the weight delivered to the additive conveyor, which delivers chemicals to the batch mixer for stabilization of the filter cake. The charge weights for the triple superphosphate and ferrous sulfate are controlled by the batch mix program in the process control computer.

The Hydrated Lime and Portland Cement Silos, T-3005 and T-3006, are used to store hydrated lime and Portland cement from bulk trucks. They are 12-foot diameter by 25-foot straight side and have cone bottoms. They are both equipped with baghouses and fans, B-3005 and B-3006, to control dust during unloading of reagents. Both silos have rotary valves that feed reagents to Conveyors, H-3005 and H-3006. These conveyors transfer the Portland cement and hydrated lime to Weigh Belt Feeders, F-3005 and F-3006, which control the weight delivered to the additive conveyor. The additive conveyor delivers the chemicals to the batch mixer for stabilization of the filter cake. Charge weights for Portland cement and hydrated lime are controlled by the batch mix program.

In addition, the hydrated lime silo has a second rotary valve that feeds hydrated lime to the Lime Batch Conveyor, H-3004. H-3004 lifts hydrated lime to the Lime Batch Weigh Belt Feeder, F-3004, that controls the weight of hydrated lime added to the Lime Slurry Tank, T-3004. This hydrated lime addition system is used to make up batches of 10 wt % hydrated lime slurry for the pre-treatment of the Silos 1 and 2 solids slurry in the Batch Treatment Tanks, T-1010 and T-1012. The Lime Slurry Tank, T-3004, holds 3,000 gallons of hydrated lime slurry and is agitated by the Lime Slurry Mixer, M-3004. The hydrated lime slurry is made by adding recycle filtrate to T-3004, and then mixing in the lime solids. The hydrated lime slurry is pumped into the batch treatment tanks by P-3004, a centrifugal slurry pump. Charge volume is measured and controlled by monitoring the level pumped from T-3004.

The Ferrous Sulfate Tank, T-3003, is an 8-foot diameter by 8-foot straight side polyethylene tank that holds 3,000 gallons of ferrous sulfate solution used to amend the slurry prior to dewatering. The ferrous sulfate solution is delivered in tote tanks or tank trucks. The Ferrous Sulfate Pump, P-3003, transfers the solution to the batch treatment tanks. This centrifugal pump is constructed of stainless steel. T-3003 is mixed by an agitator, M-3003. Charge volume is measured and controlled by monitoring the level pumped from T-3004.

6.5.4 Filtrate and Water Treatment

This system includes the filtrate tank used to recycle filtrate to the batch treatment tanks and for flushing lines in the slurry system and the packaged water treatment system. The water treatment system is used to remove heavy metals, solids and radionuclides from filtrate so that it meets the AWWT wastewater acceptance criteria. The treated filtrate would then be discharged to the AWWT.

During most of the project it will not be necessary to treat filtrate. If the average solids content of the Silos 1 and 2 solids in the temporary storage tanks is 50 wt % or higher, the retrieval activities will require make-up water in addition to the returned filtrate. The majority of the filtrate will be therefore be recycled from the filtrate receiver tank (T-2001) to the waste retrieval system to slurry more feed. Part of the filtrate will be transferred to the Recycle Filtrate Tank (T-4001). Filtrate treatment may be necessary if solids are lower than expected or if additional water is produced by other activities associated with the removal or processing activities.

T-4001, the Recycle Filtrate Tank, is a 12-foot diameter carbon steel tank that holds up to 10,000 gallons of filtrate. During the majority of the project, this filtrate is filtered (S-4001A/B) and used to intermittently flush slurry lines, tanks or pumps. Near the end of the project the filtrate will be fed to the water treatment system. IT expects the filtrate produced from the dewatering of the Silo 1 and 2 solids to have lower TDS than the filtrate from the Process Demonstration. The high TDS seen during Process Demonstration may have been an artifact of the highly soluble components of the surrogate. The Recycle Filtrate Pump, P-4001, is a centrifugal pump rated at 200 gpm of filtrate. Filters S-4001 A/B are bag filters.

Towards the end of the removal activities, or whenever filtrate inventory needs to be reduced, filtrate will be treated to remove heavy metals (lead and selenium) and radionuclides from the filtrate prior to discharge to the existing AWWT. This is accomplished by pumping (P-4001A/B) the filtrate from T-4001 to a batch water treatment system that includes reaction or treatment tanks and reagent addition systems. The 5 reactions used in this process are:

- Bleach (hypochlorite) addition (to oxidize selenite to selenate) in T-4002A/B,
- Phosphoric acid addition (to precipitate soluble lead) in T-4010A/B,,
- Barium chloride (to precipitate soluble selenate) in T-4010A/B,.
- Sodium Sulfate (to precipitate any excess barium) in T-4010A/B, and
- Adjustment of pH with hydrochloric acid (to meet AWWT pH requirements) inT-4010A/B.

The reagents (bleach, phosphoric acid, barium chloride, hydrochloric acid, and sodium sulfate) are all liquids stored in individual tote - tanks and pumped into the treatment tanks (T-4002A/B

and T-4010A/B) by chemical metering pumps (P-4002, P-4011, P-4012, P-4014, P-4115). These are typically plastic, diaphragm pumps.

The water is treated in two sets of batch treatment tanks. First, filtrate or wastewater is pumped from the recycle filtrate tank to one of the oxidation tanks: Bleach is mixed with the filtrate using an in-line mixer as it is transferred into the oxidation tanks (T-4002 A/B). The bleach treated filtrate is allowed to react for at least 4 hours to allow the oxidation reaction to complete. When the oxidation reaction is complete, the wastewater is transferred, in 3000 gallon batches, to one of the wastewater treatment tanks (T-4010A/B) with mixer M-4010A/B. Two oxidation reactors are provided so that water can be pumped out of one tank while the other is being filled or reacting. The rest of the treatment chemicals are then added to the treatment tank. The batch treatment time should be 2 to 3 hours. The treatment forms solids that are allowed to settle out of the water and are pumped to the slurry batch treatment tanks (T-1010/1012) for feed to the filter press. The solids can be mixed with slurry and filtered or accumulated and filtered separately.

The clear water from the treatment tank is pumped (P-4021) into one of the two 30,000 gallon effluent tanks (T-4020 A/B). These effluent check tanks are used to accumulate water for analysis. When analysis confirms that water meets AWWTS criteria, it is released for discharge to the AWWTS. The treated water is pumped through a set of bag filters (S-4020 A/B) to the AWWT, by P-4020, a centrifugal pump,.

IT's filtrate treatment results indicate that the metals concentrations are decreased to below the AWWT treatment standards as described in Table 2.6 of FLUOR DANIEL FERNALD DRAFT "SILOS 1 & 2 FEASIBILITY STUDY BASIS FOR DESIGN 40430-RP-0001" Revision-D, January 11, 1999. The reagents used were carefully selected to react with the lead and selenium to produce a low solubility precipitate that would settle well. The surrogates used during this project did not contain radionuclides; therefore, there are no experimental results to show that they are removed. However, based on IT's experience with the radionuclides listed in FDF Table 2.6, the reagents used to treat the metals in filtrate will effectively lower the radionuclide levels to below the acceptance criteria. Specifically, the addition of phosphate in the form of phosphoric acid will precipitate the radioactive lead, polonium, protactinium, thorium, and uranium. Also the addition of barium and sulfate will precipitate the radium from the filtrate.

6.5.5 Building Ventilation and Radon Control

The activities in the stabilization process have the potential to generate airborne dust and radon gas. Release of these contaminants is prevented by the three (3) components of the building ventilation and radon control system. The three systems are as follows.

- The first of these is the Tank Vent System (TVS). The process areas with the highest radon levels (i.e., process tanks, filter press, and stabilization mixer) will discharged into the to the existing RCS. The RCS is part of the waste retrieval system. The RCS is designed to capture high concentrations of radon in gas vented from the headspace of the temporary storage tanks. The RCS also has enough excess capacity to treat up to 500 scfm of tank vents from the stabilization system TVS.

000077

- The second system provides ventilation for the stabilization and waste box handling operations. These system vents areas surrounding the equipment discharging into the RCS. The air from these areas will contain radon at levels above the Permissible Exposure Limit (PEL) but well below that experienced in the tank vent system. The PEL for radon is 4 pCi/L. This system includes both a dehumidification unit and carbon beds for radon removal, as well as HEPA filters to remove airborne particulates.

- The third system provides ventilation for the rest of the process building where radon levels are below the PEL. This system includes HEPA filters.

6.5.5.1 TVS

The Tank Vent System (TVS) for the stabilization process is designed to maintain the tanks and other process equipment at negative pressure with respect to the rest of the building. All of the process equipment that normally contains slurry or filter cake are manifolded to the TVS. This includes the slurry feed tanks, batch treatment tanks, the filtrate receiver and filtrate tanks, air blow-down from filter press and the stabilization mixer. The air blow-down of the filter press will go to the TVS by way of the filtrate receiver. The tanks in the water treatment system are also vented to the TVS. The TVS is comprised of the manifold system, the breather valves on the tanks and the Tank Vent Booster Blower, B-6010. B-6010 ensures that there is adequate pressure to transfer the tank vent gases to the existing RCS. This blower is equipped with automatic dampers and flow control system designed to manage TVS header pressure and limit TVS flow to the RCS to 500 scfm.

6.5.5.2 High Radon Areas

The high radon vent system for the stabilization building pulls air from the process areas where silo residues may be open to the room. This includes the room or enclosure around the filter press and stabilization mixer, the box fill operations and the rework room. During the operation of this equipment, the filter cake and stabilized waste are intermittently open to the room. This results in elevated radon levels in this area. Based on an estimated radon emanation rate of 385 pCi/ft^2-sec, 2 open waste boxes and 5 ft^2 of other exposed waste, radon release is estimated to be 22,000 pCi/sec. Typically only one box will be open so average radon release should be significantly lower. The high radon vent system with radon removal is designed to keep radon in this part of the plant below 30 picoCuries/L (pCi/L). In order to minimize radon levels in this areas, the inner bags in the waste boxes will be closed and the lid sealed before moving the boxes to the 24-hr curing area.

This system is designed to remove and treat 2000 scfm from these areas which provides five to six air changes per hour. The system includes the Stabilization Building HEPA Filters, S-6001A/B, a Dehumidification System, E-6001, Carbon Adsorbers, C-6001 A/B and the Stabilization Building Ventilation Blower, B-6001. The HEPA filters are standard two stage, high capacity modules. They are designed for bag removal of plugged filters. The dehumidification system consists of a 30 ton refrigeration unit and an air dryer package. The dehumidification system is designed to produce 50°F air with a dewpoint of less than minus 10°F. The condensate from the unit is pumped to the filtrate storage tank by P-6001, the Condensate Pump. The dry air then goes to the carbon beds that remove radon. The carbon beds

contain 160,000 lb carbon. The ventilation blower is a high pressure centrifugal fan. The blower discharges the treated air to the atmosphere through the Stack, Z-6001.

6.5.5.3 Low Radon Areas

The vent system for the low radon areas in the process building is designed to remove and treat 10,000 scfm of air. This system services the plant areas where the waste is contained in tanks or sealed boxes. All tanks are vented to the TVS and sealed waste boxes will contain radon. Since radon leakage sources are eliminated or at least minimized, the air from this system will contain less than 4 pCi/liter of radon and does not require radon removal. The Container Building Blower, B-6002 pulls the air through the HEPA Filters, S-6002 A/B and discharges it to the stack, Z-6001. The HEPA units are standard two stage, high-capacity modules.

6.5.6 Process Control

Process control includes the instrumentation and equipment used to control the physical operation of the stabilization system and the sampling and analytical activities conducted to ensure that the stabilized waste meets all criteria. A PC based Computer Control System (CCS) will be used to monitor and control the process instrumentation. The primary physical control parameters for the process include:

- Slurry charge to the batch treatment tanks
- Ferrous sulfate and lime slurry addition to batch treatment tanks
- Filter Press Feed/Dump cycle
- Filter cake weight
- Additive Charge to the stabilization mixer
- Stabilization mix cycle
- Box fill operations

The primary chemical/analytical process control parameters are:

- Feed slurry solids
- Feed slurry pH and alkalinity
- Feed slurry (M)TCLP metals
- Filter cake solids
- Filtrate metals
- Waste (M)TCLP extract pH
- Waste TCLP metals

The CCS will not only monitor and control the process equipment, but will also use data input from the results of sample analyses to adjust process operations. All CCS activities will be under the control of the head operator.

6.5.6.1 Slurry Material

000079

The chemical and physical consistencies of the material to be treated during a given day will be uniform as a result of mixing the feed slurry in Slurry Feed tanks (T-1001/1002). This leads to

improved process control due to the consistency of bathes of material to be filtered and stabilized.

The treatment system relies on process control to maintain consistent operation. Process control starts in the slurry feed tanks (T-1001 and T-1002). The slurry material accumulated in these tanks will be sampled and analyzed for total solids, pH, and alkalinity. The solids content is required to determine the amounts of ferrous sulfate heptahydrate and hydrated lime to be added to the batch treatment tanks (T010 and T-1020) with the slurry material. The specific gravity of the slurry will be continuously monitored by a nuclear density instrument. This specific gravity will be correlated with solids content and the CCS will alert the operator to changes in solids content of the slurry.

For each batch of slurry pumped to the batch treatment tank, the process control system will use the volume and solids content of the batch to calculate the volume of ferrous sulfate and hydrated lime slurry to be added to each batch.

The process chemist will input the pH and alkalinity results into the CCS, which will be programmed to recognize changes or fluctuations in the chemical composition of the slurry material. Values outside of acceptable limits will cause the CCS to alert the operator of the variation. Samples of the slurry material would be obtained and transferred to the laboratory. The process chemists would dewater the slurry in a bench-scale recessed chamber filter press and subject the dewatered material to a series of stabilization formulations. These stabilization formulations would then be subjected to a modified TCLP to determine lead leachability. The most effective formulation would be entered into the process control system for the treatment of the slurry material.

6.5.6.2 Dewatering

Load cells will be used to determine the weight of each batch of filter cake which is dropped into the stabilization mixer. Based on the solids content of the slurry material used for the batch and the amount of ferrous sulfate and hydrated lime added to each batch, the process control system can calculate the total solid material in each batch and estimate the solids content and bulk density for each batch of filter cake material. Comparison of these results to the expected values and a running average of the last 5 batches will allow the process control system to alert the operator to changes in the dewatering operation.

The color and clarity of filtrate will also be monitored by online instrumentation. The CCS will alert the operator to variations in the filtrate quality.

6.5.6.3 Stabilization

The CCS will use weight of the filter cake in the mixer to determine the amounts of Portland cement, hydrated lime, ferrous sulfate and triple superphosphate to added to each stabilization batch. The process control system will open the airlock for each reagent silo (MV-3005, MV-3006) or hopper (MV3001, MV3002) and activate each reagent conveyor (H-3001, H-3002, H-3005, H-3006). The process control system will monitor each reagent weigh belt (F-3001, F-3002, F-3005, F-3006) to ensure that the correct amount of reagent has been added to each

stabilization batch.

The amounts of stabilization additives can be rapidly adjusted to varying filter cake weights since the weight of the filter cake will be measured for each batch treated. Also the daily feed material will be essentially homogenous since the slurry feed will be mixed in T-1001/1002. The filter cake percent solid and bulk densities will therefore be consistent during daily operations. The filter cake weight will be measured within ± 1 percent. The stabilization mix ratio is designed to meet all requirements if the reagents are controlled within ± 10 percent of design (90% to 110%). The weigh belt feeders can control reagent additions to within ± 1 percent. Since the feed will be consistent during daily operations and the waste and reagents weights are measured at accuracy much tighter than the necessary to maintain a properly stabilized product, the robustness of the stabilization operation will be very high.

As discussed above, the stabilization formulation may be varied to account for variation in the slurry material. The pH and alkalinity of the slurry material will be monitored to determine changes in the chemical composition of the slurry material. If required, samples of the slurry material will be obtained remotely and formulation development will be conducted. The formulation development work can be completed within 8 to 10 hours and, if necessary, the adjusted formulation entered into the process control system.

Dewatering batches with higher than average solids contents may require the addition of water during stabilization treatment. The process control system can determine the need for additional water based on the estimated solids content for the filter cake batch.

6.5.6.4 Filtrate Treatment

While the filtrate from the dewatering process does not required for recycle, it must be treated prior to discharge to the AWWT. The process control system will add the proper amount of bleach, phosphoric acid, barium chloride, hydrochloric acid, and sodium sulfate using pumps into the treatment tanks (T-4002A/B and T-4010A/B) by chemical metering pumps (P-4002, P-4011, P-4012, P-4014, P-4115). The proper amount of bleach, phosphoric acid, barium chloride, and sodium sulfate will be determined from analyzing the metal content of the filtrate. The amount of hydrochloric acid will be determined by monitoring the filtrate pH during the neutralization with hydrochloric acid. The process control system will also monitor the turbidity of the material entering the effluent tanks (T-4012A/B). In the event that the filtrate contains high suspended solids, the process control system will temporarily shutdown pump P-4010A/B to allow the solids to settle in Waste Water Treatment tanks (T-4010A/B) and in Effluent tanks (T-4012A/B). The settle solids from T-4010A/B are pumped to the slurry batch treatment tanks (T-1010/1012) for feed to the filter press. The solids can be mixed with slurry and filtered or accumulated and filtered separately.

The settle solids from Effluent tanks (T-4012A/B) will be collected using filters S-4020A/B.

6.6 PRICED EQUIPMENT LIST

000081

Table 6-2 is the priced equipment list and contains a description and price for all significant process and utility equipment. Instruments and piping components are not included on this list.

Company Name:	Fluor Daniel Fernald		
Project Name:	FEMP OU-4 Silo 1 & 2 POP Demo	**PROCESS EQUIPMENT LIST**	Initiated: JTS
Location:	Fernald, OH	**(Conceptual Design)**	Checked:
Subcontract No..			Approved:
Project Number:	775743		Revision: 0

Equipment Number	Qty	Equipment Name	Equipment Description	Motor HP	Vendor	Unit Cost	Cost
Area 10 - Slurry Pretreatment							
T-1001	1	Slurry Feed Tank	34,000 Gallons, carbon steel, 16 ft diam x 22.6 ft high	-		$75,000	$75,000
T-1002	1	Slurry Feed Tank	34,000 Gallons, carbon steel, 16 ft diam x 22.6 ft high	-		$75,000	$75,000
M-1001	1	Slurry Feed Tank Mixer	480 V/3 ph, 316 SS wet parts	60	Chemineer	$72,000	$72,000
P-1012 A/B	2	Slurry feed Pump	Centrifugal, rubber lined, 250 GPM @ 20 psig TDH, 480 V/3 ph	10		$10,800	$21,600
T-1012	1	Batch Treatment Tank	3,000 Gallons, Carbon Steel, 8 ft diam x 8 ft high, w/ 60° cone	-		$7,500	$7,500
T-1010	1	Batch Treatment Tank	3,000 Gallons, Carbon Steel, 8 ft diam x 8 ft high, w/ 60° cone	-		$7,500	$7,500
P-1020 A/B	2	Filter Feed Pump	Moyno, rubber lined, 140 GPM @ 100 psig TDH, 480 V/3 ph	10		$7,500	$15,000
M-1002	1	Slurry Feed Tank Mixer	480 V/3 ph, 316 SS wet parts	60	Chemineer	$72,000	$72,000
P-1010 A/B	2	Slurry feed Pump	Centrifugal, rubber lined, 250 GPM @ 20 psig TDH, 480 V/3 ph	10		$10,800	$21,600
M-1012	1	Batch Tank Mixer	480 V/3 ph, 316 SS wet parts	15		$16,600	$16,600
M-1010	1	Batch Tank Mixer	480 V/3 ph, 316 SS wet parts	15		$16,600	$16,600
P-1022 A/B	2	Filter Feed Pump	Moyno, rubber lined, 140 GPM @ 100 psig TDH, 480 V/3 ph	10		$7,500	$15,000
Area 20 - Dewatering and Stabilization							
T-2001	1	Filtrate Receiver	600 Gallons, Carbon Steel, 4 ft diam x 6 ft high	-		$1,200	$1,200
P-2001 A/B	2	Filtrate Transfer Pump	Horiz centr, cast iron, 200 GPM @ 60 psig TDH, 480 V/3 ph	15		$7,000	$14,000
EP S-2001	1	Filter Press	Plate press, 98 ft^3, Automatic Plate Shifters	7.5		$398,000	$398,000
EP K-2001	1	Hydraulic Compactor	Hydraulic Press, 5 ton	7.5		$125,000	$125,000
EP M-2001	1	Stabilization Mixer	Pugmill, 5 ft W, 8 ft x 5 ft, Twin Shaft	60		$75,000	$75,000
EP H-2001	1	Waste Box Conveyor	Roller conveyor, 5 ft wide x 60 ft long, Heavy Duty	15		$250,000	$250,000
H-2005	1	Additive Conveyor	Belt conveyor, 310 lb/min, 2ft wide x 30 ft long	2		$12,800	$12,800

Table 6.2 Process Equipment, Instrumentation, and Spare Parts (Page 1 of 10)

INTERNATIONAL TECHNOLOGY CORPORATION

DESIGN DATA

2292

000082

Equipment Number	Qty	Equipment Name	Equipment Description	Motor HP	Vendor	Unit Cost	Cost
Area 30 - Reagent Addition systems							
T-3001	1	TSP Hopper	Carbon Steel, 5 ft W x 5 ft L x 4 ft high, w/ 60° wedge cone	-		$3,000	$3,000
MV-3001	1	TSP Rotary Valve	6 in dia.	1		$1,600	$1,600
H-3001	1	TSP Conveyor	Screw Conveyor, 6 in dia. x 15 ft	1		$22,800	$22,800
F-3001	1	TSP Weigh Belt Feeder	156 lb/batch @ 50 lb/min	1		$5,800	$5,800
T-3002	1	Ferrous Sulfate Hopper	Carbon Steel, 5 ft W x 5 ft L x 4 ft high, w/ 60° wedge cone	-		$3,000	$3,000
MV-3002	1	Ferrous Sulfate Rotary Valve	6 in dia.	1		$1,600	$1,600
H-3002	1	Ferrous Sulfate Conveyor	Screw Conveyor, 6 in dia. x 10 ft	1		$15,800	$15,800
F-3002	1	Ferrous Sulfate Weigh Belt Feeder	78 lb/batch @ 26 lb/min	1		$5,800	$5,800
T-3003	1	Ferrous Sulfate Tank	3,000 Gallons, FRP or Polyethylene, 8 ft diam x 8 ft high	-		$4,500	$4,500
M-3003	1	Ferrous Sulfate Mixer	480 V/3 ph, SS wet parts	1		$1,800	$1,800
P-3003 A/B	2	Ferrous Sulfate Pump	Horiz centr, cast iron, 30 GPM @ 25 psig TDH, 480 V/3 ph	2		$6,000	$12,000
T-3005	1	Lime Silo	Carbon Steel, 12 ft diam x 25 ft high, w/ wedge cone	-		$32,000	$32,000
B-3005	1	Lime Silo Vent Blower		15		$5,400	$5,400
MV-3004	1	Lime Batch Rotary Valve	6 in dia.	1		$4,000	$4,000
H-3004	1	Lime Batch Conveyor	Belt conveyor, 150 lb/min, 14 ft long	1		$25,800	$25,800
F-3004	1	Lime Batch Weigh Belt Feeder	2189 lb/batch @ 150 lb/min	1		$5,800	$5,800
T-3004	1	Lime Slurry Tank	3,000 Gallons, Carbon Steel, 8 ft diam x 8 ft high	-		$6,000	$6,000
M-3004	1	Lime Slurry Mixer	480 V/3 ph, SS wet parts	5		$3,200	$3,200
P-3004 A/B	2	Lime Slurry Pump	Horiz centr, cast iron, 30 GPM @ 25 psig TDH, 480 V/3 ph	2		$6,000	$12,000
MV-3005	1	Lime Rotary Valve	6 in dia.	1		$2,400	$2,400
H-3005	1	Lime Conveyor	Belt conveyor, 78 lb/min, 28 ft long	1		$25,800	$25,800
F-3005	1	Lime Weigh Belt Feeder	391 lb/batch @ 78 lb/min	1		$5,800	$5,800
T-3006	1	Portland Cement Silo	Carbon Steel, 12 ft diam x 25 ft high, w/ wedge cone	-		$3,200	$3,200
B-3006	1	Portland Cement Silo Vent Blower		15		$5,000	$5,000
MV-3006	1	Portland Cement Rotary Valve	6 in dia.	1		$1,800	$1,800
H-3006	1	Portland Cement Conveyor	Belt conveyor, 156 lb/min, 28 ft long	2		$25,800	$25,800
F-3006	1	Portland Cement Weigh Belt Feeder	782 lb/batch @ 156 lb/min	1		$5,800	$5,800
H-3007	1	TSP Monorail Hoist	2 ton, 30 ft travel	1		$14,500	$14,500
H-3008	1	Ferrous Sulfate Monorail Hoist	2 ton, 20 ft travel	1		$14,500	$14,500

Table 6.2 Process Equipment, Instrumentation, and Spare Parts (Page 2 of 10)

	Equipment Number	Qty	Equipment Name	Equipment Description	Motor HP	Vendor	Unit Cost	Cost
Area 40 - Filtrate and Water Treatment								
	T-4001	1	Recycle Filtrate Tank	10,000 Gallons, Carbon Steel, 12 ft diam x 12 ft high	-		$20,000	$20,000
	P-4001 A,B	2	Recycle Filtrate Pumps	Horiz centr, cast iron, 200 GPM @ 80 psig TDH, 480 V/3 ph	20		$8,000	$16,000
	P-4005 A,B,C	3	Sump Pumps	25 GPM @ 25 psig TDH, 480 V/3 ph	2		$6,000	$18,000
	S-4001 A,B	2	Recycle Filtrate Filters	Bag Type, 20 um, 10 in dia. x 4 ft	-		$7,200	$14,400
	T-4002A/B	2	Oxidation Tank	15,000 Gallons, Carbon Steel, 12 ft diam x 18 ft high	-		$30,000	$60,000
	M-4010 A/B	2	WWTT Mixer	480 V/3 ph, SS wet parts	2		$2,500	$5,000
	T-4010 A/B	2	WWT Tank	3000 gallons, 8 ft dia x 10 ft tall, w cone			$7,500	$15,000
	P-4010 A/B	2	WWT Transfer Pump	Horiz centr, cast iron, 200 GPM @ 80 psig TDH, 480 V/3 ph	20		$4,200	$8,400
								$0
	P-4002	1	Hypochlorite Addition Pump	Metering Pump, 120 V/1 ph	0.04		$2,400	$2,400
	P-4011	1	Barium Chloride Addition Pump	Metering Pump, 120 V/1 ph	0.04		$2,400	$2,400
	P-4012	1	Phosphoric Acid Addition Pump	Metering Pump, 120 V/1 ph	0.04		$2,400	$2,400
	P-4014	1	Hydrochloric Acid Addition Pump	Metering Pump, 120 V/1 ph	0.04		$2,400	$2,400
	P-4015	1	Sodium Sulfate Addition Pump	Metering Pump, 120 V/1 ph	0.04		$2,400	$2,400
	T-4020 A/B	2	Effluent Tank	30,000 Gallons, Carbon Steel, 16 ft diam x 22 ft high			$60,000	$120,000
	P-4020	1	Overflow Pump	Horiz centr, cast iron, 40 GPM @ 30 psig TDH, 480 V/3 ph	3		$8,000	$8,000
	P-4021 A/B	2	WWT Sludge Pump	Prog cavity, cast iron, 10 GPM @ 30 psig TDH, 480 V/3 ph	2		$5,000	$10,000
	S-4020 A,B	2	Effluent Filters	Bag Type, 20 um, 10 in dia. x 4 ft	-		$7,200	$14,400
Area 60 - Building Ventilation and Radon Control								
	S-6001 A/B	2	High Radon System HEPA Filters	2 ft H x 4 ft W x 5 ft, 2 - 2 ft x 2 ft High Cap. w/ std. Pre-filter	-		$22,800	$45,600
EP	E-6001	1	Dehumidification Package	2000 SCFM @ -10°F dewpoint	20		$148,000	$148,000
	P-6001 A/B	2	Condensate Pump	Horiz centr, SS wetted parts, 10 GPM @ 30 psig TDH, 480 V/3 ph	2		$5,600	$11,200
	C-6001 A/B	2	Carbon Adsorber	80,000 lb Carbon	-		$250,800	$501,600
	B-6001 A/B	2	High Radon System Ventilation Blower	2000 scfm @ 24 in H_2O	20		$5,400	$10,800
	Z-6001	1	Stabilization Building Ventilation Stack	60 ft x 18 in diam	-		$5,200	$5,200
	S-6002 A/B	2	Building Vent HEPA Filters	4 ft H x 6 ft W x 8 ft, 6 - 2 ft x 2 ft High Cap. w/ std. Pre-filter	-		$45,400	$90,800
	B-6002 A/B	2	Building Ventilation Blowers	10,000 scfm @ 16 in H_2O	50		$72,000	$144,000
	B-6010 A/B	2	Tank Vent Booster Fan	500 scfm @ 12 in H_2O	3		$4,000	$8,000
EP	K-6001	2	Breathing Air Compressor Package	50 scfm	5		$14,200	$28,400
EP	K-6002	2	Utility Air Compressor Package	200 scfm @ 100 psig	20		$16,300	$32,600

Table 6.2 Process Equipment, Instrumentation, and Spare Parts (Page 3 of 10)

Equipment Number		Qty	Equipment Name	Equipment Description	Motor HP	Vendor	Unit Cost	Cost
Area 80 - Box Management								
EP	H-2003	1	Overhead Crane - Rework/Lidding	15 ton, 15 ft span x 40 ft travel, remote grapple	5		$300,000	$300,000
EP	H-8001	1	Waste Box Conveyor	Roller conveyor, 5 ft wide x 210 ft long, Heavy Duty	15		$875,000	$875,000
	H-8004	1	Box Scales	7.5 ton capacity	-		$13,200	$13,200
	H-8005	1	Box hoist and Scales	15 ton capacity	1		$25,800	$25,800
EP	H-8010	1	Warehouse Bridge Crane	15 ton, 60 ft span, 120 ft travel, remote grapple	10		$450,000	$450,000
EP	Z-2001	1	Manipulator Arm	Shilling 6° Manipulator, 8 ft reach, 400 lb capacity	1		$370,000	$370,000
	Z-8002	1	Hydraulic Bucket - Rework	2 ton, 20 ft span	10		$35,000	$35,000
		1	Fork Lift	10 ton capacity	-		$23,000	$23,000
Area 90 - Process Control System								
EP		1	Computer Control Ssystem	Computers, consoles and I/O modules			$340,000	$340,000

EP-denotes skid mounted engineered package unit supplied complete with all mechanical, electrical and control equipment.

Table 6.2 Process Equipment, Instrumentation, and Spare Parts (Page 4 of 10)

Equipment Number	Qty	Equipment Name	Equipment Description	Motor HP	Vendor	Unit Cost	Cost

Company Name: Fluor Daniel Fernald
Project Name: FEMP OU-4 Silo 1 & 2 POP Demo
Location: Fernald, OH
Subcontract No..
Project Number: 775743

TECHNOLOGY SPECIFIC INSTRUMENTATION
(Conceptual Design)

Initiated: JTS
Checked:
Approved:
Revision: 0

Equipment Number	Qty	Equipment Name	Instrument Description	Vendor	Unit Cost	Total Cost
Area 10 - Slurry Pretreatment						
LI-1001/1002	2	Slurry Feed Tank	Level indicator, capacitance		$5,500	$11,000
LS-1001/1002	6	Slurry Feed Tank	Level switches, conductance		$180	$1,080
LI-1010/1012	2	Batch Treatment Tank	Level indicator, capacitance		$5,500	$11,000
LS-1010/1012	6	Batch Treatment Tank	Level switches, conductance		$180	$1,080
AI-1010/1012	2	Slurry Feed Pumps	Slurry density analyzer, nuclear denity, 1.0 to 1.2		$9,200	$18,400
FI-1010/1012	2	Slurry Feed Pumps	Slurry flow meter, magnetic flow, 0-300 gpm		$6,400	$38,400
FI-1001 to 1012	4	Tanks	Purge gas flow indicator, turbine, 1-20 scfm		$350	$1,400
PI-1001 to 1012	4	Tanks	Pressure indicator, Magnehelic, -10 to 10 inches H2O		$280	$1,120
FI-1050 to FI-1	25	Piping	Flush flow meter, paddle, 0 - 50 gpm		$330	$660
FIT-1002 to 10	4	Tanks	Recycle filtrate flow totalizer, turbine, 0 to 50 gpm		$860	$3,440
PI-1050 to 1058	8	Slurry Feed Pumps	Pressure indicators, 0 - 50 psig		$210	$1,680
PI-1060 to 1068	8	Filter Feed Pumps	Pressure indicators, 0 - 120 psig		$210	$1,680
Area 20 - Dewatering and Stabilization						
LIC-2001	1	Filtrate Reciever	Level controller, capacitance		$6,200	$6,200
LS-2001	4	Filtrate Reciever	Level switches, conductance		$180	$720
S-2001	1	Filter Press	Engineered Control Package			
S-2001	2	Hydraulic Ram	Position limit switches			
S-2001	4	Hydraulic Pump	Pressure switches			
S-2001	2	Air Pump (Multiplier)	Pressure switches			
S-2001	2	Filter Press Drip Pan	Level switches, conductance			
S-2001	2	Filter Press Drip Pan	Position limit switches			
M-2001	1	Stabilization Mixer	Engineered Control Package			
M-2001	4	Hydraulic Pump	Pressure switches			
M-2001	2	Discharge Gate	Position limit switches			
FI-2001	1	Stabilization Mixer	Purge gas flow indicator, turbine, 1-20 scfm		$350	$350
PI-2001	1	Stabilization Mixer	Pressure indicator, Magnehelic, -10 to 10 inches H2O		$280	$280
K-2001	1	Hydraulic Compactor	Engineered Control Package			
K-2001	4	Hydraulic Pump	Pressure switches			

Table 6.2 Process Equipment, Instrumentation, and Spare Parts (Page 5 of 10)

INTERNATIONAL TECHNOLOGY CORPORATION
DESIGN DATA
2292
000086

Equipment Number	Qty	Equipment Name	Equipment Description	Motor HP	Vendor	Unit Cost	Cost
K-2001	1	Hydraulic Compactor	Position limit switches				
K-2001	4	Hydraulic Compactor Waste Catch Pan	Position limit switches				
H-2001	12	Waste Box Conveyor	Engineered Control Package				
H-2001	1	Waste Box Conveyor	Position limit switches				
RI-2005	1	Additive Conveyor	Speed indicator, mechanical				
						$600	$600
Area 30 - Reagent Addition systems							
LI-3001	1	TSP Hopper	Level indicator, capacitance			$5,500	$5,500
LI-3002	1	Ferrous Sulfate Hopper	Level indicator, capacitance			$5,500	$5,500
T-3003	1	Ferrous Sulfate Tank	Level indicator, capacitance			$5,500	$5,500
T-3004	1	Lime Slurry Tank	Level indicator, capacitance			$5,500	$5,500
T-3005	2	Lime Silo	Level switch, capacitance			$800	$1,600
T-3006	2	Portland Cement Silo	Level switch, capacitance			$800	$1,600
T-3003	4	Ferrous Sulfate Tank	Level switches, conductance			$180	$720
T-3004	4	Lime Slurry Tank	Level switches, conductance			$180	$720
PI-3003 A/B	2	Ferrous Sulfate Pump	Pressure indicators, 0 - 50 psig			$210	$420
PI-3004 A/B	2	Lime Slurry Pump	Pressure indicators, 0 - 50 psig			$210	$420
FIT-3003	1	Ferrous Sulfate Pump	Flow totalizer, turbine			$450	$450
FIT-3004	1	Lime Slurry Pump	Flow Totalizer, Magnetic Flow			$6,400	$6,400
F-3001	1	TSP Weigh Belt Feeder	Mass Flow Totalizer, load cell			$600	$600
F-3002	1	Ferrous Sulfate Weigh Belt Feeder	Mass Flow Totalizer, load cell			$600	$600
F-3004	1	Lime Batch Weigh Belt Feeder	Mass Flow Totalizer, load cell			$600	$600
F-3005	1	Lime Weigh Belt Feeder	Mass Flow Totalizer, load cell			$600	$600
F-3006	1	Portland Cement Weigh Belt Feeder	Mass Flow Totalizer, load cell			$600	$600
Area 40 - Filtrate and Water Treatment							
LI-4001	1	Recycle Filtrate Tank	Level indicator, capacitance			$5,500	$5,500
LS-4001	4	Recycle Filtrate Tank	Level switches, conductance			$180	$720
PI-4001 A,B	2	Recycle Filtrate Pumps	Pressure indicators, 0 - 120 psig			$210	$420
FI-4001	1	Recycle Filtrate Pumps	Recycle filtrate flow indicator, turbine, 0 to 50 gpm			$350	$350
LS-4005	12	Sump Pumps	Level switches, conductance			$180	$2,160
PI-4005 A,B,C	3	Sump Pumps	Pressure indicators, 0 - 50 psig			$210	$630
PI-4003	4	Recycle Filtrate Filters	Pressure indicators, 0 - 120 psig			$210	$840
LI-4002A/B	2	Oxidation Tank	Level indicator, capacitance			$5,500	$11,000
LS-4002A/B	8	Oxidation Tank	Level switches, conductance			$180	$1,440
LI-4010 A/B	2	WWT Tank	Level indicator, capacitance			$5,500	$11,000
LS-4010 A/B	8	WWT Tank	Level switches, conductance			$180	$1,440

Table 6.2 Process Equipment, Instrumentation, and Spare Parts (Page 6 of 10)

Equipment Number	Qty	Equipment Name	Equipment Description	Motor HP	Vendor	Unit Cost	Cost
PI-4010	1	WWT Transfer Pump	Pressure indicators, 0 - 50 psig			$210	$210
FI-4010	1	WWT Transfer Pump	Flow indicator, turbine, 0-100 gpm			$350	$350
LI-4020 A/B	2	Effluent Tank	Level indicator, capacitance			$5,500	$11,000
LS-4020 A/B	8	Effluent Tank	Level switches, conductance			$180	$1,440
PI-4020	2	Effluent Pump	Pressure indicators, 0 - 50 psig			$210	$420
FI-4020	1	Effluent Pump	Flow indicator, turbine, 0-20 gpm			$350	$350
PI-4025	4	Effluent Filters	Pressure indicators, 0 - 120 psig			$210	$840
PI-4021	1	WWT Sludge Pump	Pressure indicators, 0 - 50 psig			$210	$210
Area 60 - Building Ventilation and Radon Control							
E-6001	1	Dehumidification Package	Engineered Control Package				$0
P-6001 A/B	2	Condensate Pump	Pressure indicators, 0 - 50 psig			$210	$420
P-6001 A/B	2	Condensate Pump	Flow indicator, turbine, 0-20 gpm			$350	$700
PI-6001 - 6012	12	High Radon Vent System	Pressure indicators, -25 to 5 inches H2O, Magnehelic			$280	$3,360
AI - 6001	2	Vent Stack	Radiation Monitor			$22,000	$44,000
PI-6020 - 6022	12	Building Vent System	Pressure indicators, -25 to 5 inches H2O, Magnehelic			$280	$3,360
PIC-6100	1	TVS Booster Blower	Pressure indicating controller, Magnehelic			$580	$580
Area 80 - Box Management							
H-2003	1	Overhead Crane - Rework/Lidding	Engineered Control Package				
H-8001	1	Waste Box Conveyor	Engineered Control Package				
H-8006	1	Warehouse Bridge Crane	Engineered Control Package				
Z-2001	1	Manipulator Arm	Engineered Control Package				

Table 6.2 Process Equipment, Instrumentation, and Spare Parts (Page 7 of 10)

000088
DESIGN DATA 2292

Equipment Number	Qty	Equipment Name	Equipment Description	Motor HP	Vendor	Unit Cost	Cost

Company Name: Fluor Daniel Fernald
Project Name: FEMP OU-4 Silo 1 & 2 POP Demo
Location: Fernald, OH
Subcontract No..
Project Number: 775743

PROCESS EQUIPMENT SPARE PARTS LIST
(Conceptual Design)

Initiated: JTS
Checked:
Approved:
Revision: 0

Equipment Number	Qty	Equipment Name	Equipment Description		Vendor	Unit Cost	Cost
Area 10 - Slurry Pretreatment							
M-1001/1002	1	Slurry Feed Tank Mixer	Bearing and seal kit			$8,400	$8,400
M-1001/1002	1	Slurry Feed Tank Mixer	Impeller			$16,400	$16,400
M-1001/1002	1	Slurry Feed Tank Mixer	Motor		Chemineer	$4,800	$4,800
P-1010/1012 A/	1	Slurry feed Pump	Wet end			$6,200	$6,200
P-1010/1012 A/	3	Slurry feed Pump	Bearing and seal kit			$2,600	$7,800
P-1020/1022 A/	1	Filter Feed Pump	Wet end			$7,500	$7,500
P-1020/1022 A/	3	Filter Feed Pump	Bearing and seal kit			$7,500	$22,500
M-1010/1012	1	Batch Tank Mixer	Bearing and seal kit		Chemineer	$2,800	$2,800
M-1010/1012	1	Batch Tank Mixer	Impeller			$5,400	$5,400
M-1010/1012	1	Batch Tank Mixer	Drive box			$8,800	$8,800
Area 20 - Dewatering and Stabilization							
P-2001 A/B	1	Filtrate Transfer Pump	Seal kit			$2,800	$2,800
S-2001	240	Filter Press	Filter Clothes			$210	$50,400
S-2001	1	Filter Press	Mechanical and control system parts			$14,000	$14,000
S-2001	1	Filter Press	Hydraulic system parts			$5,000	$5,000
K-2001	1	Hydraulic Compactor	Hydraulic system parts			$5,000	$5,000
M-2001	1	Stabilization Mixer	Mechanical and control system parts			$12,000	$12,000
M-2001	1	Stabilization Mixer	Hydraulic system parts			$15,000	$15,000
H-2001	1	Waste Box Conveyor	Service contract			$12,000	$12,000
H-2001	1	Waste Box Conveyor	Mechanical and control system parts			$10,000	$10,000
H-2005	1	Additive Conveyor	Miscellaneous			$1,000	$1,000
Area 30 - Reagent Addition systems							
MV-3001/3002	2	Rotary Valve	spare			$1,550	$3,100
H-3001/3002	1	Screw Conveyor	Misc. parts			$2,500	$2,500
F-3001/3002/30	1	Weigh Belt Feeder	Misc. parts			$3,000	$3,000
P-3003 A/B	1	Ferrous Sulfate Pump	Seal kit			$1,200	$1,200
MV-3004/3005/	2	Rotary Valve	spare			$3,950	$7,900

Table 6.2 Process Equipment, Instrumentation, and Spare Parts (Page 8 of 10)

Equipment Number	Qty	Equipment Name	Equipment Description	Motor HP	Vendor	Unit Cost	Cost
H-3004/3006	1	Conveyor	Misc. parts			$2,000	$2,000
F-3004/3006	1	Weigh Belt Feeder	Misc. parts			$2,000	$2,000
M-3004	1	Lime Slurry Mixer	Misc. parts			$800	$800
P-3004 A/B	3	Lime Slurry Pump	Seal kit			$2,200	$6,600
H-3007/3008	1	TSP Monorail Hoist	Misc. parts			$14,500	$14,500
Area 40 - Filtrate and Water Treatment							
P-4001 A,B	1	Recycle Filtrate Pumps	Bearing and seal kit			$2,400	$2,400
P-4005 A,B,C	6	Sump Pumps	Bearing and seal kit			$1,200	$7,200
S-4001 A,B	60	Recycle Filtrate Filters	Filter Bags			$30	$1,800
P-4010	1	WWT Transfer Pump	Bearing and seal kit			$1,800	$1,800
P-4002	1	Hypochlorite Addition Pump	Spare			$2,400	$2,400
P-4011	1	Barium Chloride Addition Pump	Spare			$2,400	$2,400
P-4012	1	Phosphoric Acid Addition Pump	Spare			$2,400	$2,400
P-4014	1	Hydrochloric Acid Addition Pump	Spare			$2,400	$2,400
P-4015	1	Sodium Sulfate Addition Pump	Spare			$2,400	$2,400
P-4020	1	Overflow Pump	Bearing and seal kit			$2,400	$2,400
P-4021	1	WWT Sludge Pump	Bearing and seal kit			$2,400	$2,400
S-4020 A,B	40	Effluent Filters	Bag Type, 20 um, 10 in dia. x 4 ft			$30	$1,200
Area 60 - Building Ventilation and Radon Control							
S-6001 A/B	72	High Radon System HEPA Filters	Filter Units			$400	$28,800
E-6001	1	Dehumidification Package	Misc			$12,000	$12,000
P-6001 A/B	2	Condensate Pump	spare			$5,600	$11,200
C-6001 A/B	1	Carbon Adsorber	80,000 lb Carbon			$250,800	$250,800
B-6001 A/B	2	High Radon System Ventilation Blower	Bearing kit			$1,800	$3,600
S-6002 A/B	72	Building Vent HEPA Filters	Filter units			$400	$28,800
B-6002 A/B	2	Building Ventilation Blowers	Bearing kit			$2,200	$4,400
B-6010 A/B	2	Tank Vent Booster Fan	Spare			$4,000	$8,000
K-6001	1	Breathing Air Compressor Package	Misc			$3,000	$3,000
K-6002	1	Utility Air Compressor Package	Misc			$3,000	$3,000
Area 80 - Box Management							
	1	Overhead Crane - Rework/Lidding	Service Contract			$18,000	$18,000
H-2003	1	Overhead Crane - Rework/Lidding	Mechanical, control and hydraulic parts			$24,000	$24,000
	1	Waste Box Conveyor	Service Contract			$35,000	$35,000

Table 6.2 Process Equipment, Instrumentation, and Spare Parts (Page 9 of 10)

Equipment Number	Qty	Equipment Name	Equipment Description	Motor HP	Vendor	Unit Cost	Cost
H-8001	1	Waste Box Conveyor	Mechanical, control and hydraulic parts			$42,000	$42,000
H-8005	1	Box hoist and Scales	Mechanical, control and hydraulic parts			$4,600	$4,600
	1	Warehouse Bridge Crane	Service Contract			$26,000	$26,000
H-8010	1	Warehouse Bridge Crane	Mechanical, control and hydraulic parts			$34,000	$34,000
Z-2001	1	Manipulator Arm	Mechanical, control and hydraulic parts			$22,000	$22,000
Z-2001	1	Manipulator Arm	Service Contract			$70,000	$70,000
Z-8002	1	Hydraulic Bucket - Rework	Mechanical, control and hydraulic parts			$4,000	$4,000
	1	*Fork Lift*	10 ton capacity			$2,600	$2,600
Area 90 - Process Control System							
	1	*Computer Control Ssystem*	Service contract			$50,000	$50,000

Table 6.2 Process Equipment, Instrumentation, and Spare Parts (Page 10 of 10)

INTERNATIONAL TECHNOLOGY CORPORATION
DESIGN DATA 2292
000091

7.0 CONCLUSIONS

7.1 KEY RESULTS

IT's treatment system for the Proof of Principle Demonstration was designed to dewater and stabilize the Silos 1 and 2 residuals, producing a treated material which no longer exhibits a hazardous characteristic and which will be acceptable for potential disposal options selected by FDF. The Proof of Principle Demonstration was performed to provide data that indicates whether the IT treatment process would produce a treated surrogate that meets the specified performance objectives. The performance objectives for the treated surrogate were:

- Appearance — The treated surrogate residue shall appear uniform and homogeneous to non-magnified vision.
- Compressive Strength — Compressive strengths of at least 50 psi.
- No Liquids —Contain no free-standing liquids.
- TCLP — Passing concentrations shall be less than 50% of the RCRA limits
- Dusting/Particulate — Contain no more than 1 wt % of less-than-10 micrometer- diameter particles or 15 wt % of less-than-200 micrometer-diameter particles.

The sampling and analysis data in Section 4 and the results in Chapter 5 indicate that the Proof of Principle Demonstration produced a treated material, for eleven of eleven batches, which met the performance objectives. Further, the clay/silt soil-like material produced as the final treated material is a soft and pliable material that can be handled, conveyed, placed, and compacted.

7.1.1 Formulation Development

The Formulation Development for the three surrogates (i.e., S1, S2, and demonstration surrogates) involved the preparation of 30 wt % solids slurries. These 30 wt % solids slurries were dewatered to minimize the amount of slurry material to be stabilized. The 30 wt % solid slurries were dewatered in a filter press after conditioning the slurries by additions of ferrous sulfate and hydrated lime. The ferrous sulfate lowered the solubility of chromium, while both ferrous sulfate and hydrated lime coagulated the slurry solids, forming a filterable product. The dewatered filter cake had approximately 50-55 wt % solids. The filter cake produced by the dewatering was mixed with varying amounts of Portland cement and other chemical additives, and water if necessary, to produce a stabilized waste form.

The objective of the Formulation Development was to select two stabilization formulations for each surrogate material: one to produce a treated material which meets the RCRA TC, and one to produce a treated material which meets the RCRA UTS. Table 5.1 contains the selected formulations for both the RCRA TC limits (S1-T, S2-T, and SO-D) and the RCRA UTS (S1-U, S2-U, SO-U) criteria.

The basis of the design used for the formulations was to produce a moist, soil-like treated material which would meet the leaching criteria while slowly developing the required

compressive strength. The stabilization reagent addition levels were tailored to produce a treated material which had low TCLP-leachable metals levels. The formulations contained Portland cement, hydrated lime, ferrous sulfate, and triple superphosphate which have been demonstrated to immobilize lead and chromium. The consistency of the treated material was selected to optimize waste loading, while producing a handlable and compactable material. The optimized waste loading would reduce the amount of treated waste produced. Making the material compactable would allow optimal usage of container volume as void space could be minimized. The slow strength development would allow the treated material to be handled and reprocessed, if necessary, as a moist, soil-like material as opposed to a monolithic block of concrete.

A concern in the development of the stabilization formulations for the surrogate materials was the reagents used for their compositions. Many of the reagents used in the surrogate materials are known to have both adverse and beneficial effects on stabilization. For examples, the carbonates and phosphate compounds were shown to greatly decrease the level of TCLP-leachable lead, leading to modification of the surrogate composition to correct for that effect. The high concentrations of lead have been shown to adversely affect the setting and strength development of Portland cement. Fumed silica at low levels can decrease the permeability of stabilized material. At higher levels, the gelling properties of fumed silica and its capacity to remove calcium ions from the matrix inhibit the setting and strength development of Portland cement.

7.1.2 Process Demonstration

The Process Demonstration involved to the treatment (dewatering and stabilization) of eleven 180 gallon batches of 30 wt % solids Demonstration surrogate material. The 30 wt % solids slurry was prepared in three 1,000 gallon tanks, each containing approximately 700 gallons of slurry. Dewatering of the Process Demonstration slurry produced filter cake material of consistent quality and solids content. The filter cake weight, moisture content, and bulk density of the eleven batches of filter cake material were very consistent from batch to batch.

The stabilization of the filter cake produced a homogeneous and consistent treated material. The processing time of 15 minutes in the Mini-Maxcrete provide sufficient high shear mixing to produce a treated material with a homogeneous appearance and consistency. The stabilized material was conveyed out of the Mini-Maxcrete mixer. The treated material was compacted into the drums, using moderate vibratory action supplied by lifting and lower the drum with a forklift. During full-scale treatment, a mixer with a bottom discharge would be employed to optimize discharge of the treated material. A compactor would be used to maximize the loading of the treated material into the container.

The temperature rise measurements for each stabilization batch were similar and indicated that a temperature rise of 5-10°C can be expected during full-scale treatment. Temperature rises in this range are common for moist, soil-like treated material. The temperature rise should decrease by 50% within 24 hours after treatment. The temperature rise was not significant enough to cause any out-gassing or evolution of steam. No liquid bleed occurred from the stabilized material, indicating that no free liquids would be associated with the stabilized material. The lack of liquid bleed and the low temperature rise for the stabilized material indicates that the containers can be sealed immediately after treatment during full-scale processing. However, waiting 24

hours before sealing the containers may be appropriate to reduce condensation and to verify no liquid bleed. Placement of a pad of adsorbent material, such as bentonite, on the stabilized material may be necessary prior to sealing the container during full-scale treatment to eliminate condensation within the sealed container. The bulk density of the treated material averaged 1.49 g/cm^3 (93.1lb/ft^3), indicating that the stabilized material can be effectively and consistently compacted into the appropriate container during full-scale treatment.

The UCS data indicated that the stabilized material from each of the eleven batches exceeded the strength requirement of 50 psi. The TCLP data indicate that treated material from all eleven batches met the TC limits for the RCRA metals. Additionally, ten of the eleven batches met the UTS limits for all metals, with the exception of chromium. Only Batches 2, 5, 6, and 7 met the UTS limit for chromium (0.6 mg/L)

The primary objective of the Process Demonstration was to treat 2,600 kg of 30 wt % solids slurry per day during 72 hours of continuous operation. IT's Process Demonstration clearly met this criteria by processing continuously for the 72 hours without encountering a processing problem. The only processing challenges encountered were an initial over-pressurization of a diaphragm pump, a slight build-up of sand and mineral matter in the diaphragm pumps, and a heel of sand in the bottom of the slurry tanks.

The other objective of the Process Demonstration was to demonstrate the efficacy of the process controls for full-scale processing. The process controls determined from the Formulation Development and Process Demonstration testing included:

- percent solids and alkalinity of the slurry,
- types and amounts of dewatering agents required to achieve liquid/solid separation of the slurry,
- dewatering processing rate,
- dissolved and suspended solids content of the dewatered filtrate,
- metal ands nitrate content of the dewatered filtrate,
- solids content and bulk density of the dewatered filter cake,
- types and amounts of stabilization reagents to immobilize the contaminants in the dewatered filter cake, and
- characteristics (TCLP leachability, free liquids, UCS) of the final stabilized products.

The successful completion and results for the process demonstration indicate that these process control parameters are adequate for the control of the full-scale treatment process.

The Process Demonstration was required to determine the optimal waste loading and bulking factors associated with stabilization of the dewatered 30 wt % solids slurry. Based on the

sampling and analysis data in Section 4 and the results in Section 5, the waste loading for the final treated material would be 0.40, while the bulking factor would be 241%. These values allow the accurate determination of waste loading during full-scale processing of the Silo 1 and 2 residuals.

7.2 SCALE UP AND FULL-SCALE DESIGN

The Process Demonstration was conducted at roughly a 10% scale to the proposed full-scale treatment system and provided a sound basis for the design. Since both the Process Demonstration and conceptual systems utilize batch treatment processes, scale-up is simple and reliable.

The full-scale treatment system is similar to that used for the Process Demonstration and the results of that testing provided key parameters for the conceptual design. As in the Process Demonstration, the full-scale treatment system is based on batch treatment of the silo solids. The general process flow is as follows:

- The solids will be retrieved from the temporary storage tanks using centrifugal slurry pumps.
- Solids will be transferred to the system as a slurry containing 10 to 30 wt % solids (10 wt % solids will be used for the design).
- All of the slurry will be conditioned with ferrous sulfate and hydrated lime and dewatered in a recessed chamber filter press. Filtrate will be returned to the retrieval system.
- Filter cake (wet cake) will be mixed with Portland cement, hydrated lime, triple superphosphate and ferrous sulfate to chemically fix lead, chromium and other RCRA metals into non-leachable species.
- The stabilized solids will be placed and compacted into Department of Transportation (DOT) 7A boxes. An adsorbent pad will be placed on the treated material and the box immediately sealed to reduce radon emanation, and conveyed into the 24-hr curing area.
- The waste boxes will be stored for 2 weeks until they are released to FDF for shipment for disposal.
- though most of the filtrate will be recycled to suspend solids retrieved from Silos 1 and 2, a water treatment system will be used to treat filtrate for metals and radionuclides. Prior to discharge to the AWWT system.

The treatment system will be housed in a building that will include separate areas for the process equipment, storage of sealed boxes of waste, and other necessary operations. The gas control containment includes three ventilation systems: one for the process tanks, filter press, and stabilization mixer which vents into the existing Radon Control System (RCS), one system for the high radon areas of the process (e.g., area surrounding the filter press and stabilization mixer, and rework area), and one system for low radon areas of the process. The RCS is part of the Silos 1 and 2 waste retrieval system. The latter two ventilation systems will be HEPA filtration

combined with dehumidification and carbon adsorption and HEPA filter respectively. In order to minimize radon levels in the high radon areas, the inner bags in the waste boxes will be closed and the lids sealed before moving the boxes to the 24-hr curing area.

The system was designed with full attention to ALARA principles and to minimize radon release. The system was also designed to include the flexibility to adjust to variations in the solids slurry and treated waste parameters.

The design basis for the full-scale is covered in Section 6.0. Table 7.1 summarizes the results of the mass balance calculations resulting from the design basis data. Since IT's treatment system employs commercially-available production equipment (screw augers, filter press, pugmill-type mixer, *etc.*), the full-scale treatment system contains no proprietary or single-vendor-supplied equipment. If changes are required during full-scale processing, the batch treatment proposed for full-scale treatment can easily be modified or optimized to adjust to changing conditions in material composition and/or material handling properties. The number of waste boxes in Table 7.1 includes a factor of 3% to account for rework and inefficiencies in filling the waste boxes to the planned four inch freeboard. The 4 boxes required for disposal of the stabilized wastewater treatment sludge are also included in the number of boxes.

Table 7.1
Mass Balance Summary

Process Feed	
K-65 residues, dry basis	9735 tons
BentoGrout, dry basis	220 tons
Slurry, 10% solids	99,550 tons
Ferrous sulfate heptahydrate	381 tons
Triple Super phosphate	407 tons
Lime, hydrated hi-calcium	1386 tons
Portland Cement	2037 tons
Stabilization Residues	
Stabilized Waste	24041 tons
Stabilized Waste	516,452 ft3
Stabilized WWT Sludge	500 ft3
Waste boxes, number	4260
Waste box exterior volume	666,050 ft3
Waste Box gross weight, filled	20,800 lbs

7.3 IMPLEMENTATION

7.3.1 Technology Specific Cost

The projected cost for the full-scale treatment includes technology specific cost for all capital and operating expenditures, except for Fernald Atomic Trade Labor Council (FATLC) operating labor, transportation and disposal costs. Capital costs include; all purchased process and mechanical equipment, instrumentation and maintenance supplies and contracts. Engineering

design, procurement, construction and installation costs are not included as they are not technology specific costs. The priced equipment list presented as Table 6.2 includes a detailed breakdown of process equipment, instrumentation and spare parts inventory.

The labor component of operating costs is comprised of the stabilization contractors staff and the FATLC operations crew. The cost shown in Table 7.2 includes only the cost for the stabilization contractors project management, technical and support staff. An estimate of the FATLC hours required includes a 12-man crew for 2 shifts per day. Over the 1022 day operating schedule this amounts to 196,224 labor hours. The crew consists of a forklift operator, 1-yard man, 2 health physicists, 3 board operators, 3 maintenance personnel (mechanic, electrical and instrumentation/computer) and 2 utility operators. Chemicals include the batch treatment and stabilization additives. Utilities include primarily electrical power for the process equipment. Natural gas for heating the building and power for air conditioning the control room are not included. The waste boxes required for disposal of the waste are a substantial part of the project costs and are included in the operating costs.

Table 7.2
Summary Table
Technology Specific Cost Components

Parameter	Cost ($000)
Capital Expenditures	
Process and Mechanical Equipment	5,347
Maintenance Supplies and Contracts	978
Technology Specific Instrumentation	239
Technology Specific Capital Costs	6,564
Operating Costs	
Stabilization Contractor Labor	6,070
Power	623
Chemicals	536
Waste Boxes	23,962
Total Operating Costs	31,191

Table 7.3 provides more detail on the operating costs. The estimate for stabilization contract labor is based on 60 days for pre-startup operations, 782 days of operation (3 yrs at 5 days/week) and 180 days for shut-down, decon and demobe. This comes to a total of 1022 operating days. Electric power is based on an average utilization of 300 motor horsepower and a 30 ton dehumidification system. The chemical usage is based on the mass balance presented on the flowsheets.

000097

Table 7.3 Operating Costs for Full-Scale Treatment			
		Unit Cost	Cost, $1000's
Stabilization Contractor Labor			
Site Manager	10 hr/day	$90/hr	920
Shift Supervisor	16 hr/day	$75/hr	1,226
Chemist	16 hr/day	$65/hr	1,063
Head Operator	16 hr/day	$65/hr	1,063
Admin Assistant	8 hr/day	$45/hr	368
Project Engineer	10 hr/day	$70/hr	715
Contract Administrator	10 hr/day	$70/hr	715
		Total	6,070
Electrical Power	6,100 Kw/day	$0.10/Kw	623
Chemicals			
Ferrous Sulfate Sol'n	586 tons	$101/ton	59
Ferrous Sulfate	204 tons	$270/ton	55
Lime	1386 tons	$75/ton	104
TSP	407 tons	$270/ton	110
Portland Cement	2037 tons	$96/ton	196
WWT Chemicals	10 tons	$1200/ton	12
		Total	536
Waste Boxes	4260	$5625/box	23,962

7.3.2 Schedule

The projected schedule for the full-scale treatment of the Silo 1 and 2 residues is given in Figure 7.1. This schedule includes the time required for preparation and submittal of pre-mobilization documents such as the Project Management Plan, Engineering Management Plan, Quality Assurance Plan, Procurement Management Plan, Records Management Plan, Health and Safety Program Plan, Safety Basis, Environmental Control Plan, Design Criteria Package, Remedial Design Package, and Labor Utilization Plan. Following submittal of the pre-mobilization documents and the Notice to Proceed, the schedule includes the time for procurement and construction of the Treatment plant, including all buildings, equipment, and materials. The schedule includes time for preparation and submittal of the Operation procedures, including Conduct of Operations (CONOPS) procedures, operator training, maintenance plan, and system operability testing (SOT) plan. The performance of the SOT is included in this task. Following completion of the SOT, Pre-operational Assessment is included in the schedule. At the completion of the Pre-operation Assessment, Notice to Operate will be given.

The schedule includes roughly three years to for the operation of the treatment system, utilizing the processing rates from system design in Section 6.5. Though the treatment system, as designed, could process the Silos 1 and 2 material faster, the schedule presented is based on this slower processing rate. The time required for decontamination and demobilization of the treatment plant completes the project schedule.
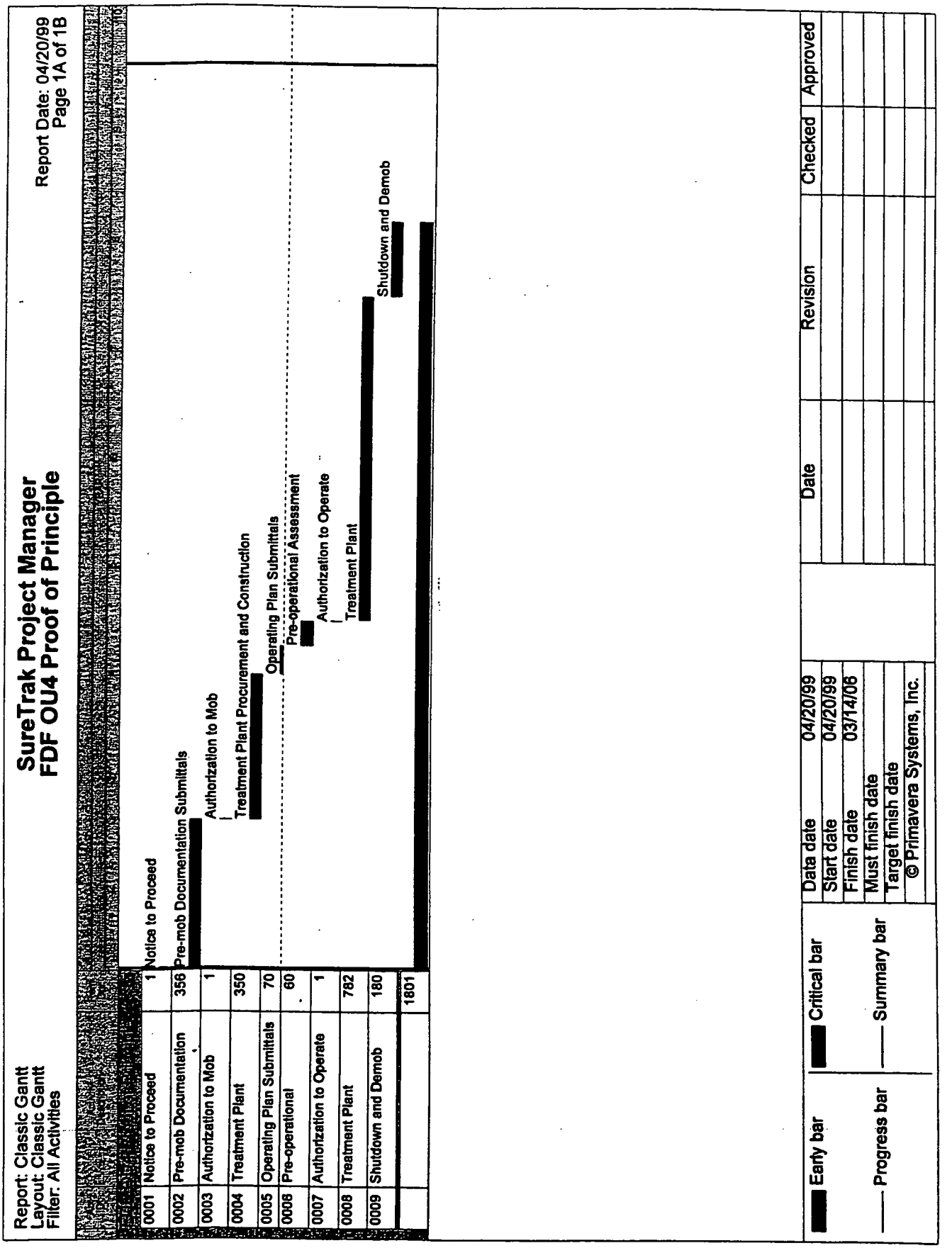
Figure 7.1. Schedule for Full-Scale Implementation