FLUOR DANIEL FERNALD
P.O. Box 538704 Cincinnati, Ohio 45253-8704 (513) 648-3000

2782

December 10, 1999

Fernald Environmental Management Project

Letter No. C:OOTP:99-0441

Mr. Jack Craig, Director
Department of Energy
Fernald Environmental Management Project
P. O. Box 538705
Cincinnati, Ohio 45253-8705

Dear Mr. Craig:

CONTRACT DE-AC24-92OR21972, REQUEST FOR EQUIVALENCY APPROVAL FOR NOT REQUIRING A FIRE SUPPRESSION SYSTEM FOR THE SILO 3 PROJECT TREATMENT FACILITY

Reference:
1) RMR-0445-0118-003, Rocky Mountain Remediation Services (RMRS) Fernald Silo 3 Project Fire Hazards Analysis (FHA), dated November 22, 1999

2) DOE-0608-94, J. Phil Hamric to N. C. Kaufman, "Exemption Request from DOE Order 5480.7a, "Fire Protection," for Certain Tension Support Structures at Fernald," dated December 17, 1993

Fluor Daniel Fernald (FDF) is seeking an equivalency approval from the Department of Energy Fernald Environmental Management Project (DOE-FEMP) that a fire suppression system is not required for the Silo 3 Project Treatment Facility.

The Silo 3 Project contractor, Rocky Mountain Remediation Services (RMRS), performed a Fire Hazards Analysis (FHA) [Ref. 1] on the conceptual design of the project's Retrieval Assembly, Treatment Facility, and the Interim Storage Area (ISA). The FHA concluded that a sprinkler system would not be necessary for any of these facilities, based on the occupancy, fuel packages, proposed fire safety features, and Maximum Permissible Fire Loss (MPFL). However, the treatment facility building will exceed the 5,000 ft^2 ground floor surface area identified in the Implementation Guide for DOE Order 420.1 and 440.1, Fire Safety Program. Per this Order, a sprinkler system would be required regardless of the results of the fire hazards analysis.

Based on the results of the FHA, FDF is requesting an equivalency approval from this Fire Safety Program requirement.

1

Enclosed is FDF's technical justification that a fire suppression system is not necessary for the Silo 3 Project. The justification focuses on the FHA, a previous exemption (per Ref. 2), and ownership of the facilities. Based on this information, FDF requests DOE-FEMP's concurrence that a fire suppression system is not required for the Silo 3 Project Treatment Facility.

If you have any questions, please contact Karen Wintz at 648-4059 or LaVon Rutherford at 648-4319.

Sincerely,

John Bradburne
President & CEO

Concurrence: 2/3/00
Jack Craig, Director Date

JB:LBR:mam
Enclosure

c: Nina Akgündüz, DOE-FEMP, MS45
Louis C. Bogar, FDF, MS52-5
Irma Brown, DOE Contract Specialist, MS45
Raymond M. Crawford, FDF, MS31
Robert D. Daniels, FDF, MS52-4
Joanne D. Lorence, DOE-FEMP, MS45
Richard L. Maurer, FDF, MS52-4
Arthur Murphy, DOE-FEMP, MS45
Dennis A. Nixon, FDF, MS52-4
Donald Paine, FDF, MS52-4
Susan M. Peterman, FDF, MS52-4
Paul A. Pimentel, FDF, MS14
Johnny A. Reising, DOE-FEMP, MS45
Dennis L. Riley, DOE-FEMP, MS45
Karen N. Wintz, FDF, MS19
David Yockman, DOE-FEMP, MS45
File Record Subject 1.1/1.5
Project Number 40420
Administrative Record, MS78

Technical Justification for not Requiring a Fire Suppression System for the Silo 3 Project

Rocky Mountain Remediation Services (RMRS), the Silo 3 Contractor, performed a Fire Hazards Analysis (FHA) (Attachment 1, RMR-0445-0118-001, *Fernald Silo 3 Project Fire Hazards Analysis*) on the conceptual designs of the Silo 3 Project Retrieval Assembly, Treatment Facility, and the Interim Storage Area (ISA). The FHA concluded that a sprinkler system would not be necessary for the facilities, based on the occupancy, fuel packages, proposed fire safety features and Maximum Permissible Fire Loss (MPFL). However, a sprinkler system would be required for the Treatment Facility, because the building exceeds the 5,000 ft^2 ground floor area identified in the Implementation Guide for Department of Energy (DOE) Order 420.1 and 440.1, Fire Safety Program.

RMRS has requested that Fluor Daniel Fernald (FDF) pursue an equivalency approval from this requirement based on the results of the FHA, past exemptions, and ownership of the facility.

RMRS Silo 3 Fire Hazards Analysis

Based on the occupancy, fuel packages, fire safety features, and MPFL, the RMRS FHA concluded that it would not be necessary to install an automatic fire suppression system within the Treatment Facility. Below is a summary of the factors from the FHA.

Occupancy

The facility is designed to be operated by 5 - 8 people.

Fuel Packages

The FHA identified the following fire packages within the treatment facility:

- Conveyor mechanism
- Bundle of instrumentation wires
- Personnel Protective Equipment (PPE)

Fire Safety Features

The FHA recommended the following fire safety features:

- Smoke Detection System
- Heat Detection System
- Notification System
- Incipient Fire Control
- Water Supply and Distribution System
- Standpipe System
- Lightning Protection
- Fire Department Response

Fire Loss Potential

The loss of the Treatment Facility and Equipment was estimated to be 2.4 million dollars, which is well below the Maximum Permissible Fire Loss criteria of 10 million dollars.

Past Exemption

Previously, an exemption (Attachment 2) from installing an automatic fire suppression system was obtained by FDF for certain Tension Support Structures (TSS). The exemption indicated that future TSS might also be exempted if the basis for exemption was comparable. The following table provides a comparison of the criteria used for determining the exemption and the different characteristics of the facility.

Evaluation Conclusion of Exempted Structures	Proposed Structure
The facilities will be utilized for the sole purpose of storing contaminated soil and debris in sealed metal storage containers.	The facility will support stabilizing and packaging of Silo 3 material.
The facilities will not be occupied full-time. Occupancy will be limited to a few personnel directly involved with waste material handling.	The facility will occupy approximately 5 - 8 people. The occupants will typically be in the control room and packaging area.
The structures fully conform to the egress requirements of 29 CFR Part 1910 and the Life Safety Code.	Same (see FHA)
Because the waste materials are either in sealed metal containers or are stored in bulk between concrete retaining walls, the likelihood of ignition and sustained combustion is minimal.	The waste is fully oxidized and therefore not combustible. The stabilization additives are not combustible and the chemical reaction would generate little heat.
Maximum credible fires that are postulated are small in nature and would be easily extinguished by available personnel using portable extinguishers.	There are two possible fire scenarios identified. One involves an outside source of fuel and energy. The other is a design basis fire from an electrical component failure.
If a fire of greater magnitude would occur, the Fernald Emergency Response Team would be summoned. The team is fully trained and equipped to suppress any fire on site and to respond to other hazardous material incidents. The team would be able to respond within minutes to extinguish a fire.	The same Fernald Emergency Response Team is available. In addition the facility will have a Smoke Detection System, Heat Detection System, Notification System, Incipient Fire Control, Water Supply and Distribution System, Standpipe System, and Lightning Protection.

Other Disadvantages of Installing a Fire Suppressions System Identified in Technical Justification of Previous Exemption

- Due to the height of the structures, products of combustion from a postulated fire would tend to stratify at a level below the roof. Consequently, activation of a roof-level automatic fire suppression system is problematic. This phenomenon would also tend to compromise the effectiveness of roof-level smoke detectors. Also, if the fabric used in the structures were to ignite and burn, hot gases would escape and prevent roof-level sprinklers from activating. Therefore, the installation of a fire suppression system under these circumstances would be ineffective.

Additional Disadvantages of Installing First Suppression System with Proposed Facility

- Since the Silo 3 Project Treatment Facility is a potentially radioactive contaminated facility, inadvertent activation of the sprinkler system could result in significant spread of contamination.

- Normal inspection and testing of the system would unduly expose the workforce to potentially high levels of airborne radioactivity.

- A sump system would have to be installed that could support the capacity of an inadvertent activation of the system.

- Since there are no plans to provide climate control within the facility, the fire suppression system would have to be a dry system.

Comparison Conclusion

Although the facility functions are different and the daily occupancy time may be longer, all other comparisons are similar. In addition, the proposed facility has many more fire safety features than the exempted facility and the proposed facility has a much shorter expected life span than the approved facility. Therefore, the proposed facility is comparable to the exempted facility for authorizing an equivalency approval from the requirement to install a fire suppression system.

Ownership

As indicated in the Implementation Guide for use with DOE Order 420.1 and 440.1, the basis for the 5,000 ft^2 criteria for requiring a fire suppression system is that DOE does not benefit from, or pay premiums for, insurance coverage as does private industry. DOE has an obligation to provide protection for its facilities such that a fire will not result in an unacceptable program delay or property loss.

The Silo 3 Project contractor, RMRS, owns the facilities and equipment and has insurance to cover the loss of these facilities in case of a fire.

Summary

Based on the results of the FHA, past exemptions, and ownership of the facility, FDF feels that it is not necessary to require a Fire Suppression System based solely on the 5,000 ft^2 criteria.

COPY: ~~PAINE~~
MC GUIRE
KING
FILE
12/20

Dale
Coo
12/22

Department of Energy
Fernald Environmental Management Project
P.O. Box 398705
Cincinnati, Ohio 45239-8705
(513) 738-6357

2782

DEC 1 7 1993

DOE-0608-94

Mr. N. C. Kaufman, President
Fernald Environmental Restoration
Management Corporation
P. O. Box 398704
Cincinnati, Ohio 45239-8704

Dear Mr. Kaufman:

EXEMPTION REQUEST FROM DOE ORDER 5480.7A, "FIRE PROTECTION," FOR CERTAIN TENSION SUPPORT STRUCTURES AT FERNALD

The requested exemption to DOE Order 5480.7a, "Fire Protection," has been conditionally approved.

Since this exemption results in the absence of automatic fire suppression capabilities in the subject structures, the following measures shall be enforced.

The measures include:

1. Vehicles shall not be fueled or left unattended within the structures for an extended period (such as overnight).

2. Combustible commodities (such as wood pallets of flammable liquids) shall be prohibited within the structure, and immediately adjacent to the structure (separation requirements shall be according to National Fire Protection Association Recommended Practice 80A.)

3. Only waste materials that have been specifically identified in the exemption request, or those that have a lesser degree of combustibility (as determined by the fire safety staff of the Fernald Operations Office), shall be stored within the structure.

4. The condition of the fabric used in the shell of the structure should be inspected for physical degradation and loss of flame retardance as part of the facility fire safety assessment, required by DOE Order 5480.7A.

Enclosed is a copy of the signed approval from headquarters, for the subject exemption request, dated December 1, 1993.

Recycled and Recyclable

7

If you or your staff have any questions regarding this matter, please contact Derl Harper at extension 3120.

Sincerely,

2782

W E Murphy

J. Phil Hamric for
Manager

FN:Harper

Enclosure: As Stated

cc w/enc:

S. Wentzel, FERMCO/31
B. Stemen, FERMCO/31
T. Weese, FERMCO/76

8

EPG (07-90)

United States Government H-1291 Department of Energy

memorandum

2782

DATE: December 1, 1993

REPLY TO ATTN OF: Personnel Protection Div.:Kubicki:3-4794

SUBJECT: EXEMPTION REQUEST FROM DOE ORDER 5480.7A, "FIRE PROTECTION," FOR CERTAIN TENSION SUPPORT STRUCTURES AT FERNALD

TO: Thomas P. Grumbly, Assistant Secretary for Environmental Restoration and Waste Management

This responds to your November 5, 1993, memorandum, which forwarded the subject exemption request. Specifically, an exemption is being requested from the requirement for the installation of an automatic sprinkler system in three tension support structures on the Fernald site. It was your staff's recommendation that the exemption be granted.

Our technical evaluation of the exemption is attached. Based on our evaluation, which included meetings with your staff as well as a site visit on May 4, 1993, we agree with your recommendation that this exemption should be granted.

Because this exemption results in the absence of an automatic fire suppression capability in the subject structures, we conclude that certain additional administrative fire prevention measures are necessary to minimize fire risks. These measures are:

1. No vehicles should be fueled or parked unattended within the structures for extended periods of time (such as overnight).

2. Combustible commodities (such as wood pallets or flammable liquids) should be prohibited within the structure and immediately adjacent to the structure. (Refer to the separation requirements of National Fire Protection Association Recommended Practice 80A.)

3. Only waste materials that have been specifically identified in the exemption request or those that have a lesser degree of combustibility (as determined by the fire safety staff of the Fernald Operations Office) should be stored within the structure.

4. The condition of the fabric used in the shell of the structure should be inspected for physical degradation and loss of flame retardance as part of the facility fire safety assessment required by DOE Order 5480.7A.

Accordingly, this exemption is conditioned on the implementation of these measures. They have been discussed with representatives of your staff and the fire protection engineering staff of FERMCO.

It is our understanding that additional tension supported structures of the type encompassed by this exemption are planned to be erected on-site. To the extent that these structures are identical in nature and of corresponding size and to the extent that waste materials stored are of the

9

same or lesser degree of combustibility, we would concur with a decision to forego the installation of automatic fire suppression systems. We request, however, to be informed of progress of these structures through design and construction.

Finally, the Office of Occupational Safety (EH-31) is planning a fire test program to further investigate the flammability of fabric used in tension supported structures and the likelihood of sprinkler actuation under anticipated fire conditions. We will share the results of this program with your safety staff as they become available.

Questions regarding this issue should be directed to Mr. Dennis Kubicki of my staff on 301-903-4794.

APPROVED: Tara O'Toole 12/1/93

Tara O'Toole, M.D., M.P.H.
Assistant Secretary
Environment, Safety and Health

Date

Attachment

cc w/attachment:
R. Hernon, EM-424
J. Bisker, EH-313
C. Ramsey, EH-10
D. Harper, FN
B. Stemen, FERMCO

Attachment

Technical Evaluation of Exemption Request
Lack of Automatic Fire Protection in Three Tension Support Structures

Subparagraph 9.b.(3) of DOE 5480.7A, "Fire Protection," requires the installation of an automatic fire protection system in all new structures over 5,000 square feet and in any facility when the maximum possible fire loss (MPFL) is in excess of $1 million.

The three facilities at Fernald that are the subject of this exemption are known as the Central Storage Facility (CSF), Phase I; the Scrap Metal Pile Cover (SMPC); and the Decontamination Facility Pad (DFP). They range in size from about 10,000 square feet for the DFP to about 40,000 square feet for the CSF. The MPFL for the facilities have been estimated to be:

$2.53 million for CSF (Phase I only)
$1.13 million for SMPC
$ .72 million for DFP

Accordingly, these structures would be required to be protected by an automatic fire suppression system.

The facilities will be utilized for the sole purpose of storing contaminated soils and debris in sealed metal storage containers. None will be occupied by site personnel on a full-time basis. Occupancy will be limited to a small number of personnel directly involved with waste material handling. The structures fully conform with the egress requirements of 29 CFR Part 1910 and the Life Safety Code.

Because the waste materials are either in sealed metal containers or are stored in bulk between concrete retaining walls, the likelihood of ignition and sustained combustion is minimal. Maximum credible fires that are postulated are small in nature and would be easily extinguished by available personnel using portable extinguishers. If a fire of greater magnitude would occur, the Fernald Emergency Response Team would be summoned. It is fully trained and equipped to suppress any fire on site and to respond to other hazardous materials incidents. The Team would be able to respond within minutes to effect fire extinguishment.

Due to the height of the structures, products of combustion from a postulated fire would tend to stratify at a level below the roof. Consequently, activation of a roof-level automatic fire suppression system is problematic. This phenomenon would also tend to compromise the effectiveness of roof-level smoke detectors. Also, if the fabric used in the structures were to ignite and burn, hot gases would escape and prevent roof-level sprinklers from activating. Therefore, the installation of a fire suppression system under these circumstances would be ineffective. No other protection scheme is feasible.

Because of the inability to provide effective fixed fire protection for these structures, it is essential to minimize the existing fire hazards. Other than the commodities stored in the buildings, principle fire hazards include smoking, fuel in vehicles and the presence of ordinary combustibles. Smoking will be prohibited by administrative controls and employee training. While vehicles are necessary for materials handling, a condition of this exemption is that fueling within the structure be prohibited and that long-term unattended parking be restricted also. An additional condition is that significant quantities of ordinary combustibles, such as pallets, be kept outside and away from these structures.

We conclude that, based on the limited fire hazard, the unique nature of the structures and the proposed administrative fire prevention features, the lack of automatic fire suppression in the subject facilities is not significant from a safety standpoint.

2782

Rocky Mountain
Remediation Services, L.L.C
. . . protecting the environment

Fernald Silo 3 Project

Fire Hazards Analysis
RMR-0445-0118-003

November 22, 1999

13

FIRE HAZARDS ANALYSIS

Silo 3 Project

FERNALD ENVIRONMENTAL MANAGEMENT PROJECT
FERNALD, OHIO

November 22, 1999

PREPARED FOR: Rocky Mountain Remediation Services, L.L.C.
1819 Denver West Drive, Building 26, Suite 200
Golden, Colorado 80401
(303) 215-1103

PREPARED BY: Glenn T. Hoynoski, P.E.
High Country Engineering
972 Highway 46, Suite 300
Golden, Colorado 80403
(303) 642-0635

TABLE OF CONTENTS

I. TERMS AND ABBREVIATIONS 1

II. CONCLUSION 2

III. SCOPE 2
- A. Assumptions and Limitations

IV. DOE FIRE PROTECTION CRITERIA 4

V. FACILITY AND PROCESS DESCRIPTION 5
- A. Brief history and description of Silo 3
- B. Facility Description
- C. Process Description
- D. Occupancy Classification and Type of Construction

VI. DESCRIPTION OF SAFETY CLASS SYSTEMS 12

VII. DESCRIPTION OF FIRE HAZARDS 13

VIII. FIRE SAFETY FEATURES 14

IX. LIFE SAFETY CONSIDERATIONS 17

X. CRITICAL PROCESS EQUIPMENT 19

XI. FIRE LOSS POTENTIAL 19

XII. POSSIBLE FIRE SCENARIO 20

ATTACHMENTS
- A. Tables
- B. Figures

LIST OF TABLES

1. Ohio Building Code Table 503 - Height and Area Limitations of Buildings
2. Ohio Building Code Table 602 - Fire resistance Ratings of Structure Elements, and Section 504.0 - Height Modifications

LIST OF FIGURES

1. Cross Section View of Silo 3
2. Cross Section View of Silo 3 with a Manipulator Assembly Structure Positioned above the Silo
3. General Arrangement Plan (Drawing 53-3230)
4. Section through the Process Treatment Building (Drawing 53-3233)
5. Mechanical Equipment inside the Process Treatment Building (Drawing 53-2101)
6. Schematic View of Silo 3 Retrieval and Stabilization in Process Module

I. TERMS AND ABBREVIATIONS

ADA	AMERICANS WITH DISABILITIES ACT
AHJ	AUTHORITY HAVING JURISDICTION
C/L	CENTER-LINE
CDP	CONCEPTUAL DESIGN PACKAGE
CFM	CUBIC FEET PER MINUTE
CSS	CENTRAL SUPERVISORY STATION
DOE	U.S. DEPARTMENT OF ENERGY
FHA	FIRE HAZARDS ANALYSIS
FEMP	FERNALD ENVIRONMENTAL MANAGEMENT PROJECT
FDC	FIRE DEPARTMENT DISPATCH CENTER
$Ft.^2$	SQUARE FEET
FMPC	FEED MATERIALS PRODUCTION CENTER
FPM	FEET PER MINUTE
GPM	GALLONS PER MINUTE
HCE	HIGH COUNTRY ENGINEERING
HEPA	HIGH EFFICIENT PARTICULATE AIR FILTER
$In.^2$	SQUARE INCHES
ISA	INTERIM STORAGE AREA
MAU	MAKE-UP AIR
MPFL	MAXIMUM POSSIBLE FIRE LOSS
NFPA	NATIONAL FIRE PROTECTION ASSOCIATION
OBC	OHIO BUILDING CODE
OFC	OHIO FIRE CODE
OSHA	OCCUPATIONAL SAFETY & HEALTH ADMINISTRATION
OL	OCCUPANT LOAD
P/L	PROPERTY LINE
PSI	POUNDS PER SQUARE INCH
ROW	RIGHT OF WAY
SAR	SAFETY ANALYSIS REPORT
SSC	SITE COMMUNICATION CENTER
SSC	SAFETY CLASS STRUCTURES SYSTEM, COMPONENTS
UL	UNDERWRITERS LABORATORIES

II. CONCLUSION

A fire hazards analysis was performed. A number of recommendations were made in the report based on review of Hazards Analysis Design documents. The most significant recommendations resulting from this study include the list below. The ongoing production of the design documents should incorporate these recommendations.

Below is a summary of recommendations:

1. Provide 1 hour fire resistive construction for the electrical room, control room and change room.

2. Obtain variance from DOE for the omission of fire protection systems in the Treatment Building, since the area exceeds 5,000 ft.^{2}.

3. Install a fire alarm system in the Treatment and Retrieval Facility. This must include pull stations, smoke detectors where required and audible visual signals connected to the Site-wide Honeywell System.

4. Provide portable fire extinguishers throughout all of the facilities.

5. Install a standpipe in the Treatment Building in the Tower Structure.

6. Consider lightning protection on the Treatment and Retrieval Facility Buildings.

7. Install emergency lighting and emergency exit signs in all exit paths in the proposed facilities.

8. Provide diesel fuel storage tank with built-in secondary containment for fueling the industrial forklift. Comply with NFPA #30-A for a vaulted tank construction and provide the associated alarms and monitoring requirements. At least fifty feet separation from any building is recommended.

9. Install interlocked motion sensors on the rubber belt conveyor mechanisms (where used) to minimize the potential for fire in the process handling system.

III. SCOPE

The following fire hazards analysis was prepared to satisfy United States Department of Energy (DOE) requirements for the proposed project. This effort was based on performing a fire hazards analysis as required by DOE Order 420.1 - Facility Safety; and DOE Order 440.1A - Worker Protection Management for DOE Federal and Contractor Employees. The

subject project is located at the DOE Fernald Environmental Management Project at Fernald, Ohio.

The scope of this project includes a fire hazards analysis for the planned Treatment Facility, the gantry structure over existing Silo 3, including the Retrieval Facility located on top of the gantry structure. Miscellaneous buildings including office trailers and cargo containers are deemed to not require a fire hazards analysis (per Section 4.1 of the Implementation Guide for Use with DOE Orders 420.1 and 440.1 Fire Safety Program, hereafter referred to as the Implementation Guide).

Where appropriate the applicable National Fire Protection Association (NFPA) Codes, Ohio Building Code (OBC), and Ohio Fire Code (OFC) were also used in this evaluation as applied to fire safety concerns.

The intent of this analysis was to review the proposed project in accordance with the proposed design documents and determine what, if any, design modifications, enhancements, etc., would be necessary to the fire safety and life safety elements of the project, based on the proposed design.

The purpose of a fire hazards analysis is to comprehensively and qualitatively assess the risk from fire within individual fire areas in a DOE facility so as to ascertain whether the DOE fire safety objectives, which are delineated in Order 420.1 and Order 440.1A, are met. A fire hazards analysis should contain, but not be limited to, a conservative assessment of the following safety issues:

- Description of construction
- Description of critical process equipment
- Description of high-value property
- Description of fire hazards
- Description of operations
- Potential for a toxic, biological and/or radiation incident due to a fire
- Natural hazards (earthquake, flood, wind) impact on fire safety
- Damage potential: Maximum Possible Fire Loss (MPFL)
- Fire protection features
- Protection of essential safety class systems
- Life safety considerations
- Emergency planning
- Fire Department/Brigade response
- Recovery potential
- Security and Safeguards considerations related to fire protection
- Exposure fire potential and the potential for fire spread between two fire areas
- Effect of significant fire safety deficiencies on fire risk.

A. ASSUMPTIONS AND LIMITATIONS

- This fire hazards analysis was based on Preliminary Hazards Analysis (PHAR) Report Design documents prepared in June and July of 1999.
- The buildings and facilities will be designed and operated to minimize the risk of an off-site release of radioactivity beyond the acceptable limits from a fire-related incident.
- The Silo 3 material, the additives used in the manufacture of the bricks, and any combination of the Silo 3 material or the additives are not flammable nor combustible.
- This effort did not include an analysis of or evaluation of the criteria established in the Defense Programs Fire Protection Program Recommended Practice.
- This document should be revised as the design process is continued and completed. The fire hazards analysis and other design documents are dependent on each other, and thus must be coordinated. Recommendations in the fire hazards analysis should be implemented in the design, and all design features and changes should be acknowledged and evaluated in the fire hazards analysis.

IV. DOE FIRE PROTECTION CRITERIA

DOE Order 420.1, Section 4.2.2 – Fire Protection Design Requirements establishes the following criteria for fire protection:

1. A reliable water supply of adequate capacity for fire suppression is required.

2. Noncombustible or fire-resistive construction is required. Complete fire-rated barriers that are commensurate with the fire hazard to isolate hazardous occupancies and to minimize fire spread and loss potential consistent with defined limits as established by DOE are similarly required.

3. Automatic fire extinguishing systems are required throughout all significant facilities and in all areas subject to loss of safety class systems, significant life safety hazards, unacceptable program interruption, or fire loss potential in excess of defined limits. The Implementation Guide, Section 9.7, requires sprinklers be installed if the ground floor area is in excess of 5,000 square feet or if the facility has a maximum possible fire loss (MPFL) equal to or exceeding $1 million. This criteria is superceded by DOE Memorandum, J.R. Craig, Ohio Field Office to G.H. Dever, January 22, 1999, DOE-0320-99, which increases the MPFL to 10 million. Fluor Daniel Fernald is investigating of obtaining a DOE exemption for the floor space criteria.

4. Redundant fire protection systems are required in areas where safety class systems are vulnerable to fire damage and where no redundant safety capability exists outside of the fire area. In new facilities, redundant safety class systems shall be in separate fire areas. Redundant fire protection systems shall also be provided in areas where the maximum possible fire loss (MPFL) exceeds DOE limits.

5. A means to summon the fire department in the event of a fire, such as a fire alarm signaling system is required.

6. A means to notify and evacuate building occupants in the event of a fire, such as a fire detection or fire alarm system, and illuminated, protected egress paths are required.

7. Physical access and appropriate equipment to facilitate effective intervention by the fire department, such as an interior standpipe system(s) in multi-story or large facilities with complex configurations.

8. A means to prevent the accidental release of significant quantities of contaminated products of combustion and fire fighting water to the environment, such as ventilation control and filter systems and curbs and dikes.

9. Fire and related hazards that are unique to DOE and are not addressed by industry codes and standards shall be protected by isolation, segregation, or use of special fire control systems, such as inert gas or explosion suppression, as determined by the FHA.

10. Fire protection systems shall be designed such that their inadvertent operation, inactivation, or failure of structural stability will not result in the loss of vital safety functions or inoperability of safety class systems as determined by the SAR.

V. FACILITY AND PROCESS DESCRIPTION

The following information was extracted from the Fernald Silo 3 Project, Integrated Hazard Analysis.

A. BRIEF HISTORY AND DESCRIPTION OF SILO 3

FEMP (formally known as FMPC) refinery processed two basic classes of materials: (1) pitch-blende ores as they were mined and shipped to the FMPC and (2) other uranium concentrates that had already been refined to some degree. This second class of materials included uranium concentrates that had undergone a preliminary refining process at an off-site mill and wastes recovered at various stages of FMPC operations.

Uranium-bearing ores, as they are mined, contain not only uranium, but also in equilibrium concentrations of uranium progeny (i.e., the isotopes of other elements formed through the sequential radioactive decay chains that begin with U-235 and U-238). These progeny, which include radium, are removed in either a preliminary milling process or in the refining process (if the ores are not preprocessed through a mill). Thus, when the FMPC refinery processed pitchblende ores, the refinery wastes contained a high concentration of the radioactive uranium progeny. These refinery wastes were known as "hot" raffinates.

When the FMPC processed uranium concentrates that had been preprocessed through a uranium mill, a significant portion of the Ra-226 and the gamma-emitting progeny had been removed and were thus termed "cold" feed material. However, some of the thorium progeny of uranium (i.e., thorium Th-230) remained within the uranium concentrates due to the inefficiency of the mill in removing this metal, so even though the wastes are "cold," they are radioactive.

Silo 3 was constructed in 1952 for the storage of "cold" by-product metal oxides generated through the operation of the FMPC refinery. Silo 3 received metal oxides generated consequential to all FMPC refinery operations from May 1954 until late 1957. During this time period, the FMPC refinery processed pitchblende ores and uranium ore concentrates received from a number of foreign and domestic mills.

During the processing of these ores, the raffinate stream and the filtrate were fed into a series of evaporators, reducing the volume by 90 percent. The concentrates from the evaporation process was transferred to either a spray calciner or a rotary calciner, depending on the years of operation, to remove the remaining liquids, and to convert the metal nitrates in the concentrates to oxides. The spray calciner operated at a temperature of 510°C (950°F) and the rotary calciner operated at a temperature of 650°C (1200°F) to 820°C (1500°F). After calcination, the finely powdered, dried metal oxides were pneumatically transferred via pipeline to Silo 3. No material, except samples have been removed from Silo 3 since filling in 1957.

According to the Fernald Silo 3 contract, Silo 3 contains approximately 5100 cubic yards of waste residues (a maximum of 3925 tons or 3561 metric tons). The material is radioactive and contains mostly U-238, U-234, Th-230, Ra-226, Pb-210, U-235, and Th-232 radionuclides and their daughter products. The total radionuclide activity is estimated as 419 curie (118 nCi/g). The total radionuclide mass comprises only 1.3% of the total mass. The remaining mass is due to inorganic chemicals and compounds present mostly as sulfates and oxides. One analysis indicated the material had 15% sulfates before calcination.

Based on radiological inventory and using DOE-STD-1027-92 approach, hazard category calculations show that Silo 3 and the Retrieval and Treatment Facilities are classified as Hazard Category 3 (HC-3).

The silo is believed to contain material composition ranges as follows:

- Dry loose fine powder at the top of the silo
- Compacted sand and soil-like material towards the lower portion of the silo
- Potentially saturated sand and soil-like material at the bottom 1-foot of the silo.

The silo is approximately 80 feet in diameter and 36 feet high at its highest point at the center of the dome. The prestressed concrete base is 4 inches thick, the pre-stressed concrete walls are 8 inches thick, and the prestressed concrete dome tapers from 8 inches thick at the walls to 4 inches thick at the center. Refer to Figure 1.

The silo does not have an earthen berm or an under-silo drain system. Silo 3 contains approximately 138,000 cubic feet of material that has a density range from 29 lb/ft^3 to 58 lb/ft^3, and a moisture content of 3.7% to 10.2% by weight.

B. FACILITY DESCRIPTION

None of the retrieval or treatment facilities currently exist. The preliminary design process is currently in progress.

Material is to be removed from Silo 3 though the use of a vacuum system attached to a manipulator arm. The Retrieval Facility will be located above the top of the silo with a gantry structure constructed over the silo. No external forces will be permitted to be exerted onto the silo walls or dome. The retrieval arm will be lowered and manipulated inside the silo to remove the silo material. Refer to Figure 2. The removed material will be pneumatically conveyed via a double walled pneumatic tube and routed into the Treatment Facility and discharged into a cyclone separator.

The separated material will then pass through the Envirobond™/Envirobric™ processing system located inside the Treatment Facility. The resulting product will be bricks meeting regulatory requirements for safe disposal at an approved disposal facility. The product will be loaded in metal containers. The metal containers will be temporarily stored in the Interim Storage Area (ISA) until such time that the containers are removed for eventual disposal.

Miscellaneous buildings associated with the Silo 3 project include four trailers and cargo containers as required. The trailers will be used for the offices, industrial hygiene, break room and lunch trailer. The cargo containers will be used to house supplies and consumables.

All utilities are provided from the existing DOE complex.

C. PROCESS DESCRIPTION

The process is contained in two units: (1) the Retrieval Facility, which is constructed over the top of the silo, and (2) the Treatment Facility which is located adjoining the silo.

The Retrieval Facility is located over the access port on top of Silo 3 and contains the articulating arm and associated equipment used to pneumatically remove material from Silo 3. This structure provides tertiary containment for the prevention of environmental contamination as well as protection from the weather. Primary and secondary containment are provided by the retrieval arm and associated hardware. This structure is supported over the top of Silo 3 by the gantry structure which spans the diameter of Silo 3.

The Treatment Facility is single-story with a control room mezzanine with plan dimensions of 116.7 ft x 60 ft. The height of the building is 39 feet. The control and electrical rooms will be modular buildings and one will contain an uninterruptible power supply system with a battery backup.

The major activities inside the Treatment Facility include receiving the pneumatically conveyed Silo 3 material into the cyclone separator, transferring the separated material to the hopper, mixing the material with additives, making bricks, loading the bricks into metal shipping containers, weighing the full shipping container, and moving the loaded metal shipping containers for temporary storage in the ISA. Refer to Figure 4 for a section through the Treatment Facility, Figure 5 for details on the mechanical equipment inside the Treatment Facility, and Figure 6 for a process schematic.

D. OCCUPANCY CLASSIFICATION AND TYPE OF CONSTRUCTION

1. Occupancy Classification of the Silo 3 Treatment Facility

The Silo 3 Treatment Facility shall be classified as Low-Hazard Factory and Industrial Use Group F-2 per the 1998 Ohio Building Code. The rationale for this classification follows.

First, the classification of radioactive materials was examined. The OBC Section 307.6 - Use Group H-4 Structures, indicates radioactive materials that are health hazards are classified as High-Hazard Use Group H-4. The OBC gives no numerical criteria. Examination of the OFC Section 1301:7-7-41 - Radioactive Materials, results in the building being excluded from classification as a High-Hazard occupancy. For classification as a High-Hazard Use Group H-4 occupancy, the Silo 3 material would have to exceed 25 rem whole-body short-term (1-hour or less) radiation dose from an unsealed source or 100 rem whole-body short-term (1-hour or less) radiation dose from a sealed source. The radiation dose potential is orders of magnitude below these levels as described in the Fernald Site 3 Project Occupational ALARA Plan (RMR-0445-005-00C). Therefore, classification as a High-Hazard Use Group H-4 was eliminated.

Based upon the above, the classification as a Factory and Industrial Use Group was considered. The process involved in this project is the manufacture of bricks. No manufacturing products in OBC Table 306.2 - Moderate-Hazard Factory and Industrial Occupancies comes reasonably close to the subject process and product. However, the manufacture of brick and masonry is contained in OBC Table 306.3 -Low-Hazard Factory and Industrial Occupancies. Therefore, the classification of the building is Low-Hazard Factory and Industrial Use Group F-2 occupancy.

For comparison, evaluation of the 1996 NFPA 101 Life Safety Code Chapter 28 - Industrial occupancies, results classifying the building as a Low Hazard Special Purpose Industrial Occupancy. The subject building will be designed for one particular type of operation and will have a relatively low density of employees, with much of the area occupied by machinery or equipment. Therefore, the Life Safety Code classification is essentially the same as the OBC/OFC classification.

2. Type of Construction for the Silo 3 Treatment Facility

The single-story Treatment Facility plan dimensions are 116.7 ft x 60 ft, or 7,000 square feet (refer to Figure 3). The height of the building is 39 feet.

The types of construction allowed by the OBC are identified in Table 602 - Fire resistance Ratings of Structure Elements. Based upon a Group "F", Division 2 occupancy, a single-story, 40 ft. high building with 7,000 square foot floor area, the permitted types of construction are listed below in order of increasing Fire resistance refer to Table 2 of this report):

- Noncombustible/Combustible, Type 4, Heavy Timber
- Noncombustible, Type 2C, Unprotected
- Noncombustible, Type 2B, Protected
- Noncombustible, Type 2A, Protected
- Noncombustible, Type IB, Protected
- Noncombustible, Type 1A, Protected.

The building will have a useful life of less than two years. Therefore, the least costly building that meets the required type of construction is appropriate. Type 4 construction is ruled out because it permits some combustible structural components and is not permitted by DOE orders.

OBC, Table 503 indicates that Type 2C construction is permitted because its height limitation is 40 ft.

Type 2C construction requirements are shown on OBC Table 602 - Fire resistance Ratings of Structure Elements (refer to Table 2 of this report). The exterior walls are assumed to be non load-bearing. All interior construction (including modular facilities) must be at the same construction type (Type 2C). The required Fire resistance rating of the exterior walls are dependent on the exterior fire separation distance from other buildings. OBC Table 705.2 requires an exterior wall (load-bearing or non load-bearing) Fire resistance rating of 2 hours for a F-2 occupancy having an exterior fire separation distance of 0 to 5 ft; a rating of 1 hour for an exterior fire separation distance of greater than 5 ft to 10 ft, and a rating of 0 hour for an exterior separation distance of greater than 10 ft. Since no adjoining buildings are contemplated, no fire resistive requirements apply.

The proposed building is a pre-engineered metal "Rubb" structure with an approved membrane skin. According to the OBC, the building construction classification is Type 2C as noted above. The PVC polyester membrane skin material has been fire tested and has met the following criteria:

- Class I flame spread per ASTM E-84
- Does not support combustion, propagate flame or contribute fuel to a fire
- Is self extinguishing per NFPA #701.

While the material does not pass the test for non-combustibility, the limited contribution in a fire permits its use in a Type 2C (non-combustible) building type under the OBC. Consequently, the use in this application is considered appropriate and meets the intent of the DOE regulations for non-combustible construction.

3. Retrieval Facility

The gantry structure and Retrieval Facility are most appropriately classified according to OBC Section 415 - Outdoor Processing Facilities. This classification shall be constructed in accordance with accepted engineering practice of the specific industry and according to the OFC. The OFC does not specifically address a gantry or anything similar to the retrieval system. Therefore, accepted engineering practice shall be used to produce the design documents and these shall be approved by the Department of Energy and the Authority Having Jurisdiction. They must be constructed of non-combustible construction.

4. Miscellaneous Buildings

Miscellaneous buildings associated with the Silo 3 project include four trailers and cargo containers. The trailers will be used for the offices, industrial hygiene, and break room. The cargo containers will be used for consumables and supplies. All temporary buildings will comply with Administrative Contractor Requirements, Contractor Portable Structures, ACR-006.

5. Interim Storage Area

The final brick product will be loaded in metal storage containers and will be stored outside in the Interim Storage Area. The cargo containers consist of steel boxes and are not regulated under the OBC.

a. DOE Facility Hazard Classification

According to the Hazards Analysis Report (RMR-0445-0056-000), the Silo 3 and retrieval operations (including the Retrieval Facility) and the Treatment Facility are classified as Hazard Category 3, and the Interim Storage Area is classified as a Radiological Facility.

b. Natural Hazards Review

The facility is located outside of the influence of a 500-year flood. The facility is not located in an area subject to earthquake phenomena.

VI. DESCRIPTION OF SAFETY CLASS SYSTEMS

The following is excerpted from the 30% Hazards Analysis Report dated July 15, 1999.

There are no safety-class structures, systems, and components (SSCs) because no facility is Hazard Category 1 or Hazard Category 2. Only Hazard Category 3 facilities exist for the project. Safety significant structures, systems and components have not yet been defined.

A. FENCING AROUND SILO EXCLUSION ZONE

A physical barrier minimizing worker exposures to gamma radiation and radon emissions, and controlling access to the primary silo containment is provided. Access control to the facilities will be by training and administrative controls.

B. SILO 3 DOME

Silo 3 was constructed in 1952 and is located south of the Waste Pit Area. Silo 3 is a freestanding, pre-stressed concrete, domed silo approximately 80 feet in diameter and 27 feet high at the top of the wall, with a floor system constructed of approximately 17 inches of compacted clay, a 2-inch-thick layer of asphaltic concrete, and an 8-inch layer of gravel, topped by 4 inches of concrete. Unlike K-65 Silos, Silo 3 has no under drain system. The domed roof tapers from 8 inches thick at the silo walls to 4 inches thick at the apex, which is 36 feet high at the top of the dome. All other construction details are similar to those of the K-65 Silos except for increased reinforcing around the dome periphery (ring beam). This reinforcing was necessary to support the additional loading from the pneumatic transfer system [during silo filling in the 1950s] which has since been removed. The Silo 3, including penetrations, must provide a physical barrier that protects the workforce and the environment from exposure to residues and its by-product (radon).

C. SILO 3 PROJECT HEPA FILTERED VENTILATION

According to the Process Description, the silo waste material will be removed from the silo via a vacuum retrieval system. The vacuum system will enter the silo from the top Retrieval Facility located above the silo and supported by the gantry structure. The vacuumed silo waste will be transferred into the Treatment Facility and the solid material and air will be separated in the cyclone separator. The air will be split into two streams. One stream will be return air transferred back into the silo. The other stream will be sent through a HEPA filter, carbon filter, and final HEPA filter and discharged through the emission stack. The silo will be maintained under a negative pressure, therefore not all the vacuum air will be returned to the silo.

HEPA filtration will be used to prior to exhausting ventilation air from the Treatment Facility.

VII. DESCRIPTION OF FIRE HAZARDS

The following section is written to describe the various fire hazards that exist in the facility. The hazards present are typical of most industrial facilities. The facility has a fairly intensive use of power for the various operations and building systems. The Retrieval Facility and the Treatment Facility have many systems that utilize electrical control systems, a variety of hydraulic systems, a variety of mechanical systems, along with the use of some flammable and combustible liquids. All of the above, while they present an element of risk, present a minimal substantial fire growth potential. The membrane covering material was addressed in an earlier section of this analysis.

The principal fire potential which exists in the Retrieval Facility and the Process Treatment building is that of typical Class A and Class C combustibles. Class A combustibles include wood crates and packaging materials, cardboard boxes and packaging materials, shrink-wrap materials, various plastics, stored or in-service HVAC filters, personal protective equipment including gloves, suits, respirators, etc., drum liners, shielding material, rags, and rubber conveyor belts. Class C combustibles include electric motors, electrical distribution switch gear, wiring, and devices, and instrumentation & control panels, wiring, and devices. The control room houses various control functions and the associated computer terminals, CRT's and wiring. The wiring and controls are susceptible to a fire event. The anticipated fuel load is estimated at 5 lbs/ft.^{2}. Based upon the potential for a fire and minimizing the consequences of the same, the control room should be separated from the adjoining areas by 1-hour construction. Based upon the potential for an electrical system fire, the room surrounding the electrical gear (including ceiling) should be a load bearing 1-hour construction.

Based on the anticipated equipment and materials needed to operate the systems, administrative controls on the accumulation and placement of combustible materials throughout the facilities should be developed. The administrative controls should restrict the maximum amount of combustibles that could potentially be involved in any single postulated fire.

The ability of the facility to administratively control the fuel quantity and location results in limitations on the sizes of any fuel packages. A fuel package is an amount of combustible material that has the potential for generating a significant amount of heat and/or flames, which will be contained within the existing barriers and requires special handling. Fuel packages should be limited by the design and construction to minimize fire risk. Known fuel packages will include:

- Conveyor mechanism
- Bundle of instrumentation wires
- Personnel Protective Equipment (PPE).

To minimize the potential for a conveyor belt fire, (where rubber belts are used) motion sensors are recommended in this report to facilitate shutdown in the event of a stuck belt.

Based upon the use of PPE and other assorted combustibles in the change room, this area should be 1-hour fire resistive construction.

VIII. FIRE SAFETY FEATURES

A. GENERAL

The following section provides an overview of the fire protection features required for the Process Treatment building and the Retrieval Facility.

B. FIRE DETECTION AND ALARM SYSTEMS

1 PULL STATIONS

The building shall be equipped with a system of pull stations located at primary Process Treatment building exits, as well as inside the Retrieval Facility. These pull stations shall be located in accordance with NFPA 72 - National Fire Alarm Code. The system is supervised (Only A if Safety Class) and when activated (by pulling the alarm), automatically alerts Site Communication Center (SCC) and the Fire Department Dispatch Center (FDC), as well as initiates a building-wide alarm signal and advises the alarm center of the specific location of the initiator. Activation of any pull station shall sound a general alarm throughout the facility.

2 SMOKE DETECTION SYSTEM

Smoke detectors shall be installed in make-up air portions of the HVAC ducts and the room housing the local fire alarm panel. The type shall be photoelectric. Each shall be wired to a fire alarm control panel. Automatic notification shall be provided to the SCC/FDC. Activation of any smoke detector shall sound a general alarm throughout the facility.

3 HEAT DETECTION SYSTEM

Heat detectors should be installed above rubber belt conveyors and within exhaust filter plenums and inside air inlet duct filter banks. Heat detectors within the air handling system are necessary only if the system is identified as a Safety Significant System. Each heat detector shall have a discrete

address and shall sound a general alarm and automatically notify the SCC/FDC when activated.

C. NOTIFICATION SYSTEM

The notification system shall consist of a building-wide emergency fire alarm. The Process Treatment building and the Retrieval Facility are both relatively small with a relatively small staff. Everyone inside either building should be notified about any fire situation originating in either building.

Notification appliances shall be horns/strobes installed inside and outside the buildings per NFPA 72. These notification devices shall sound an alarm upon activation of any pull station, smoke detector or heat detector. The audible signal should be a temporal 3 pattern, unless there is a different audible signal standard established at FEMP. The system shall be connected to the site-wide Honeywell Delta 1000 alarm system and all circuits wired for Class B supervision.

The FEMP Emergency Voice Alarm and Evacuation System shall be installed in a manner consistent with FEMP standards. The system shall be interfaced with and operated by the Site communications center.

D. INCIPIENT FIRE CONTROL

Incipient fire control consists of local facility personnel trained in the use of portable fire extinguishers and the availability of portable fire extinguishers. This feature provides the first line of defense in building or facility fire emergencies. However, it should be stressed that any fire should first be reported using the pull stations before any attempt is made to manually extinguish the fire using fire extinguishers. It is recognized that this feature is not credited with consideration under DOE guidelines as an alternative or redundant fire protection system. However, these features statistically provide a significant contribution to overall facility fire safety.

Portable fire extinguishers shall be located throughout the facility. The fire extinguishers shall have a 4A:60B:C rating, and shall be located in accordance with NFPA 10 - Standard for Portable Fire Extinguishers. Employees must be trained in the use of portable fire extinguishers.

E. FIXED FIRE PROTECTION

Based upon the MPFL criteria, and the applicable building and fire codes, the installation of an automatic fire suppression system(s) is not required by this analysis. Doe requirements currently require an automatic fire suppression system for any facility with a ground floor area greater than 5,000 square feet. Fluor Daniel Fernald is investigating a DOE variance to this requirement.

F. WATER SUPPLY AND DISTRIBUTION SYSTEM

The Hazards Analysis Report (30%) dated July 15, 1999, indicates there is an 8-inch non-looped fire lateral which ties into the 12-inch main fire distribution pipe. Four fire hydrants are located nearby. Each fire hydrant is capable of delivering approximately 1,000 gallons per minute. Gate valves are located throughout the fire hydrant distribution system to provide control over each service area. The report indicated no new fire pumps would be needed, as the water supply is adequate.

Superceded DOE Order 6430.1A, paragraph 1530-3.3.3 required a minimum flow rate calculated as follows:

Required Flow Rate (gpm) = building volume (ft^3) * 0.03

For the Process Treatment Building:

Required Flow Rate (gpm) = (116.7 ft * 60 ft * approx 10 ft) * 0.03
= 2,101 gpm

The nearby fire hydrants can deliver 2,700 gpm at 75 psi residual. Based upon a flow test conducted on 9/1/99 provided by FEMP personnel. Consequently, the water supply is sufficient.

G. STANDPIPE SYSTEM

OBC Section 915 - Standpipe Systems requires a standpipe in buildings where the highest floor level exceeds 30 ft in height. It is recommended that a standpipe be installed in the stairway to the cyclone separator structure (43' high) in the Treatment building to facilitate fire department fire fighting efforts at that area. The standpipe should be installed per NFPA 14 - Standpipe and Hose Systems.

H. LIGHTNING PROTECTION

Consider the installation of lightning protection per NFPA 780 - Lightning Protection Systems. This may consist of conventional air terminals.

I. FIRE DEPARTMENT RESPONSE

The FEMP operates an on-site fully staffed and well-trained fire department. The FEMP Fire Department is capable of handling any fire at this facility. The response time to this portion of the FEMP plant would range from five (5) minutes to ten (10) minutes after receipt of notification. The distance from the fire station to the Silo 3 site is less than two (2) miles.

For the purpose of this analysis, the FEMP Fire Department may be considered as a redundant fire protection means since the water supply is sufficient. However, this is not required.

IX. LIFE SAFETY CONSIDERATIONS

A. OCCUPANCY

The rationale for determining the occupancy was addressed in detail previously. The occupancy classification for the Process Treatment building and the Retrieval Facility was determined to be Low-Hazard Factory and Industrial Use Group F-2 occupancy.

Any hazardous materials storage room would be classified as a hazardous occupancy for the area. The specific hazardous occupancy designation shall be determined based on the materials and the quantity of materials to be stored in the room.

One such area to consider is the diesel fuel storage and dispensing area. Consideration for locating this facility outside the Process Treatment area. The storage tank may be a semi-portable type with built-in secondary containment. At least fifty (50) feet separation from any building is recommended.

B. OCCUPANT LOAD

For the purpose of occupant load, the design maximum number of persons anticipated in the respective areas is as follows:

Treatment Facility	=	5 persons
Retrieval Facility	=	3 persons
Design Total Number of Occupants in the main building areas	=	8 persons

The calculated occupant load based on the OBC Table 1008.1.2 for industrial areas is as follows:

Treatment Facility	= 116.7 ft * 60 ft/100 ft^2/person = 70 persons
Retrieval Facility	= 876 ft^2 (assumed) / 100 ft^2/person = 8 persons
Calculated Total Occupants	= 78 persons Occupants in the main building areas

Therefore, the calculated occupant load of 78 persons controls the design of egress components.

C. NUMBER OF EXITS

The Treatment Facility shall be equipped with a minimum of two exits per OBC Table 1010.2. OBC Table 1010.3 allows single exits from two story Use Group F buildings with a maximum of 30 occupants per floor and 75 feet travel. Each modular building shall have a minimum of two exits oppositely located per OBC Table 1010.2 unless exempted by OBC Table 1010.3.

DOE requires a maximum travel path distance of 75 ft to an exit from within a room considered to be hazardous. The maximum length of exit access travel for a F-2 occupancy that is sprinklered is 400 ft, and 300 feet for non-sprinklered per OBC Table 1006.5. Based on the preliminary building/equipment schematic for the Process Treatment building, this is easily achieved.

Stairs in the Treatment Facility servicing the elevated process equipment and stairs providing access to the Retrieval Facility on top of the gantry structure should be designed and constructed per OBC Section 1014 - Stairways.

D. EGRESS COMPONENTS

Egress components shall be designed and constructed per the OBC, Chapter 10 - Means of Egress.

E. EMERGENCY LIGHTING

Emergency lighting shall be provided in the Process Treatment building and in the Retrieval Facility per OBC Section 1024 - Means of Egress Lighting.

F. EXIT MARKING

Exit marking shall be provided in the Process Treatment building and in the Retrieval Facility per OBC Section 1023 - Exit Signs and Lights.

G. INTERIOR FINISH

All interior finish material used in the project for all F-2 or H occupancy spaces shall be Class II for required vertical exits and passageways, Class II for corridors providing exit access, and Class III for rooms or enclosed spaces per OBC Table 803.4.

X. CRITICAL PROCESS EQUIPMENT

The majority of the materials which will be entering the brick making process are relatively inert materials. The materials are as follows:

- Silo 3 material
- Binder material
- Reducing agent
- Fly ash
- Water.

Materials used for maintenance of the ongoing operations include:

- Diesel fuel for the forklift
- Hydraulic fluid for the forklift
- Lubrication oil for the forklift, conveyors, and electric motors
- Solvents for general maintenance
- Oil-based paint for general maintenance
- Cleaning materials for general maintenance.

The Silo 3 material is considered radioactive. This material has undergone multiple calcining processes that have virtually eliminated any volatile or semi-volatile chemicals. It is unlikely that any of the raw materials or mixtures thereof in the brick making process would be combustible. The most likely combustible materials mentioned in Section VI of this report are the process equipment and other typical materials found in an industrial setting. Refer to Section XI of this report for a discussion of the Design Basis Fire. This FHA has not contemplated any design basis fires which infringe on the primary or secondary containment provided.

XI. FIRE LOSS POTENTIAL

The main project components and their value are summarized as follows:

- Gantry structure ($500,000)
- Retrieval Facility ($1,500,000)
- Treatment Facility and equipment ($2,400,000)
- Interim Storage Area boxes ($230,000)
- Three Trailers @ $20,000 each ($60,000)

Therefore, the entire project value totals $4,690,000.

Based upon the values at risk, no fire protection systems are required based upon the DOE criteria, since the MPFL is less than 10 million dollars. The DOE Implementation Guide for DOE order 420.1 recommends an automatic fire suppression system for any facility in excess of 5,000 square feet on the ground floor. Fluor Daniel Fernald is investigating an exemption to this requirement.

Since the project value is less than $50 million, redundant fire protection is not required.

XII. POSSIBLE FIRE SCENARIO

The possible fire scenarios include both a MPF scenario, as well as a design basis fire condition. Both scenarios are described in further detail.

A. MAXIMUM POSSIBLE FIRE

The worst case accidental fire condition would involve an accident involving a commercial truck crashing into the Treatment Building. The commercial truck is assumed to contain diesel fuel tanks. The accident would result in diesel spill fire as a result of the vehicle crash and a subsequent fire. The fire would involve the entire truck, tires, engine compartment and remaining fuel tank. The total hydrocarbon fuel involved is estimated at 100 gallons. Assuming a gravel surface around the building, the fuel will spill and cover an area encompassed by a circle with a radius of approximately thirty (30) feet. The expected loss would include the truck and portions of the building. The maximum loss expected in this scenario would be as follows:

Total Loss of Truck	$ 100,000
Partial Building Loss	$1,000,000
	$1,100,000

B. DESIGN BASIS FIRE

The design basis fire would involve the electrical room/motor control center. In the event of a failure of an electrical component, a fire involving electrical cable insulation, insulators, switches and miscellaneous components would result. The estimated fuel load in the room would be in the range of 5-10 lbs./ft.^{2}. Due to the potential severity, the room housing this equipment will be enclosed in 1-hour fire resistive construction. This enclosure will minimize the consequences on the remaining facility and equipment. The loss associated with this scenario would be approximately $250,000.

TABLE 1

2782

Table 503
HEIGHT AND AREA LIMITATIONS OF BUILDINGS
Height limitations of buildings (shown in upper figure as stories and feet above grade plane)[a], and area limitations of one- or two-story buildings facing on one street or public space not less than 30 feet wide (shown in lower figure as area in square feet per floor[m]). See Note a.

Use Group	Type of construction									
	Noncombustible					Noncombustible/Combustible			Combustible	
	Type 1		Type 2			Type 3		Type 4	Type 5	
	Protected Note b		Protected		Unprotected	Protected	Unprotected	Heavy timber	Protected	Unprotected
Note a	1A	1B	2A	2B	2C	3A	3B	4	5A	5B
A-1 Assembly, theaters	Not limited	Not limited	5 St. 65' 19,950	3 St. 40' 13,125	2 St. 30' 8,400	3 St. 40' 11,550	2 St. 30' 8,400	3 St. 40' 12,600	1 St. 20' 8,925	1 St. 20' 4,200
A-2 Assembly, nightclubs and similar uses	Not limited	Not limited 7,200	3 St. 40' 5,700	2 St. 30' 3,750	1 St. 20' 2,400	2 St. 30' 3,300	1 St. 20' 2,400	2 St. 30' 3,600	1 St. 20' 2,550	1 St. 20' 1,200
A-3 Assembly — Lecture halls, recreation centers, terminals, restaurants other than nightclubs	Not limited	Not limited	5 St. 65' 19,950	3 St. 40' 13,125	2 St. 30' 8,400	3 St. 40' 11,550	2 St. 30' 8,400	3 St. 40' 12,600	1 St. 20' 8,925	1 St. 20' 4,200
A-4 Assembly, churches — Note c	Not limited	Not limited	5 St. 65' 34,200	3 St. 40' 22,500	2 St. 30' 14,400	3 St. 40' 19,800	2 St. 30' 14,400	3 St. 40' 21,600	1 St. 20' 15,300	1 St. 20' 7,200
B Business	Not limited	Not limited	7 St. 85' 34,200	5 St. 65' 22,500	3 St. 40' 14,400	4 St. 50' 19,800	3 St. 40' 14,400	5 St. 65' 21,600	3 St. 40' 15,300	2 St. 30' 7,200
E Educational — Note c	Not limited	Not limited	5 St. 65' 34,200	3 St. 40' 22,500	2 St. 30' 14,400	3 St. 40' 19,800	2 St. 30' 14,400	3 St. 40' 21,600	1 St. 20' 15,300 Note d	1 St. 20' 7,200 Note d
F-1 Factory and industrial, moderate	Not limited	Not limited	6 St. 75' 22,800	4 St. 50' 15,000	2 St. 30' 9,600	3 St. 40' 13,200	2 St. 30' 9,600	4 St. 50' 14,400	2 St. 30' 10,200	1 St. 20' 4,800
F-2 Factory and industrial, low — Note h	Not limited	Not limited	7 St. 85' 34,200	5 St. 65' 22,500	3 St. 40' 14,400	4 St. 50' 19,800	3 St. 40' 14,400	5 St. 65' 21,600	3 St. 40' 15,300	2 St. 30' 7,200
H-1 High hazard, detonation hazards — Notes e,i,k,l	1 St. 20' 16,800	1 St. 20' 14,400	1 St. 20' 11,400	1 St. 20' 7,500	1 St. 20' 4,800	1 St. 20' 6,600	1 St. 20' 4,800	1 St. 20' 7,200	1 St. 20' 5,100	Not permitted
H-2 High hazard, deflagration hazards — Notes e,i,j,l	5 St. 65' 16,800	3 St. 40' 14,400	3 St. 40' 11,400	2 St. 30' 7,500	1 St. 20' 4,800	2 St. 30' 6,600	1 St. 20' 4,800	2 St. 30' 7,200	1 St. 20' 5,100	Not permitted
H-3 High hazard, physical hazards — Notes e,l	7 St. 85' 33,600	7 St. 85' 28,800	6 St. 75' 22,800	4 St. 50' 15,000	2 St. 30' 9,600	3 St. 40' 13,200	2 St. 30' 9,600	4 St. 50' 14,400	2 St. 30' 10,200	1 St. 20' 4,800
H-4 High hazard, health hazards — Notes e,l	7 St. 85' Not limited	7 St. 85' Not limited	7 St. 85' 34,200	5 St. 65' 22,500	3 St. 40' 14,400	4 St. 50' 19,800	3 St. 40' 14,400	5 St. 65' 21,600	3 St. 40' 15,300	2 St. 30' 7,200
I-1 Institutional, residential care	Not limited	Not limited	9 St. 100' 19,950	4 St. 50' 13,125	3 St. 40' 8,400	4 St. 50' 11,550	3 St. 40' 8,400	4 St. 50' 12,600	3 St. 40' 8,925	2 St. 35' 4,200
I-2 Institutional, incapacitated	Not limited	Not limited	4 St. 50' 17,100	2 St. 30' 11,250	1 St. 20' 7,200	1 St. 20' 9,900	Not permitted	1 St. 20' 10,800	1 St. 20' 7,650	Not permitted
I-3 Institutional, restrained	Not limited	Not limited	4 St. 50' 14,250	2 St. 30' 9,375	1 St. 20' 6,000	2 St. 30' 8,250	1 St. 20' 6,000	2 St. 30' 9,000	1 St. 20' 6,375	Not permitted
M Mercantile	Not limited	Not limited	6 St. 75' 22,800	4 St. 50' 15,000	2 St. 30' 9,600	3 St. 40' 13,200	2 St. 30' 9,600	4 St. 50' 14,400	2 St. 30' 10,200	1 St. 20' 4,800
R-1 Residential, hotels	Not limited	Not limited	9 St. 100' 22,800	4 St. 50' 15,000	3 St. 40' 9,600	4 St. 50' 13,200	3 St. 40' 9,600	4 St. 50' 14,400	3 St. 40' 10,200	2 St. 35' 4,800
R-2 Residential, multiple-family	Not limited	Not limited	9 St. 100' 22,800	4 St. 50' 15,000 Note f	3 St. 40' 9,600	4 St. 50' 13,200 Note f	3 St. 40' 9,600	4 St. 50' 14,400	3 St. 40' 10,200	2 St. 35' 4,800
R-3 Residential, multiple single-family	Not limited	Not limited	4 St. 50' 22,800	4 St. 50' 15,000	3 St. 40' 9,600	4 St. 50' 13,200	3 St. 40' 9,600	4 St. 50' 14,400	3 St. 40' 10,200	2 St. 35' 4,800
S-1 Storage, moderate	Not limited	Not limited	5 St. 65' 19,950	4 St. 50' 13,125	2 St. 30' 8,400	3 St. 40' 11,550	2 St. 30' 8,400	4 St. 50' 12,600	2 St. 30' 8,925	1 St. 20' 4,200
S-2 Storage, low — Note g	Not limited	Not limited	7 St. 85' 34,200	5 St. 65' 22,500	3 St. 40' 14,400	4 St. 50' 19,800	3 St. 40' 14,400	5 St. 65' 21,600	3 St. 40' 15,300	2 St. 30' 7,200

37

2782

Table 503
HEIGHT AND AREA LIMITATIONS OF BUILDINGS (continued)

Use Group	Type of construction									
	Noncombustible					Noncombustible/Combustible			Combustible	
	Type 1		Type 2			Type 3		Type 4	Type 5	
	Protected Note b		Protected		Unprotected	Protected	Unprotected	Heavy timber	Protected	Unprotected
Note a	1A	1B	2A	2B	2C	3A	3B	4	5A	5B
U Utility, miscellaneous	Not limited	Not limited	5 St. 65' 19,950	4 St. 50' 13,125	2 St. 30' 8,400	3 St. 40' 11,550	2 St. 40' 8,400	4 St. 50' 12,600	2 St. 30' 8,925	1 St. 20' 4,200

Note a. See the following sections for general exceptions to Table 503:
Section 504.2 Allowable height increase due to automatic sprinkler system installation.
Section 506.2 Allowable area increase due to street frontage.
Section 506.3 Allowable area increase due to automatic sprinkler system installation.
Section 506.4 Allowable area reduction for multistory buildings.
Section 507.0 Unlimited area one-story buildings.
Note b. Buildings of Type 1 construction permitted to be of unlimited tabular heights and areas are not subject to special requirements that allow increased heights and areas for other types of construction (see Section 503.1.4).
Note c. For height exceptions for auditoriums in occupancies in Use Groups A-4 and E, see Section 504.3.
Note d. For height exceptions for day care centers in buildings of Type 5 construction, see Section 504.4.
Note e. For exceptions to height and area limitations for buildings with occupancies in Use Group H, see Chapter 4 governing the specific use groups.
Note f. For exceptions to height of buildings with occupancies in Use Group R-2 of Types 2B and 3A construction, see Sections 504.6 and 504.7.
Note g. For height and area exceptions for open parking structures, see Section 406.0.
Note h. For exceptions to height and area limitations for special industrial occupancies, see Section 503.1.1.
Note i. Occupancies in Use Groups H-1 and H-2 shall not be permitted below grade.
Note j. Rooms and areas of Use Group H-2 containing pyrophoric materials shall not be permitted in buildings of Type 3, 4 or 5 construction.
Note k. Occupancies in Use Group H-1 are required to be detached one-story buildings (see Section 707.1.1).
Note l. For exceptions to height for buildings with occupancies in Use Group H, see Section 504.5.
Note m. 1 foot = 304.8 mm; 1 square foot = 0.093 m^2.

HISTORY: Eff. 3-1-98

Section 504.0 HEIGHT MODIFICATIONS

504.1 General: The provisions of this section shall modify the height limitations of Table 503 as herein specified.

CROSS REFERENCES

Building Code 406.4, Heights and areas; 602.1, General

504.2 Automatic sprinkler systems: Where a building is equipped throughout with an automatic sprinkler system in accordance with Section 906.2.1, the building height limitation specified in Table 503 shall be increased one story and 20 feet (6096 mm). The building height limitations for buildings with an occupancy in Use Group R specified in Table 503 shall be increased one story and 20 feet (6096 mm) but not to exceed a height of four stories and 60 feet (18288 mm) where the building is equipped throughout with an automatic sprinkler system installed in accordance with Section 906.2.2 and the system is supervised in accordance with Section 924.1, method 1.

Exception: The automatic sprinkler system height increase shall not apply to any of the following conditions:

1. Buildings with an occupancy in Use Group H-1.
2. A fire area with an occupancy in Use Groups H-2 or H-3.
3. Buildings of Types 2C, 3A, 4 and 5A construction with an occupancy in Use Group I-2.

504.3 Auditoriums: The maximum height of auditoriums in Use Groups A-4 and E shall be 65 feet (19812 mm) in buildings of Type 2B, 3A, 4 or 5A construction and 45 feet (13716 mm) in buildings of 2C, 3B or 5B construction.

504.4 Day care centers: The height limitations of Table 503 for day care centers classified as Use Group E, in buildings of Type 5 construction, shall be increased one story and 20 feet (6096 mm) provided that the total occupant load is less than 50 persons.

504.5 High-hazard use groups: Buildings and structures with an occupancy in Use Group H that requires unusual heights necessary to accommodate special manufacturing processes and equipment shall be exempt from the tabular height limitations, in feet, of Table 503.

504.6 Type 3A construction: The height limitation for buildings of Type 3A construction with occupancies in Use Group R-2 shall be increased to six stories and 75 feet (22860 mm) where the first floor construction above the basement has a fireresistance rating of not less than 3 hours and the floor area is subdivided by 2-hour fireresistance rated fire walls into fire areas of not more than 3,000 square feet (279 m^2).

504.7 Type 2B construction: The height limitation for buildings of Type 2B construction with occupancies in Use Group R-2 shall be increased to nine stories and 100 feet (30480 mm) where the building is separated by not less than 50 feet (15240 mm) from any other building on the lot and from interior lot lines, the exits are segregated in a fire area enclosed by a 2-hour fireresistance rated fire wall and the first floor construction has a fireresistance rating of not less than 1½ hours.

HISTORY: Eff. 3-1-98

Section 505.0 MEZZANINES

505.1 General: A mezzanine or mezzanines in compliance with this section shall be considered a portion of the floor below. Such mezzanines shall not contribute to the building area as regulated by Section 503.2. Such mezzanines shall not contribute to the number of stories as regulated by Section 503.3. The area of the mezzanine shall be included in determining the fire area.

505.2 Area limitation: The aggregate area of a mezzanine or mezzanines within a room shall not exceed one-third of the area of that room. The enclosed portions of rooms shall not be included in a determination of the size of the room in which the mezzanine is located. In determining the allowable mezzanine area, the area of the mezzanine shall not be included in the area of the room.

Exception: The aggregate area of mezzanines in buildings and structures of Type 1 or 2 construction for special industrial occupancies in accordance with Section 503.1.1 shall not exceed two-thirds of the area of that room.

38

505.3 Egress: Each occupant of a mezzanine shall have access to at least two independent means of egress where such spaces require two means of egress in accordance with Section 1017.2.

TABLE 2

2782

Table 602
FIRERESISTANCE RATINGS OF STRUCTURE ELEMENTS[a]

Structure element (Note a)		Type of construction Section 602.0									
		Noncombustible					Noncombustible/Combustible			Combustible	
		Type 1 Section 603.0		Type 2 Section 603.0			Type 3 Section 604.0		Type 4 Section 605.0	Type 5 Section 606.0	
		Protected		Protected		Unprotected	Protected	Unprotected	Heavy timber Note e	Protected	Unprotected
		1A	1B	2A	2B	2C	3A	3B	4	5A	5B
1 Exterior walls	Load-bearing	4	3	2	1	0	2	2	2	1	0
		← Not less than the fireresistance rating based on fire separation distance (see Section 705.2) →									
	Nonload-bearing	← Not less than the fireresistance rating based on fire separation distance (see Section 705.2) →									
2 Fire walls and party walls (Section 707.0)		4	3	2	2	2	2	2	2	2	2
		← Not less than the fireresistance rating required by Table 707.1 →									
3 Fire separation assemblies (Section 709.0)	Fire enclosure of exits (Sections 1014.11, 709.0 and Note b)	2	2	2	2	2	2	2	2	2	2
	Shafts (other than exits) and elevator hoistways (Sections 709.0, 710.0 and Note b)	2	2	2	2	2	2	2	2	1	1
	Mixed use and fire area separations (Section 313.0)	← Not less than the fireresistance rating required by Table 313.1.2 →									
	Other separation assemblies (Note i)	1	1	1	1	1	1	1	1	1	1
		← Note d →									
4 Fire partitions (Section 711.0)	Exit access corridors (Note g)	← Not less than the fireresistance rating required by Section 1011.4 →									
		← Note d →									
	Tenant spaces separations (Note f)	1	1	1	1	0	1	0	1	1	0
		← Note d →									
5 Dwelling unit and guestroom separations (Sections 711.0, 713.0 and Notes f and j)		1	1	1	1	1	1	1	1	1	1
		← Note d →									
6 Smoke barriers (Section 712.0 and Note g)		1	1	1	1	1	1	1	1	1	1
7 Other nonloadbearing partitions		0	0	0	0	0	0	0	0	0	0
		← Note d →									
8 Interior loadbearing walls, loadbearing partitions, columns, girders, trusses (other than roof trusses) and framing (Section 716.0)	Supporting more than one floor	4	3	2	1	0	1	0	see Sec. 605.0	1	0
	Supporting one floor only or a roof only	3	2	1½	1	0	1	0	see Sec. 605.0	1	0
9 Structural members supporting wall (Section 716.0 and Note g)		3	2	1½	1	0	1	0	1	1	0
		← Not less than fireresistance rating of wall supported →									
10 Floor construction including beams (Section 713.0 and Note h)		3	2	1½ Note l	1	0	1	0	see Sec. 605.0 Note c	1	0
11 Roof construction, including beams, trusses and framing, arches and roof deck (Section 715.0 and Notes e, m)	15' or less in height to lowest member	2	1½	1	1	0	1	0	see Sec. 605.0 Note c	1	0
				← Note d →							
	More than 15' but less than 20' in height to lowest member	1	1	1	0	0	0	0	see Sec. 605.0	1	0
		← Note d →									
	20' or more in height to lowest member	0	0	0	0	0	0	0	see Sec. 605.0	0	0
		← Note d →									

Note a. For fireresistance rating requirements for structural members and assemblies which support other fireresistance rated members or assemblies, see Section 716.1.
Note b. For reductions in the required fireresistance rating of exit and shaft enclosures, see Sections 1014.11 and 710.3.
Note c. For substitution of other structural materials for timber in Type 4 construction, see Section 2304.2.
Note d. For fireretardant-treated wood permitted in roof construction and nonloadbearing walls where the required fireresistance rating is 1 hour or less, see Sections 603.2 and 2310.0.
Note e. For permitted uses of heavy timber in roof construction in buildings of Types 1 and 2 construction, see Section 715.4.
Note f. For reductions in required fireresistance ratings of tenant separations and dwelling unit separations, see Sections 1011.4 and 1011.4.1.
Note g. For exceptions to the required fireresistance rating of construction supporting exit access corridor walls, tenant separation walls in covered mall buildings, and smoke barriers, see Sections 711.4 and 712.2.
Note h. For buildings having habitable or occupiable stories or basements below grade, see Section 1006.3.1.
Note i. Not less than the rating required by this code.
Note j. For Use Group R-3, see Section 310.5.
Note k. Fireresistance ratings are expressed in hours.
Note l. In buildings which are required to comply with the provisions of Section 403.3, the required fireresistance rating for floor construction, including beams, shall be 2 hours, see Section 403.3.3.1.
Note m. 1 foot = 304.8 mm.

39

HISTORY: Eff. 3-1-98

Figure 1

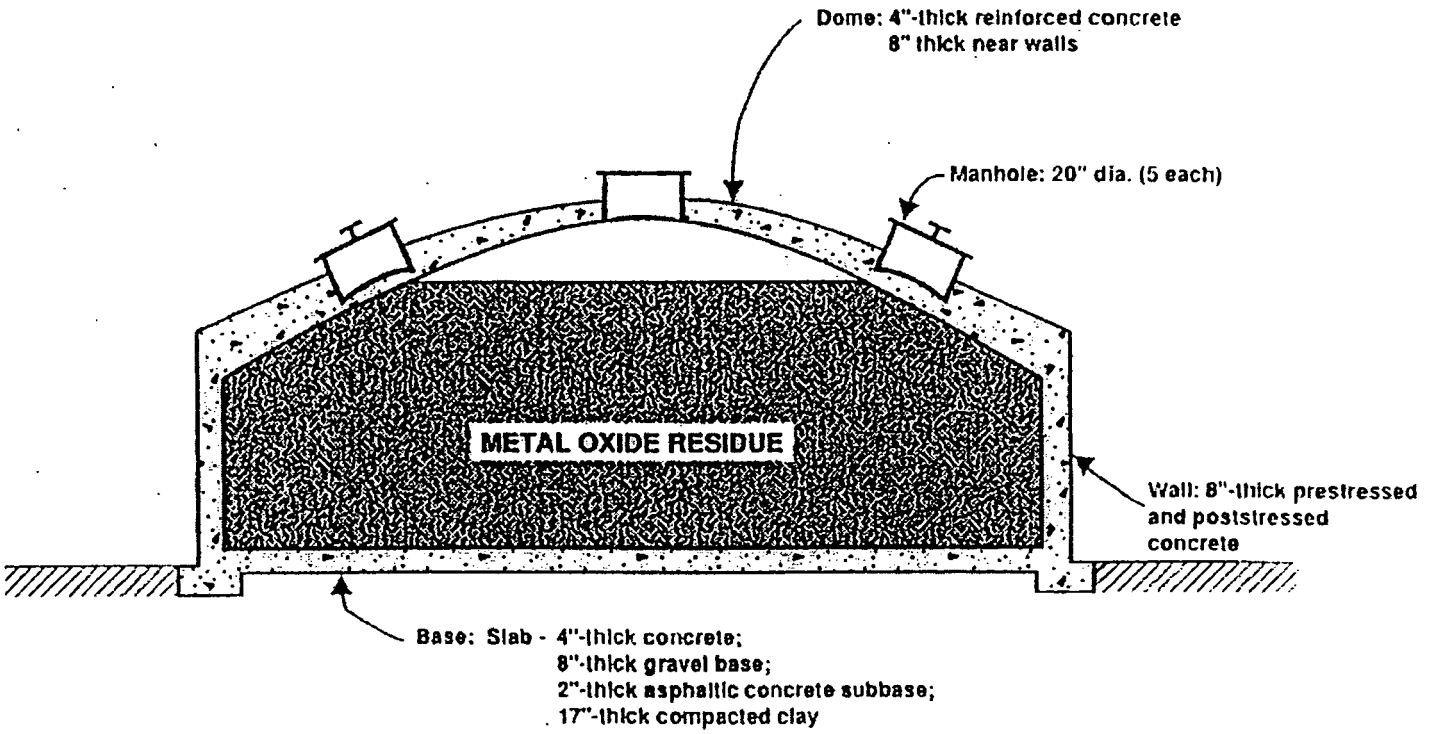

Figure 1: Cross Section View of Silo 3

Figure 2

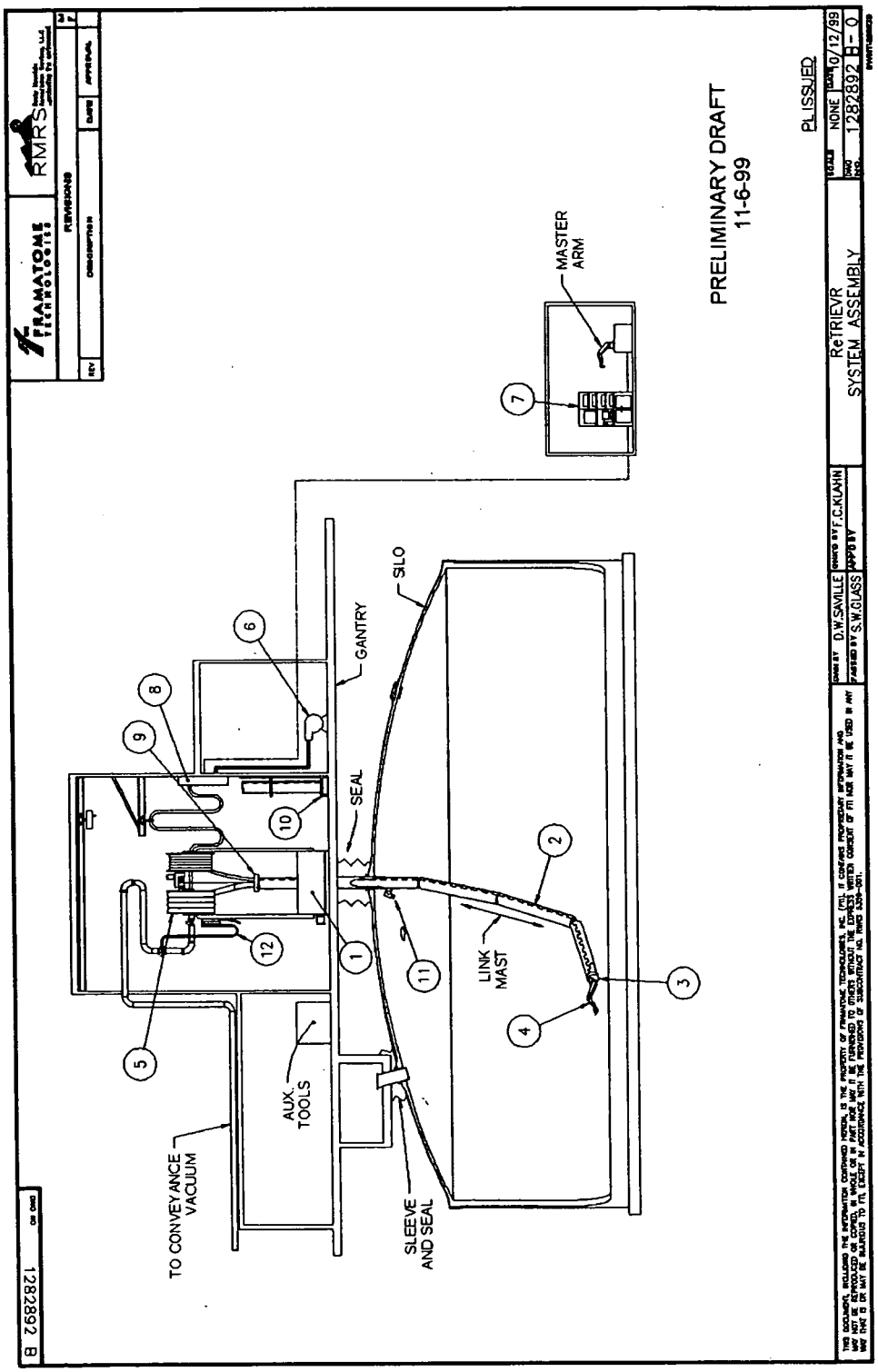

Figure 2: Cross Section View of Silo 3 with Manipulator Assembly Structure

Figure 3

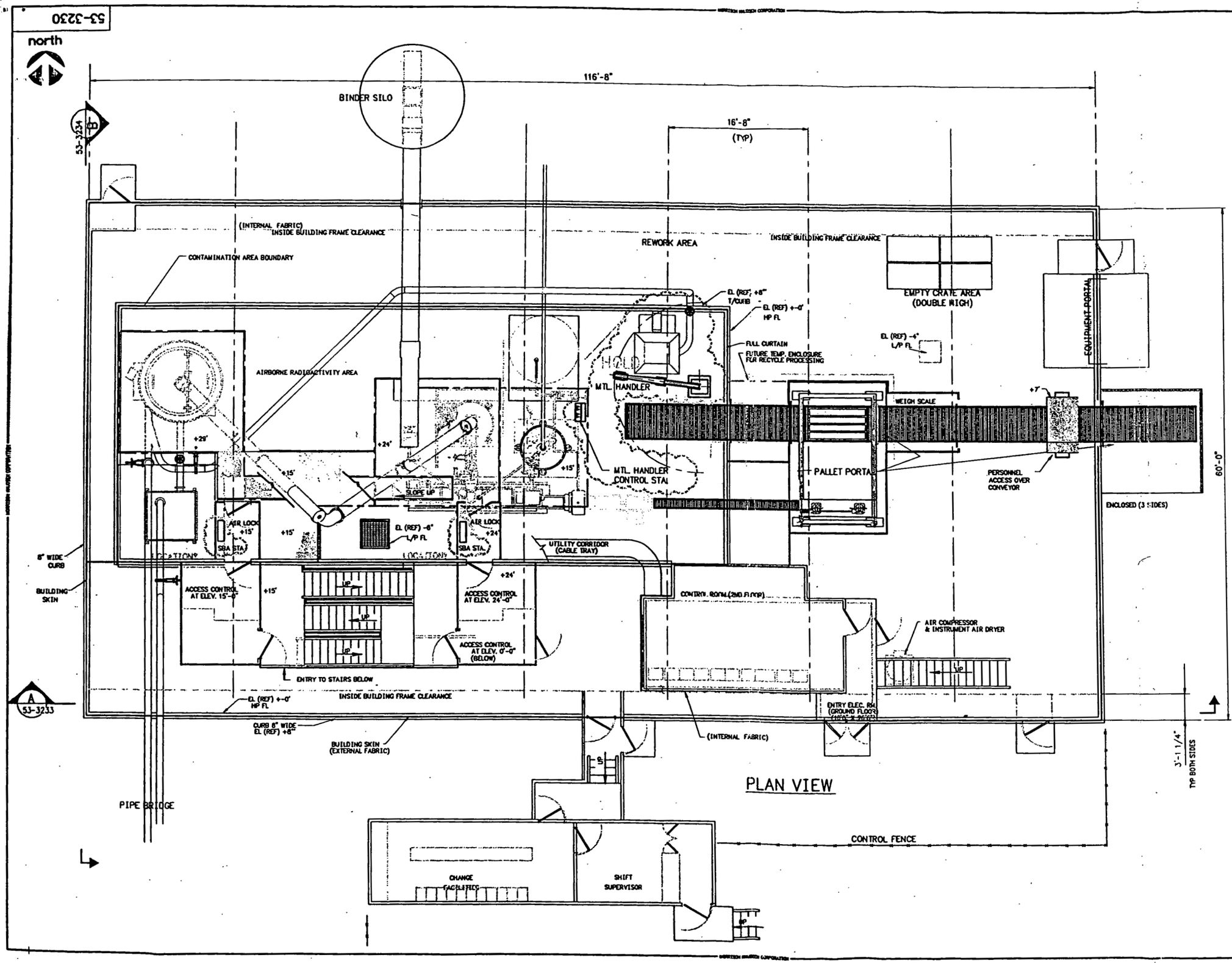

REFERENCE DRAWINGS	
DRAWING NO.	TITLE
53-2100	LAYOUT PLAN VIEW

NOTES

2782

REV	DATE	BY	CKD	DESCRIPTION
C	11/15/99			FOR REVIEW AND COMMENT
B	09/23/99			PHAR DESIGN PACKAGE
A	06/28/99			CONCEPTUAL DESIGN PACKAGE

SILO 3 PROJECT
FDF - FERMCO

GENERAL ARRANGEMENT PLAN

MORRISON KNUDSEN CORPORATION
10822 W. Toller Drive, Littleton CO 80127 Tel. (303) 948-4000

RMRS Rocky Mountain Remediation Services, L.L.C. ...protecting the environment

42

SCALE: 3/16"=1'-0"	
DRAWN: T. CASTRICONE	DATE: 8/15/99
DESIGNED: C. A. BOSSARD	DATE: 8/15/99
CHECKED:	DATE:
VERIFIED:	DATE:
APPROVED:	DATE:
CADD FILE NAME: 535001.dwg	
Q-LEVEL (Y/N):	
DRAWING NUMBER: 53-3230	REV C

Figure 4

53-3233

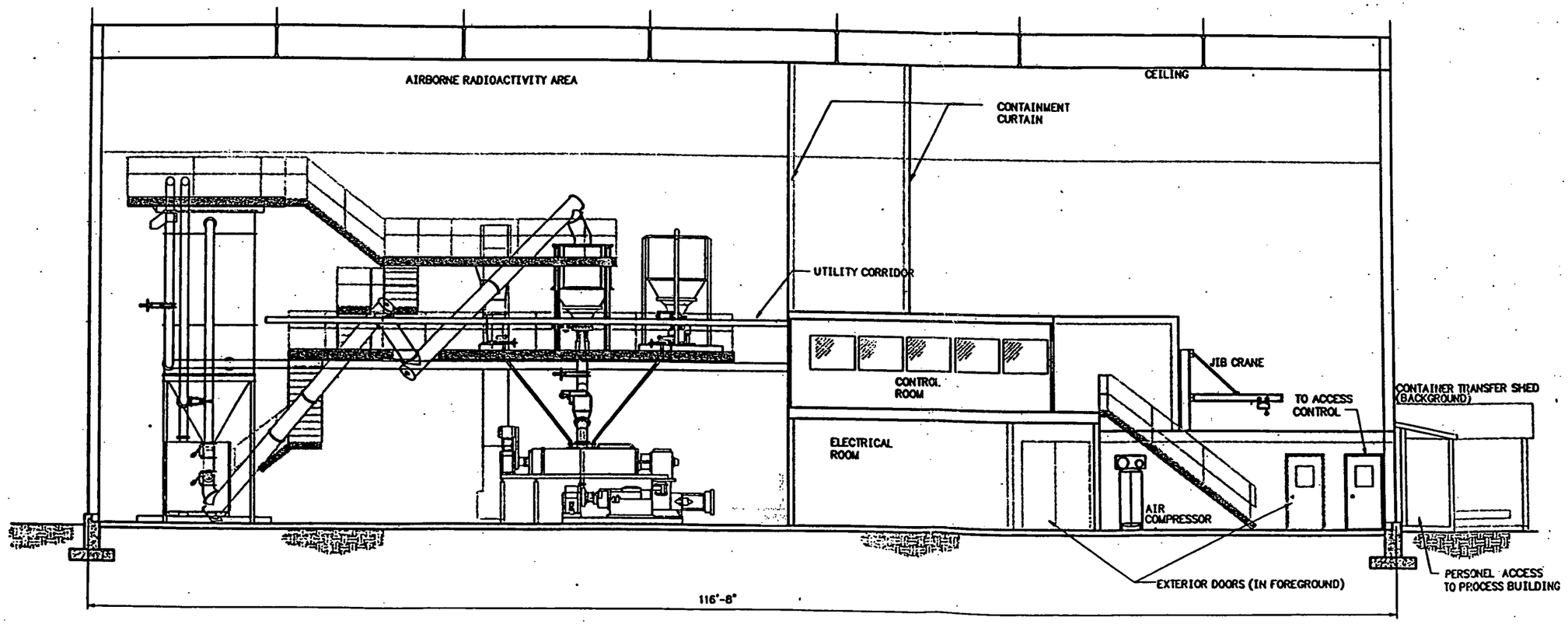

SECTION A
SCALE: NONE 53-3230

REFERENCE DRAWINGS

DRAWING NO.	TITLE

NOTES

2782

REV	DATE	BY	CKD	DESCRIPTION
B	09/23/99			PHAR DESIGN PACKAGE
A	06/28/99			CONCEPTUAL DESIGN PACKAGE

SILO 3 PROJECT
FDF - FERMCO

MECHANICAL
SECTIONS AND DETAILS

MORRISON KNUDSEN CORPORATION
10822 W. Teller Drive, Littleton CO 80127 Tel. (303) 948-6000

RMRS

43

SCALE: NONE	
DRAWN: K.LANDRUM	DATE: 9/02/99
DESIGNED: K. LANDRUM	DATE: 9/02/99
CHECKED:	DATE:
VERIFIED:	DATE:
APPROVED:	DATE:
CADD FILE NAME: 53S004.dwg	
D-LEVEL (Y/N):	
DRAWING NUMBER: 53-3233	REV B

Figure 5

53-2101

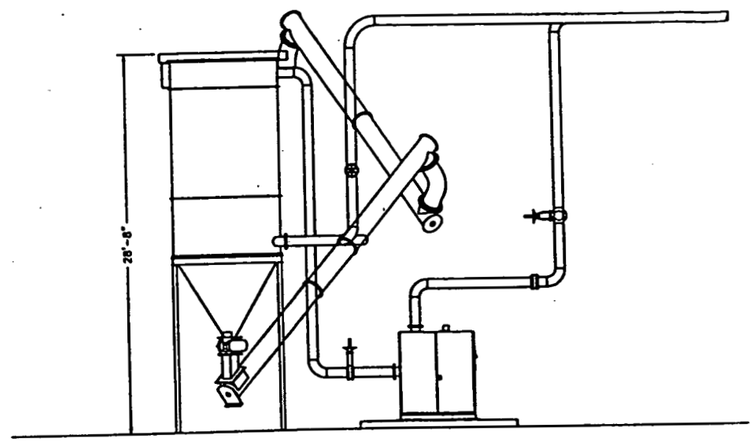

VIEW B
SCALE 3/16"=12"

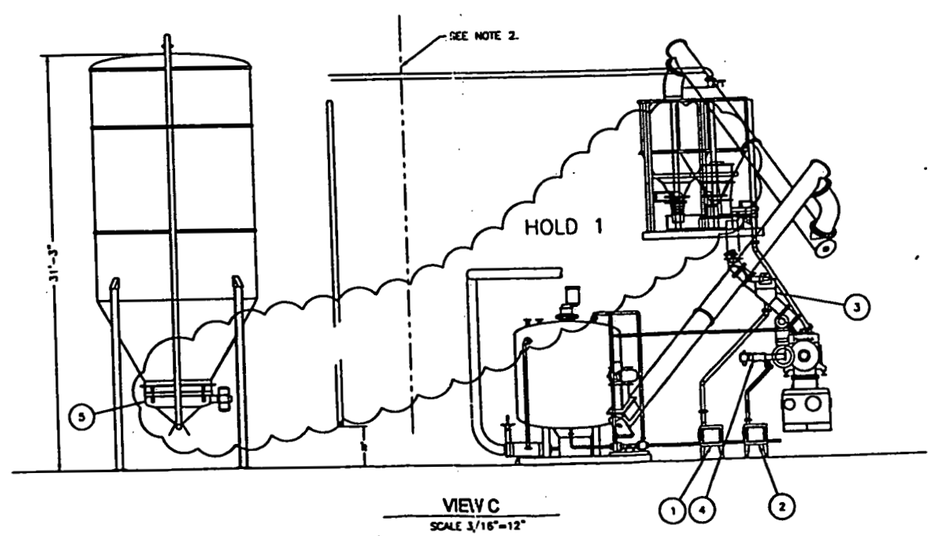

VIEW C
SCALE 3/16"=12"

KEY SCHEDULE

ITEM	DESCRIPTION	PART NUMBER
1	WASTE SAMPLER CABINET	84-PE-004
2	PRODUCT SAMPLER CABINET	84-PE-005
3	WASTE SAMPLER	84-PE-001
4	PRODUCT SAMPLER	84-PE-002
5	BINDER BIN ACTIVATOR	44-AC-001

REFERENCE DRAWINGS

DRAWING NO.	TITLE
53-2100	TREATMENT SYSTEM LAYOUT PLAN VIEW
53-2102	TREATMENT SYSTEM ELEVATIONS
53-2108	TREATMENT SYSTEM ELEVATIONS

NOTES

1. REFER TO 53-3230 FOR EQUIPMENT TO BUILDING LOCATION.
2. BUILDING PENETRATIONS DEPENDENT ON BUILDING DIMENSIONS AND PROCESS EQUIPMENT LOCATION THEREIN.

HOLD

1. EQUIPMENT CHANGING TO SCREW CONVEYOR.

2782

REV	DATE	BY	CKD	DESCRIPTION
B	9/24/99			PHAR DESIGN PACKAGE
A	6/25/99			CONCEPTUAL DESIGN PACKAGE

SILO 3 PROJECT
FDF - FERMCO

TREATMENT SYSTEM
ELEVATIONS

BNFL Inc.

RMRS

44

SCALE: 3/16" = 12"
DRAWN: R. OLDS — DATE: 6/21/99
DESIGNED: D. HORN — DATE: 6/21/99
CHECKED: — DATE:
VERIFIED: — DATE:
APPROVED: — DATE:
CADD FILE NAME: 53-2101_C1
D-LEVEL (Y/N):
DRAWING NUMBER: 53-2101
REV C1

ernald Sit \Drawings in Progress\Mechanical\53-2101_C1.dwg Mon Nc 15 11:08:32 1999 BNFL Inc.

Figure 6

2782

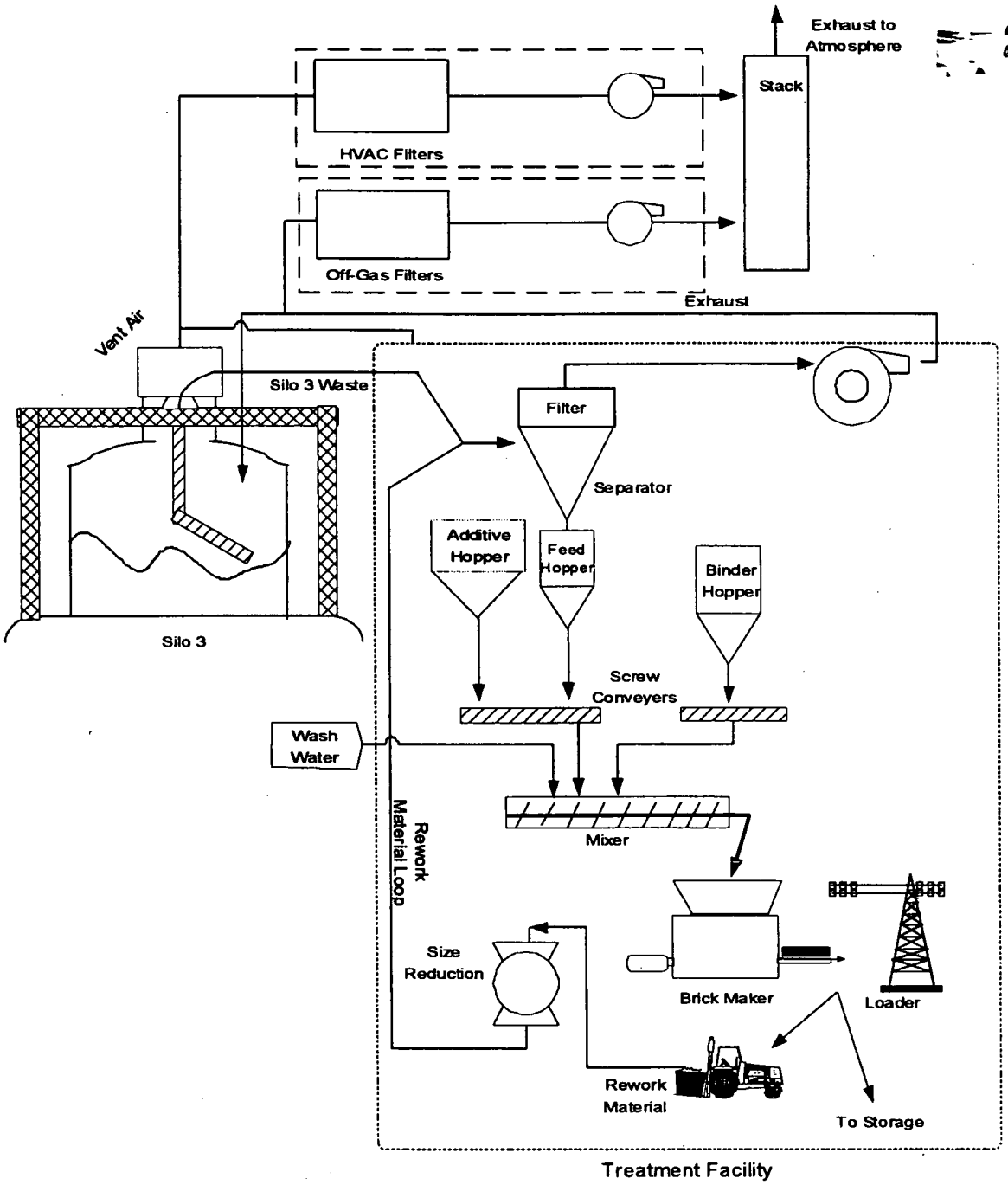

Figure 6: Schematic view of Silo 3 Retrieval and Stabilization in Process Module

45