Department of Energy
Ohio Field Office
Fernald Area Office
P. O. Box 538705
Cincinnati, Ohio 45253-8705
(513) 648-3155

3199

AUG 17 2000

Mr. James A. Saric, Remedial Project Manager
U.S. Environmental Protection Agency
Region V, SRF-5J
77 West Jackson Boulevard
Chicago, Illinois 60604-3590

DOE-0941-00

Mr. Tom Schneider, Project Manager
Ohio Environmental Protection Agency
401 East 5th Street
Dayton, Ohio 45402-2911

Ms. Val Orr
Division of Drinking and Ground Waters - UIC Unit
Ohio Environmental Protection Agency
P.O. Box 1049
1800 Watermark Drive
Columbus, Ohio 43216-1049

Dear Mr. Saric, Mr. Schneider, and Ms. Orr:

MAY 2000 RE-INJECTION OPERATING REPORT

This correspondence submits the Re-Injection Operation Report for the month of May 2000.

As specified in the Re-Injection Demonstration Test Plan, monthly re-injection operating reports are to be prepared and submitted to the U.S. Environmental Protection Agency (U.S. EPA), Ohio Environmental Protection Agency (OEPA) Office of Federal Facilities Oversight, and the OEPA Division of Drinking and Ground Waters - UIC Unit.

Recycled and Recyclable

If you have any questions regarding this submittal, please contact Robert Janke at (513) 648-3124.

Sincerely,

Johnny Reising

FEMP:R.J. Janke

Johnny W. Reising
Fernald Remedial Action
Project Manager

Enclosure

cc w/enclosure:
R. J. Janke, OH/FEMP
G. Jablonowski, USEPA-V, SRF-5J
T. Schneider, OEPA-Dayton (three copies of enclosure)
F. Bell, ATSDR
F. Hodge, Tetra Tech
M. Schupe, HSI GeoTrans
R. Vandegrift, ODH
D. Brettschneider, Fluor Fernald, Inc./52-5
K. Broberg, Fluor Fernald, Inc./52-5
W. Hertel, Fluor Fernald, Inc./52-5
M. Jewett, Fluor Fernald, Inc./52-5
R. White, Fluor Fernald, Inc./52-5
AR Coordinator, Fluor Fernald, Inc./78

cc w/o enclosure:
N. Hallein, EM-31/CLOV
A. Tanner, OH/FEMP
D. Carr, Fluor Fernald, Inc./2
T. Hagen, Fluor Fernald, Inc./65-2
J. Harmon, Fluor Fernald, Inc./90
S. Hinnefeld, Fluor Fernald, Inc./31
M. Jewett, Fluor Fernald, Inc./52-2
U. Kumthekar, Fluor Fernald, Inc./64
T. Walsh, Fluor Fernald, Inc./65-2
ECDC, Fluor Fernald, Inc./52-7

MONTHLY RE-INJECTION OPERATING REPORT MAY 2000

3199

OVERVIEW

On September 2, 1999, DOE completed one year of active groundwater re-injection as part of a field-scale demonstration. A report detailing the demonstration was issued to the U.S. EPA and Ohio EPA on May 30, 2000. Based on the results of the demonstration, re-injection will continue at Fernald.

Re-Injection at Fernald is exempted under 40 CFR 300.400(e)(1) from requiring a permit, as it is a CERCLA action. Per Ohio EPA Guidelines (OEPA 1997) DOE will prepare monthly operating reports that include:

I. An analysis of the injectate
II. The volume and rate of re-injection
III. A description of any well maintenance and rehabilitation procedures conducted.

Routine monitoring of the aquifer in the re-injection area is conducted for the Integrated Environmental Monitoring Program. Results of the Integrated Monitoring Program are reported quarterly and are available for viewing on the Fernald Website, www.fernald.gov.

DOE will submit the monthly re-injection operating reports to the U.S. EPA, Ohio EPA Office of Federal Facilities Oversight, and the Division of Ohio EPA Drinking and Ground Waters – Underground Injection Control Unit.

This report covers re-injection operations from May 1, 2000 to June 1, 2000.

ANALYSIS OF THE INJECTATE

Groundwater extracted from the Great Miami Aquifer is treated for uranium removal and is then re-injected into the Great Miami Aquifer. The groundwater is treated in the FEMP Advanced Waste Water Treatment (AWWT) Expansion Facility. The effluent from the AWWT Expansion Facility is sampled monthly for the parameters listed in Table 2-1 of the Re-Injection Demonstration Test Plan, Revision 0.

Monthly injectate grab sampling focuses on the final remediation level (FRL) constituents that have had an exceedance of their FRL in the region of the aquifer from which the groundwater is being pumped. The monthly injectate grab samples are sent to an off-site laboratory for analysis. In addition to the monthly grab sample, 24-hour composite samples are collected and analyzed for uranium. The 24-hour composite

sampler samples the combined effluent from the active treatment trains comprising the facility. The daily composite results are used by plant management for making process control decisions. They provide a daily evaluation of the quality of the water that is re-injected into the aquifer.

Composite daily uranium results from the AWWT Expansion Facility effluent are shown in Figure 1. The composite data for May 2000 indicate that the uranium concentration of the treated groundwater re-injected into the aquifer on May 1, 2000 was 20.3 µg/L. On May 2, 2000, DOE temporarily discontinued re-injection operations and notified the U.S. EPA and Ohio EPA verbally of the shutdown due to the uranium exceedance in the May 1, 2000 24-hour composite sample. Re-injection remained down until May 4, 2000 when the uranium concentration of the treated groundwater was once again judged to be acceptable for re-injection per the Operations and Maintenance Masters Plan. DOE briefed both the U.S. EPA and Ohio EPA on May 9, 2000, during the routine weekly teleconference meeting, of the uranium exceedance of May 1, 2000 and the subsequent shutdown and re-start of the re-injection wells. A facsimile was issued summarizing the discussion of May 9, 2000.

Also noted on Figure 1, the re-injection wells were shut down again on May 8, 2000. The wells remained down for the remainder of the month. Re-Injection was stopped to investigate the appearance of ion exchange resin in Injection Well 8, which was found while the well was being treated for plugging. This is further discussed below in the section on well maintenance.

The monthly grab sample was collected on May 1, 2000. Results are provided in Table 1. These results indicate that with the exception of uranium, all the constituent concentrations are below their respective FRLs. The uranium concentration measured in the grab sample was 22.7 Πg/L. The FRL for uranium is 20 Πg/L. The uranium concentration of the grab sample collected on May 1, 2000 compares favorably with the 24-hour composite sample (20.3 Πg/L uranium) collected on May 1, 2000.

VOLUME AND RATE OF RE-INJECTION

Treated groundwater is being re-injected into the Great Miami Aquifer in five re-injection wells. The design re-injection set point for each of the re-injection wells is 200 gpm. The combined design re-injection rate for all five wells is 1000 gallons per minute. Figure 2 illustrates the location of the five re-injection wells. Re-Injection Well 8 is 8 inches in diameter. Re-Injection Well 9 is 12 inches in diameter. The other re-injection wells are all 16 inches in diameter.

In February of 2000, a new injection rate strategy was initiated to help compensate for well downtimes due to maintenance, electrical outages, etc. Injection rate set points may be temporarily increased to 220 gpm toward the end of a month and decreased to the 200-gpm rate at the start of a new month. The ability to increase re-injection rates is dependent upon the availability of higher than average groundwater treatment capacity and lower than normal uranium concentrations in the site effluent. This strategy for adjusting re-injection rate set points may continue in future months depending on the available treatment capacity and uranium concentrations in the site effluent.

Figure 3 illustrates the water level rise in each of the five re-injection wells from May 1, 2000 to June 1, 2000, as measured by the operators at the AWWT Expansion Facility Distributed Control System (DCS). Water levels are recorded three times each day. Water levels inside the re-injection wells are monitored as an indicator of plugging within the wells. Given a constant re-injection rate, as a well screen becomes plugged, the water level in the well rises to compensate for the greater pressure needed to move the same volume of water through a smaller opening.

While it is not the intent of this report to discuss operational issues, the following information is provided to aid in the interpretation of Figure 3.

- On May 2, 2000 the re-injection system was shut down because the composite sample collected on May 1, 2000 had a uranium concentration that was too high. The system remained off until May 4, 2000.

- From May 8, 2000 to May 28, 2000 the system was down due to failure of the AWWT Phase III Final System Basket Filter. From May 28, 2000 to the end of the month the system was down for maintenance.

WELL MAINTENANCE AND REHABILITATION

During May, Re-Injection Well 8 was treated for plugging. Actual work was conducted from May 8, 2000 to May 11, 2000. The well was treated using approximately two gallons of sodium hypochlorite with a concentration of 12.5 percent chlorine. The well screen was swabbed and surged. Approximately 6,550 gallons of water were pumped from the well during rehabilitation.

During the rehabilitation, it was discovered that ion-exchange resin from the AWWT treatment system was present in the well. This led to the discovery that the AWWT Phase III Final System Basket Filter had failed and needed to be repaired. A report on the occurrence of ion-exchange resin in IW-8 was included in the EPA-Weekly conference call facsimile for week ending July 9, 2000, and is attached.

TABLE 1

ANALYSIS OF INJECTATE
Sample Collected May 1, 2000

Constituents[a]	Result[b]	Groundwater FRL[c]	Detection Limit	Constituent Type[e]	Basis for FRL[f]
General Chemistry		**mg/L**			
Nitrate	0.455	11.0		MP	B
Inorganics		**mg/L**			
Antimony	0.0009 B	0.006		N	A
Arsenic	U	0.05	0.00072	N	A
Barium	0.0529	2.0		N	A
Beryllium	U	0.004	0.00002	N	A
Cadmium	U	0.014	0.00008	N	B
Total Chromium	0.0008 B	0.022[d]		MP	R
Cobalt	U	0.17	0.0002	N	R
Lead	0.00065 B	0.015		N	A
Manganese	0.00026 B	0.9		N	B
Mercury	U	0.002	0.0001	MP	A
Nickel	0.0011 B	0.1		N	A
Selenium	U	0.05	0.0011	N	A
Silver	U	0.05	0.00022	N	R
Vanadium	U	0.038	0.00015	N	R
Zinc	0.0012 B	0.021		N	B
Radionuclides		**pCi/L**			
Neptunium-237	U	1.0	0.0288	MP	R*
Radium-226	U	20.0	0.656	N	A
Strontium-90	U	8.0	0.352	MP	A
Thorium-228	U	4.0	0.130	N	R*
Thorium-232	U	1.2	0.0337	N	R*
		µg/L			
Total Uranium	**22.7**	20.0		MP	A
Organics		**µg/L**			
Bis(2-ethylhexyl)phthalate	U	6.0	5	N	A
Carbon disulfide	U	5.5	5	N	A
1, 1-Dichloroethene	U	7.0	5	N	A
1, 2-Dichloroethane	U	5.0	1	MP	A
Trichloroethene	U	5.0	3	N	A

[a]Constituents taken from Table 2-1 of Re-Injection Demonstration Test Plan. Constituents are those previously detected in aquifer zones 2 and 4 at concentrations above their FRL.
[b]If a duplicate sample was analyzed the highest concentration between the regular sample and duplicate sample is reported.
U = Nondetect
B = Lab qualifier (inorganic). Reported result is greater than the instrument detection level but less than the contract required detection limit.
[c]From Table 9-4 in OU5 ROD.
[d]FRL is for hexavalent chromium.
[e]Constituent types from Appendix A of IEMP. MP indicates that the constituent has been identified as being able to migrate to the aquifer. N indicates that the constituent has been identified as not being able to migrate to the aquifer.
[f]A - Applicable or relevant and appropriate requirement based (MCL, PMCL, etc.).
B - Based on 95th percentile background concentrations.
R - Risk-based
R* - Risk-based radionuclide cleanup levels include constituent specific 95th percentile background concentration.

TABLE 2

RE-INJECTION WELL 22107 (IW-8)
OPERATIONAL SUMMARY SHEET
MAY 2000

Reference Elevation (feet AMSL) - 539.92 (top of casing)
Northing Coordinate ('83) - 476196.22
Easting Coordinate ('83) - 1347978.25

Hours in reporting period[a] = 744.17
Hours not injecting[b] = 744.17
Hours injecting[c] = 0
Operational percent[d] = 0

Target Injection Rate = 200 gpm

Monthly Measurements		
Month	Million Gallons Injected[e]	Average Operating Injection Rate (gpm)[f]
9/98	8.16	206
10/98	5.78	203
11/98	8.47	196
12/98	5.76	222
1/99	5.35	227
2/99	7.06	196
3/99	7.34	205
4/99	7.75	197
5/99	7.46	216
6/99	8.42	197
7/99	8.93	201
8/99	8.64	199
9/99	3.92	181
10/99	7.86	199
11/99	6.54	196
12/99	7.28	178
1/00	7.74	192
2/00	8.85	212
3/00	9.22	208
4/00	4.07	190
5/00	0	0

[a]First operational shift reading on 5/1/00 to first operational shift reading on 6/1/00
[b]Downtime. Well shut down in May to facilitate treatment for plugging.
[c]Hours in reporting period - Hours not injecting
[d](Hours injecting/Hours in reporting period) x 100
[e]Summation of daily totalizer differences
[f]Million Gallons Injected/(Hours Injecting x 60)

TABLE 3

RE-INJECTION WELL 22108 (IW-9)
OPERATIONAL SUMMARY SHEET
MAY 2000

Reference Elevation (feet AMSL) - 578.025 (top of casing)
Northing Coordinate ('83) - 476255.74
Easting Coordinate ('83) - 1348384.49

Hours in reporting period[a] = 744.87
Hours not injecting[b] = 600.07
Hours injecting[c] = 144.80
Operational percent[d] = 19.4

Target Injection Rate = 200 gpm

Monthly Measurements		
Month	Million Gallons Injected[e]	Average Operating Injection Rate (gpm)[f]
9/98	8.17	206
10/98	8.30	201
11/98	8.53	197
12/98	5.66	214
1/99	4.33	181
2/99	6.07	156
3/99	5.93	178
4/99	6.66	184
5/99	7.83	200
6/99	8.41	197
7/99	8.79	198
8/99	8.63	198
9/99	5.68	187
10/99	7.80	198
11/99	6.54	185
12/99	3.08	189
1/00	6.12	212
2/00	8.78	218
3/00	9.22	206
4/00	7.54	202
5/00	1.42	164

[a]First operational shift reading on 5/1/00 to first operational shift reading on 6/1/00
[b]Downtime. From May 2, 2000 to May 4, 2000 due to an FRL exceedance for uranium measured in the composite sample collected on May 1, 2000. All wells not operating from May 8, 2000 to May 31, 2000 due to the discovery of treatment resin in IW-8.
[c]Hours in reporting period - Hours not injecting
[d](Hours injecting/Hours in reporting period) x 100
[e]Summation of daily totalizer differences
[f]Million Gallons Injected/(Hours Injecting x 60)

000008

3199

TABLE 4

RE-INJECTION WELL 22109 (IW-10)
OPERATIONAL SUMMARY SHEET
MAY 2000

Reference Elevation (feet AMSL) - 576.92 (top of casing)
Northing Coordinate ('83) - 476175.65
Easting Coordinate ('83) - 1348860.53

Hours in reporting period[a] = 744.83
Hours not injecting[b] = 600.05
Hours injecting[c] = 144.78
Operational percent[d] = 19.4

Target Injection Rate = 200 gpm

Monthly Measurements		
Month	Million Gallons Injected[e]	Average Operating Injection Rate (gpm)[f]
9/98	8.13	205
10/98	8.28	200
11/98	8.50	196
12/98	5.72	217
1/99	5.48	229
2/99	8.09	208
3/99	8.13	204
4/99	5.35	190
5/99	8.25	197
6/99	8.36	196
7/99	8.81	199
8/99	8.52	196
9/99	1.97	169
10/99	7.79	198
11/99	6.47	183
12/99	7.58	186
1/00	8.72	195
2/00	6.61	233
3/00	9.11	204
4/00	7.47	200
5/00	1.43	165

[a]First operational shift reading on 5/1/00 to first operational shift reading on 6/1/00
[b]Downtime. From May 2, 2000 to May 4, 2000 due to an FRL exceedance for uranium measured in the composite sample collected on May 1, 2000. All wells not operating from May 8, 2000 to May 31, 2000 due to the discovery of treatment resin in IW-8.
[c]Hours in reporting period - Hours not injecting
[d](Hours injecting/Hours in reporting period) x 100
[e]Summation of daily totalizer differences
[f]Million Gallons Injected/(Hours Injecting x 60)

TABLE 5

RE-INJECTION WELL 22240 (IW-11)
OPERATIONAL SUMMARY SHEET
MAY 2000

Reference Elevation (feet AMSL) - 577.14 (top of casing)
Northing Coordinate ('83) - 476422.82
Easting Coordinate ('83) - 1349386.92

Hours in reporting period[a] = 744.85
Hours not injecting[b] = 600.05
Hours injecting[c] = 144.80
Operational percent[d] = 19.4

Target Injection Rate = 200 gpm

Monthly Measurements		
Month	Million Gallons Injected[e]	Average Operating Injection Rate (gpm)[f]
9/98	8.39	211
10/98	8.29	199
11/98	8.50	197
12/98	5.68	216
1/99	5.53	230
2/99	8.06	208
3/99	8.04	204
4/99	7.56	192
5/99	8.34	199
6/99	8.42	197
7/99	8.85	199
8/99	8.65	199
9/99	5.64	186
10/99	7.91	200
11/99	6.67	189
12/99	7.62	187
1/00	8.86	198
2/00	8.76	217
3/00	9.19	206
4/00	7.53	201
5/00	1.41	163

[a]First operational shift reading on 5/1/00 to first operational shift reading on 6/1/00
[b]Downtime. From May 2, 2000 to May 4, 2000 due to an FRL exceedance for uranium measured in the composite sample collected on May 1, 2000. All wells not operating from May 8, 2000 to May 31, 2000 due to the discovery of treatment resin in IW-8.
[c]Hours in reporting period - Hours not injecting
[d](Hours injecting/Hours in reporting period) x 100
[e]Summation of daily totalizer differences
[f]Million Gallons Injected/(Hours Injecting x 60)

3199

TABLE 6

RE-INJECTION WELL 22111 (IW-12)
OPERATIONAL SUMMARY SHEET
MAY 2000

Reference Elevation (feet AMSL) - 583.01 (top of casing)
Northing Coordinate ('83) - 476518.64
Easting Coordinate ('83) - 1350105.39

Hours in reporting period[a] = 744.85
Hours not injecting[b] = 600.05
Hours injecting[c] = 144.80
Operational percent[d] = 19.4

Target Injection Rate = 200 gpm

Monthly Measurements		
Month	Million Gallons Injected[e]	Average Operating Injection Rate (gpm)[f]
9/98	8.12	205
10/98	8.27	201
11/98	8.53	197
12/98	5.61	219
1/99	5.08	212
2/99	8.06	208
3/99	8.13	203
4/99	7.65	195
5/99	8.27	197
6/99	8.42	197
7/99	8.80	198
8/99	8.67	199
9/99	5.66	187
10/99	7.82	198
11/99	6.65	188
12/99	7.41	198
1/00	8.84	198
2/00	8.77	217
3/00	9.19	206
4/00	7.52	201
5/00	1.45	166

[a]First operational shift reading on 5/1/00 to first operational shift reading on 6/1/00
[b]Downtime. From May 2, 2000 to May 4, 2000 due to an FRL exceedance for uranium measured in the composite sample collected on May 1, 2000. All wells not operating from May 8, 2000 to May 31, 2000 due to the discovery of treatment resin in IW-8.
[c]Hours in reporting period - Hours not injecting
[d](Hours injecting/Hours in reporting period) x 100
[e]Summation of daily totalizer differences
[f]Million Gallons Injected/(Hours Injecting x 60)

FIGURE 1

URANIUM CONCENTRATION OF AWWT EXPANSION EFFLUENT*
MAY 2000

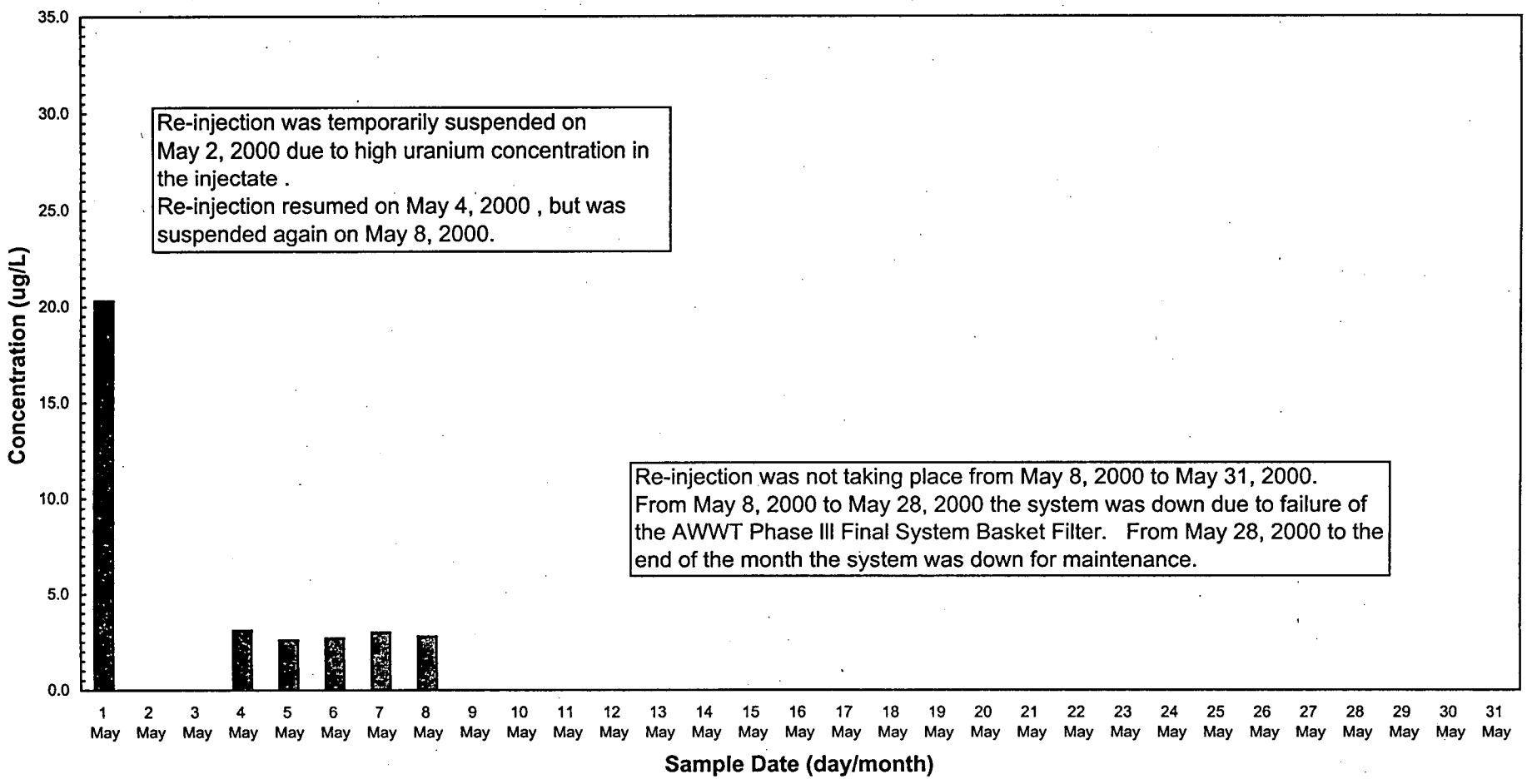

* Samples derived from combined plant effluent via 24-hour Composite Sampler.

000012

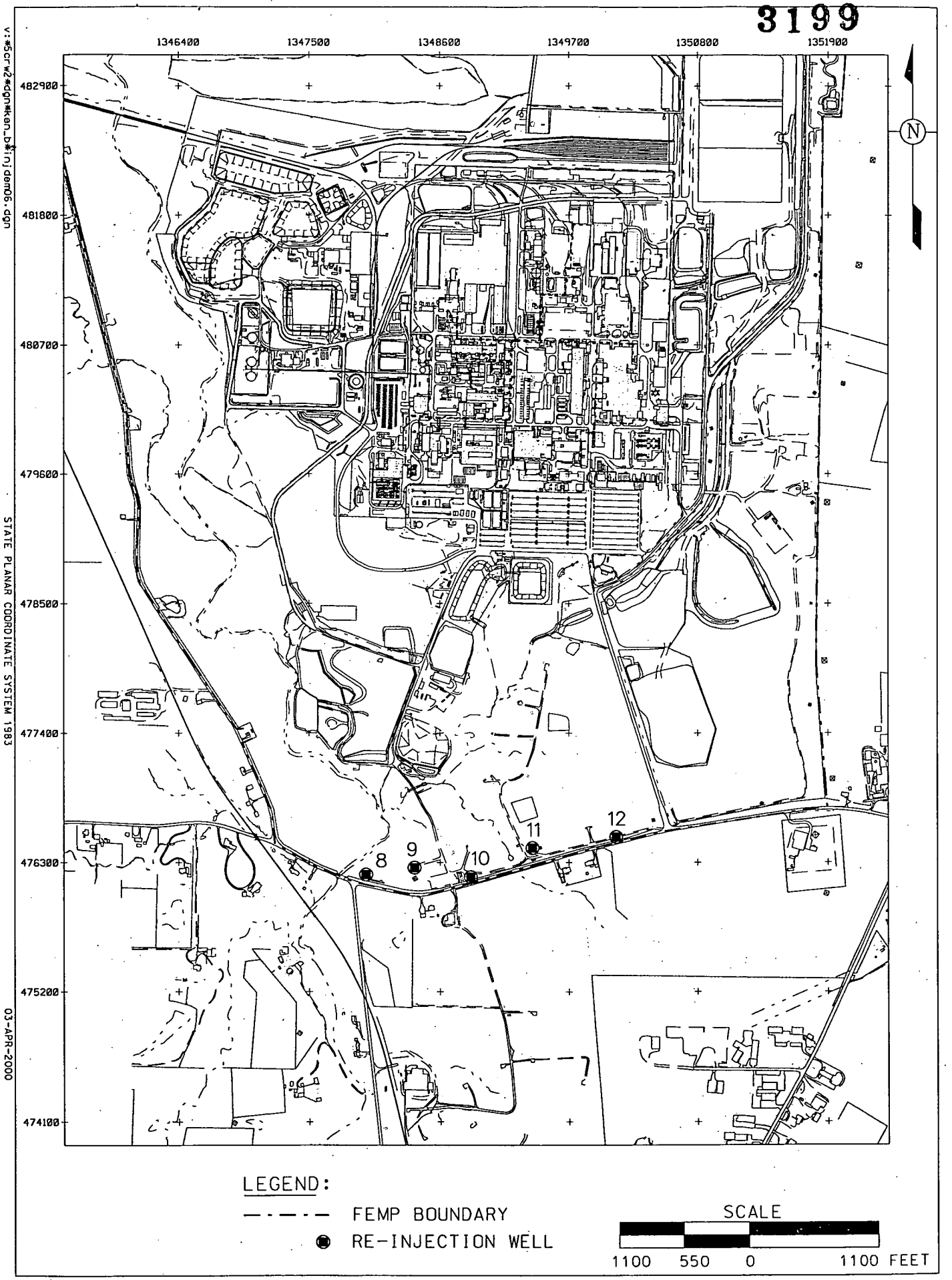

FIGURE 2. LOCATION OF RE-INJECTION WELLS

Figure 3
Re-Injection Wells, water Level Rise
First Shift on May 1, 2000 to First Shift on June 1, 2000

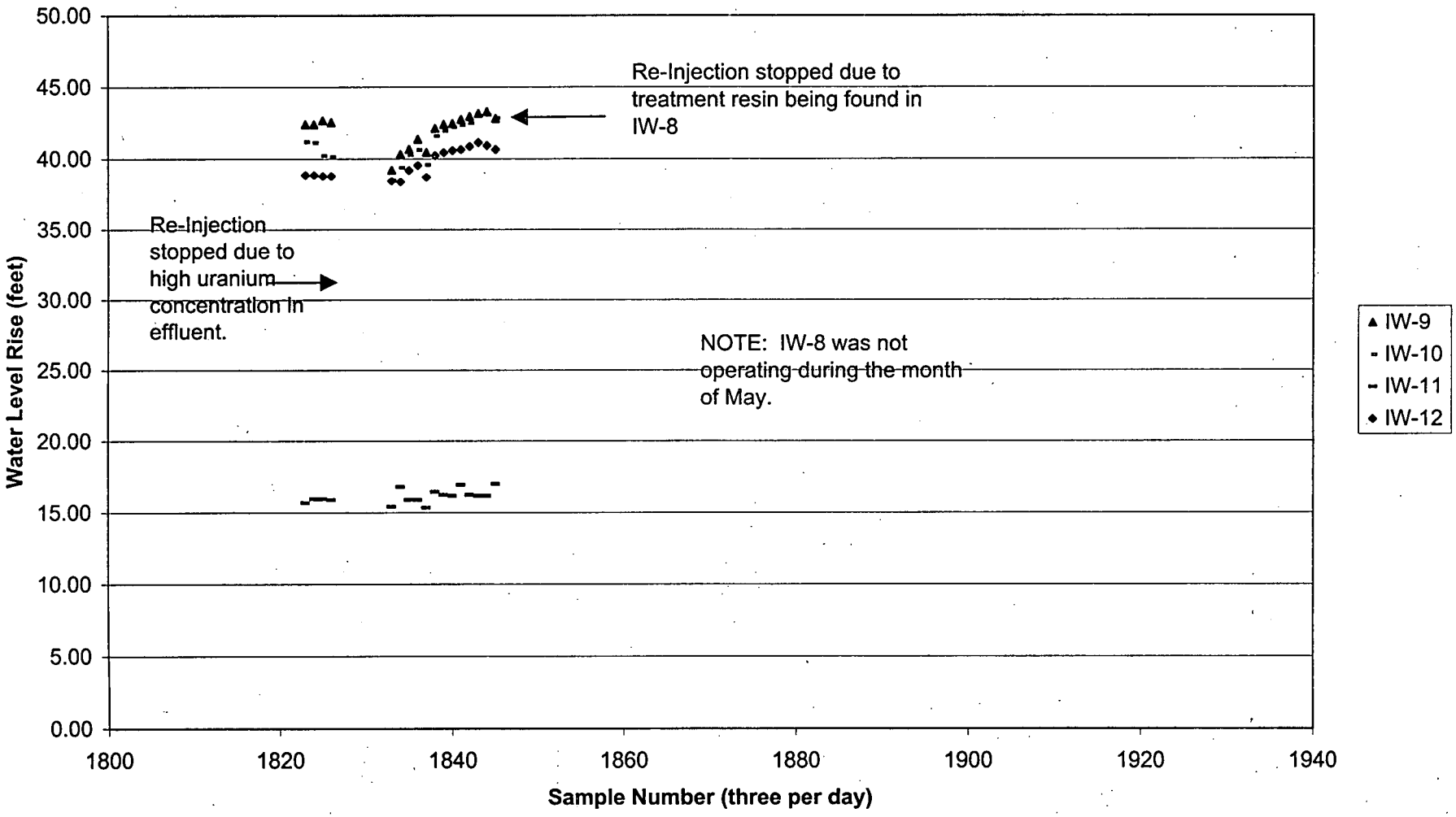

000014

Fluor Fernald, Inc.
P.O. Box 538704
Cincinnati, OH 45253-8704

(513)648-3000

3199

FLUOR GLOBAL SERVICES

Facsimile Urgent Review Comment Reply

No. of Pages: 10
(Including Lead Sheet)

DATE: July 10, 2000

TO: James Saric, USEPA
Tom Schneider, OEPA
Francie Hodge, Tetra Tech
Mark Schupe, HSI GeoTrans

FAX NO. TO BE CALLED:	(312) 353-8426	**TELEPHONE NO.:**	(312) 886-0992
	(937) 285-6404		(937) 285-6466
	(312) 938-0118		(312) 946-6440
	(703) 444-1685		(703) 444-7000

FROM: Jyh-Dong Chiou **TELEPHONE NO.:** (513) 648-3726

PROJECT NAME: Fernald Environmental Mgmt. **CONTRACT NO.:** DE-AC24-92OR21972

MESSAGE

SUBJECT: WEEKLY EPA CONFERENCE CALL INFORMATION

JULY 11, 2000
WEEKLY EPA CONFERENCE CALL - SDFP TOPICS

6/27 – 7/10

- Continue Excavation And Hauling ACM/Soil From SF (6/27, 28, 29, 30, 7/7 And 10)
- Continue Excavation And Hauling From SP3 (6/27, 28, 29, 30, 7/7 And 10)
- ❑ Continue Placement Of Soil And Debris (6/27, 28, 29, 30, 7/7 And 10)
- ❑ Clean Up Catchment Area 2 With Fire Hose And High Pressure Water, Drainage Improved Significantly

SAMPLING

- Continue A9PI Real-Time Scan (Over 60% Complete)
- Will Conduct The 2nd Round Of Physical Sampling In A9PI (Week Of 7/10)
- Continue A2PII And The Pilot Plant Drainage Ditch Pre-design Investigations
- All SP1 West WAC Attainment Sampling Results Are Below WAC; Will Conduct WAC Attainment Sampling In Miscellaneous Piles In Area 3A (Week Of 7/10)

QUESTION

EVENT

- Will Start Remaining Trap Range Excavation (7/15)
- Will Start Borrow Area Clay Screening In July (Week Of 7/17)
- Will Remove Impacted Debris From Paddys Run By Clear Well
- Will Place RA28 Debris In OSDF

UPCOMING MEETING

- Groundwater TIE Meeting (July 11)
- Real-Time Working Group Meeting To Discuss Calibration Pad Study (July)

REPORTS AND DOCUMENTS
REVIEW/APPROVAL STATUS TRACKING

A1PII

- Draft Summary Certification Report (5/5); OEPA Comments (6/14); **US EPA Conditional Approval (6/30)**
- CUs West Of Old NAR Certification Report (2/7); US EPA Approval (3/7); OEPA Conditional Approval (3/14); Revised FEMP Certified Area Map (6/19)
- PCN for CDL (6/5); Additional Trap Range TCLP Results (6/13); OEPA Approval (6/20)

A1PIII

- Final CDL And RTCs (5/15); US EPA Approval (3/21); **OEPA Conditional Approval (6/23)**
- **Draft CDL/PSP For Part 2 Area (6/26)**

A2PI

- Draft AFP CDL/PSP (5/8); OEPA Comments (6/15); **US EPA Approval (6/30);** *RTCs (by 7/12)*

A2PII

- **Draft Carolina Area IRDP (6/27)**
- **Geophysical Survey Demo Report (6/27)**

A2PIII

- *Certification Report (By 7/28)*

A3A/4A

- Draft WAC Attainment PSP For Area 3A Miscellaneous Stockpiles (5/23); OEPA Conditional Approval (6/23); **US EPA Approval (6/30);** *RTCs and Revised PSP (by 7/11)*
- Draft IRDP (3/30); OEPA Comments (6/16); US EPA Comments (6/16); *RTCs (by 7/21)*

A7

- WAC Report Addendum 2 (5/30); OEPA Approval (6/5); **US EPA Approval (7/6)**

A8PIII SOUTH

- Final CDL/PSP And RTCs (5/23)

OSDF

- Request For Disposal Of RA28 Debris In The OSDF (5/23); OEPA Approval (6/23)
- Revised OSDF Support Plans, DCP, And Calculation Sections (5/23); **OSDF Phase III CFC Package (6/28)**
- **Meeting Notes And Revised IMPP Addendum 5 (6/30)**

NATURAL RESOURCES

- Draft A8PII NRRDP (12/17); OEPA Comments (2/7); USEPA Approval (2/2); Final NRRDP (4/26); NRT RTCs (6/19)

JUNE 2000 MONTHLY SUMMARY

Date	Hi	Lo	Rain	Max Wind	Peak Gust	omments
June 1, 2000 (Th)	87	63	0.00	9.0	18.6	Mostly sunny.
June 2, 2000 (Fr)	87	61	0.16	13.3	25.1	Partly cloudy. Afternoon showers andf thundershowers.
June 3, 2000 (Sa)	71	54	0.00	8.6	17.0	Mostly cloudy.
June 4, 2000 (Su)	75	50	0.01	8.7	14.8	Mostly sunny. Late evening showers.
June 5, 2000 (Mo)	72	54	0.16	14.6	27.1	Mostly cloudy. Occasional rain showers.
June 6, 2000 (Tu)	69	51	0.00	16.7	33.3	Mostly sunny.
June 7, 2000 (We)	76	44	0.00	7.6	13.9	Mostly sunny.
June 8, 2000 (Th)	82	55	0.01	12.8	22.7	Early am shower. Otherwise, mostly sunny.
June 9, 2000 (Fr)	86	56	0.00	10.2	18.0	Mostly sunny.
June 10, 2000 (Sa)	88	61	0.00	11.4	21.2	Parlty cloudy.
June 11, 2000 (Su)	89	71	0.00	10.3	21.1	Partly cloudy.
June 12, 2000 (Mo)	89	69	0.24	8.4	14.5	Variable cloudiness. Early am showers.
June 13, 2000 (Tu)	87	69	0.08	10.7	21.1	Mostly cloudy. Mid-morning showers.
June 14, 2000 (We)	86	72	0.38	14.8	31.4	Mostly cloudy. Occasional thundershowers.
June 15, 2000 (Th)	79	70	0.00	12.8	22.4	Mostly cloudy am. Sunny pm.
June 16, 2000 (Fr)	83	65	1.08	14.4	29.2	Mostly cloudy. Afternoon/evening showers and thundershowers.
June 17, 2000 (Sa)	76	65	0.21	6.7	11.1	Cloudy. Light rain through mid-am.
June 18, 2000 (Su)	71	63	0.61	9.4	18.6	Cloudy. Morning thundershowers.
June 19, 2000 (Mo)	78	59	0.00	7.3	14.4	Partly cloudy.
June 20, 2000 (Tu)	83	55	0.00	10.9	19.0	Cloudy.
June 21, 2000 (We)	79	66	0.59	11.7	23.3	Early am thundershowers. Otherwise, partly cloudy.
June 22, 2000 (Th)	84	62	0.00	11.7	24.7	Sunny.
June 23, 2000 (Fr)	86	60	0.00	7.5	14.9	Mostly sunny.
June 24, 2000 (Sa)	84	68	0.20	15.4	38.1	Variable cloudiness. Occasional thundershowers.
June 25, 2000 (Su)	82	67	0.27	14.6	31.2	Early am thunderstorm. Cloudy am, partly cloudy pm.
June 26, 2000 (Mo)	83	62	0.00	7.7	15.0	Mostly cloudy.
June 27, 2000 (Tu)	74	64	0.07	9.1	22.5	Early am rain showers.
June 28, 2000 (We)	75	60	0.00	5.7	13.4	Cloudy am, partly cloudy pm.
June 29, 2000 (Th)	76	51	0.00	8.6	17.5	Mostly sunny.
June 30, 2000 (Fr)	75	58	0.00	4.7	11.8	Mostly sunny.
	Max	Min	Total	Max Wind	Peak Wind	
	89	44	4.07	16.7	38.1	

3199

000018

AQUIFER RESTORATION/WASTEWATER PROJECT (ARWWP)
WEEK OF 6/30/2000 to 7/9/2000

1. Operations Status/Issues:

	6/30:7/9	6/16:6/23	6/9:6/16	6/2:6/9
A. Extraction Wells				
Pumped (gpm): (Current)	3700*	4150	3900	3900
Treated (gpm): Ave. for Week	2438	1470	2134	2507
Bypassed (gpm): (Current)	1262	2680	2405	1393
Direct Bypass (gpm):	600	660	600	600
* SFE21 down for rehab; SP06 & 07 down due to reinjection rate at 600 gpm				
B. Injection Wells				
Injected (gpm):	600*	800	800	1000
Concentrated (ppb U):	7.6 **	6.3	6.0	9.9
* IW9 & 10 down for well screen rehab ** Reinjection back on-line 7/6 after Phase III combined flow <10 ppb with IX Train 2 on-line				
C. Treatment Systems (gpm/ppb U)				
Phase I Flow:	309	625	625	586
(Current, Treating Stormwater/Groundwater) U:	2.8	1	< 1	1
Phase II Flow:	30	277	0	205
(Current Treating IX Backwash)	NA	12.5		6
Phase III Flow:	1795	1213	1255	1750
U:	9.4	6.3	6.0	9.9
IAWWT Flow:	296	287	303	292
U:	3.1	1.2	3.7	3.0
SPIT Flow:	196	186	196	169
U:	< 1	< 1	< 1	.1
STP Flow:	31	39	32	22
U:		54.0	10.0	13.8
* BSL at low level				
D. Headworks Levels/Freeboard				
SWRB West Level:	3.75	4'	6'9"	Low Level
SWRB East Level:	4'	4'	6'9"	2' 7"
Avg. Storm Flow Treated (gpm):	159	887	792	242
BSL Freeboard:	75"	92"	76"	91"
E. Parshall Flume				
Running Monthly Ave. July	10.7	17.0	13.8	13.8
Bypass Days:	0	0	None	None
Previous Month Ave. (ppb):	JUNE = 17.1			
F. Issues				
See attached "Final Report for Occurrence OH-FN-FDF-FEMP-200-0009, Ion Exchange Resin In Re-Injection Well #8				

G:\Donna\topics-EPA-weekly
07/10/00

2. Regeneration

- AWWT Expansion System ion exchange unit 2B was regenerated from June 27 to 29. Expansion System train #2 was started up with 2B in lead and 2A in lag on June 29. 2B's outlet uranium concentration steadily decreased in operation and was at 2 ppb U by July 5. On July 5, train #2's line up was reversed with 2A in lead and 2B in lag. 2B have continued to perform well with outlet uranium concentration staying under 2 ppb.

- Five of the six AWWT Expansion System ion exchange units have been successfully regenerated. Loading curves for these units, comparing outlet uranium concentration to cumulative uranium loaded onto the resin, have been similar for both fresh and regenerated resin. Plans are to regenerate the remaining unit (1B) this week.

3. OSDF Groundwater and Leak Detection Monitoring Status/Issues:

- OSDF Leak Detection System Primary Containment Vessel Accumulation Rates and Uranium Concentrations:

Cell	1	2	3
Accumulation period:	6/28-7/5	6/28-7/5	6/28-7/5
Accumulation Rate: (in gallons per day for above period)	1.01 (0.59 6/21-6/28)	12.3[2] (12.1 6/21-6/27)	0 (0 6/21-6/28)
Accumulation Rate: (gallons/acre/day for above period)	.16 (0.09 6/21-6/28)	1.92[2] (1.89 6/21-6/27)	0 (0 6/21-6/28)
Total uranium concentration (ug/L) – sample date:	29.1[1] – 1/25/00 32.4[1] – 1/14/00 77[1] – 1/05/00	23.4 – 6/27 19.6 - 6/19 19.8 – 6/10 22.7 – 5/31 24.1– 5/16 25.6 – 5/3/00 27.3 – 3/28/00 22.9 – 2/6/00 13.2 – 9/11/99	Not yet sampled

[1]The high uranium concentrations are attributed to a leaking valve that allowed leachate to back up into the Cell 1 LDS inner containment vessel. A replacement valve was installed in mid January. Similar valves on the Cells 2 and 3 LDS were replaced in early February.

[2]The current Cell 2 accumulation rate is 9.6 percent of the initial response leakage rate of 20 gallons/acre/day.

- Containment pipe monitoring results: All containment pipes remain dry, including Lift Station.

4. Groundwater Restoration Program Status/Issues:

- Plan to begin a small pumping action at Monitoring Well 3027. This pumping is intended to determine if the anomalous uranium concentrations in the well will return to less than 20 ug/L as a result the pumping. The anomalous concentrations have been discussed in past IEMP reports. More sampling was done in the vicinity of MW 3027 during the pre-design field work in the Waste Storage Area. This sampling confirmed that the uranium concentrations in MW 3027 are anomalous.

- Meeting with EPA and OEPA on 7/11 to discuss:

  - Groundwater modeling reports: Calibration of the flow model and one on integrating data fusion with VAM3D

  - Conceptual Design for Aquifer Restoration in the Waste Storage and Plant 6 Areas

  - Waste Storage Area Pump Test Design

  - The Re-Injection Demonstration Test Report

  - OSDF Groundwater Baseline

5. Engineering and Construction Project Status/Issues:

- Enhanced Permanent Leachate Transmission System (EPLTS) Project

  - Installation of GIS structures 1,3, 5, & 6 are 95% complete

  - Valve House 1, foundation slab complete. Building forms for walls.

  - Valve House 2 foundation slab complete. Building forms for walls.

  - Relocation of existing ILTS complete.

  - Valve House 3, excavation complete. Forming foundation slab.

  - Silt removed from OSDF Sed. Basin in the EPLTS construction area, working on building new berm.

FY2000 Engineering and Construction Projects

- ARASA Basin Reroute – Detail engineering complete.

  - Project funding placed on temporary hold.

FINAL REPORT FOR OCCURRENCE OH-FN-FDF-FEMP-2000-0009
ION EXCHANGE RESIN IN RE-INJECTION WELL #8

The AWWT Expansion System (1800 gpm) is used to treat contaminated groundwater extracted from the Great Miami Aquifer. Some of the water discharged from the Expansion system is used for re-injection into the aquifer to speed the aquifer restoration. The water not used for re-injection is discharged to the Great Miami River. The Expansion system uses Dowex 21K ion exchange resin for uranium removal. The ion exchange system consists of three trains of two vessels per train. The trains operate in parallel with the individual vessels in the train operating in series, one in lead and one in lag. The sketch below shows a simplified flow diagram of the system.

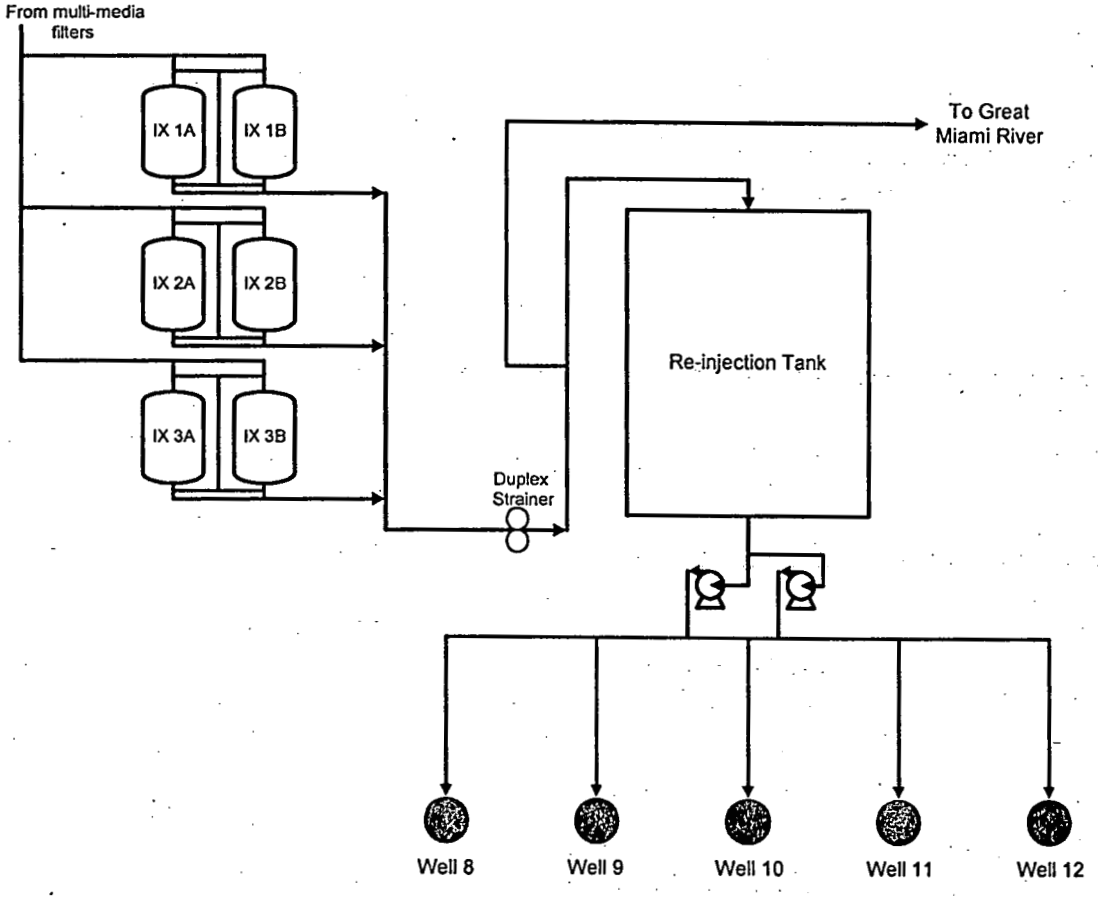

The ion exchange vessels have a header-lateral piping system at the bottom of the vessel to keep resin in the vessel while allowing treated water to flow out of the vessel. Water discharged from the ion exchange vessels flows through a duplex strainer, sized to retain any sloughed off resin, prior to discharge to the re-injection tank or the river. Pressure gauges exist upstream and downstream of the duplex strainer to measure differential pressure across the strainer. Operations personnel record the pressure on the gauges during rounds each shift.

On May 8, 2000, at about 1400 hours, ion exchange resin was found in the sump of Re-injection Well 8 by a subcontractor who was performing routine maintenance on the well. The amount of resin removed from the well sump was estimated to be about two cups. A radiological control technician was requested to perform a survey of the resin. Direct survey of the beads indicated 9000 dpm/100 cm^2 total beta-gamma contamination. The

resin was immediately cleaned up and no residual contamination was found on the ground or well.

AWWT Operations personnel inspected the duplex strainer and found that the strainer basket had a large hole that allowed resin to pass through the basket. The AWWT Expansion system was shut down at 1700 hours on May 8 because the resin found in Well 8 was deemed to have come from one of the Expansion system ion exchange vessels. Also, the existing differential pressure monitoring system was judged to be inadequate.

Since the manual readings of the strainer differential pressure were judged to be inadequate, a differential pressure transmitter was installed on the Duplex strainer and interlocked via the DCS with the Expansion system feed pumps. The purpose of the interlock was to alert the operator to an increase in differential pressure across the Duplex strainer and to automatically shut down the Expansion system feed pumps if the manufacturer's recommended differential pressure was exceeded. New baskets were placed in both sides of the Duplex strainer.

A test plan was written to determine which ion exchange vessel was leaking resin. During the test, each train of ion exchange vessels was run individually for 24 hours. Each vessel in the train was placed in lead position for twelve hours and in lag position for twelve hours. Each vessel was backwashed while it was in lag position to determine if backwashing had any effect on resin leakage.

At about 1220 hours on May 17, 2000, ion exchange vessel 3B was found to be leaking resin. Train 3 had been placed in service at 1215 hours with ion exchange vessel 3A in lead and 3B in lag. Within minutes the differential pressure alarmed at 5 psi. However, before an operator could get to the strainer to inspect the screen, differential pressure indicator PDIT 214 on DCS Screen 64 peaked at 29 psi. The interlock for PDIT 214 worked as designed and shut off the Expansion system feed pumps. The field operators switched strainer baskets and flow to train 3 was restarted.

The north strainer basket was removed and found to be about half full of resin. Flow to train 3 was stopped so the south strainer basket could be inspected. It, too, was filling with resin. Train 1 was placed in service for about 10 minutes to flush resin out of the system piping. Both strainers were cleaned and placed back in service.

No resin leakage was found from ion exchange trains 1 or 2 or ion exchange vessel 3A. Ion exchange vessel 3B was removed from service for further inspection. Trains 1 and 2 were returned to service.

Ion exchange resin was sluiced from vessel 3B and placed in white metal boxes for temporary storage. Approximately 3.25 WMBs were filled with resin removed from vessel 3B. The resin collected matched the actual amount placed in the vessel during startup of the system. Less than five cubic feet of resin was lost due to leakage from the vessel.

The manholes for ion exchange vessel 1800 3B were removed and an inspection of the effluent manifold was performed. The effluent strainers are pipes with holes drilled into the sides and wedge wire welded to the outside. The strainers are attached to the manifold by treaded connections and the weight of the strainers is supported by two pieces of angle iron. When properly connected and supported, the strainers are in a horizontal position.

One of the effluent strainers had come loose from its connection to the manifold. The strainer was not damaged in any way. Maintenance personnel attempted to reattach the strainer to the manifold and found that the weld-o-let threaded connection on the manifold had been installed at an angle slightly differing from the desired horizontal. The strainer could not be tightened into the weld-o-let in the desired in the horizontal position so that the angle iron would support the weight of the strainer. The photos below show the header-lateral manifold system and a close-up view of the strainer that was not connected.

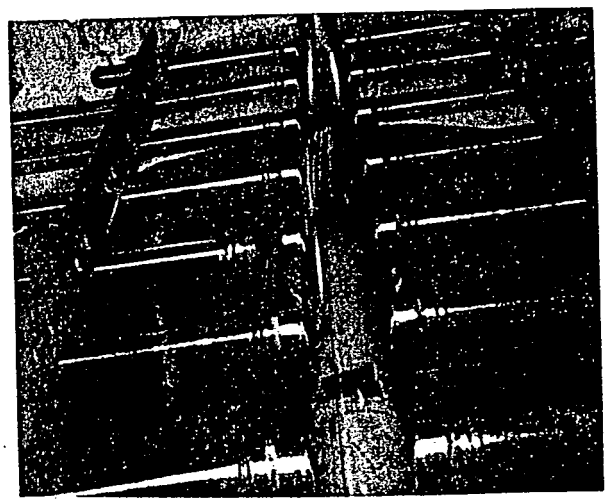

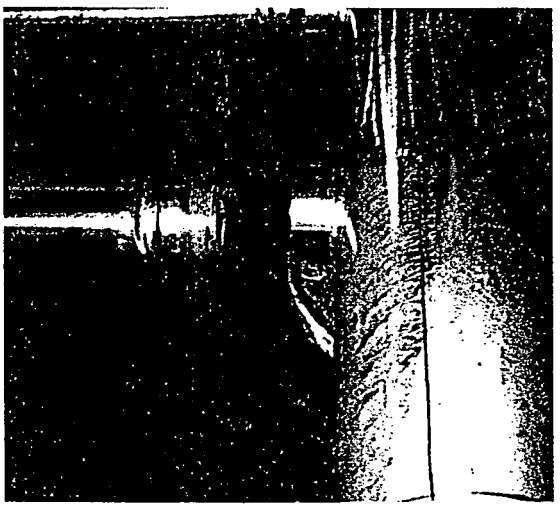

The design calculations for the vessel internals were examined and it was determined that the strainer could be removed and the opening in the manifold capped with no significant loss in flow through the vessel or no significant increase in differential pressure across the vessel.

A cap was installed in the opening on the manifold on June 1. The ion exchange resin was replaced in the vessel on June 2 and the vessel was returned to service along with the rest of the 1800 gpm system late that afternoon. The design flow rate of 600 gpm has been achieved through vessel 3B and the uranium concentration in the effluent from that vessel was about 1 ppb.

Prior to resuming operation of the re-injection wells, the re-injection tank was drained and any resin found in the bottom of the tank was removed using the industrial vacuum loader truck.