3201

CERTIFICATION DESIGN LETTER FOR AREA 1, PHASE III PART TWO

FERNALD ENVIRONMENTAL MANAGEMENT PROJECT
FERNALD, OHIO

AUGUST 2000

U.S. DEPARTMENT OF ENERGY
FERNALD AREA OFFICE

20720-RP-0002
REVISION 0
FINAL

000001

TABLE OF CONTENTS

Executive Summary ES-1

1.0 Introduction 1-1
1.1 Objectives 1-1
1.2 Scope 1-1

2.0 Historical Soil Contamination Data 2-1
2.1 Historical Soil Data 2-1
2.2 Precertification Data 2-2

3.0 Area-Specific Constituents of Concern 3-1
3.1 Selection Criteria 3-1

4.0 Certification Approach 4-1
4.1 Certification Design 4-1
4.1.1 Certification Unit Design 4-1
4.2 Analytical Methodology and Statistical Analysis 4-2

5.0 Schedule 5-1

References R-1

Appendix A RI/FS Historical Data for A1PIII Part Two
Appendix B RI/FS Historical Data for Fire Training Facility
Appendix C Precertification Scanning Data from A1PIII Part Two

LIST OF TABLES

Table 2-1 Areas 1 and 6 Secondary ASCOC List
Table 3-1 ASCOC List for All CUs

LIST OF FIGURES

Figure 1-1 A1PIII Part Two Boundary Map
Figure 1-2 FEMP Controlled Certification Map
Figure 2-1 Historical Above-FRL Sample Locations
Figure 2-2 A1PIII Part Two Cut/Fill Map
Figure 4-1 A1PIII Part Two CU Boundaries
Figure 4-2 A1PIII Part Two Sample Locations

LIST OF ACRONYMS AND ABBREVIATIONS

A1PI	Area 1, Phase I
A1PIII	Area 1, Phase III
ASCOC	area-specific constituent of concern
ASL	analytical support level
BTV	benchmark toxicity value
CDL	Certification Design Letter
CERCLA	Comprehensive Environmental Response, Compensation, and Liability Act
COC	constituent of concern
CRDL	Contract Required Detection Limit
CU	certification unit
DOE	U.S. Department of Energy
EPA	U.S. Environmental Protection Agency
FEMP	Fernald Environmental Management Project
FRL	final remediation level
FTF	Fire Training Facility
HPGe	high-purity germanium
mg/kg	milligram per kilogram
ng/kg	nonograms per kilogram
OEPA	On-Site Disposal Facility
OSDF	On-Site Disposal Facility
OU	Operable Unit
PAH	polyaromatic hydrocarbon
PCB	polychlorinated biphenyl
pCi/g	picoCuries per gram
RI/FS	Remedial Investigation/Feasibility Study
ROD	Record of Decision
RSS	Radiation Scanning System
RTRAK	Radiation Tracking System
SED	Sitewide Environmental Database
SEP	Sitewide Excavation Plan
SCQ	Sitewide CERCLA Quality Assurance Project Plan
UCL	Upper Confidence Limit
WPRAP	Waste Pits Remedial Action Project

EXECUTIVE SUMMARY

This Certification Design Letter (CDL) describes the certification approach for Area 1, Phase III (A1PIII) Part Two, shown in Figure 1-1, which is located in the northeast corner of the site, south of Area 1, Phase I and north of the railyard. The CDL includes the following information:

- A definition of the boundaries of the area to be certified under this CDL
- A discussion of the area-specific constituent of concern (ASCOC) selection process and a list of ASCOCs
- A presentation of the certification unit (CU) boundaries and proposed sampling strategy
- The analytical requirements and the statistical methodology that will be employed
- The proposed schedule for certification activities.

The scope of this CDL is limited to certification of A1PIII Part Two.

The certification design presented in this CDL follows the general approach outlined in Section 3.4 of the Sitewide Excavation Plan (DOE 1998a). The subject area has been characterized through previous sampling investigations and final remediation level (FRL) scanning with real-time equipment. The selection process for the ASCOCs is accomplished using constituent of concern (COC) lists in the Operable Unit 5 Record of Decision (DOE 1996a), previous investigation data, and process knowledge. A total of three CUs have been defined for this CDL. Samples from all CUs will be analyzed for total uranium, thorium-228, thorium-232, radium-226, and radium-228 (the sitewide primary radiological COCs). Samples from CU A1P3P2-C-01 which is located north and east of the Fire Training Facility will also be analyzed for aroclor-1254, aroclor-1260, arsenic, beryllium, (secondary COCs) and polyaromatic hydrocarbons which are ecological COCs. Field sampling is scheduled to begin in Summer 2000, and the Certification Report will be issued within 90 days after sampling is completed.

1.0 INTRODUCTION

This Certification Design Letter (CDL) describes the certification approach for Area 1, Phase III (A1PIII) Part Two. The format of this CDL follows guidelines presented in the Sitewide Excavation Plan (SEP, DOE 1998a).

A1PIII Part Two consists of approximately 6 acres bordered by Area 1, Phase I (A1PI) to the north and east and by the railyard and the Fire Training Facility (FTF) to the south and west. It consists mostly of a flat section excavated in 1996 to provide material for the construction of the north railyard and includes a roadway to the north which goes from the FTF to the On-Site Disposal Facility (OSDF) and a ditch along the roadway on the southern boundary of A1PI. A small, wooded area, approximately 100 feet by 250 feet north of the FTF, is also included in A1PIII Part Two.

The Fernald Environmental Management Project (FEMP) Controlled Certification Map (Figure 1-2), which shows the certification status for the entire FEMP, is included with this CDL in order to assist in tracking overall progress.

1.1 OBJECTIVES

The primary objectives of this CDL are as follows:

- Define the boundaries of the area to be certified under this CDL
- Present maps of real-time data
- Discuss the area-specific constituent of concern (ASCOC) selection process and present a list of ASCOCs
- Present the certification unit (CU) boundaries and proposed sampling strategy
- Summarize the analytical requirements and the statistical methodology that will be employed
- Present the proposed schedule for the certification activities.

1.2 SCOPE

The scope of this CDL is the certification of A1PIII Part Two. This area consists of an approximately 200-foot by 1,000-foot section excavated in 1996 to provide fill material during the construction of the

north railyard. A minimum of 6 inches of soil was removed from this section and in some areas, up to 9 feet was removed to support railyard construction. The area was subsequently used for heavy equipment operator training supporting the Waste Pit Removal Action Project (WPRAP). The southern boundary of the certification area is located just north of a ditch which receives drainage from the railyard. This ditch will remain in place to ensure that the certified area remains clean. A portion of roadway which runs from the FTF to the OSDF and a ditch and wooded area just north of the roadway on the border of A1PI are also part of this area.

A1PIII Part Two is divided into three CUs:

- One CU for the areas adjacent to the FTF, including a wooded area and a section of road to the north and an excavated area to the east
- One CU for the remainder of the roadway and the ditch at the boundary with A1PI
- One CU mainly for the area excavated during railyard construction.

The CU design is shown in Figure 4-1, and a description of each CU is provided in Section 4.1.

The road materials (gravel and subsurface construction materials) within the CUs will be considered impacted and will be removed at a later date.

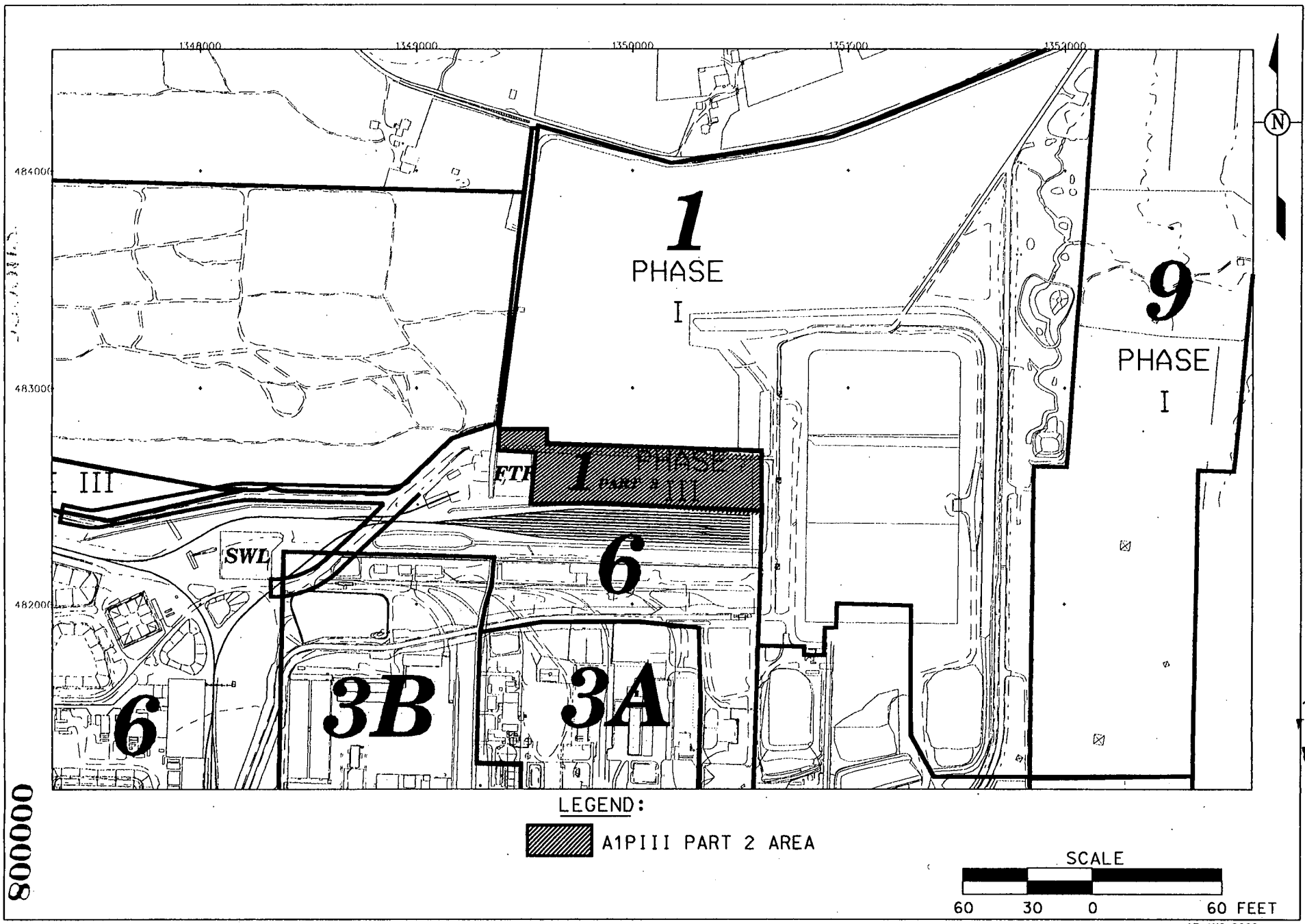

800000

v:\5cj31\dgn\bmp\a1p3p2-3.dgn
STATE PLANAR COORDINATE SYSTEM 1983

FIGURE 1-1. A1PIII, PART 2 BOUNDARY MAP

17-AUG-2000

F-8201

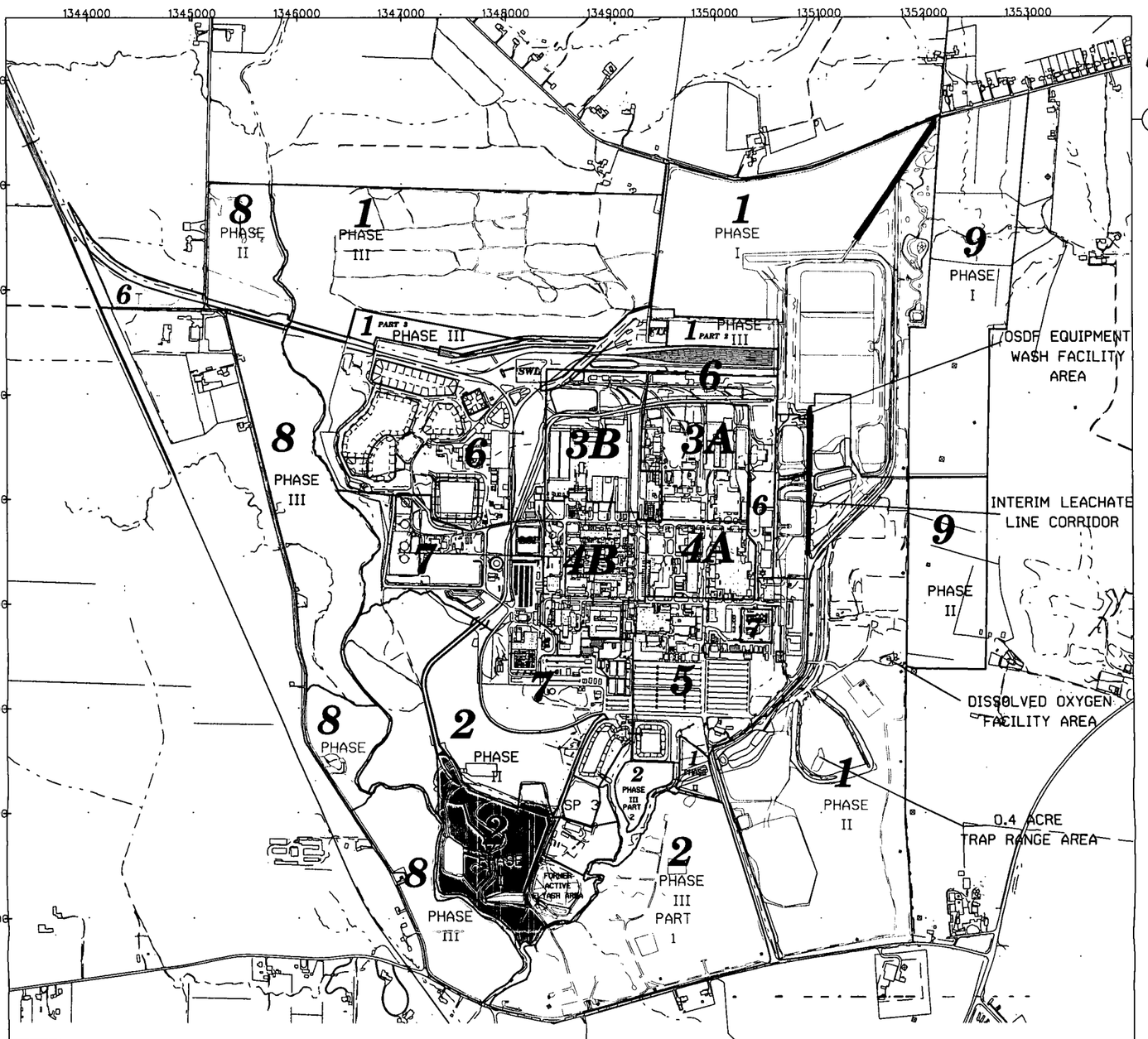

LEGEND:

APPROVED CERTIFICATION AREAS (320 ACRES TOTAL)

- A1PI APPROVED CERTIFIED AREAS - 120.5 ACRES
- A1PI SEDIMENT TRAPS 2 AND 3 APPROVED CERTIFIED AREAS 1.4 ACRES
- A1PII APPROVED CERTIFIED AREAS - 80.1 ACRES
- A1PII-S2B APPROVED CERTIFIED AREAS 1.5 ACRES
- A8PII/A6TA APPROVED CERTIFIED AREA - 22.1 ACRES
- A8PI APPROVED CERTIFIED AREAS - 12.5 ACRES
- A2PIII APPROVED CERTIFIED AREA - 70 ACRES
- A1PII APPROVED CERTIFIED AREAS WEST OF OLD NORTH ACCESS ROAD - 11.9 ACRES

CERTIFICATION AREA, SEPARATE REPORT PRESENTLY UNDER AGENCY REVIEW - 55.5 ACRES

A1PI ROADS EXCLUDED FROM CERTIFICATION

CERTIFICATION IN PROGRESS

REMEDIATION IN PROGRESS

CHARACTERIZATION FOR REUSE AREAS - 2.5 ACRES

NON CERTIFIED AREAS

NOTE: SUBSURFACE SOIL IN UTILITY CORRIDORS WITHIN THE FORMER ACTIVE FLYASH AREA CERTIFICATION AREA WILL BE CERTIFIED AT A LATER DATE.

SCALE

1200 600 0 1200 FEET

REVISION DATE 7/12/00

FIGURE 1-2. FEMP CONTROLLED CERTIFICATION MAP

STATE PLANAR COORDINATE SYSTEM 1983

16-AUG-2000

000009

2.0 HISTORICAL SOIL CONTAMINATION DATA

In accordance with the SEP, all soil demonstrating contamination above the associated final remediation levels (FRLs) or other applicable action levels must be evaluated for remedial actions prior to conducting precertification and certification activities. The Operable Unit (OU) 5 Record of Decision (ROD, DOE 1996a) also commits the FEMP to remove debris and building foundations before a remediation area can be certified.

Aerial photos taken of A1PIII Part Two as early as the 1950s confirm process knowledge that no production or construction activities occurred within the proposed certification area prior to the1996 WPRAP railyard construction. The former FTF is adjacent to the proposed certification area. As noted in the Removal Action 28 Final Report (DOE 1995a), fire control exercises occurred at the FTF in which straw, spent solvents, and other materials were burned. The physical characteristics, such as degradation rate and volatility, of the materials used at the FTF suggest that polychlorinated biphenyls (PCBs) and polyaromatic hydrocarbons (PAHs) may persist in the surrounding soils. However, highly volatile compounds, such as tetrachloroethene, are not expected beyond the FTF fenced boundary. Only surface contamination is expected outside the fenced boundary of the FTF since the method of release of contaminants from the FTF is primarily air deposition. Any potential surface contamination east of the FTF was removed during 1996 WPRAP railyard construction.

Currently within A1PIII Part Two, there are several highway barrels, empty drums, and some debris (pieces of geotextile, metal strips, railroad ties, etc.) along the fence on the eastern side of the FTF. The drums and barrels were used during operator training for heavy equipment. A sand pile (approximately 18 cubic yards) located in the western portion of the area was also used for training exercises. This sand will not be removed because it was purchased from an off-site vendor and does not pose a contamination hazard. All other debris and materials used for training will be removed prior to completion of certification in the area.

2.1 HISTORICAL SOIL DATA

Before initiating certification, all historical soil data within the A1PIII Part Two certification area were pulled from the Sitewide Environmental Database (SED). Twenty-seven samples were collected at

20 locations within A1PIII Part Two. All samples were collected at the surface except for those collected at location 11379, which were at 6-inch intervals from the surface to 2.5 feet.

Figure 2-1 shows all above-FRL or above-benchmark toxicity value (BTV) sample locations within A1PIII Part Two. The thallium concentration at location 11379 exceeds the BTV at the 2 to 2.5-foot depth. However, as stated in Appendix C of the SEP, thallium is not considered a concern to ecological receptors.

Two other locations, N18-42W-620615 and Zone 2-329 had surface (0 to 6 inches) radiological contamination. Both locations had above-FRL total uranium, and location Zone 2-329 was also above-FRL for radium-226, radium-228, thorium-228, and thorium-232. The above-FRL material was removed when the area was excavated in 1996 to provide material for construction of the railyard. The construction activities are described in the March 1996 Amendment to the OU1 Remedial Design Pre-Final Design Packages I and II Site Improvement Plan (DOE 1996b). The cut/fill map in Figure 2-2 shows the changes in elevation that occurred as a result of the construction activities.

Since limited data were available for the area to be certified, data were pulled from the SED for the FTF and evaluated for the Area 1 and Area 6 ASCOCs. Above-FRL results were found for aroclor-1254, aroclor-1260, arsenic, beryllium, and tetrachloroethene. Any potential above-FRL contamination in the adjacent A1PIII Part Two area, as a result of the FTF activities, would have been removed in the 1996 excavation for the construction of the railyard. Analysis for these constituents will be performed for CU A1P3P2-C-01, which is adjacent to the FTF.

Historical data, including below-FRL data for primary and secondary constituents of concern (COCs), are presented in Appendix A for A1PIII Part Two and Appendix B for FTF. Table 2-1 summarizes the data, including the rationale for retaining certain secondary ASCOCs originally assigned to Remediation Areas 1 and 6 (Table 2-7 from the SEP) for certification sampling.

2.2 PRECERTIFICATION DATA

According to guidelines established in Section 3.3.3 of the SEP, precertification activities were conducted to evaluate residual radiological contamination patterns. The Radiation Tracking System (RTRAK) was used to collect information about surface soil radiological contamination patterns. Supplemental Radiation Scanning System (RSS) and high-purity germanium (HPGe) detector

measurements were collected per the User Guidelines, Measurement Strategies, and Operational Factors for Deployment of In-Situ Gamma Spectrometry at the Fernald Site, hereafter referred to as the Users Manual, to ensure that any areas of elevated contamination were not missed. Details on the use and capabilities of the RTRAK, the RSS, and the HPGe are provided in the Users Manual (DOE 1998b) and the Sitewide Comprehensive Environmental Response, Compensation, and Liability Act (CERCLA) Quality Assurance Project Plan (SCQ) Addendum (DOE 1998c).

During precertification, a surface radiation survey was conducted over approximately 80 percent of A1PIII Part Two. The remaining 20 percent includes the gravel roadway and inaccessible, vegetated areas just north of the road adjacent to A1PI. The road (approximately 50 percent of the unscanned footprint) was not scanned due to its matrix and because it is considered impacted, requiring removal and placement in the OSDF. HPGE shots were taken at a sinkhole and the adjacent area approximately 10 feet in diameter located in the southwestern corner of A1P3P2-C-01. At the bottom of the sinkhole, sections of 4-inch and 8-inch clay drainage pipes (farmer's drain tiles) are exposed. The precertification data are presented in Appendix C.

While several total uranium and radium-226 concentrations were greater than one times the FRL, no concentrations exceed the "hot spot" criteria. The total population of the data used to support the conclusion that the area is ready for certification consists of historical data and real-time precertification scans.

(This page intentially left blank)

TABLE 2-1
AREAS 1 AND 6 SECONDARY ASCOC LIST

Areas 1 and 6 Secondary ASCOC	Number of Above-FRL Hits*	Number of Samples*	Retained as ASCOC	Reason for Not Retaining as ASCOC
Aroclor-1254	12* (10 are non-detections)	13*	Yes/No	Retained for CU A1P3P2-C-01 which is adjacent to the FTF
Aroclor-1260	35* (6 are non-detections)	38*	Yes/No	Retained for CU A1P3P2-C-01 which is adjacent to the FTF
Arsenic	0	2	Yes/No	Retained for CU A1P3P2-C-01 which is adjacent to the FTF
	2*	35*		
Benzo(a)pyrene	0*	21*	No	No hits greater than FRL. This parameter will be analyzed as an ecological COC for CU A1P3P2-C-01 which is adjacent to the FTF
Benzo(b)fluoranthene	0*	23*	No	No hits greater than FRL. This parameter will be analyzed as an ecological COC for CU A1P3P2-C-01 which is adjacent to the FTF
Beryllium	0	2	Yes/No	Retained for CU A1P3P2-C-01 which is adjacent to the FTF
	8* (5 are non-detections)	21*		
Bromodichloromethane	0*	10*	No	No hits at or greater than FRL
Cesium-137	0	12	No	No hits at or greater than FRL
	0*	7*		
Dibenzo(a,h)anthracene	0*	11*	No	No hits greater than FRL. This parameter will be analyzed as an ecological COC for CU A1P3P2-C-01 which is adjacent to the FTF
1,1-dichloroethene	0*	10*	No	No hits at or greater than FRL
Dieldrin	10*	10*	No	All hits are non-detections with CRDLs greater than the FRL. Compound not expected in area
Fluoride	0	0	No	Data is not available. Compound is not expected in area.
Heptachloradibenzo-p-dioxins	7*	7*	No	All hits are non-detections with CRDLs greater than the FRL. Compound not expected in area
Indeno(1,2,3-cd)pyrene	0*	18*	No	No hits greater than FRL. This parameter will be analyzed as an ecological COC for CU A1P3P2-C-01 only due to proximity to FTF

TABLE 2-1
AREAS 1 AND 6 SECONDARY ASCOC LIST
(Continued)

Areas 1 and 6 Secondary ASCOC	Number of Above-FRL Hits*	Number of Samples*	Retained as ASCOC	Reason for Not Retaining as ASCOC
Lead	0	2	No	No hits at or greater than FRL
	0*	27*		
Manganese	0	2	No	No hits at or greater than FRL
	0*	36*		
Neptunium-237	0	7	No	No hits at or greater than FRL
	0*	8*		
Octachlorodibenzo-p-dioxin	0*	7*	No	No hits at or greater than FRL
Technetium-99	0	7	No	No hits at or greater than FRL
	0*	8*		
Tetrachloroethene	1*	18*	No	Not expected due to volatility of compound
Thorium-230	0	7	No	No hits at or greater than FRL
	0*	23*		

* Represents data from the Fire Training Facility

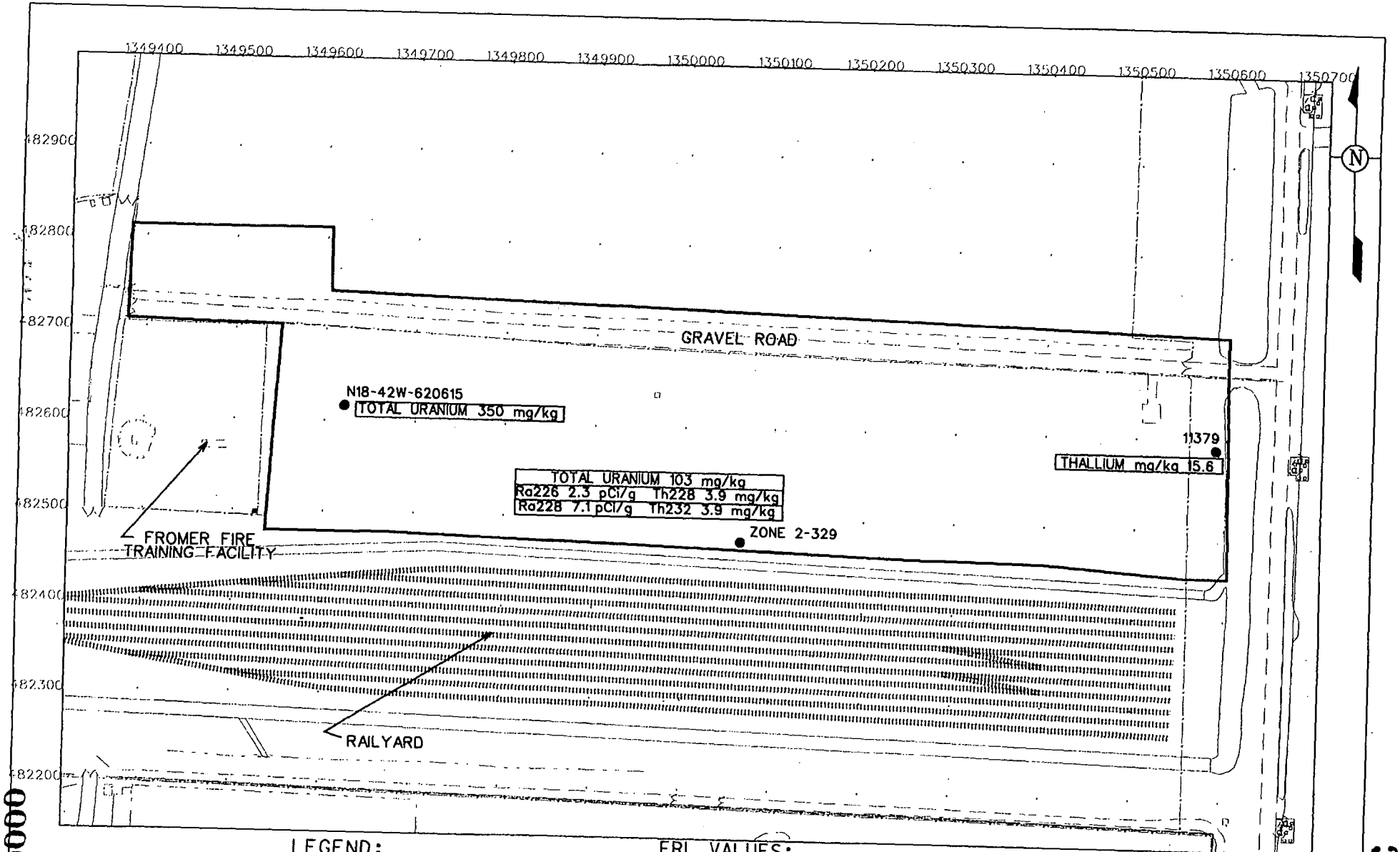

LEGEND:

- ● SAMPLE LOCATION
- —— A1PIII PART 2 AREA BOUNDARY

FRL VALUES:

TOTAL URANIUM 82 mg/kg
RA-226 1.7 pCi/g
RA-228 1.8 pCi/g
TH-228 1.7 pCi/g
TH-232 1.5 pCi/g

SCALE

150 75 0 150 FEET

v:\5oj31\dgn\bmp\a1p3p2-2.dgn
STATE PLANAR COORDINATE SYSTEM 1983

FIGURE 2-1. HISTORICAL ABOVE-FRL SAMPLE LOCATIONS

17-AUG-2000

000016

3201

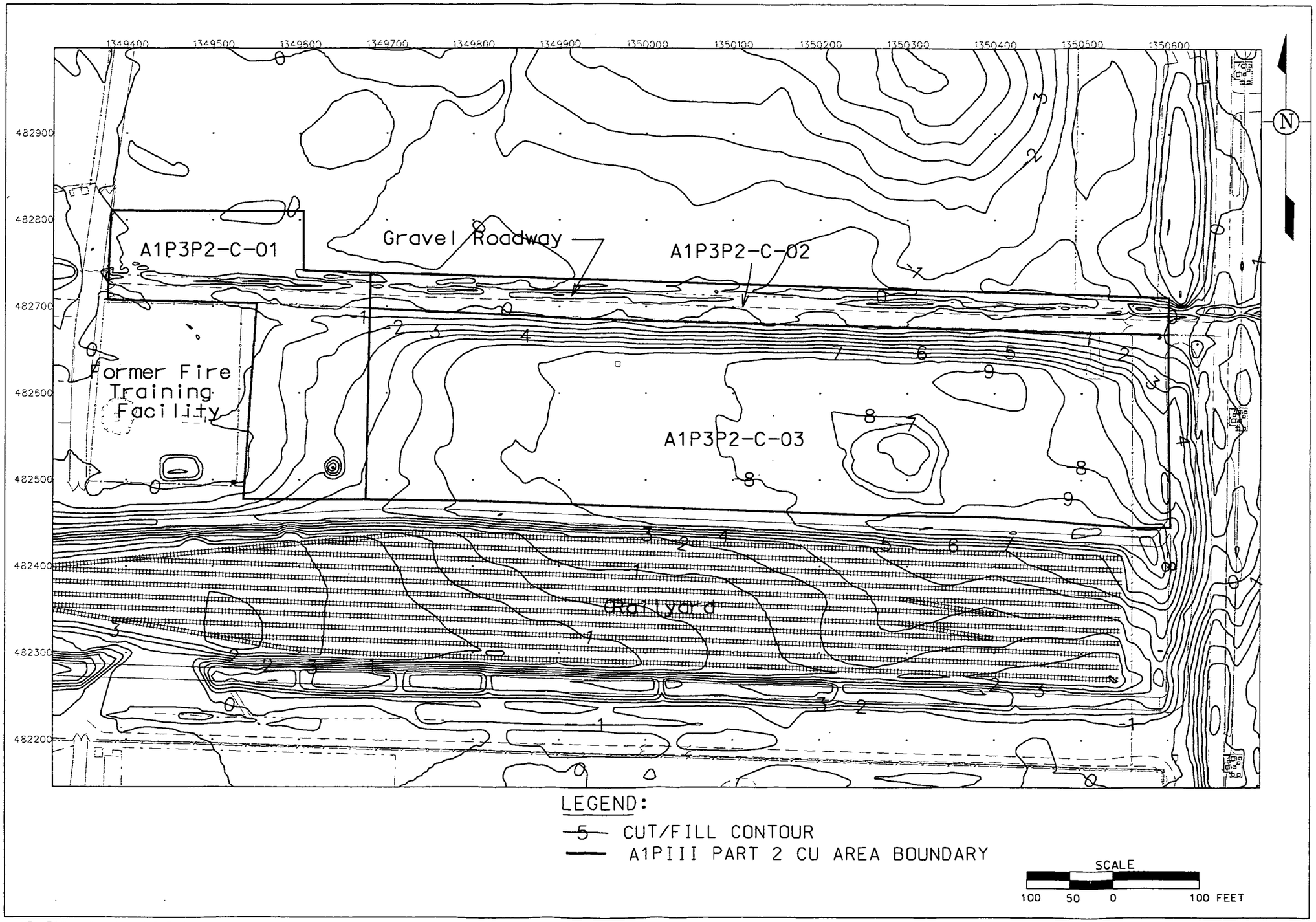

v:*5cj31*dgn*bmp*a1p3p2-6.dgn
STATE PLANAR COORDINATE SYSTEM 1983

FIGURE 2-2. A1PIII PART TWO CUT/FILL MAP

17-AUG-2000

3.0 AREA-SPECIFIC CONSTITUENTS OF CONCERN

In the OU5 ROD, there are 80 soil COCs with established FRLs which were retained for further investigation based on a screening process that considered the presence of the constituent in site soil and the potential risk to a receptor exposed to soil containing this contaminant. In spite of the conservative nature of this COC retention process, many of the COCs with established FRLs have a limited distribution in site soil or the presence of the COC is based on high Contract Required Detection Limits (CRDLs). When the FRLs were established for these COCs in the OU5 ROD, they were initially screened against site data presented on spatial maps to establish a picture of potential remediation areas.

By reviewing existing remedial investigation/feasibility study (RI/FS, DOE 1995b and 1995c) data presented on spatial distribution maps, the sitewide list of soil COCs was reduced from the 80 to 30. This reduction was possible because the majority of the COCs with FRLs listed in the OU5 ROD have no detections on site above their corresponding FRL, thus eliminating them from further consideration. The 30 remaining sitewide COCs account for over 99 percent of the combined risk to a site receptor model, and they comprise the list from which all of the remediation ASCOCs are drawn. When planning certification for a remediation area, additional selection criteria are used to derive an area specific subset of these 30 COCs.

3.1 SELECTION CRITERIA

The selection process for retaining ASCOCs for a remediation area is driven by applying a set of decision criteria. A soil contaminant will be retained as an ASCOC if:

- It is listed as a soil COC in the OU5 ROD
- It can be traced to site use, either through process knowledge or known release of the constituent to the environment
- Analytical results indicate the contaminant is present above its FRL, and the above-FRL concentrations are not attributable to false positives or elevated CRDLs
- Physical characteristics of the contaminant, such as degradation rate and volatility, indicate it is likely to persist in the soil between time of release and remediation
- The contaminant is one of the sitewide primary COCs (total uranium, radium-226, radium-228, thorium-232, and thorium-228).

Using this process, the ASCOCs are identified and listed in Table 3-1 along with the ecological COCs required for A1PIII Part Two (per Appendix C of the SEP). The ecological COCs are added to the list of analytes but certification is not contingent on BTV exceedences.

TABLE 3-1
ASCOC LIST FOR ALL CUs

ASCOC	FRL	Reason Retained
Total Uranium	82 mg/kg	Retained as a primary ASCOC sitewide
Radium-226	1.7 pCi/g	Retained as a primary ASCOC sitewide
Radium-228	1.8 pCi/g	Retained as a primary ASCOC sitewide
Thorium-228	1.7 pCi/g	Retained as a primary ASCOC sitewide
Thorium-232	1.5 pCi/g	Retained as a primary ASCOC sitewide
Aroclor-1254	0.13 mg/kg	Retained as a secondary ASCOC for CU A1P3P2-C-01 per the discussion in Table 2.1
Aroclor-1260	0.13 mg/kg	Retained as a secondary ASCOC for CU A1P3P2-C-01 per the discussion in Table 2.1
Arsenic	12 mg/kg	Retained as a secondary ASCOC for CU A1P3P2-C-01 per the discussion in Table 2.1
Beryllium	1.5 mg/kg	Retained as a secondary ASCOC for CU A1P3P2-C-01 per the discussion in Table 2.1
Benzo(a)anthracene*	1 mg/kg**	Retained an ecological COC for CU A1P3P2-C-01 per the discussion in Table 2.1
Benzo(a)pyrene*	2 mg/kg, 1 mg/kg**	Retained an ecological COC for CU A1P3P2-C-01 per the discussion in Table 2.1
Benzo(b)fluoranthene*	20 mg/kg, 1 mg/kg**	Retained an ecological COC for CU A1P3P2-C-01 per the discussion in Table 2.1
Benzo(g,h,i)perylene*	1 mg/kg**	Retained an ecological COC for CU A1P3P2-C-01 per the discussion in Table 2.1
benzo(k)fluoranthene*	1 mg/kg**	Retained an ecological COC for CU A1P3P2-C-01 per the discussion in Table 2.1
Chrysene*	1 mg/kg**	Retained an ecological COC for CU A1P3P2-C-01 per the discussion in Table 2.1
Dibenzo(a,h)anthracene*	2 mg/kg**	Retained an ecological COC for CU A1P3P2-C-01 per the discussion in Table 2.1
Fluoranthene*	10 mg/kg**	Retained an ecological COC for CU A1P3P2-C-01 per the discussion in Table 2.1
Indeno(1,2,3-cd)pyrene*	20 mg/kg**	Retained an ecological COC for CU A1P3P2-C-01 per the discussion in Table 2.1
Phenanthrene*	5 mg/kg**	Retained an ecological COC for CU A1P3P2-C-01 per the discussion in Table 2.1
Pyrene*	10 mg/kg**	Retained an ecological COC for CU A1P3P2-C-01 per the discussion in Table 2.1

mg/kg – milligrams per kilogram
pCi/g – picoCuries per gram

* PAHs include: benzo(a)anthracene, benzo(a) pyrene, benzo(b)fluoranthene, Benzo(g,h,i)perylene, benzo(k)fluoranthene, fluoranthene, chrysene, dibenzo(a,h)anthracene, indeno(1,2,3-cd)pyrene, phenanthrene, and pyrene
** BTVs

4.0 CERTIFICATION APPROACH

4.1 CERTIFICATION DESIGN

The certification design for the A1PIII Part Two area follows the general approach outlined in Section 3.4 of the SEP. As discussed in Section 3.0 of this document, total uranium, thorium-228, thorium-232, radium-226, and radium-228 (the primary ASCOCs) will be analyzed in all CUs. Aroclor-1254, aroclor-1260, arsenic, and beryllium, (secondary ASCOCs) will be analyzed for CU A1P2P3-C-01 because it is adjacent to the FTF. PAHs will be analyzed for CU A1P2P3-C-01 since these compounds are ecological COCs.

4.1.1 Certification Unit Design

The A1PIII Part Two certification area consists of the following:

- Two Group 1 CU: A1P3P2-C-01 which is comprised of the area north and east of the former FTF and a portion of the roadway between the FTF and the OSDF. A1P3P2-C-02 which is comprised of the roadway and ditch on the border of A1PI and,
- One Group 2 CU: A1P3P2-C-03 which is comprised mainly of the section previously excavated to provide material for the north railyard.

Sample points 6, 7, and 8 in CU A1P3P2-C-01 and 3, 4, 5A, 6, 8, 10, 11A, 14 and 15D in CU A1P3P2-C-02 are located within a gravel road footprint. At these locations, a 4-foot boring will be collected. The entire length of the core will be surveyed, in 6-inch intervals, using a beta/gamma (Geiger-Mueller) frisker. If no intervals exhibit greater than background beta/gamma measurements, the certification sample will be collected from the top 6-inch interval of the undisturbed, native soil below the gravel/asphalt base. If an interval of soil exhibits greater than background beta/gamma measurements, that particular interval will supersede the original certification sample interval. A geologist will determine where the undisturbed, native soil layer begins.

Certification sampling locations were selected according to Section 3.4.2 of the SEP. Each CU was first divided into 16 approximately equal sub-CUs. Sample locations were then generated by randomly selecting easting and northing coordinates within each sub-CU boundary and testing the locations against the minimum distance criterion for the CU. If minimum distance criterion was violated, an alternative random location was selected for that sub-CU and all the locations were re-tested. This process

continued until all 16 random locations met the minimum distance criterion. The selected A2PIII Part Two certification sampling locations are shown in Figure 4-2.

The allowable minimum distance between pairs ranged from 25.2 feet in CU A1P3P2-C-02 to 56.0 feet in CU A1P3P2-C-03. Of note, it is possible that subsurface obstacles (e.g., buried rocks or tree roots) could prevent collection at the planned location. If this is the case, the location can be moved up to 3 feet from the original location, as long as it remains within the same CU and sub-CU boundary. A check of the minimum distances between locations reveals that such a move would not cause a violation of the minimum distance criterion for even the closest of location pairs. A move of more than 3 feet would require a minimum distance recheck and approval from the U.S. Environmental Protection Agency (EPA) and Ohio Environmental Protection Agency (OEPA).

4.2 ANALYTICAL METHODOLOGY AND STATISTICAL ANALYSIS

Laboratory analyses of certification samples will be conducted using an approved analytical method, as discussed in Appendix H of the SEP. Analyses will be conducted to either Analytical Support Level (ASL) D or E. All requirements for ASL E are the same as ASL D except that the minimum detection level for the selected analytical method must be at least 10 percent of FRL. All results will be validated to ASL B, and a minimum of 10 percent (one of the three CUs) of the results will be validated to ASL D. The CU to be validated to ASL D (A1P3P2-C-01) was selected because it contains all analytes to be determined in A1PIII Part Two. Samples rejected during validation will be re-analyzed, or an alternate sample may be collected and substituted if there is insufficient material available from the initial sample. If any sample fails validation, all data from the laboratory with the rejected result will then be validated to ASL D to determine the integrity of all data from that laboratory. Once data are validated, results will be entered into the SED, and a statistical analysis will be performed to evaluate the pass/fail criteria for the each CU. The statistical approach is discussed in Section 3.4.3 and Appendix G of the SEP.

Two criteria must be met for the CU to pass certification. If the data distribution is normal or lognormal, the first criterion compares the 95 percent upper confidence limit (UCL) on the mean of each primary ASCOC to its FRL. On an individual CU basis, any ASCOC with the 95 percent UCL above the FRL results in that CU failing certification. If the data distribution is not normal or lognormal, the appropriate nonparametric approach discussed in Appendix G of the SEP will be used to evaluate the second criterion. The second criterion is related to individual samples. An individual sample cannot be greater

than two times the FRL or three times the FRL, based on its size (see Figure 3-11 of the SEP for further details). When the given UCL on the mean for each ASCOC is less than its FRL, and the two-times FRL hot spot criterion is met, the CU has met both criteria and will be considered certified.

There are three conditions that could result in a CU failing certification: 1) high variability in the data set, 2) localized contamination, and 3) widespread contamination. Details on the evaluation and responses to these possible outcomes are provided in Section 3.4.5 of the SEP. When all CUs within the scope of this CDL have passed certification, a certification report will be issued. The certification reports will be submitted to the regulatory agencies to receive acknowledgment that the pertinent operable unit remedial actions were completed and the individual CUs are certified to be released for interim or final land use. Section 7.4 of the SEP provides additional details and describes the required content of the certification reports.

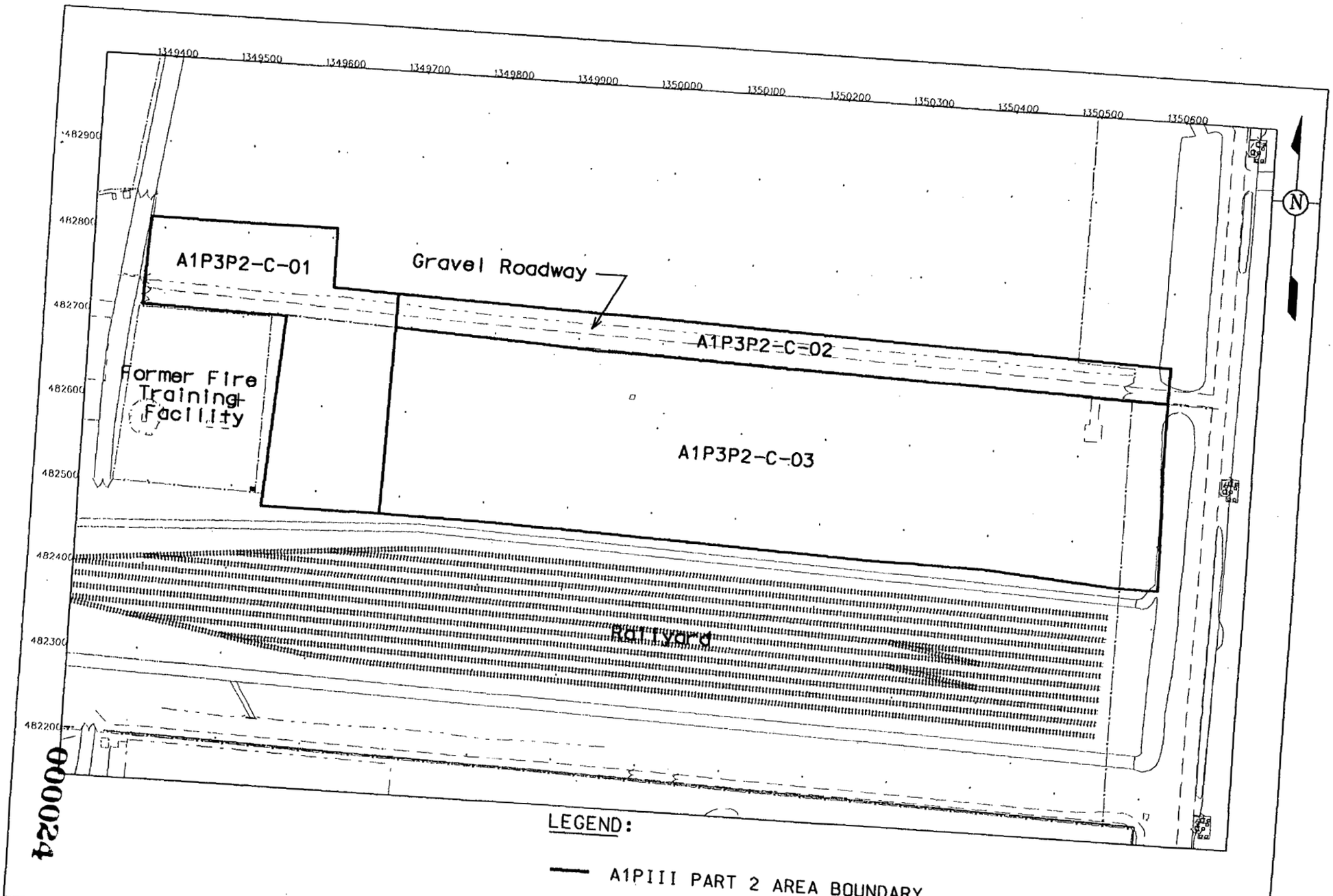

LEGEND:

A1PIII PART 2 AREA BOUNDARY

SCALE

100 50 0 100 FEET

v:\6oj31\dgn\bmp\a1p3p2-7.dgn
STATE PLANAR COORDINATE SYSTEM 1983

17-AUG-2000

FIGURE 4-1. A1PIII PART TWO CU BOUNDARIES

000024

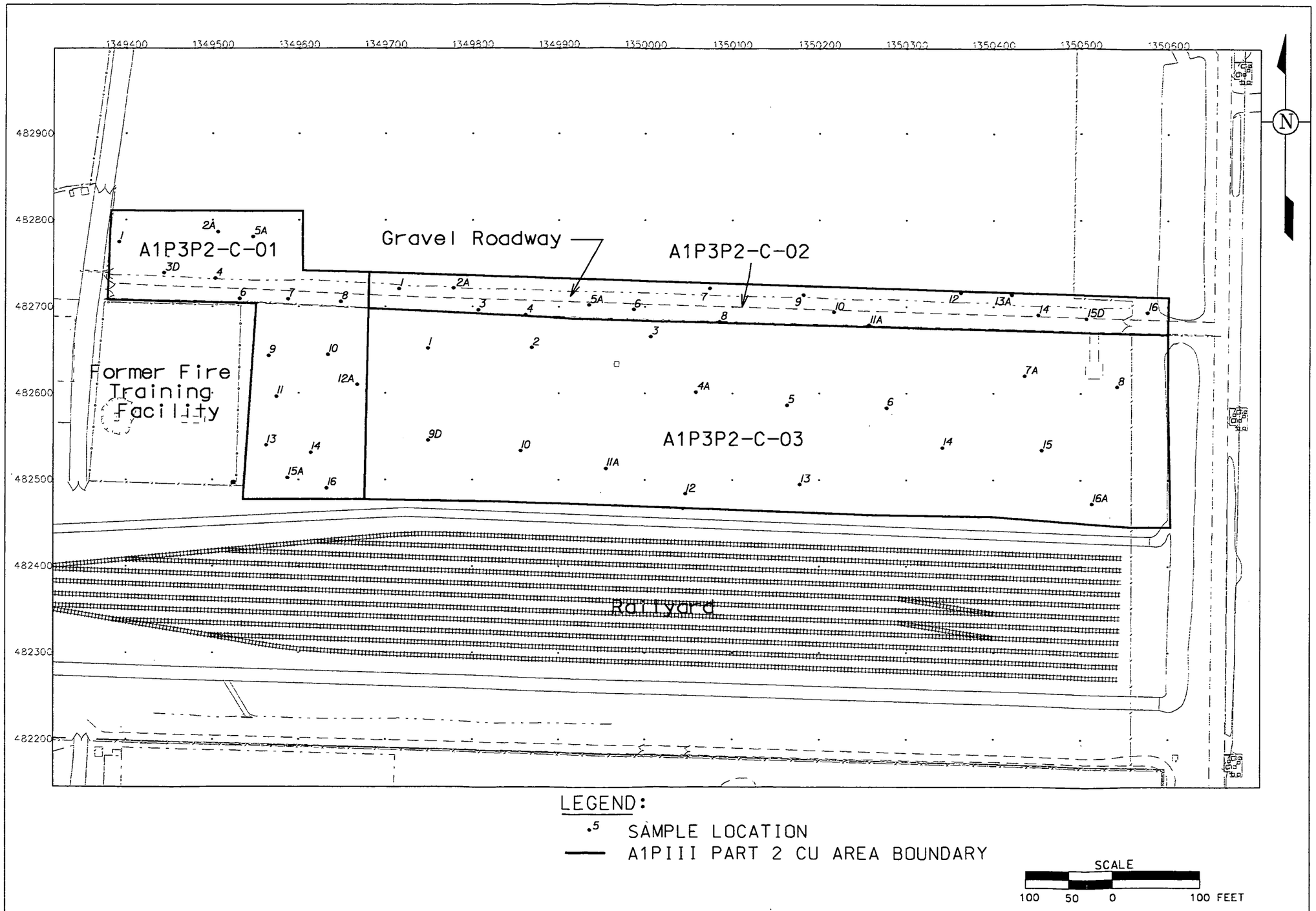

v:*5cj31*dgn*bmp*a1p3p2-5.dgn
STATE PLANAR COORDINATE SYSTEM 1983

FIGURE 4-2. A1PIII PART TWO SAMPLE LOCATIONS

17-AUG-2000

5.0 SCHEDULE

The following draft schedule shows key activities for the completion of the work within the scope of this CDL.

ACTIVITY	TARGET DATE*
Submittal of Certification Design Letter	June 26, 2000
Start of Certification Sampling	August 4, 2000
Complete Certification Sampling	August 9, 2000
Complete Analytical Work	September 30, 2000
Complete Data Validation/Statistical Analysis	October 7, 2000
Submit Certification Report	October 15, 2000

* Only the dates for submittal of the CDL and Certification Report are commitments to EPA and OEPA. Other dates are internal target completion dates.

REFERENCES

U.S. Department of Energy, 1995a, "Contamination at the Fire Training Facility Removal Action 28," Final, Fernald Environmental Management Project, DOE, Fernald Area Office, Cincinnati, Ohio.

U.S. Department of Energy, 1995b, "Operable Unit 5 Remedial Investigation Report," Final, Fernald Environmental Management Project, DOE, Fernald Area Office, Cincinnati, Ohio.

U.S. Department of Energy, 1995c, "Operable Unit 5 Feasibility Study Report," Final, Fernald Environmental Management Project, DOE, Fernald Area Office, Cincinnati, Ohio.

U.S. Department of Energy, 1996a, "Record of Decision for Remedial Action at Operable Unit 5," Final, Fernald Environmental Management Project, DOE, Fernald Area Office, Cincinnati, Ohio.

U.S. Department of Energy, 1996b, "Amendment to the Operable Unit 1 Remedial Design Pre-Final Design Packages, I and II Site Improvement Plan," Final, Fernald Environmental Management Project, DOE, Fernald Area Office, Cincinnati, Ohio.

U.S. Department of Energy, 1998a, "Sitewide Excavation Plan," Final, Fernald Environmental Management Project, DOE, Fernald Area Office, Cincinnati, Ohio.

U.S. Department of Energy, 1998b, "User Guidelines, Measurement Strategies, and Operational Factors for Deployment of In-Situ Gamma Spectrometry at the Fernald Site (Users Manual)," Draft, Fernald Environmental Management Project, DOE, Fernald Area Office, Cincinnati, Ohio.

U.S. Department of Energy, 1998c, "Addendum to the Sitewide CERCLA Quality Assurance Project Plan," Draft, Fernald Environmental Management Project, DOE, Fernald Area Office, Cincinnati, Ohio.

APPENDIX A

RI/FS HISTORICAL DATA FOR A1PIII PART TWO

APPENDIX A
HISTORICAL DATA COLLECTED FROM A1PIII PART TWO

PARAMETER	FRL	RESULT	UNITS	QUALIFIER	SAMPLE ID	LOCATION	SAMPLE DATE	TOP	BOTTOM	NORTHING	EASTING
Antimony	96	0.54	mg/kg	J	200172	11379	19940709	2	2.5	482586.876	1350587.638
Antimony	96	1.7	mg/kg	J	200171	11379	19940709	0	0.17	482586.876	1350587.638
Arsenic	12	7.6	mg/kg	-	200172	11379	19940709	2	2.5	482586.876	1350587.638
Arsenic	12	8.8	mg/kg	J	200171	11379	19940709	0	0.17	482586.876	1350587.638
Barium	68000	92.5	mg/kg	-	200171	11379	19940709	0	0.17	482586.876	1350587.638
Barium	68000	135	mg/kg	J	200172	11379	19940709	2	2.5	482586.876	1350587.638
Beryllium	1.5	0.41	mg/kg	-	200171	11379	19940709	0	0.17	482586.876	1350587.638
Beryllium	1.5	0.72	mg/kg	J	200172	11379	19940709	2	2.5	482586.876	1350587.638
Cadmium	82	0.14	mg/kg	U	200171	11379	19940709	0	0.17	482586.876	1350587.638
Cadmium	82	0.17	mg/kg	U	200172	11379	19940709	2	2.5	482586.876	1350587.638
Cesium-137	1.4	0.01	pCi/g	U	200172	11379	19940709	2	2.5	482586.876	1350587.638
Cesium-137	1.4	0.26	pCi/g	NV	O18-41W-206591	O18-41W-206591	9/25/96	0	0.5	482591.486	1350206.932
Cesium-137	1.4	0.27	pCi/g	NV	O18-32W-089541	O18-32W-089541	9/25/96	0	0.5	482541.001	1350089.657
Cesium-137	1.4	0.27	pCi/g	NV	O18-32W-089541	O18-32W-089541	9/25/96	0	0.5	482541.001	1350089.657
Cesium-137	1.4	0.33	pCi/g	NV	O18-31W-974616	O18-31W-974616	9/25/96	0	0.5	482616.519	1349974.392
Cesium-137	1.4	0.33	pCi/g	NV	O18-31W-974616	O18-31W-974616	9/25/96	0	0.5	482616.519	1349974.392
Cesium-137	1.4	0.4	pCi/g	J	5286	ZONE 2-329	19880412	0	0.5	482474.42	1350062.961
Cesium-137	1.4	0.44	pCi/g	NV	N18-42W-620615	N18-42W-620615	9/25/96	0	0.5	482615.487	1349620.995
Cesium-137	1.4	0.44	pCi/g	NV	N18-42W-620615	N18-42W-620615	9/25/96	0	0.5	482615.487	1349620.995
Cesium-137	1.4	0.6	pCi/g	J	5751	ZONE 3-460	19881006	0	0.5	482529.417	1349780.961
Cesium-137	1.4	0.612	pCi/g	-	200171	11379	19940709	0	0.17	482586.876	1350587.638
Cesium-137	1.4	0.7	pCi/g	J	5754	ZONE 3-463	19881006	0	0.5	482529.42	1350030.96
Chromium	300	18.9	mg/kg	J	200171	11379	19940709	0	0.17	482586.876	1350587.638
Chromium	300	20.7	mg/kg	J	200172	11379	19940709	2	2.5	482586.876	1350587.638
Cobalt	740	7.8	mg/kg	J	200171	11379	19940709	0	0.17	482586.876	1350587.638
Cobalt	740	11.4	mg/kg	J	200172	11379	19940709	2	2.5	482586.876	1350587.638
Copper	220000	17.3	mg/kg	-	200171	11379	19940709	0	0.17	482586.876	1350587.638
Copper	220000	18.1	mg/kg	J	200172	11379	19940709	2	2.5	482586.876	1350587.638
Lead	400	15.8	mg/kg	-	200172	11379	19940709	2	2.5	482586.876	1350587.638
Lead	400	19.6	mg/kg	J	200171	11379	19940709	0	0.17	482586.876	1350587.638
Manganese	4600	441	mg/kg	J	200171	11379	19940709	0	0.17	482586.876	1350587.638
Manganese	4600	887	mg/kg	J	200172	11379	19940709	2	2.5	482586.876	1350587.638
Mercury	7.5	0.05	mg/kg	U	200171	11379	19940709	0	0.17	482586.876	1350587.638
Mercury	7.5	0.52	mg/kg	-	200172	11379	19940709	2	2.5	482586.876	1350587.638
Molybdenum	2900	0.31	mg/kg	UJ	200171	11379	19940709	0	0.17	482586.876	1350587.638
Molybdenum	2900	0.43	mg/kg	J	200172	11379	19940709	2	2.5	482586.876	1350587.638
Neptunium-237	3.2	0.029	pCi/g	U	200172	11379	19940709	2	2.5	482586.876	1350587.638
Neptunium-237	3.2	0.122	pCi/g	UJ	200171	11379	19940709	0	0.17	482586.876	1350587.638
Neptunium-237	3.2	0.6	pCi/g	UJ	5286	ZONE 2-329	19880412	0	0.5	482474.42	1350062.961

000029

3201

APPENDIX A
HISTORICAL DATA COLLECTED FROM A1PIII PART TWO

PARAMETER	FRL	RESULT	UNITS	QUALIFIER	SAMPLE ID	LOCATION	SAMPLE DATE	TOP	BOTTOM	NORTHING	EASTING
Neptunium-237	3.2	0.6	pCi/g	U	5751	ZONE 3-460	19881006	0	0.5	482529.417	1349780.961
Neptunium-237	3.2	0.6	pCi/g	U	5754	ZONE 3-463	19881006	0	0.5	482529.42	1350030.96
Neptunium-237	3.2	0.6	pCi/g	U	5757	ZONE 3-466	19881006	0	0.5	482529.423	1350280.96
Neptunium-237	3.2	0.6	pCi/g	U	5760	ZONE 3-469	19881006	0	0.5	482529.427	1350530.959
Nickel	15000	15.4	mg/kg	J	200171	11379	19940709	0	0.17	482586.876	1350587.638
Nickel	15000	17	mg/kg	J	200172	11379	19940709	2	2.5	482586.876	1350587.638
Plutonium-238	78	0.007	pCi/g	UJ	200172	11379	19940709	2	2.5	482586.876	1350587.638
Plutonium-238	78	0.2	pCi/g	UJ	200171	11379	19940709	0	0.17	482586.876	1350587.638
Plutonium-238	78	0.6	pCi/g	U	5286	ZONE 2-329	19880412	0	0.5	482474.42	1350062.961
Plutonium-238	78	0.6	pCi/g	UJ	5751	ZONE 3-460	19881006	0	0.5	482529.417	1349780.961
Plutonium-238	78	0.6	pCi/g	UJ	5754	ZONE 3-463	19881006	0	0.5	482529.42	1350030.96
Plutonium-238	78	0.6	pCi/g	UJ	5757	ZONE 3-466	19881006	0	0.5	482529.423	1350280.96
Plutonium-238	78	0.6	pCi/g	UJ	5760	ZONE 3-469	19881006	0	0.5	482529.427	1350530.959
Plutonium-238	78	0.6	pCi/g	UJ	200172	11379	19940709	2	2.5	482586.876	1350587.638
Plutonium-239/240	77	0.079	pCi/g	U	5286	ZONE 2-329	19880412	0	0.5	482474.42	1350062.961
Plutonium-239/240	77	0.6	pCi/g	UJ	5751	ZONE 3-460	19881006	0	0.5	482529.417	1349780.961
Plutonium-239/240	77	0.6	pCi/g	UJ	5754	ZONE 3-463	19881006	0	0.5	482529.42	1350030.96
Plutonium-239/240	77	0.6	pCi/g	UJ	5757	ZONE 3-466	19881006	0	0.5	482529.423	1350280.96
Plutonium-239/240	77	0.6	pCi/g	UJ	5760	ZONE 3-469	19881006	0	0.5	482529.427	1350530.959
Plutonium-239/240	77	0.6	pCi/g	UJ	200171	11379	19940709	0	0.17	482586.876	1350587.638
Plutonium-239/240	77	1.75	pCi/g	J	O18-32W-089541	O18-32W-089541	9/25/96	0	0.5	482541.001	1350089.657
Radium-226	1.7	0.63	pCi/g	UNV	O18-31W-974616	O18-31W-974616	9/25/96	0	0.5	482616.519	1349974.392
Radium-226	1.7	0.65	pCi/g	NV	O18-31W-974616	O18-31W-974616	9/25/96	0	0.5	482616.519	1349974.392
Radium-226	1.7	0.65	pCi/g	NV	O18-41W-206591	O18-41W-206591	9/25/96	0	0.5	482591.486	1350206.932
Radium-226	1.7	0.69	pCi/g	NV	N18-42W-620615	N18-42W-620615	9/25/96	0	0.5	482615.487	1349620.995
Radium-226	1.7	0.75	pCi/g	NV	N18-42W-620615	N18-42W-620615	9/25/96	0	0.5	482615.487	1349620.995
Radium-226	1.7	0.75	pCi/g	NV	200171	11379	19940709	0	0.17	482586.876	1350587.638
Radium-226	1.7	1.087	pCi/g	-	5754	ZONE 3-463	19881006	0	0.5	482529.42	1350030.96
Radium-226	1.7	1.1	pCi/g	J	5751	ZONE 3-460	19881006	0	0.5	482529.417	1349780.961
Radium-226	1.7	1.3	pCi/g	J	200172	11379	19940709	2	2.5	482586.876	1350587.638
Radium-226	1.7	1.52	pCi/g	J	5286	ZONE 2-329	19880412	0	0.5	482474.42	1350062.961
Radium-226	1.7	2.3	pCi/g	J	5751	ZONE 3-460	19881006	0	0.5	482529.417	1349780.961
Radium-228	1.8	1.1	pCi/g	J	5754	ZONE 3-463	19881006	0	0.5	482529.42	1350030.96
Radium-228	1.8	1.1	pCi/g	J	200171	11379	19940709	0	0.17	482586.876	1350587.638
Radium-228	1.8	1.122	pCi/g	-	200172	11379	19940709	2	2.5	482586.876	1350587.638
Radium-228	1.8	1.279	pCi/g	J	5286	ZONE 2-329	19880412	0	0.5	482474.42	1350062.961
Radium-228	1.8	7.1	pCi/g	J	200172	11379	19940709	2	2.5	482586.876	1350587.638
Selenium	5400	0.34	mg/kg	-	200171	11379	19940709	0	0.17	482586.876	1350587.638
Selenium	5400	0.58	mg/kg	U	200171	11379	19940709	0	0.17	482586.876	1350587.638
Silver	29000	0.05	mg/kg	U							

000030

APPENDIX A
HISTORICAL DATA COLLECTED FROM A1PIII PART TWO

PARAMETER	FRL	RESULT	UNITS	QUALIFIER	SAMPLE ID	LOCATION	SAMPLE DATE	TOP	BOTTOM	NORTHING	EASTING
Silver	29000	0.05	mg/kg	UJ	200172	11379	19940709	2	2.5	482586.876	1350587.638
Strontium-90	14	0.015	pCi/g	U	200171	11379	19940709	0	0.17	482586.876	1350587.638
Strontium-90	14	0.015	pCi/g	UJ	200172	11379	19940709	2	2.5	482586.876	1350587.638
Strontium-90	14	0.8	pCi/g	-	5760	ZONE 3-469	19881006	0	0.5	482529.427	1350530.959
Strontium-90	14	1.1	pCi/g	-	5757	ZONE 3-466	19881006	0	0.5	482529.423	1350280.96
Strontium-90	14	1.4	pCi/g	-	5286	ZONE 2-329	19880412	0	0.5	482474.42	1350062.961
Strontium-90	14	4.3	pCi/g	-	5751	ZONE 3-460	19881006	0	0.5	482529.417	1349780.961
Strontium-90	14	4.6	pCi/g	-	5754	ZONE 3-463	19881006	0	0.5	482529.42	1350030.96
Technetium-99	30	0.015	pCi/g	U	200172	11379	19940709	2	2.5	482586.876	1350587.638
Technetium-99	30	0.215	pCi/g	J	200171	11379	19940709	0	0.17	482586.876	1350587.638
Technetium-99	30	1	pCi/g	UNV	5286	ZONE 2-329	19880412	0	0.5	482474.42	1350062.961
Technetium-99	30	1	pCi/g	U	5751	ZONE 3-460	19881006	0	0.5	482529.417	1349780.961
Technetium-99	30	1	pCi/g	U	5754	ZONE 3-463	19881006	0	0.5	482529.42	1350030.96
Technetium-99	30	1	pCi/g	U	5757	ZONE 3-466	19881006	0	0.5	482529.423	1350280.96
Technetium-99	30	1	pCi/g	U	5760	ZONE 3-469	19881006	0	0.5	482529.427	1350530.959
Thallium	91	0.59	mg/kg	-	200171	11379	19940709	0	0.17	482586.876	1350587.638
Thallium	91	15.6	mg/kg	-	200172	11379	19940709	2	2.5	482586.876	1350587.638
Thorium-228	1.7	0.8	pCi/g	-	5754	ZONE 3-463	19881006	0	0.5	482529.42	1350030.96
Thorium-228	1.7	1	pCi/g	-	5751	ZONE 3-460	19881006	0	0.5	482529.417	1349780.961
Thorium-228	1.7	1.1	pCi/g	-	5760	ZONE 3-469	19881006	0	0.5	482529.427	1350530.959
Thorium-228	1.7	1.189	pCi/g	-	200172	11379	19940709	2	2.5	482586.876	1350587.638
Thorium-228	1.7	1.321	pCi/g	-	200171	11379	19940709	0	0.17	482586.876	1350587.638
Thorium-228	1.7	1.4	pCi/g	-	5757	ZONE 3-466	19881006	0	0.5	482529.423	1350280.96
Thorium-228	1.7	3.9	pCi/g	-	5286	ZONE 2-329	19880412	0	0.5	482474.42	1350062.961
Thorium-230	280	1.275	pCi/g	D	200172	11379	19940709	2	2.5	482586.876	1350587.638
Thorium-230	280	1.5	pCi/g	-	5754	ZONE 3-463	19881006	0	0.5	482529.42	1350030.96
Thorium-230	280	1.675	pCi/g	-	200171	11379	19940709	0	0.17	482586.876	1350587.638
Thorium-230	280	2	pCi/g	-	5751	ZONE 3-460	19881006	0	0.5	482529.417	1349780.961
Thorium-230	280	2.3	pCi/g	-	5760	ZONE 3-469	19881006	0	0.5	482529.427	1350530.959
Thorium-230	280	2.4	pCi/g	-	5757	ZONE 3-466	19881006	0	0.5	482529.423	1350280.96
Thorium-230	280	3.3	pCi/g	-	5286	ZONE 2-329	19880412	0	0.5	482474.42	1350062.961
Thorium-232	1.5	0.8	pCi/g	-	5754	ZONE 3-463	19881006	0	0.5	482529.42	1350030.96
Thorium-232	1.5	0.81	pCi/g	NV	O18-41W-206591	O18-41W-206591	9/25/96	0	0.5	482591.486	1350206.932
Thorium-232	1.5	0.85	pCi/g	NV	O18-32W-089541	O18-32W-089541	9/25/96	0	0.5	482541.001	1350089.657
Thorium-232	1.5	0.9	pCi/g	-	5751	ZONE 3-460	19881006	0	0.5	482529.417	1349780.961
Thorium-232	1.5	0.93	pCi/g	NV	N18-42W-620615	N18-42W-620615	9/25/96	0	0.5	482615.487	1349620.995
Thorium-232	1.5	0.93	pCi/g	NV	N18-42W-620615	N18-42W-620615	9/25/96	0	0.5	482615.487	1349620.995
Thorium-232	1.5	0.96	pCi/g	NV	O18-31W-974616	O18-31W-974616	9/25/96	0	0.5	482616.519	1349974.392
Thorium-232	1.5	0.96	pCi/g	NV	O18-31W-974616	O18-31W-974616	9/25/96	0	0.5	482616.519	1349974.392

000031

3201

APPENDIX A
HISTORICAL DATA COLLECTED FROM A1PIII PART TWO

PARAMETER	FRL	RESULT	UNITS	QUALIFIER	SAMPLE ID	LOCATION	SAMPLE DATE	TOP	BOTTOM	NORTHING	EASTING
Thorium-232	1.5	1.057	pCi/g	-	200172	11379	19940709	2	2.5	482586.876	1350587.638
Thorium-232	1.5	1.176	pCi/g	-	200171	11379	19940709	0	0.17	482586.876	1350587.638
Thorium-232	1.5	1.2	pCi/g	-	5757	ZONE 3-466	19881006	0	0.5	482529.423	1350280.96
Thorium-232	1.5	1.3	pCi/g	-	5760	ZONE 3-469	19881006	0	0.5	482529.427	1350530.959
Thorium-232	1.5	3.9	pCi/g	-	5286	ZONE 2-329	19880412	0	0.5	482474.42	1350062.961
Uranium, Total	82	1.72	mg/kg	J	38483	2423	3/3/92			482585.94	1350301.63
Uranium, Total	82	1.737	mg/kg	-	21S-14-B2	11379	9/19/94	2	2.5	482586.884	1350587.703
Uranium, Total	82	2	mg/kg	NV	107470	4436	3/2/93			482564.7705	1349736.88
Uranium, Total	82	3.7	mg/kg	UJ	38481	3423	2/14/92			482585.09	1350286.71
Uranium, Total	82	3.8	mg/kg	NV	21S-14-B2	11379	9/19/94	2	2.5	482586.884	1350587.703
Uranium, Total	82	3.920607428	mg/kg	-	200172	11379	19940709	2	2.5	482586.876	1350587.638
Uranium, Total	82	5.6	mg/kg	NV	200172D	11379	7/29/94	2	2.5	482586.884	1350587.703
Uranium, Total	82	5.6	mg/kg	NV	200180	11379	7/9/94	1.5	2	482586.884	1350587.703
Uranium, Total	82	6.4	mg/kg	NV	200172D	11379	7/29/94	2	2.5	482586.884	1350587.703
Uranium, Total	82	7.6	mg/kg	NV	200178	11379	7/9/94	1	1.5	482586.884	1350587.703
Uranium, Total	82	8	mg/kg	NV	N18-41DL-538729	N18-41DL-538729	10/15/96			482729	1349538
Uranium, Total	82	8	mg/kg	NV	N18-41DL-538729	N18-41DL-538729	10/15/96			482729	1349538
Uranium, Total	82	10	mg/kg	NV	O18-32DL-005716	O18-32DL-005716	10/15/96			482716	1350005
Uranium, Total	82	10	mg/kg	NV	O18-42DL-486700	O18-42DL-486700	10/15/96			482700	1350486
Uranium, Total	82	10	mg/kg	NV	O18-32DL-005716	O18-32DL-005716	10/15/96			482716	1350005
Uranium, Total	82	13.6	mg/kg	NV	200176	11379	7/9/94	0.5	1	482586.884	1350587.703
Uranium, Total	82	21.2	mg/kg	NV	200173	11379	7/9/94	0	0.5	482586.884	1350587.703
Uranium, Total	82	23.585	mg/kg	-	1S-14	11379	9/19/94	0	0.17	482586.884	1350587.703
Uranium, Total	82	26.56224527	mg/kg	-	5757	ZONE 3-466	19881006	0	0.5	482529.423	1350280.96
Uranium, Total	82	29	mg/kg	NV	O18-41W-206591	O18-41W-206591	9/25/96	0	0.5	482591.486	1350206.932
Uranium, Total	82	29.3	mg/kg	NV	1S-14	11379	9/19/94	0	0.17	482586.884	1350587.703
Uranium, Total	82	30	mg/kg	NV	N18-42W-618615	N18-42W-618615	10/1/96	0	0.5	482615.624	1349618.412
Uranium, Total	82	30	mg/kg	NV	O18-32W-089541	O18-32W-089541	9/25/96	0	0.5	482541.001	1350089.657
Uranium, Total	82	30	mg/kg	NV	N18-42W-618615	N18-42W-618615	10/1/96	0	0.5	482615.624	1349618.412
Uranium, Total	82	32	mg/kg	NV	N18-42W-624615	N18-42W-624615	10/1/96	0	0.5	482615.595	1349624.417
Uranium, Total	82	32	mg/kg	NV	N18-42W-624615	N18-42W-624615	10/1/96	0	0.5	482615.595	1349624.417
Uranium, Total	82	32.18377099	mg/kg	J	200171	11379	19940709	0	0.17	482586.876	1350587.638
Uranium, Total	82	32.98398836	mg/kg	-	5751	ZONE 3-460	19881006	0	0.5	482529.417	1349780.961
Uranium, Total	82	33.88355167	mg/kg	-	5754	ZONE 3-463	19881006	0	0.5	482529.42	1350030.96
Uranium, Total	82	34	mg/kg	NV	N18-42W-621612	N18-42W-621612	10/1/96	0	0.5	482612.559	1349621.463
Uranium, Total	82	34	mg/kg	NV	N18-42W-621612	N18-42W-621612	10/1/96	0	0.5	482612.559	1349621.463
Uranium, Total	82	36	mg/kg	NV	N18-42W-621618	N18-42W-621618	10/1/96	0	0.5	482618.453	1349621.62
Uranium, Total	82	36	mg/kg	NV	N18-42W-621618	N18-42W-621618	10/1/96	0	0.5	482618.453	1349621.62
Uranium, Total	82	40	mg/kg	NV	O18-31W-974616	O18-31W-974616	9/25/96	0	0.5	482616.519	1349974.392

000032

APPENDIX A
HISTORICAL DATA COLLECTED FROM A1PIII PART TWO

PARAMETER	FRL	RESULT	UNITS	QUALIFIER	SAMPLE ID	LOCATION	SAMPLE DATE	TOP	BOTTOM	NORTHING	EASTING
Uranium, Total	82	40	mg/kg	NV	O18-31W-974616	O18-31W-974616	9/25/96	0	0.5	482616.519	1349974.392
Uranium, Total	82	42.42937086	mg/kg	-	5760	ZONE 3-469	19881006	0	0.5	482529.427	1350530.959
Uranium, Total	82	53.7	mg/kg	NV	200171D	11379	7/28/94	0	0.17	482586.884	1350587.703
Uranium, Total	82	102.735967	mg/kg	J	5286	ZONE 2-329	19880412	0	0.5	482474.42	1350062.961
Uranium, Total	82	350	mg/kg	NV	N18-42W-620615	N18-42W-620615	9/25/96	0	0.5	482615.487	1349620.995
Vanadium	5100	31.5	mg/kg	J	200171	11379	19940709	0	0.17	482586.876	1350587.638
Vanadium	5100	35.6	mg/kg	J	200172	11379	19940709	2	2.5	482586.876	1350587.638
Zinc	120000	44.9	mg/kg	J	200172	11379	19940709	2	2.5	482586.876	1350587.638
Zinc	120000	55.1	mg/kg	J	200171	11379	19940709	0	0.17	482586.876	1350587.638

000033

3201

APPENDIX B

RI/FS HISTORICAL DATA FOR FIRE TRAINING FACILITY

APPENDIX B
HISTORICAL DATA COLLECTED FROM THE FIRE TRAINING FACILITY

PARAMETER	FRL	RESULT	UNITS	QUALIFIER	SAMPLE ID	LOCATION	SAMPLE DATE	Top	Bottom	Northing 83	Easting 83
1,1,2-Trichloroethane	4300	14	ug/kg	U	99240	FT-5	19930205	2.08	2.58	482512.613	1349428.222
1,1,2-Trichloroethane	4300	12	ug/kg	U	99239	FT-5	19930205	0	0.5	482512.613	1349428.222
1,1,2-Trichloroethane	4300	6	ug/kg	U	51160	1508	19900204	2	2.5	482594.983	1349371.022
1,1,2-Trichloroethane	4300	6	ug/kg	U	51161	1509	19900204	2	2.5	482549.062	1349371.622
1,1,2-Trichloroethane	4300	6	ug/kg	U	54059	1510	19900204	2	2.5	482549.033	1349408.862
1,1,2-Trichloroethane	4300	6	ug/kg	U	54439	1511	19900205	2	2.5	482592.983	1349412.702
1,1,2-Trichloroethane	4300	6	ug/kg	U	51679	1512	19900206	2	2.5	482570.973	1349457.062
1,1,2-Trichloroethane	4300	6	ug/kg	U	53519	1513	19900206	2	2.5	482578.884	1349482.362
1,1,2-Trichloroethane	4300	6	ug/kg	U	53782	1514	19900206	2	2.5	482570.174	1349504.922
1,1,2-Trichloroethane	4300	6	ug/kg	U	52259	1515	19900207	2	2.5	482561.514	1349480.272
1,1-Dichloroethene	410	14	ug/kg	U	99240	FT-5	19930205	2.08	2.58	482512.613	1349428.222
1,1-Dichloroethene	410	12	ug/kg	U	99239	FT-5	19930205	0	0.5	482512.613	1349428.222
1,1-Dichloroethene	410	6	ug/kg	U	51160	1508	19900204	2	2.5	482594.983	1349371.022
1,1-Dichloroethene	410	6	ug/kg	U	51161	1509	19900204	2	2.5	482549.062	1349371.622
1,1-Dichloroethene	410	6	ug/kg	U	54059	1510	19900204	2	2.5	482549.033	1349408.862
1,1-Dichloroethene	410	6	ug/kg	U	54439	1511	19900205	2	2.5	482592.983	1349412.702
1,1-Dichloroethene	410	6	ug/kg	U	51679	1512	19900206	2	2.5	482570.973	1349457.062
1,1-Dichloroethene	410	6	ug/kg	U	53519	1513	19900206	2	2.5	482578.884	1349482.362
1,1-Dichloroethene	410	6	ug/kg	U	53782	1514	19900206	2	2.5	482570.174	1349504.922
1,1-Dichloroethene	410	6	ug/kg	U	52259	1515	19900207	2	2.5	482561.514	1349480.272
1,2-Dichloroethene (Total)	160	14	ug/kg	U	99240	FT-5	19930205	2.08	2.58	482512.613	1349428.222
1,2-Dichloroethene (Total)	160	12	ug/kg	U	99239	FT-5	19930205	0	0.5	482512.613	1349428.222
1,2-Dichloroethene (Total)	160	6	ug/kg	U	51160	1508	19900204	2	2.5	482594.983	1349371.022
1,2-Dichloroethene (Total)	160	6	ug/kg	U	54059	1510	19900204	2	2.5	482549.033	1349408.862
1,2-Dichloroethene (Total)	160	6	ug/kg	U	54439	1511	19900205	2	2.5	482592.983	1349412.702
1,2-Dichloroethene (Total)	160	6	ug/kg	U	51679	1512	19900206	2	2.5	482570.973	1349457.062
1,2-Dichloroethene (Total)	160	6	ug/kg	U	53519	1513	19900206	2	2.5	482578.884	1349482.362
1,2-Dichloroethene (Total)	160	6	ug/kg	U	53782	1514	19900206	2	2.5	482570.174	1349504.922
1,2-Dichloroethene (Total)	160	6	ug/kg	U	52259	1515	19900207	2	2.5	482561.514	1349480.272
1,2-Dichloroethene (Total)	160	2	ug/kg	J	51161	1509	19900204	2	2.5	482549.062	1349371.622
3,3'-Dichlorobenzidine	550	4000	ug/kg	U	51161	1509	19900204	2	2.5	482549.062	1349371.622
3,3'-Dichlorobenzidine	550	3500	ug/kg	U	51160	1508	19900204	2	2.5	482594.983	1349371.022
3,3'-Dichlorobenzidine	550	2700	ug/kg	U	51679	1512	19900206	2	2.5	482570.973	1349457.062
3,3'-Dichlorobenzidine	550	960	ug/kg	U	99240	FT-5	19930205	2.08	2.58	482512.613	1349428.222
3,3'-Dichlorobenzidine	550	890	ug/kg	U	52259	1515	19900207	2	2.5	482561.514	1349480.272
3,3'-Dichlorobenzidine	550	870	ug/kg	U	54439	1511	19900205	2	2.5	482592.983	1349412.702
3,3'-Dichlorobenzidine	550	850	ug/kg	U	54059	1510	19900204	2	2.5	482549.033	1349408.862
3,3'-Dichlorobenzidine	550	840	ug/kg	U	53782	1514	19900206	2	2.5	482570.174	1349504.922
3,3'-Dichlorobenzidine	550	830	ug/kg	U	53519	1513	19900206	2	2.5	482578.884	1349482.362
3,3'-Dichlorobenzidine	550	820	ug/kg	U	99239	FT-5	19930205	0	0.5	482512.613	1349428.222

0000035

8201

APPENDIX B
HISTORICAL DATA COLLECTED FROM THE FIRE TRAINING FACILITY

PARAMETER	FRL	RESULT	UNITS	QUALIFIER	SAMPLE ID	LOCATION	SAMPLE DATE	Top	Bottom	Northing 83	Easting 83
4-Methyl-2-pentanone	2500000	14	ug/kg	U	99240	FT-5	19930205	2.08	2.58	482512.613	1349428.222
4-Methyl-2-pentanone	2500000	13	ug/kg	U	51679	1512	19900206	2	2.5	482570.973	1349457.062
4-Methyl-2-pentanone	2500000	13	ug/kg	U	52259	1515	19900207	2	2.5	482561.514	1349480.272
4-Methyl-2-pentanone	2500000	12	ug/kg	U	51160	1508	19900204	2	2.5	482594.983	1349371.022
4-Methyl-2-pentanone	2500000	12	ug/kg	U	51161	1509	19900204	2	2.5	482549.062	1349371.622
4-Methyl-2-pentanone	2500000	12	ug/kg	U	54059	1510	19900204	2	2.5	482549.033	1349408.862
4-Methyl-2-pentanone	2500000	12	ug/kg	U	54439	1511	19900205	2	2.5	482592.983	1349412.702
4-Methyl-2-pentanone	2500000	12	ug/kg	U	53519	1513	19900206	2	2.5	482578.884	1349482.362
4-Methyl-2-pentanone	2500000	12	ug/kg	U	53782	1514	19900206	2	2.5	482570.174	1349504.922
4-Methyl-2-pentanone	2500000	12	ug/kg	U	99239	FT-5	19930205	0	0.5	482512.613	1349428.222
4-Nitroaniline	150000	9800	ug/kg	UJ	51161	1509	19900204	2	2.5	482549.062	1349371.622
4-Nitroaniline	150000	8500	ug/kg	UJ	51160	1508	19900204	2	2.5	482594.983	1349371.022
4-Nitroaniline	150000	6500	ug/kg	UJ	51679	1512	19900206	2	2.5	482570.973	1349457.062
4-Nitroaniline	150000	2300	ug/kg	U	99240	FT-5	19930205	2.08	2.58	482512.613	1349428.222
4-Nitroaniline	150000	2200	ug/kg	UJ	52259	1515	19900207	2	2.5	482561.514	1349480.272
4-Nitroaniline	150000	2100	ug/kg	UJ	54059	1510	19900204	2	2.5	482549.033	1349408.862
4-Nitroaniline	150000	2100	ug/kg	UJ	54439	1511	19900205	2	2.5	482592.983	1349412.702
4-Nitroaniline	150000	2000	ug/kg	U	99239	FT-5	19930205	0	0.5	482512.613	1349428.222
4-Nitroaniline	150000	2000	ug/kg	UJ	53519	1513	19900206	2	2.5	482578.884	1349482.362
4-Nitroaniline	150000	2000	ug/kg	UJ	53782	1514	19900206	2	2.5	482570.174	1349504.922
4-Nitroaniline	150000	53	ug/kg	NV	200105523	044703-014				482571	1349471
Acetone	43000000	30	ug/kg	U	53782	1514	19900206	2	2.5	482570.174	1349504.922
Acetone	43000000	17	ug/kg	U	53519	1513	19900206	2	2.5	482578.884	1349482.362
Acetone	43000000	16	ug/kg	U	54439	1511	19900205	2	2.5	482592.983	1349412.702
Acetone	43000000	14	ug/kg	U	99240	FT-5	19930205	2.08	2.58	482512.613	1349428.222
Acetone	43000000	13	ug/kg	NV	200105551	044703-017				482546	1349392
Acetone	43000000	13	ug/kg	U	51679	1512	19900206	2	2.5	482570.973	1349457.062
Acetone	43000000	13	ug/kg	U	52259	1515	19900207	2	2.5	482561.514	1349480.272
Acetone	43000000	12	ug/kg	U	51160	1508	19900204	2	2.5	482594.983	1349371.022
Acetone	43000000	12	ug/kg	U	51161	1509	19900204	2	2.5	482549.062	1349371.622
Acetone	43000000	12	ug/kg	U	54059	1510	19900204	2	2.5	482549.033	1349408.862
Acetone	43000000	12	ug/kg	U	99239	FT-5	19930205	0	0.5	482512.613	1349428.222
alpha-Chlordane	190	2200	ug/kg	U	51679	1512	19900206	2	2.5	482570.973	1349457.062
alpha-Chlordane	190	460	ug/kg	U	99240	FT-5	19930205	2.08	2.58	482512.613	1349428.222
alpha-Chlordane	190	400	ug/kg	U	99239	FT-5	19930205	0	0.5	482512.613	1349428.222
alpha-Chlordane	190	110	ug/kg	U	51160	1508	19900204	2	2.5	482594.983	1349371.022
alpha-Chlordane	190	110	ug/kg	U	54439	1511	19900205	2	2.5	482592.983	1349412.702
alpha-Chlordane	190	110	ug/kg	U	52259	1515	19900207	2	2.5	482561.514	1349480.272
alpha-Chlordane	190	100	ug/kg	U	54059	1510	19900204	2	2.5	482549.033	1349408.862
alpha-Chlordane	190	100	ug/kg	U	53519	1513	19900206	2	2.5	482578.884	1349482.362

000036

APPENDIX B
HISTORICAL DATA COLLECTED FROM THE FIRE TRAINING FACILITY

PARAMETER	FRL	RESULT	UNITS	QUALIFIER	SAMPLE ID	LOCATION	SAMPLE DATE	Top	Bottom	Northing 83	Easting 83
alpha-Chlordane	190	100	ug/kg	U	53782	1514	19900206	2	2.5	482570.174	1349504.922
alpha-Chlordane	190	98	ug/kg	U	51161	1509	19900204	2	2.5	482549.062	1349371.622
alpha-Chlordane	190	9	ug/kg	NV	200101385	RA28-SP-2				482571	1349386
alpha-Chlordane	190	5.2	ug/kg	NV	200101419	RA28-SP-3				482570	1349383
Antimony	96	7.3	mg/kg	UJ	51679	1512	19900206	2	2.5	482570.973	1349457.062
Antimony	96	7.2	mg/kg	UJ	53519	1513	19900206	2	2.5	482578.884	1349482.362
Antimony	96	6.6	mg/kg	UJ	54059	1510	19900204	2	2.5	482549.033	1349408.862
Antimony	96	6.5	mg/kg	UJ	51161	1509	19900204	2	2.5	482549.062	1349371.622
Antimony	96	6.3	mg/kg	UJ	53782	1514	19900206	2	2.5	482570.174	1349504.922
Antimony	96	6.3	mg/kg	UJ	52259	1515	19900207	2	2.5	482561.514	1349480.272
Antimony	96	5.7	mg/kg	UJ	51160	1508	19900204	2	2.5	482594.983	1349371.022
Antimony	96	5.3	mg/kg	UJ	54439	1511	19900205	2	2.5	482592.983	1349412.702
Antimony	96	0.7	mg/kg	NV	200101469	RA28-SP-8				482532	1349428
Antimony	96	0.58	mg/kg	NV	200101380	RA28-SP-2				482571	1349386
Aroclor-1254	130	4300	ug/kg	U	51679	1512	19900206	2	2.5	482570.973	1349457.062
Aroclor-1254	130	930	ug/kg	U	99240	FT-5	19930205	2.08	2.58	482512.613	1349428.222
Aroclor-1254	130	790	ug/kg	U	99239	FT-5	19930205	0	0.5	482512.613	1349428.222
Aroclor-1254	130	220	ug/kg	U	52259	1515	19900207	2	2.5	482561.514	1349480.272
Aroclor-1254	130	210	ug/kg	U	51160	1508	19900204	2	2.5	482594.983	1349371.022
Aroclor-1254	130	210	ug/kg	U	54059	1510	19900204	2	2.5	482549.033	1349408.862
Aroclor-1254	130	210	ug/kg	U	54439	1511	19900205	2	2.5	482592.983	1349412.702
Aroclor-1254	130	200	ug/kg	U	51161	1509	19900204	2	2.5	482549.062	1349371.622
Aroclor-1254	130	200	ug/kg	U	53519	1513	19900206	2	2.5	482578.884	1349482.362
Aroclor-1254	130	200	ug/kg	U	53782	1514	19900206	2	2.5	482570.174	1349504.922
Aroclor-1254	130	180	ug/kg	NV	200105570	044703-018				482546	1349422
Aroclor-1254	130	140	ug/kg	NV	200101452	RA28-SP-6				482563	1349398
Aroclor-1254	130	120	ug/kg	NV	200101385	RA28-SP-2				482571	1349386
Aroclor-1260	130	6800	ug/kg	NV	200105486	044703-011				482571	1349444
Aroclor-1260	130	4600	ug/kg	NV	200115267	RA28-LINE-5				482572	1349463
Aroclor-1260	130	3900	ug/kg	NV	200115265	RA28-LINE-4				482571	1349469
Aroclor-1260	130	3800	ug/kg	NV	200105474	044703-011				482571	1349444
Aroclor-1260	130	3500	ug/kg	NV	200106178	044703-051				482567	1349477
Aroclor-1260	130	3500	ug/kg	NV	200106178D	044703-051				482567	1349477
Aroclor-1260	130	2700	ug/kg	J	51679	1512	19900206	2	2.5	482570.973	1349457.062
Aroclor-1260	130	2000	ug/kg	NV	200115263	RA28-LINE-3				482572	1349477
Aroclor-1260	130	1900	ug/kg	NV	200101441	RA28-SP-5				482562	1349381
Aroclor-1260	130	1700	ug/kg	-	99240	FT-5	19930205	2.08	2.58	482512.613	1349428.222
Aroclor-1260	130	1700	ug/kg	NV	200105666	044703-025				482597	1349363
Aroclor-1260	130	1300	ug/kg	-	99239	FT-5	19930205	0	0.5	482512.613	1349428.222
Aroclor-1260	130	1100	ug/kg	NV	200105522	044703-014				482571	1349471

000037

3201

APPENDIX B
HISTORICAL DATA COLLECTED FROM THE FIRE TRAINING FACILITY

PARAMETER	FRL	RESULT	UNITS	QUALIFIER	SAMPLE ID	LOCATION	SAMPLE DATE	Top	Bottom	Northing 83	Easting 83
Aroclor-1260	130	1000	ug/kg	NV	200115259	RA28-LINE-2				482570	1349486
Aroclor-1260	130	810	ug/kg	NV	200105510	044703-013				482571	1349484
Aroclor-1260	130	800	ug/kg	NV	200105462	044703-048				482572	1349445
Aroclor-1260	130	740	ug/kg	NV	200115261	RA28-LINE-2				482570	1349486
Aroclor-1260	130	630	ug/kg	NV	200106166	044703-050				482574	1349477
Aroclor-1260	130	610	ug/kg	NV	200101474	RA28-SP-8				482532	1349428
Aroclor-1260	130	560	ug/kg	NV	200105678	044703-026				482597	1349392
Aroclor-1260	130	340	ug/kg	NV	200101419	RA28-SP-3				482570	1349383
Aroclor-1260	130	260	ug/kg	NV	200105534	044703-015				482572	1349462
Aroclor-1260	130	260	ug/kg	NV	200115257	RA28-LINE-1				482570	1349491
Aroclor-1260	130	240	ug/kg	-	51160	1508	19900204	2	2.5	482594.983	1349371.022
Aroclor-1260	130	220	ug/kg	NV	200105498	044703-012				482571	1349492
Aroclor-1260	130	220	ug/kg	NV	200105582	044703-019				482546	1349453
Aroclor-1260	130	220	ug/kg	NV	200105583	044703-019				482546	1349453
Aroclor-1260	130	220	ug/kg	U	52259	1515	19900207	2	2.5	482561.514	1349480.272
Aroclor-1260	130	220	ug/kg	U	54059	1510	19900204	2	2.5	482549.033	1349408.862
Aroclor-1260	130	210	ug/kg	U	54439	1511	19900205	2	2.5	482592.983	1349412.702
Aroclor-1260	130	210	ug/kg	U	51161	1509	19900204	2	2.5	482549.062	1349371.622
Aroclor-1260	130	200	ug/kg	U	53519	1513	19900206	2	2.5	482578.884	1349482.362
Aroclor-1260	130	200	ug/kg	U	53782	1514	19900206	2	2.5	482570.174	1349504.922
Aroclor-1260	130	140	ug/kg	NV	200106142	044703-049				482567	1349490
Aroclor-1260	130	140	ug/kg	NV	200101373	RA28-SP-1				482579	1349402
Aroclor-1260	130	130	ug/kg	NV	200105594	044703-020				482545	1349489
Aroclor-1260	130	99	ug/kg	NV	200105690	044703-027				482594	1349424
Aroclor-1260	130	74	ug/kg	NV	200105642	044703-024				482570	1349438
Arsenic	12	13.3	mg/kg	NV	200101469	RA28-SP-8				482532	1349428
Arsenic	12	12.5	mg/kg	NV	200101380	RA28-SP-2				482571	1349386
Arsenic	12	11.3	mg/kg	NV	200101369	RA28-SP-1				482579	1349402
Arsenic	12	10.5	mg/kg	NV	200105516	044703-014				482571	1349471
Arsenic	12	10	mg/kg	-	53782	1514	19900206	2	2.5	482570.174	1349504.922
Arsenic	12	8.7	mg/kg	-	54059	1510	19900204	2	2.5	482549.033	1349408.862
Arsenic	12	8.6	mg/kg	NV	200105480	044703-011				482571	1349444
Arsenic	12	8.3	mg/kg	NV	200101436	RA28-SP-5				482562	1349381
Arsenic	12	8	mg/kg	NV	200105468	044703-011				482571	1349444
Arsenic	12	7.7	mg/kg	NV	200105600	044703-021				482565	1349362
Arsenic	12	7.6	mg/kg	-	54439	1511	19900205	2	2.5	482592.983	1349412.702
Arsenic	12	7.5	mg/kg	NV	200105732	044703-031				482544	1349413
Arsenic	12	7.3	mg/kg	NV	200105504	044703-013				482571	1349484
Arsenic	12	7.1	mg/kg	J	53519	1513	19900206	2	2.5	482578.884	1349482.362
Arsenic	12	7	mg/kg	NV	200105528	044703-015				482572	1349462

000038

APPENDIX B
HISTORICAL DATA COLLECTED FROM THE FIRE TRAINING FACILITY

PARAMETER	FRL	RESULT	UNITS	QUALIFIER	SAMPLE ID	LOCATION	SAMPLE DATE	Top	Bottom	Northing 83	Easting 83
Arsenic	12	6.8	mg/kg	NV	200101447	RA28-SP-6				482563	1349398
Arsenic	12	6.6	mg/kg	NV	200105456	044703-048				482572	1349445
Arsenic	12	6.5	mg/kg	-	99240	FT-5	19930205	2.08	2.58	482512.613	1349428.222
Arsenic	12	6.4	mg/kg	NV	200101425	RA28-SP-4				482563	1349394
Arsenic	12	5.9	mg/kg	NV	200106160	044703-050				482574	1349477
Arsenic	12	5.7	mg/kg	-	52259	1515	19900207	2	2.5	482561.514	1349480.272
Arsenic	12	5.7	mg/kg	NV	200106172	044703-051				482567	1349477
Arsenic	12	5.6	mg/kg	NV	200105492	044703-012				482571	1349492
Arsenic	12	5.6	mg/kg	NV	200106136	044703-049				482567	1349490
Arsenic	12	5.3	mg/kg	NV	200101414	RA28-SP-3				482570	1349383
Arsenic	12	5.2	mg/kg	J	99239	FT-5	19930205	0	0.5	482512.613	1349428.222
Arsenic	12	5.2	mg/kg	NV	200105612	044703-022				482563	1349490
Arsenic	12	5.1	mg/kg	-	51161	1509	19900204	2	2.5	482549.062	1349371.622
Arsenic	12	5.1	mg/kg	-	51679	1512	19900206	2	2.5	482570.973	1349457.062
Arsenic	12	4.9	mg/kg	NV	200105576	044703-019				482546	1349453
Arsenic	12	4.8	mg/kg	-	51160	1508	19900204	2	2.5	482594.983	1349371.022
Arsenic	12	4.6	mg/kg	NV	200105588	044703-020				482545	1349489
Arsenic	12	4.4	mg/kg	NV	200105564	044703-018				482546	1349422
Arsenic	12	3.2	mg/kg	NV	200105624	044703-023				482572	1349423
Arsenic	12	2.9	mg/kg	NV	200105552	044703-017				482546	1349392
Barium	68000	156	mg/kg	-	53782	1514	19900206	2	2.5	482570.174	1349504.922
Barium	68000	139	mg/kg	NV	200105528	044703-015				482572	1349462
Barium	68000	135	mg/kg	-	51679	1512	19900206	2	2.5	482570.973	1349457.062
Barium	68000	135	mg/kg	NV	200101447	RA28-SP-6				482563	1349398
Barium	68000	134	mg/kg	-	52259	1515	19900207	2	2.5	482561.514	1349480.272
Barium	68000	128	mg/kg	-	53519	1513	19900206	2	2.5	482578.884	1349482.362
Barium	68000	128	mg/kg	NV	200105504	044703-013				482571	1349484
Barium	68000	123	mg/kg	NV	200101469	RA28-SP-8				482532	1349428
Barium	68000	122	mg/kg	NV	200105480	044703-011				482571	1349444
Barium	68000	121	mg/kg	NV	200105468	044703-011				482571	1349444
Barium	68000	119	mg/kg	-	54439	1511	19900205	2	2.5	482592.983	1349412.702
Barium	68000	118	mg/kg	NV	200105516	044703-014				482571	1349471
Barium	68000	116	mg/kg	-	54059	1510	19900204	2	2.5	482549.033	1349408.862
Barium	68000	112	mg/kg	NV	200101369	RA28-SP-1				482579	1349402
Barium	68000	102	mg/kg	NV	200105732	044703-031				482544	1349413
Barium	68000	100	mg/kg	NV	200105456	044703-048				482572	1349445
Barium	68000	98.8	mg/kg	NV	200101380	RA28-SP-2				482571	1349386
Barium	68000	95	mg/kg	-	51160	1508	19900204	2	2.5	482594.983	1349371.022
Barium	68000	90.1	mg/kg	NV	200106172	044703-051				482567	1349477
Barium	68000	89.8	mg/kg	NV	200101436	RA28-SP-5				482562	1349381

000039

3201

APPENDIX B
HISTORICAL DATA COLLECTED FROM THE FIRE TRAINING FACILITY

PARAMETER	FRL	RESULT	UNITS	QUALIFIER	SAMPLE ID	LOCATION	SAMPLE DATE	Top	Bottom	Northing 83	Easting 83
Barium	68000	88.7	mg/kg	NV	200105576	044703-019				482546	1349453
Barium	68000	84	mg/kg	NV	200106160	044703-050				482574	1349477
Barium	68000	83.3	mg/kg	NV	200106136	044703-049				482567	1349490
Barium	68000	79.6	mg/kg	-	99240	FT-5	19930205	2.08	2.58	482512.613	1349428.222
Barium	68000	77.3	mg/kg	-	99239	FT-5	19930205	0	0.5	482512.613	1349428.222
Barium	68000	72	mg/kg	NV	200105600	044703-021				482565	1349362
Barium	68000	69.2	mg/kg	-	51161	1509	19900204	2	2.5	482549.062	1349371.622
Barium	68000	69.1	mg/kg	NV	200105552	044703-017				482546	1349392
Barium	68000	62	mg/kg	NV	200101414	RA28-SP-3				482570	1349383
Barium	68000	59.4	mg/kg	NV	200101425	RA28-SP-4				482563	1349394
Barium	68000	51.4	mg/kg	NV	200105540	044703-016				482546	1349362
Barium	68000	50.4	mg/kg	NV	200105612	044703-022				482563	1349490
Barium	68000	47.1	mg/kg	NV	200105564	044703-018				482546	1349422
Barium	68000	33.8	mg/kg	NV	200105624	044703-023				482572	1349423
Barium	68000	25.2	mg/kg	NV	200105492	044703-012				482571	1349492
Barium	68000	20.9	mg/kg	NV	200105588	044703-020				482545	1349489
Benzene	850000	14	ug/kg	U	99240	FT-5	19930205	2.08	2.58	482512.613	1349428.222
Benzene	850000	12	ug/kg	U	99239	FT-5	19930205	0	0.5	482512.613	1349428.222
Benzene	850000	6	ug/kg	U	51160	1508	19900204	2	2.5	482594.983	1349371.022
Benzene	850000	6	ug/kg	U	51161	1509	19900204	2	2.5	482549.062	1349371.622
Benzene	850000	6	ug/kg	U	54059	1510	19900204	2	2.5	482549.033	1349408.862
Benzene	850000	6	ug/kg	U	54439	1511	19900205	2	2.5	482592.983	1349412.702
Benzene	850000	6	ug/kg	U	51679	1512	19900206	2	2.5	482570.973	1349457.062
Benzene	850000	6	ug/kg	U	53519	1513	19900206	2	2.5	482578.884	1349482.362
Benzene	850000	6	ug/kg	U	53782	1514	19900206	2	2.5	482570.174	1349504.922
Benzene	850000	6	ug/kg	U	52259	1515	19900207	2	2.5	482561.514	1349480.272
Benzo(a)anthracene	20000	2000	ug/kg	U	51161	1509	19900204	2	2.5	482549.062	1349371.622
Benzo(a)anthracene	20000	1700	ug/kg	U	51160	1508	19900204	2	2.5	482594.983	1349371.022
Benzo(a)anthracene	20000	1300	ug/kg	NV	200105595	044703-020				482545	1349489
Benzo(a)anthracene	20000	1300	ug/kg	U	51679	1512	19900206	2	2.5	482570.973	1349457.062
Benzo(a)anthracene	20000	550	ug/kg	NV	200105607	044703-021				482565	1349362
Benzo(a)anthracene	20000	480	ug/kg	U	99240	FT-5	19930205	2.08	2.58	482512.613	1349428.222
Benzo(a)anthracene	20000	440	ug/kg	U	52259	1515	19900207	2	2.5	482561.514	1349480.272
Benzo(a)anthracene	20000	430	ug/kg	U	54059	1510	19900204	2	2.5	482549.033	1349408.862
Benzo(a)anthracene	20000	430	ug/kg	U	54439	1511	19900205	2	2.5	482592.983	1349412.702
Benzo(a)anthracene	20000	420	ug/kg	U	53519	1513	19900206	2	2.5	482578.884	1349482.362
Benzo(a)anthracene	20000	420	ug/kg	U	53782	1514	19900206	2	2.5	482570.174	1349504.922
Benzo(a)anthracene	20000	410	ug/kg	U	99239	FT-5	19930205	0	0.5	482512.613	1349428.222
Benzo(a)anthracene	20000	180	ug/kg	NV	200106143	044703-049				482567	1349490
Benzo(a)anthracene	20000	170	ug/kg	NV	200105511	044703-013				482571	1349484

000040

APPENDIX B
HISTORICAL DATA COLLECTED FROM THE FIRE TRAINING FACILITY

PARAMETER	FRL	RESULT	UNITS	QUALIFIER	SAMPLE ID	LOCATION	SAMPLE DATE	Top	Bottom	Northing 83	Easting 83
Benzo(a)anthracene	20000	150	ug/kg	NV	200105667	044703-025				482597	1349363
Benzo(a)anthracene	20000	90	ug/kg	NV	200105703	044703-028				482634	1349363
Benzo(a)anthracene	20000	86	ug/kg	NV	200105739	044703-031				482544	1349413
Benzo(a)anthracene	20000	75	ug/kg	NV	200105715	044703-029				482632	1349392
Benzo(a)anthracene	20000	68	ug/kg	NV	200101386	RA28-SP-2				482571	1349386
Benzo(a)anthracene	20000	40	ug/kg	NV	200105571	044703-018				482546	1349422
Benzo(a)anthracene	20000	39	ug/kg	NV	200105727	044703-030				482629	1349425
Benzo(a)pyrene	2000	2000	ug/kg	U	51161	1509	19900204	2	2.5	482549.062	1349371.622
Benzo(a)pyrene	2000	1900	ug/kg	NV	200105547	044703-016				482546	1349362
Benzo(a)pyrene	2000	1800	ug/kg	NV	200105607	044703-021				482565	1349362
Benzo(a)pyrene	2000	1700	ug/kg	U	51160	1508	19900204	2	2.5	482594.983	1349371.022
Benzo(a)pyrene	2000	1300	ug/kg	U	51679	1512	19900206	2	2.5	482570.973	1349457.062
Benzo(a)pyrene	2000	920	ug/kg	NV	200105595	044703-020				482545	1349489
Benzo(a)pyrene	2000	440	ug/kg	U	52259	1515	19900207	2	2.5	482561.514	1349480.272
Benzo(a)pyrene	2000	430	ug/kg	U	54059	1510	19900204	2	2.5	482549.033	1349408.862
Benzo(a)pyrene	2000	430	ug/kg	U	54439	1511	19900205	2	2.5	482592.983	1349412.702
Benzo(a)pyrene	2000	420	ug/kg	U	53519	1513	19900206	2	2.5	482578.884	1349482.362
Benzo(a)pyrene	2000	420	ug/kg	U	53782	1514	19900206	2	2.5	482570.174	1349504.922
Benzo(a)pyrene	2000	320	ug/kg	NV	200106143	044703-049				482567	1349490
Benzo(a)pyrene	2000	240	ug/kg	J	99239	FT-5	19930205	0	0.5	482512.613	1349428.222
Benzo(a)pyrene	2000	230	ug/kg	NV	200105511	044703-013				482571	1349484
Benzo(a)pyrene	2000	220	ug/kg	NV	200105667	044703-025				482597	1349363
Benzo(a)pyrene	2000	150	ug/kg	NV	200105703	044703-028				482634	1349363
Benzo(a)pyrene	2000	120	ug/kg	J	99240	FT-5	19930205	2.08	2.58	482512.613	1349428.222
Benzo(a)pyrene	2000	110	ug/kg	NV	200105739	044703-031				482544	1349413
Benzo(a)pyrene	2000	95	ug/kg	NV	200105715	044703-029				482632	1349392
Benzo(a)pyrene	2000	56	ug/kg	NV	200105571	044703-018				482546	1349422
Benzo(a)pyrene	2000	44	ug/kg	NV	200105727	044703-030				482629	1349425
Benzo(b)fluoranthene	20000	2000	ug/kg	NV	200105547	044703-016				482546	1349362
Benzo(b)fluoranthene	20000	2000	ug/kg	U	51161	1509	19900204	2	2.5	482549.062	1349371.622
Benzo(b)fluoranthene	20000	1800	ug/kg	NV	200105607	044703-021				482565	1349362
Benzo(b)fluoranthene	20000	1700	ug/kg	U	51160	1508	19900204	2	2.5	482594.983	1349371.022
Benzo(b)fluoranthene	20000	1300	ug/kg	U	51679	1512	19900206	2	2.5	482570.973	1349457.062
Benzo(b)fluoranthene	20000	1200	ug/kg	NV	200105595	044703-020				482545	1349489
Benzo(b)fluoranthene	20000	480	ug/kg	U	99240	FT-5	19930205	2.08	2.58	482512.613	1349428.222
Benzo(b)fluoranthene	20000	440	ug/kg	U	52259	1515	19900207	2	2.5	482561.514	1349480.272
Benzo(b)fluoranthene	20000	430	ug/kg	U	54059	1510	19900204	2	2.5	482549.033	1349408.862
Benzo(b)fluoranthene	20000	430	ug/kg	U	54439	1511	19900205	2	2.5	482592.983	1349412.702
Benzo(b)fluoranthene	20000	420	ug/kg	U	53519	1513	19900206	2	2.5	482578.884	1349482.362
Benzo(b)fluoranthene	20000	420	ug/kg	U	53782	1514	19900206	2	2.5	482570.174	1349504.922

000041

APPENDIX B
HISTORICAL DATA COLLECTED FROM THE FIRE TRAINING FACILITY

PARAMETER	FRL	RESULT	UNITS	QUALIFIER	SAMPLE ID	LOCATION	SAMPLE DATE	Top	Bottom	Northing 83	Easting 83
Benzo(b)fluoranthene	20000	410	ug/kg	NV	200106143	044703-049				482567	1349490
Benzo(b)fluoranthene	20000	410	ug/kg	U	99239	FT-5	19930205	0	0.5	482512.613	1349428.222
Benzo(b)fluoranthene	20000	330	ug/kg	NV	200105511	044703-013				482571	1349484
Benzo(b)fluoranthene	20000	270	ug/kg	NV	200105667	044703-025				482597	1349363
Benzo(b)fluoranthene	20000	190	ug/kg	NV	200105703	044703-028				482634	1349363
Benzo(b)fluoranthene	20000	170	ug/kg	NV	200105739	044703-031				482544	1349413
Benzo(b)fluoranthene	20000	130	ug/kg	NV	200105715	044703-029				482632	1349392
Benzo(b)fluoranthene	20000	86	ug/kg	NV	200105571	044703-018				482546	1349422
Benzo(b)fluoranthene	20000	66	ug/kg	NV	200105727	044703-030				482629	1349425
Benzo(b)fluoranthene	20000	58	ug/kg	NV	200105583	044703-019				482546	1349453
Benzo(b)fluoranthene	20000	47	ug/kg	NV	200105679	044703-026				482597	1349392
Benzo(g,h,i)perylene	NA	2000	ug/kg	NV	200105547	044703-016				482546	1349362
Benzo(g,h,i)perylene	NA	2000	ug/kg	NV	200105607	044703-021				482565	1349362
Benzo(g,h,i)perylene	NA	2000	ug/kg	U	51161	1509	19900204	2	2.5	482549.062	1349371.622
Benzo(g,h,i)perylene	NA	1700	ug/kg	U	51160	1508	19900204	2	2.5	482594.983	1349371.022
Benzo(g,h,i)perylene	NA	1300	ug/kg	U	51679	1512	19900206	2	2.5	482570.973	1349457.062
Benzo(g,h,i)perylene	NA	440	ug/kg	U	52259	1515	19900207	2	2.5	482561.514	1349480.272
Benzo(g,h,i)perylene	NA	430	ug/kg	U	54059	1510	19900204	2	2.5	482549.033	1349408.862
Benzo(g,h,i)perylene	NA	430	ug/kg	U	54439	1511	19900205	2	2.5	482592.983	1349412.702
Benzo(g,h,i)perylene	NA	420	ug/kg	U	53519	1513	19900206	2	2.5	482578.884	1349482.362
Benzo(g,h,i)perylene	NA	420	ug/kg	U	53782	1514	19900206	2	2.5	482570.174	1349504.922
Benzo(g,h,i)perylene	NA	320	ug/kg	NV	200105595	044703-020				482545	1349489
Benzo(g,h,i)perylene	NA	220	ug/kg	NV	200105667	044703-025				482597	1349363
Benzo(g,h,i)perylene	NA	210	ug/kg	NV	200106143	044703-049				482567	1349490
Benzo(g,h,i)perylene	NA	200	ug/kg	J	99239	FT-5	19930205	0	0.5	482512.613	1349428.222
Benzo(g,h,i)perylene	NA	200	ug/kg	NV	200105487	044703-011				482571	1349444
Benzo(g,h,i)perylene	NA	170	ug/kg	NV	200105499	044703-012				482571	1349492
Benzo(g,h,i)perylene	NA	170	ug/kg	NV	200105511	044703-013				482571	1349484
Benzo(g,h,i)perylene	NA	150	ug/kg	NV	200105655	044703-024				482570	1349438
Benzo(g,h,i)perylene	NA	140	ug/kg	J	99240	FT-5	19930205	2.08	2.58	482512.613	1349428.222
Benzo(g,h,i)perylene	NA	100	ug/kg	NV	200105703	044703-028				482634	1349363
Benzo(g,h,i)perylene	NA	50	ug/kg	NV	200101442	RA28-SP-5				482562	1349381
Benzo(k)fluoranthene	200000	2000	ug/kg	U	51161	1509	19900204	2	2.5	482549.062	1349371.622
Benzo(k)fluoranthene	200000	1700	ug/kg	U	51160	1508	19900204	2	2.5	482594.983	1349371.022
Benzo(k)fluoranthene	200000	1300	ug/kg	U	51679	1512	19900206	2	2.5	482570.973	1349457.062
Benzo(k)fluoranthene	200000	950	ug/kg	NV	200105547	044703-016				482546	1349362
Benzo(k)fluoranthene	200000	610	ug/kg	NV	200105607	044703-021				482565	1349362
Benzo(k)fluoranthene	200000	480	ug/kg	U	99240	FT-5	19930205	2.08	2.58	482512.613	1349428.222
Benzo(k)fluoranthene	200000	440	ug/kg	NV	200105595	044703-020				482545	1349489
Benzo(k)fluoranthene	200000	440	ug/kg	U	52259	1515	19900207	2	2.5	482561.514	1349480.272

000042

APPENDIX B
HISTORICAL DATA COLLECTED FROM THE FIRE TRAINING FACILITY

PARAMETER	FRL	RESULT	UNITS	QUALIFIER	SAMPLE ID	LOCATION	SAMPLE DATE	Top	Bottom	Northing 83	Easting 83
Benzo(k)fluoranthene	200000	430	ug/kg	U	54059	1510	19900204	2	2.5	482549.033	1349408.862
Benzo(k)fluoranthene	200000	430	ug/kg	U	54439	1511	19900205	2	2.5	482592.983	1349412.702
Benzo(k)fluoranthene	200000	420	ug/kg	U	53519	1513	19900206	2	2.5	482578.884	1349482.362
Benzo(k)fluoranthene	200000	420	ug/kg	U	53782	1514	19900206	2	2.5	482570.174	1349504.922
Benzo(k)fluoranthene	200000	210	ug/kg	J	99239	FT-5	19930205	0	0.5	482512.613	1349428.222
Benzo(k)fluoranthene	200000	120	ug/kg	NV	200105511	044703-013				482571	1349484
Benzo(k)fluoranthene	200000	120	ug/kg	NV	200105667	044703-025				482597	1349363
Benzo(k)fluoranthene	200000	110	ug/kg	NV	200106143	044703-049				482567	1349490
Benzo(k)fluoranthene	200000	76	ug/kg	NV	200105703	044703-028				482634	1349363
Benzo(k)fluoranthene	200000	54	ug/kg	NV	200105715	044703-029				482632	1349392
Benzo(k)fluoranthene	200000	37	ug/kg	NV	200105631	044703-023				482572	1349423
Beryllium	1.5	1.9	mg/kg	NV	200105564	044703-018				482546	1349422
Beryllium	1.5	1.9	mg/kg	U	53782	1514	19900206	2	2.5	482570.174	1349504.922
Beryllium	1.5	1.8	mg/kg	U	51679	1512	19900206	2	2.5	482570.973	1349457.062
Beryllium	1.5	1.8	mg/kg	U	53519	1513	19900206	2	2.5	482578.884	1349482.362
Beryllium	1.5	1.7	mg/kg	U	52259	1515	19900207	2	2.5	482561.514	1349480.272
Beryllium	1.5	1.6	mg/kg	NV	200105504	044703-013				482571	1349484
Beryllium	1.5	1.6	mg/kg	NV	200105588	044703-020				482545	1349489
Beryllium	1.5	1.6	mg/kg	U	51161	1509	19900204	2	2.5	482549.062	1349371.622
Beryllium	1.5	1.5	mg/kg	NV	200105552	044703-017				482546	1349392
Beryllium	1.5	1.5	mg/kg	NV	200106136	044703-049				482567	1349490
Beryllium	1.5	1.5	mg/kg	U	54059	1510	19900204	2	2.5	482549.033	1349408.862
Beryllium	1.5	1.5	mg/kg	U	54439	1511	19900205	2	2.5	482592.983	1349412.702
Beryllium	1.5	1.4	mg/kg	NV	200105540	044703-016				482546	1349362
Beryllium	1.5	1.4	mg/kg	U	51160	1508	19900204	2	2.5	482594.983	1349371.022
Beryllium	1.5	1.3	mg/kg	NV	200105492	044703-012				482571	1349492
Beryllium	1.5	1.2	mg/kg	NV	200105528	044703-015				482572	1349462
Beryllium	1.5	1.2	mg/kg	NV	200106172	044703-051				482567	1349477
Beryllium	1.5	1.1	mg/kg	NV	200105624	044703-023				482572	1349423
Beryllium	1.5	1.1	mg/kg	NV	200106160	044703-050				482574	1349477
Beryllium	1.5	0.59	mg/kg	-	99239	FT-5	19930205	0	0.5	482512.613	1349428.222
Beryllium	1.5	0.53	mg/kg	-	99240	FT-5	19930205	2.08	2.58	482512.613	1349428.222
bis(2-Chloroisopropyl) ether	420000	2000	ug/kg	U	51161	1509	19900204	2	2.5	482549.062	1349371.622
bis(2-Chloroisopropyl) ether	420000	1700	ug/kg	U	51160	1508	19900204	2	2.5	482594.983	1349371.022
bis(2-Chloroisopropyl) ether	420000	1300	ug/kg	U	51679	1512	19900206	2	2.5	482570.973	1349457.062
bis(2-Chloroisopropyl) ether	420000	480	ug/kg	U	99240	FT-5	19930205	2.08	2.58	482512.613	1349428.222
bis(2-Chloroisopropyl) ether	420000	440	ug/kg	U	52259	1515	19900207	2	2.5	482561.514	1349480.272
bis(2-Chloroisopropyl) ether	420000	430	ug/kg	U	54059	1510	19900204	2	2.5	482549.033	1349408.862
bis(2-Chloroisopropyl) ether	420000	430	ug/kg	U	54439	1511	19900205	2	2.5	482592.983	1349412.702
bis(2-Chloroisopropyl) ether	420000	420	ug/kg	U	53519	1513	19900206	2	2.5	482578.884	1349482.362

000043

F 8201

APPENDIX B
HISTORICAL DATA COLLECTED FROM THE FIRE TRAINING FACILITY

PARAMETER	FRL	RESULT	UNITS	QUALIFIER	SAMPLE ID	LOCATION	SAMPLE DATE	Top	Bottom	Northing 83	Easting 83
bis(2-Chloroisopropyl) ether	420000	420	ug/kg	U	53782	1514	19900206	2	2.5	482570.174	1349504.922
bis(2-Chloroisopropyl) ether	420000	410	ug/kg	U	99239	FT-5	19930205	0	0.5	482512.613	1349428.222
bis(2-Ethylhexyl)phthalate	820000	2000	ug/kg	U	51161	1509	19900204	2	2.5	482549.062	1349371.622
bis(2-Ethylhexyl)phthalate	820000	1300	ug/kg	U	51679	1512	19900206	2	2.5	482570.973	1349457.062
bis(2-Ethylhexyl)phthalate	820000	480	ug/kg	U	99240	FT-5	19930205	2.08	2.58	482512.613	1349428.222
bis(2-Ethylhexyl)phthalate	820000	440	ug/kg	U	52259	1515	19900207	2	2.5	482561.514	1349480.272
bis(2-Ethylhexyl)phthalate	820000	430	ug/kg	U	54059	1510	19900204	2	2.5	482549.033	1349408.862
bis(2-Ethylhexyl)phthalate	820000	430	ug/kg	U	54439	1511	19900205	2	2.5	482592.983	1349412.702
bis(2-Ethylhexyl)phthalate	820000	420	ug/kg	U	53519	1513	19900206	2	2.5	482578.884	1349482.362
bis(2-Ethylhexyl)phthalate	820000	180	ug/kg	J	51160	1508	19900204	2	2.5	482594.983	1349371.022
bis(2-Ethylhexyl)phthalate	820000	130	ug/kg	NV	200105547	044703-016				482546	1349362
bis(2-Ethylhexyl)phthalate	820000	96	ug/kg	J	53782	1514	19900206	2	2.5	482570.174	1349504.922
bis(2-Ethylhexyl)phthalate	820000	47	ug/kg	NV	200105727	044703-030				482629	1349425
bis(2-Ethylhexyl)phthalate	820000	43	ug/kg	J	99239	FT-5	19930205	0	0.5	482512.613	1349428.222
bis(2-Ethylhexyl)phthalate	820000	43	ug/kg	NV	200105607	044703-021				482565	1349362
Bromodichloromethane	4000	14	ug/kg	U	99240	FT-5	19930205	2.08	2.58	482512.613	1349428.222
Bromodichloromethane	4000	12	ug/kg	U	99239	FT-5	19930205	0	0.5	482512.613	1349428.222
Bromodichloromethane	4000	6	ug/kg	U	51160	1508	19900204	2	2.5	482594.983	1349371.022
Bromodichloromethane	4000	6	ug/kg	U	51161	1509	19900204	2	2.5	482549.062	1349371.622
Bromodichloromethane	4000	6	ug/kg	U	54059	1510	19900204	2	2.5	482549.033	1349408.862
Bromodichloromethane	4000	6	ug/kg	U	54439	1511	19900205	2	2.5	482592.983	1349412.702
Bromodichloromethane	4000	6	ug/kg	U	51679	1512	19900206	2	2.5	482570.973	1349457.062
Bromodichloromethane	4000	6	ug/kg	U	53519	1513	19900206	2	2.5	482578.884	1349482.362
Bromodichloromethane	4000	6	ug/kg	U	53782	1514	19900206	2	2.5	482570.174	1349504.922
Bromodichloromethane	4000	6	ug/kg	U	52259	1515	19900207	2	2.5	482561.514	1349480.272
Bromoform	31000	14	ug/kg	U	99240	FT-5	19930205	2.08	2.58	482512.613	1349428.222
Bromoform	31000	12	ug/kg	U	99239	FT-5	19930205	0	0.5	482512.613	1349428.222
Bromoform	31000	6	ug/kg	U	51160	1508	19900204	2	2.5	482594.983	1349371.022
Bromoform	31000	6	ug/kg	U	51161	1509	19900204	2	2.5	482549.062	1349371.622
Bromoform	31000	6	ug/kg	U	54059	1510	19900204	2	2.5	482549.033	1349408.862
Bromoform	31000	6	ug/kg	U	54439	1511	19900205	2	2.5	482592.983	1349412.702
Bromoform	31000	6	ug/kg	U	51679	1512	19900206	2	2.5	482570.973	1349457.062
Bromoform	31000	6	ug/kg	U	53519	1513	19900206	2	2.5	482578.884	1349482.362
Bromoform	31000	6	ug/kg	U	53782	1514	19900206	2	2.5	482570.174	1349504.922
Bromoform	31000	6	ug/kg	U	52259	1515	19900207	2	2.5	482561.514	1349480.272
Bromomethane	8200000	14	ug/kg	U	99240	FT-5	19930205	2.08	2.58	482512.613	1349428.222
Bromomethane	8200000	13	ug/kg	UJ	51679	1512	19900206	2	2.5	482570.973	1349457.062
Bromomethane	8200000	13	ug/kg	UJ	52259	1515	19900207	2	2.5	482561.514	1349480.272
Bromomethane	8200000	12	ug/kg	U	99239	FT-5	19930205	0	0.5	482512.613	1349428.222
Bromomethane	8200000	12	ug/kg	UJ	51160	1508	19900204	2	2.5	482594.983	1349371.022

000044

APPENDIX B
HISTORICAL DATA COLLECTED FROM THE FIRE TRAINING FACILITY

PARAMETER	FRL	RESULT	UNITS	QUALIFIER	SAMPLE ID	LOCATION	SAMPLE DATE	Top	Bottom	Northing 83	Easting 83
Bromomethane	8200000	12	ug/kg	UJ	51161	1509	19900204	2	2.5	482549.062	1349371.622
Bromomethane	8200000	12	ug/kg	UJ	54059	1510	19900204	2	2.5	482549.033	1349408.862
Bromomethane	8200000	12	ug/kg	UJ	54439	1511	19900205	2	2.5	482592.983	1349412.702
Bromomethane	8200000	12	ug/kg	UJ	53519	1513	19900206	2	2.5	482578.884	1349482.362
Bromomethane	8200000	12	ug/kg	UJ	53782	1514	19900206	2	2.5	482570.174	1349504.922
Cadmium	82	4.2	mg/kg	-	51161	1509	19900204	2	2.5	482549.062	1349371.622
Cadmium	82	3.9	mg/kg	-	54439	1511	19900205	2	2.5	482592.983	1349412.702
Cadmium	82	3.4	mg/kg	-	54059	1510	19900204	2	2.5	482549.033	1349408.862
Cadmium	82	3.4	mg/kg	-	53519	1513	19900206	2	2.5	482578.884	1349482.362
Cadmium	82	3.4	mg/kg	-	53782	1514	19900206	2	2.5	482570.174	1349504.922
Cadmium	82	3.3	mg/kg	-	51679	1512	19900206	2	2.5	482570.973	1349457.062
Cadmium	82	2.9	mg/kg	-	52259	1515	19900207	2	2.5	482561.514	1349480.272
Cadmium	82	2.6	mg/kg	-	51160	1508	19900204	2	2.5	482594.983	1349371.022
Cadmium	82	2.2	mg/kg	NV	200105540	044703-016				482546	1349362
Cadmium	82	1.2	mg/kg	UJ	99239	FT-5	19930205	0	0.5	482512.613	1349428.222
Cadmium	82	1.2	mg/kg	UJ	99240	FT-5	19930205	2.08	2.58	482512.613	1349428.222
Cadmium	82	1.1	mg/kg	NV	200105552	044703-017				482546	1349392
Cadmium	82	0.89	mg/kg	NV	200105576	044703-019				482546	1349453
Cadmium	82	0.67	mg/kg	NV	200105600	044703-021				482565	1349362
Cadmium	82	0.54	mg/kg	NV	200105564	044703-018				482546	1349422
Carbazole	12000	60	ug/kg	NV	200105547	044703-016				482546	1349362
Carbon disulfide	5000000	14	ug/kg	U	99240	FT-5	19930205	2.08	2.58	482512.613	1349428.222
Carbon disulfide	5000000	12	ug/kg	U	99239	FT-5	19930205	0	0.5	482512.613	1349428.222
Carbon disulfide	5000000	6	ug/kg	U	51160	1508	19900204	2	2.5	482594.983	1349371.022
Carbon disulfide	5000000	6	ug/kg	U	51161	1509	19900204	2	2.5	482549.062	1349371.622
Carbon disulfide	5000000	6	ug/kg	U	54059	1510	19900204	2	2.5	482549.033	1349408.862
Carbon disulfide	5000000	6	ug/kg	U	54439	1511	19900205	2	2.5	482592.983	1349412.702
Carbon disulfide	5000000	6	ug/kg	U	51679	1512	19900206	2	2.5	482570.973	1349457.062
Carbon disulfide	5000000	6	ug/kg	U	53519	1513	19900206	2	2.5	482578.884	1349482.362
Carbon disulfide	5000000	6	ug/kg	U	53782	1514	19900206	2	2.5	482570.174	1349504.922
Carbon disulfide	5000000	6	ug/kg	U	52259	1515	19900207	2	2.5	482561.514	1349480.272
Carbon Tetrachloride	2100	14	ug/kg	U	99240	FT-5	19930205	2.08	2.58	482512.613	1349428.222
Carbon Tetrachloride	2100	12	ug/kg	U	99239	FT-5	19930205	0	0.5	482512.613	1349428.222
Carbon Tetrachloride	2100	6	ug/kg	U	51160	1508	19900204	2	2.5	482594.983	1349371.022
Carbon Tetrachloride	2100	6	ug/kg	U	51161	1509	19900204	2	2.5	482549.062	1349371.622
Carbon Tetrachloride	2100	6	ug/kg	U	54059	1510	19900204	2	2.5	482549.033	1349408.862
Carbon Tetrachloride	2100	6	ug/kg	U	54439	1511	19900205	2	2.5	482592.983	1349412.702
Carbon Tetrachloride	2100	6	ug/kg	U	51679	1512	19900206	2	2.5	482570.973	1349457.062
Carbon Tetrachloride	2100	6	ug/kg	U	53519	1513	19900206	2	2.5	482578.884	1349482.362
Carbon Tetrachloride	2100	6	ug/kg	U	53782	1514	19900206	2	2.5	482570.174	1349504.922

000045

1 8201

APPENDIX B
HISTORICAL DATA COLLECTED FROM THE FIRE TRAINING FACILITY

PARAMETER	FRL	RESULT	UNITS	QUALIFIER	SAMPLE ID	LOCATION	SAMPLE DATE	Top	Bottom	Northing 83	Easting 83
Carbon Tetrachloride	2100	6	ug/kg	U	52259	1515	19900207	2	2.5	482561.514	1349480.272
Cesium-137	1.4	1.4	pCi/g	J	5671	ZONE 3-435	19880629	0	0.1666667	482505.412	1349367.463
Cesium-137	1.4	0.9	pCi/g	J	5673	ZONE 3-435	19880629	0.3333333	0.5	482505.412	1349367.463
Cesium-137	1.4	0.7	pCi/g	J	5748	ZONE 3-457	19881006	0	0.5	482529.414	1349530.962
Cesium-137	1.4	0.2	pCi/g	UJ	5666	ZONE 3-456	19880621	0.1666667	0.3333333	482529.414	1349493.962
Cesium-137	1.4	0.2	pCi/g	UJ	5667	ZONE 3-456	19880621	0.3333333	0.5	482529.414	1349493.962
Cesium-137	1.4	0.2	pCi/g	UNV	99239	FT-5	19930205	0	0.5	482512.613	1349428.222
Cesium-137	1.4	0.2	pCi/g	UNV	99240	FT-5	19930205	2.08	2.58	482512.613	1349428.222
Chlordane	190	3.2	ug/kg	NV	200105534	044703-015				482572	1349462
Chlorobenzene	340000	14	ug/kg	U	99240	FT-5	19930205	2.08	2.58	482512.613	1349428.222
Chlorobenzene	340000	12	ug/kg	NV	200101424	RA28-SP-4				482563	1349394
Chlorobenzene	340000	12	ug/kg	U	99239	FT-5	19930205	0	0.5	482512.613	1349428.222
Chlorobenzene	340000	6	ug/kg	U	51160	1508	19900204	2	2.5	482594.983	1349371.022
Chlorobenzene	340000	6	ug/kg	U	51161	1509	19900204	2	2.5	482549.062	1349371.622
Chlorobenzene	340000	6	ug/kg	U	54059	1510	19900204	2	2.5	482549.033	1349408.862
Chlorobenzene	340000	6	ug/kg	U	54439	1511	19900205	2	2.5	482592.983	1349412.702
Chlorobenzene	340000	6	ug/kg	U	51679	1512	19900206	2	2.5	482570.973	1349457.062
Chlorobenzene	340000	6	ug/kg	U	53519	1513	19900206	2	2.5	482578.884	1349482.362
Chlorobenzene	340000	6	ug/kg	U	53782	1514	19900206	2	2.5	482570.174	1349504.922
Chlorobenzene	340000	6	ug/kg	U	52259	1515	19900207	2	2.5	482561.514	1349480.272
Chlorobenzene	340000	3	ug/kg	NV	200101435	RA28-SP-5				482562	1349381
Chloroform	45000	14	ug/kg	U	99240	FT-5	19930205	2.08	2.58	482512.613	1349428.222
Chloroform	45000	12	ug/kg	U	99239	FT-5	19930205	0	0.5	482512.613	1349428.222
Chloroform	45000	6	ug/kg	U	51160	1508	19900204	2	2.5	482594.983	1349371.022
Chloroform	45000	6	ug/kg	U	51161	1509	19900204	2	2.5	482549.062	1349371.622
Chloroform	45000	6	ug/kg	U	54059	1510	19900204	2	2.5	482549.033	1349408.862
Chloroform	45000	6	ug/kg	U	54439	1511	19900205	2	2.5	482592.983	1349412.702
Chloroform	45000	6	ug/kg	U	51679	1512	19900206	2	2.5	482570.973	1349457.062
Chloroform	45000	6	ug/kg	U	53519	1513	19900206	2	2.5	482578.884	1349482.362
Chloroform	45000	6	ug/kg	U	53782	1514	19900206	2	2.5	482570.174	1349504.922
Chloroform	45000	2	ug/kg	J	52259	1515	19900207	2	2.5	482561.514	1349480.272
Chromium	300	24.3	mg/kg	-	51161	1509	19900204	2	2.5	482549.062	1349371.622
Chromium	300	23.6	mg/kg	-	54439	1511	19900205	2	2.5	482592.983	1349412.702
Chromium	300	21.2	mg/kg	-	54059	1510	19900204	2	2.5	482549.033	1349408.862
Chromium	300	20.8	mg/kg	-	51679	1512	19900206	2	2.5	482570.973	1349457.062
Chromium	300	20.7	mg/kg	-	51160	1508	19900204	2	2.5	482594.983	1349371.022
Chromium	300	19.8	mg/kg	-	53782	1514	19900206	2	2.5	482570.174	1349504.922
Chromium	300	19.5	mg/kg	-	53519	1513	19900206	2	2.5	482578.884	1349482.362
Chromium	300	16.7	mg/kg	NV	200105480	044703-011				482571	1349444
Chromium	300	15.3	mg/kg	NV	200101469	RA28-SP-8				482532	1349428

000046

APPENDIX B
HISTORICAL DATA COLLECTED FROM THE FIRE TRAINING FACILITY

PARAMETER	FRL	RESULT	UNITS	QUALIFIER	SAMPLE ID	LOCATION	SAMPLE DATE	Top	Bottom	Northing 83	Easting 83
Chromium	300	14.7	mg/kg	NV	200101380	RA28-SP-2				482571	1349386
Chromium	300	14.3	mg/kg	-	52259	1515	19900207	2	2.5	482561.514	1349480.272
Chromium	300	13.5	mg/kg	NV	200101369	RA28-SP-1				482579	1349402
Chromium	300	13.4	mg/kg	NV	200105516	044703-014				482571	1349471
Chromium	300	13.1	mg/kg	NV	200105528	044703-015				482572	1349462
Chromium	300	13	mg/kg	-	99240	FT-5	19930205	2.08	2.58	482512.613	1349428.222
Chromium	300	12.6	mg/kg	NV	200105468	044703-011				482571	1349444
Chromium	300	11.7	mg/kg	NV	200105600	044703-021				482565	1349362
Chromium	300	11.5	mg/kg	NV	200105504	044703-013				482571	1349484
Chromium	300	11.3	mg/kg	NV	200105456	044703-048				482572	1349445
Chromium	300	11.2	mg/kg	NV	200101447	RA28-SP-6				482563	1349398
Chromium	300	11	mg/kg	-	99239	FT-5	19930205	0	0.5	482512.613	1349428.222
Chromium	300	10.7	mg/kg	NV	200106172	044703-051				482567	1349477
Chromium	300	10.5	mg/kg	NV	200105732	044703-031				482544	1349413
Chromium	300	9.9	mg/kg	NV	200101414	RA28-SP-3				482570	1349383
Chromium	300	9.6	mg/kg	NV	200101425	RA28-SP-4				482563	1349394
Chromium	300	9.4	mg/kg	NV	200101436	RA28-SP-5				482562	1349381
Chromium	300	9.3	mg/kg	NV	200106160	044703-050				482574	1349477
Chromium	300	8.5	mg/kg	NV	200106136	044703-049				482567	1349490
Chromium	300	7.3	mg/kg	NV	200105576	044703-019				482546	1349453
Chromium	300	7.1	mg/kg	NV	200105564	044703-018				482546	1349422
Chromium	300	7	mg/kg	NV	200105540	044703-016				482546	1349362
Chromium	300	6.2	mg/kg	NV	200105552	044703-017				482546	1349392
Chromium	300	5	mg/kg	NV	200105588	044703-020				482545	1349489
Chromium	300	4.9	mg/kg	NV	200105612	044703-022				482563	1349490
Chromium	300	3.4	mg/kg	NV	200105624	044703-023				482572	1349423
Chromium	300	2.4	mg/kg	NV	200105492	044703-012				482571	1349492
Chrysene	2000000	2000	ug/kg	U	51161	1509	19900204	2	2.5	482549.062	1349371.622
Chrysene	2000000	1700	ug/kg	U	51160	1508	19900204	2	2.5	482594.983	1349371.022
Chrysene	2000000	1300	ug/kg	U	51679	1512	19900206	2	2.5	482570.973	1349457.062
Chrysene	2000000	990	ug/kg	NV	200105595	044703-020				482545	1349489
Chrysene	2000000	800	ug/kg	NV	200105547	044703-016				482546	1349362
Chrysene	2000000	590	ug/kg	NV	200105607	044703-021				482565	1349362
Chrysene	2000000	480	ug/kg	U	99240	FT-5	19930205	2.08	2.58	482512.613	1349428.222
Chrysene	2000000	440	ug/kg	U	52259	1515	19900207	2	2.5	482561.514	1349480.272
Chrysene	2000000	430	ug/kg	U	54059	1510	19900204	2	2.5	482549.033	1349408.862
Chrysene	2000000	430	ug/kg	U	54439	1511	19900205	2	2.5	482592.983	1349412.702
Chrysene	2000000	420	ug/kg	U	53519	1513	19900206	2	2.5	482578.884	1349482.362
Chrysene	2000000	420	ug/kg	U	53782	1514	19900206	2	2.5	482570.174	1349504.922
Chrysene	2000000	410	ug/kg	U	99239	FT-5	19930205	0	0.5	482512.613	1349428.222

000047

3201

APPENDIX B
HISTORICAL DATA COLLECTED FROM THE FIRE TRAINING FACILITY

PARAMETER	FRL	RESULT	UNITS	QUALIFIER	SAMPLE ID	LOCATION	SAMPLE DATE	Top	Bottom	Northing 83	Easting 83
Chrysene	2000000	180	ug/kg	NV	200106143	044703-049				482567	1349490
Chrysene	2000000	170	ug/kg	NV	200105511	044703-013				482571	1349484
Chrysene	2000000	150	ug/kg	NV	200105667	044703-025				482597	1349363
Chrysene	2000000	94	ug/kg	NV	200105703	044703-028				482634	1349363
Chrysene	2000000	82	ug/kg	NV	200105739	044703-031				482544	1349413
Chrysene	2000000	77	ug/kg	NV	200105715	044703-029				482632	1349392
Chrysene	2000000	60	ug/kg	NV	200101386	RA28-SP-2				482571	1349386
Chrysene	2000000	59	ug/kg	NV	200101374	RA28-SP-1				482579	1349402
Chrysene	2000000	43	ug/kg	NV	200105571	044703-018				482546	1349422
Cobalt	740	26	mg/kg	-	54059	1510	19900204	2	2.5	482549.033	1349408.862
Cobalt	740	20.3	mg/kg	-	53782	1514	19900206	2	2.5	482570.174	1349504.922
Cobalt	740	18.6	mg/kg	-	54439	1511	19900205	2	2.5	482592.983	1349412.702
Cobalt	740	17.7	mg/kg	NV	200101380	RA28-SP-2				482571	1349386
Cobalt	740	16.9	mg/kg	-	52259	1515	19900207	2	2.5	482561.514	1349480.272
Cobalt	740	15.4	mg/kg	NV	200105480	044703-011				482571	1349444
Cobalt	740	15.1	mg/kg	NV	200105516	044703-014				482571	1349471
Cobalt	740	14.7	mg/kg	-	51679	1512	19900206	2	2.5	482570.973	1349457.062
Cobalt	740	14.5	mg/kg	NV	200101369	RA28-SP-1				482579	1349402
Cobalt	740	14.4	mg/kg	NV	200105528	044703-015				482572	1349462
Cobalt	740	13.6	mg/kg	NV	200105468	044703-011				482571	1349444
Cobalt	740	13.4	mg/kg	-	53519	1513	19900206	2	2.5	482578.884	1349482.362
Cobalt	740	12.3	mg/kg	-	51160	1508	19900204	2	2.5	482594.983	1349371.022
Cobalt	740	12.2	mg/kg	NV	200101425	RA28-SP-4				482563	1349394
Cobalt	740	12.2	mg/kg	NV	200101447	RA28-SP-6				482563	1349398
Cobalt	740	12.2	mg/kg	NV	200101469	RA28-SP-8				482532	1349428
Cobalt	740	11.5	mg/kg	NV	200101436	RA28-SP-5				482562	1349381
Cobalt	740	11.3	mg/kg	NV	200105504	044703-013				482571	1349484
Cobalt	740	10.8	mg/kg	NV	200106172	044703-051				482567	1349477
Cobalt	740	10.2	mg/kg	-	51161	1509	19900204	2	2.5	482549.062	1349371.622
Cobalt	740	10.1	mg/kg	NV	200105600	044703-021				482565	1349362
Cobalt	740	9.3	mg/kg	NV	200105576	044703-019				482546	1349453
Cobalt	740	9.3	mg/kg	NV	200101414	RA28-SP-3				482570	1349383
Cobalt	740	8.4	mg/kg	NV	200106136	044703-049				482567	1349490
Cobalt	740	7.5	mg/kg	NV	200106160	044703-050				482574	1349477
Cobalt	740	6.9	mg/kg	NV	200105492	044703-012				482571	1349492
Cobalt	740	6.8	mg/kg	NV	200105732	044703-031				482544	1349413
Cobalt	740	6.6	mg/kg	-	99239	FT-5	19930205	0	0.5	482512.613	1349428.222
Cobalt	740	6.2	mg/kg	NV	200105456	044703-048				482572	1349445
Cobalt	740	6.1	mg/kg	-	99240	FT-5	19930205	2.08	2.58	482512.613	1349428.222
Cobalt	740	5.4	mg/kg	NV	200105612	044703-022				482563	1349490

000048

APPENDIX B
HISTORICAL DATA COLLECTED FROM THE FIRE TRAINING FACILITY

PARAMETER	FRL	RESULT	UNITS	QUALIFIER	SAMPLE ID	LOCATION	SAMPLE DATE	Top	Bottom	Northing 83	Easting 83
Cobalt	740	4.4	mg/kg	NV	200105588	044703-020				482545	1349489
Cobalt	740	4.2	mg/kg	NV	200105552	044703-017				482546	1349392
Copper	220000	34.9	mg/kg	NV	200105480	044703-011				482571	1349444
Copper	220000	26.7	mg/kg	NV	200101380	RA28-SP-2				482571	1349386
Copper	220000	25.8	mg/kg	NV	200105516	044703-014				482571	1349471
Copper	220000	23.7	mg/kg	NV	200101469	RA28-SP-8				482532	1349428
Copper	220000	23.1	mg/kg	NV	200101369	RA28-SP-1				482579	1349402
Copper	220000	21.5	mg/kg	-	53782	1514	19900206	2	2.5	482570.174	1349504.922
Copper	220000	21.2	mg/kg	NV	200105504	044703-013				482571	1349484
Copper	220000	19.8	mg/kg	-	53519	1513	19900206	2	2.5	482578.884	1349482.362
Copper	220000	19.2	mg/kg	-	51679	1512	19900206	2	2.5	482570.973	1349457.062
Copper	220000	18.5	mg/kg	NV	200101436	RA28-SP-5				482562	1349381
Copper	220000	18.3	mg/kg	NV	200105528	044703-015				482572	1349462
Copper	220000	18.1	mg/kg	-	54439	1511	19900205	2	2.5	482592.983	1349412.702
Copper	220000	18.1	mg/kg	NV	200105600	044703-021				482565	1349362
Copper	220000	17.5	mg/kg	NV	200105468	044703-011				482571	1349444
Copper	220000	17.2	mg/kg	NV	200101414	RA28-SP-3				482570	1349383
Copper	220000	16.5	mg/kg	NV	200101425	RA28-SP-4				482563	1349394
Copper	220000	16.1	mg/kg	-	54059	1510	19900204	2	2.5	482549.033	1349408.862
Copper	220000	16	mg/kg	NV	200105732	044703-031				482544	1349413
Copper	220000	16	mg/kg	NV	200101447	RA28-SP-6				482563	1349398
Copper	220000	15.9	mg/kg	NV	200105456	044703-048				482572	1349445
Copper	220000	15.9	mg/kg	NV	200106136	044703-049				482567	1349490
Copper	220000	15.5	mg/kg	-	99240	FT-5	19930205	2.08	2.58	482512.613	1349428.222
Copper	220000	15.3	mg/kg	-	51160	1508	19900204	2	2.5	482594.983	1349371.022
Copper	220000	14.3	mg/kg	NV	200106172	044703-051				482567	1349477
Copper	220000	13.8	mg/kg	-	52259	1515	19900207	2	2.5	482561.514	1349480.272
Copper	220000	13.7	mg/kg	-	99239	FT-5	19930205	0	0.5	482512.613	1349428.222
Copper	220000	13.7	mg/kg	NV	200106160	044703-050				482574	1349477
Copper	220000	11.9	mg/kg	NV	200105492	044703-012				482571	1349492
Copper	220000	11.4	mg/kg	-	51161	1509	19900204	2	2.5	482549.062	1349371.622
Copper	220000	10.7	mg/kg	NV	200105576	044703-019				482546	1349453
Copper	220000	9.6	mg/kg	NV	200105564	044703-018				482546	1349422
Copper	220000	9.3	mg/kg	NV	200105540	044703-016				482546	1349362
Copper	220000	8.7	mg/kg	NV	200105552	044703-017				482546	1349392
Copper	220000	7.3	mg/kg	NV	200105612	044703-022				482563	1349490
Copper	220000	6.4	mg/kg	NV	200105588	044703-020				482545	1349489
Copper	220000	6.2	mg/kg	NV	200105624	044703-023				482572	1349423
Cyanide	120000	0.5	mg/kg	-	51161	1509	19900204	2	2.5	482549.062	1349371.622
Cyanide	120000	0.33	mg/kg	U	51679	1512	19900206	2	2.5	482570.973	1349457.062

000049

3201

APPENDIX B
HISTORICAL DATA COLLECTED FROM THE FIRE TRAINING FACILITY

PARAMETER	FRL	RESULT	UNITS	QUALIFIER	SAMPLE ID	LOCATION	SAMPLE DATE	Top	Bottom	Northing 83	Easting 83
Cyanide	120000	0.32	mg/kg	U	52259	1515	19900207	2	2.5	482561.514	1349480.272
Cyanide	120000	0.31	mg/kg	U	51160	1508	19900204	2	2.5	482594.983	1349371.022
Cyanide	120000	0.31	mg/kg	U	54059	1510	19900204	2	2.5	482549.033	1349408.862
Cyanide	120000	0.31	mg/kg	U	53519	1513	19900206	2	2.5	482578.884	1349482.362
Cyanide	120000	0.31	mg/kg	U	53782	1514	19900206	2	2.5	482570.174	1349504.922
Cyanide	120000	0.14	mg/kg	U	99240	FT-5	19930205	2.08	2.58	482512.613	1349428.222
Cyanide	120000	0.13	mg/kg	U	99239	FT-5	19930205	0	0.5	482512.613	1349428.222
Cyanide	120000	0.01	mg/kg	U	54439	1511	19900205	2	2.5	482592.983	1349412.702
Dibenzo(a,h)anthracene	2000	2000	ug/kg	U	51161	1509	19900204	2	2.5	482549.062	1349371.622
Dibenzo(a,h)anthracene	2000	1700	ug/kg	U	51160	1508	19900204	2	2.5	482594.983	1349371.022
Dibenzo(a,h)anthracene	2000	1300	ug/kg	U	51679	1512	19900206	2	2.5	482570.973	1349457.062
Dibenzo(a,h)anthracene	2000	480	ug/kg	U	99240	FT-5	19930205	2.08	2.58	482512.613	1349428.222
Dibenzo(a,h)anthracene	2000	440	ug/kg	U	52259	1515	19900207	2	2.5	482561.514	1349480.272
Dibenzo(a,h)anthracene	2000	430	ug/kg	U	54059	1510	19900204	2	2.5	482549.033	1349408.862
Dibenzo(a,h)anthracene	2000	430	ug/kg	U	54439	1511	19900205	2	2.5	482592.983	1349412.702
Dibenzo(a,h)anthracene	2000	420	ug/kg	U	53519	1513	19900206	2	2.5	482578.884	1349482.362
Dibenzo(a,h)anthracene	2000	420	ug/kg	U	53782	1514	19900206	2	2.5	482570.174	1349504.922
Dibenzo(a,h)anthracene	2000	140	ug/kg	NV	200105547	044703-016				482546	1349362
Dibenzo(a,h)anthracene	2000	62	ug/kg	J	99239	FT-5	19930205	0	0.5	482512.613	1349428.222
Dieldrin	15	430	ug/kg	U	51679	1512	19900206	2	2.5	482570.973	1349457.062
Dieldrin	15	93	ug/kg	U	99240	FT-5	19930205	2.08	2.58	482512.613	1349428.222
Dieldrin	15	79	ug/kg	U	99239	FT-5	19930205	0	0.5	482512.613	1349428.222
Dieldrin	15	22	ug/kg	U	52259	1515	19900207	2	2.5	482561.514	1349480.272
Dieldrin	15	21	ug/kg	U	51160	1508	19900204	2	2.5	482594.983	1349371.022
Dieldrin	15	21	ug/kg	U	54059	1510	19900204	2	2.5	482549.033	1349408.862
Dieldrin	15	21	ug/kg	U	54439	1511	19900205	2	2.5	482592.983	1349412.702
Dieldrin	15	20	ug/kg	U	51161	1509	19900204	2	2.5	482549.062	1349371.622
Dieldrin	15	20	ug/kg	U	53519	1513	19900206	2	2.5	482578.884	1349482.362
Dieldrin	15	20	ug/kg	U	53782	1514	19900206	2	2.5	482570.174	1349504.922
Di-n-octyl phthalate	1100000	2000	ug/kg	U	51161	1509	19900204	2	2.5	482549.062	1349371.622
Di-n-octyl phthalate	1100000	1700	ug/kg	U	51160	1508	19900204	2	2.5	482594.983	1349371.022
Di-n-octyl phthalate	1100000	1300	ug/kg	U	51679	1512	19900206	2	2.5	482570.973	1349457.062
Di-n-octyl phthalate	1100000	440	ug/kg	U	52259	1515	19900207	2	2.5	482561.514	1349480.272
Di-n-octyl phthalate	1100000	430	ug/kg	U	54059	1510	19900204	2	2.5	482549.033	1349408.862
Di-n-octyl phthalate	1100000	430	ug/kg	U	54439	1511	19900205	2	2.5	482592.983	1349412.702
Di-n-octyl phthalate	1100000	420	ug/kg	U	53519	1513	19900206	2	2.5	482578.884	1349482.362
Di-n-octyl phthalate	1100000	420	ug/kg	U	53782	1514	19900206	2	2.5	482570.174	1349504.922
Di-n-octyl phthalate	1100000	410	ug/kg	U	99239	FT-5	19930205	0	0.5	482512.613	1349428.222
Di-n-octyl phthalate	1100000	56	ug/kg	NV	200105631	044703-023				482572	1349423
Di-n-octyl phthalate	1100000	50	ug/kg	J	99240	FT-5	19930205	2.08	2.58	482512.613	1349428.222

000050

APPENDIX B
HISTORICAL DATA COLLECTED FROM THE FIRE TRAINING FACILITY

PARAMETER	FRL	RESULT	UNITS	QUALIFIER	SAMPLE ID	LOCATION	SAMPLE DATE	Top	Bottom	Northing 83	Easting 83
Di-n-octyl phthalate	1100000	43	ug/kg	NV	200101374	RA28-SP-1				482579	1349402
Di-n-octyl phthalate	1100000	41	ug/kg	NV	200101442	RA28-SP-5				482562	1349381
Ethylbenzene	5100000	3800	ug/kg	NV	200101413	RA28-SP-3				482570	1349383
Ethylbenzene	5100000	14	ug/kg	U	99240	FT-5	19930205	2.08	2.58	482512.613	1349428.222
Ethylbenzene	5100000	12	ug/kg	U	99239	FT-5	19930205	0	0.5	482512.613	1349428.222
Ethylbenzene	5100000	6	ug/kg	U	51160	1508	19900204	2	2.5	482594.983	1349371.022
Ethylbenzene	5100000	6	ug/kg	U	51161	1509	19900204	2	2.5	482549.062	1349371.622
Ethylbenzene	5100000	6	ug/kg	U	54059	1510	19900204	2	2.5	482549.033	1349408.862
Ethylbenzene	5100000	6	ug/kg	U	54439	1511	19900205	2	2.5	482592.983	1349412.702
Ethylbenzene	5100000	6	ug/kg	U	51679	1512	19900206	2	2.5	482570.973	1349457.062
Ethylbenzene	5100000	6	ug/kg	U	53519	1513	19900206	2	2.5	482578.884	1349482.362
Ethylbenzene	5100000	6	ug/kg	U	53782	1514	19900206	2	2.5	482570.174	1349504.922
Ethylbenzene	5100000	6	ug/kg	U	52259	1515	19900207	2	2.5	482561.514	1349480.272
Ethylbenzene	5100000	2	ug/kg	NV	200101468	RA28-SP-8				482532	1349428
Ethylbenzene	5100000	1	ug/kg	NV	200101424	RA28-SP-4				482563	1349394
Fluoranthene	NA	2700	ug/kg	NV	200105595	044703-020				482545	1349489
Fluoranthene	NA	2000	ug/kg	U	51161	1509	19900204	2	2.5	482549.062	1349371.622
Fluoranthene	NA	1700	ug/kg	U	51160	1508	19900204	2	2.5	482594.983	1349371.022
Fluoranthene	NA	1300	ug/kg	U	51679	1512	19900206	2	2.5	482570.973	1349457.062
Fluoranthene	NA	1200	ug/kg	NV	200105547	044703-016				482546	1349362
Fluoranthene	NA	760	ug/kg	NV	200105607	044703-021				482565	1349362
Fluoranthene	NA	480	ug/kg	U	99240	FT-5	19930205	2.08	2.58	482512.613	1349428.222
Fluoranthene	NA	440	ug/kg	U	52259	1515	19900207	2	2.5	482561.514	1349480.272
Fluoranthene	NA	430	ug/kg	U	54059	1510	19900204	2	2.5	482549.033	1349408.862
Fluoranthene	NA	430	ug/kg	U	54439	1511	19900205	2	2.5	482592.983	1349412.702
Fluoranthene	NA	420	ug/kg	U	53519	1513	19900206	2	2.5	482578.884	1349482.362
Fluoranthene	NA	420	ug/kg	U	53782	1514	19900206	2	2.5	482570.174	1349504.922
Fluoranthene	NA	330	ug/kg	NV	200105667	044703-025				482597	1349363
Fluoranthene	NA	260	ug/kg	J	99239	FT-5	19930205	0	0.5	482512.613	1349428.222
Fluoranthene	NA	160	ug/kg	NV	200105511	044703-013				482571	1349484
Fluoranthene	NA	160	ug/kg	NV	200106143	044703-049				482567	1349490
Fluoranthene	NA	140	ug/kg	NV	200105703	044703-028				482634	1349363
Fluoranthene	NA	110	ug/kg	NV	200105715	044703-029				482632	1349392
Fluoranthene	NA	110	ug/kg	NV	200105739	044703-031				482544	1349413
Fluoranthene	NA	96	ug/kg	NV	200105583	044703-019				482546	1349453
Fluoranthene	NA	68	ug/kg	NV	200105571	044703-018				482546	1349422
Fluoranthene	NA	59	ug/kg	NV	200105727	044703-030				482629	1349425
Fluoranthene	NA	56	ug/kg	NV	200101374	RA28-SP-1				482579	1349402
Fluoranthene	NA	51	ug/kg	NV	200105631	044703-023				482572	1349423
Fluoranthene	NA	40	ug/kg	NV	200105679	044703-026				482597	1349392

000051

3201

APPENDIX B
HISTORICAL DATA COLLECTED FROM THE FIRE TRAINING FACILITY

PARAMETER	FRL	RESULT	UNITS	QUALIFIER	SAMPLE ID	LOCATION	SAMPLE DATE	Top	Bottom	Northing 83	Easting 83
gamma-Chlordane	190	2200	ug/kg	U	51679	1512	19900206	2	2.5	482570.973	1349457.062
gamma-Chlordane	190	460	ug/kg	U	99240	FT-5	19930205	2.08	2.58	482512.613	1349428.222
gamma-Chlordane	190	400	ug/kg	U	99239	FT-5	19930205	0	0.5	482512.613	1349428.222
gamma-Chlordane	190	110	ug/kg	U	51160	1508	19900204	2	2.5	482594.983	1349371.022
gamma-Chlordane	190	110	ug/kg	U	54439	1511	19900205	2	2.5	482592.983	1349412.702
gamma-Chlordane	190	110	ug/kg	U	52259	1515	19900207	2	2.5	482561.514	1349480.272
gamma-Chlordane	190	100	ug/kg	U	54059	1510	19900204	2	2.5	482549.033	1349408.862
gamma-Chlordane	190	100	ug/kg	U	53519	1513	19900206	2	2.5	482578.884	1349482.362
gamma-Chlordane	190	100	ug/kg	U	53782	1514	19900206	2	2.5	482570.174	1349504.922
gamma-Chlordane	190	98	ug/kg	U	51161	1509	19900204	2	2.5	482549.062	1349371.622
Heptachlorodibenzo-p-dioxins	880	1000	ng/kg	U	99246	1513	19930113	2	2.5	482578.884	1349482.362
Heptachlorodibenzo-p-dioxins	880	1000	ng/kg	U	99239	FT-5	19930205	0	0.5	482512.613	1349428.222
Heptachlorodibenzo-p-dioxins	880	1000	ng/kg	U	99240	FT-5	19930205	2.08	2.58	482512.613	1349428.222
Heptachlorodibenzo-p-dioxins	880	970	ng/kg	U	99242	1508	19930115	2	2.5	482594.983	1349371.022
Heptachlorodibenzo-p-dioxins	880	970	ng/kg	U	99244	1511	19930115	2	2.5	482592.983	1349412.702
Heptachlorodibenzo-p-dioxins	880	960	ng/kg	U	99243	1509	19930114	2	2.5	482549.062	1349371.622
Heptachlorodibenzo-p-dioxins	880	960	ng/kg	U	99245	1512	19930114	2	2.5	482570.973	1349457.062
Indeno(1,2,3-cd)pyrene	20000	2000	ug/kg	U	51161	1509	19900204	2	2.5	482549.062	1349371.622
Indeno(1,2,3-cd)pyrene	20000	1700	ug/kg	NV	200105607	044703-021				482565	1349362
Indeno(1,2,3-cd)pyrene	20000	1700	ug/kg	U	51160	1508	19900204	2	2.5	482594.983	1349371.022
Indeno(1,2,3-cd)pyrene	20000	1500	ug/kg	NV	200105547	044703-016				482546	1349362
Indeno(1,2,3-cd)pyrene	20000	1300	ug/kg	U	51679	1512	19900206	2	2.5	482570.973	1349457.062
Indeno(1,2,3-cd)pyrene	20000	440	ug/kg	U	52259	1515	19900207	2	2.5	482561.514	1349480.272
Indeno(1,2,3-cd)pyrene	20000	430	ug/kg	U	54059	1510	19900204	2	2.5	482549.033	1349408.862
Indeno(1,2,3-cd)pyrene	20000	430	ug/kg	U	54439	1511	19900205	2	2.5	482592.983	1349412.702
Indeno(1,2,3-cd)pyrene	20000	420	ug/kg	U	53519	1513	19900206	2	2.5	482578.884	1349482.362
Indeno(1,2,3-cd)pyrene	20000	420	ug/kg	U	53782	1514	19900206	2	2.5	482570.174	1349504.922
Indeno(1,2,3-cd)pyrene	20000	400	ug/kg	NV	200105595	044703-020				482545	1349489
Indeno(1,2,3-cd)pyrene	20000	240	ug/kg	NV	200106143	044703-049				482567	1349490
Indeno(1,2,3-cd)pyrene	20000	180	ug/kg	J	99239	FT-5	19930205	0	0.5	482512.613	1349428.222
Indeno(1,2,3-cd)pyrene	20000	160	ug/kg	NV	200105667	044703-025				482597	1349363
Indeno(1,2,3-cd)pyrene	20000	120	ug/kg	J	99240	FT-5	19930205	2.08	2.58	482512.613	1349428.222
Indeno(1,2,3-cd)pyrene	20000	110	ug/kg	NV	200105703	044703-028				482634	1349363
Indeno(1,2,3-cd)pyrene	20000	67	ug/kg	NV	200105715	044703-029				482632	1349392
Indeno(1,2,3-cd)pyrene	20000	42	ug/kg	NV	200105571	044703-018				482546	1349422
Lead	400	114	mg/kg	-	99239	FT-5	19930205	0	0.5	482512.613	1349428.222
Lead	400	71	mg/kg	-	99240	FT-5	19930205	2.08	2.58	482512.613	1349428.222
Lead	400	55.3	mg/kg	NV	200105624	044703-023				482572	1349423
Lead	400	25.4	mg/kg	-	51679	1512	19900206	2	2.5	482570.973	1349457.062
Lead	400	23	mg/kg	NV	200105552	044703-017				482546	1349392

APPENDIX B
HISTORICAL DATA COLLECTED FROM THE FIRE TRAINING FACILITY

PARAMETER	FRL	RESULT	UNITS	QUALIFIER	SAMPLE ID	LOCATION	SAMPLE DATE	Top	Bottom	Northing 83	Easting 83
Lead	400	22.2	mg/kg	NV	200105732	044703-031				482544	1349413
Lead	400	21.1	mg/kg	-	51161	1509	19900204	2	2.5	482549.062	1349371.622
Lead	400	21	mg/kg	-	54439	1511	19900205	2	2.5	482592.983	1349412.702
Lead	400	20.9	mg/kg	-	54059	1510	19900204	2	2.5	482549.033	1349408.862
Lead	400	20.9	mg/kg	-	53519	1513	19900206	2	2.5	482578.884	1349482.362
Lead	400	19.5	mg/kg	NV	200105468	044703-011				482571	1349444
Lead	400	19.4	mg/kg	NV	200101380	RA28-SP-2				482571	1349386
Lead	400	19	mg/kg	NV	200105600	044703-021				482565	1349362
Lead	400	18.5	mg/kg	-	52259	1515	19900207	2	2.5	482561.514	1349480.272
Lead	400	18	mg/kg	NV	200101447	RA28-SP-6				482563	1349398
Lead	400	17.8	mg/kg	NV	200105540	044703-016				482546	1349362
Lead	400	17.5	mg/kg	NV	200105576	044703-019				482546	1349453
Lead	400	15.7	mg/kg	NV	200105480	044703-011				482571	1349444
Lead	400	15.4	mg/kg	-	53782	1514	19900206	2	2.5	482570.174	1349504.922
Lead	400	14.9	mg/kg	NV	200101369	RA28-SP-1				482579	1349402
Lead	400	14.8	mg/kg	-	51160	1508	19900204	2	2.5	482594.983	1349371.022
Lead	400	12.9	mg/kg	NV	200105456	044703-048				482572	1349445
Lead	400	12.8	mg/kg	NV	200105564	044703-018				482546	1349422
Lead	400	11	mg/kg	NV	200105612	044703-022				482563	1349490
Lead	400	10.5	mg/kg	NV	200101414	RA28-SP-3				482570	1349383
Lead	400	8.5	mg/kg	NV	200105588	044703-020				482545	1349489
Lead	400	8.3	mg/kg	NV	200101425	RA28-SP-4				482563	1349394
m,p-Methylphenol	250000	350	ug/kg	NV	200105595	044703-020				482545	1349489
m,p-Methylphenol	250000	200	ug/kg	NV	200105535D	044703-015				482572	1349462
m,p-Methylphenol	250000	160	ug/kg	NV	200105535	044703-015				482572	1349462
m,p-Methylphenol	250000	99	ug/kg	NV	200101386	RA28-SP-2				482571	1349386
m,p-Methylphenol	250000	60	ug/kg	NV	200101374	RA28-SP-1				482579	1349402
Manganese	4600	1080	mg/kg	-	53782	1514	19900206	2	2.5	482570.174	1349504.922
Manganese	4600	1020	mg/kg	NV	200101447	RA28-SP-6				482563	1349398
Manganese	4600	981	mg/kg	NV	200105468	044703-011				482571	1349444
Manganese	4600	833	mg/kg	-	54439	1511	19900205	2	2.5	482592.983	1349412.702
Manganese	4600	814	mg/kg	NV	200101369	RA28-SP-1				482579	1349402
Manganese	4600	778	mg/kg	NV	200106136	044703-049				482567	1349490
Manganese	4600	769	mg/kg	NV	200105564	044703-018				482546	1349422
Manganese	4600	765	mg/kg	-	52259	1515	19900207	2	2.5	482561.514	1349480.272
Manganese	4600	731	mg/kg	NV	200105528	044703-015				482572	1349462
Manganese	4600	720	mg/kg	NV	200101414	RA28-SP-3				482570	1349383
Manganese	4600	709	mg/kg	NV	200101380	RA28-SP-2				482571	1349386
Manganese	4600	679	mg/kg	NV	200105504	044703-013				482571	1349484
Manganese	4600	678	mg/kg	-	51679	1512	19900206	2	2.5	482570.973	1349457.062

000053

3201

APPENDIX B
HISTORICAL DATA COLLECTED FROM THE FIRE TRAINING FACILITY

PARAMETER	FRL	RESULT	UNITS	QUALIFIER	SAMPLE ID	LOCATION	SAMPLE DATE	Top	Bottom	Northing 83	Easting 83
Manganese	4600	667	mg/kg	NV	200101425	RA28-SP-4				482563	1349394
Manganese	4600	660	mg/kg	-	54059	1510	19900204	2	2.5	482549.033	1349408.862
Manganese	4600	653	mg/kg	NV	200101436	RA28-SP-5				482562	1349381
Manganese	4600	628	mg/kg	NV	200105540	044703-016				482546	1349362
Manganese	4600	616	mg/kg	NV	200105732	044703-031				482544	1349413
Manganese	4600	540	mg/kg	NV	200105612	044703-022				482563	1349490
Manganese	4600	527	mg/kg	NV	200105600	044703-021				482565	1349362
Manganese	4600	523	mg/kg	NV	200105576	044703-019				482546	1349453
Manganese	4600	516	mg/kg	NV	200105492	044703-012				482571	1349492
Manganese	4600	507	mg/kg	NV	200101469	RA28-SP-8				482532	1349428
Manganese	4600	495	mg/kg	-	51161	1509	19900204	2	2.5	482549.062	1349371.622
Manganese	4600	489	mg/kg	NV	200106160	044703-050				482574	1349477
Manganese	4600	483	mg/kg	NV	200105480	044703-011				482571	1349444
Manganese	4600	477	mg/kg	NV	200105588	044703-020				482545	1349489
Manganese	4600	475	mg/kg	-	99239	FT-5	19930205	0	0.5	482512.613	1349428.222
Manganese	4600	450	mg/kg	NV	200105516	044703-014				482571	1349471
Manganese	4600	436	mg/kg	-	51160	1508	19900204	2	2.5	482594.983	1349371.022
Manganese	4600	422	mg/kg	NV	200106172	044703-051				482567	1349477
Manganese	4600	416	mg/kg	NV	200105456	044703-048				482572	1349445
Manganese	4600	387	mg/kg	NV	200105624	044703-023				482572	1349423
Manganese	4600	384	mg/kg	-	99240	FT-5	19930205	2.08	2.58	482512.613	1349428.222
Manganese	4600	363	mg/kg	NV	200105552	044703-017				482546	1349392
Manganese	4600	285	mg/kg	-	53519	1513	19900206	2	2.5	482578.884	1349482.362
Manganese	7.5	0.38	mg/kg	NV	200105588	044703-020				482545	1349489
Mercury	7.5	0.18	mg/kg	-	51161	1509	19900204	2	2.5	482549.062	1349371.622
Mercury	7.5	0.13	mg/kg	U	99239	FT-5	19930205	0	0.5	482512.613	1349428.222
Mercury	7.5	0.12	mg/kg	U	51160	1508	19900204	2	2.5	482594.983	1349371.022
Mercury	7.5	0.12	mg/kg	U	54059	1510	19900204	2	2.5	482549.033	1349408.862
Mercury	7.5	0.12	mg/kg	U	53782	1514	19900206	2	2.5	482570.174	1349504.922
Mercury	7.5	0.12	mg/kg	U	52259	1515	19900207	2	2.5	482561.514	1349480.272
Mercury	7.5	0.12	mg/kg	U	99240	FT-5	19930205	2.08	2.58	482512.613	1349428.222
Mercury	7.5	0.11	mg/kg	U	54439	1511	19900205	2	2.5	482592.983	1349412.702
Mercury	7.5	0.11	mg/kg	U	51679	1512	19900206	2	2.5	482570.973	1349457.062
Mercury	7.5	0.09	mg/kg	U	53519	1513	19900206	2	2.5	482578.884	1349482.362
Methylene chloride	37000	14	ug/kg	U	99240	FT-5	19930205	2.08	2.58	482512.613	1349428.222
Methylene chloride	37000	12	ug/kg	U	99239	FT-5	19930205	0	0.5	482512.613	1349428.222
Methylene chloride	37000	8	ug/kg	U	53519	1513	19900206	2	2.5	482578.884	1349482.362
Methylene chloride	37000	6	ug/kg	U	51160	1508	19900204	2	2.5	482594.983	1349371.022
Methylene chloride	37000	6	ug/kg	U	51161	1509	19900204	2	2.5	482549.062	1349371.622
Methylene chloride	37000	6	ug/kg	U	54059	1510	19900204	2	2.5	482549.033	1349408.862

000054

APPENDIX B
HISTORICAL DATA COLLECTED FROM THE FIRE TRAINING FACILITY

PARAMETER	FRL	RESULT	UNITS	QUALIFIER	SAMPLE ID	LOCATION	SAMPLE DATE	Top	Bottom	Northing 83	Easting 83
Methylene chloride	37000	6	ug/kg	U	54439	1511	19900205	2	2.5	482592.983	1349412.702
Methylene chloride	37000	6	ug/kg	U	51679	1512	19900206	2	2.5	482570.973	1349457.062
Methylene chloride	37000	6	ug/kg	U	53782	1514	19900206	2	2.5	482570.174	1349504.922
Methylene chloride	37000	6	ug/kg	U	52259	1515	19900207	2	2.5	482561.514	1349480.272
Methylene chloride	37000	3	ug/kg	NV	200105455	044703-048				482572	1349445
Methylene chloride	37000	2	ug/kg	NV	200105551	044703-017				482546	1349392
Methylene chloride	37000	1	ug/kg	NV	200105467	044703-011				482571	1349444
Molybdenum	2900	4.9	mg/kg	U	99240	FT-5	19930205	2.08	2.58	482512.613	1349428.222
Molybdenum	2900	4.6	mg/kg	-	99239	FT-5	19930205	0	0.5	482512.613	1349428.222
Molybdenum	2900	2.4	mg/kg	U	51679	1512	19900206	2	2.5	482570.973	1349457.062
Molybdenum	2900	2.4	mg/kg	U	53519	1513	19900206	2	2.5	482578.884	1349482.362
Molybdenum	2900	2.2	mg/kg	U	51161	1509	19900204	2	2.5	482549.062	1349371.622
Molybdenum	2900	2.2	mg/kg	U	54059	1510	19900204	2	2.5	482549.033	1349408.862
Molybdenum	2900	2.2	mg/kg	U	52259	1515	19900207	2	2.5	482561.514	1349480.272
Molybdenum	2900	2.1	mg/kg	U	53782	1514	19900206	2	2.5	482570.174	1349504.922
Molybdenum	2900	1.9	mg/kg	U	51160	1508	19900204	2	2.5	482594.983	1349371.022
Molybdenum	2900	1.8	mg/kg	U	54439	1511	19900205	2	2.5	482592.983	1349412.702
Neptunium-237	3.2	0.6	pCi/g	U	5671	ZONE 3-435	19880629	0	0.1666667	482505.412	1349367.463
Neptunium-237	3.2	0.6	pCi/g	U	5672	ZONE 3-435	19880629	0.1666667	0.3333333	482505.412	1349367.463
Neptunium-237	3.2	0.6	pCi/g	U	5673	ZONE 3-435	19880629	0.3333333	0.5	482505.412	1349367.463
Neptunium-237	3.2	0.6	pCi/g	U	5666	ZONE 3-456	19880621	0.1666667	0.3333333	482529.414	1349493.962
Neptunium-237	3.2	0.6	pCi/g	U	5667	ZONE 3-456	19880621	0.3333333	0.5	482529.414	1349493.962
Neptunium-237	3.2	0.6	pCi/g	U	5748	ZONE 3-457	19881006	0	0.5	482529.414	1349530.962
Neptunium-237	3.2	0.6	pCi/g	UNV	99239	FT-5	19930205	0	0.5	482512.613	1349428.222
Neptunium-237	3.2	0.6	pCi/g	UNV	99240	FT-5	19930205	2.08	2.58	482512.613	1349428.222
Nickel	15000	930	mg/kg	NV	200105540	044703-016				482546	1349362
Nickel	15000	67.1	mg/kg	-	51161	1509	19900204	2	2.5	482549.062	1349371.622
Nickel	15000	50.5	mg/kg	-	53519	1513	19900206	2	2.5	482578.884	1349482.362
Nickel	15000	50	mg/kg	-	53782	1514	19900206	2	2.5	482570.174	1349504.922
Nickel	15000	43.2	mg/kg	-	54439	1511	19900205	2	2.5	482592.983	1349412.702
Nickel	15000	41.6	mg/kg	NV	200101380	RA28-SP-2				482571	1349386
Nickel	15000	39.6	mg/kg	-	54059	1510	19900204	2	2.5	482549.033	1349408.862
Nickel	15000	38.6	mg/kg	NV	200101369	RA28-SP-1				482579	1349402
Nickel	15000	38.1	mg/kg	NV	200105480	044703-011				482571	1349444
Nickel	15000	36.8	mg/kg	-	51679	1512	19900206	2	2.5	482570.973	1349457.062
Nickel	15000	34.1	mg/kg	-	51160	1508	19900204	2	2.5	482594.983	1349371.022
Nickel	15000	31.5	mg/kg	NV	200105516	044703-014				482571	1349471
Nickel	15000	28.7	mg/kg	-	52259	1515	19900207	2	2.5	482561.514	1349480.272
Nickel	15000	28.4	mg/kg	NV	200105468	044703-011				482571	1349444
Nickel	15000	20.8	mg/kg	NV	200105600	044703-021				482565	1349362

000055

1 8201

APPENDIX B
HISTORICAL DATA COLLECTED FROM THE FIRE TRAINING FACILITY

PARAMETER	FRL	RESULT	UNITS	QUALIFIER	SAMPLE ID	LOCATION	SAMPLE DATE	Top	Bottom	Northing 83	Easting 83
Nickel	15000	20.4	mg/kg	NV	200105456	044703-048				482572	1349445
Nickel	15000	15.3	mg/kg	-	99240	FT-5	19930205	2.08	2.58	482512.613	1349428.222
Nickel	15000	14.2	mg/kg	-	99239	FT-5	19930205	0	0.5	482512.613	1349428.222
Nickel	15000	11.9	mg/kg	NV	200105576	044703-019				482546	1349453
Nickel	15000	7.9	mg/kg	NV	200105564	044703-018				482546	1349422
Nickel	15000	7.6	mg/kg	NV	200105552	044703-017				482546	1349392
Nickel	15000	6.2	mg/kg	NV	200105588	044703-020				482545	1349489
Nickel	15000	5.4	mg/kg	NV	200105624	044703-023				482572	1349423
Nickel	15000	4.9	mg/kg	NV	200105612	044703-022				482563	1349490
N-Nitroso-di-n-propylamine	200	2000	ug/kg	U	51161	1509	19900204	2	2.5	482549.062	1349371.622
N-Nitroso-di-n-propylamine	200	1700	ug/kg	U	51160	1508	19900204	2	2.5	482594.983	1349371.022
N-Nitroso-di-n-propylamine	200	1300	ug/kg	U	51679	1512	19900206	2	2.5	482570.973	1349457.062
N-Nitroso-di-n-propylamine	200	480	ug/kg	UJ	99240	FT-5	19930205	2.08	2.58	482512.613	1349428.222
N-Nitroso-di-n-propylamine	200	440	ug/kg	U	52259	1515	19900207	2	2.5	482561.514	1349480.272
N-Nitroso-di-n-propylamine	200	430	ug/kg	U	54059	1510	19900204	2	2.5	482549.033	1349408.862
N-Nitroso-di-n-propylamine	200	430	ug/kg	U	54439	1511	19900205	2	2.5	482592.983	1349412.702
N-Nitroso-di-n-propylamine	200	420	ug/kg	U	53519	1513	19900206	2	2.5	482578.884	1349482.362
N-Nitroso-di-n-propylamine	200	420	ug/kg	U	53782	1514	19900206	2	2.5	482570.174	1349504.922
N-Nitroso-di-n-propylamine	200	410	ug/kg	UJ	99239	FT-5	19930205	0	0.5	482512.613	1349428.222
N-Nitrosodiphenylamine	51000	2000	ug/kg	U	51161	1509	19900204	2	2.5	482549.062	1349371.622
N-Nitrosodiphenylamine	51000	1700	ug/kg	U	51160	1508	19900204	2	2.5	482594.983	1349371.022
N-Nitrosodiphenylamine	51000	1300	ug/kg	U	51679	1512	19900206	2	2.5	482570.973	1349457.062
N-Nitrosodiphenylamine	51000	480	ug/kg	U	99240	FT-5	19930205	2.08	2.58	482512.613	1349428.222
N-Nitrosodiphenylamine	51000	440	ug/kg	U	52259	1515	19900207	2	2.5	482561.514	1349480.272
N-Nitrosodiphenylamine	51000	430	ug/kg	U	54059	1510	19900204	2	2.5	482549.033	1349408.862
N-Nitrosodiphenylamine	51000	430	ug/kg	U	54439	1511	19900205	2	2.5	482592.983	1349412.702
N-Nitrosodiphenylamine	51000	420	ug/kg	U	53519	1513	19900206	2	2.5	482578.884	1349482.362
N-Nitrosodiphenylamine	51000	420	ug/kg	U	53782	1514	19900206	2	2.5	482570.174	1349504.922
N-Nitrosodiphenylamine	51000	410	ug/kg	U	99239	FT-5	19930205	0	0.5	482512.613	1349428.222
Octachlorodibenzo-p-dioxin	8800	1000	ng/kg	U	99246	1513	19930113	2	2.5	482578.884	1349482.362
Octachlorodibenzo-p-dioxin	8800	1000	ng/kg	U	99239	FT-5	19930205	0	0.5	482512.613	1349428.222
Octachlorodibenzo-p-dioxin	8800	1000	ng/kg	U	99240	FT-5	19930205	2.08	2.58	482512.613	1349428.222
Octachlorodibenzo-p-dioxin	8800	970	ng/kg	U	99242	1508	19930115	2	2.5	482594.983	1349371.022
Octachlorodibenzo-p-dioxin	8800	970	ng/kg	U	99244	1511	19930115	2	2.5	482592.983	1349412.702
Octachlorodibenzo-p-dioxin	8800	960	ng/kg	U	99243	1509	19930114	2	2.5	482549.062	1349371.622
Octachlorodibenzo-p-dioxin	8800	960	ng/kg	U	99245	1512	19930114	2	2.5	482570.973	1349457.062
Pentachlorophenol	2300	9800	ug/kg	U	51161	1509	19900204	2	2.5	482549.062	1349371.622
Pentachlorophenol	2300	8500	ug/kg	U	51160	1508	19900204	2	2.5	482594.983	1349371.022
Pentachlorophenol	2300	6500	ug/kg	U	51679	1512	19900206	2	2.5	482570.973	1349457.062
Pentachlorophenol	2300	2300	ug/kg	U	99240	FT-5	19930205	2.08	2.58	482512.613	1349428.222

000056

APPENDIX B
HISTORICAL DATA COLLECTED FROM THE FIRE TRAINING FACILITY

PARAMETER	FRL	RESULT	UNITS	QUALIFIER	SAMPLE ID	LOCATION	SAMPLE DATE	Top	Bottom	Northing 83	Easting 83
Pentachlorophenol	2300	2200	ug/kg	U	52259	1515	19900207	2	2.5	482561.514	1349480.272
Pentachlorophenol	2300	2100	ug/kg	U	54059	1510	19900204	2	2.5	482549.033	1349408.862
Pentachlorophenol	2300	2100	ug/kg	U	54439	1511	19900205	2	2.5	482592.983	1349412.702
Pentachlorophenol	2300	2000	ug/kg	U	99239	FT-5	19930205	0	0.5	482512.613	1349428.222
Pentachlorophenol	2300	260	ug/kg	J	53782	1514	19900206	2	2.5	482570.174	1349504.922
Pentachlorophenol	2300	98	ug/kg	J	53519	1513	19900206	2	2.5	482578.884	1349482.362
Phenanthrene	NA	2000	ug/kg	U	51161	1509	19900204	2	2.5	482549.062	1349371.622
Phenanthrene	NA	1700	ug/kg	U	51160	1508	19900204	2	2.5	482594.983	1349371.022
Phenanthrene	NA	1300	ug/kg	U	51679	1512	19900206	2	2.5	482570.973	1349457.062
Phenanthrene	NA	960	ug/kg	NV	200105595	044703-020				482545	1349489
Phenanthrene	NA	480	ug/kg	U	99240	FT-5	19930205	2.08	2.58	482512.613	1349428.222
Phenanthrene	NA	440	ug/kg	U	52259	1515	19900207	2	2.5	482561.514	1349480.272
Phenanthrene	NA	430	ug/kg	U	54059	1510	19900204	2	2.5	482549.033	1349408.862
Phenanthrene	NA	430	ug/kg	U	54439	1511	19900205	2	2.5	482592.983	1349412.702
Phenanthrene	NA	420	ug/kg	U	53519	1513	19900206	2	2.5	482578.884	1349482.362
Phenanthrene	NA	420	ug/kg	U	53782	1514	19900206	2	2.5	482570.174	1349504.922
Phenanthrene	NA	310	ug/kg	NV	200105547	044703-016				482546	1349362
Phenanthrene	NA	270	ug/kg	NV	200101386	RA28-SP-2				482571	1349386
Phenanthrene	NA	180	ug/kg	NV	200105607	044703-021				482565	1349362
Phenanthrene	NA	170	ug/kg	NV	200105667	044703-025				482597	1349363
Phenanthrene	NA	67	ug/kg	J	99239	FT-5	19930205	0	0.5	482512.613	1349428.222
Phenanthrene	NA	42	ug/kg	NV	200105583	044703-019				482546	1349453
Plutonium-238	78	1.3	pCi/g	-	5671	ZONE 3-435	19880629	0	0.1666667	482505.412	1349367.463
Plutonium-238	78	0.6	pCi/g	U	5672	ZONE 3-435	19880629	0.1666667	0.3333333	482505.412	1349367.463
Plutonium-238	78	0.6	pCi/g	U	5673	ZONE 3-435	19880629	0.3333333	0.5	482505.412	1349367.463
Plutonium-238	78	0.6	pCi/g	U	5666	ZONE 3-456	19880621	0.1666667	0.3333333	482529.414	1349493.962
Plutonium-238	78	0.6	pCi/g	U	5667	ZONE 3-456	19880621	0.3333333	0.5	482529.414	1349493.962
Plutonium-238	78	0.6	pCi/g	UJ	5748	ZONE 3-457	19881006	0	0.5	482529.414	1349530.962
Plutonium-239/240	77	2.9	pCi/g	-	5672	ZONE 3-435	19880629	0.1666667	0.3333333	482505.412	1349367.463
Plutonium-239/240	77	1.9	pCi/g	-	5673	ZONE 3-435	19880629	0.3333333	0.5	482505.412	1349367.463
Plutonium-239/240	77	0.6	pCi/g	U	5671	ZONE 3-435	19880629	0	0.1666667	482505.412	1349367.463
Plutonium-239/240	77	0.6	pCi/g	U	5666	ZONE 3-456	19880621	0.1666667	0.3333333	482529.414	1349493.962
Plutonium-239/240	77	0.6	pCi/g	U	5667	ZONE 3-456	19880621	0.3333333	0.5	482529.414	1349493.962
Plutonium-239/240	77	0.6	pCi/g	UJ	5748	ZONE 3-457	19881006	0	0.5	482529.414	1349530.962
p-Methylphenol	250000	2000	ug/kg	U	51161	1509	19900204	2	2.5	482549.062	1349371.622
p-Methylphenol	250000	1700	ug/kg	U	51160	1508	19900204	2	2.5	482594.983	1349371.022
p-Methylphenol	250000	1300	ug/kg	U	51679	1512	19900206	2	2.5	482570.973	1349457.062
p-Methylphenol	250000	440	ug/kg	U	52259	1515	19900207	2	2.5	482561.514	1349480.272
p-Methylphenol	250000	430	ug/kg	U	54059	1510	19900204	2	2.5	482549.033	1349408.862
p-Methylphenol	250000	430	ug/kg	U	54439	1511	19900205	2	2.5	482592.983	1349412.702

000057

3201

APPENDIX B
HISTORICAL DATA COLLECTED FROM THE FIRE TRAINING FACILITY

PARAMETER	FRL	RESULT	UNITS	QUALIFIER	SAMPLE ID	LOCATION	SAMPLE DATE	Top	Bottom	Northing 83	Easting 83
p-Methylphenol	250000	420	ug/kg	U	53519	1513	19900206	2	2.5	482578.884	1349482.362
p-Methylphenol	250000	420	ug/kg	U	53782	1514	19900206	2	2.5	482570.174	1349504.922
p-Methylphenol	250000	110	ug/kg	J	99240	FT-5	19930205	2.08	2.58	482512.613	1349428.222
p-Methylphenol	250000	61	ug/kg	J	99239	FT-5	19930205	0	0.5	482512.613	1349428.222
Pyrene	NA	2200	ug/kg	NV	200105595	044703-020				482545	1349489
Pyrene	NA	2000	ug/kg	NV	200105547	044703-016				482546	1349362
Pyrene	NA	2000	ug/kg	U	51161	1509	19900204	2	2.5	482549.062	1349371.622
Pyrene	NA	1700	ug/kg	U	51160	1508	19900204	2	2.5	482594.983	1349371.022
Pyrene	NA	1300	ug/kg	NV	200105607	044703-021				482565	1349362
Pyrene	NA	1300	ug/kg	U	51679	1512	19900206	2	2.5	482570.973	1349457.062
Pyrene	NA	480	ug/kg	U	99240	FT-5	19930205	2.08	2.58	482512.613	1349428.222
Pyrene	NA	440	ug/kg	U	52259	1515	19900207	2	2.5	482561.514	1349480.272
Pyrene	NA	430	ug/kg	U	54059	1510	19900204	2	2.5	482549.033	1349408.862
Pyrene	NA	430	ug/kg	U	54439	1511	19900205	2	2.5	482592.983	1349412.702
Pyrene	NA	420	ug/kg	U	53519	1513	19900206	2	2.5	482578.884	1349482.362
Pyrene	NA	420	ug/kg	U	53782	1514	19900206	2	2.5	482570.174	1349504.922
Pyrene	NA	400	ug/kg	NV	200105667	044703-025				482597	1349363
Pyrene	NA	250	ug/kg	J	99239	FT-5	19930205	0	0.5	482512.613	1349428.222
Pyrene	NA	210	ug/kg	NV	200106143	044703-049				482567	1349490
Pyrene	NA	200	ug/kg	NV	200105511	044703-013				482571	1349484
Pyrene	NA	130	ug/kg	NV	200105703	044703-028				482634	1349363
Pyrene	NA	120	ug/kg	NV	200105739	044703-031				482544	1349413
Pyrene	NA	110	ug/kg	NV	200105715	044703-029				482632	1349392
Pyrene	NA	70	ug/kg	NV	200105583	044703-019				482546	1349453
Pyrene	NA	67	ug/kg	NV	200105571	044703-018				482546	1349422
Pyrene	NA	62	ug/kg	NV	200101374	RA28-SP-1				482579	1349402
Pyrene	NA	53	ug/kg	NV	200105727	044703-030				482629	1349425
Pyrene	NA	49	ug/kg	NV	200101442	RA28-SP-5				482562	1349381
Pyrene	NA	48	ug/kg	NV	200105631	044703-023				482572	1349423
Pyrene	NA	46	ug/kg	NV	200105523	044703-014				482571	1349471
Radium-226	1.7	1.7	pCi/g	NV	200101454	RA28-SP-6				482563	1349398
Radium-226	1.7	1.6	pCi/g	NV	200101375	RA28-SP-1				482579	1349402
Radium-226	1.7	1.4	pCi/g	NV	200101476	RA28-SP-8				482532	1349428
Radium-226	1.7	1.21	pCi/g	NV	99240	FT-5	19930205	2.08	2.58	482512.613	1349428.222
Radium-226	1.7	1.2	pCi/g	J	5671	ZONE 3-435	19880629	0	0.1666667	482505.412	1349367.463
Radium-226	1.7	1.2	pCi/g	J	5748	ZONE 3-457	19881006	0	0.5	482529.414	1349530.962
Radium-226	1.7	1.2	pCi/g	NV	200105548	044703-016				482546	1349362
Radium-226	1.7	1.2	pCi/g	NV	200105656	044703-024				482570	1349438
Radium-226	1.7	1.2	pCi/g	NV	200101421	RA28-SP-3				482570	1349383
Radium-226	1.7	1.1	pCi/g	NV	200105608	044703-021				482565	1349362

000058

APPENDIX B
HISTORICAL DATA COLLECTED FROM THE FIRE TRAINING FACILITY

PARAMETER	FRL	RESULT	UNITS	QUALIFIER	SAMPLE ID	LOCATION	SAMPLE DATE	Top	Bottom	Northing 83	Easting 83
Radium-226	1.7	1.1	pCi/g	NV	200101443	RA28-SP-5				482562	1349381
Radium-226	1.7	1.06	pCi/g	NV	99239	FT-5	19930205	0	0.5	482512.613	1349428.222
Radium-226	1.7	1	pCi/g	J	5673	ZONE 3-435	19880629	0.3333333	0.5	482505.412	1349367.463
Radium-226	1.7	1	pCi/g	NV	200105740	044703-031				482544	1349413
Radium-226	1.7	1	pCi/g	NV	200101387	RA28-SP-2				482571	1349386
Radium-226	1.7	1	pCi/g	NV	200101432	RA28-SP-4				482563	1349394
Radium-226	1.7	1	pCi/g	NV	200101465	RA28-SP-7				482562	1349381
Radium-226	1.7	0.7	pCi/g	NV	200105596	044703-020				482545	1349489
Radium-226	1.7	0.5	pCi/g	J	5667	ZONE 3-456	19880621	0.3333333	0.5	482529.414	1349493.962
Radium-226	1.7	0.4	pCi/g	J	5666	ZONE 3-456	19880621	0.1666667	0.3333333	482529.414	1349493.962
Radium-226	1.7	0.4	pCi/g	NV	200105560	044703-017				482546	1349392
Radium-226	1.7	0.4	pCi/g	NV	200105572	044703-018				482546	1349422
Radium-228	1.8	5.8	pCi/g	J	5671	ZONE 3-435	19880629	0	0.1666667	482505.412	1349367.463
Radium-228	1.8	2	pCi/g	J	5673	ZONE 3-435	19880629	0.3333333	0.5	482505.412	1349367.463
Radium-228	1.8	1.3	pCi/g	NV	200101455	RA28-SP-6				482563	1349398
Radium-228	1.8	1.26	pCi/g	NV	99240	FT-5	19930205	2.08	2.58	482512.613	1349428.222
Radium-228	1.8	1.2	pCi/g	NV	200105741	044703-031				482544	1349413
Radium-228	1.8	1.1	pCi/g	J	5748	ZONE 3-457	19881006	0	0.5	482529.414	1349530.962
Radium-228	1.8	1.1	pCi/g	NV	200101422	RA28-SP-3				482570	1349383
Radium-228	1.8	1	pCi/g	NV	200101376	RA28-SP-1				482579	1349402
Radium-228	1.8	1	pCi/g	NV	200101388	RA28-SP-2				482571	1349386
Radium-228	1.8	1	pCi/g	NV	200101477	RA28-SP-8				482532	1349428
Radium-228	1.8	0.9	pCi/g	NV	200105657	044703-024				482570	1349438
Radium-228	1.8	0.9	pCi/g	NV	200101444	RA28-SP-5				482562	1349381
Radium-228	1.8	0.8	pCi/g	NV	99239	FT-5	19930205	0	0.5	482512.613	1349428.222
Radium-228	1.8	0.8	pCi/g	NV	200101433	RA28-SP-4				482563	1349394
Radium-228	1.8	0.8	pCi/g	NV	200101466	RA28-SP-7				482562	1349381
Radium-228	1.8	0.7	pCi/g	NV	200105549	044703-016				482546	1349362
Radium-228	1.8	0.7	pCi/g	NV	200105609	044703-021				482565	1349362
Radium-228	1.8	0.5	pCi/g	NV	200105573	044703-018				482546	1349422
Radium-228	1.8	0.5	pCi/g	UJ	5666	ZONE 3-456	19880621	0.1666667	0.3333333	482529.414	1349493.962
Radium-228	1.8	0.5	pCi/g	UJ	5667	ZONE 3-456	19880621	0.3333333	0.5	482529.414	1349493.962
Radium-228	1.8	0.3	pCi/g	NV	200105561	044703-017				482546	1349392
Radium-228	1.8	0.3	pCi/g	NV	200105597	044703-020				482545	1349489
Selenium	5400	0.78	mg/kg	UJ	51161	1509	19900204	2	2.5	482549.062	1349371.622
Selenium	5400	0.54	mg/kg	U	99240	FT-5	19930205	2.08	2.58	482512.613	1349428.222
Selenium	5400	0.51	mg/kg	UJ	51679	1512	19900206	2	2.5	482570.973	1349457.062
Selenium	5400	0.48	mg/kg	U	99239	FT-5	19930205	0	0.5	482512.613	1349428.222
Selenium	5400	0.47	mg/kg	UJ	54059	1510	19900204	2	2.5	482549.033	1349408.862
Selenium	5400	0.46	mg/kg	UJ	54439	1511	19900205	2	2.5	482592.983	1349412.702

000059

3201

APPENDIX B
HISTORICAL DATA COLLECTED FROM THE FIRE TRAINING FACILITY

PARAMETER	FRL	RESULT	UNITS	QUALIFIER	SAMPLE ID	LOCATION	SAMPLE DATE	Top	Bottom	Northing 83	Easting 83
Selenium	5400	0.45	mg/kg	UJ	53782	1514	19900206	2	2.5	482570.174	1349504.922
Selenium	5400	0.44	mg/kg	UJ	52259	1515	19900207	2	2.5	482561.514	1349480.272
Selenium	5400	0.43	mg/kg	UJ	51160	1508	19900204	2	2.5	482594.983	1349371.022
Selenium	5400	0.4	mg/kg	UJ	53519	1513	19900206	2	2.5	482578.884	1349482.362
Silver	29000	5.6	mg/kg	-	51679	1512	19900206	2	2.5	482570.973	1349457.062
Silver	29000	4.9	mg/kg	J	99240	FT-5	19930205	2.08	2.58	482512.613	1349428.222
Silver	29000	4.3	mg/kg	J	99239	FT-5	19930205	0	0.5	482512.613	1349428.222
Silver	29000	2.9	mg/kg	-	54439	1511	19900205	2	2.5	482592.983	1349412.702
Silver	29000	2.8	mg/kg	-	51160	1508	19900204	2	2.5	482594.983	1349371.022
Silver	29000	2.4	mg/kg	U	53519	1513	19900206	2	2.5	482578.884	1349482.362
Silver	29000	2.2	mg/kg	U	51161	1509	19900204	2	2.5	482549.062	1349371.622
Silver	29000	2.2	mg/kg	U	54059	1510	19900204	2	2.5	482549.033	1349408.862
Silver	29000	2.1	mg/kg	U	53782	1514	19900206	2	2.5	482570.174	1349504.922
Silver	29000	2.1	mg/kg	U	52259	1515	19900207	2	2.5	482561.514	1349480.272
Strontium-90	14	5	pCi/g	-	5748	ZONE 3-457	19881006	0	0.5	482529.414	1349530.962
Strontium-90	14	2	pCi/g	UNV	99239	FT-5	19930205	0	0.5	482512.613	1349428.222
Strontium-90	14	2	pCi/g	UNV	99240	FT-5	19930205	2.08	2.58	482512.613	1349428.222
Strontium-90	14	0.5	pCi/g	U	5672	ZONE 3-435	19880629	0.1666667	0.3333333	482505.412	1349367.463
Strontium-90	14	0.5	pCi/g	U	5673	ZONE 3-435	19880629	0.3333333	0.5	482505.412	1349367.463
Strontium-90	14	0.5	pCi/g	U	5666	ZONE 3-456	19880621	0.1666667	0.3333333	482529.414	1349493.962
Strontium-90	14	0.5	pCi/g	U	5667	ZONE 3-456	19880621	0.3333333	0.5	482529.414	1349493.962
Strontium-90	14	0.5	pCi/g	UJ	5671	ZONE 3-435	19880629	0	0.1666667	482505.412	1349367.463
Technetium-99	30	27.3	pCi/g	-	5673	ZONE 3-435	19880629	0.3333333	0.5	482505.412	1349367.463
Technetium-99	30	18.4	pCi/g	-	5672	ZONE 3-435	19880629	0.1666667	0.3333333	482505.412	1349367.463
Technetium-99	30	16.7	pCi/g	NV	99239	FT-5	19930205	0	0.5	482512.613	1349428.222
Technetium-99	30	11.9	pCi/g	-	5671	ZONE 3-435	19880629	0	0.1666667	482505.412	1349367.463
Technetium-99	30	11.9	pCi/g	NV	99240	FT-5	19930205	2.08	2.58	482512.613	1349428.222
Technetium-99	30	10.5	pCi/g	J	5666	ZONE 3-456	19880621	0.1666667	0.3333333	482529.414	1349493.962
Technetium-99	30	8.7	pCi/g	J	5667	ZONE 3-456	19880621	0.3333333	0.5	482529.414	1349493.962
Technetium-99	30	1	pCi/g	U	5748	ZONE 3-457	19881006	0	0.5	482529.414	1349530.962
Tetrachloroethene	3600	86000	ug/kg	NV	200101413	RA28-SP-3				482570	1349383
Tetrachloroethene	3600	53	ug/kg	NV	200101368	RA28-SP-1				482579	1349402
Tetrachloroethene	3600	52	ug/kg	NV	200101435	RA28-SP-5				482562	1349381
Tetrachloroethene	3600	43	ug/kg	NV	200101424	RA28-SP-4				482563	1349394
Tetrachloroethene	3600	15	ug/kg	NV	200101447	RA28-SP-6				482563	1349398
Tetrachloroethene	3600	14	ug/kg	U	99240	FT-5	19930205	2.08	2.58	482512.613	1349428.222
Tetrachloroethene	3600	12	ug/kg	U	99239	FT-5	19930205	0	0.5	482512.613	1349428.222
Tetrachloroethene	3600	7	ug/kg	NV	200101468	RA28-SP-8				482532	1349428
Tetrachloroethene	3600	6	ug/kg	U	51160	1508	19900204	2	2.5	482594.983	1349371.022
Tetrachloroethene	3600	6	ug/kg	U	54059	1510	19900204	2	2.5	482549.033	1349408.862

000060

APPENDIX B
HISTORICAL DATA COLLECTED FROM THE FIRE TRAINING FACILITY

PARAMETER	FRL	RESULT	UNITS	QUALIFIER	SAMPLE ID	LOCATION	SAMPLE DATE	Top	Bottom	Northing 83	Easting 83
Tetrachloroethene	3600	6	ug/kg	U	54439	1511	19900205	2	2.5	482592.983	1349412.702
Tetrachloroethene	3600	6	ug/kg	U	51679	1512	19900206	2	2.5	482570.973	1349457.062
Tetrachloroethene	3600	6	ug/kg	U	53519	1513	19900206	2	2.5	482578.884	1349482.362
Tetrachloroethene	3600	6	ug/kg	U	53782	1514	19900206	2	2.5	482570.174	1349504.922
Tetrachloroethene	3600	6	ug/kg	U	52259	1515	19900207	2	2.5	482561.514	1349480.272
Tetrachloroethene	3600	5	ug/kg	NV	200101379	RA28-SP-2				482571	1349386
Tetrachloroethene	3600	2	ug/kg	J	51161	1509	19900204	2	2.5	482549.062	1349371.622
Tetrachloroethene	3600	2	ug/kg	NV	200105552	044703-017				482546	1349392
Thallium	91	0.54	mg/kg	U	99240	FT-5	19930205	2.08	2.58	482512.613	1349428.222
Thallium	91	0.51	mg/kg	U	51679	1512	19900206	2	2.5	482570.973	1349457.062
Thallium	91	0.48	mg/kg	U	99239	FT-5	19930205	0	0.5	482512.613	1349428.222
Thallium	91	0.47	mg/kg	U	54059	1510	19900204	2	2.5	482549.033	1349408.862
Thallium	91	0.46	mg/kg	U	54439	1511	19900205	2	2.5	482592.983	1349412.702
Thallium	91	0.45	mg/kg	U	53782	1514	19900206	2	2.5	482570.174	1349504.922
Thallium	91	0.44	mg/kg	U	52259	1515	19900207	2	2.5	482561.514	1349480.272
Thallium	91	0.43	mg/kg	U	51160	1508	19900204	2	2.5	482594.983	1349371.022
Thallium	91	0.4	mg/kg	U	53519	1513	19900206	2	2.5	482578.884	1349482.362
Thallium	91	0.39	mg/kg	U	51161	1509	19900204	2	2.5	482549.062	1349371.622
Thorium-228	1.7	6.2	pCi/g	-	5671	ZONE 3-435	19880629	0	0.1666667	482505.412	1349367.463
Thorium-228	1.7	2.4	pCi/g	-	5672	ZONE 3-435	19880629	0.1666667	0.3333333	482505.412	1349367.463
Thorium-228	1.7	1.3	pCi/g	-	5673	ZONE 3-435	19880629	0.3333333	0.5	482505.412	1349367.463
Thorium-228	1.7	1.3	pCi/g	NV	200105652	044703-024				482570	1349438
Thorium-228	1.7	1.3	pCi/g	NV	200101473	RA28-SP-8				482532	1349428
Thorium-228	1.7	1.2	pCi/g	NV	200101373	RA28-SP-1				482579	1349402
Thorium-228	1.7	1.2	pCi/g	NV	200101384	RA28-SP-2				482571	1349386
Thorium-228	1.7	1.1	pCi/g	NV	200105736	044703-031				482544	1349413
Thorium-228	1.7	1.1	pCi/g	NV	200101451	RA28-SP-6				482563	1349398
Thorium-228	1.7	1	pCi/g	NV	200105544	044703-016				482546	1349362
Thorium-228	1.7	0.95	pCi/g	NV	99240	FT-5	19930205	2.08	2.58	482512.613	1349428.222
Thorium-228	1.7	0.9	pCi/g	-	5748	ZONE 3-457	19881006	0	0.5	482529.414	1349530.962
Thorium-228	1.7	0.9	pCi/g	NV	200101418	RA28-SP-3				482570	1349383
Thorium-228	1.7	0.9	pCi/g	NV	200101440	RA28-SP-5				482562	1349381
Thorium-228	1.7	0.81	pCi/g	J	99239	FT-5	19930205	0	0.5	482512.613	1349428.222
Thorium-228	1.7	0.8	pCi/g	NV	200101429	RA28-SP-4				482563	1349394
Thorium-228	1.7	0.8	pCi/g	NV	200101462	RA28-SP-7				482562	1349381
Thorium-228	1.7	0.7	pCi/g	NV	200105604	044703-021				482565	1349362
Thorium-228	1.7	0.6	pCi/g	-	5667	ZONE 3-456	19880621	0.3333333	0.5	482529.414	1349493.962
Thorium-228	1.7	0.6	pCi/g	U	5666	ZONE 3-456	19880621	0.1666667	0.3333333	482529.414	1349493.962
Thorium-228	1.7	0.5	pCi/g	NV	200105568	044703-018				482546	1349422
Thorium-228	1.7	0.3	pCi/g	NV	200105556	044703-017				482546	1349392

000061

3201

APPENDIX B
HISTORICAL DATA COLLECTED FROM THE FIRE TRAINING FACILITY

PARAMETER	FRL	RESULT	UNITS	QUALIFIER	SAMPLE ID	LOCATION	SAMPLE DATE	Top	Bottom	Northing 83	Easting 83
Thorium-228	1.7	0.3	pCi/g	NV	200105592	044703-020				482545	1349489
Thorium-230	280	13.5	pCi/g	-	5671	ZONE 3-435	19880629	0	0.1666667	482505.412	1349367.463
Thorium-230	280	5.4	pCi/g	-	5673	ZONE 3-435	19880629	0.3333333	0.5	482505.412	1349367.463
Thorium-230	280	4.3	pCi/g	-	5672	ZONE 3-435	19880629	0.1666667	0.3333333	482505.412	1349367.463
Thorium-230	280	3.4	pCi/g	NV	200105544	044703-016				482546	1349362
Thorium-230	280	2.3	pCi/g	NV	200105604	044703-021				482565	1349362
Thorium-230	280	2.26	pCi/g	J	99239	FT-5	19930205	0	0.5	482512.613	1349428.222
Thorium-230	280	1.7	pCi/g	J	5667	ZONE 3-456	19880621	0.3333333	0.5	482529.414	1349493.962
Thorium-230	280	1.7	pCi/g	NV	200105652	044703-024				482570	1349438
Thorium-230	280	1.7	pCi/g	NV	200101440	RA28-SP-5				482562	1349381
Thorium-230	280	1.7	pCi/g	NV	200101473	RA28-SP-8				482532	1349428
Thorium-230	280	1.6	pCi/g	-	5748	ZONE 3-457	19881006	0	0.5	482529.414	1349530.962
Thorium-230	280	1.6	pCi/g	NV	200101378	RA28-SP-1				482579	1349402
Thorium-230	280	1.6	pCi/g	NV	200101384	RA28-SP-2				482571	1349386
Thorium-230	280	1.5	pCi/g	NV	200105736	044703-031				482544	1349413
Thorium-230	280	1.3	pCi/g	NV	200101451	RA28-SP-6				482563	1349398
Thorium-230	280	1.2	pCi/g	NV	200105568	044703-018				482546	1349422
Thorium-230	280	1.2	pCi/g	NV	200101429	RA28-SP-4				482563	1349394
Thorium-230	280	1.1	pCi/g	NV	200101418	RA28-SP-3				482570	1349383
Thorium-230	280	1	pCi/g	J	5666	ZONE 3-456	19880621	0.1666667	0.3333333	482529.414	1349493.962
Thorium-230	280	1	pCi/g	NV	200105556	044703-017				482546	1349392
Thorium-230	280	1	pCi/g	NV	200101462	RA28-SP-7				482562	1349381
Thorium-230	280	0.8	pCi/g	NV	200105592	044703-020				482545	1349489
Thorium-230	280	0.65	pCi/g	NV	99240	FT-5	19930205	2.08	2.58	482512.613	1349428.222
Thorium-232	1.5	5.2	pCi/g	-	5671	ZONE 3-435	19880629	0	0.1666667	482505.412	1349367.463
Thorium-232	1.5	1.3	pCi/g	-	5672	ZONE 3-435	19880629	0.1666667	0.3333333	482505.412	1349367.463
Thorium-232	1.5	1.2	pCi/g	-	5673	ZONE 3-435	19880629	0.3333333	0.5	482505.412	1349367.463
Thorium-232	1.5	1.2	pCi/g	NV	200105652	044703-024				482570	1349438
Thorium-232	1.5	1.2	pCi/g	NV	200101378	RA28-SP-1				482579	1349402
Thorium-232	1.5	1.2	pCi/g	NV	200101384	RA28-SP-2				482571	1349386
Thorium-232	1.5	1.2	pCi/g	NV	200101473	RA28-SP-8				482532	1349428
Thorium-232	1.5	1.1	pCi/g	NV	200105544	044703-016				482546	1349362
Thorium-232	1.5	1.1	pCi/g	NV	200101440	RA28-SP-5				482562	1349381
Thorium-232	1.5	1.1	pCi/g	NV	200101451	RA28-SP-6				482563	1349398
Thorium-232	1.5	0.9	pCi/g	NV	200105736	044703-031				482544	1349413
Thorium-232	1.5	0.9	pCi/g	NV	200101429	RA28-SP-4				482563	1349394
Thorium-232	1.5	0.824	pCi/g	J	99239	FT-5	19930205	0	0.5	482512.613	1349428.222
Thorium-232	1.5	0.8	pCi/g	-	5748	ZONE 3-457	19881006	0	0.5	482529.414	1349530.962
Thorium-232	1.5	0.8	pCi/g	NV	200101418	RA28-SP-3				482570	1349383
Thorium-232	1.5	0.7	pCi/g	J	5667	ZONE 3-456	19880621	0.3333333	0.5	482529.414	1349493.962

000062

APPENDIX B
HISTORICAL DATA COLLECTED FROM THE FIRE TRAINING FACILITY

PARAMETER	FRL	RESULT	UNITS	QUALIFIER	SAMPLE ID	LOCATION	SAMPLE DATE	Top	Bottom	Northing 83	Easting 83
Thorium-232	1.5	0.7	pCi/g	NV	200105604	044703-021				482565	1349362
Thorium-232	1.5	0.6	pCi/g	NV	200101462	RA28-SP-7				482562	1349381
Thorium-232	1.5	0.6	pCi/g	UJ	5666	ZONE 3-456	19880621	0.1666667	0.3333333	482529.414	1349493.962
Thorium-232	1.5	0.6	pCi/g	UNV	99240	FT-5	19930205	2.08	2.58	482512.613	1349428.222
Thorium-232	1.5	0.5	pCi/g	NV	200105568	044703-018				482546	1349422
Thorium-232	1.5	0.3	pCi/g	NV	200105556	044703-017				482546	1349392
Thorium-232	1.5	0.2	pCi/g	NV	200105592	044703-020				482545	1349489
Toluene	1.00E+08	14	ug/kg	U	99240	FT-5	19930205	2.08	2.58	482512.613	1349428.222
Toluene	1.00E+08	12	ug/kg	U	99239	FT-5	19930205	0	0.5	482512.613	1349428.222
Toluene	1.00E+08	6	ug/kg	U	51160	1508	19900204	2	2.5	482594.983	1349371.022
Toluene	1.00E+08	6	ug/kg	U	54059	1510	19900204	2	2.5	482549.033	1349408.862
Toluene	1.00E+08	6	ug/kg	U	54439	1511	19900205	2	2.5	482592.983	1349412.702
Toluene	1.00E+08	6	ug/kg	U	51679	1512	19900206	2	2.5	482570.973	1349457.062
Toluene	1.00E+08	6	ug/kg	U	53519	1513	19900206	2	2.5	482578.884	1349482.362
Toluene	1.00E+08	6	ug/kg	U	53782	1514	19900206	2	2.5	482570.174	1349504.922
Toluene	1.00E+08	6	ug/kg	U	52259	1515	19900207	2	2.5	482561.514	1349480.272
Toluene	1.00E+08	2	ug/kg	J	51161	1509	19900204	2	2.5	482549.062	1349371.622
Tributyl phosphate	250000	480	ug/kg	U	99240	FT-5	19930205	2.08	2.58	482512.613	1349428.222
Tributyl phosphate	250000	410	ug/kg	U	99239	FT-5	19930205	0	0.5	482512.613	1349428.222
Trichloroethene	25000	14	ug/kg	U	99240	FT-5	19930205	2.08	2.58	482512.613	1349428.222
Trichloroethene	25000	12	ug/kg	U	99239	FT-5	19930205	0	0.5	482512.613	1349428.222
Trichloroethene	25000	6	ug/kg	U	51160	1508	19900204	2	2.5	482594.983	1349371.022
Trichloroethene	25000	6	ug/kg	U	54059	1510	19900204	2	2.5	482549.033	1349408.862
Trichloroethene	25000	6	ug/kg	U	54439	1511	19900205	2	2.5	482592.983	1349412.702
Trichloroethene	25000	6	ug/kg	U	51679	1512	19900206	2	2.5	482570.973	1349457.062
Trichloroethene	25000	6	ug/kg	U	53519	1513	19900206	2	2.5	482578.884	1349482.362
Trichloroethene	25000	6	ug/kg	U	53782	1514	19900206	2	2.5	482570.174	1349504.922
Trichloroethene	25000	6	ug/kg	U	52259	1515	19900207	2	2.5	482561.514	1349480.272
Trichloroethene	25000	1	ug/kg	J	51161	1509	19900204	2	2.5	482549.062	1349371.622
Uranium, Total	82	1044.614917	mg/kg	J	5665	ZONE 3-456	19880621	0	0.1666667	482529.414	1349493.962
Uranium, Total	82	1001.958343	mg/kg	-	5671	ZONE 3-435	19880629	0	0.1666667	482505.412	1349367.463
Uranium, Total	82	883.571939	mg/kg	J	5672	ZONE 3-435	19880629	0.1666667	0.3333333	482505.412	1349367.463
Uranium, Total	82	310	mg/kg	NV	200101415	RA28-SP-3				482570	1349383
Uranium, Total	82	243.2857388	mg/kg	J	5673	ZONE 3-435	19880629	0.3333333	0.5	482505.412	1349367.463
Uranium, Total	82	136.0058316	mg/kg	J	5667	ZONE 3-456	19880621	0.3333333	0.5	482529.414	1349493.962
Uranium, Total	82	112.2879036	mg/kg	-	5666	ZONE 3-456	19880621	0.1666667	0.3333333	482529.414	1349493.962
Uranium, Total	82	100	mg/kg	NV	200101381	RA28-SP-2				482571	1349386
Uranium, Total	82	89.69221754	mg/kg	NV	99239	FT-5	19930205	0	0.5	482512.613	1349428.222
Uranium, Total	82	67.8	mg/kg	-	53095	1509	19900202	0	0.5	482549.062	1349371.622
Uranium, Total	82	60	mg/kg	NV	200101437	RA28-SP-5				482562	1349381

000063

3201

APPENDIX B
HISTORICAL DATA COLLECTED FROM THE FIRE TRAINING FACILITY

PARAMETER	FRL	RESULT	UNITS	QUALIFIER	SAMPLE ID	LOCATION	SAMPLE DATE	Top	Bottom	Northing 83	Easting 83
Uranium, Total	82	52.16820565	mg/kg	NV	99240	FT-5	19930205	2.08	2.58	482512.613	1349428.222
Uranium, Total	82	42.3	mg/kg	-	52255	1515	19900207	0	0.5	482561.514	1349480.272
Uranium, Total	82	38.4	mg/kg	-	51675	1512	19900206	0	0.5	482570.973	1349457.062
Uranium, Total	82	30.08757048	mg/kg	-	5748	ZONE 3-457	19881006	0	0.5	482529.414	1349530.962
Uranium, Total	82	28.3	mg/kg	-	54555	1514	19900207	0	0.5	482570.174	1349504.922
Uranium, Total	82	27	mg/kg	NV	200105601	044703-021				482565	1349362
Uranium, Total	82	26	mg/kg	NV	200101470	RA28-SP-8				482532	1349428
Uranium, Total	82	25	mg/kg	NV	200105541	044703-016				482546	1349362
Uranium, Total	82	25	mg/kg	NV	200105733	044703-031				482544	1349413
Uranium, Total	82	22	mg/kg	NV	200101448	RA28-SP-6				482563	1349398
Uranium, Total	82	20	mg/kg	NV	200105553	044703-017				482546	1349392
Uranium, Total	82	20	mg/kg	NV	200101370	RA28-SP-1				482579	1349402
Uranium, Total	82	18	mg/kg	NV	200105565	044703-018				482546	1349422
Uranium, Total	82	17.2	mg/kg	J	54055	1510	19900204	0	0.5	482549.033	1349408.862
Uranium, Total	82	17	mg/kg	NV	200105649	044703-024				482570	1349438
Uranium, Total	82	16.4	mg/kg	J	15539	1508	19900202	0	0.5	482594.983	1349371.022
Uranium, Total	82	15.5	mg/kg	NV	3086-11229-01	11229	26-Aug-93			482546.35	1349365.47
Uranium, Total	82	14.3	mg/kg	-	53101	1509	19900202	3	3.5	482549.062	1349371.622
Uranium, Total	82	14	mg/kg	NV	200101428	RA28-SP-4				482563	1349394
Uranium, Total	82	14	pCi/g	NV	200101459	RA28-SP-7				482562	1349381
Uranium, Total	82	13.8	mg/kg	-	53265	1513	19900206	15	15.5	482578.884	1349482.362
Uranium, Total	82	13.6	mg/kg	-	53105	1509	19900202	5	5.5	482549.062	1349371.622
Uranium, Total	82	11	mg/kg	UNV	3086-11229-02	11229	26-Aug-93			482546.35	1349365.47
Uranium, Total	82	11	mg/kg	UNV	3086-11229-03	11229	26-Aug-93			482546.35	1349365.47
Uranium, Total	82	11	mg/kg	UNV	3086-11229-04	11229	26-Aug-93			482546.35	1349365.47
Uranium, Total	82	11	mg/kg	UNV	3086-11229-05	11229	26-Aug-93			482546.35	1349365.47
Uranium, Total	82	10.6	mg/kg	J	15551	1508	19900202	6	6.5	482594.983	1349371.022
Uranium, Total	82	10.1	mg/kg	-	54440	1511	19900205	2.5	3	482592.983	1349412.702
Uranium, Total	82	8.52	mg/kg	J	54065	1510	19900204	5	5.5	482549.033	1349408.862
Uranium, Total	82	8.47	mg/kg	-	51680	1512	19900206	2.5	3	482570.973	1349457.062
Uranium, Total	82	8.25	mg/kg	-	53125	1509	19900202	15	15.5	482549.062	1349371.622
Uranium, Total	82	7.07	mg/kg	-	53520	1513	19900206	2.5	3	482578.884	1349482.362
Uranium, Total	82	6.68	mg/kg	-	52265	1515	19900207	5	5.5	482561.514	1349480.272
Uranium, Total	82	6.53	mg/kg	-	54447	1511	19900205	6	6.5	482592.983	1349412.702
Uranium, Total	82	6.41	mg/kg	-	53775	1511	19900205	10	10.5	482592.983	1349412.702
Uranium, Total	82	6.3	mg/kg	NV	200105589	044703-020				482545	1349489
Uranium, Total	82	4.54	mg/kg	UJ	15559	1508	19900202	10	10.5	482594.983	1349371.022
Uranium, Total	82	4.48	mg/kg	U	53525	1513	19900206	5	5.5	482578.884	1349482.362
Uranium, Total	82	3.55	mg/kg	-	54935	1514	19900207	10	10.5	482570.174	1349504.922
Uranium, Total	82	3.4	mg/kg	-	51895	1512	19900206	10	10.5	482570.973	1349457.062

000064

APPENDIX B
HISTORICAL DATA COLLECTED FROM THE FIRE TRAINING FACILITY

PARAMETER	FRL	RESULT	UNITS	QUALIFIER	SAMPLE ID	LOCATION	SAMPLE DATE	Top	Bottom	Northing 83	Easting 83
Vanadium	5100	29.9	mg/kg	NV	200101469	RA28-SP-8				482532	1349428
Vanadium	5100	28.6	mg/kg	NV	200101447	RA28-SP-6				482563	1349398
Vanadium	5100	28.5	mg/kg	NV	200101380	RA28-SP-2				482571	1349386
Vanadium	5100	27.5	mg/kg	NV	200105516	044703-014				482571	1349471
Vanadium	5100	27.3	mg/kg	NV	200105528	044703-015				482572	1349462
Vanadium	5100	26	mg/kg	NV	200106172	044703-051				482567	1349477
Vanadium	5100	25.8	mg/kg	-	51161	1509	19900204	2	2.5	482549.062	1349371.622
Vanadium	5100	25.7	mg/kg	-	52259	1515	19900207	2	2.5	482561.514	1349480.272
Vanadium	5100	25.3	mg/kg	-	54059	1510	19900204	2	2.5	482549.033	1349408.862
Vanadium	5100	25.3	mg/kg	-	99240	FT-5	19930205	2.08	2.58	482512.613	1349428.222
Vanadium	5100	25	mg/kg	NV	200101369	RA28-SP-1				482579	1349402
Vanadium	5100	24.9	mg/kg	-	54439	1511	19900205	2	2.5	482592.983	1349412.702
Vanadium	5100	24.6	mg/kg	-	51160	1508	19900204	2	2.5	482594.983	1349371.022
Vanadium	5100	24	mg/kg	NV	200105504	044703-013				482571	1349484
Vanadium	5100	23.6	mg/kg	-	99239	FT-5	19930205	0	0.5	482512.613	1349428.222
Vanadium	5100	22.9	mg/kg	-	51679	1512	19900206	2	2.5	482570.973	1349457.062
Vanadium	5100	22.7	mg/kg	NV	200106136	044703-049				482567	1349490
Vanadium	5100	22.1	mg/kg	NV	200101436	RA28-SP-5				482562	1349381
Vanadium	5100	21.9	mg/kg	-	53782	1514	19900206	2	2.5	482570.174	1349504.922
Vanadium	5100	21.5	mg/kg	NV	200105732	044703-031				482544	1349413
Vanadium	5100	21.5	mg/kg	NV	200101425	RA28-SP-4				482563	1349394
Vanadium	5100	20.6	mg/kg	NV	200106160	044703-050				482574	1349477
Vanadium	5100	20.4	mg/kg	-	53519	1513	19900206	2	2.5	482578.884	1349482.362
Vanadium	5100	19.9	mg/kg	NV	200105468	044703-011				482571	1349444
Vanadium	5100	19.4	mg/kg	NV	200105480	044703-011				482571	1349444
Vanadium	5100	18.2	mg/kg	NV	200101414	RA28-SP-3				482570	1349383
Vanadium	5100	14.1	mg/kg	NV	200105600	044703-021				482565	1349362
Vanadium	5100	12	mg/kg	NV	200105588	044703-020				482545	1349489
Vanadium	5100	11.6	mg/kg	NV	200105540	044703-016				482546	1349362
Vanadium	5100	11.3	mg/kg	NV	200105576	044703-019				482546	1349453
Vanadium	5100	10.8	mg/kg	NV	200105456	044703-048				482572	1349445
Vanadium	5100	10.1	mg/kg	NV	200105492	044703-012				482571	1349492
Vanadium	5100	8.1	mg/kg	NV	200105612	044703-022				482563	1349490
Vanadium	5100	7.5	mg/kg	NV	200105624	044703-023				482572	1349423
Vanadium	5100	7.1	mg/kg	NV	200105552	044703-017				482546	1349392
Vinyl chloride	130	14	ug/kg	U	99240	FT-5	19930205	2.08	2.58	482512.613	1349428.222
Vinyl chloride	130	13	ug/kg	U	51679	1512	19900206	2	2.5	482570.973	1349457.062
Vinyl chloride	130	13	ug/kg	U	52259	1515	19900207	2	2.5	482561.514	1349480.272
Vinyl chloride	130	12	ug/kg	U	51160	1508	19900204	2	2.5	482594.983	1349371.022
Vinyl chloride	130	12	ug/kg	U	51161	1509	19900204	2	2.5	482549.062	1349371.622

APPENDIX B
HISTORICAL DATA COLLECTED FROM THE FIRE TRAINING FACILITY

PARAMETER	FRL	RESULT	UNITS	QUALIFIER	SAMPLE ID	LOCATION	SAMPLE DATE	Top	Bottom	Northing 83	Easting 83
Vinyl chloride	130	12	ug/kg	U	54059	1510	19900204	2	2.5	482549.033	1349408.862
Vinyl chloride	130	12	ug/kg	U	54439	1511	19900205	2	2.5	482592.983	1349412.702
Vinyl chloride	130	12	ug/kg	U	53519	1513	19900206	2	2.5	482578.884	1349482.362
Vinyl chloride	130	12	ug/kg	U	53782	1514	19900206	2	2.5	482570.174	1349504.922
Vinyl chloride	130	12	ug/kg	U	99239	FT-5	19930205	0	0.5	482512.613	1349428.222
Xylenes, Total	9.20E+08	24000	ug/kg	NV	200101413	RA28-SP-3				482570	1349383
Xylenes, Total	9.20E+08	14	ug/kg	U	99240	FT-5	19930205	2.08	2.58	482512.613	1349428.222
Xylenes, Total	9.20E+08	12	ug/kg	U	99239	FT-5	19930205	0	0.5	482512.613	1349428.222
Xylenes, Total	9.20E+08	11	ug/kg	NV	200101379	RA28-SP-2				482571	1349386
Xylenes, Total	9.20E+08	9	ug/kg	NV	200101468	RA28-SP-8				482532	1349428
Xylenes, Total	9.20E+08	8	ug/kg	NV	200101424	RA28-SP-4				482563	1349394
Xylenes, Total	9.20E+08	6	ug/kg	U	51160	1508	19900204	2	2.5	482594.983	1349371.022
Xylenes, Total	9.20E+08	6	ug/kg	U	51161	1509	19900204	2	2.5	482549.062	1349371.622
Xylenes, Total	9.20E+08	6	ug/kg	U	54059	1510	19900204	2	2.5	482549.033	1349408.862
Xylenes, Total	9.20E+08	6	ug/kg	U	54439	1511	19900205	2	2.5	482592.983	1349412.702
Xylenes, Total	9.20E+08	6	ug/kg	U	51679	1512	19900206	2	2.5	482570.973	1349457.062
Xylenes, Total	9.20E+08	6	ug/kg	U	53519	1513	19900206	2	2.5	482578.884	1349482.362
Xylenes, Total	9.20E+08	6	ug/kg	U	53782	1514	19900206	2	2.5	482570.174	1349504.922
Xylenes, Total	9.20E+08	6	ug/kg	U	52259	1515	19900207	2	2.5	482561.514	1349480.272
Xylenes, Total	9.20E+08	6	ug/kg	U	200105468	044703-011				482571	1349444
Zinc	120000	91.9	mg/kg	NV	200105480	044703-011				482571	1349444
Zinc	120000	85.7	mg/kg	NV	200105600	044703-021				482565	1349362
Zinc	120000	82.4	mg/kg	NV	51679	1512	19900206	2	2.5	482570.973	1349457.062
Zinc	120000	75.3	mg/kg	J	53519	1513	19900206	2	2.5	482578.884	1349482.362
Zinc	120000	74.8	mg/kg	J	53782	1514	19900206	2	2.5	482570.174	1349504.922
Zinc	120000	74.7	mg/kg	J	200101380	RA28-SP-2				482571	1349386
Zinc	120000	74.2	mg/kg	NV	99239	FT-5	19930205	0	0.5	482512.613	1349428.222
Zinc	120000	72.7	mg/kg	J	200105516	044703-014				482571	1349471
Zinc	120000	72.1	mg/kg	NV	54059	1510	19900204	2	2.5	482549.033	1349408.862
Zinc	120000	67	mg/kg	J	54439	1511	19900205	2	2.5	482592.983	1349412.702
Zinc	120000	64.8	mg/kg	J	200105504	044703-013				482571	1349484
Zinc	120000	58.5	mg/kg	NV	200105528	044703-015				482572	1349462
Zinc	120000	58.4	mg/kg	NV	99240	FT-5	19930205	2.08	2.58	482512.613	1349428.222
Zinc	120000	56.2	mg/kg	-	52259	1515	19900207	2	2.5	482561.514	1349480.272
Zinc	120000	54.8	mg/kg	J	51160	1508	19900204	2	2.5	482594.983	1349371.022
Zinc	120000	52.2	mg/kg	J	51161	1509	19900204	2	2.5	482549.062	1349371.622
Zinc	120000	47.3	mg/kg	J	200105732	044703-031				482544	1349413
Zinc	120000	47.1	mg/kg	NV	200106172	044703-051				482567	1349477
Zinc	120000	44.6	mg/kg	NV	200105576	044703-019				482546	1349453
Zinc	120000	38.3	mg/kg	NV	200106160	044703-050				482574	1349477
Zinc	120000	37.9	mg/kg	NV							

000066

APPENDIX B
HISTORICAL DATA COLLECTED FROM THE FIRE TRAINING FACILITY

PARAMETER	FRL	RESULT	UNITS	QUALIFIER	SAMPLE ID	LOCATION	SAMPLE DATE	Top	Bottom	Northing 83	Easting 83
Zinc	120000	37.8	mg/kg	NV	200106136	044703-049				482567	1349490
Zinc	120000	30.7	mg/kg	NV	200105540	044703-016				482546	1349362
Zinc	120000	26	mg/kg	NV	200105552	044703-017				482546	1349392
Zinc	120000	24.3	mg/kg	NV	200105564	044703-018				482546	1349422
Zinc	120000	23.4	mg/kg	NV	200105492	044703-012				482571	1349492
Zinc	120000	22.8	mg/kg	NV	200105588	044703-020				482545	1349489
Zinc	120000	20.7	mg/kg	NV	200105612	044703-022				482563	1349490
Zinc	120000	19.9	mg/kg	NV	200105624	044703-023				482572	1349423

000067

3201

APPENDIX C

PRECERTIFICATION SCANNING DATA FROM A1PIII PART TWO

Area I Phase III, Part 2
Figure C-1

Moisture & Radon corrected Radium 226

Two point running average
RTRAK Batches 798, 800, 807
RSS Batches 576, 577
Field of View to scale
Measurement Dates between: 5/9/2000 & 5/24/2000

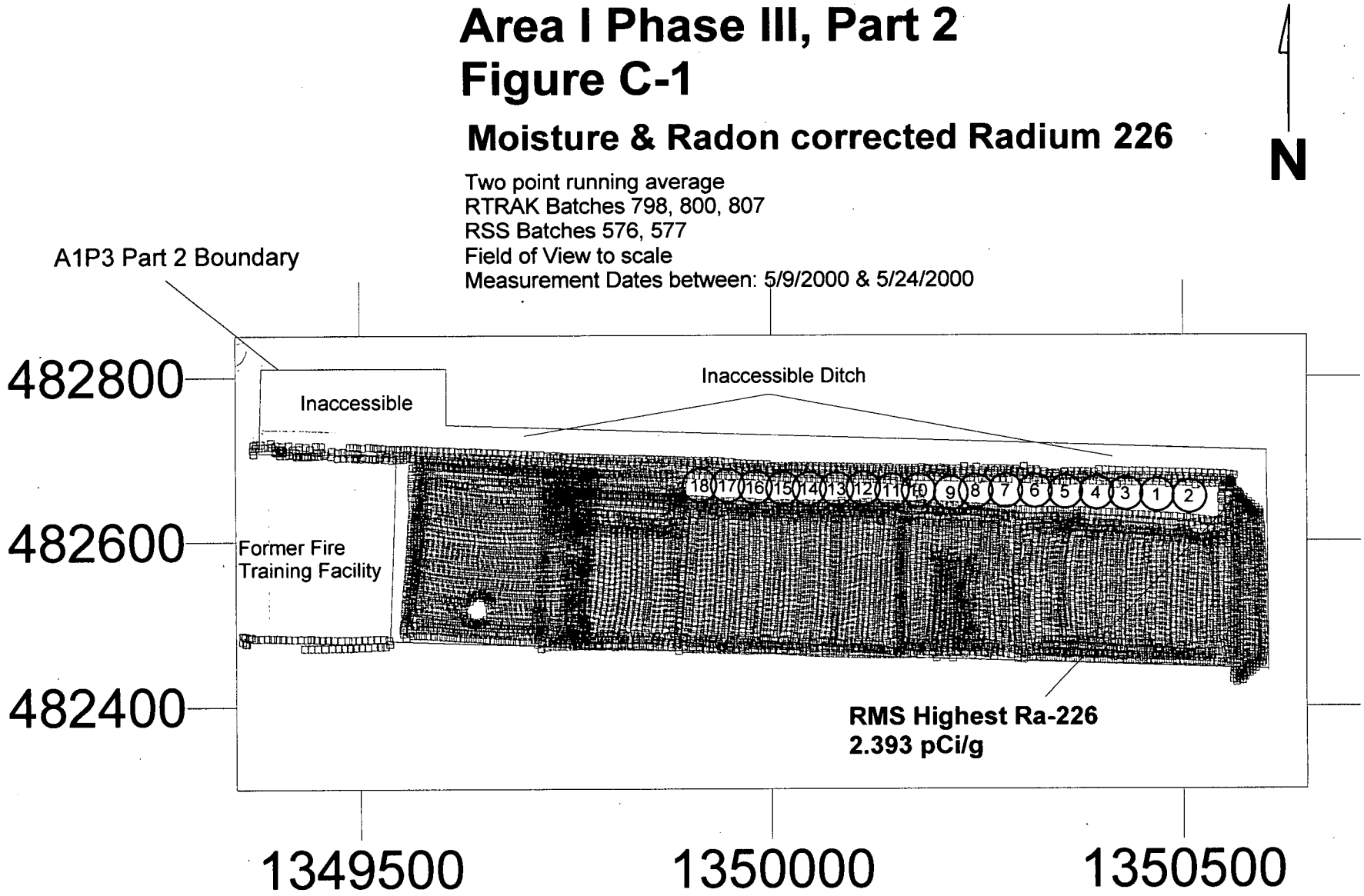

RMS Ra-226 (pCi/gm)
-1.46 to 1.70
1.70 to 3.40
3.40 to 5.10
5.10 to 10000.00

HPGe Ra-226 (pCi/g)
0.00 to 1.70
1.70 to 3.40
3.40 to 5.10
5.10 to 10000.00

RTIMP DWG Title: A1P3-PT2-P1-RA-2PT-MC
Project: 20720-PSP-0001
Name: Area 1, Phase III Certification Sampling
Prepared by: David Allen
File: A1P3_PT2_P1_RA_2PT_MC.srf
Date Prepared: 6/22/00

000069

3201

Area I Phase III, Part 2
Figure C-2

Moisture corrected Thorium 232

Two point running average
RTRAK Batches 798, 800, 807
RSS Batches 576, 577
Field of View to scale
Measurement Dates between: 5/9/2000 & 5/24/2000

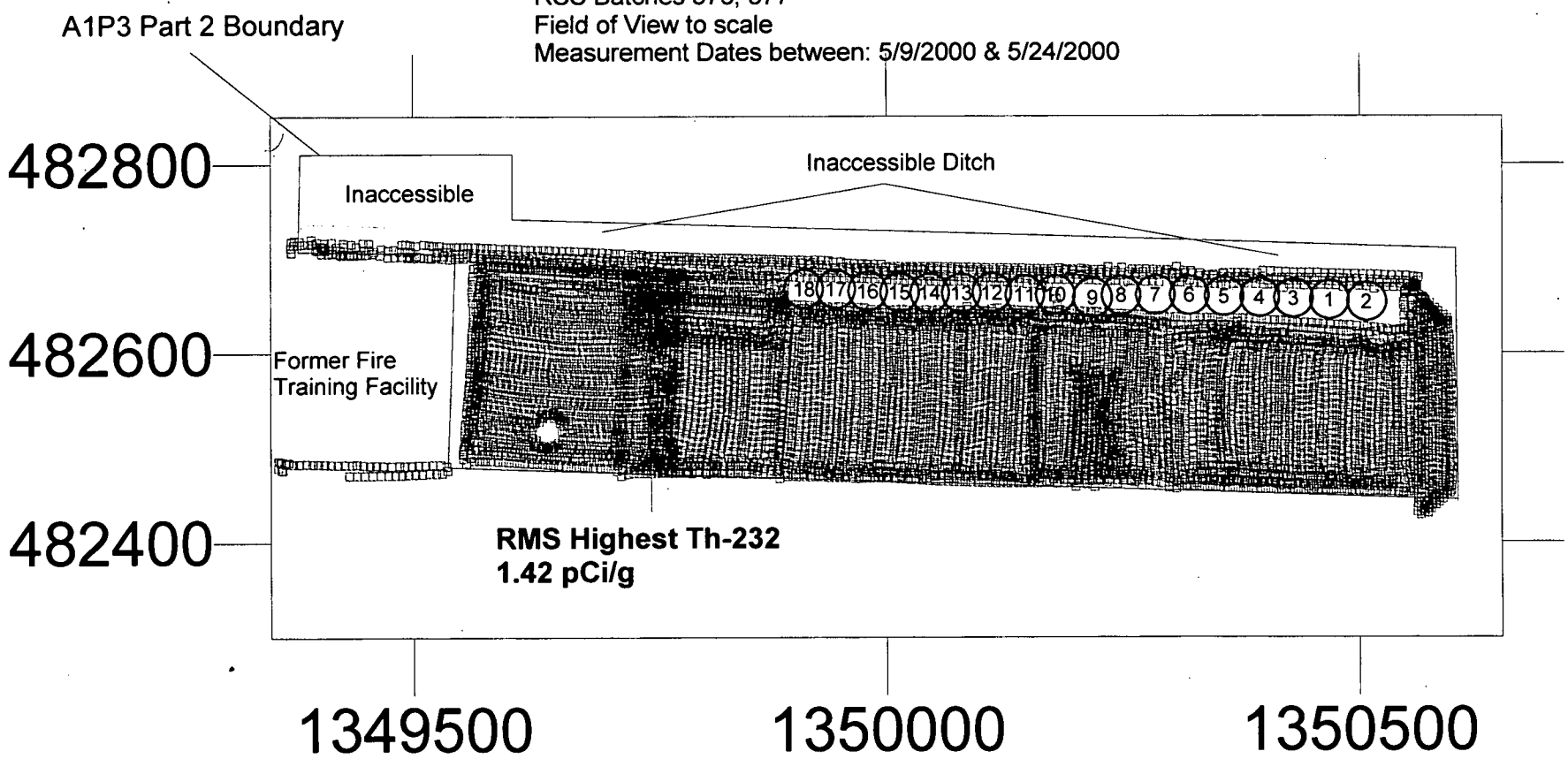

RMS Th-232 (pCi/gm)
0.00 to 1.50
1.50 to 3.00
3.00 to 4.50
4.50 to 10000.00

HPGe Th-232 (pCi/g)
0.00 to 1.50
1.50 to 3.00
3.00 to 4.50
4.50 to 10000.00

RTIMP DWG Title: A1P3-PT2-P1-TH-2PT-MC
Project: 20720-PSP-0001
Name: Area 1, Phase III Certification Sampling
Prepared by: David Allen
File: A1P3_PT2_P1_TH_2PT_MC.srf
Date Prepared: 6/22/00

000070

8201

Area I Phase III, Part 2
Figure C-3

Moisture corrected Total Uranium

Two point running average
RTRAK Batches 798, 800, 807
RSS Batches 576, 577
Field of View to scale
Measurement Dates between: 5/9/2000 & 5/24/2000

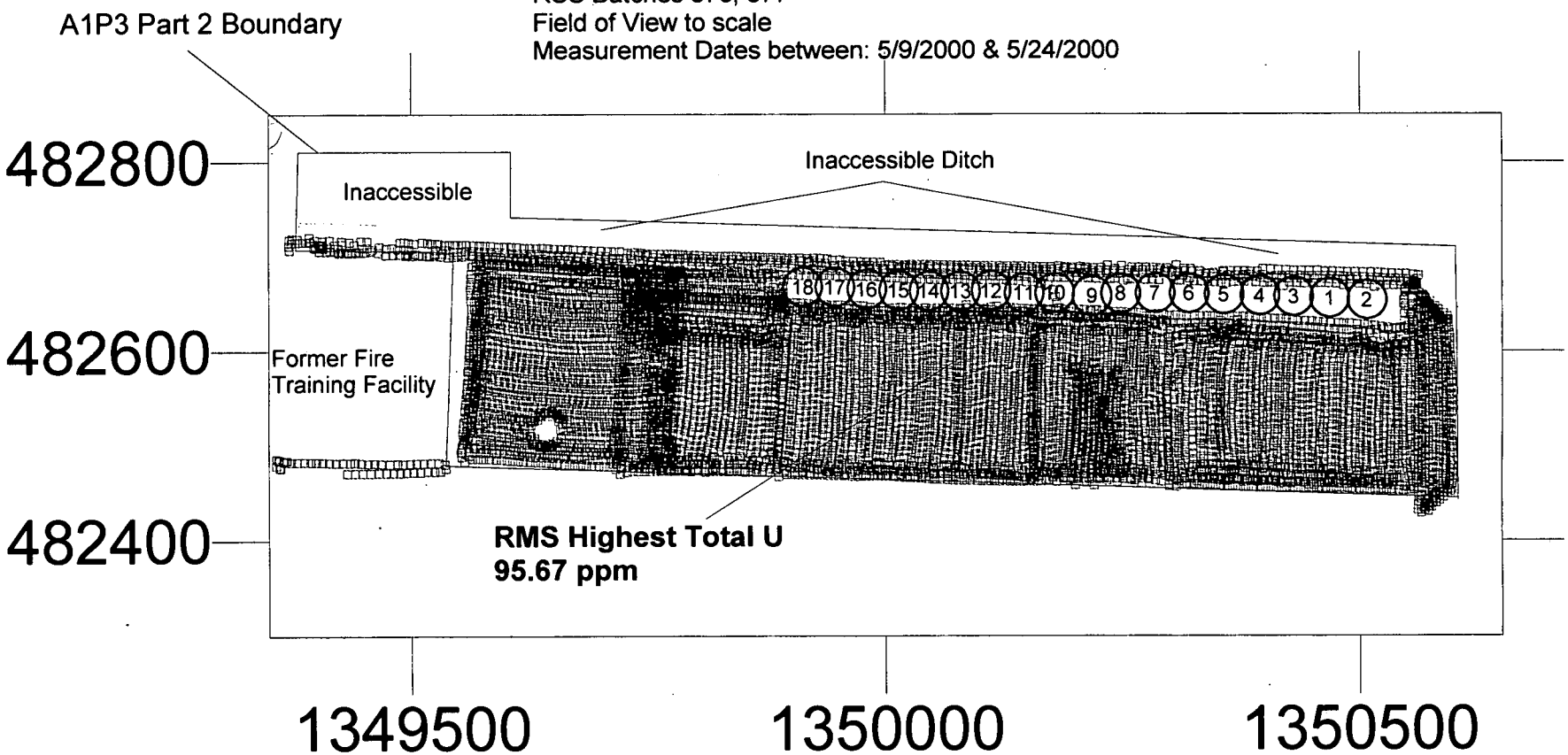

RMS Total Uranium (ppm)	HPGe Total Uranium (ppm)
-72.00 to 82.00	0.00 to 82.00
82.00 to 164.00	82.00 to 164.00
164.00 to 246.00	164.00 to 246.00
246.00 to 10000.00	246.00 to 10000.00

RTIMP DWG Title: A1P3-PT2-P1-TU-2PT-MC
Project: 20720-PSP-0001
Name: Area 1, Phase III Certification Sampling
Prepared by: David Allen
File: A1P3_PT2_P1_TU_2PT_MC.srf
Date Prepared: 6/22/00

000071

8201

Area I Phase III, Part 2
Figure C-4

TOTAL COUNTS (cps)

Two point running average
RTRAK Batches 798, 800, 807
RSS Batches 576, 577
Field of View to scale
Measurement Dates between: 5/9/2000 & 5/24/2000

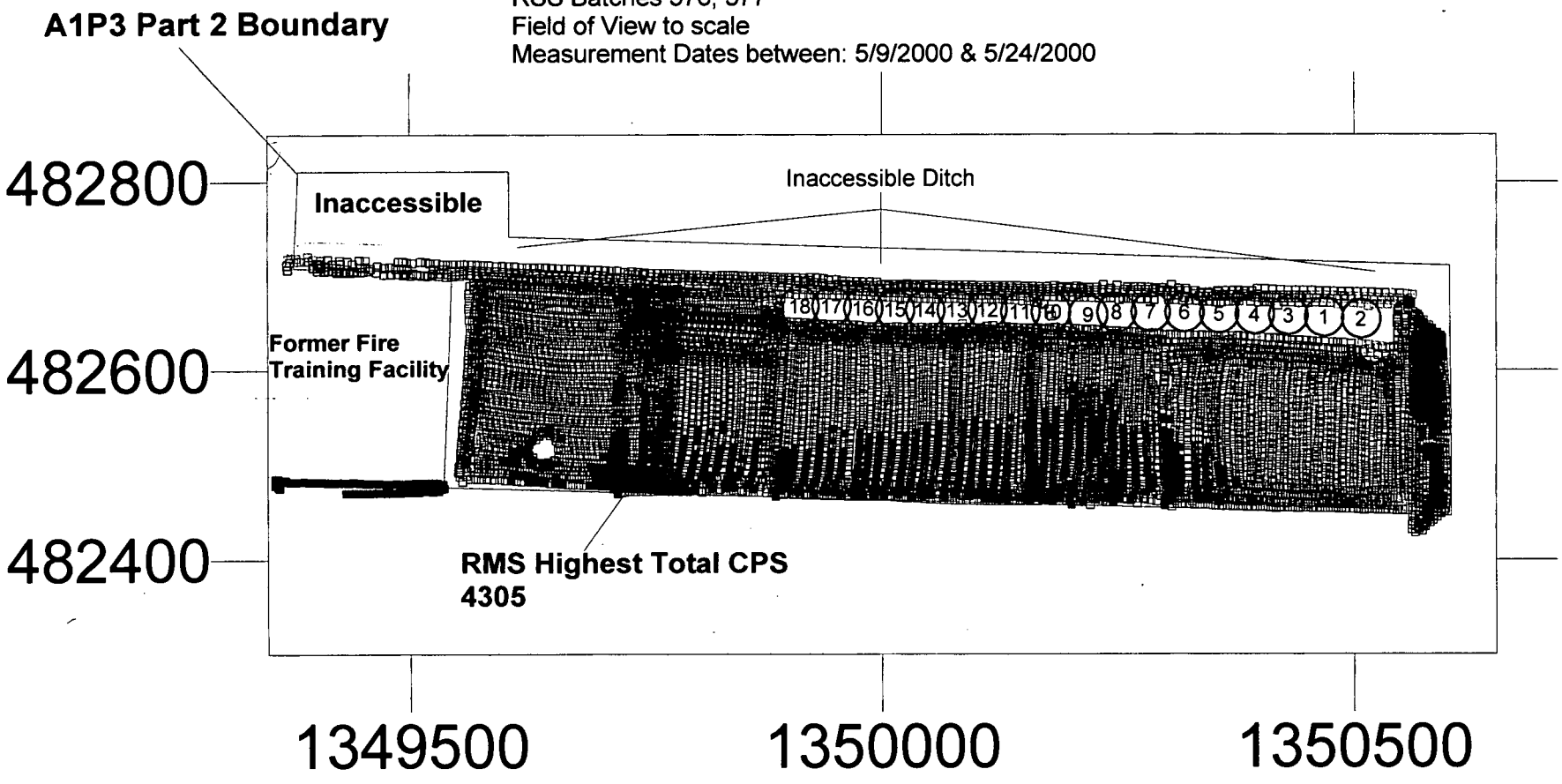

Total Counts (cps)
0.00 to 2500.00
2500.00 to 3000.00
3000.00 to 3500.00
3500.00 to 4500.00

HPGe shown for coverage only

RTIMP DWG Title: A1P3-PT2-P1-TC-1PT-MC
Project: 20720-PSP-0001
Name: Area 1, Phase III Certification Sampling
Prepared by: David Allen
File: A1P3_PT2_P1_TC_1PT_MC.srf
Date Prepared: 6/22/00

000022

8201

A1P3
Figure C-5

3201

Moisture and Radon corrected Radium 226

HPGE Det # 31265
Single Spectra in pCi/g
Coverage Plot (Field of View to scale)
Measurement Date: 08-16-00

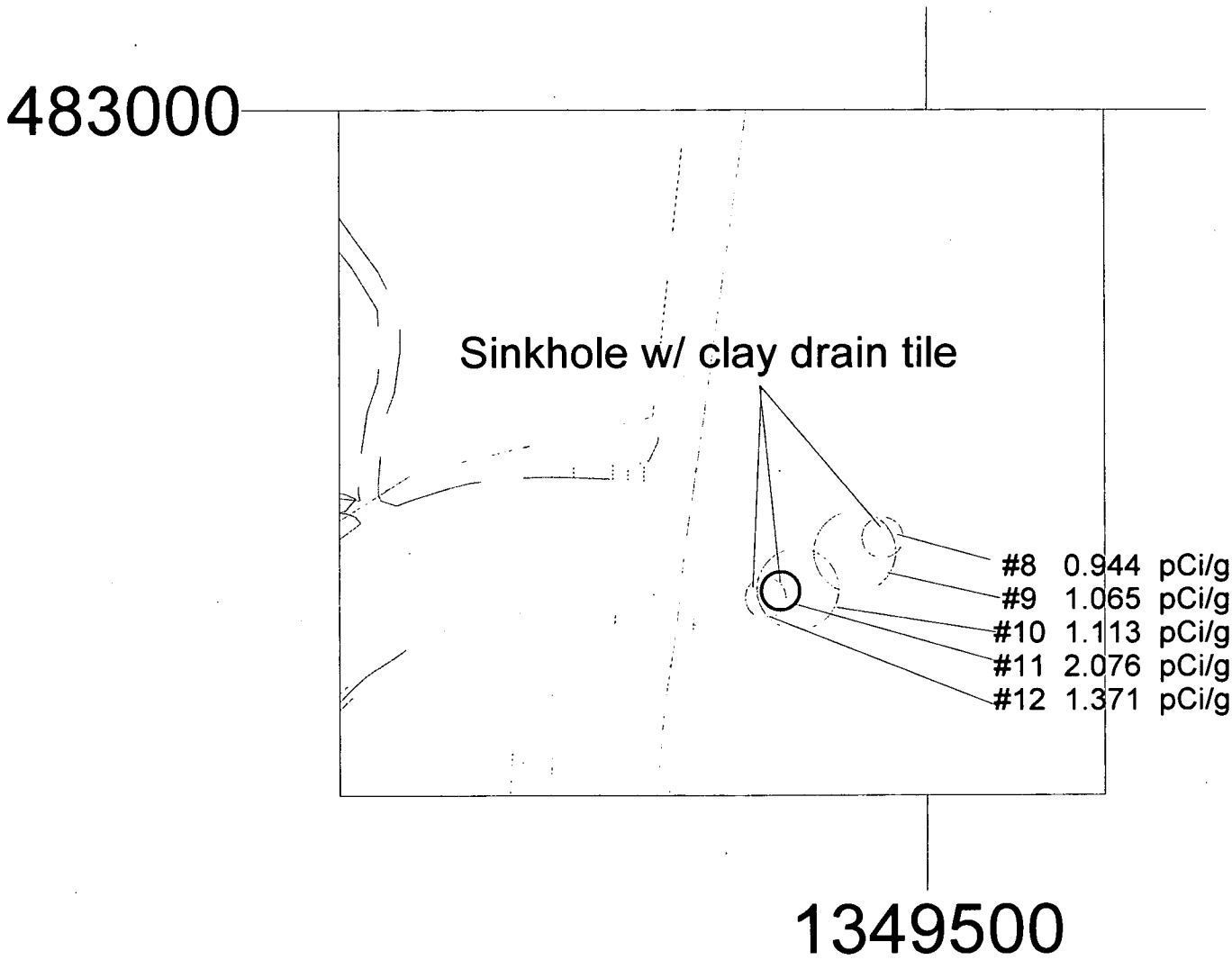

HPGe Ra-226 (pCi/g)
- 0.00 to 1.70
- 1.70 to 5.10
- 5.10 to 10000.00

RTIMP DWG Title: A1P3-P1-PT2-RA-1PT-MC.srf
Project #: 20720-PSP-0001
Project Name: A1P3 Cert. Sampling
Prepared By: David Allen
File #: A1P3_P1_PT2_RA-1PT_MC.srf
Date Prepared: 08-17-00

A1P3
Figure C-6

3201

Moisture corrected Thorium 232

HPGE Det # 31265
Single Spectra in pCi/g
Coverage Plot (Field of View to scale)
Measurement Date: 08-16-00

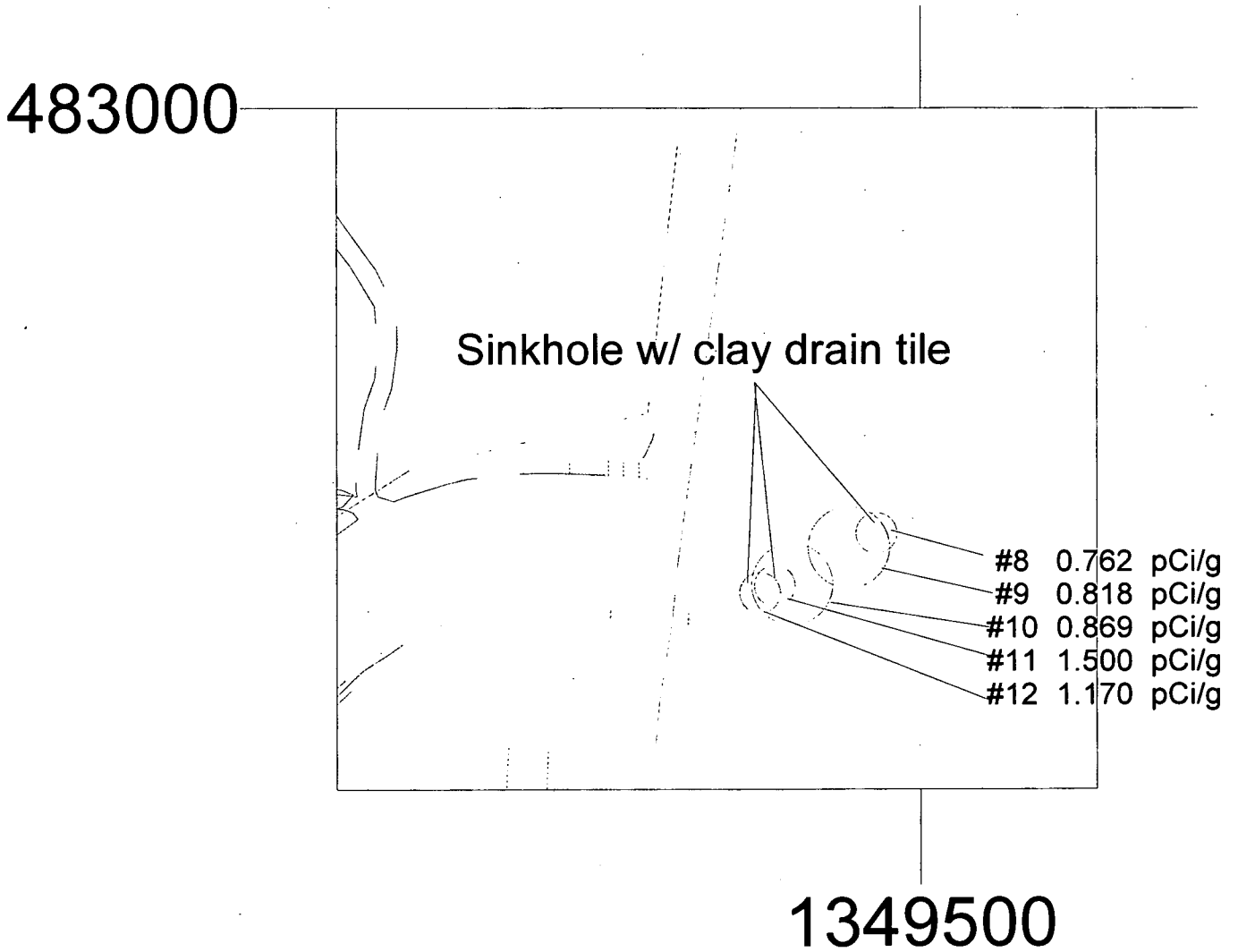

HPGe Th-232 (pCi/g)
- 0.00 to 1.50
- 1.50 to 4.50
- 4.50 to 10000.00

RTIMP DWG Title: A1P3-P1-PT2-TH-1PT-MC.srf
Project #: 20720-PSP-0001
Project Name: A1P3 Cert. Sampling
Prepared By: David Allen
File #: A1P3_P1_PT2_TH-1PT_MC.srf
Date Prepared: 08-17-00

A1P3
Figure C-7

8201

Moisture corrected Total Uranium

HPGE Det # 31265
Single Spectra in ppm
Coverage Plot (Field of View to scale)
Measurement Date: 08-16-00

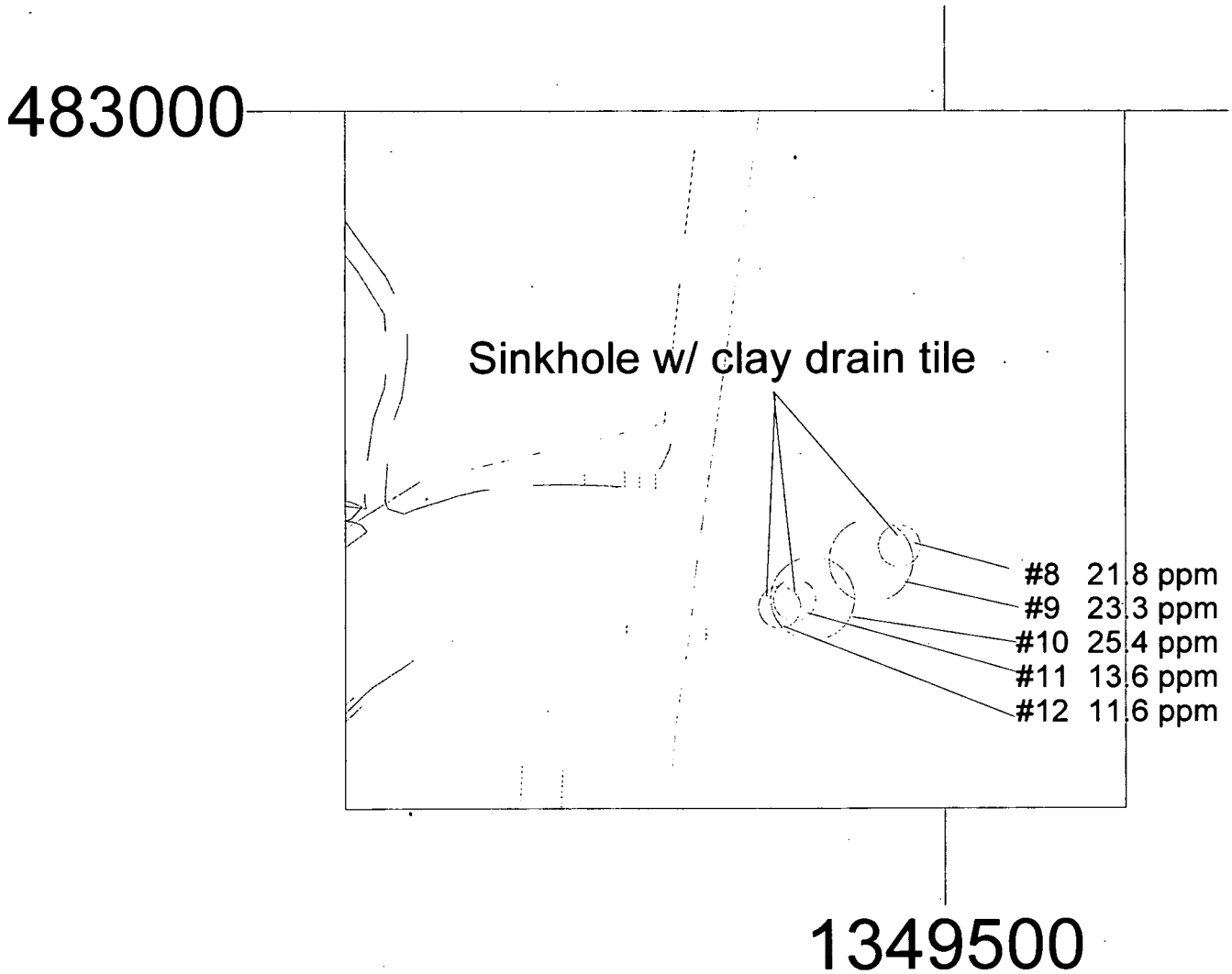

HPGe Total Uranium (ppm)
- 0.00 to 82.00
- 82.00 to 246.00
- 246.00 to 10000.00

RTIMP DWG Title: A1P3-P1-PT2-TU-1PT-MC.srf
Project #: 20720-PSP-0001
Project Name: A1P3 Cert. Sampling
Prepared By: David Allen
File #: A1P3_P1_PT2_TU-1PT_MC.srf
Date Prepared: 08-17-00