3388

SILOS 1 AND 2 ACCELERATED WASTE RETRIEVAL PROJECT

DRAFT FINAL

REMEDIAL DESIGN PACKAGE

NOVEMBER 2000

FERNALD ENVIRONMENTAL MANAGEMENT PROJECT

VOLUME 2 – SUPPORTING INFORMATION

000001

Appendix D

FOSTER WHEELER

FOSTER WHEELER ENVIRONMENTAL CORPORATION

SYSTEM DESIGN DESCRIPTIONS

DOCUMENT NO.
624-P622-30, Rev. 1

FOR THE

SILOS 1 AND 2
ACCELERATED WASTE RETRIEVAL PROJECT

SUBMITTED TO:

Fluor Fernald, Inc.

CONTRACT NO. FSC 624

November 16, 2000

FOSTER WHEELER ENVIRONMENTAL CORPORATION

SYSTEM DESIGN DESCRIPTIONS

Revision 1

Recommended by:

Foster Wheeler Engineering Manager — Date: 11/28/00

Approved by:

Foster Wheeler Project Manager — Date: 11/28/00

3388

CONTENTS

1.0 INTRODUCTION 1
1.1 Document Purpose and Organization 1
1.2 Systems Identification 1
2.0 GENERAL OVERVIEW 3
2.1 Scope 3
2.2 Mining Strategy 3
2.2.1 Introduction and Purpose 3
2.2.2 Baseline Modifications 4
2.2.3 Retrieval Equipment Descriptions 5
2.2.4 Retrieval Mining Strategy 6
2.2.5 Water Management Strategy 8
3.0 REQUIREMENTS AND BASES 10
4.0 SYSTEM DESIGN DESCRIPTIONS 11
4.1 Silo Waste Retrieval System 11
4.1.1 EMMA™ System 12
4.1.2 Bulk Retrieval System 16
4.1.3 Conditioning and Transfer System 20
4.1.4 Silo Debris Retrieval System 21
4.2 Radon Control System 22
4.2.1 Phase 1 - Radon Control in the Silo Headspaces 28
4.2.2 Phase 2A, 2B - Radon Control during Material Transfer 30
4.2.3 Phase 2C - Radon Control during Interim Storage 32
4.2.4 Phase 3 - Radon Control during Full-Scale Remediation 32
4.3 Decant Sump Waste Retrieval System 33
4.3.1 Deployment Strategy 33
4.3.2 Component Descriptions 33
4.4 TTA System 34
4.4.1 FSMS Operations 35
4.4.2 SWRS Operations 36
4.4.3 DWRS Operations 37
4.4.4 Transfer from TWRS 37
4.4.5 Transfer Storage Tanks 37
4.4.6 Transfer Storage Tanks Enclosure 38
4.4.7 Equipment Deck 39
4.4.8 Residue Sampling 39
4.4.9 Transfer Piping 40
4.4.10 Diverter Valves 40
4.4.11 Valve Containment Areas 40
4.4.12 UF Equipment 40
4.4.13 Filtrate Storage Tank 40
4.4.14 Filter Process Tank 41
4.4.15 Filtrate Transfer 41
4.4.16 Decant Pumps 41
4.4.17 Decant Pump Enclosure 42
4.4.18 Sluicers 42
4.4.19 Sluicer Enclosures 42
4.4.20 Slurry Pumps 42
4.4.21 Slurry Pump Enclosures 42
4.4.22 Makeup Water Storage Tank 42

3388

CONTENTS

4.4.23 Makeup Water Transfer Pump 43
4.5 TTA Waste Retrieval System 43
4.5.1 Transfer Storage Tanks 44
4.5.2 Transfer Piping 44
4.5.3 Diverter Valves 44
4.5.4 Sluicers 44
4.5.5 Sluicer Enclosure 44
4.5.6 Slurry Pumps 44
4.5.7 Slurry Pump Enclosure 45
4.6 Facilities Decontamination System 45
4.6.1 Silos Decontamination and Fixative Application 45
4.6.2 Access/Decontamination/Packaging for Significant Structures and Components 45
4.6.3 Decontamination/Demolition at Completion of FDS Operations 46
4.6.4 Decontamination/Packaging/Staging of Contaminated Materials 46
4.7 Full-Scale Mock-Up System 46
5.0 AWR PROJECT SUPPORT SYSTEMS AND COMPONENTS 50
5.1 Distributed Control System 50
5.1.1 System Concept 50
5.1.2 Installation Requirements 50
5.1.3 Utility Requirements 50
5.1.4 DCS Equipment Descriptions 51
5.1.5 Input/Output Nodes 55
5.1.6 Sluicing Nozzle System 56
5.1.7 Bulk Waste Retrieval/CATS System 58
5.1.8 High-Pressure Pump I/O Node 60
5.1.9 TTA I/O Node 62
5.1.10 Decant Pumps 63
5.1.11 TTA Sluicing Nozzle System 64
5.1.12 TTA Bulk Waste Retrieval 64
5.1.13 TTA Building Equipment 64
5.1.14 Radon Control System 65
5.2 System Components 65
5.2.1 Decant Pump System 65
5.2.2 High-Pressure Pump Skids 67
5.2.3 TTA Decontamination Pump Skid 69
5.2.4 Sluicer System 69
5.2.5 Slurry (Bulk Waste Retrieval) Pump/CATS 72
5.2.6 Hydraulic Power Supply System 77
5.2.7 Breathing Air System 78
5.2.8 Diesel Generator System 79
5.2.9 Compressed Air System 80
6.0 REFERENCES 81

000397

3388

ACRONYMS AND ABBREVIATIONS

AC	alternating current
ADSS	Arm Deployed Sluicing System
ALARA	as low as reasonably achievable
ANSI	American National Standards Institute
API	American Petroleum Institute
ASME	American Society of Mechanical Engineers
ATS	Automatic Transfer Switch
AWR	Accelerated Waste Retrieval
AWS	American Welding Society
AWWT	Advanced Wastewater Treatment
BAS	breathing air system
BRS	Bulk Retrieval System
CATS	Conditioning and Transfer System
CCTV	closed circuit television
CFC	Continuous Function Chart
cfm	cubic feet per minute
CFR	Code of Federal Regulations
CPU	central processor unit
DC	direct current
DCS	distributed control system
DIN	Deutsches Institut Normung
DOE	U.S. Department of Energy
DOF	degree of freedom
DQOs	Data Quality Objectives
DRS	Debris Retrieval System
DWRS	Decant Waste Retrieval System
EDT	EMMA™ Deployment Tower
EIA	Electronic Industries Alliance
EMMA™	Easily Manipulated Mechanical Arm™
EPA	Environmental Protection Agency
FDS	Facility Decontamination System
FEMP	Fernald Environmental Management Project
Fluor Fernald	Fluor Fernald, Inc.
fps	feet per second
FSM	Full-Scale Mock-Up
FSMS	Full-Scale Mock-Up System
FSS	Fixative Spray System
GEE	Gripping End-Effector
GEES	Gripping End-Effector System
GFE	government-furnished equipment
gpm	gallons per minute
HEPA	high efficiency particulate air
HMI	human-machine interface
hp	horsepower
HVAC	heating, ventilating, and air conditioning
Hz	hertz

000298

000006

3388

ACRONYMS AND ABBREVIATIONS

I/O	input/output
ICAT	Integrated Construction Acceptance Test
IEEE	Institute of Electrical and Electronics Engineers
ISO	International Standards Organization
kW	kilowatt
MCC	Motor Control Center
MEES	master equipment enable switch
MOV	motor-operated valve
NEMA	National Electrical Manufacturers Association
NIOSH	National Institute for Occupational Safety and Health
NIS	not in scope
NPSH	net positive suction head
OAC	Ohio Administrative Code
OSHA	Occupational Safety and Health Administration
PLC	programmable logic controller
PPE	personal protective equipment
Profibus	Process Field Bus
psi	pounds per square inch
psig	pounds per square inch gauge
RH	relative humidity
RCS	Radon Control System
rpm	revolutions per minute
SAIE	Silo-Arm Interface Enclosure
SAR	supplied-air respirator
SDRS	Silo Debris Retrieval System
SFC	Sequence Function Chart
SOT	System Operability Test
SREE	Silo Retrieval End-Effector
SSC	structures, systems, and components
SWRS	Silo Waste Retrieval System
TEFC	totally enclosed, fan-cooled
TRD	Technical Requirements Document
TTA	Transfer Tank Area
TWRS	Transfer Tank Area Waste Retrieval System
UF	ultrafiltration
UPS	Uninterruptible Power Supply
V	volt
VitPP	Vitrification Pilot Plant
WAC	waste acceptance criteria
WG	water gauge
WT%	weight percent

000299

000007

3388

1.0 INTRODUCTION

This System Design Descriptions document provides detailed descriptions of the process systems comprising the Accelerated Waste Retrieval (AWR) Project at the U.S. Department of Energy (DOE) Fernald Environmental Management Project (FEMP) site. This document includes information from the *Process Descriptions*, Document No. 624-P622-20, for the AWR Project, as well as a description of equipment and instrumentation in each system and the applicable codes and standards for the structures, systems, and components (SSCs) used in the systems. It was initially prepared as a component or subset of the *Preliminary Design Package* for the AWR Project, in conjunction with the *Functional Requirements Document* (Document No. 624-P622-02), *Design Criteria* Package (Document No. 624-P622-03), and other AWR Project design submittals, and subsequently revised to reflect the final design.

1.1 Document Purpose and Organization

This System Design Descriptions document describes each AWR Project system in terms of the processes and equipment needed to meet the applicable scope of work requirements, including applicable codes and regulations. It is formatted in the following manner. Section 1 provides an introduction that includes the system identification for the AWR Project. Section 2 provides a general overview of the AWR Project that includes the mining strategy of how the waste is retrieved from the silos. Section 3 lists the requirements and bases for design. Section 4 describes each major system design component, with Section 5 describing the distributed control system and system components for the AWR Project. And finally, Section 6 lists the applicable references used in the development of the System Design Descriptions.

1.2 Systems Identification

The AWR Project includes seven major systems listed below.

Silos Waste Retrieval System (SWRS). The SWRS retrieves material from the silos; transfers residues, BentoGrout™, and heel material to the transfer tanks; retrieves and packages discrete objects; and performs gross decontamination of the silos.

Decant Sump Waste Retrieval System (DWRS). The DWRS retrieves materials from the decant sump (liquids from the silos and approximately 1,000 gallons of residue/solids in a heel), segregates materials and transfers/packages them, and performs gross decontamination of the decant sump.

Transfer Tank Area (TTA) System. The TTA system consists of transfer tanks and associated piping and equipment to be used as a storage area for K-65 Material/BentoGrout™ slurry for future transfer to the Future Full-Scale Remediation Facility (not in scope [NIS] of the AWR Project). Provisions will also be made for sampling and sample storage.

Transfer Tank Waste Retrieval System (TWRS). In the future, the TWRS will retrieve the K-65 Material/BentoGrout™ slurry from the TTA and transfer it for processing at the Future Full-Scale Remediation Facility (NIS).

000400 000008

Radon Control System (RCS), Phases 1 and 2. RCS Phase 1 controls and reduces radon concentrations in the silos headspace. RCS Phase 2 ensures radon control during retrieval, transfer, and storage of the silos material.

Full-Scale Mock-Up System (FSMS). A Full-Scale Mock-Up (FSM) Integrated Construction Acceptance Test (ICAT)/System Operability Test (SOT) is to be performed with the Silo 4 FSMS. Foster Wheeler will incorporate the lessons learned from the FSM ICAT/SOT into the AWR Project before beginning operations and use the FSMS for training and troubleshooting during SWRS operations.

Facilities Decontamination System (FDS). The FDS functions to remove gross contamination from the silos, the decant sump tank, and contaminated process equipment as part of facility demobilization and closure. Two categories of gross decontamination activities are provided by the FDS. First, the gross decontamination of silos, decant sump tank, and process equipment, as well as permanent facilities erected during the project is part of the FDS. The second type is decontamination of temporary tools, equipment, and facilities used on the project.

2.0 GENERAL OVERVIEW

Silos 1 and 2 contain K-65 material, a residue that contains radionuclides, including radium (the primary contaminant of concern), generated from the processing of high-grade uranium ores. The purpose of the AWR Project is to extract the material from Silos 1 and 2, segregate discrete objects, transfer the residue to transfer tanks for staging before final remediation, reduce the radon concentration in each of the silos' headspace, provide radon control during retrieval and material storage, clean the silos and equipment for system closure, and handle secondary waste generated during the AWR Project.

2.1 Scope

Foster Wheeler is designing, constructing, testing, and directing the operation and maintenance of the AWR Project. Fluor Fernald, Inc. (Fluor Fernald) is providing labor for operations and maintenance. The AWR Project consists of four stages:

Stage 1: RCS Installation, Operation, and Maintenance to reduce the radon concentration of each of the silos headspace before silo retrieval operations;

Stage 2: Demonstration of the FSMS and residue retrieval from the TTA to support processing at the Future Full-Scale Remediation Facility (NIS);

Stage 3: Residue material retrieval from the silos, material segregation, transfer of residue to the TTA, and placement of discrete objects in drums for processing (NIS); and

Stage 4: Staging and storage of the residue in the TTA.

These stages differ slightly than the stages defined in the AWR Project *Technical Requirements Document* (TRD), Document No. 40710-RP-001, prepared by Fluor Fernald, but more accurately reflect Foster Wheeler's approach to managing the AWR Project.

2.2 Mining Strategy

The mining strategy describes how the waste will be retrieved from the silos from a philosophical standpoint as opposed to a procedural and operational standpoint. This information is used to help guide test planning and operational planning for the FSM and actual silo deployment.

2.2.1 Introduction and Purpose

This section provides a general guide towards the development of objectives for safe and cost-effective retrieval of the silo waste. The scope of this section is limited to equipment specifically related to in-tank retrieval; therefore, other important items such as the RCS, the TTA, and many others are not described. The contents of this section do not add, change, modify, or in any way affect the technical requirements of any SSC.

This section also provides brief descriptions of the mining strategy and major equipment that are associated with successfully completing the retrieval operations. While Silos 1 and 2 contain two distinct layers of material that need to be retrieved, the intent is to retrieve them

simultaneously. The first layer is a bentonite (trade name BentoGrout™) cap that was placed in silos to prevent radon migration into the dome space and out of the silos. The bentonite layer varies, but in general, it is approximately 6-inches deep in the center of the silo and 3-feet deep near the silo walls. The material may have dried out on the surface and may still be wetted near the bottom of the bentonite layer. The K-65 ore tailings that were slurried into the tanks are the remainder of the waste that is over 20 feet in depth.

2.2.2 Baseline Modifications

Foster Wheeler evaluated two concepts for retrieval of the waste. The first concept involves selectively removing the bentonite cap and preventing mixing with the K-65 waste material. Storage of the two waste streams occurs in separate TTA tanks. The Silo Retrieval End-Effector (SREE) deployed with the Easily Manipulated Mechanical Arm™ (EMMA™) is used to mine the bentonite, followed by the use of past-practice sluicing techniques for the bulk retrieval and the use of SREE and EMMA™ for heel removal. The second concept starts with past-practice sluicing techniques for bulk retrieval. This method allows the bentonite to mix with the K-65 material and does not violate technical requirements. Upon successful completion of bulk sluicing, the SREE and EMMA™ remove the remaining heel. In both concepts, EMMA™ is equipped with a small arm-based sluicer nozzle to assist in bulk sluicing and wall and floor washdown. Also, EMMA™ reduces in size remaining debris and collects it in both concepts.

After reviewing these concepts, the second concept that allows for the mixing of bentonite and K-65 material combined was selected. The main reason for selecting this option was the minimization of the size of the TTA. Two additional separate tanks for the bentonite material are eliminated. Also, the schedule for the waste retrieval operations is shorter with the second concept as there are essentially five operational phases rather than six.

The current design baseline is to retrieve the bulk waste from the silos using past-practice sluicing, that is accomplished through the use of (1) a low- to medium-pressure, high-volume nozzle through one peripheral riser and (2) a retrieval pump through the second peripheral riser. The Conditioning and Transfer System (CATS) and the retrieval pump are integrated into a single enclosure, thus eliminating two crane lifts. EMMA™ is deployed through the center riser, and it grasps the SREE and maneuvers it within the tank for heel removal and floor cleaning. Upon completion of heel removal, EMMA™ deploys the arm-based sluicer to wash down the walls and the floor. EMMA™ is also used to reduce in size any remaining debris and place it in the debris basket that is deployed through the same riser that the bulk sluicing nozzle was deployed. Early design indicated that the sluicing nozzle enclosure and the Silos Debris Retrieval System (SDRS) enclosure are separate, necessitating lifts off and on the bridge, respectively. Currently, both the sluicer nozzle assembly the SDRS are combined into a single enclosure that requires no lifts from the bridge.

The approximately 1,000 gallons of residue/solids contained in the decant sump tank will be removed by use of the DWRS. This system is separate from the SWRS, and utilizes level instrumentation to ensure the tank level does not exceed 70% of the tank capacity while mobilizing the residues. A closed circuit television (CCTV) camera will be deployed into the tank to provide the operator visual control. Ventilation of the decant sump tank will be provided through a connection to the RCS.

The residues will be mobilized and the tank will receive gross decontamination by use of a jet cleaning system. Twenty gallons per minute (gpm) of water will be supplied to the spray nozzles at approximately 1,000 pounds per square inch (psi) to produce a slurry. The slurry will

approximately 10 gpm. To vacuum the slurry out of the central inlet port, a radial waterjet pump is integrated as close to the SREE as possible. The jet pump requires approximately 10,000 psi of water at approximately 10 gpm. When the SREE inlet is submerged in liquid, the jet pump can remove up to 100 gpm of motive water and liquid. When the inlet begins to pump air, the overall retrieval rate is decreased significantly. However, the system is able to continue to vacuum the bottom of the silo floor.

Both the SREE and the jet pump require filtered water for the small nozzles that are used. The basic premise of the waterjet pump is that three radial waterjets are placed such that they converge in the discharge nozzle of the jet pump, thus creating a vacuum (for a short distance). The slurry from the SREE inlet port is sucked into the three jets and is pressurized and "pushed" through the jet pump discharge nozzle (demonstrated to pump well greater than 60 feet) and into the CATS, which is located as close to the floor as possible. The CATS allows for conditioning of the waste before transfer to the TTA. The CATS monitors the waste level and solids loading in the slurry and adds water if necessary to meet transfer requirements. The CATS is additionally used to separate any air from the slurry and exhaust the air back into the silo.

A hose management system between the SREE and the CATS ensures that the heel retrieval hoses do not create undue loading to EMMA™. Hose management is accomplished through a simple cable system to allow for the SREE to be operated within the entire silo floor area.

2.2.3.4 Debris Removal System

A simple basket system design allows the debris that remains at the bottom of the tank to be removed and packaged for disposal. The basket is lowered through the same riser that the sluicing nozzle is deployed. The basket is lowered from the containment housing at the top of the platform by a cable and winch system. EMMA™ uses the gripper to collect and place debris into the basket until the basket is either full or all the reachable debris has been placed into the basket. The basket is raised back into the containment housing where it is placed in a drum to allow for removal from the platform and disposition by Fluor Fernald.

2.2.4 Retrieval Mining Strategy

The retrieval operation occurs in five basic steps. The first step is the bulk sluicing of the K-65 waste and bentonite cap material; the second step is the removal of the heel; the third step is the collection and removal of the debris; the fourth step is wall and dome washdown; and the final step is decant sump retrieval. The first four steps occur on each of the two silos, and the last step occurs only one time upon completion of the silo retrieval.

2.2.4.1 Bulk Sluicing and Retrieval

The sluicing nozzle and the integrated slurry pump/CATS, located approximately 50 feet apart, are used for sluicing the bentonite cap and K-65 waste material. Initially, the sluicing stream is directed as close to the pump inlet as possible to induce a slurry pool for slurry to flow into. Additionally, the slurry pump has the capability to operate in reverse using sluice water to assist in making a slurry pool. The slurry pump also has a high-pressure water jet ring at the pump suction that can blast hard material into pumpable slurry. The sluicing jet, from time to time, will impinge upon and impact the retrieval pump, which is able to withstand the jet during operation. Upon creating the cavity, the nozzle cuts a canyon for slurry to flow through to the pump. The canyon will progress in depth and length toward the sluicer. The slurry pool size at the pump

suction will be minimized to minimize free water in the silo. The sluicer will "push" the slurry towards the pump for retrieval. This type of operation occurs as long as it is effective. The width of the canyon will increase with priority being given to increasing the depth of the canyon, and the pump is periodically lowered (remotely) further into the tank until it reaches the bottom.

The sluicing nozzle is also lowered periodically further into the tank. Lowering the sluicing nozzle allows for EMMA™ to be up higher in the tank dome area doing other activities including dome and upper wall washing without impingement by the large sluicing nozzle waterjet. At times, if the sluicing nozzle is inadequate to break up a waste agglomeration, the EMMA™ assists the large sluicing nozzle with the small arm-based sluicing nozzle. This operation allows a focused stream to be applied close to the waste.

The waste stream is monitored to determine the point at which a solids loading in the waste stream is the same as the return supply supernatant. Upon a determination that effective sluicing is complete, the pumping operation is modified to the CATS mode. The bulk sluicing nozzle is retracted back into its containment housing above the silo on the platform.

2.2.4.2 Heel Removal

Heel removal follows the sluicing operation. The heel is defined as anything left over after sluicing is completed. This heel may include slurry, supernate, K-65 material, and debris at the silo bottom. The containment housing of the CATS is an integration of the slurry pump system. The Heel Waste Surge Tank, Hose Bundle, and SREE are lowered through the manway for deployment. The system is then deployed such that EMMA™ can reach and grasp the handles of the SREE. EMMA™ is then used to place the SREE in various locations along the tank floor. EMMA™ also is required to work with the conveyance hose and cable tether to grasp the hose and move it into position for operation at a given location within the silo. The hose is most likely to be lying in the liquid and residue waste.

Initially, the jet pump is turned on, and the SREE (without its cutting jets on) is submerged into the heel to remove all of the free liquid. Then, the SREE jets are activated to slurry and pump any remaining waste into the CATS. The CATS accumulates the slurry in preparation for transfer to the TTA. The exit of the slurry from the conveyance hose is open to CATS to separate any entrained air from the waste. In this manner, there is no net addition of air into the tank; thus ensuring that the RCS is not overcome by additional airflow. The CATS remains in place until all of the walls and floor are washed down and the free liquid removed.

Two methods are possible for operating the SREE. In the first method, slurry pools are created and the SREE is worked around in the slurry pool. The SREE is then moved to another location in the same proximity and a nearby slurry pool is created. This process continues until the slurry pools are eventually merged together. When no further progress is made in one sector, the SREE and hose is moved to another sector where the process is started again until the waste is removed from the silo.

The second method uses the SREE in a more systematic "machining" fashion where "high" points of residue piles are selectively machined to a nearly flat condition. The End-Effector is then moved across the silo floor "machining" off a layer of waste at a time. The slurry pool method is the preferred approach because of the flexibility of the EMMA™ arm, but either method is available.

3388

2.2.4.3 Debris Retrieval

Debris retrieval is accomplished during heel removal. After successful heel removal has been completed, any debris left on the floor of the silo will be removed. The debris consists of small items that cannot be pumped out of the tank as well as larger items such as pieces of pipe.

Large pieces of debris are reduced in size to fit the retrieval basket. Debris is collected and placed in the basket. The debris retrieval system and the debris basket are deployed through the manway for deployment of the bulk sluicing nozzle because all are housed in the same enclosure. A cable and winch lowers the basket and debris-cutting tool into the silo. EMMA™ reaches and grabs the debris-cutting tool and reduces piping pieces to manageable sizes. EMMA™ then sets the debris cutting tool aside and collects the debris and places it inside the basket. EMMA™ washes down the debris and basket, then the wash ring washes the basket as it is retrieved, and the radiation monitoring ring checks the radiation level. The basket is raised back into the containment housing and a remotely operated jib crane moves the full basket into a drum where the basket and contents are sealed and prepared for transport from the platform. Additional baskets are lowered into the silo as needed until all the debris is removed.

2.2.4.4 Wall and Dome Washdown

Wall and dome washing will be occurring partially during sluicing operations. The small sluicing nozzle attached to EMMA™ has a variable geometry nozzle that can be remotely changed and allow for either a coherent jet (for sluicing assistance as described earlier) or in a wide spray to gently and quickly wash down the tank walls, dome, and floor.

2.2.4.5 Decant Sump Retrieval

The decant sump tank is centrally located between and below Silos 1 and 2. The decant sump tank is accessed through a 30-inch corrugated metal pipe which is connected to a 20-inch riser in the tank. During SWRS operations, the decant sump level will be monitored to ensure the liquid level does not exceed 70% of tank capacity. An existing sump pump will be used to remove excess liquids, which will be transferred to an existing onsite tanker truck for disposal at the FEMP Advanced Wastewater Treatment (AWWT) facility.

As wastes are removed from the silos, the berm surrounding the silos will be lowered incrementally exposing sections of the 30-inch corrugated metal pipe. The corrugated metal pipe will split and cut into pieces as the berm is lowered. The pieces of the corrugated metal pipe will be removed from the silos area and disposed of by Fluor Fernald. Berm removal will terminate at approximately 8-½ feet above the decant tank. At this point, Foster Wheeler will install heavy plastic with sandbag dikes as a laydown area for the retrieval equipment. Additional information regarding the DWRS is provided in Section 4.3 of this document.

2.2.5 Water Management Strategy

One of the objectives of the AWR Project is to minimize the secondary waste generated, particularly wastewater due to the limitation of the FEMP AWWT facility. Therefore, it is important that the AWR Project water management strategy is closely monitored. The slurry water for the SWRS operation will be supplied by recycling the sluicing water through a decanting pump within the Transfer Tanks. To operate the high-pressure pumps, the decanted sluicing water will be processed through the Ultrafiltration (UF) System to meet the high-

000406

pressure pump water quality requirements. These recycling steps reduce the water dispositioned to the AWWT facility to solely the condensate water from the RCS.

The key to successfully managing the water usage during the AWR Project is to effectively account for the water throughout the systems. The AWR Project, being sensitive to the condition of the silos and the decant sump system and to the prevention of any potential uncontrolled release of wastewater, has employed the following water management controls:

- Measure quantity of water into and out of the silos throughout the SWRS activities. During mining operations, alarm limits are set to indicate that if the water flow into the silos is 25% greater than the water flow out of the silos, then the SWRS operation can be stopped until the water is accounted for and/or corrective action taken.

- Bulk Waste Retrieval Strategy is based on localized slurry pools.

- Decant Sump Tank will have level instrumentation for continually monitoring the infiltrate liquid level and calculating the infiltrate liquid flow rate into the decant sump tank. The level of the liquid infiltrate into the K-65 decant sump tank will be monitored and recorded on operator round sheets. In addition, the level, quantity, and flow rate are monitored and recorded by the programmable logic controller (PLC) human machine interface (HMI). The following action limits will be established:

  A. If the flow of liquid into the Decant Sump Tank exceeds the baseline flow rate based on historical data the following action is required:
     - Increase monitoring and note of the waste retrieval operation and silo area conditions at time of alarm,
     - Pump tank at 60% capacity and analyze content for increased levels of K-65 materials, and
     - Maintain increased monitoring.

  B. If the flow exceeds 5 gpm, the following action is required:
     - Stop waste retrieval activity and note the conditions of waste retrieval operations and silo area,
     - Pump tank at 60% capacity and analyze contents for increased levels of K-65 material, and
     - An Action Limit of 5 gpm was calculated based on the assumption that if the tank is 50% full, then the 5 gpm infiltrate for the 8-hour time period to hook up the tanker truck would only fill the tank to 75% capacity. Also, if the tank is at 70% full, then the tank at a 5 gpm flow rate the decant tank would not overflow prior to pumping out the decant tank.

  C. If flow limits are not exceeded, the tank level limit established in the Maintenance Action Work Plan are to be maintained requiring the decant sump tank to be pumped out at 70% capacity.

- During berm excavation activities, the berm soil will be sampled for the presence of K-65 material.

3388

3.0 REQUIREMENTS AND BASES

The technical requirements and bases for the design of systems and components of the AWR Project are summarized in several project documents, and for that reason, are not specifically provided herein. These AWR Project documents include primarily the *Functional Requirements Document*, Document 624-P622-02, and the *Design Criteria Package*, Document 624-P622-03.

Of note, the basic technical requirements for the system functions, as developed by DOE and Fluor Fernald for the AWR Project and stipulated in Part 7 of the AWR Project contract (i.e., *Technical Requirements Document*), are summarized in the *Functional Requirements Document* for the AWR Project. Similarly, the specific criteria for designing the AWR Project systems and components are summarized in the *Design Criteria Package* for the AWR Project, which also includes the applicable codes and standards used for the design. References related to the AWR Project design are provided in Section 6.0 of this System Design Descriptions document.

000408

000016

4.0 SYSTEM DESIGN DESCRIPTIONS

3388

This section provides the design descriptions for the following AWR Project systems:

- Silo Waste Retrieval System,
- Radon Control System,
- Decant Sump Waste Retrieval System,
- Transfer Tank Area System,
- TTA Waste Retrieval System,
- Facilities Decontamination System, and
- Full-Scale Mock-Up System.

4.1 Silo Waste Retrieval System

The SWRS recovers the waste in the silos and transfers the waste to the TTA. The recovery of the waste occurs in three basic steps. The first step is the bulk sluicing of the K-65 waste and BentoGrout™ material; the second step is the retrieval of the heel; the third step is the collection and removal of the debris. Wall washdown occurs as the waste is retrieved. Following Fluor Fernald concurrence that a silo has been cleaned sufficiently as determined by visual inspection by the system cameras, a fixative is applied to the walls and floor of the silo. To provide the global view required to maneuver and control in-silo equipment during waste retrieval and cleaning assessments, three video cameras with lights are deployed through new 12-inch risers located approximately 120° apart at the silo perimeter and independent from the risers used to deploy the SWRS.

The SWRS main systems and components used with each system are:

- EMMA™ System
  - EMMA™ Deployment Tower (EDT) System,
  - Actuation package,
  - Mast, and
  - EMMA™.

- Bulk Retrieval System
  - Sluicer,
  - Sluicer enclosure,
  - Slurry pump,
  - Slurry pump enclosure,
  - Slurry transport piping,
  - EMMA™ System, and
  - Slurry pump.

- Conditioning and Transfer System
  - Silo Retrieval End-Effector,
  - Heel Waste Surge Tank,
  - Conveyance hose management system,
  - EMMA™ System, and
  - Slurry Pump.

3388

- Debris Retrieval System
  - Debris retrieval enclosure,
  - Waste size reduction tool,
  - Debris basket and winch assembly,
  - Drum loading station,
  - Debris retrieval spray washer, and
  - EMMA™ System.

4.1.1 EMMA™ System

The EMMA™ System is a major component of the SWRS and is critical to the success of the AWR Project. Two systems are planned for delivery to the FEMP site. These systems will be used for the waste retrieval operations on Silos 1 and 2, as well as the FSM testing activities planned for Silo 4.

The EMMA™ System is designed to assist in mining and silo closure operations from Bento-Grout™ removal through final inspection and fixative application activities. The proposed mining strategy will be achieved through effective employment of the EMMA™. The EMMA™ will facilitate operations from initial entrance into the silo through final clean out, inspection, and closure acceptance. Waste and debris retrieval operations using the EMMA™ System is achieved by:

- Deploying the high-pressure Arm Deployed Sluicing System (ADSS) nozzles to breach the Bento-Grout™ layer and force the dislodged material toward the sluicing pump;
- Forcing the waste and debris away from the sluicing pump and SREE to facilitate continuous operations;
- Deploying the Gripping End-Effector System (GEES) camera and lighting system and ADSS to inspect and clean all wall-mounted silo sampling ports;
- Cleaning the in-silo cameras and lights to ensure optimum visibility for remote operations;
- Transferring debris to different locations in the silo before removal to minimize retrieval obstructions;
- Mobilizing bulk waste and debris from behind the sluicing pump and water cannon;
- Performing wall washing and inspection operations as the headroom within the silo is increased (eliminates need for high-pressure water cannon on walls and minimizes the potential for silo damage caused by high-pressure wall washing activities);
- Forming debris piles for size reduction and removal activities;
- Strategically placing the debris size reduction tool off-center from the riser location near debris piles and providing a flat surface under the silo riser for placement of the debris collection and transport basket;

- Transferring debris from the pile to the size reduction tool to the retrieval basket;
- Providing close visual inspection capabilities throughout operations and final inspection;
- Employing the ADSS for fixative application; and
- Employing the GEES camera and lighting system to assist in initial and final wall, floor, and ceiling inspection activities.

4.1.1.1 EMMA™ Deployment Tower System

The primary purposes of the EDT are to provide containment for the EMMA™ and its support systems during transport, maintenance, and system shutdown, house the mechanical operating systems (i.e., azimuth and z-drives) that provide gross positioning of the EMMA™, and still provide a maintenance and local operating control station area. The EDT is also designed to provide a redundant containment system in the unlikely event of a RCS failure. Additionally, the tower has an integrated airlock system and equipment replacement area. The mounting of the control and power distribution cabinet, as well as the hydraulic pump unit, is done at the tower base. These items will be connected after the erection of the tower and will add area to the system footprint.

The deployment tower structure is a large cylindrical tower made of A36 carbon steel with an airlock room attached to one side of the tower base. The cylindrical structure is a 90-foot tall shell with a wall thickness of 5/16 inches for the lower 20 feet and ¼ inches for the remaining 70 feet. The tower shell provides the structural support and is constructed to provide secondary shielding and containment. Buckling concerns associated with a structure of this magnitude have been addressed through tower bracing. Tower bracing is achieved through ovalling rings placed at 12-foot intervals throughout the tower structure. Each ovalling ring has a 12-foot inner diameter and a 13-foot outer diameter. The disc-shaped ovalling ring is then welded to the outside of the tower at designated points in accordance with American Welding Society (AWS) welding standards. The ovalling rings maintain the circular profile of the structure and prevent shell buckling. Critical calculations have been performed, which are moment load, weight, height, and the center of gravity. Two lifting points are provided – a tailing lug at the base and a trunion at approximately two thirds of the height of the tower.

The tower will attach to the bridge using eight separate bolt patterns equally spaced around a 12-foot, 4½-inch circle at the base of the tower. Each bolt pattern consists of two 1¼-inch bolts located 4½ inches apart. The bolts attach to a base chair design that expands the diameter at the base of the structure to 12-foot, 9-inches.

4.1.1.2 Actuation Package

The actuation package is constructed with American Society of Testing and Materials (ASTM) A500 Grade square tubing. The actuation package's primary purpose is to house the hydraulic actuators and route the cables to their appropriate positions for EMMA™ segment attachment. The actuation package is divided into two sections, the inner frame and the outer frame. The inner frame rotates inside of the outer frame as it is driven by the azimuth drive.

4.1.1.3 Mast

The mast is a welded truss structure made of various sizes of carbon steel plate tubing that attaches between the actuation package and the EMMA™. The primary function of the mast is to provide rigid support when supporting the EMMA™ as it is deployed into the silo and during in-silo operations. The mast is 13-feet long, weighs approximately 2,000 pounds, and can be accommodated by a 30-inch diameter opening. In addition to supporting the EMMA™, the mast also routes the EMMA™ cables that are fed through the actuation package, and provides a bearing surface against the guide bearing during full insertion of the EMMA™.

4.1.1.4 EMMA™

EMMA™ is a 52 ½-foot long, 30-inch diameter, cylindrical serpentine manipulator composed of five independent stages and a wrist. Each stage contains three segments. Stages 1 through 3 are single degree of freedom (DOF) stages, capable of bending only in a vertical direction. Stages 4 and 5 are two DOF stages, and provide pitch and yaw capability, which allows the stages to bend both in vertical and horizontal configurations. The two DOF wrist at the end of the manipulator provides local dexterity for gripper, end effector, and other special tooling used for silo waste retrieval activities. The wrist and five stages of the manipulator are expected to weigh approximately 7,500 pounds.

The manipulator is designed to operate under the following parameters:

- Operate reliably for 1,000 hours (no scheduled maintenance activities);
- Able to reach the sluicing pump silo when the headroom has reached a height of 23 feet;
- Perform waste retrieval activities in operating temperature ranges of 32 °F to 100 °F with a humidity range of 10 to 100% humidity;
- Manage, as a minimum, a 200-pound payload (includes GEES and ADSS weight);
- Provide a maximum horizontal-reach of 42 feet from on-center riser access location to effectively reach the silo walls;
- Provide a maximum vertical-reach of 42 feet from the bottom of the deployment tower to effectively reach the entire silo floor; and
- Capable of remaining in the silo between operating shifts to minimize insertion/retraction times and maximize in-silo operating periods.

This system, when combined with the z- and azimuth-drives located in the deployment tower, results in a manipulator with sufficient dexterity and lifting capability to carry out operations required for successful mission completion. The manipulator's mechanical behavior is based on the actuation of stages, which are controlled with steel cables and connected via termination segments. The bending moment is transmitted from segment to segment via elastomeric couplings. There are 5 stages in the manipulator that has 9 total segments. Stages 1 through 3 are constructed from a single segment. Stages 4 and 5 are constructed from 3 segments. For Stages 4 and 5 when a single stage is actuated, the three segments in the stage go

through similar motion. Also, the motion of Stages 1, 2, and 3 are coupled, and putting stage 3 in motion also applies force to Stages 1 and 2 which puts them in motion. Also, putting Stage 2 in motion would put Stage 1 in motion, but would not affect Stage 3. This design reduces the force requirements of the actuators for the first three segments.

The drive cables for Stages 4 and 5 are isolated from the previous stages by conduit, thus actuating these stages does not affect the previous stages other than changing the transmitted movement due to gravity. The drive cables for Stages 1, 2, and 3 are not housed in conduit, so the forces applied to one stage are transmitted back to the previous stages. This design reduces the overall cable tensions required to lift the manipulator, but also requires the use of back-tension to prevent undesired motion of previous stages. This design reduces the overall cable tensions required to lift the manipulator, but also requires the use of back-tension to prevent undesired motion of previous stages.

Manipulator Segment Components—The segments contain cable routing bushings, bushing mounting fittings, and connection fittings. The cable routing bushings are constructed of hardened steel to reduce wear on the bushing surfaces as the actuation cable passes through the bushing. The bushing mounting fittings provide ease of assembly and maintenance. These fittings are affixed to the exterior of the segments, and allow easy cable removal and insertion. These fittings transfer the load from the cables to the structural components of the segments. The connection fittings enable the transfer of both compression and torsion.

Stages 1 through 3—The first three stages of the manipulator provide the basic positioning and major lifting capacity of the system. These stages are rather specialized in that they are designed only to provide motion in one direction (1 DOF). Stages 1, 2, and 3 are 132 inches and each weighs approximately 1,000 pounds.

Stage construction is accomplished through a thick curved backplate and an aluminum honeycomb structure. This construction provides support against the guide bearing and is resistant against the shear, compression, and torsional forces experienced in the segments. Plates at the end of the segments contain the bushings and hinges that are used to link stages, attach cables, and rout cables through the segments. Umbilicals, conduit, and cable for stages and end tooling located farther down the arm are routed through the sides of the segments. This area is accessible through hatches in the outer shell of the segments.

Stages 1, 2, and 3 use revolute joints that restrict movement to one DOF. A hard stop will limit the rotation between an angle of 0° and 45° (or 60°) with respect the to vertical axis. As a result, the stage can only bend in one direction and cannot reverse its direction of bend as is possible in the universal stages (Stages 4 and 5). This design significantly simplifies the kinematics of the system and allows for more accurate tracking of the position of the first three stages. This design also allows for the addition of simple and robust encoders on the manipulator that will further increase the accuracy of the forward kinematics calculations.

No conduit is used in the first three stages, so cables actuating distal stages affect the dynamics of the preceding stages. Termination segments for proximal stages act as pass through segments for more distal stages. The result is that the more proximal cable sets do not need to pull with as much force because distal cable sets are supporting a significant amount of the weight of the manipulator. However, proximal cable sets will be sized to support the full weight of the system in the event of a cable failure.

Stages 4 and 5—While Stages 1, 2, and 3 are intended to provide the basic positioning of the manipulator, Stages 4 and 5 are designed for finer positioning of the end effector. These stages are intended to bend in all directions and are isolated from other stages through the use of conduit. Stages 4 and 5 of the arm use elastomer two DOF couplings to provide the bend in the stage. Unlike the joints in Stages 1, 2, and 3, these couplings are free to bend in any direction. These stages rely on the flexing of elastomer cylinders to provide bending capabilities. The use of conduit effectively isolates the cables used to drive these stages from the motion of the previous stages. Stages 4 and 5 do not aid in the lifting of any of the other stages.

Wrist—The wrist sockets into the termination segment of Stage 5. The cable assemblies are routed through the length of the manipulator and finally into the central segment member where they meet the main portion of the wrist. The wrist provides roll and pitch motion for the GEES. A flexible protective covering (sheath) will surround the wrist and protect the gripper umbilicals. Additionally, the umbilical section at the wrist will be fitted with quick-disconnects for easy replacement. The wrist is designed in accordance with the following design criteria:

- Maneuver, at a minimum, a 200-pound payload;
- Provide roll motion of up to ±180°;
- Provide pitch motion of up to ±60°;
- Withstand the radiation and humidity expected in the silo environment; and
- Withstand operations in temperature ranges of 0 °F to 110 °F.

The wrist design will include two electrical motors that use a gearbox to provide the drive for the roll and pitch axes. This design will provide the torque and speed requirements of the application, and will be protected from the silo environment through the use of a sheath. A device that can de-couple the motor from the roll and pitch axes will be used to ensure that a wrist position that will allow for the extraction of the EMMA™ from the silo in an emergency situation can be maintained. The roll of the system uses a slip key system, which will easily allow for the ±360° rotation. Electrical trigger switches will be used for the end of travel. Drives for the electrical motors will be contained in the actuation package.

4.1.2 Bulk Retrieval System

The majority (approximately 90%) of the silo waste is removed by sluicing using the BRS. Bulk retrieval of the silo waste material is accomplished by a sluicing nozzle and a slurry pump (these items are approximately 50-feet apart in the silo). The operators to the systems' control valves are electric and controlled normally from the control trailer and also from local control panels. Sluicing fluid comes from the TTA Decant Pumps.

Initially, the sluicing nozzle is directed as close to the Slurry Pump inlet as possible to create a slurry pool (6-foot diameter by 1½- to 3-feet deep) and form a cavity for slurry to flow into. The Slurry Pump is lowered into the cavity and turned on when sufficient submergence has been achieved. Additionally, the sluice water can be directed to the slurry pump and the pump operated in reverse to assist in developing a slurry pool, as well as to backflush the screened intake. The slurry pump also has a high-pressure water jet ring at the pump suction that can

blast hard material into pumpable slurry. The sluice nozzle then begins cutting a vertical "canyon" into to the silo waste, pushing it towards the pump. The width, depth, and length of the "canyon" will be increasing while trying to minimize the diameter of the slurry pool around the slurry pump (see Section 2 of this document for Mining Strategy details). After each day's sluicing operations, the slurry line, slurry pump, sluicer line, and sluicer are back flushed with decant water then rinsed with filtered water. If plugging occurs during normal operations, the decant water.

As the waste in the silo is lowered, the slurry pump is periodically lowered further into the tank, until it reaches the bottom. As the pump is lowered, liquid-level instrumentation mounted on the pump is monitored to ensure proper submergence before the pump is started to avoid cavitation and minimize plugging. The pump is also fitted with a lower travel-limit switch that prevents it from being driven into solid K-65 material.

The pump has a discharge pressure gauge and a Coriolis effect mass flow meter. The mass flow meter measures the slurry mass flow rate and density. It is equipped with a "net flow" computer that converts instrument measurements into a total mass of solids transferred through the slurry line. The mass flow rate and density measurements are used to maintain the critical solids loading in the slurry line. The measurements are necessary to ensure the slurry transfer pipeline flow is in the turbulent flow region to prevent plugging. The accuracy of the flow meter at the nominal process solids loading (10 to 20 weight percent [WT%]) and volumetric flow rate (300 to 350 gpm) is estimated at ±0.11%. If the solids WT% increases either sharply or indicates an increasing trend, then sluice water is injected directly into the slurry transfer line to maintain the target solids content and to help ensure solids do not settle in the transfer piping.

The sluicing nozzle is also lowered periodically as the waste level is decreased. Lowering the sluicing nozzle allows EMMA™ to operate freely in the upper tank dome area and perform other tasks like dome and upper wall washing without being impacted by the large sluicing nozzle waterjet. Lowering the nozzle also increases waste mobilization efficiency by attacking the waste at a more direct angle and shorter distance. The sluicing flow is matched with the slurry pump discharge rate to achieve a steady state of slurry in the silo. The normal operating range is between 300 to 350 gpm. The sluicer is equipped with pan and tilt capability for fine control of angle of attack.

There may be times that the sluicing nozzle is not adequate to break up the waste. The EMMA™ assists the large sluicing nozzle with its smaller (½-inch) sluicing nozzle integrated into the arm. This design allows a focused stream to be applied close to the waste. EMMA™ has a second nozzle set for a wide spray to gently and quickly washdown the tank walls, dome, and floor. The fluid for this sluicing and washdown comes from the TTA filtrate storage tank using the high-pressure pumps. The sluicing operation continues until the Slurry Pump can no longer continue pumping slurry because of head limitations or cavitation occurs because it is at the silo floor.

4.1.2.1 Sluicer

The sluicer nozzle is approximately ¾-inches inside diameter and is normally operated at 150 psi and 300 gpm that creates a sluicing stream velocity of approximately 140 feet per second (fps). The nozzle is remotely articulated from the AWR Project control trailer in an automatic or manual mode to allow for either vertical channel cutting or horizontal sweeping as necessary. The sluicer has a ±170° horizontal rotation and a +100° and -5° vertical rotation capability from

the six o'clock position. As the level of the waste decreases, the sluicer is lowered to achieve the proper angle of attack on the waste. Sections of mast containing sluicing piping are manually added with the assistance of a hoist to raise and lower the nozzle. The fine adjustment of the nozzle elevation is accomplished by the mast hoist in the sluicer enclosure. The mast hoist is normally operated from the AWR Project control trailer, but may also be operated locally when adding or removing sections.

4.1.2.2 Sluicer Enclosure

The sluicing deployment system is housed in a Sluicer Enclosure. The enclosure measures approximately 6-feet by 10-feet by 20-feet high. The enclosure serves as secondary containment and drains to the silo. The enclosure weighs approximately 15,000 pounds and has several gloveport panels, an 11-feet by 3-feet access door and a 2-feet by 2-feet pass-through. The weight of the sluicing system is supported off the silo bridge platform. The sluicing system is connected to the silo by a flexible coupling or bellows that allows for small vertical or horizontal bridge platform movement without inducing stresses to the silo.

When the sluicer is no longer needed, it is removed from the silo while being decontaminated by a high-pressure spray ring that is mounted on top of the riser flange then passed through a radiation monitoring ring. Manual washing with a spray wand occurs through the glove ports as the equipment is removed to ensure the equipment is properly cleaned. Water to the spray ring and manual spray wand is filtered water and comes from the high-pressure decontamination pump. The sluicer has a large interface flange on one end for mating to the SDRS. During sluicing, the interface opening is covered by a panel. After sluicing, the panel is removed and the SDRS is bolted to the sluicer interface flange. The sluicer mast sections are stored and the mast support table is unbolted and moved away from the silo riser opening allowing the SDRS to access the riser for its retrieval operations.

4.1.2.3 Slurry Pump

The slurry pump is a progressive cavity pump with a capacity of 500 gpm of water at 100 psi of discharge pressure. Normal operation of the pump is expected to be approximately 350 gpm and 80 psi. The pump is approximately 13-feet long, including gear motor drive, with vertical profile dimensions of 19.5-inches by 15-inches. The pump weighs approximately 2,300 pounds. The pump housing is cast iron. The stator is Buna-n and the rotor is hard-coated stainless steel. A strainer basket is mounted on the suction of the pump with a ½-inch mesh size. The pump is supported from one or two 12-foot-long mast sections. The mast sections contain piping or hoses for the slurry discharge, flush water, SREE utilities, and heel waste retrieval jet pump. The drive motor is variable-speed (0 to 250 revolutions per minute [rpm]) and approximately 50 horsepower (hp). The motor and pump assembly is mounted on a vertical-positioning table that is raised and lowered by an open loop, remotely controlled, single-speed alternating current (AC) drive motor. When the pump is lowered to the bottom of the table's travel, the assembly is manually secured and disconnected from the table; the table is raised and a new section of mast is installed. A level instrument remotely displays the table's elevation. The pump has liquid-level and lower travel-limit instrumentation that indicates when the pump has been adequately submersed in the slurry to avoid cavitation and prevents driving the pump into solid K-65 material. The total weight of the slurry pump system, support equipment, and enclosure is estimated at approximately 18,000 pounds.

3388

4.1.2.4 Slurry Pump Enclosure

The slurry pump deployment assembly is housed in a Slurry Pump Enclosure. The enclosure measures approximately 9-feet wide by 18-feet long by 20-feet high. The enclosure serves as secondary containment and drains to the silo. The enclosure has a horizontal sliding carrier that assists with pump and mast section assembly, and stowage. The enclosure has multiple gloveport panels, a 10-foot by 3-foot access door, and a 2-foot by 2-foot pass-through. The enclosure is designed to store the slurry pump equipment and is used as containment while transferring the equipment between the silos and to the TTA tanks.

The weight of the Slurry Pump System is supported off the silo bridge platform. The Slurry Pump System is connected to the silo by a flexible coupling that allows for vertical or horizontal bridge platform movement without inducing stresses to the silo. When the slurry pump is no longer needed, it is retracted from the silo while being decontaminated by a high-pressure spray ring that is mounted at the bottom of the enclosure. Manual washing with a spray wand and radiation monitoring occurs through the gloveports as the equipment is removed to ensure the equipment is properly cleaned. Water to the spray ring and manual spray wand is filtered water from the high-pressure decontamination pumps.

4.1.2.5 Slurry Transport Pipeline

The slurry transport pipeline is routed overhead from the waste silos to the TTA. The slurry transport pipeline is a pipe-in-pipe design that provides secondary containment. The slurry transport pipeline is provided with freeze protection and instrumentation to detect leaks into the secondary containment, and monitor pressure drop and slurry density. The slurry transport volumetric throughput is designed to maintain a minimum velocity to deter solids settling. The pipeline is sloped to the TTA from the Support Bridge to allow self-draining.

The slurry transport pipeline terminates at a diverter valve containment area centrally located to the waste storage tanks and the slurry is discharged into the TTA storage tanks. If plugging occurs during normal operations, then the decant water to the sluicers is directed into the slurry line to clear the blockage. Capability is provided for forward flush and back flush to clear a clogged line. In addition to flushing capability, clean-outs are provided in the transfer piping at intervals of approximately every 80 feet between the Silo Bridge and the TTA. A spare slurry transfer line is also provided which will enable operations to continue until the end of the operating period. Redundant pressure indicating transmitters located at intervals along the transfer piping are for use in determining the location of the blockage.

Once the approximate location of the blockage is pinpointed, the clogged transfer line will be breached, during shutdown, at one of the clean-outs. A containment field will be established to ensure the containment of any liquids or residues, and the blind flanges on the containment pipe and carrier pipe will be removed. A manually operated metal "snake" will be deployed by maintenance personnel wearing personnel protective clothing and respirators, as determined by health physics, to clear the clog.

Since the slurry pump is equipped with an inlet screen to minimize the size of debris, the clog will most likely consist of K-65 and BentoGrout™ material. This material will remain in the pipe, and be flushed to the Transfer Tank after the blockage has been cleared. The maintenance personnel will wipe the metal "snake" with a cloth and allow the residues to fall into the carrier pipe. The cloth will be bagged and disposed as contaminated waste, and the metal "snake" will be either bagged for disposal, or bagged and taken to a decontamination area for cleaning.

000417

Following this procedure, the system will be closed and aligned for flushing with decant water, thus transferring the material to the TTA Transfer Tank.

3388

4.1.3 Conditioning and Transfer System

The waste that remains in the silos upon completion of the bulk retrieval process is called the heel. The heel may consist of remaining liquids, decant that is below the NPSH of the slurry pump, soft residue, hard residue, and agglomerated waste piles. The CATS consists of a heel tank and slurry pump assembly, SREE, hose management system, and EMMA™ System.

When bulk retrieval is complete, the slurry pump is removed from the silo. A SREE cradle is manually lowered into the silo and placed on the bottom by EMMA. With the pump removed, the pump inlet screen is replaced with a cap that creates a heel waste surge tank. The SREE is then attached to the end of the CATS hose bundle and is lowered down the slurry pump's riser. The jet pump is then installed into the hose bundle. The hose bundle hoses are connected to the heel waste surge tank before it is inserted into the silo. The slurry pump tank assembly is then lowered until it reaches the bottom of the silo. The sluicer from the BRS is removed and an SDRS is installed in the riser. The SREE is grasped by the EMMA™ gripper and manipulated to mobilize and remove the remaining heel. A waterjet pump provides the motive force to pump the waste through the discharge hose and into the heel waste surge tank. The water for the jet pump and SREE comes from the filtrate storage tank using the high-pressure pumps. Approximately 200 to 250 gpm of sluice tank water is directed into the heel waste surge tank and comes from the decant pump. When the jet pump is started, the slurry pump is turned on and the waste is transferred to the TTA tanks.

A continuous flow of sluice water is maintained into the surge tank to ensure that the slurry pump maintains a continuous flow through the slurry transport line at the appropriate velocity to minimize potential for line plugging. The water and waste added to the hopper by the SREE and waterjet are then transported by the slurry pump along with the sluice water flow. The heel waste surge tank uses the same level detection device used by the slurry pump during bulk retrieval. This level data is used by the operator to maintain the tank level by adjusting the slurry pump speed. When the heel removal activities are completed for the day, the slurry pump, the slurry line, decant line, and SREE are flushed with decant water and then rinsed with filtrate water.

4.1.3.1 Heel Waste Surge Tank

The heel waste surge tank receives the waste from the SREE and the decant supply line to vent out the air that was entrained in the waste mixture from the SREE and jet pump. The heel waste surge tank has approximately a 200-gallon capacity and is located under the slurry pump to create a reservoir from which the slurry pump can pump. The tank is equipped with level instrumentation, sluice water addition, slurry pump suction piping, and a vortex plate.

When the heel has been removed, the surge tank, slurry pump, and mast sections are removed from the silo while being decontaminated by a high-pressure spray ring that is mounted at the bottom of the slurry pump enclosure. Manual washing with a spray wand and radiation monitoring occurs through the gloveports as the equipment is removed to ensure the equipment is properly cleaned. Water to the spray ring and manual spray wand comes from the high-pressure decontamination pump.

000448

000026

3388

4.1.3.2 Silo Retrieval End-Effector

The SREE consists of three rotating jets that are used to locally slurry material and direct the slurry to a central inlet that has a 2-inch diameter. The nozzles operate at up to a maximum 10,000 psi at approximately 10 gpm. Water to the nozzles comes from the SREE high-pressure pump. To vacuum the slurry out of the central inlet port, a radial waterjet pump is integrated as close to the SREE as possible. The jet pump requires approximately 10,000 psi of water at approximately 10 gpm. Water to the nozzles and jet pump comes from the SREE high-pressure pumps. The basic premise of the waterjet pump is that three radial waterjets are placed such that they converge in the discharge nozzle of the jet pump, thus creating a vacuum (for a short distance). The slurry from the SREE inlet port is vacuumed into the three jets, at that time it is then pressurized and "pushed" through the jet pump discharge nozzle and into the heel waste surge tank.

A flexible skirt design is used on the SREE to confine spray when operating on hard surfaces at higher pressures during final floor cleaning. This design reduces mist generation and its impact on performance of visual surveillance systems. The SREE has flow passage geometry and a pressure/vacuum relief to maintain airflow in the event of a plugged inlet, thereby preventing settling in the conveyance line. The conveyance line has backflush capabilities to clear any plugs.

4.1.4 Silo Debris Retrieval System

When the bulk waste retrieval is complete and the heel retrieval process is underway, there will be debris such as plastic bottles and metal pipe sections at the bottom of the silo. The SDRS removes this waste.

The debris will fall as the waste level falls and will be left on the silo floors. The in-silo SDRS consists of a steel cage basket and hydraulically actuated waste size reduction tool. EMMA™ places large debris, such as pipes that will not fit in a debris basket, into the waste size reduction tool. Following size reduction, EMMA™ places the smaller pieces into a debris basket. The basket is washed using the EMMA™ spray nozzle, lifted into a decontamination spray ring station, passed through a radiation-monitoring ring, and lifted into a packaging enclosure. If the debris is not sufficiently decontaminated, then a second washing in the spray ring or manual wand washing is executed.

The baskets are then raised into the SDRS enclosure, where they are automatically loaded into 30-gallon drums by a hoist system. When a drum is filled, a worker in appropriate personal protective equipment (PPE) enters the SDRS enclosure to seal the drum. The entire process is automated except for the final tightening of the 30-gallon drum lid bolt and the installation of a new 30-gallon drum in the enclosure load-in station. One end of the SDRS enclosure has a flanged interface opening covered by a removable panel. When sluicing is finished, the panel is removed and the SDRS is mated to the sluicer to allow access to the sluicer's silo riser.

4.1.4.1 Waste Size Reduction Equipment

The waste size reduction equipment consists of water hydraulic-powered shears. The hydraulic power supply remains in the debris removal system enclosure and the shears are located in the silo. Operation of the cutting device is performed remotely from the control station.

000449

000027

3388

4.1.4.2 Silo Debris Retrieval System Enclosure

The debris removal system enclosure houses the lifting hoists, manual spray wash station, 30-gallon packaging equipment, and all waste removal support equipment. The enclosure serves as secondary containment and drains to the silo. The enclosure is supported by the Silo Bridge and connects to the silo by a flexible coupling or bellows through the same opening as the sluicer.

The SDRS enclosure is fabricated from a standard 20-foot International Standards Organization (ISO) container modified with double doors for ease of ingress and egress. The doors are airtight. A tele-operated ½-ton hoist assembly is installed onto the roof of the container. Racks and clips are provided to hold the debris baskets and drums in position.

4.1.4.3 30-Gallon Drum Packaging Equipment

The packaging equipment consists of a hoist system that offloads the waste baskets into a 30-gallon drum. This system is fully automatic except for unloading of a full drum from the silo, loading of a new drum in the load-in station, and clamping the lids on the containers. A grasping bridle mechanism will grasp the top ring of the baskets. This design allows the winch bridle to pick up an empty basket and set it into the drum after filling. The bridal mechanism is also designed on the top to prevent anything catching on the manway protective cover as the basket is hoisted up. The waste basket is steel mesh and not reusable. A new basket is used for each retrieval effort. A pan and tilt camera mounted on the wall provides full-room coverage, and a second camera mounted on the hoist provides the view necessary to see down the manway and into the basket.

4.2 Radon Control System

The RCS is a treatment system that employs air conditioning, dehumidification, activated carbon, and HEPA filtration to reduce the activity of radon in Silos 1 and 2 and the TTA tanks for the AWR Project. The major process components are located within buildings 94E, RCS Air Handling Building, and 94D, RCS Carbon Bed Building, at the FEMP site. Auxiliary components are located outside on a pad at the west end of the RCS buildings. The RCS receives gas streams from the following sources:

- Silos 1 and 2 (including during decontamination of the silos),
- Silo Waste Retrieval System,
- Decant Sump Waste Retrieval System,
- TTA System,
- Transfer Tank Area Waste Retrieval System, and
- Future Full-Scale Remediation Facility.

The RCS is designed to remove radon-laden air from the various system components, reduce radon releases to the atmosphere, detect and measure releases to the atmosphere, and mitigate system upsets. Contaminated gases removed from the sources described above are drawn through the RCS by redundant centrifugal fans (FAN-20-001A and FAN-20-001B). The

000420

fans and ducting system are designed to prevent over or under pressurization of the silos and transfer tanks beyond +0.5 inch water gauge (WG) and -2.0 inch WG. The ducting system recirculates process air through the system or discharges through the exhaust stack, while maintaining the required silo and tank pressures. The ducting system is balanced using a redundant PLC system. The PLC system monitors the prevailing system pressure and volumetric air flow conditions. The control system automatically controls fan speeds and the damper system. The automated damper system discharges air from the system, draws fresh air into the system, and isolates process areas as required to maintain the appropriate operating conditions. The fans are located downstream of the carbon beds to maintain an induced draft in the carbon beds. The ducting arrangement, in conjunction with the automated monitoring and damping system, prevents backflow of contaminated gases to the atmosphere.

The total design flowrate for the RCS is 1,000 cubic feet per minute (cfm). The ventilation rate for each source listed above is dependent upon which operational phase is in effect for the RCS. The ventilation gas from each source is withdrawn and transferred to the RCS Building where the treatment equipment is located. Ventilation air from each source is combined into a 10-inch insulated, carbon steel, common duct header equipped with a gravity drain trap connection that discharges to the Condensate Holdup Tank (TNK-20-002B). The 10-inch duct header connects to redundant 95%-efficient roughing filters (FLT-20-001A and FLT-20-001B) for particulate removal. Filter housings for the roughing filters are stainless steel, side access, bag-in/bag-out type housings rated at 1,000 cfm each. Filters will be operated with one online at a time.

Upon exiting a roughing filter, the ventilation air enters one of the redundant desiccant drying systems (DDS-20-001A and DDS-20-001B) at a design condition of 90 °F and 100% relative humidity (RH) where the air stream is cooled and dehumidified to 36 °F and 15% RH. The gas is cooled and dehumidified to enhance the dynamic adsorption capacity of the activated carbon. Each desiccant drying system consists of a pre-cooling coil, regenerative desiccant wheel, post-cooling coil, closed loop reactivation system, and a condensate collection and transfer system housed in an aluminum cabinet housing. Each system is rated at 1,000 cfm. The pre-cooling coil cools and dehumidifies the ventilation air to a stream that is 45 °F saturated air. From the pre-cooling coil, the air flows through a desiccant wheel where the air is dehumidified. The temperature of the air exiting the wheel will be 98 °F with moisture content of 5 grains per pound. Ventilation air from the desiccant wheel flows through a post-cooling coil where the air is cooled to the target temperature of 36 °F before exiting the desiccant drying system.

Chilled water cooling streams for the cooling coils within the desiccant drying system are provided by a set of redundant 50-ton reciprocating chillers (approximately) located outside the RCS Building on the equipment pad. The chillers are equipped with the necessary expansion tank, air vents, air separators, and chilled water supply pumps to provide the necessary chilled water flows. Three-inch, carbon steel, chilled water supply and return lines are used to transfer the cooling media to and from the coils within the desiccant dryers. The desiccant wheel has a closed-loop reactivation system for regeneration of the desiccant. This reactivation system includes a blower, heater, and condensing coil. Redundant chilling/desiccant systems are provided to ensure continuous availability.

A condensate pump located within the desiccant drying system transfers condensed liquids from the desiccant drying system to one of two 3,000-gallon carbon steel hold-up tanks (TNK-20-002A and TNK-20-002B). The condensate holdup storage tanks are vented to the RCS and automatic dampers will open to relieve pressure. These tanks are equipped with vacuum

control valves to let air into tanks when vacuum setpoint is reached. The liquid is held for as much as 40 days in the condensate holdup tanks to allow for radon decay. Subsequently, transfer pumps (PMP-20-001A and PMP-20-001B), which are made of ductile iron and rated for 25 gpm at 40 total displacement head (TDH), dispositions the liquid in one of two ways:

1. Transfer to the filtrate tanks in the TTA building for subsequent distribution to one of the four Transfer Storage Tanks or use by the high-pressure pumps.

2. Transfer to the FEMP AWWT facility after characterization indicates the condensate meets the waste acceptance criteria (WAC).

The chilled/dehumidified ventilation air stream exiting the desiccant drying systems flows to the carbon adsorption units (CBD-20-001A, CBD-20-001B, CBD-20-002A, and CBD-20-002B) via a 10-inch carbon steel duct header. The carbon adsorption system consists of four insulated carbon steel vessels, approximately 16-feet by 11-feet by 11-feet, which contains a total of 160,000 pounds of carbon (40,000 pounds per vessel). Two of the carbon vessels contain new carbon while the other two vessels contain Government-furnished carbon. The combination of the new carbon and the Government-furnished carbon will produce an effluent from the beds that is equivalent to the carbon having a K_c of approximately 11 L/g.

The four carbon beds are operated in parallel splitting the flow equally. Each carbon bed is connected to the 10-inch main duct headers by 8-inch branch duct connections on both the inlet and outlet of the beds. Each bed is aligned with a dedicated inlet and outlet damper for flow control and isolation. Modulating dampers and flow elements provided on the inlet of each bed allow flow to each bed to be reduced or increased on the basis of operations. Each carbon adsorption vessel is capable of treating up to 500 cfm.

Ventilation airflow rates and sources vary during different phases of RCS operation. The modulating dampers provide for flow distribution among the beds. Each carbon bed is physically isolated in an individual room. The treated air stream from each carbon bed is monitored individually for radon. In the event that out-of-parameter conditions are detected downstream of a carbon bed, adjusting the automatic air damper on the inlet side of the carbon bed will reduce the airflow through the affected bed. (Note: Pre-set alarm levels used to detect out-of-parameter conditions are described in *Data Quality Objectives*, Document No. 624-P621-12, for the AWR Project.) If performance of the bed continues to degrade, then the motor operated damper downstream of the affected bed will be closed automatically and the airflow will be redistributed through the other carbon beds.

In the event a carbon bed needs to be dried, the RCS has the capability to isolate the individual bed from the others. A take-off stream ranging between 125 and 250 cfm from the recirculation fans will be heated using an inline process heater (DHT-20-001) and passed through the affected carbon beds using an induced draft fan (FAN-20-003) which is a single stage, constant speed, centrifugal type fan with a carbon steel housing. The fan is rated at 500 cfm at 15 inches total static head. From this fan the drying air stream is transferred to the RCS for treatment in the carbon beds that remain on line or if the bed is allowed to sit until the radon has decayed adequately, there exists the capability to discharge through the HEPA filters (FLT-20-002A and FLT-20-002B). The carbon bed drying activity is a maintenance activity only that will be used to regain carbon bed performance.

The treated gas stream flows from the carbon adsorption units through 8-inch branch connections to the 10-inch duct header to the redundant HEPA filtration units (FLT-20-002A

and FLT-20-002B). Filter housings for the HEPA filters are stainless steel, side access, "bag-in/bag-out" type housings with in-place test sections. The HEPA filtration system employs bag-in and bag-out features to minimize the potential of releases during filter changes. Filters will be rated at 1,000 cfm each and operated with one online at a time. Air from the carbon beds, makeup air, and fan recycle combine before entering the HEPA filters.

A connection into the flow path before the exhaust fans provides makeup air to the closed air system through damper LVR-20-015. Damper LVR-20-020 allows recycled air back to the active fan. This configuration allows the fan to run near its rated speed (in rpm) to reduce strain and thus potential maintenance on the system. A connection into the flow path after the exhaust fans allows excess air to exit the system to the stack through damper LVR-20-016.

This configuration allows the flow path of the air to:

- Return to the silos or TTA tanks,
- Be exhausted to the stack,
- Be modulated to reduce total flow through the entire system, and
- Allow fresh air makeup to take place.

Quantities of makeup air, fan recycle air, and stack exhaust will be based upon maintaining a certain static pressure at the discharge of the fan. After exiting the operating HEPA filter unit the treated air stream enters the operating recirculation fans (FAN-20-001A and FAN-20-001B) for redistribution to the silos, TTA tanks, or exhaust through the monitored stack (STK-20-001). The recirculation fans are single-stage, variable speed, centrifugal-type fans with a carbon steel housing. The recirculation fans are rated at 1,000 cfm at 52 inches of total static head.

Air from the recirculation fans can be recirculated to the silos, TTA tanks, or exhausted through the stack. Air that is to be recirculated back to the silos or the TTA or exhausted out the stack is sent through a common duct header. Air recirculated back to the silos or the TTA is sent through a duct located on the pipe rack that branches to each of the areas and further branches to the individual silos and tank sources to supply the recirculated air to each one. The distribution of air being exhausted versus the amount of air being recirculated to the different sources is controlled by using modulating dampers LVR-20-016, LVR-20-015, and LVR-20-020 which will be controlled based upon pressure in the fan discharge line. The pressure in the fan discharge line will be affected by the pressure in the silos and TTA tanks, each of which has modulating dampers on the inlet and outlet lines of the silos and TTA tanks for pressure control within each source vessel. Also, a closed position for the supply dampers on the silos and TTA tanks provide a signal to the exhaust damper for the stack which allows air to be exhausted. The amount of air exhausted is based upon the flow measured by the flow meters in the respective exhaust suction lines of the sources with a closed supply damper.

The stack (STK-20-001) is a 150-foot tapered carbon steel stack that is approximately 6 feet 4 inches at the base and tapers to approximately 3 feet at the top. The maximum airflow through the stack is 12,000 cfm. The stack has connections for a 10-inch carbon steel RCS process duct and a 34-inch carbon steel building ventilation duct. The stack is provided with an isokinetic sampling system and will include monitoring for both particulate radionuclides and continuous monitoring for radon. The isokinetic sampling system is housed in a conditioned

building, Continuous Emissions Monitoring Building (94J), on the equipment pad close to the stack to minimize the horizontal run of the sampling line. Minimization of the horizontal run and sharp bends or turns of the sample line are requirements to reduce particulate fallout in the sample line. A sampling rake for collection of the sample from the stack is inserted into the stack and is attached to a sampling line. The sampling line is located at approximately 61 feet in elevation. This corresponds to roughly eight stack diameters downstream from the last flow disturbance into the stack. Also, the tapered transition from the 6 feet 4 inch base section of the stack to the smaller diameter section is located at approximately an elevation of 75 feet, which corresponds to about 2 stack diameters downstream of the sampling rake. These elevations were used to obtain a representative sample of the air stream being exhausted. In the event that an out-of-parameter condition is detected, an alarm is enunciated and appropriate action is taken, such as switching the HEPA filters being used, recirculating the process flow to the silos, reducing the airflow in the RCS, or shutting down the RCS. In addition to the automatic actions taken by the control system, the system calls—using telemetry—a designated number to alert the on-call responsible person that an out-of-parameter condition exists.

The RCS PLC is provided with software that is compatible with the overall process control system through a networking software package (e.g., Siemens PROFIBUS or other suitable technology). The RCS PLC HMI computer exhibits the following software capabilities:

- Scanning the input/output (I/O) signals received by each of the individual unit operations,
- Providing input data to registers at each individual unit operation controller to enable or disable control functions at the respective unit operation controller, and
- Providing graphic screens that display the relevant operating parameters and status of the individual unit operations controlled by the RCS PLC, as well as the complete process control system as a total.

The PLC programming is designed to:

- Automatically monitor and control the unit operations within the RCS operating system to ensure correct operating conditions are maintained,
- Automatically switch between redundant process trains when operational, maintenance, or mechanical problems occur,
- Initiate carbon bed isolation and/or recirculation mode upon detection of an out-of-parameter radon level from radon monitoring instrumentation,
- Enunciate warning status alarms to inform operational personnel that conditions exist within acceptable design parameters but outside desired operating conditions, and
- Enunciate emergency status alarms and automatically initiate system shutdown if conditions exist that are outside design parameters (e.g., unrelieved high-pressure in silos).

Alarms are annunciated at both the local PLC interface and at the overall process system control interface. Backup power is provided by an Uninterruptible Power Supply (UPS) to control system components to ensure uninterrupted operation.

The RCS Air Handling Building has a second-story and a nominal footprint of 30-feet by 135-feet. Outside the RCS Building, there is an exterior pad upon which the set of redundant chillers is installed. The RCS Buildings are separated into two areas, one containing the carbon beds (94E) and one containing the process equipment for air handling and conditioning (94D).

A concrete partition wall that is 24-inches thick separates these two areas. The first floor of the Air Handling Building contains the roughing filters, desiccant drying systems, condensate hold-up tanks, and condensate transfer pumps associated with the cooling and drying operations that are being performed in this area. The air conditioning process train is redundant to allow for maintenance activities on one train while the other operates. Two 24-inch concrete shielding walls separate the air conditioning process trains (desiccant drying systems). Also, a 12-inch slab is positioned over the desiccant drying system for shielding purposes. The operation of equipment located within the air-conditioning vaults will be cycled on the basis of maintenance, mechanical, and operational considerations. The carbon bed area is shielded by 24 inches of concrete. The air conditioning areas around the desiccant dryer and roughing filter are shielded by 12 inches of concrete and 3 inches of steel plating.

Space is provided to perform maintenance on equipment. A nominal 1-foot of concrete shielding is provided between each set of redundant equipment to account for radon that may be absorbed and trapped in the condensate, and radon daughters that may be deposited on any of the internal surfaces of the process system.

The building heating and ventilation system for the interior space of the RCS Building is a once-through system. The heating and ventilation system is comprised of separate supply and exhaust systems. The ducted supply air system draws outside air into the building by the RCS Building supply fan (FAN-77-003). The outside air enters through a filter (FLT-77-001) that reduces the amount of particulate loading in the intake system. Electric duct heater (HTR-77-012A and HTR-77-012B) heat the supply air when the outside temperature falls below design conditions of 40 °F. The carbon bed areas are not heated and have a different supply system than the air handling section of the building. Air supplied to the carbon bed rooms is being conditioned to maintain approximately 60 °F in the rooms at all times when required by the outdoor temperatures. At all other times, supplied air to the rooms will be at ambient temperatures.

Redundant centrifugal Building Ventilation Exhaust Fans (FAN-77-001A and FAN-77-001B) ventilate the interior space of the RCS Building. The fans and ducting system maintain the RCS Building at a negative pressure. The RCS Building ducting system is manually balanced. The direction of airflow is from areas of low potential contamination to areas of higher potential contamination. The prevailing pressure of the carbon bed area and the air conditioning area is monitored. The Building Ventilation Exhaust Fans maintain an induced draft (negative pressure) throughout the RCS Building and are located downstream of redundant HEPA filters (FLT-77-002A and FLT-77-002B). An emergency generator in conjunction with the redundant fans, chillers, carbon beds, HEPA filters, and PLCs provide the 100% availability requirement.

A separate exhaust air register is supplied to each carbon bed area to extract ventilation air in the event of a leak of radon into the carbon bed rooms. This air is transferred to the RCS for

treatment via the carbon bed drying line. The redundant HEPA filters and fans for the RCS and for the RCS Building ventilation are mounted in a pre-engineered structure located over the air conditioning areas. The stack is also mounted on the concrete equipment pad.

The sequence of operation for the RCS is divided into Phase 1, Phase 2A, Phase 2B, Phase 2C, and Phase 3, which are outlined below:

- Phase 1 Silo 1 and Silo 2 Headspace Reduction,
- Phase 2A Silo 1 Retrieval, Silo 2 Headspace Reduction, TTA Ventilation,
- Phase 2B Silo 2 Retrieval, TTA Ventilation,
- Phase 2C TTA Ventilation, and
- Phase 3 TTA Ventilation, Future Waste Remediation.

4.2.1 Phase 1 - Radon Control in the Silo Headspaces

During Phase 1, the ventilation air is withdrawn from Silos 1 and 2 and transferred to the RCS for treatment. The treated ventilation air is returned to the silos for sweep ventilation purposes. The desired pressure conditions are maintained by using an automatically controlled fan and damper system. The RCS will operate in this scheme to maintain radon concentration levels inside the silo headspaces at levels that will allow safe access for work activities in the silo area. The design flowrate for the ducting system for the ventilation of Silos 1 and 2 is based upon exhausting up to 500 cfm from each silo for Phase 1 operations. The design also includes the flexibility to reduce flow from one silo for a short period of time to increase the amount of air exhausted from the other silo in service. This capability may be used during the time the size of the openings in the silos will be increased for introduction of mining equipment to be used in the later phases. Recirculation will not be employed during this scheme of operation and all air from active silo will be exhausted through the stack.

During Phase 1, the RCS suction lines from Silos 1 and 2 will be flexible hoses routed over the berm with a low-point condensate trap. This trap is equipped with a level alarm to notify operations personnel of excess water in the trap. When the excess water is drained, a portable collection pan (e.g., volume $\geq$ 5 gallons) will be placed under the connection. The excess condensate (approximately 2 gallons) will be collected in a container and characterized for disposition at the AWWT facility. A ventilation stream from each silo through an existing opening in silo risers is exhausted through dampers DMP-20-049 and DMP-20-053, respectively, into 6-inch flexible hoses that connect to a six inch rigid steel duct that extends up the piperack and connects to two dampers that feed an 8-inch main duct header to the RCS. Upon entering the building, the air is treated through either process train A or B as described above. After the air is treated and leaves the fan, it flows to an 8-inch duct header that supplies the silos. This duct header connects to two dampers that feed back to the flexible hoses routed over the berm, which connect to the silos by dampers DMP-20-047 and DMP-20-051, respectively.

Modulating dampers, LVR-20-004 and LVR-20-001 on the respective suction lines from Silos 1 and 2 along with modulating dampers, LVR-20-003 and LVR-20-002 on the respective supply lines to Silos 1 and 2 serve to help maintain a negative pressure (vacuum) within each silo. These dampers are motor-operated devices and are operated in a master and slave

arrangement. Dampers LVR-20-003 and LVR-20-002 are designated as the master devices and provide full authority to modulate the silo pressure. During periods of system flux or other transient episodes, the dampers (LVR-20-004 and LVR-20-001) offer additional control in the event the other dampers exhaust their full range of authority before the target pressure is attained. Entry of the supply air into the silos is achieved through an opening opposite the one through which the air exhausted. By using opposing openings for the inlet and outlet airflow, the flushing of the radon-laden air from the silos is maximized.

The silos are protected from an out-of-parameter pressure condition by two methods. Over-pressurization conditions are not expected and are addressed by the master/slave operation of the supply and suction damper system on each silo. In the event that a positive pressure spike remains unmitigated before attaining the desired condition, the supply is terminated and the system briefly goes into return-only or exhaust mode to dampen the spike. Subsequently, the supply is bled back online and the desired condition is restored. Additionally, pressure/vacuum relief devices PCV-SILO-20-001 and PCV-SILO-20-002 protect the silos by providing the final relief from underpressurization. In an underpressurization condition the device allows fresh air in and thus relieves the condition. Any such events are considered upset conditions and are not intended for normal operation. Subsequent to such an event, the prevailing system conditions are analyzed to determine the causative issues so that operational adjustments can be identified and implemented.

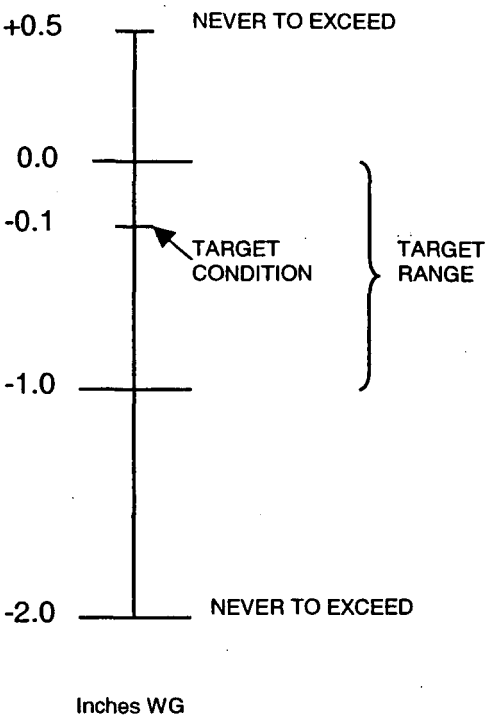

Exhibit 4.2-1. Target Pressure

As shown in Exhibit 4.2-1, the normal operating target pressure for Phase 1 will be –0.1 inches WG. If due to the structural nature of the silos (large crack areas - high infiltration rate) the target pressure may be reset to a setpoint nearer atmospheric pressure (-0.01 inches WG). The targeted range of operation is from 0.0 to –1.0 inches WG. The control system responds to maintain the target condition. Normal operations occur within the targeted range. Excursions beyond the targeted range are mitigated as discussed. The control devices, control strategy, and the relief mechanism ensure the "never-to-exceed" values of 0.5 and –2 inches. A targeted setpoint for the subsequent phases of operation will be determined based upon activities and the pressures achieved during the FSMS activities on Silo 4 during Phase 1 RCS operations.

Modulating opposed blade dampers on the respective suction lines from Silos 1 and 2 along with modulating dampers on the respective supply lines to Silos 1 and 2 serve to help maintain a negative pressure (i.e., vacuum) within each silo. Redundant pressure differential transmitters provided pressure indication inside the silos to the HMI using radio telemetry.

000427

To address the tightness of the silos that will be required for the subsequent phases of operation, a tyvek or heavy mil plastic cover may be used to cover the dome and sides of the silos. This cover minimizes the amount of in-leakage or infiltration through cracks if required.

Once the Phase 1 operations have been successful in reducing the activity levels within the silos, construction will begin on the bridge and other systems. During this construction process, the pipe rack will be extended to its final termination point near the pivot point of the bridge. Three rigid duct spool pieces 1, 2, & 3 will be installed on the completed pipe rack that will run from the dampered, blinded-off connections in lines RCS-20070-6"-893, RCS-20071-6"-893, and RCS-20069-3"-893 to a final termination point on the bridge in preparation for Phase 2A operation.

For subsequent Phases 2A and 2B, the ducting for the silo being mined will be routed on the new bridge and connected to the RCS ducting on the pipe rack. RCS ducting on the pipe rack will be sloped to the RCS Building while ductwork on the bridge will slope to the silo being mined. For Phase 2A operations, the bridge will be positioned over Silo 1. Both the RCS supply and suction connections on Silos 1 containing dampers DMP-20-046 and DMP-20-048 will be connected to rigid ducting, mounted on the bridge, by means of a short piece of flexible hose. The supply and suction ducting is routed on the new bridge and connected to the RCS ducting on the pipe rack by means of spool pieces 4 and 5.

4.2.2 Phase 2A, 2B - Radon Control during Material Transfer

When mining activities begin in Silo 1, the RCS moves from Phase 1 to Phase 2A. During this phase, recirculation air to Silo 1 is discontinued and the ventilation air is pulled into the silo through the three enclosures on the pivoting bridge that are used for waste retrieval from Silo 1. However, the capability to shutoff the enclosure louver intakes and place the silo in recirculation mode is still available if desired. Silo 2 continues to operate as before in Phase 1 mode.

The design flowrate for the ducting system for the ventilation of Silos 1 and 2 is based upon exhausting up to 500 cfm from each silo for Phase 2A operations. The design also includes the flexibility to discontinue flow from one silo for a short period of time to increase the amount of air exhausted from the other silo in service.

Besides airflow from Silos 1 and 2, two of the TTA tanks will be in operation during Phase 2A. In Phase 2A, the TTA is tied into the RCS. The flow to the various major TTA components is controlled individually at each component. Air is drawn into the TTA through a single manifold and distributed to the waste transfer tanks by modulating dampers. The filter and filtrate storage tanks are vented to the RCS and a damper will open to relieve pressure. These tanks are equipped with vacuum control valves to let air into tanks when a vacuum setpoint is reached. During Phase 2A, only two of the four waste storage tanks are in service (TNK-12-001A and TNK-12-001B). After Phase 2A, the flow to those tanks can be reduced but not eliminated.

The design flowrate for the ducting system for the ventilation of TTA tanks is based upon exhausting up to 250 cfm from each TTA tank (TNK-12-001A and TNK-12-001B) for Phase 2A operations. Flow to and from these two tanks is controlled in the same manner as was outlined in the earlier section for the silos.

Before mining starts in Silo 1, the connections of the rigid ductwork on the bridge to the silo and to the duct header on the piperack must be verified. To begin Phase 2A operations, flow must be established through the ductwork on the bridge. The dampers associated with Phase 2A operation will be opened, DMP-20-046, DMP-20-048, DMP-20-081, and DMP-20-083. The dampers associated with Phase 1 operation will be closed, DMP-20-047, DMP-20-049, DMP-20-080, and DMP-20-082. Once flow is established through the ductwork on the bridge, the flexible hoses associated with Phase 1 operations for Silo 1 can be disconnected and removed. A blind flange shall be installed over the opening associated with the hose removal to provide additional sealing.

At the start of Phase 2A, the damper in the supply air duct to Silo 1 (the first silo to be emptied), LVR-20-003, begins closing upon opening of the automatic dampers on the enclosures. Inlet air for Silo 1 is provided directly through the three enclosures used in this phase for:

- Sluicing,
- Slurry transfer, and
- EMMA™ operations.

Each enclosure is served by a secondary containment that is attached to the opening using a seal arrangement that avoids placing any load on the silo dome. The moveable bridge that is positioned first over Silo 1, and subsequently over Silo 2, structurally supports the enclosures. Each of the three enclosures has an air inlet equipped with a roughing filter, HEPA filter, automatic damper, and flow meter. Access to the enclosures is through air-locked doors that limit additional flow during entry and exit. Flexible seals are used to minimize the free space around equipment passing through the enclosure opening into the silo below.

After mining and decontamination activities are complete and before the application of the fixative to the inside surfaces of the silo, ventilation of Silo 1 will be discontinued. The dampers that were opened for initiation of mining activities listed earlier are now closed. Spool pieces 4, 5, and 6 are removed and the bridge is repositioned over Silo 2. Once in position the spool pieces are reconnected to their original connections. The ventilation strategy of Silo 2 during retrieval activities is identical to that of Silo 1. During Phase 2B, the increase in the availability of ventilation air, caused by stopping flow to Silo 1, increases the capability of the RCS to control radon from other sources by increasing the amount of air that can be exhausted from the remaining sources.

When mining activities begin in Silo 2, the RCS moves from Phase 2A to Phase 2B. During this phase, recirculation air to Silo 2 is discontinued and the ventilation air is pulled into the silo through the three enclosures on the pivoting bridge that are used for waste retrieval from Silo 2. However, the capability to shutoff the enclosure louver intakes and place the silo in recirculation mode is still available if desired.

The design flowrate for the ducting system for the ventilation of Silo 2 is based upon exhausting up to 500 cfm from each silo for Phase 2B operations. Besides airflow from Silo 2, two additional TTA tanks will be in operation during Phase 2B. The flow to the various major TTA components is controlled individually at each component. Air is drawn into the TTA through a single manifold and distributed to the waste transfer tanks by modulating dampers. The filter and filtrate storage tanks are vented to the RCS and will open to relieve pressure. These tanks

are equipped with vacuum control valves to let air into tanks when vacuum setpoint is reached. During Phase 2A, only two of the four waste storage tanks are in service (TNK-12-001A and TNK-12-001B). During Phase 2B, the flow to those tanks can be reduced but not eliminated.

The design flowrate for the ducting system for the ventilation of TTA tanks is based upon exhausting up to 250 cfm from each TTA tank (TNK-12-002A and TNK-12-002B) for Phase 2B operations. Flow to and from these two tanks is controlled in the same manner as was outlined in the earlier section for the silos.

Before mining starts in Silo 2, the connections of the rigid ductwork on the bridge to the silo and to the duct header on the pipe rack must be verified. In Phase 2B, the dampers associated with Silo 1 control shall be used to control pressures in Silo 2 to minimize the number of specialized spool pieces required for movement of the bridge. To begin Phase 2B operations, flow must be established through the ductwork on the bridge. The dampers associated with Phase 2B operation will be reopened, DMP-20-046, DMP-20-048, DMP-20-081, and DMP-20-083. The dampers associated with Phase 2A operation will be closed, DMP-20-050 and DMP-20-052. Once flow is established through the ductwork on the bridge, the flexible hoses associated with Phase 1 operations for Silo 2 can be disconnected and removed. A blind flange shall be installed over the opening associated with the hose removal to provide additional sealing.

During material retrieval activities of Silo 2, the active waste storage tanks are TNK-12-002A and TNK-12-002B while TNK-12-001A and TNK-12-001B are ventilated at a lower rate. The majority of the TTA flow is committed to tanks TNK-12-002A and TNK-12-002B. After mining and decontamination activities are complete and before the application of the fixative to the inside surfaces of the silo, ventilation of Silo 2 will be discontinued. The dampers that were opened for initiation of mining activities listed earlier are now closed. And after completion of Phase 2B, decant sump waste retrieval begins. This method for this activity is currently under development. Because of the transient nature of this operation, steady-state material balances were not required but RCS ventilation is balanced accordingly.

4.2.3 Phase 2C - Radon Control during Interim Storage

When mining activities are completed, the RCS moves from Phase 2B to Phase 2C. At the conclusion of the material retrieval campaigns the RCS ventilates various TTA components as required. Limited airflow can be maintained through TTA components during this phase. The system has the flexibility to recycle treated air back through the TTA manifold, or exhaust it through the stack. During the interim waste storage period, the waste storage tanks each have approximately 2 feet of water on top for shielding that reduces the radon release to the headspace.

The design flowrate for the ducting system for the ventilation of TTA tanks (TNK-12-001A and TNK-12-001B, TNK-12-002A and TNK-12-002B) is based upon exhausting up to 125 cfm from each silo for Phase 2C operations. Flow to and from these tanks is controlled in the same manner as was outlined in the earlier section for the silos.

4.2.4 Phase 3 - Radon Control during Full-Scale Remediation

During Phase 3, the RCS accommodates a design airflow rate of up to 500 cfm from the Future Full-Scale Remediation Facility in addition to the design airflow rate of up to 500 cfm from the TTA tanks. Dampers would again control the balance between the two inputs. If desired, the system can be operated in the recycle mode so that air from the TTA would pass through the

carbon beds and return to the TTA, in much the same way the air is to be recycled through the silos during Phase 1. Airflow through TTA waste storage tanks would be discontinued after transfer of contents from that tank to the Future Full-Scale Remediation Facility is complete.

4.3 Decant Sump Waste Retrieval System

The DWRS will retrieve the waste from the Decant Sump located just west of and between the silos. The Decant Sump is a carbon steel, 18-foot long, 9-foot diameter cylindrical tank with dished ends. The tank is buried horizontally with a 20-inch opening centered at the top of the tank. A 30-inch corrugated manway centered over the 20-inch opening extends approximately 33 feet to the ground surface.

4.3.1 Deployment Strategy

Before silo recovery is initiated, a submersible pump and level indicator will be lowered into the Decant Sump Tank through the 20-inch opening. The pump and level indicator will remain in the tank throughout the Silo 1 and 2 retrieval campaigns. If the level rises in the tank during SWRS operations, then a tanker truck will be mobilized and the liquid will be pumped from the Decant Sump into the tanker truck. The pumping system will have the capability to remove liquid from the tank at the rate of 8 gpm and will keep the liquid-level below 70% of the tank capacity. Also, if the level rises faster than one inch per minute, the SWRS will be shutdown.

The berm soil above the Decant Sump will be excavated during SWRS operations from an elevation of 603 feet to 578 feet, leaving approximately 8½ feet of ground cover above the Decant Sump. Plastic surrounded by a sandbag dike will be placed around the riser for equipment laydown and to contain any possible leaks. The retrieval method will be similar to the bulk retrieval method used in the SWRS with the exception that, because of the small amount of waste and small size of any expected debris, a mechanical arm will not be deployed.

A flange-mounted sluicer will inject filtered water at a rate of 20 gpm at 1,000 psi into the Decant Sump to create slurry. An air-powered diaphragm pump will retrieve the slurry from the Decant Sump at a rate of approximately 80 gpm. This pump will send the contents to the TTA Storage Tanks via a double-contained hose system. The headspace pressure of the Decant Sump will be maintained at a negative pressure using the RCS during normal operations.

During the sluicing operation, a camera and light will be mounted in the tank to ensure the system is operating as designed. If debris is located in the Decant Sump, manually operated remote telescoping gripping tools will then be used to remove it. The system will be operated locally.

4.3.2 Component Descriptions

The DWRS main system components are as follows:

- Air-Powered Diaphragm Pump,
- Flange-Mounted Sluicer,
- Camera System, and
- Submersible Pump.

The flange-mounted sluicer consists of a blind flange, which has been modified to accept an air-powered tank-washing head, a 3-inch nozzle for RCS ventilation, a 2-inch nozzle for slurry

extraction, a mast for supporting camera and lighting equipment, and level indicator. The blind flange will also be equipped with dowel pins for locating the flange on the existing 20-inch decant sump nozzle and eyebolts for hoisting assembly in and out of the 30-inch corrugated manway. The air-powered tank-washing head will spray two streams 180° apart and rotate about two axes simultaneously. This operation will allow mining of the residue and rinsing of the entire tank surface at the same time. The tank-washing head will receive water from the High-Pressure Decontamination Pump Skid that has been reduced to 20 gpm and 1,000 psi.

The submersible pump used during the SWRS operations will be the existing pump used on site for removal of free liquids in the Decant Sump Tank. The diaphragm pump will be reused after FSMS operations. The camera and lights will be the same camera and lighting mounted in the dome of Silo 4 during FSM. The pan and tilt unit will also be used to allow the camera and lighting to view the entire inner surface of the decant sump.

4.4 TTA System

The TTA System is provided to store residues received from Silos 1 and 2 and the Decant Sump. The TTA consists of a building that houses the Transfer Storage Tanks, a portable Sampling Module, a water makeup system, a water elimination system, and a piping network for receiving and transfer of residues from the silos to the Future Full-Scale Remediation Facility.

The TTA communicates directly with the following systems:

- Silo Waste Retrieval System,
- Decant Sump Waste Retrieval System,
- TTA Waste Retrieval System,
- Full Scale Mock-Up System, and
- Radon Control System.

The TTA is comprised of the following major features:

- Transfer Storage Tanks,
- Transfer Storage Tanks Enclosure,
- Equipment Deck,
- Sampling Module,
- Transfer Piping,
- Diverter Valves,
- Diverter Valve Containment Areas,
- UF Equipment (including the Filter Process Tank),
- Filtrate Storage Tank,
- Filtrate Transfer Pumps,
- High-Pressure Decon Pump,
- Decant Pumps,
- Decant Pump Enclosures,
- Sluicers,
- Sluicer Enclosures,
- Slurry Pumps,
- Slurry Pump Enclosures,

- Makeup Water Storage Tank, and
- Makeup Water Transfer Pump.

The TTA is used in support of four different retrieval operations: FSMS, SWRS, DWRS, and TWRS. The functional description of the TTA in support of each operation is provided in the following four paragraphs (i.e., Sections 4.4.1 – 4.4.4). Subsequent subsections (i.e., Sections 4.4.5 – 4.4.23) describe the major features or components of the TTA System.

4.4.1 FSMS Operations

Transfer Storage Tanks TNK-12-001A and TNK-12-001B are used to supply sluice water and receive surrogate material from Silo 4 in support of the FSMS to demonstrate the SWRS concept. The same tanks are also used to transfer the surrogate material from Tank 1A to demonstrate the TWRS concept.

For FSMS demonstration of the SWRS operation, Tank 1B is used for the sluicing water and Tank 1A receives the surrogate material from Silo 4. This operation is accomplished by first adding process water for sluicing to Tank 1B.

> **Note**: Following tank construction and tank leak testing, approximately 750,000 gallons of water will remain distributed among the four Transfer Storage Tanks. The tank contractor will have left approximately 187,500 gallons in each tank. Approximately 125,000 gallons of the water in Tank 1A can be transferred to Tank 1B utilizing the Decant Pump, or the required water for Surrogate sluicing can be provided from Makeup Water Tank TNK-51-001.

Decant Pumps are installed on Tanks 1A and 1B in the mode to demonstrate SWRS. Pump control is accomplished with the PLC and level transmitters in each tank. Valve alignments are selected by the PLC to set up the sluice water flow path from Tank 1B to the Sluicer located in Silo 4, and from the Slurry Pump located in Silo 4 to Tank 1A in support of surrogate Silo 4 bulk waste retrieval.

Silo 4 surrogate heel retrieval is accomplished in the CATS mode. The CATS mode requires high-pressure water that is provided by the high-pressure pumps located near the Silo 4 bridge. The supply to the Silo 4 high-pressure pumps is from Makeup Water Tank TNK-51-001. The slurry received from Silo 4 in the CATS mode is transferred to Tank 1A. Sluice water for the Silo 4 sluicer is available from Tank 1B if needed to support the CATS mode.

For demonstration of the FSMS TWRS mode of operation, Tank 1B is used for the sluicing water (during the actual TWRS, sluice water must be supplied from the Future Remediation Facility [NIS]) and the surrogate is retrieved from Tank 1A and pumped to the surrogate dewatering area. The Decant Pump installed in Tank 1B remains in place from the FSMS SWRS, and Tank 1A is equipped with two Sluicers and the TTA Slurry Pump.

The TTA Slurry Pump is not equipped with a Coriolis effect mass flow meter, unlike the Slurry Pumps located at the silos. Therefore, during FSMS TWRS mode, the Coriolis flow meter in the main sluice water header must be switched to the main slurry header. Interchangeable flanged spool pieces are provided in the main sluice water header and the main slurry header and are designed to accept the Coriolis flow meter. This is necessary to measure the discharge flow and control the sluice water bypass valve to maintain the slurry density.

3388

Pump control for FSMS TWRS is accomplished with the PLC and level transmitters in each tank. Valve alignments are selected by the PLC to set up the sluice water flow path from Tank 1B to the Sluicers located in Tank 1A, and from the Slurry Pump located in Tank 1A to surrogate dewatering area. The TWRS does not require use the CATS equipment to empty a Transfer Storage Tank.

4.4.2 SWRS Operations

The received slurry waste will undergo a settle and decant operation to concentrate the waste slurry for interim storage in tanks to await the construction of the Future Remediation Facility (NIS). Transfer Storage Tanks TNK-12-001A and TNK-12-001B are used to supply sluice water and receive material from Silo 1. Transfer Storage Tanks TNK-12-002A and TNK-12-002B are used to supply sluice water and receive material from Silo 2. Silo 1 residues are removed before Silo 2 residues are removed. After Silo 1 has been emptied, the level instrumentation and pumps in Tanks 1A and 1B are moved to Tanks 2A and 2B. Also, excess supernatant (excess supernatant is that remaining above 90% tank capacity) in Tanks 1A and 1B can be pumped to Tanks 2A and 2B instead of filtering the water and transferring it to the AWWT facility for elimination. The process begins for Silo 2 and is operated in the same manner as with Silo 1.

The following description is for TTA-Silo 1 operation; TTA-Silo 2 operation is similar. For retrieval operation, Decant Pumps are installed in Tanks 1A and 1B. Pump control is accomplished with the PLC and level transmitters in each tank. Valve alignments are selected by the PLC to set up the sluice water flow path from the tank being used for decant, either Tank 1A or 1B, to the Sluicer located in Silo 1; and from the Slurry Pump located in Silo 1 to the slurry feed tank, either Tank 1A or 1B.

Prior to the sluicing operation, start-up water will be added as required to the two tanks, Tanks 1A and 1B in this case. This initial volume of water is roughly equal to the total amount of water to be added for transferring the silo residues to the TTA. The volume required for Silo 1 is approximately 535,000 gallons, and the volume required for Silo 2 is approximately 488,000 gallons. These quantities account for the in-situ water in the silos. Of the 535,000 gallons required for the Silo 1 campaign, 250,000 gallons of water will initially be made available in each tank, with the remainder to be added as needed. This amount of water provides a level of approximately 10 feet in each of the 750,000-gallon tanks. For the Silo 2 campaign, 225,000 gallons is made available in Tanks 2A and 2B. This amount of water and supernatant from the Silo 1 tanks provides a level of approximately 9 feet in each of the 750,000-gallon tanks.

At the beginning of the bulk retrieval mode, bentonite will be the primary solid constituent in the slurry. The 15 WT% bentonite slurry will be deposited in Tank 1A where settling will be enhanced due to the presence of the start-up water. As discussed previously in the "Bulk Sluicing and Retrieval" section, the mining strategy is to expose the K-65 layer below the slurry pump and create a slurry pool in the first stages of mining. To accomplish this mining requires that a canyon be created between the sluicer and the slurry pump. This canyon will allow the operator to favor the K-65 material, and allow the bentonite to wash into the mix, thus selectively mining the bentonite.

The system is designed to allow the slurry feed tank and sluice water tank to change roles periodically. For example, sluice water may be supplied from Tank 1B during one period, while slurry is being pumped into Tank 1A. The received slurry in Tank 1A is allowed to settle, and

during the next operating period sluice water is the supernate from Tank 1A, and the slurry is pumped to Tank 1B. This tank-switching sequence is performed during Bulk Retrieval and CATS modes, as required, typically once daily.

At the beginning of each operating period, tank levels are measured as well as the residue levels to determine retrieval progress from the previous operating period. At the conclusion of each operating day, the slurry transfer piping is flushed with sluice water for a period of 10 minutes. This operation is accomplished by diverting the sluice feed flow from the Sluicer to the slurry line.

Silo 1 heel retrieval is accomplished in the CATS mode. The CATS mode requires high-pressure water that is provided by the high-pressure pumps located near the Silos 1 & 2 bridge. The supply to the high-pressure pumps is from the TTA Filtrate Transfer Pumps that transfer water from the TTA Filtrate Storage Tank. Level in the TTA Filtrate Storage Tank is maintained by batch operation of the UF Unit. Makeup water for the TTA Filtrate Storage Tank is also available from the Makeup Water Tank and from the RCS Condensate Holdup Tanks. The slurry received from Silo 1 in the CATS mode is transferred to either Tank 1A or 1B. Sluice water for the Silo 1 Sluicer is available from either Tank 1A or 1B, as required to support the CATS mode.

4.4.3 DWRS Operations

The TTA piping systems will not be used to receive the residues from the DWRS. The residues will be deposited directly into either Tank 2A or 2B through one of the spare tank risers. For a complete description of this process, refer to the DWRS Description.

4.4.4 Transfer from TWRS

During the TWRS, the K-65/BentoGrout™ is slurried from the storage tanks to the Future Full-Scale Remediation Facility (NIS) in the same way it was removed from the silos except two sluicing nozzles are deployed in the storage tank being emptied, and the CATS system and EMMA™ are not required. The storage tank bottoms are sloped to a center sump to facilitate heel removal. The Slurry Pump is deployed in the center tank nozzle. When one tank is completely emptied, instrumentation, cameras, pumps, and sluicers are moved to the next tank. The operation is repeated until all four tanks are emptied.

Sluice water for TWRS is provided from the Future Full-Scale Remediation Facility (NIS) through a flanged connection located in the sluice water line. The flanged connection is made available by relocating the Coriolis effect mass flow meter from the sluice water line and installing it in the primary slurry line. The slurry discharge connection to the Future Full-Scale Remediation Facility (NIS) then is downstream of the Coriolis flow meter.

The TTA Slurry Pump is not equipped with a Coriolis effect mass flow meter, unlike the Slurry Pumps located at the silos. Therefore during TWRS, the Coriolis flow meter in the main sluice water header must be switched to the main slurry header. This meter is necessary to measure the discharge flow and control the sluice water bypass valve to maintain the slurry density.

4.4.5 Transfer Storage Tanks

Four Transfer Storage Tanks are provided for storage of wastes from Silos 1 and 2, and from the silos Decant Sump. The K-65 material and BentoGrout™ from Silo 1 are stored in two of

the four tanks, and the K-65 material and BentoGrout™ from Silo 2 is stored in the other two tanks. The residue in the Decant Sump is transferred to the storage tanks assigned for receipt of wastes from Silo 2.

The carbon steel Transfer Storage Tanks each have a capacity of 750,000 gallons and are constructed in accordance with American Petroleum Institute (API)-650. The tank volume was selected to allow for a maximum storage level of 90% of total capacity, although the tanks are designed for filling to their maximum capacity. The tanks are 66 feet in diameter, have a straight side dimension of 30 feet, and are provided with 1/4-inch corrosion allowance. The exterior surfaces of the tanks are painted. The tank roofs are dome shaped and are supported by rafters to minimize the overall height to 33-feet, 6-inches (excluding nozzle risers) from the top of their concrete foundations. The tank bottoms are sloped to a center sump to facilitate residue removal during TWRS.

The two tanks designated for storage of Silo 1 wastes (TNK-12-001A and TNK-12-001B) are connected at their overflow nozzles by a 6-inch diameter pipe. The tanks for storage of Silo 2 wastes (TNK-12-002A and TNK-12-002B) are likewise connected. This overflow arrangement together with the use of two level measurement devices in each tank minimizes the potential of exceeding the capacity of any one tank. Tank ventilation is provided by the RCS. Pressure/ vacuum relief devices limit the tank headspace pressure to a range of -2.0 inches to +0.5 inches WG.

Tank nozzles, except for the overflow, are located on the tank roof. The roof nozzles are parallel to the tanks vertical axes and extend through sleeves in the equipment deck. Flexible boots are attached to the nozzles and the floor of the equipment deck to isolate the tank enclosure. These boots provide a seal and allow independent movement between the deck and the nozzles, thereby virtually eliminating reaction forces and moments to the tank.

Each tank is provided with the following roof nozzles:

- One 48-inch diameter located in the center for the Decant Pump or the Slurry Pump;
- Two 20-inch diameter located 90° apart for the Sluicer Modules;
- One 20-inch diameter for the RCS inlet;
- Six 12-inch diameter for the level switch, redundant pressure differential transmitters, camera, and three are spares.
- Three 6-inch diameter for level, slurry inlet, and RCS outlet;
- One 6-inch diameter overflow located in the shell; and
- One 4-inch diameter for relief/vent.

Tank corrosion considerations include adding 1/4-inch additional thickness above that required for stress to the steel tanks, and painting the tank exterior steel surfaces. An active cathodic protection system is not required for the tanks. The tanks are housed completely within the concrete and steel enclosure, and are grounded to the TTA grounding grid. The grounding grid maintains the building steel, including the reinforcing steel, and components at the same electrical potential.

4.4.6 Transfer Storage Tanks Enclosure

The Transfer Storage Tanks Enclosure is a concrete structure that provides secondary containment of stored wastes and radiation shielding. This structure is 152-feet long, 152-feet

wide. Secondary containment is provided by sealing the concrete floor and the walls to a level of eight feet above the floor. This containment is equivalent to the volume that could be occupied by residue from one 750,000-gallon tank.

The floor is sloped to a centrally located sump to facilitate removal of spills. A tank foundation sump is also provided under each tank to collect any leakage that may occur through or around the tank bottoms. The four tank foundation sumps drain by gravity to the main enclosure sump by piping embedded in the tank foundation pads. Access to the sump pump is through an opening in the diverter valve containment area located on the equipment deck above the main sump. The main sump is equipped with level instruments for spill detection. The sump pump discharge piping is routed to the slurry distribution manifold within the same diverter valve containment area for transfer to any of the four tanks. Each tank has an exposed bottom sump drain line that empties into the central sump trench thus allowing the operator to identify that tank is leaking by the camera system that can see all four sump lines. There is no ventilation provided in the Transfer Storage Tank Enclosure because this area does not require entry by personnel. For a detailed description of tank repairs, see *Contingency Plan and Emergency Response*, Document No. 624-P621-09, for the AWR Project.

4.4.7 Equipment Deck

The equipment deck covers the storage tanks. The equipment deck is supported by a steel column and beam system designed to carry floor and equipment loads. The support steel is primed and painted. The floor is 9-inch thick concrete. The equipment deck provides radiation shielding from the stored residues during maintenance activities.

Equipment handling is a key element in the design of the TTA. A Loading Platform located on the south side of the TTA is provided for installation and removal of equipment supporting the SWRS, FSMS, and TWRS. The Sluicer modules, Slurry Pump modules and Decant Pump modules are installed in the TTA by first being lifted by portable crane from a ground transport vehicle to the Loading Platform where the modules are placed on and secured to air bearings.

Access to the Equipment Deck is provided through a 16-feet wide, 24-feet-high roll-up door. Air hoses are connected to the air bearings and to the compressed air header located inside the Equipment Deck Enclosure. The air bearings allow the heavy loads to be easily moved on a near frictionless cushion of air. Workers manually guide each module to the desired location for interface with the Transfer Storage Tank riser nozzle.

The Loading Platform is also fitted with a monorail type hoist for use when tools and equipment parts are to be taken in, or removed from, the TTA. Two staircases provide access to the Equipment Deck. One staircase is located on the north end of the east side of the TTA, and the other is located adjacent to the Loading Platform on the south side of the TTA.

4.4.8 Residue Sampling

Samples of the silo residues will be taken and stored onsite for future use as determined by Fluor Fernald. Since the specific means of obtaining the samples, sample storage requirements, and Data Quality Objectives (DQOs) and related analytical requirements are not yet fully defined, details related to the silo residues sampling will be documented for review and approval upon finalization.

3388

4.4.9 Transfer Piping

The TTA System piping material is carbon steel. Sluice water lines and slurry transfer piping are double-walled, except within the diverter valve containment areas where it is single-walled. The diverter valve containment areas provide secondary containment.

4.4.10 Diverter Valves

The TTA is equipped with motor-operated diverter valves for selection of slurry and sluice water flow paths. A diverter valve is a three-ported double waterway valve. Use of diverter valves eliminates the concern for dead-legs in the piping system that may plug with residue. Diverter valves are also compact and can easily be arranged inside containment areas or enclosures for maintenance and leak detection.

4.4.11 Valve Containment Areas

There are two containment areas located on the TTA Equipment Deck. Within these areas, piping is singly contained and enables use of flanged joints for valves and equipment. The flanges within these areas are fitted with flange guards to prevent spray from a leaking joint. The areas have a sloped bottom and sump equipped with level instrumentation to detect leaks and a sump pump. The sump pump discharge lines are connected to the sluice water header, for return to a TTA Transfer Tank.

Containment Area A is located on the north side of the TTA Equipment Deck. This area contains the UF Unit, the Filter Process Tank, the Filtrate Storage Tank, the Coriolis mass flow meter, the Filtrate Transfer Pumps, the High-Pressure Decontamination Pump, and the make-up water connection. Containment Area B is centrally located on the TTA Equipment Deck. This area contains the diverter valves for connecting the primary and secondary slurry headers to the four storage tanks, as well as the sluice water distribution header. Connection for the building sump pump discharge is located within this area. This area also provides access to the building sump pump.

4.4.12 UF Equipment

The UF system is used to support water treatment from the TTA. Here suspended solids are removed from the effluent stream in a tubular membrane filtration unit. The unit is sized to process 20 gpm and is located in a contained area on the TTA Equipment Deck. The UF system includes a 300-gpm process pump that circulates water from the Filter Process Tank, through the filter producing 20 gpm of filtrate, and returning 280 gpm back to the Filter Process Tank. Filtrate discharged from the UF system is passed to the Filtrate Storage Tank where it is used to support other processes, or discharged to the FEMP AWWT facility. Solids separated in the UF system are returned to the Filtrate Process Tank and eventually to the Transfer Storage Tanks by the slurry distribution header.

4.4.13 Filtrate Storage Tank

One 7,500-gallon storage tank (TNK-12-004) is provided for storage of filtrate effluent from the UF system. This tank has sufficient capacity for a full day's production of the UF system at maximum capacity. Tank ventilation is provided by the RCS. Pressure/vacuum relief devices limit the tank headspace pressure to a range of -2.0 in. to +0.5 inch WG.

000428

The tank is constructed in accordance with API-650. It has a flat bottom supported on a concrete foundation, and the roof is dome shaped. The tank is equipped with level instruments to shutdown the UF system on high tank level. Corrosion considerations include painting external tank steel surfaces and providing a corrosion allowance of 1/16 inches. Additionally, the interior of this tank has a Plasite coating with a Dry Film Thickness of 30 mils.

4.4.14 Filter Process Tank

The Filter Process Tank (TNK-12-003) is used to store 7,500 gallons of sluice water that is transferred from the Transfer Storage Tanks at the beginning of each operating period (day) to be used by the UF system to produce filtrate. As filtrate is produced at a nominal 20 gpm and transferred to the Filtrate Storage Tank, a bleed stream from the sluice water header maintains the level of the Filter Process Tank. At the conclusion of the operating period, the thickened sluice water (approximately 2 WT%) is returned to the Transfer Storage Tanks. The Filter Process Tank is equipped with a mixer that is used for solids suspension before transferring the thickened sluice water back to the Transfer Storage Tanks.

Tank ventilation is provided by the RCS. Pressure/vacuum relief devices limit the tank headspace pressure to a range of -2.0 inches to +0.5 inches WG. The tank is constructed in accordance with API-650. The tank has a flat bottom supported on a concrete foundation, and the roof is dome shaped. The tank is equipped with level instruments to shutdown the transfer pumps on level. Corrosion considerations include painting external tank steel surfaces and providing a corrosion allowance of 1/16 inches. Additionally, the interior of this tank has a Plasite coating with a Dry Film Thickness of 30 mils.

4.4.15 Filtrate Transfer

Filtrate is transferred from the Filtrate Storage Tanks by centrifugal pumps located on the TTA Equipment Deck. The Transfer Pumps can either transfer the filtrate to the AWWT facility or circulate the filtrate out to the silos and back as a feed stream for the high-pressure systems. The PLC automatically stops the pumps on low tank level.

4.4.16 Decant Pumps

The Decant Pump, used to power the Sluicers, is deployed from its enclosure located over the center nozzle of a Transfer Storage Tank. The pump is mounted on a floating platform consisting of two rigid pontoons connected by a folding frame. The spring-loaded frame folds under its weight when lifted vertically. This folded configuration allows the deployment of the platform through a 48-inch diameter nozzle. After the platform is placed in the tank, the pump, motor and base are lowered onto the platform and aligned by guide-plates and secured over taper pins. Slack hose and cable is suspended in the tank with enough length to allow the pontoon platform to reach the bottom of the tank. As the tank is filled and the platform raises, lengths of cable and hose are disconnected and retracted from the riser.

The Decant Pump lowers into the Transfer Storage Tank using two hoists located on the ceiling of the Decant Pump Enclosure. Hoists are used only in manual control. The PLC does not control the hoists. Manual up and down buttons located on the control panel are used to control the hoists.

There are two independent Decant Pump systems. One decant pump is in Tank A and the other is in Tank B during SWRS operations. When SWRS operations are ready to begin on the

other silo, the pumps move to the second set of A and B tanks in the TTA building. A sensor is mounted near the pump intake to determine liquid-level. If the liquid-level is low, then the sensor detects the low-level and turns the pump off.

The pump is a single-speed, self-priming, centrifugal pump operating at 3,500 rpm. The pump is sized to deliver 300 gpm to the Sluicer at 150 psi. Pump-wetted parts are carbon steel or ductile iron, except the shaft that is stainless steel. The decant pump motor is rated at 60 hp. The motor requires 480-V AC, three-phase power.

4.4.17 Decant Pump Enclosure

The Decant Pump Enclosure is built with a structural steel tubing frame, with steel sheet metal welded to the frame. It has one airtight access door, one equipment pass-through door, and sufficient gloveports and windows to allow equipment maintenance. The enclosure contains the equipment needed to allow the pump to function. Equipment includes two 1-ton hoists to install and remove the pump from the tanks, one hose reel to hold the pump discharge hose, one cable reel to hold the pump motor wiring, and two 3-inch, three-way ball valves and piping to direct the flow. The enclosure also contains a spray ring to decontaminate the pump assembly when it is removed from the tank. The circuit breaker box and terminal strip box for the electric components and motors is located on the outside wall of the enclosure.

The enclosure serves as secondary containment and drains to the storage tank. An air inlet damper is provided with HEPA filtration. The enclosure is connected to the RCS by connection to the Transfer Storage Tank to provide control of the enclosure atmosphere.

4.4.18 Sluicers

For a description of the Sluicers, see the SWRS design description in Section 4.1.2.1 of this document.

4.4.19 Sluicer Enclosures

For a description of the Sluicer Enclosures, see the SWRS design description in Section 4.1.2.2 of this document.

4.4.20 Slurry Pumps

For a description of the Slurry Pumps, see the SWRS design description in Section 4.1.2.3 of this document.

4.4.21 Slurry Pump Enclosures

For a description of the Slurry Pump Enclosures, see the SWRS design description in Section 4.1.2.4 of this document.

4.4.22 Makeup Water Storage Tank

The Makeup Water Storage Tank is a 10,000-gallon, atmospheric, steel water tank. The tank is designed and constructed in accordance with API-650 and is located on a flat concrete pad foundation outside the TTA, adjacent to the Electrical Building. Corrosion considerations

include painting external tank steel surfaces and providing a corrosion allowance of 1/16-inch. The interior of this tank has a Plasite coating with a Dry Film Thickness of 30 mils.

4.4.23 Makeup Water Transfer Pump

Makeup water is provided to the TTA systems by a connection in the sluice water distribution header. The connection is in the north containment area on the TTA Equipment Deck. A centrifugal pump designed to deliver 200 gpm is located outside adjacent to the storage tank.

4.5 TTA Waste Retrieval System

The TWRS is designed to access, mobilize, and transfer residue stored in the TTA System. The TWRS is comprised of the TTA System and support features included within the Future Full-Scale Remediation Facility (NIS). Sluicers, Slurry Pumps and equipment used for the SWRS are also deployed for the TWRS.

The function of the TWRS is to provide the capability to retrieve and transfer the entire inventory of waste from the TTA Transfer Storage Tanks (TTA tanks) to the Future Full-Scale Remediation Facility for final treatment and disposal. The same equipment used for the SWRS will also be deployed by the TWRS with one major design enhancement. The TTA tanks will have two opposing sluicer assemblies per tank with a central slurry pump, thereby eliminating the need for heel removal. The equipment will be of the same design and fully interchangeable. Therefore, the sluicer assembly used in the silos will be the same as the sluicer assembly used in the TTA tanks. The central Slurry Pump is the same as that equipment used for the silos, except that the CATS portion of the equipment is not included. The two sluicer assemblies and the central slurry pump will permit a "swirl" movement of the waste within the tank as the waste is removed. This swirl will result in providing a more uniform plain of waste material and will also provide a continuous layer of water atop the waste for shielding purposes. By avoiding a fixed placement pump, the retractable slurry pump will avoid a central "well" within the waste and the possibility of exposed waste regions and results in a continuous layer of water being maintained during retrieval operations over the entire tank.

Equipment is provided for the transfer of stored residues from one TTA tank at a time. Diverter valves with flange connections are provided for connecting slurry and sluice water piping to and from the Future Full-Scale Remediation Facility using the existing decant pumps. Sluice water for TWRS operations is supplied from the Future Full-Scale Remediation Facility using the same settle and decant approach. The TTA System provides piping and valves between the future remediation facility interface point and each of the four TTA tanks. The two Sluicer modules and the Slurry Pump module are connected to the storage tank being emptied. When one tank is completely emptied, instrumentation, cameras, pumps, and sluicers are moved to the next tank. The operation is repeated until the four tanks are emptied.

Personnel access is limited during retrieval operations. Cameras observe placement of each sluicer nozzle to permit remote operation. Controls are provided to limit individual exposures to less than 800 millirem per year. Operating controls for the TWRS are included in the AWR control room. These controls allow for the shutdown or startup of TWRS equipment. Local controls for the TWRS subsystems are provided on the TTA Equipment Deck.

Automated functions of the TWRS are controlled by PLC. These controllers process system events that require alarming. Local evacuation alarms are staged on the TTA Equipment Deck. The alarms can also be activated from the Vitrification Pilot Plant (VitPP) control room and the AWR Project control trailer. Alarms are recorded and annunciated locally, in the VitPP control room, and in the AWR Project control trailer.

The TWRS is comprised of the following major features:

- Transfer Storage Tanks,
- Transfer Piping,
- Diverter Valves,
- Sluicers,
- Sluicer Enclosure,
- Slurry Pumps, and
- Slurry Pump Enclosure.

4.5.1 Transfer Storage Tanks

For a description of the Transfer Storage Tanks, see the TTA System design description in Section 4.4.5 of this document.

4.5.2 Transfer Piping

For a description of the Transfer Piping, see the TTA System design description in Section 4.4.11 of this document.

4.5.3 Diverter Valves

For a description of the Diverter Valves, see the TTA System design description in Section 4.4.12 of this document.

4.5.4 Sluicers

For a description of the Sluicers, see the SWRS design description in Section 4.1.2.1 of this document.

4.5.5 Sluicer Enclosure

For a description of the Sluicer Enclosure, see the SWRS design description in Section 4.1.2.2 of this document.

4.5.6 Slurry Pumps

For a description of the Slurry Pumps, see the SWRS design description in Section 4.1.2.3 of this document.

3388

4.5.7 Slurry Pump Enclosure

For a description of the Slurry Pump Enclosure, see the SWRS design description in Section 4.1.2.4 of this document.

4.6 Facilities Decontamination System

The FDS removes gross contamination from the silos, the decant sump tank, and contaminated process equipment as part of facility demobilization and closure. The FDS offers two categories of gross decontamination activities. First, the FDS provides gross decontamination of silos, decant sump tank and process equipment, as well as permanent facilities erected during the project, especially those left behind for management of the waste and radon effluent until the time that the waste is remediated. The second type of gross decontamination that the FDS provides is the processing of temporary tools, equipment, and facilities used on the AWR Project.

4.6.1 Silos Decontamination and Fixative Application

Gross decontamination of permanent facilities includes decontamination of the internal surfaces of the silos. The Fixative Spray System (FSS) is used after the internal surfaces of the silos are accessed and decontaminated to remove visible loose contamination, as verified by CCTV inspection. The FSS applies a fixative to the walls and floors of the silos after completion of waste and debris removal to prevent any radionuclides in the concrete surfaces from becoming airborne. The fixative is a water-based, paint-like liquid material that has properties that allows it to contain radioactive contamination under the fixative layer after it dries. More than one layer of fixative may be applied as necessary to achieve the necessary level of sealing of the silo walls.

The FSS consists of a pump, hose, nozzle, and small, positive-displacement pump. The fixative, which is liquid and pumpable, is delivered in 55-gallon drums and placed next to the pump. The pump delivers the fixative at approximately 100 psi at less than 5 gpm. A fixed length hose is connected to the outlet of the pump and leads up to the Silo-Arm Interface Enclosure (SAIE) where it is connected to a hose in EMMA™. The hose terminates at a nozzle close to the end of the arm. The nozzle is similar to an industrial painting nozzle. The EMMA™ maneuvers the nozzle near the walls and floors to locally spray the fixative to the surfaces. The flexibility of the EMMA™ allows for fixative to be applied in a consistent and comprehensive manner over the entire surface area of the silo walls. Provisions are made to prevent the fixative material from being sprayed onto the cameras inside the silos that are used to observe the fixative application process.

4.6.2 Access/Decontamination/Packaging for Significant Structures and Components

Gross decontamination includes flushing and draining the lines used to transfer the waste slurry to the TTA, and gross decontamination of the interior surfaces of the silos and the decant tank. Material is removed from the interior surfaces of the silos to the visibly clean state before the application of the fixative as described above.

Gross decontamination will also include the cleaning of surfaces in the accessible areas of the RCS and the TTA. Areas that are high radiation areas (i.e., the Carbon Bed Rooms and the Tank Area of the TTA) are not included in this decontamination effort. However, the high

radiation areas are not intended to be contamination areas. The decontaminated areas are cleaned of removable contamination, and the unremovable contamination is fixed in place.

Materials used in the performance of the gross decontamination process are water and wiping materials. Water is transferred to the TTA and processed along with water in the decant tank. Wiping materials are packaged for disposal as radioactive waste.

4.6.3 Decontamination/Demolition at Completion of FDS Operations

Facilities and equipment are surveyed, decontaminated, and presented to Fluor Fernald health physics technicians for release survey. This process is enhanced by minimizing the potential for contamination of the equipment or facilities through such practices as painting surfaces with strippable paint or wrapping them with plastic as allowed without affecting performance. The location and use of each object is tracked to help justify an exemption from complete disassembly when it can be shown that the potential for contamination is exceedingly small. A plan is prepared for decontaminating and surveying each piece or type of equipment/facility as appropriate, considering the use of the equipment/facility. These plans are submitted to Fluor Fernald for review and concurrence before the performance of the decontamination and survey. After agreement is reached, Fluor Fernald performs the verification survey on decontaminated and surveyed items.

4.6.4 Decontamination/Packaging/Staging of Contaminated Materials

Wastes generated in the decontamination of temporary equipment and facilities consist primarily of wiping materials, water, and contaminated grit if abrasive blasting is needed to clear parts. These materials are packaged and disposed of as radioactive waste.

Decontamination of discrete objects and failed equipment will be performed in a portable, truck-mounted decontamination facility. This temporary facility provides for cleaning of equipment as large as 18-feet by 30-feet, and collects the water and abrasive cleaning media used in the cleaning process. The survey of material for unrestricted release, which precedes making the material available to Fluor Fernald for verification survey, is done in an area within a facility reserved for this function where background radiation levels are low enough to achieve the desired instrument sensitivity. This facility is located in the southwest section of the AWR Project site. An equivalent facility is provided for the Fluor Fernald verification.

4.7 Full-Scale Mock-Up System

The FSMS is designed to provide operator training and proof-of-principle testing of the following AWR Project systems: SWRS, TTA System, and TWRS. This testing includes the removal and transfer of K-65 silo surrogate material and debris. Also, this testing will be performed in a nonradioactive environment using Silo 4 and modified Silo 4 superstructure facilities. A process schematic of the FSM and its sequence of operation are shown in Exhibit 4.7-1.

FSMS refers to the specific SSCs that are installed at the Silo 4 facility. FSM refers to the integrated overall mock-up system including the FSMS. The FSMS tie-ins to the waste retrieval system will be removed at the completion of the FSM ICAT/SOT. A portion of the FSMS will remain as a stand-alone system ensuring continued availability for training, system optimization and troubleshooting throughout the AWR Project operations phase.

The basis for the amount of surrogate required for the FSMS is equivalent to the amount of waste material to be removed from Silos 1 and 2 in one 8-hour shift. This amount corresponds to approximately 47 gpm, average (~22,500 gallons per eight-hour shift) or a total of ~3,000 cubic feet of surrogate material. In addition, approximately 206 cubic feet of Bentogrout™ is required for the FSM. To more closely simulate the waste material depth in Silos 1 and 2, a tank will be located inside Silo 4 allowing for a surrogate material depth of 3.8 feet is used.

The tank footprint covers three manways into Silo 4. The tank is 8-feet wide and 6-feet high with a 48-feet, 3¾-inch long straight section starting 5 feet behind the sluicing nozzle manway and going toward the center of the tank. The overall length of the tank is 70 feet, ¾ inches. The tank expands on a 78° angle from the center of the central manway and extends to the Silo 4 wall. The expanded section allows slurry to collect and be transferred by the retrieval slurry pump. The wall of the inner tank that connects the angular section is curved to allow demonstration of the cleaning of silo walls and floor. Four-foot high, plywood splashguards are installed on top of the tank to contain the surrogate during sluicing.

The FSMS communicates directly with the following systems:

- TTA Waste Retrieval System,
- TTA System, and
- UF System.

The FSMS is comprised of the following major features:

- FSMS Surrogate Tank,
- RCS Blower Skid,
- Equipment Deck,
- Transfer Piping,
- Diverter Valves,
- Surrogate Dewatering Tank,
- Dewatering Pump and Duplex Filter,
- Sluicers,
- Sluicer Enclosure,
- Slurry Pump,
- Slurry Pump Enclosure,
- EMMA™,
- EMMA™ Enclosure,
- CATS,
- High-Pressure Pump Skid,
- SREE, and
- SDRS.

The FSMS is used to validate and optimize equipment integration for AWR Project system operations using the following process sequence. (Note: The numbers correspond to numbers shown in Exhibit 4.7-1).

000445

3388

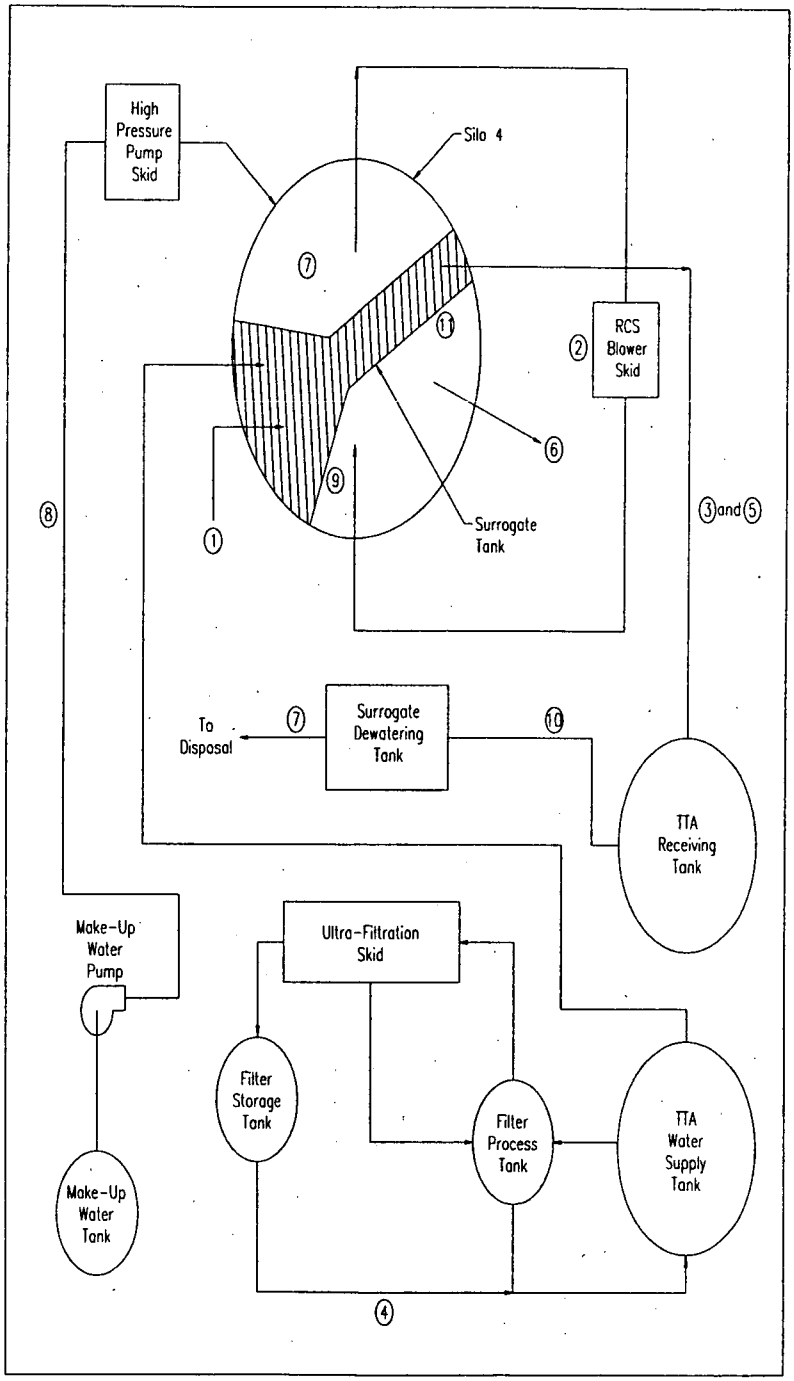

Exhibit 4.7-1. Full-Scale Mock-Up

1. Surrogate representative of the K-65 material and BentoGrout™ and the prescribed debris is placed in the surrogate tank inside Silo 4 to achieve sufficient depth of surrogate material to test the system (1 day's production).

000446

2. The fan system simulating the RCS Phase II system is calibrated to match airflow and negative gas pressures in the silo headspace and the effects of equipment ingress and egress.

3. Using the sluicing nozzle and the slurry transfer pump suspended from the Silo 4 Support Structure and water staged in one of the TTA Storage Tanks, the surrogate is sluiced to the designated TTA receiving tank.

4. Decant water from the TTA Water Supply Tank is used to test and verify operation of the UF System. Decant water is transferred to the Filter Process Tank for feed to the filter. After passing through the UF System, the clean water goes to the Filtrate Storage Tank. For SWRS, this filtered water is used for the High-Pressure Pumps. But for the FSMS, water for the High-Pressure Pumps is supplied from the Makeup Water Tank. (Note: The source of water is different because after SWRS is started, the filtrate water could not be sent to Silo 4, thus disabling the Silo 4 High-Pressure Pumps.

5. After the bulk removal of the surrogate, the sluicing nozzle and slurry transport pump are replaced with the debris retrieval system and the CATS. The EMMA™ maneuvers the SREE to remove the surrogate simulated waste heel in the tank. CATS further dilutes the waste stream and pumps it to the TTA receiving tank. The shape of the Silo 4 inner surrogate tank provides a simulation of the tank from the center to the walls. The removed surrogate is allowed to settle in the TTA receiving tank.

6. Discrete objects in the surrogate tank will be reduced in size as necessary using the SDRS cutter and shall be removed using EMMA™ and the Debris Removal System basket.

7. EMMA™ will demonstrate its ability to wash down and decontaminate the silo dome and walls and to spray a fixative using arm-mounted nozzles.

8. Clean water will be supplied to the High-Pressure Pump Skid from the Makeup Water Tank.

9. Contamination of the SWRS is simulated to demonstrate effectiveness of the installed decontamination equipment (EMMA™ and the decontamination spray rings).

10. Using the TWRS slurry pump, the settled surrogate in the TTA tank is sluiced from the tank through the existing TTA pipeline and diverted to Surrogate Settling Tank for slurry dewatering. After the surrogate material dewatering requirements have been satisfied, the material is radiologically surveyed to determine disposition. If the material meets free release criteria, then the material can be disposed of in a landfill. If the surrogate material is contaminated, then Fluor Fernald designates a disposal location. The separated water is sampled and discharged to the FEMP AWWT facility upon approval by Fluor Fernald.

11. Steps 2 through 10 are repeated as required for SOT.

000447

5.0 AWR PROJECT SUPPORT SYSTEMS AND COMPONENTS

This section provides design descriptions for the AWR Project support systems and components. First, the AWR Project distributed control system (DCS), including its concept, installation and utility requirements, and descriptions of equipment or component features is provided in Section 5.1. Secondly, Section 5.2 provides detailed descriptions of various AWR Project system components, including the decant pump, high-pressure pump skid, TTA decontamination pump skid, slurry pump and CATS, and the oil hydraulic power supply.

5.1 Distributed Control System

The AWR Project DCS is an integrated system that allows both local control at the equipment site and remote control at the central control trailer station. The AWR Project DCS supports operations during FSMS testing and SWRS, DWRS, FDS, and TWRS waste removal operations.

5.1.1 System Concept

The AWR Project DCS is a PLC-based system with distributive I/O data collection and control nodes. The PLCs and redundant operator HMI stations are located in the control trailer. The data collection and control nodes are currently located at the Silo Bridge, high-pressure pumps, and the TTA building. The distributive I/O data collection and control nodes are connected to the PLCs by a fiber optic network. The individual equipment items located at the I/O nodes are connected to the nearest I/O node with field wiring. The RCS Sampling System is equipped with a self-contained PLC controller.

5.1.2 Installation Requirements

The AWR Project DCS is modular in design. Most of the AWR Project DCS is installed on the mechanical equipment. The DCS components required for the TTA are designed for field installation at the FEMP site. To ensure the DCS works with the TTA equipment upon installation, proper interface documentation control is required. The interface documentation control is required to ensure the PLC and HMI programming agrees with the I/O connections and operating expectations of the TTA equipment when the TTA equipment is connected to the TTA I/O node.

5.1.3 Utility Requirements

The following utilities are required to support the AWR Project DCS. Additional utility requirements are described in latter portions of this section that relate to specific equipment or components.

> ***Electrical Power***—UPS 120-V AC, single-phase power is provided to the AWR Project control trailers. UPS 120-V AC, single-phase power is provided to each I/O data collection and control node. 120-V AC power, single-phase is provided to the AWR Project control trailers.
>
> ***Fiber Optic***—Fiber optic cables are installed to the required I/O nodes located throughout the site. The fiber optic cables can support three ring networks.

Interfaces—Interfaces to equipment systems include the EMMA™ System and the Gripping End-Effector, the RCS, SWRS, TWRS, SREE, and SDRS.

Maintenance—The required maintenance on the AWR Project DCS is low. Low maintenance is the result of using quality components and a modular design within the AWR Project DCS.

5.1.4 DCS Equipment Descriptions

In addition to the functions and requirements stated in the *Design Criteria Package*, Document No. 624-P622-03, for the AWR Project, the AWR Project DCS is designed incorporating the following general requirements:

- Safely control the equipment,
- Protect the operator,
- Allow remote operation of the equipment,
- Easy to learn and operate, and
- Reduced maintenance.

The following information is the description of the control system from the conceptual review session. As the design is finalized, the control system will be modified as required to support any changed requirements.

5.1.4.1 Control Trailers

Two control trailers are used for the AWR Project. One control trailer is used to support the FSMS testing, training, and operations. The second control trailer is used to support Silo 1 and 2 waste removal operations. Each control trailer has an operator station for the control of the waste removal support equipment. This operator station does not include the EMMA™ controls, as EMMA™ has a separate and adjacent operator station. The control trailers have wiring distribution for field 120-V AC power and UPS 120-V AC power.

5.1.4.2 FSMS Operations

FSMS test operations are performed first. The FSMS testing provides a means to test the equipment, train operators in equipment use, conduct a training session in waste removal from Silo 4, and perform the FSM ICAT/SOT.

5.1.4.3 Operator Stations

The operator station in the control trailer (either FSMS or silos) provides a central location for controlling and monitoring the equipment at the Silo Bridge and the TTA building. The selected PLC system is based on the Siemens central processor unit (CPU) Simatic S7-414-2DP. The CPU directly supports the Process Field Bus (Profibus) network standard. The CPU supports 32,768 channels of digital I/O and 2,048 channels of analog I/O. The CPU has 384K bytes RAM program statements. The CPU memory has battery backup to prevent loss of the operating program and data. The CPU is equipped with a real-time clock.

The PLC and the data/control I/O modules are networked on the Profibus. The Profibus network allows the data collection and equipment control to occur remotely in the field and away from the PLC. The Profibus network greatly reduces the amount of I/O field cabling required to

support the PLC operations. Each CPU will have its own 10-amp, 24-V direct current (DC) power supply. The UPS power supplies electrical power to the CPU power supply. The CPUs and its power supply are mounted on a Deutsches Institut Normung (DIN) rail inside a cabinet to minimize dust accumulation.

The programming of PLC and I/O interface development is performed with the Siemens STEP 7 Development System. The STEP 7 has user-friendly functions for phases of an automation project including: configuration and parameterization of hardware, definition of communication, programming, testing, starting up, servicing, documentation, archiving, operation, and diagnostics functions. STEP 7 supports ladder diagramming, function block diagramming, and statement lists programming methods.

Other software used in the development of the PLC controller includes Continuous Function Chart (CFC) and Sequence Function Chart (SFC). The CFC software supports hardware devices (i.e., variable frequency motor drive) that directly connect to the Profibus. The SFC supports graphic creation of sequence control and operation of equipment. Other Siemens software may become required as the needs of the operating equipment become more defined.

The STEP 7 software operates on the PC-based programming computer. The programming computer is located in the control trailer near the CPU. The connection from the PC to the CPU is by way of the Profibus network connection on the CPU. The PC computer may be identical to the computers used for the HMIs.

Installed Spares—The PLC system has 25% installed spare for memory and digital and analog I/O channel count. The I/O modules that are mounted within the field I/O nodes use no more than 75% capacity of the module to provide for the 25% installed spare I/O channels.

EMMA™ Interface—The requirement for the field PLC to monitor and record alarms from the EMMA™ system requires a connection from the field PLC to the EMMA™ controller. The EMMA™ controller consists of three Siemens PLCs. Because only one PLC can be the master on the Profibus network, the EMMA™ controller cannot be on the same Profibus network as the field PLC. The connection between the EMMA™ PLC master and the field PLC is performed using six digital outputs to EMMA™ PLC and six digital inputs from EMMA™ PLC. The EMMA™ PLC archives its own operating information.

Operator Station I/O—An I/O node is required to support the operator devices at the operator station. The I/O node consists of SM 421 digital input module and SM 422 digital output module connected to the back plane of the S7-414-2DP CPU. Field termination blocks are used to connect the field wiring to the modules. The wiring from the field termination block to an module is equipped with a connector to the module. The connector is keyed to prevent terminating the connector into the wrong module. If a module needs to be replaced, then the operator removes this connector instead of disconnecting the entire field wiring from the module.

The selected digital I/O modules (with reservations to change) have 32 digital inputs and 32 digital outputs. The inputs and outputs are rated for 24-V DC. The modules are used to support the emergency stop (E-stop) control, the water sluicing nozzle joystick and vertical position control, water sluicing nozzle selection, and the Master Equipment Enable Switch (MEES) key.

Joystick—The sluicing nozzle position is controlled in the pitch and the yaw direction. A two-DOF joystick is used for controlling the pitch and yaw of the sluicing nozzle. The joystick is mounted at the operator's control station. The joystick is also equipped with a deadman switch that allows the joystick to only become active when the operator grasps it.

The sluicing nozzle vertical position is controlled with a hoist located inside the sluicing nozzle enclosure. The command signals for the hoist are governed by a three-position (up-stop-down) joystick equipped with a deadman switch. The hoist joystick is located near the pitch/yaw joystick. This design gives the sluicing operator direct physical devices to control the sluicing nozzle.

During the FSMS, there could be up to three sluicing nozzles in operation. During SWRS operations, only one sluicing nozzle operates and during TWRS operations, two sluicing nozzles operate. A single joystick will be installed at the operating station to operate sluicing nozzles. A three-way selector switch determines which sluicing nozzle the joystick will control. During SWRS, the silo sluicing nozzle position will be selected. During TWRS, the switch will be used to select one of the two sluicing nozzles installed in a TTA tank.

5.1.4.4 Human-Machine Interface

The operator HMI station consists of two PC-type computers operating graphic screens depicting equipment layout and operating status. From the HMI screens, the operators issue commands to control the equipment and view operating status of the equipment. Equipment operating parameters are set and changed from the HMI screens.

The two HMIs operate in a redundant mode. The redundant mode allows either HMI computer to perform display and control operations for the PLC system. When both HMI computers are operating, the operator uses either or both HMI computers to view operating status and control the field equipment. The two HMI computers are connected directly to the Profibus.

The Siemens WinCC Software Development System is applied to create the display and control screens for the two HMI computers. WinCC supports data trending and archiving with time-controlled and event-driven project reporting and documentation. WinCC supports alarm logging acquisition and archiving. Password protection is supported for limiting operator access for operating control limits. Each HMI computer requires a full software license for WinCC and the redundant support software license.

The PC computers for the HMIs must operate the Microsoft NT operating system. For this reason, the computer is equipped with one of the fastest processors available when the computers are purchased. A hard disk greater than 10 gigabytes and with a minimum of 64K of RAM is installed. The computers are Ethernet ready for networking to a printer. The computers are equipped with a read/write CDROM disk drive for archiving data. A Profibus connection card (CP5412) is installed in each HMI computer to allow the computer to connect and have access to the Profibus. The color display screen is 19 inches or larger for HMI display. The computer is also equipped with a keyboard and mouse pointer device. HMI computers are powered from the UPS power within the control trailer.

RCS HMI—The RCS PLC is mounted on the RCS panel, PNL-RCS-012, and the PLC is equipped with its own local HMI located in the Electrical Equipment Building. A separate HMI for the RCS is located at the operator station in the AWR Project control trailer. Communications between the RCS HMI and the PLC is with the Profibus network. If the RCS

PLC is set up as a master, then the HMI needs a separate Profibus network from the field Profibus.

General HMI Display Screen Layout—The top display screen shows the overall layout of the field equipment. This layout includes the equipment on the silo bridge, the high-pressure pumps, and TTA equipment. The screen shows the general operating condition of the equipment, especially the pumps and motor-operated valve (MOV) positions. Some information about tank levels and water pressures and flows are also displayed.

The operator clicks on a screen icon to pop up another screen to display detailed information about the equipment device(s). The information shown depends on the device(s). For example, clicking on the slurry pump will pop up a screen about the devices within the slurry pump enclosure including the MOVs. This pop-up screen allows the operator to start a motor or change a valve position.

Operating parameters are also changed within the device pop up display screen. Password protection is an option. Operating motors and pumps are displayed in green and the off condition is represented by red. Open valves are displayed in the green and closed valves in red. Alarms and warning messages are displayed on any screen displayed on the HMI computer.

5.1.4.5 Profibus Network Communication

The current network requires three separate Profibus networks. The first Profibus network is for the field PLC, the second Profibus network is to support the EMMA™ controller, and the third Profibus network is to support the RCS PLC. Fiber optics is used to connect the widely separated equipment I/O data nodes.

The three Profibus networks are configured for the network topology. If a fiber optic cable is broken, then there still is a fiber optic path on the network for data travel. Every data I/O node requires the OLM/S4 copper-to-fiber converter. Profibus network for the RCS is redundant network topology. There are two ports for the fiber optic fiber and two copper ports to the I/O node equipment. The OLM/S4 supports the redundant ring topology.

The fiber optic cabling consists of two 62.5/125-glass fibers within the cable. The cable requires at least six fibers. The unused optic fibers become installed spares. The optic fibers are terminated with connectors directly into the OLM/S4 modules.

5.1.4.6 Master Equipment Enable Switch

The MEES is a PLC hardware protection system. The MEES has a key switch at the operator station in the control trailer that prevents equipment startup and operation unless the key is in the "Operate" position. When the key is in the "Operate" position, the PLC allows the HMIs or local control panels to control the equipment.

After an E-stop condition forces the equipment to stop operating and the E-stop switches are returned to the run position, the MEES must be turned to the "Off" position and then back to the "Operate" position to allow the field equipment to operate by way of the PLC and HMI. This control prevents an operator in the field from clearing an E-stop switch and accidentally starting equipment before conditions are ready for equipment startup.

5.1.4.7 Emergency Soft Stop

The soft stop control allows the operator to rapidly shutdown operating equipment (i.e., motor-driven equipment) at the Silo Bridge or the TTA. The soft stop commands are produced by the PLC, operators in the control trailer, or operators in the field. The PLC monitors the soft stop signals and upon detection of a soft stop command, the PLC will issue shutdown commands to the equipment.

The soft stop is intended to rapidly stop motor-driven equipment. If desired, the soft stop signal can be used to position equipment (i.e., MOVs) to a safe or known position. The PLC monitors and responds to an E-stop command.

5.1.4.8 Hardware Interface Connections

Wire termination is accomplished with Phoenix Contact products or similar products. Field wiring to the I/O modules connects to terminal interfaces and not directly to the I/O module. Phoenix Contact provides products for DIN rail wire termination, fuse holders, relays and relay holders, and other DIN rail products.

5.1.4.9 Local Control

The PCL directs the local control of the field equipment. This method allows greater control of the equipment than that provided by hand switches and relays at the equipment locations. Control commands are provided with hand switches located on the local control panels.

The Hand-Off-Remote switch position "Off" will command the PLC not to start or operate the equipment from any command source. In the "Remote" position, the PLC will take commands from the HMI. In either case, "Off" or "Hand", an HMI alarm event is recorded.

5.1.5 Input/Output Nodes

The Sluicer, Slurry, Decant, and High-Pressure Pump I/O Nodes are the data collection and control point for the equipment devices. The I/O node requires an ET200M station with an IM153 module and standard S7-300 I/O modules. This station forms a distributive I/O data collection and control node. The ET200M station can support a total of eight S7-300 type I/O modules. An I/O module is replaced within the station without removing power or affecting the operating status of the other I/O modules in the station.

If the I/O requirements for the bridge I/O is more than what one ET200M station can support, then a second ET200M station with I/O modules is added. The I/O requirements include the 25% installed I/O spare channel requirement. Generally, there are requirements for both digital and analog I/O modules. The digital I/O modules may include both DC and AC voltage I/O modules. The choices of digital I/O modules include SM321, SM322, and SM323 modules. There are also different models within each type of module. The choices of analog I/O modules include SM331, SM332, and SM334 modules. There are also different models within each type of analog module. The I/O modules are rated for a temperature range of 0 °C to 60 °C. The ET200M station is not weather-resistant. The station is housed in a heated National Electrical Manufacturers Association (NEMA) 4 enclosure. The enclosure may require air conditioning to keep the internal enclosure temperature below 60 °C (140 °F).

000453

5.1.5.1 Profibus

The fiber optic link from the control trailer to the bridge I/O node terminates in the I/O node enclosure. At this location, the Profibus is converted back to a copper link using the OLM/S4 converter. Another fiber optic link links the bridge I/O node to the high-pressure pump I/O node. The Siemens IM153 module is required for the ET200M station to use the Profibus.

5.1.5.2 Power Supply

The ET200M station requires 24-V DC for operation. The select power supply is Siemens PS307 module and mounts on the DIN rail with the IM 153 module. The power supply requires 115-V AC power from the UPS. The power supply output is rated for 5 amps. The power supply supplies power to a limited amount of sensors and actuators. Additional power supplies are required for sensor and actuator requirements.

5.1.5.3 Power

The I/O node enclosure requires 115-V AC, single-phase, for enclosure heating, ventilating, and air conditioning (HVAC) and MOV power.

5.1.5.4 Enclosure

The instrument node enclosure has an environmental rating of NEMA 4 or better. Because of the heat-producing devices inside the cabinet, the cabinet may require air conditioning. The enclosure is equipped with a sun shield to reduce the sun heat load during the summer conditions. The enclosure has an internal heater to maintain warm internal cabinet temperature in cold weather conditions. The cabinet size will be as minimal as possible. The enclosure is equipped with a thermocouple to provide warning of excess high temperature inside the enclosure.

5.1.5.5 Hardware Interface Connections

Wire termination is accomplished with Phoenix Contact products or similar products. Field wiring to the I/O modules connects to terminal interfaces and not directly to the I/O module. Phoenix Contact provides products for DIN rail wire termination, fuse holders, relays and relay holders, and other DIN rail products.

5.1.6 Sluicing Nozzle System

The sluicing nozzle system is designed to spray high-pressure water into the silo material to form a slurry mixture. The sluicing nozzle system consists of a pitch and yaw-positioning device on the nozzle. A hoist is used to lower and raise the nozzle into and out of the tank. The sluicing nozzle system has MOVs within the enclosure.

5.1.6.1 Sluicing Nozzle Pitch and Yaw Positioning

The sluicing water jet nozzle requires pitch and yaw position control. The Siemens IM 178-4 position controller module is a two-channel positioning interface module. Two absolute encoders, mounted on the sluicing nozzle, provide the nozzle's pitch and yaw position inputs to the interface module. The SM 338 reads the actual position values cyclically from the absolute encoders to pass the values onto the PLC by way of the Profibus.

The PLC receives the current pitch and yaw nozzle positions from the interface module over Profibus and the joystick positions at the operator station. The PLC finds a new commanded position (encoder position) for the nozzle and sends the commanded positions to the analog output module over Profibus. The analog output module generates an analog command to the motor drive amplifier.

The pitch and yaw motors and motor drive amplifiers are Electro-Craft devices or similar equipment. The final torque output of the motor gearbox may be as high as 400 foot-pound. The nozzle requires a positioning velocity of 0 to 10 degrees per second. The final motor and motor amplifier selection coincides with the mechanical design progression. The absolute encoders are Siemens devices equipped with synchro-serial interface. The positioning resolution is 0.09 degrees. The encoders will connect directly to the SM 338 module.

5.1.6.2 Sluicing Nozzle Vertical Positioning

A commercial two-speed winch is used to control the vertical height of the sluicing nozzle. In local operation, the hoist has two speeds. In remote operation (i.e., HMI operation), the hoist will be limited to the slow speed. An analog positioning sensor measures the vertical position of the nozzle mast. The sensor output is measured in the Bridge I/O node.

5.1.6.3 Motor Operated Valves

The MOV located inside the sluicing enclosure are controlled by the Sluicer I/O node. Limit switches mounted on the valve determine the valve's position. The valve motor actuator and the limit switches require 120-V AC power. Output modules (installed in the Bridge I/O node) control MOVs, support small ac drive motor loads, and input modules that monitor ac sensor values. The motor drive power that is supplied by the AC output module is fuse protected. The fuses are located in the Sluicer I/O node enclosure.

5.1.6.4 Motor Starter

To allow the PLC to remove AC power from the pitch and yaw motor drive amplifiers and from the hoist, a motor starter is used to supply power to the amplifiers and hoist. The motor starter provides a method to remove power from the motors for normal shutdown or soft stop shutdown. The motor drive amplifiers and the hoist are fuse protected. There is a lockable disconnect switch in-line between the motor starter and the 480-V AC, three-phase power.

5.1.6.5 Control Enclosure

A NEMA 4 or better enclosure is required to house the disconnect switch, motor starter, pitch and yaw motor drive amplifiers, hoist motor controller, and interface circuits. The enclosure requires both heat and air conditioning to maintain proper operating temperature inside the enclosure. The control enclosure is mounted to the outside on the sluicing enclosure.

5.1.6.6 Cable Handling Inside the Enclosure

The cables that pass from the control enclosure to the Sluicing Enclosure will pass through sealed bulkhead fittings. The cables from the control enclosure to the hoist and MOVs travel direct to their devices. The cables (motor and encoder) for the sluicing nozzle are stored on a cable reel. The cables are pulled off the cable reel as required when new mast sections are

installed to lengthen the sluicing nozzle mast. After the new length of cable from the cable reel are attached to the new mast section, the cable connectors on the cable reel end are reconnected to the cable connectors from the control enclosure.

5.1.6.7 Local Control

A Hand-Off-Remote switch is located on the control enclosure. In "Remote" position, the control of the equipment within the sluicing nozzle enclosure is controlled by the HMI. In the "Off" position, the PLC does not accept any commands to operate equipment within the sluicing nozzle enclosure. In the "Hand" position, the PLC accepts commands from the local I/O node control panel. In the "Hand" position, equipment within the sluicing nozzle enclosure is placed into local control. The equipment includes the pitch and yaw nozzle motors, the nozzle hoist, and MOVs.

5.1.6.8 Hardware Interface Connections

Wire termination is accomplished with Phoenix Contact products or similar products. Field wiring to the I/O modules connects to terminal interfaces and not directly to the I/O module. Phoenix Contact provides products for DIN rail wire termination, fuse holders, relays and relay holders, and other DIN rail products.

5.1.7 Bulk Waste Retrieval/CATS System

The bulk waste retrieval/CATS system is the equipment used to pump the material out of the silos and to the TTA tanks.

5.1.7.1 Slurry Pump

The slurry pump is required to operate at different speeds to control the amount of slurry that is pumped out of the silo. A variable-speed motor driving through a gear reducer governs the slurry pump. A variable-speed motor drive powers the motor. The operator in the control trailer controls the speed of the pump by adjusting the speed of the pump motor.

The current selected variable-speed motor drive is a Siemens MidiMaster Vector drive with the Profibus connection. The motor drive is controlled directly by the PLC over the Profibus network. This variable-speed motor drive is sensorless. These features make this motor drive attractive.

The slurry pump motor is rated at 50-hp. The motor drive requires 480-V AC, three-phase power. Local control of the pump motor is provided by the front panel controls located on the motor drive amplifier. An ultrasonic level sensor is mounted above the slurry pump intake to determine the level of slurry present at the pump intake. If the slurry amount or level is low, then the sensor will detect the low-level and turn the slurry pump off.

The slurry pump vertical height is controlled by a motor-driven elevator platform. A single-speed motor driving lead screws in each of the corners of the elevator platform positions the elevator platform vertical height. The elevator platform height can be controlled either from the HMI or locally. The position of the elevator platform is measured and displayed on the HMI. A bi-directional motor starter controls the elevator motor. The motor requires three-phase, 480-V AC power.

5.1.7.2 Motor Operated Valves

The three MOVs located inside the slurry pump enclosure are controlled by the Slurry I/O node. Limit switches mounted on the valves determine the valve's position. The valve motor actuator and the limit switches are 120-V AC power.

5.1.7.3 Motor Starter

To allow the PLC to remove AC power from the slurry pump motor drive and from the elevator platform, a motor starter is used to provide power to the motor drive and elevator platform motor. The motor starter provides a method to remove power from the motors for normal shutdown or soft stop shutdown. There is a lockable disconnect switch in-line between the slurry pump motor drive and the 480-V AC, three-phase power.

5.1.7.4 Control Enclosure

A NEMA 4 or better enclosure is required to house a disconnect switch, motor starter, elevator motor controller, and interface circuits. The enclosure requires both heat and air conditioning to maintain proper operating temperature inside the enclosure. The control enclosure is mounted to the outside on the slurry pump enclosure.

5.1.7.5 Cable Handling Inside the Enclosure

The cables that pass from the control enclosure to the Slurry Pump Enclosure pass through sealed bulkhead fittings. The cables from the control travel directly to their devices.

5.1.7.6 Local Control

A Hand-Off-Remote switch is located on the control enclosure. In "Remote" position, the control of the equipment within the slurry enclosure is controlled by the HMI. In the "Off" position, the PLC does not accept any commands to operate any equipment within the slurry pump enclosure. In the "Hand" position, the PLC accepts commands from the local I/O node control panel. In the "Hand" position, equipment within the Slurry pump enclosure is placed into local control. The equipment includes the slurry pump motor, the elevator, and MOVs.

5.1.7.7 Profibus Equipment

A slurry flow meter sensor is installed in the slurry pump enclosure. The flow sensor connects directly to the Profibus network, which provides information generated by the flow sensor to the HMI.

5.1.7.8 Hardware Interface Connections

Wire termination is accomplished with Phoenix Contact products or similar products. Field wiring to the I/O modules connects to terminal interfaces and not directly to the I/O module. Phoenix Contact provides products for DIN rail wire termination, fuse holders, relays and relay holders, and other DIN rail products.

000457

5.1.7.9 Other Equipment

Six radiation detectors are supplied for use on two silo risers. The radiation detectors are stand-alone equipment and provide their own input device and monitor in the control trailer.

5.1.8 High-Pressure Pump I/O Node

The High-Pressure Pump I/O Node or I/O Node 2 is the data collection and control point for the equipment devices located on or near the high-pressure pumps. The I/O node requires an ET200M station with an IM153 module and standard S7-300 I/O modules. This station forms a distributive I/O data collection and control node. The ET200M station supports a total of eight S7-300 type I/O modules. An I/O module is replaced within the station without removing power or affecting the operating status of the other I/O modules in the station.

A second ET200M station with I/O modules is added if the I/O requirements for the bridge I/O is more than what one ET200M station can support. The I/O requirements include the 25% installed I/O spare points requirement. Generally, there are requirements for both digital and analog I/O modules. The digital I/O modules may include both DC and AC voltage I/O modules. The choices of digital I/O modules include SM321, SM322, and SM323 modules. There are also different models within each type of module. The choices of analog I/O modules include SM331, SM332, and SM334 modules. There are also different models within each type of analog module. The I/O modules are rated for a temperature range of 0 °C to 60 °C. The ET200M station is not weather-resistant. The station is housed in a heated NEMA 4 enclosure. The internal enclosure temperature may require air conditioning to keep the temperature below 60 °C (140 °F).

5.1.8.1 Profibus

The fiber optic link from the bridge I/O node terminates in the high-pressure I/O node enclosure. At this location, the Profibus is converted back to a copper link using the OLM/S4 converter. Another fiber optic link links the high-pressure pump skid I/O node to the TTA I/O node. The Siemens IM153 module is required for the ET200M station to use the Profibus.

5.1.8.2 Power Supply

The ET200M station requires 24-V DC for operation. The selected power supply is Siemens PS307 module and mounts on the DIN rail with the IM 153 module. The power supply requires 115-V AC power from the UPS. The power supply output is rated for 5 amps. The power supply provides power to sensors and actuators. Additional power supplies may be required for sensor and actuator requirements.

5.1.8.3 Power

The I/O node enclosure requires 115-V AC, single-phase power for enclosure HVAC and MOV power.

5.1.8.4 Emergency Soft Stop

The soft stop cable is intended to rapidly stop motor-driven equipment.

5.1.8.5 Enclosure

The I/O node enclosure has an environmental rating of NEMA 4 or better. The enclosure is equipped with a sun shield to reduce the sun heat load during the summer conditions. The enclosure has a heater to maintain warm internal cabinet temperature in cold weather conditions. The I/O node enclosure is mounted to the outside of the high-pressure pump skid cover. The enclosure is equipped with a high-temperature switch to provide warning of excess high temperature inside the enclosure.

5.1.8.6 Hardware Interface Connections

Wire termination will be accomplished with Phoenix Contact products or similar products. Field wiring to the I/O modules connects to terminal interfaces and not directly to the I/O module. Phoenix Contact provides products for DIN rail wire termination, fuse holders, relays and relay holders, and other DIN rail products.

5.1.8.7 High-Pressure Water Pumps

The three water pressure pumps can be started and stopped from the HMI. The pump discharge flow is dumped or directed to the using device. The pump discharge pressure to the using device is controllable. The pumps' operating information and discharge water pressure is displayed on the HMI. The water pressure pumps supply water to the SREE cutting jets, to the jet pump, and to the riser decontamination spray rings.

5.1.8.8 Hydraulic Pressure Pumps

The hydraulic pump supplies hydraulic operating pressure to the SREE rotation motor and the debris-cutting shear. From the HMI, the pump can be started and stopped, and operating conditions are monitored.

5.1.8.9 Motor Starter

Each motor has its own motor starter allowing the PLC to control the starting and stopping of the high-pressure pump motors. The motor starter is controlled from the high-pressure I/O node. There is a lockable disconnect switch in-line between the motor starter and the 480-V AC, three-phase power.

5.1.8.10 Control Enclosure

A NEMA 4 or better enclosure is required to house the disconnect switch and the pump motor starter. Each motor has its own enclosure near the motor the enclosure is controlling. The enclosures do not require heat or air conditioning.

5.1.8.11 Local Control

A Hand-Off-Remote switch for each pump is located on the high-pressure I/O node enclosure. In the "Remote" position, the control of that high-pressure pump and associated control equipment is controlled by the HMI. In the "Off" position, the PLC does not accept any commands to operate equipment associated with that pump. In the "Hand" position, the PLC accepts commands from the local control panel. In the "Hand" position, equipment associated with the high-pressure pump is placed into local control. The equipment includes the starting

and stopping of the pump, position of the dump valve, pressure adjustment, and pressure reading. The control commands are performed at the hand-held local controller.

5.1.8.12 Hardware Interface Connections

Wire termination is accomplished with Phoenix Contact products or similar products. Field wiring to the I/O modules connects to terminal interfaces and not directly to the I/O module. Phoenix Contact provides products for DIN rail wire termination, fuse holders, relays and relay holders, and other DIN rail products.

5.1.9 TTA I/O Node

There are up to 14 I/O nodes with in the TTA for data collection and control point for the equipment devices located in or near the TTA building. Each I/O node requires an ET200M station with an IM153 module and standard S7-300 I/O modules. This station forms a distributive I/O data collection and control node. The ET200M station supports a total of eight S7-300 type I/O modules. An I/O module is replaced within the station without removing power or affecting the operating status of the other I/O modules in the station.

Generally, there are requirements for both digital and analog I/O modules. The digital I/O modules include both DC and AC voltage I/O modules. The choices of digital I/O modules include SM321, SM322, and SM323 modules. There are also different models within each type of module. The choices of analog I/O modules include SM331, SM332, and SM334 modules. There are also different models within each type of analog module. The I/O modules are rated for a temperature range of 0 °C to 60 °C. The ET200M station is not weather-resistant. The station is housed in a NEMA 4 enclosure.

5.1.9.1 Profibus

A fiber optic link connects each ET200M node to the main PLC. Within each node, the Profibus is converted back to a copper link using the OLM/S4 converter. Fiber optic cables are utilized to minimize damage or failures due to power surges and lightning strikes.

5.1.9.2 Power Supply

The ET200M station requires 24-V DC for operation. The selected power supply is Siemens PS307 module and mounts on the DIN rail with the IM 153 module. The power supply requires 115-V AC power from the UPS. The power supply output is rated for 5 amps. The power supply provides power to a limited amount of sensors and actuators. Sensor and actuator requirements may demand additional power supplies.

5.1.9.3 Power

The I/O node enclosure requires115-V AC, single-phase power for enclosure HVAC and MOV power.

5.1.9.4 Emergency Soft Stop

The Decant, Sluicer, and Slurry control nodes are equipped with soft stop controls.

000460

5.1.9.5 Enclosure

The instrument node enclosure has an environmental rating of NEMA 4 or better.

5.1.9.6 Hardware Interface Connections

Wire termination is accomplished with Phoenix Contact products or similar products. Field wiring to the I/O modules connects to terminal interfaces and not directly to the I/O module. Phoenix Contact provides products for DIN rail wire termination, fuse holders, relays and relay holders, and other DIN rail products.

5.1.10 Decant Pumps

The decant pump is a single-speed pump and is used to pump tank liquid from the TTA waste storage tank to the silo sluicing nozzle. The pump floats on the water surface of a TTA waste storage tank when the pump is operating. There are two independent decant pump systems.

One decant pump is in Tank A and the other decant pump is in Tank B during SWRS operations. When the second silo SWRS operations are ready to begin, the decant pumps move to the second set of A and B tanks in the TTA Building. Currently, the decant pump motor is rated at 60-hp. The motor requires 480-V AC, three-phase power. The decant pump lowers into the waste TTA storage tank using two hoists located on the ceiling of the decant pump enclosure.

5.1.10.1 TTA I/O Node Control Motor Operated Valves

The MOVs located inside the decant pump enclosure have limit switches mounted on the valves determined the valve's position. The valve motor actuator and the limit switches may be 120-V AC power.

5.1.10.2 Motor Starter

The decant pump motor has a motor starter in a control enclosure mounted to the decant pump enclosure. The motor starter is controlled by the PLC. The motor starter also provides a method to remove power from the motors for normal shutdown or soft stop shutdown. There is a lockable disconnect switch in-line between the motor starter and the 480-V AC, three-phase power.

5.1.10.3 Control Enclosure

A NEMA 4 or better enclosure is required to house the disconnect switch and motor starter. The enclosure does not require heat or air conditioning. The control enclosure is mounted to the outside on the decant pump enclosure.

5.1.10.4 Cable Handling Inside the Enclosure

The cables that pass from the control enclosure to the Slurry Pump Enclosure pass through sealed bulkhead fittings. The cables from the control enclosure to the MOVs travel direct to their devices. The cables for the decant motor are stored on a cable reel equipped with a slip ring.

5.1.10.5 Local Control

A Hand-Off-Remote switch is located on the control enclosure. In "Remote" position, the control of the equipment within the decant enclosure is controlled by the HMI. In the "Off" position, the PLC does not accept any commands to operate equipment within the decant pump enclosure. In the "Hand" position, the PLC accepts commands from the local hand-held control panel. In the "Hand" position, all equipment within the decant pump enclosure is placed into local control. The equipment includes the decant pump motor and MOVs located inside the decant pump enclosure.

5.1.10.6 Hardware Interface Connections

Wire termination is accomplished with Phoenix Contact products or similar products. Field wiring to the I/O modules connects to terminal interfaces and not directly to the I/O module. Phoenix Contact provides products for DIN rail wire termination, fuse holders, relays and relay holders, and other DIN rail products.

5.1.11 TTA Sluicing Nozzle System

The sluicing nozzle system is designed to spray high-pressure water into the TTA waste storage tank material to form a slurry mixture. The sluicing nozzle system is identical to the sluicing nozzle system used on the silos and is used to support the TWRS operations. During TWRS operations, two sluicing nozzle systems are installed into one TTA waste storage tank. The sluicing nozzle system's controls are identical to the sluicing nozzles used in the silos.

5.1.12 TTA Bulk Waste Retrieval

The TTA bulk waste retrieval system is the equipment used to pump the waste material out of the TTA tanks and to the Future Full-Scale Remediation Facility. The TTA bulk waste retrieval system control is identical to the Silo bulk waste retrieval system.

5.1.13 TTA Building Equipment

The TTA building equipment that is controlled by the TTA I/O node includes the three-way and two-way MOVs and liquid transfer pumps. The TTA I/O node also monitors the pressure and flow sensors within the TTA system.

5.1.13.1 Motor Starters within the Motor Control Center

Presently, there are three motor control centers located near the TTA building. TTA I/O node controls the motor starters using the Actuator Sensor Interface network or a new I/O node outside the TTA building.

5.1.13.2 Local Equipment Control

Each motor in the TTA has its own Hand-Off-Remote switch located on the TTA I/O node enclosure. Each MOV is controlled by its own Hand-Off-Remote/Position switch.

5.1.13.3 Hardware Interface Connections

Wire termination is accomplished with Phoenix Contact products or similar products. Field wiring to the I/O modules connects to terminal interfaces and not directly to the I/O module. Phoenix Contact provides products for DIN rail wire termination, fuse holders, relays and relay holders, and other DIN rail products.

5.1.14 Radon Control System

The RCS has its own redundant PLC for control. This PLC is located at the Electrical Equipment Building and is equipped with a Profibus communication interface communicating on Fiber Optic Ring 3. The local RCS HMI communicates with the RCS PLC and provides both monitoring and control operations for the RCS. A different Profibus network for the RCS PLC is set for communication with the RCS HMI located in the AWR Project control trailer. The PLC will provide HVAC data from modules to the RCS PLC system through this Profibus network as well as changes in setpoints from the RCS HMI in the AWR Project control trailer. For FSMS testing, an RCS simulator PLC will control and test the airflow from Silo 4 to demonstrate controlling silo pressure.

5.2 System Components

This section provides descriptions of system components associated with the AWR Project. To some degree, each subsection provides descriptions of operations, equipment, and controls related to the respective AWR Project system component.

These system components include:

- Decant Pump System,
- High-Pressure Pump Skids,
- TTA Decontamination Pump Skid,
- Sluicer System,
- Slurry (Bulk Waste Retrieval) Pump/CATS,
- Hydraulic Power Supply System,
- Sampling Module,
- Breathing Air System,
- Diesel Generator System, and
- Compressed Air System.

5.2.1 Decant Pump System

The decant pump system is used to supply water to the silo sluicer water cannon. The pump system enclosure is mounted on the TTA equipment deck directly over the 48-inch riser centrally located on each storage tank. Two pump systems are provided. After the two pumps remove the supernate from two tanks, they are moved to the two remaining tanks, and remove the supernate from them. The decant pump system contains all the equipment needed to operate the pump, and interfaces with the TTA.

5.2.1.1 Supernate Pump Assembly

The pump assembly consists of one 60-hp centrifugal pump mounted on a float. The float has two pontoons, 22-inches diameter by 60-inches long, connected by a spring loaded folding frame 48-inches long when opened. The pump suction strainer will extend about 1-foot below the water level in the storage tank.

5.2.1.2 Enclosure

The enclosure is built with a structural steel tubing frame, and steel sheet metal welded to the frame. It has one airtight access door, one equipment pass-through, and sufficient gloveports and windows to allow equipment maintenance. The enclosure contains the equipment needed to allow the supernate pump to function. Equipment includes two 1-ton hoists to install and remove the pump from the tanks, one hose reel to hold the pump discharge hose, one cable reel to hold the pump motor wiring, and two 3-way ball valves and piping to direct the supernate and slurry flow. The enclosure also contains a spray ring to decontaminate the pump assembly when it is removed from the tank. The local control box for the electric components and motors is located on the outside wall of the enclosure.

5.2.1.3 Installation

The enclosure is pre-assembled at the time of delivery to the AWR Project site. It is moved to the proper location on the equipment deck by a crane. The riser connection on the bottom is attached to the 48-inch riser boot by a band clamp, and the enclosure is leveled and bolted to the floor. The utility interfaces are connected and tested.

5.2.1.4 Deployment

The pump assembly is hoisted into the tank using the two hoists located in the top of the enclosure. The assembly is installed in two parts, the float assembly, and the pump and mounting plate assembly. The float assembly is folded to pass through the 48-inch diameter riser on the top of the storage tank. Once the float is in the water, the spring force will unfold it. The pump and mounting plate are then lowered into the tank and placed on the float. The guide pins on the float properly position the pump.

5.2.1.5 Operation

The pump is operated as needed to supply water to the sluicer water cannon. During normal operation, the pump is remotely controlled from the TTA control room. The valves in the enclosure allow the operator to flush out the slurry piping as needed. As the tank fills with settled solids, the cable and hose are decontaminated and retracted onto their respective reels. The pump is raised up to the riser when slurry is being pumped to the tank.

5.2.1.6 Retraction

The system disassembles in reverse order from the way it is assembled, with the exception of the pump, and the spray ring decontaminates float assemblies before they are removed from the riser.

000464

5.2.1.7 Control Approach

The pump operates either remotely or locally. The remote control console is located in the TTA control room. The operator controls the pump, hoists, and the valves from there. The operator receives feedback from the system by way of the sensor/transmitters on the pump, valves, and the E-stop switch. The system is locally controlled from a local control panel that contains pump and valve switches, and the E-stop switch. The hoists and any other powered equipment are operated locally.

Controls determine the level of the pump based on the supernate level in the tank. The level indicator determines both the surface and residue interface. Low-level shutoff of the pump is approximately 3 feet above that interface. The amount of water is calculated to ensure sufficient water is available to operate a day's sluicing.

5.2.2 High-Pressure Pump Skids

Three high-pressure pumps are provided to generate pressurized water for decontamination water to the decontamination spray rings, motive water to the jet pumps and cutting water to the SREE. The three pumps are mounted on one skid and enclosed. A local control panel is located on the outside of the enclosure. Quick disconnects for the high-pressure water supply lines are mounted at the enclosure interface. The enclosure has a footprint of 15 feet long by 7 feet wide by 1 foot high with an approximate weight of 15,000 pounds.

The equipment provided with the system consists of three high-pressure pumps: the decontamination water, jet pump motive water and SREE cutting water supply pumps. These pumps are housed in a heated and ventilated enclosure that includes the following: (1) three high-pressure pumps, (2) a lube water system collection pan, (3) a sump pump located in the sump, (4) process valves, piping and hoses, (5) a fresh air vent, (6) an exhaust fan, and (7) an enclosure heater to prevent freezing.

5.2.2.1 Equipment Description

The enclosure is constructed of insulated fiberglass walls and roof attached to a floor/support frame structure. The floor/support is fabricated of welded and painted carbon steel. Forklift points as well as a grounding lug are integrated in the support frame. Liquid leaks inside the enclosure are contained and collected in a sump located in the floor of the enclosure. A sump pump will be provided that will transfer any liquid to the water supply tank. The sump pump is an air-operated, double-diaphragm pump.

The high-pressure pump for the decontamination water supply is the Butterworth Liqua Blaster, Model 103ET, or equivalent. This pump has the capability to supply up to 40 gpm at 3,000-psi discharge pressure. This pump is a three-piston, positive-displacement pump constructed of stainless steel, carbon steel, and cast iron. A 480-V, 3-phase, 75-hp, totally enclosed, fan-cooled (TEFC) electric motor drives the pump.

The cutting water and motive water pumps are identical systems. Each pump is the Butterworth Liqua Blaster Model 110ET. Each pump has the capability to pump up to 10 gpm at 10,000-psi discharge pressure. These pumps are three-piston, positive-displacement pumps constructed of stainless steel, carbon steel, and cast iron. A 480-V, 3-phase, 75-hp, TEFC electric motor drives each pump.

The lube water from each pump drains into a common collection tank supplied with an air-operated, double-diaphragm sump pump to transfer the liquid to the process water tank. The fresh air vent and the exhaust fan provide air circulation inside the enclosure. Louvers with a replaceable steel mesh screen over an opening in the enclosure wall will from the fresh air vent. A 110-V motor powers the exhaust fan. The fan is equipped with movable louvers to prevent heat loss during cold weather. A thermostat-controlled, 1,500-watt heater powered by 110-V power prevents system freezing during cold weather.

5.2.2.2 Operational Description

Equipment inside the enclosure is installed before delivery to the site. A forklift positions the system on leveled and compacted gravel or a concrete pad located on the ground. Three-phase, 460-V AC and 110-V AC electrical service will be connected at the disconnect switch, that also contains the power distribution panel. The process water supply and return lines and the high-pressure supply lines connect at their respective quick-disconnects.

Process water is supplied to the high-pressure water supply system at 40 gpm and 50 psi. The water supply line enters the enclosure and divides into three separate supply lines to each pump. Each line has a hand operated valve to manually shut off the water. The pump supply lines also have local flow and pressure instrumentation. The low-level pressure switch interlocks with the power to the pump, turning off the pump when the pressure of the incoming supply water drops below the predetermined level.

Each pump has a pressure-relief valve to protect the pump from over pressurization. The crankcase lube gauge on the pump has a low-level switch that shuts off power to the pump. The lube water gravity drains to a common lube water collection tank where a sump pump returns the liquid to the water supply tank. This return line from the collection tank has backflow preventers. The discharge line from each pump has an air-operated dump valve that—when closed—diverts the water supply to the return line. The return line from the dump valve has flow instrumentation and back flow preventers. The differential of this return flow and the inlet flow indicates the high-pressure water supply flow. This flow rate is monitored remotely.

The pressure is controlled remotely with the air-operated control valve or locally with the manually operated control valve. When the pumps are started up, the dump valve returns the water to the supply tank, the manual valve is closed and the remote valve is opened. When high-pressure water is needed, the dump valve opens, allowing the water to pass through the remote pressure control valve. As this valve closes, the water is forced down the supply hose. The pressure is monitored remotely. For manual operation of the pumps, the manual control valve is opened and the remote control valve is closed upon start up. As the dump valves open, the water passes through the manual valve. Local instrumentation allows operations to monitor the pressure as they close the manual valve.

5.2.2.3 Controls

The pumps operate either locally or remotely. The local control panel mounts on the exterior of the enclosure and has pump status lights, start/stop buttons, dump supply/auto switch, dump valve status lights, and an E-stop button. In local operation, pressure is controlled with the manual pressure-controlling valve. The local pressure indicator provides feedback to the operator to monitor discharge pressure. In remote operation, the manual pressure control valve is fully closed. The pressure is controlled from the remote graphical control console by inputting the desired discharge pressure and using the pressure transmitter and pressure

controller for closed loop control. The remote console displays discharge pressure and dump valve status.

System interlocks shut down the pumps in the event of low inlet pressure, high discharge pressure, low crankcase lube level, high discharge flow, or high liquid-level in the sump. Enclosure temperature control (i.e., heater and exhaust fan) is provided by thermostats located in the enclosure and is not integrated with the local control panel or remote console. A lockable electrical disconnect switch will be mounted at the local control panel.

5.2.3 TTA Decontamination Pump Skid

One high-pressure decontamination pump provides support to the decontamination spray ring operation in the TTA. The pump will be mounted on a skid weighing up to 5,000 pounds and having a 4-foot by 6-foot footprint. Nonskid mounted piping, hoses, valves, fittings, and instrumentation are included as part of the TTA decontamination pump skid system.

5.2.3.1 Pump

The single decontamination pump for service in the TTA is a positive-displacement, piston-type pump with water lubrication. The pump provides 3,000 psi and 40 gpm at the pump discharge. This pump uses a 75-hp motor requiring 460-V, three-phase power. The high-pressure pump is skid mounted and capable of local operation from the local panel or remote operation from the central control console. The pump has a pressure-relief valve, pressure indicator, pressure transmitter, pressure controller (for remote operation), and a manual pressure control valve (for local operation). The pump is mounted to a painted, carbon steel skid without any leak collection or detection capabilities, and operates indoors without any freeze protection provisions. The pump also meets seismic, floor loading, and building ventilation requirements. Inlet piping (< 200 psi) meets the requirements of American Society of Mechanical Engineers (ASME) B31.3, and outlet piping meets the requirements of ASME B31.3 or the Water Jet Technology Association.

5.2.3.2 Controls

The pump is operated locally or remotely. The local control panel, mounted to the skid, has pump start and stop buttons, dump/supply/auto switch, dump valve status indicator lights, and E-stop. In local operation, pressure is controlled with the manual pressure-controlling valve. The local pressure indicator provides feedback to the operator to monitor discharge pressure. In remote operation, the manual pressure control valve is fully closed. The pressure is controlled from the central control console by inputting the desired discharge pressure and using the pressure transmitter and pressure controller for closed loop control. The remote console displays discharge pressure and dump valve status.

5.2.4 Sluicer System

The sluicer directs a concentrated stream of decant fluid to the waste surface and "pushes" a pumpable slurry toward the bulk waste removal pump. The sluicer deploys through one of the risers located 25 feet from the center of the silo. Using decant water supplied by the sluice water supply pump, the sluicer directs a concentrated water stream to the waste surface and provides a slurry to the retrieval pump. The sluicer system has three degrees of freedom: mast elevation, sluicing nozzle pan, and sluicing nozzle tilt. The sluicer system weighs approximately 15,000 pounds.

The sluicer system consists of the sluicer, its controls, and the enclosure. Sluicer components include the mast sections, mast hoist, mast support table, and sluicing nozzle assembly. The sluicer is controlled from either a local control panel or remotely from a graphical control console. The enclosure includes a small double-door pass through port (approximately 2-feet by 2-feet by 2-feet deep), a large double-door access hatch (approximately 3-feet by 3-feet by 11-feet high), a mast-handling trolley, and numerous gloveports.

5.2.4.1 Equipment Description

Mast and mast hoist—The mast serves a dual purpose: supply feed water and power/signals to the sluicing nozzle and its controls, and support to the nozzle (and its reaction forces). To deploy the sluicing nozzle fully into the silo (41 feet from the bottom of the bridge to the silo bottom), the mast has four 9-foot long modular extensions in addition to the pan/tilt module. As the level in the silo decreases, extensions are added to increase the mast length. A hoist at the top of the sluicer housing remotely or locally controls mast elevation.

A roof-mounted trolley running from inside the double-door hatch and along the perimeter of the sluicer enclosure moves mast modules into and out of the enclosure. Spare modules will be stored at the end of the trolley run and suspended from the trolley. As extra modules are required to extend the mast reach, a module is rolled on the trolley to near the mast hoist and handed off to the mast hoist. The in-silo portion of the mast is locked to and suspended from the mast support table during the process of adding mast modules.

The mast is made of rectangular structural tubing. The mast module joints are self-aligning joints using high-strength fasteners to hold the joints in place. The mating edges of each mast section are machined to ensure a snug fit. A removable flange-type attachment is connected to the top of the deployed mast to prevent the mast from falling into the silo in the event of a catastrophic hoist or cable failure.

The sluicer fluid-supply hose is routed through the inside of the mast. The hose has quick-connect fittings at the mast joints for ease of connection. Power and signal cabling for the sluicer joint motors and encoders are routed outside of and attached to the mast sections. All these cables are bundled together. Extra cable is stored on a manually controlled motor operated cable reel. As a new mast section is added, the cable reel pigtail is disconnected and enough cable is deployed from the reel to attach to the new mast section. The bundle is clamped to each mast section approximately every 3 feet. There is a section of hose and cable bundle suspended between the topmast section and the inlet piping inside the enclosure. This suspended section has enough slack to allow full mast elevation travel without binding the hose or cable bundle. When sufficient cable is deployed and attached, the cable reel is locked and the pigtail connected.

Mast Support Table—The mast support table guides the mast radially during sluicing operations. Cam rollers are mounted to the table to guide the mast and support the reaction forces from the sluicing nozzle. While adding or removing mast extensions, the support table will support the in-silo portion of the mast and nozzle assembly.

Sluicing Nozzle Assembly—The sluicing nozzle assembly consists of the nozzle and the pan and tilt mechanisms. The nozzle is sized to optimize the sluicing stream delivered at the waste surface given the supplied flow conditions (nominally 300 gpm at 150 psi, less line losses from the pump). The pan and tilt mechanisms are electrically driven with position feedback to the

remote control console. The nozzle is capable of directing flow from the horizontal position to approximately ±90°. The pan mechanism is capable of rotating the nozzle approximately ±170°.

Enclosure—The enclosure has a footprint of approximately 6 feet by 10 feet and is constructed of structural tubing with a sheet metal skin. Gloveports are located strategically at various points on the enclosure including near the mast support table, the small pass through port, and the hose and cable connection locations as a minimum. A double-door access hatch allows large items to be moved into or out of the enclosure without breaking containment. The outside door is a single door. The inner door is a double-door (e.g., French doors) to minimize the space required to open the doors. A trolley rail runs inside the large pass through area. A second trolley rail runs in the main enclosure and around the periphery of the main enclosure. The trolleys are used to move mast extensions into and out of the enclosure and for mast extension storage. A hose and cable interface box attaches to the enclosure. Hoses and cables inside the enclosure terminate at the interface box with bulkhead connectors and quick-connects. A small double-door pass through port is provided to move smaller items into and out of the enclosure without breaking containment.

5.2.4.2 Operational Description

The initial condition of the sluicer system before beginning operations is with hoses and control/ power cables connected internally and externally. One mast module is mounted to the sluicing assembly and supported by the mast hoist. The sluicing nozzle is aligned with the mast to allow the assembly to pass through the silo riser into the silo. The other three mast extensions are stored in a corner of the enclosure hanging from the trolley. Doors and hatches are closed and latched. The operator sets mast position limits. The local/off/remote switch at the local control panel is set to "remote". From the remote console, the sluicer operator lowers the mast into the silo until the nozzle is at the desired operating position. The nozzle is directed to the desired location using the joystick controls at the remote console. The sluicer is ready for operation in this condition.

During sluicing, the sluicer operator continues to move the sluicing nozzle with the joystick controller to "push" slurry toward the bulk waste removal pump. The operator adjusts the nozzle elevation as required by lowering or raising the mast. When the lower limit of mast travel is reached, operations must cease to allow addition of another mast extension.

A locking support bracket is installed at the top of the in-silo mast extension to allow the mast to rest on the support table. The mast is lowered until it rests on the support table. The mast hoist is disconnected from the top of the mast and raised. A second mast extension is rolled on the trolley to near the mast hoist. The mast hoist is connected to the top of the second mast extension and the mast extension is released from the trolley. The second mast extension is lowered into place on top of the in-silo mast and fastened. Hose connections are made at both ends of the second extension and the cable bundle is extended and clamped to the outside of the second extension. The position limits are adjusted as necessary. Operations continue as previously described.

Retraction of the mast is a reverse process of the actions described above. The sluicing nozzle is aligned with the mast to allow it to pass up through the silo riser. Hoses and cables are disconnected. The mast is raised and mast extensions are removed and stowed on the trolley one at a time.

5.2.4.3 Control Approach

The sluicer operates remotely with local control available for the mast hoist. The hoist operates on three-phase, 480-V AC power supplied to a local panel. Remote operations are from a control console inside the control room. A local control panel is provided at the sluicer enclosure. The local panel has a mast hoist up/off/down switch, sluicer control valve open/close switch, cable reel out/off/in switch, sluicer module local/off/remote switch, and E-stop button. Motor starter/contactor/amplifier, control power supplies, digital I/O cards, E-stop, and relays are mounted in the local cabinet. Lockable power-disconnect switches are provided at the local panel. The remote control console uses multi-screen, graphical user interface, and PLC-based control. The graphical sluicer screen shows sluice water pressure and flow, sluicer angles, and E-stop status. Specific interlock requirements are programmed. After acceptance testing, software control is offered. This same console supports remote control of the equipment provided.

The sluicer pan and tilt joints are driven with servomotors with encoders for position feedback to the remote console and closed loop control system. The pan joint 0-degree position directs the nozzle approximately toward the center of the silo. It is capable of rotation up to ±170°. The tilt joint 0-degree position directs the nozzle toward the bottom of the silo. It is capable of rotation up to at least +100° and –5°. Each of the joints is capable of velocities from 0.1 to 5 degrees per second in either the positive or negative direction. A joystick controller controls the sluicer joints from the remote console only (i.e., there is no local control for the joints). The sluicer operator inputs the desired joint velocity on the graphical control console and then uses the joystick to direct the nozzle spray. The graphical control console displays joint positions and position limit alerts.

Each of the joints has software-controlled position limits. These limits are set to prevent the operator from moving the joints outside the desired limits of operation and to protect the equipment. The software limits are controlled by the sluicer operator and accessed through the graphical control console by inputting a password.

The mast hoist is controlled either locally or from the remote console. A "Local/Off/Remote" switch located at the local control panel selects the point of control. With the switch in the "Local" position, the hoist is operated locally. An "Up/Off/Down" switch on the local panel controls the hoist. With the local switch in the "Up" position, the hoist moves up and in the "down" position, the hoist moves down. This switch is a "dead man" type switch so that if it is released, the switch returns to the "Off" position. With the local switch in the "Remote" position, the hoist operates remotely from the graphical control console. From the console, the operator selects the mast hoist and either lowers or raises the mast by selecting and holding the up or down arrow. The mast hoist has an adjustable limit switch to control the upper and lower bounds for mast hoist operation.

5.2.5 Slurry (Bulk Waste Retrieval) Pump/CATS

The slurry (bulk waste retrieval) pump/CATS system is incorporated into one system and consists of a single enclosure housing all equipment associated with the bulk waste retrieval and CATS system. The enclosure and equipment are mounted on the silo bridge structure. Also associated with the system but located on the bridge outside the enclosure is a local control panel for the system equipment. The bulk waste retrieval slurry pump is deployed vertically through the silo riser and is driven from a variable-speed drive motor coupled directly to the slurry pump. The pump and drive is supported from up to two 12-foot long mast sections.

The mast sections include hose jumpers providing slurry discharge, slurry recycle/flush water, SREE hydraulic water supply/return, SREE cutting jet high-pressure water, and heels removal jet pump motive high-pressure wand. The overall weight of the slurry pump/CATS system and support equipment is estimated at approximately 18,000 pounds. The space requirement for the slurry pump and deployment/operational equipment is an approximate 9-foot by 18-foot footprint by 20-feet high.

The bulk waste retrieval and CATS system include the following equipment: (1) a progressive cavity (Seepex) pump; (2) a deployment mast assembly with external hoses and piping; (3) a vertical positioning table for vertically changing pump elevations; (4) variable-speed control pump drive motor and gear box, (5) a mast section stowage trolley, (6) a spray ring for decontamination of equipment; (7) process valves, piping, and hoses; (8) provisions for stowage and deployment of the SREE hose bundle; and (9) heel waste surge tank for collection and transfer of heel waste.

5.2.5.1 Equipment Description

Pump—The slurry pump is a progressive cavity pump. The pump is a Seepex, Model 130-12BN. It has the capacity to pump up to 500-gpm water at 100-psi discharge pressure. The pump normally operates at approximately 300 rpm at 350 gpm. The pump and gear motor are approximately 130 inches long. The pump assembly weighs approximately 2,300 pounds. The pump assembly is mounted from one or two 12-foot long mast sections in a vertical orientation. A strainer basket/can assembly is mounted on the suction end of the pump with the strainer being approximately 24 inches in diameter. A carbon steel pump housing, Buna-n stator, and hard-coated stainless steel rotor are necessary for this application. The system design is periodically evaluated for other materials that might better suit the slurry properties.

Pump Support Mast—The pump is supported from the motor end in a vertical-mounting configuration because of the size restrictions of the silo riser vertical access. The mast is in two 12-foot long sections constructed of 10-inch pipe. The sections are fabricated out of thick section material and have machined connection flanges with locating dowel pins to maximize alignment and minimize vibration. Each shaft section includes: (1) two 3-inch hose jumpers, one for the slurry discharge and one for sluice/slurry water recycle; (2) two high-pressure (10,000 psi), ½-inch inner diameter (ID) hoses for the SREE cutting jets and the jet pump motive water; and (3) two hydraulic hoses for the SREE drive motor. The uppermost shaft section is attached to a vertical positioning table with a travel of approximately 2 feet more than the shaft section length. A variable-speed drive motor coupled to a gearbox is mounted to the slurry pump and drives the slurry pump. The motor is approximately 50 hp and operates in a range of 0 to 300 rpm.

Elevation Table—The elevation table is constructed of a flat plate on which the slurry pump mast assembly mounts. The plate is fitted with four direct couple screw linear actuators driven by an open loop, remotely controlled, single-speed AC drive motor. A level instrument/encoder remotely displays the table elevation. Software interlocks on the basis of the table level signal maintain limits for the top and bottom of the table travel. The gearboxes, drive shafts and couplings, and drive motor are mounted to the structural steel frame members of the enclosure.

Mast Section Trolley—The mast section stowage trolley is mounted on the side of the enclosure and is of dual crane rail-type construction. The trolley has the capacity to store the mast sections. The trolleys are free rolling, non-motorized, and fitted with attachments for

hanging the mast sections vertically. The trolley assembly of the monorail has a rotating boom section on the end that can extend under the elevation table and transfer the mast sections from the elevation table to the trolley. The trolley has travel stops at both ends.

Enclosure—The equipment enclosure is constructed of welded and painted carbon steel. It generally uses a structural tube exterior frame with a carbon steel sheet metal skin welded to the structural frame members. The frame includes anchor points, lifting eyes, and grounding lugs. Because of the excessive time and cost required for full PPE dress-out activities inside the enclosure, gloveports and viewing windows are located in areas where routine work is required. Routine activities include adding or removing mast sections, routine maintenance of valves and instruments, passing small items (less than 1 cubic foot and 50 pounds) into the enclosure, and performing decontamination with the hand-held spray wand. A large, controlled ventilation vestibule is provided for personnel access to the inside of the enclosure or insertion/removal of large equipment. A supplied air connection is provided for the enclosure as well. Gloveports and windows are capable of attaching steel cover panels to them if required for missile protection. The enclosures include piping penetrations for attachment of inlet ventilation, decontamination water, and other utilities such as compressed air. Waterproof, bulkhead-type electrical connectors attach electrical services. Each enclosure includes a spool piece on the bottom for attachment to the silo/tank risers. A spray ring is located near the bottom of the enclosure as a part of this spool piece. The floor of the enclosure is designed to drain decontamination water into the risers.

Hose Bundle—A hose bundle approximately 75-feet long supplies utilities to the SREE and heel waste jet pump. SREE utilities (water hydraulics and high-pressure cutting water) are attached to the SREE at one end of the hose bundle. The other end of the hose bundle attaches to the pump mast at the heel waste surge tank section that connects to the bottom of the pump. The hose bundle includes a waste conveyance hose with the jet pump incorporated in-line. The waste conveyance hose is 2-inches ID on the suction and discharge of the jet pump. The SREE hydraulic supply hose is ½-inch ID and the return hose will be ¾-inch ID. The SREE and jet pump high-pressure water hoses will both be ½-inch ID. An abrasion sleeve surrounds all the hoses in the hose bundle. The enclosure incorporates a hose bundle reel capable of deploying and retracting the hose bundle. When the hose bundle is stowed on the reel, the jet pump is removed and replaced by a flexible jumper of the same length. As the bundle is deployed, the jet pump is installed in line, as that section of bundle is unspooled.

5.2.5.2 Bulk Waste Retrieval Mode

Installation—The bulk waste retrieval equipment is located within a single enclosure. Equipment inside the enclosure, including wiring, instrumentation, and piping and the decontamination spray ring are positioned and installed before delivery. After rotating the bridge in place over the silo, the enclosure is coupled to the silo riser opening by removing the blind flange on the flexible boot below the spray ring and bolting the flange to the flange on the silo riser. Blind flanges are removed from the double-walled process piping interface point and the secondary containment for the piping is attached to the mating flange on the enclosure. Using the glove access at the process piping connection point, blind flanges are removed from a flexible jumper on the process piping in the enclosure and the jumper is bolted to the bridge mounted secondarily contained process piping. Single-walled piping is attached with mating quick connects, and/or flanges, and/or screwed piping connections.

Deployment—The enclosure is delivered with the slurry pump suction strainer coupled to the elevation table. The elevation table is positioned at the upper end of its travel. At the start of deployment, the pump is lowered into the silo riser by lowering the elevation table to its lower position. The pump suction is still several feet above the waste in the silo at this point. A support slides into place around the upper end of the pump at this point. The support is capable of supporting the weight of the pump and all mast sections combined. Once the upper end of the pump assembly is secured, it unbolts from the elevation table assembly and the elevation table raises to the upper end of its travel. A mast section, suspended from the mast section trolley at the top of enclosure, rolls into place under the elevation table assembly. The table lowers until the top of the mast section can be coupled and bolted to the table. The table then lowers again until the lower end of the mast section is bolted to the pump assembly. The slide is then released from the pump and retracted from over the riser opening. The pump lowers further into the silo adding additional mast sections until the pump suction encounters the waste determined by visual observation using the in-tank cameras. The 3-inch process hoses (slurry and flush/recycle) connect to the mast.

Operations—The slurry pump is lowered approximately 1-inch above the BentoGrout™ layer and its elevation noted by the slurry pump operator. Lowering and raising the pump occurs by remotely operating the elevation table from the control station located in the control room. The slurry pump suction rises approximately 2 feet above the level of the top of the BentoGrout™ layer. The sluice water is directed though the sluicer under suction of the slurry pump and will sluice in an area approximately 6 feet in diameter. The slurry pump is lowered until the solids level switch is triggered. The pump is then started remotely and its speed remotely controlled to regulate the discharge flow rate or pressure. As the slurry pool level decreases, the pump is slowed, or stopped to maintain suction. If the pump is slowed to a point that there is risk of settling in the pipe, then the pump stops and the transfer line is flushed. Valving inside the enclosure allows the slurry transfer line to be flushed by diverting sluice water through the slurry transfer line. The valve and piping selection is such that the transfer line can be either forward or back flushed (depending upon valve line-up) using sluice water supplied from the decant pump system in the TTA. As sluicing proceeds, the solids level under the pump suction lowers as indicated by the solids level switch. The operator continues to lower the pump remotely until solids are encountered and the switch is made again. The solids content in the transfer line is remotely monitored during slurry transfer operations. The solids content is adjusted by adding sluice water to the slurry transfer line. The sluice water used to adjust the solids content is injected into the line by a 1-inch control valve located in the enclosure. The operator is required to closely monitor the discharge pressure of the slurry pump for indications of cavitation during operations. If cavitation is detected, signaled by erratic pressure fluctuations, the operator shuts the pump down and flushes the pump and transfer line.

The most likely place for solids plugging to occur is at the pump suction. Pump suction plugs are cleared by running the pump in reverse, or by blasting the suction strainer with the high-pressure spray ring mounted to it. Solids plugging occurring in the waste transfer piping is detected by increase in pump discharge pressure with no increase in pump speed or no significant change in solids content. In the event of a partial or total plug in the slurry transfer line, the valving in the enclosure diverts the pump discharge back through the mast to the silo while sluice water is used to clear the plug. Once the plug is cleared, the slurry is diverted back into the transfer line to resume normal operations.

Retraction—Retraction of the bulk waste removal pump fundamentally operates in reverse order of deployment except that the decontamination spray ring is activated during retraction of

mast sections to ensure contamination inside the enclosures is kept as low as reasonably achievable (ALARA).

5.2.5.3 CATS Mode

Installation—The heel waste retrieval (i.e., CATS) mode associated equipment uses the same equipment described above (e.g., enclosure, slurry transfer pump, elevation table, process piping and valving, overhead trolleys). In addition, CATS also uses the following equipment: (1) an in-silo heel waste surge tank; (2) a hose bundle to provide high-pressure water and hydraulic drive supply utilities to the jet pump and SREE; (3) hose bundle handling equipment to aid in the deployment and retraction of the SREE/jet pump/hose bundle assembly, and (4) hose bundle support hoists located in the EMMA™ and sluicer enclosures to reduce hose bundle loading on the EMMA™. These items are installed in the enclosures after bulk waste retrieval is completed and the slurry pump is retracted and roughly decontaminated.

Deployment—Personnel working inside the enclosure performs the installation of this equipment into the silo. The SREE, attached to the end of the hose bundle, lowers through the riser while unspooling the hose bundle from its reel until the first hoist line attachment collar on the hose bundle is within reach of the EMMA™. While paying out hoist line from the hose bundle lift hoist located in the sluicer enclosure, the EMMA™ carries the hoist line hook to the collar and attaches it to the collar. The hoist then takes up cable as the remainder of the hose bundle is lowered into the tank. When only 10-feet of bundle remains on the reel, the end of the bundle is manually taken off the reel and attached to the couplings on the pump mast. The surge tank, slurry pump assembly, and mast sections are deployed into the silo in the same manner as used in bulk retrieval mode.

Operations—The waste heel removal begins in the area near the sluicer riser. At the start of heel removal, the sluice water decants from the TTA and diverts through the 3-inch flush/recycle line routed along the mast and into the surge tank in the silo. The slurry pump starts and its speed is adjusted to maintain the liquid-level in the surge tank. The high-pressure pump supplying the SREE is remotely started and the pressure adjusts to between 500 psi and 5,000 psi. The SREE rotation starts and adjusts to between 200 rpm and 500 rpm. The hose bundle hoist in the sluicer enclosure is remotely operated to raise the hose bundle out of the waste to allow the EMMA™ to move the SREE in the silo without dragging the hose bundle through the waste. The EMMA™ positions the bottom of the SREE at the waste surface and creates a slurry pool approximately 6 feet in diameter. Once the solids content of the slurry pool appears appropriate (10% to 50% solids), the high-pressure pump supplying the jet pump motive water is remotely started and the water pressure adjusted to between 6,000 psi and 10,000 psi creating suction through the waste hose in the hose bundle. The EMMA™ then lowers the SREE into the slurry pool and pumps the slurry though the jet pump to the heel waste surge tank. The slurry pump speed is adjusted to account for the additional flow into the hopper.

The EMMA™ continuously moves the SREE through the pool, expanding the pool depth and diameter until the hose bundle requires moving to another area of the silo. This operation continues until an area approximately 20 to 25 feet in radius from the sluicer riser is cleaned. When heel removal is complete in this region of the silo, the SREE is lifted into the air with the jet pump operating to clear the waste hose of most of its water. The EMMA™ places the SREE on the floor of the tank in a cradle and detaches the hose bundle hoist cable extending through the sluicer riser. The sluicer-deployed hose bundle hoist cable is retracted and the EMMA™ grasps the hose bundle at one of the gripper collars located every 20 feet along the length of

the hose bundle. The EMMA™ picks up a portion of the hose bundle and moves it to the edge of the uncleaned portion of the tank. The hose bundle hoist cable in the EMMA™ enclosure is deployed into the silo where the EMMA™ attaches it to the hoist attachment collar. The remainder of the heel waste is removed using the same method as described above.

Retraction—Retraction of the CATS equipment occurs in reverse order of the deployment while using the decontamination spray ring to perform gross decontamination of equipment before entering the enclosure.

Controls—The slurry pump is capable of being operated remotely or locally. The pump drive motor-operates on three-phase, 480-V AC power supplied to a local panel. A variable-speed motor controller is supplied with the pump motor and allows the pump motor to be operated at 1,700 to 0 rpm. The elevation table is controlled both locally and remotely and will be interlocked with the limit switch mounted on the pump suction that detects suction screen contact with the solid waste in the tank. The elevation table operation also interlocks with the upper and lower travel-limits. The hose bundle reel operates locally. The process valves (e.g., slurry, flush, recycle, and solids control) operate locally or remotely. Interlocks for these are to be provided.

Remote operations are from the central control console inside the control room. A local control panel is located at the Silo Bridge. The local panel provides a master on/off/auto switch, valve position switches, elevation table run switch, elevation table position display, hose bundle reel motor start/stop switch and a master E-stop button. Motor starter/contactor, control power supplies, digital I/O cards, E-stop, relays, and status lights are mounted in the local cabinet. A lockable power disconnect switch is positioned at the local panel.

5.2.6 Hydraulic Power Supply System

The hydraulic power supply system provides the hydraulic power needed by the SREE. The hydraulic portion of the system is based on a recirculating hydraulic system that runs on Shell Tullus hydraulic oil. A local control panel is located on the outside of the enclosure. Self-checking quick disconnects for the supply and return lines are mounted at the enclosure interface. The enclosure (that houses the 3,000 psi, 5 gpm hydraulic pressure unit) has a footprint of approximately 4-feet by 4-feet and an estimated weight of 1,000 pounds.

The system consists of a weather enclosure with the following equipment located inside it: (1) a hydraulic pump; (2) a water reservoir; (3) an oil cooler; (4) a filtering system; (5) process valves, piping, and hoses; (6) a fresh air vent; (7) an exhaust fan; and (8) an oil reservoir heater to prevent freezing.

5.2.6.1 Equipment Description

The enclosure is constructed of fiberglass or sheet metal walls and roof attached to a floor/support frame structure. A door is provided in one wall for operator access to perform operational checks and maintenance. The floor-support frame structure is fabricated of welded and painted carbon steel. Forklift points, as well as a grounding lug are integrated in the support frame. The space requirement for the enclosure is approximately 4-feet by 4-feet by 5-feet high. The estimated weight is 5,000 pounds.

A 460-V, three-phase, 10-hp, 1,725-rpm electric motor drives the pump. The pump/motor unit is capable of 3,000 psi at 5 gpm. The reservoir is a steel tank with a total capacity of 25

gallons. A tank-mounted unit contains monitors for temperature and level. The oil level can also be checked visually by a sight glass. The oil cooler will be an electric refrigeration unit. The filtering system is located in the return loop and includes a 10-micron cartridge filter. A pressure-relief valve vents the pressure back to the reservoir should over-pressurization occur.

The fresh air vent and the exhaust fan provide air circulation inside the enclosure. Louvers with replaceable steel mesh screen over an opening in the enclosure wall from the fresh air vent. A 110-V motor powers the exhaust fan. The fan is located in an adjoining wall to the fresh air vent and is equipped with movable louvers to prevent heat loss during cold weather. A thermostat controlled oil reservoir heater to prevent system freezing during cold weather is also powered by 110 V.

5.2.6.2 Operational Description

Installation—All equipment inside the enclosure is installed before delivery to the AWR Project site. A forklift positions the system on leveled and compacted gravel or a concrete pad located on the ground near the silo. Three-phase, 460-V AC and 110-V AC electrical service is connected at the disconnect switch that also contains the power distribution panel. Hydraulic hoses and a water supply line are connected at their respective quick-disconnects. As dependent systems connect to this system and the hydraulic lines are purged of air, the reservoir level is monitored to avoid a low-level shutdown.

Operation—The system will control hydraulic pressure from 500 psi to 3,000 psi. The system may operate in local mode or remotely. The system will be configured to control flow rate of oil to the SREE. Interlocked flow switches will automatically shut down the pump upon any hose break. A low-level switch on the reservoir will also be interlocked with pump operation.

5.2.6.3 Controls

The system operates either locally or remotely. The local control panel mounted on the exterior of the enclosure has pump status lights, a manual/off/auto selector switch, and a flow control adjustment switch. Also included in this panel are a motor starter/contactor, an E-stop, digital I/O cards, relays, and control power supplies. Power and signal cables external to the enclosure are provided. Remote operation is controlled by input from the central control system multi-screen graphical user HMI, which is PLC-based. The screen offers system remote/local status, pump start/stop and run status, E-stop status, and flow rate control. Low-pressure, flow-achieved indications and reservoir temperature readout are also on this screen. This console provides remote control of the equipment.

System interlocks are provided to shut down the pump in the event of low reservoir level or high oil temperature. Enclosure temperature control for the exhaust fan is provided by thermostats located in the enclosure and is not integrated with the local control panel or remote console. A lockable electrical disconnect switch is mounted at the local control panel.

5.2.7 Breathing Air System

5.2.7.1 Equipment Description

Supplied-air respirator (SAR) hoods will be available if required to enter an equipment module for maintenance purposes. Breathing air will be supplied to the SAR hood by a breathing air

system (BAS) comprised of six compressed gas cylinders mounted to a cart (BAS-41-001). The cart can be moved to the appropriate location and then secured.

The compressed gas cylinders will have a 444-cubic foot, 4,500-psi capacity and conform to the following:

- *Respiratory Protection Requirements Manual*, FEMP Requirements Manual RM-0007,
- *American National Standards Institute (ANSI) Compressed Gas Association Commodity Specification for Air*, G7.1-1989, and
- *Color Code for Pipelines and for Compressed Gas Cylinders*, Military Standard-101B.

The bottles are connected to a cart-mounted control box using whip hoses containing check valves. The control box has an emergency relief valve, pressure switch for remote and local alarms, pressure regulator, pressure indicators, low-pressure whistle and a manifold for connecting the ¼-inch SAR hoses.

The SAR hoods will be continuous flow, disposable bubble hoods. SAR hoods will have 360° and upward viewing capabilities. SAR hoods will have ¼-inch couplings and belt assembly with required personal regulators attached. SAR hoods will conform to the following:

- *National Institute for Occupational Safety and Health (NIOSH) Type C*, TC-19C-140,
- *Respiratory Protection Requirements Manual*, FEMP Requirements Manual RM-0007,
- *Occupational Safety and Health Administration (OSHA) Standard for Respiratory Protection* (Title 29 of the Code of Federal Regulations [CFR] Part 1910.134), and
- *ANSI Standard for Respiratory Protection* (ANSI Z88.2-1992).

5.2.7.2 Operational Description

If maintenance is required inside an equipment module during operations, personnel entering the module may be fitted with SAR hoods and appropriate PPE while carrying the necessary length of hose. Inside the vestibule, the hose would be connected to a breathing air connection. This connection would be supplied with breathing air from cart BAS-41-001 located near the vestibule. Personnel will remain attached to the breathing air system until they leave the module and reenter the vestibule.

5.2.8 Diesel Generator System

5.2.8.1 Equipment Description

The standby Diesel Generator System provides backup electrical power for Motor Control Center (MCC)-31-003 that feeds the equipment for the RCS and Decant Pump Modules DEC-12-200 and DEC-12-201. The system consists of the following:

- Packaged diesel engine generator set DGN-32-001 rated at 1,000 kilowatts (kW) at 480Y/277 V, 60 Hz, and 0.8 power factor with an integral double-contained diesel fuel

tank having a capacity of 3,000 gallons. This packaged generator set is located on the concrete equipment pad north of the Electrical Equipment Building (Building 94G).

- A remote engine and generator control panel controlling and displaying the system status is located in the Electrical Equipment Building (Building 94G).

- Automatic Transfer Switch (ATS)-32-001 rated at 2,000 amps, 480Y/277 V, 60 Hz is located adjacent to MCCs in the Electrical Equipment Building (Building 94G).

5.2.8.2 Operational Description

Upon the loss of normal power, the diesel generator set will automatically start. The automatic transfer switch will transfer the MCC-31-003 from the normal power source to the standby diesel generator system for continuation of operation.

5.2.9 Compressed Air System

5.2.9.1 Equipment Description

A duplex air compressor with desiccant dryers is provided to produce instrument quality air for various end users including air-operated pumps, valves, instrumentation, and air bearings (modules only). Note: A portable air compressor will be provided as an air supply for moving the Silos 1 and 2 bridge.

The air compressor consists of the following:

- Two tank-mounted, oil-injected, reciprocating compressors with air-cooled aftercoolers capable of providing 60 cfm each at 125 psig.

- One 250-gallon horizontal receiver code-stamped per ASME Section VIII. Maximum allowable working pressure is 125 psig.

- One heaterless regenerative-type, dual-tower desiccant air dryer with particulate and coalescing filters. Capacity is 120 cfm @ 100 psig with a maximum allowable working pressure of 125 psig.

5.2.9.2 Operational Description

The compressed air system is available 24 hours a day, 7 days a week. Air usage is expected to be minimal except during the usage of air-operated pumps or during the use of air bearings while moving equipment modules inside the TTA Building. Air connections are also provided throughout the AWR Project site for activities that may require air-driven tools. A line lubricator will be installed at the location where an air-driven tool would require lubrication.

3388

6.0 REFERENCES

1. ANSI, *Compressed Gas Association Commodity Specification for Air*, G7.1-1989, American National Standards Institute.

2. ANSI, *Standard for Respiratory Protection*, ANSI Z88.2-1992.

3. API, *Standard 650, Welded Steel Tanks for Oil Storage, Tenth Edition*, American Petroleum Institute, Washington, D.C., November 1, 1998.

4. ASME, *B1.1, Unified Inch Screw Threads (UN and UNR Thread Form)*, American Society of Mechanical Engineers, NY, 1989.

5. ASME, *B31.3, Process Piping, American Society of Mechanical Engineers*, NY, 1996.

6. ASME, *B46.1, Surface Texture (Surface Roughness, Waviness, and Lay)*, American Society of Mechanical Engineers, NY, 1995.

7. ASME, *Y14.5M, Dimensioning and Tolerancing*, American Society of Mechanical Engineers, NY, 1994.

8. ASME, *Boiler and Pressure Vessel Code*, Section II-A, "Ferrous Material Specifications," American Society of Mechanical Engineers, NY, July 1, 1998.

9. ASME, *Boiler and Pressure Vessel Code*, Section II-B, "Nonferrous Material Specifications," American Society of Mechanical Engineers, NY, July 1, 1998.

10. ASME, *Boiler and Pressure Vessel Code*, Section II-C, "Material Specifications for Welding Rod, Electrodes, and Filler Materials," American Society of Mechanical Engineers, NY, July 1, 1998.

11. ASME, *Boiler and Pressure Vessel Code*, Section VIII, "Code Stamp For All Pressure Vessels," American Society of Mechanical Engineers, NY, July 1, 1998.

12. ASME, *Boiler And Pressure Vessel Code*, Section IX, "Welding And Brazing Qualifications," American Society of Mechanical Engineers, NY, July 1, 1998.

13. AWS, *A2.4, Standard Symbols for Welding, Brazing, and Nondestructive Examination*, American Welding Society, Miami, FL, 1998.

14. AWS, D1.1, *Structural Welding Code—Steel*, American Welding Society, Miami, FL, 1996.

15. AWS, D1.2, *Structural Welding Code—Aluminum*, American Welding Society, Miami, FL, 1996.

16. DOE, DOE Order 420.1, *Facility Safety*, U.S. Department of Energy, Washington, D.C., October 24, 1996.

000479

17. DOE, DOE Order 440.1A, *Worker Protection Management for DOE, Federal, and Contractor Employees*, U.S. Department of Energy, Germantown, MD, March 27, 1998.

18. DOE, DOE Order 5400.5, *Radiation Protection of the Public and the Environment*, U.S. Department of Energy, Washington, D.C., January 7, 1993.

19. DOE, DOE-HDBK-1090-95, *DOE Hoisting and Rigging Handbook*, U.S. Department of Energy, Washington D.C., 1995.

20. EIA, TIA-232-F, "Interface Between Data Terminal Equipment And Data Circuit-Terminating Equipment Employing Serial Binary Data Interchange," Electronic Industries Alliance, Arlington, VA, October 1, 1997.

21. EIA, TIA-423-B, "Electrical Characteristics of Unbalanced Voltage Digital Interface Circuits." Electronic Industries Alliance, Arlington, VA, 1996.

22. EIA, TIA-422-B, "Electrical Characteristics of Balanced Voltage Digital Interface Circuits." Electronic Industries Alliance, Arlington, VA, May 1, 1994.

23. EIA, TIA-449, "General Purpose 37-Position And 9-Position Interface Between Data Terminal Equipment And Data Circuit-Terminating Equipment Employing Serial Binary Data Interchange," Electronic Industries Alliance, Arlington, VA.

24. EIA, TIA-485-A, "Electrical Characteristics of Generator and Receivers for Use in Balanced Digital Multipoint Systems, Electronic Industries Alliance, March 1, 1998.

25. Fluor Fernald, Engineering Design (ED)-12-4016, *Equipment and Piping Labeling*, Fluor Fernald, Inc.

26. Fluor Fernald, FEMP Requirements Manual (RM)-0007, *Respiratory Protection Requirements Manual*,. Fluor Fernald, Inc.

27. Fluor Fernald, *Silo's 1 & 2 Accelerated Waste Retrieval (AWR) Project, Part 7, Technical Requirements, Revision. 1, February 3, 1999*; Fluor Fernald, Inc., RFP No. F98P168407, Contract No. FSC 624.

28. Fluor Fernald, *Fernald Silo Retrieval Project, Technical Proposal; Solicitation No. F98P168407*, Foster Wheeler, et al., September 21, 1998.

29. FEMP, *Operable Unit 4 (OU4) Silos Project ALARA Evaluation (Rev. 1), 40000-RAD-0001, Revision 1*, Fernald Environmental Management Project, March 27, 1998.

30. IEEE, 142-1991, Recommended Practice for Grounding of Industrial and Commercial Power Systems, Institute of Electrical and Electronics Engineers, Piscataway, NJ, 1991.

31. NEMA, ICS1, Industrial Control and Systems: General Requirements, National Electrical Manufacturers Association, Rosslyn, VA, 1993.

32. NEMA, ICS6, Industrial Control and Systems: Enclosures, National Electrical Manufacturers Association, Rosslyn, VA, 1993.

33. NFPA, 70-99, *National Electric Code, 1999 Edition*, National Fire Protection Association, Battery March Park, MA, August 5, 1998.

34. NFPA, 101-97, Life Safety Code, National Fire Protection Association, Battery March Park, MA, February 7, 1997.

35. NFPA, 780-1997, Standard for the Installation of Lightning Protection Systems, National Fire Protection Association, August 15, 1997.

36. Ohio EPA, Ohio Administrative Code (OAC) 3745-95, *Supply Backflow Prevention and Cross Connection*, Ohio Environmental Protection Agency (EPA), 1995.

37. 10 *CFR* 835, "Occupational Radiation Protection," *Code of Federal Regulations.*

38. 29 *CFR* 1910, "Occupational Safety and Health Standards," *Code of Federal Regulations.*

39. 29 *CFR* 1926, "Safety and Health Regulations for Construction," *Code of Federal Regulations.*

40. FR 22157, 1972, "Occupational Noise Exposure," *Federal Register*, Volume. 32, Page. 22157 (October 18).

000484

Appendix E

Piping and Instrumentation Diagrams for All Systems

DOCUMENT NO. 624-P622-60

DRAWING NUMBER	DRAWING TITLE	REVISION
05FMD001	MISC FACILITIES PIPING AND INSTRUMENTATION DIAGRAM INSTRUMENTATION IDENTIFICATION	1
05FMD002	MISC FACILITIES PIPING AND INSTRUMENTATION DIAGRAM CONTROL SYSTEM STANDARDS	1
05FMD003	MISC FACILITIES PIPING AND INSTRUMENTATION DIAGRAM PIPING & EQUIP INDENTIFICATION	1
05FMD004	MISC FACILITIES PIPING AND INSTRUMENTATION DIAGRAM GENERAL NOTES	1
05FMD005	MISC FACILITIES PIPING AND INSTRUMENTATION DIAGRAM VALVE LIST SHEET 1	0
05FMD006	MISC FACILITIES PIPING AND INSTRUMENTATION DIAGRAM VALVE LIST SHEET 2	0
05FMD007	MISC FACILITIES MODULE LOCATION & INDENTIFICATION MATRIX	0
10FMD004	FULL-SCALE MOCKUP SYSTEM PIPING & INSTRUMENTATION DIAGRAM RADON CONTROL SYSTEM	1
10FMD005	FULL-SCALE MOCKUP SYSTEM PIPING & INSTRUMENTATION DIAGRAM RADON CONTROL SYSTEM	1

Piping and Instrumentation Diagrams for All Systems

DOCUMENT NO. 624-P622-60

DRAWING NUMBER	DRAWING TITLE	REVISION
10FMD012	FULL-SCALE MOCKUP SYSTEM PIPING & INSTRUMENTATION DIAGRAM SILO 4 –SWRS MODE	1
10FMD013	FULL-SCALE MOCKUP SYSTEM PIPING & INSTRUMENTATION DIAGRAM SLURRY & WATER PIPING TIE-IN	1
10FMD014	FULL-SCALE MOCKUP SYSTEM PIPING & INSTRUMENTATION DIAGRAM SURROGATE DEWATERING	1
10FMD015	FULL-SCALE MOCKUP SYSTEM PIPING & INSTRUMENTATION DIAGRAM HP PUMP SKID SKD-11-250	1
10FMD016	FULL-SCALE MOCKUP SYSTEM PIPING & INSTRUMENTATION DIAGRAM SILO 4 – CATS MODE	1
11FMD010	SILO WASTE RETRIEVAL SYSTEM PIPING & INSTRUMENTATION DIAGRAM SILO 2 – SWRS MODE	1
11FMD011	SILO WASTE RETRIEVAL SYSTEMPIPING & INSTRUMENTATION DIAGRAM DIVERTER BOX ENC-11-001	1
11FMD012	SILO WASTE RETRIEVAL SYSTEM PIPING & INSTRUMENTATION DIAGRAM SLURRY LINE CLEANOUTS	1
11FMD013	SILO WASTE RETRIEVAL SYSTEM PIPING & INSTRUMENTATION DIAGRAM HP PUMP SKID SKD-11-251	1

Piping and Instrumentation Diagrams for All Systems

DOCUMENT NO. 624-P622-60

DRAWING NUMBER	DRAWING TITLE	REVISION
11FMD014	SILO WASTE RETRIEVAL SYSTEM PIPING & INSTRUMENTATION DIAGRAM PROCESS ANALYZER	1
11FMD016	SILO WASTE RETRIEVAL SYSTEM PIPING & INSTRUMENTATION DIAGRAM SILO 1 – CATS MODE	1
12FMD009	TRANSFER TANK SYSTEM PIPING & INSTRUMENTATION DIAGRAM CONTAINMENT AREA B	1
12FMD010	TRANSFER TANK SYSTEM PIPING & INSTRUMENTATION DIAGRAM STORAGE TANK TNK-12-001A	1
12FMD011	TRANSFER TANK SYSTEM PIPING & INSTRUMENTATION DIAGRAM STORAGE TANK TNK-12-001B	1
12FMD012	TRANSFER TANK SYSTEM PIPING & INSTRUMENTATION DIAGRAM STORAGE TANK TNK-12-002A	1
12FMD013	TRANSFER TANK SYSTEM PIPING & INSTRUMENTATION DIAGRAM STORAGE TANK TNK-12-002B	1
12FMD014	TRANSFER TANK SYSTEM PIPING & INSTRUMENTATION DIAGRAM BUILDING SUMP	1

Piping and Instrumentation Diagrams for All Systems

DOCUMENT NO. 624-P622-60

DRAWING NUMBER	DRAWING TITLE	REVISION
12FMD015	TRANSFER TANK SYSTEM PIPING & INSTRUMENTATION DIAGRAM ULTRAFILTRATION SKID SKD-12-001	1
12FMD016	TRANSFER TANK SYSTEM PIPING & INSTRUMENTATION DIAGRAM FILTRATE SYSTEM TANKS	1
12FMD017	TRANSFER TANK SYSTEM PIPING & INSTRUMENTATION DIAGRAM FILTRATE RECIRC & TRANSFER	A
12FMD018	TRANSFER TANK SYSTEM PIPING & INSTRUMENTATION DIAGRAM FILTRATE RECIRC & TRANSFER	A
12FMD019	TRANSFER TANK SYSTEM PIPING & INSTRUMENTATION DIAGRAM MODULE AIR FILTERS	A
13FMD005	TRANSFER TANK WASTE RETRIEVAL PIPING & INSTRUMENTATION DIAGRAM STORAGE TANK TNK-12-001A	1
14FMD010	DECANT SUMP RETRIEVAL SYSTEM PIPING & INSTRUMENTATION DIAGRAM DECANT SUMP RETRIEVAL	0
14FMD011	DECANT SUMP RETRIEVAL SYSTEM PIPING & INSTRUMENTATION DIAGRAM DECANT SUMP SWRS MODE	0

Piping and Instrumentation Diagrams for All Systems

DOCUMENT NO. 624-P622-60

DRAWING NUMBER	DRAWING TITLE	REVISION
14FMD012	DECANT SUMP RETRIEVAL SYSTEM PIPING & INSTRUMENTATION DIAGRAM DECANT SUMP CONTENTS STORAGE	0
20FMD012	RADON CONTROL SYSTEM PIPING & INSTRUMENTATION DIAGRAM SILO 2	2
20FMD013	RADON CONTROL SYSTEM PIPING & INSTRUMENTATION DIAGRAM SILO 1	2
20FMD014	RADON CONTROL SYSTEM PIPING & INSTRUMENTATION DIAGRAM FILTER & FILTRATE STORAGE TANKS	1
20FMD015	RADON CONTROL SYSTEM PIPING & INSTRUMENTATION DIAGRAM TTA STORAGE TANKS	1
20FMD016	RADON CONTROL SYSTEM PIPING & INSTRUMENTATION DIAGRAM CARBON BEDS	2
20FMD017	RADON CONTROL SYSTEM PIPING & INSTRUMENTATION DIAGRAM HOLD-UP TANKS &CONDENSATE	2
20FMD018	RADON CONTROL SYSTEM PIPING & INSTRUMENTATION DIAGRAM DRYER & AIR HANDLING	2

Piping and Instrumentation Diagrams for All Systems

DOCUMENT NO. 624-P622-60

DRAWING NUMBER	DRAWING TITLE	REVISION
20FMD019	RADON CONTROL SYSTEM PIPING & INSTRUMENTATION DIAGRAM EXHAUST & RECIRC FANS	2
20FMD020	RADON CONTROL SYSTEM PIPING & INSTRUMENTATION DIAGRAM DECANT WASTE RETRIEVAL	1
40FMD001	PLANT & INSTRUMENTATION AIR SYSTEM PIPING & INSTRUMENTATION DIAGRAM COMPRESSED AIR DISTRIBUTION	2
41FMD001	BREATHING AIR SYSTEM PIPING & INSTRUMENTATION DIAGRAM BREATHING AIR STATION	A
51FMD002	POTABLE/DOMESTIC WATER SYS PIPING & INSTRUMENTATION DIAGRAM POTABLE WATER	2
51FMD003	POTABLE/DOMESTIC WATER SYS PIPING & INSTRUMENTATION DIAGRAM MAKE-UP WATER	2
51FMD004	POTABLE/DOMESTIC WATER SYS PIPING & INSTRUMENTATION DIAGRAM DOMESTIC WATER	2

IDENTIFICATION LETTERS

SYMBOL	FIRST-LETTER (4): MEASURED OR INITIATING VARIABLE	FIRST-LETTER (4): MODIFIER	SUCCEEDING-LETTERS (3): READOUT, OR PASSIVE FUNCTION	SUCCEEDING-LETTERS (3): OUTPUT FUNCTION	SUCCEEDING-LETTERS (3): MODIFIER
A	ANALYSIS (5, 19)		ALARM		
B	BURNER, COMBUSTION		USER'S CHOICE (1)	USER'S CHOICE (1)	USER'S CHOICE (1)
C	CONDUCTIVITY			CONTROL (13)	
D	DENSITY OR S.G.	DIFFERENTIAL (4)			
E	VOLTAGE		SENSOR (PRIMARY ELEMENT)		
F	FLOW RATE	RATIO (FRACTION) (4)			
G	USER'S CHOICE (1)		GLASS, VIEWING DEVICE (9)		
H	HAND				HIGH (7, 15, 16)
	CURRENT (ELECTRICAL)		INDICATE (10)		
	OWER	SCAN (7)			
	TIME, TIME SCHEDULE	TIME RATE OF CHANGE (4, 21)		CONTROL STATION (22)	
L	LEVEL		LIGHT (11)		LOW (7,15,16)
M	MOISTURE/HUMIDITY	MOMENTARY (4)			MIDDLE, INTERMEDIATE (7, 15)
N	CLOSED CIRCUIT TV (CCTV)		USER'S CHOICE (1)	USER'S CHOICE (1)	USER'S CHOICE (1)
O	USER'S CHOICE (1)		ORIFICE, RESTRICTION		
P	PRESSURE, VACUUM		POINT (TEST) CONNECTION		
Q	QUANTITY	INTEGRATE, TOTALIZE (4)			
R	RADIATION		RECORD (17)		
S	SPEED, FREQUENCY	SAFETY (8)		SWITCH (13)	
T	TEMPERATURE			TRANSMIT (18)	
U	MULTIVARIABLE (6)		MULTIFUNCTION (12)	MULTIFUNCTION (12)	MULTIFUNCTION (12)
V	VIBRATION, MECHANICAL ANALYSIS (19)			VALVE, DAMPER, LOUVER (13)	
W	WEIGHT, FORCE		WELL		
X	UNCLASSIFIED (2)	X AXIS	UNCLASSIFIED (2)	UNCLASSIFIED (2)	UNCLASSIFIED (2)
Y	EVENT, STATE OR PRESENSE (20)	Y AXIS		RELAY, COMPUTE, CONVERT (13, 14, 18)	
Z	POSITION, DIMENSION	Z AXIS		DRIVER, ACTUATOR,UNCLASSIFIED FINAL CONTROL ELEMENT	

TYPICAL LETTER COMBINATIONS *

SYMBOL	CONTROLLERS: RECORDING	CONTROLLERS: INDICATING	CONTROLLERS: BLIND	CONTROLLERS: SELF-ACTUATED CONTROL VALVES	READOUT DEVICES: RECORDING	READOUT DEVICES: INDICATING	SWITCHES AND ALARM DEVICES **: HIGH***	SWITCHES AND ALARM DEVICES **: LOW	SWITCHES AND ALARM DEVICES **: COMB	TRANSMITTERS: RECORDING	TRANSMITTERS: INDICATING	TRANSMITTERS: BLIND	SOLENOIDS, RELAYS, COMPUTING DEVICES	PRIMARY ELEMENT	TEST POINT	WELL OR PROBE	VIEWING DEVICE, GLASS	SAFETY DEVICE	FINAL ELEMENT
A	ARC	AIC	AC		AR	AI	ASH	ASL	ASHL	ART	AIT	AT	AY	AE	AP	AW			AV
B	BRC	BIC	BC		BR	BI	BSH	BSL	BSHL	BRT	BIT	BT	BY	BE		BW	BG		BZ
C																			
D																			
E	ERC	EIC	EC		ER	EI	ESH	ESL	ESHL	ERT	EIT	ET	EY	EE					EZ
F	FRC FQRC FFRC	FIC FQIC FFIC	FC FFC	FCV, FICV	FR FQR FFR	FI FQI FFI	FSH FCSH FFSH	FSL FOSL FFSL	FSHL	FRT	FIT FQIT	FT FQT	FY FQY	FE FOE FE	FP		FG		FV FOV FFV
G																			
H		HIC	HC						HS										HV
	IRC	IIC			IR	II	ISH	ISL	ISHL	IRT	IIT	IT	IY	IE					IZ
	JRC	JIC			JR	JI	JSH	JSL	JSHL	JRT	JIT	JT	JY	JE					JV
	KRC	KIC	KC	KCV	KR	KI	KSH	KSL	KSHL	KRT	KIT	KT	KY	KE					KV
L	LRC	LIC	LC	LCV	LR	LI	LSH	LSL	LSHL	LRT	LIT	LT	LY	LE		LW	LG		LV
M																			
N																			
O																			
P	PRC PDRC	PIC PDIC	PC PDC	PCV PDCV	PR PDR	PI PDI	PSH PDSH	PSL PDSL	PSHL	PRT PDRT	PIT PDIT	PT PDT	PY PDY	PE PE	PP PP			PSV,PSE	PV PDV
Q	QRC	QIC			QR	QI	QSH	QSL	QSHL	QRT	QIT	QT	QY	QE					QZ
R	RRC	RIC	RC		RR	RI	RSH	RSL	RSHL	RRT	RIT	RT	RY	RE		RW			RZ
S	SRC	SIC	SC	SCV	SR	SI	SSH	SSL	SSHL	SRT	SIT	ST	SY	SE					SV
T	TRC TDRC	TIC TDIC	TC TDC	TCV TDCV	TR TDR	TI TDI	TSH TDSH	TSL TDSL	TSHL	TRT TDRT	TIT TDIT	TT TDT	TY TDY	TE TE	TP TP	TW TW		TSE	TV TDV
U					UR	UI							UY						UV
V					VR	VI	VSH	VSL	VSHL	VRT	VIT	VT	VY	VE					VZ
W	WRC WDRC	WIC WDIC	WC WDC	WCV WDCV	WR WDR	WI WDI	WSH WDSH	WSL WDSL	WSHL	WRT WDRT	WIT WDIT	WT WDT	WY WDY	WE WE					WZ WDZ
X																			
Y		YIC	YC		YR	YI	YSH	YSL				YT	YY	YE					YZ
Z	ZRC ZDRC	ZIC ZDIC	ZC ZDC	ZCV ZDCV	ZR ZDR	ZI ZDI	ZSH ZDSH	ZSL ZDSL	ZSHL	ZRT ZDRT	ZIT ZDIT	ZT ZDT	ZY ZDY	ZE ZDE					ZV ZDV

3388

INSTRUMENT IDENTIFICATION

THIS INFORMATION IS BASED UPON ANSI/ISA-S5.1-1984 (R 1992) INSTRUMENTATION SYMBOLS AND IDENTIFICATION. REPRINTED BY PERMISSION. COPYRIGHT © INSTRUMENT SOCIETY OF AMERICA 1984, FROM ISA-S5.1 - INSTRUMENT SYMBOLS AND IDENTIFICATION.

NOTES FOR TABLE

NOTE:

- * THIS TABLE IS NOT ALL-INCLUSIVE.
- ** A. ALARM, THE ANNUNCIATING DEVICE MAY BE USED IN THE SAME FASHION AS S. SWITCH.
- *** THE LETTERS H AND L MAY BE OMITTED IN THE UNDEFINED CASE.

OTHER POSSIBLE COMBINATIONS:

RO	(RESTRICTION ORIFICE)
FRK, HIK	(CONTROL STATIONS)
FX	(ACCESSORIES)
TJR	(SCANNING RECORDER)
LLH	(PILOT LIGHT)
PFR	(RATIO)
KQI	(RUNNING TIME INDICATOR)
QQI	(INDICATING COUNTER)
WKIC	(RATE-OF-WEIGHT-LOSS CONTROLLER)
HMS	(HAND MOMENTARY SWITCH)

1. A "USER'S CHOICE" LETTER IS INTENDED TO COVER UNLISTED MEANINGS THAT WILL BE USED REPETITIVELY IN A PARTICULAR PROJECT. IF USED, THE LETTER MAY HAVE ONE MEANING AS A FIRST-LETTER AND ANOTHER MEANING AS A SUCCEEDING-LETTER. THE MEANINGS NEED TO BE DEFINED ONLY ONCE IN A LEGEND, OR OTHER PLACE, FOR THAT PROJECT. FOR EXAMPLE, THE LETTER N MAY BE DEFINED AS "MODULUS OF ELASCITY" AS A FIRST-LETTER AND "OSCILLOSCOPE" AS A SUCCEEDING-LETTER.
2. THE UNCLASSIFIED LETTER X IS INTENDED TO COVER UNLISTED MEANINGS THAT WILL BE USED ONLY ONCE OR USED TO A LIMITED EXTENT. IF USED, THE LETTER MAY HAVE ANY NUMBER OF MEANINGS AS A FIRST-LETTER AND ANY NUMBER OF MEANINGS AS A SUCCEEDING LETTER. EXCEPT FOR ITS USE WITH DISTINCTIVE SYMBOLS, IT IS EXPECTED THAT THE MEANINGS WILL BE DEFINED OUTSIDE A TAGGING BUBBLE ON A FLOW DIAGRAM. FOR EXAMPLE, XR-2 MAY BE A STRESS RECORDER AND XX-4 MAY BE A STRESS OSCILLOSCOPE.
3. THE GRAMMATICAL FORM OF THE SUCCEEDING-LETTER MEANINGS MAY BE MODIFIED AS REQUIRED. FOR EXAMPLE, "INDICATE" MAY BE APPLIED AS "INDICATOR" OR "INDICATING," "TRANSMIT" AS "TRANSMITTER" OR "TRANSMITTING," ETC.

ANY FIRST-LETTER, IF USED IN COMBINATION WITH MODIFYING LETTERS D(DIFFERENTIAL), F(RATIO), M(MOMENTARY), K(TIME RATE OF CHANGE), Q(INTEGRATE OR TOTALIZE), OR ANY COMBINATION OF THESE IS INTENDED TO REPRESENT A NEW AND SEPARATE MEASURED VARIABLE, AND THE COMBINATION IS TREATED AS A FIRST-LETTER ENTITY. THUS, INSTRUMENTS TDI AND TI INDICATE TWO DIFFERENT VARIABLES. NAMELY, DIFFERENTIAL-TEMPERATURE AND TEMPERATURE. MODIFYING LETTERS ARE USED AS APPLICABLE.

5. FIRST-LETTER A(ANALYSIS) COVERS ALL ANALYSES NOT DESCRIBED BY A "USER'S CHOICE" LETTER. IT IS EXPECTED THAT THE TYPE OF ANALYSIS WILL BE DEFINED OUTSIDE A TAGGING BUBBLE. SOME EXAMPLES ARE:

CO	-CARBON MONOXIDE	O	-DISSOLVED OXYGEN
COMB	-COMBUSTIBLES	O2	-GASEOUS OXYGEN
H	-DISSOLVED HYDROGEN	pH	-pH
H2	-GASEOUS HYDROGEN	CL2	-GASEOUS CHLORINE
Na	-SODIUM	SMOKE	-SMOKE DENSITY
N2H4	-HYDRAZINE	SO2	-SULPHUR DIOXIDE
NOx	-NITROGEN OXIDES	TRB	-TURBIDITY

6. USE OF FIRST-LETTER U FOR "MULTIVARIABLE" IN LIEU OF A COMBINATION OF FIRST-LETTERS IS OPTIONAL. IT IS RECOMMENDED THAT NONSPECIFIC VARIABLE DESIGNATORS SUCH AS U BE USED SPARINGLY.
7. THE USE OF MODIFYING TERMS "HIGH," "LOW," "MIDDLE," OR "INTERMEDIATE," AND "SCAN" IS OPTIONAL.
8. THE TERM "SAFETY" APPLIES TO EMERGENCY PROTECTIVE PRIMARY ELEMENTS AND EMERGENCY PROTECTIVE FINAL CONTROL ELEMENTS ONLY. THUS, A SELF-ACTUATED VALVE THAT PREVENTS OPERATION OF A FLUID SYSTEM AT A HIGHER-THAN-DESIRED PRESSURE BY BLEEDING FLUID FROM THE SYSTEM IS A BACK-PRESSURE-TYPE PCV, EVEN IF THE VALVE IS NOT INTENDED TO BE USED NORMALLY. HOWEVER, THIS VALVE IS DESIGNATED AS A PSV IF IT IS INTENDED TO PROTECT AGAINST EMERGENCY CONDITIONS. I.E. CONDITIONS THAT ARE HAZARDOUS TO PERSONNEL AND/OR EQUIPMENT AND THAT ARE NOT EXPECTED TO ARISE NORMALLY.
9. THE PASSIVE FUNCTION G APPLIES TO INSTRUMENTS OR DEVICES THAT PROVIDE AN UNCALIBRATED VIEW, SUCH AS SIGHT GLASSES AND TELEVISION MONITORS.
10. "INDICATE" NORMALLY APPLIES TO THE READOUT-ANALOG OR DIGITAL-OF AN ACTUAL MEASUREMENT. IN THE CASE OF A MANUAL LOADER, IT MAY BE USED FOR THE DIAL OR SETTING INDICATION, I.E., FOR THE VALUE OF THE INITIATING VARIABLE.
11. A PILOT LIGHT THAT IS PART OF AN INSTRUMENT LOOP SHOULD BE DESIGNATED BY A FIRST-LETTER FOLLOWED BY THE SUCCEEDING-LETTER L. FOR EXAMPLE, A PILOT LIGHT THAT INDICATES AN EXPIRED TIME PERIOD SHOULD BE TAGGED KQL. IF IT IS DESIRED TO TAG A PILOT LIGHT THAT IS NOT PART OF AN INSTRUMENT LOOP. THE LIGHT IS DESIGNATED IN THE SAME WAY. FOR EXAMPLE, A RUNNING LIGHT FOR AN ELECTRIC MOTOR MAY BE TAGGED EL, ASSUMING VOLTAGE TO BE THE APPROPRIATE MEASURED VARIABLE, OR YL, ASSUMING THE OPERATING STATUS IS BEING MONITORED. THE UNCLASSIFIED VARIABLE X SHOULD BE USED ONLY FOR APPLICATIONS WHICH ARE LIMITED IN EXTENT. THE DESIGNATION XL SHOULD NOT BE USED FOR MOTOR RUNNING LIGHTS, AS THESE ARE COMMONLY NUMEROUS. IT IS PERMISSIBLE TO USE THE USER'S CHOICE LETTERS M,N OR O FOR A MOTOR RUNNING LIGHT WHEN THE MEANING IS PREVIOUSLY DEFINED. IF M IS USED, IT MUST BE CLEAR THAT THE LETTER DOES NOT STAND FOR THE WORD "MOTOR", BUT FOR A MONITORED STATE.
12. USE OF A SUCCEEDING-LETTER U FOR "MULTIFUNCTION" INSTEAD OF A COMBINATION OF OTHER FUNCTIONAL LETTERS IS OPTIONAL. THIS NONSPECIFIC FUNCTION DESIGNATOR SHOULD BE USED SPARINGLY.
13. A DEVICE THAT CONNECTS, DISCONNECTS, OR TRANSFERS ONE OR MORE CIRCUITS MAY BE EITHER A SWITCH, A RELAY, AN ON-OFF CONTROLLER, OR A CONTROL VALVE, DEPENDING ON THE APPLICATION.

IF THE DEVICE MANIPULATES A FLUID PROCESS STREAM AND IS NOT A HAND-ACTUATED ON-OFF BLOCK VALVE, IT IS DESIGNATED AS A CONTROL VALVE. IT IS INCORRECT TO USE THE SUCCEEDING-LETTERS CV FOR ANYTHING OTHER THAN A SELF-ACTUATED CONTROL VALVE. FOR ALL APPLICATIONS OTHER THAN FLUID PROCESS STREAMS, THE DEVICE IS DESIGNATED AS FOLLOWS:

A SWITCH, IF IT IS ACTUATED BY HAND.

A SWITCH OR AN ON-OFF CONTROLLER, IF IT IS AUTOMATIC AND IS THE FIRST SUCH DEVICE IN A LOOP. THE TERM "SWITCH" IS GENERALLY USED IF THE DEVICE IS USED FOR ALARM, PILOT LIGHT, SELECTION, INTERLOCK, OR SAFETY.

THE TERM "CONTROLLER" IS GENERALLY USED IF THE DEVICE IS USED FOR NORMAL OPERATING CONTROL.

A RELAY, IF IT IS AUTOMATIC AND IS NOT THE FIRST SUCH DEVICE IN A LOOP, I.E., IT IS ACTUATED BY A SWITCH OR AN ON-OFF CONTROLLER.

14. IT IS EXPECTED THAT THE FUNCTIONS ASSOCIATED WITH THE USE OF SUCCEEDING-LETTER Y WILL BE DEFINED OUTSIDE A BUBBLE ON A DIAGRAM WHEN FURTHER DEFINITION IS CONSIDERED NECESSARY. THIS DEFINITION NEED NOT BE MADE WHEN THE FUNCTION IS SELF-EVIDENT, AS FOR A SOLENOID VALVE IN A FLUID SIGNAL LINE.
15. THE MODIFYING TERMS "HIGH," AND "LOW," AND "MIDDLE" OR "INTERMEDIATE" CORRESPOND TO VALUES OF THE MEASURED VARIABLE, NOT TO VALUES OF THE SIGNAL, UNLESS OTHERWISE NOTED. FOR EXAMPLE, A HIGH-LEVEL ALARM DERIVED FROM A REVERSE-ACTING LEVEL TRANSMITTER SIGNAL SHOULD BE AN LAH, EVEN THOUGH THE ALARM IS ACTUATED WHEN THE SIGNAL FALLS TO A LOW VALUE. THE TERMS MAY BE USED IN COMBINATIONS AS APPROPRIATE.
16. THE TERMS "HIGH" AND "LOW," WHEN APPLIED TO POSITIONS OF VALVES AND OTHER OPEN-CLOSE DEVICES, ARE DEFINED AS FOLLOWS; "HIGH" DENOTES THAT THE VALVE IS IN OR APPROACHING THE FULLY OPEN POSITION, AND "LOW" DENOTES THAT IT IS IN OR APPROACHING THE FULLY CLOSED POSITION.
17. THE WORD "RECORD" APPLIES TO ANY FORM OF PERMANENT STORAGE OF INFORMATION THAT PERMITS RETRIEVAL BY ANY MEANS.
18. FOR USE OF THE TERM "TRANSMITTER" VERSUS "CONVERTER," SEE DEFINITIONS IN SECTION 3 OF REFERENCE DOCUMENT.
19. FIRST-LETTER V, "VIBRATION OR MECHANICAL ANALYSIS," IS INTENDED TO PERFORM THE DUTIES IN MACHINERY MONITORING THAT THE LETTER A PERFORMS IN MORE GENERAL ANALYSES. EXCEPT FOR VIBRATION, IT IS EXPECTED THAT THE VARIABLE OF INTEREST WILL BE DEFINED OUTSIDE THE TAGGING BUBBLE.
20. FIRST-LETTER Y IS INTENDED FOR USE WHEN CONTROL OR MONITORING RESPONSES ARE EVENT-DRIVEN AS OPPOSED TO TIME- OR TIME SCHEDULE-DRIVEN. THE LETTER Y, IN THIS POSITION, CAN ALSO SIGNIFY PRESENCE OR STATE.
21. MODIFYING-LETTER K, IN COMBINATION WITH A FIRST-LETTER SUCH AS L, T, OR W, SIGNIFIES A TIME RATE OF CHANGE OF THE MEASURED OR INITIATING VARIABLE. THE VARIABLE WKIC, FOR INSTANCE, MAY REPRESENT A RATE-OF-WEIGHT-LOSS CONTROLLER.
22. SUCCEEDING-LETTER K IS A USER'S OPTION FOR DESIGNATING A CONTROL STATION, WHILE THE SUCCEEDING-LETTER C IS USED FOR DESCRIBING AUTOMATIC OR MANUAL CONTROLLERS.

HAND ELECTRIC SWITCH DESIGNATIONS

E	-	EMERGENCY STOP
J	-	JOG
E/J	-	EMERGENCY STOP/JOG
2PBL	-	2 PUSH BUTTONS (ON-OFF) MOMENTARY WITH BACK LIGHT(S)
2PB	-	2 MOMENTARY PUSH BUTTONS (ON-OFF)
S/J/R	-	STOP/JOG/RUN
SW	-	SELECTOR SWITCH
HOA	-	HAND, OFF, AUTO
S/S	-	START/STOP
OC	-	OPEN, CLOSE
OCA	-	OPEN, CLOSE, AUTO
HSR	-	HANDSWITCH (FORWARD, OFF, REVERSE)
FOR	-	FORWARD, OFF, REVERSE

NOTES:

1. THE PURPOSE OF THIS SHEET IS TO PRESENT A BASIC DEFINITION OF THE SYSTEM USED FOR INSTRUMENT IDENTIFICATION. THIS SHEET SHOULD PROVIDE SUFFICIENT INFORMATION TO ALLOW MOST USERS TO UNDERSTAND THE INSTRUMENT REPRESENTATION USED ON THE ASSOCIATED P&IDS.
2. MULTI-LETTER DESIGNATIONS ADJACENT TO THE SHARED DISPLAY SYMBOL. MULTI-LETTER DESIGNATIONS INDICATE AN INTERLOCK CONFIGURATION WITH ALARM POINT AND A SINGLE LETTER INDICATES AN ALARM POINT ONLY.

000096

THE ORIGINAL DRAWING AND SUBSEQUENT REVISIONS THEREOF, WITH APPROVAL NAMES, INITIALS, AND THE PE SEAL, IF APPLICABLE, ARE MAINTAINED IN THE FILES OF FWENC.

000488

REV	DATE	BY	CHK'D	APR'VD	DESCRIPTION/ISSUE
1	08/10/00	BJD	FLZ	KDR	CERTIFIED FOR CONSTRUCTION / CP-00-001
0	11/01/99	BJD	SWH		PRELIMINARY DESIGN SUBMITTAL

RPE: STATE OF OHIO — KENNETH D. RICKETT — E-64415 — REGISTERED PROFESSIONAL ENGINEER

DRAWN BY: B J Davis — DATE: 08/10/00
DESIGNED BY: BJ Davis — DATE: 08/10/00
CHECKED BY: F L Langley — DATE: 08/10/00
APPROVED BY: Kenneth Rickett — DATE: 08/10/00
APPROVED BY: John Lawson — DATE: 8/10/00

DEPARTMENT OF ENERGY
FERNALD ENVIRONMENTAL MANAGEMENT PROJECT
SILOS 1 AND 2 ACCELERATED WASTE RETRIEVAL PROJECT
FERNALD, OHIO
FDF CONTRACT NO. FSC 624

FOSTER WHEELER
FOSTER WHEELER ENVIRONMENTAL CORPORATION

TITLE: MISC FACILITIES PIPING & INSTRUMENT DIAGRAM INSTRUMENT IDENTIFICATION

SIZE: D — SCALE: NONE — DWG. NO. 05FMD001 — REV 1

GENERAL INSTRUMENTS

INSTRUMENT FOR SINGLE MEASURED VARIABLE AND ANY NUMBER OF FUNCTIONS. INSTRUMENT IS FIELD MOUNTED.

INSTRUMENT IS MOUNTED IN FRONT OF LOCAL PANEL.

INSTRUMENT IS MOUNTED IN REAR OF LOCAL PANEL.

DISCRETE INSTRUMENT AT REMOTE LOCATION

SHARED DISPLAY OR VIRTUAL (SOFTWARE BASED) SYMBOLS AND SWITCH

REMOTE OR BLIND INDICATOR/CONTROLLER

AUXILIARY OPERATORS INTERFACE DEVICE

CONTROL ROOM INDICATOR/ CONTROLLER/RECORDER OR ANNUNCIATION POINT

COMPUTER FUNCTION

PROGRAMMABLE LOGIC CONTROL

SOFTWARE INTERLOCK

ALARM & CONTROL DESIGNATIONS

S/S
HH
H
L
LL
0-100%

HH – HI-HI ALARM (CONTROL ROOM)
H – HI ALARM (CONTROL ROOM)
L – LO ALARM (CONTROL ROOM)
LL – LO-LO ALARM (CONTROL ROOM)
S/S – START/STOP FROM CONTROL ROOM
0-100% – ADJUSTABLE RANGE OF OUTPUT

LOCATION DESIGNATIONS

XXX – DENOTES PANEL OR RACK NUMBER IN WHICH INSTRUMENT IS LOCATED

SIGNALS AND LINES

SOLIDS FLOW

CONNECTION TO PROCESS OR INSTRUMENT INPUT

MAIN PROCESS LINE

PNEUMATIC SIGNAL

ELECTRICAL SIGNAL OR INTERNAL SYSTEM LINK

INTERNAL SYSTEM LINK (SOFTWARE OR DATA LINK)

CAPILLARY TUBING (FILLED SYSTEM)

STEAM LINE

ELECTRICAL LINE

HYDRAULIC LINE

MECHANICAL LINK

TYPICAL CONNECTIONS

IN LINE DEVICE

DIRECT CONNECTION PROCESS BLOCK VALVE SYMBOL OPTIONAL

ELECTRICAL CONNECTION

FILLED SYSTEM DIRECT CONNECTION

SENSORS – PRESSURE

DIRECT CONNECTED

WITH DIAPHRAGM SEAL PIPE MOUNTED

WITH DIAPHRAGM SEAL LINE MOUNTED (FLANGED, SCREWED INTO THREAD-O-LET, OR 1/2 COUPLING)

SENSORS – FLOW

FE – ORIFICE PLATE

VENTURI TUBE OR FLOW NOZZLE

PITOT OR VENTURI TUBE

TARGET TYPE SENSOR

ROTAMETER

TURBINE

MAGNETIC FLOW METER

IN LINE INSTRUMENT

FLOW TOTALIZER INDICATOR

VORTEX SENSOR

SIGHT FLOW METER

SENSORS – LEVEL

GAGE GLASS, EXTERNAL FLOAT, DISPLACEMENT DIFFERENTIAL-PRESSURE TYPE LEVEL INSTRUMENT

VALVES USUALLY SHOWN IF LARGER THAN 1"

INTERNAL BALL FLOAT

OMIT FLANGE IF SCREWED CONNECTION (TYPICAL)

INTERNAL BALL FLOAT

MULTIPLE PROBE

CONTACTING PROBE:

CONDUCTIVE TAPE
CAPACITANCE
CONDUCTANCE
OPTICAL
VIBRATING

EXTERNAL DIAPHRAGM

SENSORS – TEMPERATURE

TI – THERMOMETER
TW – THERMOWELL
(BI – METAL OR CLOSE COUPLED FILLED SYSTEM)

RTD (IF APPLICABLE) SINGLE SENSOR IN WELL

DUAL SENSORS IN SINGLE WELL

FILLED SYSTEM WITH CAPILLARY (REMOTE MOUNTED INSTRUMENT)

VALVE NOTATION

VALVE BODIES

OPEN		CLOSED
	GATE	
	GLOBE	
	BALL	
	PLUG	
	NEEDLE	
	BUTTERFLY	
	DIAPHRAM	
	CHECK FACING RIGHT FACING LEFT	
	AUTOMATIC RECIRCULATION CHECK VALVE	
	3 WAY	
	STRAINER	
	DUPLEX STRAINER	
	WYE STRAINER	
	DRAINS	

NORMAL POSITIONS ALL VALVES

NO–INDICATES NORMALLY OPEN
NC–INDICATES NORMALLY CLOSED

LOCKED POSITIONS ALL VALVES

LO–INDICATES LOCKED OPEN
LC–INDICATES LOCKED CLOSED

FAIL POSITIONS ALL VALVES

FO–INDICATES FAIL OPEN
FC–INDICATES FAIL CLOSED
FL–INDICATES FAIL LOCKED
FI–INDICATES FAIL INDETERMINATE

VALVES – ACTUATORS

CYLINDER

ROTARY MOTOR (SHOWN TYPICALLY WITH ELECTRIC SIGNAL)

DIGITAL

DIAPHRAGM

SOLENOID

PNEUMATIC CYLINDER SPRING RETURN TO FAIL POSITION FOR ELECTRIC OR PNEUMATIC FAILURE

SELF-ACTIVATED DEVICES – PRESSURE

3388

PRESSURE REDUCING REGULATOR WITH EXTERNAL PRESSURE TAP

BACKPRESSURE REGULATOR WITH EXTERNAL PRESSURE TAP.

DIFFERENTIAL PRESSURE REDUCING REGULATOR WITH INTERNAL AND EXTERNAL PRESSURE TAPS

PRESSURE REDUCING REGULATOR, SELF CONTAINED.

BACKPRESSURE REGULATOR SELF-CONTAINED

PRESSURE RELIEF VALVE (CONTROL)

PRESSURE RELIEF VALVE (SAFETY)

PRESSURE RELIEF VALVE (CONTROL)

PRESSURE RELIEF VALVE (CONTROL)

PRESSURE SAFETY ELEMENT RUPTURE DISK

000097

000489

THE ORIGINAL DRAWING AND SUBSEQUENT REVISIONS THEREOF, WITH APPROVAL NAMES, INITIALS, AND THE PE SEAL, IF APPLICABLE, ARE MAINTAINED IN THE FILES OF FWENC.

REV	DATE	BY	CHK'D	APR'VD	DESCRIPTION/ISSUE
1	[illegible]	BJD	[illegible]	KDR	CERTIFIED FOR CONSTRUCTION / CP-00-001
0	11/01/99	BJD	SWH		PRELIMINARY DESIGN SUBMITTAL

PE: STATE OF OHIO, KENNETH D. RICKETT, E-62418, REGISTERED PROFESSIONAL ENGINEER

		DATE
DRAWN BY	B.J. Davis	08/10/00
DESIGNED BY	B.J. Davis	08/10/00
CHECKED BY	Bill Lovejoy	08/10/00
APPROVED BY	Kenneth D. Rickett	08/10/00
APPROVED BY	John Swanson	8/10/00

DEPARTMENT OF ENERGY
FERNALD ENVIRONMENTAL MANAGEMENT PROJECT
SILOS 1 AND 2 ACCELERATED WASTE RETRIEVAL PROJECT
FERNALD, OHIO
FDF CONTRACT NO. FSC 624

FOSTER WHEELER
FOSTER WHEELER ENVIRONMENTAL CORPORATION

TITLE
MISC FACILITIES
PIPING & INSTRUMENT DIAGRAM
CONTROL SYSTEM STANDARDS

SIZE	SCALE	DWG. NO.	REV
D	NONE	05FMD002	1

GENERAL EQUIPMENT

- GEAR PUMP
- DIAPHRAGM PUMP
- CENTRIFUGAL PUMP
- SUMP PUMP
- SUBMERSIBLE SUMP PUMP
- VERTICAL PUMP
- POSITIVE DISPLACEMENT PUMP
- DEEP WELL SUBMERSIBLE PUMP
- VACUUM PUMP
- MIXER
- STATIC MIXER
- PRESSURE VESSEL
- HEAD TANK/OPEN TANK
- CENTRIFUGAL FAN
- CENTRIFUGAL FAN W/INLET VANE DAMPER
- TANK W/CONE ROOF
- "Y" TYPE STRAINER
- CONE STRAINER

GENERAL EQUIPMENT (CONT'D)

- ROTARY, CENTRIFUGAL & WATER SEALED COMPRESSORS & VACUUM PUMPS
- HEPA FILTER
- ROUGHING FILTER
- CARBON BED
- STACK
- VENDOR SKID
- ROTARY VALVE
- VOLUMETRIC FEEDER
- KNIFE GATE
- CLEANOUT
- DEMISTER
- DUCT HEATER
- FLOW CONTROL OPPOSED BLADE DAMPER
- BACKDRAFT OR BACKFLOW DAMPER
- SPACE HEATER

GENERAL PIPING

- PRIMARY PROCESS FLOW
- SECONDARY PROCESS OR UTILITY FLOW
- PIPE WITH HEAT TRACING AND INSULATION (H1 — H1)
- PIPE WITH INSULATION (I — I)
- DIRECTION OF FLOW
- DOUBLE CONTAINED LINE
- CONCENTRIC REDUCER OR INCREASER
- ECCENTRIC REDUCER
- EXPANSION/FLEXIBLE JOINT
- DRY QUICK CONNECT/DISCONNECT COUPLINGS W/FLEXIBLE HOSE
- QUICK CONNECT/DISCONNECT COUPLINGS W/FLEXIBLE HOSE
- QUICK CONNECT (FEMALE)
- QUICK CONNECT (MALE)
- ATMOSPHERIC VENT
- SAMPLE CONNECTION (S)
- SCREWED CAP
- WELDED CAP
- FLANGED JOINT
- PLUG
- UNION JOINT
- BLIND FLANGED LINE OR VALVE
- DRAIN
- SIGHT GLASS
- TRAP (T)
- LINE FILTER (F)
- FLOW ORIFICE
- DOUBLE CHECK BACKFLOW PREVENTER
- REDUCED PRESSURE BACKFLOW PREVENTER

000490

THE ORIGINAL DRAWING AND SUBSEQUENT REVISIONS THEREOF, WITH APPROVAL NAMES, INITIALS, AND THE PE SEAL, IF APPLICABLE, ARE MAINTAINED IN THE FILES OF FWENC.

SYSTEM NUMBERS

FACILITIES

00	--	STABILIZATION BUILDING
01	--	PRODUCT HANDLING AND STORAGE FACILITY
02	--	WASTE RETRIEVAL FACILITIES
03	--	ANALYTICAL LABORATORY
04	--	MAINTENANCE AND WAREHOUSE FACILITIES
05	--	MISC. FACILITIES
06	--	SUPPORT FACILITIES

RETRIEVAL

10	--	FULL-SCALE MOCKUP SYSTEM
11	--	SILO WASTE RETRIEVAL SYSTEM
12	--	TRANSFER TANK SYSTEM
13	--	TTA WASTE RETRIEVAL SYSTEM
14	--	DECANT SUMP RETRIEVAL SYSTEM

PROCESSING

15	--	FEED PREPARATION SYSTEM
16	--	PROCESSOR FEED SYSTEM
17	--	PROCESSOR SYSTEM
18	--	PROCESS OFFGAS SYSTEM
19	--	VESSEL VENT SYSTEM
20	--	RADON CONTROL SYSTEM
21	--	FACILITY DECONTAMINATION SYSTEM

PRODUCT HANDLING

23	--	PRODUCT FORMING AND HANDLING SYSTEM
24	--	PRODUCT PACKAGING SYSTEM
25	--	CONTAINER RECEIPT AND HANDLING SYSTEM
26	--	PRODUCT RECYCLE SYSTEM

ELECTRICAL

30	--	HIGH VOLTAGE SYSTEM
31	--	480 VOLT DISTRIBUTION SYSTEM
32	--	STANDBY ELECTRICAL SYSTEM
33	--	UNINTERRUPTABLE POWER SYSTEM
34	--	LIGHTING SYSTEM
35	--	GROUNDING SYSTEM
39	--	MISCELLANEOUS ELECTRICAL

UTILITIES AND CHEMICALS

40	--	PLANT AND INSTRUMENT AIR SYSTEM
41	--	BREATHING AIR SYSTEM
42	--	UTILITY STEAM SYSTEM
43	--	COLD CHEMICAL SYSTEM
44	--	PRODUCT ADDITIVE SYSTEM

WATER SYSTEMS

50	--	PROCESS WATER SYSTEM
51	--	POTABLE WATER SYSTEM
52	--	FIRE WATER SYSTEM
53	--	COOLING WATER SYSTEM
54	--	MELTER COOLING WATER SYSTEM
55	--	PROCESS CHILLED WATER SYSTEM
56	--	RECYCLE SYSTEM
57	--	CONTAINER DECONTAMINATION SYSTEM

WASTE SYSTEMS

61	--	SANITARY SEWER SYSTEM
62	--	NON-RADIOACTIVE LIQUID WASTE SYSTEM
63	--	RADIOACTIVE WASTE SYSTEM
64	--	LABORATORY WASTE SYSTEM
65	--	RADIOACTIVE SOLID WASTE SYSTEM
66	--	STORM WATER SYSTEM

HVAC SYSTEMS

70	--	STABILIZATION BLDG SUPPLY AIR SYSTEM
71	--	STABILIZATION BLDG EXHAUST AIR SYSTEM
72	--	HVAC CHILLED WATER SYSTEM
73	--	PRODUCT HANDLING BLDG HVAC SYSTEM
74	--	WASTE RETRIEVAL FACILITY HVAC SYSTEM
75	--	ANALYTICAL LABORATORY HVAC SYSTEM
76	--	MAINT. AND WAREHOUSE FAC. HVAC SYSTEMS
77	--	MISC. FACILITIES HVAC SYSTEM

MECHANICAL AND ANALYTICAL SYSTEMS

80	--	MAINTENANCE EQUIPMENT
81	--	MECHANICAL HANDLING EQUIPMENT
82	--	REMOTE HANDLING EQUIPMENT
83	--	RADIATION SHIELDING EQUIPMENT
84	--	SAMPLING SYSTEM
85	--	INSPECTION SYSTEM

INFORMATION AND CONTROL SYSTEMS

90	--	DISTRIBUTED CONTROL SYSTEM
91	--	MANAGEMENT INFORMATION SYSTEM
92	--	FIRE DETECTION AND ALARM SYSTEM
93	--	HEALTH PROTECTION SYSTEM
94	--	ANALYTICAL LABORATORY SYSTEM

MISCELLANEOUS

- 1ST DWG.# — LINE BREAK OR RESUMPTION POINT
- 1ST B/L — BATTERY LIMITS
- RETURN AIR FLOW DIRECTION
- OUTSIDE AIR FLOW DIRECTION
- EXHAUST AIR FLOW DIRECTION
- 15120 | 15105 — SPECIFICATION BREAK

3388

NOZZLE IDENTIFICATION

E1 / 6" — FUNCTION DESIGNATOR WITH UNIQUE NUMERIC IDENTIFIER; SIZE

A	--	SPARE
B	--	INSTRUMENT (OTHER THAN PRESSURE, TEMP, OR GAGE GLASS)
D	--	DRAIN
E	--	EQUIPMENT
F	--	FEED
K	--	DIP TUBE
L	--	LIQUID LEVEL
M	--	MANHOLE
N	--	INSPECTION
O	--	OVERFLOW
P	--	PRESSURE
R	--	RELIEF VALVE
S	--	SAMPLE
T	--	THERMOMETER
U	--	OUTLET (LIQUID)
V	--	OUTLET (AIR)
W	--	WATER
Y	--	INLET (AIR)
Z	--	INLET (LIQUID)

VALVE IDENTIFICATION

AAA-BB-CCC

- VALVE NUMBER
- SYSTEM NUMBER
- VALVE CODE

AIR OPERATED VALVE	--	AOV
AUTOMATIC RECIRCULATION VALVE	--	ARV
BACK FLOW PREVENTER	--	BFP
CHECK VALVE	--	CKV
DOUBLE CHECK VALVE	--	DCV
DIFFUSER CHECK VALVE	--	DFV
DAMPER (BUTTERFLY)	--	DMP
FLOAT OPERATED VALVE	--	FOV
HAND OPERATED VALVE	--	HOV
MOTOR OPERATED VALVE	--	MOV
PRESSURE CONTROL VALVE	--	PCV
PRESSURE SAFETY ELEMENT	--	PSE
PRESSURE SAFETY VALVE	--	PSV
SOLENOID OPERATED VALVE	--	SOV

EQUIPMENT NUMBER IDENTIFICATION

XXX-YY-ZZZ

- EQUIPMENT NUMBER
- SYSTEM NUMBER
- EQUIPMENT CODE (SEE EQUIPMENT CODE DESIGNATORS)

000098

EQUIPMENT CODE DESIGNATION

AIR COMPRESSOR	--	ACP
AIR HANDLING UNIT	--	AHU
BACKDRAFT DAMPER	--	BKD
BELT CONVEYOR	--	BCV
BLOWER	--	BLR
BOILER	--	BOL
BREATHING AIR STATION	--	BAS
BUCKET ELEVATOR	--	BEV
CABLE OR HOSE REEL	--	CBR
CARBON BED	--	CBD
CENTRIFUGE	--	CFG
CHILLER	--	CHR
CLARIFIER	--	CLR
CONDENSER	--	CND
COOLING TOWER	--	CTW
CRANE/HOIST	--	CRH
DAMPER (NON-BUTTERFLY)	--	DPR
DECANT MODULE	--	DEC
DEMISTER	--	DEM
DESSICANT DRYER SYSTEM	--	DDS
DIESEL GENERATOR	--	DGN
DISCONNET SWITCH	--	DSW
DOUBLE CHECK VALVE	--	DCV
DRYER	--	DRY
DUCT HEATER	--	DHT
EDUCTOR	--	EDR
ENCLOSURE	--	ENC
EMMA MODULE	--	EMA
EVAPORATOR	--	EVP
EXHAUST AIR REGISTER	--	EAR
EXPANSION JOINT	--	EXP
FAN	--	FAN
FILTER	--	FLT
FLEXIBLE CONNECTION	--	FLX
FILTER / REGULATOR / LUBRICATOR	--	FRL
GRAVITY DAMPER	--	GDM
GEOPROBE	--	GOP
HEAT EXCHANGER	--	HTX
HYDRAULIC ACTUATOR	--	HYD
LIFT TABLE	--	LFT
OPPOSED BLADE DAMPER	--	LVR
MIXER/AGITATOR	--	MXA
MIXER/BLENDER	--	MXB
ORIFICE PLATE	--	ORF
PACKAGE UNIT	--	PKU
PERSONNEL CONTAMINATION MONITOR	--	PCM
PHASE SEPARATOR	--	PHS
PITCH DRIVE	--	PTH
PLANETARY GEAR REDUCER	--	PGR
PRESSURE SAFETY ELEMENT	--	PSE
PUMP	--	PMP
RECEIVER	--	RVR
ROTARY LOCK	--	ROL
SAMPLING SYSTEM (LIQUIDS)	--	SSL
SAMPLING SYSTEM (SOLIDS)	--	SSS
SCREW CONVEYOR (METERING)	--	SCM
SCREW CONVEYOR (TRANSFER)	--	SCT
SCRUBBER	--	SCR
SHIELD ENCLOSURE OR BOX	--	SHL
SLIDE GATE	--	SLG
SLUICER MODULE	--	SLC
SLURRY MODULE	--	SLR
SPACE HEATER	--	HTR
STRAINER	--	STR
SAMPLE MODULE	--	SMM
SUMP	--	SMP
SUPPLY AIR DIFFUSER	--	SAD
TANK	--	TNK
TANK WASHER	--	TKW
TRAP	--	TRP
ULTRA FILTRATION RACK	--	UFR
VACUUM CLEANER	--	VAC
VACUUM BREAKER	--	VBK
WASTE CUTTING TABLE	--	WCT
WATER METER PIT	--	WMP
WRIST ACTUATOR	--	WRA
YAW DRIVE		YAW

LINE IDENTIFICATION

III-JJKKK-M-NNN

- MATERIAL SPECIFICATION
- PIPE SIZE
- LINE NUMBER
- LINE SYSTEM
- LINE SERVICE (SEE BELOW)

LINE SERVICE DESIGNATION

AIR, COMPRESSED	--	CA
CHILLED WATER	--	CHW
CONDENSATE	--	CND
HYDRAULIC FLUID, 500 PSI OR GREATER	--	HF1
MISCELLANEOUS SLURRY	--	MS
FILTRATE	--	FLT
SUMP	--	SUMP
DOMESTIC WATER	--	DW
POTABLE WATER	--	DW3
PROCESS WATER	--	TW
PROCESS LIQUID WASTE	--	LPW
RADON CONTROL SYSTEM	--	RCS
VENTILATION AIR	--	VA

DEPARTMENT OF ENERGY
FERNALD ENVIRONMENTAL MANAGEMENT PROJECT
SILOS 1 AND 2 ACCELERATED WASTE RETRIEVAL PROJECT
FERNALD, OHIO
FDF CONTRACT NO. FSC 624

REV	DATE	BY	CHK'D	APR'VD	DESCRIPTION/ISSUE
1	08/10/00	BJD	[illegible]	KDR	CERTIFIED FOR CONSTRUCTION / CP-00-001
0	11/01/99	BJD	SWH		PRELIMINARY DESIGN SUBMITTAL

RPC — STATE OF OHIO — KENNETH D. RICKETT — E-64418 — REGISTERED PROFESSIONAL ENGINEER — Rev. 1

DRAWN BY	[illegible]	DATE 08/10/00
DESIGNED BY	[illegible]	DATE 08/10/00
CHECKED BY	[illegible]	DATE 08/10/00
APPROVED BY	Kenneth D. Rickett	DATE 08/10/00
APPROVED BY	[illegible]	DATE 8/10/00

FOSTER WHEELER
FOSTER WHEELER ENVIRONMENTAL CORPORATION

TITLE
MISC FACILITIES PIPING & INSTRUMENT DIAGRAM PIPING & EQUIP IDENTIFICATION

SIZE	SCALE:	DWG. NO.	REV
D	NONE	05FMD003	1

3388

GENERAL NOTES:

1. THE LINE SPECIFICATION "A" DENOTES DOUBLE CONTAINMENT PIPING AND IS DEFINED AS FOLLOWS:

   PIPING SPECIFICATION 105 INNER PIPE WITH A PIPING SPECIFICATION 105 OUTER PIPE.
   INNER PIPE LINE SIZE IS SHOWN IN LINE CALLOUT.
   OUTER PIPE LINE SIZE IS 6" UNLESS OTHERWISE NOTED.

2. THE LINE SPECIFICATION "B" DENOTES DOUBLE CONTAINMENT PIPING AND IS DEFINED AS FOLLOWS:

   PIPING SPECIFICATION 105 INNER PIPE WITH A PIPING SPECIFICATION 105 OUTER PIPE.
   INNER PIPE LINE SIZE IS SHOWN IN LINE CALLOUT.
   OUTER PIPE LINE SIZE IS 8" UNLESS OTHERWISE NOTED.

3. THE LINE SPECIFICATION "C" DENOTES DOUBLE CONTAINMENT PIPING AND IS DEFINED AS FOLLOWS:

   PIPING SPECIFICATION 120 INNER PIPE WITH A PIPING SPECIFICATION 120 OUTER PIPE.
   INNER PIPE LINE SIZE IS SHOWN IN LINE CALLOUT.
   OUTER PIPE LINE SIZE IS 6" UNLESS OTHERWISE NOTED.

4. SLURRY, DECANT, SLUICER, EMMA, AND DEBRIS REMOVAL MODULES DEPICTED ON FLOW DIAGRAMS AND PIPING & INSTRUMENT DIAGRAMS DEPICT ONLY MAJOR COMPONENTS. FOR A DETAILED PRESENTATION SEE THE FOLLOWING:

EQUIPMENT MODULE	P&ID DRAWING	SPECIFICATION
DECANT MODULES (DEC-12-200 & 201)	12PMD001	JS-PM-DEC-12-200
SLURRY MODULES (SLR-11-200, 201, & 202)	11PMD500 & 501	JS-PM-SLR-11-200
SLUICER MODULES (SLC-11-203, 204, & 205)	11PMD001	JS-PM-SLC-11-203
EMMA MODULES (EMA-14-400 & 401)	11GID070	JS-GM-EMA-14-400
DEBRIS REMOVAL MODULES (DRM-11-600 & 601)	11BID450	BNW-29994-DRS-PDR

5. HIGH PRESSURE PUMP ENCLOSURES DEPICTED ON FLOW DIAGRAMS AND PIPING & INSTRUMENT DIAGRAMS DEPICT ONLY MAJOR COMPONENTS. FOR A DETAILED DESCRIPTION SEE THE FOLLOWING:

HP PUMP SKID	P&ID DRAWING	SPECIFICATION
SILOS 1 & 2 (SKID SKD-11-250)	11PMD401, 11PMD402	JS-PM-SKD-11-250
SILO 4 (SKID SKD-11-251)	11PMD401, 11PMD402	JS-PM-SKD-11-250
TTA DECON PUMP (SKID SKD-11-252)	11PMD403	JS-PM-SKD-11-250

6. MECHANICAL SPECIFICATIONS ARE AS FOLLOWS:

15050	---	PIPING SYSTEMS
15060	---	HANGERS AND MISCELLANEOUS SUPPORTS
15103	---	DOMESTIC WATER
15105	---	SLURRY/SLUICE WATER PIPING
15106	---	MISCELLANEOUS PIPING
15107	---	HP FILTRATE PIPING
15110	---	VALVES
15120	---	PIPING SPECIALTIES
15136	---	COMPRESSED AIR
15261	---	CALCIUM SILICATE INSULATION
15262	---	FIBROUS GLASS INSULATION
15264	---	ELASTOMERIC RUBBER INSULATION
15270	---	ALUMINUM JACKETING
15293	---	THERMAL INSULATION FOR DUCTWORK - FIBROUS GLASS BLANKET WITH ALUMINUM FACING
15296	---	THERMAL INSULATION FOR ROUND DUCTWORK - FIBROUS GLASS INSULATION WITH FIELD APPLIED ALUMINUM JACKETING
15891	---	DUCTWORK - CARBON STEEL, HIGH VELOCITY, HIGH PRESSURE
15893	---	DUCTWORK - CARBON STEEL, ALL WELDED
15896	---	DUCTWORK - GALVANIZED STEEL
15993	---	TESTING, ADJUSTING, AND BALANCING PROCEDURES

ORDER OF PRECEDENCE: DRAWINGS LEAD SPECIFICATIONS

7. THE FOLLOWING LISTS ARE ISSUED UNDER SEPARATE DOCUMENTS:

   EQUIPMENT LIST ------- 624-P622-19

   LINE LIST ------- 624-P622-25

   INSTRUMENT LIST ------- 624-P622-35

   VALVE LIST ------- 624-P622-65

8. PIPING SPECIFICATIONS WITHIN LINE DESIGNATORS REFER TO THE LAST DIGITS OF THE 15000 SERIES OF THE CONSTRUCTION SPECIFICATION (I.E., PIPING SPECIFICATION 105 MAY BE FOUND IN SECTION 15105 OF THE CONSTRUCTION SPECIFICATION.) IN SOME CASES THE ENTIRE SPECIFICATION NUMBER IS GIVEN FOR CLARITY (I.E. 02510 WHICH IS A CIVIL PIPING SPECIFICATION).

9. CABLE TRAYS USED IN THIS APPLICATION ARE REFERED TO AS HOSE TRAYS

   HOSE TRAY CONTAINING HIGH PRESSURE HOSE SHALL MEET REQUIREMENTS OF CONSTRUCTION SPECIFICATION 16133.

   IN ADDITION TO THE REQUIREMENTS LISTED IN 16133, THE HOSE TRAY SHALL HAVE A CLOSED BOTTOM AND A SOLID COVER.

   THE HOSE TRAY SHALL BE 6-IN WIDE X 4-IN DEEP AND HAVE A MINIMUM BEND RADIUS OF 24-IN FOR ELBOWS.

   HOSE TRAYS TO BE INSULATED IN ACCORDANCE WITH CONSTRUCTION SPECIFICATION 15262, FIBROUS GLASS INSULATION, WHERE REQUIRED ON DRAWINGS.

10. TUBING LINE NUMBERS ORIGINATE FROM THEIR PROCESS CONNECTION TO THE INSTRUMENT MOUNTED ON THE RACK.

000099

000491

THE ORIGINAL DRAWING AND SUBSEQUENT REVISIONS THEREOF, WITH APPROVAL NAMES, INITIALS, AND THE PE SEAL, IF APPLICABLE, ARE MAINTAINED IN THE FILES OF FWENC.

REV	DATE	BY	CHK'D	APR'VD	DESCRIPTION/ISSUE
1	08/10/00	BJD	EAX	KDR	CERTIFIED FOR CONSTRUCTION / CP-00-001
0	11/01/99	BJD	SWH		PRELIMINARY DESIGN SUBMITTAL

PSE: STATE OF OHIO, KENNETH D. RUCKETT, E-64418, REGISTERED PROFESSIONAL ENGINEER

		DATE
DRAWN BY	BJ Davis	08/10/00
DESIGNED BY	BJ Davis	08/10/00
CHECKED BY	EA Langley	08/10/00
APPROVED BY	Kenneth D Ruckett	08/10/00
APPROVED BY	Jim Lawson	8/10/00

DEPARTMENT OF ENERGY
FERNALD ENVIRONMENTAL MANAGEMENT PROJECT
SILOS 1 AND 2 ACCELERATED WASTE RETRIEVAL PROJECT
FERNALD, OHIO
FDF CONTRACT NO. FSC 624

FOSTER WHEELER
FOSTER WHEELER ENVIRONMENTAL CORPORATION

TITLE
MISC FACILITIES
PIPING & INSTRUMENT DIAGRAM
GENERAL NOTES

SIZE	SCALE	DWG. NO.	REV
D	NONE	05FMD004	1

VALVE NUMBER	DATA SHEET OR SPECIFICATION	STANDARD VALVE NO.	P&ID NO.	TYPE	PIPE CONNECTIONS	SIZE
BFP-51-001	02510	N/A	51FMD002	RPZ BACK FLOW PREVENTER	SCREWED	2"
BKD-20-001	DS-FM-BKD-20-001	N/A	20FMD019	BACKDRAFT DAMPER	DUCT FLANGE	10" X 10"
BKD-77-001	DS-FM-BKD-20-001	N/A	77FMD008	BACKDRAFT DAMPER	DUCT FLANGE	32" X 32"
CKV-11-001	DS-FM-CKV-12-008	100	11FMD011	CHECK	FLANGED	1"
CKV-12-001	DS-FM-CKV-12-008	100	12FMD009	CHECK	FLANGED	1"
CKV-12-002	DS-FM-CKV-12-002	110	12FMD009	CHECK	WAFER	3"
CKV-12-004	DS-FM-CKV-12-004	N/A	12FMD009	CHECK	FLANGED	3"
CKV-12-005	DS-FM-CKV-12-004	N/A	12FMD014	CHECK	FLANGED	3"
CKV-12-006	DS-FM-CKV-12-002	110	12FMD016	CHECK	WAFER	3"
CKV-12-007	DS-FM-CKV-12-002	110	12FMD016	CHECK	WAFER	3"
CKV-12-008	DS-FM-CKV-12-008	100	12FMD017	CHECK	FLANGED	1 1/2"
CKV-12-009	DS-FM-CKV-12-008	100	12FMD016	CHECK	FLANGED	1 1/2"
CKV-12-010	DS-FM-CKV-12-002	110	12FMD016	CHECK	WAFER	3"
CKV-12-011	DS-FM-CKV-12-002	110	20FMD017	CHECK	WAFER	2"
CKV-20-001	DS-FM-CKV-12-002	110	20FMD017	CHECK	WAFER	2"
CKV-20-002	DS-FM-CKV-12-002	110	20FMD017	CHECK	WAFER	2"
CKV-20-003	DS-FM-CKV-12-008	100	20FMD017	CHECK	FLANGED	1"
CKV-20-004	DS-FM-CKV-12-008	100	20FMD017	CHECK	FLANGED	1"
CKV-20-005	DS-FM-CKV-12-008	100	20FMD018	CHECK	FLANGED	1"
CKV-20-006	DS-FM-CKV-12-008	100	20FMD018	CHECK	FLANGED	1"
CKV-51-001	DS-FM-CKV-12-002	110	51FMD003	CHECK	WAFER	3"
CKV-51-002	DS-FM-CKV-12-002	110	12FMD016	CHECK	WAFER	3"
CKV-51-003	DS-FM-CKV-12-002	110	12FMD009	CHECK	WAFER	3"
CKV-51-004	DS-FM-CKV-12-002	110	12FMD009	CHECK	WAFER	3"
DCV-51-001	15103	N/A	51FMD002	DOUBLE-CHECK VALVE BACK FLOW PREVENTER	SCREWED	2"
DCV-51-002	15103	N/A	51FMD004	DOUBLE-CHECK VALVE BACK FLOW PREVENTER	SCREWED	1"
DCV-51-003	15103	N/A	51FMD004	DOUBLE-CHECK VALVE BACK FLOW PREVENTER	FLANGED	3"
DFV-10-002	DS-FM-DFV-10-001	280	10FMD014	DIAPHRAGM CHECK	FLANGED	3"
DMP-11-001	DS-FM-DMP-20-001	N/A	10FMD012	BUTTERFLY	LUG	4"
DMP-11-002	DS-FM-DMP-20-001	N/A	20FMD013	BUTTERFLY	LUG	4"
DMP-11-005	DS-FM-DMP-20-001	N/A	12FMD019	BUTTERFLY	LUG	4"
DMP-12-001	DS-FM-DMP-20-001	N/A	12FMD019	BUTTERFLY	LUG	4"
DMP-12-002	DS-FM-DMP-20-001	N/A	12FMD019	BUTTERFLY	LUG	4"
DMP-12-004	DS-FM-DMP-20-001	N/A	11FMD013	BUTTERFLY	FLANGED	6"
DMP-12-005	DS-FM-DMP-20-001	N/A	11FMD010	BUTTERFLY	FLANGED	6"
DMP-14-001	DS-FM-DMP-20-001	N/A	10FMD012	BUTTERFLY	LUG	4"
DMP-14-002	DS-FM-DMP-20-001	N/A	20FMD013	BUTTERFLY	LUG	4"
DMP-20-001	DS-FM-DMP-20-001	N/A	20FMD018	BUTTERFLY	LUG	10"
DMP-20-002	DS-FM-DMP-20-001	N/A	20FMD018	BUTTERFLY	LUG	10"
DMP-20-003	DS-FM-DMP-20-001	N/A	20FMD018	BUTTERFLY	LUG	10"
DMP-20-004	DS-FM-DMP-20-001	N/A	20FMD018	BUTTERFLY	LUG	10"
DMP-20-005	DS-FM-DMP-20-001	N/A	20FMD016	BUTTERFLY	LUG	6"
DMP-20-006	DS-FM-DMP-20-001	N/A	20FMD016	BUTTERFLY	LUG	8"
DMP-20-007	DS-FM-DMP-20-001	N/A	20FMD016	BUTTERFLY	LUG	6"
DMP-20-008	DS-FM-DMP-20-001	N/A	20FMD016	BUTTERFLY	LUG	8"
DMP-20-009	DS-FM-DMP-20-001	N/A	20FMD016	BUTTERFLY	LUG	6"
DMP-20-010	DS-FM-DMP-20-001	N/A	20FMD016	BUTTERFLY	LUG	8"
DMP-20-011	DS-FM-DMP-20-001	N/A	20FMD016	BUTTERFLY	LUG	6"
DMP-20-012	DS-FM-DMP-20-001	N/A	20FMD016	BUTTERFLY	LUG	8"
DMP-20-013	DS-FM-DMP-20-001	N/A	20FMD019	BUTTERFLY	LUG	10"
DMP-20-014	DS-FM-DMP-20-001	N/A	20FMD019	BUTTERFLY	LUG	10"
DMP-20-015	DS-FM-DMP-20-001	N/A	20FMD019	BUTTERFLY	LUG	10"
DMP-20-016	DS-FM-DMP-20-001	N/A	20FMD019	BUTTERFLY	LUG	10"
DMP-20-017	DS-FM-DMP-20-001	N/A	20FMD019	BUTTERFLY	LUG	10"
DMP-20-018	DS-FM-DMP-20-001	N/A	20FMD019	BUTTERFLY	LUG	10"
DMP-20-019	DS-FM-DMP-20-001	N/A	20FMD019	BUTTERFLY	LUG	10"
DMP-20-020	DS-FM-DMP-20-001	N/A	20FMD019	BUTTERFLY	LUG	10"
DMP-20-021	DS-FM-DMP-20-001	N/A	20FMD019	BUTTERFLY	LUG	10"
DMP-20-022	DS-FM-DMP-20-001	N/A	20FMD019	BUTTERFLY	LUG	10"
DMP-20-023	DS-FM-DMP-20-001	N/A	20FMD016	BUTTERFLY	LUG	6"
DMP-20-024	DS-FM-DMP-20-001	N/A	20FMD018	BUTTERFLY	LUG	10"
DMP-20-025	DS-FM-DMP-20-001	N/A	20FMD018	BUTTERFLY	LUG	6"
DMP-20-028	DS-FM-DMP-20-001	N/A	20FMD018	BUTTERFLY	LUG	8"
DMP-20-029	DS-FM-DMP-20-001	N/A	20FMD014	BUTTERFLY	LUG	4"
DMP-20-030	DS-FM-DMP-20-001	N/A	20FMD014	BUTTERFLY	LUG	4"
DMP-20-031	DS-FM-DMP-20-001	N/A	20FMD018	BUTTERFLY	LUG	10"
DMP-20-032	DS-FM-DMP-20-001	N/A	20FMD017	BUTTERFLY	LUG	4"
DMP-20-033	DS-FM-DMP-20-001	N/A	20FMD017	BUTTERFLY	LUG	4"
DMP-20-034	DS-FM-DMP-20-001	N/A	20FMD018	BUTTERFLY	LUG	4"
DMP-20-035	DS-FM-DMP-20-001	N/A	20FMD016	BUTTERFLY	LUG	6"
DMP-20-036	DS-FM-DMP-20-001	N/A	20FMD016	BUTTERFLY	LUG	6"
DMP-20-037	DS-FM-DMP-20-001	N/A	20FMD016	BUTTERFLY	LUG	6"
DMP-20-038	DS-FM-DMP-20-001	N/A	20FMD013	BUTTERFLY	LUG	6"
DMP-20-039	DS-FM-DMP-20-001	N/A	20FMD013	BUTTERFLY	LUG	6"
DMP-20-040	DS-FM-DMP-20-001	N/A	20FMD016	BUTTERFLY	LUG	8"
DMP-20-041	DS-FM-DMP-20-001	N/A	20FMD016	BUTTERFLY	LUG	8"
DMP-20-042	DS-FM-DMP-20-001	N/A	20FMD016	BUTTERFLY	LUG	8"
DMP-20-043	DS-FM-DMP-20-001	N/A	20FMD016	BUTTERFLY	LUG	8"
DMP-20-044	DS-FM-DMP-20-001	N/A	20FMD016	BUTTERFLY	LUG	6"
DMP-20-045	DS-FM-DMP-20-001	N/A	20FMD016	BUTTERFLY	LUG	6"
DMP-20-046	DS-FM-DMP-20-001	N/A	20FMD013	BUTTERFLY	LUG	6"
DMP-20-047	DS-FM-DMP-20-001	N/A	20FMD013	BUTTERFLY	LUG	6"
DMP-20-048	DS-FM-DMP-20-001	N/A	20FMD013	BUTTERFLY	LUG	6"
DMP-20-049	DS-FM-DMP-20-001	N/A	20FMD013	BUTTERFLY	LUG	6"
DMP-20-050	DS-FM-DMP-20-001	N/A	20FMD012	BUTTERFLY	LUG	6"
DMP-20-051	DS-FM-DMP-20-001	N/A	20FMD012	BUTTERFLY	LUG	6"
DMP-20-052	DS-FM-DMP-20-001	N/A	20FMD012	BUTTERFLY	LUG	6"
DMP-20-053	DS-FM-DMP-20-001	N/A	20FMD012	BUTTERFLY	LUG	6"

VALVE NUMBER	DATA SHEET OR SPECIFICATION	STANDARD VALVE NO.	P&ID NO.	TYPE	PIPE CONNECTIONS	SIZE
DMP-20-054	DS-FM-DMP-20-001	N/A	20FMD013	BUTTERFLY	LUG	3"
DMP-20-058	DS-FM-DMP-20-001	N/A	20FMD013	BUTTERFLY	LUG	3"
DMP-20-059	DS-FM-DMP-20-001	N/A	20FMD013	BUTTERFLY	LUG	6"
DMP-20-060	DS-FM-DMP-20-001	N/A	20FMD013	BUTTERFLY	LUG	6"
DMP-20-062	DS-FM-DMP-20-001	N/A	20FMD015	BUTTERFLY	LUG	6"
DMP-20-063	DS-FM-DMP-20-001	N/A	20FMD015	BUTTERFLY	LUG	6"
DMP-20-064	DS-FM-DMP-20-001	N/A	20FMD015	BUTTERFLY	LUG	6"
DMP-20-065	DS-FM-DMP-20-001	N/A	20FMD015	BUTTERFLY	LUG	6"
DMP-20-066	DS-FM-DMP-20-001	N/A	20FMD015	BUTTERFLY	LUG	6"
DMP-20-067	DS-FM-DMP-20-001	N/A	20FMD015	BUTTERFLY	LUG	6"
DMP-20-068	DS-FM-DMP-20-001	N/A	20FMD015	BUTTERFLY	LUG	6"
DMP-20-069	DS-FM-DMP-20-001	N/A	20FMD015	BUTTERFLY	LUG	6"
DMP-20-070	DS-FM-DMP-20-001	N/A	20FMD015	BUTTERFLY	LUG	6"
DMP-20-071	DS-FM-DMP-20-001	N/A	20FMD019	BUTTERFLY	LUG	6"
DMP-20-072	DS-FM-DMP-20-001	N/A	20FMD019	BUTTERFLY	LUG	10"
DMP-20-073	DS-FM-DMP-20-001	N/A	20FMD019	BUTTERFLY	LUG	6"
DMP-20-074	DS-FM-DMP-20-001	N/A	20FMD019	BUTTERFLY	LUG	8"
DMP-20-075	DS-FM-DMP-20-001	N/A	20FMD016	BUTTERFLY	LUG	6"
DMP-20-076	DS-FM-DMP-20-001	N/A	20FMD016	BUTTERFLY	LUG	6"
DMP-20-077	DS-FM-DMP-20-001	N/A	20FMD016	BUTTERFLY	LUG	6"
DMP-20-078	DS-FM-DMP-20-001	N/A	20FMD016	BUTTERFLY	LUG	6"
DMP-20-079	DS-FM-DMP-20-001	N/A	20FMD016	BUTTERFLY	LUG	6"
DMP-20-080	DS-FM-DMP-20-001	N/A	20FMD013	BUTTERFLY	LUG	6"
DMP-20-081	DS-FM-DMP-20-001	N/A	20FMD013	BUTTERFLY	LUG	6"
DMP-20-082	DS-FM-DMP-20-001	N/A	20FMD013	BUTTERFLY	LUG	6"
DMP-20-083	DS-FM-DMP-20-001	N/A	20FMD013	BUTTERFLY	LUG	6"
DMP-20-084	DS-FM-DMP-20-001	N/A	20FMD013	BUTTERFLY	LUG	3"
DMP-20-085	DS-FM-DMP-20-001	N/A	20FMD015	BUTTERFLY	LUG	6"
DMP-20-086	DS-FM-DMP-20-001	N/A	20FMD015	BUTTERFLY	LUG	6"
DMP-20-087	DS-FM-DMP-20-001	N/A	20FMD015	BUTTERFLY	LUG	6"
DMP-20-088	DS-FM-DMP-20-001	N/A	20FMD015	BUTTERFLY	LUG	6"
DMP-20-089	DS-FM-DMP-20-001	N/A	20FMD015	BUTTERFLY	LUG	6"
DMP-20-090	DS-FM-DMP-20-001	N/A	20FMD015	BUTTERFLY	LUG	6"
DMP-20-091	DS-FM-DMP-20-001	N/A	20FMD015	BUTTERFLY	LUG	6"
DMP-20-092	DS-FM-DMP-20-001	N/A	20FMD015	BUTTERFLY	LUG	6"
DMP-20-093	DS-FM-DMP-20-001	N/A	20FMD016	BUTTERFLY	LUG	6"
DMP-20-094	DS-FM-DMP-20-001	N/A	20FMD015	BUTTERFLY	LUG	3"
DMP-20-095	DS-FM-DMP-20-001	N/A	20FMD015	BUTTERFLY	LUG	3"
DMP-20-096	DS-FM-DMP-20-001	N/A	20FMD015	BUTTERFLY	LUG	3"
DMP-20-097	DS-FM-DMP-20-001	N/A	20FMD015	BUTTERFLY	LUG	3"
DMP-20-098	DS-FM-DMP-20-001	N/A	20FMD014	BUTTERFLY	LUG	8"
DMP-77-001	DS-FM-DMP-77-001	N/A	77FMD006	BUTTERFLY	DUCT FLANGE	30"
DMP-77-002	DS-FM-DMP-77-001	N/A	77FMD006	BUTTERFLY	DUCT FLANGE	34"
DMP-77-003	DS-FM-DMP-77-001	N/A	77FMD006	BUTTERFLY	DUCT FLANGE	20"
DMP-77-004	DS-FM-DMP-77-001	N/A	77FMD006	BUTTERFLY	DUCT FLANGE	30"
DMP-77-005	DS-FM-DMP-77-001	N/A	77FMD006	BUTTERFLY	DUCT FLANGE	8"
DMP-77-006	DS-FM-DMP-77-001	N/A	77FMD006	BUTTERFLY	DUCT FLANGE	8"
DMP-77-007	DS-FM-DMP-77-001	N/A	77FMD006	BUTTERFLY	DUCT FLANGE	8"
DMP-77-008	DS-FM-DMP-77-001	N/A	77FMD006	BUTTERFLY	DUCT FLANGE	8"
DMP-77-009	DS-FM-DMP-77-001	N/A	77FMD006	BUTTERFLY	DUCT FLANGE	6"
DMP-77-010	DS-FM-DMP-77-001	N/A	77FMD006	BUTTERFLY	DUCT FLANGE	6"
DMP-77-011	DS-FM-DMP-77-001	N/A	77FMD006	BUTTERFLY	DUCT FLANGE	6"
DMP-77-012	DS-FM-DMP-77-001	N/A	77FMD006	BUTTERFLY	DUCT FLANGE	6"
DMP-77-013	DS-FM-DMP-77-001	N/A	77FMD006	BUTTERFLY	DUCT FLANGE	30"
DMP-77-014	DS-FM-DMP-77-001	N/A	77FMD008	BUTTERFLY	DUCT FLANGE	34"
DMP-77-015	DS-FM-DMP-77-001	N/A	77FMD008	BUTTERFLY	DUCT FLANGE	34"
DMP-77-016	DS-FM-DMP-77-001	N/A	77FMD008	BUTTERFLY	DUCT FLANGE	34"
DMP-77-017	DS-FM-DMP-77-001	N/A	77FMD008	BUTTERFLY	DUCT FLANGE	34"
DMP-77-018	DS-FM-DMP-77-001	N/A	77FMD008	BUTTERFLY	DUCT FLANGE	34"
DMP-77-019	DS-FM-DMP-77-001	N/A	77FMD008	BUTTERFLY	DUCT FLANGE	34"
DMP-77-020	DS-FM-DMP-77-001	N/A	77FMD008	BUTTERFLY	DUCT FLANGE	34"
DMP-77-021	DS-FM-DMP-77-001	N/A	77FMD008	BUTTERFLY	DUCT FLANGE	34"
DMP-77-022	DS-FM-DMP-77-001	N/A	77FMD008	BUTTERFLY	DUCT FLANGE	34"
DMP-77-023	DS-FM-DMP-77-001	N/A	77FMD006	BUTTERFLY	DUCT FLANGE	14"
DMP-77-026	DS-FM-DMP-77-001	N/A	77FMD008	BUTTERFLY	DUCT FLANGE	34"
FCV-AWT-20-001	DS-FM-FCV-20-AWT	260	20FMD017	BALL	FLANGED	2"
HOV-10-001	DS-FM-HOV-10-001	120	10FMD012	BALL	SOCKET WELD/SCREWED	1"
HOV-10-002	DS-FM-HOV-10-001	120	10FMD012	BALL	SOCKET WELD/SCREWED	1"
HOV-10-003	DS-FM-HOV-10-001	120	10FMD012	BALL	SOCKET WELD/SCREWED	1"
HOV-10-004	DS-FM-HOV-10-001	120	10FMD012	BALL	SOCKET WELD/SCREWED	1"
HOV-10-005	DS-FM-HOV-10-005	140	10FMD012	BALL	SCREWED	1/2"
HOV-10-006	DS-FM-HOV-10-005	140	10FMD012	BALL	SCREWED	1/2"
HOV-10-007	DS-FM-HOV-10-001	120	10FMD012	BALL	SOCKET WELD/SCREWED	1"

VALVE NUMBER	DATA SHEET OR SPECIFICATION	STANDARD VALVE NO.	P&ID NO.	TYPE	PIPE CONNECTIONS	SIZE
HOV-10-008	DS-FM-HOV-10-001	120	10FMD012	BALL	SOCKET WELD/SCREWED	1"
HOV-10-009	DS-FM-HOV-10-011	160	10FMD014	BALL	FLANGED	3"
HOV-10-010	DS-FM-HOV-40-070	190	10FMD014	BLEEDER	SCREWED	1/2"
HOV-10-011	DS-FM-HOV-10-011	160	10FMD014	BALL	FLANGED	3"
HOV-10-012	DS-FM-HOV-10-011	160	10FMD014	BALL	FLANGED	3"
------	------	------	------	------	------	------
HOV-10-014	DS-FM-HOV-10-011	160	10FMD014	BALL	FLANGED	3"
HOV-10-015	DS-FM-HOV-10-011	160	10FMD014	BALL	FLANGED	3"
			3388			
HOV-11-001	DS-FM-HOV-10-001	120	11FMD010	BALL	SOCKET WELD/SCREWED	1"
HOV-11-002	DS-FM-HOV-10-001	120	11FMD010	BALL	SOCKET WELD/SCREWED	1"
HOV-11-003	DS-FM-HOV-10-001	120	11FMD010	BALL	SOCKET WELD/SCREWED	1"
HOV-11-004	DS-FM-HOV-10-001	120	11FMD010	BALL	SOCKET WELD/SCREWED	1"
HOV-11-005	DS-FM-HOV-10-005	140	11FMD010	BALL	SCREWED	1/2"
HOV-11-006	DS-FM-HOV-10-005	140	11FMD010	BALL	SCREWED	1/2"
HOV-11-007	DS-FM-HOV-10-001	120	11FMD010	BALL	SOCKET WELD/SCREWED	1"
HOV-11-008	DS-FM-HOV-10-001	120	11FMD010	BALL	SOCKET WELD/SCREWED	1"
HOV-11-011	DS-FM-HOV-10-011	160	11FMD014	BALL	FLANGED	3"
HOV-11-012	DS-FM-HOV-10-011	160	11FMD014	BALL	FLANGED	3"
HOV-11-013	DS-FM-HOV-11-016	170	11FMD011	BALL	FLANGED	1"
HOV-11-014	DS-FM-HOV-10-011	160	11FMD014	BALL	FLANGED	1"
HOV-11-016	DS-FM-HOV-11-016	170	11FMD011	BALL	FLANGED	1"
HOV-11-018	DS-FM-HOV-11-016	170	11FMD011	BALL	FLANGED	1"
HOV-11-019	DS-FM-HOV-11-016	170	11FMD011	BALL	FLANGED	1"
HOV-12-001	DS-FM-HOV-11-016	170	12FMD009	BALL	FLANGED	1"
HOV-12-002	DS-FM-HOV-10-001	120	12FMD010	BALL	SOCKET WELD/SCREWED	1"
HOV-12-003	DS-FM-HOV-10-001	120	12FMD010	BALL	SOCKET WELD/SCREWED	1"
HOV-12-004	DS-FM-HOV-10-001	120	12FMD010	BALL	SOCKET WELD/SCREWED	1"
HOV-12-005	DS-FM-HOV-10-001	120	12FMD011	BALL	SOCKET WELD/SCREWED	1"
HOV-12-006	DS-FM-HOV-10-001	120	12FMD011	BALL	SOCKET WELD/SCREWED	1"
HOV-12-007	DS-FM-HOV-10-001	120	12FMD011	BALL	SOCKET WELD/SCREWED	1"
HOV-12-008	DS-FM-HOV-10-001	120	13FMD005	BALL	SOCKET WELD/SCREWED	1"
HOV-12-009	DS-FM-HOV-10-001	120	13FMD005	BALL	SOCKET WELD/SCREWED	1"
HOV-12-010	DS-FM-HOV-10-001	120	13FMD005	BALL	SOCKET WELD/SCREWED	1"
HOV-12-011	DS-FM-HOV-10-001	120	12FMD013	BALL	SOCKET WELD/SCREWED	1"
HOV-12-012	DS-FM-HOV-10-001	120	12FMD013	BALL	SOCKET WELD/SCREWED	1"
HOV-12-013	DS-FM-HOV-10-001	120	12FMD013	BALL	SOCKET WELD/SCREWED	1"
HOV-12-014	DS-FM-HOV-10-001	120	12FMD010	BALL	SOCKET WELD/SCREWED	1"
HOV-12-015	DS-FM-HOV-10-001	120	12FMD011	BALL	SOCKET WELD/SCREWED	1"
HOV-12-016	DS-FM-HOV-10-001	120	13FMD005	BALL	SOCKET WELD/SCREWED	1"
HOV-12-017	DS-FM-HOV-10-001	120	12FMD013	BALL	SOCKET WELD/SCREWED	1"
HOV-12-018	DS-FM-HOV-10-009	220	12FMD016	BALL	FLANGED	1/2"
HOV-12-019	DS-FM-HOV-10-009	220	12FMD016	BALL	FLANGED	4"
HOV-12-020	DS-FM-HOV-10-009	220	12FMD016	BALL	FLANGED	3"
HOV-12-021	DS-FM-HOV-10-009	220	12FMD016	BALL	FLANGED	4"
HOV-12-022	DS-FM-HOV-10-009	220	12FMD016	BALL	FLANGED	3"
HOV-12-023	DS-FM-HOV-11-016	170	12FMD016	BALL	FLANGED	3"
HOV-12-024	DS-FM-HOV-51-017	290	12FMD016	GLOBE	FLANGED	1"
HOV-12-025	DS-FM-HOV-10-009	220	12FMD016	BALL	FLANGED	3"
HOV-12-026	DS-FM-HOV-40-070	190	12FMD016	BLEEDER VALVE	SCREWED	1/2"
HOV-12-027	DS-FM-HOV-40-070	190	12FMD016	BLEEDER VALVE	SCREWED	1/2"
HOV-12-028	DS-FM-HOV-11-016	170	12FMD016	BALL	FLANGED	1 1/2"
------	------	------	------	------	------	------
HOV-12-030	DS-FM-HOV-10-011	160	12FMD014	BALL	FLANGED	3"
HOV-12-031	DS-FM-HOV-10-011	160	12FMD009	BALL	FLANGED	3"
HOV-12-032	DS-FM-HOV-10-011	160	12FMD009	BALL	FLANGED	3"

NOTES:

1. VENDOR SUPPLIED VALVES SUCH AS VALVES ON SKIDS ARE NOT REFLECTED IN THIS VALVE LIST.
2. FOR SYSTEM 90 INSTRUMENTATION VALVES SEE DRAWING 90FID115.

000492

THE ORIGINAL DRAWING AND SUBSEQUENT REVISIONS THEREOF, WITH APPROVAL NAMES, INITIALS, AND THE PE SEAL, IF APPLICABLE, ARE MAINTAINED IN THE FILES OF FWENC.

000100

REV	DATE	BY	CHK'D	APR'VD	DESCRIPTION/ISSUE
0	08/10/00	[illegible]	[illegible]	KDR	CERTIFIED FOR CONSTRUCTION

PE: STATE OF OHIO, KENNETH D. RICKETT, E-44111, REGISTERED PROFESSIONAL ENGINEER, 08/10/00

		DATE
DRAWN BY	[illegible]	08/10/00
DESIGNED BY	[illegible]	08/10/00
CHECKED BY	[illegible]	08/10/00
APPROVED BY	Kenneth D Rickett	08/10/00
APPROVED BY	[illegible]	8/10/00

DEPARTMENT OF ENERGY
FERNALD ENVIRONMENTAL MANAGEMENT PROJECT
SILOS 1 AND 2 ACCELERATED WASTE RETRIEVAL PROJECT
FERNALD, OHIO
FDF CONTRACT NO. FSC 624

FOSTER WHEELER
FOSTER WHEELER ENVIRONMENTAL CORPORATION

TITLE
MISC FACILITIES
PIPING & INSTRUMENT DIAGRAM
VALVE LIST – SHEET 1

SIZE	SCALE:	DWG. NO.	REV
D	NONE	05FMD005	0

VALVE NUMBER	DATA SHEET OR SPECIFICATION	STANDARD VALVE NO.	P&ID NO.	TYPE	PIPE CONNECTIONS	SIZE
HOV-12-033	DS-FM-HOV-10-011	160	12FMD009	BALL	FLANGED	3"
HOV-12-034	DS-FM-HOV-10-011	160	12FMD009	BALL	FLANGED	3"
HOV-12-035	DS-FM-HOV-10-011	160	12FMD009	BALL	FLANGED	3"
HOV-12-036	DS-FM-HOV-10-011	160	12FMD009	BALL	FLANGED	3"
HOV-12-037	DS-FM-HOV-10-011	160	12FMD009	BALL	FLANGED	3"
HOV-12-038	DS-FM-HOV-10-011	160	12FMD009	BALL	FLANGED	3"
HOV-12-039	DS-FM-HOV-20-001	230	12FMD019	BALL	SCREWED	3/4"
HOV-12-040	DS-FM-HOV-10-009	220	12FMD016	BALL	FLANGED	2"
HOV-12-041	DS-FM-HOV-10-009	220	12FMD016	BALL	FLANGED	1/2"
HOV-12-042	DS-FM-HOV-10-009	220	12FMD016	BALL	FLANGED	1/2"
HOV-12-043	DS-FM-HOV-10-009	220	12FMD017	BALL	FLANGED	2"
HOV-12-044	DS-FM-HOV-10-009	220	12FMD017	BALL	FLANGED	3"
HOV-12-045	DS-FM-HOV-11-016	170	20FMD017	BALL	FLANGED	2"
HOV-12-046	DS-FM-HOV-10-009	220	12FMD017	BALL	FLANGED	2"
HOV-12-047	DS-FM-HOV-10-009	220	12FMD009	BALL	FLANGED	3"
HOV-12-048	DS-FM-HOV-20-001	230	12FMD019	BALL	SCREWED	3/4"
HOV-12-049	DS-FM-HOV-51-017	290	12FMD016	GLOBE	FLANGED	1"
HOV-14-001	DS-FM-HOV-10-011	160	14FMD010	BALL	FLANGED	2"
HOV-20-001	DS-FM-HOV-20-001	230	20FMD015	BALL	SCREWED	3/4"
HOV-20-002	DS-FM-HOV-20-001	230	20FMD013	BALL	SCREWED	3/4"
HOV-20-003	DS-FM-HOV-51-017	290	20FMD017	GLOBE	FLANGED	1/2"
HOV-20-004	DS-FM-HOV-20-001	230	20FMD013	BALL	SCREWED	3/4"
HOV-20-005	DS-FM-HOV-11-016	170	20FMD017	BALL	FLANGED	2"
HOV-20-006	DS-FM-HOV-20-001	230	20FMD013	BALL	SCREWED	3/4"
HOV-20-008	DS-FM-HOV-40-070	190	20FMD017	BLEEDER VALVE	SCREWED	1/2"
HOV-20-009	DS-FM-HOV-51-017	290	20FMD017	GLOBE	FLANGED	1/2"
HOV-20-010	DS-FM-HOV-11-016	170	20FMD019	BALL	FLANGED	1"
HOV-20-012	DS-FM-HOV-11-016	170	20FMD017	BALL	FLANGED	2"
HOV-20-013	DS-FM-HOV-40-070	190	20FMD017	BLEEDER VALVE	SCREWED	1/2"
HOV-20-015	DS-FM-HOV-11-016	170	20FMD017	BALL	FLANGED	1"
HOV-20-016	DS-FM-HOV-11-016	170	20FMD018	BALL	FLANGED	1/2"
HOV-20-017	DS-FM-HOV-11-016	170	20FMD016	BALL	FLANGED	1/2"
HOV-20-018	DS-FM-HOV-11-016	170	20FMD018	BALL	FLANGED	1/2"
HOV-20-019	DS-FM-HOV-11-016	170	20FMD017	BALL	FLANGED	2"
HOV-20-020	DS-FM-HOV-20-020	250	20FMD013	BALL	SOCKET WELD	1 1/2"
HOV-20-021	DS-FM-HOV-20-020	250	20FMD013	BALL	SOCKET WELD	1 1/2"
HOV-20-022	DS-FM-HOV-51-017	290	20FMD017	GLOBE	FLANGED	1/2"
HOV-20-023	DS-FM-HOV-51-017	290	20FMD017	GLOBE	FLANGED	1/2"
HOV-40-001	DS-FM-HOV-40-001	130	40FMD001	GATE	SCREWED	1/2"
HOV-40-002	DS-FM-HOV-40-001	130	40FMD001	GATE	SCREWED	1/2"
HOV-40-003	DS-FM-HOV-40-001	130	40FMD001	GATE	SCREWED	1/2"
HOV-40-004	DS-FM-HOV-40-001	130	40FMD001	GATE	SCREWED	1/2"
HOV-40-005	DS-FM-HOV-40-001	130	40FMD001	GATE	SCREWED	1/2"
HOV-40-006	DS-FM-HOV-40-001	130	40FMD001	GATE	SCREWED	1/2"
HOV-40-007	DS-FM-HOV-40-001	130	40FMD001	GATE	SCREWED	1 1/2"
HOV-40-008	DS-FM-HOV-40-001	130	40FMD001	GATE	SCREWED	1 1/2"
HOV-40-009	DS-FM-HOV-40-001	130	40FMD001	GATE	SCREWED	1/2"
HOV-40-010	DS-FM-HOV-40-001	130	40FMD001	GATE	SCREWED	1/2"
HOV-40-011	DS-FM-HOV-40-001	130	40FMD001	GATE	SCREWED	1"
HOV-40-012	DS-FM-HOV-40-001	130	40FMD001	GATE	SCREWED	1/2"
HOV-40-013	DS-FM-HOV-40-001	130	40FMD001	GATE	SCREWED	1/2"
HOV-40-014	DS-FM-HOV-40-001	130	40FMD001	GATE	SCREWED	1/2"
HOV-40-015	DS-FM-HOV-40-001	130	40FMD001	GATE	SCREWED	1/2"
HOV-40-016	DS-FM-HOV-40-001	130	40FMD001	GATE	SCREWED	1/2"
HOV-40-017	DS-FM-HOV-40-001	130	40FMD001	GATE	SCREWED	1/2"
HOV-40-018	DS-FM-HOV-40-001	130	40FMD001	GATE	SCREWED	1/2"
HOV-40-019	DS-FM-HOV-40-001	130	40FMD001	GATE	SCREWED	1/2"
HOV-40-020	DS-FM-HOV-40-001	130	40FMD001	GATE	SCREWED	1/2"
HOV-40-021	DS-FM-HOV-40-001	130	40FMD001	GATE	SCREWED	1/2"
HOV-40-022	DS-FM-HOV-40-001	130	40FMD001	GATE	SCREWED	1/2"
HOV-40-023	DS-FM-HOV-40-001	130	40FMD001	GATE	SCREWED	1/2"
HOV-40-024	DS-FM-HOV-40-001	130	40FMD001	GATE	SCREWED	1/2"
HOV-40-025	DS-FM-HOV-40-001	130	40FMD001	GATE	SCREWED	1/2"
HOV-40-026	DS-FM-HOV-40-001	130	40FMD001	GATE	SCREWED	1/2"
HOV-40-027	DS-FM-HOV-40-001	130	40FMD001	GATE	SCREWED	1/2"
HOV-40-028	DS-FM-HOV-40-001	130	40FMD001	GATE	SCREWED	1/2"
HOV-40-029	DS-FM-HOV-40-001	130	40FMD001	GATE	SCREWED	1/2"
HOV-40-030	DS-FM-HOV-40-001	130	40FMD001	GATE	SCREWED	1/2"
HOV-40-031	DS-FM-HOV-40-001	130	40FMD001	GATE	SCREWED	1/2"
HOV-40-032	DS-FM-HOV-40-001	130	40FMD001	GATE	SCREWED	1/2"
HOV-40-033	DS-FM-HOV-40-001	130	40FMD001	GATE	SCREWED	1/2"
HOV-40-034	DS-FM-HOV-40-001	130	40FMD001	GATE	SCREWED	1/2"
HOV-40-035	DS-FM-HOV-40-001	130	40FMD001	GATE	SCREWED	1/2"
HOV-40-036	DS-FM-HOV-40-001	130	40FMD001	GATE	SCREWED	1/2"
HOV-40-037	DS-FM-HOV-40-001	130	40FMD001	GATE	SCREWED	1/2"
HOV-40-038	DS-FM-HOV-40-001	130	40FMD001	GATE	SCREWED	1/2"
HOV-40-039	DS-FM-HOV-40-039	300	10FMD014	NEEDLE	SCREWED	3/4"
HOV-40-040	DS-FM-HOV-40-001	130	10FMD014	GATE	SCREWED	1/2"
HOV-40-052	DS-FM-HOV-40-001	130	40FMD001	GATE	SCREWED	1 1/2"
HOV-40-053	DS-FM-HOV-40-001	130	40FMD001	GATE	SCREWED	1 1/2"
HOV-40-054	DS-FM-HOV-40-001	130	40FMD001	GATE	SCREWED	1/2"
HOV-40-055	DS-FM-HOV-40-001	130	40FMD001	GATE	SCREWED	1/2"
HOV-40-056	DS-FM-HOV-40-001	130	40FMD001	GATE	SCREWED	1/2"
HOV-40-057	DS-FM-HOV-40-001	130	40FMD001	GATE	SCREWED	1/2"
HOV-40-058	DS-FM-HOV-40-001	130	40FMD001	GATE	SCREWED	1/2"
HOV-40-059	DS-FM-HOV-40-001	130	40FMD001	GATE	SCREWED	1/2"
HOV-40-060	DS-FM-HOV-40-001	130	40FMD001	GATE	SCREWED	1 1/2"
HOV-40-061	DS-FM-HOV-40-001	130	40FMD001	GATE	SCREWED	1 1/2"
HOV-40-062	DS-FM-HOV-40-001	130	40FMD001	GATE	SCREWED	1/2"
HOV-40-063	DS-FM-HOV-40-001	130	40FMD001	GATE	SCREWED	1/2"
HOV-40-067	DS-FM-HOV-40-001	130	40FMD001	GATE	SCREWED	1/2"
HOV-40-068	DS-FM-HOV-40-001	130	40FMD001	GATE	SCREWED	1/2"
HOV-40-069	DS-FM-HOV-40-070	190	40FMD001	BLEEDER VALVE	SCREWED	1/2"
HOV-40-070	DS-FM-HOV-40-070	190	40FMD001	BLEEDER VALVE	SCREWED	1/2"
HOV-40-071	DS-FM-HOV-40-070	190	40FMD001	BLEEDER VALVE	SCREWED	1/2"
HOV-40-072	DS-FM-HOV-40-070	190	40FMD001	BLEEDER VALVE	SCREWED	1/2"
HOV-40-073	DS-FM-HOV-40-070	190	40FMD001	BLEEDER VALVE	SCREWED	1/2"
HOV-40-074	DS-FM-HOV-40-070	190	40FMD001	BLEEDER VALVE	SCREWED	1/2"

VALVE NUMBER	DATA SHEET OR SPECIFICATION	STANDARD VALVE NO.	P&ID NO.	TYPE	PIPE CONNECTIONS	SIZE
HOV-51-001	02510	N/A	51FMD002	GATE	FLANGED	4"
HOV-51-002	02510	N/A	51FMD002	GATE	SCREWED	2"
HOV-51-003	02510	N/A	51FMD002	GATE	SCREWED	1"
HOV-51-004	02510	N/A	51FMD002	GATE	SCREWED	1"
HOV-51-005	02510	N/A	51FMD002	GATE	SCREWED	1"
HOV-51-006	02510	N/A	51FMD002	GATE	SCREWED	1"
HOV-51-007	02510	N/A	51FMD002	GATE	SCREWED	1"
HOV-51-008	02510	N/A	51FMD002	GATE	SCREWED	1"
HOV-51-009	02510	N/A	51FMD002	GATE	SCREWED	1"
HOV-51-010	02510	N/A	51FMD002	GATE	SCREWED	1"
HOV-51-011	02510	N/A	51FMD002	GATE	SCREWED	1"
HOV-51-012	02510	N/A	51FMD002	GATE	SCREWED	1"
HOV-51-013	02510	N/A	51FMD002	GATE	SCREWED	2"
HOV-51-014	02510	N/A	51FMD002	GATE	SCREWED	2"
HOV-51-015	02510	N/A	51FMD002	GATE	SCREWED	2"
HOV-51-016	DS-FM-HOV-20-001	230	51FMD004	BALL	SCREWED	3/4"
HOV-51-017	DS-FM-HOV-51-017	290	51FMD003	GLOBE	FLANGED	1 1/2"
HOV-51-018	DS-FM-HOV-40-070	190	51FMD003	BLEEDER VALVE	SCREWED	1/2"
HOV-51-019	DS-FM-HOV-40-001	230	51FMD004	BALL	SCREWED	3/4"
HOV-51-020	DS-FM-HOV-40-001	230	51FMD004	BALL	SCREWED	3/4"
HOV-51-021	DS-FM-HOV-40-001	230	51FMD004	BALL	SCREWED	3/4"
HOV-51-022	DS-FM-HOV-40-001	230	51FMD004	BALL	SCREWED	3/4"
HOV-51-023	DS-FM-HOV-40-001	230	51FMD004	BALL	SCREWED	3/4"
HOV-51-024	DS-FM-HOV-40-001	230	51FMD004	BALL	SCREWED	3/4"
HOV-51-025	DS-FM-HOV-40-001	230	51FMD004	BALL	SCREWED	3/4"
HOV-51-026	DS-FM-HOV-40-001	230	51FMD004	BALL	SCREWED	3/4"
HOV-51-027	DS-FM-HOV-40-001	230	51FMD004	BALL	SCREWED	3/4"
HOV-51-028	DS-FM-HOV-40-001	230	51FMD004	BALL	SCREWED	3/4"
HOV-51-029	DS-FM-HOV-40-001	230	51FMD004	BALL	SCREWED	3/4"
HOV-51-030	DS-FM-HOV-40-001	230	51FMD004	BALL	SCREWED	3/4"
HOV-51-031	DS-FM-HOV-20-001	230	51FMD004	BALL	SCREWED	2"
HOV-51-032	DS-FM-HOV-20-001	230	51FMD004	BALL	SCREWED	2"
HOV-51-033	DS-FM-HOV-20-001	230	51FMD004	BALL	SCREWED	1"
HOV-51-034	DS-FM-HOV-20-001	230	51FMD004	BALL	SCREWED	1"
HOV-51-035	DS-FM-HOV-20-001	230	51FMD004	BALL	SCREWED	1"
HOV-51-036	DS-FM-HOV-10-009	220	51FMD003	BALL	FLANGED	4"
HOV-51-037	DS-FM-HOV-10-009	220	51FMD003	BALL	FLANGED	3"
HOV-51-038	DS-FM-HOV-20-001	230	51FMD003	BALL	SCREWED	1"
HOV-51-039	DS-FM-HOV-20-001	230	51FMD003	BALL	SCREWED	2"
HOV-51-041	DS-FM-HOV-10-009	220	51FMD004	BALL	FLANGED	3"
HOV-51-043	DS-FM-HOV-20-001	230	10FMD012	BALL	SCREWED	1"
HOV-51-044	DS-FM-HOV-20-001	230	10FMD012	BALL	SCREWED	1"
HOV-51-045	DS-FM-HOV-20-001	230	10FMD012	BALL	SCREWED	1"
HOV-51-046	DS-FM-HOV-20-001	230	11FMD016	BALL	SCREWED	1"
HOV-51-047	DS-FM-HOV-20-001	230	11FMD016	BALL	SCREWED	1"
HOV-51-048	DS-FM-HOV-20-001	230	11FMD016	BALL	SCREWED	1"
HOV-51-049	DS-FM-HOV-10-009	220	51FMD003	BALL	FLANGED	1/2"
HOV-51-053	DS-FM-HOV-10-009	220	51FMD004	BALL	FLANGED	3"
HOV-51-054	DS-FM-HOV-20-001	230	51FMD004	BALL	SCREWED	1"
HOV-51-055	DS-FM-HOV-20-001	230	51FMD004	BALL	SCREWED	1"
HOV-51-056	DS-FM-HOV-20-001	230	51FMD004	BALL	SCREWED	2"
HOV-51-057	DS-FM-HOV-20-001	230	51FMD004	BALL	SCREWED	3/4"
HOV-51-058	DS-FM-HOV-20-001	230	51FMD004	BALL	SCREWED	3/4"
HOV-51-059	DS-FM-HOV-20-001	230	51FMD004	BALL	SCREWED	3/4"
HOV-51-060	DS-FM-HOV-20-001	230	51FMD004	BALL	SCREWED	3/4"
HOV-51-061	DS-FM-HOV-20-001	230	11FMD010	BALL	SCREWED	1"
HOV-51-062	DS-FM-HOV-20-001	230	51FMD004	BALL	SCREWED	1"
HOV-51-063	DS-FM-HOV-20-001	230	51FMD004	BALL	SCREWED	1"
HOV-51-064	DS-FM-HOV-20-001	230	51FMD004	BALL	SCREWED	1"
HOV-51-065	DS-FM-HOV-20-001	230	51FMD004	BALL	SCREWED	1"
HOV-51-066	02510	N/A	51FMD003	GATE	SCREWED	2"
HOV-51-067	02510	N/A	10FMD015	GATE	SCREWED	2"
HOV-51-068	02510	N/A	10FMD015	GATE	SCREWED	2"
LVR-10-001	DS-FM-LVR-20-001	N/A	10FMD004	OPPOSED BLADE DAMPER	FLANGED	9" X 12"
LVR-10-002	DS-FM-LVR-20-001	N/A	10FMD004	OPPOSED BLADE DAMPER	FLANGED	9" X 12"
LVR-10-003	DS-FM-LVR-20-001	N/A	10FMD005	OPPOSED BLADE DAMPER	FLANGED	9" X 12"
LVR-10-004	DS-FM-LVR-20-001	N/A	10FMD005	OPPOSED BLADE DAMPER	FLANGED	10"
LVR-10-005	DS-FM-LVR-20-001	N/A	10FMD005	OPPOSED BLADE DAMPER	FLANGED	9" X 12"
LVR-20-001	DS-FM-LVR-20-001	N/A	20FMD013	OPPOSED BLADE DAMPER	FLANGED	6" X 12"
LVR-20-002	DS-FM-LVR-20-001	N/A	20FMD013	OPPOSED BLADE DAMPER	FLANGED	6" X 12"
LVR-20-003	DS-FM-LVR-20-001	N/A	20FMD013	OPPOSED BLADE DAMPER	FLANGED	6" X 12"
LVR-20-004	DS-FM-LVR-20-001	N/A	20FMD013	OPPOSED BLADE DAMPER	FLANGED	6" X 12"
LVR-20-005	DS-FM-LVR-20-001	N/A	20FMD016	OPPOSED BLADE DAMPER	FLANGED	9" X 12"
LVR-20-006	DS-FM-LVR-20-001	N/A	20FMD016	OPPOSED BLADE DAMPER	FLANGED	9" X 12"
LVR-20-007	DS-FM-LVR-20-001	N/A	20FMD015	OPPOSED BLADE DAMPER	FLANGED	6" X 12"
LVR-20-008	DS-FM-LVR-20-001	N/A	20FMD015	OPPOSED BLADE DAMPER	FLANGED	6" X 12"
LVR-20-009	DS-FM-LVR-20-001	N/A	20FMD015	OPPOSED BLADE DAMPER	FLANGED	6" X 12"
LVR-20-010	DS-FM-LVR-20-001	N/A	20FMD015	OPPOSED BLADE DAMPER	FLANGED	6" X 12"
LVR-20-011	DS-FM-LVR-20-001	N/A	20FMD015	OPPOSED BLADE DAMPER	FLANGED	6" X 12"
LVR-20-012	DS-FM-LVR-20-001	N/A	20FMD015	OPPOSED BLADE DAMPER	FLANGED	6" X 12"
LVR-20-013	DS-FM-LVR-20-001	N/A	20FMD015	OPPOSED BLADE DAMPER	FLANGED	6" X 12"
LVR-20-014	DS-FM-LVR-20-001	N/A	20FMD015	OPPOSED BLADE DAMPER	FLANGED	6" X 12"
LVR-20-015	DS-FM-LVR-20-001	N/A	20FMD019	OPPOSED BLADE DAMPER	FLANGED	6" X 12"
LVR-20-016	DS-FM-LVR-20-001	N/A	20FMD019	OPPOSED BLADE DAMPER	FLANGED	12" X 12"
LVR-20-017	DS-FM-LVR-20-001	N/A	20FMD016	OPPOSED BLADE DAMPER	FLANGED	9" X 12"
LVR-20-019	DS-FM-LVR-20-001	N/A	20FMD016	OPPOSED BLADE DAMPER	FLANGED	6" X 12"
LVR-20-020	DS-FM-LVR-20-001	N/A	20FMD019	OPPOSED BLADE DAMPER	FLANGED	12" X 12"
LVR-20-021	DS-FM-LVR-20-001	N/A	20FMD016	OPPOSED BLADE DAMPER	FLANGED	9" X 12"

VALVE NUMBER	DATA SHEET OR SPECIFICATION	STANDARD VALVE NO.	P&ID NO.	TYPE	PIPE CONNECTIONS	SIZE
MOV-10-001	DS-FM-MOV-11-001	200	10FMD013	3-WAY BALL	FLANGED	4"
MOV-11-001	DS-FM-MOV-11-001	200	11FMD011	3-WAY BALL	FLANGED	4"
MOV-11-002	DS-FM-MOV-12-007	150	11FMD014	BALL	FLANGED	3"
MOV-12-001	DS-FM-MOV-11-001	200	12FMD009	3-WAY BALL	FLANGED	4"
MOV-12-002	DS-FM-MOV-11-001	200	12FMD009	3-WAY BALL	FLANGED	4"
MOV-12-003	DS-FM-MOV-11-001	200	12FMD009	3-WAY BALL	FLANGED	4"
MOV-12-004	DS-FM-MOV-11-001	200	12FMD009	3-WAY BALL	FLANGED	4"
MOV-12-005	DS-FM-MOV-11-001	200	12FMD009	3-WAY BALL	FLANGED	4"
MOV-12-006	DS-FM-MOV-11-001	200	12FMD009	3-WAY BALL	FLANGED	4"
MOV-12-007	DS-FM-MOV-12-007	150	12FMD009	BALL	FLANGED	3"
MOV-12-008	DS-FM-MOV-12-007	150	12FMD016	BALL	FLANGED	1"
MOV-12-009	DS-FM-MOV-12-007	150	12FMD016	BALL	FLANGED	3"
MOV-12-010	DS-FM-MOV-11-001	200	12FMD009	3-WAY BALL	FLANGED	3"
MOV-12-011	DS-FM-MOV-11-001	200	12FMD009	3-WAY BALL	FLANGED	3"
MOV-12-012	DS-FM-MOV-12-012	210	20FMD017	BALL	FLANGED	2"
MOV-12-013	DS-FM-MOV-11-001	200	12FMD009	3-WAY BALL	FLANGED	3"
MOV-12-014	DS-FM-MOV-11-001	200	12FMD009	3-WAY BALL	FLANGED	3"
MOV-12-019	DS-FM-MOV-12-007	150	12FMD016	BALL	FLANGED	4"
MOV-12-020	DS-FM-MOV-12-015	240	12FMD016	BALL	FLANGED	4"
MOV-12-021	DS-FM-MOV-12-015	240	12FMD017	BALL	FLANGED	1 1/2"
MOV-12-022	DS-FM-MOV-12-015	240	12FMD017	BALL	FLANGED	2"
MOV-20-001	DS-FM-MOV-12-012	210	20FMD017	BALL	FLANGED	3"
MOV-20-002	DS-FM-MOV-12-012	210	20FMD017	BALL	FLANGED	3"
MOV-20-003	DS-FM-MOV-12-012	210	20FMD017	BALL	FLANGED	1"
MOV-20-004	DS-FM-MOV-12-012	210	20FMD017	BALL	FLANGED	1"
MOV-20-005	DS-FM-MOV-12-012	210	20FMD017	BALL	FLANGED	1"
MOV-20-006	DS-FM-MOV-12-012	210	20FMD017	BALL	FLANGED	1"
MOV-51-001	DS-FM-MOV-51-001	180	51FMD003	BALL	SCREWED	2"
MOV-51-002	DS-FM-MOV-12-015	240	51FMD004	BALL	FLANGED	3"
MOV-51-003	DS-FM-MOV-12-015	240	51FMD004	BALL	FLANGED	3"
MOV-51-015	DS-FM-MOV-51-001	180	51FMD004	BALL	SCREWED	3/4"
MOV-51-016	DS-FM-MOV-51-001	180	51FMD004	BALL	SCREWED	3/4"
MOV-51-017	DS-FM-MOV-51-001	180	51FMD004	BALL	SCREWED	3/4"
MOV-51-018	DS-FM-MOV-51-001	180	51FMD004	BALL	SCREWED	3/4"
PCV-ACP-40-001	DS-FM-PCV-ACP-40-001	310	40FMD001	REGULATOR	SCREWED	1 1/2"
PCV-SILO-20-001	DS-FM-PCV-TNK	270	20FMD013	VACUUM RELIEF	FLANGED	2"
PCV-SILO-20-002	DS-FM-PCV-TNK	270	20FMD012	VACUUM RELIEF	FLANGED	2"
PCV-TNK-12-001A	DS-FM-PCV-TNK	270	20FMD015	VACUUM RELIEF	FLANGED	2"
PCV-TNK-12-001B	DS-FM-PCV-TNK	270	20FMD015	VACUUM RELIEF	FLANGED	2"
PCV-TNK-12-002A	DS-FM-PCV-TNK	270	20FMD015	VACUUM RELIEF	FLANGED	2"
PCV-TNK-12-002B	DS-FM-PCV-TNK	270	20FMD015	VACUUM RELIEF	FLANGED	2"
PCV-TNK-12-003	DS-FM-PCV-TNK	270	20FMD014	VACUUM RELIEF	FLANGED	2"
PCV-TNK-12-004	DS-FM-PCV-TNK	270	20FMD014	VACUUM RELIEF	FLANGED	2"
PCV-TNK-20-002A	DS-FM-PCV-TNK	270	20FMD017	RELIEF	FLANGED	2"
PCV-TNK-20-002B	DS-FM-PCV-TNK	270	20FMD017	RELIEF	FLANGED	2"
PRV-TNK-14-001	DS-FM-PCV-TNK	270	20FMD020	RELIEF	FLANGED	2"
SOV-20-001	DS-FM-SOV-20-001	N/A	20FMD018	GLOBE	SCREWED	1"

3388

NOTES:

1. VENDOR SUPPLIED VALVES SUCH AS VALVES ON SKIDS ARE NOT REFLECTED IN THIS VALVE LIST.
2. FOR SYSTEM 90 INSTRUMENTATION VALVES SEE DRAWING 90FID115.

000493

THE ORIGINAL DRAWING AND SUBSEQUENT REVISIONS THEREOF, WITH APPROVAL NAMES, INITIALS, AND THE PE SEAL, IF APPLICABLE, ARE MAINTAINED IN THE FILES OF FWENC.

REV	DATE	BY	CHK'D	APR'VD	DESCRIPTION/ISSUE
0	08/10/00	BJD	BJL	KDR	CERTIFIED FOR CONSTRUCTION

PE: STATE OF OHIO, KENNETH D. RICKETT, E-54618, REGISTERED PROFESSIONAL ENGINEER

		DATE
DRAWN BY	BJ Davis	08/10/00
DESIGNED BY	BJ Davis	08/10/00
CHECKED BY	B.L. Langley	08/10/00
APPROVED BY	Kenneth D. Rickett	08/10/00
APPROVED BY	John Lawson	8/10/00

000101

DEPARTMENT OF ENERGY
FERNALD ENVIRONMENTAL MANAGEMENT PROJECT
SILOS 1 AND 2 ACCELERATED WASTE RETRIEVAL PROJECT
FERNALD, OHIO
FDF CONTRACT NO. FSC 624

FOSTER WHEELER
FOSTER WHEELER ENVIRONMENTAL CORPORATION

TITLE
MISC FACILITIES
PIPING & INSTRUMENT DIAGRAM
VALVE LIST - SHEET 2

SIZE	SCALE:	DWG. NO.	REV
D	NONE	05FMD006	0

3388

EQUIPMENT LOCATION MATRIX

MODE	LOCATION \ MODULE	DECANT MODULE DEC-12-200	DECANT MODULE DEC-12-201	SLURRY MODULE SLR-11-200	SLURRY MODULE SLR-11-201	SLURRY MODULE SLR-11-202	SLUICER MODULE SLC-11-203	SLUICER MODULE SLC-11-204	SLUICER MODULE SLC-11-205	EMMA MODULE EMA-14-400	EMMA MODULE EMA-14-401	DEBRIS REMOVAL MODULE DRM-11-600	DEBRIS REMOVAL MODULE DRM-11-601
FSM BULK/CAT SILO 4	SILO 1 BRIDGE												
	SILO 2 BRIDGE												
	SILO 4 BRIDGE			■			■			■		■	
	TANK TNK-12-001A	■											
	TANK TNK-12-001B		■										
	TANK TNK-12-002A												
	TANK TNK-12-002B												
FSM TWRS MODE TANK TNK-12-001A	SILO 1 BRIDGE												
	SILO 2 BRIDGE												
	SILO 4 BRIDGE												
	TANK TNK-12-001A					■		■	■				
	TANK TNK-12-001B												
	TANK TNK-12-002A												
	TANK TNK-12-002B												
FSM TWRS MODE TANK TNK-12-001B	SILO 1 BRIDGE												
	SILO 2 BRIDGE												
	SILO 4 BRIDGE												
	TANK TNK-12-001A												
	TANK TNK-12-001B		■										
	TANK TNK-12-002A												
	TANK TNK-12-002B												
SWRS BULK MODE SILO 2	SILO 1 BRIDGE												
	SILO 2 BRIDGE				■			■			■		■
	SILO 4 BRIDGE												
	TANK TNK-12-001A												
	TANK TNK-12-001B												
	TANK TNK-12-002A	■											
	TANK TNK-12-002B		■										
SWRS BULK MODE SILO 1	SILO 1 BRIDGE				■			■			■		■
	SILO 2 BRIDGE												
	SILO 4 BRIDGE												
	TANK TNK-12-001A	■											
	TANK TNK-12-001B		■										
	TANK TNK-12-002A												
	TANK TNK-12-002B												
SWRS CATS MODE SILO 2	SILO 1 BRIDGE												
	SILO 2 BRIDGE				■			■			■		■
	SILO 4 BRIDGE												
	TANK TNK-12-001A												
	TANK TNK-12-001B												
	TANK TNK-12-002A	■											
	TANK TNK-12-002B		■										
SWRS CATS MODE SILO 1	SILO 1 BRIDGE				■			■			■		■
	SILO 2 BRIDGE												
	SILO 4 BRIDGE												
	TANK TNK-12-001A	■											
	TANK TNK-12-001B		■										
	TANK TNK-12-002A												
	TANK TNK-12-002B												
TWRS MODE TANK TNK-12-001A	SILO 1 BRIDGE												
	SILO 2 BRIDGE												
	SILO 4 BRIDGE												
	TANK TNK-12-001A					■		■	■				
	TANK TNK-12-001B												
	TANK TNK-12-002A												
	TANK TNK-12-002B												
TWRS MODE TANK TNK-12-001B	SILO 1 BRIDGE												
	SILO 2 BRIDGE												
	SILO 4 BRIDGE												
	TANK TNK-12-001A												
	TANK TNK-12-001B					■		■	■				
	TANK TNK-12-002A												
	TANK TNK-12-002B												
TWRS MODE TANK TNK-12-002A	SILO 1 BRIDGE												
	SILO 2 BRIDGE												
	SILO 4 BRIDGE												
	TANK TNK-12-001A												
	TANK TNK-12-001B												
	TANK TNK-12-002A					■		■	■				
	TANK TNK-12-002B												
TWRS MODE TANK TNK-12-002B	SILO 1 BRIDGE												
	SILO 2 BRIDGE												
	SILO 4 BRIDGE												
	TANK TNK-12-001A												
	TANK TNK-12-001B												
	TANK TNK-12-002A												
	TANK TNK-12-002B					■		■	■				

NOTES:

1. THE FOLLOWING PROVIDES A CROSS-REFERENCE FOR THE EQUIPMENT IDENTIFICATION NUMBERS AND THEIR ASSOCIATED COMMON NAMES:

IDENTIFICATION NUMBER	DESCRIPTION
DEC-12-200	DECANT MODULE 1
DEC-12-201	DECANT MODULE 2
SLR-11-200	SLURRY MODULE 1
SLR-11-201	SLURRY MODULE 2
SLR-11-202	SLURRY MODULE 3
SLC-11-203	SLUICER MODULE 1
SLC-11-204	SLUICER MODULE 2
SLC-11-205	SLUICER MODULE 3
EMA-14-400	EMMA MODULE 1
EMA-14-401	EMMA MODULE 2
DRM-11-600	DEBRIS REMOVAL MODULE 1
DRM-11-601	DEBRIS REMOVAL MODULE 2

2. OVER THE LIFE OF THE PROJECT THE VARIOUS MODULES ARE USED IN A VARIETY OF PHYSICAL LOCATIONS AND SYSTEMS. THE TABLE PROVIDES A SNAPSHOT OF ALL ACTIVE COMPONENTS AT THE BEGINNING OF AN ACTIVITY. IT DOES NOT DISPOSITION INACTIVE COMPONENTS.

000494

THE ORIGINAL DRAWING AND SUBSEQUENT REVISIONS THEREOF, WITH APPROVAL NAMES, INITIALS, AND THE PE SEAL, IF APPLICABLE, ARE MAINTAINED IN THE FILES OF FWENC.

REV	DATE	BY	CHK'D	APR'VD	DESCRIPTION/ISSUE
0	08/10/00	DJD	AHT	KDR	CERTIFIED FOR CONSTRUCTION

000102

PE: STATE OF OHIO, KENNETH D. RICKETT, E-64418, REGISTERED PROFESSIONAL ENGINEER, 08/10/00

DRAWN BY: DJ Davis	DATE: 08/10/00	
DESIGNED BY: DJ Davis	DATE: 08/10/00	
CHECKED BY: A.N. Hampton	DATE: 8/10/00	
APPROVED BY: Kenneth D. Rickett	DATE: 08/10/00	
APPROVED BY: John Lawson	DATE: 8/10/00	

DEPARTMENT OF ENERGY
FERNALD ENVIRONMENTAL MANAGEMENT PROJECT
SILOS 1 AND 2 ACCELERATED WASTE RETRIEVAL PROJECT
FERNALD, OHIO
FDF CONTRACT NO. FSC 624

FOSTER WHEELER
FOSTER WHEELER ENVIRONMENTAL CORPORATION

TITLE: MISC FACILITIES MODULE LOCATION & IDENTIFICATION MATRIX

SIZE	SCALE:	DWG. NO.	REV
D	NONE	05FMD007	0

3388

NOTES:

1. FOR GENERAL NOTES SEE DRAWING 05FMD004.
2. FOR MASS BALANCE TABLES SEE DRAWING 10FMD001.

REFERENCE DRAWINGS:

05FMD001 -- INSTRUMENT IDENTIFICATION
05FMD002 -- CONTROL SYSTEM STANDARDS
05FMD003 -- PIPING & EQUIPMENT IDENTIFICATION
05FMD004 -- GENERAL NOTES
05FMD005 -- VALVE LIST - SHEET 1
05FMD006 -- VALVE LIST - SHEET 2

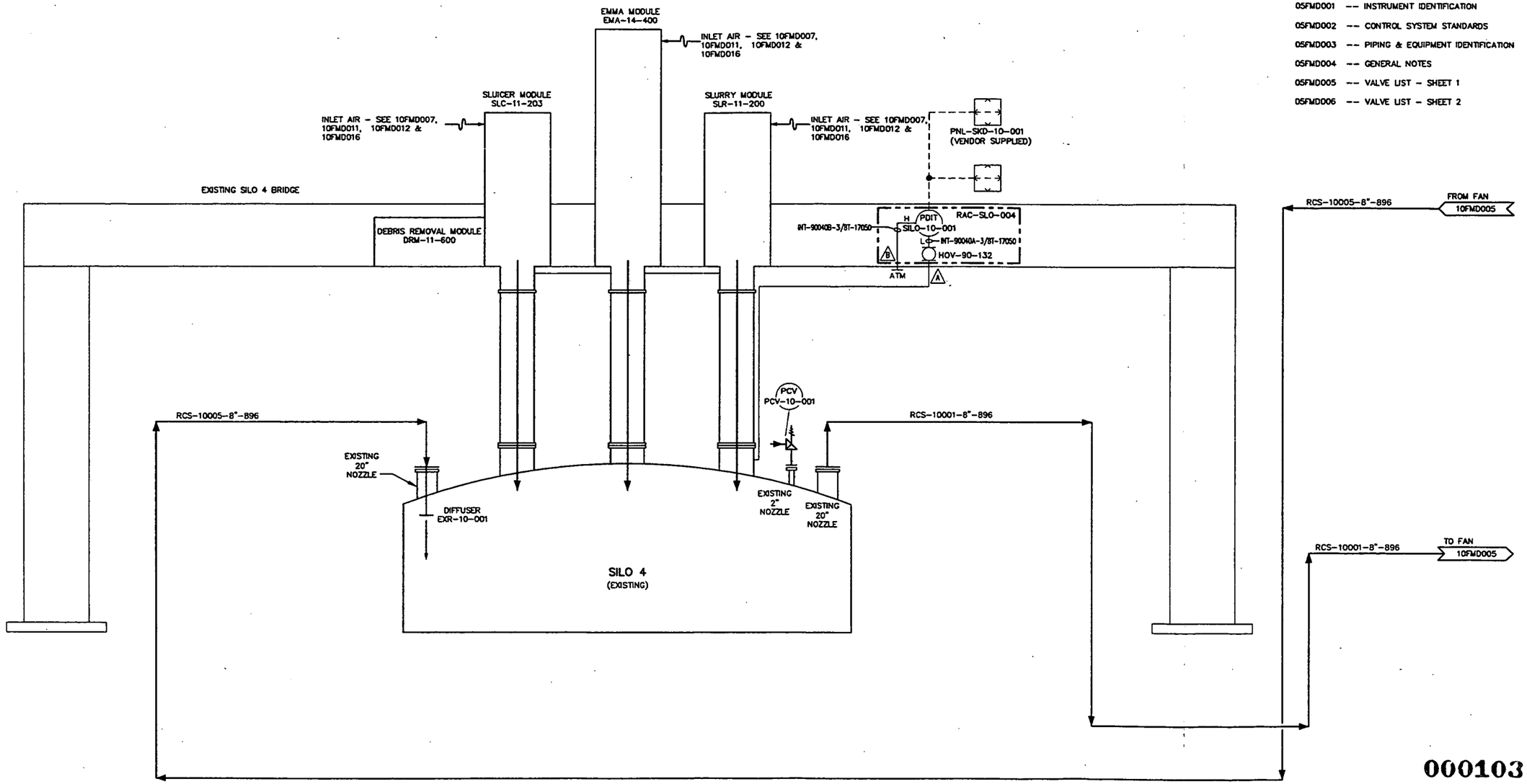

000103

000495

PRELIMINARY
NOT FOR CONSTRUCTION

REV	DATE	BY	CHK'D	APR'VD	DESCRIPTION/ISSUE
1	[illegible]				ISSUED FOR 90% REVIEW / CP-00-001
0	11/01/99	BJD	RAR		PRELIMINARY DESIGN SUBMITTAL

RPE

		DATE
DRAWN BY	B J DAVIS	11/01/99
DESIGNED BY	B J DAVIS	11/01/99
CHECKED BY	R A RIORDAN	11/01/99
APPROVED BY		
APPROVED BY		

DEPARTMENT OF ENERGY
FERNALD ENVIRONMENTAL MANAGEMENT PROJECT
SILOS 1 AND 2 ACCELERATED WASTE RETRIEVAL PROJECT
FERNALD, OHIO
FDF CONTRACT NO. FSC 624

FOSTER WHEELER
FOSTER WHEELER ENVIRONMENTAL CORPORATION

TITLE
FULL-SCALE MOCKUP SYSTEM
PIPING & INSTRUMENT DIAGRAM
RADON CONTROL SYSTEM

SIZE	SCALE	DWG. NO.	REV
D	NONE	10FMD004	1

FILENAME: 10FMD004.DWG

G:\CHARGE\FDFS" "C:\SYS10\10fmd004.dwg, 08/30/2000 12:24:41 PM

3388

NOTES:

1. FOR GENERAL NOTES SEE DRAWING 05FMD004.
2. FOR MASS BALANCE TABLES SEE DRAWING 10FMD001.

REFERENCE DRAWINGS:

05FMD001 -- INSTRUMENT IDENTIFICATION
05FMD002 -- CONTROL SYSTEM STANDARDS
05FMD003 -- PIPING & EQUIPMENT IDENTIFICATION
05FMD004 -- GENERAL NOTES
05FMD005 -- VALVE LIST - SHEET 1
05FMD006 -- VALVE LIST - SHEET 2

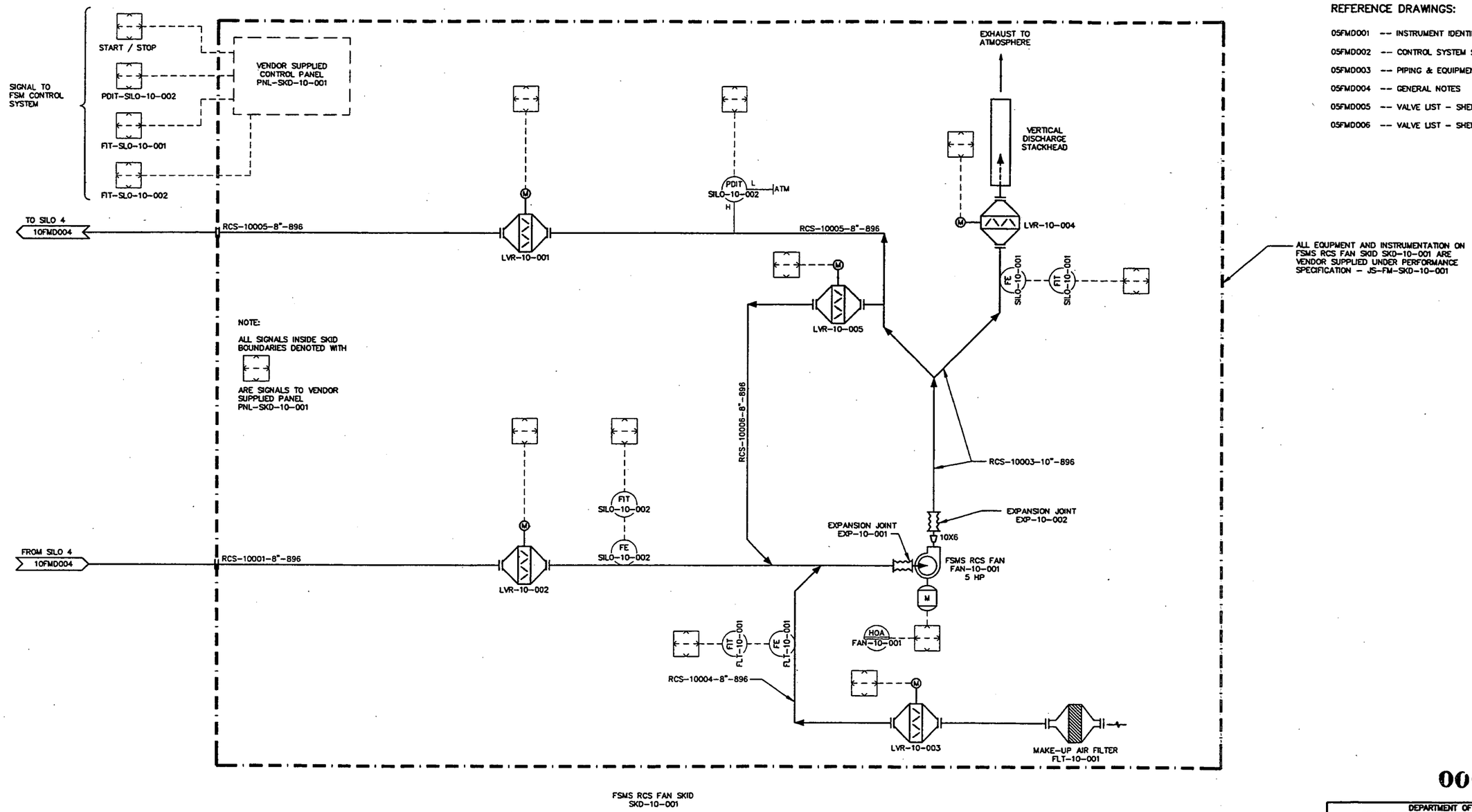

000104

000496

PRELIMINARY
NOT FOR CONSTRUCTION

REV	DATE	BY	CHK'D	APR'VD	DESCRIPTION/ISSUE
1	[illegible]	[illegible]	[illegible]		ISSUED FOR 90% REVIEW / CP-00-001
0	11/01/99	BJD	RAR		PRELIMINARY DESIGN SUBMITTAL

RPE

DRAWN BY B J DAVIS	DATE 11/01/99	
DESIGNED BY B J DAVIS	DATE 11/01/99	
CHECKED BY R A RIORDAN	DATE 11/01/99	
APPROVED BY	DATE	
APPROVED BY	DATE	

DEPARTMENT OF ENERGY
FERNALD ENVIRONMENTAL MANAGEMENT PROJECT
SILOS 1 AND 2 ACCELERATED WASTE RETRIEVAL PROJECT
FERNALD, OHIO
FDF CONTRACT NO. FSC 624

FOSTER WHEELER
FOSTER WHEELER ENVIRONMENTAL CORPORATION

TITLE
FULL-SCALE MOCKUP SYSTEM
PIPING & INSTRUMENT DIAGRAM
RADON CONTROL SYSTEM

SIZE	SCALE:	DWG. NO.	REV
D	NONE	10FMD005	1

FILENAME: 10FMD005.DWG

G:\CHARGE\EDFS\ECSYS10\10fmd005.dwg, 08/30/2000 12:24:47 PM

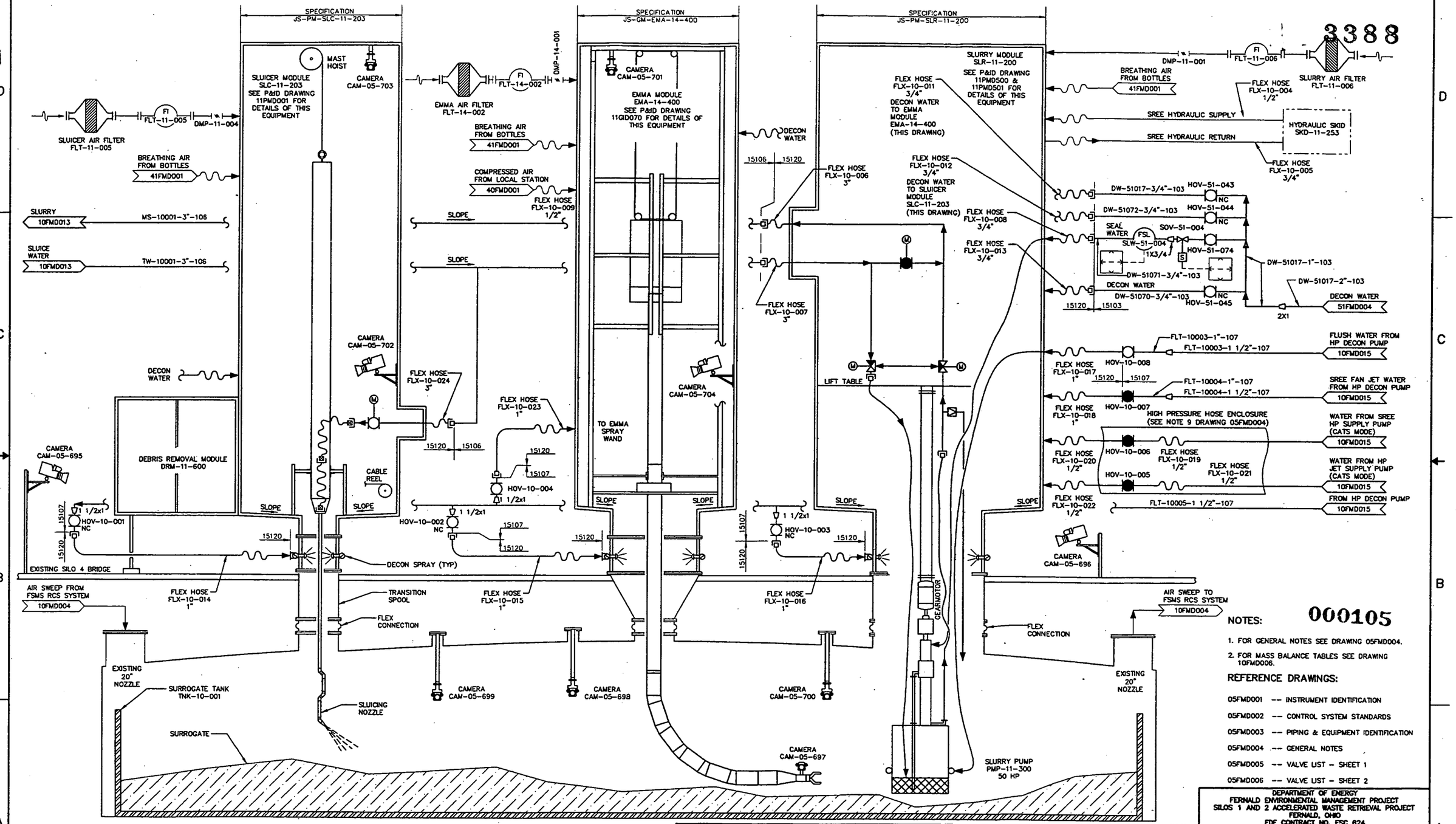

3388

000105

SILO 4 – SWRS MODE

NOTES:

1. FOR GENERAL NOTES SEE DRAWING 05FMD004.
2. FOR MASS BALANCE TABLES SEE DRAWING 10FMD006.

REFERENCE DRAWINGS:

05FMD001 -- INSTRUMENT IDENTIFICATION
05FMD002 -- CONTROL SYSTEM STANDARDS
05FMD003 -- PIPING & EQUIPMENT IDENTIFICATION
05FMD004 -- GENERAL NOTES
05FMD005 -- VALVE LIST – SHEET 1
05FMD006 -- VALVE LIST – SHEET 2

000497

PRELIMINARY
NOT FOR CONSTRUCTION

REV	DATE	BY	CHK'D	APR'VD	DESCRIPTION/ISSUE
1	8/31/99	BJD	RAR		ISSUED FOR 90% REVIEW / CP-00-001
0	11/01/99	BJD	RAR		PRELIMINARY DESIGN SUBMITTAL

RPE

DRAWN BY B J DAVIS	DATE 11/01/99	
DESIGNED BY B J DAVIS	DATE 11/01/99	
CHECKED BY R A RIORDAN	DATE 11/01/99	
APPROVED BY	DATE	
APPROVED BY	DATE	

DEPARTMENT OF ENERGY
FERNALD ENVIRONMENTAL MANAGEMENT PROJECT
SILOS 1 AND 2 ACCELERATED WASTE RETRIEVAL PROJECT
FERNALD, OHIO
FDF CONTRACT NO. FSC 624

FOSTER WHEELER
FOSTER WHEELER ENVIRONMENTAL CORPORATION

TITLE
FULL-SCALE MOCKUP SYSTEM PIPING & INSTRUMENT DIAGRAM SILO 4 – SWRS MODE

SIZE	SCALE:	DWG. NO.	REV
D	NONE	10FMD012	1

FILENAME: 10FMD012.DWG

G:\CHARGE\DFSII\YS10\10fmd012.dwg, 08/31/2000 08:46:00 AM

3388

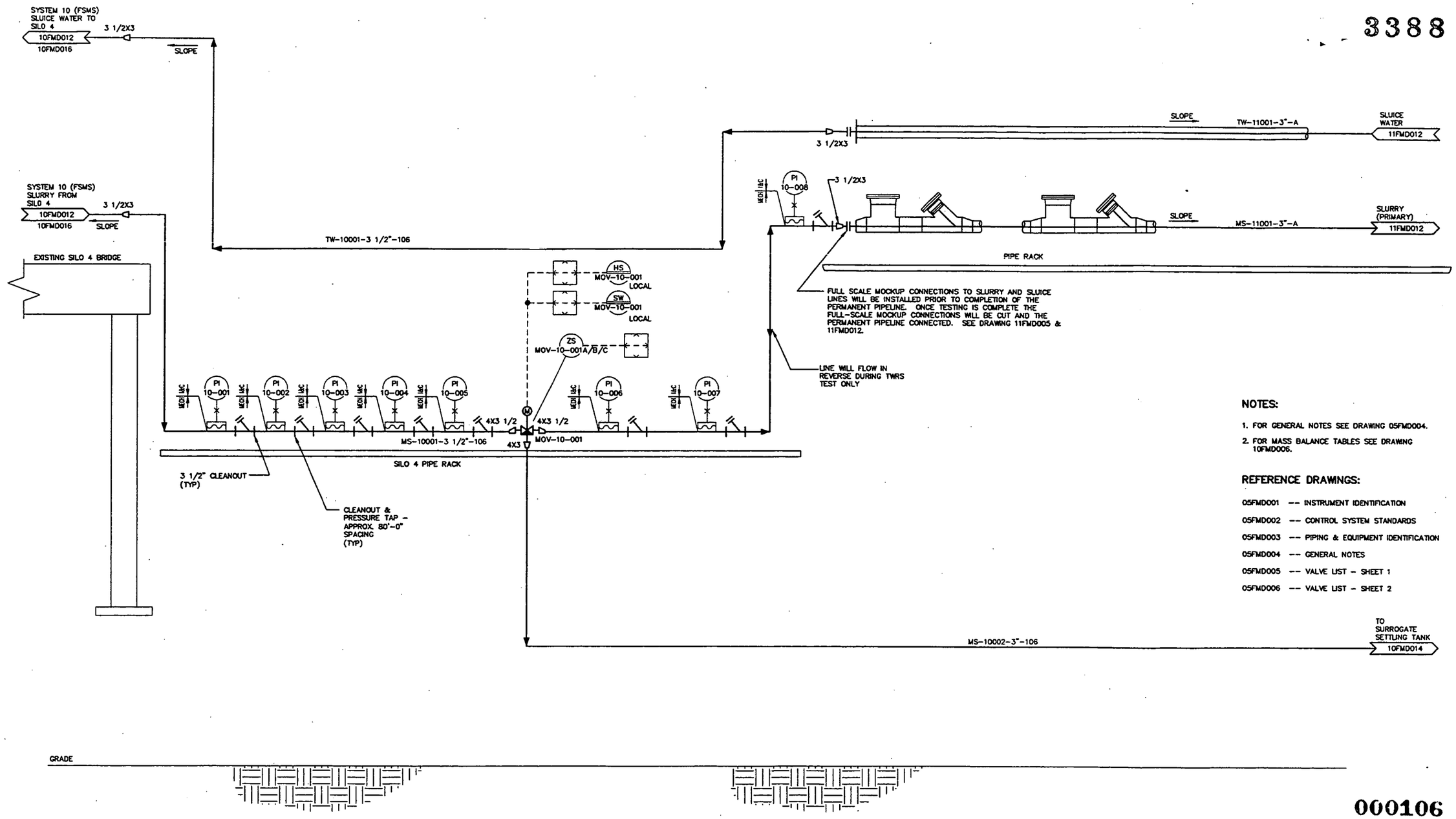

NOTES:

1. FOR GENERAL NOTES SEE DRAWING 05FMD004.
2. FOR MASS BALANCE TABLES SEE DRAWING 10FMD006.

REFERENCE DRAWINGS:

05FMD001 -- INSTRUMENT IDENTIFICATION
05FMD002 -- CONTROL SYSTEM STANDARDS
05FMD003 -- PIPING & EQUIPMENT IDENTIFICATION
05FMD004 -- GENERAL NOTES
05FMD005 -- VALVE LIST - SHEET 1
05FMD006 -- VALVE LIST - SHEET 2

000106

000498

PRELIMINARY
NOT FOR CONSTRUCTION

REV	DATE	BY	CHK'D	APR'VD	DESCRIPTION/ISSUE
1	9/21/00	BJD	RAR		ISSUED FOR 90% REVIEW / CP-00-001
0	11/01/99	BJD	RAR		PRELIMINARY DESIGN SUBMITTAL

RPE

DRAWN BY B J DAVIS	DATE 11/01/99	
DESIGNED BY B J DAVIS	DATE 11/01/99	
CHECKED BY R A RIORDAN	DATE 11/01/99	
APPROVED BY	DATE	
APPROVED BY	DATE	

DEPARTMENT OF ENERGY
FERNALD ENVIRONMENTAL MANAGEMENT PROJECT
SILOS 1 AND 2 ACCELERATED WASTE RETRIEVAL PROJECT
FERNALD, OHIO
FDF CONTRACT NO. FSC 624

FOSTER WHEELER
FOSTER WHEELER ENVIRONMENTAL CORPORATION

TITLE
FULL-SCALE MOCKUP SYSTEM
PIPING & INSTRUMENT DIAGRAM
SLURRY & WATER PIPING TIE-IN

SIZE	SCALE:	DWG. NO.	REV
D	NONE	10FMD013	1

FILENAME: 10FMD013.DWG

G:\CHARGE\FDFSI\SYS10\10fmd013.dwg, 08/30/2000 12:28:23 PM

NOTES:

1. FOR GENERAL NOTES SEE DRAWING 05FMD004.

3388

REFERENCE DRAWINGS:

05FMD001 -- INSTRUMENT IDENTIFICATION
05FMD002 -- CONTROL SYSTEM STANDARDS
05FMD003 -- PIPING & EQUIPMENT IDENTIFICATION
05FMD004 -- GENERAL NOTES
05FMD005 -- VALVE LIST - SHEET 1
05FMD006 -- VALVE LIST - SHEET 2

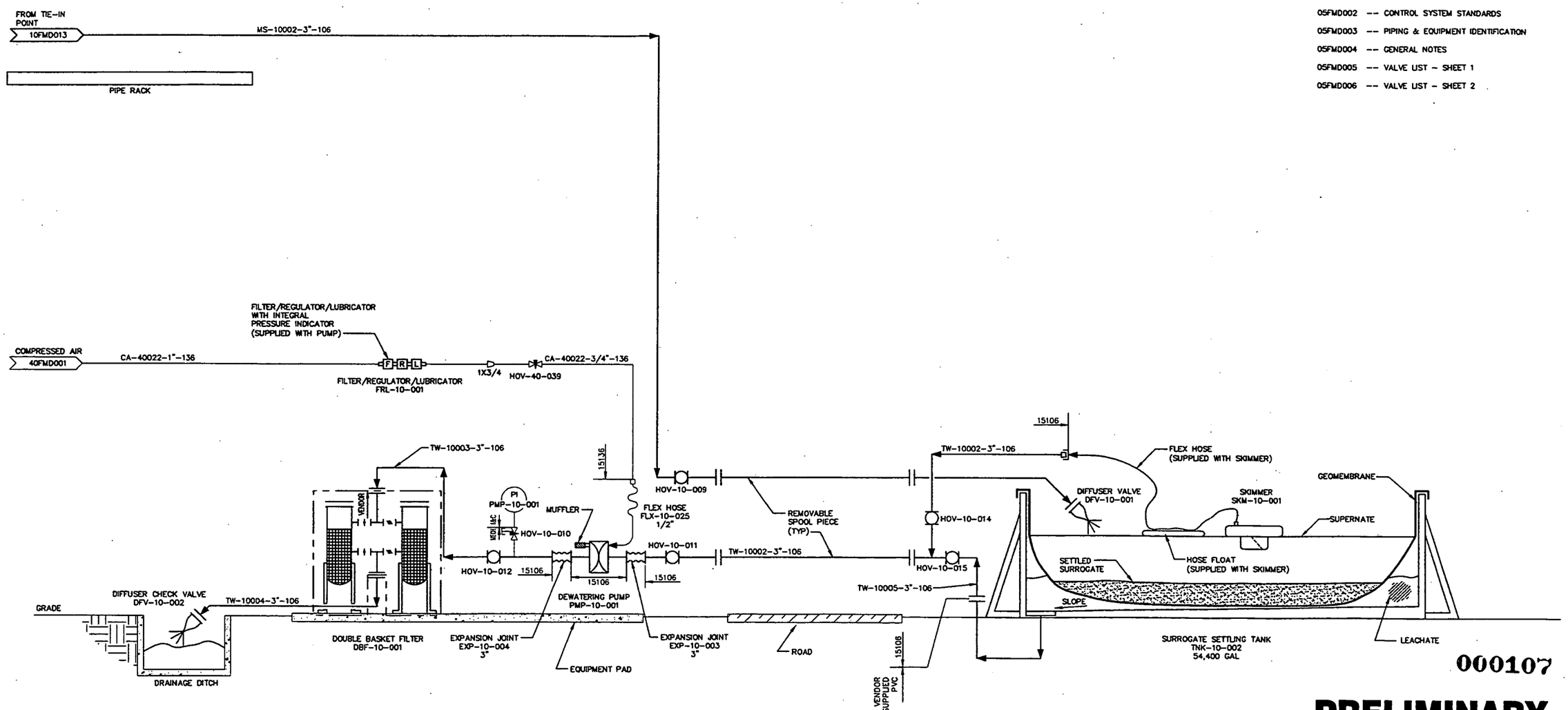

000107

PRELIMINARY
NOT FOR CONSTRUCTION

DEPARTMENT OF ENERGY
FERNALD ENVIRONMENTAL MANAGEMENT PROJECT
SILOS 1 AND 2 ACCELERATED WASTE RETRIEVAL PROJECT
FERNALD, OHIO
FDF CONTRACT NO. FSC 624

FOSTER WHEELER
FOSTER WHEELER ENVIRONMENTAL CORPORATION

TITLE
FULL-SCALE MOCKUP SYSTEM
PIPING & INSTRUMENT DIAGRAM
SURROGATE DEWATERING

REV	DATE	BY	CHK'D	APR'VD	DESCRIPTION/ISSUE
1	[illegible]	[illegible]	[illegible]		ISSUED FOR 90% REVIEW / CP-00-001
0	11/01/99	BJD	RAR		PRELIMINARY DESIGN SUBMITTAL

DRAWN BY B J DAVIS	DATE 11/01/99
DESIGNED BY B J DAVIS	DATE 11/01/99
CHECKED BY R A RIORDAN	DATE 11/01/99
APPROVED BY	DATE
APPROVED BY	DATE

SIZE D | SCALE: NONE | DWG. NO. 10FMD014 | REV 1

000499

G:\CHARGE\FDFSIL[illegible]SYS10\10fmd014.dwg, 08/30/2000 12:29:00 PM

FILENAME: 10FMD014.DWG

3388

NOTES:

1. FOR GENERAL NOTES SEE DRAWING 05FMD004.
2. FOR MASS BALANCE TABLES SEE DRAWING 10FMD006.

REFERENCE DRAWINGS:

05FMD001 -- INSTRUMENT IDENTIFICATION
05FMD002 -- CONTROL SYSTEM STANDARDS
05FMD003 -- PIPING & EQUIPMENT IDENTIFICATION
05FMD004 -- GENERAL NOTES
05FMD005 -- VALVE LIST - SHEET 1
05FMD006 -- VALVE LIST - SHEET 2

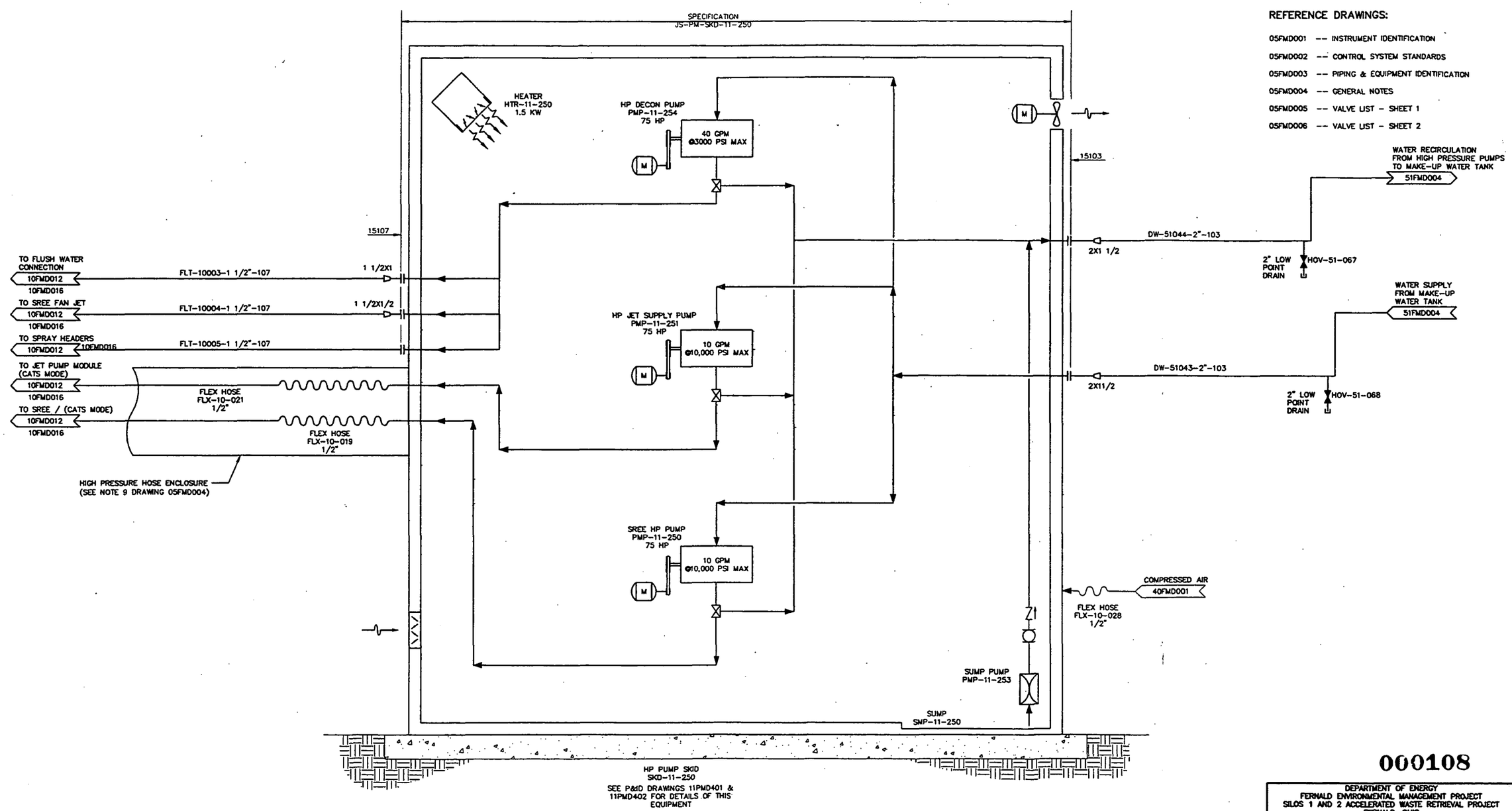

000108

000500

PRELIMINARY
NOT FOR CONSTRUCTION

REV	DATE	BY	CHK'D	APR'VD	DESCRIPTION/ISSUE
1	[illegible]	[illegible]	[illegible]		ISSUED FOR 90% REVIEW / CP-00-001
0	11/01/99	BJD	RAR		PRELIMINARY DESIGN SUBMITTAL

DRAWN BY: B J DAVIS	DATE: 11/01/99
DESIGNED BY: B J DAVIS	DATE: 11/01/99
CHECKED BY: R A RIORDAN	DATE: 11/01/99
APPROVED BY	DATE
APPROVED BY	DATE

DEPARTMENT OF ENERGY
FERNALD ENVIRONMENTAL MANAGEMENT PROJECT
SILOS 1 AND 2 ACCELERATED WASTE RETRIEVAL PROJECT
FERNALD, OHIO
FDF CONTRACT NO. FSC 624

FOSTER WHEELER
FOSTER WHEELER ENVIRONMENTAL CORPORATION

TITLE
FULL-SCALE MOCKUP SYSTEM
PIPING & INSTRUMENT DIAGRAM
HP PUMP SKID SKD-11-250

SIZE	SCALE	DWG. NO.	REV
D	NONE	10FMD015	1

FILENAME: 10FMD015.DWG

G:\CHARGE\FDFSIL...\SYS10\10fmd015.dwg, 08/30/2000 12:29:36 PM

3388

SPECIFICATION JS-PM-SLC-11-203

SPECIFICATION JS-GM-EMA-14-400

SPECIFICATION JS-PM-SLR-11-200

SLUICER AIR FILTER FLT-11-005

FI FLT-11-005

DMP-11-004

BREATHING AIR FROM BOTTLES 41FMD001

SLURRY 10FMD013

MS-10001-3"-106

SLUICE WATER 10FMD013

TW-10001-3"-106

DECON WATER

SLUICER MODULE SLC-11-203 SEE P&ID DRAWING 11PMD001 FOR DETAILS OF THIS EQUIPMENT

MAST HOIST

CAMERA CAM-05-703

CAMERA CAM-05-702

FLEX HOSE FLX-10-024 3"

DEBRIS REMOVAL MODULE DRM-11-600

CAMERA CAM-05-695

CABLE REEL

HOV-10-001 NC

EXISTING SILO 4 BRIDGE

AIR SWEEP FROM FSMS RCS SYSTEM 10FMD004

FLEX HOSE FLX-10-014 1"

TRANSITION SPOOL

FLEX CONNECTION

EXISTING 20" NOZZLE

SURROGATE TANK TNK-10-001

SLUICING NOZZLE

SURROGATE

SLOPE

EMMA AIR FILTER FLT-14-002

FI FLT-14-002

DMP-14-001

BREATHING AIR FROM BOTTLES 41FMD001

COMPRESSED AIR FROM LOCAL STATION 40FMD001

FLEX HOSE FLX-10-009 1/2"

FLEX HOSE FLX-10-023 1"

HOV-10-004

HOV-10-002 NC

DECON SPRAY (TYP)

FLEX HOSE FLX-10-015 1"

CAMERA CAM-05-699

CAMERA CAM-05-698

CAMERA CAM-05-701

EMMA MODULE EMA-14-400 SEE P&ID DRAWING 11GID070 FOR DETAILS OF THIS EQUIPMENT

TO EMMA SPRAY WAND

CAMERA CAM-05-704

HOV-10-003 NC

FLEX HOSE FLX-10-016 1"

CAMERA CAM-05-700

SREE

CAMERA CAM-05-697

JET PUMP

DECON WATER

FLEX HOSE FLX-10-006 3"

FLEX HOSE FLX-10-007 3"

LIFT TABLE

GEARMOTOR

SLURRY PUMP PMP-11-300 50 HP

SLURRY MODULE SLR-11-200 SEE P&ID DRAWING 11PMD500 & 11PMD501 FOR DETAILS OF THIS EQUIPMENT

FLEX HOSE FLX-10-011 3/4" DECON WATER TO EMMA MODULE EMA-14-400 (THIS DRAWING)

FLEX HOSE FLX-10-012 3/4" DECON WATER TO SLUICER MODULE SLC-11-203 (THIS DRAWING)

FLEX HOSE FLX-10-008 3/4"

FLEX HOSE FLX-10-013 3/4"

DMP-11-001

FI FLT-11-006

SLURRY AIR FILTER FLT-11-006

BREATHING AIR FROM BOTTLES 41FMD001

FLEX HOSE FLX-10-004 1/2"

SREE HYDRAULIC SUPPLY

SREE HYDRAULIC RETURN

HYDRAULIC SKID SKD-11-253

FLEX HOSE FLX-10-005 3/4"

DW-51017-3/4"-103 HOV-51-043 NC

DW-51072-3/4"-103 HOV-51-044 NC

SEAL WATER FSL SLW-51-004 SOV-51-004 HOV-51-074

DW-51071-3/4"-103

DECON WATER DW-51070-3/4"-103 HOV-51-045 NC

DW-51017-1"-103

DW-51017-2"-103

DECON WATER 51FMD004

FLUSH WATER FROM HP DECON PUMP 10FMD015

FLT-10003-1"-107

FLT-10003-1 1/2"-107

FLEX HOSE FLX-10-017 1" HOV-10-008 1 1/2x1

SREE FAN JET WATER FROM HP DECON PUMP 10FMD015

FLT-10004-1"-107

FLT-10004-1 1/2"-107

FLEX HOSE FLX-10-018 1" HOV-10-007 1 1/2x1

HIGH PRESSURE HOSE ENCLOSURE (SEE NOTE 9 DRAWING 05FMD004)

WATER FROM SREE HP SUPPLY PUMP (CATS MODE) 10FMD015

FLEX HOSE FLX-10-020 1/2" HOV-10-006 FLEX HOSE FLX-10-019 1/2" FLEX HOSE FLX-10-021 1/2" HOV-10-005

WATER FROM HP JET SUPPLY PUMP (CATS MODE) 10FMD015

FLEX HOSE FLX-10-022 1/2" FLT-10005-1 1/2"-107 FROM HP DECON PUMP 10FMD015

CAMERA CAM-05-696

AIR SWEEP TO FSMS RCS SYSTEM 10FMD004

FLEX CONNECTION

EXISTING 20" NOZZLE

000109

NOTES:

1. FOR GENERAL NOTES SEE DRAWING 05FMD004.
2. FOR MASS BALANCE TABLES SEE DRAWING 10FMD006.

REFERENCE DRAWINGS:

05FMD001 -- INSTRUMENT IDENTIFICATION
05FMD002 -- CONTROL SYSTEM STANDARDS
05FMD003 -- PIPING & EQUIPMENT IDENTIFICATION
05FMD004 -- GENERAL NOTES
05FMD005 -- VALVE LIST - SHEET 1
05FMD006 -- VALVE LIST - SHEET 2

SILO 4 - CATS MODE

000501

PRELIMINARY
NOT FOR CONSTRUCTION

REV	DATE	BY	CHK'D	APR'VD	DESCRIPTION/ISSUE
1	11/01/99	BJD	RAR		ISSUED FOR 90% REVIEW / CP-00-001
0	11/01/99	BJD	RAR		PRELIMINARY DESIGN SUBMITTAL

		DATE
DRAWN BY	B J DAVIS	11/01/99
DESIGNED BY	B J DAVIS	11/01/99
CHECKED BY	R A RIORDAN	11/01/99
APPROVED BY		
APPROVED BY		

DEPARTMENT OF ENERGY
FERNALD ENVIRONMENTAL MANAGEMENT PROJECT
SILOS 1 AND 2 ACCELERATED WASTE RETRIEVAL PROJECT
FERNALD, OHIO
FDF CONTRACT NO. FSC 624

FOSTER WHEELER
FOSTER WHEELER ENVIRONMENTAL CORPORATION

TITLE
FULL-SCALE MOCKUP SYSTEM
PIPING & INSTRUMENT DIAGRAM
SILO 4 - CATS MODE

SIZE	SCALE	DWG. NO.	REV
D	NONE	10FMD016	1

FILENAME: 10FMD016.DWG

G:\CHARGE\FDFSILOS\MECSYS\10\10fmd016.dwg, 08/31/2000 08:45:13 AM

3388

SPECIFICATION JS-PM-SLC-11-203

SPECIFICATION JS-GM-EMA-14-400

SPECIFICATION JS-PM-SLR-11-200

SLUICER MODULE SLC-11-204 SEE P&ID DRAWING 11PMD001 FOR DETAILS OF THIS EQUIPMENT

MAST HOIST

CAMERA CAM-05-687

AIR INLET SEE SYS 20

BREATHING AIR FROM BOTTLES 41FMD001

SLURRY 11FMD011 — MS-11001-3"-A — HI HI

SLUICE WATER 11FMD011 — TW-11001-3"-A — HI HI

FLEX HOSE FLX-11-016 3/4"

DECON WATER

DEBRIS REMOVAL MODULE DRM-11-601

CAMERA CAM-05-680

CAMERA CAM-05-688

FLEX HOSE FLX-11-013 6"

FLEX HOSE FLX-11-014 3"

CABLE REEL

SLOPE

HI

15120 15105

FLEX HOSE FLX-11-019 1"

15120 15107

HOV-11-004 1 1/2x1

HOV-11-002 NC 1 1/2x1 HI

15107 15120

HOV-11-001 NC 1 1/2x1

15107 15120

BRIDGE

RADIATION MONITOR

DECON SPRAY (TYP)

AIR SWEEP FROM RCS SYSTEM SEE SYS 20

FLEX HOSE FLX-11-018 1"

TRANSITION SPOOL

FLEX CONNECTION

EXISTING 20" NOZZLE

SLUICING NOZZLE

SLURRY

CAMERA CAM-05-684

CAMERA CAM-05-683

CAMERA CAM-05-685

CAMERA CAM-05-682

CAMERA CAM-05-686

EMMA MODULE EMA-14-401 SEE P&ID DRAWING 11GID070 FOR DETAILS OF THIS EQUIPMENT

AIR INLET SEE SYS 20

BREATHING AIR FROM BOTTLES 41FMD001

FLEX HOSE FLX-11-005 1/2"

COMPRESSED AIR FROM LOCAL STATION 40FMD001

TO EMMA SPRAY WAND

CAMERA CAM-05-689

FLEX HOSE FLX-11-015 3/4"

DECON WATER

15105 15120

FLEX HOSE FLX-11-010 3"

FLEX HOSE FLX-11-009 6"

FLEX HOSE FLX-11-011 3"

FLEX HOSE FLX-11-012 6"

LIFT TABLE

GEARMOTOR

SLURRY PUMP PMP-11-301 50 HP

SLURRY MODULE SLR-11-201 SEE P&ID DRAWING 11PMD500 & 11PMD501 FOR DETAILS OF THIS EQUIPMENT

FLEX HOSE FLX-11-016 3/4" DECON WATER TO SLUICER MODULE SLC-11-204 (THIS DRAWING)

FLEX HOSE FLX-11-015 3/4" DECON WATER TO EMMA MODULE EMA-14-401 (THIS DRAWING)

FLEX HOSE FLX-11-006 3/4"

FLEX HOSE FLX-11-017 3/4"

FLEX HOSE FLX-11-022 1"

FLEX HOSE FLX-11-023 1"

FLEX HOSE FLX-11-025 1/2"

FLEX HOSE FLX-11-027 1/2"

FLEX HOSE FLX-11-024 1/2"

FLEX HOSE FLX-11-026 1/2"

HIGH PRESSURE HOSE ENCLOSURE (SEE NOTE 9 DRAWING 05FMD004)

CAMERA CAM-05-681

AIR SWEEP TO RCS SYSTEM SEE SYS 20

AIR INLET SEE SYS 20

BREATHING AIR FROM BOTTLES 41FMD001

SREE HYDRAULIC SUPPLY

SREE HYDRAULIC RETURN

FLEX HOSE FLX-11-007 1/2"

FLEX HOSE FLX-11-008 3/4"

HYDRAULIC SKID SKD-11-254

15120 15103

DW-51016-3/4"-103 — HI HI — HOV-51-046 NC

DW-51062-3/4"-103 — HI HI — HOV-51-047 NC

SEAL WATER — FSL SLW-51-003 — SOV-51-003 — HOV-51-061

DW-51061-3/4"-103

DW-51016-1"-103

DECON WATER — HOV-51-048 NC — DW-51060-3/4"-103

2X1 — DECON WATER 51FMD004

HOV-11-008 1 1/2x1 — FLT-11003-1 1/2"-107 — FLUSH WATER FROM HP DECON PUMP 11FMD013

15120 15107

HOV-11-007 — FLT-11003-1"-107 — FLT-11004-1"-107 — FLT-11004-1 1/2"-107 — SREE FAN JET WATER FROM HP DECON PUMP 11FMD013

VA-12004-6"-891 — DMP-12-005 — AIR OUTLET SCREEN

HOV-11-006 — WATER FROM SREE HP SUPPLY PUMP (CATS MODE) 11FMD013

HOV-11-005 — WATER FROM HP JET SUPPLY PUMP (CATS MODE) 11FMD013

FLT-11005-1 1/2"-107 — FROM HP DECON PUMP 11FMD013

SILO 2 – SWRS MODE

NOTES:

1. FOR GENERAL NOTES SEE DRAWING 05FMD004.
2. FOR MASS BALANCE TABLES SEE DRAWING 11FMD001 & 11FMD002.

REFERENCE DRAWINGS:

05FMD001 -- INSTRUMENT IDENTIFICATION
05FMD002 -- CONTROL SYSTEM STANDARDS
05FMD003 -- PIPING & EQUIPMENT IDENTIFICATION
05FMD004 -- GENERAL NOTES
05FMD005 -- VALVE LIST – SHEET 1
05FMD006 -- VALVE LIST – SHEET 2

000110

000502

PRELIMINARY
NOT FOR CONSTRUCTION

REV	DATE	BY	CHK'D	APR'VD	DESCRIPTION/ISSUE
1	9/11/00	BJD	JWH		ISSUED FOR 90% REVIEW / CP-00-001
0	11/01/99	BJD	SWH		PRELIMINARY DESIGN SUBMITTAL

RPE

		DATE
DRAWN BY	B J DAVIS	11/01/99
DESIGNED BY	B J DAVIS	11/01/99
CHECKED BY	S W HUNGATE	11/01/99
APPROVED BY		DATE
APPROVED BY		DATE

DEPARTMENT OF ENERGY
FERNALD ENVIRONMENTAL MANAGEMENT PROJECT
SILOS 1 AND 2 ACCELERATED WASTE RETRIEVAL PROJECT
FERNALD, OHIO
FDF CONTRACT NO. FSC 624

FOSTER WHEELER
FOSTER WHEELER ENVIRONMENTAL CORPORATION

TITLE
SILO WASTE RETRIEVAL SYSTEM
PIPING & INSTRUMENT DIAGRAM
SILO 2 – SWRS MODE

SIZE	SCALE	DWG. NO.	REV
D	NONE	11FMD010	1

FILENAME: 11FMD010.DWG

G:\CHARGE\FDF\SIL\ CYS11\11fmd010.dwg, 08/30/2000 12:34:47 PM

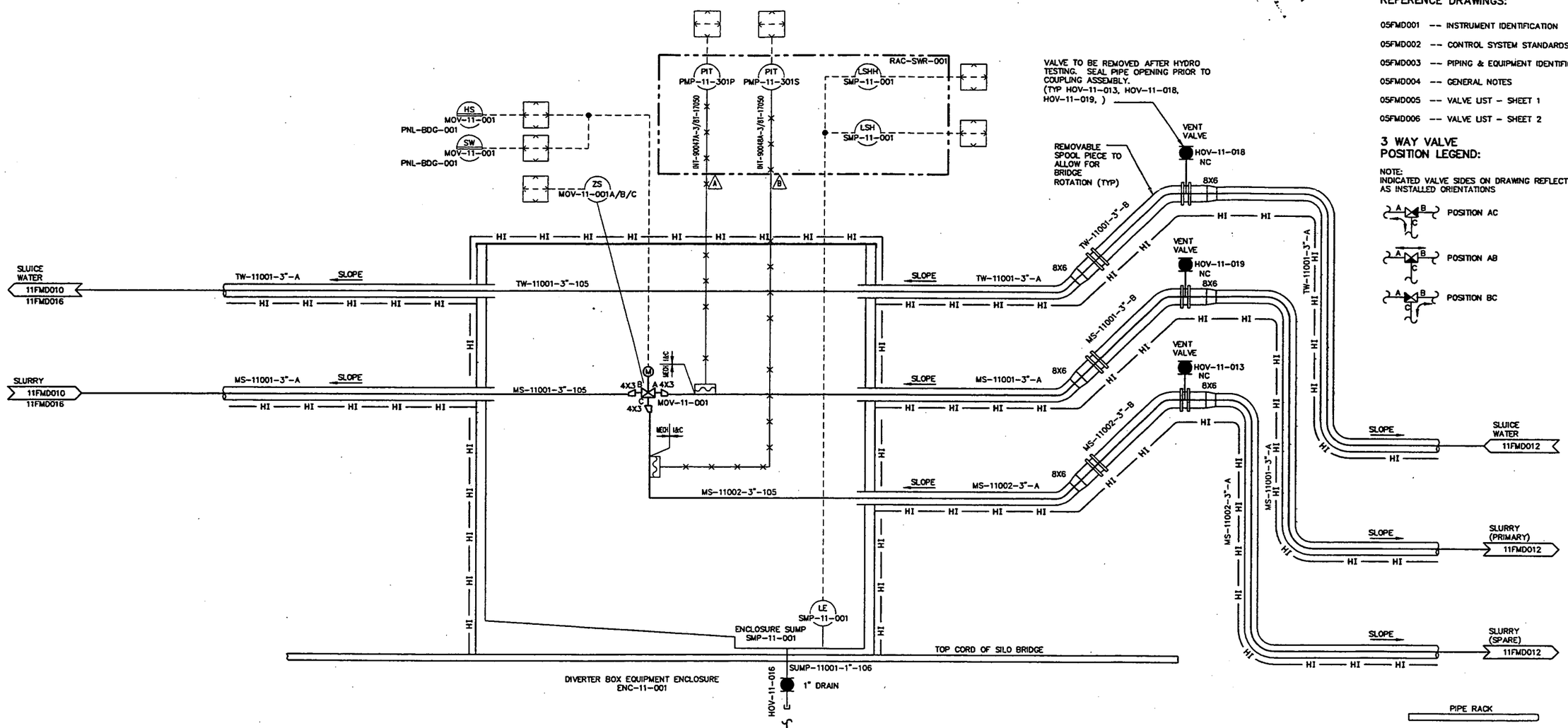

3388

NOTES:

1. FOR GENERAL NOTES SEE DRAWING 05FMD004.
2. FOR MASS BALANCE TABLES SEE DRAWING 11FMD001 & 11FMD002.

REFERENCE DRAWINGS:

05FMD001 -- INSTRUMENT IDENTIFICATION
05FMD002 -- CONTROL SYSTEM STANDARDS
05FMD003 -- PIPING & EQUIPMENT IDENTIFICATION
05FMD004 -- GENERAL NOTES
05FMD005 -- VALVE LIST - SHEET 1
05FMD006 -- VALVE LIST - SHEET 2

3 WAY VALVE POSITION LEGEND:

NOTE:
INDICATED VALVE SIDES ON DRAWING REFLECT AS INSTALLED ORIENTATIONS

000111

PRELIMINARY
NOT FOR CONSTRUCTION

REV	DATE	BY	CHK'D	APR'VD	DESCRIPTION/ISSUE
1	[illegible]				ISSUED FOR 90% REVIEW / CP-00-001
0	11/01/99	BJD	SWH		PRELIMINARY DESIGN SUBMITTAL

RPE

		DATE
DRAWN BY	B J DAVIS	11/01/99
DESIGNED BY	B J DAVIS	11/01/99
CHECKED BY	S W HUNGATE	11/01/99
APPROVED BY		DATE
APPROVED BY		DATE

DEPARTMENT OF ENERGY
FERNALD ENVIRONMENTAL MANAGEMENT PROJECT
SILOS 1 AND 2 ACCELERATED WASTE RETRIEVAL PROJECT
FERNALD, OHIO
FDF CONTRACT NO. FSC 624

FOSTER WHEELER
FOSTER WHEELER ENVIRONMENTAL CORPORATION

TITLE
SILO WASTE RETRIEVAL SYSTEM
PIPING & INSTRUMENT DIAGRAM
DIVERTER BOX ENC-11-001

SIZE	SCALE	DWG. NO.	REV
D	NONE	11FMD011	1

FILENAME: 11FMD011.DWG

000503

G:\CHARGE\FDFS\SYS11\11fmd011.dwg, 08/30/2000 12:35:25 PM

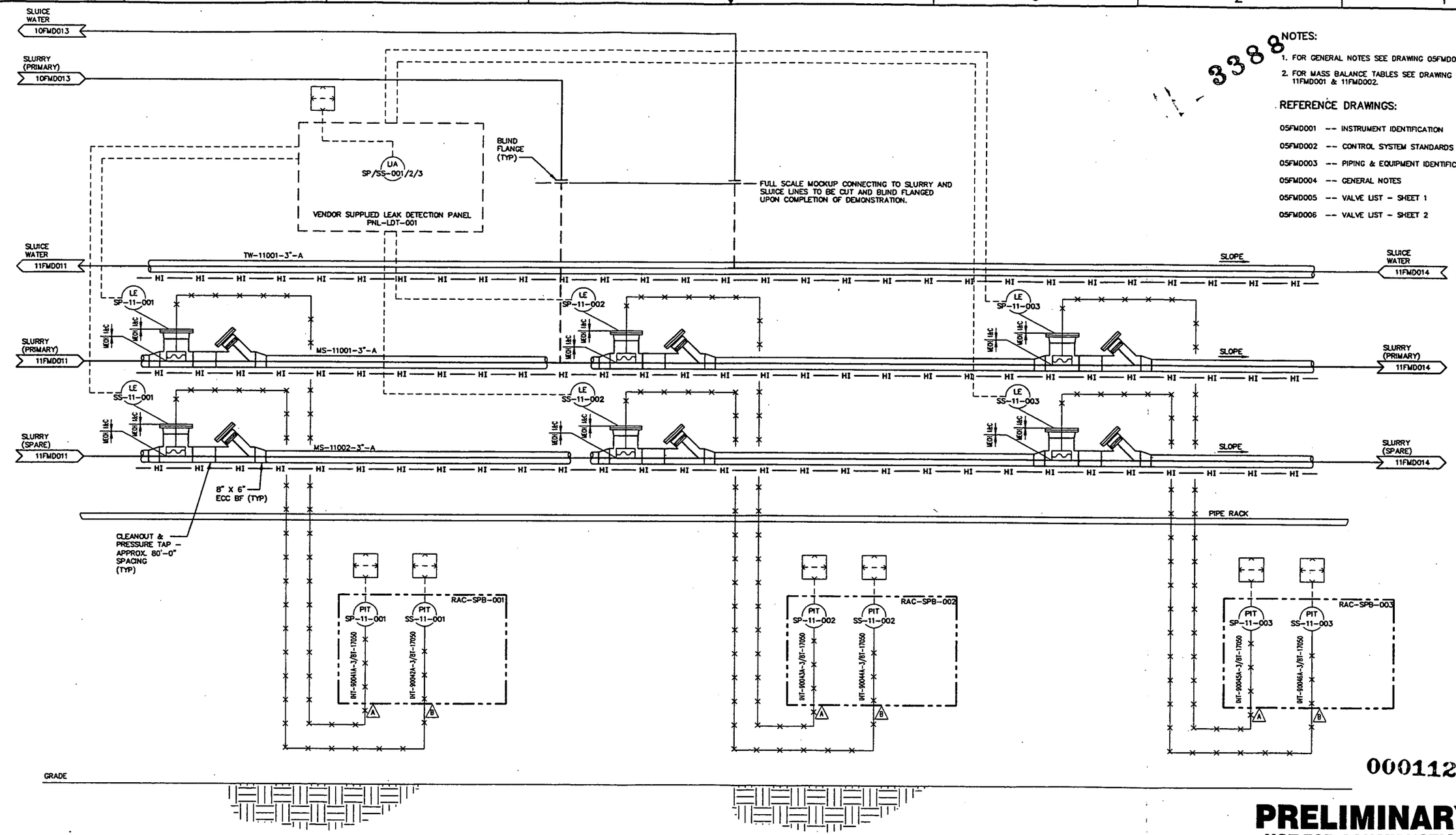

3388

NOTES:

1. FOR GENERAL NOTES SEE DRAWING 05FMD004.
2. FOR MASS BALANCE TABLES SEE DRAWING 11FMD001 & 11FMD002.

REFERENCE DRAWINGS:

05FMD001 -- INSTRUMENT IDENTIFICATION
05FMD002 -- CONTROL SYSTEM STANDARDS
05FMD003 -- PIPING & EQUIPMENT IDENTIFICATION
05FMD004 -- GENERAL NOTES
05FMD005 -- VALVE LIST - SHEET 1
05FMD006 -- VALVE LIST - SHEET 2

000112

PRELIMINARY
NOT FOR CONSTRUCTION

REV	DATE	BY	CHK'D	APR'VD	DESCRIPTION/ISSUE
1	[illegible]	[illegible]			ISSUED FOR 90% REVIEW / CP-00-001
0	11/01/99	BJD	SWH		PRELIMINARY DESIGN SUBMITTAL

RPE

DRAWN BY B J DAVIS	DATE 11/01/99	
DESIGNED BY B J DAVIS	DATE 11/01/99	
CHECKED BY S W HUNGATE	DATE 11/01/99	
APPROVED BY	DATE	
APPROVED BY	DATE	

DEPARTMENT OF ENERGY
FERNALD ENVIRONMENTAL MANAGEMENT PROJECT
SILOS 1 AND 2 ACCELERATED WASTE RETRIEVAL PROJECT
FERNALD, OHIO
FDF CONTRACT NO. FSC 624

FOSTER WHEELER
FOSTER WHEELER ENVIRONMENTAL CORPORATION

TITLE
SILO WASTE RETRIEVAL SYSTEM
PIPING & INSTRUMENT DIAGRAM
SLURRY LINE CLEANOUTS

SIZE	SCALE:	DWG. NO.	REV
D	NONE	11FMD012	1

FILENAME: 11FMD012.DWG

000504

G:\CHARGE\FDF\SYS11\11fmd012.dwg, 08/30/2000 12:36:02 PM

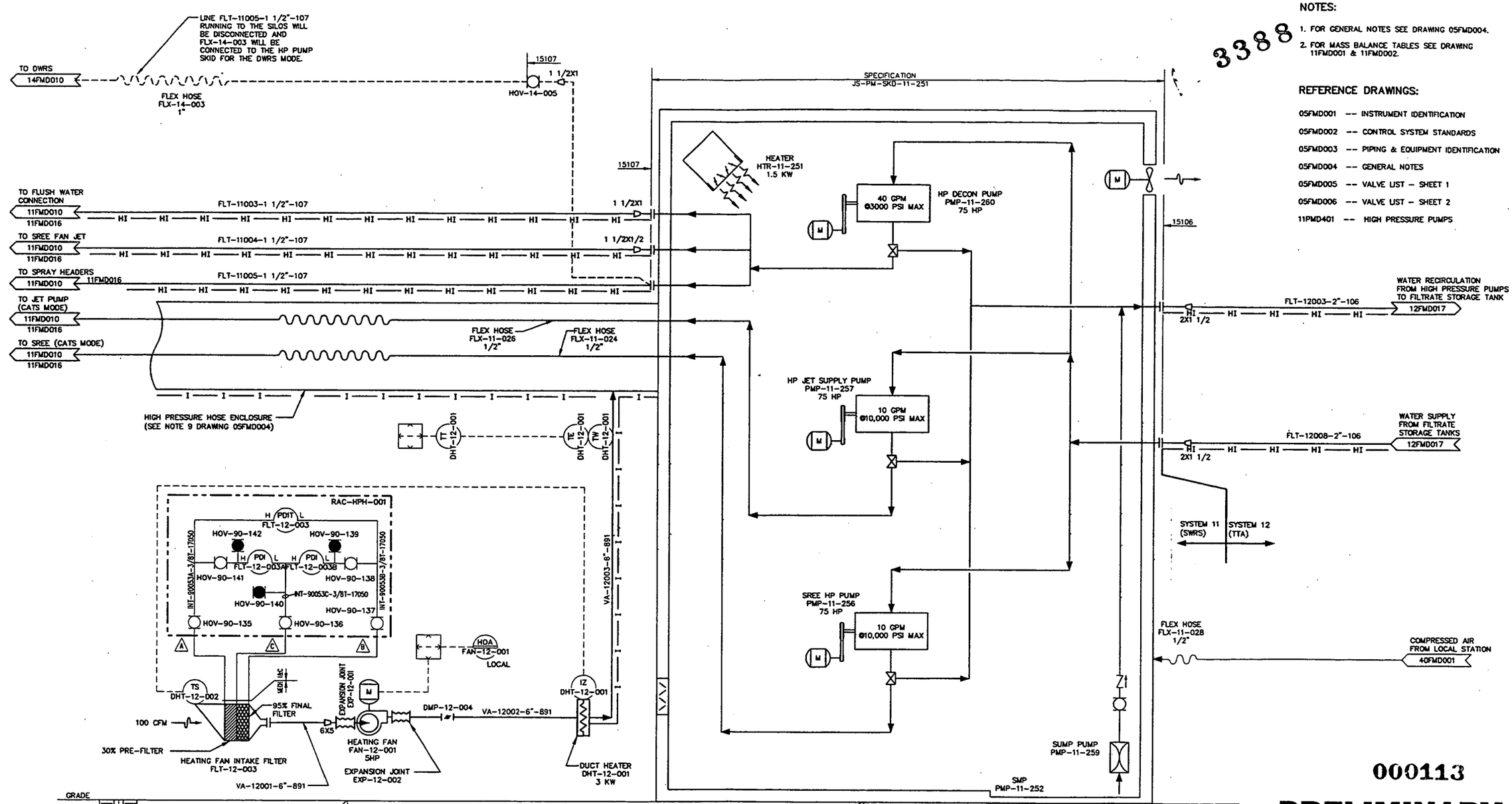

NOTES:

1. FOR GENERAL NOTES SEE DRAWING 05FMD004.
2. FOR MASS BALANCE TABLES SEE DRAWING 11FMD001 & 11FMD002.

3388

REFERENCE DRAWINGS:

05FMD001 -- INSTRUMENT IDENTIFICATION
05FMD002 -- CONTROL SYSTEM STANDARDS
05FMD003 -- PIPING & EQUIPMENT IDENTIFICATION
05FMD004 -- GENERAL NOTES
05FMD005 -- VALVE LIST - SHEET 1
05FMD006 -- VALVE LIST - SHEET 2
11PMD401 -- HIGH PRESSURE PUMPS

NOTE:

HEATING FAN FAN-12-001 TO SUPPLY HEATED AIR TO THE HIGH PRESSURE PUMP FLEXIBLE HOSE ENCLOSURE FOR THE PURPOSE OF FREEZE PROTECTION.

HP PUMP SKID SKD-11-251
SEE P&ID DRAWINGS 11PMD401 & 11PMD402 FOR DETAILS OF THIS EQUIPMENT

000113

PRELIMINARY
NOT FOR CONSTRUCTION

REV	DATE	BY	CHK'D	APR'VD	DESCRIPTION/ISSUE
1					ISSUED FOR 90% REVIEW / CP-00-001
0	11/01/99	BJD	SWH		PRELIMINARY DESIGN SUBMITTAL

RPE

DRAWN BY B J DAVIS	DATE 11/01/99	
DESIGNED BY B J DAVIS	DATE 11/01/99	
CHECKED BY S W HUNGATE	DATE 11/01/99	
APPROVED BY	DATE	
APPROVED BY	DATE	

DEPARTMENT OF ENERGY
FERNALD ENVIRONMENTAL MANAGEMENT PROJECT
SILOS 1 AND 2 ACCELERATED WASTE RETRIEVAL PROJECT
FERNALD, OHIO
FDF CONTRACT NO. FSC 624

FOSTER WHEELER
FOSTER WHEELER ENVIRONMENTAL CORPORATION

TITLE
SILO WASTE RETRIEVAL SYSTEM
PIPING & INSTRUMENT DIAGRAM
HP PUMP SKID SKD-11-251

SIZE	SCALE	DWG. NO.	REV
D	NONE	11FMD013	1

FILENAME: 11FMD013.DWG

000505

G:\CHARGE\FDFSE F:\SYS11\11fmd013.dwg, 08/30/2000 12:36:39 PM

3388

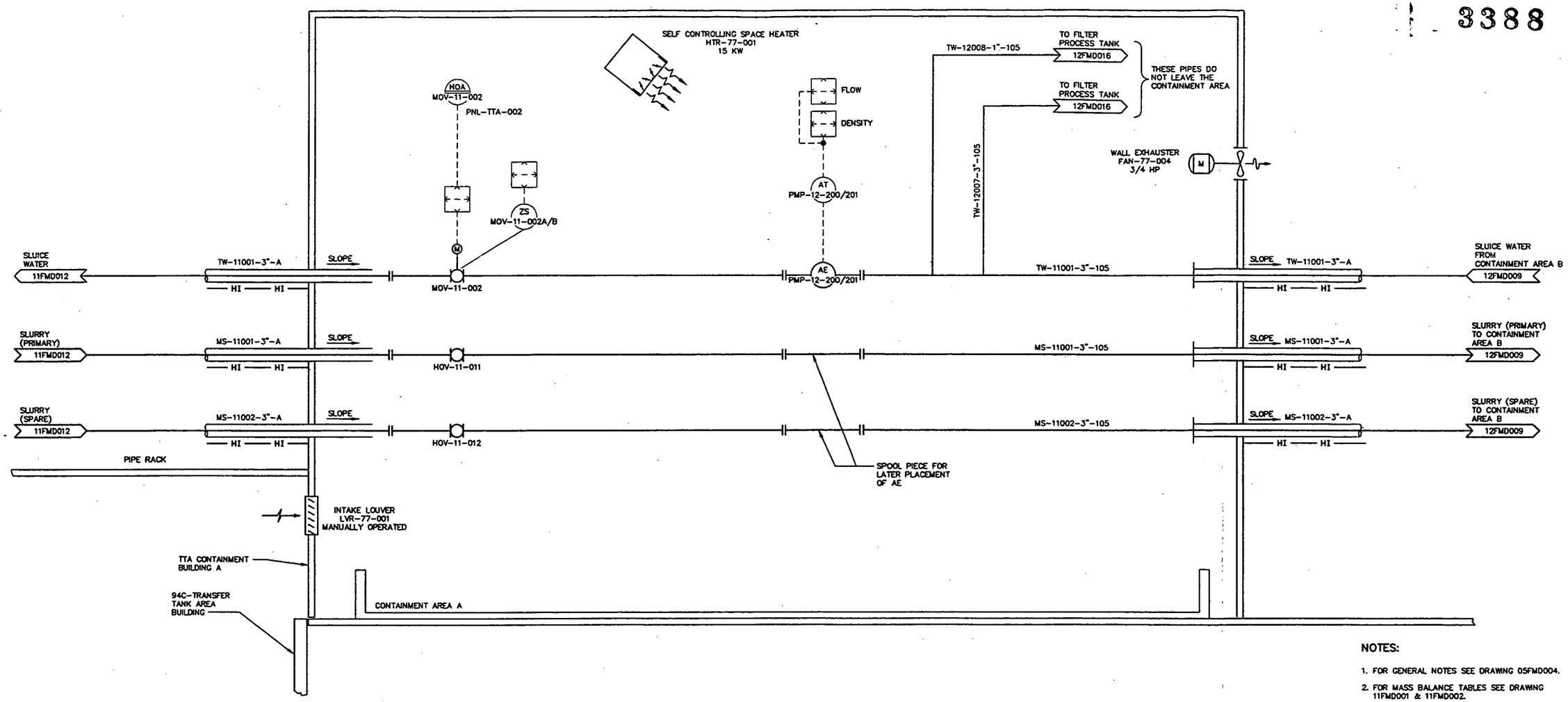

NOTES:

1. FOR GENERAL NOTES SEE DRAWING 05FMD004.
2. FOR MASS BALANCE TABLES SEE DRAWING 11FMD001 & 11FMD002.

REFERENCE DRAWINGS:

05FMD001 -- INSTRUMENT IDENTIFICATION
05FMD002 -- CONTROL SYSTEM STANDARDS
05FMD003 -- PIPING & EQUIPMENT IDENTIFICATION
05FMD004 -- GENERAL NOTES
05FMD005 -- VALVE LIST - SHEET 1
05FMD006 -- VALVE LIST - SHEET 2

000114

PRELIMINARY
NOT FOR CONSTRUCTION

000506

REV	DATE	BY	CHK'D	APR'VD	DESCRIPTION/ISSUE
1	8/31/99	RJD	SWH		ISSUED FOR 90% REVIEW / CP-00-001 & AWR-DCN-M-0001
0	11/01/99	BJD	SWH		PRELIMINARY DESIGN PACKAGE

RPE

		DATE
DRAWN BY	B J DAVIS	11/01/99
DESIGNED BY	B J DAVIS	11/01/99
CHECKED BY	S W HUNGATE	11/01/99
APPROVED BY		DATE
APPROVED BY		DATE

DEPARTMENT OF ENERGY
FERNALD ENVIRONMENTAL MANAGEMENT PROJECT
SILOS 1 AND 2 ACCELERATED WASTE RETRIEVAL PROJECT
FERNALD, OHIO
FDF CONTRACT NO. FSC 624

FOSTER WHEELER
FOSTER WHEELER ENVIRONMENTAL CORPORATION

TITLE
SILO WASTE RETRIEVAL SYSTEM
PIPING & INSTRUMENT DIAGRAM
PROCESS ANALYZER

SIZE	SCALE:	DWG. NO.	REV
D	NONE	11FMD014	1

FILENAME: 11FMD014.DWG

G:\CHARGE\FDFSE\SYS11\11fmd014.dwg, 08/30/2000 12:37:18 PM

3388

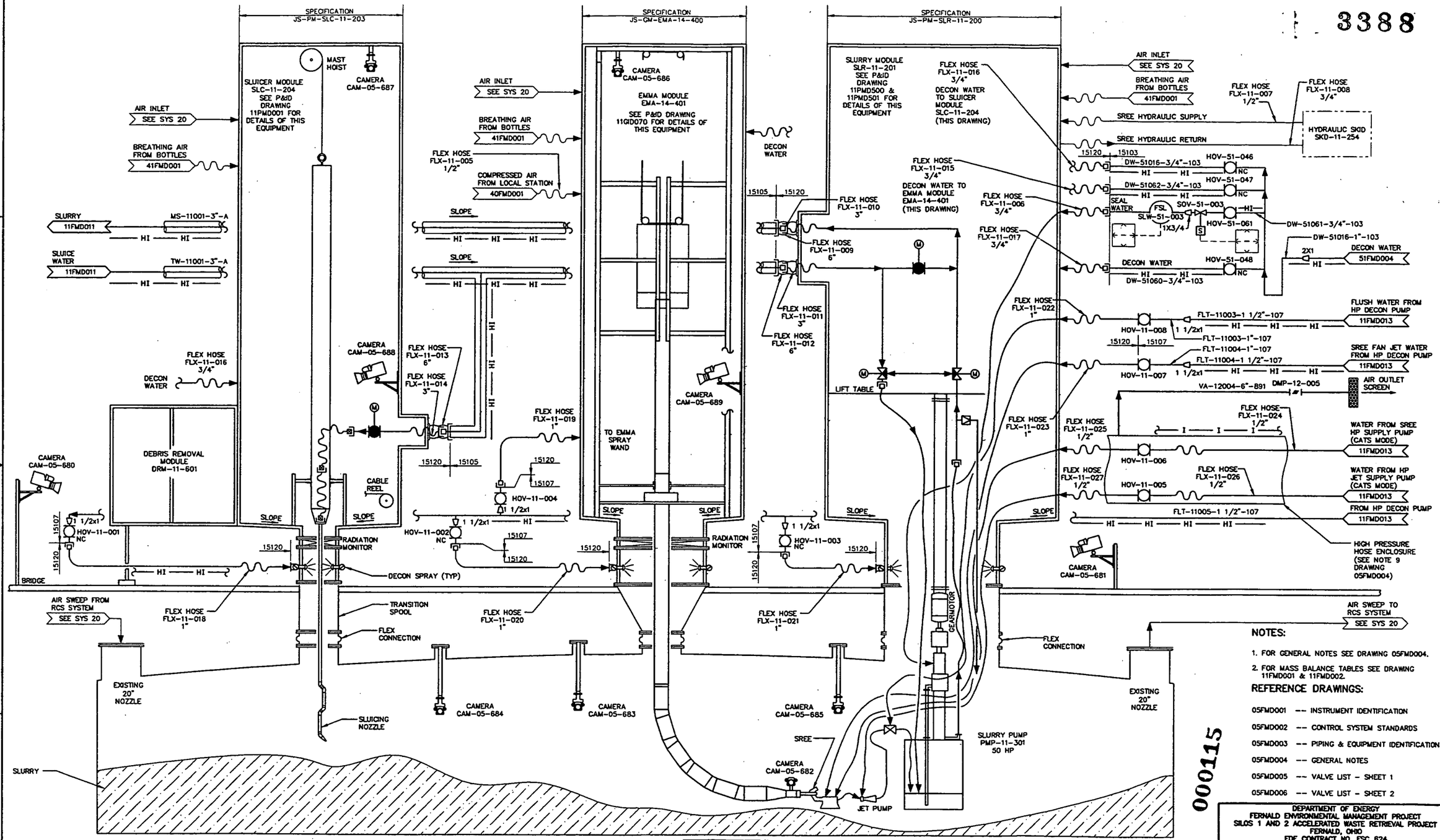

SILO 1 – CATS MODE

000507

PRELIMINARY
NOT FOR CONSTRUCTION

NOTES:

1. FOR GENERAL NOTES SEE DRAWING 05FMD004.
2. FOR MASS BALANCE TABLES SEE DRAWING 11FMD001 & 11FMD002.

REFERENCE DRAWINGS:

05FMD001 -- INSTRUMENT IDENTIFICATION
05FMD002 -- CONTROL SYSTEM STANDARDS
05FMD003 -- PIPING & EQUIPMENT IDENTIFICATION
05FMD004 -- GENERAL NOTES
05FMD005 -- VALVE LIST – SHEET 1
05FMD006 -- VALVE LIST – SHEET 2

000115

REV	DATE	BY	CHK'D	APR'VD	DESCRIPTION/ISSUE
1	[illegible]				ISSUED FOR 90% REVIEW / CP-00-001
0	11/01/99	BJD	SWH		PRELIMINARY DESIGN SUBMITTAL

RPE

		DATE
DRAWN BY	B J DAVIS	11/01/99
DESIGNED BY	B J DAVIS	11/01/99
CHECKED BY	S W HUNGATE	11/01/99
APPROVED BY		DATE
APPROVED BY		DATE

DEPARTMENT OF ENERGY
FERNALD ENVIRONMENTAL MANAGEMENT PROJECT
SILOS 1 AND 2 ACCELERATED WASTE RETRIEVAL PROJECT
FERNALD, OHIO
FDF CONTRACT NO. FSC 624

FOSTER WHEELER
FOSTER WHEELER ENVIRONMENTAL CORPORATION

TITLE
SILO WASTE RETRIEVAL SYSTEM
PIPING & INSTRUMENT DIAGRAM
SILO 1 – CATS MODE

SIZE	SCALE	DWG. NO.	REV
D	NONE	11FMD016	1

FILENAME: 11FMD016.DWG

G:\CHARGE\FDF\S...\SYS11\11fmd016.dwg, 08/30/2000 12:38:25 PM

SYSTEM 11 (SWRS) | SYSTEM 12 (TTA)

SLUICE WATER TO CONTAINMENT AREA A — 11FMD014 — 13FMD003 (SEE NOTE BELOW)

SLURRY (PRIMARY) FROM CONTAINMENT AREA A — 11FMD014 — 13FMD003 (SEE NOTE BELOW)

SLURRY (SPARE) FROM CONTAINMENT AREA A — 11FMD014 — 13FMD003 (SEE NOTE BELOW)

NOTE:

FLOW DURING TRANSFER TANK WASTE RETRIEVAL (SYSTEM 13) FOR SLUICE WATER WILL BE TOWARD CONTAINMENT AREA B (TO THE RIGHT). FLOW FOR PRIMARY AND SPARE SLURRY LINES WILL BE AWAY FROM CONTAINMENT AREA B (TO THE LEFT).

TW-11001-3"-A SLOPE — TW-12001-3"-105
MS-11001-3"-A SLOPE — MS-12001-3"-105
MS-11002-3"-A SLOPE — MS-12002-3"-105
HI — HI

SELF CONTROLLING SPACE HEATER HTR-77-002 15 KW

WALL EXHAUSTER FAN-77-005 3/4 HP

RAC-TTA-001 — PIT PMP-11-301P-T — PIT PMP-11-301S-T — INT-90049A-3/81-17050 — INT-90050A-3/81-17050

FOR LS MOUNTED ON THIS RACK SEE 12FMD014

3 WAY VALVE POSITION LEGEND:
NOTE: INDICATED VALVE SIDES ON DRAWING REFLECT AS INSTALLED ORIENTATIONS

POSITION AC
POSITION AB
POSITION BC

NOTES:

1. FOR GENERAL NOTES SEE DRAWING 05FMD004.
2. FOR MASS BALANCE TABLES SEE DRAWING 11FMD001 & 11FMD002.

REFERENCE DRAWINGS:

05FMD001 -- INSTRUMENT IDENTIFICATION
05FMD002 -- CONTROL SYSTEM STANDARDS
05FMD003 -- PIPING & EQUIPMENT IDENTIFICATION
05FMD004 -- GENERAL NOTES
05FMD005 -- VALVE LIST - SHEET 1
05FMD006 -- VALVE LIST - SHEET 2

3388

FILTER CONCENTRATE FROM FILTRATION SYSTEM — 12FMD015

MS-12007-3"-A SLOPE — MS-12007-3"-105 — MOV-12-001 — CKV-12-004 — MOV-12-001A/B/C

MOV-12-004A/B/C — MS-12001-4"-105

MOV-12-006A/B/C — MS-12002-4"-105 — MOV-12-006 — HOV-12-032 — MS-12002-3"-A SLOPE — SLURRY FROM/TO TANK TNK-12-001B — 12FMD011

MOV-12-004 — MOV-12-002 — MOV-12-002A/B/C

SLURRY FROM/TO TANK TNK-12-001A — 12FMD010 — 13FMD005 — MS-12001-3"-A SLOPE — MS-12001-3"-105 — HOV-12-035 — MOV-12-002

MOV-12-007A/B — MOV-12-007

SLURRY FROM/TO TANK TNK-12-002A — 12FMD012 — MS-12004-3"-A SLOPE — MS-12003-4"-105 — MS-12004-3"-105 — HOV-12-036 — MOV-12-003 — MS-12004-4"-105 — MOV-12-004

MOV-12-005A/B/C — MS-12006-4"-105 — MS-12005-3"-105 — MOV-12-005 — HOV-12-031 — MS-12005-3"-A SLOPE — SLURRY FROM/TO TANK TNK-12-002B — 12FMD013

MOV-12-003 — MOV-12-003A/B/C

MOV-12-014 — MOV-12-007

INTAKE LOUVER LVR-77-002 MANUALLY OPERATED

15106 15103 — DW-51013-3"-103 — MAKE-UP WATER — 51FMD004

HOV-12-047 — CKV-51-003 — CKV-51-004

FLT-12013-3"-106 — FILTRATE — 12FMD017

CKV-12-002

MOV-12-014A/B/C — TW-12001-3"-105 — MOV-12-010A/B/C — MOV-12-013A/B/C

SLUICE WATER FROM/TO TANK TNK-12-001A — 12FMD010 — 13FMD005 — TW-12004-3"-A SLOPE — TW-12004-3"-105 — HOV-12-037 — MOV-12-014

TW-12006-3"-105 — HOV-12-033 — TW-12006-3"-A SLOPE — SLUICE WATER FROM/TO TANK TNK-12-001B — 12FMD011

SLUICE WATER FROM/TO TANK TNK-12-002A — 12FMD012 — TW-12003-3"-A SLOPE — TW-12003-3"-105 — HOV-12-038 — TW-12003-3"-105 — MOV-12-011 — MOV-12-010 — TW-12002-3"-105 — MOV-12-013 — HOV-12-034 — TW-12002-3"-A SLOPE — SLUICE WATER FROM/TO TANK TNK-12-002B — 12FMD013

MOV-12-011 — MOV-12-011A/B/C

CKV-12-001 — HOV-12-001

PMP-12-004 — MOV-12-013

000116

SUMP PUMP PMP-12-004 1 HP — SMP-12-004 — SUMP-12001-1"-105

TTA CONTAINMENT BUILDING B

TTA EQUIPMENT DECK

CONTAINMENT AREA B

FROM BUILDING SUMP — 12FMD014 — SUMP-12002-3"-106

MOV-12-010

CONTAINMENT AREA B SUMP SMP-12-004

PRELIMINARY
NOT FOR CONSTRUCTION

000508

REV	DATE	BY	CHK'D	APR'VD	DESCRIPTION/ISSUE
1	[illegible]				ISSUED FOR 90% REVIEW / CP-00-001 & AWR-DCN-M-0001
0	01/01/99	BJD	SWH		PRELIMINARY DESIGN SUBMITTAL

RPE

		DATE
DRAWN BY	B J DAVIS	11/01/99
DESIGNED BY	B J DAVIS	11/01/99
CHECKED BY	S W HUNGATE	11/01/99
APPROVED BY		
APPROVED BY		

DEPARTMENT OF ENERGY
FERNALD ENVIRONMENTAL MANAGEMENT PROJECT
SILOS 1 AND 2 ACCELERATED WASTE RETRIEVAL PROJECT
FERNALD, OHIO
FDF CONTRACT NO. FSC 624

FOSTER WHEELER
FOSTER WHEELER ENVIRONMENTAL CORPORATION

TITLE
TRANSFER TANK SYSTEM
PIPING & INSTRUMENT DIAGRAM
CONTAINMENT AREA B

SIZE	SCALE	DWG. NO.	REV
D	NONE	12FMD009	1

FILENAME: 12FMD009.DWG

G:\CHARGE\FDF\SYS12\12fmd009.dwg, 08/30/2000 12:44:06 PM

3388

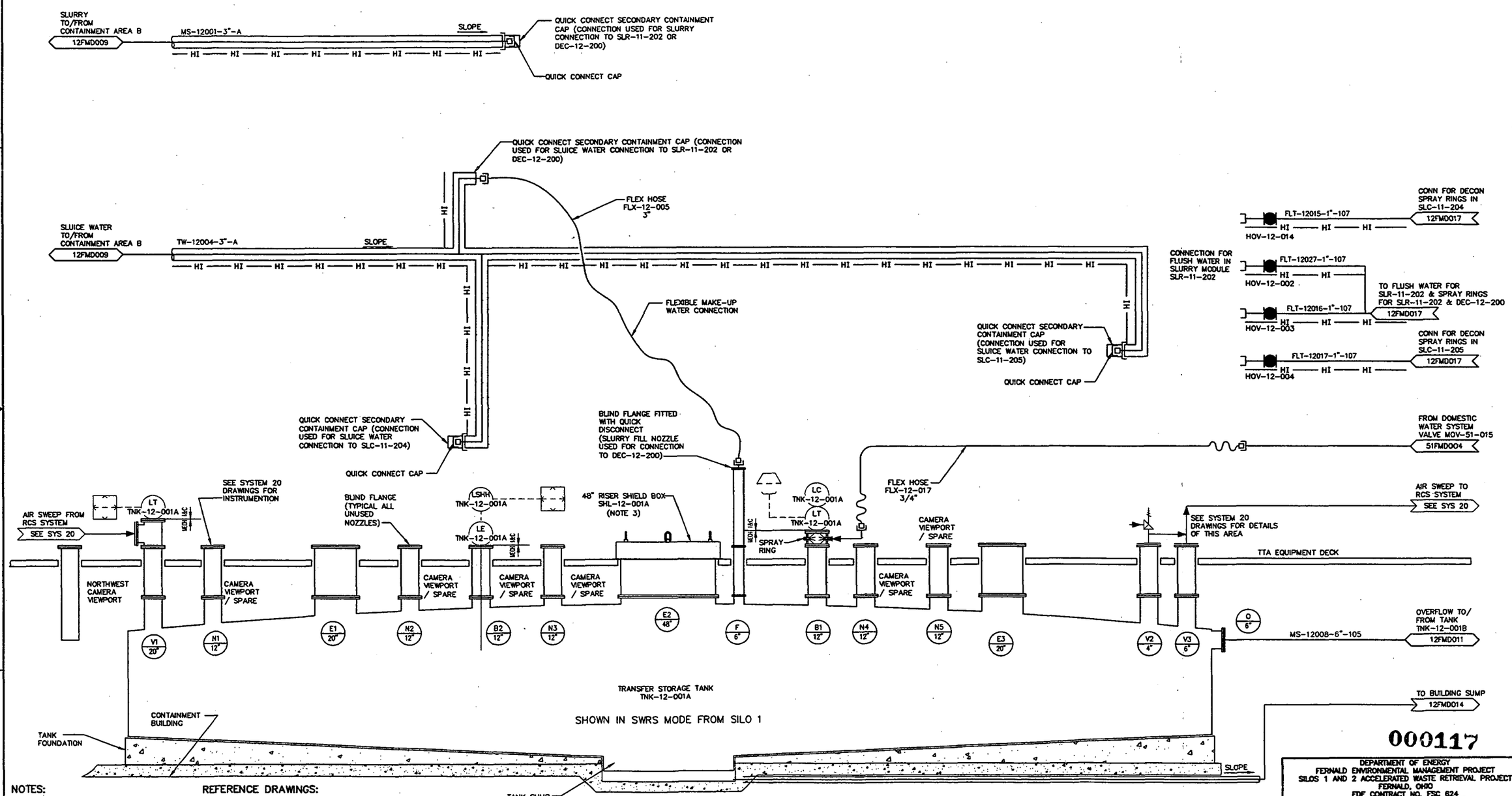

000117

NOTES:

1. FOR GENERAL NOTES SEE DRAWING 05FMD004.
2. FOR MASS BALANCE TABLES SEE DRAWING 11FMD001 & 11FMD002.
3. SHIELD BOX TO BE PLACED OVER E2-48" RISER WHEN NOT IN USE.

REFERENCE DRAWINGS:

05FMD001 -- INSTRUMENT IDENTIFICATION
05FMD002 -- CONTROL SYSTEM STANDARDS
05FMD003 -- PIPING & EQUIPMENT IDENTIFICATION
05FMD004 -- GENERAL NOTES
05FMD005 -- VALVE LIST - SHEET 1
05FMD006 -- VALVE LIST - SHEET 2

000509

PRELIMINARY
NOT FOR CONSTRUCTION

REV	DATE	BY	CHK'D	APR'VD	DESCRIPTION/ISSUE
1	[illegible]				ISSUED FOR 90% REVIEW / CP-00-001 & AWR-DON-M-0001
0	01/01/99	BJD	SWH		PRELIMINARY DESIGN SUBMITTAL

RPE

		DATE
DRAWN BY	B J DAVIS	11/01/99
DESIGNED BY	B J DAVIS	11/01/99
CHECKED BY	S W HUNGATE	11/01/99
APPROVED BY		DATE
APPROVED BY		DATE

DEPARTMENT OF ENERGY
FERNALD ENVIRONMENTAL MANAGEMENT PROJECT
SILOS 1 AND 2 ACCELERATED WASTE RETRIEVAL PROJECT
FERNALD, OHIO
FDF CONTRACT NO. FSC 624

FOSTER WHEELER
FOSTER WHEELER ENVIRONMENTAL CORPORATION

TITLE
TRANSFER TANK SYSTEM
PIPING & INSTRUMENT DIAGRAM
STORAGE TANK TNK-12-001A

SIZE	SCALE:	DWG. NO.	REV
D	NONE	12FMD010	1

FILENAME: 12FMD010.DWG

G:\CHARGE\FDFSE\SYS12\12fmd010.dwg, 08/30/2000 12:44:44 PM

3388

NOTES:

1. FOR GENERAL NOTES SEE DRAWING 05FMD004.
2. FOR MASS BALANCE TABLES SEE DRAWING 11FMD001 & 11FMD002.
3. SHIELD BOX TO BE PLACED OVER E2-48" RISER WHEN NOT IN USE.

REFERENCE DRAWINGS:

05FMD001 -- INSTRUMENT IDENTIFICATION
05FMD002 -- CONTROL SYSTEM STANDARDS
05FMD003 -- PIPING & EQUIPMENT IDENTIFICATION
05FMD004 -- GENERAL NOTES
05FMD005 -- VALVE LIST - SHEET 1
05FMD006 -- VALVE LIST - SHEET 2

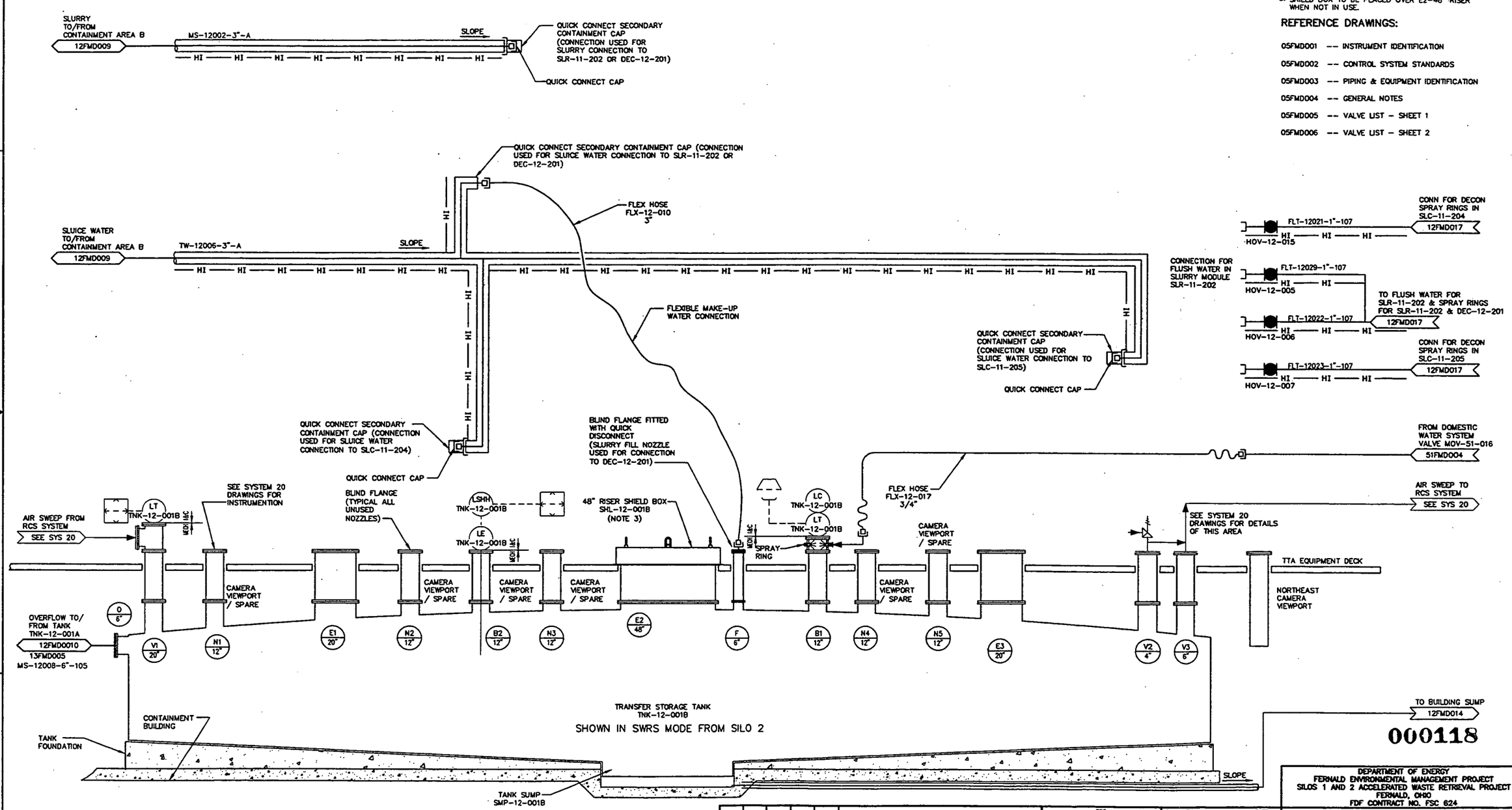

000118

000510

PRELIMINARY
NOT FOR CONSTRUCTION

REV	DATE	BY	CHK'D	APR'VD	DESCRIPTION/ISSUE
1					ISSUED FOR 90% REVIEW / CP-00-001 & AWR-DCN-M-0001
0	11/01/99	BJD	SWH		PRELIMINARY DESIGN SUBMITTAL

RPE

		DATE
DRAWN BY	B J DAVIS	11/01/99
DESIGNED BY	B J DAVIS	11/01/99
CHECKED BY	S W HUNGATE	11/01/99
APPROVED BY		DATE
APPROVED BY		DATE

DEPARTMENT OF ENERGY
FERNALD ENVIRONMENTAL MANAGEMENT PROJECT
SILOS 1 AND 2 ACCELERATED WASTE RETRIEVAL PROJECT
FERNALD, OHIO
FDF CONTRACT NO. FSC 624

FOSTER WHEELER
FOSTER WHEELER ENVIRONMENTAL CORPORATION

TITLE
TRANSFER TANK SYSTEM
PIPING & INSTRUMENT DIAGRAM
STORAGE TANK TNK-12-001B

SIZE	SCALE:	DWG. NO.	REV
D	NONE	12FMD011	1

FILENAME: 12FMD011.DWG

G:\CHARGE\FDFSE\SYS12\12fmd011.dwg, 08/30/2000 12:45:23 PM

3388

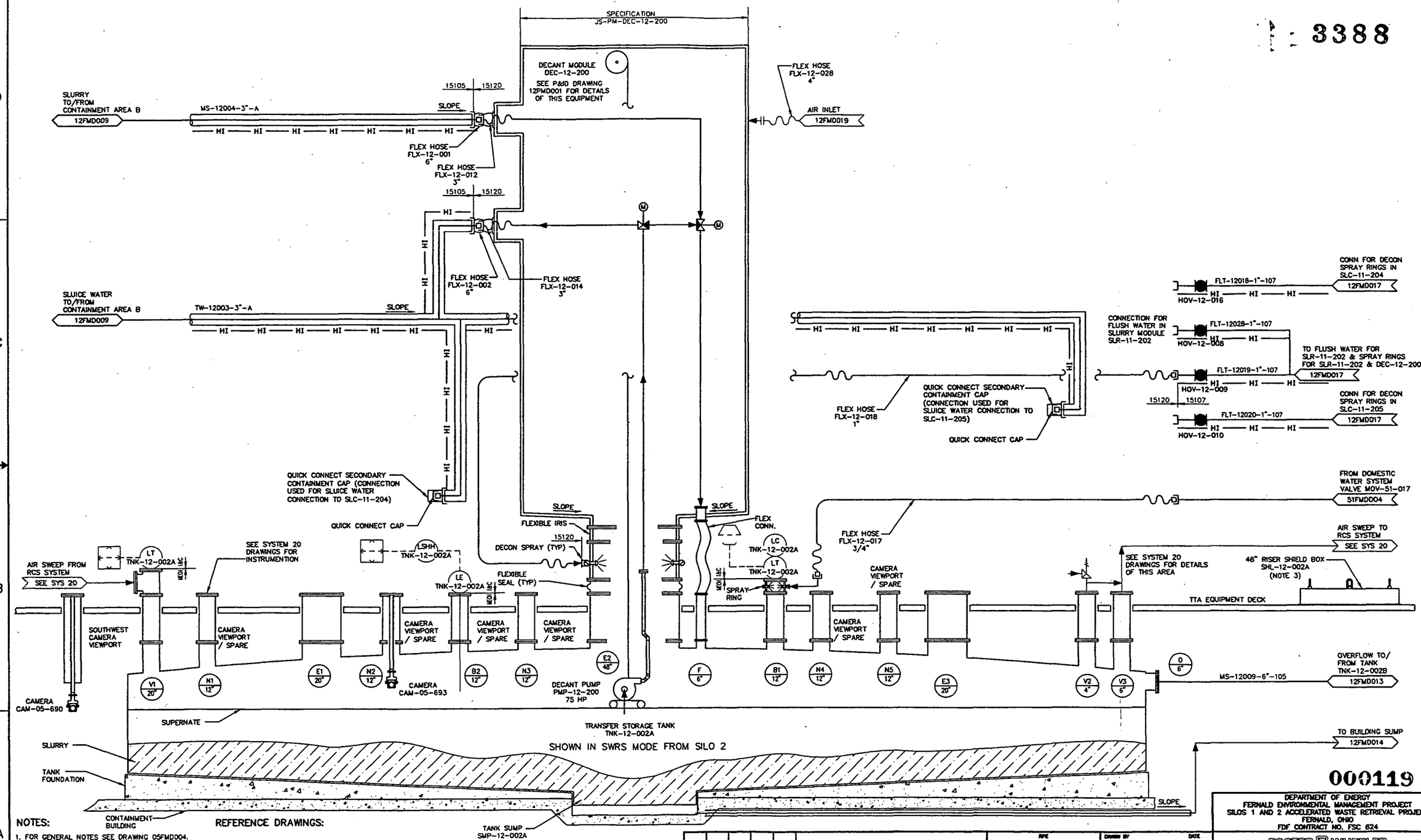

000119

NOTES:

1. FOR GENERAL NOTES SEE DRAWING 05FMD004.
2. FOR MASS BALANCE TABLES SEE DRAWING 11FMD001 & 11FMD002.
3. SHIELD BOX TO BE PLACED OVER E2-48" RISER WHEN NOT IN USE.

REFERENCE DRAWINGS:

05FMD001 -- INSTRUMENT IDENTIFICATION
05FMD002 -- CONTROL SYSTEM STANDARDS
05FMD003 -- PIPING & EQUIPMENT IDENTIFICATION
05FMD004 -- GENERAL NOTES
05FMD005 -- VALVE LIST - SHEET 1
05FMD006 -- VALVE LIST - SHEET 2

000511

PRELIMINARY
NOT FOR CONSTRUCTION

REV	DATE	BY	CHK'D	APR'VD	DESCRIPTION/ISSUE
1	03/00	BJD	SWH		ISSUED FOR 90% REVIEW / CP-00-001 & AWR-DCN-M-0001
0	11/01/99	BJD	SWH		PRELIMINARY DESIGN SUBMITTAL

RPE

		DATE
DRAWN BY	B J DAVIS	11/01/99
DESIGNED BY	B J DAVIS	11/01/99
CHECKED BY	S W HUNGATE	11/01/99
APPROVED BY		
APPROVED BY		

DEPARTMENT OF ENERGY
FERNALD ENVIRONMENTAL MANAGEMENT PROJECT
SILOS 1 AND 2 ACCELERATED WASTE RETRIEVAL PROJECT
FERNALD, OHIO
FDF CONTRACT NO. FSC 624

FOSTER WHEELER
FOSTER WHEELER ENVIRONMENTAL CORPORATION

TITLE
TRANSFER TANK SYSTEM
PIPING & INSTRUMENT DIAGRAM
STORAGE TANK TNK-12-002A

SIZE	SCALE	DWG. NO.	REV
D	NONE	12FMD012	1

FILENAME: 12FMD012.DWG

G:\CHARGE\FDF5\ENSYS12\12fmd012.dwg, 08/30/2000 12:46:01 PM

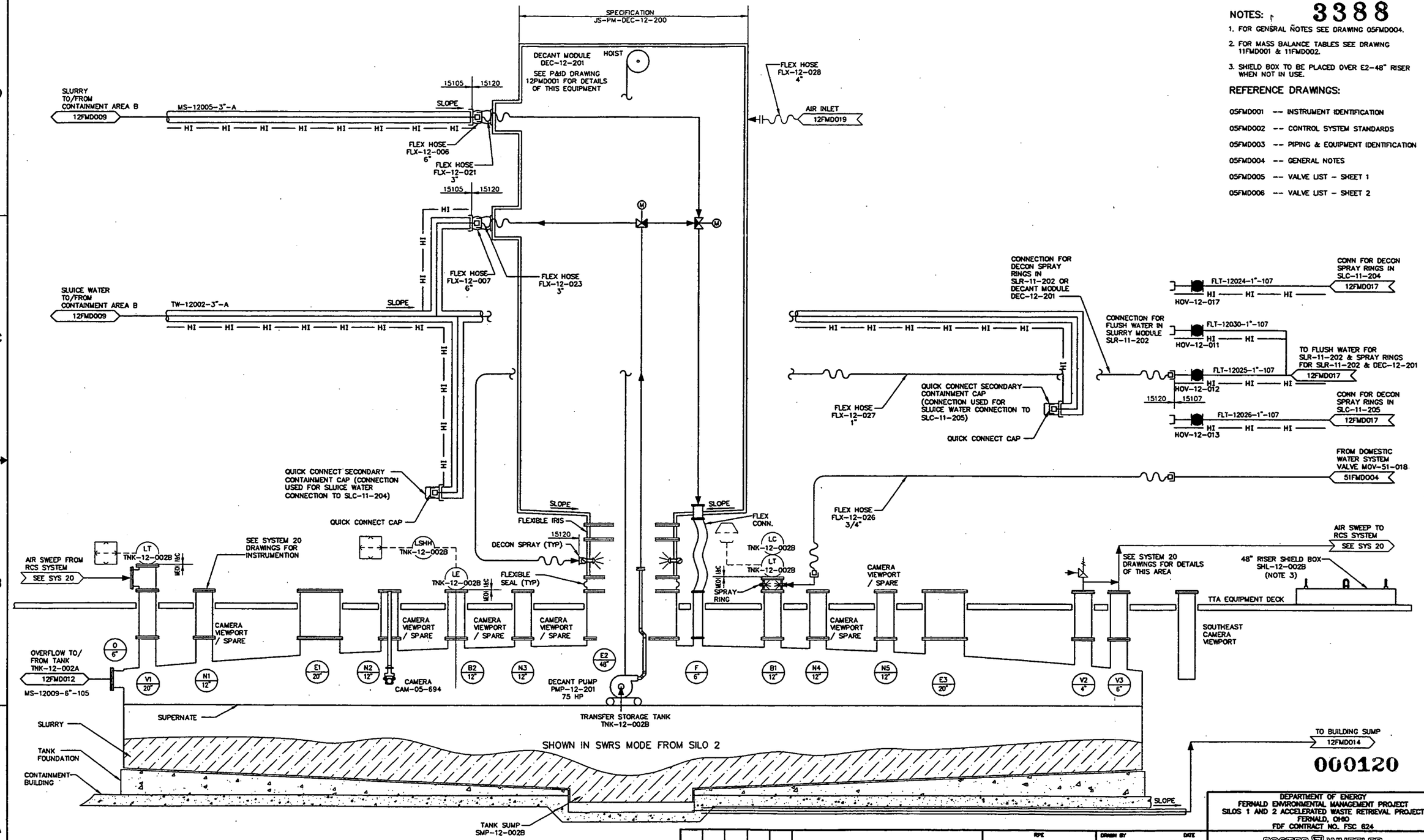

NOTES:

3388

1. FOR GENERAL NOTES SEE DRAWING 05FMD004.
2. FOR MASS BALANCE TABLES SEE DRAWING 11FMD001 & 11FMD002.
3. SHIELD BOX TO BE PLACED OVER E2-48" RISER WHEN NOT IN USE.

REFERENCE DRAWINGS:

05FMD001 -- INSTRUMENT IDENTIFICATION
05FMD002 -- CONTROL SYSTEM STANDARDS
05FMD003 -- PIPING & EQUIPMENT IDENTIFICATION
05FMD004 -- GENERAL NOTES
05FMD005 -- VALVE LIST - SHEET 1
05FMD006 -- VALVE LIST - SHEET 2

000120

000512

PRELIMINARY
NOT FOR CONSTRUCTION

REV	DATE	BY	CHK'D	APR'VD	DESCRIPTION/ISSUE
1	[illegible]	[illegible]	[illegible]		ISSUED FOR 90% REVIEW / CP-00-001 & AWR-DCN-M-0001
0	11/01/99	BJD	SWH		PRELIMINARY DESIGN SUBMITTAL

RPE

		DATE
DRAWN BY	B J DAVIS	11/01/99
DESIGNED BY	B J DAVIS	11/01/99
CHECKED BY	S W HUNGATE	11/01/99
APPROVED BY		DATE
APPROVED BY		DATE

DEPARTMENT OF ENERGY
FERNALD ENVIRONMENTAL MANAGEMENT PROJECT
SILOS 1 AND 2 ACCELERATED WASTE RETRIEVAL PROJECT
FERNALD, OHIO
FDF CONTRACT NO. FSC 624

FOSTER WHEELER
FOSTER WHEELER ENVIRONMENTAL CORPORATION

TITLE
TRANSFER TANK SYSTEM
PIPING & INSTRUMENT DIAGRAM
STORAGE TANK TNK-12-002B

SIZE	SCALE	DWG. NO.	REV
D	NONE	12FMD013	1

FILENAME: 12FMD013.DWG

G:\CHARGE\FDFS\SYS12\12fmd013.dwg, 08/30/2000 12:46:40 PM

3388

NOTES:

1. FOR GENERAL NOTES SEE DRAWING 05FMD004.
2. FOR MASS BALANCE TABLES SEE DRAWING 11FMD001 & 11FMD002.

REFERENCE DRAWINGS:

05FMD001 -- INSTRUMENT IDENTIFICATION
05FMD002 -- CONTROL SYSTEM STANDARDS
05FMD003 -- PIPING & EQUIPMENT IDENTIFICATION
05FMD004 -- GENERAL NOTES
05FMD005 -- VALVE LIST - SHEET 1
05FMD006 -- VALVE LIST - SHEET 2

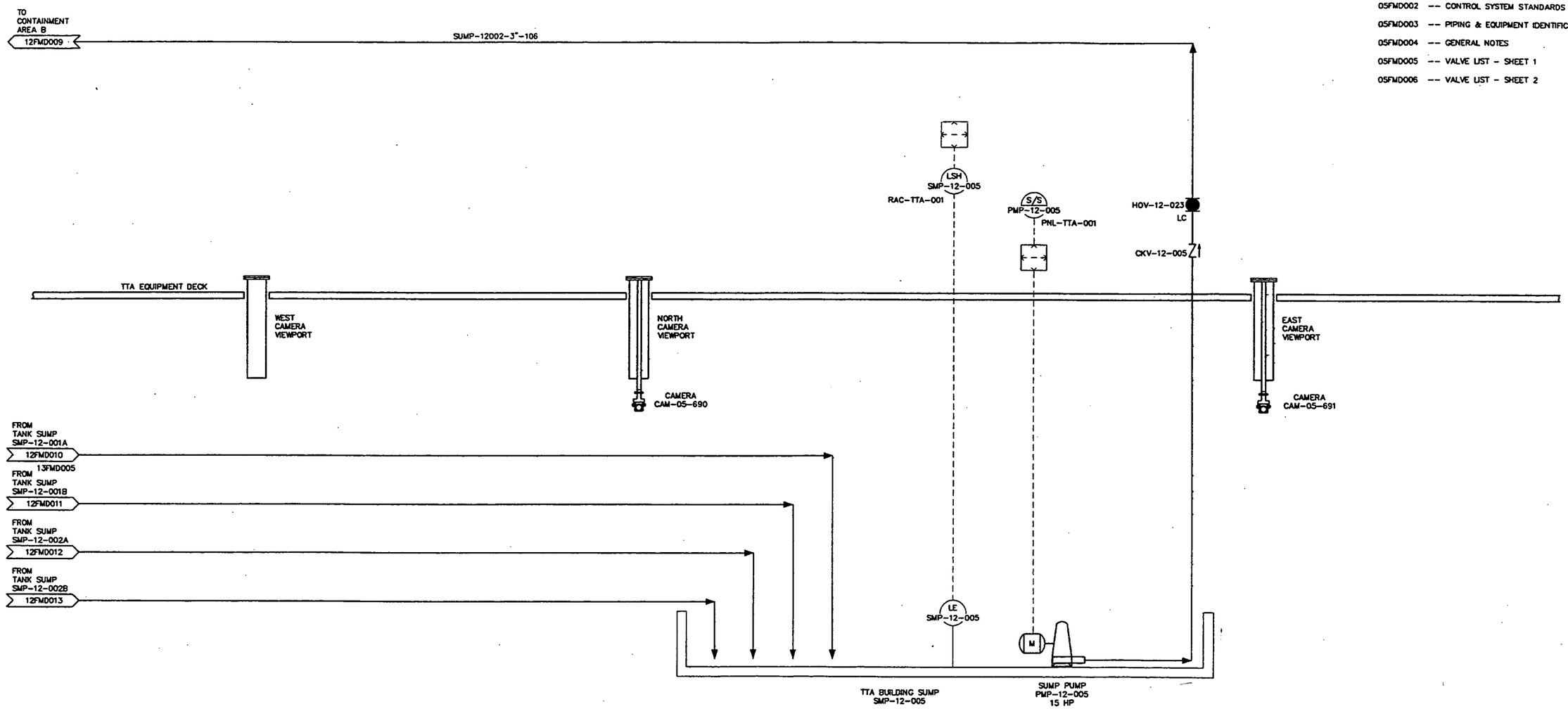

000121

PRELIMINARY
NOT FOR CONSTRUCTION

00054 3

REV	DATE	BY	CHK'D	APR'VD	DESCRIPTION/ISSUE
1	[illegible]				ISSUED FOR 90% REVIEW / CP-00-001
0	11/01/99	BJD	SWH		PRELIMINARY DESIGN SUBMITTAL

RPE

		DATE
DRAWN BY	B J DAVIS	11/01/99
DESIGNED BY	B J DAVIS	11/01/99
CHECKED BY	S W HUNGATE	11/01/99
APPROVED BY		
APPROVED BY		

DEPARTMENT OF ENERGY
FERNALD ENVIRONMENTAL MANAGEMENT PROJECT
SILOS 1 AND 2 ACCELERATED WASTE RETRIEVAL PROJECT
FERNALD, OHIO
FDF CONTRACT NO. FSC 624

FOSTER WHEELER
FOSTER WHEELER ENVIRONMENTAL CORPORATION

TITLE
TRANSFER TANK SYSTEM
PIPING & INSTRUMENT DIAGRAM
BUILDING SUMP SMP-12-005

SIZE	SCALE:	DWG. NO.	REV
D	NONE	12FMD014	1

FILENAME: 12FMD014.DWG

G:\CHARGE\FDFS\SYS12\12fmd014.dwg, 08/30/2000 12:47:18 PM

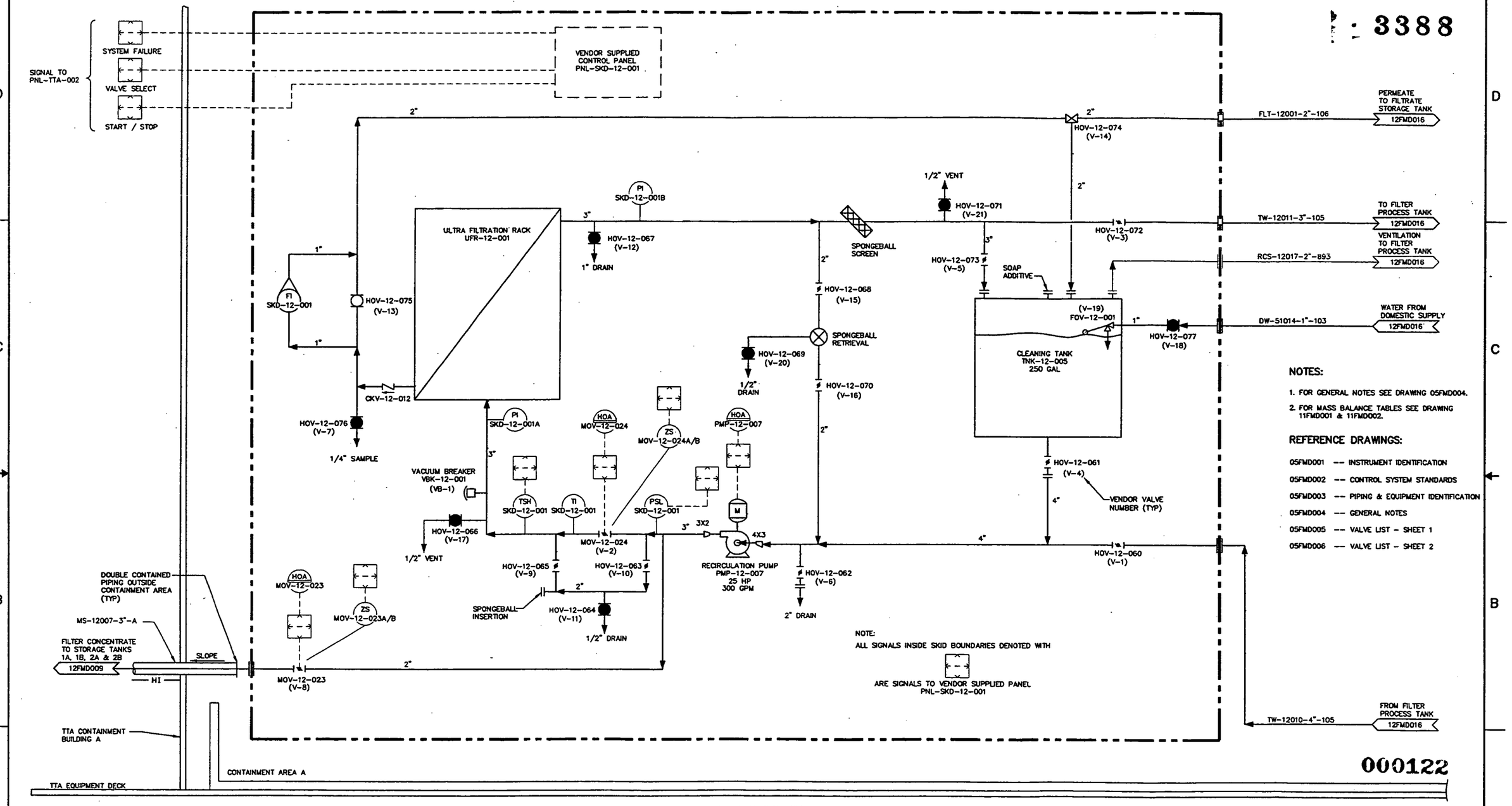

NOTES:

1. FOR GENERAL NOTES SEE DRAWING 05FMD004.
2. FOR MASS BALANCE TABLES SEE DRAWING 11FMD001 & 11FMD002.

REFERENCE DRAWINGS:

05FMD001 -- INSTRUMENT IDENTIFICATION
05FMD002 -- CONTROL SYSTEM STANDARDS
05FMD003 -- PIPING & EQUIPMENT IDENTIFICATION
05FMD004 -- GENERAL NOTES
05FMD005 -- VALVE LIST - SHEET 1
05FMD006 -- VALVE LIST - SHEET 2

PRELIMINARY
NOT FOR CONSTRUCTION

000514

REV	DATE	BY	CHK'D	APR'VD	DESCRIPTION/ISSUE
1	8/31/00	BJD	SWH		ISSUED FOR 90% REVIEW / CP-00-001 & AWR-DCN-M-0001
0	11/01/99	BJD	SWH		PRELIMINARY DESIGN SUBMITTAL

RPE

DRAWN BY	B J DAVIS	DATE 11/01/99
DESIGNED BY	B J DAVIS	DATE 11/01/99
CHECKED BY	S W HUNGATE	DATE 11/01/99
APPROVED BY		DATE
APPROVED BY		DATE

DEPARTMENT OF ENERGY
FERNALD ENVIRONMENTAL MANAGEMENT PROJECT
SILOS 1 AND 2 ACCELERATED WASTE RETRIEVAL PROJECT
FERNALD, OHIO
FDF CONTRACT NO. FSC 624

FOSTER WHEELER
FOSTER WHEELER ENVIRONMENTAL CORPORATION

TITLE
TRANSFER TANK SYSTEM
PIPING & INSTRUMENT DIAGRAM
ULTRA FILTRATION SKD-12-001

SIZE D | SCALE: NONE | DWG. NO. 12FMD015 | REV 1

FILENAME: 12FMD015.DWG

G:\CHARGE\FDFS\...\SYS12\12fmd015.dwg, 08/30/2000 12:47:56 PM

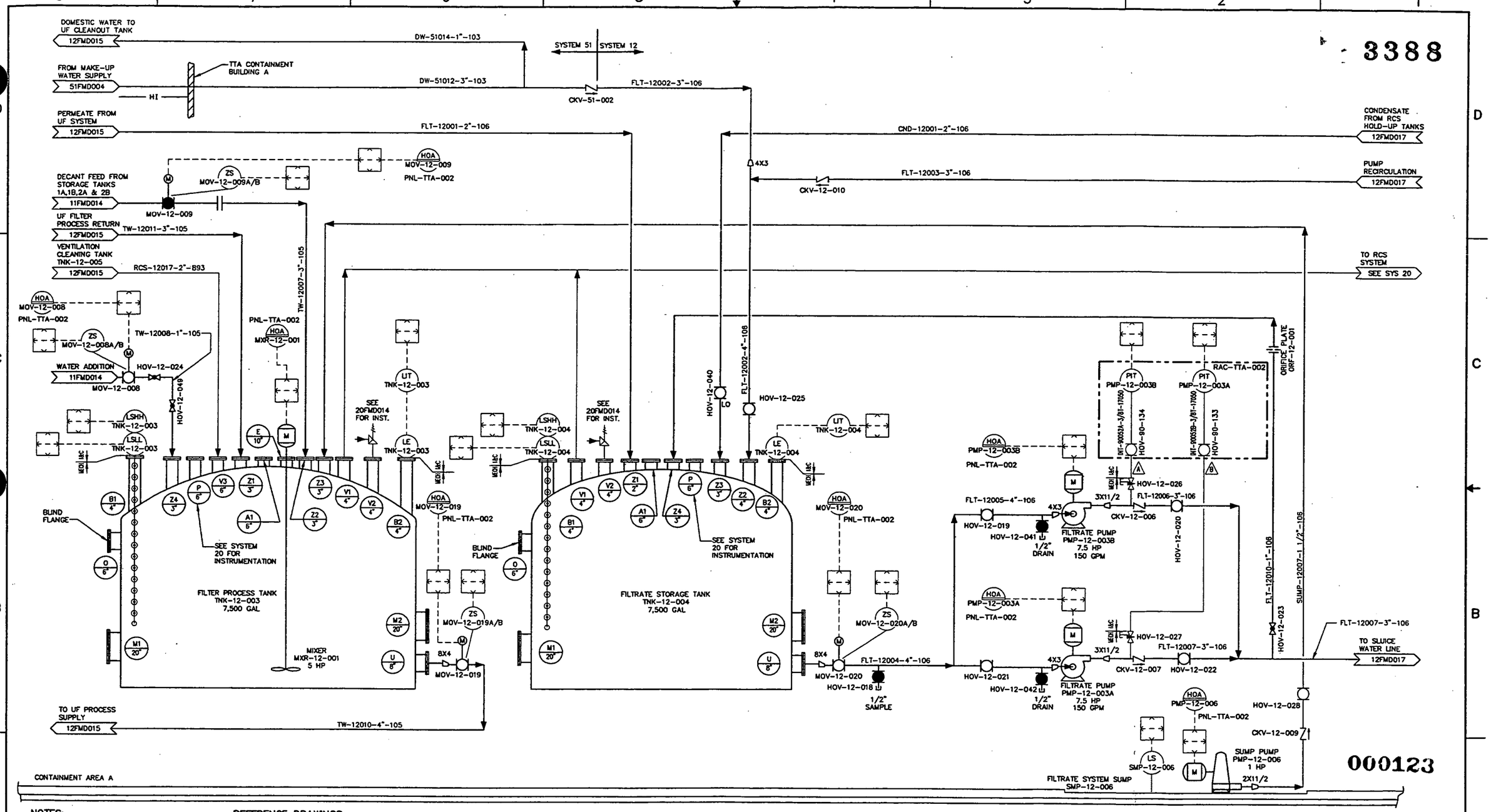

NOTES:

1. FOR GENERAL NOTES SEE DRAWING 05FMD004.
2. FOR MASS BALANCE TABLES SEE DRAWING 11FMD001 & 11FMD002.
3. SEE DRAWING 11PMD403 FOR DETAILS OF HIGH PRESSURE PUMP SKID SKD-11-252.

REFERENCE DRAWINGS:

05FMD001 -- INSTRUMENT IDENTIFICATION
05FMD002 -- CONTROL SYSTEM STANDARDS
05FMD003 -- PIPING & EQUIPMENT IDENTIFICATION
05FMD004 -- GENERAL NOTES
05FMD005 -- VALVE LIST - SHEET 1
05FMD006 -- VALVE LIST - SHEET 2

000515

PRELIMINARY
NOT FOR CONSTRUCTION

REV	DATE	BY	CHK'D	APR'VD	DESCRIPTION/ISSUE
1	8/3/00	BJD	JWH		ISSUED FOR 90% REVIEW / CP-00-001 & AWR-DCH-M-0001
0	11/01/99	BJD	SWH		PRELIMINARY DESIGN SUBMITTAL

RPE

DRAWN BY	B J DAVIS	DATE 11/01/99
DESIGNED BY	B J DAVIS	DATE 11/01/99
CHECKED BY	S W HUNGATE	DATE 11/01/99
APPROVED BY		DATE
APPROVED BY		DATE

DEPARTMENT OF ENERGY
FERNALD ENVIRONMENTAL MANAGEMENT PROJECT
SILOS 1 AND 2 ACCELERATED WASTE RETRIEVAL PROJECT
FERNALD, OHIO
FDF CONTRACT NO. FSC 624

FOSTER WHEELER
FOSTER WHEELER ENVIRONMENTAL CORPORATION

TITLE
TRANSFER TANK SYSTEM
PIPING & INSTRUMENT DIAGRAM
FILTRATE SYSTEM TANKS

SIZE	SCALE	DWG. NO.	REV
D	NONE	12FMD016	1

FILENAME: 12FMD016.DWG

G:\CHARGE\FDFS\...\SYS12\12fmd016.dwg, 08/30/2000 12:48:36 PM

3388

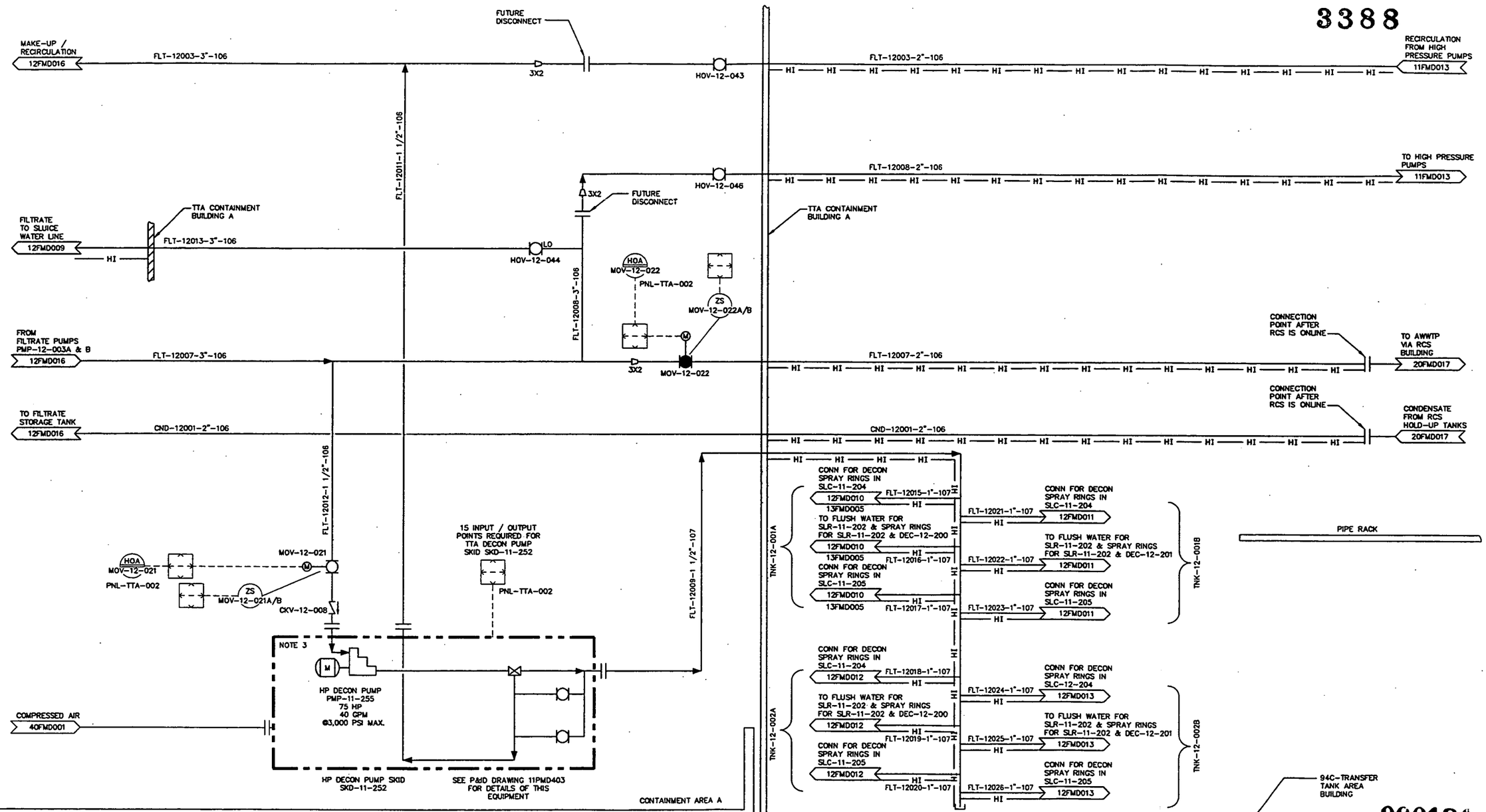

000124

NOTES:

1. FOR GENERAL NOTES SEE DRAWING 05FMD004.
2. FOR MASS BALANCE TABLES SEE DRAWING 11FMD001 & 11FMD002.
3. SEE DRAWING 11PMD403 FOR DETAILS OF HIGH PRESSURE PUMP SKID SKD-11-252.

REFERENCE DRAWINGS:

05FMD001 -- INSTRUMENT IDENTIFICATION
05FMD002 -- CONTROL SYSTEM STANDARDS
05FMD003 -- PIPING & EQUIPMENT IDENTIFICATION
05FMD004 -- GENERAL NOTES
05FMD005 -- VALVE LIST - SHEET 1
05FMD006 -- VALVE LIST - SHEET 2

000516

PRELIMINARY
NOT FOR CONSTRUCTION

REV	DATE	BY	CHK'D	APR'VD	DESCRIPTION/ISSUE
A	8/30/00	BJD	DJW	JWH	ISSUED FOR 90% REVIEW

REF

DRAWN BY BJD DATE 08/31/00
DESIGNED BY AJD DATE 08/31/00
CHECKED BY JWH DATE 8/31/00
APPROVED BY DATE
APPROVED BY DATE

DEPARTMENT OF ENERGY
FERNALD ENVIRONMENTAL MANAGEMENT PROJECT
SILOS 1 AND 2 ACCELERATED WASTE RETRIEVAL PROJECT
FERNALD, OHIO
FDF CONTRACT NO. FSC 624

FOSTER WHEELER
FOSTER WHEELER ENVIRONMENTAL CORPORATION

TITLE
TRANSFER TANK SYSTEM
PIPING & INSTRUMENT DIAGRAM
FILTRATE RECIRC & TRANSFER

SIZE	SCALE:	DWG. NO.	REV
D	NONE	12FMD017	A

FILENAME: 12FMD017.DWG

G:\CHARGE\FDFSIL\SYS12\12fmd017.dwg, 08/30/2000 12:49:14 PM

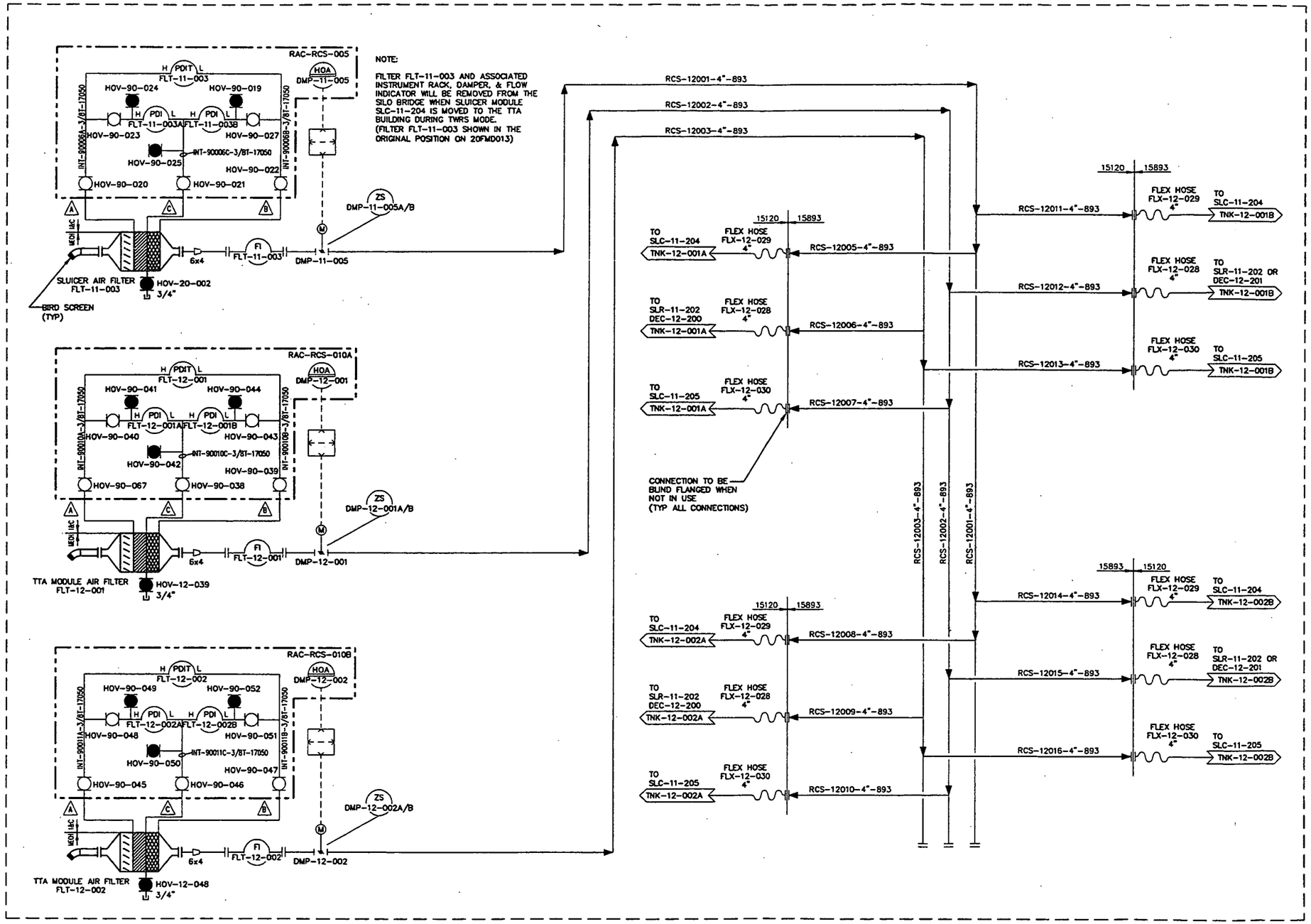

94C-TRANSFER TANK AREA BUILDING

NOTES: 3388

1. FOR GENERAL NOTES SEE DRAWING 05FMD004.

REFERENCE DRAWINGS:

05FMD001 -- INSTRUMENT IDENTIFICATION
05FMD002 -- CONTROL SYSTEM STANDARDS
05FMD003 -- PIPING & EQUIPMENT IDENTIFICATION
05FMD004 -- GENERAL NOTES
05FMD005 -- VALVE LIST - SHEET 1
05FMD006 -- VALVE LIST - SHEET 2

000125

000517

PRELIMINARY
NOT FOR CONSTRUCTION

REV	DATE	BY	CHK'D	APR'VD	DESCRIPTION/ISSUE
A	8/31/00	[illegible]	[illegible]		ISSUED FOR 90% REVIEW

DRAWN BY [illegible] DATE 08/31/00
DESIGNED BY [illegible] DATE 08/31/00
CHECKED BY [illegible] DATE 8/31/00
APPROVED BY DATE
APPROVED BY DATE

DEPARTMENT OF ENERGY
FERNALD ENVIRONMENTAL MANAGEMENT PROJECT
SILOS 1 AND 2 ACCELERATED WASTE RETRIEVAL PROJECT
FERNALD, OHIO
FDF CONTRACT NO. FSC 624

FOSTER WHEELER
FOSTER WHEELER ENVIRONMENTAL CORPORATION

TITLE
TRANSFER TANK SYSTEM
PIPING & INSTRUMENT DIAGRAM
MODULE AIR FILTERS

SIZE D | SCALE: NONE | DWG. NO. 12FMD019 | REV A

FILENAME: 12FMD019.DWG

G:\CHARGE\FDFSIL...\SYS12\12fmd019.dwg, 08/30/2000 12:50:30 PM

3388

SPECIFICATION JS-PM-SLC-11-203

SPECIFICATION JS-PM-SLR-11-200

SLURRY MODULE SLR-11-202
SEE P&ID DRAWINGS 11PMD500 & 11PMD501 FOR DETAILS OF THIS EQUIPMENT

SLUICER MODULE SLC-11-204
SEE P&ID DRAWING 11PMD001 FOR DETAILS OF THIS EQUIPMENT

SLUICER MODULE SLC-11-205
SEE P&ID DRAWING 11PMD001 FOR DETAILS OF THIS EQUIPMENT

MAST HOIST

FLEX HOSE FLX-12-029 4"
AIR INLET 12FMD019
BREATHING AIR FROM BOTTLES 41FMD001
SLURRY TO/FROM CONTAINMENT AREA B 12FMD009
MS-12002-3"-A
DECON WATER
SLUICE WATER TO/FROM CONTAINMENT AREA B 12FMD009
TW-12004-3"-A

FLEX HOSE FLX-12-028 4"
AIR INLET 12FMD019
BREATHING AIR FROM BOTTLES 41FMD001
FLEX HOSE FLX-13-002 1/2"
COMPRESSED AIR FROM LOCAL STATION 40FMD001
DECON WATER
SEAL WATER
FLUSH WATER

DECON WATER TO SLUICER MODULE SLC-11-204
FLEX HOSE FLX-13-014 3/4"
FLEX HOSE FLX-13-015 3/4"
FLEX HOSE FLX-13-016 3/4"
FLEX HOSE FLX-13-003 3/4"
SEE 51FMD004
FLEX HOSE FLX-12-030 4"
AIR INLET 12FMD019
BREATHING AIR FROM BOTTLES 41FMD001
DECON WATER

15105 15120
FLEX HOSE FLX-13-004 6"
FLEX HOSE FLX-13-005 3"
FLEX HOSE FLX-13-007 3"
FLEX HOSE FLX-13-006 6"
FLEX HOSE FLX-13-008 6"
FLEX HOSE FLX-13-009 3"
FLEX HOSE FLX-13-011 6"
FLEX HOSE FLX-13-010 3"
LIFT TABLE
CABLE REEL
SLOPE
RAD MONITOR (TYP)
DECON SPRAY (TYP)
FLEXIBLE SEAL (TYP)
BLIND FLANGE
GEARMOTOR

15120 15107
CONN FOR DECON SPRAY RINGS IN SLC-11-204 12FMD017
FLT-12015-1"-107
FLEX HOSE FLX-13-018 1"
HOV-12-014
RLT-12027-1"-107
FLEX HOSE FLX-13-017 1"
HOV-12-002
TO FLUSH WATER FOR SLR-11-202 & SPRAY RINGS FOR SLR-11-202 & DEC-12-200 12FMD017
RLT-12015-1"-107
FLEX HOSE FLX-13-019 1"
HOV-12-003
CONN FOR DECON SPRAY RINGS IN SLC-11-205 12FMD017
FLT-12017-1"-107
FLEX HOSE FLX-13-020 1"
HOV-12-004
AIR SWEEP TO RCS SYSTEM SEE SYS 20
SEE SYSTEM 20 DRAWINGS FOR DETAILS OF THIS AREA
48" RISER SHIELD BOX SHL-12-002A (NOTE 3)
TTA EQUIPMENT DECK

SEE SYSTEM 20 DRAWINGS FOR INSTRUMENTION
AIR SWEEP FROM RCS SYSTEM SEE SYS 20
LT TNK-12-001A
SOUTHWEST CAMERA VIEWPORT
CAMERA VIEWPORT / SPARE
V1 20" N1 12" E1 20" N2 12" B2 12" N3 12" E2 48" F 6" B1 12" N4 12" N5 12" E3 20" V2 4" V3 6" O 6"
OVERFLOW TO/FROM TANK TNK-12-001B 12FMD011
MS-12008-6"-105
TO BUILDING SUMP 12FMD014
SLUICING NOZZLE
SLURRY PUMP PMP-11-302 40 HP
TRANSFER STORAGE TANK TNK-12-001A
SHOWN IN TTA WASTE RETRIEVAL MODE TO FUTURE REMEDIATION FACILITY TANKS TNK-12-001B, TNK-12-002A, &TNK-12-002B ARE SIMILAR
RESIDUE
TANK FOUNDATION
CONTAINMENT BUILDING
TANK SUMP SMP-12-001A

000126

NOTES:
1. FOR GENERAL NOTES SEE DRAWING 05FMD004.
2. FOR MASS BALANCE TABLES SEE DRAWING 13FMD001.
3. SHIELD BOX TO BE PLACED OVER E2-48" RISER WHEN NOT IN USE.

REFERENCE DRAWINGS:
05FMD001 -- INSTRUMENT IDENTIFICATION
05FMD002 -- CONTROL SYSTEM STANDARDS
05FMD003 -- PIPING & EQUIPMENT IDENTIFICATION
05FMD004 -- GENERAL NOTES
05FMD005 -- VALVE LIST
05FMD006 -- VALVE LIST - SHEET 2

000548

PRELIMINARY
NOT FOR CONSTRUCTION

REV	DATE	BY	CHK'D	APR'VD	DESCRIPTION/ISSUE
1					ISSUED FOR 90% REVIEW / CP-00-001 & AWR-DCN-M-0001
0	11/01/99	BJD	SWH		PRELIMINARY DESIGN SUBMITTAL

RPE

DRAWN BY B J DAVIS	DATE 11/01/99	
DESIGNED BY B J DAVIS	DATE 11/01/99	
CHECKED BY S W HUNGATE	DATE 11/01/99	
APPROVED BY	DATE	
APPROVED BY	DATE	

DEPARTMENT OF ENERGY
FERNALD ENVIRONMENTAL MANAGEMENT PROJECT
SILOS 1 AND 2 ACCELERATED WASTE RETRIEVAL PROJECT
FERNALD, OHIO
FDF CONTRACT NO. FSC 624

FOSTER WHEELER
FOSTER WHEELER ENVIRONMENTAL CORPORATION

TITLE
TRANSFER TANK WASTE RETRIEVAL PIPING & INSTRUMENT DIAGRAM STORAGE TANK TNK-12-001A

SIZE	SCALE:	DWG. NO.	REV
D	NONE	13FMD005	1

FILENAME: 13FMD005.DWG

G:\CHARGE\FDFSI\SYS13\13fmd005.dwg, 08/30/2000 12:53:09 PM

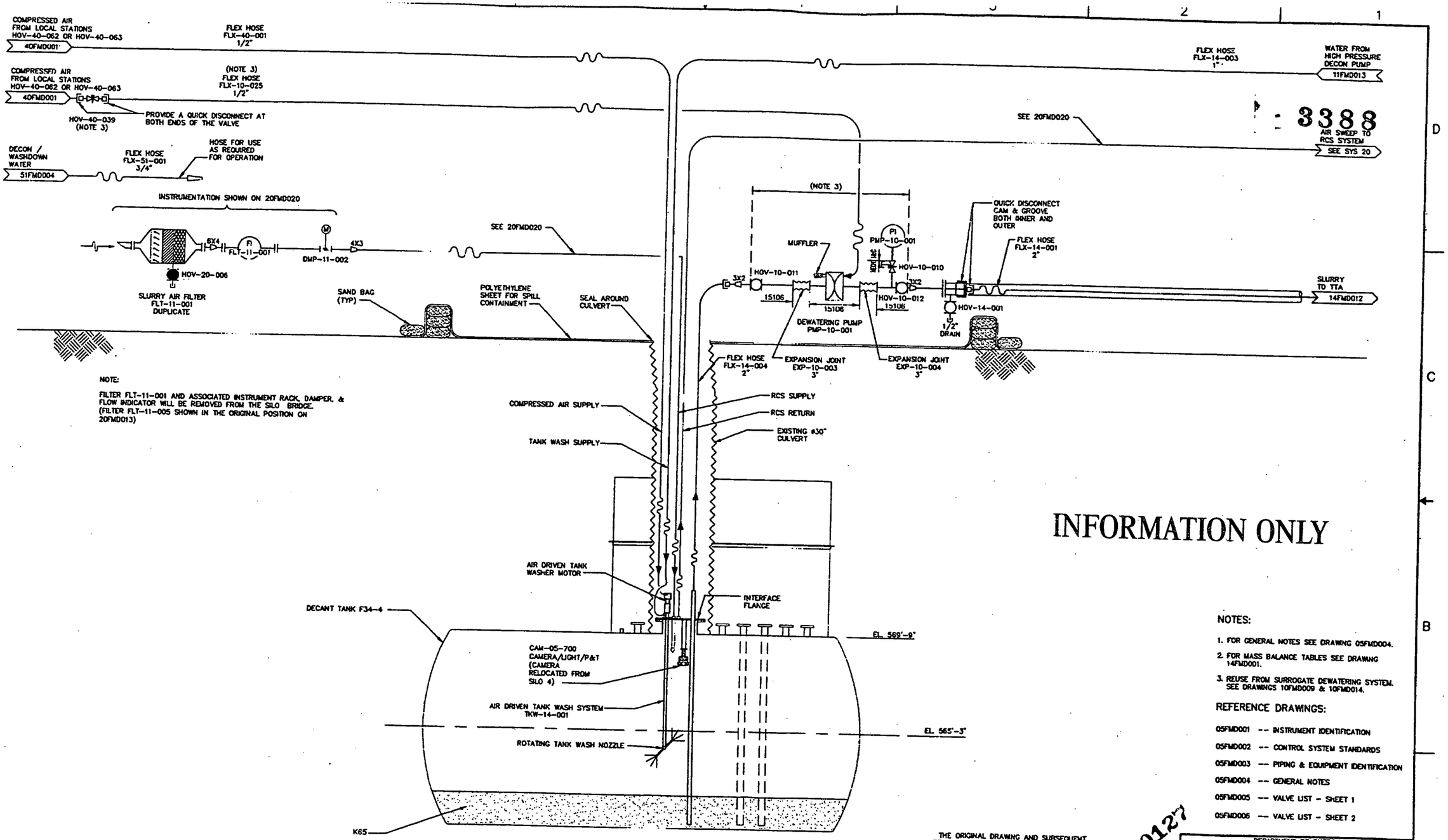

3388

INFORMATION ONLY

NOTES:

1. FOR GENERAL NOTES SEE DRAWING 05FMD004.
2. FOR MASS BALANCE TABLES SEE DRAWING 14FMD001.
3. REUSE FROM SURROGATE DEWATERING SYSTEM. SEE DRAWINGS 10FMD009 & 10FMD014.

REFERENCE DRAWINGS:

05FMD001 -- INSTRUMENT IDENTIFICATION
05FMD002 -- CONTROL SYSTEM STANDARDS
05FMD003 -- PIPING & EQUIPMENT IDENTIFICATION
05FMD004 -- GENERAL NOTES
05FMD005 -- VALVE LIST - SHEET 1
05FMD006 -- VALVE LIST - SHEET 2

THE ORIGINAL DRAWING AND SUBSEQUENT REVISIONS THEREOF, WITH APPROVAL NAMES, INITIALS, AND THE PE SEAL, IF APPLICABLE, ARE MAINTAINED IN THE FILES OF FWENC.

000127

000519

REV	DATE	BY	CHK'D	APR'VD	DESCRIPTION/ISSUE
0	11/10/00	[illegible]	[illegible]	[illegible]	CERTIFIED FOR CONSTRUCTION

STATE OF OHIO KENNETH D. RICKETT E-64418 REGISTERED PROFESSIONAL ENGINEER 11/10/00

DRAWN BY B.J. Davis DATE 11/10/00
DESIGNED BY B.J. Davis DATE 11/10/00
CHECKED BY [illegible] DATE 11/10/00
APPROVED BY [illegible] DATE 11/10/00
APPROVED BY John Lawson DATE 11/10/00

DEPARTMENT OF ENERGY
FERNALD ENVIRONMENTAL MANAGEMENT PROJECT
SILOS 1 AND 2 ACCELERATED WASTE RETRIEVAL PROJECT
FERNALD, OHIO
FDF CONTRACT NO. FSC 624

FOSTER WHEELER
FOSTER WHEELER ENVIRONMENTAL CORPORATION

TITLE
DECANT SUMP RETRIEVAL SYSTEM
PIPING & INSTRUMENT DIAGRAM
DECANT SUMP RETRIEVAL

SIZE D | SCALE: NONE | DWG. NO. 14FMD010 | REV 0

FILENAME: 14FMD010.DWG

3388

NOTES:

1. FOR GENERAL NOTES SEE DRAWING 05FMD004.
2. FOR MASS BALANCE TABLES SEE DRAWING 14FMD001.

REFERENCE DRAWINGS:

05FMD001 -- INSTRUMENT IDENTIFICATION
05FMD002 -- CONTROL SYSTEM STANDARDS
05FMD003 -- PIPING & EQUIPMENT IDENTIFICATION
05FMD004 -- GENERAL NOTES
05FMD005 -- VALVE LIST - SHEET 1
05FMD006 -- VALVE LIST - SHEET 2

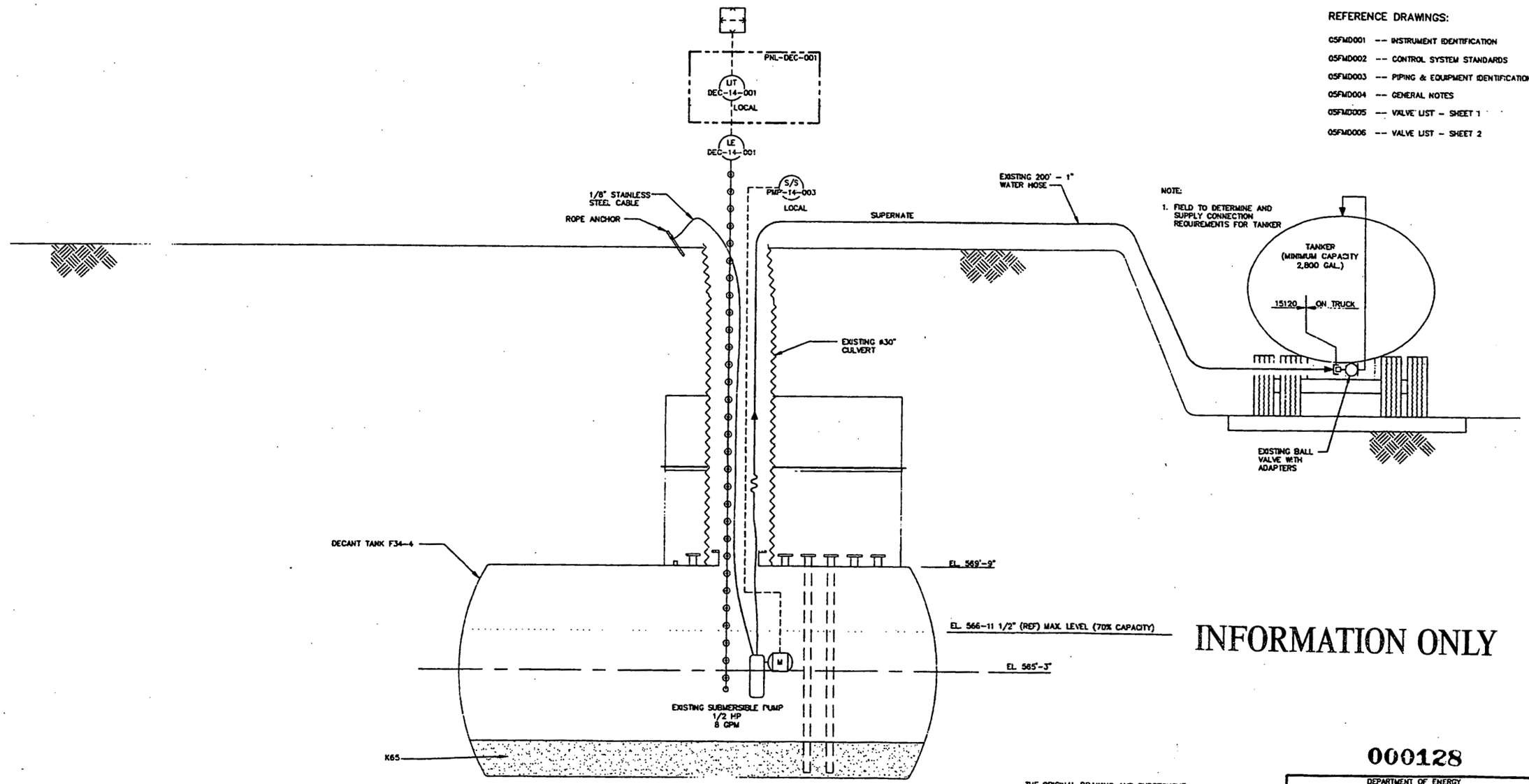

INFORMATION ONLY

000128

THE ORIGINAL DRAWING AND SUBSEQUENT REVISIONS THEREOF, WITH APPROVAL NAMES, INITIALS, AND THE PE SEAL IF APPLICABLE, ARE MAINTAINED IN THE FILES OF FWENC.

REV	DATE	BY	CHK'D	APR'VD	DESCRIPTION/ISSUE
0	11/10/00	BJD	BDL	KDR	CERTIFIED FOR CONSTRUCTION

RPE: STATE OF OHIO, KENNETH D. RICKETT, E-64418, REGISTERED PROFESSIONAL ENGINEER

		DATE
DRAWN BY	B.J. Davis	11/10/00
DESIGNED BY	B.J. Davis	11/10/00
CHECKED BY	B.L. Langley	11/10/00
APPROVED BY	Kenneth D. Rickett	11/10/00
APPROVED BY	[signature]	11/10/00

DEPARTMENT OF ENERGY
FERNALD ENVIRONMENTAL MANAGEMENT PROJECT
SILOS 1 AND 2 ACCELERATED WASTE RETRIEVAL PROJECT
FERNALD, OHIO
FDF CONTRACT NO. FSC 624

FOSTER WHEELER
FOSTER WHEELER ENVIRONMENTAL CORPORATION

TITLE
DECANT SUMP RETRIEVAL SYSTEM
PIPING & INSTRUMENT DIAGRAM
DECANT SUMP - SWRS MODE

SIZE	SCALE	DWG. NO.	REV
D	NONE	14FMD011	0

FILENAME: 14FMD011.DWG

000520

3388

NOTES:

1. FOR GENERAL NOTES SEE DRAWING 05FMD004.
2. FOR MASS BALANCE TABLES SEE DRAWING 14FMD001.

REFERENCE DRAWINGS:

05FMD001 -- INSTRUMENT IDENTIFICATION
05FMD002 -- CONTROL SYSTEM STANDARDS
05FMD003 -- PIPING & EQUIPMENT IDENTIFICATION
05FMD004 -- GENERAL NOTES
05FMD005 -- VALVE LIST - SHEET 1
05FMD006 -- VALVE LIST - SHEET 2

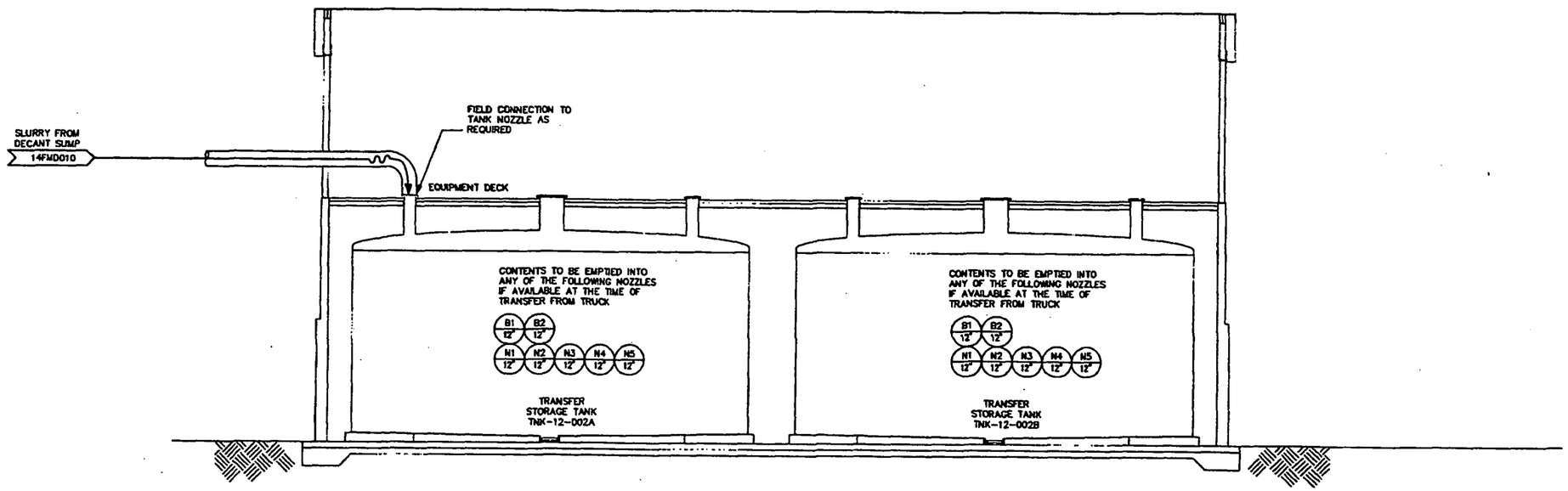

INFORMATION ONLY

000129

THE ORIGINAL DRAWING AND SUBSEQUENT REVISIONS THEREOF, WITH APPROVAL NAMES, INITIALS, AND THE PE SEAL, IF APPLICABLE, ARE MAINTAINED IN THE FILES OF FWENC.

REV	DATE	BY	CHK'D	APR'VD	DESCRIPTION/ISSUE
0	11/10/00	[illegible]	[illegible]	[illegible]	CERTIFIED FOR CONSTRUCTION

STATE OF OHIO — KENNETH D. RICKETT — E-64418 — REGISTERED PROFESSIONAL ENGINEER

		DATE
DRAWN BY	[illegible]	11/10/00
DESIGNED BY	[illegible]	11/10/00
CHECKED BY	[illegible]	11/10/00
APPROVED BY	[illegible]	11/10/00
APPROVED BY	[illegible]	10/10/00

DEPARTMENT OF ENERGY
FERNALD ENVIRONMENTAL MANAGEMENT PROJECT
SILOS 1 AND 2 ACCELERATED WASTE RETRIEVAL PROJECT
FERNALD, OHIO
FDF CONTRACT NO. FSC 624

FOSTER WHEELER
FOSTER WHEELER ENVIRONMENTAL CORPORATION

TITLE
DECANT SUMP RETRIEVAL SYSTEM
PIPING & INSTRUMENT DIAGRAM
DECANT SUMP CONTENTS STORAGE

SIZE	SCALE:	DWG. NO.	REV
D	NONE	14FMD012	0

FILENAME: 14FMD012.DWG

000521

NOTES:

1. FOR GENERAL NOTES SEE DRAWING 05FMD004.

2. FOR MASS BALANCE TABLES SEE DRAWINGS 20FMD001 & 20FMD002.

3. THE SEQUENCE OF OPERATION OF SILOS IS DIVIDED INTO THE FOLLOWING PHASES:

PHASE 1 – SILO 1 AND SILO 2 HEADSPACE REDUCTION
PHASE 2A – SILO 1 RETRIEVAL, SILO 2 HEADSPACE REDUCTION, TTA VENTILATION
PHASE 2B – SILO 2 RETRIEVAL, TTA VENTILATION

4. PHASE 1 OPERATION AT THE SILOS:

THIS OPERATIONAL DESCRIPTION APPLIES ONLY TO ITEMS APPEARING ON DRAWING 20FMD003, 20FMD004, 20FMD012, & 20FMD013.

DURING PHASE 1, THE RCS SUCTION LINES FROM SILOS 1 & 2 WILL BE FLEXIBLE DUCTING ROUTED OVER THE BERM AND CONNECTED TO THE RIGID RCS DUCTING AT THE BASE OF THE PIPE RACK (SEE CONNECTION POINTS 1 & 4 ON DRAWINGS 20FMD004 AND 20FMD013). A LOW-POINT CONDENSATE TRAP WILL BE LOCATED IN THE DUCT AT THE BASE THE PIPE RACK. THE RCS SUPPLY DUCTING WILL BE FLEXIBLE DUCTING ROUTED OVER THE BERM AND CONNECTED TO THE RIGID RCS DUCTING AT THE BASE OF THE PIPE RACK (SEE CONNECTION POINTS 2 & 3 ON DRAWINGS 20FMD004 AND 20FMD013).

RCS SUCTION FLOW WILL BE ESTABLISHED FOR SILO 1 BY OPENING DMP-20-049, DMP-20-082, LVR-20-004, AND DMP-20-059. RCS SUPPLY FLOW WILL BE ESTABLISHED FOR SILO 1 BY OPENING DMP-20-047, DMP-20-080, LVR-20-003, AND DMP-20-038.

RCS SUCTION FLOW WILL BE ESTABLISHED FOR SILO 2 BY OPENING DMP-20-053, LVR-20-001, AND DMP-20-060. RCS SUPPLY FLOW WILL BE ESTABLISHED FOR SILO 2 BY OPENING DMP-20-051, LVR-20-002, AND DMP-20-039.

DAMPERS DMP-20-046, DMP-20-048, DMP-20-050, DMP-20-052, DMP-20-081, DMP-20-083, AND DMP-20-054 WILL REMAIN CLOSED AND BLIND FLANGED DURING PHASE 1 OPERATIONS.

CONCURRENT WITH PHASE 1 OPERATION THE PIPE RACK WILL BE EXTENDED TO ITS FINAL TERMINATION POINT NEAR THE BRIDGE PIVOT. SPOOL PIECES 1, 2, AND 3 WILL BE ADDED TO EXTEND THE DUCTWORK TO THE INTERFACE POINTS WITH THE BRIDGE.

5. PHASE 2A OPERATION AT THE SILOS:

PHASE 2A OPERATIONS WILL INVOLVE POSITIONING THE BRIDGE OVER SILO 1. THE RCS SUPPLY AND SUCTION DUCTS FROM SILO 1 WILL BE CONNECTED TO RIGID DUCTING, INSTALLED ON THE BRIDGE, BY MEANS OF FLEXIBLE DUCTING. THE SUPPLY AND SUCTION DUCTING WILL BE ROUTED ON THE NEW BRIDGE AND CONNECTED TO THE RCS DUCTING ON THE PIPE RACK BY MEANS OF SPOOL PIECES 4 AND 5 (SEE DRAWINGS 20FMD004 AND 20FMD013). ALL RCS DUCTING ON THE PIPE RACK WILL BE SLOPED TO THE RCS BUILDING, WHILE DUCTWORK ON THE BRIDGE WILL SLOPE TO THE SILO.

RCS SUCTION FLOW WILL BE ESTABLISHED FOR SILO 1 BY OPENING DMP-20-048, DMP-20-083, LVR-20-004, AND DMP-20-059. RCS SUPPLY FLOW WILL BE ESTABLISHED FOR SILO 1 BY OPENING DMP-20-046, DMP-20-081, LVR-20-003, AND DMP-20-038.

RCS SUCTION FLOW WILL BE ESTABLISHED FOR SILO 2 BY OPENING DMP-20-053, LVR-20-001, AND DMP-20-060. RCS SUPPLY FLOW WILL BE ESTABLISHED FOR SILO 2 BY OPENING DMP-20-051, LVR-20-002, DMP-20-039.

DURING PHASE 2A OPERATION, DMP-20-080 SHALL BE CLOSED AND BLIND FLANGED. THE ASSOCIATED DOWN STREAM PIPING SHALL BE REMOVED. DMP-20-082 AND DMP-20-084 SHALL BE CLOSED AND BLIND FLANGED. THE ASSOCIATED UP STREAM PIPING SHALL BE REMOVED. IN ADDITION, DAMPERS DMP-20-047, DMP-20-049, DMP-20-050, DMP-20-052 ARE CLOSED AND BLIND FLANGED.

AFTER COMPLETION OF PHASE 2A, SILO 1 WILL BE COMPLETE AND REMOVED FROM THE SYSTEM. SPOOL PIECES 4, 5, & 6 SHALL BE DISCONNECTED TO ALLOW REPOSITIONING OF THE BRIDGE OVER TO SILO 2. AFTER REPOSITIONING OF THE BRIDGE OVER SILO 2, SPOOL PIECES 4, 5, & 6 WILL BE RECONNECTED IN PREPARATION FOR PHASE 2B OPERATION.

6. PHASE 2B OPERATION:

THIS OPERATIONAL DESCRIPTION APPLIES ONLY TO ITEMS APPEARING ON DRAWING 20FMD003, 20FMD004, 20FMD012, & 20FMD013.

PHASE 2B OPERATIONS WILL INVOLVE POSITIONING THE BRIDGE OVER SILO 2. THE RCS SUPPLY AND SUCTION DUCTS FROM SILO 2 WILL BE CONNECTED TO RIGID DUCTING, INSTALLED ON THE BRIDGE, BY MEANS OF FLEXIBLE DUCTING. THE SUPPLY AND SUCTION DUCTING WILL BE ROUTED ON THE NEW BRIDGE AND CONNECTED TO THE RCS DUCTING ON THE PIPE RACK BY MEANS OF SPOOL PIECES 4 AND 5 (SEE DRAWINGS 20FMD004 AND 20FMD013). ALL RCS DUCTING ON THE PIPE RACK WILL BE SLOPED TO THE RCS BUILDING, WHILE DUCTWORK ON THE BRIDGE WILL SLOPE TO THE SILO.

RCS SUCTION FLOW WILL BE ESTABLISHED FOR SILO 2 BY OPENING DMP-20-052, DMP-20-083, LVR-20-004, AND DMP-20-059. RCS SUPPLY FLOW WILL BE ESTABLISHED FOR SILO 2 BY OPENING DMP-20-050, DMP-20-081, LVR-20-003, AND DMP-20-038.

DURING PHASE 2B OPERATION LVR-20-002 SHALL BE CLOSED AND BLIND FLANGED. THE ASSOCIATED DOWN STREAM SHALL BE REMOVED. DMP-20-058, AND LVR-20-001 SHALL BE CLOSED AND BLIND FLANGED. THE ASSOCIATED UP STREAM OF SHALL BE REMOVED. IN ADDITION, DAMPERS DMP-20-051 AND DMP-20-053 WILL BE CLOSED AND BLIND FLANGED.
DAMPERS DMP-20-080, DMP-20-082, AND DMP-20-084 WILL REMAIN CLOSED AND BLIND FLANGED DURING PHASE 2B OPERATIONS. DAMPER DMP-20-060 WILL ALSO BE CLOSED.

000522

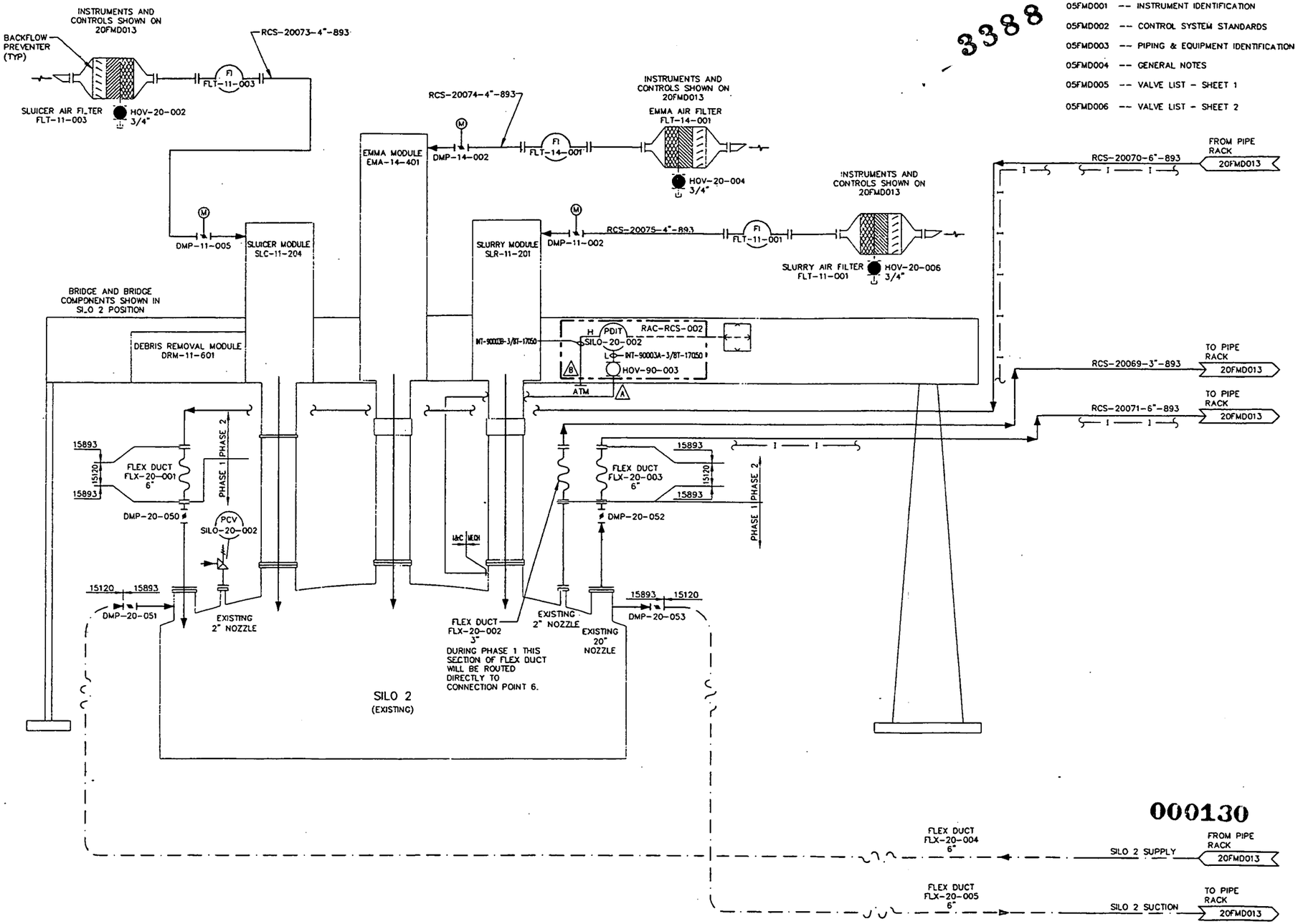

3388

REFERENCE DRAWINGS:

05FMD001 -- INSTRUMENT IDENTIFICATION
05FMD002 -- CONTROL SYSTEM STANDARDS
05FMD003 -- PIPING & EQUIPMENT IDENTIFICATION
05FMD004 -- GENERAL NOTES
05FMD005 -- VALVE LIST - SHEET 1
05FMD006 -- VALVE LIST - SHEET 2

000130

THE ORIGINAL DRAWING AND SUBSEQUENT REVISIONS THEREOF, WITH APPROVAL NAMES, INITIALS, AND THE PE SEAL, IF APPLICABLE, ARE MAINTAINED IN THE FILES OF FWENC.

REV	DATE	BY	CHK'D	APR'VD	DESCRIPTION/ISSUE
2	08/10/00	BJD	KDR	KDR	CERTIFIED FOR CONSTRUCTION
1	05/15/00	BJD			ISSUED FOR 90% REVIEW/CP-00-001
0	01/01/99	BJD	KR		PRELIMINARY DESIGN SUBMITTAL

PE: STATE OF OHIO, KENNETH D. RICKETT, E-64418, REGISTERED PROFESSIONAL ENGINEER, 8-10-00

		DATE
DRAWN BY	BJ Davis	08/10/00
DESIGNED BY	BJ Davis	08/10/00
CHECKED BY	Kenneth D. Rickett	08/10/00
APPROVED BY	Kenneth D. Rickett	8/10/00
APPROVED BY	John Simon	8/10/00

DEPARTMENT OF ENERGY
FERNALD ENVIRONMENTAL MANAGEMENT PROJECT
SILOS 1 AND 2 ACCELERATED WASTE RETRIEVAL PROJECT
FERNALD, OHIO
FDF CONTRACT NO. FSC 624

FOSTER WHEELER
FOSTER WHEELER ENVIRONMENTAL CORPORATION

TITLE
RADON CONTROL SYSTEM
PIPING & INSTRUMENT DIAGRAM
SILO 2

SIZE	SCALE:	DWG. NO.	REV
D	NONE	20FMD012	2

FILENAME: 20FMD012.DW

3388

RAC-RCS-005
HOV-90-024
HOV-90-026
FLT-11-003
FLT-11-003A
FLT-11-003B
HOV-90-023
HOV-90-027
HOV-90-025
HOV-90-022
HOV-90-020
HOV-90-021
INT-90006C-3/8T-17050
INT-90006A-3/8T-17050
INT-90006B-3/8T-17050
DMP-11-005
DMP-11-005A/B
RCS-20073-4"-893
HOV-20-002 3/4"
BACKFLOW PREVENTER (TYP)
SLUICER AIR FILTER FLT-11-003
SLUICER MODULE SLC-11-204
BRIDGE AND BRIDGE COMPONENTS SHOWN IN SILO 1 POSITION
DEBRIS REMOVAL MODULE DRM-11-601
EMMA MODULE EMA-14-401
DMP-14-002
DMP-14-002A/B
RCS-20074-4"-893
EMMA AIR FILTER FLT-14-001
HOV-20-004 3/4"
RAC-RCS-004
HOV-90-016
HOV-90-019
FLT-14-001
FLT-14-001B
FLT-14-001A
HOV-90-015
HOV-90-018
HOV-90-017
INT-90005C-3/8T-17050
HOV-90-012
HOV-90-014
HOV-90-013
INT-90005B-3/8T-17050
INT-90005A-3/8T-17050
RAC-RCS-003
HOV-90-008
HOV-90-010
FLT-11-001
FLT-11-001B
FLT-11-001A
HOV-90-007
HOV-90-011
HOV-90-009
INT-90004C-3/8T-17050
HOV-90-004
HOV-90-006
HOV-90-005
INT-90004B-3/8T-17050
INT-90004A-3/8T-17050
DMP-11-002
DMP-11-002A/B
RCS-20075-4"-893
SLURRY MODULE SLR-11-201
SLURRY AIR FILTER FLT-11-001
HOV-20-006 3/4"
RCS-20070-6"-893
RAC-RCS-001
SILO-20-001
INT-90002A-3/8T-17050
INT-90002B-3/8T-17050
HOV-90-002
ATM
RCS-20069-3"-893
RCS-20071-6"-893
FLEX DUCT FLX-20-001 6"
DMP-20-046
PCV SILO-20-001
DMP-20-047
EXISTING 20" NOZZLE
EXISTING 2" NOZZLE
FLEX DUCT FLX-20-002 3"
DURING PHASE 1 THIS SECTION OF FLEX DUCT WILL BE ROUTED DIRECTLY TO CONNECTION POINT 7.
FLEX DUCT FLX-20-003 6"
DMP-20-048
DMP-20-049
FLEX DUCT FLX-20-007 6"
SILO 1 (EXISTING)
PHASE 1
PHASE 2
15893
15120
SPOOL PIECE 4 REMOVABLE TO ALLOW BRIDGE ROTATION (TYP)
SPOOL PIECE 1
SPOOL PIECE 2
SPOOL PIECE 5 REMOVABLE TO ALLOW BRIDGE ROTATION (TYP)
SPOOL PIECE 6 REMOVABLE TO ALLOW BRIDGE ROTATION (TYP)
SPOOL PIECE 3
BLIND FLANGE WHEN NOT IN USE
RCS-20006-6"-893
DMP-20-080
DMP-20-081
LVR-20-003
RCS-20005-8"-893
FROM RECIRCULATION FANS 20FMD019
DMP-20-038
DMP-20-039
RCS-20070-6"-893
LVR-20-002
RCS-20005-6"-893
RCS-20008-6"-893
DMP-20-082
DMP-20-083
LVR-20-004
FIT SILO-20-001
FE SILO-20-001
DMP-20-084
PNL-RCS-006A
DMP-20-084A/B
DMP-20-054A/B
DMP-20-054
BLIND FLANGE WHEN NOT IN USE
RCS-20078-3"-893
DMP-20-059
RCS-20020-8"-893
TO TREATMENT SYSTEM 20FMD018
RCS-20064-3"-893
DMP-20-058A/B
DMP-20-058
DMP-20-060
LVR-20-001
FE SILO-20-002
FIT SILO-20-002
RCS-20001-6"-893
PIPE RACK
SCREWED CAP WHEN NOT IN USE
AIR FLOW
15106
LSHH
CND-20-003
CND-20-004
4x1 1/2 ECC
HOV-20-020
HOV-20-021
CND-20015-1 1/2"-106
CND-20015-4"-106
CND-20017-1 1/2"-106
CND-20017-4"-106
CND-20015-6"-106
CND-20017-6"-106
CONDENSATE TRAP
DETAIL 1 SCALE: NONE
DETAIL 2 SCALE: NONE
20FMD004 20FMD013
SILO 1 SUCTION
SILO 1 SUPPLY
SILO 2 SUPPLY
SILO 2 SUPPLY
TO SILO 2 20FMD012
FROM SILO 2 20FMD012
FLEX DUCT FLX-20-006 6"
FLEX DUCT FLX-20-004 6"
FLEX DUCT FLX-20-005 6"
FROM DWRS SYSTEM 20FMD020
REUSE FLEX DUCT FLX-20-005 - 6". CUT AND REASSEMBLE AS REQUIRED. ROUTE TO CONNECTION POINT 4.
RCS PHASE 2 PIPE RACK CONSTRUCTION
RCS PHASE 1 PIPE RACK CONSTRUCTION

NOTES:

1. FOR NOTES SEE DRAWINGS 20FMD003, & 20FMD012

LEGEND:

(1) = INDICATES CONNECTION POINTS FOR PIPING.

— · — · — · — = INDICATES FLEX DUCT FOR PHASE 1

000131

REFERENCE DRAWINGS:

05FMD001 -- INSTRUMENT IDENTIFICATION
05FMD002 -- CONTROL SYSTEM STANDARDS
05FMD003 -- PIPING & EQUIPMENT IDENTIFICATION
05FMD004 -- GENERAL NOTES
05FMD005 -- VALVE LIST - SHEET 1
05FMD006 -- VALVE LIST - SHEET 2

LETTER OR NUMBER OF SECTION OR DETAIL
DRAWING ON WHICH SECTION OR DETAIL IS TAKEN
DRAWING ON WHICH SECTION OR DETAIL IS SHOWN
SECTION & DETAIL KEY

000523

THE ORIGINAL DRAWING AND SUBSEQUENT REVISIONS THEREOF, WITH APPROVAL NAMES, INITIALS, AND THE PE SEAL, IF APPLICABLE, ARE MAINTAINED IN THE FILES OF FWENC.

REV	DATE	BY	CHK'D	APR'VD	DESCRIPTION/ISSUE
2	08/10/00	BJD	KBR	KBR	CERTIFIED FOR CONSTRUCTION
1	05/15/00	BJD			ISSUED FOR 90% REVIEW/CP-00-001
0	11/01/99	BJD	KR		PRELIMINARY DESIGN SUBMITTAL

RPE STATE OF OHIO KENNETH D. ROBETT E-6418 REGISTERED PROFESSIONAL ENGINEER

DRAWN BY H. Davis DATE 08/10/00
DESIGNED BY H. Davis DATE 08/10/00
CHECKED BY Kenneth D. Robett DATE 08/10/00
APPROVED BY Kenneth D. Robett DATE 08/10/00
APPROVED BY John Larson DATE 8/10/00

DEPARTMENT OF ENERGY
FERNALD ENVIRONMENTAL MANAGEMENT PROJECT
SILOS 1 AND 2 ACCELERATED WASTE RETRIEVAL PROJECT
FERNALD, OHIO
FDF CONTRACT NO. FSC 624

FOSTER WHEELER
FOSTER WHEELER ENVIRONMENTAL CORPORATION

TITLE
RADON CONTROL SYSTEM
PIPING & INSTRUMENT DIAGRAM
SILO 1

SIZE D | SCALE: NONE | DWG. NO. 20FMD013 | REV 2

FILENAME: 20FMD013.DWG

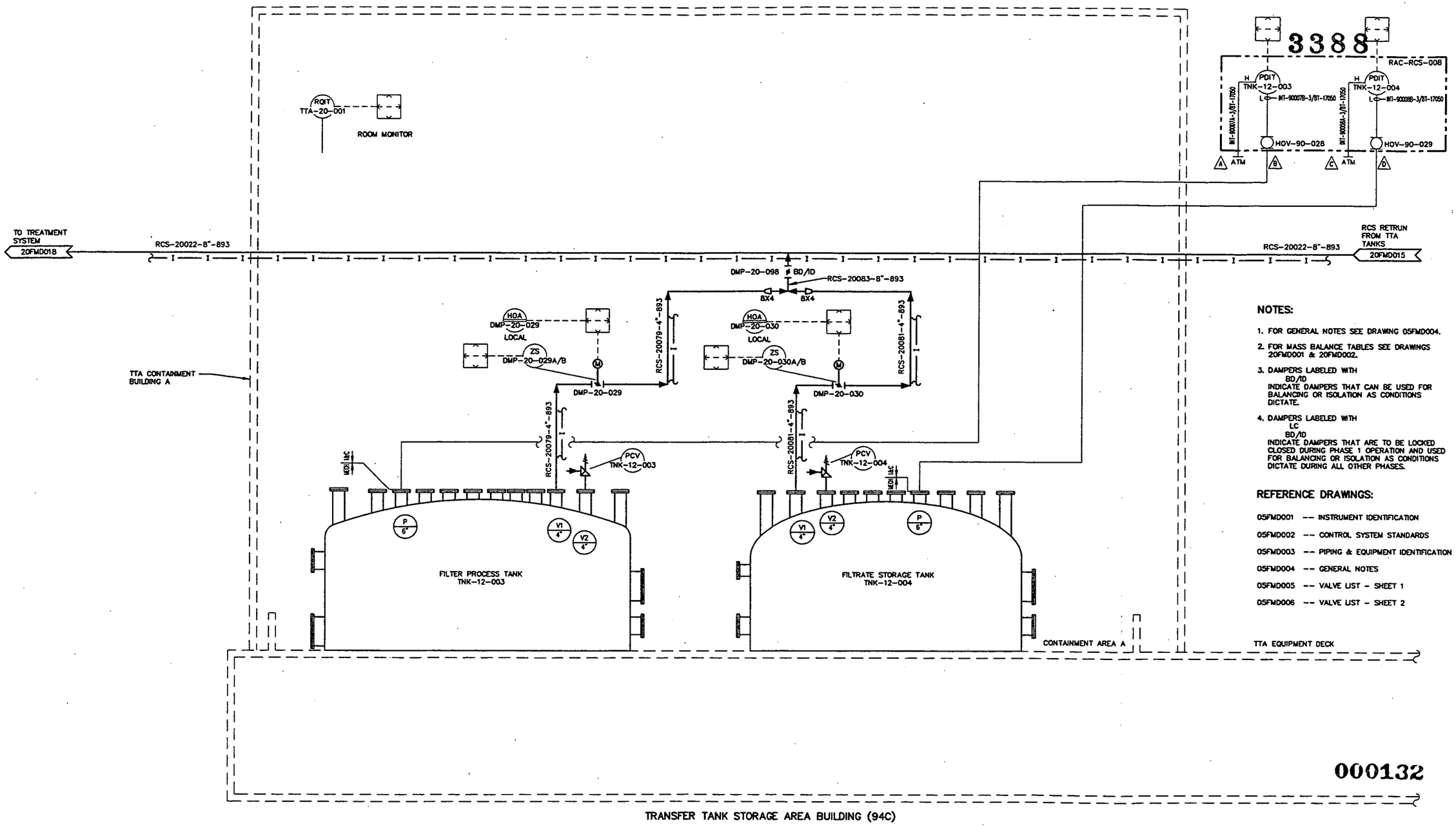

NOTES:

1. FOR GENERAL NOTES SEE DRAWING 05FMD004.
2. FOR MASS BALANCE TABLES SEE DRAWINGS 20FMD001 & 20FMD002.
3. DAMPERS LABELED WITH BD/ID INDICATE DAMPERS THAT CAN BE USED FOR BALANCING OR ISOLATION AS CONDITIONS DICTATE.
4. DAMPERS LABELED WITH LC BD/ID INDICATE DAMPERS THAT ARE TO BE LOCKED CLOSED DURING PHASE 1 OPERATION AND USED FOR BALANCING OR ISOLATION AS CONDITIONS DICTATE DURING ALL OTHER PHASES.

REFERENCE DRAWINGS:

05FMD001 -- INSTRUMENT IDENTIFICATION
05FMD002 -- CONTROL SYSTEM STANDARDS
05FMD003 -- PIPING & EQUIPMENT IDENTIFICATION
05FMD004 -- GENERAL NOTES
05FMD005 -- VALVE LIST - SHEET 1
05FMD006 -- VALVE LIST - SHEET 2

000132

000524

PRELIMINARY
NOT FOR CONSTRUCTION

REV	DATE	BY	CHK'D	APR'VD	DESCRIPTION/ISSUE
1	8/31/00	BJD	KR		ISSUED FOR 90% REVIEW / CP-00-001 & AWR-DCN-M-0001
0	11/01/99	BJD	KR		PRELIMINARY DESIGN SUBMITTAL

RPE

		DATE
DRAWN BY	B J DAVIS	11/01/99
DESIGNED BY	B J DAVIS	11/01/99
CHECKED BY	KEN RICKETT	11/01/99
APPROVED BY		DATE
APPROVED BY		DATE

DEPARTMENT OF ENERGY
FERNALD ENVIRONMENTAL MANAGEMENT PROJECT
SILOS 1 AND 2 ACCELERATED WASTE RETREIVAL PROJECT
FERNALD, OHIO
FDF CONTRACT NO. FSC 624

FOSTER WHEELER
FOSTER WHEELER ENVIRONMENTAL CORPORATION

TITLE
RADON CONTROL SYSTEM
PIPING & INSTRUMENT DIAGRAM
FILTER & FILTRATE STORAGE TNKS

SIZE	SCALE:	DWG. NO.	REV
D	NONE	20FMD014	1

FILENAME: 20FMD014.DWG

G:\CHARGE\FDFS\TS20\20fmd014.dwg, 08/30/2000 02:37:20 PM

3388

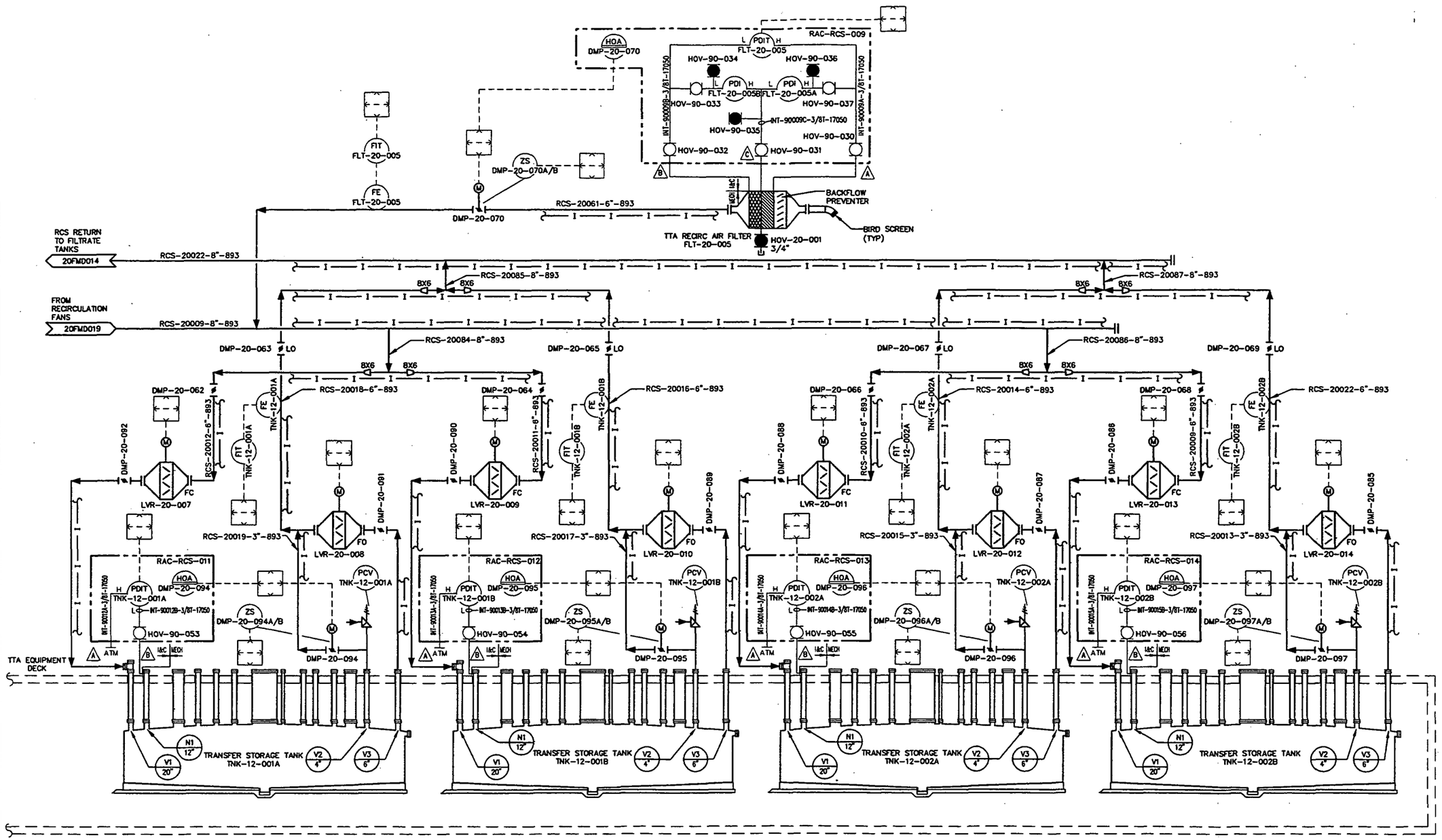

TRANSFER TANK STORAGE AREA BUILDING (94C)

000133

NOTES:

1. FOR GENERAL NOTES SEE DRAWING 05FMD004.
2. FOR MASS BALANCE TABLES SEE DRAWINGS 20FMD001 & 20FMD002.

REFERENCE DRAWINGS:

05FMD001 -- INSTRUMENT IDENTIFICATION
05FMD002 -- CONTROL SYSTEM STANDARDS
05FMD003 -- PIPING & EQUIPMENT IDENTIFICATION
05FMD004 -- GENERAL NOTES
05FMD005 -- VALVE LIST - SHEET 1
05FMD006 -- VALVE LIST - SHEET 2

000525

PRELIMINARY
NOT FOR CONSTRUCTION

REV	DATE	BY	CHK'D	APR'VD	DESCRIPTION/ISSUE
1	[illegible]	[illegible]	[illegible]		ISSUED FOR 90% REVIEW / CP-00-001 & AWR-DCN-M-0001
0	11/01/99	BJD	KR		PRELIMINARY DESIGN SUBMITTAL

RPE

		DATE
DRAWN BY	B J DAVIS	11/01/99
DESIGNED BY	B J DAVIS	11/01/99
CHECKED BY	K RICKETT	11/01/99
APPROVED BY		
APPROVED BY		

DEPARTMENT OF ENERGY
FERNALD ENVIRONMENTAL MANAGEMENT PROJECT
SILOS 1 AND 2 ACCELERATED WASTE RETRIEVAL PROJECT
FERNALD, OHIO
FDF CONTRACT NO. FSC 624

FOSTER WHEELER
FOSTER WHEELER ENVIRONMENTAL CORPORATION

TITLE
RADON CONTROL SYSTEM
PIPING & INSTRUMENT DIAGRAM
TTA STORAGE TANKS

SIZE	SCALE:	DWG. NO.	REV
D	NONE	20FMD015	1

FILENAME: 20FMD015.DWG

G:\CHARGE\FDFSI\SYS20\20fmd015.dwg, 08/30/2000 12:59:01 PM

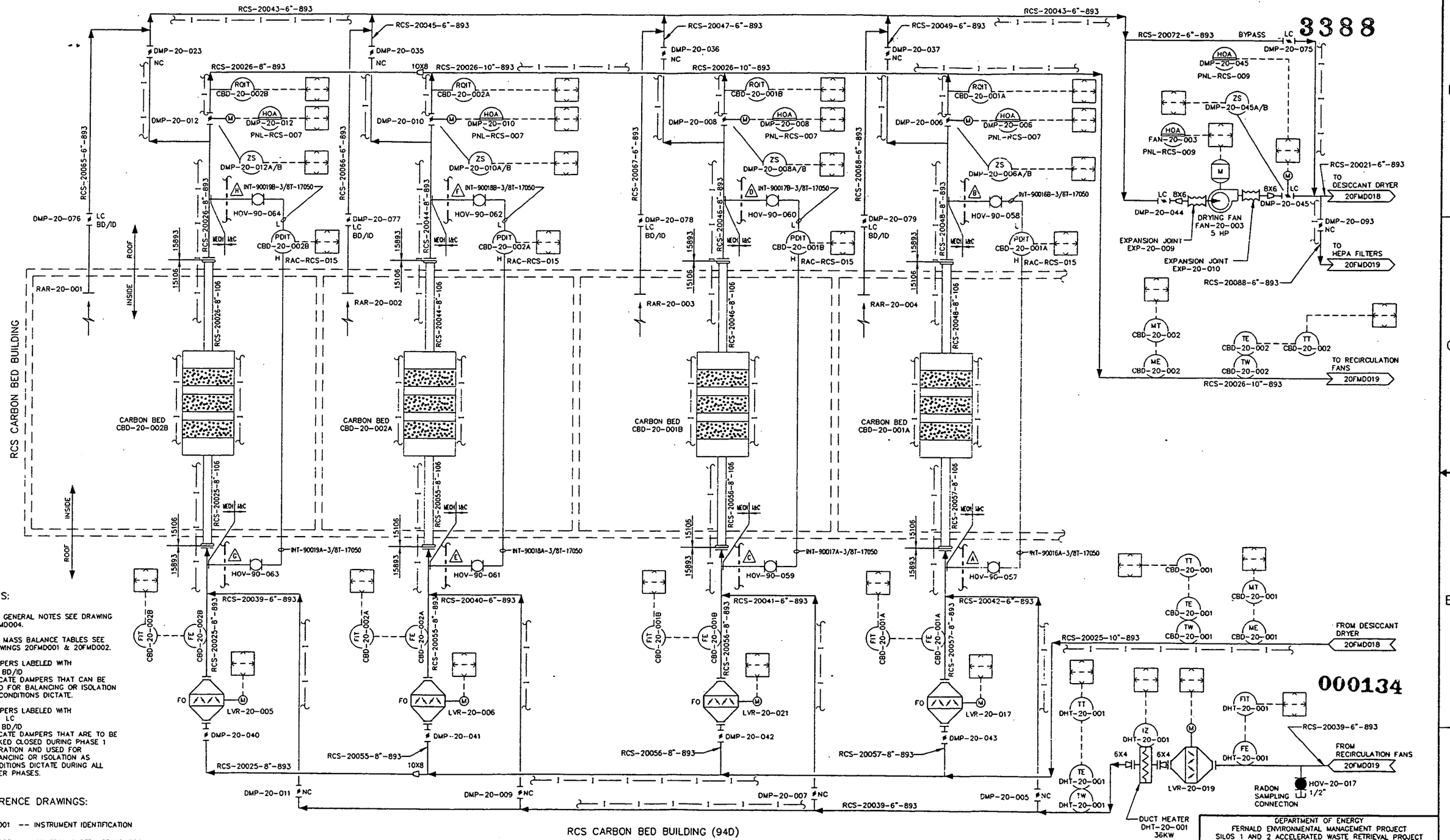

NOTES:

1. FOR GENERAL NOTES SEE DRAWING 05FMD004.
2. FOR MASS BALANCE TABLES SEE DRAWINGS 20FMD001 & 20FMD002.
3. DAMPERS LABELED WITH BD/ID INDICATE DAMPERS THAT CAN BE USED FOR BALANCING OR ISOLATION AS CONDITIONS DICTATE.
4. DAMPERS LABELED WITH LC BD/ID INDICATE DAMPERS THAT ARE TO BE LOCKED CLOSED DURING PHASE 1 OPERATION AND USED FOR BALANCING OR ISOLATION AS CONDITIONS DICTATE DURING ALL OTHER PHASES.

REFERENCE DRAWINGS:

05FMD001 -- INSTRUMENT IDENTIFICATION
05FMD002 -- CONTROL SYSTEM STANDARDS
05FMD003 -- PIPING & EQUIPMENT IDENTIFICATION
05FMD004 -- GENERAL NOTES
05FMD005 -- VALVE LIST - SHEET 1
05FMD006 -- VALVE LIST - SHEET 2

000526

000134

THE ORIGINAL DRAWING AND SUBSEQUENT REVISIONS THEREOF, WITH APPROVAL NAMES, INITIALS, AND THE PE SEAL, IF APPLICABLE, ARE MAINTAINED IN THE FILES OF FWENC.

REV	DATE	BY	CHK'D	APR'VD	DESCRIPTION/ISSUE
2	08/10/00	BJD	KDR	KDR	CERTIFIED FOR CONSTRUCTION
1	05/15/00	BJD			ISSUED FOR 90% REVIEW/CP-00-001
0	11/01/99	BJD	KR		PRELIMINARY DESIGN SUBMITTAL

RPE — STATE OF OHIO — KENNETH D. RICKETT E-64419 — REGISTERED PROFESSIONAL ENGINEER — 08/10/00 — Rev 2

DRAWN BY	BJ Davis	DATE 08/10/00
DESIGNED BY	BJ Davis	DATE 08/10/00
CHECKED BY	Kenneth D. Rickett	DATE 08/10/00
APPROVED BY	Kenneth D. Rickett	DATE 08/10/00
APPROVED BY	John Lawson	DATE 8/10/00

DEPARTMENT OF ENERGY
FERNALD ENVIRONMENTAL MANAGEMENT PROJECT
SILOS 1 AND 2 ACCELERATED WASTE RETRIEVAL PROJECT
FERNALD, OHIO
FDF CONTRACT NO. FSC 624

POSTER WHEELER
POSTER WHEELER ENVIRONMENTAL CORPORATION

TITLE
RADON CONTROL SYSTEM
PIPING & INSTRUMENT DIAGRAM
CARBON BEDS

SIZE D | SCALE: NONE | DWG. NO. 20FMD016 | REV 2

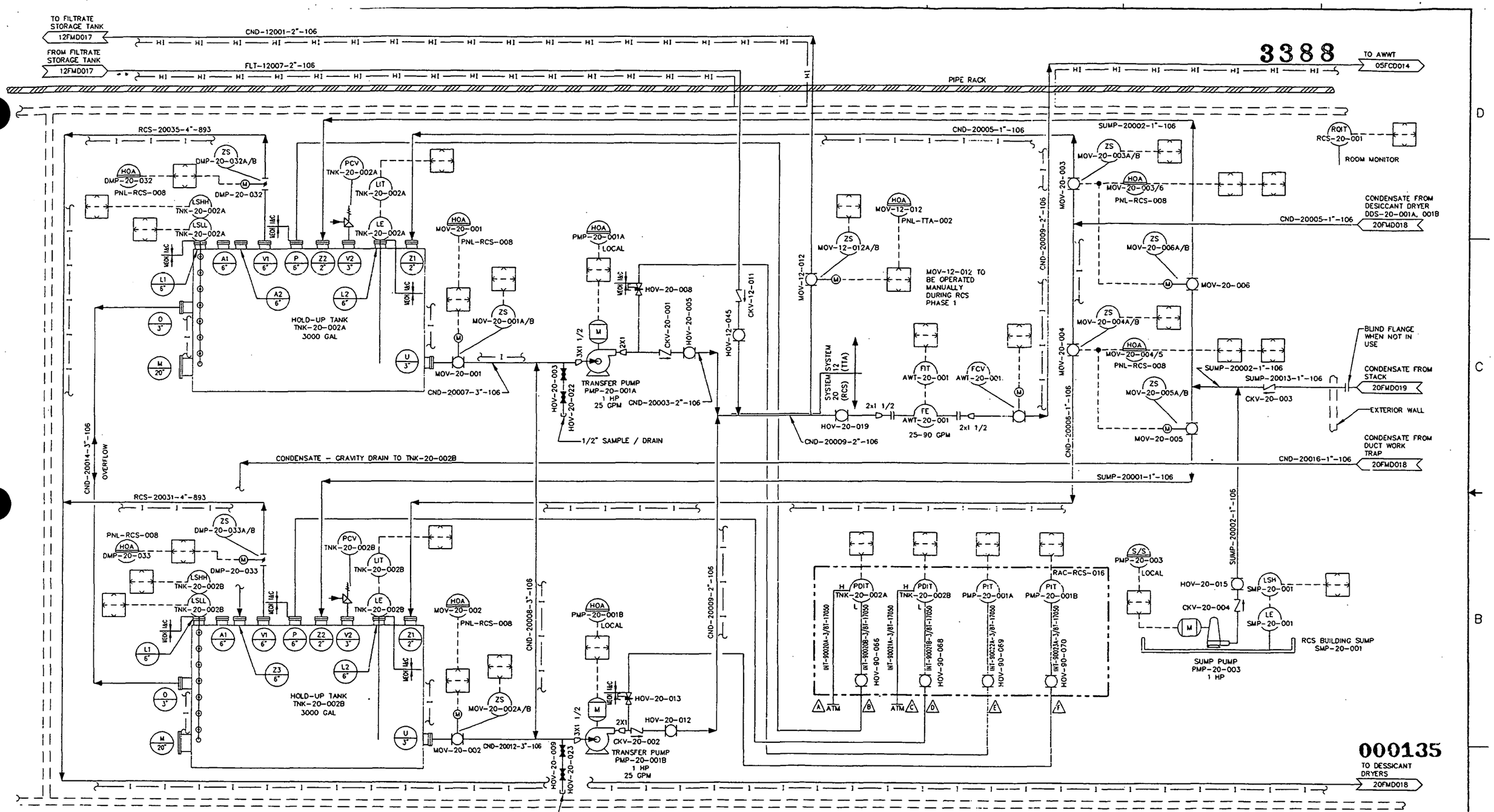

NOTES:

1. FOR GENERAL NOTES SEE DRAWING 05FMD004.
2. FOR MASS BALANCE TABLES SEE DRAWINGS 20FMD001 & 20FMD002.
3. DESICCANT DRYING SYSTEM INCLUDES PRECOOLING COIL, DESICCANT WHEEL, POST-COOLING COIL, CLOSED LOOP REACTIVATION SYSTEM, CONDENSATE COLLECTION TRANSFER SYSTEM, AND INSTRUMENTATION.

REFERENCE DRAWINGS:

05FMD001 -- INSTRUMENT IDENTIFICATION
05FMD001 -- CONTROL SYSTEM STANDARDS
05FMD001 -- PIPING & EQUIPMENT IDENTIFICATION
05FMD001 -- GENERAL NOTES
05FMD001 -- VALVE LIST - SHEET 1
05FMD001 -- VALVE LIST - SHEET 2

000527

THE ORIGINAL DRAWING AND SUBSEQUENT REVISIONS THEREOF, WITH APPROVAL NAMES, INITIALS, AND THE PE SEAL, IF APPLICABLE, ARE MAINTAINED IN THE FILES OF FWENC.

REV	DATE	BY	CHK'D	APR'VD	DESCRIPTION/ISSUE
2	08/10/00	BJD	KDR	KDR	CERTIFIED FOR CONSTRUCTION
1	05/15/00	BJD			ISSUED FOR 90% REVIEW/CP-00-001
0	01/01/99	BJD	KR		PRELIMINARY DESIGN SUBMITTAL

RPE: STATE OF OHIO, KENNETH D. RICKETT, E-64418, REGISTERED PROFESSIONAL ENGINEER, Rev. 2

		DATE
DRAWN BY	B.J. Davis	08/10/00
DESIGNED BY	B.J. Davis	08/10/00
CHECKED BY	Kenneth D. Rickett	08/10/00
APPROVED BY	Kenneth D. Rickett	08/10/00
APPROVED BY	John Conaway	8/10/00

DEPARTMENT OF ENERGY
FERNALD ENVIRONMENTAL MANAGEMENT PROJECT
SILOS 1 AND 2 ACCELERATED WASTE RETRIEVAL PROJECT
FERNALD, OHIO
FDF CONTRACT NO. FSC 624

FOSTER WHEELER
FOSTER WHEELER ENVIRONMENTAL CORPORATION

TITLE
RADON CONTROL SYSTEM
PIPING & INSTRUMENT DIAGRAM
HOLD-UP TANKS & CONDENSATE

SIZE	SCALE	DWG. NO.	REV
D	NONE	20FMD017	2

NOTES:

1. FOR GENERAL NOTES SEE DRAWING 05FMD004.
2. FOR MASS BALANCE TABLES SEE DRAWINGS 20FMD001 & 20FMD002.
3. DESICCANT DRYING SYSTEM INCLUDES PRECOOLING COIL, DESICCANT WHEEL, POST-COOLING COIL, CLOSED LOOP REACTIVATION SYSTEM, CONDENSATE COLLECTION TRANSFER SYSTEM, AND INSTRUMENTATION.
4. DAMPERS LABELED WITH
   BD/ID
   INDICATE DAMPERS THAT CAN BE USED FOR BALANCING OR ISOLATION AS CONDITIONS DICTATE.

   DAMPERS LABELED WITH
   LC
   BD/ID
   INDICATE DAMPERS THAT ARE TO BE LOCKED CLOSED DURING PHASE 1 OPERATION AND USED FOR BALANCING OR ISOLATION AS CONDITIONS DICTATE DURING ALL OTHER PHASES.

REFERENCE DRAWINGS:

05FMD001 -- INSTRUMENT IDENTIFICATION
05FMD002 -- CONTROL SYSTEM STANDARDS
05FMD003 -- PIPING & EQUIPMENT IDENTIFICATION
05FMD004 -- GENERAL NOTES
05FMD005 -- VALVE LIST - SHEET 1
05FMD006 -- VALVE LIST - SHEET 2

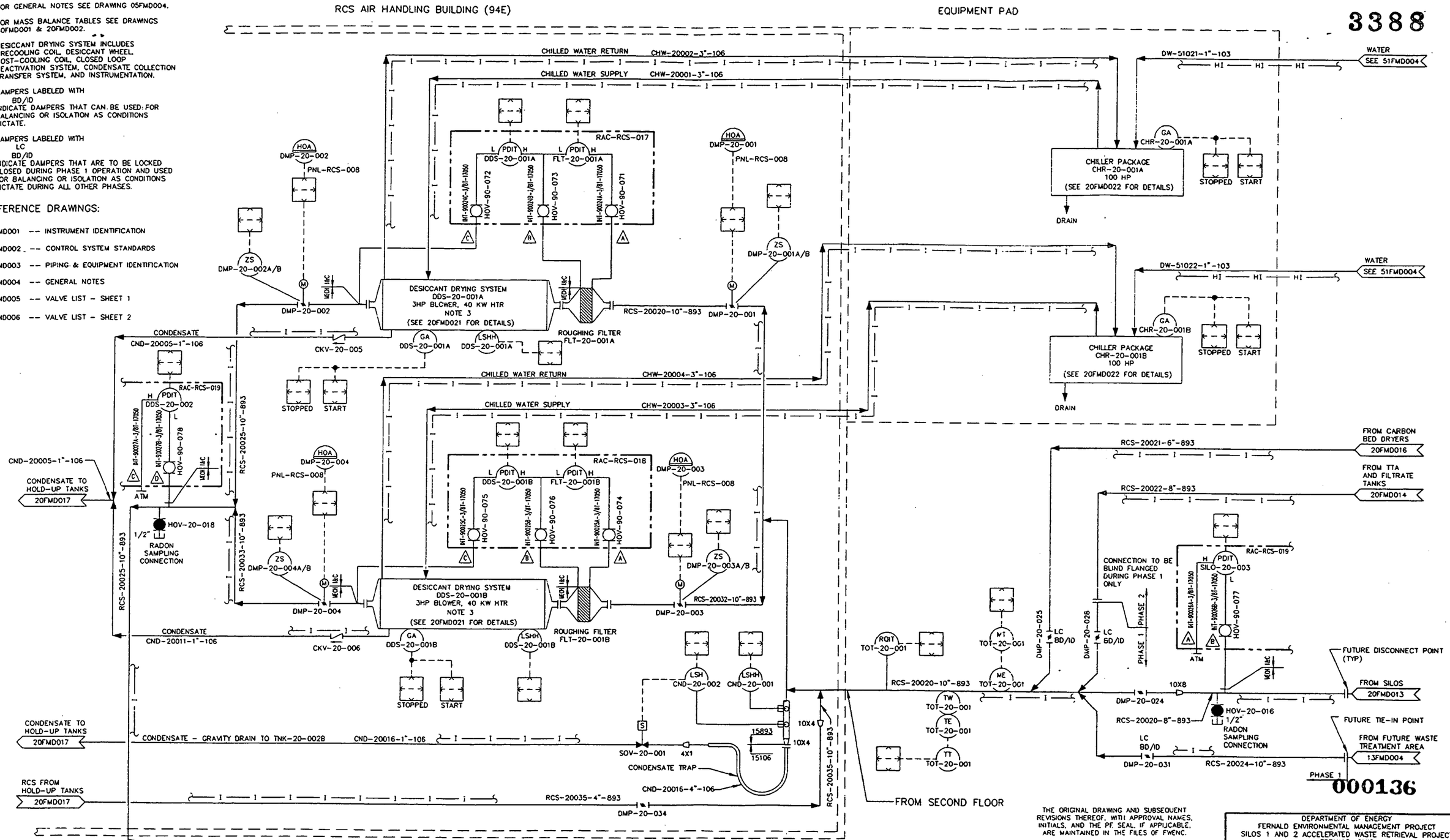

THE ORIGINAL DRAWING AND SUBSEQUENT REVISIONS THEREOF, WITH APPROVAL NAMES, INITIALS, AND THE PE SEAL, IF APPLICABLE, ARE MAINTAINED IN THE FILES OF FWENC.

REV	DATE	BY	CHK'D	APR'VD	DESCRIPTION/ISSUE
2	08/10/00	BJD	KWK	KDR	CERTIFIED FOR CONSTRUCTION
1	05/15/00	BJD			ISSUED FOR 90% REVIEW/CP-00-001
0	11/01/99	BJD	KR		PRELIMINARY DESIGN SUBMITTAL

RPE STATE OF OHIO KENNETH D. RICKETT E-64418 REGISTERED PROFESSIONAL ENGINEER Rev. 2

DRAWN BY B.J. Davis	DATE 08/10/00	
DESIGNED BY B.J. Davis	DATE 08/10/00	
CHECKED BY Kenneth D. Rickett	DATE 08/10/00	
APPROVED BY Kenneth D. Rickett	DATE 08/10/00	
APPROVED BY John Larson	DATE 8/10/00	

DEPARTMENT OF ENERGY
FERNALD ENVIRONMENTAL MANAGEMENT PROJECT
SILOS 1 AND 2 ACCELERATED WASTE RETRIEVAL PROJECT
FERNALD, OHIO
FDF CONTRACT NO. FSC 624

FOSTER WHEELER
FOSTER WHEELER ENVIRONMENTAL CORPORATION

TITLE
RADON CONTROL SYSTEM
PIPING & INSTRUMENT DIAGRAM
DRYERS & AIR HANDLING

SIZE	SCALE:	DWG. NO.	REV
D	NONE	20FMD018	2

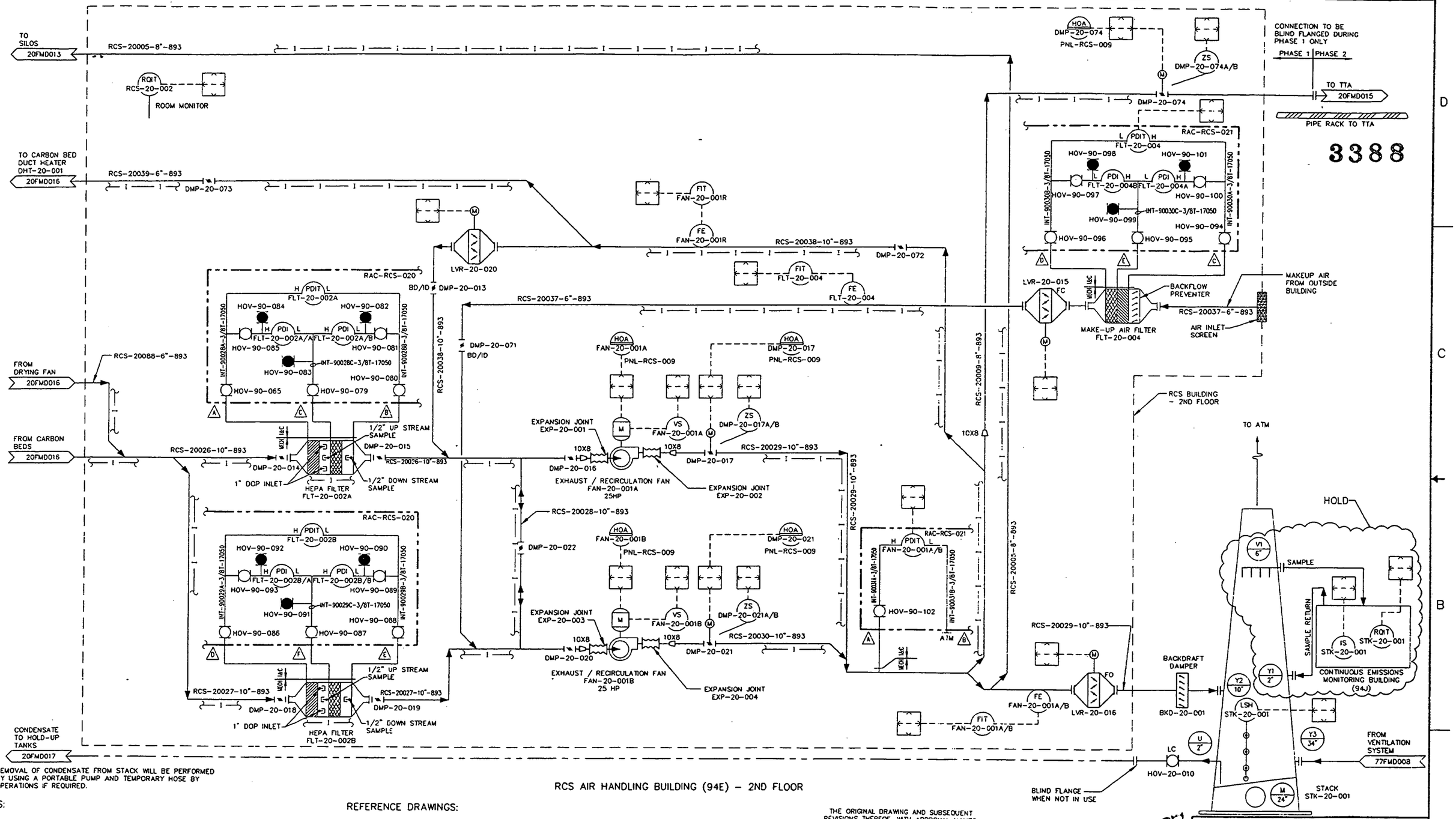

REMOVAL OF CONDENSATE FROM STACK WILL BE PERFORMED BY USING A PORTABLE PUMP AND TEMPORARY HOSE BY OPERATIONS IF REQUIRED.

RCS AIR HANDLING BUILDING (94E) - 2ND FLOOR

.S:

1. FOR GENERAL NOTES SEE DRAWING 05FMD004.
2. FOR MASS BALANCE TABLES SEE DRAWINGS 20FMD001 & 20FMD002.
3. DAMPERS LABELED WITH BD/ID INDICATE DAMPERS THAT CAN BE USED FOR BALANCING OR ISOLATION AS CONDITIONS DICTATE.
4. DAMPERS LABELED WITH LC BD/ID INDICATE DAMPERS THAT ARE TO BE LOCKED CLOSED DURING PHASE 1 OPERATION AND USED FOR BALANCING OR ISOLATION AS CONDITIONS DICTATE DURING ALL OTHER PHASES.

000529

REFERENCE DRAWINGS:

05FMD001 -- INSTRUMENT IDENTIFICATION
05FMD002 -- CONTROL SYSTEM STANDARDS
05FMD003 -- PIPING & EQUIPMENT IDENTIFICATION
05FMD004 -- GENERAL NOTES
05FMD005 -- VALVE LIST - SHEET 1
05FMD006 -- VALVE LIST - SHEET 2

THE ORIGINAL DRAWING AND SUBSEQUENT REVISIONS THEREOF, WITH APPROVAL NAMES, INITIALS, AND THE PE SEAL, IF APPLICABLE, ARE MAINTAINED IN THE FILES OF FWENC.

00013

REV	DATE	BY	CHK'D	APR'VD	DESCRIPTION/ISSUE
2	08/10/00	BJD	KJR	KJR	CERTIFIED FOR CONSTRUCTION
1	05/15/00	BJD			ISSUED FOR 90% REVIEW/CP-00-001
0	11/01/99	BJD	KR		PRELIMINARY DESIGN SUBMITTAL

PE: STATE OF OHIO KENNETH D. FRONETT E-64418 REGISTERED PROFESSIONAL ENGINEER

		DATE
DRAWN BY	B.J. Davis	08/10/00
DESIGNED BY	B.J. Davis	08/10/00
CHECKED BY	Kenneth D. Frenett	08/10/00
APPROVED BY	Kenneth D. Frenett	08/10/00
APPROVED BY	John Lawson	8/10/00

DEPARTMENT OF ENERGY
FERNALD ENVIRONMENTAL MANAGEMENT PROJECT
SILOS 1 AND 2 ACCELERATED WASTE RETRIEVAL PROJECT
FERNALD, OHIO
FDF CONTRACT NO. FSC 624

FOSTER WHEELER
FOSTER WHEELER ENVIRONMENTAL CORPORATION

TITLE
RADON CONTROL SYSTEM
PIPING & INSTRUMENT DIAGRAM
EXHAUST & RECIRC FANS

SIZE	SCALE	DWG. NO.	REV
D	NONE	20FMD019	2

3388

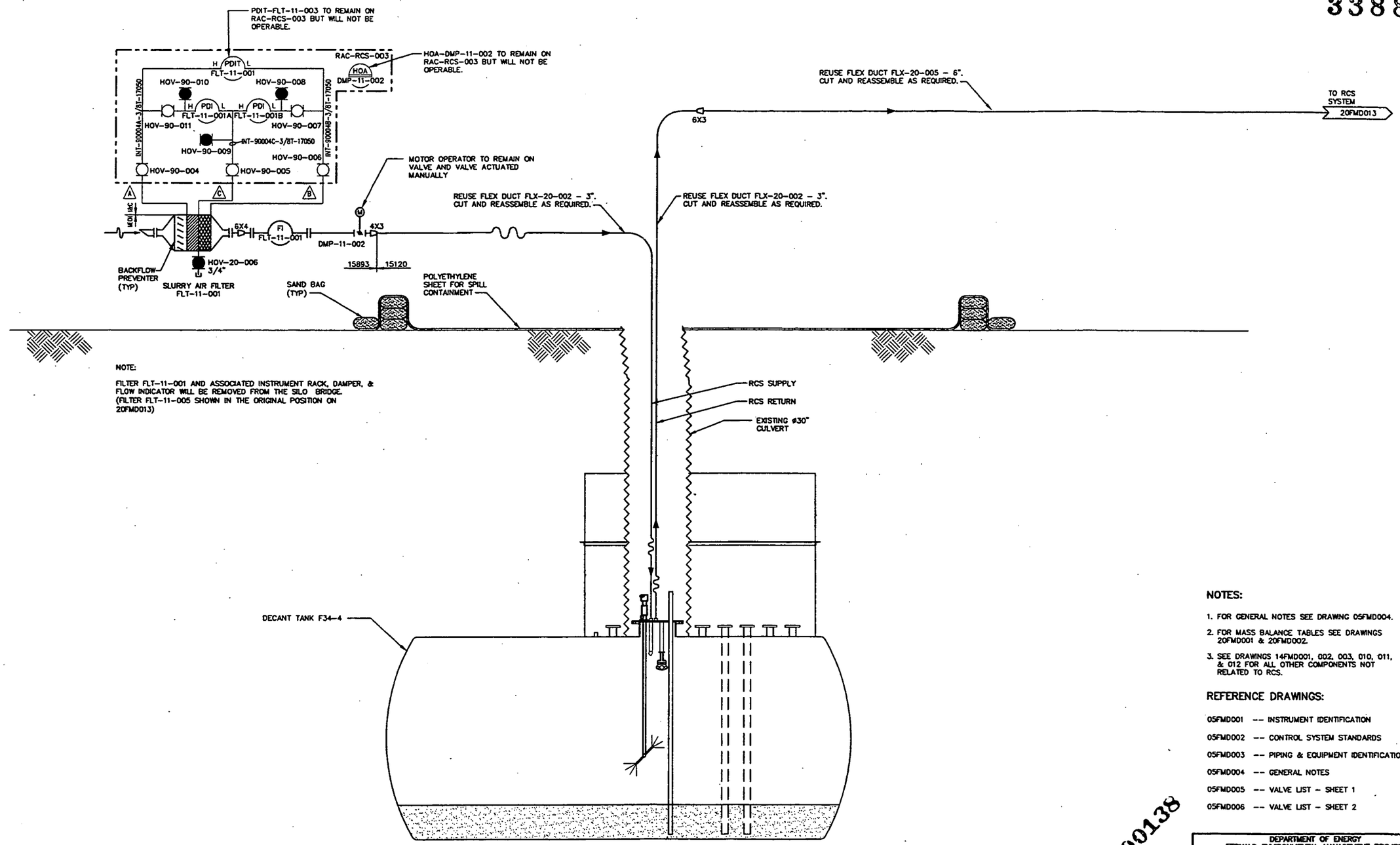

NOTE:

FILTER FLT-11-001 AND ASSOCIATED INSTRUMENT RACK, DAMPER, & FLOW INDICATOR WILL BE REMOVED FROM THE SILO BRIDGE. (FILTER FLT-11-005 SHOWN IN THE ORIGINAL POSITION ON 20FMD013)

NOTES:

1. FOR GENERAL NOTES SEE DRAWING 05FMD004.
2. FOR MASS BALANCE TABLES SEE DRAWINGS 20FMD001 & 20FMD002.
3. SEE DRAWINGS 14FMD001, 002, 003, 010, 011, & 012 FOR ALL OTHER COMPONENTS NOT RELATED TO RCS.

REFERENCE DRAWINGS:

05FMD001 -- INSTRUMENT IDENTIFICATION
05FMD002 -- CONTROL SYSTEM STANDARDS
05FMD003 -- PIPING & EQUIPMENT IDENTIFICATION
05FMD004 -- GENERAL NOTES
05FMD005 -- VALVE LIST - SHEET 1
05FMD006 -- VALVE LIST - SHEET 2

000138

000530

PRELIMINARY
NOT FOR CONSTRUCTION

REV	DATE	BY	CHK'D	APR'VD	DESCRIPTION/ISSUE
1	[illegible]				ISSUED FOR 90% REVIEW / CP-00-001
0	11/01/99	BJD	KR		PRELIMINARY DESIGN SUBMITTAL

RPE

		DATE
DRAWN BY	B J DAVIS	11/01/99
DESIGNED BY	B J DAVIS	11/01/99
CHECKED BY	KEN RICKETT	11/01/99
APPROVED BY		DATE
APPROVED BY		DATE

DEPARTMENT OF ENERGY
FERNALD ENVIRONMENTAL MANAGEMENT PROJECT
SILOS 1 AND 2 ACCELERATED WASTE RETRIEVAL PROJECT
FERNALD, OHIO
FDF CONTRACT NO. FSC 624

FOSTER WHEELER
FOSTER WHEELER ENVIRONMENTAL CORPORATION

TITLE
RADON CONTROL SYSTEM
PIPING & INSTRUMENT DIAGRAM
DECANT WASTE RETRIEVAL

SIZE	SCALE:	DWG. NO.	REV
D	NONE	20FMD020	1

FILENAME: 20FMD020.DWG

G:\CHARGE\FDFSIL\SYS20\20fmd020.dwg, 08/30/2000 12:59:20 PM

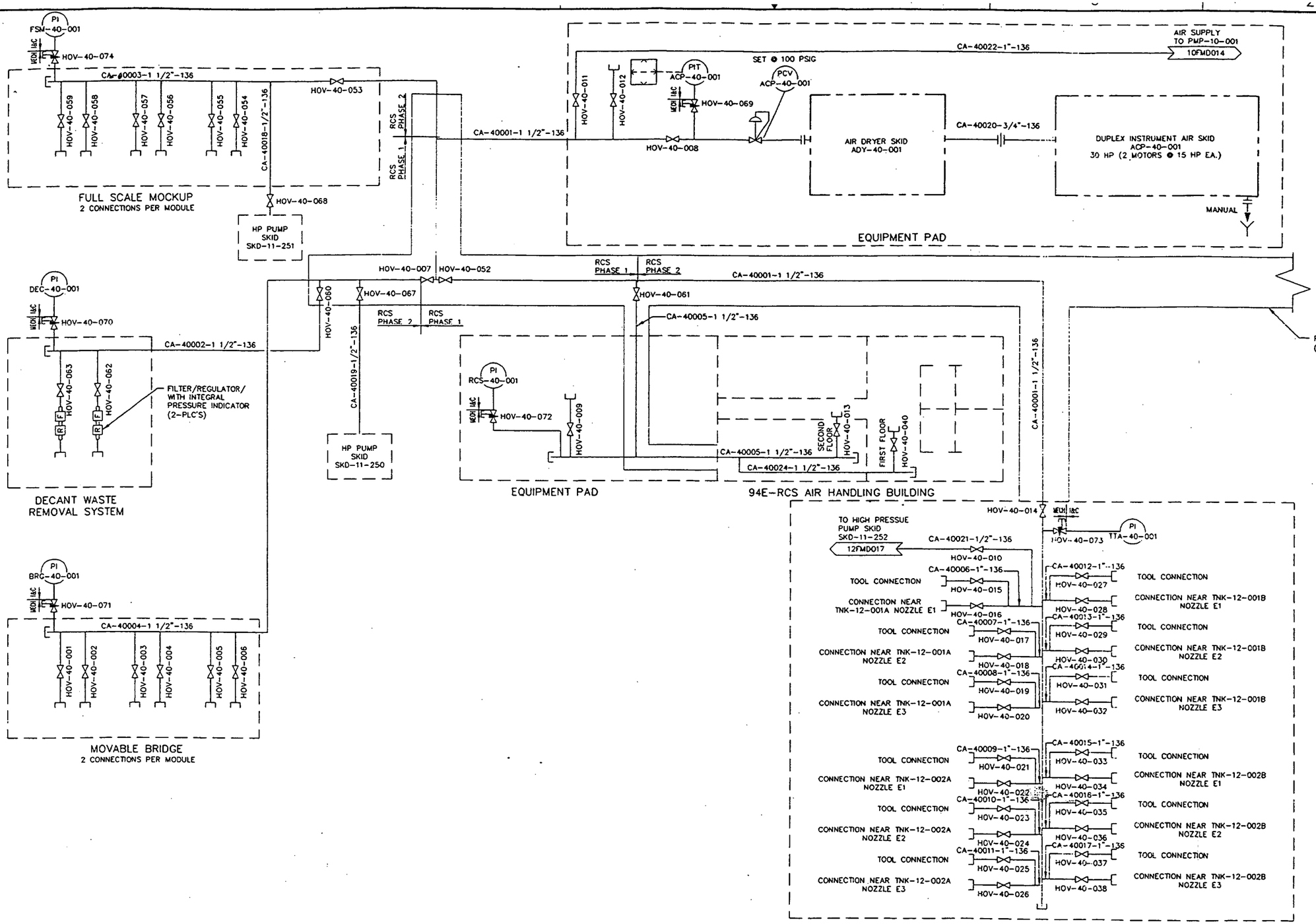

NOTES: **3388**

1. FOR GENERAL NOTES SEE DRAWING 05FMD004.
2. ALL BRANCH CONNECTIONS ARE 1/2" PIPE UNLESS OTHERWISE NOTED.
3. FOR UTILITY AIR HOSES, SEE SECTION 15120, PIPING SPECIALTIES, DATA SHEET DS-FM-FLX-10-008.

REFERENCE DRAWINGS:

05FMD001 -- INSTRUMENT IDENTIFICATION
05FMD002 -- CONTROL SYSTEM STANDARDS
05FMD003 -- PIPING & EQUIPMENT IDENTIFICATION
05FMD004 -- GENERAL NOTES
05FMD005 -- VALVE LIST - SHEET 1
05FMD006 -- VALVE LIST - SHEET 2

THE ORIGINAL DRAWING AND SUBSEQUENT REVISIONS THEREOF, WITH APPROVAL NAMES, INITIALS, AND THE PE SEAL, IF APPLICABLE, ARE MAINTAINED IN THE FILES OF FWENC.

000139

REV	DATE	BY	CHK'D	APR'VD	DESCRIPTION/ISSUE
2	08/10/00	BJD	BSM	KDR	CERTIFIED FOR CONSTRUCTION
1	05/15/00	BJD			ISSUED FOR 90% REVIEW/CP-00-001
0	11/01/99	BJD	SWH		PRELIMINARY DESIGN SUBMITTAL

PE: STATE OF OHIO, KENNETH D. RICKETT, E-64418, REGISTERED PROFESSIONAL ENGINEER — Rev 2

		DATE
DRAWN BY	BJDavis	08/10/00
DESIGNED BY	BJDavis	08/10/00
CHECKED BY	BSMatson	08/10/00
APPROVED BY	Kenneth D Rickett	08/10/00
APPROVED BY	Jim Lawson	8/10/00

DEPARTMENT OF ENERGY
FERNALD ENVIRONMENTAL MANAGEMENT PROJECT
SILOS 1 AND 2 ACCELERATED WASTE RETRIEVAL PROJECT
FERNALD, OHIO
FDF CONTRACT NO. FSC 624

FOSTER WHEELER
FOSTER WHEELER ENVIRONMENTAL CORPORATION

TITLE: PLANT & INSTRUMENT AIR SYSTEM PIPING & INSTRUMENT DIAGRAM COMPRESSED AIR DISTRIBUTION

SIZE	SCALE:	DWG. NO.	REV
D	NONE	40FMD001	2

000531

3388

NOTES:

1. FOR GENERAL NOTES SEE DRAWING 05FMD004.
2. BREATHING AIR SKID SKD-41-001 CONSTRUCTED PER DATA SHEET DS-FM-BAS-41-001.
3. BOTTLE CONNECTING HOSES ARE SUPPLIED WITH CHECK VALVES.
4. BOTTLES ARE SUPPLIED WITH VALVES AND PRESSURE RELIEF VALVES.

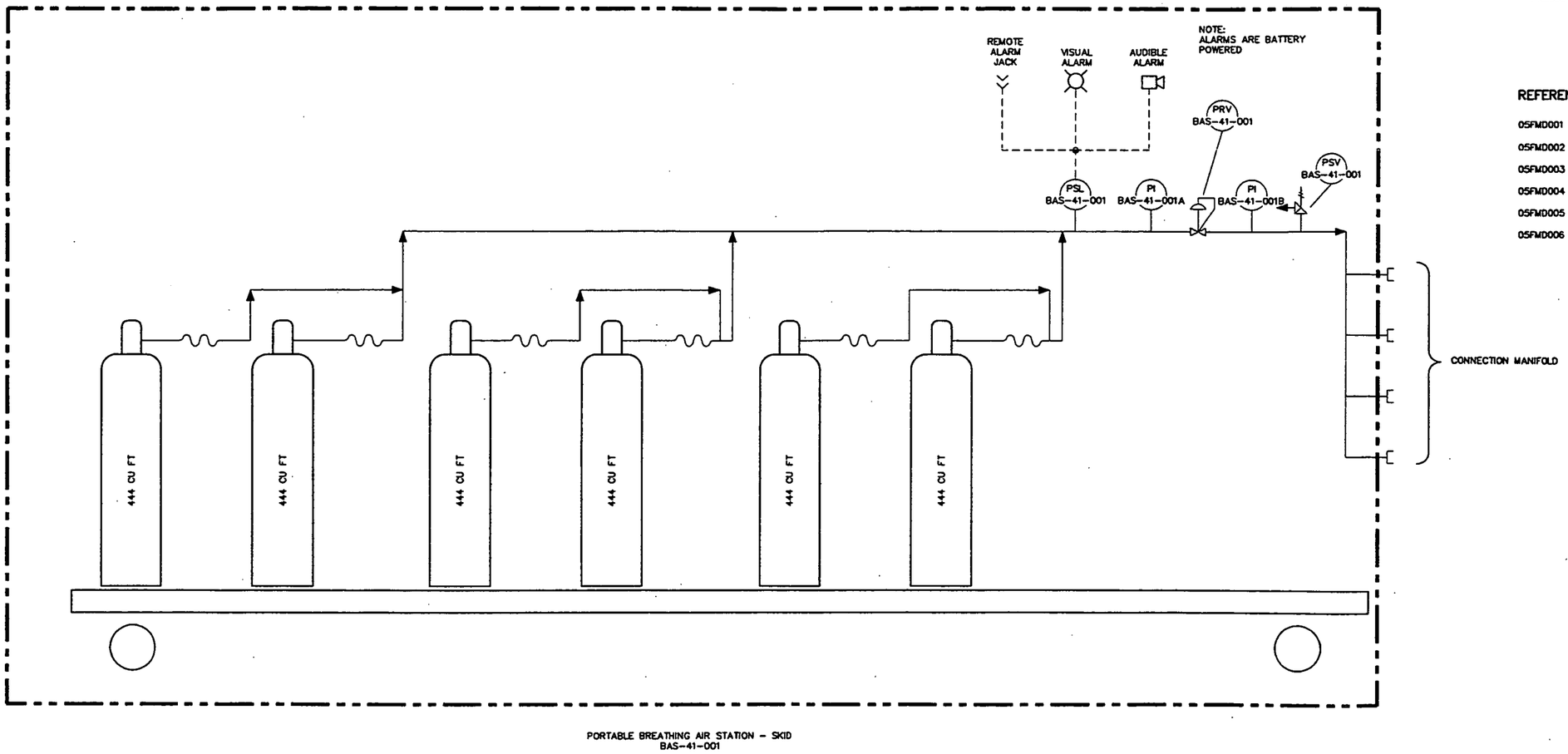

PORTABLE BREATHING AIR STATION - SKID
BAS-41-001

REFERENCE DRAWINGS:

05FMD001 -- INSTRUMENT IDENTIFICATION
05FMD002 -- CONTROL SYSTEM STANDARDS
05FMD003 -- PIPING & EQUIPMENT IDENTIFICATION
05FMD004 -- GENERAL NOTES
05FMD005 -- VALVE LIST - SHEET 1
05FMD006 -- VALVE LIST - SHEET 2

000140

000532

PRELIMINARY
NOT FOR CONSTRUCTION

REV	DATE	BY	CHK'D	APR'VD	DESCRIPTION/ISSUE
A	8/31/00	BGD	[illegible]		ISSUED FOR 90% REVIEW

RPE

DRAWN BY BGD DATE 08/31/00
DESIGNED BY BGD DATE 08/31/00
CHECKED BY [illegible] DATE 8/31/00
APPROVED BY DATE
APPROVED BY DATE

DEPARTMENT OF ENERGY
FERNALD ENVIRONMENTAL MANAGEMENT PROJECT
SILOS 1 AND 2 ACCELERATED WASTE RETRIEVAL PROJECT
FERNALD, OHIO
FDF CONTRACT NO. FSC 824

FOSTER WHEELER
FOSTER WHEELER ENVIRONMENTAL CORPORATION

TITLE
BREATHING AIR SYSTEM
PIPING & INSTRUMENT DIAGRAM
BREATHING AIR STATION

SIZE	SCALE	DWG. NO.	REV
D	NONE	41FMD001	A

FILENAME: 41FMD001.DWG

G:\CHARGE\FDFSI\sys41\41fmd001.dwg, 08/30/2000 12:59:40 PM

3388

NOTES:
1. FOR GENERAL NOTES SEE DRAWING 05FMD004.

REFERENCE DRAWINGS:

05FMD001 -- INSTRUMENT IDENTIFICATION
05FMD002 -- CONTROL SYSTEM STANDARDS
05FMD003 -- PIPING & EQUIPMENT IDENTIFICATION
05FMD004 -- GENERAL NOTES
05FMD005 -- VALVE LIST - SHEET 1
05FMD006 -- VALVE LIST - SHEET 2

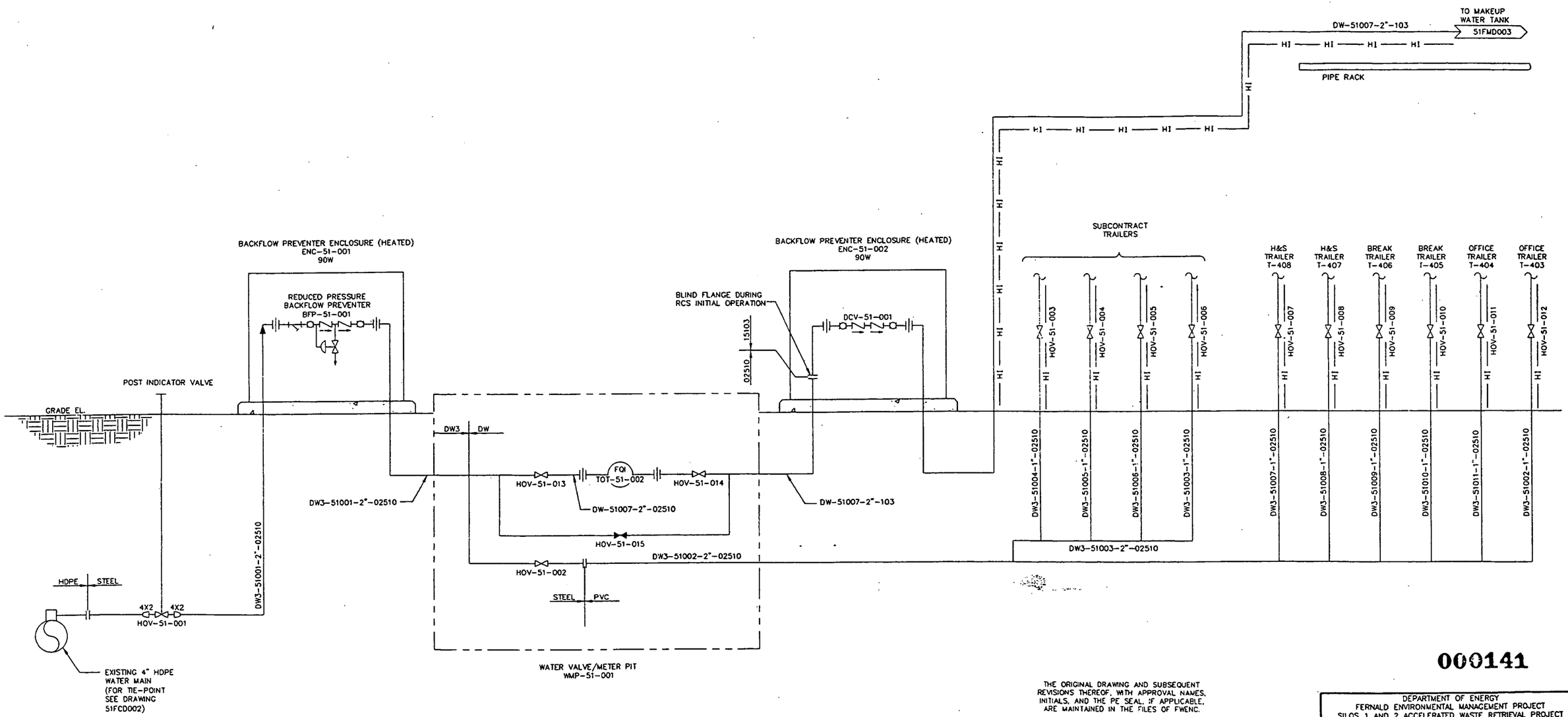

000141

THE ORIGINAL DRAWING AND SUBSEQUENT REVISIONS THEREOF, WITH APPROVAL NAMES, INITIALS, AND THE PE SEAL, IF APPLICABLE, ARE MAINTAINED IN THE FILES OF FWENC.

000533

REV	DATE	BY	CHK'D	APR'VD	DESCRIPTION/ISSUE
2	08/10/00	MP	BSM	KDR	CERTIFIED FOR CONSTRUCTION
1	05/15/00	BJD			ISSUED FOR 90% REVIEW/CP-00-001
0	11/01/99	BJD	SWH		PRELIMINARY DESIGN PACKAGE

RPE: STATE OF OHIO, KENNETH D. RICKETT, E-64418, REGISTERED PROFESSIONAL ENGINEER

		DATE
DRAWN BY	B.J. Davis	08/10/00
DESIGNED BY	B.J. Davis	08/10/00
CHECKED BY	B.S. McFarlane	08/10/00
APPROVED BY	Kenneth D. Rickett	08/10/00
APPROVED BY	John Lawson	8/10/00

DEPARTMENT OF ENERGY
FERNALD ENVIRONMENTAL MANAGEMENT PROJECT
SILOS 1 AND 2 ACCELERATED WASTE RETRIEVAL PROJECT
FERNALD, OHIO
FDF CONTRACT NO. FSC 624

FOSTER WHEELER
FOSTER WHEELER ENVIRONMENTAL CORPORATION

TITLE
POTABLE/DOMESTIC WATER SYS
PIPING & INSTRUMENT DIAGRAM
POTABLE WATER DISTRIBUTION

SIZE	SCALE:	DWG. NO.	REV
D	NONE	51FMD002	2

3388

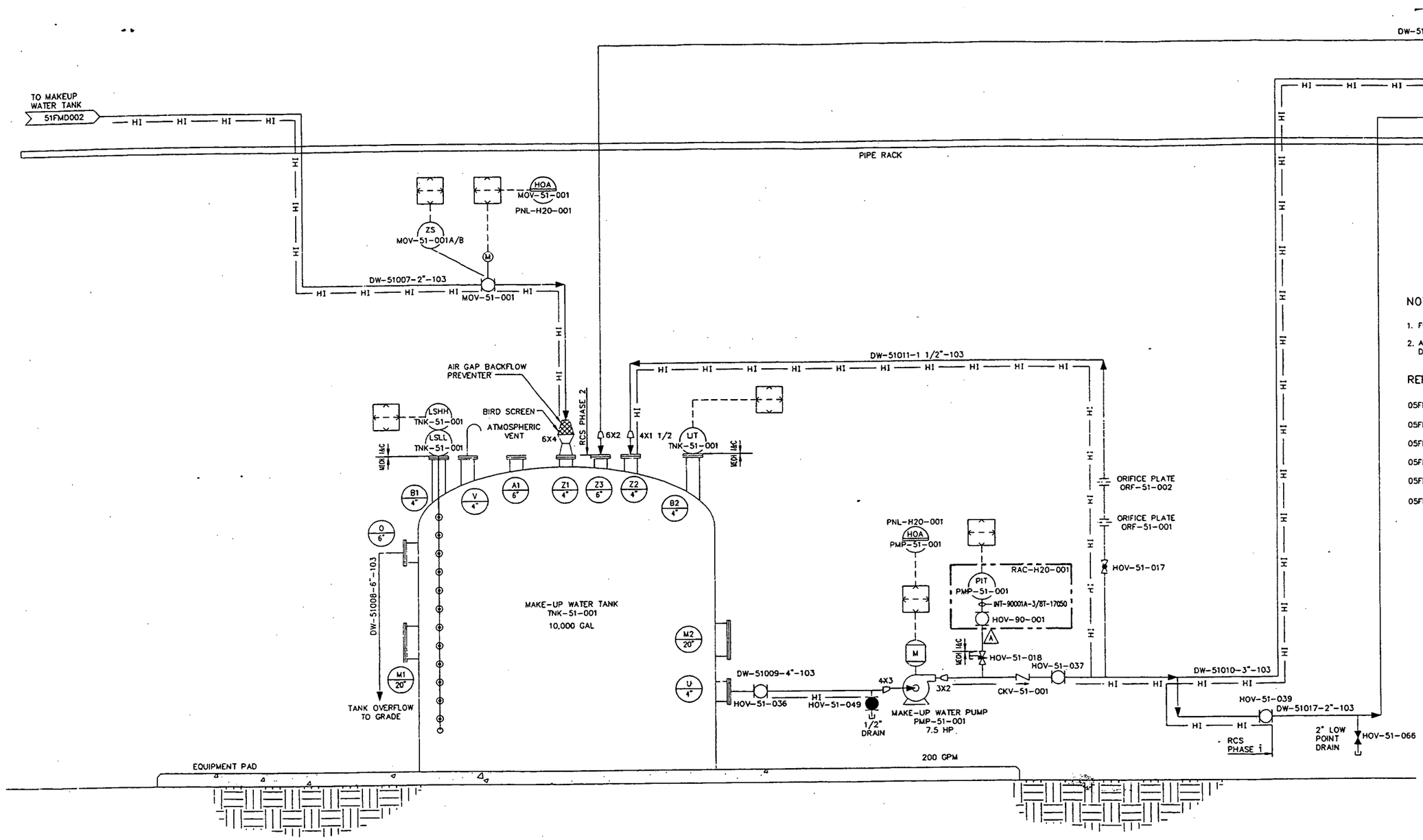

MAKE-UP WATER SYSTEM

NOTES:

1. FOR GENERAL NOTES SEE DRAWING 05FMD004.
2. ALL EQUIPMENT TO BE OPERATED MANUALLY DURING RCS PHASE 1

REFERENCE DRAWINGS:

05FMD001 -- INSTRUMENT IDENTIFICATION
05FMD002 -- CONTROL SYSTEM STANDARDS
05FMD003 -- PIPING & EQUIPMENT IDENTIFICATION
05FMD004 -- GENERAL NOTES
05FMD005 -- VALVE LIST - SHEET 1
05FMD006 -- VALVE LIST - SHEET 2

000142

THE ORIGINAL DRAWING AND SUBSEQUENT REVISIONS THEREOF, WITH APPROVAL NAMES, INITIALS, AND THE PE SEAL, IF APPLICABLE, ARE MAINTAINED IN THE FILES OF FWENC.

000534

REV	DATE	BY	CHK'D	APR'VD	DESCRIPTION/ISSUE
2	08/10/00	BJH	BSM	KDR	CERTIFIED FOR CONSTRUCTION
1	05/15/00	BJD			ISSUED FOR 90% REVIEW/CP-00-001
0	11/01/99	BJD	SWH		PRELIMINARY DESIGN PACKAGE

STATE OF OHIO KENNETH D. RICKETT E-64418 REGISTERED PROFESSIONAL ENGINEER

		DATE
DRAWN BY	B.J. Davis	08/10/00
DESIGNED BY	B.J. Davis	08/10/00
CHECKED BY	B.S. McFadden	08/10/00
APPROVED BY	Kenneth D. Rickett	08/10/00
APPROVED BY	John Lanson	8/10/00

DEPARTMENT OF ENERGY
FERNALD ENVIRONMENTAL MANAGEMENT PROJECT
SILOS 1 AND 2 ACCELERATED WASTE RETRIEVAL PROJECT
FERNALD, OHIO
FDF CONTRACT NO. FSC 624

FOSTER WHEELER
FOSTER WHEELER ENVIRONMENTAL CORPORATION

TITLE
POTABLE/DOMESTIC WATER SYS PIPING & INSTRUMENT DIAGRAM MAKE-UP WATER

SIZE	SCALE:	DWG. NO.	REV
D	NONE	51FMD003	2

FILENAME: 51FMD003.DWG

3388

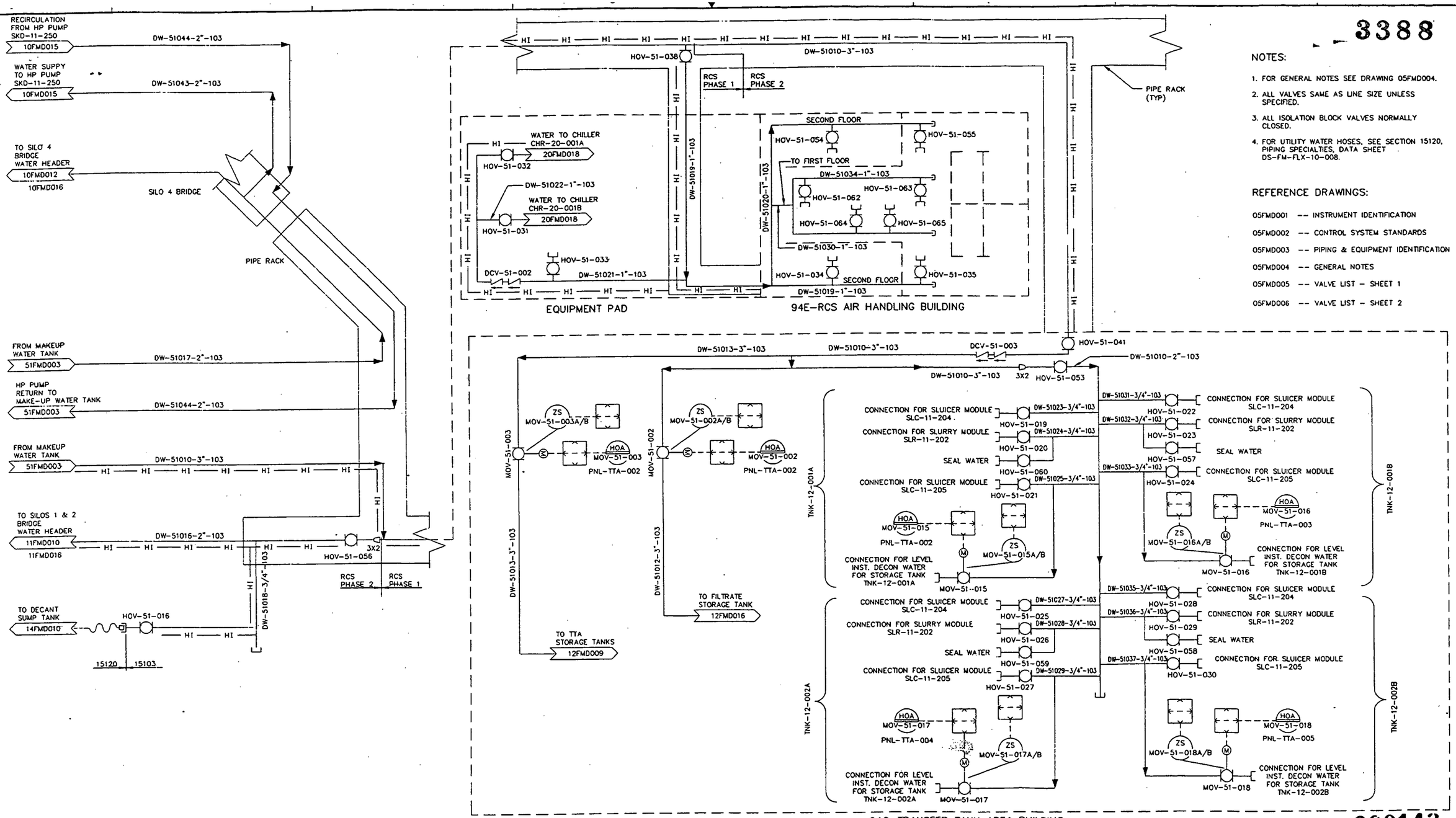

NOTES:

1. FOR GENERAL NOTES SEE DRAWING 05FMD004.
2. ALL VALVES SAME AS LINE SIZE UNLESS SPECIFIED.
3. ALL ISOLATION BLOCK VALVES NORMALLY CLOSED.
4. FOR UTILITY WATER HOSES, SEE SECTION 15120, PIPING SPECIALTIES, DATA SHEET DS-FM-FLX-10-008.

REFERENCE DRAWINGS:

05FMD001 -- INSTRUMENT IDENTIFICATION
05FMD002 -- CONTROL SYSTEM STANDARDS
05FMD003 -- PIPING & EQUIPMENT IDENTIFICATION
05FMD004 -- GENERAL NOTES
05FMD005 -- VALVE LIST - SHEET 1
05FMD006 -- VALVE LIST - SHEET 2

000143

THE ORIGINAL DRAWING AND SUBSEQUENT REVISIONS THEREOF, WITH APPROVAL NAMES, INITIALS, AND THE PE SEAL, IF APPLICABLE, ARE MAINTAINED IN THE FILES OF FWENC.

REV	DATE	BY	CHK'D	APR'VD	DESCRIPTION/ISSUE
2	08/10/00	BJD	BSM	KDR	CERTIFIED FOR CONSTRUCTION
1	05/15/00	BJD			ISSUED FOR 90% REVIEW/CP-00-001
0	11/01/99	BJD	SWH		PRELIMINARY DESIGN PACKAGE

RPE: STATE OF OHIO, KENNETH D. FRICKETT, E-64418, REGISTERED PROFESSIONAL ENGINEER

		DATE
DRAWN BY	B.J. Davis	08/10/00
DESIGNED BY	B.J. Davis	08/10/00
CHECKED BY	B.S. McCallum	08/10/00
APPROVED BY	Kenneth D. Frickett	08/10/00
APPROVED BY	John Jackson	8/10/00

DEPARTMENT OF ENERGY
FERNALD ENVIRONMENTAL MANAGEMENT PROJECT
SILOS 1 AND 2 ACCELERATED WASTE RETRIEVAL PROJECT
FERNALD, OHIO
FDF CONTRACT NO. FSC 624

FOSTER WHEELER
FOSTER WHEELER ENVIRONMENTAL CORPORATION

TITLE
POTABLE/DOMESTIC WATER SYS
PIPING & INSTRUMENT DIAGRAM
DOMESTIC WATER DISTRIBUTION

SIZE	SCALE:	DWG. NO.	REV
D	NONE	51FMD004	2

000525

Appendix F

INFORMATION ONLY

- 3388

FOSTER WHEELER

FOSTER WHEELER ENVIRONMENTAL CORPORATION

SYSTEM DESIGN DESCRIPTION

DOCUMENT NO.
624-P622-30, Rev. 2

FOR THE

SILOS 1 AND 2 ACCELERATED WASTE RETRIEVAL (AWR) PROJECT

(EMMA™ MANIPULATOR SYSTEM)

SUBMITTED TO:

FLUOR DANIEL FERNALD (FDF)

CONTRACT NO. FSC 624

June 1, 2000

000536

000144

TABLE OF CONTENTS

3388

1.0 SYSTEM OVERVIEW DESCRIPTION 1
1.1 Process Description 1
1.2 System Features 1
1.3 Design Criteria 5
1.4 System Interface Points 9
2.0 DEPLOYMENT TOWER SYSTEM 17
2.1 Tower Base 19
2.2 Z-Drive 19
2.3 Guide Rail and Guide Bearing Assembly 20
2.4 Maintenance Crane 21
2.5 RCS requirements 21
2.6 Airlock 21
2.7 Maintenance Floors 21
2.8 Utility Connections 22
2.9 Lighting 22
2.10 Painting 22
2.11 Spool Piece 22
3.0 ACTUATION PACKAGE 24
3.1 Outer Frame 24
3.2 Inner Frame 24
3.3 Azimuth Drive 25
3.4 Braking System 25
4.0 MAST 27
5.0 EMMA™ MANIPULATOR 28
5.1 Stages 1 through 3 29
5.2 Stages 4 and 5 29
5.3 Coupling Overview 30
5.4 Wrist 31
5.5 Sheath 31
6.0 INSTRUMENTATION & CONTROLS SYSTEM 33
6.1 EMMA Operation 37
6.2 Manipulator Control 39

000537

ACRONYM LIST

DOF	Degree (s) of Freedom
ACS	Arm Control System
ADSS	Arm Deployed Sluicing Subsystem
AICS	American Institute of Steel Construction
ALARA	As Low As Reasonably Achievable
ASCE	American Society of Civil Engineers
AWR	Accelerated Waste Retrieval
AWS	American Welding Society
CCTV	Closed Circuit Television
CD	Compact Disk
DMCS	Distributed Microprocessor Based Control System
DOE	Department of Energy
EMMA™	Easily Manipulated Mechanical Arm™
FAT	Factory Acceptance Testing
FEMP	Fernald Environment Management Plan
FF	Fluor Fernald
FMEA	Failure Modes and Effect Analysis
Foster Wheeler	Foster Wheeler Environmental Corporation
FSM	Full Scale Mockup
GEES	Gripper End Effector System
GUI	Graphical User Interface
HEPA	High Efficiency Particulate Air
HMI	Human Machine Interface
HVAC	Heating, Ventilation, and Air Conditioning
I/O	Input/Output
ICAT	Integrated Construction Acceptance Testing
LOS	Local Operating Station
OSHA	Occupational Safety and Health Administration
P & ID	Piping and Instrumentation Diagram
PC	Personal Computer
PID	Proportional, Integral, Derivative Controller
PLC	Programmable Logic Controllers
RAM	Reliability, Availability, and Maintainability
RCS	Radon Control System
ROS	Remote Operating Station
SREE	Silo Retrieval End Effector
SSC	Structure, Systems, and Components
SWRS	Silo Waste Retrieval System
TPG	The Providence Group
UL	Underwriters Laboratories
UPS	Uninterrupted Power Supply
VAC	Variable Alternating Current
VFD	Variable Frequency Drive

3388

1.0 SYSTEM OVERVIEW DESCRIPTION

1.1 Process Description

The EMMA™ manipulator system is a major component of the Silo Waste Retrieval System (SWRS), and is critical to the success of the Accelerated Waste Retrieval (AWR) program. Two systems are planned for delivery to the Fernald Site. These systems will be used for the AWR operations on Silos 1 and 2, and the full-scale mockup (FSM) testing activities planned for Silo 4.

The EMMA™ manipulator system is designed to assist in all mining and silo closure operations from Bento-Grout removal through final inspection and fixative application activities. The proposed mining strategy will be achieved through effective employment of the manipulator. The manipulator will facilitate operations from initial entrance into the silo through final clean out, inspection, and closure acceptance. Waste and debris retrieval operations using the manipulator system is achieved by:

Deploying the high pressure Arm Deployed Sluicing System (ADSS) nozzles to breach the Bento-Grout layer and force the dislodged material toward the sluicing pump
Forcing the waste and debris away from the sluicing pump and Silo Retrieval End Effector (SREE) to facilitate continuous operations
Deploying the GEES camera and lighting system and ADSS to inspect and clean all wall-mounted silo sampling ports
Cleaning the in-silo cameras and lights to ensure optimum visibility for remote operations
Transferring debris to different locations in the silo prior to removal to minimize retrieval obstructions
Mobilizing bulk waste and debris from behind the sluicing pump and water cannon
Performing wall washing and inspection operations as the headroom within the silo is increased (eliminates need for high pressure water cannon on walls and minimizes the potential for silo damage caused by high pressure wall washing activities)
Forming debris piles for size reduction and removal activities
Strategically placing the debris size reduction tool off-center from the riser location near debris piles and providing a flat surface under the silo riser for placement of the debris collection and transport basket
Transferring debris from the pile to the size reduction tool to the retrieval basket
Providing close visual inspection capabilities throughout operations and final inspection
Employing the ADSS for fixative application
Employing the Gripper End Effector System (GEES) camera and lighting system to assist in initial and final wall, floor, and ceiling inspection activities

1.2 System Features

The manipulator is a 52.5 -foot long, 30-inch diameter (maximum), cylindrical serpentine manipulator composed of five independent stages and a wrist assembly. Stages 1 through 3 are single degree of freedom (1 DOF) stages, capable of bending only in a vertical direction (pitch). Stages 4 and 5 are two degrees of freedom (2 DOF) stages, and provide pitch and yaw capability, which allows the stages to bend both in vertical and horizontal directions. The 2 DOF

wrist at the end of the manipulator provides local dexterity for the GEES and ADSS, and other tooling provided for use in silo waste retrieval activities. The manipulator's length ensures access to the complete working envelope within the silo. The dexterity offered by the five discrete manipulator stages and wrist assembly enables the manipulator to move effectively around in-silo obstacles such as the SREE umbilical, the water cannon, and the slurry pump.

Ease of maintenance and Operations

Through the RAM (Reliability, Availability, and Maintainability) analysis, the expected reliability of our component was examined. Through this effort it has been determined that the manipulator will operate for 1000 hours with no scheduled maintenance activities. The probability for failure during this period is low. The failures rates used for this analysis were very conservative compared to the expectation for the part lifetimes. Repairs can be made during the non-operational periods. This was not considered in the RAM, but this type of repair would easily allow the system to operate for 1000 hours of operation before maintenance is required.

The control setup is very simple and intuitive. Operators have been trained in very short periods of time to use an EMMA™ system. The system that will be used at the Fernald silo is slightly more complex in that it has rotational and vertical positioning. A human machine interface (HMI) description has been included in this package. Ease of control has been the primary focus for the design of this system. Although a computer is used as part of the control system, an operator does not interface with this for normal operation. Ergonomically designed controls that exist such as levers, joysticks, or knobs are used to control EMMA's™ degrees of freedom.

The manipulator is designed so that insertion or extraction is not necessary at the end of each operation period. The arm can be left inside the silo environment. This decreases downtime during startup and shutdown, but will elminate the ability to perform work on the system during non-operational hours.

Key Capabilities

Perform waste retrieval activities in operating temperature ranges of 32°F to 100°F with humidity ranges from 10-100%. Temperature effects on the materials of construction and controllability have been examined, and it has been determined that the environment will not hinder the functionality of the system.

Manage, as a minimum, a 200-lb. payload at maximum horizontal reach (includes GEES and ADSS weight). All calculations have included this payload and the manipulator is designed to work with this load.

Provide ability to reach extreme areas within the silo. A 3D simulation has been implemented which provides the basis for manipulator length and ensures that the parts of the silo furthest from the inlet port can be reached. This analysis shows that the manipulator will be capable of reaching all points in the silo with the exception of those on the ceiling in the immediate area of the inlet port.

This system, when combined with the z- and azimuth-drives located in the deployment tower, results in a manipulator with sufficient dexterity and lifting capacity to carry out operations required for successful mission completion.

Equipment Safety and Survival

The EMMA™ manipulator system design incorporates unique coupling and cable systems that will allow the manipulator to safely sustain the in-silo rigors associated with operation and decontamination activities. The design also specifies robust materials of construction that will provide a 10-year operating life.

Several redundant systems have been included to ensure that control of the EMMA™ can always be maintained and that collision or loading of the silo does not occur. The system sensors will alert the operator to situations that could potentially damage the silo integrity, or cause a manipulator system failure. Programmed software controls will not allow the manipulator system to process forward movement or configuration commands should the manipulator encroach the designated safety space by the wall. Additional safety controls will be incorporated into the operating system to meet all operating requirements set forth by the silo environment and client-mandated operating requirements.

The EMMA™ manipulator system is a self-contained subsystem designed to meet safety factor requirements for operations at a nuclear facility. A System, Subsystem, and Component (SSC) Performance Grading (PG) exercise was performed in accordance with FF (Fluor Fernald) guidance to ensure system compatibility within the stated Silo environments. This analysis resulted in:

A PG 3 rating for the Deployment Tower structure. This structure reflects the highest risk component of the EMMA™ manipulator system with respect to seismic and wind loading stability, bridge interface, and potential worst-case failure scenarios. To minimize or mitigate risks associated with this structure, ASME/ANSI standards are being conservatively applied to the design and construction activities. Section 3.0 of this document identifies the specific risk areas and the approach employed to minimize or eliminate these risks.

PG 4 ratings were given to the remaining system equipment and components. The additional equipment/component designs are being prepared in strict accordance with applicable industry, DOE, and Fernald site codes and standards (identified in the Equipment Specification No. JS-GM-EMA-14-400).

Flexible coupling system—Elastomeric couplings are designed to provide the flexibility and recoverability required to meet the harsh operating conditions anticipated in the silo environment. These couplings will withstand the deformation caused by direct object impact, weight associated with deployment and transfer activities, changes in configuration required to reach all points within the silo, as well as temperature, humidity, and radiation operating environments. These flexible couplings are capable of regaining their original size, form, and functional abilities immediately following any event or combination of events stated above. This feature reduces maintenance and provides increased operating capability.

Redundant cabling system—The manipulator's actuation cables have been designed to meet a Safety Factor of 3. The cables have been selected and routed to provide durability and flexibility. Additionally, the design incorporates redundancy to accommodate a potential single failure so that effects to the operation, performance, and integrity of the system is minimized. In the unlikely event of a double failure, the manipulator will assume a slack, fully extended vertical posture that allows retrieval from the silo. Under no circumstances will the arm fail in a position that prohibits extraction, or allows it to contact and damage the silo. Wrist design will also reflect a failsafe system to ensure that the manipulator can be retracted from the silo.

Component and materials of construction selection—All components and materials of construction meet the operating environment and safety and sustainability requirements. For example, the deployment tower will be constructed of A-36 carbon steel (minimum ¼" thickness) to resist potential buckling and fracture risks. This material is painted to protect against corrosion for the duration of the retrival operation. Additional components and materials considerations include: operating system redundancies which provide 99 percent system availability; stainless and aluminum manipulator components that resist corrosion in the silo environment; sheath material that withstands 3,000 psi decontamination water spray; and a rigid mast segment constructed to prevent buckling under operational loading limits.

Personnel Safety

The Tower and EMMA™ system were designed to minimize the amount of time a worker(s) would need to be in the hazardous areas. This system was designed with ALARA as a guiding principle. Other methods of insertion are available with the EMMA™ system. However, the vertical tower deployment allows for the most reliability and least hands on operation.

Maintenance activities will be performed in the deployment tower structure from the appropriate maintenance platforms. Labor intensive maintenance such as stage, segment, or major change outs will be done at a staging area provided outside of the silo area. The design and procedures will address maintenance efficiencies under both nominal and off-normal events.

OSHA guidelines were followed that ensure appropriate specification of equipment and layout of space in the tower module. This includes safety climbs, door sizes, workspaces, and confined space considerations.

Efficiency of maintenance workers was considered during the RAM and several measures have been taken to ease worker strain while inside the confined spaces of the tower. Floors have been included in various locations that allow for rest points while climbing. Floors fold out allowing access to the manipulator. This allows a much more comfortable and safe platform for performing work. The manipulator and associated actuation package locks down so that a redundant system ensures no suspended loads above workers.

Modifications to Preliminary Designs

Due to the change in the location of the silo inlet hole, a re-evaluation of the needed manipulator length and tower height was done. This was performed to minimize the risks due to the height

and weight of the tower structure. The tower height in the final design will be 90 feet tall. The manipulator length has been reduced to 52.5 feet. This includes stages 1-5 and the wrist.

Other changes from the preliminary design include the reduction of segments in stages 1-3. Previously these stages had 3 segments, but to reduce complexity of the initial stages this was changed to one segment for each stage. They are connected through a hinge. No loss to the functional requirements has occurred due to this change.

A change to the wrist design has also been done. Actuation of the wrist will be accomplished through electrical motors mounted on the manipulator system. This change was incorporated to reduce the weight of the system and increase the reliability and response time of the wrist.

The azimuth drive used for the rotation of the EMMA™ system will reflect a +/- 180 design that will incorporate a simple hard stop. This will reduce wear to the umbilical system, reduce space needed to store umbilical slack, and increase total reliability of the system.

The dexterity of stage 4 has been reduced to eliminate weight and structural forces that will get exerted on the system. This change will not impact any of the functions that EMMA™ will perform.

The LOS and controls cabinet has been moved as an external unit that mounts to the sidewall of the tower. This design reduces the size of the airlock, allows easier access for the power and signal distribution, and decreases the footprint of the system.

1.3 Design Criteria

The EMMA™ system has been under development since 1995, and has evolved to provide teleoperated functionality in hazardous and radioactive environments similar to the operating environment anticipated in the Fernald Environmental Management Plant (FEMP) silos. The existing EMMA™ design is being modified to meet the Functional Requirements as set forth by Fluor Fernald (FF). This design will meet DOE and Fernald site design, safety, and performance requirements. This design will also meet additional applicable industry design standards and requirements. Table 1-1 identifies the FF Functional Requirements (*Technical Requirements Document, Silos 1 and 2 AWR Project*, C. No. FSC 624, TRD-40710-RP-001, Tables 2-2 and 2-11) that pertain to the manipulator system.

Table 1-1. The EMMA™ Manipulator System is Designed to Meet FDF Functional Requirements.

Requirement No.	Requirement / Method of Accomplishment

Requirement No.	Requirement / Method of Accomplishment
SWRS-001	**Ensure that the retrieval system does not compromise the integrity of the silos.** The EMMA™ manipulator system has been designed to ensure that the silo integrity Is not compromised in three ways. First, the EMMA™ manipulator system is contained within the 90' tower structure, and will be mounted directly to the Silo Bridge Platform. Second, a guide bearing will be installed at the base of the tower to prevent the manipulator from contacting the silo dome during insertion, extraction, or operation. Third, in silo operations with the manipulator are monitored by the operators through the camera trees located throughout the silo. Fourth, the manipulator will have configuration limits based on position sensors that are controlled through the monitoring control system to ensure the silo structure is not impacted. Lastly the flexible end stages of the manipulator will dampen out the forces transmitted to objects that are contacted.
SWRS-008	**Provide local control of all functions of the SWRS.** A local operating station (LOS) will be provided outside the tower to offer local control of all manipulator system functions (see Section 6.0).
SWRS-009	**Provide remote monitoring and control from the accelerated retrieval control room for SWRS process control functions.** A remote operating station (ROS) will be provided in the operator's trailer located in a safe work zone as determined by ALARA considerations. This station will allow control of all manipulator functions (see Section 6.0).
SWRS-010	**Restrict the placement of loads on the domes of the silos so that no live load greater than 700 lbs and/or three persons is upon the dome and/or the protective plywood and steel frame protective dome covers.** See response to SWRS-001. No loads will be placed upon the silo domes.
SWRS-011	**Restrict load geometries so that the load applied to a silo dome is distributed over a maximum area (i.e., limit geometry for equipment loading to a circular area at least 3 feet in diameter). Point loading is not allowed.** See response to SWRS-001.
SWRS-012	**Measure (or estimate by calculation) any load to be placed on a silo dome surface prior to activities on a silo dome.** See response to SWRS-001.
SWRS-013	**Ensure that design of SWRS provides for ease of decontamination and demolition at the end of Stage 2 operation.** A protective sheath and/or shell will be installed over the functional manipulator and mast sections of the system. This will simplify decontamination and eliminate debris collection pockets. The silo spray ring provides the first level of system decontamination upon system extraction, and a hand-held decontamination spray wand will be provided in the tower and accessible through glove ports to ensure that decontamination has been performed to safe levels.

Requirement No.	Requirement / Method of Accomplishment
SWRS-014	**Ensure that the design life of the SWRS is 10 years.** Historical data, prototype testing, and dynamic modeling data are being developed, accumulated, and analyzed to ensure that a 10 year design life is achieved. Additionally, all commercially available equipment is being selected to fulfill this requirement.
SWRS-016	**Utilize remote retrieval operations to the extent practical to limit personnel activities in accordance with ALARA principles.** The ROS, located at a remote on-site location, ensures operator safety during system operations. To further ensure enforcement of ALARA, no operator(s) will be allowed in the tower while the manipulator is deployed except in the event of system failure or maintenance activities which might require the system to be deployed. These scenarios will be identified and proceduralized at a later date.
SWRS-018	**Ensure that the equipment placed inside the silos is retrievable from the silos for maintenance purposes.** The z-drive provides vertical control of the manipulator, and will enable the manipulator to be completely retracted from the silo for maintenance and demobilization activities.
CS-001	**Provide a centralized control area. The term "remote" used herein refers to monitoring and control performed by an operator from this centralized location. The term "local" refers to field mounted or intermediate between field mounted and the centralized control location.** The SWRS offers both remote and local (ROS and LOS) operating stations.
CS-002	**Worker and operator exposures will be ALARA by performing normal process monitoring and control remotely.** All nominal system operations can be performed and managed from the ROS.
CS-003	**At the centralized control area, the distributed microprocessor based control system (DMCS) redundant human machine interface (HMI) shall provide control, monitoring, alarms, trending, archiving and printing of system operations.** The ROS is equipped with monitoring and control equipment including an HMI PLC PC, HMI Programming PC, CD read/write drive, and a printer. This system offers sufficient redundancy, and is capable of receiving/providing the input/output necessary for control, monitoring, alarm and warning indication, trending, archiving, and printing.
CS-004	**The DMCS configuration software will perform process control functions, interlock and logic routines, and sequential operations. A separate DMCS configuration software programmer station will be provided. Activation and deactivation of HMI screens, logic, and alarms will be easily performed.** The HMI PLC PC performs process control functions, interlock and logic routines, and sequential operations capabilities. A separate programming PC will be provided for programming functions. Both stations will be designed to easily activate and deactivate HMI screens, logic, and alarm controls.

Requirement No.	Requirement / Method of Accomplishment
CS-005	**DMCS real-time functions (e.g., data acquisition, data storage, display, and alarms) will be designed for 99% availability. Provide on-line diagnostics.** The PLC real-time functions have been designed to provide 99 percent availability through redundant and modular electronic systems. They are capable of providing on-line diagnostics.
CS-006	**Data handling functions (e.g., data entry, reporting, and archiving) at the HMI operator interface will be designed for 99% availability.** See response to CS-005.
CS-007	**Include down-time for lightning strikes, system maintenance, and off-line diagnostics in the system availability calculations.** The downtime required for these and other system events was considered in the FMEA and RAM analyses.
CS-008	**No single point failure will cause loss of the entire system.** Due to the system redundancy and modularity of the manipulator control system, no single point failure will cause loss of the entire system. For example if the ROS fails, the LOS will still operate.
CS-009	**Data stored at local microprocessors will be recoverable upon system restart. The microprocessors will have execution speeds, scan rates, and transmission rates selected for proper DMCS and process operation.** Data stored on the HMI PLC and PC will be backed up. The HMI PLC PC selection is based on a need for rapid and complete recovery upon restart, high execution speeds, scan rates, and transmission rates required for the SWRS operations.
CS-013	**Packaged control and monitoring systems will provide necessary monitoring and control interfaces with the DMCS; including operation trouble alarms, visual, and audible.** Both the LOS and ROS will display alarms and warnings through the HMI PLC PC operator and control panels. Trouble alarms will be displayed visually and broadcast audibly.
CS-019	**Commingling DMCS hardware with non-related systems in the control room will be avoided.** The manipulator's operating system is being designed as a stand-alone system that will prevent hardware commingling with non-related systems. The manipulator's operating system communicates with other AWR control systems, but does not offer integrated functionality with these systems. This is a safety measure to ensure that only one operator has control of the manipulator at any given time.
CS-020	**A segregated area in the control room for the DMCS with adequate workspace, document laydown space, traffic patterns, and maintenance access will be provided.** An area has been designated in the operator's trailer for the manipulator system ROS. The layout of this area will be designed in accordance with OSHA human factors considerations, and will provide sufficient workspace, document lay-down space, and traffic and maintenance areas.

Requirement No.	Requirement / Method of Accomplishment
CS-021	**DMCS operation, process, and alarm data will be stored long-term (archived). Large capacity storage media will be selected that will easily permit 30-day archival data retrieval.** The system will offer sufficient storage space for 30-days worth of data collection, at a minimum. The data will be transferred to a CD via a CD read/write drive, labeled, cataloged, and safely stored for data archiving purposes. The system, currently under development, will allow easy retrieval of archived data. Additionally, the data will be backed up at the end of each operating shift.
CS-022	**Ensure that computer hardware and software are year 2000 compliant.** All software and hardware was selected based on Y2K compliance.
CS-023	**The DMCS password and keylock security will prevent unauthorized use.** The PLCs will be programmed for password protection, and the CPUs will feature physical key lock security.
CS-024	**DMCS installed spare capacity of system hardware (i.e., input, output, memory) will be a minimum of 25%.** The HMI PLC PC and Programming PLC PC's will each provide a minimum of 25 percent spare capacity.
CS-025	**Selection of instruments will depend on range, accuracy, and compatibility with safety, reliability, and maintainability. Instrument signals will use standard voltage currents. Electronic instruments will be Factory Mutual approved or Underwriters Laboratories listed.** All components in the control system will be selected based on reliability, range, compatibility, safety, and maintainability. Additionally, the commercially available equipment selected to date offers UL listing, and all future equipment selection will be Factory Mutual approved or UL listed items.
CS-026	**The existing VITPP Uninterruptible Power Supply (UPS) will be used to power the DMCS.** All critical electronic equipment associated with the ROS will be powered from the AWR UPS system.
CS-029	**Instrumentation systems will be designed to provide remote sensing in inaccessible or high dose areas.** All manipulator instrumentation is being selected to offer high reliability in a radioactive and remote environment. Instrumentation will be designed with shielding, as required, to ensure availability and reliability requirements.

1.4 System Interface Points

The EMMA™ manipulator system, although an independent subsystem, has been designed to effectively interface with the bridge, utilities, end effector components, retrieval operation equipment, and control systems of the integrated AWR system. The design considers bridge interface with regard to weight, connection points, and forces exerted on the system in high winds, heavy snow, and other natural phenomena, and nominal and off-normal operating events. The utility requirements have been considered and connection points will be provided

at the tower utility interface connections. The various equipment interfaces have been defined and are designed for ease of integration at the retrieval site. The operating stations, both local and remote, are designed for overall system compatibility. This feature offers increased spare capacity and operator cross-training potential. The table below outlines all of the EMMA™ subsystem interface points. An interface diagram (11GED080) is used to reference the interface number to a particular location in the system.

000549

Table 1-2. The EMMA™ Manipulator System Interface List

Interface number	Interface Team member	Location	Description	GreyPilgrim Responsibility	Team Member Interface Responsibility	Time of connection or Installation
GP-INT-001	TPG / GreyPilgrim	Control Trailer	Power to control equipment	Wire 12/3, specification	120 VAC, 20A Power, plugs, and sockets	At Fernald Site
GP-INT-002	TPG / GreyPilgrim	Control Trailer	Power to control equipment	Wire 12/3, specification	120 VAC / 20A	At Fernald Site
GP-INT-003	TPG / GreyPilgrim	Control Trailer	Power to control equipment	Wire 12/3, specification	120 VAC / 20A	At Fernald Site
GP-INT-004	TPG / GreyPilgrim	Control Trailer	Power to control equipment	Wire 12/3, specification	120 VAC / 20A with UPS	At Fernald Site
GP-INT-005	TPG / GreyPilgrim	Control Trailer	Power to control equipment	Wire 12/3, specification	120 VAC / 20A with UPS	At Fernald Site
GP-INT-006	TPG / GreyPilgrim	Control Trailer	I/O between GreyPilgrim and Providence Control	Wire 16/16, specification	Connection to I/0 module	At Fernald Site
GP-INT-007	TPG / GreyPilgrim	Control Trailer	Fiber optic cable	OLM module, cable ends, requirements	Supply fiber optic profibus communication cable from control trailer to the tower base	At Fernald Site
GP-INT-008	TPG / GreyPilgrim	Control Trailer	Control room space and equipment layout	Provide dimension of control room equipment, and layout of operator station	Provide necessary space and layout in overall control trailer design	At Fernald Site
GP-INT-009	Foster Wheeler / GreyPilgrim	Tower Base	Electrical cabinet on bridge	Provide control panel dimensions and location	Provide space for the location	At Fernald Site
GP-INT-010	Foster Wheeler/ GreyPilgrim	Tower Base	Power to EMMA	Provide wire and power requirements – 4/3, 120	Provide power, plugs, and receptacles	At Fernald Site

INFORMATION ONLY

3388

000157

Interface number	Interface Team member	Location	Description	GreyPilgrim Responsibility	Team Member Interface Responsibility	Time of connection or Installation
			module	VAC / 100 A		
GP-INT-011	Foster Wheeler/ GreyPilgrim	Tower Base	Main high voltage power to EMMA module	4/4, 480 VAC, 100 A	Provide power, plugs, and receptacles	At Fernald Site
GP-INT-012	Foster Wheeler/ GreyPilgrim	Tower Base	Main 120VAC Power to EMMA module	12/3, 120 VAC / 20 A	Provide power, plugs, and receptacles	At Fernald Site
GP-INT-013	Foster Wheeler/ GreyPilgrim	Tower Base	Routing for electrical lines to our hydraulic pump	Provide wire and connectors, 480 VAC / 15 A for Hydraulic Pump	Space and routing path	At Fernald Site
GP-INT-014	Foster Wheeler / GreyPilgrim	Tower Base	Routing for electrical lines to our hydraulic pump	Provide wire and connectors, 480 VAC / 10 A for Hydraulic Pump heater	Space and routing path	At Fernald Site
GP-INT-015	Foster Wheeler / GreyPilgrim	Tower Base	Hydraulic pump placement	Provide dimensions, weight, mounting, and location requirements	Provide space and placement in overall bridge layout	At Fernald Site
GP-INT-016	Foster Wheeler / GreyPilgrim	Tower Base	Lightning protection	Provide wire specification for Lightning Protection, 1 wire 4/0 GND	Connector wire to overall grounding scheme at the tower base	At Fernald Site
GP-INT-017	Foster Wheeler / GreyPilgrim	Tower Base	Routing for hydraulic fluid line	Provide hydraulic hose pressure line and connectors	Space and routing path	At Fernald Site
GP-INT-018	Foster Wheeler / GreyPilgrim	Tower Base	Routing for hydraulic fluid line	Provide hydraulic hose return line and connectors	Space and routing path	At Fernald Site
GP-INT-019	Foster Wheeler/ Battelle / GreyPilgrim	Tower Base	3000 psi decon water	Rout cable from tower opening to the actuation package	Battelle/Foster Wheeler – Provide hose, connectors, sizes etc. Address freeze	Hose that is internal to the tower is installed at the tower/manipulator

INFORMATION ONLY

000550

000158

3388

Interface number	Interface Team member	Location	Description	GreyPilgrim Responsibility	Team Member Interface Responsibility	Time of connection or Installation
					protection	assembly site. Connection at the base of the tower will be performed at the Fernald site.
GP-INT-020	Providence/ GreyPilgrim	Bottom of Bridge	Spray Ring interface	Provide spool piece and bolts that will connect with the decon spray ring	Provide detailed specification of decon spray ring	At Fernald Site
GP-INT-021	Foster Wheeler/ GreyPilgrim	Bottom of Bridge	Silo riser interface	Provide spool piece and bolts that will connect with the silo riser piece	Provide detailed specification of silo riser piece	At Fernald Site
GP-INT-022	Foster Wheeler/ Battelle / GreyPilgrim	Tower Base	Pneumatic 125 psi	Route line from tower opening to the actuation package	Battelle/Foster Wheeler – Provide hose, connectors, sizes etc.	Hose that is internal to the tower is installed at the tower/manipulator assembly site. Connection at the base of the tower will be performed at the Fernald site.
GP-INT-023	Foster Wheeler / GreyPilgrim	Tower Base	HEPA filter and air duct	Provide hole, flange plate, and ducting inside of tower	Provide connection specifications, location requirements, HEPA filter, and any ducting outside of the tower	Ducting internal to the tower installed at the tower/manipulator assembly site. Connection to HEPA on bridge will be done at Fernald Site
GP-INT-024	Foster Wheeler / GreyPilgrim	Tower Base	Breathable air	Not in GreyPilgrim scope	Providing breathable air line	TBD
GP-INT-025	Battelle / GreyPilgrim	Tower Base – Tower Internal	Video line to tower camera	Route cable in the tower	Provide cable, connectors, and specifications	At the tower/manipulator assembly site.
GP-INT-026	Battelle / GreyPilgrim	Tower Internal	Tower camera mounting	Provide primary bracket for mounting of camera	Specific location, bracket details, and camera	Camera installed at Fernald Site, bracket will

INFORMATION ONLY

000551

000159

3388

Interface number	Interface Team member	Location	Description	GreyPilgrim Responsibility	Team Member Interface Responsibility	Time of connection or Installation
						be installed at the tower/manipulator assembly site.
GP-INT-027	Battelle / GreyPilgrim	Tower Base – Tower Internal	Video line to ADS	Route cable in the tower	Provide cable, connectors, and specifications	At the tower/manipulator assembly site.
GP-INT-028	Battelle / GreyPilgrim	Tower Internal	DAM 1 power line	Provide Power, Rout cables and specify required length	Provide cables and power requirements – 14/3 – 120 VAC / 20A	At the tower/manipulator assembly site.
GP-INT-029	Battelle / GreyPilgrim	Tower Internal	DAM 2 power line	Provide Power, Rout cables and specify required length	Provide cables and power requirements – 14/3 – 120 VAC / 20A	At the tower/manipulator assembly site.
GP-INT-030	Battelle / GreyPilgrim	Tower Internal	DAM 1 mounting	Mounting of DAM 1, Provide bracket	Provide DAM 1 and specifications	At the tower/manipulator assembly site.
GP-INT-031	Battelle / GreyPilgrim	Tower Internal	DAM 2 mounting	Mounting of DAM 2, Provide bracket	Provide DAM 1 and specifications	At the tower/manipulator assembly site.
GP-INT-032	Battelle/ GreyPilgrim	Tower Internal	Alarm mounting	TBD	Provide Alarm and specifications	At the tower/manipulator assembly site.
GP-INT-033	Battelle/ GreyPilgrim	Tower Internal	DAM 1 line to radiation detector 1	Provide routing ,length specification, and seal tight conduit along floor	Provide cable, connector, specifications	At the tower/manipulator assembly site.
GP-INT-034	Battelle/ GreyPilgrim	Tower Internal	DAM 1 line to radiation detector 2	Provide routing ,length specification, and seal tight conduit along floor	Provide cable, connector, specifications	At the tower/manipulator assembly site.
GP-INT-035	Battelle/ GreyPilgrim	Tower Internal	DAM 2 line to radiation detector 3	Provide routing ,length specification, and seal tight conduit along floor	Provide cable, connector, specifications	At the tower/manipulator assembly site.
GP-INT-036	Battelle/ GreyPilgrim	Tower Internal	DAM 2 line to radiation detector 4	Provide routing ,length specification, and seal tight conduit along floor	Provide cable, connector, specifications	At the tower/manipulator assembly site.
GP-INT-037	Foster Wheeler/ Battelle / GreyPilgrim	Tower Internal / Bridge	Radiation detector 1	Provide location and layout of radiation detector	Battelle – Provide sensors, specifications, mounting plan Foster Wheeler –	At the tower/manipulator assembly site.

INFORMATION ONLY

000552

000160

3388

Interface number	Interface Team member	Location	Description	GreyPilgrim Responsibility	Team Member Interface Responsibility	Time of connection or Installation
					mounting interface on shielding plate of bridge	
GP-INT-038	Foster Wheeler/ Battelle / GreyPilgrim	Tower Internal / Bridge	Radiation detector 2	Provide location and layout of radiation detector	Battelle – Provide sensors, specifications, mounting plan Foster Wheeler – mounting interface on shielding plate of bridge	At the tower/manipulator assembly site.
GP-INT-039	Foster Wheeler/ Battelle / GreyPilgrim	Tower Internal / Bridge	Radiation detector 3	Provide location and layout of radiation detector	Battelle – Provide sensors, specifications, mounting plan Foster Wheeler – mounting interface on shielding plate of bridge	At the tower/manipulator assembly site.
GP-INT-040	Foster Wheeler/ Battelle / GreyPilgrim	Tower Internal / Bridge	Radiation detector 4	Provide location and layout of radiation detector	Battelle – Provide sensors, specifications, mounting plan Foster Wheeler – mounting interface on shielding plate of bridge	At the tower/manipulator assembly site.
GP-INT-041	Providence / GreyPilgrim	Tower Internal	Umbilical management winch	Location of winch and routing of cable	Provide winch, specifications, relays,	At the tower/manipulator assembly site
GP-INT-042	Providence / GreyPilgrim	Tower Internal	Power for winch	GreyPilgrim, Inc. supply power, TBD	Provide requirements, connectors and cable	At the tower/manipulator assembly site
GP-INT-043	Providence / GreyPilgrim	Tower Internal	Control for winch	Use relay to connect into GreyPilgrim, Inc. PLC and network system	Signal Requirements, Interface with 8 I/O at control trailer	At the tower/manipulator assembly site.
GP-INT-044	Battelle / GreyPilgrim	Actuation Package	GEE/ADS control panel	Provide space and mounting locations, overall layout	Provide control panel, specifications	At the tower/manipulator assembly site.
GP-INT-045	Battelle / GreyPilgrim	EMMA	GEE control line 1	Provide routing of control cable 1 cable, length specification	Provide cable/line, connectors, and specifications	At the tower/manipulator assembly site.
GP-INT-046	Battelle / GreyPilgrim	EMMA	GEE control	Provide routing of	Provide cable/line,	At the tower/manipulator

000553
000161
INFORMATION ONLY
3388

Interface number	Interface Team member	Location	Description	GreyPilgrim Responsibility	Team Member Interface Responsibility	Time of connection or Installation
			line 2	control cable 2, length specification	connectors, and specifications	assembly site.
GP-INT-047	Battelle / GreyPilgrim	EMMA	Camera control line	Provide routing of camera control cable, length specification	Provide cable/line, connectors, and specifications	At the tower/manipulator assembly site.
GP-INT-048	Battelle / GreyPilgrim	EMMA	Pneumatic line	Provide routing of 125 psi air line, length specification	Provide cable/line, connectors, and specifications	At the tower/manipulator assembly site.
GP-INT-049	Battelle / GreyPilgrim	EMMA	Decon water line 1	Provide routing of 3000 psi decon water line 1, length specification	Provide cable/line, connectors, and specifications	At the tower/manipulator assembly site.
GP-INT-050	Battelle / GreyPilgrim	EMMA	Decon water line 2	Provide routing of 3000 psi decon water line 1, length specification	Provide cable/line, connectors, and specifications	At the tower/manipulator assembly site.
GP-INT-051	Battelle / GreyPilgrim, Inc	EMMA	GEE mounting interface plate	Provide mounting plate	Provide wrist, specifications, and mounting plate that will interface with stage 5 of the EMMA manipulator	At the tower/manipulator assembly site.
GP-INT-052	Battelle / Providence, GreyPilgrim, Inc	Tower Base, Tower Internal	Fiber optic line	Provide interface through tower for fiber optic line, rout cable through tower	Battelle – provide fiber optic requirements, and provide cable and connectors for routing through the tower Providence – provide fiber optic line and connector to the tower base	Cable that is internal to the tower is installed at the tower/manipulator assembly site. Connection at the base of the tower will be performed at the Fernald site.
GP-INT-053	Foster Wheeler / GreyPilgrim	Tower base	Secondary Spray Wand	Provide an inlet port and viewing window for spray down	Provide quick connect attachment of water hose on bridge and the spray wand	At Fernald Site
GP-INT-054	Foster Wheeler / GreyPilgrim	Tower Base	Attachment of Tower to the Bridge	Provide bolt pattern, bolts, and template	Provide structure on bridge to interface with bolt pattern	At Fernald Site

000554
000162
INFORMATION ONLY
3388

Document and Submittal Summary

The EMMA™ manipulator system is comprised of five discrete subsystems: 1) deployment tower system; 2) actuation package; 3) mast; 4) manipulator; and 5) instrumentation and controls system. Detailed descriptions of these subsystems including system interface points, physical characteristics, materials of construction, and design assumptions are provided in the following sections of this document. Additional supporting information pertaining to the system design is included in the system specification. It is our assumption that this information best represents the final design of the system

2.0 DEPLOYMENT TOWER SYSTEM

The primary purposes of the deployment tower are to provide containment for the EMMA™ manipulator and its support systems during transport, maintenance, and system shutdown, house the mechanical operating systems (azimuth and z-drives) which provide gross positioning of the manipulator, and provide a maintenance and local operating control station area. The deployment tower is also designed to provide a redundant containment system in the unlikely event of a Radon Control System (RCS) failure. This made for a design of the tower that is airtight, maintains an airlock, and contains sealed connections. The mounting of the control and power distribution cabinet, as well as the hydraulic pump unit, is done at the tower base. These are connected after the erection of the tower.

The deployment tower structure is a large cylindrical tower made of A36 carbon steel with an airlock room attached internally at the base. The cylindrical structure is a 90-foot tall shell with a wall thickness of 5/16" for the lower 20 feet and ¼" for the remaining 70 feet. The tower shell provides the structural support and is constructed to provide secondary shielding and containment. It is composed of two sections to allow for the insertion of the manipulator and is attached together with an 80-bolt flange connection at the midpoint. Buckling concerns associated with a structure of this magnitude have been addressed through bracing, achieved through ovalling rings placed at 11.25-foot intervals throughout the tower structure. Each ovalling ring has a 12' inner diameter and a 13' outer diameter. The disc-shaped ovalling ring is then welded to the outside of the tower at designated points in accordance with AWS welding standards. The ovalling rings maintain the circular profile of the structure and prevent shell buckling. GreyPilgrim has performed the critical calculations, which are moment load, weight, height, and the center of gravity. Two lifting points are provided, one with a tailing lug at the base and the other 60 feet from the base with a trunion.

The tower is designed in accordance with the ASCE 7-98 (a more recent version of ASCE 7-95). The tower wind loading calculations were prepared under type b and c scenarios ("b" is rural exposure and "c" is urban exposure). These calculations are provided in Appendix B and contain supporting data including the technical report on wind loading scenarios and the dynamic modeling program used to develop the wind loading data. Scenario "c" has been selected as the design basis. The results of these calculations indicate a maximum wind shear and overturning moment at the base of the tower at 17.99 Kips and 897.9 Kip feet, respectively. The dead load moment from the EMMA™ system is 140 Kip feet, which adds to the 897.9 Kip feet of the overturning moment due to wind loading.

The calculation for the seismic loading were determined to be worst case for the structure. These were performed with FDF-TRD appendix C requirements and the UCRL-15910 for earthquake loading. The seismic loads were determined to be 28.77 Kips from shear loading and a 1925.33 Kip-ft overturning moment at the tower base. The structure and bolting interface have all been designed to withstand this loading with factors of safety.

The tower will attach to the bridge using eight separate bolt patterns equally spaced around a 12'-4.5" circle at the base of the tower. The base chair of the tower consists of two rings around the circumference of the tower. Holes are drilled through both of the rings for 16 1-3/8" A588 grade 50 bolts. The bolts serve as the structural connection to the bridge.

The deployment tower structure and anchor bolts have been rated a SSC, PG 3 based on the safety concerns identified with the structure. This structure represents the worst possible case scenario as related to catastrophic failure. As a result of this critical PG rating, the design is being developed under close scrutiny and with attention to codes and standards that will mitigate potential failure. Applicable codes and standards for design and construction incorporation include the American Institute of Steel Construction Standards and Codes (AISC), the American Welding Society Standards (AWS D1.1), and the American Society of Mechanical Engineers Standards for steel stacks (ASME/ANSI STS-1, Current 1999 edition). The four key areas of risk associated with this structure and the risk mitigation approaches to each of these risk areas are provided in
Table 3-1.

Table 3-1. Risk Mitigation Plan for SSC PG 3, EMMA™ Tower Deployment Structure.

Key Risk Areas	Design/Construct Criteria	Action
Shell Buckling	Shell buckling is mitigated by maintaining peak compressive stresses in the shell within buckling allowables as permitted by the ASME.	The EMMA™ tower structure as designed, results in peak compressive stresses of less than one-third to one-half of the allowable stresses. This is achieved through maintaining a minimum wall thickness of ¼" steel to ensure constructability and safe transport of the 12-foot diameter tower.
Failure in Tension (including weld failure)	Mitigate weld failures by application of the more stringent AWS requirements for dynamically loaded structures (e.g., bridge).	Tensile stresses assessed in the tower design are only 1/4 to 1/3 of the allowable tensile values. Measures will be taken in the equipment specification and further in the application of QA/QC to ensure that 90 percent penetration is achieved on all welds. Additionally, 100 percent testing of all circumferential butt welds to the AWS dynamic test levels by ASNT TC-1A Certified, Level 2 Inspectors will be required.
Failure by Fatigue	Mitigate failure by fatigue by maintaining shell stresses well below the endurance limit of the	Critical connections, including bridge tower interface connections, openings in the shell

Key Risk Areas	Design/Construct Criteria	Action
	ASTM A36 mild carbon steel material used in construction.	and structural reinforcement and tower attachment designs were developed based on state-of-the-art methods of analysis. One scenario includes wind gust buffeting and vortex shedding. The data was integrated into the final design and will be developed to provide detailed requirements for eliminating notches and stress raisers.
Brittle Fracture	Mitigate brittle fracture failures by ensuring that stack plate materials selected for tower construction meet fracture toughness standards set forth in the ASTM for the site environment conditions.	Identify A-36 carbon steel or a more fine-grained steel for tower construction. Require ultrasonic testing for 100 percent of the stack plate material to ensure that any inclusions are within the limits set forth by the ASTM.

The deployment tower houses the z-drive, azimuth drive, actuation package, mast, flooring structure, local operating station, and the EMMA™ manipulator. This system weighs approximately 88,500 lbs., and when attached to the silo bridge platform, will impart no load to the silos. The EMMA™ is attached to the mast, which is rigidly mounted to the inner frame of the actuation package. All of these components are discussed in the following sections.

Tower Base

The base chair of the tower consists of two rings around the circumference of the tower. These rings are separated by three stiffeners in 8 equally spaced locations around the perimeter of the tower. Holes are drilled through both of the rings for 16 1-3/8" A588 grade 50 bolts. The bolts serve as the structural connection to the bridge.

The tower floor consists of a central ring and 8 radial I-beams. The central ring is for the support of the guide bearing assembly while the I-beams take the horizontal load imparted to the guide bearing by the manipulator. The floor will have removable plating except under the airlock. The removable plating will rest on the I-beams as well as a rolled angle around the interior of the structure. The central ring is offset one foot from the center of the tower to provide more space for maintenance.

Radiation detectors are located beneath the floor plating and behind the guide bearing ring.

To maintain constant 250 cfm airflow in the tower structure, a circular piece of rubber with radial slits will be placed below the guide bearing. The rubber resists tearing, but is flexible enough to allow the arm to pass though with minimal resistance.

2.2 Z-Drive

The z-drive is contained within the tower structure and connects to the actuation package. The z-drive controls the vertical position of the mast, actuation package, and arm and translates the entire actuation package in the vertical direction. It provides for vertical motion of the

manipulator up to 70 feet. This motion is driven by a high strength winch system. The winch system's wire cable is routed from the winch located at the top of the tower, through pulleys on the edges of the actuation package and the side of the tower, and then back to a hard connection at the top of the tower. This gives the winch a mechanical advantage of 4 and adds to the stability to the system, while allowing the top of the actuation package to remain open for actuator maintenance. This system will have several safety features to ensure correct operation, such as various alarms located in the winch. The control of the winch system's motor will be done through a variable frequency drive. This device will provide various warnings including an off-normal indicator. Additional sensor devices will be used to ensure that the z-position of the actuation package is known and that mechanical or rigging failures can be detected in the system. This system is designed using a ½ HP drive motor that can support a load of 31,000 lbs. using the z-drive system.

2.3 Guide Rail and Guide Bearing Assembly

Four guide rails in the tower are used to keep the actuation package from swaying and to brace the package during azimuth drive operation (the actuation package is discussed in detail in Section 3.0). The guide rails extend the length of the tower and provide lateral and secondary vertical support for the actuation package. The guide rails and guide shoes are commercially available equipment being supplied by a certified commercial elevator companies. The rail supports are 3-inch diameter tubes welded to a T-beam and plate. At each attachment point guide rails are shimmed to allow for fine adjustment during tower erection. The guide bearing is mounted to the floor of the tower. The combination of this bearing and the lateral bracing of the guide rails support the moment generated by the weight of the manipulator when it is flexing. The expected maximum load on the bearings is taken from the moment generated on the mast when the manipulator is extended to maximum reach.

The bearing ring housing is composed of two large assemblies, the bearing ring assembly and the housing race. The bearing ring assembly consists of eight identical roller assemblies that form a circular shape. The housing race is a 6 piece assembly that is mounted to the floor of the deployment tower. Loads exerted by EMMA™ are supported by the bearing ring assembly and the actuation guide rails. The bearing ring assembly then transfers the load to the housing race, which ultimately transfers the load to the base of the tower. This prevents direct contact between the manipulator and silo and eliminates loading on the silo structure.

The guide bearing and housing race assemblies serve several purposes. Its most important function is to provide smooth entrance into the silo and prevent contact with the 36" silo opening. This is provided by the large rollers positioned in the x-y plane of the housing. As the manipulator moves up and down (along the z-axis), the rollers bear any side loads that the arm may create.

When the manipulator is fully deployed inside the silo and extended to reach the far working areas in the silo, the rollers and the actuation guide rails counter the moment associated with this extension.

These stacked bearings transfer the radial load to the housing race while giving the entire assembly the freedom of rotational and vertical movement.

The weight of the bearing ring assembly is transmitted to the housing race via 16, stud-type bearings that are threaded into each bracket assembly. This housing race interfaces with the tower base and is connected through 8 bolts in a radial pattern.

2.4 Maintenance Crane

The maintenance crane is used for vertical lift of the actuators into the actuation package during maintenance and replacement. The maintenance crane lifts the actuators from the bottom of the tower and places them in the actuation package during installation and maintenance operations. The maintenance crane is located at one side of the top of the tower. The crane consists of a rotary motor, spool, trolley, and a length of wire cable. The maintenance crane is a standard hoist that runs along an I-beam. The motor drives the spool that controls the wire cable, and trolley connecting the crane to the I-beam allows the horizontal position of the cable to be changed. The trolley runs along a guide that passes over the actuation package. The linear positioning of the trolley and the rotational control of the azimuth drive allows for access to all actuators located in the actuation package. This crane can support a load of approximately 1000 lbs.

RCS requirements

Achieving the necessary airflow in the deployment tower is accomplished by running an air duct into an opening in the tower , which then travels to the top of the deployment tower. This duct is installed during fabrication and tied down to the guide rails. The RCS system requires that the tower is under negative pressure and has a continous airflow through the entire tower and into the silo inlet port. This is achieved with the HEPA filter location and airduct routing.

2.6 Airlock

The airlock is incorporated into the tower structure. This airlock can be used for access of all personnel and most replacement equipment. The airlock is framed by 2x2x3/16 angles with a ¼" floor and 1/8" wall plate. It is positioned in such a way that it does not interfere with the guide rail supports. The outer door mounts to a flange welded to the outside of the tower while the inner door mounts to the airlock wall. The second door is a plastic curtain to ensure adequate airflow. The airlock will have to be seal to hold a 0.1" water gauge pressure differential to the external environment.

2.7 Maintenance Floors

Four (4) maintenance floors have been integrated into the tower structure design. These floors will enable maintenance activities and visual observation at all points of the manipulator when it is extracted from the silo. The maintenance floors are positioned directly above the airlock. The first floor is located ten feet off the floor of the tower. The first floor is accessed by a ladder running up the side of the airlock, while another ladder begins at this platform. From this platform the other ladder runs the remaining height of the tower, passing through hatches in each maintenance floor encountered. This larger ladder has a safety climb to comply with OSHA regulations. Approximately 5 feet below the roof of the tower is a platform for supporting and maintaining the z-drive winch.

Each of the first three maintenance floors is equipped with a fold-down section to allow close, safe access to the arm. The fold down sections have a circular notch cut into them to fit around

the arm. Handrails cordon off all edges of the maintenance floors to address worker fall protection requirements. The fold down sections are raised and lowered using a hand winch attached to the wall of the tower. This system allows the actuation drum to travel through sections of the tower where maintenance floors are located. When the floors are in use, an operator can stand on the permanent section of the floor and use a winch to lower the remaining portion of the floor. In the deployed position, the floor rests on metal bearings on the tower wall to provide support. The operator will use the winch to stow the floor when it is no longer in use. The permanent portion of the floor on the side of the actuation package offers more room because of the offset, and has an opening to provide sufficient clearance for a ladder and operator to pass through.

2.8 Utility Connections

All utilities required for system operation will be hardwired into the tower control panel with the exception of service loops to the actuation package. The utilities will breach the tower wall at the utility access port and then immediately placed in cable tray for a 90 degree bend around the inside of the tower. Once there they will turn up the wall secured in place by unistrut, an industry standard modular connection system welded every ten feet up the tower wall. The opening in the tower will be sealed with hardenable seal that will fit around the various utilities and equipment umbillicals that are located in the tower.

2.9 Lighting

Interior tower lighting will be provided to adequately illuminate all arm operations within the tower including maintenance activities. These lights have been located. Emergency lights exist along with exit sign to mark exit routes in the event of an emergency.

Painting

The interior and exterior exposed carbon steel surfaces will be painted.

Spool Piece

The spool piece is a flexible, airtight tube that connects the bottom of the spray ring to the top of the silo in the Fernald Silos 1, 2 & 4 project. The spool piece drains the spray ring into the silo. The spool piece is also required to absorb 3-4 inches of deflection in the bridge structure that the spray ring is mounted to.

A rolled flange on the bottom of the spray ring, and a flanged riser at the top of the silo dome provide the attachment points for the spool piece. The distance between the spray ring and the riser is 68" for Silos 1&2 and 73.75" for Silo 4. The silo domes can withstand no more than 700-lbs. load.

A rolled flange welded to a long metal tube is bolted to the flange at the bottom of the spray ring. A second rolled flange welded to a 6" metal tube is bolted to the riser flange on top of the silo dome. The gap between the tubes is encased in a flexible neoprene boot, clamped at each end to the metal tubes. Large hose clamps as specified in the Providence Group's slurry pump design are used to attach the boot.

For Silos 1&2 the long metal tube (Middle Tube Weldment) is 5.5" shorter than the tube for Silo 4 because the Silo 4 is a different sized dome.

A flexible PVC skirt is cement bonded to the inside of the long metal tube to deliver the waste directly into the silo riser. When the bridge structure is in the un-deflected state, the skirt terminates 1" below the opening in the silo riser.

3.0 ACTUATION PACKAGE

The actuation package is constructed of the same carbon steel box tubing as the mast. The actuation package's primary purpose is to house the hydraulic actuators and route the cables to their appropriate positions for manipulator segment attachment. The actuation package is divided into two sections, the inner frame and the outer frame. The inner frame rotates inside of the outer frame as it is driven by the azimuth drive.

3.1 Outer Frame

The outer frame of the actuation Package interfaces with the inner frame, the z-drive and the guide rails. The horizontal load is transferred to the guide rails through the interface with the inner frame and the guide shoes mounted on the outer frame. The interface with the inner frame is a piece of rolled metal, which rotates on wheels mounted to the outer frame. The load of the inner frame and manipulator is supported through a large chain and roller bearing connection. This type of design elminates any loads other then the verticial load of the system to be exerted. Loading the outer frame in such a manner allows for the azimuth drive to work effectively and improved reliabilty of the design.

The outer frame is constructed of standard channels and I-beams. It consists of a main I-beam that transfers the weight load from the inner frame to the outer frame. The two snatch blocks for the z-drive are mounted along this main beam. Under the main beam is a structure that allows access to at least three main actuators at a time for replacement. Extending down at four places are supports for the wheels that bear to the rolled steel ring. A support structure for the azimuth drive and the umbilical routing is located on the one side of the frame.

3.2 Inner Frame

The inner frame of the actuation package contains the arm control system (ACS), the hydraulic actuators, all the manipulator's electronic and hydraulic systems, and the azimuth. Additionally, connections and space will be provided for the modular GEES and ADSS power and control systems. The inner frame of the actuation package is designed around a backbone of six high-force hydraulic actuators. These six actuators are placed in a line down the center of the actuation package and are responsible for bending the first three stages of the manipulator.

Each of these actuators is housed in a self-supporting frame. Each actuator frame contains a sealed enclosure around the cylinder and a metal frame around the travel space of the rod. The sealed enclosures act in conjunction with the secondary glands to provide redundant sealing and cylinder leak prevention. The metal frame around the rod is designed to bear the entire compressive force of the actuators. The metal frame bolts to a flange plate, which in turn bolts to the actuator. Inside each metal frame, a metal block, or keyed plate, is attached to the end of the rod along with the load cell. This keyed plate contains machined holes that enable the cables to be passed through for connection to the corresponding manipulator. Because these actuators are used for 1 DOF joints, the extension of the right and left cables are identical which eliminates the need for a snatch block. The cables are fixed in-place, using bolts on the threaded fittings for easy cable length adjustment. Once the cables and load cell are attached,

a keyed plate is bolted to the metal frame at the open end. The cables are passed through a bushing that has a properly radiused wall for cable routing.

Each of the six high force actuator frames (constructed to withstand up to 120,000 lbs. of force) will slide into place in the actuation package.

The actuation package contains six additional actuators used to control cables encased in conduit. The conduit-encased cables control stages 4 and 5 of the manipulator. The cables activated by the six high-pressure actuators, described above, control stages 1 through 3. The cables for stages 1 through 3 are not encased in conduit.

Support equipment such as hydraulic valves, gripper control equipment, and arm control PLC, I/O modules are all located in the inner frame. This equipment is accessible because the actuation package can align with a maintenance floor in the tower. Its open structure allows for easy access to equipment. A floor structure has been included into the package so that personnel can work with equipment throughout the 8-foot diameter package. The package is locked down during these activities so that the system is directly attached to the tower structure and not capable of vertical movement.

3.3 Azimuth Drive

As stated previously in Section 2.0, the azimuth drive is mounted to the lower portion of the actuation package and rotates the inner frame of the actuation package in a +/-180 degree sweep configuration. This is done so that a simple hard stop can be installed that will protect against damage to retrieval equipment and umbilical. This rotation feature provides angular positioning of the manipulator while inside the silo.

Extending down at four places are supports for the wheels that bear to the rolled steel ring. A support structure for the azimuth drive and the umbilical routing is located on the one side of the azimuth drive output interfaces this bearing ring using a cable rotation system. The drive in combination with cable tensioners controls the cable motion. The cable is attached to the inner frame bearing ring. Bearings attached to the outer frame of the actuation package support the inner drum and allow it to rotate freely. The inner drum houses the hydraulic rams, hydraulic valves, the wrist drive system, the cable routing system, and the mast interface.

Braking System

Braking used in the z-drive system is done through the z-drive actuation that has controlled acceleration and deceleration. This is the primary braking or stopping method for the system.

A hardstop can be built in to provide a rigid connection to the tower structure. This would prevent any vertical motions and creates a direct attachment of the actuation package to the tower structure. Under these conditions the actuation package is no longer an overhanging load.

4.0 MAST

The primary function of the mast is to provide rigid support when supporting the EMMA™ manipulator as it is deployed into the silo, and during in-silo operations. The mast is 13-feet long, weighs approximately 2000 lbs., and can be accommodated by a 30-inch diameter opening. In addition to supporting the manipulator, the mast also routes the manipulator cables that are fed through the actuation package, and provides a bearing surface against the guide bearing during full insertion of the manipulator.

The primary structure of the mast is coposed of two A36 steel T-beams, (I-beams with one flange removed) and a ¾ " thick rolled plate. The T-beams are welded to interface plates that facilitate the connections to the manipulator and the actuation package. The aluminium plate is attached to the T-beams and the interface plates with a series of brackets and bolted connections. The aluminium plate has an outer radius of 15" and is designed to bend the load imparted by the guide bearing.

The structure allows room for the cables, conduit, and umbillicals that travel through the mast to the arm. Removable bushings route cables to the appropriate locations at the mast and manipulator interfaces. A sheath will be connected around the mast.

EMMA™ MANIPULATOR

EMMA™ is a 52.5-foot long, 30-inch diameter, cylindrical serpentine manipulator composed of five independent stages and a wrist. Stages 1 through 3 are single degree of freedom (1 DOF) stages, capable of bending only in a vertical direction. Stages 4 and 5 are two degrees of freedom (2 DOF) stages, and provide pitch and yaw capability, which allows the stages to bend both in vertical and horizontal configurations. The 2 DOF wrist at the end of the manipulator provides local dexterity for gripper, end effector, and other special tooling used for silo waste retrieval activities. The equipment is designed so that the wrist, stage 4, and stage 5 provide the fine positioning of the end. Prior stages and actuation package motion is for the gross positioning of the manipulator. The wrist and five stages of the manipulator are expected to weigh approximately 5000 lbs.

The manipulator is designed to operate under the following parameters:

Operate reliably for 1,000 hours (no scheduled maintenance activities)
Able to reach the sluicing pump silo when the headroom has reached a height of 23 feet
Perform waste retrieval activities in operating temperature ranges of 32°F to 100°F with a humidity range of 10-100% humidity
Manage, as a minimum, a 200 lb. payload (includes GEES and ADSS weight)
Provide ability to reach all points on the silo walls and the silo floor.
Capable of remaining in the silo between operating shifts to minimize insertion/retraction times and maximize in-silo operating periods

This system, when combined with the z- and azimuth-drives located in the deployment tower, results in a manipulator with sufficient dexterity and lifting capability to carry out operations required for successful mission completion.

The manipulator's mechanical behavior is based on the actuation of stages (all stages are controlled with steel cables and connected via termination segments; the bending moment is transmitted from segment to segment via elastomeric couplings. There are 5 stages in the manipulator. Stages 1-3 are constructed from a single segment. Stages 4 and 5 are constructed from 3 segments.

The drive cables for stages 4 and 5 are isolated from the previous stages by conduit, thus actuating these stages does not affect the previous stages other than changing the transmitted movement due to gravity.

The drive cables for stages 1, 2, and 3 are not housed in conduit, so the forces applied to one stage are transmitted back to the previous stages. This reduces the overall cable tensions required to lift the manipulator, but also requires the use of back tension to prevent undesired motion of previous stages. This means that an additional cable is run opposite to the main cables to provide the control of the position of all of the stages despite the fact that they are coupled.

Manipulator Segment Components—The segments contain cable routing bushings, cable mounting fittings, and connection fittings. The cable routing bushings are constructed of hardened steel to reduce wear on the bushing surfaces as the actuation cable passes through the bushing.

The cable terminatio fittings provide ease of assembly and maintenance. These fittings are affixed to the exterior of the segments, and allow easy cable removal and insertion. These fittings transfer the load from the cables to the structural components of the segments. The connection fittings enable the transfer of both compression and torsion. In stages 1, 2, and 3, segment structure is designed to take these loads through separate load paths.

5.1 Stages 1 through 3

The first three stages of the manipulator provide the basic positioning and major lifting capacity of the system. These stages are rather specialized in that they are designed only to provide motion in one direction (1 DOF). Stages 1, 2, and - 3 are 132 inches, and each weigh approximately 850 pounds.

Stage construction is accomplished through a thick curved backplate that provides support against the guide bearing and an aluminium honeycomb structure is resistant against the shear, compression, and torsional forces experienced in the segments. Plates at the end of the segments contain the bushings and hinges that are used to link stages, attach cables, and rout cables through the segments. Umbilicals, conduit, and cables for stages and end tooling located farther down the arm are routed through the sides of the segments. This area is accessible through hatches in the outer shell of the segments.

Stages 1, 2, and 3 use revolute joints that restrict movement to one degree of freedom. Each of these stages uses a rotational hinge joint. A hard stop will limit the rotation between an angle of 0 and 45 degrees with respect the to vertical axis. As a result, the stage can only bend in one direction and cannot reverse its direction of bend as is possible in the universal stages (stages 4 and 5). This significantly simplifies the kinematics of the system and allows for more accurate tracking of the position of the first three stages. This also allows for the addition of simple and robust encoders on the manipulator that will further increase the accuracy of the forward kinematics calculations.

No conduit is used in the first three stages, so cables actuating distal stages affect the dynamics of the preceding stages. Termination segments for proximal stages act as pass through segments for more distal stages. The result is that the more proximal cable sets do not need to pull with as much force because distal cable sets are supporting a significant amount of the weight of the manipulator. However, proximal cable sets will be sized to support the full weight of the system in the event of a cable failure.

5.2 Stages 4 and 5

While stages 1, 2, and 3 are intended to provide the basic positioning of the manipulator, stages 4 and 5 are designed for finer positioning of the end effector. These stages are intended to bend in all directions and are isolated from other stages through the use of conduit. Stages 4 and 5 of the arm use elastomer 2 DOF couplings to provide the bend in the stage. Unlike the joints in stages 1, 2, and 3, these couplings are free to bend in any direction. These

stages rely on the flexing of elastomer cylinders to provide bending capabilities. The use of conduit effectively isolates the cables used to drive these stages from the motion of the previous stages. Stages 4 and 5 do not aid in the lifting of any of the other stages.

Each stage is designed to consist of three segments that act together when the stage is actuated. Like the first 3 stages, Stages 4 and 5 are also cable driven. However, in these stages the cables are carried in individual conduits up until termination. Employing the conduit de-couples the mechanical behavior of the stages from the first three stages and from each other, thus enabling independent actuation authority over either stage.

Stage 4 can bend to 90 degrees in the vertical direction and 45 degrees in the horizontal direction. This design minimizes torsional loading the the manipulators, but maintains the necessary dexiterity for operation.

Both stages 4 and 5 use 6 cables for actuation. The six cables for stage 4 are divided into 3 groups of 2. This provides a split in the load carried by a particular cable. A saftey factor of 3 is used on the cables so if one pair of cables were to break the other pairs can support the load transmitted. These two cables act together to deliver the desired motion authority. Due to the 3 cable actuation configuration pitch and yaw motion are coupled together. This means the part of the control system lower algorythims include a method for resolving this coupling.

Each group of cables pairs exits the conduit they are looped in a block and tackle system that amplifies the amount of force applied while reducing the travel. In stage 4 this amplification is 7:1 and the looping of cables is located into segment 3.

In stage 5 the amplification is 5:1 and the looping of cables is located in the third segment of stage 4.

5.3 Coupling Overview

The couplings are a significant component in the proper functioning of the EMMA™ manipulator. The resilience of these members ensures that the bend of a stage is spread out over several joints in a relatively equal manner. It allows for the inclusion of the flexible joint and a structural member. This specialized coupling is only included into the dexertous stages 4 and 5. Stages 1, 2, and 3 do not use any couplings and are connected by a hinge joint.

The coupling is a hollow elastomer cylinder bonded to steel end caps. As the coupling bends, the cylinder resists the bend and passes the moment back to the next proximal joint. Since the cylinder provides resistance in all directions, the joint can bend effectively in all directions.

Affixed to these joints is an external U-joint. This device takes the torsional, compressive, and shear loads exerted onto the joints, thus elminating these loads on the elastomer. This is necessary for a large manipulator where the torsional forces are high and would cause the manipulator to twist excessively.

Design parameters for the couplings are:

Function between 32°F and 100°F and are undamaged by external temperature variation between –25 F and 105 F.
Withstand the radiation in the silo. This is estimated to be 700mrad/hr.

Function in a humid environment.
Each coupling must be able to bend to 30 degrees to achieve an overall stage bend of 90 degrees.
Meet the specific loading requirements of each joint of the manipulator

The couplings used in stages 4 and 5 are composed of hollow elastomer cylinders bonded to aluminium end caps. Chemlock 13 adhesive has been chosen for this application. The outer diameter is 8", with an inner diameter of 3", an elastomer length of approximately 6", and an overall length of 14.75". The end caps will mate with the segments and provide the stiffness and strength required for a bolted connection.

5.4 Wrist

The wrist sockets into the termination segment of stage 5). The cable assemblies are routed through the length of the manipulator and finally into the central segment member where they meet the main portion of the wrist. The wrist provides roll and pitch motion for the GEES.

A flexible protective covering (sheath) will surround the wrist and protect the gripper umbilical. Additionally, the umbilical section at the wrist will be fitted with quick disconnects for easy replacement.

The wrist is designed in accordance with the following design criteria:

Maneuver, at a minimum, a 200 lb. payload
Provide roll motion of up to ±180°
Provide pitch motion of up to ±60°
Withstand the radiation and humidity expected in the silo environment
Withstand operations in temperature ranges of 0°F to 110°F

The wrist design will include two electrical motors that use a gearbox to provide the drive for the roll and pitch axes. This will provide the torque and speed requirements of the application, and will be protected from the silo environment through the use of a sheath. A device that can de-couple the motor from the roll and pitch axes will be used to ensure that a wrist position that will allow for the extraction of the EMMA™ from the silo in an emergency situation can be maintained. The roll of the system uses a slip key system that will easily allow for the +/- 360-degree rotation. Electrical trigger switches will be used for the end of travel. Drives for the electrical motors will be contained in the actuation package.

5.5 Sheath

The sheath is an important facet in the manipulator system decontamination process. The sheath is a segmented unit that covers the exposed sections of the mast, five stages of the manipulator, and the wrist assembly to provide a smooth, decontaminable surface by reducing the number of debris traps. Stages 1-3 will have a flexible sheath material in the regions around the hinges that go through bending. The segment portion of these stages will be protected by the outer aluminum hatch. The segments are joined with a waterproof, durable system. This approach reduces maintenance time for manipulator repairs—the entire sheath will not have to

be removed, only the section covering the segment under observation. In many cases the maintenance hatches on the stages themselves can be opened to inspect internals. These hatches are sealed and fastened down for operation. The same approach is taken for segments 4 and 5 that have at aluminum skins around the structural segments and the flexible sheath around the elastomer couplings.

The flexible sheath is constructed of a neoprene coated hypalon fabric. This material was selected based on the following performance criteria:

Ability to withstand 3,000 psi pressure washing from a distance of 6 inches
Demonstrated ability to retain shape and material consistency under extreme pressure and bends
Water resistance
High resistance to tearing, pinching, and puncture
Rip-stop capability if punctured or torn

Manufacturer data reveals that the selected sheath material can effectively meet these requirements.

The sheath material must also withstand pinching between the segments and guide bearings. Design measures combined with the durability of the selected sheath material will minimize damages caused by this scenario. A specific design measure involves the guide bearing. The rollers of he guide bearing are round, made of aluminum core covered with a firm polyurethane coating. This design minimizes the localized loads to the sheath as the manipulator is inserted and retracted from the silo. Polyurethane exhibits local deformation under high loads and provides a larger contact area for the sheath surface, which minimizes the potential tearing or piercing of the sheath.

This closure system simplifies maintenance for manipulator cable or internals maintenance activities, and is also water-resistant and can withstand the decontamination pressure forces.

Sheaths between the mast and segment 1, between segment 1 and segment 2, segement 2 and segment 3 will be very similar. They will have to allow a piloting motion a single axis in the range of 0 to 45 degrees. It will be attached to the backshell at the bottom and to the hatch doors at the top of the segment. There will be no exposed parts of the segment except the end of the backshell which also acts as a hardstop.

Sheaths used for stage 4 and 5 segments will be identical. They are needed to allow bi-axial motion in the range of negtive 30 to postive 30 degrees along both axes. In these segments no part is exposed to the outside environment except the aluminium skins of the segments. These skin is sealed around the segment structure.

Design of the individual sheath pieces is done with a pleated bellow shape. This shape allows for the stretch and compression of the sheath without loading the hypalon material.

INSTRUMENTATION & CONTROLS SYSTEM

Overview

The control system for the arm is made up of three major functional systems: the Arm Control System (ACS), the Local Operating Station (LOS), and the Remote Operating Station (ROS). The Programmable Logic Controller PLC system directly controls the arms movement by interfacing with the arms sensors, Human Machine Interface (HMI), actuators, and servos. The system is broke down into three separate PLC controllers, the ACS, LOS and ROS PLC systems. Each system is located in a panel of the same name. LOS PLC and ROS PLC are a redundant systems. Only the ACS PLC is a separate and critical system. The PLC's are connected via Profibus communication system. The PLC's generate data in a special HMI data block, thus transferring all information directly to the HMI computer in real time. All operation is done through an HMI panel that can be connected to the LOS or the ROS.

The ACS consists of a PLC, power supplies, and various I/O modules for electronic components. The LOS consists of a PLC, power supplies, I/O modules, E-stop and a cluster of indicators. The LOS is designed for maintenance and diagnostic purposes, although the station can control the arm. The ROS consists of a PLC, power supplies, I/O modules, E-stop, and a cluster of indicators. An operator panel has been designed that can be attached to either the LOS or the ROS control panels. This panel contains the E-Stop, joysticks, and momentary switches. The devices on this panel are used to control the motion of the manipulator. In addition to the operator panel a computer system is also used to perform more advanced data analysis with the ability to generate alarms and warning. This is the interface used for troubleshooting and system diagnostics. The ROS monitors the system status, observes system trends, and provides information through the attached computer. This system has been designed for the primary location of control. Ease of operation has been incorporated into the design with respect to minimized controls and ergonomic layout.

The Siemens PLC system provides a robust platform for implementation that can be adapted when functionality needs to be added or altered. All data communication between the arm and the active Operating Station pass through a ProfiBus DP System. ProfiBus DP is a robust and widely accepted fieldbus standard that provides high-speed data communication over medium range distances on the order of 1000 meters.

All control system equipment is Year 2000 (Y2K) compliant and is Factory Mutual approved or Underwriter Laboratories listed. The system has been designed to achieve better then 99% availability.

Primary methods of operation, including those for startup, shutdown, maintenance, and normal retrieval operation activities, have been considered. Ease of operation has been considered with respect to the method that each of the motions is controlled. Location of the video monitors has been considered to achieve the primary feedback mechanism for the operator. Software initiated alarms and warnings have also been incorporated to assist the operator in avoiding silo damage through hazardous manipulator configurations. The primary motions used to perform dexterous motions with EMMA™ is through a proven method of joystick controls that allows operators to position stages 4 and 5 of the manipulator with excellent resolution.

Arm Control System:

Overview

The ACS directly controls the arm's movement by interfacing with the arm's sensors, operating stations, actuators, and servos. The system is located near the arm in the tower and moves up and down with the arm elevation system. The system communicates with the active Operating station to provide the user with control of the arm. A Lock Out switch controls which Operating Station is active. This ensures that only one location maintains control of the system.

Sensors and Actuators

From a control perspective, the arm consists of hydraulic valves, force sensors, and position sensors, thermal sensors, and drive encoders. Drive encoders are used on the z-drive, wrist motors, and azimuth drive. Hydraulic actuators pull on cables controlling the curvature of the various arm segments. Tension on each of the cables is monitored with force sensors. Position sensors indicate the extension of each cable.

ACS System

Data from the force sensors, position sensors, drive encoders, and the joysticks are all used to control the hydraulic actuators that move the arm. This data is collected and managed by the entire PLC system. The ACS PLC system manages all of the specific information from the arm's sensors (cable tension, cable position, and temperature) and calculates cable length information. The ACS PLC System maintains the arm's position or assist in fluid movement in accordance with the operator's direction motion. In the event of a communications break or a system crash at either the LOS or ROS, the ACS PLC System will maintain the arm's position.

Alarms and Warnings

Additionally, this PLC system is responsible for generating low-level alarms. Low level alarms include out of range data, excessive force, and spikes in the sensor readings. The ACS PLC system is connected through ProfiBus to the controlling operating station. The ACS PLC System transfers alarm information and cable length information through the ProfiBus to the operating station. The operating station uses the ProfiBus to transmit arm control information to the ACS PLC System.

Local Operating Station

Overview

The LOS is located at the tower base. This system provides both operator interface capabilities and direct interface with control drives and sensor. The LOS has a lock out switch. In normal operation, the lock out switch prevents the station from affecting the operation of the arm. For maintenance and diagnostic work, the lock out switch can be set to activate the local controls. When active, the LOS provides range limited option for control of the arm. The range-limited control is a safety feature for maintenance. This system can be configured to fully control the manipulator. Configuring the system in such a manner requires that a computer, and camera monitors are connected to the system.

LOS System

The ACS PLC System communicates with the LOS PLC over the ProfiBus. This allows the ACS PLC System to respond to operator control. Also, the ACS PLC System generates alarms and relays them to the operating station PLC. The LOS PLC System as one of the operating station has interfaces that can connect with the control panel and computer system if necessary. It is capable of translating information from the ACS and communicating at a higher level with the operator. In addition to the operation activities the LOS also has a direct interface with the arm elevation, rotation, and various I/Os for the tower. A-drive and z-drive both have a variable frequency drive that controls the motors. These drives are connected to the LOS. Maintenance floors in the deployment tower have switches to verify correct position during operation or maintenance. This information is communicated to the ROS assuming that is the location of control. All possible information that can be practically provided directly to this PLC is provided to allow easier access to systems during troubleshooting of the systems. The LOS is at the tower base and is much more accessible than the ACS.

Alarms and Warnings

The LOS has a set of indicator lights that display immediate problems. For reliability, the alarms are generated and displayed through PLC systems only; alarm information is isolated from the PCs. The alarms are generated by the ACS and LOS PLC systems and monitored by the PLC System located in the active operating station. Alarms include out of range data, excessive force, spikes in the sensor readings, or a fault in operation.

Remote Operating Station

Overview

The ROS is the central control for the arm and is located in the control trailer for the SWRS functions. An identical system is located in the trailer for the FSMS ICAT. All higher functions like data monitoring, archiving, and trending, take place at the ROS. In addition, the ROS includes the operator panel and HMI computers. This has full joystick control and alarm

indicators. The arm operator has complete control of the arm from the ROS. The ROS can be physically located as far away from the arm as 500 meters. The station communicates with the ACS and LOS through a physically wired ProfiBus connection.

ROS System

The operating Station PLC System communicates with the ACS over the ProfiBus. The operating station PLC System relays alarm messages from the ACS and LOS to the operator via the alarm indicators and HMI computer acknowlegement screens. The operating station PLC system also responds to the operator by sending motion control signals to the various control systems This system also contains an 8-bit I/O data transfer with the larger site PLC system. This data is used to control interfaces with other site equipment. The main signals are operation status of the equipment.

Alarms and Warnings

The ROS has a set of indicator lights that display immediate problems. For reliability, the alarms are generated and displayed through PLC systems only; alarm information is isolated from the PCs. The alarms generated by the ACS PLC system and LOS PLC system are monitored by the PLC system located in the active operating station. Alarms include out of range data, excessive force, and spikes in the sensor readings. This is communicated to the HMI computer, but if actions are required the PLC system immediately takes actions.

Operator Panel and HMI Equipment

Operator Panel

The operator panel is a remote panel tied into the operation system control panel. All major control I/Os are distributed through the operator panel. Both digital and analog signals are used. Control input devices for the z-drive and azimuth drive are mounted on this panel. Control switches for stage 1 through 3 are located on this panel and two joystick are include for the wrist and stage 4 and 5 control. The operator panel is mounted in front of the operator and contains control I/Os needed to directly control manipulator positioning. All switches are momentary or wobble switches. This means that the switch is spring loaded to return to the default or off position. Systems using this control are not designed for continous movement during operation, but for corse positioning. The operator moves the switch in the direction the arm need to move, and then the operator releases the switch and arm movement stops. The PLC's control speed, ramp up and deceleration control.

Two joysticks directed by the operator control the EMMA™ manipulator and wrist. Each joystick has two degrees of freedom. These two analog signals are used to control stage 4 and 5. The joystick also have rocker switches located on the joysticks that control wrist motion. They are similar to momentary switches on the panels, but their locations allow control of the wrist while simultanously controlling the positions of stage 4 and 5. Using the joysticks and switches on the

operator panel, the operator can control any of the five stages of the manipulator or the wrist. The joystick outputs have input directly to the ROS or LOS_PLC.

Computers

HMI PC

The HMI PC provides a graphical user interface. The operator views analog measurements, discrete events, and a 3D representation of the manipulator and silo. The 3D representation of the arm is determined using the forward kinematics derived from sensor readings. The ROS HMI PC stores data on its hard drive, and this data is then archived on a CD via the read/write CD drive.

The HMI PCs are equipped with Pentium processors, Windows NT, minimum 10G hard drives and read/write CD-ROM drives. The PCs also have password protection and keylock security. All hardware and software is Y2K compliant. The PCs have the proper hardware configuration to allow for expansion of ProfiBus communication cards.

The HMI graphical user interface (GUI) is programmed using WinCC. The GUI is designed to include analog and discrete measurements, alarms, and the graphical representation of the arm. The PC obtains monitoring data from the PLC through the PC to PLC ProfiBus connection.

Programming PC

The programming PC is used to make changes to the PLC program and it is operated independently from the HMI PC. Programming is done in the STEP 7 programming language used to program Siemens PLC systems. The programming PC is also a fully functional backup to the HMI PC, available as a trouble-shooting tool.

The programming PC is configured under the same hardware requirements as the HMI PC.

Laptop Maintenance PC

This computer is used for system setup and diagnostics. It will be included with the stored LOS operator panel and is designed to connect with the LOS in the event that the computer interface is necessary for operation at this location.

Alarms and Warnings

Alarms and warnings that are found through PLC system are all communicated to the HMI computer. Through the GUI all these faults can be acknowledged by the operator.

EMMA Operation

Overview

The EMMA manipulator has 11 possible degrees of freedom. These include manipulator rotation, vertical position, Stages 1,2,3 pitch (up and down movement), Stage 4,5 pitch and yaw (side to side motion), and the wrist roll (rotation) and pitch. These motions are controlled in a fashion that best incorporates the natural intuition of these motions and the frequency of their use. Include in the table is each of the motions, how they are controlled, and a description of functions.

Motion	Controlled By:	Function
Azimuth drive or Manipulator Rotation	Momentary switch can be moved left or right	Rotate the manipulator to angle angular position inside the silo. Provide sweeping arcs at the end of the systems.
Z-drive or Manipulator vertical position	Momentary switch can be moved up or down	This provides the ability to insert and extract the manipulator from the silo environment. This drive would also allow for achieving various level of insertion based upon the height of the waste.
Stage 1	Momentary switch can be moved up or down	This movement allows the manipulator to extend out horizontally inside the silo. This stage provides the least resolution, but the largest movement.
Stage 2	Momentary switch can be moved up or down	This movement allows the manipulator to reach a full 90-degree bend. This stage provides gross positioning of the manipulator.
Stage 3	Momentary switch can be moved up or down	This stage can allow the manipulator to bend upwards to the silo dome if necessary. This stage provides gross positioning of the manipulator.
Stage 4	Joystick 2 up and down motion translates to pitch and left or right translates to yaw	This is a 9-foot long stage that has the dexterity of the 3 segmented flexible structure. It can achieve a 90-degree bend in pitch and a 45-degree in yaw.
Stage 5	Joystick 2 up and down motion translates to pitch and left or right translates to yaw	This stage is the last stage of the manipulator and can bend to 90 degrees in any direction. This stage is 7 feet long.
Wrist Roll	Joystick 1 rocker switch to roll clockwise or counterclockwise	This motion allows for the articulation of the gripper and any retrieval equipment used at the end of the arm.
Wrist Pitch	Joystick 2 rocker switch to move up or down	This motion allows for the articulation of the gripper and any retrieval equipment used at the end of the arm

Manipulator Control

The primary control of the manipulators resides in the ROS. Commands, control algorithms, alarms and warning systems are distributed between the 3 different PLC and the HMI computers. The methods of operator interfaces include two modes. One is the teleoperative mode that is for normal operation. The second is maintenance mode. This has been included to ease diagnostics during troubleshooting and complimenting maintenance procedures that require some manipulator articulation.

Manipulator Control Modes

Teleoperative Mode — In this mode the operator controls each motion of the system through the various input devices such as joysticks or momentary switches. When the arm are in teleoperative mode, a controller is used to generate a control signal to the hydraulic valves or servo motor drives. The controller uses the operator's joystick or switch input to generate appropriate signals. The controller sends signals to each drive or valve that compensates for various mechanical effects and allows smooth movement of the stage.

Maintenance Mode —In maintenance mode, the operator can send signals directly to the servo valves. There is no coordinated control of the actuators in maintenance mode. This means that smooth control of the manipulator is not possible. Maintenance mode is used to troubleshoot arm failures and verify the overall functionality of the hydraulic system.

Alarms and Warnings

The primary method for operation feedback to the operator is accomplished through the use of the camera monitors. This allows for the operator to make judgements on the configuration and positioning of the system. Several features are included into the control system of EMMA that assists the operator. These systems are included to add redundant feedback with respect to the arm position insuring that the silo structure is not damaged.

The EMMA system provides feedback to the operator with alarms and warning triggered by various scenarios. These alarms or warning are acknowledged through the HMI computer at the ROS. This feedback could be presented due to mechanical or electrical problem with the EMMA systems or due to the arm position approaching a collision with the silo structure. This is particularly important during the insertion and extraction procedures.

The two types of operator feedback relate to system faults and configuration warnings. System faults are problems with the EMMA system that were found through system diagnositics. The functionailtiy of electrical motors, drive system, communication system, etc. Warnings or alarms may result from these errors. Maitaince procedures will correlate with the computer indicated problems so that appropriate action can be taken. All faults of this type will be communicated throught the HMI computer located in the ROS.

The other type of feedback is warnings or alarms that relate to the manipulator being in a hazardous configuration. This feeback is important to protect the silo integrity. The first warning system is the visual feeback that the operator recieves through the camera monitor. In additon

to this the EMMA system has another method of determination. This is a 3-D Forward Kinematics Model

The forward kinematics algorithm predicts the position of the end of the manipulator within the silo based on sensor measurements. The rotational joints of the first three stages are equipped with absolute rotary encoders and the segments of the universal stages are equipped with U-joints with 2 rotary encoders for each joint. Therefore it will be possible to determine the arm position using standard kinematic analysis based upon this angular feedback information. All sensors and associated electronics equipment will be properly shielded to facilitate reliable operations in the silo's radioactive environment. This predicted arm configuration can then be compared to the known obstacles or dimensions of the silo environment.

INFORMATION ONLY

MATERIALS LIST			
MARK NO.	QUANTITY	DESCRIPTION	REFERENCE
		EMMA ASSEMBLY	11GMD700
1	1	SEGMENT 1 ASSEMBLY	11GMD701
2	1	SEGMENT 2 ASSEMBLY	11GMD709
3	1	SEGMENT 3 ASSEMBLY	11GMD712
4	1	STAGE 4 ASSEMBLY	11GMD722
5	1	STAGE 5 ASSEMBLY	11GMD680

3388

NOTES:

1. FOR GENERAL NOTES AND LIST OF RELATED DRAWINGS SEE DRAWING 11GMD310
2. NEXT ASSEMBLY: SILO 1 & 2 WASTE RETRIEVAL MANIPULATOR SYSTEM 11GMD900

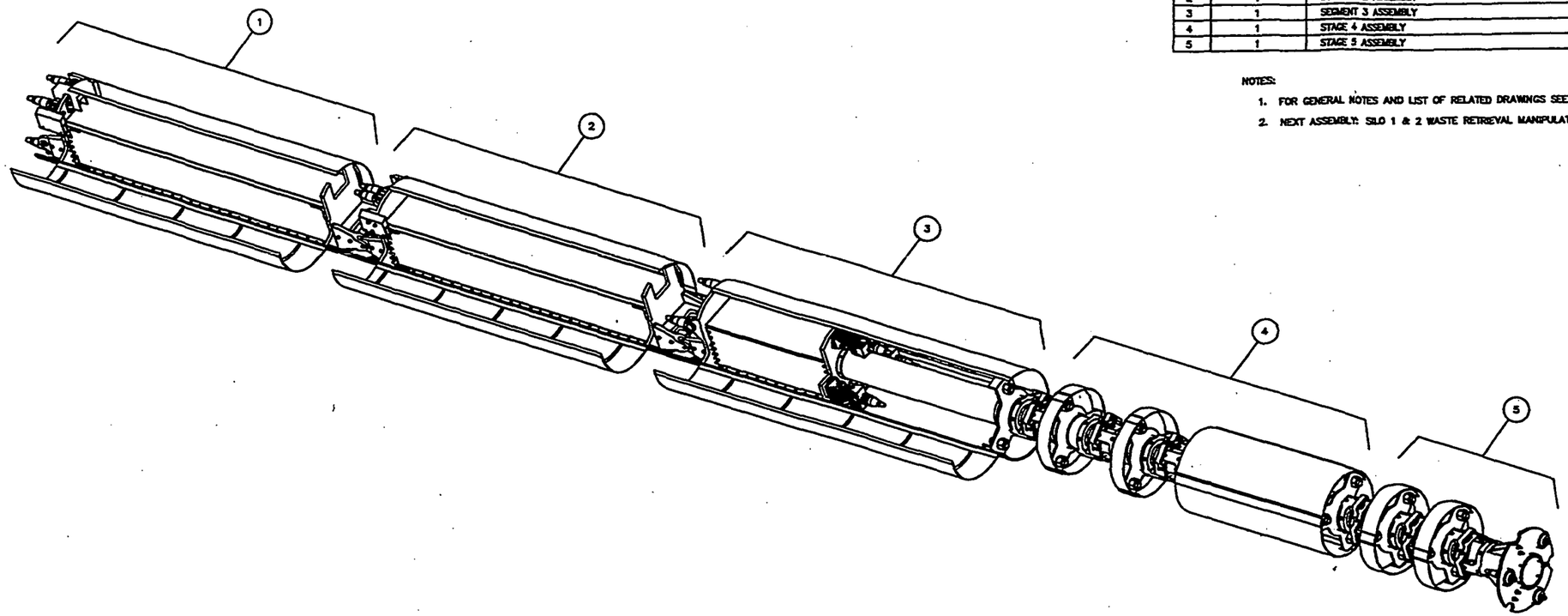

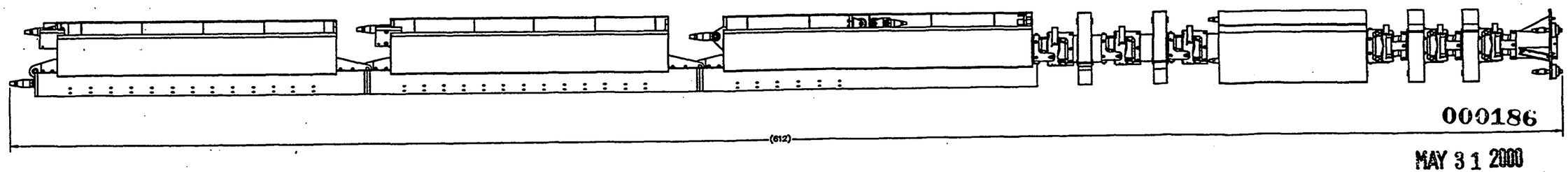

000186

MAY 31 2000

000578

REV	DATE	BY	CHK'D	APR'VD	DESCRIPTION/ISSUE
0	5/31				CERTIFIED FOR CONSTRUCTION

DEPARTMENT OF ENERGY
FERNALD ENVIRONMENTAL MANAGEMENT PROJECT
SILOS 1 AND 2 ACCELERATED WASTE RETRIEVAL PROJECT
FERNALD, OHIO
FDF CONTRACT NO. FSC 624

FOSTER WHEELER
FOSTER WHEELER ENVIRONMENTAL CORPORATION

TITLE: SILO WASTE RETRIEVAL SYSTEM ASSEMBLY
EMMA ASSEMBLY

SIZE: D | SCALE: 3/5"=1'-0" | DWG. NO. 11GMD700 | REV 0

FILENAME: 11GMD700.DWG

INFORMATION ONLY

MATERIALS LIST

MARK NO.	QUANTITY	DESCRIPTION	REFERENCE
1	1	COMBINATION EXIT AND EMERGENCY LIGHTS (McMASTER-CARR)	6367K26
2	6	150 WATT TWIN TUBE (McMASTER-CARR)	1594K43
3	6	LONG-LIFE COMPACT EMERGENCY LIGHT (McMASTER-CARR)	1488K31
4	5	30 mm ASSEMBLY PUSH-BUTTON SWITCHES NORMALLY CLOSED (McMASTER-CARR)	7403K37
5	4	INDUCTIVE SENSORS (TURCK)	NI 4-M12-VN6X
6	6	NEMA STYLE RECEPTACLE (McMASTER-CARR)	7120K92

- 3388

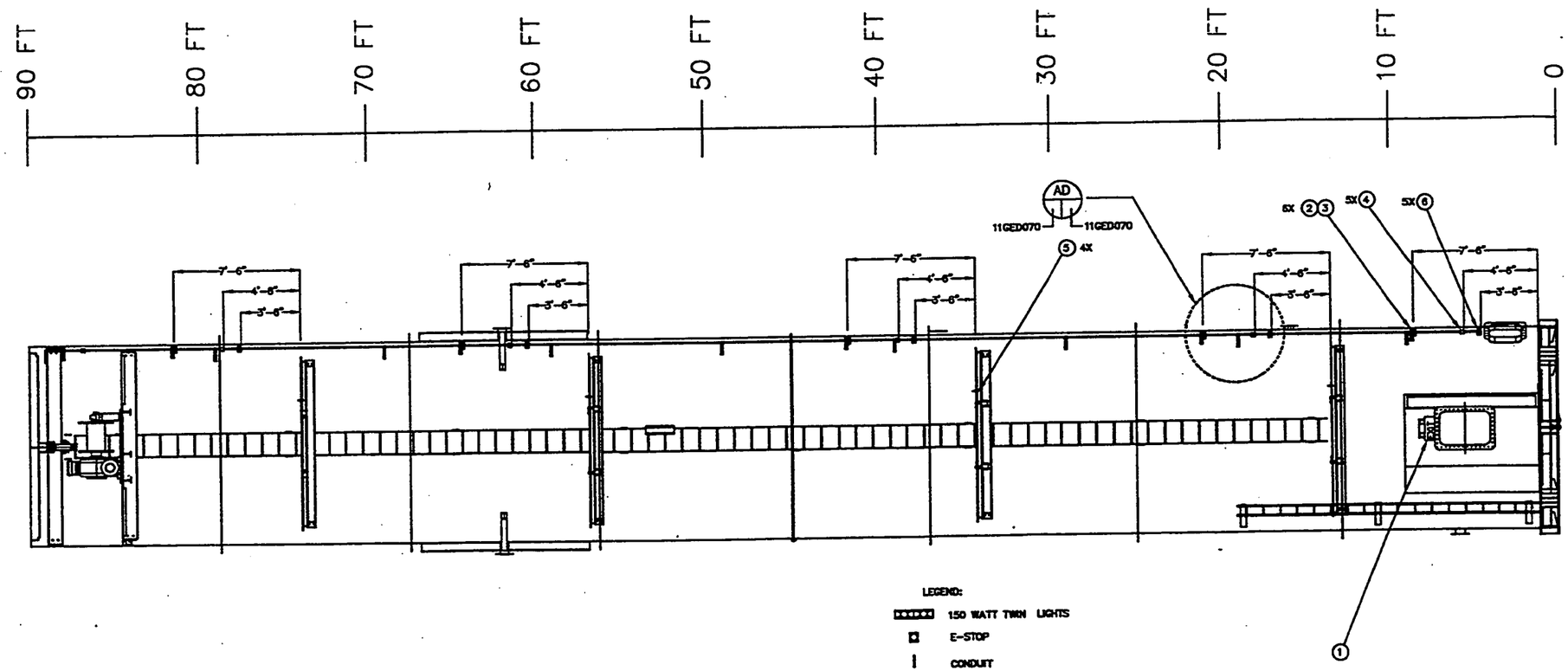

LEGEND:

- 150 WATT TWIN LIGHTS
- E-STOP
- CONDUIT
- EMERGENCY LIGHT
- MAINTENANCE HOIST PLUG
- EMERGENCY FLOOR SWITCH

000187

MAY 3 0 2000

AD VIEW
SCALE: NONE
11GED070 11GED070

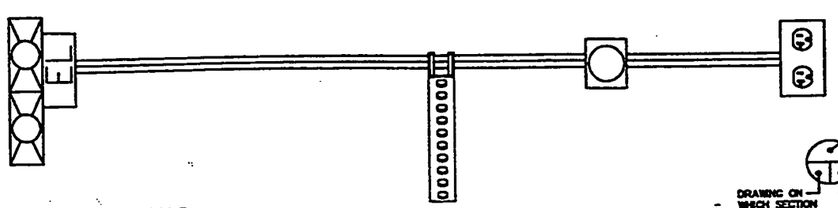

000579

LETTER OR NUMBER OF SECTION OR DETAIL
DRAWING ON WHICH SECTION OR DETAIL IS TAKEN
DRAWING ON WHICH SECTION OR DETAIL IS SHOWN

SECTION & DETAIL KEY

REV	DATE	BY	CHK'D	APR'VD	DESCRIPTION/ISSUE
0	5/31	VG	[illegible]	[illegible]	CERTIFIED FOR CONSTRUCTION

SPE

DRAWN BY [illegible] DATE 5/30/00
DESIGNED BY [illegible] DATE 5/30/00
CHECKED BY [illegible] DATE 5/31/00
APPROVED BY [illegible] DATE 5/30/00
APPROVED BY R.S. [illegible] DATE 5/31/00

DEPARTMENT OF ENERGY
FERNALD ENVIRONMENTAL MANAGEMENT PROJECT
SILOS 1 AND 2 ACCELERATED WASTE RETRIEVAL PROJECT
FERNALD, OHIO
FDF CONTRACT NO. FSC 624

FOSTER WHEELER
FOSTER WHEELER ENVIRONMENTAL CORPORATION

TITLE
SILO WASTE RETRIEVAL SYSTEM
TOWER LAYOUT
GENERAL ARRANGEMENT

SIZE	SCALE	DWG. NO.	REV
	4/15"=1' -0"	11GED070	0

FILENAME: 11GED070.DWG

3388

INFORMATION ONLY

INFORMATION ONLY

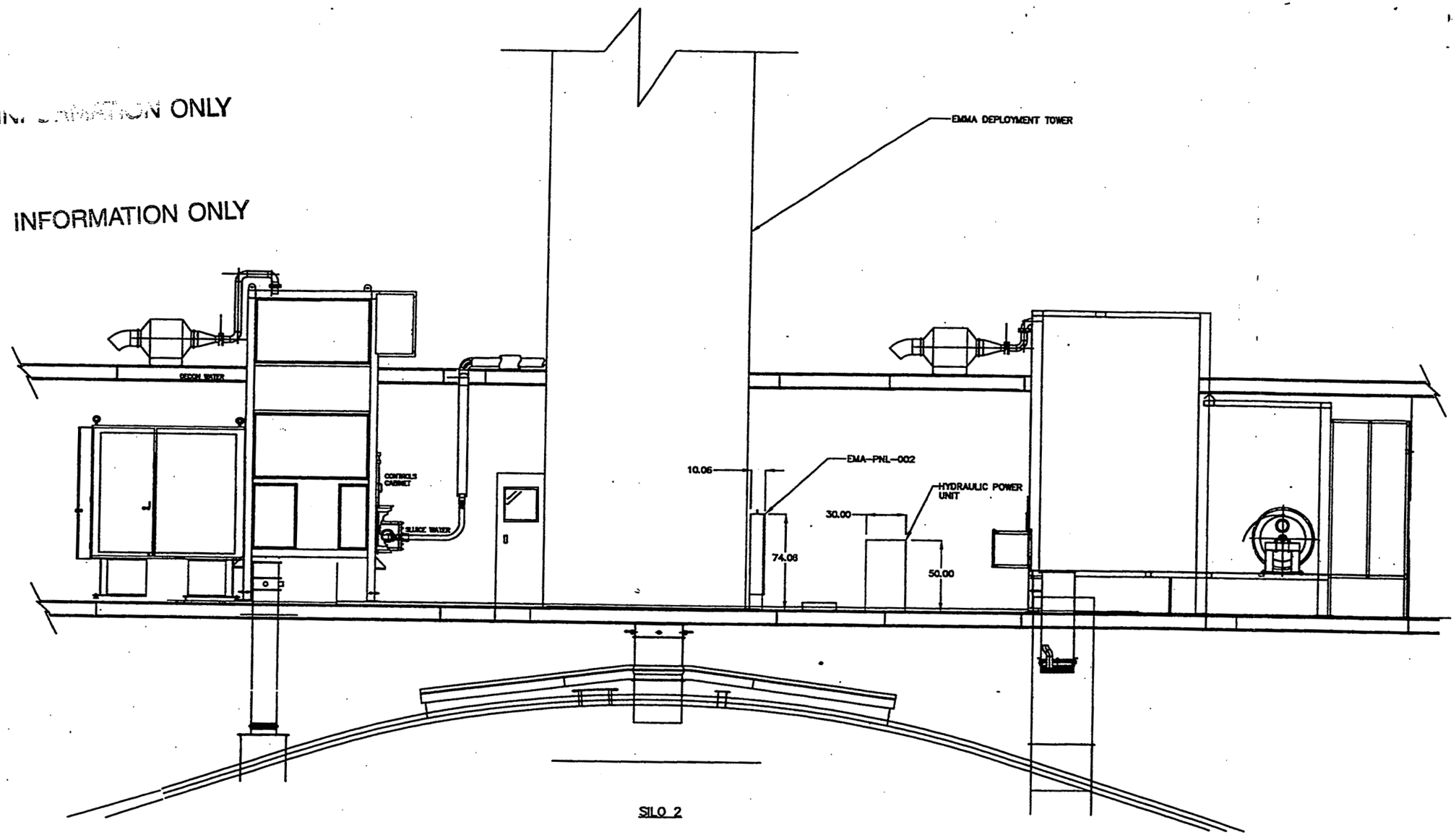

000188

000580

REV	DATE	BY	CHK'D	APV'D	DESCRIPTION/ISSUE
0					CERTIFIED FOR CONSTRUCTION

RFC

DEPARTMENT OF ENERGY
FERNALD ENVIRONMENTAL MANAGEMENT PROJECT
SILOS 1 AND 2 ACCELERATED WASTE RETRIEVAL PROJECT
FERNALD, OHIO
FDF CONTRACT NO. FSC 624

FOSTER WHEELER

FOSTER WHEELER ENVIRONMENTAL CORPORATION

TITLE: SILO WASTE RETRIEVAL SYSTEM LAYOUT (SHEET 1 OF 2) – LOS LAYOUT

SIZE: D | SCALE: NONE | DWG. NO. 11GED090 | REV 0

FILENAME: 11GED090.DWG

3388

INFORMATION ONLY

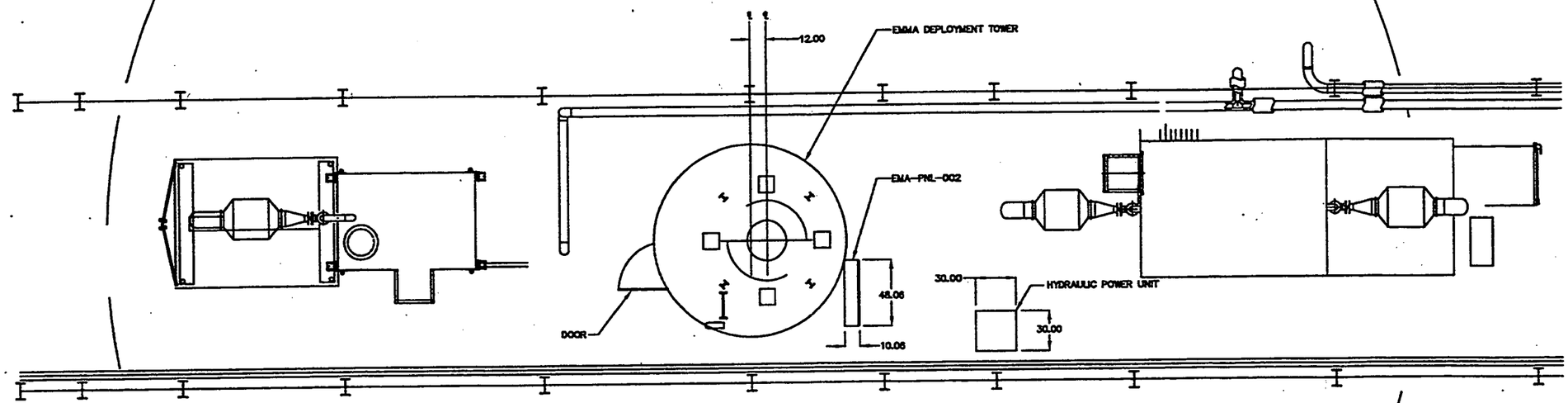

000189

000581

REV	DATE	BY	CHK'D	APP'VD	DESCRIPTION/ISSUE
0	5/31	VE			CERTIFIED FOR CONSTRUCTION

RFC

DEPARTMENT OF ENERGY
FERNALD ENVIRONMENTAL MANAGEMENT PROJECT
SILOS 1 AND 2 ACCELERATED WASTE RETRIEVAL PROJECT
FERNALD, OHIO
FDF CONTRACT NO. FSC 624

FOSTER WHEELER
FOSTER WHEELER ENVIRONMENTAL CORPORATION

TITLE: SILO WASTE RETRIEVAL SYSTEM
LAYOUT (SHEET 2 OF 2) –
LOS LAYOUT

SIZE: D | SCALE: NONE | DWG. NO. 11GED091 | REV 0

FILENAME: 11GED091.DWG

3388

INFORMATION ONLY

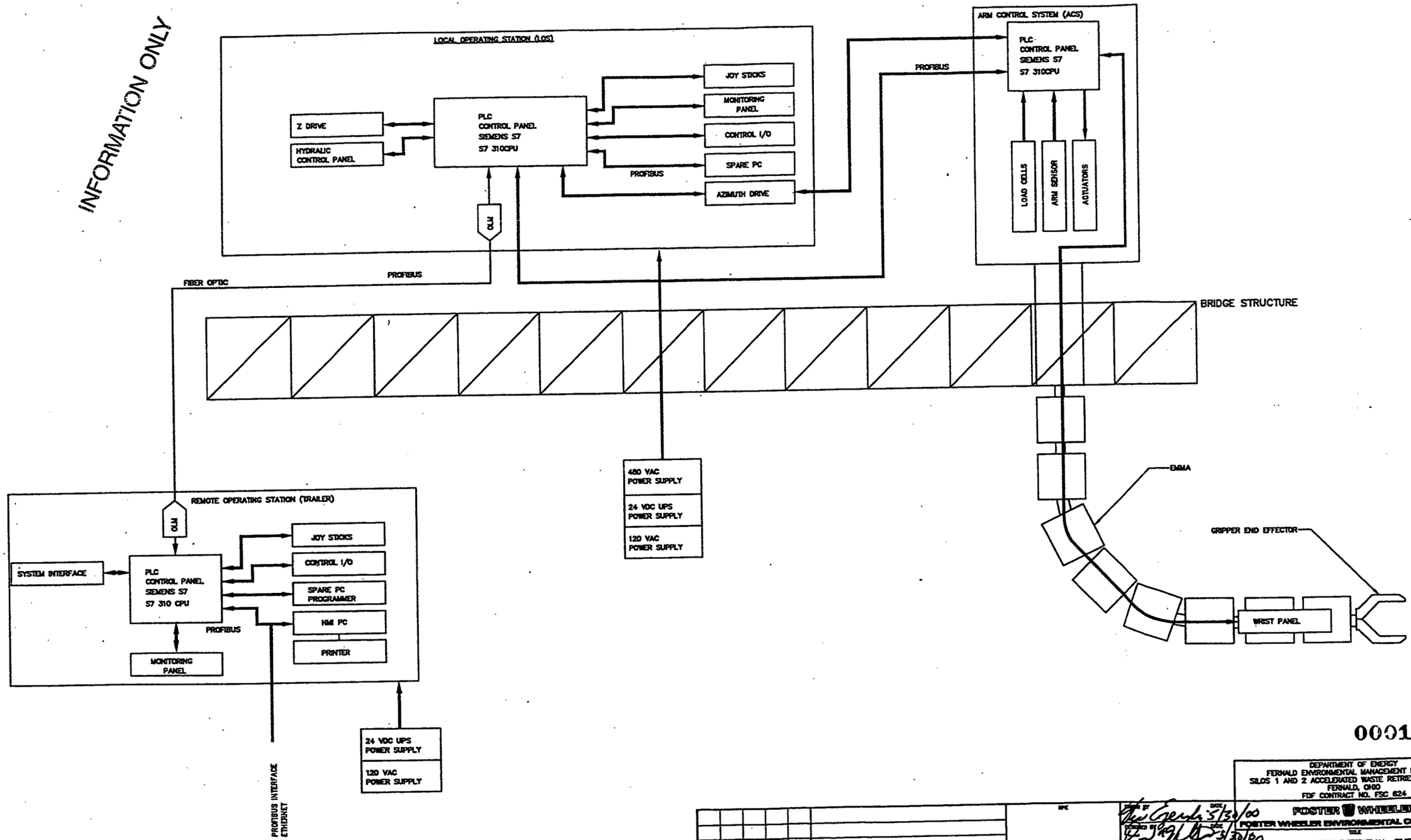

000190

000582

REV	DATE	BY	CHK'D	APR'VD	DESCRIPTION/ISSUE
1	5/31	VE	DH	MH	CERTIFIED FOR CONSTRUCTION
0	10/19	VE	DH	MH	PRELIMINARY DESIGN SUBMITTAL

DEPARTMENT OF ENERGY
FERNALD ENVIRONMENTAL MANAGEMENT PROJECT
SILOS 1 AND 2 ACCELERATED WASTE RETRIEVAL PROJECT
FERNALD, OHIO
FDF CONTRACT NO. FSC 624

FOSTER WHEELER
FOSTER WHEELER ENVIRONMENTAL CORPORATION

TITLE: SILO WASTE RETRIEVAL SYSTEM BLOCK DIAGRAM CONTROL SYSTEM

SIZE: A | SCALE: NONE | DWG. NO. 11GID010 | REV 1

FILENAME: 11GID010.DWG

3388

INFORMATION ONLY

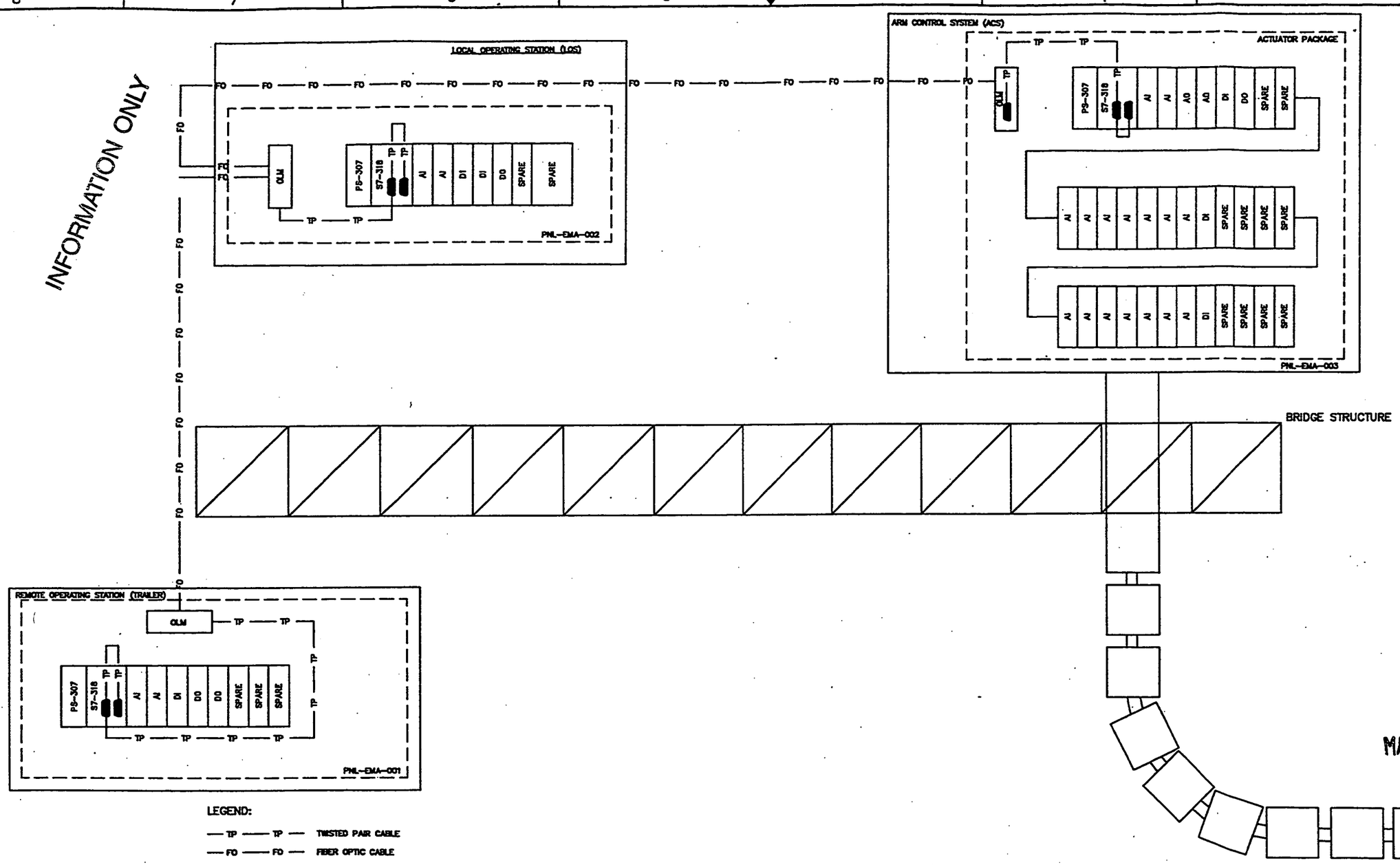

MAY 30 2000

000191

000583

REV	DATE	BY	CHK'D	APR'VD	DESCRIPTION/ISSUE
1	5/30	VE			CERTIFIED FOR CONSTRUCTION
0	10/19	VE	DH	MH	PRELIMINARY DESIGN SUBMITTAL

DEPARTMENT OF ENERGY
FERNALD ENVIRONMENTAL MANAGEMENT PROJECT
SILOS 1 AND 2 ACCELERATED WASTE RETRIEVAL PROJECT
FERNALD, OHIO
FDF CONTRACT NO. FSC 624

FOSTER WHEELER
FOSTER WHEELER ENVIRONMENTAL CORPORATION

TITLE
SILO WASTE RETRIEVAL SYSTEM
ONE LINE DIAGRAM
CONTROL SYSTEM

SIZE	SCALE	DWG. NO.	REV
	NONE	11GID120	1

FILENAME: 11GID120.DWG

3388

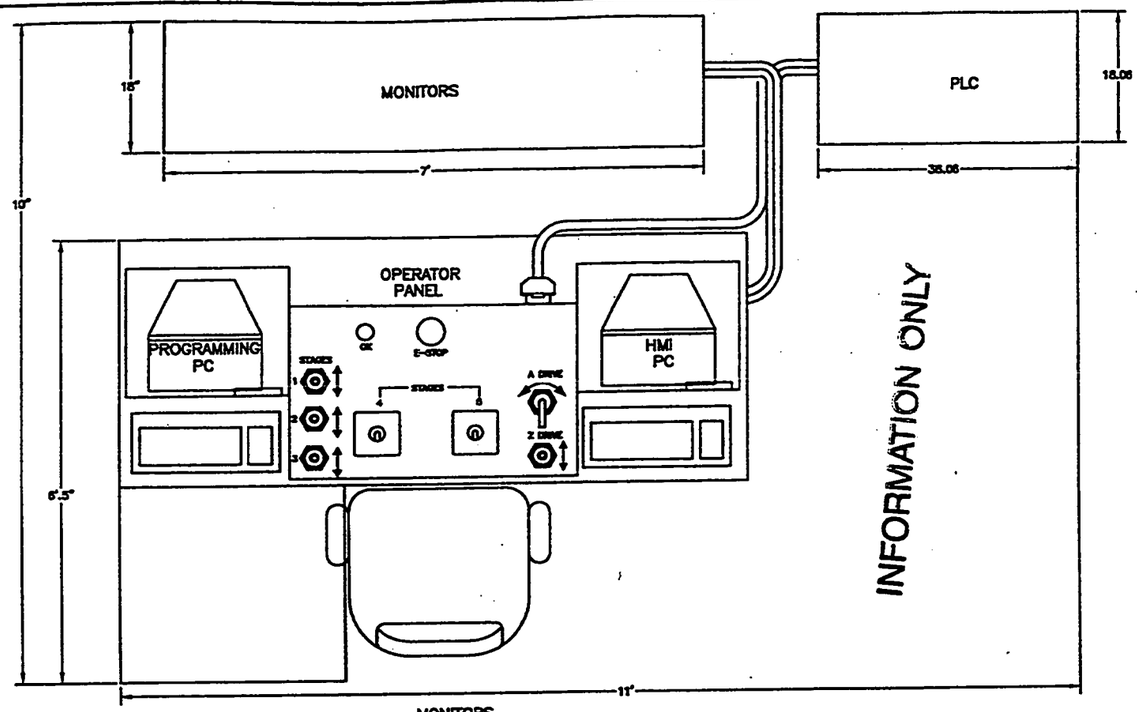

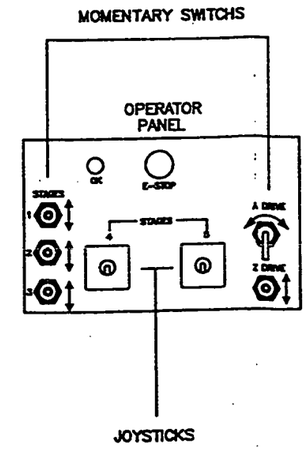

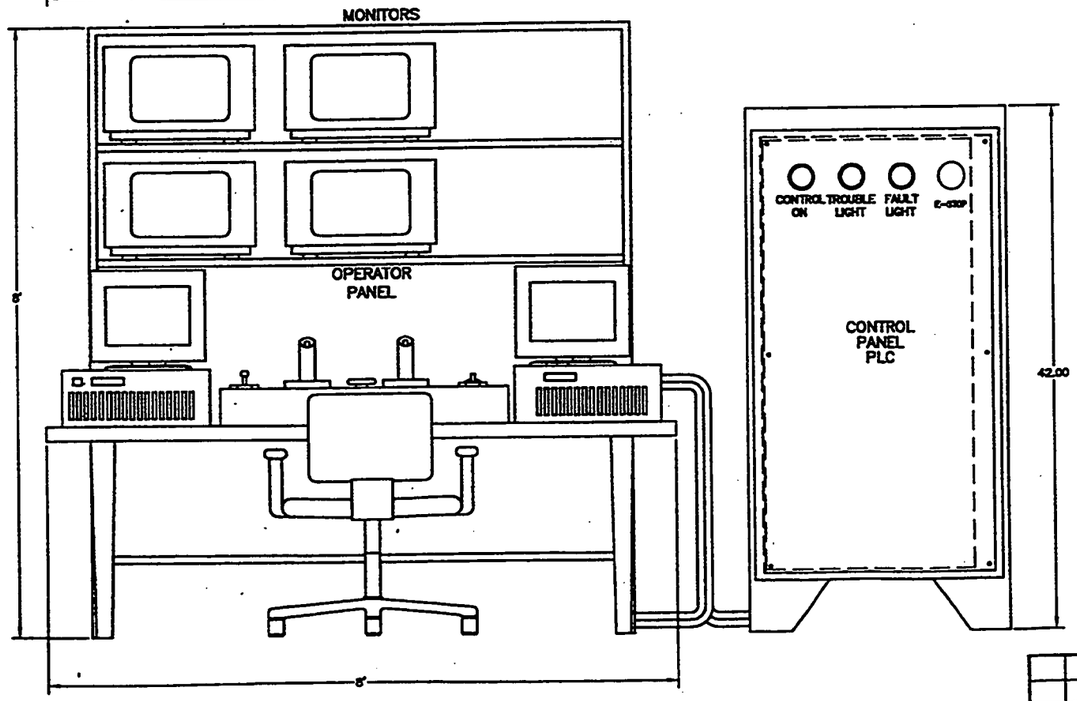

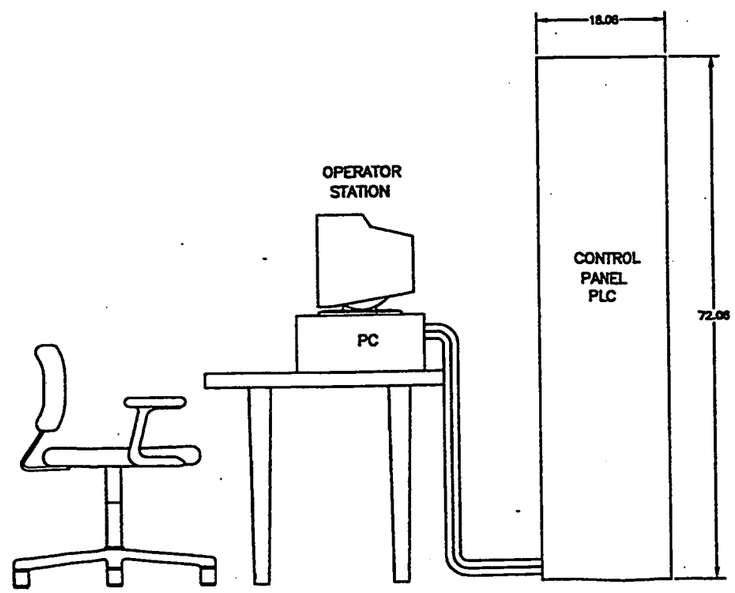

000192

MAY 2 0 2000

MAY 3 0 2000

REV	DATE	BY	CHK'D	APR'VD	DESCRIPTION/ISSUE
1	5/30	VE	DH	MH	CERTIFIED FOR CONSTRUCTION
0	10/18	VE	DH	MH	PRELIMINARY DESIGN SUBMITTAL

DEPARTMENT OF ENERGY
FERNALD ENVIRONMENTAL MANAGEMENT PROJECT
SILOS 1 AND 2 ACCELERATED WASTE RETRIEVAL PROJECT
FERNALD, OHIO
FDF CONTRACT NO. FSC 624

FOSTER WHEELER
FOSTER WHEELER ENVIRONMENTAL CORPORATION

TITLE
SILO WASTE RETRIEVAL SYSTEM
REMOTE OPERATING STATION
GENERAL ARRANGEMENT

SIZE D | SCALE NONE | DWG. NO. 11GID130 | REV 1

FILENAME: 11GID130.DWG

000584

Appendix G

3388

FOSTER WHEELER

FOSTER WHEELER ENVIRONMENTAL CORPORATION

ATTACHMENT 1
PROCESS CONTROL PLAN
(BALANCE OF PLANT)

DOCUMENT NO.
624-P622-36, Rev. 1

FOR THE

SILOS 1 AND 2 ACCELERATED WASTE RETRIEVAL (AWR) PROJECT

SUBMITTED TO:

FLUOR FERNALD, INC.

CONTRACT NO. FSC 624

November 21, 2000

000585

000193

3388

CONTENTS

1.0 Human Machine Interface Controls 5
- 1.1 Sluicing (Bulk Material Retrieval) 6
- 1.2 Sluicing (Heel Retrieval) 7
- 1.3 Sluicing Tank Waste Retrieval System 8
- 1.4 Decontamination (Decon Spray Ring Operations) 9
- 1.5 Decontamination (ADS Operation) 9
- 1.6 TTA Operations 10
- 1.7 Troubleshooting 10
- 1.8 Motor Control Operation 10
- 1.9 E-Stop and Q-Stop 11

2.0 Local Controls 12
- 2.1 Sluicer Module 12
- 2.2 Decant Pump Module 13
- 2.3 Slurry Pump/CAT Module 14
- 2.4 High Pressure Water Pump Skid 15
- 2.5 Hydraulic Power Unit Skid 16

3.0 Equipment Descriptions 17
- 3.1 Central Control Systems 17
  - 3.1.1 Programmable Logic Controller 17
  - 3.1.2 HMI Computers 18
  - 3.1.3 HMI Controls 18
  - 3.1.4 Ethernet Communications 19
  - 3.1.5 Programming Station Computer 19
  - 3.1.6 RCS HMI 19
  - 3.1.7 Profibus Network 20
  - 3.1.8 ET200M Data and Control Node 20
- 3.2 Sluicer Modules (SLC-11-203, -204, -205) 20
  - 3.2.1 Sluice Water Supply Valves 21
  - 3.2.2 Sluicer Pitch Drives 21
  - 3.2.3 Sluicer Yaw Drives 22
  - 3.2.4 Mast Hoists 22
  - 3.2.5 Cable Reels (CBR-11-201, –202, -203) 23
- 3.3 Decant Pump Modules (DEC-12-200, -201) 23
  - 3.3.1 Flow Control Valves (MOV-12-200, -201, -202, -203) 24
  - 3.3.2 Pontoon and Pump Hoists (CRH-12-200, -201, -202, -203) 24
  - 3.3.3 Hose Reels (HSR-12-200, -201) 25
  - 3.3.4 Decant Pumps (PMP-12-200, -201) 25
  - 3.3.5 Decant Pumps Pressure Indicating Transmitters (PIT PMP-12-200, -201) 26
  - 3.3.6 Decant Flow Indicating Transmitters (FET PMP-12-200, -201) 26
- 3.4 Slurry Pump/CAT Modules (SLR-11-200, -201, and -202) 26
  - 3.4.1 Slurry pumps (PMP-11-300, -301, and -302) 27
  - 3.4.2 Lift tables (LFT-11-300, -301, and –302) 27
  - 3.4.3 Hose Bundle Reels (CBR-11-300, and -301) 28
  - 3.4.4 Automatic Control Valves (MOV-11-306, 307, 308) 28
  - 3.4.5 Slurry Line Automatic Diverter Valves (MOV-11-300, -301, -302) 28
  - 3.4.6 Sluice (Flush) Water Automatic Diverter Valves (MOV-11-303, -304, -305) 29
  - 3.4.7 Slurry Mass Flow Meter (FET-SLR-11-200, -201, -202) 29
  - 3.4.8 Slurry Pressure Transmitter (PIT-SLR-11-200, -201, -202) 29

3388

3.4.9 Lift Table Level Transmitter (LT-LFT-300, -301, -302) 29
3.4.10 Slurry Pump Inlet Level Transmitter (LT-PMP-300, -301, -302) 29
3.4.11 Slurry Pump Inlet Solids Contact Switch (YS-PMP-300, -301, -302) 30
3.5 High Pressure Water Pump Skids (SKD-11-250 and SKD-11-251) 30
3.6 SREE Cutting Jet Pump Subsystem 30
3.7 Jet Pump HPW Supply Pump Subsystem 30
3.8 Decon Pump HPW Supply Pump Subsystem 31
3.8.1 Lubrication Water Sump Pump (PMP-11-252, and 258) and Lubrication Water Sump Level Switch (LS SMP-11-251 and -257) 31
3.8.2 Collection Pan Sump Pump (PMP-11-253, and 259) and Collection Pan Sump Level Switch (LSH SMP-11-250,and 256) 31
3.8.3 Local E-Stop (XX-PMP-250, and -251) 32
3.8.4 SREE Cutting Jet Pump Subsystem 32
3.8.5 Waste Removal Jet Pump HPW Supply Subsystem 33
3.9 Hydraulic Power Unit Skids 35

000587

000195

3388

ACRONYMS

ADS	Arm Deployment Sluicer
ES	Engineering System
FSMS	Full Scale Mockup System
HMI	Human Machine Interface
HPU	Hydraulic Power Unit
HPW	High Pressure Water
MPI	Multipoint Interface
OS	Operating System
PLC	Progammable Logic Controller
RCS	Radon Control System
SREE	Slurry Recovery End Effector
SWRS	Silo Waste Retrieval System
TTA	Transfer Tank Area
TWRS	Tank Waste Retrieval System
UPS	Uninterruptible Power Supply

000588

000196

3388

1.0 Human Machine Interface Controls

The Human Machine Interface (HMI) will have a main screen from which the operator will select a mode of operation. The basic modes of operation will be:

- Sluicing (bulk material retrieval),
- Sluicing (heel retrieval),
- Sluicing [Transfer Tank Area (TTA) tank material retrieval],
- Decontamination (decon spray ring operations),
- Decontamination (Arm Deployed Sluicer operations), and
- Troubleshooting (password protected).

The sluicing screens will graphically display the source tank and receiving tank conditions, pumps and pump status being used to perform the particular sluicing operation, interconnecting piping with automatic valve and process parameter status graphically displayed, and alarm conditions. Upon selecting a mode of operation, a material flow path will be selected for the particular operation. For instance, operator selection of bulk material sluicing operation will activate a password protected pop-up screen that will contain all the choices for normal material flow paths. The shift supervisor will then key in a password and select the desired material flow path (i.e., sluicing from silo 4 to tank 1A). The shift supervisor, in performing this selection, will verify that conditions for operation have been met and operations may proceed. The valve line ups for that flow path then will automatically be made by the PLC logic and equipment operation permissive condition will be allowed. Subscreens will be available for more detailed information regarding each major equipment system (sluicer module, HPW pump skid, decon pump skid, slurry pump module, decant pump module, water filtration system, and make-up water system).

In general, each pump display will include a stop/start switch and will indicate run status and speed and direction as appropriate. Each process instrument display will include the instrument located schematically on the piping with its output signal numerically displayed on the sensor icon. Each automatic valve display will indicate its status (open, closed, or flow direction for diverter valves) by the color of the icon. The process piping will display flow status and fluid type by changing color. Each tank will include liquid level, solids level, and internal pressure signals displayed.

The HMI consists of two computers that are in redundant operation. Either or both computers can be used to control and monitor the same or different equipment operations. The redundant operation allows either computer to fail without affecting operations. When the failed computer is returned to service, the operating computer updates the other computer with all operation-collected data and operating status.

The sluicing, slurry, and decant modules are unique items of equipment because the modules are relocated to new locations as operations proceed. The three sluicer modules can be located in ten different locations (on silo 4, silo 1 & 2, and TTA). The three slurry modules in six different locations and the two decant modules in four different locations. The PLC and HMI recognize where each module type is located and will properly control the connected module.

3388

Assigning a range of Profibus addresses to each module where each address for a module is defined as the module type and its location does this. The FSMS and AWR HMI and PLC programs are identical. If a module is not in an assigned location on the Profibus, the PLC and HMI will ignore any request for module control or data. When a module is moved to a new physical location, the address of the data collection and control node inside the control cabinet will need to be changed to the predefined address for that location. This address change is performed with dip switches on the node and done before power is applied to the module.

1.1 Sluicing (Bulk Material Retrieval)

The bulk material retrieval screen will contain a graphical representation of the source silo and receiving and sluice water TTA tanks. The source silo will include graphical displays of the sluicer and slurry pump modules with slurry and sluice water process lines and associated automatic valves contained within these modules displayed. The receiving and sluice water TTA tanks will include graphical displays of the decant pump modules with slurry and sluice water process lines and associated automatic valves contained within these modules displayed. The screen will also have simplified schematic display of the silo/TTA interconnecting piping. The piping schematic will include diverter valve and process instrumentation icons. The sluicer graphic display will include the sluicer pitch/yaw drive positions, internal sluice water lines and automatic block valve display, and sluice water supply pressure. The decant pump module graphic display will include a decant pump display, the internal slurry and sluice water piping and automatic diverter valves displays, and flow and pressure sensor displays at their correct location on the piping, decant pump hoists up/down operation icons, hose reel in/out operation icon, and module HEPA filter differential pressure signal displays. The slurry pump graphic display will include the slurry pump and speed control display, the internal slurry and sluice water piping and automatic diverter valves displays, mass flow and pressure sensor displays at their correct location on the piping, pump lift table level sensor display, pump inlet level sensor display, and inlet screen solids detection switch state display.

When the operator wants to initiate sluicing, he/she will open the sluice water block valve from the valve display on the sluicer module graphic. Verify that the correct flow path is achieved by looking at the tank labeling and the piping/diverter valve graphical displays, and verify sluicer nozzle functionality by moving it to a desired position and watching the position display response and observing from the in-silo cameras. The decant pump will be started from its display on the decant pump module graphic and the operator will verify sluice water flow and pressure from those signals displayed on the decant pump module graphic. The operator will verify that the decant pump is at a desired elevation for operation in the TTA tanks using the TTA tank overview camera. He/she adjusts the pump elevation using the by depressing the hoist up/down icon as needed. Operating the hose reel, the operator will also pay in/out decant pump discharge hose to accommodate changing pump levels. The hose reel is operated by depressing either the pay hose "in" or "out" icon. The sluicer nozzle will be operated from a joystick at the HMI station. When the slurry pool depth reaches a desired level, as seen from the level sensor on the slurry pump module graphic, the operator starts the slurry pump by enabling it and selects a pump drive speed from the slurry pump display. The operator will verify the slurry pump discharge flow and pressure from the numerical values displayed on the mass flow meter and pressure transmitter icons in the slurry pump module graphic. The operator will continue to monitor the slurry pump output pressure and flow and inlet level as sluicing progresses. Should the slurry level become high or low, the operator will adjust the pump speed accordingly. Should the slurry line become plugged, the operator may chose to temporarily suspend sluicing by shutting down the slurry pump and selecting the forward flush icon on the screen. This will automatically divert the sluice water flow from the sluicer to the

slurry pump module and on through the slurry transfer line to the TTA receiving tank. He/she will continue this until the slurry discharge is clear as seen from the TTA tank camera. The operator can back flush the slurry pump by selecting the back flush icon on the screen. This action will divert the sluice water to the pump discharge. The operator must run the pump in reverse to maximize the pump suction flushing effect.

The HMI will automatically calculate the water and solids removal balance using the mass flow, sluice water flow, and tank level instrument data. The balance will be displayed on the sluicing screen and will alarm at a silo water accumulation value of 3000 gallons.

The bulk retrieval screen will contain an icon for selecting decontamination spray ring operation. When selected, the HMI will automatically bring up the HPW System operation screen. Details for HPW Pump operations from this screen are provided in Section 1.2.

1.2 Sluicing (Heel Retrieval)

The heel retrieval sluicing screen will contain the same TTA receiving and sluice water tank and silo, interconnecting piping, decant pump modules, and slurry pump module graphics as stated in Section 1.1. However, the heel retrieval screen will also contain sub-tier graphical screens for the HPW pump skid and the HPU skid. Selecting a particular source silo and TTA receiving and sluice water tanks will prompt the PLC to automatically line up the proper diverter valves and piping. In the case of heel retrieval, the sluice water will be directed from the decant pump to the heel waste surge tank mounted to the inlet of the slurry pump.

The HPW sub screen will contain graphics for each of the three HPW pumps; 1) the decon pump, 2) the SREE cutting jet supply pump, and 3) the waste removal jet pump motive water supply pump. Each pump graphic will contain graphics for the basic process water flow piping from supply to pump discharge and return water. The piping graphics will include icons for the HPW automatic diverter valves, the automatic pressure control valve, and the decon pump's three automatic discharge valves. Icons and numerical output signal displays for each pumps two flow meters, and discharge pressure transmitter will be included in the piping graphics. Presence of water flow and automatic valve position status will be indicated by a change in color on the pipe or valve graphic. The pump graphics will include start/stop icons and run status will be indicated by color change of the icon. The operator changes the automatic valve status by selecting the valve icon which toggles it's position indicated by color change. A system fault status icon will be included to give the operator indication of a system up-set condition.

The HPU sub screen will contain graphics for the hydraulic pump and will contain graphics for the basic hydraulic fluid flow supply and return piping. The piping graphics will include icons for the automatic flow control valve. Icons and numerical output signal displays for the HPU fluid supply flow meter, fluid reservoir level and temperature, and supply pressure transmitter will be included in the piping graphics. Presence of fluid flow and automatic flow control valve position status will be indicated by a change in color on the pipe or valve graphic. A system fault status icon will be included to give the operator indication of system up-set conditions.

To start heel retrieval operations, the operator will start the SREE cutting jet rotation by starting the HPU from its sub screen and selecting a desired flow rate to adjust the SREE cutting head speed. The cutting jets will then be started from the HPW pump skid subscreen by starting the cutting jet HPW supply pump. Starting the HPW pump is done by 1) ensuring the diverter valve is directed to recycle and the pressure command set at zero, 2) starting the HPW pump by selecting the start icon on the pump graphic, 3) changing the diverter valve to supply position by

selecting the valve icon, and 4) inputting a pressure value on the pressure control valve icon. The EMMA operator manipulates the SREE within the tank to create a slurry pool from which to remove material. The operator will start the decant pump which will send sluice water into the heel waste surge tank. The slurry pump is started and its speed adjusted to balance the level in the heel tank at about 50%. The decant pump and slurry pump operation will occur in the same manner as described in 1.1 above. The slurry is then pumped into the heel tank by sending HPW to the waste removal jet pump. This is performed by operating the jet pump motive HPW supply pump from the HPW pump skid subscreen. The HPW pump is operated in the same steps as stated above for the cutting jet HPW supply pump. The operator monitors the heel tank level and adjusts the slurry pump speed to maintain level in the heel tank. Should the inlet screen of the SREE become plugged, the operator flushes the screen with the fan jet water supplied by the decon HPW pump. The decon HPW is operated in the same manner as the other two HPW pumps except that the operator opens the fan jet supply valve on the HPW skid before starting the decon HPW supply pump. When the fan jet operation is complete, the operator shuts the decon HPW supply down in reverse order from starting and then closes the fan jet valve. Should the waste conveyance line from the SREE to the heel tank become plugged, the operator will back flush this line with the conveyance line flush water. This water is supplied from the decon HPW supply pump as well. The line flush is operated the same as the fan jet except the conveyance line flush supply valve is opened and closed instead of the fan jet supply valve. Forward and back flushing the slurry transfer line located between the slurry pump and the TTA is performed in the same manner as stated in Section 1.1.

1.3 Sluicing Tank Waste Retrieval System

The Tank Waste Retrieval System (TWRS) screen will contain a graphical representation of the source TTA tank. The source TTA tank will include graphical displays of the two sluicer modules and the slurry pump module with slurry and sluice water process lines and associated automatic valves contained within these modules displayed. The screen will also have a simplified schematic graphic display of the TTA/treatment plant interconnecting piping. The piping graphic will include diverter valve and process instrumentation icons. The sluicer graphic will include sluicer pitch/yaw drive positions, internal sluice water lines, and automatic block valve display. The slurry pump graphic schematic will include the slurry pump and speed control display, the internal slurry and sluice water piping and automatic diverter valve displays, mass flow and pressure sensor displays at their correct location on the piping, pump lift table level sensor display, pump inlet level sensor display, and inlet screen solids detection switch state display.

When the operator wants to initiate sluicing, he/she will open the sluice water block valve from the valve display on the sluicer module graphic display. The operator verifies that the correct flow path is achieved by looking at the tank labeling and the piping/diverter valve graphical displays, and verifies sluicer nozzle functionality by moving it to a desired position and watching the position display response and observing from the in-silo cameras. The sluicer nozzles will be operated from the joysticks at the HMI station. When the slurry pool depth reaches a desired level, as seen from the level sensor on the slurry pump module graphic, the operator starts the slurry pump by enabling it and selects a pump drive speed from the slurry pump display. The operator will verify the slurry pump discharge flow and pressure from the numerical values displayed on the mass flow meter and pressure transmitter icons in the slurry pump module graphic. The operator will continue to monitor the slurry pump output pressure and flow and inlet level as sluicing progresses. Should the slurry level become high or low, the operator will adjust the pump speed accordingly. Should the slurry line start becoming plugged, the operator may chose to temporarily suspend sluicing by shutting down the slurry pump and selecting the

forward flush icon on the screen. This will automatically divert the sluice water flow from the sluicer modules to the slurry pump module and on through the slurry transfer line to the treatment facility. The operator can back flush the slurry pump by selecting the back flush icon on the screen. This action will divert the sluice water to the pump discharge. The operator must run the pump in reverse to maximize the pump suction flushing effect.

The HMI will automatically calculate the water and solids removal balance using the mass flow, sluice water flow, and tank level instrument data. The balance will be displayed on the sluicing screen and will alarm at a silo water accumulation value of 3000 gallons.

1.4 Decontamination (Decon Spray Ring Operations)

The decontamination spray ring operation screen will include graphical displays of the decon pump, one of three pumps located on the HPW pump skid. Graphic displays for each spray ring located at the sluicer module, the slurry pump module, and the EMMA will also be included with interconnecting piping from the spray rings to the HPW skid. The pump graphic will contain graphics for the basic process water flow piping from supply to pump discharge and return water. The piping graphics will include icons for the HPW automatic diverter valve, the automatic pressure control valve, and the decon pump's three automatic discharge valves. Icons and numerical output signal displays for the pump's two flow meters, and discharge pressure transmitter will be included in the piping graphics. Presence of water flow and automatic valve position status will be indicated by a change in color on the pipe or valve graphic. The pump graphics will include start/stop icons and run status will be indicated by color change of the icon. The operator changes the automatic valve status by selecting the valve icon which toggles it's position indicated by color change. A system fault status icon will be included to give the operator indication of a system up-set condition.

The operator will operate the spray ring by first ensuring the proper manual block valve located on the bridge is opened for the desired spray ring. The operator will then send HPW to the spray ring by starting the HPW decon pump. Starting this pump is done by 1) opening the decon spray ring supply valve by selecting the valve icon, 2) ensuring the diverter valve is directed to recycle and the pressure command set at zero, 3) starting the HPW pump by selecting the start icon on the pump graphic, 4) changing the diverter valve to supply position by selecting the valve icon, and 5) inputting a pressure value on the pressure control valve icon. The operator will shut down the pump by performing the above steps in reverse order.

1.5 Decontamination (ADS Operation)

The Arm Deployed Sluicer (ADS) will be used to perform silo wall washing and in-silo debris washing. The ADS will also be used to assist in bulk material and heel sluicing activities. The wall and debris decontamination screen will contain graphical displays of the decon pump, one of three pumps located on the HPW pump skid. Graphic blocks for the ADS with interconnecting piping from the ADS to the HPW skid will be included. The pump graphic will contain graphics for the basic process water flow piping from supply to pump discharge and return water. The piping graphics will include icons for the HPW automatic diverter valve, the automatic pressure control valve, and the decon pump's three automatic discharge valves. Icons and numerical output signal displays for the pump's two flow meters, and discharge pressure transmitter will be included in the piping graphics. Presence of water flow and automatic valve position status will be indicated by a change in color on the pipe or valve graphic. The pump graphics will include start/stop icons and run status will be indicated by color change of the icon. The operator changes the automatic valve status by selecting the valve

icon which toggles it's position indicated by color change. A system fault status icon will be included to give the operator indication of a system up-set condition.

The operator will operate the ADS by first ensuring the proper manual block valve located on the bridge is opened for the ADS water supply and the EMMA operator has opened the desired ADS nozzle automatic block valve. The operator will then send HPW to the ADS by starting the HPW decon pump. Starting this pump is done by 1) opening the decon spray ring supply valve by selecting the valve icon, 2) ensuring the diverter valve is directed to recycle and the pressure command set at zero, 3) starting the HPW pump by selecting the start icon on the pump graphic, 4) changing the diverter valve to supply position by selecting the valve icon, and 5) inputting a pressure value on the pressure control valve icon. The operator will shut down the pump by performing the above steps in reverse.

1.6 TTA Operations

Operation of the other equipment located within the TTA will be controlled from dedicated HMI display screen(s). The screen(s) will be reachable directly from one of the operation screens that is being used.

The TTA display and control will provide control of the equipment within the TTA building except for the sluicer, slurry, and decant modules.

1.7 Troubleshooting

The troubleshooting screen will be accessed by password only. The troubleshooting screen will include system programming level information, including equipment interlocks. Because of the danger of operating AWR equipment without interlocks in place, the shift supervisor or controls systems engineers will be the only project personnel with this password access. Only individual equipment items can have their interlocks removed. Removal of interlock protection for whole systems or plant wide will not be allowed.

It is highly recommended that during troubleshooting operations, that single operator operations at the HMI be changed to two operator operations. This means that two operators are monitoring and operating the equipment that is operating without interlock protection.

The interlocks that can be removed are those interlocks that are programmed within the PLC. Interlock protection that is hardwired within the control cabinet cannot be removed. An example of a hardwired protection would be motor overload protection.

1.8 Motor Control Operation

This discussion is of the planned operation of the pump motors within the system. The Slurry pump is a variable frequency (speed) type and may require special operations.

During HMI operations, the motor can be manually started in either HMI Auto or HMI Manual. The operator can change between HMI Auto and HMI Manual without changing the running state of the motor. In HMI Auto, the motor is allowed to start automatically in response to a start command from the equipment operation sequence program. An example of a possible sequence program would be the automatic valve lineup for sluice water from a TTA tank to the sluicer and the starting of the decant pump. If the motor were in HMI Auto, the motor would start as soon as the valve lineup is completed. If the motor were in HMI Manual, the valve

lineup would be completed and the sequence program would wait until the operator places the decant motor in HMI Auto or the program times out.

The motor can be stopped in either mode.

In HMI Manual mode only, a password-protected method is used to remove the pump protection interlocks. In HMI Auto, the pump protection interlocks must be in place for the motor to start. Protection cannot be removed with the motor operating.

The motor is normally operated locally with all interlock protection in place. The removal of interlock protection for local control is performed at the HMI under password-protection.

1.9 E-Stop and Q-Stop

An E-Stop push-pull switch is located on each of the sluicer, slurry, decant, and high-pressure water pump control cabinets. The E-Stop is hardwired into the local control circuits of the equipment the operating personnel will be in direct contact with. An E-Stop pushed on a sluicer control cabinet doesn't affect operations in a slurry cabinet. The condition of the E-Stop is monitored by the PLC and the E-Stop status is displayed on the HMI. The PLC backs up the E-Stop command by stopping all enclosure equipment, except Motor Operated Valves, within the enclosure. This includes the enclosure equipment that is connected to the E-Stop by hardwired and to equipment that stopped only by the PLC.

The HMI station has two controls in support of equipment operations: Master On/Off and Q-Stop switches.

The Master On/Off switch is a key lockable switch that provides a command to the PLC. The Off position will command the PLC to disregard all HMI or local field commands for equipment control. The key is removable in the Off position. The HMI will still monitor the status condition of all equipment. In the On position, the PLC performs normal equipment operation. The Master On/Off switch does not affect the RCS.

The Q-Stop switch is a push-pull type switch that when pulled out allows normal PLC operation. When pushed in (maintained), the PLC will stop all motors. The Q-Stop switch does not affect the RCS.

To recover from a Q-Stop condition, the Q-Stop switch must be pulled out and then the Master On/Off switch must be positioned to Off and then returned to On. The motors and Motor Operated Valves will not change their shutdown status. The operator may then recovery from the shutdown operation.

2.0 Local Controls

The HPU skids, HPW skids, Slurry Pump/CATS modules, Sluicer modules, and Decant Pump modules all contain local control cabinets. These cabinets are all NEMA 4 rated and contain switches and devices mounted on the front of the cabinets that are used to perform local control of the equipment systems. Each cabinet incorporates a "local/off/remote" selector switch. When this switch is in the "remote" position, the equipment may only be operated from the HMI located in the control trailers. When the switch is in the "off" position, all equipment, controlled by the PLC is removed from service. When the switch is in "local" position, the equipment can only be operated locally (interlocks and logic control is still maintained by the PLC and HMI monitoring is available). The following local control descriptions apply only to functions available when the selector switch is in the "local" mode. Each local control cabinet contains an E-Stop switch mounted conspicuously on the front of the cabinet. Depressing the E-Stop switch will stop equipment operation.

The Motor Operate Valves are powered by the UPS power system. This allows the PLC to operate the valve, if required, during a loss of site power. Also, the valve will continue to travel to its commanded position even when an E-stop is active. A valve will not be allowed to stop between states.

2.1 Sluicer Module

The sluicer module includes the following equipment that can be operated from the local control cabinet:

- Sluicer mast hoist,
- Sluice water supply valve and
- Cable reel.

The sluicer mast hoist is operated locally from a pendant hoist switch. The hoist is moved up by switching the hoist switch to the UP position and holding it in that position. When the switch is released, it returns to the OFF position automatically and the hoist stops. The hoist is moved down by switching and holding the hoist switch in the DOWN position. Releasing the hoist switch stops the hoist. The operator should visually verify that the hoist is moving as commanded and that cable tension is maintained at all times. The hoist operating range, upper and lower, is set with limit switches located on the hoist.

The sluice water supply valve is operated locally by setting the valve position selector switch to the desired position, OPEN or CLOSE. The operator should visually verify that the valve position indicators are in the desired position. Before placing the "local/off/remote" switch to local, the supply valve switch must be manually aligned to agree with the current valve position.

The sluicer module cable reel can only be operated locally due to safety considerations since operators must assist in cable handling activities with glovebox gloves or from inside the enclosure while the reel is operated. The reel is controlled locally by holding the spring return switch in either the OUT or IN position until the desired cable length is achieved. To stop the reel, the operator must only remove his/her hand from the switch and the switch will return to the OFF position. Before operating the cable reel, the six cables must be disconnected from the

cable reel. A lockable disconnect is provided on the control cabinet to de-energized the high voltage equipment connected to these cables.

The local control panel E-stop directly stops the cable reel motor and mast hoist since these are the only two items that can be in operation when operators are inside the enclosures or gloveports. The PLC monitors the E-stop and will order a shutdown of the other equipment.

2.2 Decant Pump Module

The decant pump module includes the following equipment that can be operated from the local control cabinet:

- Pontoon and decant pump hoists,
- Decant pump,
- Automatic 3-way diverter valves, and
- Hose reel.

The pontoon and decant pump hoists are operated locally by "up/off/down" hand switches mounted on the front of the local control cabinet. Each hoist is controlled from its own switch. The hoist is moved up by holding the hoist switch in the UP position. When the switch is released, it returns to the OFF position automatically and the hoist stops. The hoist is moved down by holding the hoist switch in the DOWN position. Releasing the hoist switch stops the hoist. The operator should visually verify that the hoist is moving as commanded and that cable tension is maintained at all times. The hoist is protected from travelling beyond an upper or lower travel position with limit switches.

The decant pump is operated locally by push button controls. The pump is started by pressing the DECANT PUMP START button and stopped by pressing the DECANT PUMP STOP button.

The automatic 3-way diverter valves are operated locally by setting both of the valve position selector switches to the desired positions. Positions for MOV-12-200 (202) are Supply to Silo, Supply to MOV-201 (203), and Supply to Slurry Line. Positions for MOV-12-201 (203) are Back Flush Slurry Line, Forward Flush Slurry Line, and Discharge to Tank. The operator should visually verify that the valve position indicators are in the desired position. Before placing the "local/off/remote" switch to local, the two valve switches must be manually aligned to agree with the current valve positions.

The decant pump hose reel can be remotely operated from the HMI control screens discussed in section 1.0. The reel is controlled locally by holding the spring return switch in either the RAISE or LOWER position until the desired hose length is achieved. To stop the reel, the operator must only remove his/her hand from the switch and the switch will return to the OFF position.

The local control panel E-stop directly stops the cable reel motor, decant pump, and the two hoists since these are the only three items that can be in operation when operators are inside the enclosures or gloveports.

3388

2.3 Slurry Pump/CAT Module

The slurry pump module includes the following equipment that can be operated from the local control cabinet:

- Slurry pump variable frequency drive,
- Automatic 3-way diverter valves,
- Pump lift table drive,
- CAT hose bundle reel, and
- Enclosure heater.

The slurry pump variable frequency drive is operated locally by using the push button control panel on the front of the variable frequency drive. The control panel allows motor startup, direction and speed to be set, and motor shutdown. The variable frequency drive is located inside a heated and air conditioned cabinet. To operate the variable frequency drive, the cabinet door must be open. A physical barrier for operator protection is provided between the control panel and the high voltage components.

The two diverter valves are operated locally by operating the valve selector switch for the desired valve. Positions for MOV-11-300 (301,302) are Pump Back Flush, Flush to TTA, and Normal Pumping, Positions for MOV-11-303 (304,305) Flush Supply to Pump Can, Flush Supply to MOV 300, and Pump Recirc. Position for MOV-11-306 (307,308) is any position from Open to Close. Before placing the "local/off/remote" switch to local, the two valve switches must be manually aligned to agree with the current valve positions.

The slurry pump lift table is locally controlled by switching the "Up/Off/Down" switch to the desired direction and holding the switch until the lift table has reached the desired position.

The CAT hose/cable bundle can only be operated locally due to safety considerations since operators must assist in hose and cable bundle handling activities inside the enclosure while the reel is operated. The reel is controlled locally by switching the "Out/Off/In" switch to the desired direction until the hose/cable bundle has reached the desired length.

The local control panel E-stop directly stops the hose/cable reel motor and the lift table since these are the only two items that can be in operation when operators are inside the enclosures or gloveports.

Before operating the cable reel, the motor cable connector must be disconnected from the cable reel before the cable reel may be operated. A lockable disconnect is provided on the variable frequency drive control cabinet to de-energized the high voltage equipment connected to this cable.

The enclosure heater is operated locally by a heater mounted thermostat control. The thermostat is adjusted from a temperature selector mounted on the heater inside the enclosure.

3388

2.4 High Pressure Water Pump Skid

When the "Local/Off/Remote" switch is in the "Local" position and the pumps are not running, the recycle/supply diverter valves will default to the recycle position. The HPW pump skid contains the following equipment that can be operated from the local control cabinet:

- SREE cutting jet supply pump and associated air operated valves,
- Jet pump motive water supply pump and associated air operated valves,
- Decon water supply pump and associated air operated valves,
- Lube water collection sump pump,
- Leak collection pan sump pump, and
- Enclosure heater and vent fan.

The local control cabinet has a system fault light on the front of the control cabinet which gives indication of a system upset condition. An E-stop switch is also located on the front of the local control cabinet, which will de-energize the three pump's motors when pushed in. Before operating any of the HPW pumps locally, the operator must verify that air pressure and process water supply and return are available and functional.

Before locally operating the SREE cutting jet HPW supply pump, the operator must ensure that the manual pressure control valve is in the fully open position. The SREE cutting jet supply pump is started by moving the SREE pump 3-way switch to the pump on-recycle position. To send water to the SREE cutting jets the 3-way switch is moved to the pump on-supply position. The operator then manually closes the manual pressure control valve until the desired pressure is reached as determined by reading the local discharge pressure gauge. The pump is shut down in reverse order of the above steps.

Before locally operating the jet pump motive HPW supply pump, the operator must ensure that the manual pressure control valve is in the fully open position. The jet pump supply pump is started by moving the jet pump 3-way switch to the pump on-recycle position. To send water to the jet pump motive jets, the 3-way switch is moved to the pump on-supply position. The operator then manually closes the manual pressure control valve until the desired pressure is reached as determined by reading the local discharge pressure gauge. The pump is shut down in reverse order of the above steps.

Before operating the decon HPW supply pump, the operator must ensure that the manual pressure control valve is in the fully open position and the desired discharge valve is opened. To open the desired discharge valve, the operator moves the discharge valve selector switch from the closed position to either the waste conveyance line flush, the SREE fan jet, or the decon spray ring position. When using the decon spray rings, the operator must also ensure that the proper manual valve is open for the desired spray ring or the ADS. The decon HPW supply pump is started by moving the decon HPW pump 3-way switch to the pump on-recycle position. To send water to the HPW service points, the 3-way switch is moved to the pump on-supply position. The operator then manually closes the manual pressure control valve until the desired pressure is reached as determined by reading the local discharge pressure gauge. The pump is shut down in reverse order of the above steps.

3388

The lube water sump pump is operated automatically by local level switches.

2.5 Hydraulic Power Unit Skid

The HPU skid contains the following equipment that can be operated from the local control cabinet:

- The hydraulic pump,
- The flow control valve,
- The oil reservoir heater, and
- The oil cooler and enclosure vent fan.

Before operating the HPU locally, the operator should ensure that the flow adjustment setting is at zero flow. The hydraulic pump can be started by switching the pump "run/stop" switch to the "run" position. The operator adjusts the flow by entering the desired flow value in the flow control adjustment device. The control cabinet has a system fault light on the front of the control cabinet which gives indication of a system upset condition. An E-stop switch, also located on the front of the local control cabinet, will stop all HPU motors when pushed in. The oil cooler and enclosure vent fan are controlled by locally mounted and adjustable thermostats.

3.0 Equipment Descriptions

The following sections describe the main equipment components within each equipment module.

3.1 Central Control Systems

The central control system for both FSMS and AWR operations is based around the Siemens Programmable Logic Controller (PLC). Operator interface is provided by a graphics HMI. The HMI is in a redundant configuration. Each equipment module (sluicer, slurry, decant, HPW) has an ET200M I/O control and data node. The node consists of Profibus communication module connected up to analog and digital I/O modules. Communication between the PLC and the ET200M nodes is via the Profibus network.

All components of the control system (PLC, HMI, communication devices, ET200M nodes) are powered from the site wide Uninterruptible Power Supply (UPS).

3.1.1 Programmable Logic Controller

The PLC is a Siemens bundled PCS7 system. A bundled system provides a powerful system already configured and assembled.

The PCS7 system consists of a UR2 9-slot backplane rack. The rack provides for disturbed power and communications between the rack's plug in modules.

The Siemens power supply occupies the first two rack slots. The power supply uses 120 vac, single-phase power to produce the 24 vdc, 10 amp output. The power supply contains two lithium AA batteries for power backup to keep the PLC RAM memory intact on a complete lost of power.

The PLC itself is a Siemens CPU S7416-2DP module. The CPU is equipped with 1600 Kbytes of run program/data memory. This amount of provides the necessary 25% excess memory required per the design specifications. The CPU contains 2000 Kbytes of load memory that contains the operating program. The CPU supports 2048 Function Blocks, 2048 Functions, and 4095 Data Blocks. CPU execution time is 0.08 μs for bit, word, and fixed-point addition operations and 0.48 μs for floating-point addition. The CPU supports 511 counters and timers and 2047 8-bit retentive memories. The CPU supports both 187.5 kbit/s Multi-point interface (MPI) and 12 Mbit/s Profibus communication networks. Total I/O channels supported by the CPU is 65536 digital I/O and 4096 analog I/O. The CPU module requires two slots.

A Siemens Ethernet communications processor, CP 443-1 TCP, is installed in slot 5 of the UR2 rack. The CP supports Ethernet communications between the CPU and the HMI and Programming Station computers. The CP handles only the 10 Mbit/s Ethernet communication speeds and not the fast 100Mbit/s speeds.

A Siemens S7-421 digital input module in slot 6 provides 32 point, 24 vdc, isolated signal inputs. The input module supports digital signals from the joystick controls, sluicer mast control, Master On/Off and Soft-Stop switches. Eight signal inputs are reserved for communications with the EMMA PLC system.

A Siemens S7-422 digital output module in slot 7 provides 16 point, relay, isolated signal inputs. The module reserves eight digital signals for communications with the EMMA PLC system.

3.1.2 HMI Computers

Two Dell XPS mini-tower computers operate in a redundant mode to provide HMI support for the PLC. The Dell computers are equipped with 600 MHz Pentium III processors with 256 Mbyte of RAM, 30 Gbyte hard drive, CD-RW module, 100 Mbyte ZIP drive, 16 Mbyte graphics card driving a 21 inch color monitor. The computers have the NT 4.0 operating system and virus protection software. The computers are equipped with the Siemens PCI Ethernet card for networking to the PLC. The computers are selected to provide fast command input and graphics update speed. The large hard drive and the CD-RW and ZIP drives provide the means to storage operating trending data as required by the design specification.

Each computer is loaded with the PCS7 operating station software with server support and 64K tag runtime license. The computers are also equipped with sequence visualization software and data archiving software. The sequence visualization is a graphics package to allow the rapid determination of a failure in a sequence program. The data archiving package for the collection of operating data and storing the data during operations.

The computers are loaded with the Siemens WINCC redundancy software. This software will keep both computers in synch with operating data. If one computer should fail and later return on line, the operating computer will update failed computer with all operating information collected during the computer's downtime.

One or both computers can be used to monitor and control equipment with the HMI. This allows the operator(s) to monitor and control two different operations at the same time.

3.1.3 HMI Controls

Controls located at the HMI station includes a digital two-speed joystick with a deadman switch, joystick speed select control, sluicer mast control, Master On/Off keylock switch, and the Q-Stop push-pull switch.

The sluicer nozzle control joystick is a two degree-of-freedom two-speed digital joystick. This means that in any direction the joystick commands only two speeds. The operator determines the faster sluicer nozzle speed from a list of predefined speeds at the HMI sluicer graphic icon. The slower joystick speed is one-half of the fast speed. A manual toggle switch (normal/slow) located near the joystick will reduce the joystick speeds by a factor of four in the slow position. The joystick is equipped with a deadman switch which the operator must hold to cause the sluicer nozzle to follow the joystick commands. The joystick is spring returned to center. During TTA waste removal operations, there will be two sluicers on the TTA tanks. The operator selects which sluicer nozzle the joystick will control by using the HMI sluicer graphic screens to select the active sluicer nozzle.

The sluicer mast height is controlled by a toggle switch located near the joystick. The toggle switch is spring-returned to center that causes the sluicer mast to stop and hold at its current position. The other switch positions are Up and Down and controls the direction of the sluicer mast. The joystick deadman must be held closed by the operator before sluicer mast switch will move the sluicer mast. This method requires two hands to move the sluicer mast and will prevent unwanted motion.

The Master On/Off switch is a keylock switch located near the HMI. When the switch is Off, the PLC is commanded not to start any motor driven equipment. When the switch is On, the PLC will accept all operator commands. The key can be removed from the switch when the switch is in the Off position.

The soft-stop switch is a push-pull type of switch. When the soft-stop switch is pulled, normal operation of the equipment is allowable. When the soft-stop switch is pushed, the PLC is commanded to stop all motor driven pumps. After the soft-stop switch is pushed, the soft-stop switch must be pulled out and the Master On/Off switch must be turned to Off position and then to the ON position. This sequence of operations commands the PLC to begin equipment operations from the HMI or locally if desired.

3.1.4 Ethernet Communications

All Ethernet devices are connected to a 3Com SuperStack Baseline Hub. The Ethernet devices include the PLC, the two HMI computers, the RCS HMI computer, Programming Station computer, and a printer. The Hub is equipped with 12 RJ-45 10BASE-T ports. A Hub port is connected to the computers' or PLC's Ethernet card with a color-coded twisted-pair cable connected to a RJ-45 to AUI transceiver (Siemens network connections is with AUI interface). The 3Com Hub is also equipped with an internal fiber optic transceiver module. The fiber optic transceiver connects the RCS HMI with the RCS local HMI located at the RCS skid. The two RCS HMIs operate in redundant mode operation. With this link, the control PLC can communicate with the RCS PLC.

3.1.5 Programming Station Computer

The programming station computer is identical to the HMI computers except the color monitor is 19 inches. The computer is connected to the PLC with the Ethernet connection. Because of the Profibus network, the programming station will be able to monitor not only the control PLC but also the RCS PLC and all the ET200M data and control nodes. The programming station includes a runtime operating station license and can be used as a third HMI if desired.

The programming computer is loaded with the Siemens PCS7 ES Toolset. The Toolset includes the programming languages: STEP7 Basic Programming package, the SCL (Standard Control Language) package, CFC (Continuous Function Chart) package, SFC (Sequential Function Chart) package. Along with these packages, the programming computer contains the Basic Block, Technology Block, Field Device Block, and Driver Block libraries. Other packages within the toolset include the import/export assistant and DOCPRO package. The DOCPRO package will combine all programming files on the programming station and produce a complete documentation package with diagrams and cross-references. The S7PLC simulation package is included to allow testing or simulation of I/O hardware before the hardware becomes available.

The programming computer is also loaded with the Siemens PCS7 OS Engineering and Configuration Toolset. This toolset creates the HMI as the PLC programming is performed. Changes or additions to the PLC program are reflected on the HMI graphical display.

3.1.6 RCS HMI

The RCS HMI is a redundant HMI for the local HMI located at the RCS skid. The HMI computer is identical to the HMI computers except the color monitor is 19 inches.

3388

3.1.7 Profibus Network

The PLC communicates with the ET200M data and control nodes located on the major equipment modules over the Profibus network. The Profibus network travels from the control trailer to the silo bridge (sluicer and slurry), to the HPW pump skid, to the electrical power panel, and into the TTA building (sampler valve box, distribution valve box, tank 30, tanks 1A, 1B, 2A, and 2B, make-up water system, and FSM diverter box), and then back to the control trailer. The Profibus network outside the TTA building is fiber optic. Inside the TTA building, the network is copper wire.

The Profibus network is in a ring configuration. The ring allows a break in the network at any point and all network traffic will be unaffected. The PLC Profibus port is connected to two optical link modules that connect to each end of the field fiber optic network. Each optical link module is powered by its own separate power supply.

3.1.8 ET200M Data and Control Node

Each sluicer, slurry, decant, and HPW module includes a Siemens ET200M data and control node. The ET200M consists of a backplane for power and communication. The first module on the backplane is a 5 amp 24 Vdc power supply. The power supply is powered by the 120 Vac UPS. The second module is the Siemens IM153 module which performs the network communications with the PLC and collects the data from up to eight S7-300 type I/O modules.

The ET200M allows the change out of an I/O module during operations and without powering the system down.

The S7-300 I/O modules include digital input and output (DC and AC voltages) modules and analog input and output (voltage and current) modules. An absolute encoder module is also used for the sluicer module. Field terminations to the I/O modules are via a quick plug to the I/O module connection.

The spare I/O on an ET200M node is at least 25% of the total type of the I/O located at that ET200M node.

3.2 Sluicer Modules (SLC-11-203, -204, -205)

The Sluicer Modules contain the following devices that interact with local and remote control systems:

- Sluice Water Supply Valves (MOV-11-201, -202, -203);
- Sluicer Pitch Drives (PTH-11-201, -202, -203);
- Sluicer Yaw Drives (YAW-11-201, -202, -203);
- Mast Hoists (CRH-11-201, -202, -203);
- Mast Hoist High/Low Position Switches (ZSH/L CRH-11-201, -202, -203);
- Mast Hoist High-High Position Switches (ZSHH CRH-11-201, -202, -203);

3388

- Cable Reels (CBR-11-201, -202, -203);
- Sluicer Water Pressure Indicating Transmitters (PIT SLC-11-203, -204, -205); and
- Local E-stop (XX-SLC-11-203, -204, -205).

3.2.1 Sluice Water Supply Valves

The sluice water supply valves are electrically actuated, 2-way ball valves. The actuators are powered by 120 vac, single-phase UPS power. The valves control the flow of sluice water to the sluicer nozzle. When operating the sluicer module remotely, the valves are controlled from the HMI operator's screen. When operating locally the valves are operated by switching "open/close" hand switch (HC-MOV-11-201, -202, and 203) to the desired position.

Sluice Water Supply Valve Interlocks include:

- Close sluice water supply valves (MOV-11-201, -202, -203) when any line flushing modes are selected from the HMI screen;
- Close when either remote or local E-stop is initiated;
- Loss of site power, the sluice water supply valve will be closed;
- Loss of the decant pump supplying sluice water; signal from (PMP-12-200, -201); and
- RCS fault; signal from RCS.

3.2.2 Sluicer Pitch Drives

The sluicer pitch drive moves the pitch joint to control the sluicer nozzle vertical angle. The drive motor is a PWM servo motor. The servo drive amplifier is powered by 120 vac, single-phase power. The pitch drive can only be operated remotely at the HMI. The drive is a servo drive with closed loop position feedback from an absolute encoder mounted at the pitch joint. The nozzle's pitch position is displayed on HMI screens discussed in section 1.1, above. It has the ability of moving the joint at speeds from 0.1 to 5 degrees/sec. Position limits are password controlled by the HMI operator.

Sluicer Pitch Drive Interlocks include:

- Mast elevation > -10 ft;
- Local control switch in "Hand" position;
- De-energize with either local or remote E-stop;
- Operating range of the nozzle's pitch drive is limited by user assigned position limits, values from HMI;
- Local E-stop; signal from local E-stop (XX-SLC-11-203,-204-205);

- The joystick deadman; signal from HMI station;
- Soft-Stop; signal from HMI station; and
- Master On/OFF; signal from HMI station.

3.2.3 Sluicer Yaw Drives

The sluicer yaw drive moves the pitch joint to control the sluicer nozzle horizontal angle. The drive motor is a PWM servo motor. The servo drive amplifier is powered by 120 vac, single-phase power. The yaw drive can only be operated remotely at the HMI. The drive is a servo drive with closed loop position feedback from an absolute encoder mounted at the yaw joint. The nozzle's yaw position is displayed on HMI screens discussed in Section 1.1. It has the ability of moving the joint at speeds from 0.1 to 5 degrees/sec. Position limits are password controlled by the HMI operator.

Sluicer Yaw Drive Interlocks include:

- Mast elevation > -10 ft;
- Local control switch in "Hand" position;
- De-energize with either local or remote E-stop;
- Operating range of the nozzle's yaw drive is limited by user assigned position limits; values from HMI;
- Local E-stop; signal from local E-stop (XX-SLC-11-203,-204-205);
- The joystick deadman; signal from HMI station;
- Soft-Stop; signal from HMI station; and
- Master On/OFF; signal from HMI station.

3.2.4 Mast Hoists

The mast hoists are 2-ton hoists powered by 480 volt, 3 phase AC. They support the weight of the sluicer mast and control the vertical mast position. The hoist has 2 switches. The high/low switch (ZSH/L-CRH-11-201, -202, -203) sets the upper and lower travel limits for the hoist. The high-high switch (ZSHH-CRH-201, -202, -203) prevents the hoist from pulling the hook too far up in the event the high/low switch malfunctions or is set improperly. The hoist can be operated remotely from the HMI station discussed in Section 1.1. The hoists are locally controlled by hand pendant switches (HS-CRH-11-201, -202, -203) mounted to the local control cabinet. The pendant can be carried to any location around the sluicer enclosure.

Mast Hoist Operational Interlocks include:

- De-energize with either local or remote E-stop;

- The high/high limit switch is wired directly into the hoist controls. There is no HMI display for this limit switch;
- The high/low limit switches are also wired directly to the hoist controls but the PLC does monitor the condition of the limit switches to provide HMI feedback;
- Local E-stop; signal from local E-stop (XX-SLC-11-203,-204-205);
- Soft-Stop; signal from HMI station; and
- Master On/OFF; signal from HMI station.

3.2.5 Cable Reels (CBR-11-201, –202, -203)

Due to safety issues of having personnel handling the cable from inside the module or from gloves while the reels are in operation, the cable reels are only operated locally. The cable reels are driven by reversible, single speed, AC drive motors. The reels are operated by "out/off/in" hand switch (HS-CBR-11-201, -202, -203) located on the front of the local control cabinets.

Cable Reel Operational Interlocks include:

- De-energize with either local or remote E-stop;
- Local E-stop; signal from local E-stop (XX-SLC-11-203,-204-205); and
- Sluicer Water Pressure Indicating Transmitters (PIT SLC-11-203, -204, -205).

The pressure transmitters provide sluice nozzle supply pressure feedback 4-20 ma signal for the HMI displays.

3.3 Decant Pump Modules (DEC-12-200, -201)

The Decant Pump Modules contain the following devices that interact with local and remote control systems:

- Pontoon and Pump Hoists (CRH-12-200, -201, -202, -203);
- Pontoon/Pump Hoists High/Low Position Switches (ZSH/L CRH-12-200, -201, -202, -203);
- Hose Reels (HSR-12-200, -201);
- Flow Control Valves (MOV-12-200, -201, -202, -203);
- Decant Pumps (PMP-12-200, -201);
- Decant Pumps Pressure Indicating Transmitters (PIT PMP-12-200, -201);
- Decant Flow Indicating Transmitters (FET PMP-12-200, -201); and
- Local E-stop (XX-DEC-12-200, -201).

3388

3.3.1 Flow Control Valves (MOV-12-200, -201, -202, -203)

The decant pump flow control valves control flow of sluice water out of the tank and slurry into the tank. The valves are automatic diverter valves electrically actuated, 3-way ball valves. The actuators are powered by 120 vac, UPS single-phase power. When operating the decant pump module remotely, the valves are controlled from the HMI screens as discussed in section 1.0. When operating locally (manually) the valves are operated by switching 3-position hand switches (HS-MOV-12-200, -201, -202, and 203) to the desired position. Valve MOV-12-201 and -203 are interlocked with slurry pump positive rotation operation to ensure the slurry pump cannot discharge slurry to the sluice (flush) water line. MOV-12-200 (202) normal operation "Supply to Silo" is to supply decant water to the silo or to MOV-201 (203) "Supply to MOV-201 (203) for flushing. A third position is connecting the slurry line to the silo sluice supply line and is a forbidden operation "Supply to Slurry Line". MOV-12-201 (203) normal mode of operation "Discharge to Tank" is to direct slurry from the silo into the TTA tank. MOV-201 (-203) can direct decant water from MOV-200 (-201) to back flush "Back Flush Slurry Line" the slurry line to the slurry enclosure or direct decant water from MOV-200 (-203) to forward flush "Forward Flush Slurry Line" the slurry line to the TTA tank.

Flow Control Valves Interlocks include:

- MOV-12-200 (202) cannot be reposition when the decant pump (PMP-12-200, -201) is operating;
- MOV-12-201 (203) cannot be reposition when the slurry pump (PMP-11-300, -301, and –302) is operating;
- MOV-12-200 (202) and MOV-12-201 (203) cannot be position in the forbidden position if the slurry pump (PMP-11-300, -301, and –302) is operating; and
- RCS fault; signal from RCS.

3.3.2 Pontoon and Pump Hoists (CRH-12-200, -201, -202, -203)

The pontoon and pump hoists are 5-ton hoists powered by 480 volt, 3-phase single speed motors. They are used to lower and raise the pontoon platform and the decant pump independently into and out of the tanks. The high/low switches (ZSH/L-CRH-12-200, -201, -202, -203) set the upper and lower travel limits for the hoists. The hoists can be operated remotely from the HMI as discussed in Section 1.0. The hoists are locally controlled by hand switches (HS-CRH-12-200, -201, -202, -203) mounted on individual pendants. The pendants can be carried to any point around the decant module.

Pontoon/Pump Hoists Operational Interlocks include:

- De-energize with either local or remote E-stop;
- Hoist is limited to operating range signal by ZSH/L-CRH-12-200, -201, -202, -203;
- Local E-stop; signal from XX-DEC-12-200, -201;
- Soft-Stop; signal from HMI station; and

3388

- Master On/OFF; signal from HMI station.

3.3.3 Hose Reels (HSR-12-200, -201)

The hose reels pay out decant pump discharge hose as the pump is deployed into the TTA tanks and take up hose slack hose as the pump/pontoon raises with TTA tank contents level. The reels are operated remotely from the HMI screens described in Section 1.0. The reels are operated locally by hand switches (HS-HSR-12-200, -201) located on the front of the local control cabinets.

Hose Reels Operational Interlocks include:

- De-energize with either local or E-stop; and
- Local E-stop; signal from XX-DEC-12-200, -201.

3.3.4 Decant Pumps (PMP-12-200, -201)

The decant pumps are centrifugal pumps driven by 75 hp, 480 vac 3-phase single speed drives operating at 3550 rpm. The pumps are capable of supplying sluice water at 300 gpm as indicated by sluice water flow transmitter (FET-PMP-12-200, -201) and 150 psig as indicated by sluice water pressure transmitter (PIT-PMP-12-200, -201). The pump is controlled locally by START and STOP pushbuttons mounted on local control cabinets. The decant pumps are remotely controlled from the HMI as discussed in section 1.0. The motor starter is equipped with a lockable disconnect to remove motor power when the pump discharge hose is being reposition.

Pump Operation Interlocks include:

- High TTA tank level (FWENC to supply level), signal from level transmitter XXXXXXXX;
- Low TTA tank level (FWENC to supply level), signal from level transmitter XXXXXXXX;
- Low pump flow rate; set point = 200 gpm; signal from decant pump flow meter (FT-PMP-12-200 and -201), delayed for 15 seconds during pump start;
- Low pump discharge pressure; set point = 100 psig; signal from pressure transmitter (PIT-PMP-12-200 and -201), delayed for 15 seconds during pump start;
- Leak detected; signal from (FWENC to supply XXXXXXXXXXX);
- RCS fault; signal from (FWENC to supply XXXXXXXXXXXX);
- Local E-stop; signal from local E-stop (XX-DEC-12-200 and -201);
- Soft E-stop; signal from the HMI;
- Local E-stop; signal from XX-DEC-12-200, -201;

- Soft-Stop; signal from HMI station;
- Master On/OFF; signal from HMI station;
- The pump is not allowed to start if MOV-12-200 (202) is in motion; by HMI station; and
- RCS fault; signal from RCS.

3.3.5 Decant Pumps Pressure Indicating Transmitters (PIT PMP-12-200, -201)

The pressure transmitters operates off 24 vdc power and provides 4-20 ma decant pump discharge pressure signals for the HMI displays. Low and high-pressure alarms are provided to the HMI. The low-pressure alarm has a time delay of 15 seconds after motor start.

3.3.6 Decant Flow Indicating Transmitters (FET PMP-12-200, -201)

The flow transmitters operates off 24 vdc power and provides 4-20 ma decant pump discharge flow signals for the HMI displays. Low and high-flow alarms are provided to the HMI. The low-flow alarm has a time delay of 15 seconds after motor start.

3.4 Slurry Pump/CAT Modules (SLR-11-200, -201, and -202)

The Slurry Pump/CAT Modules contain the following devices that interact with local and remote control systems:

- Slurry pumps (PMP-11-300, -301, and –302);
- Lift tables (LFT-11-300, -301, and –302);
- Hose bundle reels (CBR-11-300, and –301);
- Automatic control valves (MOV-11-306, 307, 308);
- Slurry line automatic diverter valves (MOV-11-300, -301, -302);
- Sluice (flush) water automatic diverter valves (MOV-11-303, -304, -305);
- Slurry mass flow meter (FET-SLR-11-200, -201, -202);
- Slurry pressure transmitter (PIT-SLR-11-200, -201, -202);
- Lift table level transmitter (LT-LFT-300, -301, -302);
- Slurry pump inlet level transmitter (LT-PMP-300, -301, -302);
- Slurry pump inlet solids contact switch (YS-PMP-300, -301, -302); and
- Local E-stop (XX-SLR-11-200, -201, -202).

3388

3.4.1 Slurry pumps (PMP-11-300, -301, and -302)

The slurry pumps are progressive cavity pumps driven by 50hp 480 vac, 3 phase power variable speed drives. The pumps operate in a range of 0gpm to 350gpm as indicated by Slurry mass flow meter (FET-SLR-11-200, -201, -202) and 0 to 150 psig as indicated by Slurry pressure transmitter (PIT-SLR-11-200, -201, -202). Locally the pump is controlled by a local control cabinet mounted keypad controller (HS-PMP- 11-300, -301, -302) mounted on the variable speed drive. The slurry pumps are remotely controlled from the HMI features discussed in Section 1.0.

Pump Operation Interlocks include:

- -Low make up water supply pressure; set point=10 psig, signal from PIT-PMP-12-200 (201);
- Low slurry pump inlet level; set point= 6"; signal from slurry pump inlet level transmitter (LT-PMP-300, -301, -302);
- Low slurry discharge flow rate; set point=150 gpm; signal from slurry mass flow meter (FET-SLR-11-200, -201, -202), delayed for 15 seconds during pump start;
- High slurry discharge pressure; set point=15 psig; signal from slurry pressure transmitter (PIT-SLR-11-200, -201, -202);
- Low slurry discharge pressure; set point=50 psig signal from slurry pressure transmitter (PIT-SLR-11-200, -201, -202), delayed for 15 seconds during pump start;
- Sluice water line protection; position "Pump Back Flush" signal from (ZS-MOV-11-300, -301, and -302), slurry line automatic diverter valves (MOV-11-300, -301, -302) directed to send slurry into sluice water line;
- Leak detected; signal from (XXXXXXXXXXX);
- RCS fault; signal from RCS;
- Local E-stop; signal from local E-stop (XX-SLR-11-200, -201, -202);
- Soft-S-stop; signal from the HMI station; and
- Master On/Off: signal from HMI station.

3.4.2 Lift tables (LFT-11-300, -301, and -302)

The slurry pump lift tables are driven by reversible, single speed, 480 vac, 3-phase drive motors. These motors are locally controlled by a hand switches (HS-LFT-11-300, 301, and 302) mounted on the front of the local control cabinet. The elevation of the lift tables is tracked by the lift table level transmitters (LT-LFT-11-300, 301, and 302). The value of the elevation is displayed remotely on the HMI screens discussed in Section 1.1.

Lift Table Operation Interlocks include:

- Pump inlet solids contact; signal from slurry pump inlet solids contact switch (YS-PMP-300, -301, -302);
- High level position; set point=16 ft.; signal from lift table level transmitter (LT-LFT-300, -301, -302);
- Low level position; set point=1 ft; signal from lift table level transmitter (LT-LFT-300, -301, -302);
- Local E-stop; signal from local E-stop (XX-SLR-11-200, -201, -202); and
- Soft S-stop; signal from the HMI.

3.4.3 Hose Bundle Reels (CBR-11-300, and -301)

Due to safety issues of having personnel handling the hose bundle from inside the module while the hose bundle reels are in operation, the hose bundle reel is only operated locally. The hose bundle reels are driven by reversible, single speed, 480 vac, 3-phase drive motors. The reels are operated by a "run/stop" hand switch (HS-CBR-11-300, -301, and 302) located on the front of the local control cabinets.

Hose Bundle Reel Operational Interlocks include:

- Local E-stop; signal from local E-stop (XX-SLR-11-200, -201, -202).

3.4.4 Automatic Control Valves (MOV-11-306, 307, 308)

The automatic control valves, powered by a single phase 120 vac UPS power, are used to inject sluice water into the slurry discharge line exiting the module in order to keep the slurry solids concentration at 20% by weight or less. When operating the slurry pump remotely, the valves are close loop controlled by the central control PLC using signals from the slurry mass flow meter (FET-SLR-11-200, -201, -202). The PLC controls the valve automatically, opening the valve at 20% solids or higher and closes the valve at 15% solids or lower. The valve operation is interlocked to operate only when the slurry pump is operating. When operating locally (manually) the valves are operated by switching "open/close" hand switch (HS-MOV-11-306, -307, and 308) to the desired position. Valve position is provided by 4-20 ma signal to the HMI. Fully closed and fully open valve positions are provided by limit switches.

3.4.5 Slurry Line Automatic Diverter Valves (MOV-11-300, -301, -302)

The slurry line automatic diverter valves are electrically actuated, 3-way ball valves. The actuators are powered by 120 vac, single-phase UPS power. They direct the slurry flow to the slurry transfer line when in position "Normal Pumping" sensed by valve position switches (ZS-MOV-11-300A/B/C/D, -301A/B/C/D, and 302A/B/C/D). When in position "Pump Back Flush", the valves allow sluice water to be directed to the slurry pump discharge for back flushing purposes. When in position "Flush to TTA", the valves allow sluice water to be directed though the slurry transfer line. The valves are interlocked with pump positive rotation operation to ensure the pump cannot discharge slurry to the sluice (flush) water line. When operating the slurry pump remotely, the valves are automatically positioned by PLC from HMI commands as

described in Section 1.1. When operated manually from the local control cabinet, the operator moves the valve position by moving the valve position selector switch (HS MOV-11-300, -301, and -302) to the desired valve position.

3.4.6 Sluice (Flush) Water Automatic Diverter Valves (MOV-11-303, -304, -305)

The sluice (flush) water automatic diverter valves are electrically actuated, 3-way ball valves. The actuators are powered by 120 vac, single-phase UPS power. They direct the sluice water flow to the slurry pump inlet screen when in position "Flush Supply to Pump Can" sensed by valve position switches (ZS-MOV-11-303A/B/C/D, -304A/B/C/D, and 305A/B/C/D). When in position "Flush Supply to MOV-11-300 (-301, -302), the valves sluice (flush) water to the slurry transfer line for forward flushing purposes. When operating the slurry pump remotely, the valves are automatically positioned by PLC from HMI commands as described in Section 1.0. When operated manually from the local control cabinet, the operator moves the valve position by moving the valve position selector switch (HS MOV-11-303, -304, and -305) to the desired valve position.

3.4.7 Slurry Mass Flow Meter (FET-SLR-11-200, -201, -202)

The slurry mass flow meter is a corriolis type straight through dual tube flow meter. The meter operates off 120 vac power and outputs a signal in Profibus format. This signal is used by the PLC when operating the slurry pump remotely to control the % solids of slurry by closed loop control of the automatic control valves (MOV-11-306, 307, 308). The control range is 15% to 20% by weight of solids as discussed in Section 1.1.

3.4.8 Slurry Pressure Transmitter (PIT-SLR-11-200, -201, -202)

The slurry pressure transmitter operates off 24 vdc power and outputs a 4-20 ma analog signal. This signal is used to evaluate the slurry transfer process as well as prevent the slurry pump from being run dry. The slurry pump is interlocked to shut down when the output signal reaches 150 psig or more and shut down when the signal reaches 50 psi or less 15 seconds after the pump start command is received by the PLC.

3.4.9 Lift Table Level Transmitter (LT-LFT-300, -301, -302)

The lift table level transmitter operates off 24 vdc power and outputs a 4-20 ma analog signal. This signal is used to provide the operator with data on the lift table elevation position relative to the floor of the slurry pump enclosure. The lift table drive is interlocked to shut down when the output signal reaches 16 ft or more and shut down when the signal reaches 1 ft or less.

3.4.10 Slurry Pump Inlet Level Transmitter (LT-PMP-300, -301, -302)

The slurry pump inlet ultrasonic level transmitter operates off 24 vdc power and outputs a 4-20 ma analog signal. This signal is used to provide the operator with data on the slurry pool depth relative to pump suction. The data is used to prevent the slurry pump from being run dry. The level data is also used to evaluate the material balance in the heel surge tank during silo heel retrieval. The slurry pump drive is interlocked to shut down when the output signal reaches 6 in or less.

3.4.11 Slurry Pump Inlet Solids Contact Switch (YS-PMP-300, -301, -302)

The slurry pump inlet contact switch operates off 24 vdc power and provides digital output signal. The switch is used to detect when the slurry pump inlet screen contact the solid material in the silos and prevents inlet screen damage from driving the pump into the solid material. The lift table drive is interlocked to stop when the switch is made by contacting solid material.

3.5 High Pressure Water Pump Skids (SKD-11-250 and SKD-11-251)

The High Pressure Water (HPW) Pump skids contains the following devices that interact with local and remote control systems:

- Lubrication water sump pump (PMP-11-252, and 258);
- Lubrication water sump level switch (LS SMP-11-251 and -257);
- Collection pan sump pump (PMP-11-253, and 259);
- Collection pan sump level switch (LSH SMP-11-250 and -256);
- Local E-stop (XX-PMP-11-250 and -251); and
- Soft S-stop from the HMI.

3.6 SREE Cutting Jet Pump Subsystem

The SREE Cutting Jet Pumo Subsystem contains the following devices

- SREE cutting jet HPW supply pump (PMP-11-250 and -256);
- Supply/Recycle automatic diverter valves (AOV-11-233 and -244);
- Automatic pressure control valve (AOV-11-231 and -243);
- Differential flow meters (FE PMP-11-250A&B and -256A&B);
- Discharge pressure transmitters (PT PMP-11-250 and -256); and
- Discharge pressure controller (PY PMP-11-250 and -256).

3.7 Jet Pump HPW Supply Pump Subsystem

The Jet Pump HPW Supply Pump Subsystem contains the following devices:

- Jet pump HPW supply pump (PMP-11-251 and -257);
- Supply/Recycle automatic diverter valves for PMP-11-251 and -257, (AOV-11-233 and -244);
- Automatic pressure control valve for PMP-11-251 and -257, (AOV-11-234 and -245);

3388

- Differential flow meters (FE PMP-11-251A&B and -257A&B);
- Discharge pressure transmitters (PT PMP-11-251 and -257); and
- Discharge pressure controller (PY PMP-11-251 and -257).

3.8 Decon Pump HPW Supply Pump Subsystem

The Decon Pump HPW Supply Pump Subsystem contains the following devices:

- Decon HPW supply pump (PMP-11-254 and -260);
- Supply/Recycle automatic diverter valves for PMP-11-254 and -260, (AOV-11-250 and -238);
- Automatic pressure control valve for PMP-11-254 and -260 (AOV-11-239 and -251);
- Differential flow meters (FE PMP-11-254A&B and -260A&B);
- Discharge pressure transmitters (PT PMP-11-254 and -260); and
- Discharge pressure controller (PY PMP-11-254 and -260).

3.8.1 Lubrication Water Sump Pump (PMP-11-252, and 258) and Lubrication Water Sump Level Switch (LS SMP-11-251 and -257)

The lubrication water sump pump is an air operated diaphragm pump which returns the HPW lubrication water back to the process water recycle loop. The pump is located in a small collection tank. The pump turns on automatically when the upper level switch (LS SMP-11-251 and -257) is energized and opens the solenoid operated air valve controlling the compressed air that drives the pump. When the sump level reaches the lower limit, the limit switch de-energizes the solenoid and tuns off the pump. The level switch and the solenoid are both operated off 24 vdc power. The sump pump operates in this manner for both local and remote HPW pump skid operation.

3.8.2 Collection Pan Sump Pump (PMP-11-253, and 259) and Collection Pan Sump Level Switch (LSH SMP-11-250,and 256)

The collection pan sump pump is an air operated diaphragm pump which returns the any leakage water back to the process water recycle loop. The pump is located in the skid collection pan sump. The high level switch (LSH SMP-11-250, and 256) senses the presence of liquid in the sump in case a HPW pump or piping develops a leak. If liquid is detected, the sensor sends a digital fault signal. This fault signal is sent to the PLC which then is displayed on the HMI screens discussed in Section 1.0. The fault signal is also displayed locally on the front of the local control cabinet. The compressed air driving the sump pump is manually turned on by opening HOV-11-246. This valve is manually operated to ensure that operations personnel inspect the cause and condition of any leakage before draining the sump and continuing operations. The level switch is operated off 24 vdc power. The sump pump operates in this manner for both local and remote HPW pump skid operation.

3388

3.8.3 Local E-Stop (XX-PMP-250, and -251)

The HPW pump skids have a local E-stop button conspicuously mounted to the front of the local control cabinet. Depressing this E-stop button de-energizes all electrically operated equipment on the skid. The E-stop operates in either local or remote operations.

3.8.4 SREE Cutting Jet Pump Subsystem

3.8.4.1 SREE Cutting Jet HPW Supply Pump (PMP-11-250 and -256)

The SREE cutting jet HPW pump is a 3-piston, positive displacement pump driven by a 75hp single speed, 480 vac, 3-phase drive. The pumps operate in a range of 0 gpm to 10 gpm as indicated by differential flow meters (FE PMP-11-250A&B and -256A&B) and 50 to 10,000 psig as indicated by discharge pressure transmitters (PT PMP-11-250 and -256). Locally the pump is controlled by a local control cabinet mounted "hand/off/auto" switch (HOA-PMP- 11-250 and -251) and a local control cabinet mounted 3-way pump/diverter valve control switch (HC PMP-11-250 and 256). Switching to the "hand" position enables the local pump controls and the 3-way switch starts the pump and directs the HPW to recycle or to the cutting jets. The pressure is locally controlled by adjusting the manual pressure control valve (HOV-11-230 and -244). The HPW supply pump is remotely controlled from the HMI features discussed in Section 1.0.

Pump Operation Interlocks include:

- Low process water supply pressure >30 psi, signal from local hardware interlock switch (PSL PMP-11-250 and -256);
- Low pump crankcase lubricant level; signal from local hardware interlock switch (LSL PMP-11-250 and -256);
- High discharge pressure <10,000 psig; signal from slurry pressure transmitter (PT-PMP-11-250 and -256);
- Leak detected; signal from collection pan level switch (LSH SMP-11-250 and -256);
- RCS fault; signal from RCS;
- Local E-stop; signal from local E-stop (XX-PMP-11-250 and -251);
- Soft S-stop; signal from the HMI; and
- Master On/Off; signal from the HMI.

3.8.4.2 Supply/Recycle Automatic Diverter Valves (AOV-11-230 and -242)

The supply/recycle diverter valve directs the HPW either to the cutting jets or to process water recycle. The valve is an air actuated automatic valve which is operated by a solenoid operated air valve. The solenoid valve is operated with 24 vdc digital signal. The solenoid valve signal is controlled locally by a local cabinet mounted hand switch (HC PMP-11-250 and 256). The valve is operated remotely from the HMI as discussed in Section 1.0.

3.8.4.3 Automatic Pressure Control Valve (AOV-11-231 and –243)

The automatic pressure control valve is an air actuated valve operated by a closed loop controller (PY PMP-11-250 and -256) receiving an analog, 4-20 ma pressure feedback signal from the HPW pressure transmitter (PT PMP-11-250 and -256). The pressure input from the PLC and output signal to the PLC is 24 vdc, 4-20 ma signal. The control valve and transmitter operate in a range of 50 to 10,000 psig. The automatic pressure control valve can only be operated from commands from the HMI as discussed in Section 1.0. Local pressure control is performed through manual adjustment of manual pressure control valve (HOV-11-230 and -244) as described above.

3.8.4.4 Differential Flow Meters (FE PMP-11-250A&B and –256A&B)

The SREE cutting jet pump system has two flow meters, one on the pump process water inlet (FE PMP-11-250A and -256A) and one on the recycle line (FE PMP-11-250B and -256B) returning process water to the site process water system. The flow of HPW supplied to the cutting jets is calculated by the PLC as the difference between the two flow meters. Each meter is powered by 24 vdc power and has a 4-20 ma analog output signal. This signal is distributed to the central control PLC and HMI calculates the differential flow and totals the water usage and displays the values on the HMI screens as discussed in Section 1.0.

3.8.4.5 Discharge Pressure Transmitters (PT PMP-11-250 and -256) and Discharge Pressure Controller (PY PMP-11-250 and -256)

The HPW discharge pressure transmitter operates off 24 vdc power and outputs a 4-20 ma analog signal. This signal is used to control the pump discharge pressure in a closed control loop with the pressure controller (PY PMP-11-250 and -256). The controller sends an output control air signal to the pressure control valve (AOV-11-231 and -243) which controls the pressure. The SREE cutting jet HPW supply pump is interlocked to shut down when the output signal reaches 10,000 psig or more. The controller and pressure transmitter send and receive signal to/from the central control PLC and the HMI. The remote pump pressure displays and operations are as discussed in Section 1.0.

3.8.5 Waste Removal Jet Pump HPW Supply Subsystem

3.8.5.1 Waste Removal Jet [Pump HPW Supply Pump (PMP-11-251 and -257)

The jet pump HPW supply pump is a 3-piston, positive displacement pump driven by a 75hp single speed, 480 vac, 3-phase, drive. The pumps operate in a range of 0 gpm to 10 gpm as indicated by differential flow meters (FE PMP-11-251A&B and –257A&B) and 50 to 10,000 psig as indicated by discharge pressure transmitters (PT PMP-11-251 and -257). Locally the pump is controlled by a local control cabinet mounted "hand/off/auto" switch (HOA-PMP- 11-251 and -257) and a local control cabinet mounted 3-way pump/diverter valve control switch (HC PMP-11-251 and 257). Switching to the "hand" position enables the local pump controls and the 3-way switch starts the pump and directs the HPW to recycle or to the cutting jets. The pressure is locally controlled by adjusting the manual pressure control valve (HOV-11-237 and -251). The HPW supply pump is remotely controlled from the HMI features discussed in Section 1.0.

Pump Operation Interlocks include:

- Low process water supply pressure >30 psi, signal from local hardware interlock switch (PSL PMP-11-251 and -257);
- Low pump crankcase lubricant level; signal from local hardware interlock switch (LSL PMP-11-251 and -257);
- High discharge pressure <10,000 psig; signal from pressure transmitter (PT-PMP-11-251 and -257);
- Leak detected; signal from collection pan level switch (LSH SMP-11-250 and -256);
- RCS fault; signal from RCS;
- Local E-stop; signal from local E-stop (XX-PMP-11-250 and -251);
- Soft S-stop; signal from the HMI; and
- Master On/Off; signal for HMI.

3.8.5.2 Supply/Recycle Automatic Diverter Valves (AOV-11-233 and -244)

The supply/recycle diverter valve directs the HPW either to the jet pump or to process water recycle. The valve is an air actuated automatic valve, which is operated by a solenoid operated air valve. The solenoid valve is operated with 24 vdc digital signal. The solenoid valve signal is controlled locally by a local cabinet mounted hand switch (HC PMP-11-251 and 257). The valve is operated remotely from the HMI as discussed in Section 1.0.

3.8.5.3 Automatic Pressure Control Valve (AOV-11-234 and -245)

The automatic pressure control valve is an air actuated valve operated by a closed loop controller (PY PMP-11-251 and –257) receiving an analog, 4-20 ma pressure feedback signal from the HPW pressure transmitter (PT PMP-11-251 and 257). The pressure input from the PLC and output signal to the PLC is 24 vdc. The control valve and transmitter operate in a range of 50 to 10,000 psig. The automatic pressure control valve can only be operated from commands from the HMI as discussed in Section 1.0. Local pressure control is performed through manual adjustment of manual pressure control valve (HOV-11-237 and -251) as described above.

3.8.5.4 Differential Flow Meters (FE PMP-11-251A&B and -257A&B)

The jet pump HPW supply pump system has two flow meters, one on the pump process water inlet (FE PMP-11-251A and -257A) and one on the recycle line (FE PMP-11-251B and -257B) returning process water to the site process water system. The flow of HPW supplied to the jet pump is calculated by the PLC as the difference between the two flow meters. Each meter is powered by 24 vdc power and has a 4-20 ma analog output signal. This signal is distributed to the central control PLC and HMI calculates the differential flow and totals the water usage and displays the values on the screens as discussed in Section 1.0.

3.8.5.5 Discharge Pressure Transmitters (PT PMP-11-250 and -256)and Discharge Pressure Controller (PY PMP-11-250 and -256)

The HPW discharge pressure transmitter operates off 24 vdc power and outputs a 4-20 ma analog signal. This signal is used to control the pump discharge pressure in a closed control loop with the pressure controller (PY PMP-11-250 and -256). The controller sends an output control air signal to the pressure control valve (AOV-11-231 and -243) which controls the pressure. The jet pump HPW supply pump is interlocked to shut down when the output signal reaches 10,000 psig or more. The controller and pressure transmitter send and receive signal to/from the central control PLC and the HMI. The remote pump pressure displays and operations are as discussed in Section 1.0.

3.9 Hydraulic Power Unit Skids

The Hydraulic Power Unit (HPU) supplies hydraulic fluid under pressure to the SREE cutting jets rotational motor. The HPU can adjust the hydraulic flow to the SREE to control the cutting jets rotational speed.

The HPU is hardwired to the slurry's ET200M data and control node. The number of signals required by the HPU. The control signals includes hydraulic motor start and stop, hydraulic fluid flow control, hydraulic fluid flow sensor signal, fluid discharge pressure signal, hydraulic oil temperature, reservoir low warning and reservoir low-low signal, hydraulic filter clogged, and general fault signal.

The HPU has the following operations that happen without PLC control. These operations include hydraulic oil recirc pump operation and hydraulic oil cooler operation.

Appendix H

INFORMATION ONLY

3388

FOSTER WHEELER

FOSTER WHEELER ENVIRONMENTAL CORPORATION

PROCESS CONTROL PLAN (RADON CONTROL SYSTEM)

DOCUMENT NO. 624-P622-36A

FOR THE

SILOS 1 AND 2 ACCELERATED WASTE RETRIEVAL (AWR) PROJECT

SUBMITTED TO:

FLUOR FERNALD, INC.

CONTRACT NO. FSC 624

000620

000228

Silo Logic Description

SYSTEM 20 RCS LOGIC DESCRIPTION

PHASE 1 - Radon (reduction) Control in the Silo 1 and Silo 2 Headspaces

During Phase 1, Silo 1 and 2 will be connected to the ventilation system via flexible ducts to the rigid ducts located on the pipe rack, the ventilation air is withdrawn from the Silos 1 and 2 and transferred to the Radon Control System (there will be no Sluicer, Emma or Slurry modules connected to the silo). The treated ventilation air is returned to the silos for the sweep ventilation. The desired pressure conditions are maintained by using an automatically controlled fan and damper system to maintain a predetermined line supply pressure to the silos. The RCS will continue to operate in this scheme while radon concentration in the silo head spaces is reduced to a concentration that will allow safe access for work activities in the silo area. The following paragraphs provide the detail description of the control logic which will be used for programming of the RCS – PLC.

2. 1. Exhaust/Recirculation Fans FAN-20-001A and FAN-20-001B

The air from the silos is pulled out by one of the exhaust/recirculation variable speed drive fans FAN-20-001A or FAN-20-001B.

The air from each silo passes through their respective opposed blade damper, LVR-20-001 and LVR-20-004 that serves to help maintain a negative pressure (vacuum) in each silo. The air supply to each silo passes through their respective opposed blade damper, LVR-20-002 and LVR-20-003.

HMI will have a soft two-position selector switch 'FAN-20-001A - FAN-20-001B'. Operator will select the fan manually. Selected fan discharge damper DMP-20-017 or DMP-20-021 will open and selected fan will run. The other fan will be in standby mode. If running fan fails or is placed in local OFF at fan, the PLC will send alarm to HMI, the fan's damper will close, standby damper will open and standby fan will start automatically. The operator must press soft RESET button in the HMI to clear the alarm.

The stand-by fan will stay in operation unless the operator returns the fan to AUTO and re-selects the previous fans for operation.

Alternating fans may be done by selecting the alternate fan on HMI or selecting the AUTO-rotation of the fans. This will allow auto-rotation of fans on a timed bases. There will be a password required to invoke this selection.

Each fan is controlled by the local HAND-OFF- AUTO three position switch (HOA-FAN-20-001A or HOA-FAN-20-001B). Switch will send two digital input (2CI) to the PLC for each fan. Both fan local switch will be in AUTO position during normal operation.

Hand position – Fan will run, the interlocks are by-passed. Speed is controlled by pendant on VSD (VSD must be in local position).

Off position – Fan will stop.

Auto position- Fan will start and stop from the PLC/HMI signal (CO).

HMI will have soft HAND-OFF-AUTO switch.

Soft Auto position – Fan will start-stop based on the run-standby logic. Fan will shutdown on any of the following conditions.

1. Unrelieved high or low pressure in silos (PDIT-SILO-20-001 and PDIT-SILO-20-002).

2. Both desiccant dryer and chiller (DDS-20-001A or B and CHR-20-001A or B) shutdown. Bypass these signals during fan start-up.

3. Respective discharge damper is closed.

In normal operation both fan soft selector switch will be in AUTO position.

Variable Speed Drives for the fans are located on the second floor of the RCS building and will have 'Remote-Local' selection for the speed control, in remote mode it will receive the 4-20 mA signal (AO) from the PLC based on the supply pressure transmitter PDIT-FAN-20-001A/B and will require signal from TTA in subsequent phases PID control, in local mode speed will be controlled from local control pendant on the VSD.

Speed of the fan will be manually controlled on the HMI screen.

VSD will receive start-stop signal (CO) from PLC and it will send run signal (CI) and (AI) 0-10 volts to the PLC/HMI.

Air flow transmitter FIT-FAN-20-001A/B will monitor air flow discharge from fan FAN-20-001A or B though the opposed blade damper LVR-20-016 to stack and it will send 4-20 mA signal to the PLC, flow rate will be displayed locally and at the HMI and PLC when LVR-20-0016 is being operated and will log the flow data at _____ seconds interval. Operator will set the pressure desired, controller will modulate the opposed blade damper LVR-20-016 to discharge pressure to the stack or modulate the opposed blade damper LVR-20-015 to increase the pressure to the desired set point and as other users are added to the system.

Air flow transmitter FIT-FAN-20-001R will monitor air flow discharge from fan FAN-20-001A/B to suction side (recirc) and it will send 4-20 mA signal to the PLC,

flow rate will be displayed in the HMI and PLC will log the flow data at _____ seconds interval. This reading will be used to adjust the VSD to the desired total flow rate when system is isolated in startup.

Damper DMP-20-017 is open-close dampers and will isolate exhaust/recirculation fan FAN-20-001A discharge. Damper is controlled from local H-O-A switch HOA-DMP-20-017. Switch will send two digital input (2CI) to the PLC.

Hand (open) position – Damper will open, the interlocks are by-passed.

Off (close) position – Damper will close, the interlocks are by-passed

Auto position- Damper will open and close from the PLC/HMI (CO).

HMI will have soft OPEN-CLOSE-AUTO switch.

Soft Auto position – Damper will close/open based on run/standby logic. Damper will close on following conditions.

1. Fan shutdown (signal to be bypassed during opening of the damper).

Dampers DMP-20-017 control valve (open/close) will receive control signal (CO) from the PLC. Damper limit switch (damper open or close indication) ZS-DMP-20-017A/B will send a two digital input signals (2CI) to the PLC/HMI. The open limit switch will give permissive signal to the fan: FAN0290001A.

Damper DMP-20-021 is open-close dampers and will isolate exhaust/recirculation fan FAN-20-001B discharge. Damper is controlled from local H-O-A switch HOA-DMP-20-021. Switch will send two digital input (2CI) to the PLC.

Hand (open) position – Damper will open, the interlocks are by-passed.

Off (close) position – Damper will close, the interlocks are by-passed.

Auto position- Damper will open and close from the PLC/HMI.

HMI will have soft OPEN-CLOSE-AUTO switch.

Soft Auto position – Damper will close/open based on run/standby logic. Damper will close on following conditions.

1. Fan shutdown (signal to be bypassed during opening of the damper).

Dampers DMP-20-021 control valve (open/close) will receive control signal (CO) from the PLC. Damper limit switch (damper open or close indication) ZS-DMP-20-

021A/B will send a two digital input signals (2CI) to the PLC/HMI. The open limit switch will give permissive signal to the fan. FAN-20-001B

Differential pressure transmitter PDIT-FAN-20-001A/B monitors FAN-20-001A/B discharge pressure and it will send 4-20 mA signal (AI) to the PLC, differential pressure will be displayed in the HMI and PLC will log the pressure data at ____ seconds interval. It will control exhaust opposed blade damper LVR-20-016 on high pressure, and intake opposed blade damper LVR-20-015 on low pressure. The set-point will be operator adjustable in the HMI.

2. **PDIT-SILO-20-002 monitors and controls the pressure inside the silo 2.**

Range: -5" to +5" H2O

Pressure transmitter will send a 4-20 mA (AI) signal to the PLC and a PID control will maintain the pressure set point entered by the operator from HMI, by modulating the dampers LVR-20-001, LVR-20-002 and LVR-20-016.

The targeted range of the operation is from 0.0 to -1.0 inches water gauge. Acceptable ranges of operation are 0.5 to –2 inches water gauge.

PDIT-SILO-20-001 monitors and controls the pressure inside the silo 1.

Range: -5" to +5" H2O

Pressure transmitter will send a 4-20 mA (AI) signal to the PLC and a PID control will maintain the pressure set point entered by the operator from HMI, by modulating the dampers LVR-20-003, LVR-20-004 and LVR-20-016.

The targeted range of the operation is from 0.0 to -1.0 inches water gauge. Acceptable ranges of operation are 0.5 to –2 inches water gauge.

3. **Dampers LVR-20-001 , LVR-20-002 and LVR-20-016 for Silo 2**

PLC shall control the silo 2 pressure by modulating the discharge air control opposed blade damper LVR-20-001 and re-circulating air supply opposed blade damper LVR-20-002. These opposed blade dampers will operate in a slave and master arrangement.

If differential pressure increases (decrease in vacuum) discharge air opposed blade damper LVR-20- 001 shall modulate to open, when it reaches 100% and if pressure is still high then re-circulating opposed blade damper LVR-20-002 shall modulate to close to maintain the pressure.

If LVR-20-002 closes 100% and differential pressure is still high then the supply will increase due to 500 scfm being diverted to silo 1. Opposed blade damper LVR-20-016 will begin to open and exhaust air to the stack STK-20-001 to reduce the

differential pressure. The flow transmitter FIT-FAN-20-001A/B will then control LVR-20-016 to exhaust the same flow as FIT-SILO-20-002. This set point is additive.

Opposed blade dampers LVR-20-001, 002 and 016 receives 4-20 mA signal (AO) from the PLC for control and sends 4-20 mA feedback signal (AI) to the PLC for it's position indication.

Each opposed blade damper will have a controller in the HMI from which operator will be able to control modulating of the opposed blade damper manually or automatic based on the PLC logic.

Damper DMP-20-054 is an open-close damper and will isolate Silo 1 or Silo 2. Damper is controlled from a local H-O-A switch HOW-DMP-20-054. Switch will send two-digital input (2CI) to the PLC.

Hand (open) position – Damper will open, the interlocks are by-passed.

Off (close) position – Damper will close, the interlocks are by-passed.

Auto position – Damper will open and close from the PLC/HMI.

HMI will have Soft Auto-Open-Close switch. Soft Auto position-Damper will operate on automatic on any of the following conditions:

1. Open on high positive set point from PDIT-SILO-20-001 or PDIT-SILO-20-002

2. Open on failure of LVR-20-004

Dampers DMP-20-054 control motor (open/close) will receive control signal (CO) from the PLC. Damper limit switches (damper open or close indication) ZS-DMP-20-054 A/B will send a two digital input signals (2CI) to the PLC/HMI.

Damper DMP-20-058 is an open-close damper and will isolate Silo 2. Damper is controlled from a local H-O-A switch HOW-DMP-20-058. Switch will send two-digital input (2CI) to the PLC.

Hand (open) position – Damper will open, the interlocks are by-passed.

Off (close) position – Damper will close, the interlocks are by-passed.

Auto position – Damper will open and close from the PLC/HMI.

HMI will have Soft Auto-Open-Close switch. Soft Auto position-Damper will operate on automatic on any of the following conditions:

1. Open on high positive set point from PDIT-SILO-20-002

2. Open on failure of LVR-20-001

Dampers DMP-20-058 control motor (open/close) will receive control signal (CO) from the PLC. Damper limit switches (damper open or close indication) ZS-DMP-20-058 A/B will send a two digital input signals (2CI) to the PLC/HMI.

Damper DMP-20-084 is an open-close damper and will isolate Silo 1. Damper is controlled from a local H-O-A switch HOW-DMP-20-084. Switch will send two-digital input (2CI) to the PLC.

Hand (open) position – Damper will open, the interlocks are by-passed.

Off (close) position – Damper will close, the interlocks are by-passed.

Auto position – Damper will open and close from the PLC/HMI.

HMI will have Soft Auto-Open-Close switch. Soft Auto position-Damper will operate on automatic on any of the following conditions:

1. Open on high positive set point from PDIT-SILO-20-001

2. Open on failure of LVR-20-004

Dampers DMP-20-084 control motor (open/close) will receive control signal (CO) from the PLC. Damper limit switches (damper open or close indication) ZS-DMP-20-084 A/B will send a two digital input signals (2CI) to the PLC/HMI.

Air flow transmitter FIT-SILO-20-002 monitor air flow though the damper LVR-20-001 and it will send 4-20 mA signal to the PLC, flow rate will be displayed in the HMI and PLC will log the flow data at _____ seconds interval.

Dampers LVR-20-004, LVR-20-003 and LVR-20-016 for Silo 1

PLC shall control the silo 1 pressure by modulating the discharge air control opposed blade damper LVR-20-004 and re-circulating air supply damper LVR-20-003. These opposed blade dampers will operate in a slave and master arrangement.

If differential pressure increases (decrease in vacuum) discharge air opposed blade damper LVR-20- 004 shall modulate to open, when it reaches 100% and if pressure is still high then re-circulating opposed blade damper LVR-20-003 shall modulate to close to maintain the pressure.

If LVR-20-003 closes 100% and differential pressure is still high then the supply will increase due to 500 scfm being diverted to silo 2. Opposed blade damper LVR-20-016 will begin to open and exhaust air to the stack STK-20-001 due to increased pressure at PDIT-FAN-20-001 A/B. The flow transmitter FIT-FAN-20-001A/B will

then control LVR-20-016 to exhaust the same flow as FIT-SILO-20-001. This set point is additive.

Opposed blade dampers LVR-20-003, 004 and 016 receives 4-20 mA signal (AO) from the PLC for control and sends 4-20 mA feedback signal (AI) to the PLC for it's position indication.

Each opposed blade damper will have a controller in the HMI from which operator will be able to control modulating of the damper manually or automatic based on the PLC logic.

Air flow transmitter FIT-SILO-20-001 monitor air flow though the opposed blade damper LVR-20-004 and it will send 4-20 mA signal to the PLC, flow rate will be displayed in the HMI and PLC will log the flow data at _____ seconds interval.

4. **Fan recirculation opposed blade damper LVR-20-020**

Recirculation opposed blade damper LVR-20-020 shall modulate to maintain flow set point and flow transmitter FIT-FAN-20-001R so that the exhaust fan FAN-20-001A or B speed does not need to change during changing flows in the system.

Opposed blade dampers LVR-20-020 receives 4-20 mA signal (AO) from the PLC for control and sends 4-20 mA feedback signal (AI) to the PLC for its position indication.

Opposed blade damper will have a controller in the HMI from which operator will be able to control modulating of the opposed blade damper manually or automatic based on the PLC logic.

5. **Makeup air opposed blade damper LVR-20-015 and makeup air filter FLT-20-004**

A tee in the flow path before the exhaust fans provides makeup air to the closed air system through opposed blade damper LVR-20-015.

Opposed blade damper LVR-20-015 is a modulating opposed blade damper, it supplies make-up air to compensate for the air exhausting from the opposed blade damper LVR-20-016 through stack. Opposed blade damper will receive modulating signal from pressure transmitter controller PDIT-FAN-20-001A/B to maintain pressure set point.

Opposed blade damper LVR-20-015 receives 4-20 mA signal (AO) from the PLC for control and sends 4-20 mA feedback signal (AI) to the PLC for its position indication.

Air flow transmitter FIT-FLT-20-004 will monitor air flow from makeup air filter FLT-20-004 though the damper LVR-20-015 and it will send 4-20 mA signal to the

PLC, flow rate will be displayed locally and at the controller in the HMI and PLC will log the flow data at _____ seconds interval.

Differential pressure transmitter PDIT-FLT-20-004 monitors differential pressure across filter FLT-20-004 and it will send 4-20 mA signal (AI) to the PLC, differential pressure will be displayed in the HMI and PLC will log the pressure data at ____ seconds interval. It will initiate the alarm in the HMI if differential pressure will be above the set-point. The set-point will be operator adjustable in the HMI.

6. **Roughing filters FLT-20-001A and B, Desiccant drying system DDS-20-001A and B and Chiller units CHR-20-001A and B.**

The pulled out air from Silo 1 and 2 passes through one train of the redundant roughing filters and desiccant drying system/chiller (A train or B train).

Differential pressure transmitter PDIT-SILO-20-003 monitors total differential pressure in header from both Silo 1 & 2 and it will send 4-20 mA signal (AI) to the PLC, differential pressure will be displayed in the HMI and PLC will log the pressure data at ____ seconds interval.

Moisture transmitter MT-TOT-20-001 monitors total moisture going in to the Desiccant dryer/chiller and it will send 4-20 mA signal (AI) to the PLC, moisture content will be displayed in the HMI and PLC will log the moisture data at ____ seconds interval.

Temperature transmitter TT-TOT-20-001 monitors air temperature going in to the Desiccant dryer/chiller and it will send 4-20 mA signal (AI) to the PLC, temperature will be displayed in the HMI and PLC will log the temperature data at ____ seconds interval.

Differential pressure transmitter PDIT-FLT-20-001A monitors differential pressure across roughing filter FLT-20-001A and it will send 4-20 mA signal (AI) to the PLC, differential pressure will be displayed in the HMI and PLC will log the pressure data at ____ seconds interval if exceed high set point. It will initiate the alarm in the HMI if differential pressure will be above the high-high set point; operator will reset the alarm from the HMI. The set point will be operator adjustable in the HMI.

Differential pressure transmitter PDIT-DDS-20-001A monitors differential pressure across desiccant dryer DDS-20-001A and it will send 4-20 mA signal (AI) to the PLC, differential pressure will be displayed in the HMI and PLC will log the pressure data at ____ seconds interval if exceed high set point. It will initiate the alarm in the HMI if differential pressure will be above the high-high set point; operator will reset the alarm from the HMI. The set point will be operator adjustable in the HMI.

Differential pressure transmitter PDIT-FLT-20-001B monitors differential pressure across roughing filter FLT-20-001B and it will send 4-20 mA signal (AI) to the PLC, differential pressure will be displayed in the HMI and PLC will log the pressure data at ____ seconds interval if exceed high set point. It will initiate the alarm in the HMI if differential pressure will be above the high-high set point; operator will reset the alarm from the HMI. The set point will be operator adjustable in the HMI.

Differential pressure transmitter PDIT-DDS-20-001B monitors differential pressure across desiccant dryer DDS -20-001B and it will send 4-20 mA signal (AI) to the PLC, differential pressure will be displayed in the HMI and PLC will log the pressure data at ____ seconds interval if exceed high set point. It will initiate the alarm in the HMI if differential pressure will be above the high-high set point; operator will reset the alarm from the HMI. The set point will be operator adjustable in the HMI.

Dampers DMP-20-001 and DMP-20-002 are open-close dampers and will isolate train 'A' desiccant dryer/roughing filter. Dampers are controlled from local H-O-A switches HOA-DMP-20-001 and HOA-DMP-20-002. Each switch will send two digital input (2CI) to the PLC.

Hand (open) position – Damper will open, the interlocks are by-passed.

Off (close) position – Damper will close, the interlocks are by-passed.

Auto position- Damper will open and close from the PLC/HMI.

HMI will have soft Auto- Open-Close switch.

Soft Auto position – Damper will close on following conditions.

1. High-High differential pressure across roughing filter (PDIT-FLT-20-001A).
2. General alarm from desiccant dryer (DDS -20-001A) and chiller (CHR-20-001A).

Dampers DMP-20-001 and DMP-20-002 control valves (open/close) will receive control signal (CO) from the PLC. Damper limit switches (damper open or close indication) ZS-DMP-20-001A/B and ZS-DMP-20-002A/B will send a two digital input signals (2CI for each switch)to the PLC/HMI. Limit switches input shall become permissive for the control of the Desiccant dryer and the Chiller units.

Dampers DMP-20-003 and DMP-20-004 are open-close dampers and will isolate train 'B' desiccant dryer/roughing filter. Dampers are controlled from local H-O-A switches HOA-DMP-20-003 and HOA-DMP-20-004. Each switch will send two digital input (2CI) to the PLC.

Hand (open) position – Damper will open, the interlocks are by-passed.

Off (close) position – Damper will close, the interlocks are by-passed.

Auto position- Damper will open and close from the PLC/HMI. HMI will have soft Auto- Open-Close switch.

Soft Auto position – Damper will close on following conditions.

1. High-High differential pressure across roughing filter (PDIT-FLT-20-001B).

2. General alarm from desiccant dryer (DDS-20-001B) and chiller (CHR-20-001B).

Dampers DMP-20-003 and DMP-20-004 control valves (open/close) will receive control signal (CO) from the PLC. Damper limit switches (damper open or close indication) ZS-DMP-20-003A/B and ZS-DMP-20-004A/B will send a two digital input signals (2CI for each switch)to the PLC/HMI. Limit switches input shall become permissive for the control of the Desiccant dryer and the Chiller units.

There will be a soft selector switch 'DDS-20-001A – DDS-20-001B' in HMI, operator will select which train will be in operation. The selected train Chiller, Desiccant dryer and Roughing filter will run, it will shutdown on any of the following conditions. On shutdown it will send an alarm to HMI and a stand-by train will start.

1. High-High differential pressure across desiccant dryer.

2. High-High differential pressure across roughing filter.

3. High moisture signal from MT-CBD-20-001.

4. Train shutdown (chiller and dryer) because of internal problems and High-High water in dryer.

5. Soft timer in HMI timed out. Timer will be operator adjustable, range ----- hours.

Stand-by train will stay in operation unless Operator re-selects the previous train for operation. Alternating chiller/dryer may be done by reselecting a chiller/dryer on HMI. The operator must press soft RESET button in the HMI to clear the alarm.

Note that the when switchover occurs the online train shall stay open until the switch over train is open, the isolating damper valves will then shutdown the unit.

Desiccant dryers and Chiller units both works together, chiller unit shall be started first, it will give permissive signal to the desiccant dryer to start via plant PLC. Also if Desiccant dryer shutdown associated chiller will shutdown.

Upon existing the roughing filter, the ventilation air enters desiccant drying system (DDS-20-001A Or DDS-20-001B) at 90 degree F and 100% relative humidity where steam is cooled and dehumidified to 40 degree F and 15% relative humidity. This conditioning of the ventilation air in the desiccant drying system is achieved by using a precooling coil, regenerative desiccant wheel, post-cooling coil, closed loop reactivation system, and a condensate collection and transfer system. The precooling coil cools and dehumidifies the ventilation air to a stream that is 55 degree F saturated air. From the precooling coil, the air flows through a desiccant impregnated wheel where the air is dehumidified. The temperature of the air exiting the wheel is 98 degree F with moisture content of 5 grains per pound (moisture content that corresponds to 15% relative humidity and 40 degree F). Ventilation air from the desiccant wheel flows through a post-cooling coil where the air is cooled to the target temperature of 40-degree F before existing the desiccant drying system. Chilled water streams for the cooling coils within the desiccant drying system are provided by the chiller (CHR-20-001A or CHR-20-001B) located outside the RCS building.

Each Desiccant dryer (DDS-20-001A and DDS-20-001B) has a local control panel; the local panel will perform all unit control functions. Following interface signals will be sent or received from the plant PLC.

1. Common trouble alarm (shut down alarm) to the plant PLC.

2. High-high condensate level to the plant PLC.

3. Remote start-stop signal (NC dry contact) from the plant PLC.

Plant PLC/HMI will display all above information (GA-DDS-20-001A and GA-DDS-20-001B, LSHH-DDS-20-001A and LSHH-DDS-20-001B), there will be a soft H-O-A switch in the HMI.

Soft Auto position – Dryer will start-stop based on the run-standby logic. Dryer will shutdown on any following conditions.

1. Both re-circulation fan (FAN-20-001A/B) shutdown.

2. Respective chiller shutdown.

In normal operation both dryer soft elector switch will be in AUTO position.

Each Chiller unit (CHR-20-001A and CHR-20-001B) has a local control panel; the local panel will perform all unit control functions. Following interface signals will be sent or received from the plant PLC.

1. Common trouble alarm to the plant PLC.

2. Remote start-stop signal (NC dry contact) from the plant PLC

Plant PLC/HMI will display all above information (GA-CHR-20-001A and GA-CHR-20-001B), there will be a soft H-O-A switch in the HMI.

Soft Auto position – Chiller will start-stop based on the run-standby logic. Chiller will shutdown on any of the following conditions.

1. Both re-circulation fan (FAN-20-001A/B) shutdown.

2. Respective dryer shutdown.

In normal operation both Chiller soft elector switch will be in AUTO position.

Differential pressure transmitter **PDIT-DDS-20-002** monitors total differential pressure in header from desiccant drying system and it will send 4-20 mA signal (AI) to the PLC, differential pressure will be displayed in the HMI and PLC will log the pressure data at _____ seconds interval if exceed high set point. It will initiate an alarm in the HMI and switch to alternate desiccant dryer. Operator will reset the alarm from the HMI. If alarm persists after transfer to alternate desiccant dryer, system will shutdown.

The set point will be operator adjustable in the HMI.

7. Carbon Beds CBD-20-001A, CBD-20-001B and CBD-20-002A, CBD-20-002B

Within the desiccant drying system the air stream is conditioned to 40 degree F and approximately 15% relative humidity. The air then passes through the carbon beds, CBD-20-001A, CBD-20-001B, CBD-20-002A and CBD-20-002B. The all four beds are operated in parallel. Each bed is aligned with a dedicated inlet and outlet damper for flow control and isolation. Modulating dampers and flow elements provided on the inlet of each bed allow flow to each bed to be reduced or increased on the basis of operations. The design flow for the RCS system is 1000 cubic feet per minute. Ventilation rates and sources vary during different phases of the RCS operation.

The treated air stream through each carbon bed is monitored individually for radon. In the event that elevated levels of radon are detected downstream of a carbon bed, the air flow through the affected bed will be reduced by adjusting the automatic air damper on the inlet side of the carbon bed. If performance of the bed continue to

degrade, the motor operated damper downstream of the affected bed will be closed automatically and the airflow will be redistributed through the other carbon beds.

Moisture transmitter MT-CBD-20-001 monitors air moisture prior to carbon bed from Desiccant dryer/chiller and it will send 4-20 mA signal (AI) to the PLC, moisture content will be displayed at the controller in the HMI and PLC will log the moisture data at ____ seconds interval when exceed high set point.

The operator will select moisture controller humidity set point, if humidity goes above set point alarm will be displayed, stand-by train will start and running desiccant dryer/chiller train will be stopped.

Temperature transmitter TT-CBD-20-001 monitors air temperature entering carbon bed from the Desiccant dryer/chiller and it will send 4-20 mA signal (AI) to the PLC, temperature will be displayed in the HMI and PLC will log the temperature data at ____ seconds interval.

Radon transmitter RQIT-TOT-20-001 (Government Furnished Equipment) monitors radon of air from silos to the dryers and it will send pulse signal (1.3 pulse/pCi/L/minute) and High-High alarm contact signal (programmable) to the PLC. Radiation data will be displayed at the controller in the HMI. Operator will set two set points (High and High-High) and when set points are reached, alarm will be displayed. Set points will be operator adjustable.

Model - Pylon 'CRM-1' continuous active radon monitor.

Range - 20 – 900,000 ?

A Master Flow Controller in the HMI will control four slave controllers (FIT-CBD-20-001A, FIT-CBD-20-001B, FIT-CBD-20-002A and FIT-CBD-20-002B) which will modulate damper for the carbon bed to evenly distribute flow to all beds, which are in operation. Operator will select the total flow set –point (adjustable range ___) for the master controller.

Opposed blade damper LVR-20-017 modulates flow through carbon bed CBD-20-001A based on the signal from the flow controller in the HMI.

Opposed blade damper LVR-20-017 receives 4-20 mA signal (AO) from the PLC for control and sends 4-20 mA feedback signal (AI) to the PLC for its position indication.

Air flow transmitter FIT-CBD-20-001A will control air flow though the opposed blade damper LVR-20-017 and it will send 4-20 mA signal to the PLC, flow controller will be displayed in the HMI, controller will have MAN-AUTO mode in manual mode operator will select the flow rate desired, In auto mode PLC will automatic set the flow rate based on the signal from master controller in the HMI.

PLC will send modulating signal to the opposed blade damper LVR-20-017. PLC will log the flow data at _____ seconds interval. Damper DMP-20-006 is permissive open until High-High radiation is detected.

Differential pressure transmitter PDIT-CBD-20-001A monitors differential pressure across carbon bed CBD-20-001A and it will send 4-20 mA signal (AI) to the PLC, differential pressure will be displayed in the HMI and PLC will log the pressure data at ____ seconds interval if exceed high set point. It will initiate the alarm in the HMI if differential pressure will be above the high set point; operator will reset the alarm from the HMI. The set points will be operator adjustable in the HMI. High-High differential pressure alarm will also close the damper DMP-20-006 and LVR-20-017.

Radon transmitter RQIT-CBD-20-001A (Government Furnished Equipment) monitors radon breakthrough of carbon bed CBD-20-001A and it will send pulse signal (1.3 pulse/pCi/L/minute) and High-High alarm contact signal (programmable) to the PLC. Radiation data will be displayed at the controller in the HMI. Operator will set two set points (High and High-High) and when set points are reached, alarm will be displayed. Set points will be operated adjustable.

Model - Pylon 'CRM-1' continuous active radon monitor.

Range - 20- 400,000 pCi/L (Pico-Curies per liter)

In the event that elevated level of radon is detected (High alarm) the radon controller will reduce the airflow through carbon bed CBD-20-001A by adjusting automatic inlet damper LVR-20-017. Radon controller will override the signal from the flow controller. Flow to other carbon beds will automatically adjust to balance remainder of flow.

If performance of the bed continue to degrade (High-High alarm), alarm will be displayed and downstream damper DMP-20-006 will close, isolating the carbon bed.

Damper DMP-20-006 is an open-close damper and will isolate carbon bed CBD-20-001A. Damper is controlled from local H-O-A switch HOA-DMP-20-006. Switch will send two digital input (2CI) to the PLC.

Hand (open) position – Damper will open, the interlocks are by-passed.

Off (close) position – Damper will close, the interlocks are by-passed.

Auto position- Damper will open and close from the PLC/HMI.

HMI will have soft Auto- Open-Close switch.

Soft auto position – Damper will close automatic on any of the following conditions.

1. High-High differential pressure across carbon bed CBD-20-001A (signal from PDIT-CBD-20-001A).

2. High-High radiation alarm from radiation monitor RQIT-CBD-20-001A.

Damper DMP-20-006 control valve (open/close) will receive control signal (CO) from the PLC. Damper limit switches (damper open or close indication) ZS-DMP-20-006A/B will send a two digital input signals (2CI) to the PLC/HMI.

Opposed blade damper LVR-20-021 modulates flow through carbon bed CBD-20-001B based on the signal from the flow controller in the HMI.

Opposed blade damper LVR-20-021 receives 4-20 mA signal (AO) from the PLC for control and sends 4-20 mA feedback signal (AI) to the PLC for its position indication.

Air flow transmitter FIT-CBD-20-001B will control air flow though the opposed blade damper LVR-20-021 and it will send 4-20 mA signal to the PLC, flow controller will be displayed in the HMI, controller will have MAN-AUTO mode in manual mode operator will select the flow rate desired, In auto mode PLC will automatic set the flow rate based on the signal from master controller in the HMI. PLC will send modulating signal to the opposed blade damper LVR-20-021. PLC will log the flow data at _____ seconds interval. Damper DMP-20-008 is permissive open until High-High radiation is detected.

Differential pressure transmitter PDIT-CBD-20-001B monitors differential pressure across carbon bed CBD-20-001A and it will send 4-20 mA signal (AI) to the PLC, differential pressure will be displayed in the HMI and PLC will log the pressure data at ____ seconds interval if exceed high set point. It will initiate the alarm in the HMI if differential pressure will be above the high set point; operator will reset the alarm from the HMI. The set points will be operator adjustable in the HMI. High-High differential pressure alarm will also close the damper DMP-20-008 and LVR-20-021.

Radon transmitter RQIT-CBD-20-001B (Government Furnished Equipment) monitors radon breakthrough of carbon bed CBD-20-001B and it will send pulse signal (1.3 pulse/pCi/L/minute) and High-High alarm contact signal (programmable) to the PLC. Radiation data will be displayed at the controller in the HMI. Operator will set two set points (High and High-High) and when set points are reached, alarm will be displayed. Set points will be operated adjustable.

Model – Pylon 'CRM-1' continuous active radon monitor.

Range – 20- 400,000 pCi/L (Pico-Curies per liter)

In the event that elevated level of radon (High alarm) is detected he radon controller will reduce the airflow through carbon bed CBD-20-001B by adjusting automatic inlet damper LVR-20-021. Radon controller will override the signal from the flow controller. Flow to other carbon beds will automatically adjust to balance remainder of flow.

If performance of the bed continue to degrade (High-High alarm), alarm will be displayed and downstream damper DMP-20-008 will close, isolating the carbon bed.

Damper DMP-20-008 is an open-close damper and will isolate carbon bed CBD-20-001A. Damper is controlled from local H-O-A switch HOA-DMP-20-008. Switch will send two digital input (2CI) to the PLC.

Hand (open) position – Damper will open, the interlocks are by-passed.

Off (close) position – Damper will close, the interlocks are by-passed.

Auto position- Damper will open and close from the PLC/HMI.

HMI will have soft Auto- Open-Close switch.

Soft Auto position – Damper will close automatic on any of the following conditions.

1. High differential pressure across carbon bed CBD-20-001B (signal from PDIT-CBD-20-001A).

2. High-High radiation alarm from radiation monitor RQIT-CBD-20-001B.

Dampers DMP-20-008 control valve (open/close) will receive control signal (CO) from the PLC. Damper limit switches (damper open or close indication) ZS-DMP-20-008A/B will send a two digital input signals (2CI) to the PLC/HMI.

Opposed blade damper LVR-20-006 modulates flow through carbon bed CBD-20-002A based on the signal from the flow controller in the HMI.

Opposed blade damper LVR-20-006 receives 4-20 mA signal (AO) from the PLC for control and sends 4-20 mA feedback signal (AI) to the PLC for its position indication.

Air flow transmitter FIT-CBD-20-002A will control air flow though the opposed blade damper LVR-20-006 and it will send 4-20 mA signal to the PLC, flow controller will be displayed in the HMI, controller will have MAN-AUTO mode in manual mode operator will select the flow rate desired, In auto mode PLC will automatic set the flow rate based on the signal from master controller in the HMI. PLC will send modulating signal to the opposed blade damper LVR-20-006. PLC will

log the flow data at _____ seconds interval. Flow controller will also open damper DMP-20-010 when airflow is required.

Differential pressure transmitter PDIT-CBD-20-002A monitors differential pressure across carbon bed CBD-20-002A and it will send 4-20 mA signal (AI) to the PLC, differential pressure will be displayed in the HMI and PLC will log the pressure data at ____ seconds interval if exceed High set point. It will initiate the alarm in the HMI if differential pressure will be above the High set point; operator will reset the alarm from the HMI. The set point will be operator adjustable in the HMI. High-High differential pressure alarm will also close the damper DMP-20-010 and LVR-20-006.

Radon transmitter RQIT-CBD-20-002A (Government Furnished Equipment) monitors radon breakthrough of carbon bed CBD-20-002A and it will send pulse signal (1.3 pulse/pCi/L/minute) and High-High alarm contact signal (programmable) to the PLC. Radiation data will be displayed at the controller in the HMI. Operator will set two set points (High and High-High) and when set points are reached, alarm will be displayed. Set points will be operated adjustable.

Model – Pylon 'CRM-1' continuous active radon monitor.

Range – 20- 400,000 pCi/L (Pico-Curies per liter)

In the event that elevated level of radon is detected (High alarm) the radon controller will reduce the airflow through carbon bed CBD-20-002A by adjusting automatic inlet damper LVR-20-006. Radon controller will override the signal from the flow controller. Flow to other carbon beds will automatically adjust to balance remainder of flow.

If performance of the bed continue to degrade (High-High alarm), alarm will be displayed and downstream damper DMP-20-010 will close, isolating the carbon bed.

Damper DMP-20-010 is an open-close damper and will isolate carbon bed CBD-20-002A. Damper is controlled from local H-O-A switch HOA-DMP-20-010. Switch will send two digital input (2CI) to the PLC.

Hand (open) position – Damper will open, the interlocks are by-passed.

Off (close) position – Damper will close, the interlocks are by-passed.

Auto position- Damper will open and close from the PLC/HMI.

HMI will have soft Auto-Open-Close switch.

Soft Auto position – Damper will close automatic on any of the following conditions.

1. High differential pressure across carbon bed CBD-20-002A (signal from PDIT-CBD-20-002A).

2. High-High radiation alarm from radiation monitor RQIT-CBD-20-002A.

Dampers DMP-20-010 control valve (open/close) will receive control signal (CO) from the PLC. Damper limit switches (damper open or close indication) ZS-DMP-20-010A/B will send a two digital input signals (2CI) to the PLC/HMI.

Opposed blade damper LVR-20-005 modulates flow through carbon bed CBD-20-002B based on the signal from the flow controller in the HMI.

Opposed blade damper LVR-20-005 receives 4-20 mA signal (AO) from the PLC for control and sends 4-20 mA feedback signal (AI) to the PLC for its position indication.

Air flow transmitter FIT-CBD-20-002B will control air flow though the opposed blade damper LVR-20-005 and it will send 4-20 mA signal to the PLC, flow controller will be displayed in the HMI, controller will have MAN-AUTO mode in manual mode operator will select the flow rate desired, In auto mode PLC will automatic set the flow rate based on the signal from master controller in the HMI. PLC will send modulating signal to the opposed blade damper LVR-20-005. PLC will log the flow data at _____ seconds interval. Damper DMP-20-012 is permissive open until High-High radiation is detected.

Differential pressure transmitter PDIT-CBD-20-002B monitors differential pressure across carbon bed CBD-20-001A and it will send 4-20 mA signal (AI) to the PLC, differential pressure will be displayed in the HMI and PLC will log the pressure data at ____ seconds interval if exceeds High set point. It will initiate the alarm in the HMI if differential pressure will be above the High set point; operator will reset the alarm from the HMI. The set point will be operator adjustable in the HMI. High-High differential pressure alarm will also close the damper DMP-20-012 and LVR-20-005.

Radon transmitter RQIT-CBD-20-002B (Government Furnished Equipment) monitors radon breakthrough of carbon bed CBD-20-002B and it will send pulse signal (1.3 pulse/pCi/L/minute) and High-High alarm contact signal (programmable) to the PLC. Radiation data will be displayed at the controller in the HMI. Operator will set two set points (High and High-High) and when set points are reached, alarm will be displayed. Set points will be operated adjustable.

Model – Pylon 'CRM-1' continuous active radon monitor.

Range – 20- 400,000 pCi/L (Pico-Curies per liter)

In the event that elevated level of radon (High alarm) is detected he radon controller will reduce the airflow through carbon bed CBD-20-002B by adjusting automatic inlet opposed blade damper LVR-20-005. Radon controller will override the signal

from the flow controller. Flow to other carbon beds will automatically adjust to balance remainder of flow.

If performance of the bed continue to degrade (High-High alarm), alarm will be displayed and downstream damper DMP-20-012 will close, isolating the carbon bed.

Damper DMP-20-012 is an open-close damper and will isolate carbon bed CBD-20-002B. Damper is controlled from local H-O-A switch HOA-DMP-20-012. Switch will send two digital input (2CI) to the PLC.

Hand (open) position – Damper will open, the interlocks are by-passed.

Off (close) position – Damper will close, the interlocks are by-passed.

Auto position- Damper will open and close from the PLC/HMI.

HMI will have soft Auto- Open-Close switch.

Soft Auto position – Damper will close automatic on any of the following conditions.

1. High differential pressure across carbon bed CBD-20-002B (signal from PDIT-CBD-20-002B).

2. High-High radiation alarm from radiation monitor RQIT-CBD-20-002B.

Damper DMP-20-012 control valve (open/close) will receive control signal (CO) from the PLC. Damper limit switches (damper open or close indication) ZS-DMP-20-012A/B will send a two digital input signals (2CI) to the PLC/HMI.

8. Condensate hold-up tanks TNK-20-002A and TNK-20-002B.

Condensed liquids from the desiccant drying system are transferred to a 3000-gallon hold-up tanks TNK-20-002A and TNK-20-002B by a condensate pump located within each desiccant drying system. The liquid is held for as much as 40 days in the tanks to allow radon decay. Subsequently the liquid is dispositioned by an operator-initiated transfer by pumps (PMP-20-001A or PMP-20-001B or both) in one of two ways:

a. Transfer to TTA distribution equipment enclosure for subsequent distribution to one of the four transfer storage tanks.

b. Transfer to the Advanced Wastewater Treatment (AWWT) plant after sampling, analysis and radiological survey indicates the condensate meets the waste acceptance criteria.

Transfer to TTA will be the normal way of operation, manual ball valve to the AWWT will be normally closed and manual ball valve to TTA will be normally open.

Level indicator transmitter LIT-TNK-20-002A indicates and monitor the water level in hold-up tank TNK-20-002A and will send 4-20 mA signal (AI) to the PLC, level will be displayed at the HMI. Operator will select the high and low soft level switch set point. It will initiate tank switch over from TNK-20-002A to TNK-20-002B by closing MOV-20-003 and opening MOV-20-004.

Level switch LSHH-TNK-20-002A monitors High-High water level in hold-up tank TNK-20-002A and will send digital input (CI) to the PLC, alarm will be displayed in the HMI.

Level switch LSLL-TNK-20-002A monitors Low-Low water level in hold-up tank TNK-20-002A and will send digital input (CI) to the PLC, alarm will be displayed in the HMI, transfer pump PMP-20-001A or PMP-20-001B will stop and the associated valve MOV-20-001 or MOV-20-002will close.

Differential pressure transmitter PDIT-TNK-20-002A monitors pressure in the hold-up tank TNK-20-002A and it will send 4-20 mA signal (AI) to the PLC, pressure will be displayed in the HMI and PLC will log the pressure data at ____ seconds interval if set points are exceeded. It will initiate the alarm in the HMI if pressure will be above the set point; operator will reset the alarm from the HMI. The set point will be operator adjustable in the HMI.

Automatic ball valve MOV-20-001 is open-close motor operated hold-up tank TNK-20-002A discharge valve. Valve is controlled from local H-O-A switch HOA-MOV-20-001. Switch will send two digital input (2CI) to the PLC.

Hand (open) position – Valve will open, the interlocks are by-passed.

Off (close) position – Valve will close, the interlocks are by-passed.

Auto position- Valve will open and close from the PLC/HMI.

HMI will have soft HAND-OFF-AUTO switch.

Soft Auto position – Valve will open based on selection to open from operator to transfer to TTA or AWWT and close based on the signal from the level transmitter LIT-TNK-20-002A. Level switch LSL from HMI will initiate closing valve MOV-20-001 and stopping pump PMP-20-001A. LSLL-20-002A will be a back-up close signal.

Ball valve motor (open/close) will receive control signal (CO) from the PLC. Valve limit switch (valve open or close indication) ZS-MOV-20-001A/B will send a two

digital input signals (2CI) to the PLC/HMI. Open limit switch will give permissive signal to transfer pump PMP-20-001A.

Transfer pump PMP-20-001A transfer condensate from hold-up tank TNK-20-002A to AWWT or TTA. Pump is controlled by the local HAND-OFF-AUTO three-position switch (HOA-PMP-20-001A). Switch will send two digital input (2 CI) to the PLC.

Hand position – Pump will run, the interlocks are by-passed.

Off position – Pump will stop.

Auto position- Pump will start and stop from the PLC/HMI signal (CO).

HMI will have soft HAND-OFF-AUTO switch.

Soft Auto position – Pump will stop based on the signal from the level transmitter LIT-TNK-20-002A. Level switch LSLL-20-002A will be back-up stop signal. Starting of pump will be a manual start on HMI once sample has been cleared to transfer. Valve MOV-20-001 limit switch open will be a permissive to start pump. Selection to transfer will be determined by operator. Transfer to Transfer Tank Area will be done by selection of MOV-12-012. If transfer to AWWT, password will be required and flow rate input will determine which flow control valve will be used. If only PMP-20-001A is used FCV-AWT-20-001 will be used. If both pumps PMP-20-001A and PMP-20-001B are used FCV-AWT-20-002 will be used.

Automatic ball valves MOV-20-003 and MOV-20-006 are open-close motor operated hold-up tank TNK-20-002A inlet valves. Valves are controlled from a local H-O-A switch HOA-MOV-20-003/6. Switch will send two digital input (2CI) to the PLC.

Hand (open) position – Valves will open, the interlocks are by-passed.

Off (close) position – Valves will close, the interlocks are by-passed.

Auto position- Valves will open and close from the PLC/HMI.

HMI will have soft HAND-OFF-AUTO switch.

Soft Auto position – Valves will open based on tank selection of tank and close based on the signal from the level transmitter LIT-TNK-20-002A. Level switch LSH from HMI will initiate closing valve MOV-20-003, MOV-20-006, and opening valves MOV-20-004 and MOV-20-005.

Ball valve motor (open/close) will receive control signal (CO) from the PLC. Valve limit switch (valve open or close indication) ZS-MOV-20-003A/B will send a two digital input signals (2CI) to the PLC/HMI.

Automatic ball valve MOV-12-012 is open-close motor operated valve located in Transfer tank system (**TTA**) to open for transfer of condensate to the TTA and provide permissive for transfer pumps PMP-20-001A and/or PMP-20-001B. Valve is controlled from local H-O-A switch HOA-MOV-12-012. Switch will send two digital input (2CI) to the PLC.

Hand (open) position – Valve will open, the interlocks are by-passed.

Off (close) position – Valve will close, the interlocks are by-passed.

Auto position- Valve will open and close from the PLC/HMI.

HMI will have soft HAND-OFF-AUTO switch.

Soft Auto position – Valve will open based on selection to transfer to TTA and close based on the signal from shutdown of both pumps PMP-20-001A and PMP-20-001B.

Ball valve motor (open/close) will receive control signal (CO) from the PLC. Valve limit switch (valve open or close indication) ZS-MOV-12-012A/B will send a two digital input signals (2CI) to the PLC/HMI. If MOV-12-012 is open, disable PID loops for both FCV-AWT-20-001 and FCV-AWT-20-002.

Indicating pressure transmitter PIT-PMP-20-001A monitors discharge pressure of transfer pump PMP-20-001A and it will send 4-20 mA signal (AI) to the PLC, differential pressure will be displayed in the HMI and PLC will log the pressure data at ____ seconds when PMP-20-001 is energized. It will initiate an alarm in the HMI if pressure exceeds set point. The set point will be operator adjustable in the HMI.

Level indicator transmitter LIT-TNK-20-002B indicates and monitors the water level in hold-up tank TNK-20-002B and will send 4-20 mA signal (AI) to the PLC, level will be displayed at the HMI. Operator will select the high and low soft level switch set point. It will initiate switch over from TNK-20-002B to TNK-20-002A by closing MOV-20-004 and opening MOV-20-003.

Level switch LSHH-TNK-20-002B monitors High-High water level in hold-up tank TNK-20-002B and will send digital input (CI) to the PLC, alarm will be displayed in the HMI.

Level switch LSLL-TNK-20-002B monitors Low-Low water level in hold-up tank TNK-20-002B and will send digital input (CI) to the PLC, alarm will be displayed in

the HMI, transfer pump PMP-20-001A or PMP-20-001B will stop and the associated valve MOV-20-001 or MOV-20-002 will close.

Differential pressure transmitter PDIT-TNK-20-002B monitors pressure in the hold-up tank TNK-20-002B and it will send 4-20 mA signal (AI) to the PLC, pressure will be displayed in the HMI and PLC will log the pressure data at ____ seconds interval if set points are exceeded. It will initiate the alarm in the HMI if pressure will be above the set point; operator will reset the alarm from the HMI. The set point will be operator adjustable in the HMI.

Automatic ball valve MOV-20-002 is open-close motor operated hold-up tank TNK-20-002B discharge valve. Valve is controlled from local H-O-A switch HOA-MOV-20-002. Switch will send two digital input (2CI) to the PLC.

Hand (open) position – Valve will open, the interlocks are by-passed.

Off (close) position – Valve will close, the interlocks are by-passed

Auto position- Valve will open and close from the PLC/HMI.

HMI will have soft HAND-OFF-AUTO switch.

Soft Auto position – Valve will open based on selection to open from operator to transfer to TTA or AWWT and close based on the signal from the level transmitter LIT-TNK-20-002B. Level switches LSL from HMI will initiate closing valve MOV-20-002. LSLL-20-002B will be a back-up close signal.

Ball valve motor (open/close) will receive control signal (CO) from the PLC. Valve limit switch (valve open or close indication) ZS-MOV-20-002A/B will send a two digital input signals (2CI) to the PLC/HMI. Open limit switch will give permissive signal to transfer pump PMP-20-001B.

Transfer pump PMP-20-001B transfer condensate from hold-up tank TNK-20-002B to AWWT or TTA. Pump is controlled by the local HAND-OFF-AUTO three-position switch (HOA-PMP-20-001B). Switch will send two digital input (2 CI) to the PLC.

Hand position – Pump will run, the interlocks are by-passed.

Off position – Pump will stop.

Auto position- Pump will start and stop from the PLC/HMI signal (CO).

HMI will have soft HAND-OFF-AUTO switch.

Soft Auto position – Pump will stop based on the signal from the level transmitter LIT-TNK-20-002B. Level switch LSLL-20-002B will be back-up stop signals and valve MOV-20-002 limit switch will be a permissive signal to start.

Transfer pump will send run signal to the automatic ball valve **MOV-12-012**, located in Transfer tank system (**TTA**) to open for transfer of condensate.

Automatic ball valves MOV-20-004 and MOV-20-005 are open-close motor operated hold-up tank TNK-20-002B inlet valves. Valves are controlled from local H-O-A switch HOA-MOV-20-004/5. Switch will send two digital input (2CI) to the PLC.

Hand (open) position – Valves will open, the interlocks are by-passed.

Off (close) position – Valves will close, the interlocks are by-passed.

Auto position- Valves will open and close from the PLC/HMI.

HMI will have soft HAND-OFF-AUTO switch.

Soft Auto position – Valves will open based on tank selection of tank and close based on the signal from the level transmitter LIT-TNK-20-002B. Level switch LSH from HMI will initiate closing valve MOV-20-004, MOV-20-005 and opening valves MOV-20-003 and MOV-20-006.

Ball valve motor (open/close) will receive control signal (CO) from the PLC. Valve limit switch (valve open or close indication) ZS-MOV-20-004A/B will send a two digital input signals (2CI) to the PLC/HMI.

Indicating pressure transmitter PIT-PMP-20-001B monitors discharge pressure from 0f transfer pump PMP-20-001B and it will send 4-20 mA signal (AI) to the PLC, differential pressure will be displayed in the HMI and PLC will log the pressure data at ____ seconds interval when PMP-20-001B is energized. It will initiate an alarm in the HMI if pressure exceed set point. The set point will be operator adjustable in the HMI.

Flow transmitter FIT-AWT-20-001 controls flow to **AWWT**, it will send 4-20 mA signal (AI) to the PLC, flow controller in the HMI will display the flow. Operator will select the flow rate desired, flow controller will send a signal (AO) to the modulating flow control valve FCV-AWT-20-001 to control the flow. Valve will send 4-20 mA feedback signal (AI) to the PLC for its position indication.

Damper DMP-20-032 is an open-close damper and will isolate tank TNK-20-002A. Damper is controlled from local H-O-A switch HOA-DMP-20-032. Switch will send two digital input (2CI) to the PLC.

Hand (open) position – Damper will open, the interlocks are by-passed.

Off (close) position – Damper will close, the interlocks are by-passed.

Auto position- Damper will open and close from the PLC/HMI.

HMI will have soft Auto- Open-Close switch.

Soft Auto position – Damper will operate in automatic on any of the following conditions.

1. Open on high positive set point from PDIT-TNK-12-001A.

2. Close on low set point from PDIT-TNK-12-001A.

Damper DMP-20-032 control valve (open/close) will receive control signal (CO) from the PLC. Damper limit switches (damper open or close indication) ZS-DMP-20-032A/B will send a two digital input signals (2CI) to the PLC/HMI.

Damper DMP-20-033 is an open-close damper and will isolate tank TNK-20-002A. Damper is controlled from local H-O-A switch HOA-DMP-20-033. Switch will send two digital input (2CI) to the PLC.

Hand (open) position – Damper will open, the interlocks are by-passed.

Off (close) position – Damper will close, the interlocks are by-passed.

Auto position- Damper will open and close from the PLC/HMI.

HMI will have soft Auto- Open-Close switch.

Soft Auto position – Damper will operate in automatic on any of the following conditions.

1. Open on high positive set point from PDIT-TNK-12-001B.

2. Close on low set point from PDIT-TNK-12-001B.

Damper DMP-20-033 control valve (open/close) will receive control signal (CO) from the PLC. Damper limit switches (damper open or close indication) ZS-DMP-20-033A/B will send a two digital input signals (2CI) to the PLC/HMI.

9. Drying of Carbon Bed.

In the event that a carbon bed needs to be dried, PLC will isolate the individual bed from the others. A take-off stream from the recirculation fans will be heated and

passed through the affected carbon beds using induced draft fan (FAN-20-003). From this fan drying air stream will be sent to the running Desiccant dryer.

Following is the detail description of the logic for the drying of one carbon bed CBD-20-001; this will be typical for the other three-carbon beds.

Close normally open manual damper DMP-20-043, and place automatic damper DMP-20-006 in closed position using local H-O-A switch (alarm will be displayed in the HMI), this will isolate the carbon bed from desiccant dryer air stream.

Open normally closed manual dampers DMP-20-005, DMP-20-037, and DMP-20-073.

Carbon bed is now ready for the drying operation.

Damper LVR-20-019 modulates flow through carbon bed based on the signal from the flow controller (FIT-DHT-20-001) in the HMI. Operator will manually select the flow rate desired.

Damper LVR-20-019 receives 4-20 mA signal (AO) from the PLC for control and sends 4-20 mA feedback signal (AI) to the PLC for it's position indication.

Air flow transmitter FIT-DHT-20-001 monitor air flow to duct heater DHT-20-001 through damper LVR-20-19 and it will send 4-20 mA signal to the PLC, flow rate will be displayed at the controller in the HMI and it will give start-stop signal to the duct heater controller IZ-DHT-20-001 and drying fan FAN-20-003. PLC will log the flow data at _____ seconds interval when in operation.

Temperature transmitter TT-DHT-20-001 monitors air temperature entering the drying carbon bed from the duct heater DHT-20-001 and it will send 4-20 mA signal (AI) to the PLC, temperature will be displayed at the controller in the HMI, operator will set the desired temperature set point and controller will send a feedback signal to the duct heater temperature controller IZ-DHT-20-001. The PLC will log the temperature data at ____ seconds interval when in operation.

Duct Heater DHT-20-001 heats a take-off air stream from the recirculation fan. It has a local control panel that performs all unit control functions (IZ-DHT-20-001). Heater will be turn on-off from the local panel, it will receive permissive signal (CO) from the plant PLC (FIT-DHT-20-001). Heater temperature will be controlled from the plant PLC (TT-DHT-001) 4-20 mA signal (AO).

Damper DMP-20-045 is open-close dampers and will isolate drying fan FAN-20-003. Damper is controlled from local H-O-A switch HOA-DMP-20-045. Switch will send two digital input (2CI) to the PLC.

Hand (open) position – Damper will open, the interlocks are by-passed.

Off (close) position – Damper will close, the interlocks are by-passed.

Auto position- Damper will open and close from the PLC/HMI.

HMI will have soft OPEN-CLOSE-AUTO switch.

Soft Auto position – Damper will close automatic on any of the following conditions.

1. Drying fan shutdown (signal to be bypassed during opening of the damper).

Damper DMP-20-045 control valve (open/close) will receive control signal (CO) from the PLC. Damper limit switch (damper open or close indication) ZS-DMP-20-045A/B will send a two digital input signals (2CI) to the PLC/HMI. Open limit switch will give permissive signal to the drying fan.

Drying Fan FAN-20-003 provides pressure suction to carbon bed regeneration and it will transfer drying air stream to the Desiccant dryer. Fan is controlled by the local HAND-OFF-AUTO three-position switch (HOA-FAN-20-003). Switch will send two digital input (2 CI) to the PLC.

Hand position – Fan will run, the interlocks are by-passed.

Off position – Fan will stop.

Auto position- Fan will start and stop from the PLC/HMI signal (CO).

HMI will have soft HAND-OFF-AUTO switch.

Soft Auto position – Fan will start based on operator selection on HMI screen. The fan will stop based on the permissive signal from the damper DMP-20-045 limit switch and operator selection on HMI screen.

After carbon bed is dried, operator will manually stop FAN-20-003, opposed blade damper LVR-20-019 will close and damper DMP-20-045 will close, this will shut off the duct heater IZ-DHT-20-001. Operator will manually close dampers DMP-20-037, DMP-20-043, DMP-20-073, and restored damper DMP-20-006 to its AUTO position.

10. HEPA Filter FLT-20-002A and FLT-20-002B.

The treated gas stream flows from the carbon adsorption units through a redundant high efficient HEPA filtration unit (only one unit will be on line FLT-20-002A or FLT-20-00B) before entering the recirculation fan (FAN-20-001A or FAN-20-001B), For redistribution to the silo or exhaust through the monitored stack STK-20-001.

Temperature transmitter TT-CBD-20-002 monitors air temperature exiting carbon bed and to the HEPA filter and it will send 4-20 mA signal (AI) to the PLC, temperature will be displayed in the HMI and PLC will log the temperature data at ____ seconds interval. It will initiate the alarm in the HMI if temperature exceeds set point. Operator will reset the alarm from the HMI. The high set point will be operator adjustable in the HMI.

Moisture transmitter MT-CBD-20-002 monitors air moisture after carbon bed and to the HEPA filter and it will send 4-20 mA signal (AI) to the PLC, moisture content will be displayed in the HMI and PLC will log the moisture data at ____ seconds interval. It will initiate the alarm in the HMI if moisture exceeds set point. Operator will reset the alarm from the HMI. The high set point will be operator adjustable in the HMI.

Differential pressure transmitter PDIT-FLT-20-002A monitors differential pressure across HEPA filter FLT-20-002A and it will send 4-20 mA signal (AI) to the PLC, differential pressure will be displayed in the HMI and PLC will log the pressure data at ____ seconds interval if exceed High set point. It will initiate the alarm in the HMI if differential pressure will be above the High set point; operator will reset the alarm from the HMI. The High set point will be operator adjustable in the HMI.

Differential pressure transmitter PDIT-FLT-20-002B monitors differential pressure across HIPA filter FLT-20-002B and it will send 4-20 mA signal (AI) to the PLC, differential pressure will be displayed in the HMI and PLC will log the pressure data at ____ seconds interval if exceed High set point. It will initiate the alarm in the HMI if differential pressure will be above the High set point; operator will reset the alarm from the HMI. The High set point will be operator adjustable in the HMI.

On high differential pressure alarm from the HEPA filter, operator will manually switch the airflow to the standby HEPA filtration unit and change the filter of the clogged filtration unit.

11. Exhaust Stack STK-20-001

During normal operation treated gas stream is exhausted to the atmosphere via monitored stack STK-20-001 based on control set point on pressure in the supply duct. In the event of out-of-parameter condition detected volume of treated gas stream exhausted to the atmosphere may be increased or decreased. The RCS building ventilation air (System 77) is continuously exhausted via stack.

Radon transmitter RQIT-STK-20-001 Monitors radon level (alpha) in the stack STK-20-001 and it will send pulse signal (1.3 pulse/pCi/L/minute) and High-High alarm contact signal (programmable) to the PLC. Radiation data will be displayed at the controller in the HMI. Operator will set two set points (High and High-High) and when set points are reached, alarm will be displayed. Set points will be operated adjustable.

Range – 20- 200,000 pCi/L (Pico-Curies per liter)

During Silos headspace reduction (phase 1) High-High radon alarm will cause the entire system to shutdown.

During TTA ventilation (Phase 2A, 2B, 2C and 3) High-High radon alarm will cause the entire system to shutdown.

Isokinetic Sampler IS-STK-20-001 Monitors flow and particulate in the stack STK-20-001 and will send a particualte concentration based on flow to the PLC. Particulate concentrations shall be displayed at the controller in the HMI. Operator will set two set points (High and High-High) and when set points are reached, alartm will be displayed. Set points will be operated adjustable.

Level switch LSH-STK-20-001 monitors the stack sump water level, on high level, it will send a digital input signal (CI) to the PLC and displayed the alarm condition in HMI. Switch will have dead-bend for the pump start-stop signals.

12. RCS building sump SMP-20-001

Level switch LSH-SMP-20-001 monitors the building sump water level, on high level, it will send a digital input signal (CI) to the PLC and displayed the alarm condition in HMI. Switch will have dead-band for the pump start-stop signals.

Sump pump PMP-20-003 transfer water from building sump to the hold-up tanks TNK-20-002A and TNK-20-002B. Pump is controlled by the local START-RUN-STOP three-position switch (S/S-PMP-20-003). Switch will send two digital input (2 CI) to the PLC.

Start position – Pump will start, the interlocks are in effect. Pump will stop on low level by PLC/HMI signal.

Run position – Pump will run.

Stop position – Pump will stop.

HMI will have soft START-RUN-STOP switch.

Soft Start position – Pump will start based on selection from HMI and stop based on the signal from the level switch LSH-SMP-20-001 (switch has a dead-band for start-enable-stop).

13. System Shutdown.

Following conditions will cause system shutdown.

a. Unrelieved high/low-pressure in Silos.

b. Both recirculation fan (FAN-20-001A/B) shutdown.

c. Both desiccant/chiller (DDS-20-001A/CHR-20-001A and DDS-20-001B/CHR-20-001B) train shutdown.

d. High-High stack radon levels.

System shutdown signal will cause following shutdown of the equipment and open/close of the Dampers.

a. Recirculation fans FAN-20-001A and B.

b. Desiccant dryers DDS-20-001A and B

c. Chillers CHR-20-001A and B

d. Close stack exhaust opposed blade damper LVR-20-016

e. Close make-up opposed blade damper LVR-20-015

f. Close Silo supply opposed blade dampers LVR-20-002 and LVR-20-003

14. Telemetry

Following out of parameter conditions will dial out and/or page a designated number to alert the on-call responsible person. PLC will send a contact input to the Auto Dialer (8 channel) for each condition.

a. Unrelieved high/low-pressure in Silos.

b. Both recirculation fan (FAN-20-001A/B) shutdown.

c. Both desiccant/chiller (DDS-20-001A/CHR-20-001A and DDS-20-001B/CHR-20-001B)

d. High radon alarm at stack STK-20-001 (RQIT-STK-20-001).

e. High-High radon alarm in any of the carbon beds.

f. High differential pressure in either of the filter trains FLT-20-002A or FLT-20-002B.

15. Evacuation Alarms

Following alarms will be sent to the Vitrification Pilot Plan (VitPP) control room evacuation system, for local evacuation alarms activation.

a. High-High radiation alarm from stack radiation monitor RQIT-STK-20-001 ?

16. Condensate Traps

Flexible air duct from Silo 1 and Silo 2 will have condensate trap, each trap will be monitored by level switch. Level switch LS-CND-20-003 and LS-CND-20-004 will send an alarm signal (CI) to the PLC. Operator action will be taken to remove water from traps.

A condensate trap within the RCS building will be monitored by level switches. Level switches LSH-CND-20-002 and LSHH-CND-20-001 will send alarm signals (CI) to PLC. Valve SOV-20-001 will open on closure of LSH-CND-20-002 to allow condensate to gravity drain to hold up tank.

17. Loss of normal Electrical Power

A standby Diesel Generator (1000 KW) is provided for the back-up power for the RCS building equipment. In case of normal power failure a monitoring relay will initiate a signal to the diesel generator to start. When the generator reaches at its rated voltage the transfer-switch will transfer all electrical loads (MCC-3) to the generator.

Generator will send run signal to the PLC.

Transfer to the generator power will take about _____ seconds, during this time following events will take place.

1. All running motors (fan and pumps) will start to slow down or stop.

2. All motor run signals to the PLC will be lost. PLC will over-ride these signals during power transfer.

3. All motor operated dampers (open/close) will stay in same position (UPS power).

4. All modulating dampers will stay in same position (UPS power).

5. PLC inputs/outputs will not be affected because of UPS power.

Packaged Equipment – When equipment controls are in automatic mode, on loss of normal 480 Volt electrical power supply, equipment shall automatically start again when 480 Volt power supply returns (Standby Diesel Generator). If required

equipment control power shall be supplied from Un-interuptable Power Supply (UPS).

Phase 2A – Silo 1 Retrieval, Silo 2 Headspace Reduction and TTA ventilation

When mining activities begin in Silo 1, the RCS moves from Phase 1 to Phase 2A. During this phase, recirculation air to Silo1 will be discontinued or reduced and the ventilation air is pulled through the three enclosures (Sluicer, EMMA and Slurry modules) on the pivoting bridge that are used for waste retrieval from Silo 1. Silo 2 continues to operate as before in Phase 1.

At the start of Phase 2A, the damper in the supply (recirculation) air duct to Silo 1 (The first silo to be emptied), LVR-20-003 closes automatically upon opening of the any one of the dampers DMP-11-002, DMP-14-002 or DMP-11-005 due to the increase in airflow to the silo.

1. **Slurry, EMMA and Sluicer Modules**

Differential pressure transmitter PDIT-FLT-11-001 monitor differential pressure across **Slurry air filter FLT-11-001** and it will send 4-20 mA signal (AI) to the PLC, differential pressure will be displayed in the HMI and PLC will log the pressure data at ____ seconds interval when damper DMP-11-002 is opened.

Damper DMP-11-002 is open-close damper and will isolate slurry module SLR-11-201 from slurry air filter FLT-11-001. Damper is controlled from local H-O-A switch HOA-DMP-11-002. Switch will send two digital input (2CI) to the PLC.

Hand (open) position – Damper will open, the interlocks are by-passed.

Off (close) position – Damper will close, the interlocks are by-passed.

Auto position- Damper will open and close from the PLC/HMI.

Dampers DMP-11-002 control motor (open/close) will receive control signal (CO) from the PLC. Damper limit switch (damper open or close indication) ZS-DMP-11-002A/B will send a two digital input signals (2CI) to the PLC/HMI. Open limit switch will send signal to recirculation damper LVR-20-003 to close.

Differential pressure transmitter PDIT-FLT-14-001 monitor differential pressure across **EMMA air filter FLT-14-001** and it will send 4-20 mA signal (AI) to the PLC, differential pressure will be displayed in the HMI and PLC will log the pressure data at ____ seconds interval when DMP-14-002 is opened.

Damper DMP-14-002 is open-close damper and will isolate EMMA module EMA-14-401 from EMMA air filter FLT-14-001. Damper is controlled from local H-O-A switch HOA-DMP-14-002. Switch will send two digital input (2CI) to the PLC.

Hand (open) position – Damper will open, the interlocks are by-passed.

Off (close) position – Damper will close, interlocks are by-passed.

Auto position- Damper will open and close from the PLC/HMI.

Dampers DMP-14-002 control motor (open/close) will receive control signal (CO) from the PLC. Damper limit switch (damper open or close indication) ZS-DMP-14-002A/B will send a two digital input signals (2CI) to the PLC/HMI. Open limit switch will send signal to recirculation damper LVR-20-003 to close.

Differential pressure transmitter PDIT-FLT-11-003 monitor differential pressure across **Sluicer air filter FLT-11-003** and it will send 4-20 mA signal (AI) to the PLC, differential pressure will be displayed in the HMI and PLC will log the pressure data at ____ seconds interval when DMP-11-005 is opened.

Damper DMP-11-005 is open-close damper and will isolate sluicer module SLC-11-204 from sluicer air filter FLT-11-003. Damper is controlled from local H-O-A switch HOA-DMP-11-002. Switch will send two digital input (2CI) to the PLC.

Hand (open) position – Damper will open, the interlocks are by-passed.

Off (close) position – Damper will close, the interlocks are by-passed.

Auto position- Damper will open and close from the PLC/HMI.

Dampers DMP-11-005 control motor (open/close) will receive control signal (CO) from the PLC. Damper limit switch (damper open or close indication) ZS-DMP-11-005A/B will send a two digital input signals (2CI) to the PLC/HMI. Open limit switch will send signal to recirculation damper LVR-20-003 to close.

2. Transfer Tank Area (TTA)

At the inception of Phase 2A, the TTA is tied into the RCS. The flow to the various major TTA components is controlled individually at each component. Air is drawn into the TTA through single manifold and distributed to the waste transfer tanks by modulating dampers. The filtrate storage tanks are vented to the RCS system.

During Phase 2A only two of the four-transfer storage tanks are in service (TNK-12-001A and TNK-12-001B).

Damper DMP-20-074 is an open-close damper and will isolate TTA area from exhaust/recirculation fan FAN-20-001A and FAN-20-001B. Damper is controlled from local H-O-A switch HOA-DMP-20-074. Switch will send two digital input (2CI) to the PLC. Damper will be normally closed during Phase 1.

Hand (open) position – Damper will open, the interlocks are by-passed.

Off (close) position – Damper will close, the interlocks are by-passed.

Auto position- Damper will open and close from the PLC/HMI.

HMI will have soft Auto- Open-Close switch.

Soft Auto position – Damper will be normally open when TTA building is brought on line.

Dampers DMP-20-074 control motor (open/close) will receive control signal (CO) from the PLC. Damper limit switches (damper open or close indication) ZS-DMP-20-0074A/B will send a two digital input signals (2CI) to the PLC/HMI. Damper will be slaved to the TTA fresh air intake damper DMP-20-070. Close when DMP-20-070 is open and open when DMP-20-070 is closed.

Transfer storage tanks TNK-12-001A and TNK-12-001B

Storage tanks TNK-12-001A and TNK-12-001B will be placed in the service and storage tanks TNK-12-002A and TNK-12-002B will be isolated by closing their respective dampers in manual mode during Phase 2A.

Air flow transmitter FIT-TNK-12-001A will monitor air flow discharge from transfer storage tank TNK-12-001A through damper LVR-20-008 and it will send 4-20 mA signal to the PLC, flow rate will be displayed in the HMI and PLC will log the flow data at _____ seconds interval.

Differential pressure transmitter PDIT-TNK-12-001A Monitors and controls the pressure inside the Transfer tank TNK-12-001A

Range: -5" to +5" H2O

Pressure transmitter will send a 4-20 mA (AI) signal to the PLC and a PID control will maintain the pressure set point entered by the operator from HMI, by modulating the opposed blade dampers LVR-20-007 and LVR-20-008.

The operating target pressure range is between 0 and -1 inch water gauge. The acceptable range of the operation is from 0.0 to -1.0 inch water gauge.

Opposed blade dampers LVR-20-007 and LVR-20-008 for Transfer storage tank TNK-12-001A

PLC shall control the transfer storage tank pressure by modulating the discharge air control opposed blade damper LVR-20-008 and re-circulating air supply opposed

blade damper LVR-20-007. These dampers will operate in a slave and master arrangement.

If differential pressure increases (decrease in vacuum) discharge air opposed blade damper LVR-20- 008 shall modulate to open, when it reaches 100% and if pressure is still high then re-circulating opposed blade damper LVR-20-007 shall modulate to close to maintain the pressure.

Opposed blade dampers LVR-20-007 and 008 receives 4-20 mA signal (AO) from the PLC for control and sends 4-20 mA feedback signal (AI) to the PLC for it's position indication.

Each Opposed blade damper will have a controller in the HMI from which operator will be able to control modulating of the opposed blade damper manually or automatic based on the PLC logic.

If differential pressure decreases (increase in vacuum) discharge air opposed blade damper LVR-20-008 shall modulate to open.

If opposed blade damper LVR-20-007 is closed and LVR-20-008 is open, return flow will be set point for control of LVR-20-016. This set point is additive.

Damper DMP-20-094 is an open-close damper and will isolate transfer storage tank **TNK-12-001A**. Damper is controlled from local H-O-A switch HOA-DMP-20-094. Switch will send two digital input (2CI) to the PLC.

Hand (open) position – Damper will open, the interlocks are by-passed.

Off (close) position – Damper will close, the interlocks are by-passed.

Auto position- Damper will open and close from the PLC/HMI.

HMI will have Soft Auto-Open-Close switch. Soft Auto position-Damper will operate on automatic on any of the following conditions:

1. Open on high-high positive set point from PDIT-TNK-12-001A.

2. Open on failure of LVR-20-008.

Dampers DMP-20-094 control motor (open/close) will receive control signal (CO) from the PLC. Damper limit switches (damper open or close indication) ZS-DMP-20-094A/B will send a two digital input signals (2CI) to the PLC/HMI.

Air flow transmitter FIT-TNK-12-001B will monitor air flow discharge from transfer storage tank TNK-12-001B through opposed blade damper LVR-20-010 and

it will send 4-20 mA signal to the PLC, flow rate will be displayed in the HMI and PLC will log the flow data at _____ seconds interval.

Differential pressure transmitter PDIT-TNK-12-001B Monitors and controls the pressure inside the Transfer tank TNK-12-001B.

Range: -5" to +5" H2O

Pressure transmitter will send a 4-20 mA (AI) signal to the PLC and a PID control will maintain the pressure set point entered by the operator from HMI, by modulating the opposed blade dampers LVR-20-009 and LVR-20-010.

The operating target pressure range is between 0 and -1 inches water gauge. The acceptable range of the operation is from 0.5 to -2.0 inches water gauge.

Opposed blade dampers LVR-20-009 and LVR-20-010 for Transfer storage tank TNK-12-001B

PLC shall control the transfer storage tank pressure by modulating the discharge air control opposed blade damper LVR-20-010 and re-circulating air supply opposed blade damper LVR-20-009. These dampers will operate in a slave and master arrangement.

If differential pressure increases (decrease in vacuum) discharge air opposed blade damper LVR-20- 010 shall modulate to open, when it reaches 100% and if pressure is still high then re-circulating opposed blade damper LVR-20-009 shall modulate to close to maintain the pressure.

Opposed blade dampers LVR-20-009 and 010 receives 4-20 mA signal (AO) from the PLC for control and sends 4-20 mA feedback signal (AI) to the PLC for it's position indication.

Each opposed blade damper will have a controller in the HMI from which operator will be able to control modulating of the opposed blade damper manually or automatic based on the PLC logic.

If differential pressure decreases (increase in vacuum) discharge air opposed blade damper LVR-20-010 shall modulate to open.

If opposed blade damper LVR-20-009 is closed and LVR-20-010 is open, return flow will be set point for control of LVR-20-016. This set point is additive.

Damper DMP-20-095 is an open-close damper and will isolate transfer storage tank **TNK-12-001B**. Damper is controlled from local H-O-A switch HOA-DMP-20-095. Switch will send two digital input (2CI) to the PLC.

Hand (open) position – Damper will open, the interlocks are by-passed.

Off (close) position – Damper will close, the interlocks are by-passed.

Auto position- Damper will open and close from the PLC/HMI.

HMI will have Soft Auto-Open-Close switch. Soft Auto position-Damper will operate on automatic on any of the following conditions:

1. Open on high-high positive set point from PDIT-TNK-12-001B.

2. Open on failure of LVR-20-010.

Dampers DMP-20-095 control motor (open/close) will receive control signal (CO) from the PLC. Damper limit switches (damper open or close indication) ZS-DMP-20-095A/B will send a two digital input signals (2CI) to the PLC/HMI.

Makeup air damper DMP-20-070 and TTA makeup air filter FLT-20-005

A tee in the flow path before the first tee to the transfer storage tanks provides a fresh makeup air to the TTA system through damper LVR-20-070. Damper may be opened during Phase 2A.

Damper DMP-20-070 is an open-close damper and will isolate makeup (fresh) air to the TTA. Damper is controlled from local H-O-A switch HOA-DMP-20-070. Switch will send two digital input (2CI) to the PLC.

Hand (open) position – Damper will open, the interlocks are by-passed.

Off (close) position – Damper will close, the interlocks are by-passed.

Auto position- Damper will open and close from the PLC/HMI.

HMI will have soft Auto- Open-Close switch.

Soft Auto position – Damper will be normally open, it will close automatically when stack radon monitor RQIT-STK-20-001 detects a high radon concentration.

Dampers DMP-20-070 control valve (open/close) will receive control signal (CO) from the PLC. Damper limit switches (damper open or close indication) ZS-DMP-20-070A/B will send a two digital input signals (2CI) to the PLC/HMI. Damper is slaved to DMP-20-074.

Air flow transmitter FIT-FLT-20-005 will monitor air flow from makeup air filter FLT-20-005 through the damper DMD-20-070 and it will send 4-20 mA signal to the

PLC, flow rate will be displayed locally and at the controller in the HMI and PLC will log the flow data at _____ seconds interval.

Differential pressure transmitter PDIT-FLT-20-005 monitors differential pressure across filter FLT-20-005 and it will send 4-20 mA signal (AI) to the PLC, differential pressure will be displayed in the HMI and PLC will log the pressure data at ____ seconds interval if exceed High set point. It will initiate the alarm in the HMI if differential pressure will be above the High set point. The set point will be operator adjustable in the HMI.

3. **Filtrate Storage Tanks TNK-12-003 and TNK-12-004**

RCS return from TTA tanks passes to the filtrate storage tanks, and then to desiccant drying system for recirculation.

Damper DMP-20-029 is an open-close damper and will isolate filtrate storage tank **TNK-12-003**. Damper is controlled from local H-O-A switch HOA-DMP-20-029. Switch will send two digital input (2CI) to the PLC.

Hand (open) position – Damper will open, the interlocks are by-passed.

Off (close) position – Damper will close, the interlocks are by-passed.

Auto position- Damper will open and close from the PLC/HMI.

HMI will have Soft Auto-Open-Close switch. Soft auto position-damper will operate in automatic on any of the following conditions.

1. Open on high positive set point from PDIT-TNK-12-003.

2. Close on low set point from PDIT-TNK-12-003.

Dampers DMP-20-029 control motor (open/close) will receive control signal (CO) from the PLC. Damper limit switches (damper open or close indication) ZS-DMP-20-029A/B will send a two digital input signals (2CI) to the PLC/HMI.

Differential pressure transmitter PDIT-TNK-12-003 monitors pressure of filtrate tank TNK-12-003 and it will send 4-20 mA signal (AI) to the PLC, differential pressure will be displayed in the HMI and PLC will log the pressure data at ____ seconds interval. It will initiate the alarm in the HMI if differential pressure will be above the set point. The set point will be operator adjustable in the HMI.

Damper DMP-20-030 is an open-close damper and will isolate filtrate storage tank **TNK-12-004**. Damper is controlled from local H-O-A switch HOA-DMP-20-030. Switch will send two digital input (2CI) to the PLC.

Hand (open) position – Damper will open, the interlocks are by-passed.

Off (close) position – Damper will close, the interlocks are by-passed.

Auto position- Damper will open and close from the PLC/HMI.

HMI will have Soft Auto-Open-Close switch. Soft Auto position-Damper will operate on automatic on any of the following conditions:

1. Open on high positive set point from PDIT-TNK-12-004.

2. Close on low set point from PDIT-TNK-12-004.

Dampers DMP-20-030 control motor (open/close) will receive control signal (CO) from the PLC. Damper limit switches (damper open or close indication) ZS-DMP-20-030A/B will send a two digital input signals (2CI) to the PLC/HMI.

Differential pressure transmitter PDIT-TNK-12-004 monitors pressure of filtrate tank TNK-12-004 and it will send 4-20 mA signal (AI) to the PLC, differential pressure will be displayed in the HMI and PLC will log the pressure data at ____ seconds interval. It will initiate the alarm in the HMI if differential pressure will be above the set point. The set point will be operator adjustable in the HMI.

PHASE 2B – Silo 2 Retrieval and TTA Ventilation

At the beginning of Phase B the material retrieval activities shift to Silo 2, Silo 1 activities having been completed and ventilation of Silo 1 is stopped. The bridge is positioned over Silo 2. New position of the bridge will prevent re-connection of s Silo 2 flexible ventilation ducts to the dampers LVR-20-001 and LVR-20-002, because of this ventilation ducts will be connected to the Silo 1 dampers LVR-20-003 and LVR-20-004 to control pressure within Silo 2 during Phase 2. Dampers LVR-20-001 and LVR-20-004 are disconnected and closed during Phase 2 operation.

The ventilation strategy of Silo 2 during retrieval activities is identical to that of Silo 1.

At the start of Phase 2, the damper in the supply (recirculation) air duct to Silo 2, LVR-20-003 closes automatically upon opening of the any one of the dampers DMP-11-002, DMP-14-002 or DMP-11-005.

1. Slurry, EMMA and Sluicer Modules

Logic same as Phase 2A.

2. Transfer Tank Area (TTA)

At the conclusion of Phase 2A, flow to transfer storage tanks TNK-12-001A and TNK-12-001B will be reduced by closing their respective dampers in manual mode.

Transfer storage tanks TNK-12-002A and TNK-12-002B

Storage tanks TNK-12-002A and TNK-12-002B will be placed in service during Phase 2B.

Air flow transmitter FIT-TNK-12-002A will monitor air flow discharge from transfer storage tank TNK-12-002A through opposed blade damper LVR-20-012 and it will send 4-20 mA signal to the PLC, flow rate will be displayed in the HMI and PLC will log the flow data at _____ seconds interval.

Differential pressure transmitter PDIT-TNK-12-002A Monitors and controls the pressure inside the Transfer tank TNK-12-002A.

Range: -5" to +5" H2O

Pressure transmitter will send a 4-20 mA (AI) signal to the PLC and a PID control will maintain the pressure set point entered by the operator from HMI, by modulating the opposed blade dampers LVR-20-011 and LVR-20-012.

The operating target pressure range is between 0 and –1 inches water gauge. The acceptable range of the operation is from 0.5 to -2.0 inches water gauge.

Opposed blade dampers LVR-20-011 and LVR-20-012 for Transfer storage tank TNK-12-002A

PLC shall control the transfer storage tank pressure by modulating the discharge air control opposed blade damper LVR-20-012 and re-circulating air supply opposed blade damper LVR-20-011. These dampers will operate in a slave and master arrangement.

If differential pressure increases (decrease in vacuum) discharge air opposed blade damper LVR-20- 012 shall modulate to open, when it reaches 100% and if pressure is still high then re-circulating opposed blade damper LVR-20-011 shall modulate to close to maintain the pressure.

Opposed blade dampers LVR-20-011 and 012 receives 4-20 mA signal (AO) from the PLC for control and sends 4-20 mA feedback signal (AI) to the PLC for it's position indication.

Each opposed blade damper will have a controller in the HMI from which operator will be able to control modulating of the opposed blade damper manually or automatic based on the PLC logic.

If differential pressure decreases (increase in vacuum) discharge air opposed blade damper LVR-20-012 shall modulate to open.

If opposed blade damper LVR-20-011 is closed and LVR-20-012 is open, return flow will be set point for control of LVR-20-016. This set point is additive.

Damper DMP-20-096 is an open-close damper and will isolate transfer storage tank **TNK-12-002A**. Damper is controlled from local H-O-A switch HOA-DMP-20-096. Switch will send two digital input (2CI) to the PLC.

Hand (open) position – Damper will open, the interlocks are by-passed.

Off (close) position – Damper will close, the interlocks are by-passed.

Auto position- Damper will open and close from the PLC/HMI.

HMI will have Soft Auto-Open-Close switch. Soft Auto position-Damper will operate on automatic on any of the following conditions:

1. Open on high-high positive set point from PDIT-TNK-12-002A.

2. Open on failure of LVR-20-012.

Dampers DMP-20-096 control motor (open/close) will receive control signal (CO) from the PLC. Damper limit switches (damper open or close indication) ZS-DMP-20-096A/B will send a two digital input signals (2CI) to the PLC/HMI.

Air flow transmitter FIT-TNK-12-001B will monitor air flow discharge from transfer storage tank TNK-12-001B through opposed blade damper LVR-20-010 and it will send 4-20 mA signal to the PLC, flow rate will be displayed in the HMI and PLC will log the flow data at _____ seconds interval.

Pressure differential transmitter PDIT-TNK-12-002B Monitors and controls the pressure inside the Transfer tank TNK-12-002B.

Range: -5" to +5" H2O

Pressure transmitter will send a 4-20 mA (AI) signal to the PLC and a PID control will maintain the pressure set point entered by the operator from HMI, by modulating the opposed blade dampers LVR-20-013 and LVR-20-014.

The targeted operating pressure range is between 0 and -1 inches water gauge. The acceptable range of the operation is from 0.5 to -2.0 inches water gauge.

Opposed blade dampers LVR-20-013 and LVR-20-014 for Transfer storage tank TNK-12-002B

PLC shall control the transfer storage tank pressure by modulating the discharge air control opposed blade damper LVR-20-014 and re-circulating air supply damper LVR-20-013. These opposed blade dampers will operate in a slave and master arrangement.

If differential pressure increases (decrease in vacuum) discharge air opposed blade damper LVR-20- 014 shall modulate to open, when it reaches 100% and if pressure is still high then re-circulating opposed blade damper LVR-20-013 shall modulate to close to maintain the pressure.

Opposed blade dampers LVR-20-013 and 014 receives 4-20 mA signal (AO) from the PLC for control and sends 4-20 mA feedback signal (AI) to the PLC for it's position indication.

Each opposed blade damper will have a controller in the HMI from which operator will be able to control modulating of the opposed blade damper manually or automatic based on the PLC logic.

If differential pressure decreases (increase in vacuum) discharge air opposed blade damper LVR-20-014 shall modulate to open.

If opposed blade damper LVR-20-013 is closed and LVR-20-014 is open, return flow will be set point for control of LVR-20-016. This set point is additive.

Damper DMP-20-097 is an open-close damper and will isolate transfer storage tank **TNK-12-002B**. Damper is controlled from local H-O-A switch HOA-DMP-20-097. Switch will send two digital input (2CI) to the PLC.

Hand (open) position – Damper will open, the interlocks are by-passed.

Off (close) position – Damper will close, the interlocks are by-passed.

Auto position- Damper will open and close from the PLC/HMI.

HMI will have Soft Auto-Open-Close switch. Soft Auto position-Damper will operate on automatic on any of the following conditions:

1. Open on high-high positive set point from PDIT-TNK-12-002B.

2. Open on failure of LVR-20-014.

Dampers DMP-20-097 control motor (open/close) will receive control signal (CO) from the PLC. Damper limit switches (damper open or close indication) ZS-DMP-20-097A/B will send a two digital input signals (2CI) to the PLC/HMI.

Makeup air damper DMP-20-070 and TTA makeup air filter FLT-20-005

Logic same as Phase 2A.

3. **Filtrate Storage Tanks TNK-12-003 and TNK-12-004**

Logic same as Phase 2A.

Conclusion of Phase 2B

At the conclusion of phase 2B, ventilation of Silo 2 is discontinued and the decant sump waste retrieval begins. During this activity (approximately one week duration) the modified sluicer module will be used to retrieve solid and liquid wastes from the decant sump. As in Phase 2A and Phase 2B operations, the modules enclosure provides the ventilation air for the decant sump. A temporary holdup tank used to receive decant sump waste will be vented to the RCS system. Because of the transient nature of this operation, steady state material balances are not required but RCS system ventilation will be balanced accordingly.

Differential pressure transmitter PDIT-FLT-11-001 will not be active to monitor pressure across sluicer air filter FLT-11-001.

Damper DMP-11-002 is an open-close damper and will not be active and must be manually operated to isolate sluicer module inlet filter FLT-11-001. Damper is controlled from local override hand wheel.

Damper LVR-20-001 controls the pressure of the decant sump by modulating flow through sump based on the signal from controller in the HMI. Operator will manually select the flow rate desired.

Damper LVR-20-018 receives 4-20 mA signal (AO) from the PLC for control and sends 4-20 mA feedback signal (AI) to the PLC for it's position indication.

PHASE 2C – TTA Ventilation (Radon Control During Interim Storage)

At the conclusion of the material retrieval campaigns the Radon Control System ventilates various TTA components as required. Limited air flow can be maintained through TTA components during this phase.

The system will have flexibility to recycle treated air back through the TTA manifold or exhaust it through the stack

Close manual dampers DMP-20-059, DMP-20-060, and DMP-20-024, this will isolate silos from desiccant dryer.

Close manual dampers DMP-20-038 and DMP-20-039, this will isolate silos from circulating fans.

Increase airflow (500 CFM) in re-circulation loop to balance system for the reduced air users.

PHASE 3 – TTA Ventilation and Radon Control During Future Material Treatment

During Phase 3, the RCS will accommodate airflow of 500 cubic feet per minute from the future treatment system in addition to the 500 cubic feet per minute from the TTA. Dampers will control the balance between the two inputs.

If desired, the system can be operated in recycle mode so that air from the TTA would pass through the carbon beds and return to the TTA, in much same way the air is to be recycled through the silos during Phase 1. Input from the waste treatment should not be accepted during period of recycle.

Airflow through a TTA waste storage tank could be discontinued after transfer from that tank to the Future Waste Treatment Facility is complete.

****

GENERAL CONTROL PHILOSOPHY

1. Radon Control will be a 24-hour continuos automatic operation. Operator will be in control room during 8-hour day shift. During off-shift hour Operator will be notified of out of parameter conditions via Auto Dialer

2. HMI graphic will have following Phase selector soft push buttons.

   PHASE 1
   Radon (reduction) Control in the Silo 1 and Silo 2 Headspaces

   PHASE 2A
   Silo 1 Retrieval, Silo 2 Headspace Reduction and TTA Ventilation

   PHASE 2B
   Silo 2 Retrieval and TTA Ventilation

   PHASE 2C
   TTA Ventilation (Radon Control During Interim Storage)

   PHASE 3
   TTA Ventilation and Radon Control During Future Material Treatment

   Selection of the Phase push button will be password protected.

3. PHASE 1 – Following conditions shall be implemented for operation.

   a. Block signals from Slurry, EMMA, and Sluicer modules damper limit switches (ZS-DMP-11-002A/B, ZS-DMP-14-002A/B and ZS-11-005A/B) from closing the recirculation damper LVR-20-003.

   b. Block venting of TTA storage tanks (TNK-12-001A, TNK-12-001B, TNK-12-002A and TNK-12-002B) by closing the respective supply and discharge dampers (LVR-20-007, LVR-20-008, LVR-20-009, LVR-20-010, LVR-20-011, LVR-20-012, LVR-20-013 and LVR-20-014). Close fresh makeup air supply damper DMP-20-070.

   c. Keep recirculation air (to TTA) damper DMP-20-074 closed.

   d. Block venting of filtrate storage tanks (TNK-12-003 and TNK-12-004) by closing the respective dampers (DMP-20-029 and DMP-20-030).

   e. Block venting of Decant sump by closing the damper LVR-20-018.

4. PHASE 2A - Following conditions shall be implemented for operation

   a. Block venting of transfer storage tanks TNK-12-002A and TNK-12-002B by closing the respective dampers (LVR-20-011, LVR-20-012, LVR-20-013 and LVR-20-014.

   b. Block signals from pressure transmitters PDIT-TNK-12-002A and PDIT-TNK-002B.

   c. Block signal from Silo 1 pressure transmitter PDIT-SILO-20-001.

4. PHASE 2B - Following conditions shall be implemented for operation.

   a. Block signals from and to the exhaust damper LVR-20-001 and recirculation damper LVR-20-002, these dampers will be disconnected and closed during phase 2B.

   b. Block signal from Silo 1 pressure transmitter PDIT-SILO-20-001.

   c. Block signal from Silo 2 pressure transmitter PDIT-SILO-20-002.

   d. Change graphic to show Silo 2 connection to dampers LVR-20-003 and LVR-20-004.

   e. Reduce venting of transfer storage tanks TNK-12-001A and TNK-12-001B by closing the respective dampers (LVR-20-07, LVR-20-008, LVR-20-009 and LVR-20-010).

   f. Block signals from pressure transmitters PDIT-TNK-12-001A and PDIT-TNK-12-001B.

5. PHASE 2C - Following conditions shall be implemented for operation

   a. Block signals from Silo 1 and 2 pressure transmitters PDIT-SILO-20-001 and PDIT-SILO-20-002.

   b. Block all signals to and from Slurry, EMMA, and Sluicer modules air filters and dampers (PDIT-FLT-011-001, DMP-11-002, PDIT-FLT-14-001, DMP-14-002, DMP-11-005 and PDIT-FLT-11-003).

   c. Increase air flow (------ CFM) through exhaust damper (LVR-20-016) to the stack STK-20-001. Operator will set the flow rate from controller FIT-FAN-20-001A/B.

6. PHASE 3 - Following conditions shall be implemented for operation

a. Remove silos 1 and 2 from graphic.

b. Increase air flow (------ CFM) through exhaust damper (LVR-20-016) to the stack STK-20-001. Operator will set the flow rate from controller FIT-FAN-20-001A/B.

7. Radiation monitors alarms settings (preliminary) for radiation monitors after carbon beds.

PHASE	HIGH AL pCi/L	HIGH-HIGH AL pCi/L
1		
2A		
2B		
2C		
3		

Note – Radiation monitor range (20-200,000) have to be changed if above set points are required.

8. Radiation monitor alarms settings (preliminary) for radiation monitors before carbon beds.

PHASE	HIGH AL pCi/L	HIGH-HIGH AL pCi/L
1		
2A		
2B		
2C		
3		

Note – Radiation monitor range (20-200,000) have to be changed if above set points are required.

9. Radiation monitor alarms settings (preliminary) for radiation monitor at stack.

PHASE	HIGH AL pCi/L	HIGH-HIGH AL pCi/L
1		
2A		
2B		
2C		
3		

10. Radiation monitors alarms settings (preliminary) for radiation monitors inside the RCS building.

RCS HVAC LOGIC

Date: 08-08-00

SYSTEM 77 RCS BLDG HVAC LOGIC DESCRIPTION

The building Heating and Ventilation System for the interior spaces of the RCS building is a once through system. The H & V system is comprised of a separate supply and a redundant exhaust system. The ducted supply system draws outside air into the building by the RCS building supply fan (FAN-77-003). The outside air enters through a filter (FLT-77-001) that reduces the amount of particulate loading in the intake system. Electric duct heaters (HTR-77-012A and B) will heat the supply air when outside temperature falls below design conditions.

Differential pressure in the 1st floor pump building, 4 carbon beds, and 2nd floor filter/fan building are monitored and alarmed if exceeds set point. Upset in each carbon bed area will be handled manually.

Redundant centrifugal Building Ventilation Exhaust Fan (FAN-77-001A or FAN-77-001B) ventilates the interior spaces of the RCS building. The fans and ducting system maintain the RCS building at a negative pressure. The RCS building ducting is manually balanced.

There are no interlocks between RCS building HV system and RCS system.

Differential pressure transmitter PDIT-FLT-77-001 monitors differential pressure across outside air supply filter FLT-77-001 and it will send 4-20 m A signal (AI) to the PLC, differential pressure will be displayed on the HMI and PLC will log the pressure data if it exceeds the high and high-high set point. It will initiate the alarm on the HMI if differential pressure exceeds the high or high-high set point. The set points will be operator adjustable on the HMI and will be password authorization.

Damper DMP-77-002 is open-close damper and will isolate supply air fan FAN-77-003. Damper is controlled from local H-O-A switch HOA-DMP-77-002. Switch will send two digital input (2CI) to the PLC.

Hand (open) position – Damper will open, the interlocks are by-passed.

Off (close) position – Damper will close, the interlocks are by-passed

Auto position- Damper will open and close from the PLC/HMI.

HMI will have soft Auto- Open- Close switch.

Soft Auto position – Damper will close automatic when fan FAN-77-003 is de-energized. Damper will open when command start is initiated from HMI for start of FAN-77-003.

Damper DMP-77-002 control valve (open/close) will receive control signal (CO) from the PLC. Damper limit switch (damper open or close indication) ZS-DMP-77-002A/B will send a two digital input signals (2CI) to the PLC/HMI. Open limit switch will give permissive signal to the supply fan.

Supply air Fan FAN-77-003 supplies outside air to the RCS building. Fan is controlled by the local HAND-OFF-AUTO three-position switch (HOA-FAN-77-003). Switch will send two digital input (2 CI) to the PLC.

Hand position - Fan will run, the interlocks are by-passed.

Off position - Fan will stop.

Auto position- Fan will start and stop from the PLC/HMI signal (CO).

HMI will have soft HAND-OFF-AUTO switch.

Soft Auto position - Fan will shutdown automatically on any of the following conditions.

1. High-High radiation alarm from radiation monitor RQIT-RCS-77-001.
2. Both vent fan FAN-77-001A and FAN-77-001B shutdown.
3. Damper DMP-77-002 is NOT open.

Differential pressure transmitter PDIT-RCS-77-001 monitors differential pressure of holdup tank TNK-20-001A area and it will send 4-20 m A signal (AI) to the PLC, differential pressure will be displayed in the HMI and PLC will log the pressure data when input exceeds high or high-high set point. It will initiate the alarm on the HMI if differential pressure exceeds high or high-high set point. The set point will be operator adjustable in the HMI.

Differential pressure transmitter PDIT-RCS-77-003 monitors differential pressure of carbon bed CBD-20-001A area and it will send 4-20 m A signal (AI) to the PLC, differential pressure will be displayed in the HMI and PLC will log the pressure data when input exceeds high or high-high set point. It will initiate the alarm in the HMI if differential pressure exceeds high or high-high set point. The set point will be operator adjustable in the HMI.

Differential pressure transmitter PDIT-RCS-77-004 monitors differential pressure of carbon bed CBD-20-001B area and it will send 4-20 m A signal (AI) to the PLC,

differential pressure will be displayed in the HMI and PLC will log the pressure data when input exceeds high or high-high set point. It will initiate the alarm in the HMI if differential pressure exceeds high or high-high set point. The set point will be operator adjustable in the HMI.

Differential pressure transmitter PDIT-RCS-77-005 monitors differential pressure of carbon bed CBD-20-002A area and it will send 4-20 m A signal (AI) to the PLC, differential pressure will be displayed in the HMI and PLC will log the pressure data when input exceeds high or high-high set point. It will initiate the alarm in the HMI if differential pressure exceeds high or high-high set point. The set point will be operator adjustable in the HMI.

Differential pressure transmitter PDIT-RCS-77-006 monitors differential pressure of carbon bed CBD-20-002B area and it will send 4-20 m A signal (AI) to the PLC, differential pressure will be displayed in the HMI and PLC will log the pressure data when input exceeds high or high-high set point. It will initiate the alarm in the HMI if differential pressure exceeds high or high-high set point. The set point will be operator adjustable in the HMI.

Duct Heaters HTR-77-012A and HTR-77-012B heats the supply air when outside air temperature falls below operator set point. Heater control is independent of the PLC and provides heat on demand and interlocks with air flow. Duct heater HTR-77-012A will heat the first floor air and heater HTR-77-012B will heat the second floor air. Signal of operation to PLC or temp in building or duct air temp behind heater is needed to verify operation of heaters.

A&C AHU-77-001 shutdown on both fans off.

Radon transmitter RQIT-RCS-77-001 (Government Furnished Equipment) monitors radon level in return air duct of RCS building and it will send pulse signal (1.3 pulse/pCi/L/minute) and High-High alarm contact (programmable) to the PLC. Radiation data will be displayed at controller and on the HMI, operator will set two set-points (High and High-High) and when set point are reached, alarm will be displayed. Set-points will be operator adjustable.

Model – Pylon 'CRM-1' continuous active radon monitor.

Range - 20 – 200,000 pCi/L (Pico-Curies per liter).

High-High radiation alarm will shutdown the HV system and notifies the operator via Auto dialer. Following units will close or shutdown.

1. Buildings supply fan FAN-77-003.

2. Damper DMP-77-002.

3. Duct heater HTR-77-012.

4. Building vent fans FAN-77-001A and B.

5. Damper DMP-77-019.

6. Damper DMP-77-021.

High radiation alarm will alert operator there may be a radiation leak in one of the carbon bed room. A separate exhaust register is supplied to each carbon bed room to extract ventilation air in the event of radon leak. This air is transferred to the RCS system for treatment via the carbon bed drying line. Operator will manually open the system 20 exhaust damper of the affected carbon bed room, close the affected system 77 exhaust damper, and open bypass damper DMP-20-075 and start drying fan FAN-20-003.

Differential pressure transmitter PDIT-FLT-77-002A monitors differential pressure across return air HEPA filter FLT-77-002A and it will send 4-20 m A signal (AI) to the PLC, differential pressure will be displayed in the HMI and PLC will log the pressure data when input exceeds high or high-high set point. It will initiate the alarm in the HMI if differential pressure exceeds high or high-high set point. The set point will be operator adjustable in the HMI.

Differential pressure transmitter PDIT-FLT-77-002B monitors differential pressure across return air HEPA filter FLT-77-002B and it will send 4-20 m A signal (AI) to the PLC, differential pressure will be displayed in the HMI and PLC will log the pressure data when input exceeds high or high-high set point. It will initiate the alarm in the HMI if differential pressure exceeds high or high-high set point. The set point will be operator adjustable in the HMI.

Building Vent Fans FAN-77-001A and FAN-77-001B ventilates the interior spaces of the RCS building.

HMI will have a soft two-position selector switch 'FAN-77-001A - FAN-77-001B'. Operator will select the fan manually. Selected fan discharge damper will open and selected fan will run, other fan will be in standby mode. If running fan stops, it will send alarm to HMI, standby damper will open and standby fan will start automatically. The stopped fans damper will close.

Stand-by fan will stay in operation and operator must press soft RESET button on the HMI to clear alarm. The operator may switch fans over once system upset is corrected by selecting the other fan again.

Each fan is controlled by the local HAND-0FF- AUTO three position switch (HOA-FAN-77-001A or HOA-FAN-77-001B). Switch will send two digital input (2CI) to the PLC. Both fan local switches will be in AUTO position during normal operation.

Hand position - Fan will run, the interlocks are by-passed.

Off position - Fan will stop.

Auto position- Fan will start and stop from the PLC/HMI signal (CO).

HMI will have soft HAND-OFF-AUTO switch.

Soft Auto position – Fan will start-stop based on the run-standby logic. Fan will shutdown on following conditions.

1. High radon alarm from RQIT-RCS-77-001.

2. Respective discharge damper closed DMP-77-019 and DMP-77-021.

In normal operation both fans soft selector switch will be in AUTO position.

Fan motor starter will receive start-stop signal (CO) from PLC and it will send run signal (CI) to the PLC/HMI.

Damper DMP-77-019 is open-close dampers and will isolate building vent fan FAN-77-001A discharge. Damper is controlled from local H-O-A switch HOA-DMP-77-019. Switch will send two digital input signals (2CI) to the PLC. Switch will be in Auto position during normal operation.

Hand (open) position – Damper will open, the interlocks are by-passed.

Off (close) position – Damper will close, the interlocks are by-passed.

Auto position- Damper will open and close from the PLC/HMI (CO).

HMI will have soft OPEN-CLOSE-AUTO switch.

Soft Auto position – Damper will close/open based on the run-standby logic. Damper will close on following conditions.

1. High radon alarm from RQIT-RCS-77-001.

2. Vent fan shutdown (signal to be bypassed during opening of the damper).

In normal operation damper soft selector switch will be in AUTO position.

Dampers DMP-77-019 control valve (open/close) will receive control signal (CO) from the PLC. Damper limit switch (damper open or close indication) ZS-DMP-77-019A/B

will send a two digital input signals (2CI) to the PLC/HMI. Open limit switch will give permissive signal to the fan.

Damper DMP-77-021 is open-close dampers and will isolate building vent fan FAN-77-001B discharge. Damper is controlled from local H-O-A switch HOA-DMP-77-021. Switch will send two digital input signals (2CI) to the PLC. Switch will be in Auto position during normal operation.

Hand (open) position – Damper will open, the interlocks are by-passed.

Off (close) position – Damper will close, the interlocks are by-passed.

Auto position- Damper will open and close from the PLC/HMI (CO).

HMI will have soft OPEN-CLOSE-AUTO switch.

Soft Auto position – Damper will close/open based on the run-standby logic. Damper will close on following conditions.

1. High-High radon alarm from RQIT-RCS-77-001.

2. Vent fan shutdown (signal to be bypassed during opening of the damper).

In normal operation damper soft selector switch will be in AUTO position.

Dampers DMP-77-021 control valve (open/close) will receive control signal (CO) from the PLC. Damper limit switch (damper open or close indication) ZS-DMP-77-021A/B will send a two digital input signals (2CI) to the PLC/HMI. Open limit switch will give permissive signal to the fan.

Air flow transmitter FIT-FAN-77-001A/B will monitor air flow discharge from fan FAN-77-001A/B through damper DMP-77-022 to stack and it will send 4-20 m A signal to the PLC, flow rate will be displayed on local panel and in the HMI and PLC will log the flow data at _____ seconds interval.

Radon transmitter RQIT-RCS-20-001 (Government Furnished Equipment) monitors radon level in first floor of RCS building and it will send pulse signal (1.3 pulse/pCi/L/minute) and High-High alarm contact (programmable) to the PLC. Radiation data will be displayed at controller in the HMI, operator will set two set-points (High and High-High) and when set point are reached, alarm will be displayed. Set-points will be operator adjustable.

Model – Pylon 'CRM-2' continuous passive radon monitor.

Range - 4 – 1,000 pCi/L (Pico-Curies per liter).

Radon transmitter RQIT-RCS-20-002 (Government Furnished Equipment) monitors radon level in second floor of RCS building and it will send pulse signal (1.3 pulse/pCi/L/minute) and High-High alarm contact (programmable) to the PLC. Radiation data will be displayed at controller in the HMI, operator will set two set-points (High and High-High) and when set point are reached, alarm will be displayed. Set-points will be operator adjustable.

Shutdown exhaust fan on High/High alarm from RQIT-RCS-20-001 or RQIT-RCS-20-002. Close damper DMP-77-002 and DMP-77-019 on DM-R-77-021.

Model – Pylon 'CRM-2' continuous passive radon monitor.

Range – 4 – 1,000 pCi/L (Pico-Curies per liter).

Shutdown exhaust fan on High/High alarm from RQIT-RCS-20-001 or RQIT-RCS-20-002. Close damper DMP-77-002 and DMP-77-019 on DM-R-77-021.

Radon transmitter RQIT-TTA-20-001 (Government Furnished Equipment) monitors radon level in first floor of TTA building and it will send pulse signal (1.3 pulse/pCi/L/minute) and High-High alarm contact (programmable) to the PLC. Radiation data will be displayed at controller in the HMI, operator will set two set-points (High and High-High) and when set point are reached, alarm will be displayed. Set-points will be operator adjustable.

Model – Pylon 'CRM-2' continuous passive radon monitor.

Range - 4 – 1,000 pCi/L (Pico-Curies per liter).

Radon transmitter RQIT-TTA-20-002 (Government Furnished Equipment) monitors radon level in second floor of TTA building and it will send pulse signal (1.3 pulse/pCi/L/minute) and High-High alarm contact (programmable) to the PLC. Radiation data will be displayed at controller in the HMI, operator will set two set-points (High and High-High) and when set point are reached, alarm will be displayed. Set-points will be operator adjustable.

Shutdown exhaust fan on High/High alarm from RQIT-TTA-20-001 or RQIT-TTA-20-002. Close damper DMP-77-002 and DMP-77-019 on DM-R-77-021.

Model – Pylon 'CRM-2' continuous passive radon monitor.

Range – 4 – 1,000 pCi/L (Pico-Curies per liter).

Shutdown exhaust fan on High/High alarm from RQIT-TTA-20-001 or RQIT-TTA-20-002. Close damper DMP-77-002 and DMP-77-019 on DM-R-77-021.

****

FOSTER WHEELER

FOSTER WHEELER ENVIRONMENTAL CORPORATION

SOFTWARE SPECIFICATION

SILOS 1 AND 2 ACCELERATED WASTE RETRIEVAL (AWR) PROJECT

SPEC NO.
JS-FE-HMI-90-001, Rev. 2
for
RCS Control System
and
Human-Machine Interface

SUBMITTED TO:

FLUOR FERNALD, INC.

CONTRACT NO. FSC 624

"THIS DOCUMENT IS THE PROPERTY OF FLUOR FERNALD PREPARED BY FOSTER WHEELER ENVIRONMENTAL CORPORATION, AND IS PROVIDED UPON THE CONDITION THAT IT WILL NEITHER BE REPRODUCED, COPIED, ISSUED TO A THIRD PARTY, WILL BE USED SOLEY FOR THE INTENDED PURPOSE AND SOLELY FOR THE EXECUTION REVIEW OF THE ENGINEERING AND CONSTRUCTION OF THE SUBJECT PROJECT"

Revision	Prepared by	Reviewed by	Approved by	Date	Pages Affected
1	Pete Bowman	Ken Rickett	John Lawson	8/14/00	All
2	Pete Bowman	Ken Rickett	John Lawson	11/21/00	All

Software Specification	Specification No.: JS-FE-HMI-90-001	REV. 2	ISSUE DATE 8/10/00
	Page 2 of 35	REQUISITION NO.	
PROJECT TITLE Silos 1 & 2 Accelerated Waste Retrieval (AWR)	CONTRACT NO. FSC-624	PLANT LOCATION Fernald, Ohio	
EQUIPMENT RCS Control and Human Machine Interface	EQUIPMENT NO. Various		

Revision Sheet

Revision No.	Revision Date	Affected Pages, Sections, and Paragraphs	Reason for Revision
0	4/18/00	All	Issued for Procurement Only
1	8/14/00	All	Clarification of Operation
2	11/21/00	All	Clarification of RCS Control System Description

CONTENTS

		Page
1.0	RCS CONTROL SYSTEM DESCRIPTIONS	4
2.0	SCOPE	16
3.0	SUPPLIER'S SCOPE OF RESPONSIBILITY	16
4.0	CONTROL SYSTEM	18
5.0	CONTROL LOGIC DESCRIPTION	24
6.0	FACILITY OPERATION	26
7.0	QUALITY ASSURANCE	27
8.0	SOFTWARE PRODUCTS	27
9.0	CODES AND STANDARDS	28
10.0	EXECUTION	29
11.0	TRAINING	32
12.0	TESTS, INSPECTIONS, AND EXAMINATIONS	32
13.0	DELIVERY	33
14.0	ATTACHMENTS	34

1.0 RCS CONTROL SYSTEM DESCRIPTIONS

1.1 RCS Process Control System

The RCS is a treatment system that employs air conditioning, dehumidification, activated carbon, and high efficiency particulate accumulator (HEPA) filtration to provide Best Available Technology for control of radon emissions and other radionuclides to the environment. The RCS will be operated in compliance with applicable or relevant and appropriate requirements (ARARs) and technical baseline contractual requirements identified in Section 5.0 of the Remedial Design Package. The RCS provides treatment of emissions from the following sources:

- Silos 1 and 2 headspace (including during decontamination of the silos),
- Silos 1 and 2 Waste Retrieval System,
- Decant Sump Tank Waste Retrieval System,
- Transfer Tank Area (TTA) System,
- TTA Waste Retrieval System, and
- Future Full-Scale Remediation and Support Facilities.

The philosophy for operation of the RCS focuses upon controlling two key process parameters: system operating pressure and radon emissions. Based upon the phase of the Silos 1 and 2 remediation activities, the configuration of the RCS and thus the mechanics for controlling the system operating pressure and radon emissions will vary.

The following sections describe the methods for controlling the RCS operating pressure and radon emissions during the following remediation phases: Phase 1 - Silo 1 and Silo 2 Headspace Reduction:

- Phase 2A - Silo 1 Retrieval, Silo 2 Headspace Reduction, TTA Ventilation;
- Phase 2B - Silo 2 Retrieval, TTA Ventilation;
- Phase 2C - TTA Ventilation; and
- Phase 3 - TTA Ventilation, Future Waste Remediation.

1.1.1 Pressure Control in the Silos 1 and 2 Headspace

The Silos 1 and 2 headspace will be protected from an out-of-parameter pressure condition. Over-pressurization conditions are addressed by the master/slave operation of the supply and exhaust damper system on each silo. In the event that a positive pressure spike remains unmitigated before attaining the desired condition, the supply of air to the silo headspace is terminated and the system briefly goes into return-only or exhaust mode to dampen the spike. Subsequently, the supply is bled back online and the desired condition is restored. Additionally, a pressure/vacuum relief device protects the silos by providing the final relief from over and under-pressurization. In an under-pressurization condition, the pressure/vacuum relief device allows ambient air in and thus relieves the condition. Such events are considered upset conditions and are not intended for normal operation. Subsequent to such an event, the prevailing system conditions are analyzed to determine the causative issues so that operational adjustments can be identified and implemented.

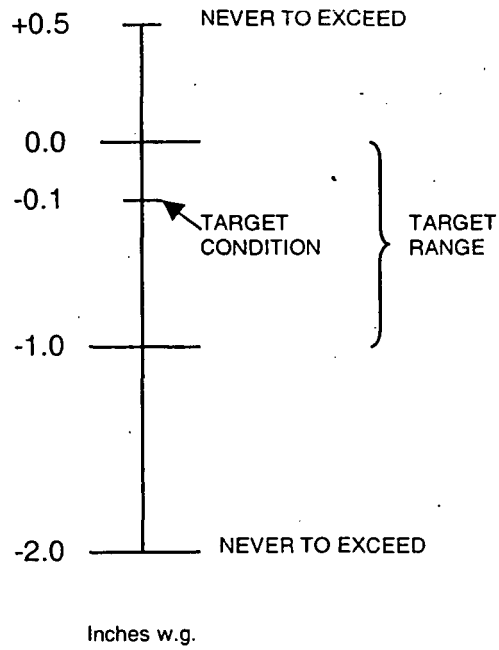

Target Headspace Pressure

As shown above, based upon silo integrity, allowable operating pressure ranges for the silos are between 0.5 and –2.0 inches water gauge (w.g.). The targeted operating pressure range for operation in the silos is from 0.0 to –1.0 inch w.g. The normal operating target pressure during Phase 1 will be –0.1 inches w.g. The target pressure may be adjusted to a setpoint nearer atmospheric pressure (-0.01 inches w.g.) if the structural nature of the silos (large crack areas = high infiltration rate) necessitates. The control system will respond to maintain the targeted pressure condition. Normal operations will occur within the targeted range. Excursions beyond the targeted range are mitigated as discussed below. The control devices, control strategy, and the relief mechanism ensure the "never-to-exceed" values of 0.5 and –2 inches w.g. Targeted setpoints for the subsequent phases of operation (Phases 2A, 2B, 2C, and 3) will be optimized based testing during the Full-scale Mock-up System activities conducted on Silo 4 during Phase RCS operations.

During Phase 1, the headspace air is withdrawn from Silos 1 and 2 and transferred to the RCS for treatment. The desired pressure condition is maintained by using an induced-draft, automatically, controlled fan and damper system.

A ventilation air stream from Silo 1 or Silo 2 is exhausted into an 8-inch main duct header to the RCS Building. Upon entering the building, the air is treated through one of two process trains. After the air is treated and leaves the fan, it flows to a 10-inch duct header whose branch supply lines exhaust air to the stack, the Silos, and in subsequent phases to the TTA tanks, as needed.

The dampers associated with pressure control for Silos 1 and 2 are modulating opposed blade dampers. They consist of an exhaust stack damper (LVR-20-003), a make-up air damper (LVR-20-004), a silo supply damper (LVR-20-016), and a silo exhaust damper (LVR-20-015). A pressure differential transmitter provides pressure indication inside the silos to the HMI. A redundant pressure differential transmitter will be provided to ensure proper pressure is detected and maintained in the silos.

During normal pressure operations (range ≅ 0 to –1.0 inches w.g.), flow from the silos through the silo exhaust damper will be monitored against the desired setpoint for the flow transmitter. The silo supply damper will be set to a percentage of the setpoint flow through the silo exhaust damper. The exhaust stack and make-up air dampers will operate to provide a constant flow to the silos by maintaining a setpoint pressure in the 10-inch fan exhaust header. The setpoint pressure for the header will be influenced based upon the selected flowrate being exhausted from the silos. The pressure differential transmitter will measure the pressure in the exhaust header and will control the make-up air and exhaust dampers to maintain required header pressure. If the exhaust air header pressure reaches the high setpoint, then the exhaust stack damper will automatically begin to open to alleviate this condition. When the transmitter detects the low setpoint, the make-up air damper will automatically start to open to allow more air to flow into the RCS system to maintain the desired pressure in the exhaust air header. The difference between the high and low setpoints will be approximately 0.5 inches w.g.

The flow characteristics for the silos supply damper at different blade positions (percentage open/closed) will be developed and input into the PLC. This offset flow control method will ensure that the exhaust flowrate from the silos will be greater than the supply flowrate, which will maintain a negative pressure within the silos. Offset flow control will be overridden in the event of pressures outside the operating range, either high or low. If the pressure exceeds the high set point or low set points for normal operating pressure range then associated opposed blade dampers for silos supply and silos exhaust will be controlled by the silo pressure differential transmitter control loop.

If the pressure in the silo exceeds the high end of the operating range, the RCS will begin to operate using a master/slave pressure control scheme. Pressure in the silos will be relieved,

as required, by the supply dampers acting as the masters and exhaust dampers acting as the slaves. Pressure differential transmitters will control the dampers.

When a positive pressure is detected in the silo, the silo supply damper will begin to close immediately. If unrelieved pressure outside of the operating range remains after complete closure of the silo supply damper, the silo exhaust damper will open until the operating range is recovered. If the pressure reaches or exceeds the high-high set point for the pressure differential transmitter (> 0.20 inches w.g.), then bypass dampers associated with the silo (dependent upon phase of operation), will open fully to aid in pressure relief. With the closing of the silo supply damper, back pressure will elevate the pressure in the fan exhaust air header and will be detected by the pressure differential transmitter which will open the exhaust stack damper to relieve pressure. This is the same operation as outlined above for maintaining a constant exhaust air header pressure.

The RCS can be automatically shutdown if the pressure inside the silo exceeds 0.45 inches w.g. In the event of a shutdown of the RCS, opposed blade-modulating dampers for silo exhaust and exhaust stack will receive a signal from the PLC to open to 100% to allow for diffusion through the RCS to the stack. The make-up air damper and the silo supply damper will receive a signal to close upon system shutdown.

A recycle duct containing damper around the fan is provided to maintain the fan at a working level close to optimal conditions. Also exhaust air can be recycled around the fan on high pressure in the silos and gradually bled back into the system upon reaching normal operating conditions.

If the pressure in the silos decrease below the low end of the operating range (-1 inch w.g.), the RCS will again operate using a master/slave pressure control scheme. If a negative pressure below –1 inch w.g. occurs, then the silo supply damper will begin to open to 100% capacity. If unrelieved vacuum outside of operating range remains after complete opening of the silo supply damper, the silo exhaust damper will begin to close until the operating range is recovered.

Additionally, a vacuum/pressure relief device is provided for the silos. If a vacuum pressure beyond –2 inches w.g. occurs in the silo, it will result in the opening of a vacuum relief valve that is located on the silo. Likewise, if a positive pressure of 2 inches w.g. occurs in the silo, it will result in the opening of a pressure relief valve to mitigate this condition.

When normal operating pressures within the silos have been re-established following a pressure upset, control of the RCS will be returned to the offset flow control system.

The TTA tanks undergoing recirculation will be controlled using the same methods described for the silos using their respective dampers. The TTA tanks that are ventilated during the subsequent phases of RCS operation will be normally ventilated as a once through system by pulling atmospheric air through a backdraft-dampered, HEPA-filtered

opening into an air supply header that branches to feed the TTA tanks. The ability to recirculate air from the RCS to the TTA tanks is included in the design for subsequent phases of operation of the RCS.

Once the Phase 1 operations have been successful in reducing the activity levels within the silos, construction will begin on the bridge and other systems. During this construction process, the pipe rack will be extended to its final termination point near the pivot point of the bridge. Three rigid duct spool pieces will be installed on the completed pipe rack that will run from the dampered, blinded-off connections to a final termination point on the bridge in preparation for Phase 2A operation.

To address the tightness of the silos that will be required for the subsequent phases of operation of the RCS, a tyvek or heavy mil plastic cover may be used to cover the dome and sides of the silos. This cover may be used to minimize the amount of in-leakage or infiltration through cracks.

For subsequent Phases 2A and 2B, the ducting for the silo being mined will be routed on the new bridge and connected to the RCS ducting on the pipe rack. RCS ducting on the pipe rack will be sloped to the RCS Building while ductwork on the bridge will slope to the silo being mined.

For Phase 2A operations, the bridge will be positioned over Silo 1. Both the RCS supply and suction connections on Silo 1 containing dampers will be connected to rigid ducting, mounted on the bridge, by means of a short piece of flexible hose. The supply and suction ducting is routed on the new bridge and connected to the RCS ducting on the pipe rack by means of spool pieces.

1.1.2 Radon Control in the Silo Headspace – Phase 1 Operation

During Phase 1, the ventilation air is withdrawn from Silos 1 and 2 and transferred to the RCS for treatment. The treated ventilation air is returned to the silos for "sweep ventilation" purposes. The RCS will operate in this scheme to reduce radon concentration levels inside the silo headspaces at levels that will allow safe access for work activities in the silo area. The design flowrate for the ducting system for the ventilation of Silos 1 and 2 is based upon exhausting up to 500 cfm from each silo during Phase 1 operations. The RCS design also includes the flexibility to reduce flow from one silo for a short period of time in order to increase the amount of air exhausted from the other silo in service. This capability may be used during the time the size of the openings in the silos will be increased for introduction of mining equipment to be used in the later phases. Recirculation will not be employed during this phase of operations and all air from the active silo will be exhausted through the stack.

During Phase 1, the RCS suction lines from Silos 1 and 2 will be flexible hoses routed over the berm with a low-point condensate trap. This trap is equipped with a level alarm to notify operations personnel of excess water in the trap. When the excess water is drained, a

portable collection pan (e.g., volume ≥ 5 gallons) will be placed under the connection. The excess condensate (approximately 2 gallons) will be collected in a container and characterized for discharge to the Advanced Wastewater Treatment (AWWT) facility. A ventilation stream from each silo through an existing opening in silo risers is exhausted through manual dampers into 6-inch flexible hoses that connect to a 6-inch rigid steel duct that extends up the pipe rack and connects to two dampers that feed an 8-inch main duct header to the RCS. Upon entering the building, the air is treated through on of two process trains. After the air is treated, it flows to an 8-inch duct header that supplies the silos. This duct header connects to two dampers that feed back to the flexible hoses routed over the berm, which connect to the silos by manual dampers.

Start-up of silo ventilation will be initiated by enabling the silo control loops on the HMI. Opposed blade dampers will be controlled by flow indicating transmitters. The initial flow set point for exhaust flow from the silos will be 0 cfm. Airflow exiting the silos at this point will be greater than 0 cfm based on in-leakage or the automatic opening of pressure control valves due to increased vacuum pressure in the silos. The RCS Process and Instrumentation Diagram (P&ID) control loops will therefore actuate opposed blade dampers to the closed position.

The operator will input the silo flow set points into the HMI. The starting set points for the silos will be (≅50 cfm). At this point the following two possible flow conditions exist for the silos as follows:

1. The opposed blade dampers for silo supply are still in the 100% closed position. The opposed blade dampers for the silo exhaust are opening. This position would be a result of up to 50 cfm of in-leakage into each of the silos. The in-leakage into the silos could be a result of cracks in the silos or pressure control valves starting to open. In this scenario, the total flow is ≅100 cfm exiting the silos with no air provided from the recirculation line. The exhaust stack damper would open to exhaust 100 cfm out the stack. There would be no recirculation of air back to the silos.

2. The opposed blade dampers for the silo supply are in a position less that 100% closed. The opposed blade dampers for the silo exhaust are opening. The position of the dampers would be a result of less that 50 cfm of in-leakage into each of the silos. At this point any increase in discharge header pressure above the setpoint programmed into the HMI will cause opposed blade dampers for the exhaust stack to open to reduce the discharge header pressure. Any decrease in discharge header pressure below the setpoint programmed into the HMI will cause the opposed blade dampers for the make-up air to open to increase the discharge header pressure.

Flow set points for the silos will be gradually increased in ≅50 cfm increments until flow rate exiting silos are ≅500 cfm each.

1.1.3 Radon Control during Material Transfer – Phase 2A and 2B Operation

When hydraulic mining activities begin in Silo 1, the RCS moves from Phase 1 to Phase 2A. During this phase, recirculation air to Silo 1 is discontinued and the ventilation air is pulled into the silo through the three enclosures on the pivoting bridge that are used for waste retrieval from Silo 1. The capability to shutoff the enclosure louver intakes and place the silo in recirculation mode is still available if needed. While hydraulic mining activities occur in Silo 1, Silo 2 continues to operate as before in Phase 1 mode.

The design flowrate for the ducting system for the ventilation of Silos 1 and 2 is based upon exhausting up to 500 cfm from each silo for Phase 2A operations. The design also includes the flexibility to discontinue flow from one silo for a short period of time to increase the amount of air exhausted from the other silo in service.

In addition to airflow from Silos 1 and 2, two of the TTA tanks TNK-12-001A and TNK-12-001B will be in operation during Phase 2A. In Phase 2A, the TTA is connected into the RCS. The flow to the various major TTA components is controlled individually at each component. Air is drawn into the TTA through a single manifold and distributed to the transfer tanks by modulating dampers. The filter and filtrate storage tanks are vented to the RCS and a damper will be open to relieve pressure. These tanks are equipped with pressure/vacuum control valves to let air into the tanks at the vacuum set point or to remove air at the pressure setpoint. During Phase 2A, only two of the four waste storage tanks are in service (TNK-12-001A and TNK-12-001B). After Phase 2A, the flow to these tanks can be reduced but not eliminated.

The design flowrate for the ducting system for the ventilation of TTA tanks is based upon exhausting up to 250 cfm from each TTA tank (TNK-12-001A and TNK-12-001B) for Phase 2A operations. Flow to and from these two tanks is controlled using the same methods as those described for the silos.

Before mining starts in Silo 1, the connections of the rigid ductwork on the bridge to the silo and to the duct header on the pipe rack must be verified. To begin Phase 2A operations, airflow must be established through the ductwork on the bridge. The dampers associated with Phase 2A operations will be opened and the dampers associated with Phase 1 operation will be closed. Once airflow is established through the ductwork on the bridge, the flexible hoses associated with Phase 1 operations for Silo 1 can be disconnected and removed. A blind flange will be installed over the opening associated with the hose removal to provide additional sealing.

At the start of Phase 2A operations, the damper in the supply air duct to Silo 1 (the first silo to be emptied) begins closing upon opening of the automatic dampers on the enclosures. Inlet air for Silo 1 is provided directly through the three enclosures used in this phase for:

- Sluicing,

- Slurry transfer, and
- EMMA™ operations.

Each enclosure is served by a secondary containment that is attached to the silo penetration using a seal arrangement that avoids placing any load on the silo dome. The moveable bridge that is positioned first over Silo 1, and subsequently over Silo 2, structurally supports the enclosures. Each of the three enclosures has an air inlet equipped with a roughing filter, HEPA filter, automatic damper, and flow meter. Access to the enclosures is through air-locked doors that limit additional flow during entry and exit. Flexible seals are used to minimize the free space around equipment passing through the enclosure opening into the silo below.

Ventilation of Silo 1 will be discontinued after hydraulic mining and interior decontamination activities are completed and before the application of the fixative to the inside surfaces of the silo. The dampers that were opened for initiation of mining activities listed earlier are now closed. Spool pieces are removed and the bridge is repositioned over Silo 2. Once in position the spool pieces are reconnected to their original connections. The ventilation strategy of Silo 2 during retrieval activities is identical to that of Silo 1. During Phase 2B, there is an increase in the availability of ventilation air caused by stopping flow to the empty Silo 1. This increases the capability of the RCS to control radon from other sources by increasing the amount of air that can be exhausted from the remaining sources.

When hydraulic mining activities begin in Silo 2, the RCS moves from Phase 2A to Phase 2B. During this phase, recirculation air to Silo 2 is discontinued and the ventilation air is pulled into the silo through the three enclosures on the pivoting bridge that are used for waste retrieval from Silo 2. The capability to shutoff the enclosure louver intakes and place the silo in recirculation mode is still available if needed.

The design flowrate for the ducting system for the ventilation of Silo 2 is based upon exhausting up to 500 cfm from each silo for Phase 2B operations. In addition to the airflow from Silo 2, the two remaining TTA tanks will be placed in operation during Phase 2B. The airflow to the various major TTA components is controlled individually at each component. Air is drawn into the TTA through a single manifold and distributed to the waste transfer tanks by modulating dampers. The filter and filtrate storage tanks are vented to the RCS and will be open to relieve pressure. These tanks are equipped with pressure/vacuum control valves to let air into tanks at the vacuum set point or to remove air at the pressure setpoint. During Phase 2B, all four waste storage tanks are in service (TNK-12-001A, TNK-12-001B, TNK-12-002A, and TNK-12-002B). After Phase 2B, the airflow to these tanks can be reduced but not eliminated.

The design flowrate for the ducting system for the ventilation of TTA tanks is based upon exhausting up to 250 cfm from each TTA tank (TNK-12-001A, TNK-12-001B, TNK-12-002A,

and TNK-12-002B) for Phase 2B operations. Flow to and from these two tanks is controlled using the same methods as those described for the silos.

Before hydraulic mining starts in Silo 2, the connections of the rigid ductwork on the bridge to the silo and to the duct header on the pipe rack must be verified. In Phase 2B, the dampers associated with Silo 1 control shall be used to control pressures in Silo 2 to minimize the number of specialized spool pieces required for movement of the bridge. To begin Phase 2B operations, airflow must be established through the ductwork on the bridge. The dampers associated with Phase 2B operation will be reopened and the dampers associated with Phase 2A operation will be closed. Once airflow is established through the ductwork on the bridge, the flexible hoses associated with Phase 1 operations for Silo 2 can be disconnected and removed. A blind flange shall be installed over the opening associated with the hose removal to provide additional sealing.

During material retrieval activities of Silo 2, the active waste storage tanks are TNK-12-002A and TNK-12-002B while TNK-12-001A and TNK-12-001B are ventilated at a lower rate. The majority of the TTA flow is committed to tanks TNK-12-002A and TNK-12-002B. After mining and decontamination activities are complete and before the application of the fixative to the inside surfaces of the silo, ventilation of Silo 2 will be discontinued. The dampers that were opened for initiation of mining activities listed earlier are now closed.

After completion of Phase 2B, decant sump waste retrieval begins. This method for this activity is currently under development. Because of the transient nature of this operation, steady-state material balances were not required but RCS ventilation is balanced accordingly.

1.1.4 Radon Control during Interim Storage – Phase 2C

At the conclusion of the material retrieval campaigns from Silos 1 and 2, the operation of the RCS moves from Phase 2B to Phase 2C. During this phase, the RCS ventilates various TTA components as required. Limited airflow can be maintained through TTA components during this phase. The RCS has the flexibility to recycle treated air back through the TTA manifold, or exhaust it through the stack. During the interim waste storage period, the waste storage tanks each have approximately a 2-foot layer of water on top of the material for attenuating the release of radon to the TTA headspace.

The design flowrate for the ducting system for the ventilation of TTA tanks (TNK-12-001A and TNK-12-001B, TNK-12-002A and TNK-12-002B) is based upon exhausting up to 125 cfm from each tank for Phase 2C RCS operations. Airflow to and from these tanks is controlled using the same methods as those described for the silos.

1.1.5 Radon Control during Full-Scale Remediation - Phase 3

During Phase 3, the RCS can accommodate a design airflow rate of up to 500 cfm from the future full-scale treatment facility and its support facilities. In addition, the design supports an airflow rate of up to 500 cfm from the TTA tanks. Dampers would again control the balance between the two inputs. If desired, the system can be operated in the recycle mode so that air from the TTA would pass through the carbon beds and return to the TTA, in much the same way the air is to be recycled through the silos during Phase 1. Airflow through TTA waste storage tanks would be discontinued after transfer of contents from that tank to the future full-scale treatment facility is complete.

1.1.6 Process Control of Carbon Beds

The carbon adsorption system consists of four insulated carbon steel vessels, approximately 16-feet by 11-feet by 11-feet, which contains a total of 160,000 pounds of carbon (40,000 pounds per vessel). Each carbon adsorption vessel is capable of treating up to 500 cfm. Each carbon bed is physically isolated in an individual room.

The four carbon beds are operated in parallel, connected to the 10-inch main duct headers by 8-inch branch duct connections on both the inlet and outlet of the beds. Each bed is aligned with a dedicated inlet and outlet damper for flow control and isolation. Modulating dampers and flow elements provided on the inlet of each bed allow flow to each bed to be reduced or increased on the basis of operations.

The treated air stream from each carbon bed is monitored by radon monitors downstream of the carbon bed discharge dampers. In the event that out-of-parameter high alarm conditions is detected downstream of a carbon bed, the adjusting of the opposed blade damper set point on the inlet side of the carbon bed may reduce the airflow through the affected bed. If the performance of the bed continues to degrade and an out-of-parameter high-high alarm from the HMI occurs, the affected carbon bed damper will automatically close and cannot be re-opened until associated radon high-high alarm has been cleared. Closing of the damper will force the opposed blade damper of the affected carbon bed to also close. The opposed blade damper will be locked in the closed position until the associated damper is reset. The airflow will be redistributed evenly through the other carbon beds.

Pressure across each carbon bed is monitored and displayed on the HMI screen. The HMI will alarm if less than low set point or greater than high set point is exceeded on any active carbon bed.

Moisture levels entering and exiting the carbon bed are indicated on the HMI screen. High-high set point exiting will alarm on the HMI screen to alert the operator of an out-of-parameter condition.

Temperature levels entering and exiting the carbon bed are indicated on the HMI screen. High-high set point entering and exiting will alarm on the HMI screen to alert the operator of an out-of-parameter condition.

In the event a carbon bed needs to be dried to regain carbon bed performance, the RCS has the capability to isolate the individual bed from the others. A take-off stream ranging between 125 and 250 cfm from the recirculation fans will be heated using an inline process heater and passed through the affected carbon beds using an induced draft fan. From this fan the drying air stream is transferred to the RCS for treatment in the carbon beds that remain on line or if the bed is allowed to sit until the radon has decayed adequately, there exists the capability to discharge through the HEPA filters.

1.1.7 Emission Control

The treated gas stream flows from the carbon adsorption units through 8-inch branch connections to the 10-inch duct header to the redundant HEPA filtration units. Filter housings for the HEPA filters are stainless steel, side access, "bag-in/bag-out" type housings with in-place test sections. The HEPA filtration system employs bag-in and bag-out features to minimize the potential of releases during filter changes. Filters will be rated at 1,000 cfm each and operated with one online at a time. Air from the carbon beds, makeup air, and fan recycle combine before entering the HEPA filters. Differential pressure transmitters monitor differential pressure across each filter. The HMI will alarm if less than low set point or greater than high set point is exceeded when filter is in service.

A connection into the flow path before the exhaust fans provides makeup air to the closed air system through opposed blade damper LVR-20-015. Opposed blade damper LVR-20-020 allows recycled air back to the active fan. This configuration allows the fan to run near its rated speed (in rpm) to reduce strain and thus potential maintenance on the system. A connection into the flow path after the exhaust fans allows excess air to exit the system to the stack through opposed blade damper LVR-20-016.

This configuration allows the flow path of the air to:

- Return to the silos or TTA tanks,
- Be exhausted to the stack,
- Be modulated to reduce total flow through the entire system, and
- Allow fresh air makeup to take place.

Quantities of makeup air, fan recycle air, and stack exhaust will be based upon maintaining a certain static pressure at the discharge of the fan. After exiting the operating HEPA filter

unit the treated air stream enters the operating recirculation fan for redistribution to the silos, TTA tanks, or exhaust through the monitored stack.

Air from the recirculation fans can be recirculated to the silos, TTA tanks, or exhausted through the stack is sent through a common duct header. Air recirculated back to the silos or the TTA is sent through a duct located on the pipe rack that branches to each of the areas and further branches to the individual silos and tank sources to supply the recirculated air to each one. The distribution of air being exhausted versus the amount of air being recirculated to the different sources is controlled by using modulating dampers LVR-20-016, LVR-20-015, and LVR-20-020 which will be controlled based upon pressure in the fan discharge line. The pressure in the fan discharge line will be affected by the pressure in the silos and TTA tanks, each of which has modulating dampers on the inlet and outlet lines of the silos and TTA tanks for pressure control within each source vessel. Also, a closed position for the supply dampers on the silos and TTA tanks provide a signal to the exhaust damper for the stack which allows air to be exhausted. The amount of air exhausted is based upon the flow measured by the flow meters in the respective exhaust suction lines of the sources with a closed supply damper.

The stack (STK-20-001) is a 150-foot tapered carbon steel stack that is approximately 6 feet 4 inches at the base and tapers to approximately 3 feet at the top. The maximum airflow through the stack is 12,000 cfm. The stack has connections for a 10-inch carbon steel RCS process duct and a 34-inch carbon steel building ventilation duct. The stack is provided with an isokinetic sampling system and will include monitoring for both particulate radionuclides and continuous monitoring for radon. The isokinetic sampling system is housed in enclosures that are environmentally conditioned on the equipment pad close to the stack to minimize the horizontal run of the sampling line. Minimization of the horizontal run and sharp bends or turns of the sample line are requirements to reduce particulate fallout in the sample line. A sampling rake for collection of the sample from the stack is inserted into the stack and is attached to a sampling line. The sampling line is located at approximately 61 feet in elevation. This corresponds to roughly eight stack diameters downstream from the last flow disturbance into the stack. Also, the tapered transition from the 6 feet 4 inch base section of the stack to the smaller diameter section is located at approximately an elevation of 75 feet, which corresponds to about 2 stack diameters downstream of the sampling rake. These elevations were used to obtain a representative sample of the air stream being exhausted. In the event that an out-of-parameter condition is detected, an alarm is enunciated and appropriate action is taken, such as switching the HEPA filters being used, recirculating the process flow to the silos, reducing the airflow in the RCS, or shutting down the RCS. In addition to the automatic actions taken by the control system, the system calls—using telemetry—a designated number to alert the on-call responsible person that an out-of-parameter condition exists.

2.0 SCOPE

This specifications provides the requirements for program design and development that includes the programming philosophy, operation interlocks, sequencing required, and testing for the programmable logic controller (PLC) and human-machine interface (HMI) programming. The programming will be used in association with Phase 1 operation of the Radon Control System (RCS) to be used by the Silos 1 and 2 Accelerated Waste Retrieval (AWR) Project.

3.0 SUPPLIER'S SCOPE OF RESPONSIBILITY

The "Supplier" referred to in this specification shall be an approved system integrator. The Suppliers shall design, procure, fabricate, test, inspect, and deliver to site in accordance with this specification and the attachments. The Supplier shall assume single source responsibility for providing the complete turnkey monitoring and control system described in this specification—including the programming for the PLC and the HMI.

The system integrator shall be required to demonstrate a minimum of 5 years recent past experience in the design, programming, manufacturing, and commissioning of control systems of the comparable size, type, and complexity of the proposed project. The Supplier shall be required to have his own in-house capability to handle complete system engineering, fabrication, and testing. This responsibility includes, but is not limited to, the following:

- System Engineering,
- System Programming,
- System Documentation,
- System Installation Support,
- Factory Testing,
- Packing and Shipping to the Job Site,
- Start-Up Assistance,
- Loop Checkout, and
- Operating Manual.

3.1.1 Reference Drawings and Instrument Tabulations

One-Line Loop Diagrams

- 90FID001 DCS RCS CONT SYS BLOCK DIAG
- 90FID002 DCS RCS I/O CONFIGURATION TABLE SHT 1 OF 3
- 90FID003 DCS RCS I/O CONFIGURATION TABLE SHT 2 OF 3
- 90FID004 DCS RCS I/O CONFIGURATION TABLE SHT 3 OF 3
- 90FID005 DCS RCS CONTROL & HMI ARCHITECTURE – PHASE I
- 90FID009 DCS RCS CONTROL & HMI ARCHITECTURE – PHASE 2
- 90FID020 DCS ONE-LINE LOOP DIAGRAM PNL-RCS-001
- 90FID021 DCS ONE-LINE LOOP DIAGRAM PNL-RCS-002
- 90FID022 DCS ONE-LINE LOOP DIAGRAM PNL-RCS-003
- 90FID023 DCS ONE-LINE LOOP DIAGRAM PNL-RCS-004
- 90FID024 DCS ONE-LINE LOOP DIAGRAM PNL-RCS-005
- 90FID025 DCS ONE-LINE LOOP DIAGRAM PNL-RCS-005
- 90FID026 DCS ONE-LINE LOOP DIAGRAM PNL-RCS-006A
- 90FID027 DCS ONE-LINE LOOP DIAGRAM PNL-RCS-006A
- 90FID028 DCS ONE-LINE LOOP DIAGRAM PNL-RCS-006B
- 90FID029 DCS ONE-LINE LOOP DIAGRAM PHASE 1 PNL-RCS-007
- 90FID030 DCS ONE-LINE LOOP DIAGRAM PHASE 2 PNL-RCS-007
- 90FID031 DCS ONE-LINE LOOP DIAGRAM PNL-RCS-007
- 90FID032 DCS ONE-LINE LOOP DIAGRAM PNL-RCS-007
- 90FID033 DCS ONE-LINE LOOP DIAGRAM PNL-RCS-008

- 90FID034 DCS ONE-LINE LOOP DIAGRAM PNL-RCS-008
- 90FID035 DCS ONE-LINE LOOP DIAGRAM PNL-RCS-008
- 90FID036 DCS ONE-LINE LOOP DIAGRAM PNL-RCS-009
- 90FID037 DCS ONE-LINE LOOP DIAGRAM PNL-RCS-009
- 90FID038 DCS ONE-LINE LOOP DIAGRAM PNL-RCS-009
- 90FID039 DCS ONE-LINE LOOP DIAGRAM PNL-RCS-010
- 90FID040 DCS ONE-LINE LOOP DIAGRAM PNL-RCS-011
- 90FID042 DCS ONE-LINE LOOP DIAGRAM PNL-RCS-012
- 90FID043 DCS ONE-LINE LOOP DIAGRAM PNL-RCS-013

4.0 CONTROL SYSTEM

4.1 General

The principal means of control for the treatment system is a microprocessor-based PLC. The PLC—combined with the HMI, which includes video display, personal computer (PC), keyboard, and printer—will provide the plant operator with complete control of all vital plant functions. The system video-displayed graphics shall indicate a real-time and continuously updated set of all parameters, possibly requiring operator intervention. The control system PC also serves as a data acquisition and storage device for all system parameters—allowing plant operator or maintenance personnel a facility for recording historical equipment data.

4.2 Plant Alarm System

1. Provide overall plant alarm system. Alarm and events shall be logged to file. Alarms shall fall within one of following categories.

   a. Priority 1. Alarms annunciated at computer and logged to alarm printer. These alarms are transmitted to remote location by auto dialer.

   b. Priority 2. Alarms annunciated at computer and logged to alarm printer.

2. Provide alarm and event summary screens at computer as noted below.

   a. Alarm Summary Screen

- Display only current alarms. Acknowledged alarms that are no longer active shall not be displayed.
- Allow operator to acknowledge alarms using single keystroke at alarm summary screen.
- Display shall include:
  - time and date alarm initially occurred
  - alarm point identification, and
  - description of alarm.

b. Event Summary Screen

- Events include but are not limited to:
  - operator changeover from manual to automatic operation of equipment,
  - pump fan/chiller or equipment start-stop,
  - operator entered set-point changes with password, and
  - acknowledgment of alarms.
- Display shall include following information.
  - time and date event occurred, and
  - identification of event.

4.3 Data Logging

All analog process points shall be logged to the hard disk of the computer. Procedure for data collection and storage of analog data shall be as follows.

1. Computer shall scan process points at regular interval of 15 minutes and log average value to the disk.
2. Data shall be stored in Excel™ file format.
3. Daily log report shall be generated and logged to disk automatically and shall be able to be printed on demand.

4. Daily files shall be automatically archived to CD and deleted from the hard drive after 30 days.

4.4 Trending

Historical and real-time trending of all analog process points shall be provided. Trend display requirements are as follows.

1.) Identification of process point being displayed. Use same nomenclature as used on process graphic display screens.

2.) Start and end time of data being displayed.

3.) Display shall incorporate movable vertical cursor along time axis. Parameter value at cursor date and time shall be displayed digitally.

4.) Initial configuration of display shall display data from present time back to 8 hours before present time. Provide capability for operator to enter new start time for data being displayed to view parameter trend more than 8 hours old.

5.) Trend display shall be accessible by a single keystroke from process graphic screen.

4.5 Graphic Screen

Provide graphic screens as listed below for operator interface. These screens are the minimum required. Additional screens may be required during software development based on process requirements. The need for additional screens shall be determined at time of notice to proceed or at any time during the software development. The cost of major change requests will be negotiated by FWENC and the Supplier. Minor change requests will be performed at no cost to FWENC

1. Process main screen. This screen shall appear first whenever the system starts. The main screen shall give graphic overview of the process and give operator the ability to go to any other screen.

   Main screen shall show status of the main equipment (e.g., chiller running).

   There shall be a login template for operator to login using a password and logout.

   Main screen will have following phase selector soft push buttons:

   - Phase 1 – Radon (Reduction) Control in the Silo 1 and 2 Headspace,
   - Phase 2A – Silo 1 Retrieval, Silo 2 Headspace Reduction and TTA Ventilation,

- Phase 2B – Silo 2 Retrieval and TTA Ventilation,
- Phase 2C – TTA Ventilation During Interim Storage, and
- Phase 3 – TTA Ventilation and Future Material Treatment.

Selection of Phase push buttons shall be password protected.

2. Process screens. These screens shall provide operator the ability to control the plant operation and view all critical parameters and alarms. The graphic shall be based on Piping and Instrumentation Diagram (P&ID) drawings.

   The following is the list of process screen:

   1.) Silo 1 and 2 (P&ID 12 and 13);

   2.) Filter Filtrate and TTA Storage Tanks (P&ID 14 and 15);

   3.) Carbon Bed System (P&ID 16);

   4.) Hold-Up Tanks and Condensate (P&ID 17);

   5.) Dryer and Chiller (P&ID 18);

   6.) Exhaust, Recirculation Fans, and Stack (P&ID 19); and

   7.) Building Ventilation (P&ID 6 and 8).

3. Analog input set-point screen. This screen shall provide operator ability to change set points of all analog inputs with passwords.

4. Radiation trending screen. This screen shall show radiation trending.

5. Alarm screen. This screen shall show adjustable timer for each alarm point.

6. All opposed blade dampers, control valves, and variable speed drives shall have auto/manual template control set points when the device is chosen.

4.6 General Programming Guidelines

1. All alarm conditions shall be visibly displayed on the cathode ray tube (CRT) screen as well as logged in the hard disk and shall remain active until acknowledged by the operator.

2. Provide adjustable timers for alarm display points to prevent nuisance alarm. Timer values shall be 0–60 seconds. Initial setting, unless otherwise specified, shall be 5 seconds.

3. Unless otherwise specified in logic description, following timer values to generate equipment fail alarms.

   - Damper fail to open: 60 seconds
   - Damper fail to close: 60 seconds
   - Equipment fail to start: 60 seconds

4. All digital alarms or interlock signals shall be failsafe (i.e., contact opens for alarm or shutdown, unless otherwise noted).

5. For shutdown or permissive interlock (i.e., high-high level) signal from analog input. Provide dead-band in signal to prevent rapid recycling of the pump because of fluctuation of signal (e.g., pump will shutdown at 80 inches of water level and will restart automatically at 70 inches of water level, dead-band provided - 10 inches).

6. For shutdown or permissive interlock (i.e., high-high level) signal from digital input, provide time delay after shutdown for automatic restart of the pump to prevent rapid recycling because of signal fluctuation.

7. In 'AUTO' position of the soft 'HAND-OFF-AUTO' control station, the motor shall start and stop on the basis of the logic description. In 'HAND' position operator will start the motor bypassing all interlocks.

8. Switchover of 'HAND-OFF-AUTO'. Switch from 'HAND' to 'AUTO' shall not stop the motor if interlocks are satisfied. Switch from 'AUTO' to 'HAND' shall not stop the motor.

9. Operational status display of the equipment shall be provided on the PC graphics. Typically, equipment will be displayed green if running and red if stopped.

10. Electrically actuated OPEN-CLOSE valves shall be displayed green if open and red if closed. In addition, the control signal shall determine the percent open of the modulating control valve (i.e., 12-mA control signal is 50% open, color yellow). The system shall display the position (% open) of the modulating control valve.

11. Controller shall provide display of process variables, control variable, and operator-adjustable set point.

12. All soft switch set points generated by the analog signal shall be operator adjustable.

13. For the Motor Control Center (MCC), incoming power shall be monitored by a relay. Loss of power signal shall be sent to the PLC.

4.7 Password

Provide password protection levels for operation at the computer. Password protection shall consist of two levels.

1. Operator - Password entry required. Parameters that can be changed at this level include:

   - Access to all graphic screens,
   - Switch from manual to automatic control, and
   - Manual control of equipment.

2. Supervisor - Password entry required. Parameters that can be changed at this level include:

   - Alarm and/or interlock set points generated from analog signals,
   - Process set points for controller,
   - Exit from run-time operation of Process Control System software, and
   - Access to all software programming functions (i.e., strategy-building, configuration, and other).

4.8 Automatic Shutdown and Manual Startup

1. Upon system powerup, the general-purpose computer and PLC component shall perform necessary start-up diagnostics functions and relay outcome codes to PC and PLC to begin operation. If all components are in proper working order, all 'HAND-OFF-AUTO' switches will come up in 'HAND' mode. Operator will bring the plant to operation by lineup and placing HOA in "AUTO" mode.

2. When the plant shuts down from plant shutdown signals (e.g, high-high radiation, high differential pressure at silo head, MCC power loss), all HAND-OFF-AUTO control station shall come up in their fail-safe position in HAND mode. Operator will restart the motors and bring the plant to operation and place HOA in "AUTO" mode.

3. Control system consists of two independent control components: SCADA software running on a PC and redundant PLCs. The loss of one of the PLC either by power loss or by other failure will result in plant switch over to the other PLC.

The shutdown of SCADA software or the HMI computer shall not result in a plant shutdown. A restart of SCADA will not cause the system PLC to restart. A shutdown of SCADA will result in the operator interface alarming and historical recording and other functions to be stopped until SCADA is restarted. PLC may be shutdown without HMI computer by switches located on CPUs. Both CPUs must be switched to stop.

Upon PLC system powerup or PLC system restart:

All analog and digital outputs will go to the fail-safe position/state (off or 0% output).

'HAND-OFF-AUTO' station modes will come up in the manual mode with outputs in the fail-safe position (usually OFF/STOP).

All tunable parameters will remain at the last assigned value from previous run-time session.

Thus, although all tuning changes made during run-time will be retained through a PLC system exit and restart, outputs and 'HAND-OFF-AUTO' stations will come up in their fail-safe positions (manual mode). The operator will be required to restart the plant.

There will be only one PLC system restart mode, regardless of the cause of system shutdown. The PLC system restart mode will be identical; whether shutdown was caused by switching the PLC to program mode, PLC panel power loss, uninterruptable power supply (UPS) power loss, or other system failure (e.g., PLC watchdog timer time-out).

Whenever PLC system restart mode is executed, an alarm shall be actuated. If SCADA is running, it will record the date and time of the alarm in the alarm log.

5.0 CONTROL LOGIC DESCRIPTION

Control of the Radon Control System (RCS) is required for the two main systems associated with its operation.

The first is the process system, System 20, which is designed to reduce radon gas from the head spaces of different radon sources, the two Silos, the four TTA tanks, the Filtrate Process and Storage tanks, the two Hold-Up tanks, and the Decant sump. One of the redundant Exhaust/Recirculation fans will provide air to the supply header at a

predetermined pressure for distribution of air to the different radon sources. Opposed blade dampers in the recycle line, discharge exhaust line, and makeup air line will be used to control pressure within the air supply header to the radon source (silos/tanks). Pressure readings above the supply header setpoint will modulate the opposed blade damper in the exhaust line to the stack to allow air to be discharge until the required pressure condition within the air supply header is re-established. Makeup air will be pulled in through a makeup air filter and will be modulated using an opposed blade damper to re-establish the set pressure in the air supply header in the event of a reduced pressure condition within the header. The operating exhaust/recirculation fan will be operated near its rated speed and flow to the radon sources (silos/tanks) and will be controlled by the opposed blade damper in the recycle line around the fans. This system will provide a constant pressure supply to the radon source (silos/tanks). Pressure control at each radon source (silos/tanks) will be accomplished by using a set of opposed blade dampers on the supply and exhaust/suction lines from each source and an independent pressure transmitter within each source. Increases in pressure outside operating range within the radon source (silos/tanks), will cause the opposed blade damper on the supply line to begin to close to reduce the amount of air that is entering the silo/tank. As the supply damper closes, there will be an increase in the supply header pressure, which will now begin to open the exhaust damper to the stack. When the supply damper is modulated to 100% closed, the opposed blade damper on the exhaust/suction line will open further to allow increase discharge to exhaust fans. This control philosophy can also provide control when modules are opened on the silo bridge or TTA deck. The Filtrate Process tank, Filter Storage tank, and the two Hold-Up tanks will be vented to the RCS system. They will be brought on-line, as they are needed. Each of the radon source (silos/tanks) has a vacuum relief valve, which will open if the vacuum pressure exceeds allowable tolerances. Air from each of the radon sources (silos/tanks) shall pass through a desiccant drying system to remove moisture and then to the carbon beds to delay radon and entrap radon daughters. The air will then be exhausted through HEPA filters and recirculated to the radon source (silos/tanks) or exhausted through the stack as needed to maintain supply air header pressure.

The second system is the RCS building heating and ventilation system, which is a once through system that will provide a negative pressure within the RCS buildings for containment. The building supply fan will supply air to the areas in the RCS building. The carbon bed building Air Handling Unit will provide conditioned air into the carbon bed building area to maintain the process temperature within the carbon beds to allow for radon removal. The Air Handling Unit for the carbon bed areas will run continuously but air conditioning will only be done while the temperature is above 60°F. The Air Handling Unit will also be interlocked with the building exhaust fans to shutdown on exhaust fan shutdown. The combined exhaust streams from the first and second floors of the Air Handling Building and from the carbon bed areas will be filtered through a set of redundant HEPA filters to remove any particulate. Air from the filters will be discharged through the stack by one of the redundant building exhaust fans.

The following alarms are Priority 1 and shall be transmitted to remote location by the Auto-Dialer.

- unrelieved high pressure in silos,
- both recirculation fan shutdown,
- both chiller or desiccant dryer shutdown,
- high radon alarm at stack,
- spare high radar alarm in building exhaust duct,
- spare,
- spare, and
- spare.

6.0 FACILITY OPERATION

A. The Radon Control facility will be operated continuously. Periodic shutdown/startup and temporary operations may be required for routine maintenance and/or automatic equipment shutdown.

B. The P&IDs along with the above control system and logic description provide the basis for the treatment facility operation.

C. All operations of the plant process equipment shall be performed at the HMI except for those operations described as local-manual in nature.

6.1 Submittals

A. The Supplier shall submit, in the manner and within the time limit where called out as set forth in the contract documents: Graphic screen layouts, PLC ladder diagrams, Input/Output (I/O) address and software information.

B. Review/approval of the submittals shall not relieve the Supplier of the entire responsibility for the engineering, design, programming, workmanship and material under the project documents.

C. Program documentation shall be provided including a complete set of all original manuals received from software subcontractors with sufficient detail to enable understanding, trouble shooting, and any future system modifications.

D. All original system software disks of SCADA and PLC run time and development shall be provided. Copies of all hard disk files and logic and/or ladder diagrams shall be provided. All software manuals and handbooks shall be provided.

E. Submittals Register

- Software information	2 weeks after award	Review/Approval
- Screen Display and PLC ladder diagram	8 weeks after receipt of software information	Review/Approval
- Testing and delivery of control panel/PLC	8 weeks after receipt of approved screen display and ladder diagram	Review/Approval
- System Operation & Maintenance (O&M) manuals (6- copies)	With shipment	Review/Comment

7.0 QUALITY ASSURANCE

The Supplier shall have a quality assurance program that will ensure equipment and services provided will properly reflect the specification requirements. The program shall cover as a minimum the following areas:

- Design and procurement control,
- Control of purchased material,
- Inspection and testing,
- Handling and storage, and
- Corrective action.

The Supplier shall submit their quality assurance plan to FWENC for review and approval.

8.0 SOFTWARE PRODUCTS

8.1 PLC Software

1. Relay ladder diagram programming to implement specified control strategies.
2. Perform data acquisition and control of associated process equipment. Function as totally independent unit from SCADA software.

3. Relays, timers, counters, math, comparators, data transfer, PID control and other predefined control programming necessary to implement specified control strategies.

4. Software shall allow PLC ladder program to be documented, assign labels to address points in program; display labels on programmer monitor, and annotate on ladder printout.

5. Capabilities to add, delete, or modify any portion of PLC program while system is running or stopped.

6. PLC programming software shall be Siemens STEP 7™, and Continuous Function Chart (CFC) and Sequence Function Chart (SFC) software.

8.2 SCADA Software

1. A complete package of Window's™-based SCADA software—including the runtime and development packages and the data acquisition and color graphic systems to interface with PLC—shall be provided with the PC. The color graphic system shall be Computer-Aided Design (CAD) based preferably compatible with PC AutoCad™. These systems shall fully support all control, display and data acquisition function for the system outlined on the P&IDs. The control and data acquisition software shall be capable of data logging and recording alarms and operator actions or events. The system shall be capable of producing American Standard Code for Information Interchange (ASCII) files for direct import into a spreadsheet program such as Excel™ (latest version) and replayed on the MMI as one of the multitask functions. The data logging rate, schedule, and duration shall be operator configurable. Latest version of Window-NT™ shall be provided. Software shall be in compliance with Year-2000 (Y2K) requirements.

2. SCADA software shall be Siemens WinCC™. During the first year, the process control system is in operation, Supplier shall provide product upgrades for entire system at no cost to FWENC. Upgrades shall include—but not be limited to—software revision updates.

9.0 CODES AND STANDARDS

A. The equipment furnished under this specification shall be in accordance with but not limited to the latest version of the following codes and standard, including all revisions and addenda in effect at the date of purchase order unless otherwise stated in this specification.

- American National Standard Institute (ANSI)

- ANSI S50.1 Compatibility of Analog Signals for Electronics Industrial Process Instruments.
- ANSI C2 National Electrical Safety Code

- National Fire Protection Association (NFPA)
  - NFPA 70 National Electrical Code (NEC)
- Instrument Society of America (ISA)
  - RP 55.1 Hardware Testing of Digital Process Computers
  - RP 12.6 Installation of Intrinsically Safe Instrument System in Classified Location
- National Electrical Manufacturing Association (NEMA)
  - ICS 6 Enclosure for Industrial Controls and systems
- Federal Communication Commission (FCC) Rules and Regulations
  - FCC Part 15 Radio Frequency Devices
- DOE Standards

10.0 EXECUTION

10.1 Input/Output Handling

A. Point Identification - Each system's addressable points shall have a unique identification number assigned by the Supplier that shall not exceed twelve alpha/numeric characters. The identification number shall be the same as the instrument tag number and will be used by the operator to address point data. In addition, a twenty-four character (minimum) abbreviated, English description of each point shall be part of the database. The operator shall have the capability to easily modify point identification numbers and descriptions in the future as required.

B. I/O List – See attached I/O list for ranges, units, point types, and other similar data. This list is not intended to include the specific requirements of the Supplier. The Supplier shall compile an I/O assignment list for review. An I/O required to implement the scope of this system (such as analog to digital converter check points, system alarms, cold junction compensation, and power supply voltage checks) shall be provided. Additionally, the quantity of inputs and outputs specified

by the FWENC shall be provided. Ranges, functions, and other information shall be provided to the Supplier.

10.2 Graphic Screen

Graphic requirements for the fan/pump and/or valve selector switches, plus instrument controllers and alarms required are contained. For additional graphic requirements see attached logic description.

Within the P&IDs and logic description attachments to this specification, screen use shall occur in the following manner:

A. Operator shall be able to scroll from one screen to any other screen. Provide a template on the side of each screen showing all screen names upon which the operator can click and access that screen.

B. The operator shall be able to click on a screen icon to pop up another screen to display available control for that icon. For example, clicking on the recirculation fan will show 'A-B' selector switch and 'HAND-OFF-AUTO' selector switches for both fans with the selected switch position highlighted.

C. Clicking on the transmitter shall bring up the controller screens. Controller screen shall provide a display of process variables, control variables and operator adjustable setpoints. Controller screen shall have an 'AUTO-MAN' selector switch. The PID controller screen shall have P, I, and D set points.

D. Alarms and warning massages shall be displayed near associated instrument and/or equipment.

10.3 DOE Standard for Human Factor Engineering Design Criteria

A. For control/display integration see attached U.S. Department of Energy (DOE) standard, Section 2.0, pp. 7–15.

B. For visual display including CRT, see attached DOE standard, Section 3.0, pp. 17–24 and pp. 38–44.

10.4 Erection/Installation Support

A. Startup support personnel shall be provided to initialize custom system. This support shall include—but not be limited to—inspection of the equipment installation to ensure it is installed in accordance with the manufacturer's recommendations, checking the control system hardware and software configuration, making tuning adjustments necessary to place the system in trouble-free operation, and instructing

the operating personnel in the proper operation and maintenance of the equipment furnished.

B. The Supplier shall allow a minimum of 15 days for training, loop check, and start-up service time to perform functions described above. Cost for additional service shall be the responsibility of the Supplier.

10.5 Loop Checks

A. Loop checks shall be performed by the Supplier with the fully operational control system in coordination with the electrical Subcontractor.

10.6 Testing and Inspections

A. During the course of fabrication, the Supplier shall inspect and test the equipment for materials, connections, assembly, workmanship, completeness, proper operation and strict conformance to this specification and approved design drawings. FWENC shall have the right to inspect for quality control, including calibration records of test equipment, at any time. In addition to the Supplier's ongoing tests and inspections, a demonstration test and a site acceptance test shall be performed.

B. Before shipment of control system equipment to the job site—but upon completion of system fabrication, software development and documentation to reflect the current system—the Supplier shall perform a demonstration test to the satisfaction of the FWENC. In the event that complete test cannot be performed—because of shipment of the control panel to the site before software completion—partial test shall be performed at the factory and complete operational test will be performed at the job site. Any deficiency found during test in the field shall be corrected by the Supplier at it's own time and expense.

C. Witnessed factory test shall be designed to demonstrate that hardware and software fulfills all the requirements of this specification. The test conditions shall resemble actual installed conditions as closely as possible. Additional hardware or software required to successfully verify system operation shall be supplied at no cost to the FWENC.

D. Some of the test to be performed shall include but not limited to the following:

- Building and loading the system data base,
- Conducting on-line modifications to the data base,
- Demonstrating operability of the interfaces (hardware and software),

- Demonstrating operability of the data communication network,
- Verifying the screen displays and interactive capabilities of the operator's console,
- Simulating selected operating conditions to verify the performance of the monitoring and control functions, and
- Generating reports using test data.

E. During the test, FWENC shall have unrestricted access to the system, and all faults identified during this period shall be corrected and retested before completion of factory test. All test data and procedures followed during testing shall be logged, and certified copies of logs shall be provided to the FWENC.

F. The Supplier shall notify the FWENC 15 days in advance of a proposed start date for the factory testing. At the time of notification, the Supplier shall submit a detailed test procedure for approval by FWENC.

11.0 TRAINING

A. Training shall be provided by the Supplier. The cost of training shall be included in the contract price. Training shall include—but not be limited to—programming, operation, and maintenance of the system. The training and instruction shall be directly related to the system being supplied. The training programs shall include a factory-training program consisting of schooling and hands-on experience at an established user-oriented digital system course and a field-training program consisting of hands-on related instruction using the operating system shall be provided by Supplier.

B. The field training program shall be run at the operations site and consist of two days of instruction for operations personnel and shall cover system operation, system debugging, program modification, and troubleshooting and maintenance procedures. Supplier shall submit a training schedule for FWENC approval.

12.0 TESTS, INSPECTIONS, AND EXAMINATIONS

All test, inspection, and examination reports shall include as a minimum:

- Job title,
- Date of Test,
- Specific test performed/Procedure designation,

- Test Results,
- Signature of the person performing the test/inspection,
- Statement of the inspector's qualifications, and
- Equipment used and calibration date (if available).

Shop inspection shall be required. The responsibility for quality control tests besides with the Supplier. FWENC reserves the right to inspect, at any time during fabrication, the equipment and to witness all tests. Inspections shall be by the Supplier or its authorized representative who shall have entry to plants, including the Subcontractors' plants, while working on or testing of the equipment is being performed. FWENC shall have the right to reject any equipment that does not conform to the specifications, applicable codes, rules, regulations, or this specification. Modification costs associated with corrective actions shall be the responsibility of the Supplier.

When tests performed in the Supplier's shop require witnessing, Supplier shall provide 10 days advance notice to FWENC before performing tests. The Supplier shall provide for FWENC approval a calibration and inspection procedure for each instrument type. The Supplier shall provide certification to FWENC that all test equipment has been calibrated to a traceable National Institute of Standards and Technology (NIST) standard. The equipment shall be identified by model and serial number. The enclosures shall be given the instruments manufacturer's standard tests, including leak testing, continuity, and functional checkout. All test procedures shall be referred to in the proposal and submitted for approval after award. All test results shall be recorded, certified, and submitted to FWENC for approval 10 days before shipment. If the equipment fails to perform during the test, corrective action shall be taken in the Supplier's shop and the tests shall be repeated.

The Supplier shall provide for FWENC approval a cabinet test procedure for each cabinet or panel designed and fabricated.

Acceptance test shall include checking alarms, shutdown, outputs, and readings. The Supplier shall describe the method of testing to be used to determine the performance characteristics in the proposal.

The Supplier shall notify FWENC 10 days before the actual fabrication start date. FWENC shall have the option to inspect the fabrication before, during, and upon completion and to witness any and all test and inspections.

13.0 DELIVERY

Immediately following cleaning, all surfaces and components shall be dried and openings shall be sealed. The preparation for delivery shall include providing necessary packaging as

required to prevent damage during shipment. All vendor-supplied cables shall be packed in a separate container. At no time shall spare or loose parts be shipped in cabinets. The Supplier shall submit shipping schedule to FWENC approval 3 weeks before shipment. The Supplier shall ship two copies of the following documents with the cabinets: operation and performance data, literature and parts list, instrument operating and maintenance instructions, and installation instructions.

14.0 ATTACHMENTS

- System 20 Logic Description
- System 77 Logic Description