62 2-402 .7

DRAFT GEOTECHNICAL SAMPLING AND TESTING PLAN FOR PHASE III OF THE SITE-WIDE DISPOSAL FACILITY FIELD INVESTIGATION REVISION 1 MARCH 9, 1995

03/09/95

DOE-0688-95
DOE-FN EPAS
200
WORK PLAN

DRAFT GEOTECHNICAL SAMPLING AND TESTING PLAN

FOR PHASE III OF THE

SITE-WIDE DISPOSAL FACILITY FIELD INVESTIGATION

REVISION 1

MARCH 9, 1995

Prepared by

Fernald Environmental Restoration Management Corporation

Prepared for

U. S. Department of Energy
Fernald Field Office

Under Contract DE-AC05-92OR21972

62

Department of Energy
Fernald Environmental Management Project
P. O. Box 538705
Cincinnati, Ohio 45253-8705
(513) 648-3155

MAR 0 9 1995

DOE-0688-95

Mr. James A. Saric, Remedial Project Manager
U.S. Environmental Protection Agency
Region V - 5HRE-8J
77 West Jackson Boulevard
Chicago, Illinois 69604-3590

Mr. Thomas P. Schneider
Ohio Environmental Protection Agency
401 E. Fifth Street
Dayton, Ohio 45402-2911

Dear Mr. Saric and Mr. Schneider:

TRANSMITTAL OF DRAFT GEOTECHNICAL SAMPLING AND TESTING PLAN FOR PHASE III OF THE SITE-WIDE DISPOSAL FACILITY FIELD INVESTIGATION

The Department of Energy, Fernald Area Office (DOE-FN) is pleased to submit the enclosed Draft Geotechnical Sampling and Testing Plan (GSTP) for Phase III of the Site-Wide Disposal Facility Field Investigation for your review and approval.

Both Fernald Environmental Restoration Management Corporation (FERMCO) and Parsons are evaluating geotechnical data from previous investigations within the area of interest and data currently being received from the Phase II Pre-Design Investigation for the Site-Wide Disposal Facility. As analysis of this information continues over the next several weeks, we will continue to evaluate and refine the proposed strategy for this investigation. Our current plan is to meet with U.S. and Ohio Environmental Protection Agencies during the week of March 20, 1995, to discuss this proposed plan and any planned modifications which result from our ongoing data analysis activities.

If you have any questions, please contact Rod Warner at (513) 648-3156.

Sincerely,

Johnny Reising

for Jack R. Craig
Fernald Remedial Action
Project Manager

FN:Jalovec

Enclosures: As Stated

Recycled and Recyclable

DRAFT GEOTECHNICAL SAMPLING AND TESTING PLAN

FOR PHASE III OF THE

SITE-WIDE DISPOSAL FACILITY FIELD INVESTIGATION

REVISION 1

MARCH 9, 1995

APPROVALS:

for Nancy S. Weatherup, Director — 03/09/95 Date
CERCLA/RCRA Unit 2

Don L. Walker — 3/9/95 Date
Project Manager, Site-Wide Disposal Facility

Steve T. Garland — 03/09/95 Date
CRU2 Engineering Manager

TABLE OF CONTENTS

SECTION	TITLE	PAGE
1.0	Introduction	1-1
2.0	Summary of Previous Investigations	2-1
3.0	Organization and Responsibilities	3-1
3.1	Organization	3-1
3.2	Responsibilities	3-1
3.3	Sample Team Organization	3-2
3.3.1	Organization Structure	3-2
3.3.2	Responsibilities of Team Members	3-4
3.3.3	Responsibility Matrix	3-5
3.3.4	Sampling Schedule	3-6
4.0	Health and Safety	4-1
4.1	Geotechnical Sampling and Testing Plan	4-1
4.2	Radiological Monitoring and Controls	4-2
4.3	Non-Radiological Monitoring and Controls	4-3
5.0	Quality Assurance and Quality Control	5-1
5.1	Accuracy, Precision, and Sensitivity	5-1
5.2	Completeness, and Comparability	5-2
5.3	Training	5-2
5.4	Performance and System Audits	5-3
5.5	Field Changes to the GSTP	5-3
6.0	Field Activity Guidelines	6-1
6.1	Field Activity Requirements	6-1
6.2	Field Operations Procedures	6-2
7.0	Field Sampling Plan	7-1
7.1	General	7-1
7.2	Field Programs	7-1
7.2.1	Sampling From Soil Boring Locations	7-1
7.2.1.1	Objectives	7-1
7.2.1.2	Soil Sample Collection (Geotechnical)	7-3
7.2.2	Sampling From Shallow Soil Excavation Locations	7-3

TABLE OF CONTENTS

SECTION	TITLE	PAGE
	7.2.2.1 Objectives	7-3
	7.2.2.2 Soil Sample Collection (Geotechnical)	7-9
	7.2.3 Cone Penetrometer Testing	7-11
	7.2.3.1 Objectives	7-11
	7.2.4 Phase III Well Installation	7-17
	7.2.4.1 Objective	7-17
	7.2.4.2 Well Construction	7-18
	7.2.4.3 Well Development	7-18
	7.2.4.4 Groundwater Measurements	7-18
	7.2.5 Phase III Slug Testing	7-19
	7.2.5.1 Objective	7-19
	7.2.5.2 Slug Test Data Analysis	7-20
7.3	Field Methods	7-20
	7.3.1 Subsurface Soil Sampling	7-20
	7.3.2 Shallow Excavations	7-21
	7.3.3 Cone Penetrometer Testing Method	7-21
	7.3.4 Waste Handling/Disposal	7-22
	7.3.5 Project Surveying	7-23
7.4	General Sampling Requirements	7-23
	7.4.1 Field QC Samples	7-23
	7.4.2 Alternate Sampling Procedures	7-24
	7.4.3 Sample Equipment and Materials	7-25
	7.4.4 Equipment Decontamination	7-25
	7.4.5 Sample Volume, Containers, and Preservation	7-25
	7.4.6 Sample Collection Documentation	7-25
	7.4.7 Sample Collection Reports	7-26
7.5	Sample Management	7-26
	7.5.1 Sample Identification and Labeling	7-26
	7.5.2 Sample Chain of Custody Records and Field Data Documentation	7-26
7.6	Field Equipment Methods	7-27
	7.6.1 Calibration of Field Equipment	7-27
	7.6.2 Documentation of Calibration	7-27
7.7	Laboratory Methods	7-27
7.8	Sample Analysis and Validation	7-27

000005

LIST OF FIGURES

FIGURE	TITLE	PAGE
1-1	Proposed Investigation Area	1-2
1-2	Proposed Location for On-Site Disposal Facility	1-3
2-1	Total Thickness of Gray Till	2-5
2-2	Total Thickness of Glacial Till	2-6
2-3	Depth to Uranium Contaminated Soil	2-7
3-1	Final Geotechnical Investigation Organizational Structure	3-3
7-1	Tentative Locations for Soil Borings and CPTs	7-2

LIST OF TABLES

TABLE	TITLE	PAGE
2-1	Summary of Reports Reviewed During GSTP Preparation	2-1
2-2	Summary of Reviewed Geotechnical Testing	2-3
2-3	Summary of Total Geotechnical Testing	2-4
6-1	Reference Guidelines	6-3
6-2	Geotechnical Surveying Procedures	6-4
6-3	Soil Sampling Procedures	6-5
6-4	Groundwater Sampling Procedures and References	6-6
7-1	Geotechnical Laboratory Testing Program (Soil Borings)	7-4
7-2	Sample Volume, Containers, and Preservation - Soil Samples	7-9
7-3	Geotechnical Laboratory Testing Program (Shallow Borings/Excavations)	7-12
7-4	CPT Soundings Planned Depths	7-15
7-5	Summary of ASTM Procedures	7-16

APPENDIX

ATTACHMENT	TITLE
A	Final Geotechnical Investigation Specific Data Quality Objectives
B	SSOP-1070, "Unexpected Discovery of Cultural Resources"
C	Example Field Forms
D	Equipment List
E	Type K Expansive Grout
F	Denison Sampling
G	Schedule
H	Methodology for Using Hollow-Stem Auger as a Temporary Casing in Zones of Subsurface Uranium Contamination
I	ASTM Standards

000007

1.0 INTRODUCTION

The preferred remedial alternative for Operable Unit 2 includes an on-site disposal of remediation material. The design of a disposal facility is required as part of Operable Unit 2 remedial action plans. Also, the design will include accepting waste materials generated from other on-site remediation. Initial screening for an acceptable location for the disposal facility was performed using available environmental sampling data. This data was evaluated by using an uncertainty kriging model to determine if enough data was available to ensure accurate geological predictions. The model results indicated that an unacceptable uncertainty existed in predicting lithologies for locating a disposal facility. Therefore, a predesign investigation was performed to define the most suitable location of the disposal facility within an identified best area at the Fernald Environmental Management Project (FEMP) based on Operable Units 2 and 5 Remedial Investigation/Feasibility Study (RI/FS) investigations. The identified best area is located on the east side of the FEMP and measures approximately 2000 feet east to west by 5300 feet north to south (see Figure 1-1). This area is considered the best location for an on-site disposal facility primarily based on the greatest thickness of gray clay which provides a protective layer over the Great Miami Aquifer. Fate and transport modeling and risk assessments in the Operable Unit 2 Feasibility Study (FS) report have shown that a disposal facility in this area, based on a feasible facility design and a 12-foot gray clay layer, will be protective of human health and the environment. The boundary of the identified best area, identified on Figure 1-1, is bounded on the north, east, and south by the Ohio Environmental Protection Agency (OEPA) siting requirements (buffer from property line and water supply wells). The west boundary follows the 12 feet of gray clay contour line with the exception of the northern portion of the west boundary line (above the Production Area), which was made based on identification of sand lenses within the gray clay.

Based on information obtained from the predesign investigation, estimates of waste volumes for on-site disposal, and preliminary disposal facility design; the proposed location for the on-site disposal facility has been identified (see Figure 1-2).

The objective of this geotechnical sampling and testing plan is to obtain engineering and geotechnical data necessary for the engineering design of the site-wide disposal facility. The data obtained through this investigation will support engineering analyses for the disposal facility design including

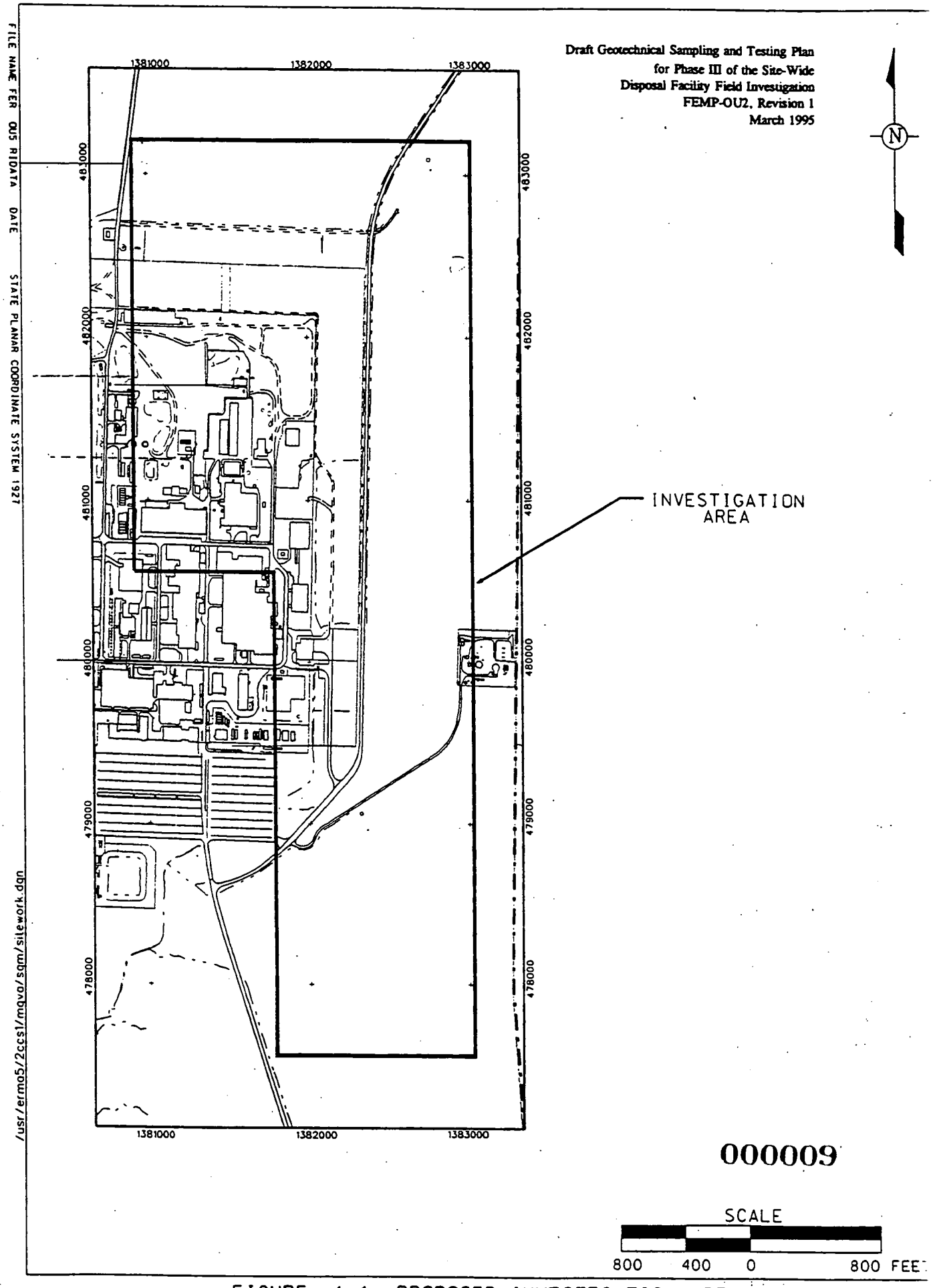

FIGURE 1-1. PROPOSED INVESTEGATION AREA

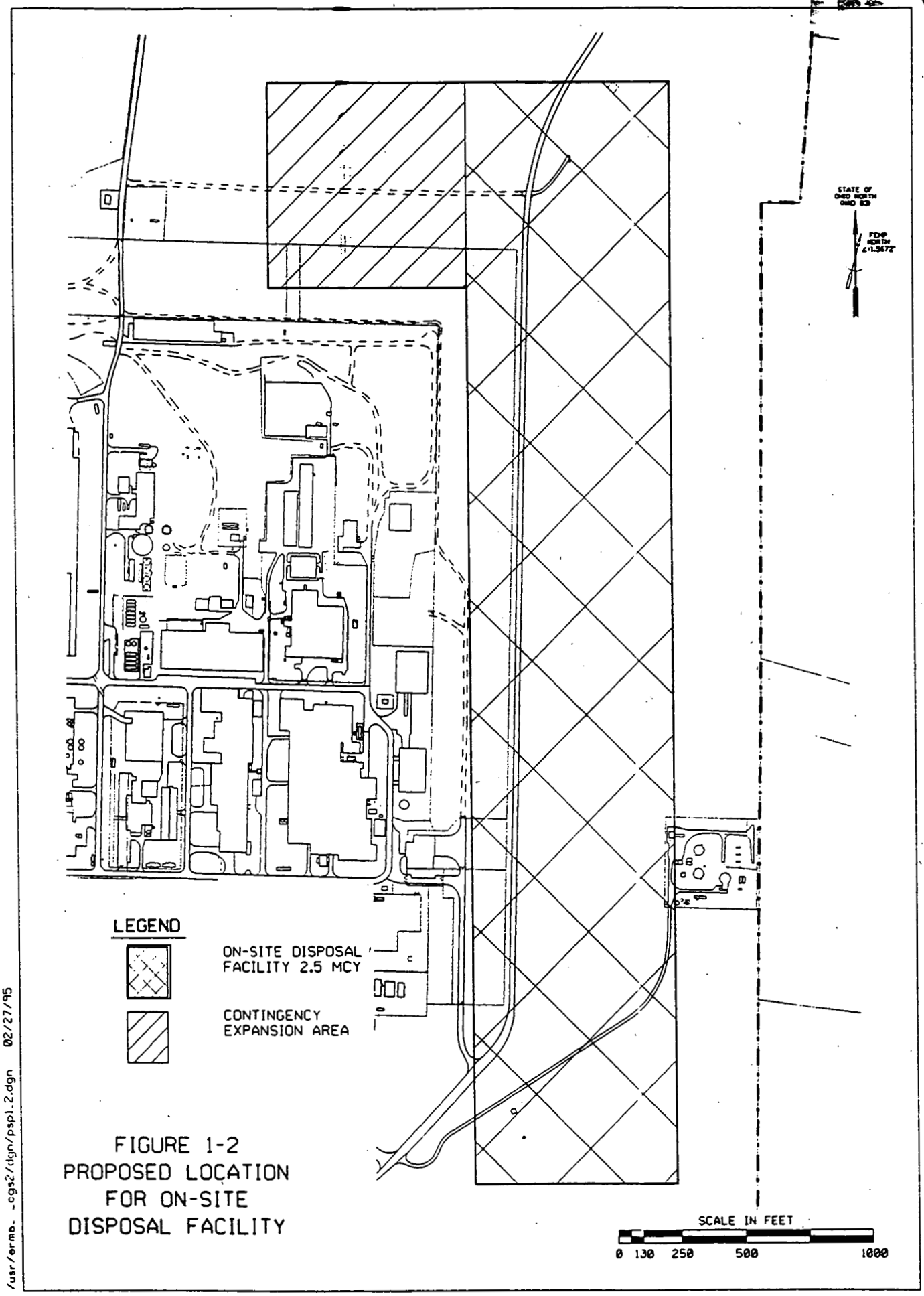

FIGURE 1-2
PROPOSED LOCATION
FOR ON-SITE
DISPOSAL FACILITY

/usr/ermb_ _cgs2/dgn/pspl.2.dgn 02/27/95

settlement, earthquake stability, structural support, liquefaction potential, slope stability and other design requirements. Data will also be obtained to determine if engineering controls will be required to minimize potential flow pathways from granular materials. This investigation will provide further refinement to the evaluation of the location and extent of identified interbedded and interconnected granular materials and perched groundwater identified in the pre-design field investigation phases I and II. The final geotechnical investigation will be performed within and adjacent to the general area proposed for the disposal facility with emphasis being placed on the areas proposed for the construction of the disposal facility dikes/berms. The data quality objectives are identified in Appendix A.

The proposed location and depth for geotechnical borings and Cone Penetrometer Testing (CPT) have been based on an examination of existing geotechnical information within and near the proposed area, and estimated till thickness. The proposed sampling locations are being evaluated and refined as data from the Pre-Design Field Investigation is received and reviewed. The Scope of Work included in this Geotechnical Sample and Testing Plan (GSTP) is based on the current understanding of site conditions and anticipated findings of the Phase II Pre-design Investigation. Revisions to the Phase III fieldwork may be necessary to ensure that the objectives are satisfied as the geotechnical investigations proceed. Investigative findings which could materially affect the conclusions of the Phase II Pre-design Investigation will be discussed with the agencies prior to modification or expansion of Phase III fieldwork.

2.0 SUMMARY OF PREVIOUS INVESTIGATIONS

Existing FEMP reports were reviewed to obtain information that would be useful in locating the disposal facility and/or in planning this final geotechnical investigation. The reports reviewed are listed in Table 2-1.

TABLE 2-1

SUMMARY OF REPORTS REVIEWED DURING GSTP PREPARATION

Author	Date	Report
Parsons	March 1992	"Conceptual Design Report for the Engineered Waste Management Facility"
Parsons	September 1993	"Central Storage Facility Subsurface Exploration"
CRU4 Letter	January 1994	OU4 Feasility Study Geotechnical Analysis
Parsons	March 1994	"On-Site Waste Disposal Cell Pre-Design Activities Engineering Report"
Parsons	July 1994	"On-Site Waste Disposal Cell Pre-Design Activities Engineering Supplement Report"
DOE	June 1994	"Remedial Investigation Report for Operable Unit 5, Volume 1 of 5 and Appendix P"
Parsons	On-going	"Phases I and II of the Operable Unit 2 Pre-Design Field Investigation"

The "Conceptual Design Report for the Engineered Waste Management Facility" performed geotechnical testing of soils mainly from the northern and eastern side of the site.

The "Central Storage Facility Subsurface Exploration" Report evaluated the subsurface conditions at a proposed Central Storage Facility (approximately 1 acre in area) located to the north of the production area.

The report "On-Site Waste Disposal Cell Pre-Design Activities Engineering Report" and "...Supplemental Report" (Parsons, 1994) focused on geological testing from the southeastern corner of the site.

The OU4 Feasility Study Geotechnical Analysis (see FERMCO letter M:CRU5(OR):94-0071 "Transmittal of Geotechnical Data to the Administrative Record," dated January 28, 1994) contains soil sample information taken from a preliminary location for an on-property disposal facility north of the Production Area.

"The Draft Remedial Investigation Report for Operable Unit 5 at the FEMP" (DOE, 1994) contained interpretations of stratigraphy and boring/well log data that was used in preparation of the GSTP.

The study "Phases I and II of the Operable Unit 2 Pre-Design Field Investigation" performed geological and geotechnical testing of soils within the identified best area shown in Figure 1-1. Phase I comprised of CPT. Phase II comprised of soil borings and geotechnical testing.

A summary of the types and number of existing geotechnical tests related to the proposed location for the On-Site Disposal Facility for the purpose of locating additional borings are listed in Table 2-2. Table 2-3 summarizies the types and numbers of total geotechnical tests planned to be performed after the completion of the Phase III Geotechnical Investigation.

The existing data obtained from the reports identified in Table 2-1, as well as miscellaneous monitoring activities undertaken during remedial investigations, have provided more than 150 borings/wells within the boundaries of the identified best area shown in Figure 1-1. Diagrams indicating thickness of the gray till (see Figure 2-1) and thickness of the total till (see Figure 2-2) have been developed from information obtained from these borings, wells, and cone penetrometer testings. Figure 2-3 shows the approximate depths required to penetrate soils contaminated with uranium at levels above the Operable Unit 5 Proposed Final Remediation Level for leachable uranium from on-site soils (20 mg/kg) as reported in the November 1994 Draft Proposed Plan for Operable Unit 5. Special precautions will be required in areas containing soils (at depth) with uranium levels in excess of 20 mg/kg to assure protection of the groundwater (See Appendix H for the Methodology for Using a Hollow-Stem Auger as a Temporary Casing in Zones of Subsurface Uranium Contamination).

TABLE 2-2
SUMMARY OF REVIEWED GEOTECHNICAL TESTING

TEST	EWMF*	OU2 DISPOSAL FACILITY GEOTECHNICAL REPORT INCLUDING SUPPLEMENT REPORT	PRE-DESIGN (PHASE II)**	CENTRAL STORAGE FACILITY SUBSURFACE EXPLORATION	OU4 FEASIBILITY STUDY GEOTECHNICAL ANALYSIS
Moisture Content	99	32	89	21	—
Unit Weight	—	17	—	12	—
Grain Size/ Hydrometer	99	39	116	7	31
Specific Gravity	99	39	89	—	—
Atterberg Limits	92	37	116	7	—
Consolidation (Undisturbed)	10	3	6	3	—
Consolidation (Remolded)	—	—	3	—	—
UU Triaxial (Undisturbed)	—	—	—	3	—
CU Triaxial (Undisturbed)	10	8	11	—	—
CU Triaxial (Remolded)	—	2	4	—	—
Hydraulic Conductivity (Undisturbed)	10	4	27	—	14
Hydraulic Conductivity (Remolded)	—	8	14	—	—
Standard Proctor	—	6	28	—	—
Modified Proctor	—	1	—	—	—

* As presented in the H. C. Nutting Report

** As specified on the Request for Analysis forms sent to the geotechnical laboratory

TABLE 2-3
SUMMARY OF TOTAL GEOTECHNICAL TESTING

TEST	REVIEWED GEOTECHNICAL TESTING (Total)	PHASE III GEOTECHNICAL INVESTIGATION (Proposed)	TOTAL
Moisture Content	241	76	317
Moisture Content (Microwave)	—	18	18
Unit Weight	29	48	77
Grain Size/ Hydrometer	292	99	391
Specific Gravity	227	14	241
Atterberg Limits	252	63	315
Consolidation (Undisturbed)	22	16	38
Consolidation (Remolded)	3	16	19
UU Triaxial (Undisturbed)	3	17	20
UU Triaxial (Remolded)	—	8	8
CU Triaxial (Undisturbed)	29	13	42
CU Triaxial (Remolded)	6	7	13
Hydraulic Conductivity (Undisturbed)	55	8	63
Hydraulic Conductivity (Remolded)	22	14	36
Standard Proctor	34	16	50
Modified Proctor	1	—	1
Organic Matter	—	42	42
Soundness	—	5	5
Abrasion	—	5	5
R-Value	—	3	3

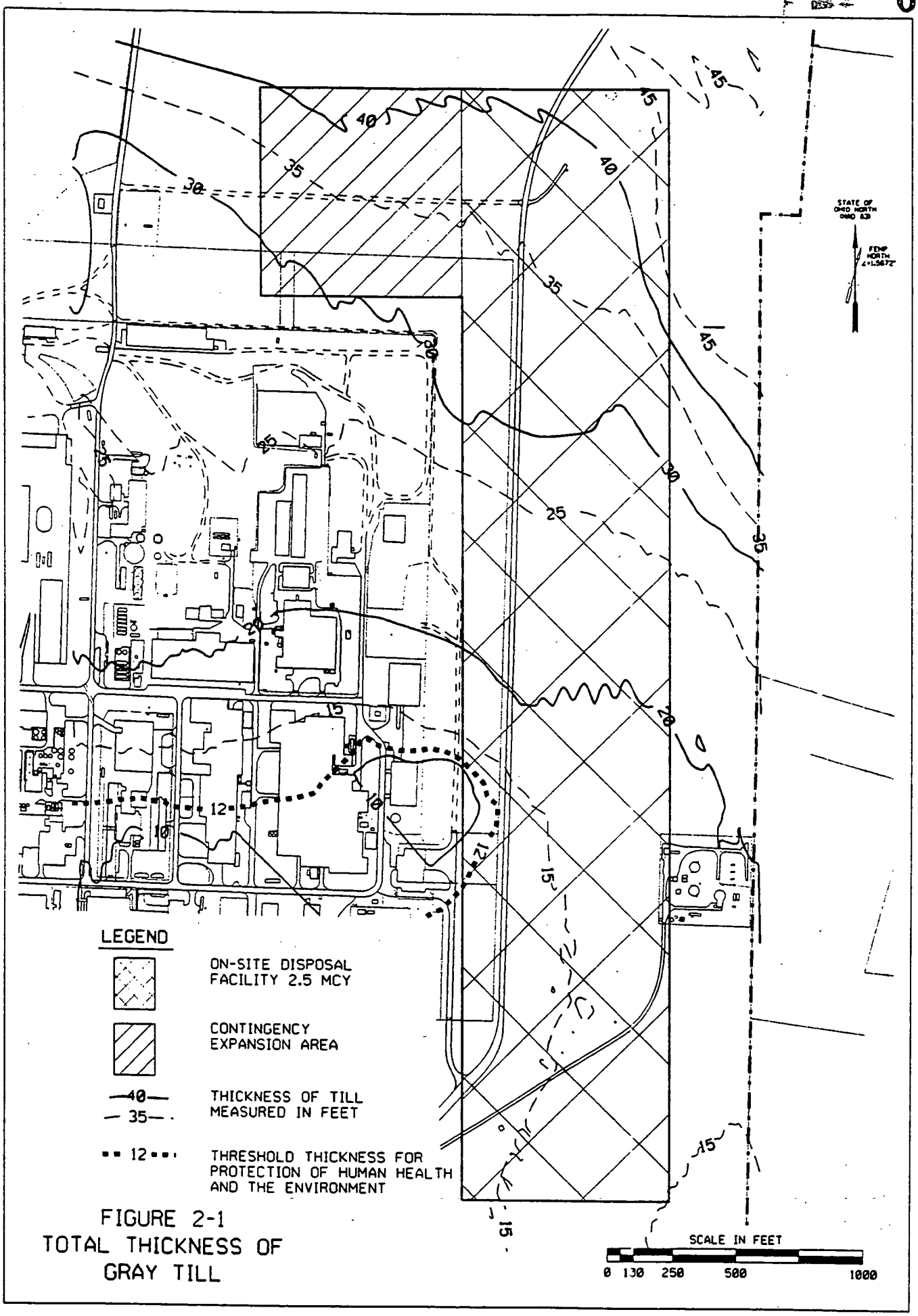

FIGURE 2-1
TOTAL THICKNESS OF GRAY TILL

/usr/erme5/2cgs2/dgn/psp2.1.dgn 02/27/95

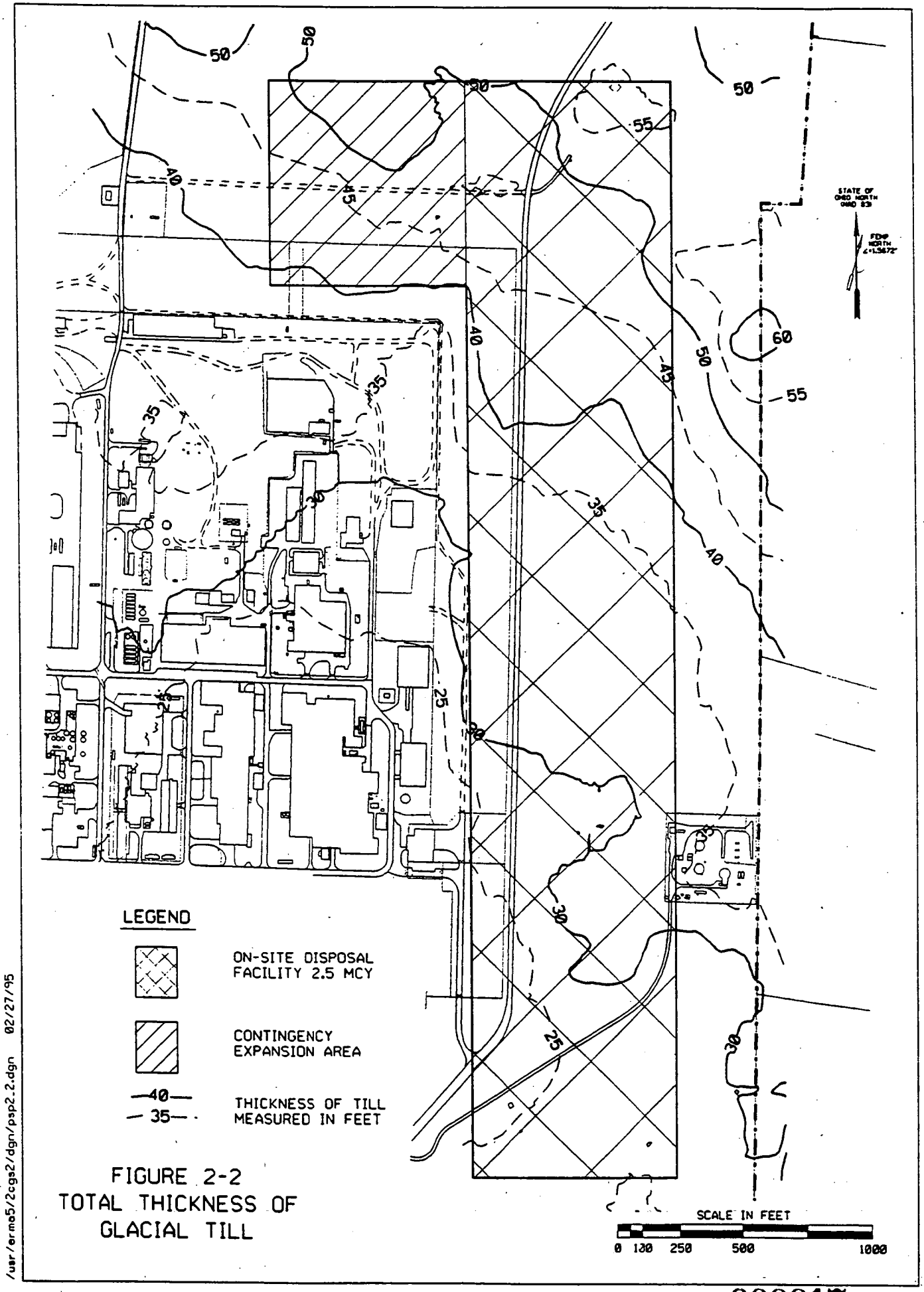

FIGURE 2-2
TOTAL THICKNESS OF GLACIAL TILL

/usr/ermo5/2cgs2/dgn/psp2.2.dgn 02/27/95

000017

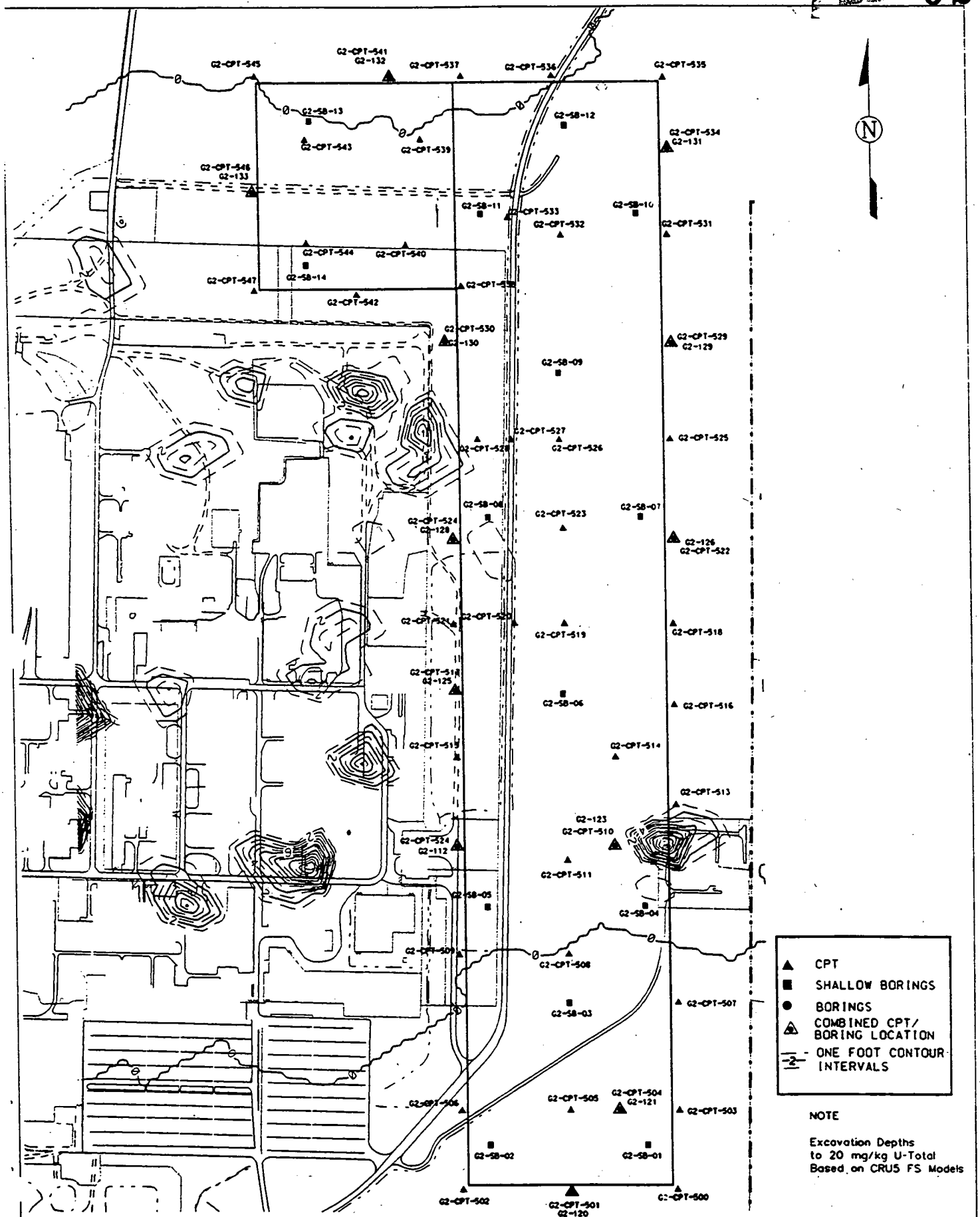

FIGURE 2-3
DEPTH TO URANIUM CONTAMINATED SOIL IN THE DISPOSAL FACILITY AREA

3.0 ORGANIZATION AND RESPONSIBILITIES

3.1 ORGANIZATION

This section describes the organizational and management structure to be used in implementing the Operable Unit 2 Predesign Work Plan at the FEMP. An Environmental Restoration Management Contract (ERMC) has been implemented at the FEMP site to manage the restoration activities, with Fernald Environmental Restoration Management Corporation (FERMCO). FERMCO reports directly to the Department of Energy-Fernald Area Office and acts as the main contractor for FEMP activities and coordinator of technical support and remediation subcontractors. Under the current FERMCO organizational structure, Operable Unit 2 activities will be the responsibility of Comprehensive Environmental Response, Compensation, and Liability Act/Resource Conservation and Recovery Act (CERCLA/RCRA) Unit 2 (CRU2), with such activities being conducted by individuals of various disciplines matrixed to CRU2 from other FERMCO departments (see Figure 3-1).

3.2 RESPONSIBILITIES

The major tasks that constitute the Operable Unit 2 Predesign Investigation organizational responsibilities to carry out those tasks are identified here. Primary responsibilities for implementing the Operable Unit 2 Predesign Work Plan will rest with Operable Unit 2 of the FERMCO organization, with additional necessary support provided through matrixing from other FERMCO departments and through subcontracts as appropriate to ensure quality and timeliness. Task-specific responsibilities will be implemented as follows:

1. Complete overall planning, integration, execution, and support of the Operable Unit 2 pre-design program. Implementation of these activities is the responsibility of the Environmental/Engineering Section matrixed to CRU2.

2. Prepare and obtain approval of Operable Unit 2 sampling and analytical procedures. Development of any new procedures will be the responsibility of the Planning Group within the Environmental/Engineering Section of CRU2. New procedures will be submitted to EPA for approval, as exceptions or addenda to the SCQ.

3. Prepare a Geotechnical Sampling and Testing Plan (GSTP) per CERCLA guidance for conducting field investigations, sampling, and analytical tasks. Each GSTP will be provided to the U.S. Environmental Protection Agency (EPA) and the Ohio Environmental Protection Agency (OEPA) for their review and approval before sampling activities are initiated.

4. Conduct the field program in accordance with the SCQ, established procedures, and the GSTP, including all aspects of monitoring, sampling, and shipment of samples. FERMCO's Site Restoration Services (SRS) will provide the necessary matrixed support to CRU2 to ensure completion of these tasks. Parsons will provide technical oversight and perform the geotechnical testing for geotechnical sample selection, analysis, and interpretation.

5. Review and validation of chemical data collected during field sampling/field characterization program will be conducted by the Data Quality Management Department of the Environmental Division. These tasks will be performed in accordance with the approved SCQ data validation procedures. Validated data will be entered into the FEMP SED.

6. Assess and evaluate the field data to the requirements of DQOs and the Work Plan. Various facets of this task will be the responsibility of the Environmental/Engineering Section of CRU2, including the Predesign Investigation Group, and the Data Management Group.

3.3 SAMPLE TEAM ORGANIZATION

3.3.1 Organizational Structure

Sampling for this project will be performed by both Parsons and the SRS Department of FERMCO. A schematic presentation of the organization in provided in Figure 3-1. Due to the nature, objectives, and programmatic requirements of this project, actual sampling locations and analysis parameter selection have been designated by FERMCO/Parson personnel of Operable Unit 2.

Parson's geotechnical personnel will be responsible for selecting geotechnical samples and producing the subsequent field boring logs. FERMCO personnel will be responsible for assisting in soil sample collection, and shipping of samples to the analytical lab.

Additional sampling custodian staff may be utilized to provide an interface between the sampling crews and the FEMP or contract laboratory to be used for sample analysis.

FIGURE 3-1
FINAL GEOTECHNICAL INVESTIGATION
ORGANIZATIONAL STRUCTURE

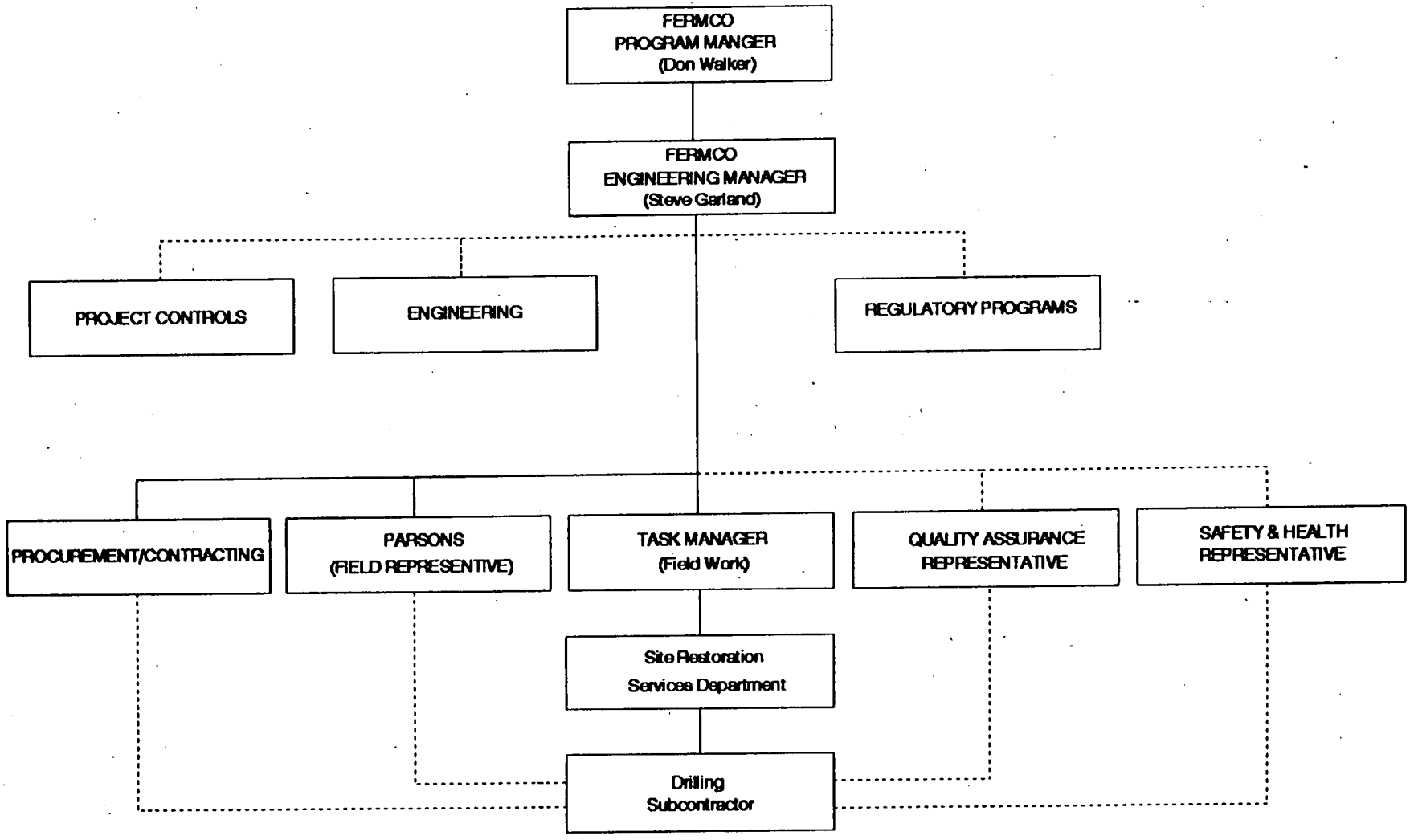

3.3.2 Responsibilities of Team Members

Overall project management will be provided by Steve Garland, P.E. who is matrixed into CRU2. Reporting to him are the following functional groups:

- Regulatory Programs - responsible for assuring that the regulatory basis for the design is met by the proposed data collection
- Procurement/Contracting - Responsible for obtaining the required subcontract services
- Project Controls - Responsible for tracking costs and scheduling data
- Final Geotechnical Investigation Task Manager - Responsible for implementing program objectives and reviewing data
- Engineering - Responsible for geotechnical testing and geotechnical data interpretation.
- Quality Assurance - Independent of investigation activities and responsible for assuring field activities follow the identified procedures. Provide QA oversight of subcontractor activities.
- Safety and Health - Responsible for assuring the safe conduct of investigation field activities and for the overall health of site workers.

Field sampling personnel from SRS are responsible for the collection and transportation of the samples and for the performance of slug tests and groundwater monitoring in accordance with the approved GSTP. All activities associated with the execution of sampling are to be documented on the appropriate Field Activity Logs (FALs) which are to be completed, by the A-E's geologist, for each location. These technicians are also responsible for ensuring that the proper sampling equipment is available and in serviceable condition. Also, proper decontamination of equipment between each sampling point is the responsibility of these staff. Additional sampling custodian staff who interface with the FEMP or contract laboratory are responsible for ensuring that proper sampling containers, are available and in serviceable condition. Drillers are responsible for their equipment.

Also, sample labeling, handling, storage, and a Site-Wide Analysis Request/Custody Record (SWAR/CR) Form to be completed prior to submittal to the appropriate FEMP or contractor laboratory for analysis, are the responsibility of the sampling custodian. Finally, sampling custodians are responsible for logging in all collected samples, delivering the samples to the FEMP laboratory or sending the samples, with accompanying paperwork, to the contract laboratory. These personnel are

a part of the SRS Department.

3.3.3 Responsibility Matrix

The following is a responsibility breakdown of the geotechnical field investigation tasks.

1.	Procurement	
	a. Drilling	FERMCO
	b. CPTs	FERMCO
	c. Location Surveying	FERMCO
	d. Laboratory Testing	A-E Contracted Laboratory
2.	Access	
	a. Access Coordination	FERMCO
	b. Vehicle/Equipment Inspection	FERMCO
	c. Site Access Training	FERMCO
	d. Health & Safety Training	FERMCO
3.	Permits & Approvals	
	a. Site Penetration Permits	FERMCO
	b. Other Site Permits/Approvals	FERMCO
4.	QA/QC Activities	
	a. Overall QA/QC Management	A-E+FERMCO
	b. Field Activities QA/QC	A-E
	c. Laboratory QA/QC	A-E
5.	Field Investigation Program	
	a. Technical & Commercial Direction of Field Program	FERMCO
	b. Specify Sample Depth, Type, Quantity	A-E
	c. Document Sampling Methods are in accordance with ASTM Standards	A-E+FERMCO
	d. Coordinating Movement of Equipment On-Site	FERMCO
	e. Coordinating Movement & Release of Samples	FERMCO
	f. Preparing Field Notes and Other Documents	FERMCO
	g. Preparing Boring Logs	A-E
	h. Health & Safety Management/Oversight	FERMCO
	i. Field Health & Safety	A-E+FERMCO
	j. Slug Tests/Groundwater Measurements	FERMCO

3.3.4 Sampling Schedule

Sampling will be accomplished according to the schedule contained in the approved work plan and Appendix G of this GSTP. In general, sampling will be performed concurrent with other investigative activities such as soil boring.

4.0 HEALTH AND SAFETY

The most successful methodology for providing an effective health and safety program for any activity is to ensure that involved personnel have received adequate training prior to implementation of the fieldwork. Employee awareness of all physical, radiological, and chemical hazards which may be encountered will be accomplished by training throughout the planning and execution of this project.

All FEMP employee and subcontractor personnel who will be performing fieldwork during this project will be required to have participated in all Occupational Safety and Health Administration (OSHA)-mandated 1910.120 Hazardous Waste Site Worker training. In addition, all applicable annual refresher training will have been taken by the individuals.

DOE Order 5700.6C (Quality Assurance) require a series of site-specific training courses for workers at the FEMP. These courses are designed to augment OSHA required training and provide additional training specific to the hazards which exist at the FEMP.

Field personnel participating in the performance of this project will be trained to the SCQ requirements, the FEMP and Project Specific Health and Safety Plan, and the GSTP.

In summary, employee awareness and clearly delineated lines of authority and responsibility have been designed to provide for effective health and safety related knowledge specific to each activity.

4.1 GEOTECHNICAL SAMPLING AND TESTING PLAN

All aspects of this GSTP will be performed in accordance with all existing applicable U.S. DOE, U.S. EPA, OSHA, and State of Ohio Health and Safety Regulations. Additionally, all practices will be managed in accordance with commonly accepted practices used in the hazardous waste industry.

Prior to the implementation of fieldwork which involves cone penetrometer work, drilling, trenching, or soil boring, a Penetration Permit will be obtained. Before a Penetration Permit is obtained, the area of concern is investigated and compared against the site database for underground utilities in the area. No drilling, trenching or soil borings will be performed without a valid Penetration Permit being obtained prior to actual performance of the fieldwork.

Field activities require a health and safety plan. A health and safety plan has been prepared in accordance with the FEMP Site Health and Safety Plan. For each project task and subtask, health and safety technician coverage is provided by the assignment of a technician to monitor the activities of the field crew. Health and safety plans provide for the hazards typically encountered by personnel when performing the specified fieldwork.

Proper equipment to be used for health and safety monitoring and personnel protection will be specified in the Project Specific Health and Safety Plan (Attachment B -- Personnel Environmental Monitoring Action Levels). Criteria for the selection of monitoring equipment and protective clothing will also be detailed in the Project Specific Health and Safety Plan (Attachment A -- Project-Specific Health and Safety Requirements Matrix).

Each member of the field crews is required to participate in a health and safety training session which is specific to each field project, prior to performance of that fieldwork.

4.2 RADIOLOGICAL MONITORING AND CONTROL

Radiological monitoring for this work plan will be achieved using existing institutional controls commonly utilized at the FEMP. For those areas of the FEMP which are under existing institutional radiological controls, any employee who will be entering such areas is required to possess and wear a Thermoluminescent Dosimeter (TLD) to monitor for exposure to radiation. In addition, each employee is required to participate in a regularly scheduled urinalysis program which is designed to monitor for radiological exposure. In addition, each employee performing work in the former production area or in any radiologically controlled area must attend and pass appropriate on-site radiological training.

Monitoring results, which exceed FEMP-determined exposure guidelines, will be further evaluated as to the possible source(s). Measures necessary to reduce personnel exposure to radiation will be implemented. Such measures may include, but are not limited to, personnel training, decontamination, employee exposure monitoring, increased personnel monitoring, personnel protective equipment, and sampling of suspect materials encountered.

If the responsible radiological technician assigned to the field activities identifies a real or potential condition which could or will result in an unsafe condition, then that person has the responsibility to cease field operations until such time as the unsafe condition has been corrected.

4.3 NON-RADIOLOGICAL MONITORING AND CONTROL

Monitoring of potential health and safety problems associated with non-radiological hazards are evaluated by a health and safety technician. Also, all field crews are responsible for hazard awareness and recognition. Task-specific training is designed to enhance the performance of all fieldwork using good and safe work practices.

Evaluating the potential for personnel exposure to organic contaminants will be achieved mainly through the use of a Photoionization Detector. Other equipment which could potentially be used includes oxygen meters, and combustible gas indicators. Appropriate PPE levels will be determined and governed by the radiological, and health and safety technicians prior to the execution of field activities.

If the responsible industrial hygiene technician assigned to the field activities identifies a real or potential condition which could or will result in an unsafe condition, then that person has the responsibility to cease field operations until such time as the unsafe condition has been corrected.

5.0 QUALITY ASSURANCE AND QUALITY CONTROL

The primary objectives of the QA/QC sections of this plan relate to the collection of engineering/geotechnical information needed to support the design of an on-site disposal facility with an approximately 2.5 million cubic yard capacity. Specific objectives of this field sampling effort will be designed, organized, and implemented in a manner which will optimize the collection of information which meets predetermined DQOs. To ensure that information is gathered in such a manner that DQOs are met, QC measures will be used to determine conformance with overall program objectives.

The fundamental mechanisms used to achieve these project quality goals can be categorized as prevention, assessment, and correction. These components are further described as follows:

1. Prevention of defects in the data quality through planning and design, documented instructions and procedures, and careful selection and training of skilled, qualified personnel.

2. Quality assessment through a program of regular audits and surveillances to supplement continual informal review.

3. Permanent correction of conditions adverse to quality objectives through a close-looped corrective action system.

5.1 ACCURACY, PRECISSION AND SENSITIVITY

For the purposes of this GSTP, accuracy, precision, and sensitivity are defined in the following manner:

Accuracy and Precision

Accuracy is defined as degree of conformity to the true value, and is achieved by using recognized calibration standards. Precision is defined as degree to which measurements of replicates agree to one another, being free from bias or drift in the measurement data.

Accurate and precise data will be achieved through the use of sampling and analysis procedures that minimize biases, through the use of standard procedures, through the meticulous calibration of field and testing equipment, and by implementing corrective action whenever measured accuracy and

precision exceed pre-established limits.

Sensitivity

Sensitivity is defined as the capability of indicating minute differences. The sensitivity of field measurements (eg., penetrometer measurements) will be estimated.

Refer to Section 4.2 of the SCQ for additional detail.

5.2 COMPLETENESS, AND COMPARABILITY

For the purposes of this GSTP, Completeness, and Comparability are defined in the following manner:

Completeness

A sufficient number of successful measurements, at least 90 percent, must be obtained to characterize the extent and nature of soil, subsoil, perched water and groundwater within the proposed waste disposal facility site.

Comparability

Comparability is the extent to which comparisons among separate measurements will yield valid conclusions. Comparability among measurements in the final geotechnical investigation will be achieved through the use of rigorous standard field installation, sampling, document control, data reporting, and analytical procedures. Refer to Section 4.3 of the SCQ for additional detail.

5.3 TRAINING

All FEMP employees and subcontractors assigned to this project will be required to participate in a series of regularly scheduled training sessions which are designed to enhance employee awareness of each one's responsibilities and duties in the project. Field staff will receive comprehensive project and task specific training. Project daily "Tailgate Safety Meetings" will augment health and safety and project objectives training prior to the project start. Refer to Section 4.4 of the SCQ for additional details.

5.4 PERFORMANCE AND SYSTEM AUDITS

To verify compliance with the SCQ and project-specific requirements, the FEMP project manager and designated FEMP QA organization shall be responsible for scheduling and conducting QA audits and surveillance. Audit results of activities covered by the SCQ are available to the EPA upon request to DOE/FN. EPA may conduct external audits of FEMP activities covered by the 1991 Amended Consent Agreement as required.

As a minimum, audits shall consist of evaluation of the QA program and procedures, effectiveness of the implementation, and review of associated project documentation. Audits shall cover applicable laboratory activities, field operations and documentation, and final reports. Auditing shall be performed in accordance with DOE guidelines, the SCQ and applicable GSTPs.

Planned QA oversight of Parsons and Geotechnical subcontractor analysis will be conducted by FEMP QA.

As a minimum, surveillance shall consist of monitoring/observing ongoing project activity and work areas to verify item and activity conformance to specified requirements. Surveillance shall be scheduled, planned, and documented. Refer to Section 12 of the SCQ for additional details.

5.5 Field Changes to the GSTP

Field changes to the GSTP are at the discretion of the architect-engineering subcontractor's representative, field geologist, sampling technician, and/or the Task Manager. Prior to implementation of the field changes, the Task Manager shall be informed of the proposed changes and the circumstances requiring the changes. Any changes to the activities specified in the GSTP or the DQO must have the approval of the Task Manager and Quality Assurance prior to implementation. Changes to the program shall be documented on the applicable Variance Request Form within 24-hours of verbal approval. Field changes to the sampling activities defined in this GSTP may change the location of sampling or add additional sampling locations. Scope changes to the GSTP or DQO will require respective document revisions. Specific DQOs for this GSTP were developed and are presented in Appendix A.

6.0 FIELD ACTIVITY GUIDELINES

6.1 FIELD ACTIVITY REQUIREMENTS

This section presents a generalized description of the field activities proposed to complete the Final Geotechnical Investigation. Field activities will consist of geotechnical surveying using a cone penetrometer and sampling of subsurface soils using an auger rig, installation of groundwater wells using, measurements of water levels, and slug tests.

Procedures to be used during the performance of the field operations are derived from several FEMP program plans, procedures, ASTM guidance, and EPA sources. FEMP program plans, specifically the SCQ and FEMP SC/DM Department Standard Operating Procedures will be used as guidance documents. U.S. EPA procedure reference sources include the "Compendium of Superfund Field Operations Methods" and "Hazardous Waste Site Disposal Operations." Guidance for field activities is presented in Section 6.2 below.

For those field activities for which adequate procedures do not exist, activity-specific procedures are presented. These procedures will be in accordance with commonly accepted investigative techniques and recognized industry practices.

Because there is a possibility that the FEMP and surrounding area may contain archaeological sites, which are protected under Federal law, procedures have been developed to properly protect these sites. If any material is encountered during this investigation which may be a cultural or archaeological resource, work will stop immediately and the appropriate people notified. Appendix B outlines this procedure in greater detail.

6.2 FIELD OPERATIONS PROCEDURES

Tables 6-1 through 6-4 provide references for administrative, field, and sample handling/laboratory procedures for various activities in the Final Geotechnical Investigation for the On-site Disposal Facility. These activities are:

- Geological survey using a cone penetrometer
- Soil sampling for geotechnical soil properties
- Soil sampling for selected radiological analysis
- Well installation
- Water level measurements

000032

TABLE 6-1

REFERENCE GUIDELINES

Administrative Procedures	Reference Documents
QA/QC	SCQ Sections 4, 5, 10, and 11; Appendix A/Table 2-2; Appendix D; Appendix J
Chain of Custody	SCQ Volume I, Section 7.1; RI/FS Fernald Project Policy and Procedures Manual, FPP-401, Section 5.1.12
Corrective Action	SCQ Volume I, Section 15.2; RI/FS Fernald Project Policy and Procedures Manual, FPP-210
Daily Logs	SCQ Appendix J, Subsection J.4.1
Variances	SCQ Volume I, Section 15.4.1; RI/FS Fernald Project Policy and Procedures Manual, FPP-203
Document Change Request	SCQ Volume I, Section 4.4.3.2; RI/FS Fernald Project Policy and Procedures Manual, FPP-200

Field Procedures	Reference Documents
General Drilling Practices	SCQ Section 5.2.1; Appendix J, Subsection J.4.2
Monitoring Well/Piezometer Design, Installation, and Abandonment	SCQ, Section 5.2.2; Appendix J, Subsection J.4.3; PCN-EM-GW-004-1-01 and -02 - Standard Operating Procedure for Well Plugging and Abandonment
Abandonment	ASTM D5299-42 "Standard Guide for Decommissioning of Groundwater Wells, Vadose Zone Monitoring Devices, Boreholes and Other Devices for Environmental Activities" OAC 3745-9-10 "Abandonment of Test Holes and Wells" ASTM C150-92 "Standard Specification for Portland Cement"
Well Development	SCQ Appendix J, Subsection J.4.4
Field Screening of Samples for Radioactive Contamination	SCQ Appendix K, Subsection K.5.3.2; RI/FS Fernald Project Policy and Procedures Manual, FPP-600
Decontamination	SCQ Appendix K, Subsection K.11

Sample Handling/ Laboratory Procedures	Reference Documents
Classification, Transportation, and Shipment of FEMP RI/FS Samples	RI/FS Fernald Project Policy and Procedures Manual, FPP-601; SCQ Appendix K, Subsection K.10; Volume I, Subsection 6.7; Compendium of Superfund Field Operations Methods, Section 6.0

TABLE 6-2

GEOTECHNICAL SURVEYING PROCEDURES

Administrative Procedures	Reference Documents
See Table 6-1	See Table 6-1

Field Procedures	Reference Documents
Penetrometer Techniques	Section 8.2.3 of this GSTP; ASTM D 3441-86 "Standard Method for Deep, Quasi-Static, Cone and Friction-cone Penetrometer"

TABLE 6-3

SOIL SAMPLING PROCEDURES

Administrative Procedures	Reference Documents
See Table 6-1	See Table 6-1

Field Procedures	Reference Documents
General Drilling Practices	See Table 6-1
Subsurface Sampling	SCQ Appendix K, Section K.5.3
Surface Sampling	SCQ Appendix K, Section K.5.1
Field Screening of Samples for Radioactive Contamination	SCQ Appendix K, Section K.11; RI/FS Fernald Project Policy and Procedures Manual, FPP-600
Decontamination	See Table 6-1

Sample Handling/Laboratory Procedures	Reference Documents
Classification, Transportation, and Shipment of FEMP RI/FS Samples	See Table 6-1
Geotechnical Analyses	ASTM reference methods as shown on Table 7-5 Dry Weight, Army Corp, Engineers EM100-2-1906.

TABLE 6-4

GROUNDWATER SAMPLING PROCEDURES AND REFERENCE DOCUMENTS

Administrative Procedures	Reference Documents
See Table 6-1	See Table 6-1

Field Procedures	Reference Documents
General Groundwater Purging and Sampling Techniques	SCQ Volume I, Subsection 6.2; Appendix K, Subsection K4.2; SC-GWM-FO-201 Groundwater Sampling Activities
Water Level Measurements	SCQ Volume I, Section 6.2.2.1; Appendix K, Subsection K.4.2.1; EP-GWM-FO-201 Groundwater Elevation Measurements
Field Analytical Methods	SCQ Volume I, Subsection 6.2; Appendix K, Subsection K.4.1
Decontamination	SCQ Appendix K, Subsection K.11 SC-GWM-FO-201 Groundwater Sampling Activities

Sample Handling/Laboratory Procedures	Reference Documents
Classification, Transportation, and Shipment of FEMP RI/FS Samples	See Table 6-1

7.0 FIELD SAMPLING PLAN

7.1 GENERAL

The information generated by the geotechnical investigation study is essential in determining the geotechnical properties of the subsurface soils within and adjacent to the proposed area of the on-site disposal facility. This information is necessary in order to perform the detailed design including the stability and anticipated performance evaluation of the subject disposal facility.

As part of the geotechnical investigation study, both geotechnical sampling and in-situ testing will be conducted to determine the geotechnical properties of the subsurface soils. Three different types of geotechnical investigations are currently planned: soil borings, shallow soil sampling, and cone penetrometer testings. The following sections discuss the sample collection methods, field and analytical methods, procedures, and types of geotechnical sampling and in-situ investigation.

Changes to the sampling plan made in the field to conform with sampling and geological conditions will be documented in accordance with section 5.5.

7.2 FIELD PROGRAMS

7.2.1 Sampling From Soil Boring Locations

7.2.1.1 Objectives

Borings will be completed within and adjacent to the proposed location for the disposal facility for the purpose of collecting soil samples to facilitate additional engineering/geotechnical soil tests, and gathering additional soil profile information. Figure 7-1 shows the proposed locations for the 14 boring locations.

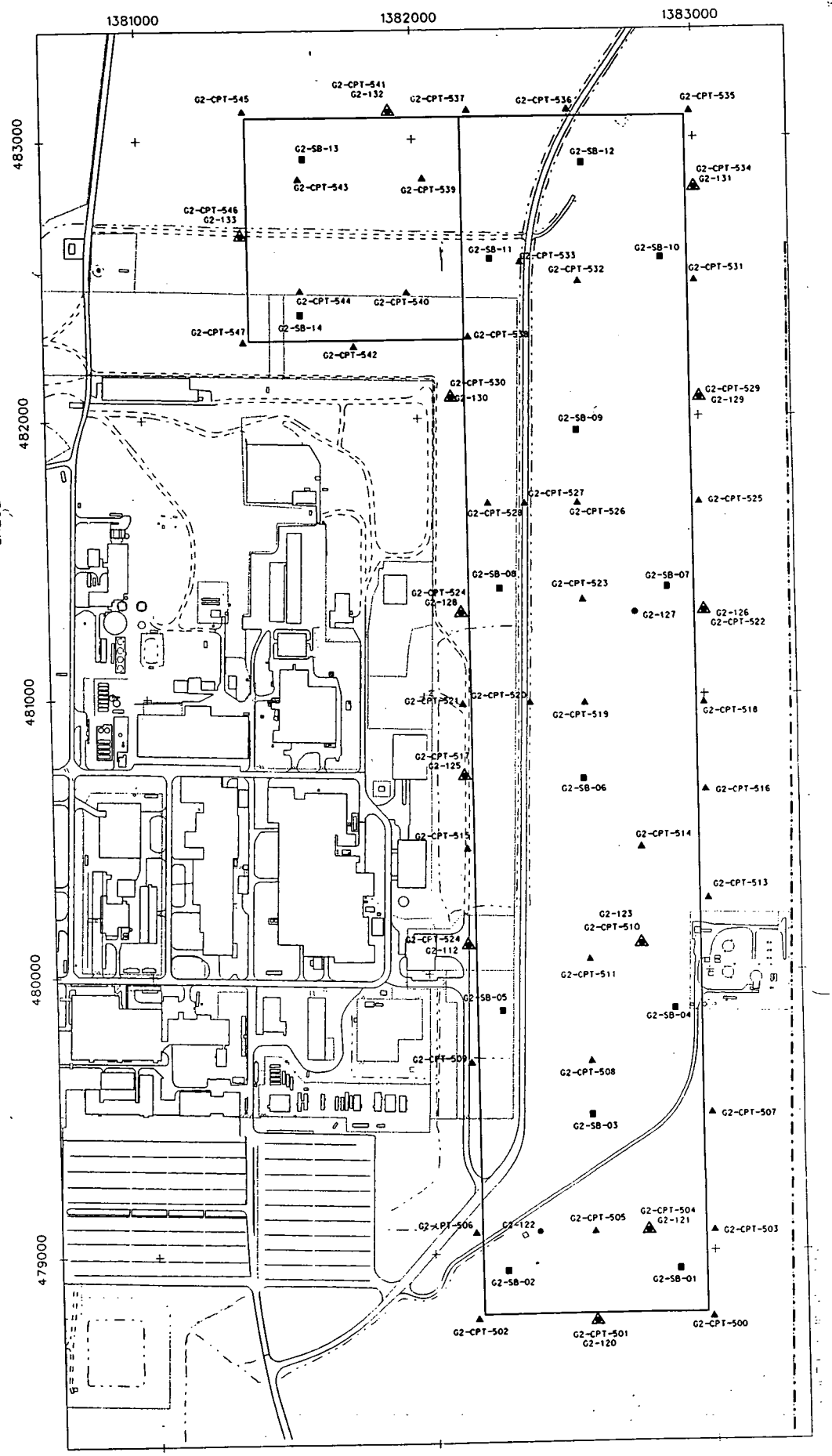

LEGEND

- ▲ CPT
- ■ SHALLOW BORINGS
- ● BORINGS
- ▲● COMBINED SOIL BORING/CONE PENETROMETER LOCATION (SOIL BORING AND CONE PENETROMETER WITHIN 3-FEET)

FIGURE 7-1.
TENTATIVE LOCATIONS FOR SOIL BORINGS AND CONE PENETROMETER TESTS

7.2.1.2 Soil Sample Collection (Geotechnical)

Truck-mounted hollow-stem auger drill rigs will be used to drill 14 geotechnical soil borings. Split-spoon or Shelby tube, or Denison samplers will be used to collect soil samples from the 14 borings (See Appendix F for Denison Sampling Method). Penetration/resistance testing (blows/6") performed in the field will be used to correlate settlement, strength, bearing capacity, consistency of soil, and liquefaction parameters. Geotechnical testing required to determine soil characterization, moisture content, strength, compressibility, consolidation, and hydraulic conductivity will be performed on samples taken from both the brown and gray till.

Four of the borings are designated to penetrate the till to depths of about 80 feet. This is to provide properties of deeper soils which are required for evaluation of liquefaction, stability, and settlement of subsurface soils below the disposal facility. Geotechnical testing required to determine the grain size distribution, and moisture content will be performed on soil samples taken from the Great Miami Acquifer.

Planned boring depths, type and depth of samples, and corresponding geotechnical testing required for each sample are identified in Table 7-1. Split spoon and Shelby tube samples will be collected alternately at intervals of about 2.5 feet to a depth of about 20 feet and then at intervals of 5 feet to the bottom of the boring. Only Spilt spoon samples will be collected in the Great Miami Acquifer (the soils immediately below the glacial till). Denison samplers may be substitued in place of Shelby tubes for the collection of undisturbed samples in soils having a standard penetration resistance higher than 20 blows/ft. Sample volumes, containers, and preservation methods are listed in Table 7-2.

Thin-walled Shelby tube samples and Denison samplers will be shipped "upright" in 85-gallon drums. The sample tubes will be packed with vermiculite or similar packing material. All applicable shipping requirements including chain of custody will be followed.

7.2.2 Sampling From Shallow Soil Excavation Locations

7.2.2.1 Objectives

In addition to the 14 borings detailed in Section 7.2.1, 14 shallow excavations (less than 5 feet in depth) will be completed for the purpose of collecting bulk soil samples to facilitate additional

TABLE 7-1

GEOTECHNICAL LABORATORY TESTING PROGRAM (SOIL BORINGS)

Boring Number	Planned Depth(ft)	Grey Clay[3] Depth(ft)	Soil[4] Type	SPT Depth (ft)	Shelby Depth (ft)	Geotechnical Testing
G2-120	20	10	Brn Clay	2.5-4	–	–
			Brn Clay	–	5-7	CON_{r85}+GS+AL+MC+MC_m+UW
			Brn Clay	7.5-9	–	–
			Grey Clay	–	10-12	UU+UU_r+UU_{r85}+GS+AL+MC+UW
			Grey Clay	12.5-14	–	–
			Grey Clay	–	15-17	–
			Grey Clay	18.5-20	–	–
G2-121	22	12	Brn Clay	–	2.5-4.5	–
			Brn Clay	5-6.5	–	–
			Brn Clay	–	7.5-9.5	CU+GS+AL+UW
			Brn Clay	10-11.5	–	–
			Grey Clay	–	12.5-14.5	P+GS+AL+MC+MC_m+UW
			Grey Clay	15.-16.5	–	–
			Grey Clay	–	17.5-19.5	P+GS+AL+MC+UW
			Grey Clay	20-21.5	–	–
G2-122	20	10	Brn Clay	2.5-4	–	–
			Brn Clay	–	5-7	CON+CU+GS+AL+UW
			Brn Clay	7.5-9	–	–
			Grey Clay	–	10-12	UU+UU_r+UU_{r85}+GS+AL+MC+MC_m+UW
			Grey Clay	12.5-14	–	–
			Grey Clay	–	15-17	CU_{r85}+GS+AL+MC+UW
			Grey Clay	17.5-19	–	–
G2-123	25	13	Brn Clay	–	2.5-4.5	–
			Brn Clay	5-6.5	–	–
			Brn Clay	–	7.5-9.5	CU+GS+AL+UW
			Brn Clay	10-11.5	–	–
			Grey Clay	–	12.5-14.5	P+GS+AL+MC+MC_m+UW
			Grey Clay	15.-16.5	–	–
			Grey Clay	–	17.5-19.5	CU+GS+AL+UW
			Grey Clay	20-21.5	–	
			Grey Clay	–	23-25	
G2-124	80	14	Brn Clay	2.5-4	–	–
			Brn Clay	–	5-7	CU+GS+AL+UW
			Brn Clay	7.5-9	–	–
			Brn Clay	–	10-12	CON+CON_{r85}+CON_r+UU+GS+AL+UW+SG
			Brn Clay	12.5-14	–	–
			Grey Clay	–	15-17	–
			Grey Clay	17.5-19	–	–
			Grey Clay	–	20-22	–
			–*	25-26.5	–	MC+GS
			–*	30-31.5	–	MC+GS
			–*	35-36.5	–	MC+GS
			–*	40-41.5	–	MC+GS

000040

TABLE 7-1 (continued)

GEOTECHNICAL LABORATORY TESTING PROGRAM
(SOIL BORINGS)

Boring Number	Planned Depth(ft)	Grey Clay[3] Depth(ft)	Soil[4] Type	SPT Depth (ft)	Shelby Depth (ft)	Geotechnical Testing
G2-124 (continued)			–•	45-46.5	–	MC+GS
			–*	50-51.5	–	MC+GS
			–*	55-56.5	–	MC+GS
			–*	60-61.5	–	MC+GS
			–*	65-66.5	–	MC+GS
			–*	70-71.5	–	MC+GS
			–•	75-76.5	–	MC+GS
			–*	80-81.5	–	MC+GS
G2-125	25	13	Brn Clay	–	2.5-4.5	CU_r+GS+AL+MC+MC_m+UW
			Brn Clay	5-6.5	–	–
			Brn Clay	–	7.5-9.5	UU+GS+AL+MC+UW
			Brn Clay	10-11.5	–	–
			Grey Clay	–	12.5-14.5	CU+GS+AL+UW
			Grey Clay	15-16.5	–	–
			Grey Clay	–	17.5-19.5	UU+GS+AL+MC+UW
			Grey Clay	20-21.5	–	–
			Grey Clay	–	23-25	–
G2-126	80	13	Brn Clay	–	2.5-4.5	–
			Brn Clay	5-6.5	–	–
			Brn Clay	–	7.5-9.5	CU+GS+AL+UW
			Brn Clay	10-11.5	–	–
			Grey Clay	–	12.5-14.5	CU_r+GS+AL+MC+UW
			Grey Clay	15.-16.5	–	–
			Grey Clay	–	17.5-19.5	CON+CON_{r85}+CON_r+UU+GS+AL+UW+SG
			Grey Clay	20-21.5	–	–
			Grey Clay	–	25-27	P+GS+AL+MC+UW
			Grey Clay	30-31.5	–	–
			Grey Clay	–	35-37	CON+CON_S+GS+AL+SG
			–•	40-41.5	–	MC+GS
			–•	45-46.5	–	MC+GS
			–•	50-51.5	–	MC+GS
			–•	55-56.5	–	MC+GS
			–•	60-61.5	–	MC+GS
			–*	65-66.5	–	MC+GS
			–*	70-71.5	–	MC+GS
			–•	75-76.5	–	MC+GS
			–•	80-81.5	–	MC+GS
G2-127	30	11	Brn Clay	2.5-4	–	–
			Brn Clay	–	5-7	CON+CON_S+UU+UU_r+UU_{r85}+GS+AL+UW+SG
			Brn Clay	7.5-9	–	–
			Grey Clay	–	10-12	CU+GS+AL+UW
			Grey Clay	12.5-14	–	–
			Grey Clay	–	15-17	P+GS+AL+MC+MC_m+UW
			Grey Clay	17.5-19	–	–

000041

TABLE 7-1 (continued)

GEOTECHNICAL LABORATORY TESTING PROGRAM (SOIL BORINGS)

Boring Number	Planned Depth(ft)	Grey Clay[3] Depth(ft)	Soil[4] Type	SPT Depth (ft)	Shelby Depth (ft)	Geotechnical Testing
G2-127 (continued)			Grey Clay	–	20-22	–
			Grey Clay	25-26.5	–	–
			Grey Clay	–	28-30	–
G2-128	25	8	Brn Clay	–	2.5-4.5	–
			Brn Clay	5-6.5	–	–
			Grey Clay	–	7.5-9.5	CU_r+GS+AL+MC+UW
			Grey Clay	10-11.5	–	–
			Grey Clay	–	12.5-14.5	CON+CON_{r85}+UU+GS+AL+SG+UW
			Grey Clay	15.-16.5	–	–
			Grey Clay	–	17.5-19.5	GS+AL+MC+UW
			Grey Clay	20-21.5	–	–
			Grey Clay	–	23-25	–
G2-129	42	8	Brn Clay	2.5-4	–	–
			Brn Clay	–	5-7	UU+GS+AL+MC+MC_m+UW
			Brn Clay	7.5-9	–	–
			Grey Clay	–	10-12	CU+GS+AL+UW
			Grey Clay	12.5-14	–	–
			Grey Clay	–	15-17	GS+AL+MC+UW
			Grey Clay	17.5-19	–	–
			Grey Clay	–	20-22	–
			Grey Clay	25-26.5	–	–
			Grey Clay	–	30-32	–
			Grey Clay	35-36.5	–	–
			Grey Clay	–	40-42	–
G2-130	80	7	Brn Clay	2.5-4	–	–
			Brn Clay	–	5-7	UU+GS+AL+MC+MC_m+UW
			Grey Clay	7.5-9	–	–
			Grey Clay	–	10-12	CU+GS+AL+UW
			Grey Clay	12.5-14	–	–
			Grey Clay	–	15-17	CON+CON_{r85}+CON_r+UU+GS+AL+SG+UW
			Grey Clay	17.5-19	–	–
			Grey Clay	–	20-22	CU_r+GS+AL+MC+UW
			Grey Clay	25-26.5	–	–
			Grey Clay	–	30-32	CU+GS+AL+UW
			Grey Clay	35-36.5	–	–
			–*	40-41.5	–	MC+GS
			–*	45-46.5	–	MC+GS
			–*	50-51.5	–	MC+GS
			–*	55-56.5	–	MC+GS
			–*	60-61.5	–	MC+GS
			–*	65-66.5	–	MC+GS
			–*	70-71.5	–	MC+GS
			–*	75-76.5	–	MC+GS

000042

TABLE 7-1 (continued)

GEOTECHNICAL LABORATORY TESTING PROGRAM (SOIL BORINGS)

Boring Number	Planned Depth(ft)	Grey Clay[3] Depth(ft)	Soil[4] Type	SPT Depth (ft)	Shelby Depth (ft)	Geotechnical Testing
G2-130 (continued)			–*	80-81.5	–	MC+GS
G2-131	80	9	Brn Clay	–	2.5-4.5	–
			Brn Clay	5-6.5	–	–
			Brn Clay	–	7.5-9.5	UU+UU_r+GS+AL+MC+MC_m+UW
			Grey Clay	10-11.5	–	–
			Grey Clay	–	12.5-14.5	CON+CON_S+GS+AL+UW+SG
			Grey Clay	15.-16.5	–	–
			Grey Clay	–	17.5-19.5	–
			Grey Clay	20-21.5	–	–
			Grey Clay	–	25-27	CON+UU+GS+AL+UW+SG
			Grey Clay	30-31.5	–	–
			Grey Clay	–	35-37	–
			Grey Clay	40-41.5	–	–
			Grey Clay	–	45-47	CON+CON_S+UU+GS+AL+UW+SG
			Grey Clay	50-51.5	–	–
			–*	55-56.5	–	MC+GS
			–•	60-61.5	–	MC+GS
			–•	65-66.5	–	MC+GS
			–•	70-71.5	–	MC+GS
			–•	75-76.5	–	MC+GS
			–•	80-81.5	–	MC+GS
G2-132	45	10	Brn Clay	2.5-4	–	–
			Brn Clay	–	5-7	UU+CU_r+GS+AL+MC+UW
			Brn Clay	7.5-9	–	–
			Grey Clay	–	10-12	UU+UU_r+GS+AL+MC+MC_m+UW
			Grey Clay	12.5-14	–	–
			Grey Clay	–	15-17	CU+GS+AL+UW
			Grey Clay	17.5-19	–	–
			Grey Clay	–	20-22	P+GS+AL+MC+UW
			Grey Clay	25-26.5	–	–
			Grey Clay	–	30-32	–
			Grey Clay	35-36.5	–	–
			Grey Clay	–	40-42	–
			Grey Clay	43.5-45	–	–
G2-133	37	11	Brn Clay	–	2.5-4.5	CU_{r85}+GS+AL+MC+UW
			Brn Clay	5-6.5	–	–
			Brn Clay	–	7.5-9.5	CON+CON_S+UU+GS+AL+SG+UW
			Brn Clay	10-11.5	–	–
			Grey Clay	–	12.5-14.5	CU+GS+AL+UW
			Grey Clay	15.-16.5	–	–
			Grey Clay	–	17.5-19.5	P+GS+AL+MC+UW
			Grey Clay	20-21.5	–	–
			Grey Clay	–	25-27	P+GS+AL+MC+UW

TABLE 7-1 (continued)

GEOTECHNICAL LABORATORY TESTING PROGRAM (SOIL BORINGS)

Boring Number	Planned Depth(ft)	Grey Clay[3] Depth(ft)	Soil[4] Type	SPT Depth (ft)	Shelby Depth (ft)	Geotechnical Testing
G2-133			Grey Clay	30-31.5	–	–
(continued)			Grey Clay	–	35-37	–

Notes:

1. The definitions of the geotechnical laboratory testing are as follows:
   - MC = Moisture Content, ASTM D2216.
   - MC_m = Moisture Content, ASTM D4643. This test is being performed for comparison and calibration purposes with MC (ASTM D2216)
   - UW = Dry Unit Weight, Army Corp. Engineers EM100-2-1906.
   - GS = Grain Size/Hydrometer, ASTM D422.
   - SG = Specific Gravity, ASTM D854.
   - AL = Atterberg Limits, ASTM D4318.
   - CON = Consolidation with time readings, ASTM D2435, undisturbed sample at natural moisture.
   - CON_s = Consolidation with time readings, ASTM D2435, undisturbed sample at saturated condition.
   - CON_r = Consolidation with time readings, ASTM D2435, remolded sample with 95% relative compaction at moisture content wet optimum in accordance with ASTM D698.
   - CON_{r85} = Consolidation with time readings, ASTM D2435, remolded sample with 85% relative compaction at optimum moisture content accordance with ASTM D698.
   - UU = Unconsolidated, Undrained Triaxial Compression, ASTM D2850, undisturbed sample.
   - UU_r = Unconsolidated, Undrained Triaxial Compression, ASTM D2850, remolded sample with 95% relative compaction at moistu content wet of optimum in accordance with ASTM D698.
   - UU_{r85} = Unconsolidated, Undrained Triaxial Compression, ASTM D2850, remolded sample with 85% relative compaction at optimu moisture content in accordance with ASTM D698.
   - CU = Consolidated Undrained Triaxial Compression with pore pressure measurements, ASTM D4767, undisturbed sample. Thr samples to be used at three different confining pressures. If Three samples are not available, perform an stage test on or sample.
   - CU_r = Consolidated Undrained Triaxial Compression with pore pressure measurements, ASTM D4767, remolded sample with 9 relative compaction at moisture content wet of optimum in accordance with ASTM D698. Three samples to be used at thr different confining pressures. If Three samples are not available, perform an stage test on one sample.
   - CU_{r85} = Consolidated Undrained Triaxial Compression with pore pressure measurements, ASTM D4767, remolded sample with 8 relative compaction at optimum moisture content in accordance with ASTM D698. Three samples to be used at three differe confining pressures. If Three samples are not available, perform an stage test on one sample.
   - SP = Standard Proctor, ASTM D698.
   - P = Permeability, ASTM D5084, undisturbed sample.
   - P_r = Permeability, ASTM D5084, remolded sample with 95% relative compaction at moisture content wet of optimum in accordan with ASTM D698.
   - OC = Organic Content, ASTM D2974.
   - R = Resistance R-Value, ASTM D2844.
   - S = Soundness, ASTM C88.
   - A = Resistance to Abration, ASTM C535.
2. Where • is shown, if clayey soils are encountered, representative undisturbed samples shall be obtained and AL alor with other warranted strength or compressibility tests shall be assigned.
3. Approximate depth to the top of Grey Clay based on the available information extracted from the existing adjace borings.
4. General soil type information based on the available information extracted from the existing adjacent borings.
5. It should be noted that, where CON and CU tests are performed, MC test shall also be performed as part of the CC and CU tests themselves.

000044

engineering/geotechnical soil tests on both topsoil and underlying till. Figure 7-1 shows the proposed locations for the 14 excavation locations.

Geotechnical testing required to determine soil characterization, moisture content, standard proctor densities, and permeability will be performed on samples of till. Topsoil (top 18-inches) will be tested to determine ash and organic matter content.

7.2.2.2 Soil Sample Collection (Geotechnical)

A backhoe or hand-operated power auger will be used to collect disturbed soil samples from sixteen shallow excavations for the purpose of providing bulk samples of topsoil and soils underlying the topsoil which are intended to be used as liner material. The topsoil will be used for organic content tests while the surface soil samples below the topsoils will be used for remolded permeability and standard proctor density testing.

TABLE 7-2

SAMPLE VOLUME, CONTAINERS, AND PRESERVATION - SOIL SAMPLES

Parameter	Container	Preservation
Gross Alpha/Beta[1]	4 ounces	None
Specific Gravity, Moisture Content, Atterberg Limit, Grain Size/Hydrometer Analysis	1 x 500 ml glass wide mouth or (1) 3 (O.D.) x 30 in. Shelby tube*	None
Dry Unit Weight, Undisturbed Hydraulic Conductivity (Permeability), Unconfined UU Triaxial Compressions, Undisturbed Consolidation	(1) 3 (O.D.) x 30 in. Shelby tube*	None
Undisturbed Consolidated Undrained Triaxial, with pore pressure measurement	(1) 3 (O.D.) x 30 in. Shelby tube*	None

Remolded Hydraulic Conductivity (Permeability), Remolded Unconfined Undrained Triaxial Compressions, Remolded Consolidation	5-gallons (45 kg) (field weight -- taken from (1) 3 (O.D.) x 30 in. Shelby tube*, shallow excavation, or shallow auger cuttings)	None
Remolded Consolidated Undrained Triaxial, with pore pressure measurement	5-gallons (45 kg) (field weight -- taken from (1) 3 (O.D.) x 30 in. Shelby tube*, shallow excavation, or shallow auger cuttings)	None
Total Uranium/Isotopic Uranium	500 ml	None
Ash and Organic Matter Content	250 ml	None
Chloride	1 x 500 ml polyethylene with polyethylene or polyethylene-lined closure	None
Sulfate	1 x 500 ml polyethylene with polyethylene or polyethylene-lined closure	2-6°c
Soundness	5-gallons (45 kg) (field weight -- sampled from stockpiled stone)	None
Resistance to Abrasion	5-gallons (45 kg) (field weight -- sampled from stockpiled stone)	None

Resistance R-Value	1-gallon (6 kg) (field weight)	None
Standard Proctor	5-gallons (45 kg) (field weight -- taken from auger cuttings or shallow excavations)	None

* ASTM D1587 Suitable Tube

[1] Only required for soils collected within the restricted area fence of the FEMP or in areas of known contamination.

The planned depths, type and depth of samples, and corresponding geotechnical testing required for each sample are identified in Table 7-3. Two composite samples will be prepared by combining samples taken from designated locations. In addition, four samples will be selected along a proposed roads (not shown in this report) for performance of R-value tests.

Sample volumes, containers, and preservation methods are listed in Table 7-2.

All applicable shipping requirements including chain of custody will be followed.

7.2.3 Cone Penetrometer Testing

7.2.3.1 Objectives

Cone penetrometer testings (CPT) will be performed within and adjacent to the proposed location for the disposal facility for the purpose of providing continuous stratigraphy information and strength data for engineering evaluation and analyses. Dissipation tests will also be conducted at selected locations to estimate in-situ soil horizontal permeability in saturated zones. Additionally, the CPT data are used to interpolate soil properties between samples and borings. Figure 7-1 shows the proposed locations for the 48 CPTs and Table 7-4 indicates the planned CPT depths. Fourteen of the CPTs are designated to penetrate the till by being performed to depths of 100 feet or to refusal, whichever is

TABLE 7-3

GEOTECHNICAL LABORATORY TESTING PROGRAM (SHALLOW BORINGS/EXCAVATIONS)

Shallow Boring Number	Planned Depth(ft)	Soil Type	Sample Depth (ft)	Geotechnical Testing
G2-SB-1	5	Topsoil	0.0-0.5	OC
		Topsoil	0.5-1.0	OC
		Topsoil	1.0-1.5	OC
		Brn Clay	1.5-5.0	$SP+P_r+CON_{r85}+GS+AL+MC+SG$
G2-SB-2	5	Topsoil	0.0-0.5	OC
		Topsoil	0.5-1.0	OC
		Topsoil	1.0-1.5	OC
		Brn Clay	1.5-5.0	$SP+P_r+GS+AL+MC+MC_m$
G2-SB-3	5	Topsoil	0.0-0.5	OC
		Topsoil	0.5-1.0	OC
		Topsoil	1.0-1.5	OC
		Brn Clay	1.5-5.0	$SP+P_r+GS+AL+MC+MC_m$
G2-SB-4	5	Topsoil	0.0-0.5	OC
		Topsoil	0.5-1.0	OC
		Topsoil	1.0-1.5	OC
		Brn Clay	1.5-5.0	$SP+P_r+CON_{r85}+CON_r+GS+AL+MC+SG$
G2-SB-5	5	Topsoil	0.0-0.5	OC
		Topsoil	0.5-1.0	OC
		Topsoil	1.0-1.5	OC
		Brn Clay	1.5-5.0	$SP+P_r+GS+AL+MC+MC_m$
G2-SB-6	5	Topsoil	0.0-0.5	OC
		Topsoil	0.5-1.0	OC
		Topsoil	1.0-1.5	OC
		Brn Clay	1.5-5.0	$SP+P_r+GS+AL+MC+MC_m$
G2-SB-7	5	Topsoil	0.0-0.5	OC
		Topsoil	0.5-1.0	OC
		Topsoil	1.0-1.5	OC
		Brn Clay	1.5-5.0	$SP+P_r+CON_{r85}+CON_r+GS+AL+MC+SG$
G2-SB-8	5	Topsoil	0.0-0.5	OC
		Topsoil	0.5-1.0	OC
		Topsoil	1.0-1.5	OC
		Brn Clay	1.5-5.0	$SP+P_r+GS+AL+MC+MC_m$
G2-SB-9	5	Topsoil	0.0-0.5	OC
		Topsoil	0.5-1.0	OC
		Topsoil	1.0-1.5	OC
		Brn Clay	1.5-5.0	$SP+P_r+GS+AL+MC$

000048

TABLE 7-3 (continued)

GEOTECHNICAL LABORATORY TESTING PROGRAM (SHALLOW BORINGS/EXCAVATIONS)

Shallow Boring Number	Planned Depth(ft)	Soil Type	Sample Depth (ft)	Geotechnical Testing
G2-SB-10	5	Topsoil	0.0-0.5	OC
		Topsoil	0.5-1.0	OC
		Topsoil	1.0-1.5	OC
		Brn Clay	1.5-5.0	$SP+P_r+GS+AL+MC+MC_m$
G2-SB-11	5	Topsoil	0.0-0.5	OC
		Topsoil	0.5-1.0	OC
		Topsoil	1.0-1.5	OC
		Brn Clay	1.5-5.0	$SP+P_r+CON_{r85}+GS+AL+MC+SG$
G2-SB-12	5	Topsoil	0.0-0.5	OC
		Topsoil	0.5-1.0	OC
		Topsoil	1.0-1.5	OC
		Brn Clay	1.5-5.0	$SP+P_r+GS+AL+MC+MC_m$
G2-SB-13	5	Topsoil	0.0-0.5	OC
		Topsoil	0.5-1.0	OC
		Topsoil	1.0-1.5	OC
		Brn Clay	1.5-5.0	$SP+P_r+GS+AL+MC$
G2-SB-14	5	Topsoil	0.0-0.5	OC
		Topsoil	0.5-1.0	OC
		Topsoil	1.0-1.5	OC
		Brn Clay	1.5-5.0	$SP+P_r+GS+AL+MC+MC_m$
G2-SB-2+ G2-SB-3+ G2-SB-4+ G2-SB-6[2]	5	Topsoil	0.0-1.5	$SP+CON_{r85}$
G2-SB-8+ G2-SB-9+ G2-SB-10+ G2-SB-11[2]	5	Topsoil	0.0-1.5	$SP+CON_{r85}$
G2-SB-15[3]	2	Topsoil	0.0-1.0	–
		Brn Clay	1.0-2.0	R
G2-SB-16[3]	2	Topsoil	0.0-1.0	–
		Brn Clay	1.0-2.0	R
G2-SB-17[3]	2	Topsoil	0.0-1.0	–
		Brn Clay	1.0-2.0	R

TABLE 7-3 (continued)

GEOTECHNICAL LABORATORY TESTING PROGRAM (SHALLOW BORINGS/EXCAVATIONS)

Shallow Boring Number	Planned Depth(ft)	Soil Type	Sample Depth (ft)	Geotechnical Testing
Borrow Area[4]	--	Riprap	-	5S+5A

Notes:

1. The definitions of the geotechnical laboratory testing are as follows:
   - MC = Moisture Content, ASTM D2216.
   - MC_m = Moisture Content, ASTM D4643. This test is being performed for comparison and calibration purposes with MC (ASTM D2216).
   - GS = Grain Size/Hydrometer, ASTM D422.
   - SG = Specific Gravity, ASTM D854.
   - AL = Atterberg Limits, ASTM D4318.
   - CON_r = Consolidation with time readings, ASTM D2435, remolded sample with 95% relative compaction at moisture content wet of optimum in accordance with ASTM D698.
   - CON_{r85} = Consolidation with time readings, ASTM D2435, remolded sample with 85% relative compaction at optimum moisture content in accordance with ASTM D698.
   - SP = Standard Proctor, ASTM D698.
   - P_r = Permeability, ASTM D5084, remolded sample with 95% relative compaction at moisture content wet of optimum in accordance with ASTM D698.
   - OC = Organic Content, ASTM D2974.
   - S = Soundness, ASTM C88.
   - A = Resistance to Abration, ASTM C535.
2. Composite sample prepared by combining samples taken from the designated locations.
3. Shallow borings/excavations G2-SB-15 through G2-SB-17 shall be selected at the location of proposed roads to collect samples for performance of R-Value tests.
4. Location of the borrow area for obtaining the riprap samples will be specified by FERMCO.

000050

TABLE 7-4
CPT SOUNDINGS PLANNED DEPTHS

CPT Sounding Number	Planned Depth (ft)
G2-CPT-500	21
G2-CPT-501*	100
G2-CPT-502	20
G2-CPT-503*	100
G2-CPT-504	22
G2-CPT-505	21
G2-CPT-506*	100
G2-CPT-507	23
G2-CPT-508	25
G2-CPT-509	19
G2-CPT-510	25
G2-CPT-511	24
G2-CPT-512*	100
G2-CPT-513*	100
G2-CPT-514	25
G2-CPT-515	21
G2-CPT-516	29
G2-CPT-517*	100
G2-CPT-518	30
G2-CPT-519	28
G2-CPT-520	27
G2-CPT-521	26
G2-CPT-522*	100
G2-CPT-523	29
G2-CPT-524*	100
G2-CPT-525	39
G2-CPT-526	35
G2-CPT-527	35
G2-CPT-528	30
G2-CPT-529*	100
G2-CPT-530*	100
G2-CPT-531	48
G2-CPT-532	43
G2-CPT-533	43
G2-CPT-534*	100
G2-CPT-535	48
G2-CPT-536*	100
G2-CPT-537	45
G2-CPT-538	37
G2-CPT-539	45
G2-CPT-540	39
G2-CPT-541*	100
G2-CPT-542*	100
G2-CPT-543	43
G2-CPT-544	37
G2-CPT-545	45
G2-CPT-546*	100
G2-CPT-547	34

Note: The CPT soundings marked by * shall be performed to 100 feet or equipment refusal.

000051

TABLE 7-5

SUMMARY OF ASTM PROCEDURES

TEST NO.	TITLE
C88	Standard Test Method for Soundness of Aggregates by Use of Sodium Sulfate or Magnesium Sulfate
C535	Standard Test Method for Resistance to Degradation of Large-Size Coarse Aggregate by Abrasion and Impact in the Los Angeles Machine
D75	Practice for Sampling Aggregates
D420	Standard Guide for Investigating and Sampling Soil and Rock
D421	Standard Practice for Dry Preparation of Soil Samples for Particle-Size Analysis Determination of Soil Constants
D422	Standard Method for Particle Size Analysis for Soils
D698	Laboratory Compaction Characteristics of Soil Using Standard Effort
D854	Standard Test Method for Specific Gravity of Soils
D1452	Standard Practice for Soil Investigation and Sampling by Auger Borings
D1586	Standard Test Method for Penetrometer Test and Split-Barrel Sampling of Soils
D1587	Standard Practice for Thin-Walled Tube Sampling of Soils
D2216	Standard Test Methods for Laboratory Determination of Water (Moisture) Content of Soil, Rock, and Soil-Aggregate Mixtures
D2217	Standard Practice for Wet Preparation of Soil Samples for Particle-Size Analysis and Determination of Soil Constants.
D2435	Test Method for One-Dimensional Consolidation Properties of Soil
D2487	Standard Classification of Soils for Engineering Purposes
D2488	Standard Practice for Description and Identification of Soils
D2573	Standard Test Method for Field Vane Shear Test in Cohesive Soil
D2844	Standard Test Method for Resistance R-Value and Expansion Pressure of Compacted Soils
D2850	Standard Test Method for Unconsolidated, Undrained Compressive Strength of Cohesive Soils in Triaxial Compression
D2974	Standard Test Method for Moisture, Ash, and Organic Matter of Peat and Other Organic Soils
D3080	Standard Test Method for Direct Shear Test of Soils Under Consolidated Drained Conditions
D3441	Standard Test Method for Deep, Quasi-Static, Cone and Friction Penetration Tests of Soil

000052

D3550	Standard Practice for Ring-Lines Barrel Sampling of Soils
D4044	Standard Test Method for (Field Procedure) for Instantaneous Change in Head (Slug Test) for Determining Hydraulic Properties of Aquifiers
D4104	Standard Test Method (Analytical Procedure) for Determining Transmissivity of Nonleaky Confined Aquifers by Overdamped Well Response to Instantaneous Change in Head (Slug Test)
D4186	Standard Test Method for One-Dimensional Consolidation properties of Soils Using Controlled-Strain Loading
D4220	Standard Practices for Preserving and Transporting Soil Samples.
D4318	Test Method for Liquid Limit, Plastic Limit, and Plasticity Index of Soils
D4546	Standard Test Methods for One-Dimensional Swell or Settlement Potential of Cohesive Soils
D4643	Standard Test Method for Determination of Water (Moisture) Content of Soil by the Microwave Oven Method
D4767	Test Method for Consolidated-Undrained Triaxial Compressive Test on Cohesive Soils
D5084	Standard Test Method for Measurement of Hydraulic Conductivity of Standard Porous Materials Using a Flexible Wall Parameter
D5092	Standard Test Method for Design and Installation of Ground Water Monitoring Wells in Aquifers

less. This is to provide properties of deeper soils which are required for evaluation of liquefaction, stability, and settlement of subsurface soils below the disposal facility.

7.2.4 Phase III Well Installation

7.2.4.1 Objective

Approximately four additional Type I wells will be installed during Final Geotechnical Investigation to further identify and quantify the lateral extent of zones of interbedded and interconnected granular materials in the till, and to further characterize the perched ground water. The additional wells will be installed in selected geotechnical borings to be completed in the Final Geotechnical Investigation. To avoid installing wells incapable of producing water and to maximize the usefulness of the additional wells, the locations of these wells will be selected based on field observations during the advancement of the geotechnical borings. The Lead FERMCO Geologist will determine the well location with approval from the OU2 Environmental Task Manager.

7.2.4.2 Well Construction

Wells will be completed using 2-inch ID, 316 stainless steel riser and .010-inch slotted screen 2 to 5 feet in length across the perched ground water interval. The screening interval will be determined by the Lead Geologist with approval from the OU2 Environmental Task Manager. Filter pack will be well-sorted quartz sand of 20-40 mesh (medium). A bentonite seal will be placed above the filter pack, and will be a maximum of 5 feet in length. The annular space will then be filled to 2.5 feet below ground surface with a slurry of volclay grout. Wells will be developed after the grout surface seal has cured per the SCQ requirements.

A concrete cap and a 3 feet by 3 feet by 4-inch pad will be poured from 2.5 feet below surface. A 10-inch carbon steel protective casing 5 feet in length with a hinged lid will be lowered into place to a depth of 2.5 feet below surface. Protective casing lid will be stamped with the corresponding five digit well identification number using a standard metal stamping set. All wells will be surveyed by a State of Ohio licensed surveyor and their locations (Northing, Easting, and elevations) will be added to the Site-Wide Environmental Database (SED).

7.2.4.3 Well Development

Wells will be developed according to the procedure (SRS-FO-005)Monitoring Well Development, if possible. If the well does not well recharge in a reasonable period of time to allow development of the well per procedures, the well will be bailed dry three times.

Well development ground water will be collected in either a 55 gallon drum or a development/purge tank in a Ground Water Monitoring truck, drums shall have the well identification number and date development started. Each must be labeled as IDW water. IDW development water will be transported to the General Sump and discharged to the Great Miami River.

7.2.4.4 Groundwater Measurements

Ground water level measurements will be collected from each additional well at the time of completion and after well development. Ground water measurements will be collected on a weekly basis for a period of one month. Collection of ground water measurements will be conducted within a 24-hour period of consistent weather conditions to minimize atmospheric and precipitation effects on ground water levels. Section K.4.2.1 of the SCQ outlines the procedure for taking water level

measurements. Water level and bottom of well measurements shall be recorded to the nearest 0.01 feet.

Ground water measurements for five wells installed during Phase II of the Pre-Design Field Investigation will be monitored for a period not to exceed 5 working days to assess the influence of atmospheric effects on the perched ground water. A transducer attached to a data logger, will be placed in the well being monitored. Data will be collected until a sufficient number of readings have been made to clearly show a trend. The wells to be monitored shall be screened exclusively in the gray clay. The selection of the wells to be monitored will be determined by the OU2 Environmental Task Manager.

7.2.5 PHASE III SLUG TESTING

7.2.5.1 Objective

Point measurements of hydraulic conductivity in the glacial overburden will be obtained to further quantify the hydrogeologic conditions of the disposal facility footprint. Slug testing will be conducted on the 18 existing Type I wells installed during Phase II of the Pre-Design Field Investigation, and the Type I wells installed during the Final Geotechnical Investigation.

All slug testing will be conducted in accordance with American Society for Testing and Materials (ASTM) Standard Test Method for (Field Procedure) for Instantaneous Change in Head (Slug Tests) for Determining Hydraulic Properties of Aquifers (D 4044), and performed under the policies and guidelines provided in the SCQ, Appendix J.4.6.2 procedures.

In the event that a well has an inadequate water volume to complete a slug test the well will not be slug tested. The OU2 Environmental Task Manager will make this determination.

During the slug testing water levels will be monitored using pressure transducers and recorded with a data logger. Operation of the pressure transducer and the data logger will be in accordance with the manufacturer's instructions. The pressure transducers will be installed no lower than 1 foot above the base of the well screen. Two or three data loggers (In Situ® Hermit 2000 or equivalent) will be used along with pressure transducers attached to 150 to 200-foot cables on spools.

Slugs that will be inserted into the Pre-Design Investigation wells will have a nominal OD of 1-1/4 inch. The slugs will be solid cylinders of known volumes, and each slug will have dimensions that allow it to occupy an interval no more than 1 foot above the base of the well screen and no less than 1/2 foot below static water level once the water level has equilibrated.

Since the pressure transducers will be in place before the slug in lowered into the well and will be left in place after the slug is removed, care must be taken while lowering into and retrieving slugs from the test well. Striking or bumping the transducer, or a sudden pressure increase caused by dropping the slug into the well may damage the transducer. The slug will be lowered and retrieved from the test well with a white nylon rope. After each slug test is completed the nylon rope will be discarded.

Each well will respond differently during the test. The length of a test may range from a few minutes to several hours. As specified in the SCQ Appendix J.4.6.2 the test shall continue until the water level in the test well returns to equilibrium, or for slowly recovering wells, until a sufficient number of readings have been obtained to clearly show a trend on a semi-log plot of time versus water level. The readings can be recovered from the data logger during the test and will be recorded along with other pertinent information on the slug test forms included in this GSTP.

7.2.5.2 Slug Test Data Analysis

Slug test forms will be submitted to OU2 Environmental Task Manager along with data logger field tapes and computer discs. Data from the slug tests will be analyzed using ASTM Standard Test Method for (Analytical Procedure) for Determining Transmissivity of Nonleaky Confined aquifers by Overdamped Well Response to Instantaneous Change in Head (Slug Test), D 4104.

7.3 FIELD METHODS

7.3.1 Subsurface Soil Sampling

Soil borings will be drilled using a truck-mounted hollow-stem auger drill (see Table 7-5 for applicable ASTM drilling and sampling standards). Soil samples will be collected by split spoon or Shelby tube type sampler. After drilling and sampling is complete, each boring will be plugged with a non-shrinking (Type K) portland cement (see Appendix E) grout from the bottom to surface through

the hollow stem auger or via a tremie pipe; after grout has cured, a minimum of a 12-inch cement plug will be placed in the hole.

Sampling will be conducted in advance of the hollow-stem auger described above, from six inches below surface to planned total depth. A Parson's geoligist/engineer will describe the soil in accordance with ASTM D2478 and record classifications on the lithologic log. A FERMCO geologist/engineer will direct the drill rig operator thoughout drilling operations and record activities on a Field Activity Log. All samples will be field screened with beta/gamma and photoionization detectors (PID), and values recorded by FERMCO radiological technicians.

7.3.2 Shallow Excavations

Shallow excavations/borings will be made using a backhoe or hand-operated power auger. Disturbed soil samples will be collected by hand using either a shovel, hand auger, or scoop. After excavating/drilling and sampling is completed, excavation will be backfilled with the removed soils and tamped down with the backhoe and borings will be plugged with a non-shrinking (Type K) portland cement (see Appendix E) grout from the bottom to surface. All samples will be field screened with beta/gamma and photoionization detectors (PID), and values recorded. Excavations will either be backfilled or covered over and isolated when left unattended. A FERMCO geologist/engineer will direct the drill rig/excavation equipment operator thoughout drilling/excavating operations and record activities on a Field Activity Log.

The topsoil will be used for organic content tests while the surface soil samples below the topsoils will be used for remolded permeability and standard proctor density testing.

7.3.3 Cone Penetrometer Testing Method

See Appendix I for the complete D3441-86 method. In summary, truck-mounted hydraulic pushing equipment is used to push a 1.5-inch diameter steel rod into the ground. Pressures, up to 40,000 pounds, are used to push the rods while end bearing resistance and friction resistance are measured by transducers located at the tip. Rate of penetration is maintained constant at 2 to 4 feet per minute while the resistance is recorded by data logger equipment in the truck.

The ability of the CPT to define shear strength and lithological contacts will be assessed by collecting CPT data adjacent to existing borings where geotechnical data are available. Precision of the CPT will be assessed by conducting at least two pushes of the cone penetrometer within 5-feet of each other. CPTs will be calibrated by conducting at least two pushes within 5-feet of two different auger borings. The mechanical/electrical precision for the method is stated to be $\pm$ 5 to 10 percent in end bearing resistance and 10 to 20 percent in friction resistance. This range of variance is acceptable in the calculated shear strength since a safety factor of 1.5 to 2 is usually applied to these data.

The report from the penetrometer will include lithological interpretations based upon the shear strength encountered. The CPT holes will be abandoned by filling with a non-shrinking (Type K) portland cement grout (Appendix E).

7.3.4 Waste Handling/Disposal

During the performance of this fieldwork, wastes in the form of drill cuttings, excavated soils, and decontamination wastes will be generated. Drill cuttings and excavated soils will be field screened during removal using Geiger-Müller detectors and PID probes to assure that the cuttings are radiologically uncontaminated. The radiological monitoring results will be recorded by FERMCO radiological technicians. In addition, the areas where soil excavation is to occur will be monitored using Geiger-Müller detectors and PID probes prior to the initiation of excavation activities.

Cuttings will be placed into clean 55-gallon drums during boring operations. After each borehole has been grouted, drummed cuttings having a radiological activity monitored to be below 100 pCi/g Total Uranium will be emptied in the area of the boring and spread over the ground surface. Cuttings having a radiological activity monitored by field instruments to be at or above 100 pCi/g Total Uranium will be disposed on-site in accordance with Removal Action 17 (Improved Storage of Soil and Debris) for later disposition under Operable Unit 5. Also, if re-distribution of the clean soil is not feasible (i.e. due to a paved area, etc.), the soil will be emptied onto a controled stockpile.

Excavated soils will be temporarily stockpiled on plastic until backfilling operations begin. Excavated soils at or above 100 pCi/g Total Uranium will be disposed on-site in accordance with Removal Action 17 (Improved Storage of Soil and Debris) for later disposition under Operable Unit 5. However, areas of excavation will be monitored prior to excavation. If radiological surface

contamination is discovered to be at or above 100 pCi/g Total Uranium then the excavation will be relocated to an area that does not have radiological surface contamination at or above 100 pCi/g Total Uranium.

Decontamination of drilling and sampling equipment will be performed at the Drilling Contractor's Decontamination Area. Drilling equipment used within the FEMP restricted area or any large scale decontamination will be performed at the on-site Decontamination and Decommission Facility. Fluids and any solid materials generated will be handled in accordance with the normal operation of that facility's contamination treatment/control devices. Decontamination water generated at the Drilling Contractor's Decontamination Area will be placed in the FEMP General Sump.

Decontamination of the slugs, transducers, cables, and electronic water level probes will be performed in accordance with the Ground Water Monitoring Sampling Activities Procedure (SC-GWM-FO-201).

7.3.5 Project Surveying

Land surveying will be performed at all cone penetrometer, drilling, and excavation locations. Surveying results will be approved and certified by a State of Ohio Registered Professional Land Surveyor. All surveyed locations will be accurate to the nearest 0.01 feet elevation accuracy. Survey points will be located to within 0.5 feet accuracy and integrated into the existing FEMP Geographic Information System (GIS), and incorporated into the site Geotechnical Data Base being developed by Parsons and into the Sitewide Environmental Database.

7.4 GENERAL SAMPLING REQUIREMENTS

7.4.1 Field QC Samples

Since no environmental sampling will be taken, field QC samples will not be collected during the Operable Unit 2 Final Geotechnical Investigation. The rationale for selection follow:

- No duplicate soil samples will be collected due to the lack of an effective field compositing technique which would produce meaningful data where discrepancies are considered a laboratory precision problem.

- Container blanks will not be collected because containers used for sampling activities are pre-cleaned by the manufacturer and have a certificate of analysis for each lot of containers.

7.4.2 Alternate Sampling Procedures

The implementation of alternate sampling procedures could be necessary if any unanticipated problem developed during the field investigative effort. Alternate sampling procedures, or deviations, consist of either GSTP plan variances or GSTP non-conformances.

If it becomes necessary to deviate from a sampling standard operating procedure, such a deviation will be handled in the following manner:

1. The field sampling technician or geologist will identify the need to deviate from the sampling plan or procedure.
2. The technician will bring the problem to the attention of field crew management and make recommendations about how to best proceed with sample collection with minimal impact to the existing sampling procedures and project DQOs.
3. Possible solutions and the impacts of the solutions on the project DQOs will be determined.
4. A Variance Request Form (example in Appendix C) will be implemented which describes the nature of the variance, the need for the variance, and how variation from the GSTP will minimize or have no impacts to the project DQOs.
5. QA will evaluate and approve the Variance Request. Verbal approval from QA will be received prior to implementation of the variance.
6. The approved Variance Request Form will become a part of the overall project historical file, and will be reported in the final project report.

GSTP non-conformances are defined as field or laboratory activities which have been completed, but are subsequently found not to have been performed according to the GSTP. A non-conformance may have a significant impact on the usability of field- or laboratory-derived investigation results. Resolution of a project non-conformance will be the responsibility of the FERMCO Program Manager.

7.4.3 Sample Equipment and Materials

All environmental media samples will be collected with equipment which is functional, designed for the specific purposes of the sampling event, and properly decontaminated. Sampling will be accomplished with equipment which is constructed of nonreactive materials.

Sampling containers will be composed of materials which are commonly used for the type of media to be sampled. All sample containers will be of the volume necessary for laboratory analysis purposes. Appendix D lists equipment typically used per type of sampling activity.

7.4.4 Equipment Decontamination

All drilling and media sampling equipment will be decontaminated to Level I in accordance with Appendix K of the SCQ specifications.

7.4.5 Sample Volume, Containers, and Preservation

Sample containers will be pre-cleaned by the manufacturer and will be accompanied by a certificate of analysis. The sample container types and preservative requirements are specified in the FEMP SCQ and are summarized in Tables 7-2. Sample volumes will be consistent with the contract laboratory requirements.

7.4.6 Sample Collection Documentation

The collection of soil and subsoil materials are documented on the following forms:

- Lithologic Log
- Sample Collection Log
- Site-Wide Analysis Request/Custody Records

Examples of these forms are shown in Appendix C.

In addition to these forms, daily field activities are recorded on the Field Activity Log form. This form is included in Appendix C of this report.

7.4.7 Sample Collection Reports

No specific sample collection field reports are proposed for this project. Rather, the information contained in the field forms specified in Section 7.4.6 of this report serve as the basis for documenting all significant aspects of the sample collection activities.

Upon completion of the project, all significant task related information, including copies of field forms and laboratory related forms, including analytical results of samples taken, are included in a Task Closure Report. This report is initiated by the SC/DM Department of the Environmental Technical Services Division, and will be sent to Operable Unit 2 for their records.

7.5 SAMPLE MANAGEMENT

7.5.1 Sample Identification and Labeling

A unique six-digit sample number will be assigned to each sample collected by SRS. Each sample container will also be affixed with a sample label containing, at a minimum, the information specified on Form 7-2, Appendix B of the FEMP SCQ.

7.5.2 Sample Chain of Custody Records and Field Data Documentation

Sample custody procedures as outlined in the FEMP SCQ will be observed throughout the sample handling process from field collection to shipment or delivery of the samples to the laboratory. The Site-Wide Analysis Request/Custody Record (SWAR/CR) will be completed for all samples delivered to the on-site sample processing laboratory.

In addition to the custody records, a Sample Collection Log will be completed which summarizes all samples collected from a single borehole or well. A Groundwater Quality Report will be prepared for each well sampling event to document the well purge data and groundwater conditions prior to sample collection. A lithology will be completed for soil borings when appropriate. Furthermore, all field investigation work is documented in detail on a daily basis using the Field Activity Log (see Appendix C).

7.6 FIELD EQUIPMENT METHODS

7.6.1 Calibration of Field Equipment

Field equipment to be used during this investigation is divided into the categories of health and safety monitoring and field screening and monitoring. At a minimum, all equipment will be operated and calibrated according to the equipment manufacturer's specifications. All instruments are calibrated to manufacturers' specifications. Written logs of equipment calibration are maintained by the appropriate personnel in charge of performing the instrument calibrations.

7.6.2 Documentation of Calibration

Separate logbooks are kept for each type of instrumentation. The logbooks contain a history not only of the instrument calibration but also of any unusual or irregular problems noted during the use of that particular instrument. Four separate documents are used to record calibration of instruments. Appendix C contains examples of the calibration documentation.

The forms are labeled as follows:

- Water Quality Field Collection Report
- Instrument Calibration Log
- Field Activity Log

7.7 LABORATORY METHODS

Geotechnical testing performance requirements shall be used as guidelines for evaluating laboratory capability to provide specific analytical services to the FEMP. Audits shall be performed to verify laboratory performance using the performance evaluation sample results specified in Appendix E of the SCQ.

7.8 Sample Testing

Sample testing will be performed in accordance with the guidance and requirements contained in the FEMP SCQ. This task consists of sample management; quality control; and data reduction and reporting. These subjects are discussed in detail in the SCQ. Geotechnical samples will not be validated and will comply with the standards listed in Table 7-5.

Sample management and control will be in accordance with Section 7 (*Analytical Laboratory Sample Custody*) of the SCQ. Sample custody will be maintained and documented from the time of collection through analysis. Appropriate records will be maintained in the chain-of-custody process for sample tracking and control during shipment.

Data reduction and reporting for each ASL will be in accordance with Section 2.3.3 (DQOs) of the SCQ. Numerical analysis, including manual calculations, mapping, and computer modeling, will be documented and subjected to peer review.

Once the samples are collected and sent to the appropriate laboratory for analysis, field information will be received by SRS to verify that all required field information is complete and accurate, and the information will be forwarded to Data Quality Management if the analyses generated for the task are either ASLs C, D, and/or E. Field records generated for ASL B analyses will be forwarded to Data Quality for field validation.

The laboratory will then analyze the samples per the requirements set forth in the GSTP. After the laboratory has analyzed the samples and verified that the quality of the data meets the requirements of the analytical method, and that all deliverables are included, the data will be delivered to Parson's representatives to perform the following tasks:

- Verify that all required deliverables have been received;
- Verify that contract performance requirements have been met. These contract performance requirements will be identified in the GSTP;
- Enter data into the SED; and
- Copy data packages and deliver them to Data Quality Management personnel. The original of the data packages will be stored in a secure location.
- Confirm with an initial screening that the appropriate information is present;
- Log the package into a tracking database;
- Ensure that all QC information required to qualify data is present with supporting documents which can impact qualification of data from the laboratory.

APPENDIX A

FINAL GEOTECHNICAL INVESTIGATION

SPECIFIC DATA QUALITY OBJECTIVES

62

Fernald Environmental Management Project

Data Quality Objectives

Title: Geotechnical Investigation On-site Disposal Facility

Number: GT-006

Revision: 0

Effective Date: 3/9/95

Contact Name: Tony Snider

Approval: _____ FOR G.R. *Date:* 3/9/95
DQO Coordinator

Rev #	0				
Date	3/9/95				

1.A. Task/Description: CRU #: 2

GEOTECHNICAL INVESTIGATION
ON-SITE DISPOSAL FACILITY

1.B. Project Phase: (Put an X in the appropriate selection.)

RI ☐ FS ☐ RD ☐ RA ☐ R,A ☐ OTHER ☒ Specify: Geotechnical Investigation

1.C. DQO No.:_____ DQO Reference No.: _____

---

2. Media Characterization: (Put an X in the appropriate selection.)

Air ☐ Biological ☐ Groundwater ☐ Sediment ☐
Soil ☒ Waste ☐ Wastewater ☐ Surface water ☐
Other (specify)

---

3. Data Use with Analytical Support Level (A-E): (Put an X in the appropriate Analytical Support Level selection(s) beside each applicable Data Use.)

Site Characterization
A ☐ B ☐ C ☐ D ☐ E ☐

Risk Assessment
A ☐ B ☐ C ☐ D ☐ E ☐

Evaluation of Alternatives
A ☐ B ☐ C ☐ D ☐ E ☐

Engineering Design
A ☐ B ☒ C ☐ D ☐ E ☐

Monitoring during remediation activities
A ☐ B ☐ C ☐ D ☐ E ☐

Other (Explain)
A ☐ B ☐ C ☐ D ☐ E ☐

4.A. Drivers:

CRU2 Feasibility Study preferred alternative, and State of Ohio landfill siting regulations. If the pre-design siting study identifies this area to be a suitable location, then this data will be utilized in the DOE Title I/Title II design and DOE Title III construction oversight.

4.B.Objective:

The information generated by the geotechnical investigation study along with the available data will be used to perform the detailed design including the stability and anticipated performance evaluation of the subject disposal facility which are pivotal to the remediation of the FEMP.

---

5. Site Information (Description):

The in-situ testing and soil sampling will occur in an area on the east boundary of the FEMP that measures approximately 800 feet wide by 4,320 feet long, with the long edge parallel with the east boundary of the site. The site is relatively flat and covered with grass.

DQO Number: _____

6.A. Data Types with appropriate Analytical Support Level Equipment Selection and SCQ Reference: (Place an "X" to the right of the appropriate box or boxes selecting the type of analysis or analyses required. Then select the type of equipment to perform the analysis if appropriate. Please include a reference to the SCQ Section.)

1. pH	☐	2. Uranium	☐	3. BTX	☐
Temperature	☐	Full Radiologic	☐	TPH	☐
Specific Conductance	☐	Metals	☐		
Oil/Grease	☐				
Dissolved Oxygen	☐	Cyanide	☐		
Silica	☐				
4. Cations	☐	5. VOA	☐	6. Other (specify)	
Anions	☐	ABN	☐	Geotechnical; See Attachment	
TOC	☐	Pesticides	☐		
TCLP	☐	PCB	☐		
CEC	☐				
COD	☐				

6.B. Equipment Selection and SCQ Reference:

Equipment Selection		Refer to SCQ Section
ASL A		SCQ Section:
ASL B	See GSTP	SCQ Section: 5.3.3
ASL C		SCQ Section:
ASL D		SCQ Section:
ASL E		SCQ Section:

7.A. Sampling Methods: (Put an X in the appropriate selection.)

Biased	X	Composite	☐	Environmental	☐	Grab	☐
Grid	☐	Intrusive	X	Non-Intrusive	☐	Phased	☐
Source	☐						

Other (specify): _____

DQO Number: _____

7.B. Sample Work Plan Reference: (List the samples required. Reference Draft GSTP for Phase III of the Site-Wide Disposal Facility Field Investigation)

Background samples: Samples have been previously collected from this area.

7.C. Sample Collection Reference: (Please provide a specific reference to the SCQ Section and subsection guiding sampling collection procedures.)

Sample Collection Reference: Appendix K

---

8. Quality Control Samples: (Place an "X" in the appropriate selection box.)

8.A. Field Quality Control Samples:

Trip Blanks ☐ Container Blanks ☐
Field Blanks ☐ Duplicate Samples ☐
Equipment Rinsate Samples ☐ Split Samples ☐
Preservative Blanks ☐ Performance Evaluation Samples ☐

Other (specify) _____

8.B. Laboratory Quality Control Samples:

Method Blank ☐ Matrix Duplicate/Replicate ☐
Matrix Spike ☐ Surrogate Spikes ☐

Other (specify) _____

9. Other: Please provide any other germane information that may impact the data quality or gathering of this particular objective, task or data use.

DATA QUALITY OBJECTIVE LOGIC FLOW
GEOTECHNICAL INVESTIGATION
ON-SITE DISPOSAL FACILITY

1 Problem Statement

CRU2 has been tasked to manage the DOE Title I/Title II design and DOE Title III construction oversight for a proposed on-site disposal facility. This will require a geotechnical investigation study to provide data to be used in conjunction with the data generated during the pre-design field study to characterize the geotechnical properties of the potential site of the facility.

Using all available information, a potential site which is located on the eastern portion of the FEMP has been established for the disposal facility. This site is approximately 800 feet by 4,320 feet in size and is sufficient for the layout of a facility capable of handling 2.5 million cubic yards of material. An additional section approximately 800 feet by 780 feet in size is also considered north west of the original facility area as potential expansion areas. This geotechnical study is intended to investigate both the disposal facility and the potential expansion area.

As part of the geotechnical investigation study, geotechnical sampling and in-situ testing will be conducted to determine the geotechnical properties of the subsurface soils. The collected data in conjunction with available data will be used for detailed design, stability evaluation, and anticipated performance of the disposal facility.

2 Identification of a Decision that Addresses the Problem

The information generated by the geotechnical investigation study along with the available data are essential in determining the geotechnical properties (including the strength, compressibility, and hydraulic conductivity) of the subsurface soils in the footprint of proposed cell and its potential expansion areas. This information is necessary in order to perform the detailed design including the stability and anticipated performance evaluation of the subject disposal facility which are pivotal to the remediation of the FEMP.

3 Identification of Inputs that Affect the Decision

To develop design parameters, and evaluate stability and anticipated level of performance of the disposal facility, the geotechnical properties of the subsurface soils need to be known. Based on review of existing geotechnical data, known variability of geotechnical parameters, and engineering judgement, it has been determined that a total of 16 soil borings, 40 cone penetrometer tests (CPTs), and 16 shallow borings/excavations are needed. These additional samples are needed in order to develop the required geotechnical data for design. This number of soil borings and CPT

will provide sufficient information, when used in conjunction with existing information, to adequately determine geotechnical properties of the soils for the detailed design purposes. In general, the in-situ testing and sampling will be conducted in a manner to accurately determine the soil properties from the surface to approximately the bottom of the till. However, at isolated locations outside the footprint of the disposal area, the CPT and borings may extend to depths of about 80 to 100 feet. Three of the borings are designated to be performed to depths of about 80 feet. This is intended to provide properties of deeper soils which are required for evaluation of both liquefaction and settlement of subsurface soils below the disposal facility.

The soil borings are intended to provide undisturbed and disturbed samples for log preparation and laboratory testing. Additionally, as part of the soil borings, Standard Penetration Test (SPT) blow counts will also be collected in both cohesive and granular soils. SPT values in cohesive soils will provide a measure of the soil consistency and strength values. In granular soils, SPT blow counts will provide a measure of the soil density and strength values. SPT values in granular soils will also be used in estimating the liquefaction potential of the saturated zones. The planned depth of each of the geotechnical borings along with tentative sampling type and depths are provided in the attached GSTP. Split spoon and Shelby tube samples will be collected alternately at intervals of about 2.5 feet to a depth of about 20 feet and then at intervals of 5 feet to the bottom of the boring. The shelby tube or Denison samples will be used to collect material for tests that need undisturbed samples; e.g., consolidation, triaxial shear, and permeability. Split spoon samples will be used to collect material for the other tests; e.g., grain size, Atterberg limits, and moisture content.

The shallow borings/excavations are intended to provide bulk samples of topsoil (upper 18 inches) as well as the subsurface soils (from 1.5. to about 5 feet) which are intended to be used as liner material. The topsoil samples will be used for organic content tests while the surface soil samples below the topsoil will be used for remolded permeability tests. The planned depth of each shallow borings/excavations along with tentative sampling depths and laboratory tests are provided in the GSTP.

The following is a summary of the number and type of the laboratory tests to be performed during the geotechnical investigation.

TEST TYPE	STANDARD	NO. OF TESTS
-Moisture Content, MC	ASTM D2216	76
-Moisture Content, MC_m	ASTM D4643	18
-Unit Weight, UW	EM100-2-1906	48

-Grain Size/Hydrometer, GS	ASTM D422	99
-Specific Gravity, SG	ASTM D854	14
-Atterberg Limits, AL	ASTM D4318	63
-Consolidation with time readings: Undisturbed, Natural moisture, CON Undisturbed, Saturated condition, CON_s Remolded, Wet of optimum moisture, CON_r Remolded, 85% relative compaction, CON_{r8s}	ASTM D2435	 11 5 5 11
-UU Triaxial Undisturbed sample, UU Remolded, Wet of optimum moisture, UU_r Remolded, 85% relative compaction, UU_{r85}	ASTM D2850	 17 5 3
-CU Triaxial (w/pp): Undisturbed sample, CU Remolded, Wet of optimum moisture, CU_r Remolded, 85% relative compaction, CU_{r85}	ASTM D4767	 13 5 2
-R-value, R	ASTM D2844	3
-Standard Proctor, SP	ASTM D698	16
-Hydraulic Conductivity: Undisturbed sample, P Remolded sample, P_r	ASTM D5084	 8 14
-Organic Matter, OC	ASTM D2974	42
-Soundness, S	ASTM C88	5
-Abrasion, A	ASTM C535	5

Moisture content, unit weight, grain size, specific gravity, and Atterberg limits are primarily used for soil identification and classification purposes. Consolidation tests are performed to develop parameters needed for estimating the settlement of the subsurface soils below the facility as well as the disposal facility itself. Triaxial tests are performed to develop strength parameters needed for bearing capacity and stability evaluation of the foundation soils as well as stability of the facility itself. R-value tests are performed to develop parameters needed for design of roadway sections.

Standard proctor tests are performed to develop parameters needed for preparation of reconstituted samples as well as compaction control during the construction. Hydraulic conductivity tests are performed to define the permeability characteristics of the in-situ soils as well as the potential liner materials.

Organic matter tests are performed to estimate organic content of the topsoil to aid in assessing the potential settlement of the wasted topsoil due to its decomposition.

Soundness and abrasion tests are performed to evaluate the durability of the riprap materials. The source of the riprap will be a local quarry.

The CPTs are intended to provide continuous stratigraphy information as well as strength data for engineering evaluation and analyses. Dissipation tests will also be conducted at selected locations to estimate in-situ soil horizontal permeability in saturated zones. Additionally, the CPT data are used to interpolate soil properties between samples as well as borings. The planned depth of each of the CPTs are provided in the attached GSTP. Fifteen of the CPTs are designated to be performed to depth of about 100 feet or refusal, whichever is less. This is to provide properties of deeper soils which are required for evaluation of liquefaction, stability and settlement of subsurface soils below the disposal facility.

Perched groundwater is suspected to be contaminated in selected locations. To prevent cross contaminating the regional aquifer the bottom of the glacial overburden (till) will be estimated from kriged surfaces and the CPTs will terminate about 5 feet above the estimated bottom of the till. After the CPTs are completed, they will be filled with expansive Type K grout. None of the deep CPTs are in known areas of contamination.

The information gathered from the sampling is intended to be used by personnel qualified and experienced in conducting site investigation and disposal facility design and evaluation.

4 Specification of the Domain of the Decision

The in-situ testing and soil sampling will occur in an area on the east boundary of the FEMP that measures approximately 800 feet wide by 4,320 feet long, with the long edge parallel with the east boundary of the site. In-situ testing measurements and geotechnical samples will be collected from the brown clay (from the surface to a depth of about 15 feet) and the grey clay (from a depth of about 15 feet to 30 feet) and in selected locations from soils below the depth of about 30 feet using CPTs, as well as Shelby tubes and split barrel samplers. An electric CPT rig will be utilized to advance the CPTs while and auger drill rig will be used to collect the Shelby tubes and the split barrel samples. The tentative locations of the CPTs and soil borings are shown on Figure 1 of the GSTP. These locations were selected based on the existing available information in order to produce the representative subsurface soils' properties and geotechnical data within the footprint of the proposed disposal facility.

5 Development of Logic Statements

The result of the in-situ and geotechnical sampling and testing will be summarized in the geotechnical investigation report. The information obtained from this investigation will assist CRU2 in detailed design of the subject disposal facility. The primary objectives of the in-situ testing, and geotechnical sampling and testing are as follows:

- Define the geotechnical properties of subsurface soils at the Disposal Facility site and provide geotechnical design parameters. These parameters will be used for subsequent bearing capacity, settlement, and stability analyses of the native soils under the Disposal Facility area.

- Provide geotechnical properties and parameters for reconstituted clay samples intended for construction of the lining material and the perimeter dikes for overall stability and settlement evaluation of the Disposal Facility.

- Provide geotechnical properties and parameters for subsurface native granular soils for potential liquefaction evaluation of materials below the Disposal Facility footprint.

- Provide geotechnical properties and parameters for the topsoil and materials similar to the intended waste materials for overall settlement evaluation of the Disposal Facility contents.

- Provide information regarding the hydraulic conductivity of the native clay soils below the Disposal Facility footprint.

- Provide information regarding the hydraulic conductivity of the reconstituted clay samples intended for use as lining materials.

- Report on any relevant geotechnical findings or observations made during execution of the work that may affect the geotechnical aspects of the design, construction and performance.

6 Establishment of Constraints on Uncertainty

The purpose of this step is to define possible decision errors based on study findings. A false positive error would indicate that the subsurface materials have properties more conducive for cell construction. This would have an impact on location selection and design parameters. This could result from laboratory or analytical testing errors, misclassification of soil in the field or by missing a significant granular pathway during the field investigation. The consequences would be that a false positive would be

discovered during construction or post-construction monitoring. This would result in a reduced factor of safety or a design upgrade.

A false negative would indicate that the soil has unacceptable properties; therefore, creating the need for using off-site material, over designing the disposal cell, or eliminating the possibility for an on-site disposal facility.

The impacts of a false positive or negative (in order of importance):

1.) cost
2.) credibility
3.) social
4.) ecological

To minimize the possibility of errors, all of the procedures will be conducted by qualified personnel. The analysis shall adhere to the appropriate FEMP ASLs of quality control criteria as specified in the Site-Wide CERCLA Quality Assurance Project Plan (SCQ). The required ASLs for this study are level B.

In the event that a boring cannot be completed, a new boring will be started a minimum of five feet from the previous unsuccessful boring. If a boring cannot be successfully completed, it is likely that results from other sampling locations will serve as an effective substitute.

7 Development of a Cost-Effective Design for Obtaining Data

Geotechnical sampling and analysis will be performed in accordance to ASTM standards under a quality program which meets NQA1, QL3 requirements to assure quality results for design of the disposal facility. The ASL for all geotechnical testing will be ASL B. All data will be checked by the engineer in accordance with approved design procedures and SCQ requirements.

Records documenting geotechnical laboratory equipment calibration will be maintained and included in the project records. Observed variability of results may result in a raise in the factor of safety in accordance with engineering practices. Any sample which retrieves an adequate quantity and acceptable configuration of material will be considered a successful sampling event.

8 Summary

The primary objective of this sampling and analytical effort is to facilitate the selection of location and design of an on-site disposal facility.

The geotechnical tests of concern are listed in the table in Section 3. The samples will be collected and tested in accordance with engineering procedures which meet the requirements of the SCQ and NQA1,QL3 protocols. All geotechnical testing will be ASL B.

APPENDIX B

SSOP - 1070,

"UNEXPECTED DISCOVERY OF CULTURAL RESOURCES"

Fernald Environmental FERMCO Restoration Management Corporation	Title: UNEXPECTED DISCOVERY OF CULTURAL RESOURCES	
	DOCUMENT NO: SSOP-1070 REVISION NO: 0	
	Effective Date: 03-31-94	Page 3 of 8

1.0 PURPOSE

This procedure provides the method by which Fernald Environmental Restoration Management Corporation (FERMCO) or sub-contractor personnel shall notify the FERMCO Cultural Resource Coordinator (CRC) within the Environmental Planning Department of the Regulatory Programs Division of the unexpected discovery of Cultural Resources during drilling or any other ground disturbing activities at the Fernald Environmental Management Project (FEMP) or beyond its boundaries.

2.0 SCOPE

This procedure applies to all FEMP and subcontractor personnel. This procedure addresses all ground disturbing activities in process at the FEMP and is applicable to all FEMP, subcontractor and teaming partner personnel.

3.0 DEFINITIONS

Cultural Resource Coordinator (CRC) - The FERMCO person in charge of managing cultural resources at the FEMP.

Cultural Resources - Any prehistoric district, building, structure, or object included in or eligible for inclusion on the National Register of Historic Places. Such items include artifacts, records, and remains that are related to a district, site, building, structure, or object.

Ground Disturbing Activity - Any activity that disturbs the ground either on the FEMP site or on adjacent property. Examples of ground disturbance include stripping of topsoil, drilling wells, road improvements, etc.

Field Personnel - FERMCO of Subcontractor employees that are conducting ground disturbing activities.

Historic Properties - Any historic or prehistoric site, structure, or object.

Responsible Field Representative - The employee designated with responsibility for field activities such as Construction Engineer, Construction Coordinator or Project Engineer.

State Historic Preservation Office (SHPO) - The state authority responsible for enforcement of the National Historical Preservation Act.

4.0 RESPONSIBILITIES

DOE-FN Cultural Resources Point of Contact

- Notifies SHPO of unexpected cultural resource discovery.
- Negotiates mitigation.
- Notifies FERMCO of authorization to proceed with work.

Environmental Planning Manager

- Notifies DOE-FN of unexpected cultural resource discovery.
- Coordinates mitigation.
- Prehistoric/Historic Assessment Report.

Cultural Resource Coordinator (CRC)

- Coordinates Cultural Resource Management Program.
- Notifies Environment Planning Manager of unexpected cultural resource discovery.
- Completes and signs Pre-historic/Historic Assessment Report.
- Assists in completion and signs unexpected cultural resource discovery form.
- Coordinates mitigation.

Project Engineer/Construction Engineer/Construction Coordinator

- Stops work upon discovery of a cultural resource.
- Notifies CRC upon discovery of a cultural resource.
- Completes and signs Unexpected Cultural Resource Discovery form.

5.0 GENERAL

The National Historic Preservation Act (36 CFR 800, Section 106) requires Federal agencies to take into account the effects of their actions on properties that are on, or eligible for inclusion on, the National Register of Historic Places List. This list includes undiscovered resources as well as districts, sites, buildings, structures or objects.

5.0 GENERAL (cont.)

To comply with section 106 and due to the large number of historic and archaeological resources existing in the area, consultation was requested by the Department of Energy (DOE) from the State Historic Preservation Office (SHPO) concerning proposed remedial activity at the FEMP. This consultation resulted in an agreement that any planned surface disturbance activities in non-controlled areas at the FEMP must be preceded by a cultural resources survey to determine the existence of potentially significant historic or archeological resources.

Any records resulting from this procedure shall be archived with the CRC program and made available on a "need to know" basis as specified in public law (PL) 96-95.

All discoveries, historic and prehistoric, shall be included in the Cultural Resource Management Plan (Draft).

6.0 PREREQUISITES

None

7.0 PROCEDURE

7.1 HANDLING THE DISCOVERY OF A CULTURAL RESOURCE

FIELD PERSONNEL

1. Upon discovery of any historic, pre-historic, or archaeological site, feature, or object, cease all ground disturbing activity and contact the responsible Field Representative.

RESPONSIBLE FIELD REPRESENTATIVE

2. Immediately report the discovery to the Cultural Resource Coordinator and the responsible CRU Director or Division Manager.

3. Complete the Unexpected Cultural Resources Discovery form (Figure 1) and log it into the Field Activity Daily Log. Submit the Discovery form and a copy of the Field Activity Daily Log to the CRC.

NOTE: Proper Document Control Procedures must be followed.

Fernald Environmental FERMCO Restoration Management Corporation	Title: UNEXPECTED DISCOVERY OF CULTURAL RESOURCES
	DOCUMENT NO: SSOP-1070 REVISION NO: 0
	Effective Date: 03-31-94 / Page 6 of 8

REGULATORY PROGRAMS/ENVIRONMENTAL PLANNING UNEXPECTED CULTURAL RESOURCES DISCOVERY FORM	Date/Time of Discovery: Construction Engineer:
PROJECT TITLE: PROJECT LOCATION:	Contact with Construction Contract Manager and Time:
Location of Discovery (include sketch map):	
Description of Discovery (include any damage to discovery, additional discovery observed, etc. Use additional sheets, if necessary):	
Method of Discovery:	
Additional Comments:	

Environmental Planning Department Manager:	Date:
CRU Director/Division Manager:	Date:
Responsible Field Representative:	Date:
Cultural Resource Coordinator Signature:	Date:

FEF-3780 (Rev. 03/08/94)

000082

Figure 1 - Unexpected Cultural Resources Discovery Form

7.1 HANDLING THE DISCOVERY OF A CULTURAL RESOURCE (cont.)

CULTURAL RESOURCE COORDINATOR

4. Verbally report the discovery to the Environmental Planning Department Manager.

5. Complete and sign a Prehistoric/Historic Assessment Report using the format provided (Attachment A).

6. Determine whether an on-call Cultural Resources Subcontractor will be used.

7. Report the assessment to the Environmental Planning Department Manager.

ENVIRONMENTAL PLANNING DEPARTMENT MANAGER

8. Sign the Prehistoric/Historic Assessment Report.

9. Verbally contact the DOE Cultural Resource Point of Contact and follow up with the signed Prehistoric/Historic Assessment Report. Include a copy of the completed Unexpected Discovery of Cultural Resources form.

DOE CULTURAL RESOURCE POINT OF CONTACT

10. Contact the State Historic Preservation Office and gain concurrence for the mitigation procedure to be followed, if any.

CULTURAL RESOURCE COORDINATOR

11. Secure the cultural resource area until notified by DOE.

12. Coordinate any further mitigation efforts through an on-call Subcontractor or through EPD.

CONSTRUCTION

13. After receipt of written notification from the DOE, direct field personnel to proceed with ground activities in the affected area.

8.0 APPLICABLE DOCUMENTS

8.1 DRIVERS

- Archeological and Historic Act of 1974
- National Historic Preservation Act of 1966, as amended
- Native American Graves and Repatriation Act of 1990

8.2 REFERENCES

- 36 CFR 800, Section 106: "Protection of Historic Properties"
- "Secretary of the Interior Standards and Guidelines for Archaeology and Historic Preservation"

APPENDIX C

EXAMPLE FIELD FORMS

FEMP

62

FIELD ACTIVITY LOG

CONTROL NO.:	PROJECT NO. / RI/FS WSS NO.:	PAGE ____ OF ____
PREPARED BY (NAME):	BADGE NO.:	DATE:

FIELD ACTIVITY SUBJECT:	GENERAL LOCATION / FACILITY DESCRIPTION:	
WEATHER CONDITIONS:	AIR TEMPERATURE:	BAROMETRIC PRESSURE (in Hg):

TIME	DESCRIPTION OF ACTIVITY

METER CALIBRATION

WATER QUALITY METER

MFR. NAME:	SERIAL NO.:	INITIALS:	DATE:	TIME:	STD. SOLN. MFR.:	STD. SOLN. LOT NO.:	STD. SOLN. EXP. DATE:

PHOTOIONIZATION DETECTOR

MFR. NAME:	SERIAL NO.:	INITIALS:	DATE:	TIME:	CAL. GAS MFR.:	CAL. GAS TYPE:	CAL. GAS CONC.:	ppm:	PROBE eV:

ALPHA METER		BETA GAMMA METER		CALIBRATION PROBLEMS:
MFR. NAME:	SERIAL NO.:	MFR. NAME:	SERIAL NO.:	

VISITORS		TIME	
NAME(S)	ORGANIZATION(S)	ARRIVED	DEPARTED

FS-F-2682 (11-08-94)

G:\WP3\C94-364.DRW

FEMP

FIELD ACTIVITY LOG
(CONTINUATION PAGE)

CONTROL NO.:	PROJECT NO. / RI/FS WBS NO.:	PAGE ____ OF ____
PREPARED BY (NAME):	BADGE NO.:	DATE:

FIELD ACTIVITY SUBJECT:	GENERAL LOCATION / FACILITY DESCRIPTION:

TIME	DESCRIPTION OF ACTIVITY

FS-F-3662-1 (11-08-94)

Q:\WPSC\94-365.DRW

FEMP

SAMPLE COLLECTION LOG

CONTROL NUMBER:	PAGE _____ OF _____	
PREPARED BY:	BADGE NO.:	DATE:
REVIEWED BY:	BADGE NO.:	DATE:

SAMPLE LOCATION:	PROJECT NAME:	PROJECT NUMBER:
SAMPLE TEAM LEADER:	BADGE NO.:	SAMPLE TEAM NAME(S) / BADGE NO(S).

CUSTOMER NUMBER / FACTS ID (CUSTOMER # / FACTS ID)	SAMPLE TYPE CODE	SAMPLE SCREEN RESULTS (PID)	SAMPLE SCREEN RESULTS (RAD)	COLLECTION START		COLLECTION STOP		SAMPLE DEPTH — INTERVAL ( ) UNITS	PRESERVATIVE	NUMBER OF CONTAINERS	SAMPLE CONTAINER TYPE & SIZE	ANALYTICAL PARAMETERS (OR TARGET ANALYTE LIST)	VISUAL DESCRIPTION OF SAMPLE	DUPLICATE OF SAMPLE NUMBER	QA / QC SAMPLE DESIGNATION
				DATE	TIME	DATE	TIME								
								–							
								–							
								–							
								–							
								–							
								–							
								–							
								–							

REMARKS:

880000

62

Q:\WPSC\Rs...DRW REVISED 10-25-94

FEMP SAMPLE COLLECTION LOG - SAMPLE CODES

SAMPLE TYPE CODE	
M103	Soil
M104	Sediment
M111	Sludge
M112	Air Filter
M118	Miscellaneous (Specific description addressed in remark field)
M300	Tank Contents (Water)
M301	Tank Contents (Organic)
M302	Tank Contents (Unknown)
M305	Concrete
M310	Liquid (Unknown)
M314	Oils
M317	Rocks/Bricks
M322	Solid (Unknown)
M333	Deionized Water
M334	Drill Cuttings

PRESERVATIVE CODE	
P00	None Required
P01	Cool, 4°C
P02	Freeze, < 0°C
P03	Filter on site
P04	Filter on site/HNO_3 to pH < 2
P05	Filter on site/Cool, 4°C
P06	Filter on site/Cool, 4°C/H_2SO_4 to pH < 2
P07	H_2SO_4 to pH < 2
P08	H_2SO_4 to pH < 2/Cool, 4°C
P09	HCl to pH < 2
P10	HCl to 1%
P11	HNO_3 to pH < 2
P12	HNO_3 to 1%
P13	HNO_3 to pH < 2/Cool, 4°C
P14	NaOH to pH > 12/Cool, 4°C
P15	$Na_2S_2O_3$ (10% soln) to 1%
P16	$Na_2S_2O_3$ 100 mg/L
P17	Cool, 4°C/2mL ZnOAc + NaOH to pH > 9

QA/QC SAMPLE DESIGNATION CODE	
Q01	Preservation Blank
Q02	Container Blank
Q03	Temperature Blank
Q04	Trip Blank
Q05	Field Blank
Q06	Rinsate
Q07	Duplicate Sample
Q08	Split Sample
Q09	Deionized Water Blank
Q10	Matrix Spike
Q11	Matrix Spike/Matrix Spike Duplicate

000089

FEMP WATER SAMPLE COLLECTION LOG

CONTROL NO.: PAGE ____ OF ____

PREPARED BY (NAME):	BADGE NO.:	DATE:	REVIEWED BY (NAME): BADGE NO. DATE:
PROJECT NAME:			PROJECT NO. / RI/FS WBS NO.: CHARGE NO.:

MPLE TEAM LEAD NAME:	SAMPLE COLLECTION TEAM MEMBER NAMES: BADGE NO.:	SAMPLE LOCATION:
BADGE NO.:		
SAMPLING TEAM LETTER:		

SAMPLE DESCRIPTION
☐ HYDROPUNCH SAMPLE ☐ LYSIMETER ☐ MONITORING WELL SAMPLE ☐ SURFACE WATER SAMPLE ☐ OTHER

FACTS SAMPLE ID NO. / FILTERED STATUS

☐ SAMPLE	☐ FB	☐ RINSATE
	☐ MS	☐ DUP
☐ SPLIT		
☐ TB		

SAMPLING EQUIPMENT LIST

NAME	MANUFACTURER / SERIAL NO.	NAME	TYPE
WATER LEVEL INDICATOR		BAILER	
OTHER		SAMPLING HOSE	
OTHER		PUMP	
OTHER		FILTER KIT	
OTHER		OTHER	

P.I.D. UNITS	BACKGROUND	BREATHING ZONE	DOWNHOLE
BETA GAMMA METER UNITS	BACKGROUND	WELL	

REFERENCE POINT: ☐ TPC ☐ TOW | WELL MATERIAL: ☐ PVC ☐ STEEL ☐ STAINLESS STEEL | REPORTED TOTAL DEPTH (ft):

WELL DIAMETER FOR VOLUME CONVERSION: ☐ 2 in = 0.163 gal/ft ☐ 4 in = 0.653 gal/ft ☐ 6 in = 1.469 gal/ft ☐ 8 in = 2.611 gal/ft

STANDARD PURGE SAMPLE COLLECTION DATA

☐ Packer: ____ WATER LEVEL (ft) PURGE 25 GALLONS

☐ No Packer: ____ − ____ = ____ × ____ = ____ × 3 = ____
TOTAL DEPTH (ft) − WATER LEVEL (ft) = WATER COLUMN (ft) × (gal/ft) = 1 PURGE VOLUME (gal) × 3 = TOTAL PURGE VOLUME (gal)

WATER QUALITY DATA

	TIME	pH S.U.	Spec. Cond. (mS/cm)	TURBIDITY (NTU)	D.O. (mg/L)	TEMP. (°C)
Pre-purge						
Volume 1						
Volume 2						
Volume 3						
Post-Sampling						

MAXIMUM PURGE RATE: (gal/min.)
ACTUAL PURGE VOLUME: (gal.)
DATE / TIME SAMPLED:
SAMPLE DEPTH (ft):

HYDROPUNCH / LYSIMETER / MICRO-PURGE / SURFACE WATER SAMPLE COLLECTION DATA

WATER LEVEL (ft) ____ SCREEN LENGTH (ft) ____ MICRO-PURGE VOLUME (gal) ____ LYSIMETER EVACUATED VOLUME ____

WATER QUALITY DATA

	TIME	pH S.U.	Spec. Cond. (mS/cm)	TURBIDITY (NTU)	D.O. (mg/L)	TEMP. (°C)
Pre-sampling						

MAXIMUM PURGE RATE: (gal/min) | ACTUAL PURGE VOLUME: (gal) | SAMPLE DEPTH (ft): | DATE / TIME SAMPLED:

000090

FEMP
MONITORING WELL DEVELOPMENT FORM

CONTROL NUMBER:	FAL REF. NUMBER:	Page of

WELL NUMBER:	PROJECT NAME:	PROJECT NUMBER:

DATE(S) OF WELL INSTALLATION:	WELL DEVELOPMENT START DATE/TIME:	COMPLETION DATE/TIME:

DRILLER/HELPER:

FIELD ENGINEER/GEOLOGIST:	DATE:	CHECKED/VERIFIED BY:	DATE:

ITEM	BEFORE DEVELOPMENT	AFTER DEVELOPMENT
STATIC WATER LEVEL		
TOTAL DEPTH		

WELL VOLUME CALCULATIONS

2 inches = 0.163 gal.
4 inches = 0.653 gal.
6 inches = 1.469 gal.
8 inches = 2.612 gal.
10 inches = 4.080 gal.
11 inches = 4.937 gal.
12 inches = 5.875 gal.

TOTAL CALCULATED VOLUME OF WATER TO BE REMOVED/GALLONS:	TOTAL VOLUME OF WATER REMOVED DURING DEVELOPMENT/GALLONS:	TYPE AND SIZE OF PUMP:	TYPE AND SIZE OF BAILER:

LITHOLOGIC DESCRIPTION OF REMOVED SEDIMENTS:	DESCRIPTION OF DEVELOPMENT TECHNIQUES:

SAMPLE COLLECTED		VOLUME OF WATER PURGED FROM WELL (gals.)	TEMP (°___)	SPECIFIC CONDUCTANCE (µmhos/cm)	pH (S.U.)	DO (mg/L)	TURBIDITY (N.T.U.)	COLOR	PARTICULATES	ODOR	REMARKS
DATE	TIME										

FS-F-3680 (REV. 9/10/93)

000091

62

FEMP
MONITORING WELL DEVELOPMENT FORM
(Continuation Page)

CONTROL NUMBER:	FAL REF NUMBER:	Page of

WELL NUMBER:	PROJECT NAME:	PROJECT NUMBER:

DATE(S) OF WELL INSTALLATION:	WELL DEVELOPMENT START DATE/TIME:	COMPLETION DATE/TIME:

DRILLER/HELPER:

FIELD ENGINEER/GEOLOGIST:	DATE:	CHECKED/VERIFIED BY:	DATE:

SAMPLE COLLECTED DATE	SAMPLE COLLECTED TIME	VOLUME OF WATER PURGED FROM WELL (gals.)	TEMP (°___)	SPECIFIC CONDUCTANCE (μmhos/cm)	pH (S.U.)	DO (mg/l)	TURBIDITY (N.T.U.)	COLOR	PARTICULATES	ODOR	REMARKS

000092

WELL NUMBER:

FEMP
WELL COMPLETION LOG

CONTROL NUMBER:

PROJECT NAME:

PROJECT NUMBER:

GEOLOGIST:

DRILLING METHOD:

DATES OF INSTALLATION:	WATER LEVEL (FL):	DATE:	RELATED FAL NUMBERS:	CHECKED BY:

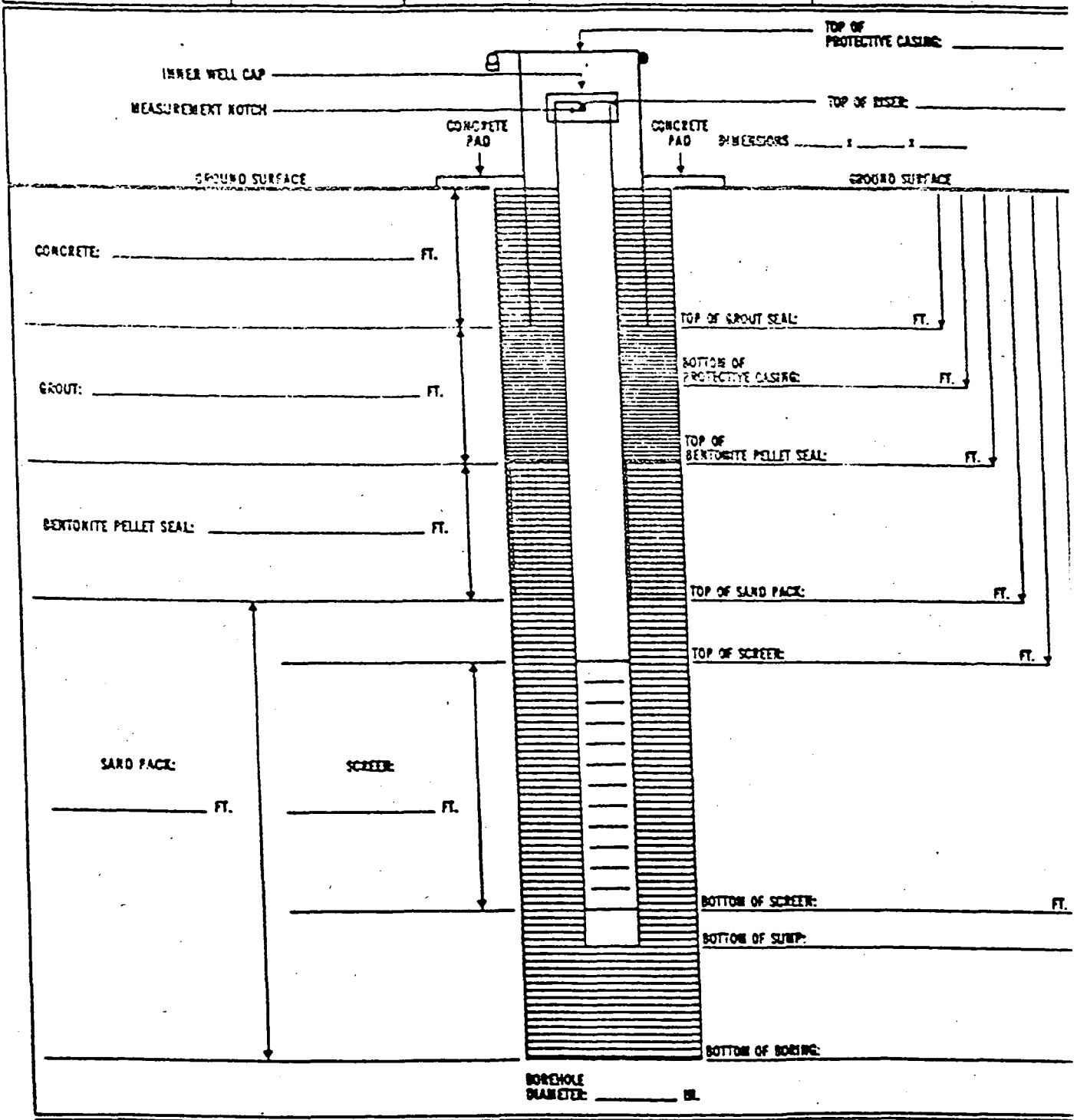

TYPE AND AMOUNT OF GROUT USED:	BENTONITE PELLETS (5-GALLON BUCKETS):	DEEPEST TEMPORARY DRILLING CASING PE
VOLUME OF WATER USED DURING DRILLING: GAL.	RISER MATERIAL:	VOLUME OF WATER USED FOR GROUT HYDR

RISER WALL THICKNESS:	TYPE OF SAND PACK:	SCREEN MATERIAL:	DRILLING CASING DIAMETER:
RISER/SCREEN DIAMETER: IN.	SCREEN SLOT SIZE: IN.	SCREEN TYPE:	DEPTH OF CENTRALIZER(S):

000093

FS-F-3684 (9/10/93)

CONTROL NUMBER:

FEMP
LITHOLOGIC LOG

Page of

PROJECT NAME:	PROJECT NUMBER:
BORING NUMBER:	COORDINATES: / RELATED FAL NUMBERS:
SURFACE ELEVATION:	GROUNDWATER LEVEL: / DATE: / TIME: / DATE STARTED:
GEOLOGIST:	GROUNDWATER LEVEL: / DATE: / TIME: / DATE COMPLETED:
WATER USED DURING DRILLING:	DRILLING CONTRACTOR: / DRILLING EQUIPMENT: / DRILLER/HELPER:

DEPTH (FEET)	SAMPLE TIME, DATE, AND NUMBER	BLOWS (per 6 inch)	RECOVERY (inches)	DESCRIPTION (Colors identified per Munsell Color Chart)	USCS SYMBOL	MEASURED CONSISTENCY (TSF)	REMARKS

INSTRUMENT	BACKGROUND	DATE	TIME
PID:			
ALPHA			
BETA/GAMMA			

NOTES:

000094

* Samples collected per ASTM Standard Penetration test.

F... 1 (2/18/93)

FEMP WATER SAMPLE COLLECTION LOG

CONTROL NO.: PAGE ____ OF ____

PREPARED BY (NAME):	BADGE NO.:	DATE:	REVIEWED BY (NAME):	BADGE NO.:	DATE:
PROJECT NAME:			PROJECT NO. / RI/FS WBS NO.:		CHARGE NO.:

VIPLE TEAM LEAD NAME:	SAMPLE COLLECTION TEAM MEMBER NAMES:	BADGE NOs.:	SAMPLE LOCATION:
DGE NO.:			
SAMPLING TEAM LETTER:			

SAMPLE DESCRIPTION

☐ HYDROPUNCH SAMPLE ☐ LYSIMETER ☐ MONITORING WELL SAMPLE ☐ SURFACE WATER SAMPLE ☐ OTHER

FACTS SAMPLE ID NO. / FILTERED STATUS

☐ SAMPLE	☐ FB	☐ RINSATE
	☐ MS	☐ DUP
☐ SPLIT		
☐ TB		

SAMPLING EQUIPMENT LIST

NAME	MANUFACTURER / SERIAL NO.	NAME	TYPE
WATER LEVEL INDICATOR		BAILER	
OTHER		SAMPLING HOSE	
OTHER		PUMP	
OTHER		FILTER KIT	
OTHER		OTHER	

P.I.D. UNITS	BACKGROUND	BREATHING ZONE	DOWNHOLE
BETA GAMMA METER UNITS	BACKGROUND	WELL	

REFERENCE POINT: ☐ TPC ☐ TOW | WELL MATERIAL: ☐ PVC ☐ STEEL ☐ STAINLESS STEEL | REPORTED TOTAL DEPTH (ft):

WELL DIAMETER FOR VOLUME CONVERSION: ☐ 2 in = 0.163 gal/ft ☐ 4 in = 0.653 gal/ft ☐ 6 in = 1.469 gal/ft ☐ 8 in = 2.611 gal/ft

STANDARD PURGE SAMPLE COLLECTION DATA

☐ Packer: _____ WATER LEVEL (ft) PURGE 25 GALLONS

☐ No Packer: _____ (TOTAL DEPTH (ft)) − _____ (WATER LEVEL (ft)) = _____ (WATER COLUMN (ft)) × _____ (gal/ft) = _____ (1 PURGE VOLUME (gal)) × 3 = _____ (TOTAL PURGE VOLUME (gal))

WATER QUALITY DATA

	TIME	pH S.U.	Spec. Cond. (mS/cm)	TURBIDITY (NTU)	D.O. (mg/L)	TEMP. (°C)
Pre-purge						
Volume 1						
Volume 2						
Volume 3						
Post-Sampling						

MAXIMUM PURGE RATE: (gal/min.)

ACTUAL PURGE VOLUME: (gal.)

DATE / TIME SAMPLED:

SAMPLE DEPTH (ft):

HYDROPUNCH / LYSIMETER / MICRO-PURGE / SURFACE WATER SAMPLE COLLECTION DATA

WATER LEVEL (ft) _____ SCREEN LENGTH (ft) _____ MICRO-PURGE VOLUME (gal) _____ LYSIMETER EVACUATED VOLUME _____

WATER QUALITY DATA

	TIME	pH S.U.	Spec. Cond. (mS/cm)	TURBIDITY (NTU)	D.O. (mg/L)	TEMP. (°C)
Pre-sampling						

MAXIMUM PURGE RATE: (gal/min)	ACTUAL PURGE VOLUME: (gal)	SAMPLE DEPTH (ft):	DATE / TIME SAMPLED:

000095

FS-F-3721 (11-08-94)

G:\WPSC\94-360.D

FEMP

FIELD ACTIVITY LOG

CONTROL NO.:	PROJECT NO / RI/FS WBS NO.	PAGE ____ OF ____
PREPARED BY (NAME):	BADGE NO.:	DATE:

FIELD ACTIVITY SUBJECT:	GENERAL LOCATION / FACILITY DESCRIPTION:	
WEATHER CONDITIONS:	AIR TEMPERATURE:	BAROMETRIC PRESSURE (in Hg):

TIME	DESCRIPTION OF ACTIVITY

METER CALIBRATION

WATER QUALITY METER

MFR. NAME:	SERIAL NO.:	INITIALS:	DATE:	TIME:	STD. SOLN. MFR.:	STD. SOLN. LOT NO.:	STD. SOLN. EXP. DATE:

PHOTOIONIZATION DETECTOR

MFR. NAME:	SERIAL NO.:	INITIALS:	DATE:	TIME:	CAL. GAS MFR.:	CAL. GAS TYPE:	CAL. GAS CONC.:	ppm:	PROBE eV:

ALPHA METER		BETA GAMMA METER		CALIBRATION PROBLEMS:
MFR. NAME:	SERIAL NO.:	MFR. NAME:	SERIAL NO.:	

VISITORS		TIME	
NAME(S)	ORGANIZATION(S)	ARRIVED	DEPART

FS-F-3682 (11-08-94)

000096

G:\WPSC\94-364 DRW

FMPC RI/FS

VR No. _____

VARIANCE REQUEST

Page ___ of ___

Date: _____

VARIANCE (Include Justification)

REQUESTED BY: _____ Date: _____

APPROVED BY: _____ Date: _____
Project Director/Designee

_____ Date: _____
Project Quality Assurance Officer

APPLICABLE DOCUMENT(S) AND SECTION No.(S)

AST FORM 0006 Rev.(1) 3-1-91

VARIANCE LOG

PROJECT NUMBER _____ PAGE _____ OF _____

PROJECT NAME _____

DATE	VARIANCE GRANTED AND APPLICABLE DOCUMENT	RESPONSIBLE INDIVIDUAL

FERNALD RI/FS

NONCONFORMANCE REPORT

PROJECT NO. _____ PAGE ___ OF ___

PROJECT NAME _____ DATE: _____

NONCONFORMANCE:

IDENTIFIED BY: _____ DATE: _____

CORRECTIVE ACTION REQUIRED:

TO BE PERFORMED BY: _____ DATE: _____

MUST CORRECTION BE VERIFIED? YES ___ NO ___

TO BE VERIFIED BY: _____ PREPARED BY: _____ DATE: _____

CORRECTIVE ACTION TAKEN:

PERFORMED BY: _____ DATE: _____

VERIFIED BY: _____ DATE: _____

CC:

Approved By: _____ Date: _____

_____ Date: _____

PAGE ___ OF ___

PAGE

FERNALD RI/FS

Shielded Delta-Gamma In-Situ Measurement

Background Assessment

Project Name: _____ Recorded By: _____

Date: _____ Time: _____

Delta Housing No.: _____ Daily Check Results: _____

Probe No.: _____ HV _____ (1000V) Threshold _____ (100)

Ratemeter/Scaler No.: _____ BAT _____ (OK) Window _____ (OUT)

Check Source No.: _____ Check Location: _____

Unshielded C_1* _____ C_2 _____ C_3 _____ Avg. Unshielded _____

Shielded C_1* _____ C_2 _____ C_3 _____ Avg. Shielded _____

Delta 1 _____ 2 _____ 3 _____ Avg. Delta _____

Bkg. Meas.	Location	Unshielded C_1*	Unshielded C_2	Unshielded C_3	Shielded C_1*	Shielded C_2	Shielded C_3	Delta
1								
2								
3								
4								
5								
6								
7								
8								
9								
10								

Average _____

Std. Dev. _____

Ave. ± 3 Std. Dev. _____

*Each count represents the counts per minute based on integration of 1000 cts. on the "C" scale of a ratemeter/scaler.

WEEKLY CALIBRATION LOG GROUNDWATER

I.D. NUMBER	EQUIPMENT	CREW

Date: Initials: METER CALIBRATION

pH Temp.	pH Std.	pH Std.	D.O. Temp.	Zero	Full Sg	D.O. Calib. Q	Spec. Cond. Temp.	Spec. Cond. Low	Spec. Cond. High	10-TU Standard	10-TU Lot #	10-TU Reading	10-TU Span
	4	7						147	1413				
OK			OK				OK						

Date: Initials: METER CALIBRATION

pH Temp.	pH Std.	pH Std.	D.O. Temp.	Zero	Full Sg	D.O. Calib. Q	Spec. Cond. Temp.	Spec. Cond. Low	Spec. Cond. High	10-TU Standard	10-TU Lot #	10-TU Reading	10-TU Span
	4	7						147	1413				
OK			OK				OK						

Date: Initials: METER CALIBRATION

pH Temp.	pH Std.	pH Std.	D.O. Temp.	Zero	Full Sg	D.O. Calib. Q	Spec. Cond. Temp.	Spec. Cond. Low	Spec. Cond. High	10-TU Standard	10-TU Lot #	10-TU Reading	10-TU Span
	4	7						147	1413				
OK			OK				OK						

Date: Initials: METER CALIBRATION

pH Temp.	pH Std.	pH Std.	D.O. Temp.	Zero	Full Sg	D.O. Calib. Q	Spec. Cond. Temp.	Spec. Cond. Low	Spec. Cond. High	10-TU Standard	10-TU Lot #	10-TU Reading	10-TU Span
	4	7		-				147	1413				
OK			OK				OK						

PHOTO IONIZATION DETECTOR INSTRUMENT USAGE AND CALIBRATION LOG

UNIT NUMBER: _____ PROPERTY/MODEL NUMBER: _____

UNIT TYPE: _____ LAMP VOLTAGE: _____

NOTE: CUMULATIVE USE IS NOT TO EXCEED ____ HOURS (CLEANING REQUIRED)

DATE/TIME OUT	*DATE/TIME RETURNED*	*TECH. NAME*	*CALIB. BY*	*PROJECT# /CHARGE #*	*PPM SPAN GAS*	*MAX PPM RDE*	*RESPONSE FACTOR*	*HOURS OF USE*
/	/							
/	/							
/	/							
/	/							
/	/							
/	/							
/	/							
/	/							
/	/							
/	/							
/	/							
/	/							
/	/							
/	/							

000102

62

APPENDIX D

EQUIPMENT LIST

PROJECT EQUIPMENT LIST

REQUIRED DOCUMENTS

Penetration Permit
Project Specific Health and Safety Plan
FEMP Work Permit
Flame Permit
Radiological Worker Permit
Training Certification Card
Radiological Survey
Equipment Inspection Station
Project-Specific Plan
Chemical Hazardous Materials Work Permit

BLANK FORMS

Tailgate Safety Meeting
Field Activity Log
Sample Collection Log
Site-Wide Analysis Request/ Chain of Custody

SAMPLING SUPPLIES

Containers
Sample Labels
Permanent Indelible Markers
Custody Tape
CPT Sample Extractor
Sampling Spoons/Knives

METERS/DETECTORS

Beta Gamma Detector (Frisker)
Photoionization Detector (PID)

TAPES & PLASTICS

Silver Duct Tape
Yellow Radiological Tape
Clear Tape
Roll of Clear Plastic
Custody Tape

MISCELLANEOUS TOOLS

Scissors
Screwdriver
Hammer
Box Knife
Tape Measure/Yardstick
Carpenters Level

EXCLUSION ZONE SUPPLIES

Caution Tape

Wooden Stakes
Danger/Caution Signs/Flags

DECONTAMINATION SUPPLIES

Stainless Steel 5-Gallon Pails
Alconox
Elbow-length Nitrile Gloves
Brushes
Stainless Steel Water Sprayer
Deionized Water
Clear Plastic Sheeting
Chemical laboratory wipes

PERSONAL PROTECTION EQUIPMENT

Cotton Coveralls
Hard Hat
Steel-Toed Boots
Safety Glasses
Dosimeter
Latex Gloves
Cotton Glove Liners
Leather Work Gloves
Ear Plugs
Full Face Air Purifying Respirator

IDW SUPPLIES

Plastic Trash Bags

PERSONAL

Water Dispenser
Paper Cups
Drinking Water
Ice

EMERGENCY SAFETY SUPPLIES/EQUIPMENT

Radio
Emergency Eyewash

First Aid Kit

APPENDIX E

TYPE K

EXPANSIVE GROUT

Type K Expansive Cement from Southdown. A concrete solution to ordinary concrete problems.

You know the problems ordinary Portland Cement concrete can bring to a job. Shrinkage cracking. Curling. Permeability. They often occur soon after placement. That's because ordinary concrete shrinks significantly as it dries, causing internal tensile stress. When stress exceeds tensile strength, the problems begin. Early cracking and curling can lead to bigger problems in the years that follow as man and nature combine to attack shrinkage control joints with salt, extreme heat, freezing/thawing cycles, heavy floor or roadway traffic, airborne pollutants, marine spray and other deteriorants. Costly, time-consuming repairs or replacement become necessary.

How Type K works to dramatically reduce shrinkage and curling.

Type K Expansive Cement from Southdown, a true ASTM C 845 cement, minimizes drying shrinkage because it relieves internal tensile stresses that develop as it dries. It expands significantly during the seven-day moist cure period after placement, then, as it dries further, drops back to a zero expansion/contraction level.

The bottom line is that Type K's attributes add up to easier placement and longer life. And because the need for frequent jointing is decreased, larger placements can be made. Joint-free Type K placements of 12,000 to 15,000 sq. ft. are common and 20,000-plus sq. ft. placements have been made successfully.

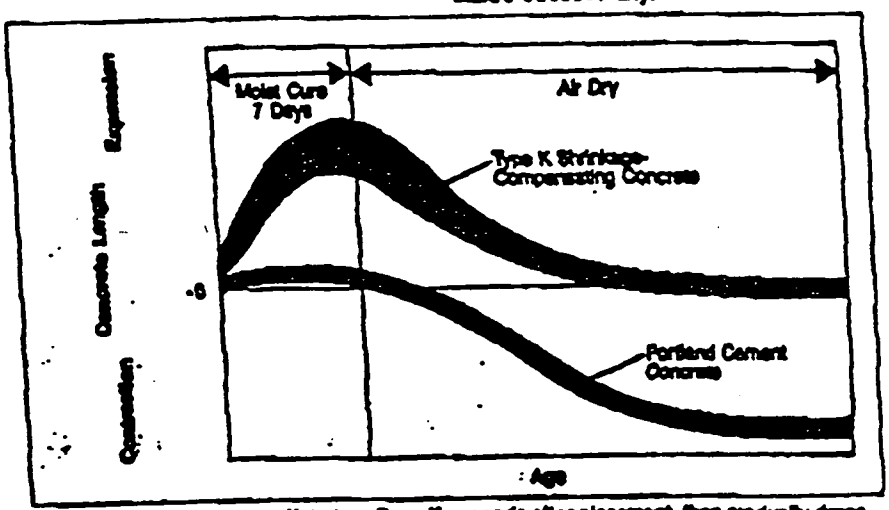

Drying curves tell the story. Note how Type K expands after placement, then gradually drops back to zero. Ordinary Portland Cement concrete shows little expansion, but significant contraction. Cracking and curling can result and a lifetime of potential problems are born.

000106

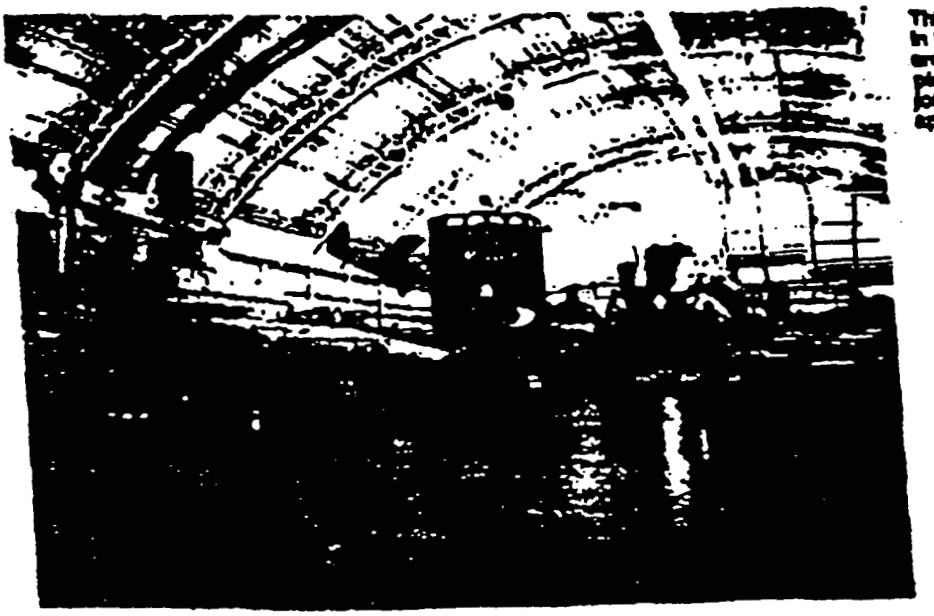

This Type K floor in the Air Force Museum in Dayton, Ohio is virtually jointless. In this area covering 160,000 sq. ft., there are nine placements and only 2600 lineal feet of jointing. Type K is Corps of Engineers approved.

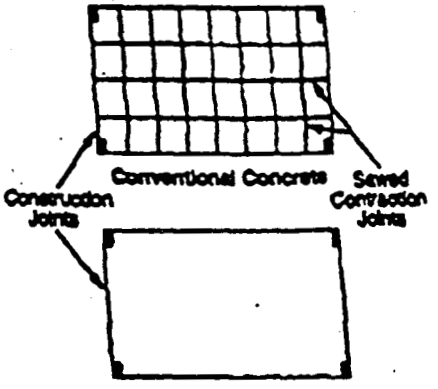

Instead of 32 jointed sections in a typical slab-on-grade project, Type K requires only one! Placements of 16,000 sq. ft. and more are possible without jointing.

Moist cure allows full expansion.

Type K works its magic during a seven-day moist cure period. During that time it reaches full expansion, then begins the contraction cycle. Ponding, wet coverings or moisture-proof covers are required during this important period to achieve maximum expansion.

What you need to know to specify Type K Expansive Cement.

Cement: Cement shall be Type K Expansive Cement, an expansive hydraulic cement conforming to ASTM C 845 as manufactured by Southdown, Inc., P.O. Box 191, Fairborn, Ohio 45324, 1-800-762-0040, FAX (513) 878-4289.

Aggregate: Any sound, nonreactive, well graded aggregate suitable for regular portland cement concrete as per ASTM C 33.

Admixtures: Generally, admixtures that are suitable for regular Portland Cement concrete may be used with Type K expansive cement. DO NOT USE CALCIUM CHLORIDE. Southdown representatives should be contacted to confirm compatibility of any admixture.

Cement Content: Recommended cement content is a minimum of 7.5 sacks (715 lbs.) per cubic yard for bridge decks, parking decks, treatment plants, containment vessels and other structures exposed to severe weather changes, de-icing salts and chemicals. For 4000 psi, non-air entrained concrete, recommended cement content is a minimum of 6 sacks (564 lbs.) per cubic yard. For 4000 psi, air entrained concrete, a minimum of 6.5 sacks (611 lbs.) per cubic yard is recommended.

Water/Cement Ratio: Water/cement ratio shall be a maximum of .58, surface, saturated, dry conditions.

Air Content: For air-entrained concrete, a 5% ± 1% air content is recommended.

Mixing Time: Limit mixing and placing time to 90 (ninety) minutes.

Slump: Slump shall be 5". ± 1" at time of placement.

Reinforcing Steel: A minimum of 0.13% reinforcement based on cross-sectional area is recommended by ACI 223 is required. Accepted engineering design practices for reinforced concrete recommended by ACI 318 should provide the required minimum reinforcement.

For slabs-on-grade, reinforcement should be positioned level in the upper half of the slab (preferably one-third the distance from the top), allowing for adequate cover.

Additional reinforcement requirements may be required as recommended by ACI 223.

Placement: Concrete should not be placed in ambient temperatures over 80 degrees Fahrenheit. Precautions should be taken to prevent concrete temperatures over 75 degrees Fahrenheit. Placement areas of 7,000-15,000 square feet are not uncommon with placements as great as 20,000 + square feet attainable, but should never be more than can be adequately placed and finished one working day with adequate manpower. Placements generally should not exceed a 3:1 length to width ratio, but that ratio may be exceeded under special job conditions.

Finishing: Normal finishing techniques should be followed to produce the required finish. Due to Type K cement concrete's lack of bleed water, finishing operations should be started as soon as the concrete is ready. Should plastic shrinkage cracking occur, fog sprays should be available.

Curing: Continuous water curing with burlap for a minimum of seven (7) days.

Testing: Normal testing procedures per ASTM C 31.

CAUTION: TYPE K EXPANSIVE CEMENT IS [illegible] TO BURN AND CAN CAUSE SKIN IRRITATION. Contains Portland Cement. Avoid eye contact or prolonged contact with skin. Wash thoroughly after handling. In case of eye contact, flush with plenty of water for at least 15 minutes. Consult a physician immediately. Keep out of reach of children.

Hazardous waste facilities/water treatment plants

In containment areas, you can't afford to build in cracks and leaks.

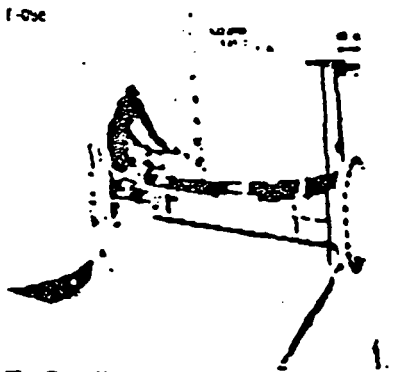

The Type K containment area surrounding these hazardous waste storage tanks has only one joint.

Type K Expansive Cement is fast becoming the standard concrete mix for the secure containment areas hazardous waste facilities, water and sewage treatment plants require. Jointing is cut to a minimum, eliminating costly water stops and built-in leaks.

Type K treats water and waste with great respect.

By totally eliminating jointing in some projects, Type K virtually eliminates the chance of leaking and seeping. In-place, Type K is much more impermeable than other concretes. Its ability to eliminate bleed water results in superior resistance to moisture and sulfate attack. And the higher slump means easier placement and greater pumping efficiency — without admixtures or changes in basic mix design.

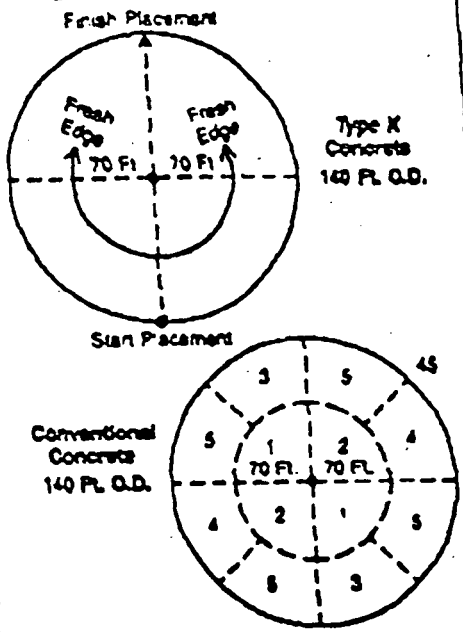

Compare the jointing in these two 140-ft. outside diameter containment vessels. The simple-to-execute Type K diagram shows why it is becoming the standard mix.

What if Type K had not been used?

Paul Greaves, Partner Rhodfert Consultants

"If the containment tank shown below were not made of Type K, it would certainly show shrinkage cracks. We would have designed it with more joints and the joints themselves would eventually become maintenance problems. But as far as our firm is concerned, Type K is standard for a job like this."

This Type K water treatment tank is built to last.

000108

Southdown makes Type K available throughout the U.S. Just contact the Southdown Company nearest you.

Southdown Companies

Southwestern Portland Cement Company

P.O. Box 191
508 E. Xenia Dr.
Fairborn, OH 45324
(800) 762-0040

P.O. Box 1547
U.S. Highway 80
Odessa, TX 79760
(915) 381-0190

100 N. Barranca Ave.
Suite 1050
West Covina, CA 91791
(818) 332-0075

3900 E. Mexico Ave.
Suite 601
Denver, CO 80210
(303) 758-1334

Kosmos Cement Company

15301 Dixie Hwy.
Kosmosdale, KY 40272
(502) 935-7331

Neville Island
Pittsburgh, PA 15225
(412) 771-5500

Florida Mining & Materials Co.
16301 Ponce De Leon Blvd.
U.S. Highway 98
Brooksville, FL 34614
(904) 796-7241

Dixie Cement Company
6212 Cement Plant Road
Knoxville, TN 37924
(615) 522-1171

Transit Mixed Concrete Company
4760 Valley Blvd.
Los Angeles, CA 90032
(213) 223-4101

Florida Mining & Materials Co.
(Concrete Products)
13228 N. Central Ave.
Tampa, FL 33612
(813) 933-6711

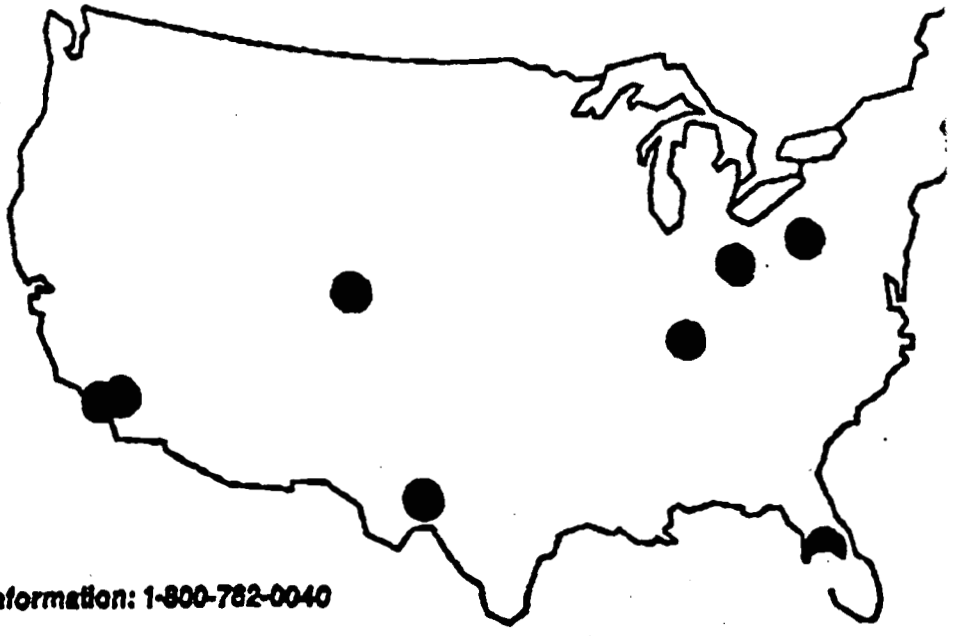

Southdown Type K Central Information: 1-800-762-0040

Southdown, Inc.
1200 Smith Street, Suite 2400
Houston, Texas 77002

000109

Surprise. The in-place cost for Type K is often no more than for standard concrete.

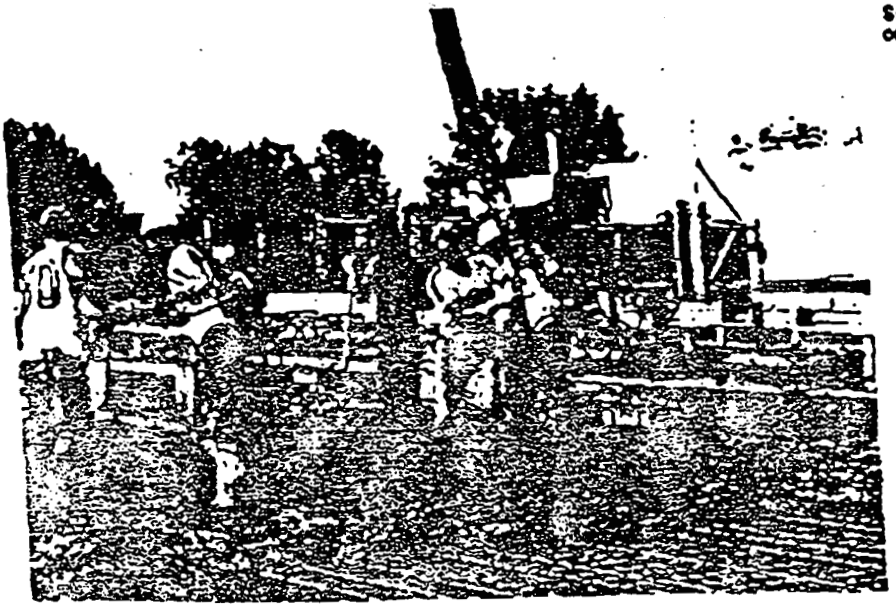

Higher slump, no bleed water, faster finishing.

Type K Expansive Cement in concrete is placed at a higher slump than ordinary concretes, yet substantially reduces drying shrinkage cracking. There is no bleed water, despite higher water demand, and the finishing process is shortened. Curing problems — and the costly maintenance problems that inevitably follow — are eliminated.

Internal reinforcing controls Type K's expansion properties.

Type K yields maximum benefits when its expansion takes place against restraints such as welded wire fabric, epoxy-coated rebars or other reinforcements prescribed by ACI.

Placing internal reinforcement at the upper half of the slab, preferably within two inches of the surface, is recommended for greatest effect.

Let's talk economics.

Type K can bring its permanence to many jobs at an in-place cost often no more than conventional concrete. No special equipment is required. Normal practices can be followed for mixing, placing and finishing. And larger placements are the rule with Type K, so labor costs can be less.

But that's only half the story. Type K's reduced permeability, resistance to environmental deteriorants, cracking and curling can result in longer life and lower maintenance costs.

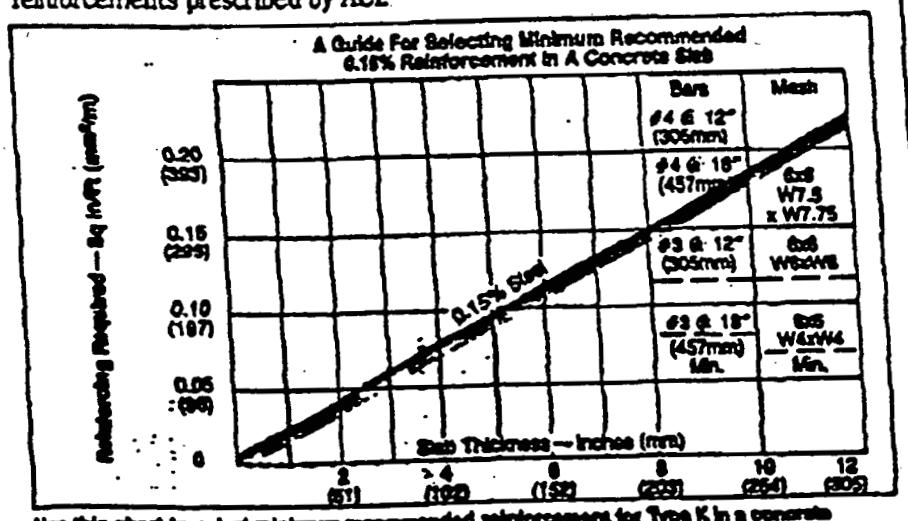

Use this chart to select minimum recommended reinforcement for Type K in a concrete slab. ACI-223 recommends a minimum reinforcement of 0.15% of the gross sectional area of the concrete.

Type K: Best in the long run.

Paul Grauer, Partner
Woolpert Consultants

"We have extensive experience with Type K in both bridge decks and water treatment plants. We believe there's a definite long-run benefit in decreased maintenance costs and longer life. Cracking allows detrimental elements to enter the concrete, which promotes early deterioration. By eliminating cracking, you keep water, chemicals and other influences out of the concrete and it lasts longer."

000110

Type K means fewer joints, fewer problems in Slabs-On-Grade.

Placing Type K in slab-on-grade projects such as warehouses, factories, food/beverage processing facilities, terminals, roads, aircraft hangers and runways means building a surface that will last a *long* time with less maintenance.

The secret to durability is locked in the product.

Type K is carefully produced by Southdown companies by intergrinding anhydrous calcium sulfoaluminate clinkers with Portland Cement clinkers in precise proportion to meet the ASTM C 845 specifications for expansive hydraulic cement, which produces controlled expansion during the curing process. As a result, zero expansion/contraction is achieved after cure, so shrinkage control joints can be reduced dramatically.

Type K means less maintenance cost.

Bill Lentz
Lentz Jones Nebraska
Consulting Structural Engineers

"I think what Type K brings to the party is a crack-free floor, which allows the owner to minimize his maintenance costs and keep the facility clean."

This million-plus sq. ft. Type K placement is being made in a new warehouse and distribution center for one of the nation's largest fashion retailers.

APPENDIX F

DENISON SAMPLING

Denison Samples

Denison samples shall generally be taken in soils having a standard penetration resistance higher than 20, blows/ft as directed by the Engineers.

Borings utilizing the Denison sampler shall be taken in order to obtain soil samples for laboratory testing. Samples shall be taken with a 4 in. O.D. Denison sampler capable of recovering 2 ft long samples. Brass liners shall be used. Each sample shall be taken carefully so that the soil will remain as nearly as possible in an undisturbed state. The extension of the inner barrel shoe beyond the outer barrel cutting teeth shall be the least amount which results in a full inner barrel of soil, and which will not cause undercutting or contamination of the sample by drilling fluid. Sampling shall proceed to obtain a continuous vertical specimen. After the hole has been thoroughly cleaned, the sampler shall be lowered carefully into the hole. The sampler shall be placed in contact with the bottom of the hole. The driller shall make sure that the truck jacks are carrying the load of the truck so that the truck will not be lifted on the springs and tires when load is applied to the sampler. The sample tube shall then be forced into the ground in a continuous drive and at a rate of penetration equal to the rate at which the outer barrel is able to cut. The speed of rotation shall be limited to that which will not rupture the soil sample. After the tube has been inserted to its full length into the soil, the driller shall wait approximately 5 min before beginning withdrawal. The tube shall then be withdrawn from the bottom of the hole in a smooth constant motion using hydraulic pressure to pull the tube at a rate of about 1 in. per sec. Turning of the rods with a wrench to break the friction of the sample shall not be allowed unless all other methods have been attempted first and shall not be resorted to unless approved by the Engineers. After the sample has pulled free from the bottom of the hole by a clearance of about 1 to 2 ft, removal shall stop momentarily to allow the drilling fluid to flow around the bottom of the tube (about 30 sec.). Removal shall then continue at a slow and uniform withdrawal rate not to exceed 0.5 ft per sec. Breaking the pipe joints during withdrawal shall be done carefully and in as large sections as can be practically handled so as not to disturb the sample.

APPENDIX G

SCHEDULE

APPENDIX G

SCHEDULE FOR FINAL GEOTECHNICAL INVESTIGATION

Activity	Date
Issue PO Plan, Rev. 0	February 22, 1995
Begin CPT Fieldwork	March 20, 1995
Issue 90% GSTP, Rev. A	March 21, 1995
Issue Final GSTP, Rev. 0	March 28, 1995
Finish CPT Fieldwork	March 31, 1995
Parsons Begin Fieldwork	April 4, 1995
Parsons Complete Fieldwork	May 2, 1995
Parsons Begins Laboratory Testing	April 10, 1995
Parsons Completes Laboratory Testing	July 10, 1995
Parsons Issues 90% Geotechnical Investigation Report and Recommendations, Rev. A	July 28, 1995
Parsons Issues Final Geotechnical Report and Recommendations, Rev. 0	August 11, 1995

APPENDIX H

METHODOLOGY FOR USING HOLLOW-STEM AUGER AS A TEMPORARY CASING IN ZONES OF SUBSURFACE URANIUM CONTAMINATION

Methodology for Using Hollow-Stem Auger as a Temporary Casing in Zones of Subsurface Uranium Contamination

Using an 8.25-inch ID/14-inch OD hollow-stem auger, drill through the zone of contamination to a depth four feet below the estimated depth of contamination as determined from Operable Unit 5's subsurface uranium contamination modeling. Raise the auger string approximately one foot to vacate the bottom of the boring. Pump a bentonite-based sealer (Hole-Seal) into the bottom of the boring to form an approximately 3-foot thick column of sealer. Allow the sealer to hydrate for at least one-hour. After the sealer has hydrated, the 8.25-inch ID/14-inch OD hollow-stem auger can be used as a temporary casing for the contaminated section of the boring. Prior to placing the bentonite-based sealer in the bottom of the boring, depth to bottom should be measured to confirm that the bore hole has not collapsed.

A 3.25-inch ID/6.625-inch OD hollow-stem auger string will be used to drill inside the 8.25-inch ID/14-inch OD hollow-stem auger and the through the column of sealer to the full depth of the boring (see Figure H-1 for a schematic showing the steps involved in using a hollow-stem auger as a temporary casing).

After all drilling and sampling efforts have been completed for the boring, the 3.25-inch ID/6.625-inch OD hollow-stem auger string will pulled from the boring and the resulting hole will be plugged with type K grout. Once the 6.625-inch diameter boring hole has been fully grouted and the 3.25-inch ID/6.625-inch OD hollow-stem auger string has been pulled from the boring, the 8.25-inch ID/14-inch OD hollow-stem auger string will be pulled and the resulting 14-inch diameter boring hole will be plugged using type K grout.

Note: This methodology is only to be used at locations were subsurface uranium contamination is greater than 3 feet in depth.

FIGURE H-1

HOLLOW-STEM AUGER AS TEMPORARY CASING SCHEMATIC

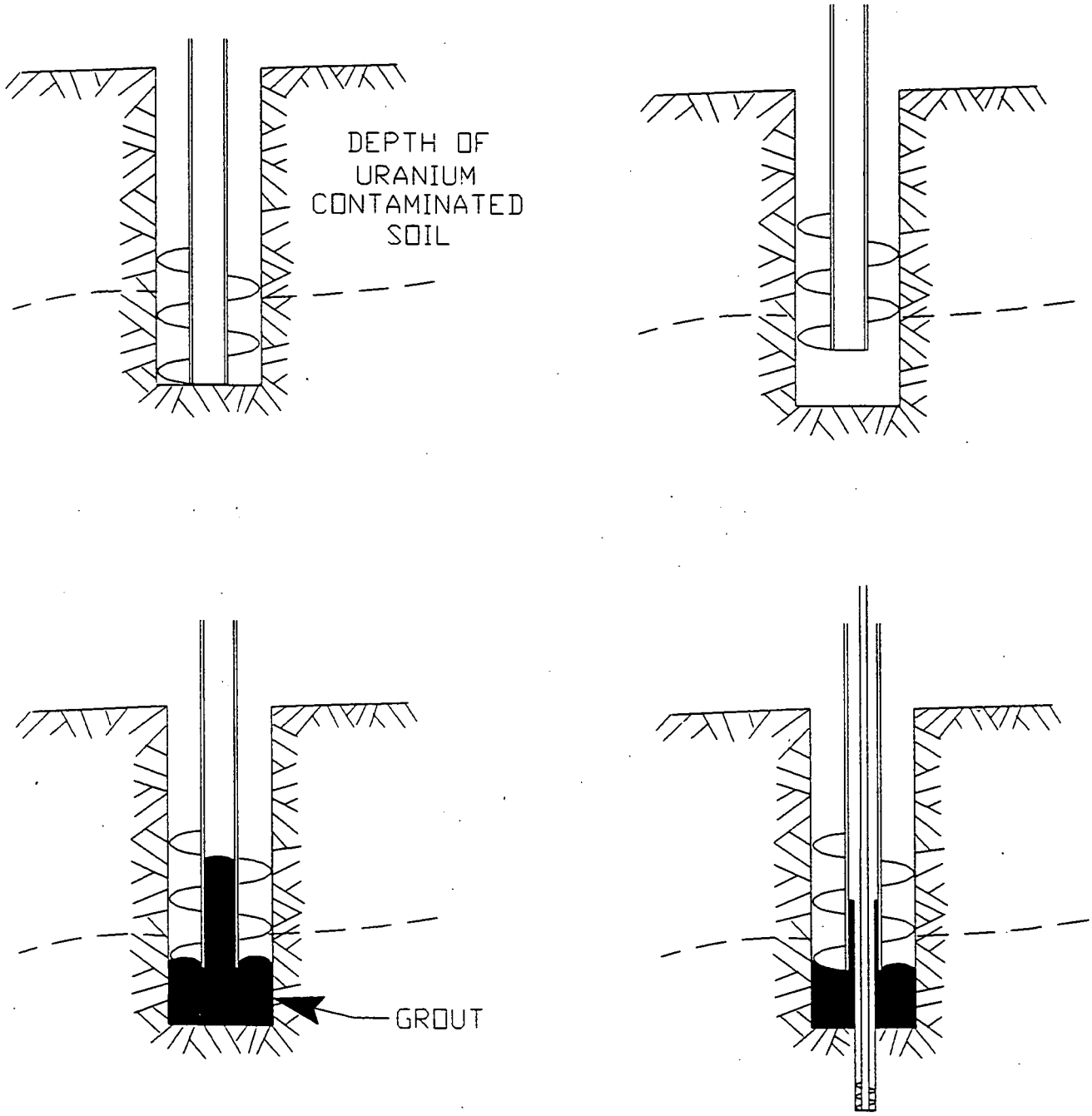

APPENDIX I

ASTM STANDARDS

SUMMARY OF ASTM PROCEDURES

TEST NO.	TITLE
C88	Standard Test Method for Soundness of Aggregates by Use of Sodium Sulfate or Magnesium Sulfate
C535	Standard Test Method for Resistance to Degradation of Large-Size Coarse Aggregate by Abrasion and Impact in the Los Angeles Machine
D75	Practice for Sampling Aggregates
D420	Standard Guide for Investigating and Sampling Soil and Rock
D421	Standard Practice for Dry Preparation of Soil Samples for Particle-Size Analysis Determination of Soil Constants
D422	Standard Method for Particle Size Analysis for Soils
D698	Laboratory Compaction Characteristics of Soil Using Standard Effort
D854	Standard Test Method for Specific Gravity of Soils
D1452	Standard Practice for Soil Investigation and Sampling by Auger Borings
D1586	Standard Test Method for Penetrometer Test and Split-Barrel Sampling of Soils
D1587	Standard Practice for Thin-Walled Tube Sampling of Soils
D2216	Standard Test Methods for Laboratory Determination of Water (Moisture) Content of Soil, Rock, and Soil-Aggregate Mixtures
D2217	Standard Practice for Wet Preparation of Soil Samples for Particle-Size Analysis and Determination of Soil Constants.
D2435	Test Method for One-Dimensional Consolidation Properties of Soil
D2487	Standard Classification of Soils for Engineering Purposes
D2488	Standard Practice for Description and Identification of Soils
D2573	Standard Test Method for Field Vane Shear Test in Cohesive Soil
D2844	Standard Test Method for Resistance R-Value and Expansion Pressure of Compacted Soils
D2850	Standard Test Method for Unconsolidated, Undrained Compressive Strength of Cohesive Soils in Triaxial Compression
D2974	Standard Test Method for Moisture, Ash, and Organic Matter of Peat and Other Organic Soils
D3080	Standard Test Method for Direct Shear Test of Soils Under Consolidated Drained Conditions
D3441	Standard Test Method for Deep, Quasi-Static, Cone and Friction Penetration Tests of Soil

D3550	Standard Practice for Ring-Lines Barrel Sampling of Soils
D4044	Standard Test Method for (Field Procedure) for Instantaneous Change in Head (Slug Test) for Determining Hydraulic Properties of Aquifiers
D4104	Standard Test Method (Analytical Procedure) for Determining Transmissivity of Nonleaky Confined Aquifers by Overdamped Well Response to Instantaneous Change in Head (Slug Test)
D4186	Standard Test Method for One-Dimensional Consolidation properties of Soils Using Controlled-Strain Loading
D4220	Standard Practices for Preserving and Transporting Soil Samples
D4318	Test Method for Liquid Limit, Plastic Limit, and Plasticity Index of Soils
D4546	Standard Test Methods for One-Dimensional Swell or Settlement Potential of Cohesive Soils
D4643	Standard Test Method for Determination of Water (Moisture) Content of Soil by the Microwave Oven Method
D4767	Test Method for Consolidated-Undrained Triaxial Compressive Test on Cohesive Soils
D5084	Standard Test Method for Measurement of Hydraulic Conductivity of Standard Porous Materials Using a Flexible Wall Parameter
D5092	Standard Test Method for Design and Installation of Ground Water Monitoring Wells in Aquifers

Standard Test Method for Soundness of Aggregates by Use of Sodium Sulfate or Magnesium Sulfate[1]

This standard is issued under the fixed designation C 88; the number immediately following the designation indicates the year of original adoption or, in the case of revision, the year of last revision. A number in parentheses indicates the year of last reapproval. A superscript epsilon (ε) indicates an editorial change since the last revision or reapproval.

This test method has been approved for use by agencies of the Department of Defense. Consult the DoD Index of Specifications and Standards for the specific year of issue which has been adopted by the Department of Defense.

1. Scope

1.1 This test method covers the testing of aggregates to estimate their soundness when subjected to weathering action in concrete or other applications. This is accomplished by repeated immersion in saturated solutions of sodium or magnesium sulfate followed by oven drying to partially or completely dehydrate the salt precipitated in permeable pore spaces. The internal expansive force, derived from the rehydration of the salt upon re-immersion, simulates the expansion of water on freezing. This test method furnishes information helpful in judging the soundness of aggregates when adequate information is not available from service records of the material exposed to actual weathering conditions.

1.2 The values given in parentheses are provided for information purposes only.

1.3 *This standard does not purport to address the safety problems associated with its use. It is the responsibility of the user of this standard to establish appropriate safety and health practices and determine the applicability of regulatory limitations prior to use.*

2. Referenced Documents

2.1 *ASTM Standards:*

C 33 Specification for Concrete Aggregates[2]

C 136 Test Method for Sieve Analysis of Fine and Coarse Aggregates[2]

C 670 Practice for Preparing Precision and Bias Statements for Test Methods for Construction Materials[2]

C 702 Practice for Reducing Field Samples of Aggregate to Testing Size[2]

D 75 Practice for Sampling Aggregates[3]

D 3665 Practice for Random Sampling of Construction Materials[3]

E 11 Specification for Wire Cloth Sieves for Testing Purposes[4]

E 100 Specification for ASTM Hydrometers[5]

E 323 Specification for Perforated-Plate Sieves for Testing Purposes[4]

3. Significance and Use

3.1 This test method provides a procedure for making a preliminary estimate of the soundness of aggregates for use in concrete and other purposes. The values obtained may be compared with specifications, for example Specification C 33, that are designed to indicate the suitability of aggregate proposed for use. Since the precision of this test method is poor (Section 12), it may not be suitable for outright rejection of aggregates without confirmation from other tests more closely related to the specific service intended.

3.2 Values for the permitted-loss percentage by this test method are usually different for fine and coarse aggregates, and attention is called to the fact that test results by use of the two salts differ considerably and care must be exercised in fixing proper limits in any specifications that include requirements for these tests. The test is usually more severe when magnesium sulfate is used; accordingly, limits for percent loss allowed when magnesium sulfate is used are normally higher than limits when sodium sulfate is used.

NOTE 1—Refer to the appropriate sections in Specification C 33 establishing conditions for acceptance of coarse and fine aggregates which fail to meet requirements based on this test.

4. Apparatus

4.1 *Sieves*—With square openings of the following sizes conforming to Specifications E 11 or E 323, for sieving the samples in accordance with Sections 6, 7, and 9:

150 µm (No. 100)	8.0 mm (5/16 in.)
	9.5 mm (3/8 in.)
300 µm (No. 50)	12.5 mm (1/2 in.)
	16.0 mm (5/8 in.)
600 µm (No. 30)	19.0 mm (3/4 in.)
	25.0 mm (1 in.)
1.18 mm (No. 16)	31.5 mm (1 1/4 in.)
2.36 mm (No. 8)	37.5 mm (1 1/2 in.)
	50 mm (2 in.)
4.00 mm (No. 5)	63 mm (2 1/2 in.)
	larger sizes by
4.75 mm (No. 4)	12.5-mm (1/2-in.)
	spread

4.2 *Containers*—Containers for immersing the samples of aggregate in the solution, in accordance with the procedure described in this test method, shall be perforated in such a manner as to permit free access of the solution to the sample and drainage of the solution from the sample without loss of aggregate.

NOTE 2—Baskets made of suitable wire mesh or sieves with suitable openings are satisfactory containers for the samples.

4.3 *Temperature Regulation*—Suitable means for regu-

[1] This test method is under the jurisdiction of ASTM Committee C-9 on Concrete and Concrete Aggregates and is the direct responsibility of Subcommittee C09.20 on Normal Weight Aggregates.

Current edition approved Oct. 26, 1990. Published December 1990. Originally published as C 88 - 31 T. Last previous edition C 88 - 83.

[2] *Annual Book of ASTM Standards*, Vol 04.02.

[3] *Annual Book of ATSM Standards*, Vol 04.03.

[4] *Annual Book of ASTM Standards*, Vol 14.02.

[5] *Annual Book of ASTM Standards*, Vol 14.03.

ting the temperature of the samples during immersion in the sodium sulfate or magnesium sulfate solution shall be provided.

4.4 *Balances*—For fine aggregate, a balance or scale accurate within 0.1 g over the range required for this test; for coarse aggregate, a balance or scale accurate within 0.1 % or 1 g, whichever is greater, over the range required for this test.

4.5 *Drying Oven*—The oven shall be capable of being heated continuously at 230 ± 9°F (110 ± 5°C) and the rate of evaporation, at this range of temperature, shall be at least 25 g/h for 4 h, during which period the doors of the oven shall be kept closed. This rate shall be determined by the loss of water from 1-L Griffin low-form beakers, each initially containing 500 g of water at a temperature of 70 ± 3°F (21 ± 2°C), placed at each corner and the center of each shelf of the oven. The evaporation requirement is to apply to all test locations when the oven is empty except for the beakers of water.

4.6 *Specific Gravity Measurement*—Hydrometers conforming to the requirements of Specification E 100, or a suitable combination of graduated glassware and balance, capable of measuring the solution specific gravity within ±0.001.

5. Special Solutions Required

5.1 Prepare the solution for immersion of test samples from either sodium or magnesium sulfate in accordance with 5.1.1 or 5.1.2 (Note 3). The volume of the solution shall be at least five times the solid volume of all samples immersed at any one time.

NOTE 3—Some aggregates containing carbonates of calcium or magnesium are attacked chemically by fresh sulfate solution, resulting in erroneously high measured losses. If this condition is encountered or is suspected, repeat the test using a filtered solution that has been used previously to test the same type of carbonate rock, provided that the solution meets the requirements of 5.1.1 and 5.1.2 for specific gravity.

5.1.1 *Sodium Sulfate Solution*—Prepare a saturated solution of sodium sulfate by dissolving a USP or equal grade of the salt in water at a temperature of 77 to 86°F (25 to 30°C). Add sufficient salt (Note 4), of either the anhydrous (Na_2SO_4) or the crystalline ($Na_2SO_4 \cdot 10H_2O$) form,[6] to ensure not only saturation but also the presence of excess crystals when the solution is ready for use in the tests. Thoroughly stir the mixture during the addition of the salt and stir the solution at frequent intervals until used. To reduce evaporation and prevent contamination, keep the solution covered at all times when access is not needed. Allow the solution to cool to 70 ± 2°F (21 ± 1°C). Again stir, and allow the solution to remain at the designated temperature for at least 48 h before use. Prior to each use, break up the salt cake, if any, in the container, stir the solution thoroughly, and determine the specific gravity of the solution. When used, the solution shall have a specific gravity not less than 1.151 nor more than 1.174. Discard a discolored solution, or filter it and check for specific gravity.

NOTE 4—For the solution, 215 g of anhydrous salt or 700 g of the decahydrate per litre of water are sufficient for saturation at 71.6°F (22°C). However, since these salts are not completely stable and since it is desirable that an excess of crystals be present, the use of not less than 350 g of the anhydrous salt or 750 g of the decahydrate salt per litre of water is recommended.

5.1.2 *Magnesium Sulfate Solution*—Prepare a saturated solution of magnesium sulfate by dissolving a USP or equal grade of the salt in water at a temperature of 77 to 86°F (25 to 30°C). Add sufficient salt (Note 5), of either the anhydrous ($MgSO_4$) or the crystalline ($MgSO_4 \cdot 7H_2O$) (Epsom salt) form, to ensure saturation and the presence of excess crystals when the solution is ready for use in the tests. Thoroughly stir the mixture during the addition of the salt and stir the solution at frequent intervals until used. To reduce evaporation and prevent contamination, keep the solution covered at all times when access is not needed. Allow the solution to cool to 70 ± 2°F (21 ± 1°C). Again stir, and allow the solution to remain at the designated temperature for at least 48 h before use. Prior to each use, break up the salt cake, if any, in the container, stir the solution thoroughly, and determine the specific gravity of the solution. When used, the solution shall have a specific gravity not less than 1.295 nor more than 1.308. Discard a discolored solution, or filter it and check for specific gravity.

NOTE 5—For the solution, 350 g of anhydrous salt or 1230 g of the heptahydrate per litre of water are sufficient for saturation at 73.4°F (23°C). However, since these salts are not completely stable, with the hydrous salt being the more stable of the two, and since it is desirable that an excess of crystals be present, it is recommended that the heptahydrate salt be used and in an amount of not less than 1400 g/litre of water.

6. Samples

6.1 The sample shall be obtained in general accordance with Practice D 75 and reduced to test portion size in accordance with Practice C 702.

6.2 *Fine Aggregate*—Fine aggregate for the test shall be passed through a 9.5-mm (3/8-in.) sieve. The sample shall be of such size that it will yield not less than 100 g of each of the following sizes, which shall be available in amounts of 5 % or more, expressed in terms of the following sieves:

Passing Sieve	Retained on Sieve
600 µg (No. 30)	300 µm (No. 50)
1.18 mm (No. 16)	600 µm (No. 30)
2.36 mm (No. 8)	1.18 mm (No. 16)
4.75 mm (No. 4)	2.36 mm (No. 8)
9.5 mm (3/8 in.)	4.75 mm (No. 4)

6.3 *Coarse Aggregate*—Coarse aggregate for the test shall consist of material from which the sizes finer than the No. 4 sieve have been removed. The sample shall be of such a size that it will yield the following amounts of the indicated sizes that are available in amounts of 5 % or more:

Size (Square-Opening Sieves)	Weight, g
9.5 mm (3/8 in.) to 4.75 mm (No. 4)	300 ± 5
19.0 mm (3/4 in.) to 9.5 mm (3/8 in.)	1000 ± 10
Consisting of:	
12.5-mm (1/2-in.) to 9.5-mm (3/8-in.) material	330 ± 5
19.0-mm (3/4-in.) to 12.5-mm (1/2-in.) material	670 ± 10
37.5-mm (1 1/2-in.) to 19.0-mm (3/4 in.)	1500 ± 50
Consisting of:	
25.0-mm (1-in.) to 19.0-mm (3/4-in.) material	500 ± 30
37.5-mm (1 1/2-in.) to 25.0-mm (1-in.) material	1000 ± 50
63-mm (2 1/2 in.) to 37.5-mm (1 1/2 in.)	5000 ± 300
Consisting of:	
50-mm (2 in.) to 37.5-mm (1 1/2-in.) material	2000 ± 200
63-mm (2 1/2-in.) to 50-mm (2-in.) material	3000 ± 300
Larger sizes by 25-mm (1-in.) spread in sieve size, each fraction	7000 ± 1000

[6] Experience with the test method indicates that a grade of sodium sulfate designated by the trade as dried powder, which may be considered as approximately anhydrous, is the most practical for use. That grade is more economically available than the anhydrous form. The decahydrate sodium sulfate presents difficulties in compounding the required solution on account of its cooling effect on the solution.

6.4 When an aggregate to be tested contains appreciable amounts of both fine and coarse material, having a grading with more than 10 weight % coarser than the 9.5-mm (3/8-in.) sieve and, also, more than 10 weight % finer than the 4.75-mm (No. 4) sieve, test separate samples of the minus No. 4 fraction and the plus No. 4 fraction in accordance with the procedures for fine aggregate and coarse aggregate, respectively. Report the results separately for the fine-aggregate fraction and the coarse-aggregate fraction, giving the percentages of the coarse- and fine-size fractions in the initial grading.

7. Preparation of Test Sample

7.1 *Fine Aggregate*—Thoroughly wash the sample of fine aggregate on a 300-µm (No. 50) sieve, dry to constant weight at 230 ± 9°F (110 ± 5°C), and separate into the different sizes by sieving, as follows: Make a rough separation of the graded sample by means of a nest of the standard sieves specified in 6.2. From the fractions obtained in this manner, select samples of sufficient size to yield 100 g after sieving to refusal. (In general, a 110-g sample will be sufficient.) Do not use fine aggregate sticking in the meshes of the sieves in preparing the samples. Weigh samples consisting of 100 ± 0.1 g out of each of the separated fractions after final sieving and place in separate containers for the test.

7.2 *Coarse Aggregate*—Thoroughly wash and dry the sample of coarse aggregate to constant weight at 230 ± 9°F (110 ± 5°C) and separate it into the different sizes shown in 6.3 by sieving to refusal. Weigh out quantities of the different sizes within the tolerances of 6.3 and, where the test portion consists of two sizes, combine them to the designated total weight. Record the weights of the test samples and their fractional components. In the case of sizes larger than 19.0 mm (3/4 in.), record the number of particles in the test samples.

8. Procedure

8.1 *Storage of Samples in Solution*—Immerse the samples in the prepared solution of sodium sulfate or magnesium sulfate for not less than 16 h nor more than 18 h in such a manner that the solution covers them to a depth of at least 1/2 in. (Note 6). Cover the containers to reduce evaporation and prevent the accidental addition of extraneous substances. Maintain the samples immersed in the solution at a temperature of 70 ± 2°F (21 ± 1°C) for the immersion period.

NOTE 6—Suitably weighted wire grids placed over the sample in the containers will permit this coverage to be achieved with very lightweight aggregates.

8.2 *Drying Samples After Immersion*—After the immersion period, remove the aggregate sample from the solution, permit it to drain for 15 ± 5 min, and place in the drying oven. The temperature of the oven shall have been brought previously to 230 ± 9°F (110 ± 5°C). Dry the samples at the specified temperature until constant weight has been achieved. Establish the time required to attain constant weight as follows: with the oven containing the maximum sample load expected, check the weight losses of test samples by removing and weighing them, without cooling, at intervals of 2 to 4 h; make enough checks to establish required drying time for the least favorable oven location (see 4.5) and sample condition (Note 7). Constant weight will be considered to have been achieved when weight loss is less than 0.1 % of sample weight in 4 h of drying. After constant weight has been achieved, allow the samples to cool to room temperature, when they shall again be immersed in the prepared solution as described in 8.1.

NOTE 7—Drying time required to reach constant weight may vary considerably for several reasons. Efficiency of drying will be reduced as cycles accumulate because of salt adhering to particles and, in some cases, because of increase in surface area due to breakdown. The different size fractions of aggregate will have differing drying rates. The smaller sizes will tend to dry more slowly because of their larger surface area and restricted interparticle voids, but this tendency may be altered by the effects of container size and shape.

8.3 *Number of Cycles*—Repeat the process of alternate immersion and drying until the required number of cycles is obtained.

9. Quantitative Examination

9.1 Make the quantitative examination as follows:

9.1.1 After the completion of the final cycle and after the sample has cooled, wash the sample free from the sodium sulfate or magnesium sulfate as determined by the reaction of the wash water with barium chloride ($BaCl_2$). Wash by circulating water at 110 ± 10°F (43 ± 6°C) through the samples in their containers. This may be done by placing them in a tank into which the hot water can be introduced near the bottom and allowed to overflow. In the washing operation, the samples shall not be subjected to impact or abrasion that may tend to break up particles.

9.1.2 After the sodium sulfate or magnesium sulfate has been removed, dry each fraction of the sample to constant weight at 230 ± 9°F (110 ± 5°C). Sieve the fine aggregate over the same sieve on which it was retained before the test, and sieve the coarse aggregate over the sieve shown below for the appropriate size of particle. For fine aggregate, the method and duration of sieving shall be the same as were used in preparing the test samples. For coarse aggregate, sieving shall be by hand, with agitation sufficient only to assure that all undersize material passes the designated sieve. No extra manipulation shall be employed to break up particles or cause them to pass the sieves. Weigh the material retained on each sieve and record each amount. The difference between each of these amounts and the initial weight of the fraction of the sample tested is the loss in the test and is to be expressed as a percentage of the initial weight for use in Table 1.

Size of Aggregate	Sieve Used to Determine Loss
63 mm (2½ in.) to 37.5 mm (1½ in.)	31.5 mm (1¼ in.)
37.5 mm (1½ in.) to 19.0 mm (¾ in.)	16.0 mm (⅝ in.)
19 mm (¾ in.) to 9.5 mm (⅜ in.)	8.0 mm (5/16 in.)
9.5 mm (⅜ in.) to 4.75 mm (No. 4)	4.0 mm (No. 5)

10. Qualitative Examination

10.1 Make a qualitative examination of test samples coarser than 19.0 mm (3/4 in.) as follows (Note 8):

10.1.1 Separate the particles of each test sample into groups according to the action produced by the test (Note 8).

10.1.2 Record the number of particles showing each type of distress.

NOTE 8—Many types of action may be expected. In general, they may be classified as disintegration, splitting, crumbling, cracking,

TABLE 1 Suggested Form for Recording Test Data (with Illustrative Test Values)

Sieve Size			Grading of Original Sample, %	Weight of Test Fractions Before Test, g	Percentage Passing Designated Sieve After Test	Weighted Percentage Loss
Soundness Test of Fine Aggregate						
Minus 150 µm (No. 100)			6	...	...	...
300 µm (No. 50) to No. 100			11	...	...	...
600 µm (No. 30) to No. 50			26	100	4.2	1.1
1.18 mm (No. 16) to No. 30			25	100	4.8	1.2
2.36 mm (No. 8) to No. 16			17	100	8.0	1.4
4.75 mm (No. 4) to No. 8			11	100	11.2	1.2
9.5 mm (3/8 in.) to No. 4			4	...	11.2[A]	0.4
Totals			100.0	...	...	5
Soundness Test of Coarse Aggregate						
63 mm (2½ in.) to 50 mm (2 in.)	2825 g	2½ to 1½ in.	20	4783	4.8	1.0
50 mm (2 in.) to 37.5 mm (1½ in.)	1958 g					
37.5 mm (1½ in.) to 25.0 mm (1 in.)	1012 g	1½ to ¾ in.	45	1525	8.0	3.6
25 mm (1 in.) to 19.0 mm (¾ in.)	513 g					
19.0 mm (¾ in.) to 12.5 mm (½ in.)	675 g	¾ to 3/8 in.	23	1008	9.6	2.2
12.5 mm (½ in.) to 9.5 mm (3/8 in.)	333 g					
9.5 mm (3/8 in.) to 4.75 mm (No. 4)	298 g		12	298	11.2	1.3
Totals			100	...	...	8

[A] The percentage loss (11.2 %) of the next smaller size is used as the percentage loss for this size, since this size contains less than 5 % of the original sample as received. See 11.1.3.4.

flaking, etc. While only particles larger than ¾ in. in size are required to be examined qualitatively, it is recommended that examination of the smaller sizes be made in order to determine whether there is any evidence of excessive splitting.

11. Report

11.1 Report the following data (Note 9):

11.1.1 Weight of each fraction of each sample before test,

11.1.2 Material from each fraction of the sample finer than the sieve designated in 9.1.2 for sieving after test, expressed as a percentage of the original weight of the fraction,

11.1.3 Weighted average calculated in accordance with Test Method C 136 from the percentage of loss for each fraction, based on the grading of the sample as received for examination or, preferably, on the average grading of the material from that portion of the supply of which the sample is representative except that:

11.1.3.1 For fine aggregates (with less than 10 % coarser than the 9.5-mm (3/8-in.) sieve), assume sizes finer than the 300-µm (No. 50) sieve to have 0 % loss and sizes coarser than the 9.5-mm (3/8-in.) sieve to have the same loss as the next smaller size for which test data are available.

11.1.3.2 For coarse aggregate (with less than 10 % finer than the 4.75-mm (No. 4) sieve), assume sizes finer than the 4.75-mm (No. 4) sieve to have the same loss as the next larger size for which test data are available.

11.1.3.3 For an aggregate containing appreciable amounts of both fine and coarse material tested as two separate samples as required in 6.4, compute the weighted average losses separately for the minus No. 4 and plus No. 4 fractions based on recomputed gradings considering the fine fraction as 100 % and the coarse fraction as 100 %. Report the results separately giving the percentage of the minus No. 4 and plus No. 4 material in the initial grading.

11.1.3.4 For the purpose of calculating the weighted average, consider any sizes in 6.2 or 6.3 that contain less than 5 % of the sample to have the same loss as the average of the next smaller and the next larger size, or if one of these sizes is absent, to have the same loss as the next larger or next smaller size, whichever is present.

11.1.4 Report the weighted percentage loss to the nearest whole number,

11.1.5 In the case of particles coarser than 19.0 mm (¾ in.) before test: (*1*) The number of particles in each fraction before test, and (*2*) the number of particles affected, classified as to number disintegrating, splitting, crumbling, cracking, flaking, etc., as shown in Table 2, and

11.1.6 Kind of solution (sodium or magnesium sulfate) and whether the solution was freshly prepared or previously used.

NOTE 9—Table 1, shown with test values inserted for purpose of illustration, is a suggested form for recording test data. The test values shown might be appropriate for either salt, depending on the quality of the aggregate.

12. Precision

12.1 *Precision*—For coarse aggregate with weighted average sulfate soundness losses in the ranges of 6 to 16 % for sodium and 9 to 20 % for magnesium, the precision indexes are as follows:

	Coefficient of Variation (1S %), %[A]	Difference Between Two Tests (D2S %), % of Average[A]
Multilaboratory:		
Sodium sulfate	41	116
Magnesium sulfate	25	71
Single-Operator:		
Sodium sulfate	24	68
Magnesium sulfate	11	31

[A] These numbers represent, respectively, the (1S %) and (D2S %) limits as described in Practice C 670.

12.2 *Bias*—Since there is no accepted reference material suitable for determining the bias for this procedure, no statement on bias is being made.

TABLE 2 Suggested Form for Qualitative Examination (with Illustrative Test Values)

Qualitative Examination of Coarse Sizes									
Sieve Size	Particles Exhibiting Distress								Total No. of Particles Before Test
	Splitting		Crumbling		Cracking		Flaking		
	No.	%	No.	%	No.	%	No.	%	
63 mm (2½ in.) to 37.5 mm (1½ in.)	2	7	...	...	2	7	...	...	29
37.5 mm (1½ in.) to 19.0 mm (¾ in.)	5	10	1	2	4	8	...	...	50

The American Society for Testing and Materials takes no position respecting the validity of any patent rights asserted in connection with any item mentioned in this standard. Users of this standard are expressly advised that determination of the validity of any such patent rights, and the risk of infringement of such rights, are entirely their own responsibility.

This standard is subject to revision at any time by the responsible technical committee and must be reviewed every five years and if not revised, either reapproved or withdrawn. Your comments are invited either for revision of this standard or for additional standards and should be addressed to ASTM Headquarters. Your comments will receive careful consideration at a meeting of the responsible technical committee, which you may attend. If you feel that your comments have not received a fair hearing you should make your views known to the ASTM Committee on Standards, 1916 Race St., Philadelphia, PA 19103.

Standard Test Method for Resistance to Degradation of Large-Size Coarse Aggregate by Abrasion and Impact in the Los Angeles Machine[1]

This standard is issued under the fixed designation C 535; the number immediately following the designation indicates the year of original adoption or, in the case of revision, the year of last revision. A number in parentheses indicates the year of last reapproval. A superscript epsilon (ε) indicates an editorial change since the last revision or reapproval.

This method has been approved for use by agencies of the Department of Defense. Consult the DoD Index of Specifications and Standards for the specific year of issue which has been adopted by the Department of Defense.

1. Scope

1.1 This test method covers testing sizes of coarse aggregate larger than ¾ in. (19 mm) for resistance to degradation using the Los Angeles testing machine.

NOTE 1—A procedure for testing coarse aggregate smaller than 1½ in. (37.5 mm) is covered in Method C 131.

1.2 *This standard may involve hazardous materials, operations, and equipment. This standard does not purport to address all of the safety problems associated with its use. It is the responsibility of the user of this standard to establish appropriate safety and health practices and determine the applicability of regulatory limitations prior to use.*

2. Referenced Documents

2.1 *ASTM Standards:*

C 131 Test Method for Resistance to Degradation of Small-Size Coarse Aggregate by Abrasion and Impact in the Los Angeles Machine[2]

C 136 Test Method for Sieve Analysis of Fine and Coarse Aggregates[2]

C 670 Practice for Preparing Precision and Bias Statements for Test Methods for Construction Materials[2]

C 702 Practice for Reducing Field Samples of Aggregate to Testing Size[3]

D 75 Practice for Sampling Aggregates[2]

E 11 Specification for Wire-Cloth Sieves for Testing Purposes[4]

3. Summary of Method

3.1 The Los Angeles test is a measure of degradation of mineral aggregates of standard gradings resulting from a combination of actions including abrasion or attrition, impact, and grinding in a rotating steel drum containing a specified number of steel spheres, the number depending upon the grading of the test sample. As the drum rotates, a shelf plate picks up the sample and the steel spheres, carrying them around until they are dropped to the opposite side of the drum, creating an impact-crushing effect. The contents then roll within the drum with an abrading and grinding action until the shelf plate impacts and the cycle is repeated. After the prescribed number of revolutions, the contents are removed from the drum and the aggregate portion is sieved to measure the degradation as percent loss.

4. Significance and Use

4.1 The Los Angeles test has been widely used as an indicator of the relative quality or competence of various sources of aggregate having similar mineral compositions. The results do not automatically permit valid comparisons to be made between sources distinctly different in origin, composition, or structure. Specification limits based on this test should be assigned with extreme care in consideration of available aggregate types and their performance history in specific end uses.

5. Apparatus

5.1 *Los Angeles Machine* conforming to the requirements of Test Method C 131.

5.1.1 The machine shall be so driven and so counterbalanced as to maintain a substantially uniform peripheral speed (Note 2). If an angle is used as the shelf, the direction of rotation shall be such that the charge is caught on the outside surface of the angle.

NOTE 2—Backlash or slip in the driving mechanism is very likely to furnish test results that are not duplicated by other Los Angeles machines producing constant peripheral speed.

5.2 *Sieves*, conforming to Specification E 11.

5.3 *Balance*—A balance or scale accurate within 0.1 % of test load over the range required for this test

5.4 *Charge*—The charge shall consist of 12 steel spheres averaging approximately 1 27/32 in. (46.8 mm) in diameter, each weighing between 390 and 445 g, and having a total weight of 5000 ± 25 g.

NOTE 3—Steel ball bearings 1 13/16 in. (46.038 mm) and 1 7/8 in. (47.625 mm) in diameter, weighing approximately 400 and 440 g each, respectively, are readily available. Steel spheres 1 27/32 in. (46.8 mm) in diameter weighing approximately 420 g may also be obtainable. The charge may consist of a mixture of these sizes.

6. Sampling

6.1 The field sample shall be obtained in accordance with Practice D 75 and reduced to test portion in accordance with Practice C 702.

[1] This test method is under the jurisdiction of ASTM Committee C-9 on Concrete and Concrete Aggregates and is the direct responsibility of Subcommittee C09.20 on Normal Weight Aggregates.

Current edition approved April 28, 1989. Published June 1989. Originally published as C 535 - 64 T. Last previous edition C 535 - 81 (1987).

[2] *Annual Book of ASTM Standards*, Vols 04.02 and 04.03.

[3] *Annual Book of ASTM Standards*, Vol 04.02.

[4] *Annual Book of ASTM Standards*, Vol 14.02.

000127

TABLE 1 Gradings of Test Samples

Sieve Size, mm (in.) (Square Openings)		Weights of Indicated Sizes, g		
		Grading[A]		
Passing	Retained on	1	2	3
75 (3)	63 (2½)	2 500 ± 50	...	...
63 (2½)	50 (2)	2 500 ± 50	...	...
50 (2)	37.5 (1½)	5 000 ± 50	5 000 ± 50	...
37.5 (1½)	25.0 (1)	...	5 000 ± 25	5 000 ± 25
25.0 (1)	19.0 (¾)	...	...	5 000 ± 25
	Total	10 000 ± 100	10 000 ± 75	10 000 ± 50

[A] Gradings 1, 2, and 3 correspond, respectively, in their size distribution to Gradings, E, F, and G in the superseded ASTM Method C 131 – 55, Test for Abrasion of Coarse Aggregate by Use of the Los Angeles Machine, which appears in the 1961 *Book of ASTM Standards*, Part 4.

7. Test Sample

7.1 The test sample shall be washed and oven-dried at 221 to 230°F (105 to 110°C) to substantially constant weight (Note 4), separated into individual size fractions, and recombined to the grading of Table 1 most nearly corresponding to the range of sizes in the aggregate as furnished for the work. The weight of the sample prior to test shall be recorded to the nearest 1 g.

NOTE 4—If the aggregate is essentially free of adherent coatings and dust, the requirement for washing before and after test may be waived. Elimination of washing after test will seldom reduce the measured loss by more than about 0.2 % of the original sample weight.

8. Procedure

8.1 Place the test sample and charge in the Los Angeles testing machine and rotate the machine at 30 to 33 r/min for 1000 revolutions. After the prescribed number of revolutions, discharge the material from the machine and make a preliminary separation of the sample on a sieve coarser than the 1.70-mm (No. 12). The finer portion shall then be sieved on a 1.70-mm sieve in a manner conforming to Method C 136. The material coarser than the 1.70-mm sieve shall be washed (Note 4), oven-dried at 221 to 230°F (105 to 110°C) to substantially constant weight, and weighed to the nearest 5 g (Note 5).

NOTE 5—Valuable information concerning the uniformity of the sample under test may be obtained by determining the loss after 200 revolutions. This loss should be determined without washing the material coarser than the 1.70-mm (No. 12) sieve. The ratio of the loss after 200 revolutions to the loss after 1000 revolutions should not greatly exceed 0.20 for material of uniform hardness. When this determination is made, take care to avoid losing any part of the sample; return the entire sample, including the dust of fracture, to the testing machine for the final 800 revolutions required to complete the test.

9. Calculation

9.1 Express the loss (difference between the original weight and the final weight of the test sample) as a percentage of the original weight of the test sample. Report this value as the percent loss.

NOTE 6—The percent loss determined by this method has no known consistent relationship to the percent loss for the same material when tested by Test Method C 131.

10. Precision

10.1 *Precision*—The precision of this test method has not been determined. It is expected to be comparable to that of Test Method C 131.

10.2 *Bias*—No statement is being made about the bias of this Test Method since there is no accepted reference material suitable for determining the bias of this procedure.

000128

APPENDIX

(Nonmandatory Information)

X1. MAINTENANCE OF SHELF

X1.1 The shelf of the Los Angeles machine is subject to severe surface wear and impact. With use, the working surface of the shelf is peened by the balls and tends to develop a ridge of metal parallel to and about 1¼ in. (32 mm) from the junction of the shelf and the inner surface of the cylinder. If the shelf is made from a section of rolled angle, not only may this ridge develop but the shelf itself may be bent longitudinally or transversely from its proper position.

X1.2 The shelf should be inspected periodically to determine that it is not bent either lengthwise or from its normal radial position with respect to the cylinder. If either condition is found, the shelf should be repaired or replaced before further tests are made. The influence on the test result of the ridge developed by peening of the working face of the shelf is not known. However, for uniform test conditions, it is recommended that the ridge be ground off if its height exceeds 0.1 in. (2 mm).

The American Society for Testing and Materials takes no position respecting the validity of any patent rights asserted in connection with any item mentioned in this standard. Users of this standard are expressly advised that determination of the validity of any such patent rights, and the risk of infringement of such rights, are entirely their own responsibility.

This standard is subject to revision at any time by the responsible technical committee and must be reviewed every five years and if not revised, either reapproved or withdrawn. Your comments are invited either for revision of this standard or for additional standards and should be addressed to ASTM Headquarters. Your comments will receive careful consideration at a meeting of the responsible technical committee, which you may attend. If you feel that your comments have not received a fair hearing you should make your views known to the ASTM Committee on Standards, 1916 Race St., Philadelphia, PA 19103.

000129

Designation: D 75 – 87 (Reapproved 1992)$^{\epsilon 1}$

American Association State Highway and Transportation Officials Standard
AASHTO No.: T2

Standard Practice for Sampling Aggregates[1]

This standard is issued under the fixed designation D 75; the number immediately following the designation indicates the year of original adoption or, in the case of revision, the year of last revision. A number in parentheses indicates the year of last reapproval. A superscript epsilon (ε) indicates an editorial change since the last revision or reapproval.

This practice has been approved for use by agencies of the Department of Defense. Consult the DoD Index of Specifications and Standards for the specific year of issue which has been adopted by the Department of Defense.

$^{\epsilon 1}$ NOTE—Editorial changes were made throughout in September 1992.

1. Scope*

1.1 This practice covers sampling of coarse and fine aggregates for the following purposes:

1.1.1 Preliminary investigation of the potential source of supply,

1.1.2 Control of the product at the source of supply,

1.1.3 Control of the operations at the site of use, and

1.1.4 Acceptance or rejection of the materials.

NOTE 1—Sampling plans and acceptance and control tests vary with the type of construction in which the material is used. Attention is directed to Practices E 105 and D 3665.

1.2 The values stated in inch-pound units are to be regarded as the standard.

1.3 *This standard does not purport to address all of the safety problems, if any, associated with its use. It is the responsibility of the user of this standard to establish appropriate safety and health practices and determine the applicability of regulatory limitations prior to use.*

2. Referenced Documents

2.1 *ASTM Standards:*

C 702 Practice for Reducing Field Samples of Aggregate to Testing Size[2]

D 2234 Test Method for Collection of a Gross Sample of Coal[3]

D 3665 Practice for Random Sampling of Construction Materials[4]

E 105 Practice for Probability Sampling of Materials[5]

E 122 Practice for Choice of Sample Size to Estimate the Average Quality of a Lot or Process[5]

E 141 Practice for Acceptance of Evidence Based on the Results of Probability Sampling[5]

3. Significance and Use

3.1 Sampling is equally as important as the testing, and the sampler shall use every precaution to obtain samples that will show the nature and condition of the materials which they represent.

3.2 Samples for preliminary investigation tests are obtained by the party responsible for development of the potential source (Note 2). Samples of materials for control of the production at the source or control of the work at the site of use are obtained by the manufacturer, contractor, or other parties responsible for accomplishing the work. Samples for tests to be used in acceptance or rejection decisions by the purchaser are obtained by the purchaser or his authorized representative.

NOTE 2—The preliminary investigation and sampling of potential aggregate sources and types occupies a very important place in determining the availability and suitability of the largest single constituent entering into the construction. It influences the type of construction from the standpoint of economics and governs the necessary material control to ensure durability of the resulting structure, from the aggregate standpoint. This investigation should be done only by a responsible trained and experienced person. For more comprehensive guidance, see the Appendix.

4. Securing Samples

4.1 *General*—Where practicable, samples to be tested for quality shall be obtained from the finished product. Samples from the finished product to be tested for abrasion loss shall not be subject to further crushing or manual reduction in particle size in preparation for the abrasion test unless the size of the finished product is such that it requires further reduction for testing purposes.

4.2 *Inspection*—The material shall be inspected to determine discernible variations. The seller shall provide suitable equipment needed for proper inspection and sampling.

4.3 *Procedure:*

4.3.1 *Sampling from a Flowing Aggregate Stream (Bins or Belt Discharge)*—Select units to be sampled by a random method, such as Practice D 3665, from the production. Obtain at least three approximately equal increments, selected at random from the unit being sampled, and combine to form a field sample whose mass equals or exceeds the minimum recommended in 4.4.2. Take each increment from the entire cross section of the material as it is being

[1] This practice is under the jurisdiction of ASTM Committee D-4 on Road and Paving Materials and is the direct responsibility of Subcommittee D04.30 on Methods of Sampling.

Current edition approved Oct. 30, 1987. Published December 1987. Originally published as D 75 – 20 T. Last previous edition D 75 – 82.

[2] *Annual Book of ASTM Standards*, Vol 04.02.

[3] *Annual Book of ASTM Standards*, Vol 05.05.

[4] *Annual Book of ASTM Standards*, Vol 04.03.

[5] *Annual Book of ASTM Standards*, Vol 14.02.

* A Summary of Changes section appears at the end of this practice.

discharged. It is usually necessary to have a special device constructed for use at each particular plant. This device consists of a pan of sufficient size to intercept the entire cross section of the discharge stream and hold the required quantity of material without overflowing. A set of rails may be necessary to support the pan as it is passed under the discharge stream. Insofar as is possible, keep bins continuously full or nearly full to reduce segregation.

NOTE 3—Sampling the initial discharge or the final few tons from a bin or conveyor belt increases the chances of obtaining segregated material and should be avoided.

4.3.2 *Sampling from the Conveyor Belt*—Select units to be sampled by a random method, such as Practice D 3665, from the production. Obtain at least three approximately equal increments, selected at random, from the unit being sampled and combine to form a field sample whose mass equals or exceeds the minimum recommended in 4.4.2. Stop the conveyor belt while the sample increments are being obtained. Insert two templates, the shape of which conforms to the shape of the belt in the aggregate stream on the belt, and space them such that the material contained between them will yield an increment of the required weight. Carefully scoop all material between the templates into a suitable container and collect the fines on the belt with a brush and dust pan and add to the container.

4.3.3 *Sampling from Stockpiles or Transportation Units*—Avoid sampling coarse aggregate or mixed coarse and fine aggregate from stockpiles or transportation units whenever possible, particularly when the sampling is done for the purpose of determining aggregate properties that may be dependent upon the grading of the sample. If circumstances make it necessary to obtain samples from a stockpile of coarse aggregate or a stockpile of combined coarse and fine aggregate, design a sampling plan for the specific case under consideration. This approach will allow the sampling agency to use a sampling plan that will give a confidence in results obtained therefrom that is agreed upon by all parties concerned to be acceptable for the particular situation. The sampling plan shall define the number of samples necessary to represent lots and sublots of specific sizes. General principles for sampling from stockpiles are applicable to sampling from trucks, rail cars, barges or other transportation units. For general guidance in sampling from stockpiles, see the Appendix.

4.3.4 *Sampling from Roadway (Bases and Subbases)*—Sample units selected by a random method, such as Practice D 3665, from the construction. Obtain at least three approximately equal increments, selected at random from the unit being sampled, and combine to form a field sample whose mass equals or exceeds the minimum recommended in 4.4.2. Take all increments from the roadway for the full depth of the material, taking care to exclude any underlying material. Clearly mark the specific areas from which each increment is to be removed: a metal template placed over the area is a definite aid in securing approximately equal increment weights.

4.4 *Number and Masses of Field Samples:*

TABLE 1 Size of Samples

Maximum Nominal Size of Aggregates[A]	Approximate Minimum Mass of Field Samples, lb (kg)[B]
Fine Aggregate	
No. 8 (2.36 mm)	25 (10)
No. 4 (4.75 mm)	25 (10)
Coarse Aggregate	
3/8 in. (9.5 mm)	25 (10)
1/2 in. (12.5 mm)	35 (15)
3/4 in. (19.0 mm)	55 (25)
1 in. (25.0 mm)	110 (50)
1 1/2 in. (37.5 mm)	165 (75)
2 in. (50 mm)	220 (100)
2 1/2 in. (63 mm)	275 (125)
3 in. (75 mm)	330 (150)
3 1/2 in. (90 mm)	385 (175)

[A] For processed aggregate the nominal maximum size of particles is the la sieve size listed in the applicable specification, upon which any mater permitted to be retained.

[B] For combined coarse and fine aggregates (for example, base or sub minimum weight shall be coarse aggregate minimum plus 25 lb (10 kg).

4.4.1 The number of field samples (obtained by one o methods described in 4.3) required depends on the critic of, and variation in, the properties to be measured. Desig each unit from which a field sample is to be obtained pri sampling. The number of field samples from the produc should be sufficient to give the desired confidence in results.

NOTE 4—Guidance for determining the number of samples req to obtain the desired level of confidence in test results may be fou Test Method D 2234, Practice E 105, Practice E 122, and Pra E 141.

4.4.2 The field sample masses cited are tentative. masses must be predicated on the type and number of to which the material is to be subjected and suffic material obtained to provide for the proper executio these tests. Standard acceptance and control tests are cov by ASTM standards and specify the portion of the sample required for each specific test. Generally speal the amounts specified in Table 1 will provide adeq material for routine grading and quality analysis. Extract portions from the field sample according to Practice C 70 as required by other applicable test methods.

5. Shipping Samples

5.1 Transport aggregates in bags or other container constructed as to preclude loss or contamination of any of the sample, or damage to the contents from mishanc during shipment.

5.2 Shipping containers for aggregate samples shall l suitable individual identification attached and enclose that field reporting, laboratory logging, and test repo may be facilitated.

6. Keywords

6.1 aggregates, exploration of potential sources; ag gates, number and sizes needed to estimate chara aggregates, sampling

APPENDIXES

(Nonmandatory Information)

X1. SAMPLING AGGREGATE FROM STOCKPILES OR TRANSPORTATION UNITS

X1.1 Scope

X1.1.1 In some situations it is mandatory to sample aggregates that have been stored in stockpiles or loaded into rail cars, barges, or trucks. In such cases the procedure should ensure that segregation does not introduce a serious bias in the results.

X1.2 Sampling from Stockpiles

X1.2.1 In sampling material from stockpiles it is very difficult to ensure unbiased samples, due to the segregation which often occurs when material is stockpiled, with coarser particles rolling to the outside base of the pile. For coarse or mixed coarse and fine aggregate, every effort should be made to enlist the services of power equipment to develop a separate, small sampling pile composed of materials drawn from various levels and locations in the main pile after which several increments may be combined to compose the field sample. If necessary to indicate the degree of variability existing within the main pile, separate samples should be drawn from separate areas of the pile.

X1.2.2 Where power equipment is not available, samples from stockpiles should be made up of at least three increments taken from the top third, at the mid-point, and at the bottom third of the volume of the pile. A board shoved vertically into the pile just above the sampling point aids in preventing further segregation. In sampling stockpiles of fine aggregate the outer layer, which may have become segregated, should be removed and the sample taken from the material beneath. Sampling tubes approximately 1¼-in. (30-mm) min by 6 ft (2-m) min in length may be inserted into the pile at random locations to extract a minimum of five increments of material to form the sample.

X1.3 Sampling from Transportation Units

X1.3.1 In sampling coarse aggregates from railroad cars or barges, effort should be made to enlist the services of power equipment capable of exposing the material at various levels and random locations. Where power equipment is not available, a common procedure requires excavation of three or more trenches across the unit at points that will, from visual appearance, give a reasonable estimate of the characteristics of the load. The trench bottom should be approximately level, at least 1 ft (0.3 m) in width and in depth below the surface. A minimum of three increments from approximately equally spaced points along each trench should be taken by pushing a shovel downward into the material. Coarse aggregate in trucks should be sampled in essentially the same manner as for rail cars or barges, except for adjusting the number of increments according to the size of the truck. For fine aggregate in transportation units, sampling tubes as described in X1.2 may be used to extract an appropriate number of increments to form the sample.

X2. EXPLORATION OF POTENTIAL AGGREGATE SOURCES

X2.1 Scope

X2.1.1 Sampling for evaluation of potential aggregate sources should be performed by a responsible trained and experienced person. Because of the wide variety of conditions under which sampling may have to be done it is not possible to describe detailed procedures applicable to all circumstances. This appendix is intended to provide general guidance and list more comprehensive references.

X2.2 Sampling Stone from Quarries or Ledges

X2.2.1 *Inspection*—The ledge or quarry face should be inspected to determine discernible variations or strata. Differences in color and structure should be recorded.

X2.2.2 *Sampling and Size of Sample*—Separate samples having a mass of at least 50 lb (approximately 25 kg) should be obtained from each discernible stratum. The sample should not include material weathered to such an extent that it is no longer suitable for the purpose intended. One or more pieces in each sample should be at least 6 by 6 by 4 in. (150 by 150 by 100 mm) in size with the bedding plane plainly marked, and this piece should be free of seams or fractures.

X2.2.3 *Record*—In addition to the general information accompanying all samples the following information should accompany samples taken from ledges or quarry faces:

X2.2.3.1 Approximate quantity available. (If quantity is very large this may be recorded as practically unlimited.)

X2.2.3.2 Quantity and character of overburden.

X2.2.3.3 A detailed record showing boundaries and location of material represented by each sample.

NOTE X2.1—A sketch, plan, and elevation, showing the thickness and location of the different layers is recommended for this purpose.

X2.3 Sampling Roadside or Bank Run Sand and Gravel Deposits

X2.3.1 *Inspection*—Potential sources of bank run sand and gravel may include previously worked pits from which there is an exposed face or potential deposits discovered through air-photo interpretation, geophysical exploration, or other types of terrain investigation.

X2.3.2 *Sampling*—Samples should be so chosen from each different stratum in the deposit discernible to the sampler. An estimate of the quantity of the different materials should be made. If the deposit is worked as an open-face bank or pit, samples should be taken by channeling the face

vertically, bottom to top, so as to represent the materials proposed for use. Overburdened or disturbed material should not be included in the sample. Test holes should be excavated or drilled at numerous locations in the deposit to determine the quality of the material and the extent of the deposit beyond the exposed face, if any. The number and depth of test holes will depend upon the quantity of the material needed, topography of the area, nature of the deposit, character of the material, and potential value of the material in the deposit. If visual inspection indicates that there is considerable variation in the material, individual samples should be selected from the material in each well defined stratum. Each sample should be thoroughly mixed and quartered if necessary so that the field sample thus obtained will be at least 25 lb (12 kg) for sand and 75 lb (35 kg) if the deposit contains an appreciable amount aggregate.

X2.3.3 *Record*—In addition to the general inf accompanying all samples the following informatio accompany samples of bank run sand and gravel:

X2.3.3.1 Location of supply.

X2.3.3.2 Estimate of approximate quantity avail

X2.3.3.3 Quantity and character of overburden.

X2.3.3.4 Length of haul to proposed site of wor

X2.3.3.5 Character of haul (kind of road, m grades, etc.)

X2.3.3.6 Details as to extent and location of represented by each sample.

NOTE X2.2—A sketch of plans and elevations, showing th and location of different layers, is recommended for this pur

X3. NUMBER AND SIZE OF INCREMENTS NEEDED TO ESTIMATE CHARACTER OF UNIT SAMP

X3.1 Scope

X3.1.1 This appendix presents the rationale used by the responsible committee in the development of this practice.

X3.2 Descriptions of Terms Specific to This Standard

X3.2.1 *field sample*—a quantity of the material to be tested of sufficient size to provide an acceptable estimate of the average quality of a unit.

X3.2.2 *lot*—a sizable isolated quantity of bulk material from a single source, assumed to have been produced by the same process (for example, a day's production or a specific mass or volume).

X3.2.3 *test portion*—a quantity of the material of sufficient size extracted from the larger field sample by a procedure designed to ensure accurate representation of the field sample, and thus of the unit sampled.

X3.2.4 *unit*—a batch or finite subdivision of a lot of bulk material (for example, a truck load or a specific area covered).

X3.3 Test Unit, Size, and Variability

X3.3.1 The unit to be represented by a single fiel should neither be so large as to mask the effects of si variability within the unit nor be so small as to be af the inherent variability between small portions of material.

X3.3.2 A unit of bulk material composed o aggregate or aggregate mixtures might consist c truckload. If it were possible, the entire load might b as a practical matter, a field sample is composed of more increments chosen at random from the materi loaded or unloaded from the truck. Research has sh such a procedure permits an acceptable estimate to of the average gradation that might be measured fro 20 increments from the truck.

X3.3.3 Significant variability with a lot of materi it might exist, should be indicated by statistical m such as the standard deviation between units sel random from within the lot.

SUMMARY OF CHANGES

This section identifies the location of selected changes to this practice that have been incorporated since the last issue. For the convenience of the user, Committee D-4 has highlighted those changes that may impact the use of this practice. This section may also include description changes or reasons for the changes, or both.

(1) Appendix X3 was added.

The American Society for Testing and Materials takes no position respecting the validity of any patent rights asserted in connection with any item mentioned in this standard. Users of this standard are expressly advised that determination of the validity of any such patent rights, and the risk of infringement of such rights, are entirely their own responsibility.

This standard is subject to revision at any time by the responsible technical committee and must be reviewed every five years and if not revised, either reapproved or withdrawn. Your comments are invited either for revision of this standard or for additional standards and should be addressed to ASTM Headquarters. Your comments will receive careful consideration at a meeting of the responsible technical committee, which you may attend. If you feel that your comments have not received a fair hearing you should make your views known to the ASTM Committee on Standards, 1916 Race St., Philadelphia, PA 19103.

Standard Guide for Investigating and Sampling Soil and Rock[1]

This standard is issued under the fixed designation D 420; the number immediately following the designation indicates the year of original adoption or, in the case of revision, the year of last revision. A number in parentheses indicates the year of last reapproval. A superscript epsilon (ε) indicates an editorial change since the last revision or reapproval.

INTRODUCTION

Investigation, sampling, and identification of subsurface materials involve complex techniques accomplished by many different procedures and interpretations. These are frequently site specific and are influenced by geological and geographical conditions; purpose of the investigation; design requirements; and the background, training, and experience of the investigator.

This guide for soil, rock, and ground water investigation and sampling, based on standard procedures, will lessen inconsistency and will encourage rational methods of site evaluation. An acceptable and consistent investigation and sampling program will help to determine the influence of geologic and geographic environment on subsurface conditions.

1. Scope

1.1 This guide identifies recognized methods by which soil, rock, and ground water conditions may be determined. The objective of the investigation should be to identify and locate, both horizontally and vertically, significant soil and rock types and ground water conditions present within a given site area and to establish the characteristics of the subsurface materials by sampling and in situ testing. Laboratory testing of soil and rock samples is governed by other ASTM standards.

1.2 *Key Words:*

1.2.1 *Site Investigations (see Practice D 3584):*

UF Reconnaissance Surveys
- Subsurface Investigations
- Geological Investigations
- Field Investigations

BT Explorations
- Feasibility Studies

NT *Hydrologic Investigations*
- Foundation Investigations
- Geophysical Investigation

RT Soil Surveys
- Maps
- Preliminary Investigations
- Sampling

1.3 The values stated in inch-pound units are to be regarded as the standard.

2. Referenced Documents

2.1 *ASTM Standards:*

C 119 Definitions of Terms Relating to Dimension Stone[2]

C 294 Descriptive Nomenclature of Constituents of Natural Mineral Aggregates[3]

C 851 Practice for Estimating Scratch Hardness of Coarse Aggregate Particles[3]

D 75 Practice for Sampling Aggregates[2]

D 653 Terminology Relating to Soil, Rock, and Contained Fluids[2]

D 1194 Test Method for Bearing Capacity of Soil for Static Load on Spread Footings[2]

D 1452 Practice for Soil Investigation and Sampling by Auger Borings[2]

D 1586 Method for Penetration Test and Split-Barrel Sampling of Soils[2]

D 1587 Practice for Thin-Walled Tube Sampling of Soils[2]

D 2113 Practice for Diamond Core Drilling for Site Investigation[2]

D 2487 Test Method for Classification of Soils for Engineering Purposes[2]

D 2488 Practice for Description and Identification of Soils (Visual-Manual Procedure)[2]

D 2573 Test Method for Field Vane Shear Test in Cohesive Soil[2]

D 2607 Classification of Peats, Mosses, Humus, and Related Products[2]

D 2937 Test Method for Density of Soil In Place by the Drive-Cylinder Method[2]

D 3282 Practice for Classification of Soils and Soil-Aggregate Mixtures for Highway Construction Purposes[2]

D 3385 Test Method for Infiltration Rate of Soils in Field Using Double-Ring Infiltrometers[2]

D 3397 Methods for Triaxial Classification of Base Materials, Soils, and Soil Mixtures[4]

D 3441 Test Method for Deep, Quasi-Static, Cone and Friction-Cone Penetration Tests of Soil[2]

D 3550 Practice for Ring-Lined Barrel Sampling of Soils[2]

[1] This guide is under the jurisdiction of ASTM Committee D-18 on Soil and Rock and is the direct responsibility of Subcommittee D18.01 on Surface and Subsurface Reconnaissance.

Current edition approved Aug. 19, 1987. Published October 1987. Originally published as D 420 – 65 T. Last previous edition D 420 – 69 (1979)[ε1].

[2] *Annual Book of ASTM Standards*, Vol 04.08.

[3] *Annual Book of ASTM Standards*, Vol 04.02.

[4] *Annual Book of ASTM Standards*, Vol 04.03.

D 3584 Practice for Indexing Papers and Reports on Soil and Rock for Engineering Purposes[2]

D 3740 Practice for the Evaluation of Agencies Engaged in the Testing and/or Inspection of Soil and Rock as Used in Engineering Design and Construction[2]

D 4083 Practice for Description of Frozen Soils (Visual-Manual Procedure)[2]

D 4220 Practices for Preserving and Transporting Soil Samples[2]

D 4427 Classification of Peat Samples by Laboratory Testing[2]

G 51 Test Method for pH of Soil for Use in Corrosion Testing[2]

G 57 Method for Field Measurement of Soil Resistivity Using the Wenner Four-Electrode Method[2]

3. Significance and Use

3.1 An adequate soil, rock, and ground water investigation provides pertinent information for decision making on one or more of the following subjects:

3.1.1 Location of the proposed construction both vertically and horizontally.

3.1.2 Location and preliminary evaluation of suitable borrow and other local sources of construction material.

3.1.3 Need for special excavating and dewatering techniques.

3.1.4 Investigations of slope stability in natural slopes, cuts, and embankments.

3.1.5 Conceptual selection of embankment types, foundations for structures, and hydraulic barrier requirements.

3.1.6 Ground water resource planning and development of detailed investigations.

3.1.7 Identification of ground water contamination and development of detailed monitoring studies.

3.1.8 Development of additional detailed subsurface investigations for specific structures or facilities.

3.2 A subsurface soil, rock, and ground water investigation should provide sufficiently large soil and rock samples of such quality as to allow adequate testing to determine the soil or rock classification or mineralogic type, or both, and the engineering properties pertinent to the proposed design.

3.3 This guide is not meant to be an inflexible description of investigation requirements; other techniques may be applied as appropriate.

4. Apparatus

4.1 The type of equipment required for a subsurface investigation depends upon various factors including the type of subsurface material, the depth of exploration, the nature of the terrain, and the intended use of the data.

4.2 *Hand Augers, Hole Diggers, Shovels, and Push Tube Samplers*, suitable for exploration of surficial soils to depths of 3 to 9 ft (1 to 3 m).

4.3 *Earth Excavation Equipment*, such as backhoes, draglines, and drilled pier augers (screw or bucket) to allow in situ examination of soil deposits and sampling of materials containing very large particles.

5. Techniques

5.1 Geophysical or remote sensing techniques may be used for mapping of the areal extent of geological formations and for evaluating variations in soil and rock properties.

5.1.1 Satellite and aircraft spectral mapping tools, such a LANDSAT, may be used to find and map the areal extent c subsurface materials and geologic structure. Interpretation c aircraft photographs and satellite imagery may locate an identify significant geologic features that may be indicativ of faults and fractures. Some ground control is generali required to verify information derived from remote sensir data. Table 13.8 of Ref. (1)[5] is a useful summary of remo sensing capabilities.

5.1.2 Seismic refraction/reflection and ground penetratir radar techniques may be used to map soil horizons ar depth profiles, water tables, and depth to bedrock in mar situations, with depth penetration and resolution varyi with local conditions. Electromagnetic induction, electric resistivity, and induced polarization (or complex resistivit techniques may be used to map variations in water conte and quality, clay horizons, stratification, and depth aquifer/bedrock. Other geophysical techniques such gravity and magnetic methods may be useful under certa specific conditions. Crosshole shear wave velocity measu ments may provide soil and rock parameters for dynan analyses.

5.4 Currently available ASTM standards on boring a sampling are:

5.4.1 Practice D 1452 on auger boring.

5.4.2 Method D 1586 on standard penetration test.

5.4.3 Practice D 1587 on thin walled tube sampling.

5.4.4 Practice D 2113 on diamond core drilling.

5.4.5 Test Method D 2573 on field vane shear test.

5.4.6 Test Method D 3385 on double ring infiltromete

5.4.7 Method D 3441 on cone penetration tests.

5.4.8 Practice D 3550 on ring-lined barrel sampling.

6. Exploration Plan

6.1 The project design and performance requirem must be established prior to final development of exploration plan. A complete soil, rock, and ground w investigation should encompass the following activities:

6.1.1 Review of available information on the geol history, rock, soil, and ground water conditions occurrin the proposed location and in the immediate vicinity of site.

6.1.2 Interpretation of air-photo and other remote sen data.

6.1.3 Field reconnaissance for identification of surf geologic conditions, mapping of stratigraphic exposures outcrops, and examination of the performance of exi structures.

6.1.4 On site investigation of the surface and subsu materials by geophysical surveys, borings, or test pits.

6.1.5 Recovery of representative disturbed sample laboratory classification tests of soil, rock, and local struction material. These should be supplemented by u turbed specimens suitable for the determination of engineering properties pertinent to the investigation.

6.1.6 Determination of the position of the ground table, or water tables if there is perched or artesian gr

[5] The boldface numbers in parentheses refer to the list of references at of this standard.

water, and of the variability of that position in both short and long time frames.

6.1.7 Determination of the location of suitable foundation material, either bedrock or satisfactory load-bearing soils.

6.1.8 Field identification of soil and rock types with the depth of their occurrence and the locations of their structural discontinuities.

6.1.9 Evaluation of the performance of existing installations, relative to their foundation material and environment in the immediate vicinity of the proposed site.

7. Reconnaissance of Project Area

7.1 Technical data should be reviewed before any field program is started. This includes, but is not limited to, topographic maps, airphotos, satellite imagery, geologic maps, statewide or county soil surveys and mineral resource surveys, and engineering soil maps covering the proposed project area. Reports of subsurface investigations of nearby or adjacent projects should be studied.

NOTE 1—While certain of the older maps and reports may be obsolete and of limited value in the light of current knowledge, a comparison of the old with the new will often reveal valuable unexpected information.

7.1.1 The United States Geological Survey and the geological surveys of the various states are the principal sources of geologic maps and reports on mineral resources and ground water.

7.1.2 United States Department of Agriculture Soil Conservation Service soil survey reports, where available and of recent date, should enable the engineer to estimate the range in soil profile characteristics to depths of 5 or 6 ft (1.5 or 2 m) for each soil mapped.

NOTE 2—Each soil type has a distinctive soil profile due to age, parent material, relief, climatic condition, and vegetative cover. These properties can assist in identifying the various soil types, each requiring special engineering considerations and treatment. Similar engineering soil properties are often found where similar soil profile characteristics exist. Changes in soil properties in adjacent areas often indicate changes in parent material or relief.

7.2 In areas where descriptive data are limited by inadequate geologic or soils maps, the soil and rock in open cuts in the vicinity of the proposed project should be studied and various soil and rock profiles noted. Field notes of such studies should include data outlined in 8.4.

7.3 Where a preliminary map covering the area of the project is desired, it can be prepared on maps compiled from airphotos showing the ground conditions. The distribution of the predominant soil and rock deposits likely to be encountered during the investigation may be shown using data obtained from geologic maps and limited ground reconnaissance. Experienced airphoto interpreters can deduce much subsurface data from a study of black and white, color, and infrared photographs because similar soil or rock conditions, or both, usually have similar airphoto patterns in regions of similar climate or vegetation.

7.4 In areas where documentary information is insufficient, some knowledge of subsurface conditions can be obtained from land owners and local well drillers and construction people.

NOTE 3—This preliminary map may be expanded into a detailed engineering map by locating all test holes, pits, and sampling stations and by revising boundaries as determined from the detailed subsurface survey.

8. Determination of Subsurface Conditions

8.1 Subsurface conditions are positively defined only at the individual test pit, hole, boring, or open cut examined. A stratigraphic profile can be developed by detailed investigations only where determinations of a continuous relationship of the depths and locations of various types of soil and rock can be made. This phase of the investigation may be implemented by plotting logs of soil and rock exposures in walls of excavations or cut areas or by plotting logs of the test borings, or both, and then interpolating between these logs. The spacing of these investigations will depend on the geologic complexity of the project area and on the importance of soil and rock continuity to the project design. Exploration should be deep enough to identify all strata that might be significantly affected by the proposed use of the site and to develop the engineering data required to allow analysis of the items listed in Section 3 for each project.

8.2 Geophysical survey methods may be used to supplement borehole and outcrop data and to interpolate between holes. Seismic, ground penetrating radar, and electrical resistivity methods can be particularly valuable when distinct differences in the properties of contiguous subsurface materials are indicated.

8.2.1 The seismic refraction method is especially useful in determining depth to, or rippability of, rock in locations where successively denser strata are encountered.

8.2.2 The seismic reflection method is useful in delineating geological units at depths below 10 ft (3 m). It is not constrained by layers of low seismic velocity and is especially useful in areas of rapid stratigraphic change.

8.2.3 The electrical resistivity method is similarly useful in determining depth to rock and anomalies in the stratigraphic profile, in evaluating stratified formations where a denser stratum overlies a less dense stratum, and in investigation of prospective sand-gravel or other sources of borrow material. Resistivity parameters also are required for the design of grounding systems and cathodic protection for buried structures.

8.2.4 The ground penetrating radar method is useful in defining soil and rock layers and manmade structures in the depth range of 1 to 30 ft (⅓ to 10 m).

NOTE 4—Geophysical investigations can be a useful guide in determining boring or test hole locations. The interpretation of geophysical studies should be verified by borings or test excavations.

8.3 The depth of exploratory borings or test pits for roadbeds, airport paving, or vehicle parking areas should be to at least 5 ft (1.5 m) below the proposed subgrade elevation. Special circumstances may increase this depth. Borings for structures or embankments should extend below the level of significant influence of the proposed load as determined by a subsurface stress analysis.

8.3.1 When drainage may be influenced by either pervious water-bearing materials or impervious materials that can block internal drainage, borings should extend down into these materials sufficiently to determine those engineering and geologic properties relevant to the project design.

000136

8.3.2 In all borrow areas the borings or test pits should be sufficient in number and depth to outline the required quantities of material meeting the specified quality requirements.

8.3.3 Where frost penetration must be considered in the behavior of soil and rock, borings should extend significantly below the depth of maximum frost penetration.

8.4 Exploration records shall be kept in a systematic manner for each project. Such records shall include:

8.4.1 Description of each site or area investigated. Each test hole, boring, test pit, or geophysical test site shall be clearly located (horizontally and vertically) with reference to some established coordinate system, datum, or permanent monument.

8.4.2 Logs of each test hole, boring, test pit, or cut surface exposure in which the field description and location of each material encountered is clearly shown either by symbol or word description.

NOTE 5—Color photographs of rock cores, soil samples, and exposed strata may be of considerable value. Each photograph should include an identifying number or symbol, a date, and a scale.

8.4.3 Identification of all soils based on Practice D 2488, Classification D 2607, or Practice D 4083. Identification of rock materials based on Definitions of Terms C 119, Descriptive Nomenclature C 294, or Practice C 851. Classification of soil materials is discussed in Section 10.

8.4.4 Seepage and water-bearing zones and piezometric elevations found in each test hole, boring, or test pit.

8.4.5 In situ test results, where required, such as the penetration resistance or vane shear tests discussed in 9.3, plate load tests, or other in situ tests for engineering properties of soils or rock.

8.4.6 Percentage of core recovery and rock quality designation in core drilling as outlined in 9.3.5.

8.4.7 Graphical presentation of field and laboratory data and its interpretation facilitates comprehensive understanding of subsurface conditions.

9. Sampling and In Situ Testing

9.1 Obtain representative samples of each subsurface material that is significant to the project design and construction. The size and type of sample required is dependent upon the tests to be performed and the percentage of coarse particles in the sample.

NOTE 6—The size of disturbed or bulk samples for routine tests may vary at the discretion of the geotechnical investigator, but the following quantities are suggested as suitable for most materials: (*a*) Visual classification—50 to 500 g (2 oz to 1 lb); (*b*) Soil constants and particle size analysis of non-gravelly soil—500 g to 2.5 kg (1 to 5 lb); (*c*) Soil compaction tests and sieve analysis of gravelly soils—20 to 40 kg (40 to 80 lb); (*d*) Aggregate manufacture or aggregate properties tests—50 to 200 kg (100 to 400 lb).

9.2 Accurately identify each sample with the boring, test hole, or testpit number and depth below reference ground surface from which it was taken. Place a waterproof identification tag inside the container, securely close the container, protect it to withstand rough handling, and mark it with proper identification on the outside. Keep samples for natural moisture determination in sealed containers to prevent moisture loss. When drying of samples may affect classification or engineering properties test results, protect them to minimize moisture loss. Practices D 4220 a the transportation of samples from field to laboratory

9.3 Recommended ASTM procedures for in situ sar and testing are as follows:

9.3.1 Practice D 75 describes the sampling of coar fine aggregates for the preliminary investigation of a tial source of supply.

9.3.2 Test Method D 1194 describes the estimation bearing capacity of soil in place by means of field l tests. The results can be useful for design of spread fc based on static loading conditions. The load test sho performed in conjunction with other field tests, gener accordance with Method D 1586 or Method D 34 allow a determination of the applicability of the result

9.3.3 Practice D 1452 describes the use of augers investigations and sampling where disturbed soil sampi be used. This procedure is also valuable in connectio ground water exploration. Depths of auger investigatic limited by ground water conditions, soil characteristic equipment used.

9.3.4 Method D 1586 describes a procedure to representative soil samples for identification and clas tion laboratory tests and to measure the resistance of t to penetration by a standardized sampler.

9.3.5 Practice D 1587 describes a procedure to r relatively undisturbed soil samples suitable for labo testing.

9.3.6 Practice D 2113 describes a procedure to r intact samples of rock and certain soils too hard to sam Method D 1586 or Practice D 1587.

9.3.7 Practice D 3550 describes a procedure to r moderately disturbed, representative samples of sc classification testing and in some cases shear or consoli testing.

9.3.8 Test Method D 2573 describes a procedure tc sure the in situ unit shear resistance of cohesive sc rotation of a four-bladed vane in a horizontal plane.

9.3.9 Test Method D 2937 describes a procedu pushing a thin-wall tube 4 to 6 in. (100 to 150 mm) soil mass to recover a relatively undisturbed sam known volume allowing the measurement of wet or density and natural moisture content.

9.3.10 Test Method D 3385 describes a procedure fo measurement of the infiltration rate of soils. Water u constant head is allowed to seep into the top surfac fixed soil area and the volume rate of inflow into a k volume of soil is measured.

9.3.11 Method D 3441 describes the determination end bearing and side friction components of the resista penetration of a conical penetrometer into a soil mass.

9.3.12 Method G 57 describes the measurement electrical resistivity of a soil mass. A Wenner four-elec configuration is used.

NOTE 7—Other in situ test procedures are being prepared by Committee D-18.

10. Classification of Earth Materials

10.1 Identify samples of soil and rock after submissi the laboratory for identification and classification te accordance with one or more of the following standar applicable references (**2 through 11**), or both.

10.1.1 Descriptive Nomenclature 294.
10.1.2 Test Method D 2487.
10.1.3 Practice D 3282.
10.1.4 Method D 3397.
10.1.5 Practice D 2488.
10.1.6 Practice D 4083.
10.1.7 Classification D 4427.

11. Subsurface Profile

11.1 Delineate subsurface profiles only from actual geophysical, test-hole, test-pit, or cut-surface data. Interpolation between locations should be made on the basis of available geologic knowledge of the area and should be clearly identified. The use of geophysical techniques as discussed in 8.2 is a valuable aid in such interpolation. Geophysical survey data should be identified separately from sample data or in situ test data.

12. Interpretation of Results

12.1 Interpret the results of an investigation in terms of actual findings and make every effort to collect and include all field and laboratory data from previous investigations in the same area. Extrapolation of data into local areas not surveyed and tested should be made only for conceptual studies. Such extrapolation can be done only where geologically uniform subsurface disposition of soil and rock is known to exist on the basis of other data. Engineering properties of the soil and rock encountered on important projects should not be predicted solely on field identification or classification but should be verified by laboratory tests made on samples collected in accordance with Section 9 or by in situ testing, or both.

12.2 The recommendations for design parameters can be made only by professional engineers or geologists specializing in the field of geotechnical engineering and familiar with the purpose, conditions, and requirements of the study. Soil mechanics, rock mechanics, and geomorphological concepts must be combined with a knowledge of geotechnical engineering or hydrogeology to make a complete application of the results of the soil, rock, and ground water investigation. Complete design recommendations may require a more detailed study than that envisioned by this guide.

13. Report

13.1 The report of a subsurface investigation shall include:

13.1.1 Location of the area investigated in terms pertinent to the project. This may include sketch maps or aerial photos on which the test pits, bore holes, and sample areas are located, as well as geomorphological data relevant to the determination of the various soil and rock types. Such data includes elevation contours, streambeds, sink holes, cliffs, and the like. Where feasible, include in the report a geologic map or an agronomic soils map, or both, of the area investigated.

13.1.2 Describe the investigation procedures and include copies of all borings and testhole logs, all laboratory test results, and graphical interpretations of the geophysical measurements.

13.1.3 Include cross sections delineating the extent of the stratigraphic units and note anomalies or otherwise significant conditions.

13.1.4 Describe and relate the findings obtained under Sections 7, 8, and 12, using the subhead titles for the respective sections.

14. Precision and Bias

14.1 This guide provides qualitative data only; therefore, a precision and bias statement is not applicable.

REFERENCES

(1) Reeves, R. G., Anson, A., and Landen, D., eds., *Manual of Remote Sensing*, 2nd Ed., American Society of Photogrametry, Falls Church, VA.

(2) Hvorslev, M. J., "Subsurface Exploration and Sampling of Soils," Engineering Foundation, New York, 1948.

(3) "Classification of Rocks," Colorado School of Mines, Vol. 50, No. 1, 1955.

(4) Higgins, M. W., "Cataclastic Rocks," U.S. Geological Survey Professional Paper 687, 1971.

(5) Howell, J. V., and Weller, J. M., eds., "Glossary of Geology," American Geological Institute, Washington, DC, 1972.

(6) Wahls, H. E., ed., "In Situ Measurement of Soil Properties," *Proc. Specialty Conference of the Geotechnical Engineering Division*, ASCE, NC State Univ., Raleigh, NC, 1975.

(7) ASCE Manual No. 56, "Subsurface Investigation for Design and Construction of Foundations of Buildings," American Society of Civil Engineers, New York, NY, 1976.

(8) Dowding, C. H., ed., "Site Characterization and Exploration," *Proc. Specialty Workshop*, ASCE, Northwestern Univ., Evanston, IL, 1978.

(9) Mori, H., ed., "State of the Art on Current Practice of Soil Sampling," *Proc. International Symposium of Soil Sampling*, Int. Soc. Soil Mech. and Foundation Engineering, New York, NY, 1979.

(10) Alsud, S. A., "Engineering Geophysics," Bul. AEG, Vol. XIX, No. 2, 1982.

(11) Trautman, C. H., and Kulhawy, F. H., "Data Sources for Engineering Geologic Studies," Bul. AEG, Vol. XX, No. 4, 1983.

The American Society for Testing and Materials takes no position respecting the validity of any patent rights asserted in connection with any item mentioned in this standard. Users of this standard are expressly advised that determination of the validity of any such patent rights, and the risk of infringement of such rights, are entirely their own responsibility.

This standard is subject to revision at any time by the responsible technical committee and must be reviewed every five years and if not revised, either reapproved or withdrawn. Your comments are invited either for revision of this standard or for additional standards and should be addressed to ASTM Headquarters. Your comments will receive careful consideration at a meeting of the responsible technical committee, which you may attend. If you feel that your comments have not received a fair hearing you should make your views known to the ASTM Committee on Standards, 1916 Race St., Philadelphia, PA 19103.

Designation: D 421 – 85

Standard Practice for Dry Preparation of Soil Samples for Particle-Size Analysis and Determination of Soil Constants[1]

This standard is issued under the fixed designation D 421; the number immediately following the designation indicates the year of original adoption or, in the case of revision, the year of last revision. A number in parentheses indicates the year of last reapproval. A superscript epsilon (ε) indicates an editorial change since the last revision or reapproval.

1. Scope

1.1 This practice covers the dry preparation of soil samples as received from the field for particle-size analysis and the determination of the soil constants.

1.2 *This standard may involve hazardous materials, operations, and equipment. This standard does not purport to address all of the safety problems associated with its use. It is the responsibility of whoever uses this standard to consult and establish appropriate safety and health practices and determine the applicability of regulatory limitations prior to use.*

2. Referenced Documents

2.1 *ASTM Standards:*

D 2217 Practice for Wet Preparation of Soil Samples for Particle-Size Analysis and Determination of Soil Constants[2]

E 11 Specification for Wire-Cloth Sieves for Testing Purposes[3]

3. Significance and Use

3.1 This practice can be used to prepare samples for particle-size and plasticity tests where it is desired to determine test values on air-dried samples, or where it is known that air drying does not have an effect on test results relative to samples prepared in accordance with Practice D 2217.

4. Apparatus

4.1 *Balance*, sensitive to 0.1 g.

4.2 *Mortar and Rubber-Covered Pestle*, suitable for breaking up the aggregations of soil particles.

4.3 *Sieves*—A series of sieves, of square mesh woven wire cloth, conforming to Specification E 11. The sieves required are as follows:

No. 4 (4.75-mm)
No. 10 (2.00-mm)
No. 40 (425-μm)

4.4 *Sampler*—A riffle sampler or sample splitter, for quartering the samples.

5. Sampling

5.1 Expose the soil sample as received from the field to the air at room temperature until dried thoroughly. Break u aggregations thoroughly in the mortar with a rubber-co pestle. Select a representative sample of the amount req to perform the desired tests by the method of quarteri by the use of a sampler. The amounts of material requir perform the individual tests are as follows:

5.1.1 *Particle-Size Analysis*—For the particle-size ysis, material passing a No. 10 (2.00-mm) sieve is requir amounts equal to 115 g of sandy soils and 65 g of eith or clay soils.

5.1.2 *Tests for Soil Constants*—For the tests fo constants, material passing the No. 40 (425-μm) sie required in total amount of 220 g, allocated as follows:

Test	Grams
Liquid limit	100
Plastic limit	15
Centrifuge moisture equivalent	10
Volumetric shrinkage	30
Check tests	65

6. Preparation of Test Sample

6.1 Select that portion of the air-dried sample select purpose of tests and record the mass as the mass of the test sample uncorrected for hygroscopic moisture. Se the test sample by sieving with a No. 10 (2.00-mm) Grind that fraction retained on the No. 10 sieve in a m with a rubber-covered pestle until the aggregations c particles are broken up into the separate grains. separate the ground soil into two fractions by sieving No. 10 sieve.

6.2 Wash that fraction retained after the second s free of all fine material, dry, and weigh. Record this m the mass of coarse material. Sieve the coarse material being washed and dried, on the No. 4 (4.75-mm) siev record the mass retained on the No. 4 sieve.

7. Test Sample for Particle-Size Analysis

7.1 Thoroughly mix together the fractions passing th 10 (2.00-mm) sieve in both sieving operations, and i method of quartering or the use of a sampler, select a p weighing approximately 115 g for sandy soils and ap mately 65 g for silt and clay soil for particle-size analy

8. Test Sample for Soil Constants

8.1 Separate the remaining portion of the material p the No. 10 (2.00-mm) sieve into two parts by means of 40 (425-μm) sieve. Discard the fraction retained on th 40 sieve. Use the fraction passing the No. 40 sieve i determination of the soil constants.

[1] This practice is under the jurisdiction of ASTM Committee D-18 on Soil and Rock and is the direct responsibility of Subcommittee D18.03 on Texture, Plasticity, and Density Characteristics of Soils.

Current edition approved July 26, 1985. Published September 1985. Originally published as D 421 – 35 T. Last previous edition D 421 – 58 (1978)[ε1].

[2] *Annual Book of ASTM Standards*, Vol 04.08.

[3] *Annual Book of ASTM Standards*, Vol 14.02.

000139

The American Society for Testing and Materials takes no position respecting the validity of any patent rights asserted in connection with any item mentioned in this standard. Users of this standard are expressly advised that determination of the validity of any such patent rights, and the risk of infringement of such rights, are entirely their own responsibility.

This standard is subject to revision at any time by the responsible technical committee and must be reviewed every five years and if not revised, either reapproved or withdrawn. Your comments are invited either for revision of this standard or for additional standards and should be addressed to ASTM Headquarters. Your comments will receive careful consideration at a meeting of the responsible technical committee, which you may attend. If you feel that your comments have not received a fair hearing you should make your views known to the ASTM Committee on Standards, 1916 Race St., Philadelphia, PA 19103.

Standard Test Method for Particle-Size Analysis of Soils[1]

This standard is issued under the fixed designation D 422; the number immediately following the designation indicates the year of original adoption or, in the case of revision, the year of last revision. A number in parentheses indicates the year of last reapproval. A superscript epsilon (ε) indicates an editorial change since the last revision or reapproval.

[ε1] NOTE—Section 19 was added editorially in September 1990.

1. Scope

1.1 This test method covers the quantitative determination of the distribution of particle sizes in soils. The distribution of particle sizes larger than 75 µm (retained on the No. 200 sieve) is determined by sieving, while the distribution of particle sizes smaller than 75 µm is determined by a sedimentation process, using a hydrometer to secure the necessary data (Notes 1 and 2).

NOTE 1—Separation may be made on the No. 4 (4.75-mm), No. 40 (425-µm), or No. 200 (75-µm) sieve instead of the No. 10. For whatever sieve used, the size shall be indicated in the report.

NOTE 2—Two types of dispersion devices are provided: (*1*) a high-speed mechanical stirrer, and (*2*) air dispersion. Extensive investigations indicate that air-dispersion devices produce a more positive dispersion of plastic soils below the 20-µm size and appreciably less degradation on all sizes when used with sandy soils. Because of the definite advantages favoring air dispersion, its use is recommended. The results from the two types of devices differ in magnitude, depending upon soil type, leading to marked differences in particle size distribution, especially for sizes finer than 20 µm.

2. Referenced Documents

2.1 *ASTM Standards:*

D 421 Practice for Dry Preparation of Soil Samples for Particle-Size Analysis and Determination of Soil Constants[2]

E 11 Specification for Wire-Cloth Sieves for Testing Purposes[3]

E 100 Specification for ASTM Hydrometers[4]

3. Apparatus

3.1 *Balances*—A balance sensitive to 0.01 g for weighing the material passing a No. 10 (2.00-mm) sieve, and a balance sensitive to 0.1 % of the mass of the sample to be weighed for weighing the material retained on a No. 10 sieve.

3.2 *Stirring Apparatus*—Either apparatus A or B may be used.

3.2.1 Apparatus A shall consist of a mechanically operated stirring device in which a suitably mounted e. motor turns a vertical shaft at a speed of not less than 1 rpm without load. The shaft shall be equipped w replaceable stirring paddle made of metal, plastic, or rubber, as shown in Fig. 1. The shaft shall be of such l that the stirring paddle will operate not less than ¾ in. mm) nor more than 1½ in. (38.1 mm) above the bott the dispersion cup. A special dispersion cup conformi either of the designs shown in Fig. 2 shall be provided tc the sample while it is being dispersed.

3.2.2 Apparatus B shall consist of an air-jet dispe cup[5] (Note 3) conforming to the general details shown i: 3 (Notes 4 and 5).

NOTE 3—The amount of air required by an air-jet dispersion of the order of 2 ft³/min; some small air compressors are not cap supplying sufficient air to operate a cup.

NOTE 4—Another air-type dispersion device, known as a disp tube, developed by Chu and Davidson at Iowa State College, ha shown to give results equivalent to those secured by the air-jet disp cups. When it is used, soaking of the sample can be done i sedimentation cylinder, thus eliminating the need for transferrir slurry. When the air-dispersion tube is used, it shall be so indica the report.

NOTE 5—Water may condense in air lines when not in use. water must be removed, either by using a water trap on the air line, blowing the water out of the line before using any of the a dispersion purposes.

3.3 *Hydrometer*—An ASTM hydrometer, graduate read in either specific gravity of the suspension or gram litre of suspension, and conforming to the requirement hydrometers 151H or 152H in Specifications E 100. Dir sions of both hydrometers are the same, the scale being only item of difference.

3.4 *Sedimentation Cylinder*—A glass cylinder essent 18 in. (457 mm) in height and 2½ in. (63.5 mm) in diam and marked for a volume of 1000 mL. The inside diam shall be such that the 1000-mL mark is 36 ± 2 cm from bottom on the inside.

3.5 *Thermometer*—A thermometer accurate to (0.5°C).

3.6 *Sieves*—A series of sieves, of square-mesh woven- cloth, conforming to the requirements of Specification E A full set of sieves includes the following (Note 6):

[1] This test method is under the jurisdiction of ASTM Committee D-18 on Soil and Rock and is the direct responsibility of Subcommittee D18.03 on Texture, Plasticity, and Density Characteristics of Soils.

Current edition approved Nov. 21, 1963. Originally published 1935. Replaces D 422 – 62.

[2] *Annual Book of ASTM Standards*, Vol 04.08.

[3] *Annual Book of ASTM Standards*, Vol 14.02.

[4] *Annual Book of ASTM Standards*, Vol 14.03.

[5] Detailed working drawings for this cup are available at a nominal cost the American Society for Testing and Materials, 1916 Race St., Philadelphia 19103. Order Adjunct No. 12-404220-00.

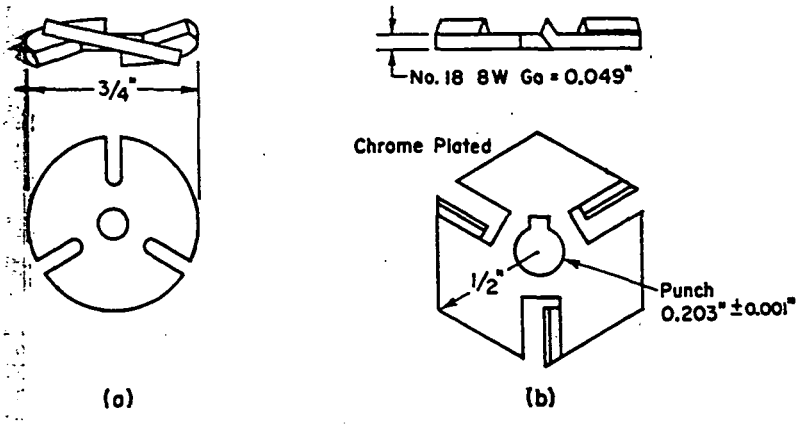

Metric Equivalents					
in.	0.001	0.049	0.203	½	¾
mm	0.03	1.24	5.16	12.7	19.0

FIG. 1 Detail of Stirring Paddles

3-in. (75-mm)	No. 10 (2.00-mm)
2-in. (50-mm)	No. 20 (850-µm)
1½-in. (37.5-mm)	No. 40 (425-µm)
1-in. (25.0-mm)	No. 60 (250-µm)
¾-in. (19.0-mm)	No. 140 (106-µm)
⅜-in. (9.5-mm)	No. 200 (75-µm)
No. 4 (4.75-mm)	

NOTE 6—A set of sieves giving uniform spacing of points for the graph, as required in Section 17, may be used if desired. This set consists of the following sieves:

3-in. (75-mm)	No. 16 (1.18-mm)
1½-in. (37.5-mm)	No. 30 (600-µm)
¾-in. (19.0-mm)	No. 50 (300-µm)
⅜-in. (9.5-mm)	No. 100 (150-µm)
No. 4 (4.75-mm)	No. 200 (75-µm)
No. 8 (2.36-mm)	

3.7 *Water Bath or Constant-Temperature Room*—A water bath or constant-temperature room for maintaining the soil suspension at a constant temperature during the hydrometer analysis. A satisfactory water tank is an insulated tank that maintains the temperature of the suspension at a convenient constant temperature at or near 68°F (20°C). Such a device is illustrated in Fig. 4. In cases where the work is performed in a room at an automatically controlled constant temperature, the water bath is not necessary.

3.8 *Beaker*—A beaker of 250-mL capacity.

3.9 *Timing Device*—A watch or clock with a second hand.

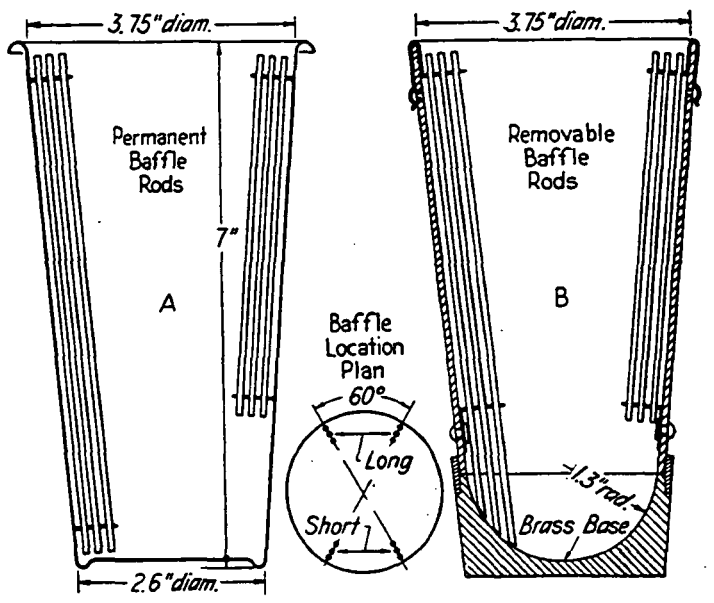

Metric Equivalents			
in.	1.3	2.6	3.75
mm	33	66	95.2

FIG. 2 Dispersion Cups of Apparatus

4. Dispersing Agent

4.1 A solution of sodium hexametaphosphate (sometimes called sodium metaphosphate) shall be used in distilled or demineralized water, at the rate of 40 g of sodium hexametaphosphate/litre of solution (Note 7).

NOTE 7—Solutions of this salt, if acidic, slowly revert or hydrolyze back to the orthophosphate form with a resultant decrease in dispersive action. Solutions should be prepared frequently (at least once a month) or adjusted to pH of 8 or 9 by means of sodium carbonate. Bottles containing solutions should have the date of preparation marked on them.

4.2 All water used shall be either distilled or demineralized water. The water for a hydrometer test shall be brought to the temperature that is expected to prevail during the hydrometer test. For example, if the sedimentation cylinder is to be placed in the water bath, the distilled or demineralized water to be used shall be brought to the temperature of the controlled water bath; or, if the sedimentation cylinder is used in a room with controlled temperature, the water for the test shall be at the temperature of the room. The basic temperature for the hydrometer test is 68°F (20°C). Small variations of temperature do not introduce differences that are of practical significance and do not prevent the use of corrections derived as prescribed.

000142

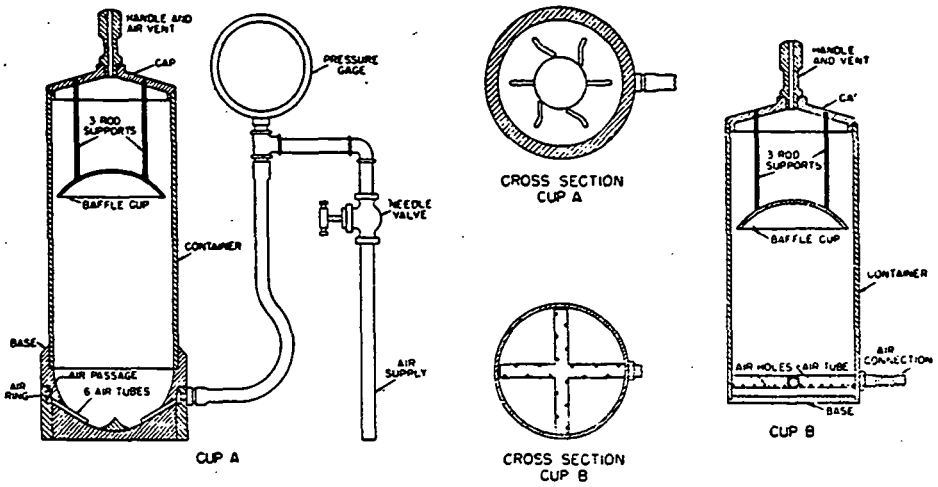

FIG. 3 Air-Jet Dispersion Cups of Apparatus B

5. Test Sample

5.1 Prepare the test sample for mechanical analysis as outlined in Practice D 421. During the preparation procedure the sample is divided into two portions. One portion contains only particles retained on the No. 10 (2.00-mm) sieve while the other portion contains only particles passing the No. 10 sieve. The mass of air-dried soil selected for purpose of tests, as prescribed in Practice D 421, shall be sufficient to yield quantities for mechanical analysis as follows:

5.1.1 The size of the portion retained on the No. 10 sieve shall depend on the maximum size of particle, according to the following schedule:

Nominal Diameter of Largest Particles, in. (mm)	Approximate Minimum Mass of Portion, g
⅜ (9.5)	500
¾ (19.0)	1000
1 (25.4)	2000
1½ (38.1)	3000
2 (50.8)	4000
3 (76.2)	5000

5.1.2 The size of the portion passing the No. 10 sieve shall be approximately 115 g for sandy soils and approximately 65 g for silt and clay soils.

5.2 Provision is made in Section 5 of Practice D 421 for weighing of the air-dry soil selected for purpose of tests, the separation of the soil on the No. 10 sieve by dry-sieving and washing, and the weighing of the washed and dried fraction retained on the No. 10 sieve. From these two masses the percentages retained and passing the No. 10 sieve can be calculated in accordance with 12.1.

NOTE 8—A check on the mass values and the thoroughness of pulverization of the clods may be secured by weighing the portion passing the No. 10 sieve and adding this value to the mass of the washed and oven-dried portion retained on the No. 10 sieve.

SIEVE ANALYSIS OF PORTION RETAINED ON NO. 10 (2.00-mm) SIEVE

6. Procedure

6.1 Separate the portion retained on the No. 10 (2.00-mm) sieve into a series of fractions using the 3-in. (75-mm), 2-in. (50-mm), 1½-in. (37.5-mm), 1-in. (25.0-mm (19.0-mm), ⅜-in. (9.5-mm), No. 4 (4.75-mm), and sieves, or as many as may be needed depending sample, or upon the specifications for the materi test.

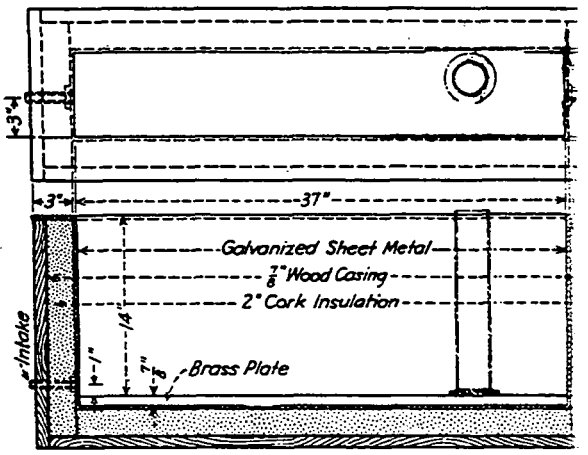

Metric Equivalents					
in.	⅞	1	3	6¼	14
mm	22.2	25.4	76.2	158.2	356

FIG. 4 Insulated Water Bath

6.2 Conduct the sieving operation by means of and vertical motion of the sieve, accompanied by action in order to keep the sample moving continuo the surface of the sieve. In no case turn or ma fragments in the sample through the sieve by hand. (sieving until not more than 1 mass % of the resic sieve passes that sieve during 1 min of sievin mechanical sieving is used, test the thoroughness c by using the hand method of sieving as described a

6.3 Determine the mass of each fraction on a conforming to the requirements of 3.1. At the weighing, the sum of the masses retained on all t used should equal closely the original mass of the sieved.

000143

HYDROMETER AND SIEVE ANALYSIS OF PORTION PASSING THE NO. 10 (2.00-mm) SIEVE

7. Determination of Composite Correction for Hydrometer Reading

7.1 Equations for percentages of soil remaining in suspension, as given in 14.3, are based on the use of distilled or demineralized water. A dispersing agent is used in the water, however, and the specific gravity of the resulting liquid is appreciably greater than that of distilled or demineralized water.

7.1.1 Both soil hydrometers are calibrated at 68°F (20°C), and variations in temperature from this standard temperature produce inaccuracies in the actual hydrometer readings. The amount of the inaccuracy increases as the variation from the standard temperature increases.

7.1.2 Hydrometers are graduated by the manufacturer to be read at the bottom of the meniscus formed by the liquid on the stem. Since it is not possible to secure readings of soil suspensions at the bottom of the meniscus, readings must be taken at the top and a correction applied.

7.1.3 The net amount of the corrections for the three items enumerated is designated as the composite correction, and may be determined experimentally.

7.2 For convenience, a graph or table of composite corrections for a series of 1° temperature differences for the range of expected test temperatures may be prepared and used as needed. Measurement of the composite corrections may be made at two temperatures spanning the range of expected test temperatures, and corrections for the intermediate temperatures calculated assuming a straight-line relationship between the two observed values.

7.3 Prepare 1000 mL of liquid composed of distilled or demineralized water and dispersing agent in the same proportion as will prevail in the sedimentation (hydrometer) test. Place the liquid in a sedimentation cyclinder and the cylinder in the constant-temperature water bath, set for one of the two temperatures to be used. When the temperature of the liquid becomes constant, insert the hydrometer, and, after a short interval to permit the hydrometer to come to the temperature of the liquid, read the hydrometer at the top of the meniscus formed on the stem. For hydrometer 151H the composite correction is the difference between this reading and one; for hydrometer 152H it is the difference between the reading and zero. Bring the liquid and the hydrometer to the other temperature to be used, and secure the composite correction as before.

8. Hygroscopic Moisture

8.1 When the sample is weighed for the hydrometer test, weigh out an auxiliary portion of from 10 to 15 g in a small metal or glass container, dry the sample to a constant mass in an oven at 230 ± 9°F (110 ± 5°C), and weigh again. Record the masses.

9. Dispersion of Soil Sample

9.1 When the soil is mostly of the clay and silt sizes, weigh out a sample of air-dry soil of approximately 50 g. When the soil is mostly sand the sample should be approximately 100 g.

9.2 Place the sample in the 250-mL beaker and cover with 125 mL of sodium hexametaphosphate solution (40 g/L). Stir until the soil is thoroughly wetted. Allow to soak for at least 16 h.

9.3 At the end of the soaking period, disperse the sample further, using either stirring apparatus A or B. If stirring apparatus A is used, transfer the soil - water slurry from the beaker into the special dispersion cup shown in Fig. 2, washing any residue from the beaker into the cup with distilled or demineralized water (Note 9). Add distilled or demineralized water, if necessary, so that the cup is more than half full. Stir for a period of 1 min.

NOTE 9—A large size syringe is a convenient device for handling the water in the washing operation. Other devices include the wash-water bottle and a hose with nozzle connected to a pressurized distilled water tank.

9.4 If stirring apparatus B (Fig. 3) is used, remove the cover cap and connect the cup to a compressed air supply by means of a rubber hose. A air gage must be on the line between the cup and the control valve. Open the control valve so that the gage indicates 1 psi (7 kPa) pressure (Note 10). Transfer the soil - water slurry from the beaker to the air-jet dispersion cup by washing with distilled or demineralized water. Add distilled or demineralized water, if necessary, so that the total volume in the cup is 250 mL, but no more.

NOTE 10—The initial air pressure of 1 psi is required to prevent the soil - water mixture from entering the air-jet chamber when the mixture is transferred to the dispersion cup.

9.5 Place the cover cap on the cup and open the air control valve until the gage pressure is 20 psi (140 kPa). Disperse the soil according to the following schedule:

Plasticity Index	Dispersion Period, min
Under 5	5
6 to 20	10
Over 20	15

Soils containing large percentages of mica need be dispersed for only 1 min. After the dispersion period, reduce the gage pressure to 1 psi preparatory to transfer of soil - water slurry to the sedimentation cylinder.

10. Hydrometer Test

10.1 Immediately after dispersion, transfer the soil - water slurry to the glass sedimentation cylinder, and add distilled or demineralized water until the total volume is 1000 mL.

10.2 Using the palm of the hand over the open end of the cylinder (or a rubber stopper in the open end), turn the cylinder upside down and back for a period of 1 min to complete the agitation of the slurry (Note 11). At the end of 1 min set the cylinder in a convenient location and take hydrometer readings at the following intervals of time (measured from the beginning of sedimentation), or as many as may be needed, depending on the sample or the specification for the material under test: 2, 5, 15, 30, 60, 250, and 1440 min. If the controlled water bath is used, the sedimentation cylinder should be placed in the bath between the 2- and 5-min readings.

NOTE 11—The number of turns during this minute should be approximately 60, counting the turn upside down and back as two turns.

Any soil remaining in the bottom of the cylinder during the first few turns should be loosened by vigorous shaking of the cylinder while it is in the inverted position.

10.3 When it is desired to take a hydrometer reading, carefully insert the hydrometer about 20 to 25 s before the reading is due to approximately the depth it will have when the reading is taken. As soon as the reading is taken, carefully remove the hydrometer and place it with a spinning motion in a graduate of clean distilled or demineralized water.

NOTE 12—It is important to remove the hydrometer immediately after each reading. Readings shall be taken at the top of the meniscus formed by the suspension around the stem, since it is not possible to secure readings at the bottom of the meniscus.

10.4 After each reading, take the temperature of the suspension by inserting the thermometer into the suspension.

11. Sieve Analysis

11.1 After taking the final hydrometer reading, transfer the suspension to a No. 200 (75-µm) sieve and wash with tap water until the wash water is clear. Transfer the material on the No. 200 sieve to a suitable container, dry in an oven at 230 ± 9°F (110 ± 5°C) and make a sieve analysis of the portion retained, using as many sieves as desired, or required for the material, or upon the specification of the material under test.

CALCULATIONS AND REPORT

12. Sieve Analysis Values for the Portion Coarser than the No. 10 (2.00-mm) Sieve

12.1 Calculate the percentage passing the No. 10 sieve by dividing the mass passing the No. 10 sieve by the mass of soil originally split on the No. 10 sieve, and multiplying the result by 100. To obtain the mass passing the No. 10 sieve, subtract the mass retained on the No. 10 sieve from the original mass.

12.2 To secure the total mass of soil passing the No. 4 (4.75-mm) sieve, add to the mass of the material passing the No. 10 sieve the mass of the fraction passing the No. 4 sieve and retained on the No. 10 sieve. To secure the total mass of soil passing the ⅜-in. (9.5-mm) sieve, add to the total mass of soil passing the No. 4 sieve, the mass of the fraction passing the ⅜-in. sieve and retained on the No. 4 sieve. For the remaining sieves, continue the calculations in the same manner.

12.3 To determine the total percentage passing for each sieve, divide the total mass passing (see 12.2) by the total mass of sample and multiply the result by 100.

13. Hygroscopic Moisture Correction Factor

13.1 The hydroscopic moisture correction factor is the ratio between the mass of the oven-dried sample and the air-dry mass before drying. It is a number less than one, except when there is no hygroscopic moisture.

14. Percentages of Soil in Suspension

14.1 Calculate the oven-dry mass of soil used in the hydrometer analysis by multiplying the air-dry mass by the hygroscopic moisture correction factor.

14.2 Calculate the mass of a total sample represented by the mass of soil used in the hydrometer test, by dividing the oven-dry mass used by the percentage passing the No. 10 (2.00-mm) sieve, and multiplying the result by 100. T value is the weight W in the equation for percent remaining in suspension.

TABLE 1 Values of Correction Factor, a, for Different Spec Gravities of Soil Particles[A]

Specific Gravity	Correction Factor[A]
2.95	0.94
2.90	0.95
2.85	0.96
2.80	0.97
2.75	0.98
2.70	0.99
2.65	1.00
2.60	1.01
2.55	1.02
2.50	1.03
2.45	1.05

[A] For use in equation for percentage of soil remaining in suspension when Hydrometer 152H.

14.3 The percentage of soil remaining in suspension at level at which the hydrometer is measuring the density of suspension may be calculated as follows (Note 13): hydrometer 151H:

$$P = [(100\,000/W) \times G/(G - G_1)](R - G_1)$$

NOTE 13—The bracketed portion of the equation for hydrom 151H is constant for a series of readings and may be calculated first then multiplied by the portion in the parentheses.

For hydrometer 152H:

$$P = (Ra/W) \times 100$$

where:

a = correction faction to be applied to the reading hydrometer 152H. (Values shown on the scale computed using a specific gravity of 2.65. Correct factors are given in Table 1),

P = percentage of soil remaining in suspension at the le at which the hydrometer measures the density of suspension,

R = hydrometer reading with composite correction plied (Section 7),

W = oven-dry mass of soil in a total test sample rep sented by mass of soil dispersed (see 14.2), g,

G = specific gravity of the soil particles, and

G_1 = specific gravity of the liquid in which soil particles suspended. Use numerical value of one in bc instances in the equation. In the first instance a possible variation produces no significant effect, a in the second instance, the composite correction for is based on a value of one for G_1.

15. Diameter of Soil Particles

15.1 The diameter of a particle corresponding to t percentage indicated by a given hydrometer reading shall calculated according to Stokes' law (Note 14), on the ba that a particle of this diameter was at the surface of t suspension at the beginning of sedimentation and had settl to the level at which the hydrometer is measuring the densi of the suspension. According to Stokes' law:

$$D = \sqrt{[30n/980(G - G_1)] \times L/T}$$

where:

D = diameter of particle, mm,

000145

n = coefficient of viscosity of the suspending medium (in this case water) in poises (varies with changes in temperature of the suspending medium),

L = distance from the surface of the suspension to the level at which the density of the suspension is being measured, cm. (For a given hydrometer and sedimentation cylinder, values vary according to the hydrometer readings. This distance is known as effective depth (Table 2)),

T = interval of time from beginning of sedimentation to the taking of the reading, min,

G = specific gravity of soil particles, and

G_1 = specific gravity (relative density) of suspending medium (value may be used as 1.000 for all practical purposes).

NOTE 14—Since Stokes' law considers the terminal velocity of a single sphere falling in an infinity of liquid, the sizes calculated represent the diameter of spheres that would fall at the same rate as the soil particles.

15.2 For convenience in calculations the above equation may be written as follows:

$$D = K\sqrt{L/T}$$

where:

K = constant depending on the temperature of the suspension and the specific gravity of the soil particles. Values of K for a range of temperatures and specific gravities are given in Table 3. The value of K does not change for a series of readings constituting a test, while values of L and T do vary.

15.3 Values of D may be computed with sufficient accuracy, using an ordinary 10-in. slide rule.

NOTE 15—The value of L is divided by T using the A- and B-scales, the square root being indicated on the D-scale. Without ascertaining the value of the square root it may be multiplied by K, using either the C- or CI-scale.

16. Sieve Analysis Values for Portion Finer than No. 10 (2.00-mm) Sieve

16.1 Calculation of percentages passing the various sieves used in sieving the portion of the sample from the hydrometer test involves several steps. The first step is to calculate the mass of the fraction that would have been retained on the No. 10 sieve had it not been removed. This mass is equal to the total percentage retained on the No. 10 sieve (100 minus total percentage passing) times the mass of the total sample represented by the mass of soil used (as calculated in 14.2), and the result divided by 100.

16.2 Calculate next the total mass passing the No. 200 sieve. Add together the fractional masses retained on all the sieves, including the No. 10 sieve, and subtract this sum from the mass of the total sample (as calculated in 14.2).

16.3 Calculate next the total masses passing each of the other sieves, in a manner similar to that given in 12.2.

16.4 Calculate last the total percentages passing by dividing the total mass passing (as calculated in 16.3) by the total mass of sample (as calculated in 14.2), and multiply the result by 100.

17. Graph

17.1 When the hydrometer analysis is performed, a graph of the test results shall be made, plotting the diameters of the particles on a logarithmic scale as the abscissa and the percentages smaller than the corresponding diameters to an

TABLE 2 Values of Effective Depth Based on Hydrometer and Sedimentation Cylinder of Specified Sizes[A]

Hydrometer 151H		Hydrometer 152H			
Actual Hydrometer Reading	Effective Depth, L, cm	Actual Hydrometer Reading	Effective Depth, L, cm	Actual Hydrometer Reading	Effective Depth, L, cm
1.000	16.3	0	16.3	31	11.2
1.001	16.0	1	16.1	32	11.1
1.002	15.8	2	16.0	33	10.9
1.003	15.5	3	15.8	34	10.7
1.004	15.2	4	15.6	35	10.6
1.005	15.0	5	15.5		
1.006	14.7	6	15.3	36	10.4
1.007	14.4	7	15.2	37	10.2
1.008	14.2	8	15.0	38	10.1
1.009	13.9	9	14.8	39	9.9
1.010	13.7	10	14.7	40	9.7
1.011	13.4	11	14.5	41	9.6
1.012	13.1	12	14.3	42	9.4
1.013	12.9	13	14.2	43	9.2
1.014	12.6	14	14.0	44	9.1
1.015	12.3	15	13.8	45	8.9
1.016	12.1	16	13.7	46	8.8
1.017	11.8	17	13.5	47	8.6
1.018	11.5	18	13.3	48	8.4
1.019	11.3	19	13.2	49	8.3
1.020	11.0	20	13.0	50	8.1
1.021	10.7	21	12.9	51	7.9
1.022	10.5	22	12.7	52	7.8
1.023	10.2	23	12.5	53	7.6
1.024	10.0	24	12.4	54	7.4
1.025	9.7	25	12.2	55	7.3
1.026	9.4	26	12.0	56	7.1
1.027	9.2	27	11.9	57	7.0
1.028	8.9	28	11.7	58	6.8
1.029	8.6	29	11.5	59	6.6
1.030	8.4	30	11.4	60	6.5
1.031	8.1				
1.032	7.8				
1.033	7.6				
1.034	7.3				
1.035	7.0				
1.036	6.8				
1.037	6.5				
1.038	6.2				

[A] Values of effective depth are calculated from the equation:

$$L = L_1 + \tfrac{1}{2}\,[L_2 - (V_B/A)]$$

where:

L = effective depth, cm,

L_1 = distance along the stem of the hydrometer from the top of the bulb to the mark for a hydrometer reading, cm,

L_2 = overall length of the hydrometer bulb, cm,

V_B = volume of hydrometer bulb, cm^3, and

A = cross-sectional area of sedimentation cylinder, cm^2

Values used in calculating the values in Table 2 are as follows:

For both hydrometers, 151H and 152H:

L_2 = 14.0 cm

V_B = 67.0 cm^3

A = 27.8 cm^2

For hydrometer 151H:

L_1 = 10.5 cm for a reading of 1.000

= 2.3 cm for a reading of 1.031

For hydrometer 152H:

L_1 = 10.5 cm for a reading of 0 g/litre

= 2.3 cm for a reading of 50 g/litre

TABLE 3 Values of K for Use in Equation for Computing Diameter of Particle in Hydrometer Analysis

Temperature, °C	Specific Gravity of Soil Particles								
	2.45	2.50	2.55	2.60	2.65	2.70	2.75	2.80	2.
16	0.01510	0.01505	0.01481	0.01457	0.01435	0.01414	0.01394	0.01374	0.0
17	0.01511	0.01486	0.01462	0.01439	0.01417	0.01396	0.01376	0.01356	0.0
18	0.01492	0.01467	0.01443	0.01421	0.01399	0.01378	0.01359	0.01339	0.0
19	0.01474	0.01449	0.01425	0.01403	0.01382	0.01361	0.01342	0.1323	0.0
20	0.01456	0.01431	0.01408	0.01386	0.01365	0.01344	0.01325	0.01307	0.0
21	0.01438	0.01414	0.01391	0.01369	0.01348	0.01328	0.01309	0.01291	0.0
22	0.01421	0.01397	0.01374	0.01353	0.01332	0.01312	0.01294	0.01276	0.0
23	0.01404	0.01381	0.01358	0.01337	0.01317	0.01297	0.01279	0.01261	0.0
24	0.01388	0.01365	0.01342	0.01321	0.01301	0.01282	0.01264	0.01246	0.0
25	0.01372	0.01349	0.01327	0.01306	0.01286	0.01267	0.01249	0.01232	0.0
26	0.01357	0.01334	0.01312	0.01291	0.01272	0.01253	0.01235	0.01218	0.0
27	0.01342	0.01319	0.01297	0.01277	0.01258	0.01239	0.01221	0.01204	0.0
28	0.01327	0.01304	0.01283	0.01264	0.01244	0.01255	0.01208	0.01191	0.0
29	0.01312	0.01290	0.01269	0.01249	0.01230	0.01212	0.01195	0.01178	0.0
30	0.01298	0.01276	0.01256	0.01236	0.01217	0.01199	0.01182	0.01165	0.0

arithmetic scale as the ordinate. When the hydrometer analysis is not made on a portion of the soil, the preparation of the graph is optional, since values may be secured directly from tabulated data.

18. Report

18.1 The report shall include the following:

18.1.1 Maximum size of particles,

18.1.2 Percentage passing (or retained on) each sieve, which may be tabulated or presented by plotting on a graph (Note 16),

18.1.3 Description of sand and gravel particles:

18.1.3.1 Shape—rounded or angular,

18.1.3.2 Hardness—hard and durable, soft, or weathered and friable,

18.1.4 Specific gravity, if unusually high or low,

18.1.5 Any difficulty in dispersing the fraction passing the No. 10 (2.00-mm) sieve, indicating any change in type and amount of dispersing agent, and

18.1.6 The dispersion device used and the length of the dispersion period.

NOTE 16—This tabulation of graph represents the gradation of the sample tested. If particles larger than those contained in the sample were removed before testing, the report shall so state giving the amount and maximum size.

18.2 For materials tested for compliance with definite specifications, the fractions called for in such specifications shall be reported. The fractions smaller than the No. 10 sieve shall be read from the graph.

18.3 For materials for which compliance with definite specifications is not indicated and when the soil is composed almost entirely of particles passing the No. 4 (4.75-mm) sieve, the results read from the graph may be reported as follows:

(1) Gravel, passing 3-in. and retained on No. 4 sieve .....
(2) Sand, passing No. 4 sieve and retained on No. 200 sieve .....
  (a) Coarse sand, passing No. 4 sieve and retained on No. 10 sieve .....
  (b) Medium sand, passing No. 10 sieve and retained on No. 40 sieve .....
  (c) Fine sand, passing No. 40 sieve and retained on No. 200 sieve .....
(3) Silt size, 0.074 to 0.005 mm .....
(4) Clay size, smaller than 0.005 mm .....
  Colloids, smaller than 0.001 mm .....

18.4 For materials for which compliance with specifications is not indicated and when the soil c material retained on the No. 4 sieve sufficient to re sieve analysis on that portion, the results may be repc follows (Note 17):

SIEVE ANALYSIS

Sieve Size	Perce Pas
3-in.	.....
2-in.	.....
1½-in.	.....
1-in.	.....
¾-in.	.....
⅜-in.	.....
No. 4 (4.75-mm)	.....
No. 10 (2.00-mm)	.....
No. 40 (425-µm)	.....
No. 200 (75-µm)	.....

HYDROMETER ANALYSIS

0.074 mm	.....
0.005 mm	.....
0.001 mm	.....

NOTE 17—No. 8 (2.36-mm) and No. 50 (300-µm) sieves substituted for No. 10 and No. 40 sieves.

19. Keywords

19.1 grain-size; hydrometer analysis; hygroscopic ture; particle-size; sieve analysis

The American Society for Testing and Materials takes no position respecting the validity of any patent rights asserted in connection with any item mentioned in this standard. Users of this standard are expressly advised that determination of the validity of any such patent rights, and the risk of infringement of such rights, are entirely their own responsibility.

This standard is subject to revision at any time by the responsible technical committee and must be reviewed every five years and if not revised, either reaffirmed or withdrawn. Your comments are invited either for revision of this standard or for additional standards and should be addressed to ASTM Headquarters. Your comments will receive careful consideration at a meeting of the responsible technical committee, which you may attend. If you feel that your comments have not received a fair hearing you should make your views known to the ASTM Committee on Standards, 1916 Race St., Philadelphia, PA 19103.

000147

Designation: D 698 - 91

Test Method for Laboratory Compaction Characteristics of Soil Using Standard Effort (12,400 ft-lbf/ft^3 (600 kN-m/m^3))[1]

This standard is issued under the fixed designation D 698; the number immediately following the designation indicates the year of original adoption or, in the case of revision, the year of last revision. A number in parentheses indicates the year of last reapproval. A superscript epsilon (ε) indicates an editorial change since the last revision or reapproval.

1. Scope

1.1 This test method covers laboratory compaction procedures used to determine the relationship between water content and dry unit weight of soils (compaction curve) compacted in a 4 or 6-in. (101.6 or 152.4-mm) diameter mold with a 5.5-lbf (24.4-N) rammer dropped from a height of 12 in. (305 mm) producing a compactive effort of 12,400 ft-lbf/ft^3 (600 kN-m/m^3).

NOTE 1—The equipment and procedures are similar as those proposed by R. R. Proctor (*Engineering News Record*—September 7, 1933) with this one major exception: his rammer blows were applied as "12 inch firm strokes" instead of free fall, producing variable compactive effort depending on the operator, but probably in the range 15,000 to 25,000 ft-lbf/ft^3 (700 to 1,200 kN-m/m^3). The standard effort test (see 3.2.2) is sometimes referred to as the Proctor Test.

NOTE 2—Soils and soil-aggregate mixtures should be regarded as natural occurring fine- or coarse-grained soils or composites or mixtures of natural soils, or mixtures of natural and processed soils or aggregates such as silt, gravel, or crushed rock.

1.2 This test method applies only to soils that have 30 % or less by weight of particles retained on the ¾-inch (19.0-mm) sieve.

NOTE 3—For relationships between unit weights and water contents of soils with 30 % or less by weight of material retained on the ¾-in. (19.0-mm) sieve to unit weights and water contents of the fraction passing ¾-in. (19.0-mm) sieve, see Practice D 4718.

1.3 Three alternative procedures are provided. The procedure used shall be as indicated in the specification for the material being tested. If no procedure is specified, the choice should be based on the material gradation.

1.3.1 *Procedure A:*

1.3.1.1 *Mold*—4-in. (101.6-mm) diameter.

1.3.1.2 *Material*—Passing No. 4 (4.75-mm) sieve.

1.3.1.3 *Layers*—Three.

1.3.1.4 *Blows per layer*—25.

1.3.1.5 *Use*—May be used if 20 % or less by weight of the material is retained on the No. 4 (4.75-mm) sieve.

1.3.1.6 *Other Use*—If this procedure is not specified, materials that meet these gradation requirements may be tested using Procedures B or C.

1.3.2 *Procedure B:*

1.3.2.1 *Mold*—4-in. (101.6-mm) diameter.

1.3.2.2 *Material*—Passing ⅜-in. (9.5-mm) sieve.

1.3.2.3 *Layers*—Three.

1.3.2.4 *Blows per layer*—25.

1.3.2.5 *Use*—Shall be used if more than 20 % by weight of the material is retained on the No. 4 (4.75-mm) sieve and 20 % or less by weight of the material is retained on the ⅜-in. (9.5-mm) sieve.

1.3.2.6 *Other Use*—If this procedure is not specified, materials that meet these gradation requirements may be tested using Procedure C.

1.3.3 *Procedure C:*

1.3.3.1 *Mold*—6-in. (152.4-mm) diameter.

1.3.3.2 *Material*—Passing ¾-inch (19.0-mm) sieve.

1.3.3.3 *Layers*—Three.

1.3.3.4 *Blows per layer*—56.

1.3.3.5 *Use*—Shall be used if more than 20 % by weight of the material is retained on the ⅜-in. (9.5-mm) sieve and less than 30 % by weight of the material is retained on the ¾-in. (19.0-mm) sieve.

1.3.4 The 6-in. (152.4-mm) diameter mold shall not be used with Procedure A or B.

NOTE 4—Results have been found to vary slightly when a material is tested at the same compactive effort in different size molds.

1.4 If the test specimen contains more than 5 % by weight oversize fraction (coarse fraction) and the material will not be included in the test, corrections must be made to the unit weight and water content of the specimen or to the appropriate field in place density test specimen using Practice D 4718.

1.5 This test method will generally produce a well defined maximum dry unit weight for non-free draining soils. If this test method is used for free draining soils the maximum unit weight may not be well defined, and can be less than obtained using Test Methods D 4253.

1.6 The values in inch-pound units are to be regarded as the standard. The values stated in SI units are provided for information only.

1.6.1 In the engineering profession it is customary practice to use, interchangeably, units representing both mass and force, unless dynamic calculations ($F = Ma$) are involved. This implicitly combines two separate systems of units, that is, the absolute system and the gravimetric system. It is scientifically undesirable to combine the use of two separate systems within a single standard. This test method has been written using inch-pound units (gravimetric system) where the pound (lbf) represents a unit of force. The use of mass (lbm) is for convenience of units and is not intended to convey the use is scientifically correct. Conversions are given in the SI system in accordance with Practice E 380. The use of balances or scales recording pounds of mass (lbm), or the recording of density in lbm/ft^3 should not be regarded as nonconformance with this standard.

[1] This test method is under the jurisdiction of ASTM Committee D-18 on Soil and Rock and is the direct responsibility of Subcommittee D18.03 on Texture, Plasticity and Density Characteristics of Soils.

Current edition approved Nov. 19, 1991. Published January 1992.

1.7 *This standard does not purport to address all of the safety problems, if any, associated with its use. It is the responsibility of the user of this standard to establish appropriate safety and health practices and determine the applicability of regulatory limitations prior to use.*

2. Referenced Documents

2.1 *ASTM Standards:*

C 127 Test Method for Specific Gravity and Absorption of Coarse Aggregate[2]

C 136 Method for Sieve Analysis of Fine and Coarse Aggregate[2]

D 422 Test Method for Particle Size Analysis of Soils[3]

D 653 Terminology Relating to Soil, Rock, and Contained Fluids[3]

D 854 Test Method for Specific Gravity of Soils[3]

D 1557 Test Methods for Moisture-Density Relations of Soils and Soil Aggregate Mixtures Using 10-lb (4.54-kg.) Rammer and 18-in. (457 mm) Drop[3]

D 2168 Test Methods for Calibration of Laboratory Mechanical-Rammer Soil Compactors[3]

D 2216 Test Method for Laboratory Determination of Water (Moisture) Content of Soil, Rock and Soil-Aggregate Mixtures[3]

D 2487 Test Method for Classification of Soils for Engineering Purposes[3]

D 2488 Practice for Description of Soils (Visual-Manual Procedure)[3]

D 4220 Practices for Preserving and Transporting Soil Samples[3]

D 4253 Test Methods for Maximum Index Density of Soils Using a Vibratory Table[3]

D 4718 Practice for Correction of Unit Weight and Water Content for Soils Containing Oversize Particles[3]

D 4753 Specification for Evaluating, Selecting and Specifying Balances and Scales For Use in Soil and Rock Testing[3]

E 1 Specification for ASTM Thermometers[4]

E 11 Specification for Wire-Cloth Sieves for Testing Purposes[5]

E 319 Practice for the Evaluation of Single-Pan Mechanical Balances[5]

E 380 Practice for Use of the International System of Units (SI) (the Modernized Metric System)[5]

3. Terminology

3.1 *Definitions*—See Terminology D 653 for general definitions.

3.2 *Description of Terms Specific to This Standard:*

3.2.1 *oversize fraction (coarse fraction),* P_c in %—the portion of total sample not used in performing the compaction test; it may be the portion of total sample retained on the No. 4 (4.75-mm), 3/8-in. (9.5-mm), or 3/4-in. (19.0-mm) sieve.

3.2.2 *standard effort*—the term for the 12,400 ft-lbf/ft^3 (600 kN-m/m^3) compactive effort applied by the equipment and procedures of this test.

3.2.3 *standard maximum dry unit weight,* γ_{dmax} in lbf/ft^3 (kN/m^3)—the maximum value defined by the compaction curve for a compaction test using standard effort.

3.2.4 *standard optimum water content,* w_o in %—the water content at which a soil can be compacted to the maximum dry unit weight using standard compactive effort.

3.2.5 *test fraction (finer fraction),* P_F in %—the portion of the total sample used in performing the compaction test; it is the fraction passing the No. 4 (4.75-mm) sieve in Procedure A, minus 3/8-in. (9.5-mm) sieve in Procedure B, or minus 3/4-in. (19.0-mm) sieve in Procedure C.

4. Summary of Test Method

4.1 A soil at a selected water content is placed in three layers into a mold of given dimensions, with each layer compacted by 25 or 56 blows of a 5.5-lbf (24.4-N) rammer dropped from a distance of 12-in. (305-mm), subjecting the soil to a total compactive effort of about 12,400 ft-lbf/ft^3 (600 kN-m/m^3). The resulting dry unit weight is determined. The procedure is repeated for a sufficient number of water contents to establish a relationship between the dry unit weight and the water content for the soil. This data, when plotted, represents a curvilinear relationship known as the compaction curve. The values of optimum water content and standard maximum dry unit weight are determined from the compaction curve.

5. Significance and Use

5.1 Soil placed as engineering fill (embankments, foundation pads, road bases) is compacted to a dense state to obtain satisfactory engineering properties such as, shear strength, compressibility, or permeability. Also, foundation soils are often compacted to improve their engineering properties. Laboratory compaction tests provide the basis for determining the percent compaction and water content needed to achieve the required engineering properties, and for controlling construction to assure that the required compaction and water contents are achieved.

5.2 During design of an engineered fill, shear, consolidation, permeability, or other tests require preparation of test specimens by compacting at some water content to some unit weight. It is common practice to first determine the optimum water content (w_o) and maximum dry unit weight (γ_{dmax}) by means of a compaction test. Test specimens are compacted at a selected water content (w), either wet or dry of optimum (w_o) or at optimum (w_o), and at a selected dry unit weight related to a percentage of maximum dry unit weight (γ_{dmax}). The selection of water content (w), either wet or dry of optimum (w_o) or at optimum (w_o) and the dry unit weight (γ_{dmax}) may be based on past experience, or a range of values may be investigated to determine the necessary percent of compaction.

6. Apparatus

6.1 *Mold Assembly*—The molds shall be cylindrical in shape, made of rigid metal and be within the capacity and dimensions indicated in 6.1.1 or 6.1.2 and Figs. 1 and 2. The walls of the mold may be solid, split, or tapered. The "split" type may consist of two half-round sections, or a section o:

[2] *Annual Book of ASTM Standards*, Vol 04.02.
[3] *Annual Book of ASTM Standards*, Vol 04.08.
[4] *Annual Book of ASTM Standards*, Vol 14.03.
[5] *Annual Book of ASTM Standards*, Vol 14.02.

000149

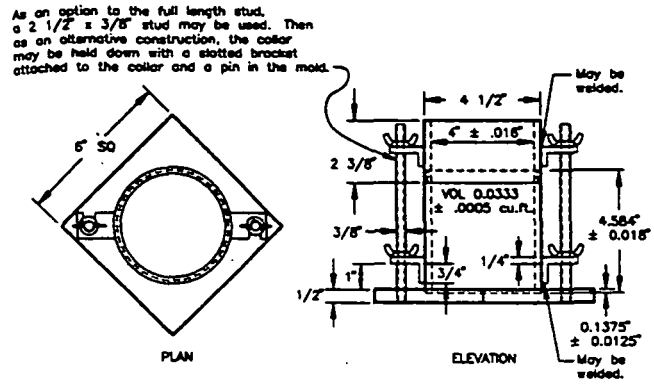

FIG. 1 4.0-in. Cylindrical Mold

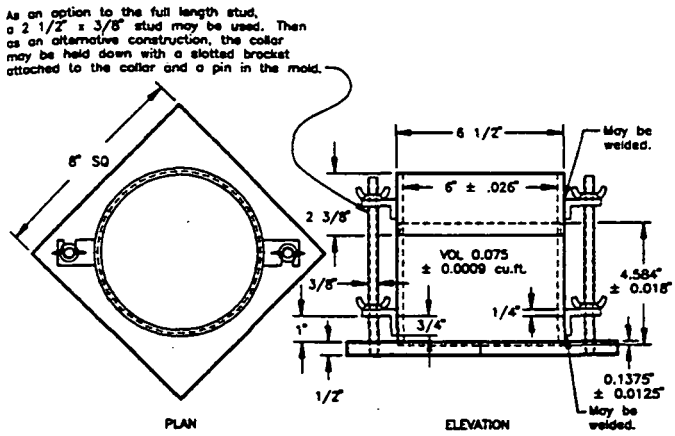

FIG. 2 6.0-in. Cylindrical Mold

pipe split along one element, which can be securely locked together to form a cylinder meeting the requirements of this section. The "tapered" type shall an internal diameter taper that is uniform and not more than 0.200 in./ft (16.7- mm/m) of mold height. Each mold shall have a base plate and an extension collar assembly, both made of rigid metal and constructed so they can be securely attached and easily detached from the mold. The extension collar assembly shall have a height extending above the top of the mold of at least 2.0 in. (50.8-mm) which may include an upper section that flares out to form a funnel provided there is at least a 0.75 in. (19.0-mm) straight cylindrical section beneath it. The extension collar shall align with the inside of the mold. The bottom of the base plate and bottom of the centrally recessed area that accepts the cylindrical mold shall be planar.

6.1.1 *Mold, 4 in.*—A mold having a 4.000 ± 0.016-in. (101.6 ± 0.4-mm) average inside diameter, a height of 4.584 ± 0.018-in. (116.4 ± 0.5-mm) and a volume of 0.0333 ± 0.0005 ft^3 (944 ± 14 cm^3). A mold assembly having the minimum required features is shown in Fig. 1.

6.1.2 *Mold, 6 in.*—A mold having a 6.000 ± 0.026-in. (152.4 ± 0.7-mm) average inside diameter, a height of 4.584 ± 0.018-in. (116.4 ± 0.5-mm), and a volume of 0.075 ± 0.0009 ft^3 (2124 ± 25 cm^3). A mold assembly having the minimum required features is shown in Fig. 2.

6.2 *Rammer*—A rammer, either manually operated as described further in 6.2.1 or mechanically operated as described in 6.2.2. The rammer shall fall freely through a distance of 12 ± 0.05-in. (304.8 ± 1.3-mm) from the surfac of the specimen. The mass of the rammer shall be 5.5 : 0.02-lbm (2.5 ± 0.01-kg), except that the mass of th mechanical rammers may be adjusted as described in Tes Methods D 2168, see Note 5. The striking face of th rammer shall be planar and circular, except as noted i: 6.2.2.3, with a diameter when new of 2.000 ± 0.005-ir (50.80 ± 0.13-mm). The rammer shall be replaced if th striking face becomes worn or bellied to the extent that th diameter exceeds 2.000 ± 0.01-in. (50.80 ± 0.25-mm).

NOTE 5—It is a common and acceptable practice in the inch-poun system to assume that the mass of the rammer is equal to its ma: determined using either a kilogram or pound balance and 1 lbf is equ: to 1 lbm or 0.4536 kg. or 1 N is equal to 0.2248 lbm or 0.1020 kg.

6.2.1 *Manual Rammer*—The rammer shall be equippe with a guide sleeve that has sufficient clearance that the fre fall of the rammer shaft and head is not restricted. The guid sleeve shall have at least four vent holes at each end (eigh holes total) located with centers ¾ ± 1/16-in. (19.0 ± 1.6-mm from each end and spaced 90 degrees apart. The minimun diameter of the vent holes shall be ⅜-in. (9.5-mm). Add: tional holes or slots may be incorporated in the guide sleev

6.2.2 *Mechanical Rammer-Circular Face*—The ramme shall operate mechanically in such a manner as to provid uniform and complete coverage of the specimen surfac There shall be 0.10 ± 0.03-in. (2.5 ± 0.8-mm) clearanc between the rammer and the inside surface of the mold at i: smallest diameter. The mechanical rammer shall meet th calibration requirements of Test Methods D 2168. Th mechanical rammer shall be equipped with a positive me chanical means to support the rammer when not in oper: tion.

6.2.2.3 *Mechanical Rammer-Sector Face*—When use with the 6-in. (152.4-mm) mold, a sector face rammer ma be used in place of the circular face rammer. The specime contact face shall have the shape of a sector of a circle radius equal to 2.90 ± 0.02-in. (73.7 ± 0.5-mm). Th rammer shall operate in such a manner that the vertex of th sector is positioned at the center of the specimen.

6.3 *Sample Extruder (optional)*—A jack, frame or othe device adapted for the purpose of extruding compacte specimens from the mold.

6.4 *Balance*—A class GP5 balance meeting the requir ments of Specification D 4753 for a balance of 1-g reac ability.

6.5 *Drying Oven*—Thermostatically controlled, preferabl of a forced-draft type and capable of maintaining a uniforr temperature of 230 ± 9°F (110 ± 5°C) throughout the dryin chamber.

6.6 *Straightedge*—A stiff metal straightedge of any conve nient length but not less than 10-in. (254-mm). The tot: length of the straightedge shall be machined straight to tolerance of ±0.005-in. (±0.1-mm). The scraping edge sha be beveled if it is thicker than ⅛-in. (3-mm).

6.7 *Sieves*—¾-in. (19.0-mm), ⅜-in. (9.5-mm), and No. (4.75-mm), conforming to the requirements of Specificatio E 11.

6.8 *Mixing Tools*—Miscellaneous tools such as mixin pan, spoon, trowel, spatula, etc., or a suitable mechanic: device for thoroughly mixing the sample of soil with incr ments of water.

000150

7. Calibration

7.1 Perform calibrations before initial use, after repairs or other occurrences that might affect the test results, at intervals not exceeding 1,000 test specimens, or annually, whichever occurs first, for the following apparatus:

7.1.2 *Balance*—Evaluate in accordance with Specification D 4753.

7.1.3 *Molds*—Determine the volume as described in Annex 1.

7.1.4 *Manual Rammer*—Verify the free fall distance, rammer mass, and rammer face in accordance with Section 6.2. Verify the guide sleeve requirements in accordance with Section 6.2.1.

7.1.5 *Mechanical Rammer*—Calibrate and adjust the mechanical rammer in accordance with Test Methods D 2168. In addition, the clearance between the rammer and the inside surface of the mold shall be verified in accordance with 6.2.2.

8. Test Sample

8.1 The required sample mass for Procedures A and B is approximately 35-lbm (16-kg), and for Procedure C is approximately 65-lbm (29-kg) of dry soil. Therefore, the field sample should have a moist mass of at least 50-lbm (23-kg) and 100-lbm (45-kg), respectively.

8.2 Determine the percentage of material retained on the No. 4 (4.75-mm), ⅜-in. (9.5-mm), or ¾-in. (19.0-mm) sieve as appropriate for choosing Procedure A, B, or C. Make this determination by separating out a representative portion from the total sample and determining the percentages passing the sieves of interest by Test Methods D 422 or Method C 136. It is only necessary to calculate percentages for the sieve or sieves for which information is desired.

9. Preparation of Apparatus

9.1 Select the proper compaction mold in accordance with the procedure (A, B, or C) being used. Determine and record its mass to the nearest gram. Assemble the mold, base and extension collar. Check the alignment of the inner wall of the mold and mold extension collar. Adjust if necessary.

9.2 Check that the rammer assembly is in good working condition and that parts are not loose or worn. Make any necessary adjustments or repairs. If adjustments or repairs are made, the rammer must be recalibrated.

10. Procedure

10.1 *Soils:*

10.1.1 Do not reuse soil that has been previously laboratory compacted.

10.1.2 When using this test method for soils containing hydrated halloysite, or where past experience with a particular soil indicates that results will be altered by air drying, use the moist preparation method (see 10.2).

10.1.3 Prepare the soil specimens for testing in accordance with 10.2 (preferred) or with 10.3.

10.2 *Moist Preparation Method (preferred)*—Without previously drying the sample, pass it through a No. 4 (4.75-mm), ⅜-in. (9.5-mm), or ¾-in. (19.0-mm) sieve, depending on the procedure (A, B, or C) being used. Determine the water content of the processed soil.

10.2.1 Prepare at least four (preferably five) specimens having water contents such that they bracket the estimated optimum water content. A specimen having a water content close to optimum should be prepared first by trial additions of water and mixing (see Note 6). Select water contents for the rest of the specimens to provide at least two specimens wet and two specimens dry of optimum, and water contents varying by about 2 %. At least two water contents are necessary on the wet and dry side of optimum to accurately define the dry unit weight compaction curve (see 10.5). Some soils with very high optimum water content or a relatively flat compaction curve may require larger water content increments to obtain a well defined maximum dry unit weight. Water content increments should not exceed 4 %.

NOTE 6—With practice it is usually possible to visually judge a point near optimum water content. Typically, soil at optimum water content can be squeezed into a lump that sticks together when hand pressure is released, but will break cleanly into two sections when "bent". At water contents dry of optimum soils tend to crumble; wet of optimum soils tend to stick together in a sticky cohesive mass. Optimum water content is typically slightly less than the plastic limit.

10.2.2 Use approximately 5-lbm (2.3-kg) of the sieved soil for each specimen to be compacted using Procedure A or B, or 13-lbm (5.9-kg) using Procedure C. To obtain the specimen water contents selected in 10.2.1, add or remove the required amounts of water as follows: to add water, spray it into the soil during mixing; to remove water, allow the soil to dry in air at ambient temperature or in a drying apparatus such that the temperature of the sample does not exceed 140°F (60°C). Mix the soil frequently during drying to maintain an even water content distribution. Thoroughly mix each specimen to ensure even distribution of water throughout and then place in a separate covered container and allow to stand in accordance with Table 1 prior to compaction. For the purpose of selecting a standing time, the soil may be classified using Test Method D 2487, Practice D 2488 or data on other samples from the same material source. For referee testing, classification shall be by Test Method D 2487.

10.3 *Dry Preparation Method*—If the sample is too damp to be friable, reduce the water content by air drying until the material is friable. Drying may be in air or by the use of drying apparatus such that the temperature of the sample does not exceed 140°F (60°C). Thoroughly break up the aggregations in such a manner as to avoid breaking individual particles. Pass the material through the appropriate sieve: No. 4 (4.75-mm), ⅜-in. (9.5-mm), or ¾-in. (19.0-mm). When preparing the material by passing over the ¾-in. sieve for compaction in the 6-in. mold, break up aggregations sufficiently to at least pass the ⅜-in. sieve in order to facilitate the distribution of water throughout the soil in later mixing.

10.3.1 Prepare at least four (preferably five) specimens in accordance with 10.2.1.

10.3.2 Use approximately 5-lbm (2.3-kg) of the sieved soil for each specimen to be compacted using Procedure A or B.

TABLE 1 Required Standing Times of Moisturized Specimens

Classification	Minimum Standing Time, h
GW, GP, SW, SP	No Requirement
GM, SM	3
All other soils	16

TABLE 2 Metric Equivalents for Figs. 1 and 2

in.	mm
0.016	0.41
0.026	0.66
0.032	0.81
0.028	0.71
½	12.70
2½	63.50
2⅝	66.70
4	101.60
4½	114.30
4.584	116.43
4¾	120.60
6	152.40
6½	165.10
6⅝	168.30
6¾	171.40
8¼	209.60
ft³	**cm³**
1/30 (0.0333)	943
0.0005	14
1/13.333 (0.0750)	2,124
0.0011	31

or 13-lbm (5.9-kg) using Procedure C. Add the required amounts of water to bring the water contents of the specimens to the values selected in 10.3.1. Follow the specimen preparation procedure specified in 10.2.2 for drying the soil or adding water into the soil and curing each test specimen.

10.4 *Compaction*—After curing, if required, each specimen shall be compacted as follows:

10.4.1 Determine and record the mass of the mold or mold and base plate.

10.4.2 Assemble and secure the mold and collar to the base plate. The mold shall rest on a uniform rigid foundation, such as provided by a cylinder or cube of concrete with a mass of not less than 200-lbm (91-kg). Secure the base plate to the rigid foundation. The method of attachment to the rigid foundation shall allow easy removal of the assembled mold, collar and base plate after compaction is completed.

10.4.3 Compact the specimen in three layers. After compaction, each layer should be approximately equal in thickness. Prior to compaction, place the loose soil into the mold and spread into a layer of uniform thickness. Lightly tamp the soil prior to compaction until it is not in a fluffy or loose state, using either the manual compaction rammer or a 2-in. (5-mm) diameter cylinder. Following compaction of each of the first two layers, any soil adjacent to the mold walls that has not been compacted or extends above the compacted surface shall be trimmed. The trimmed soil may be included with the additional soil for the next layer. A knife or other suitable device may be used. The total amount of soil used shall be such that the third compacted layer slighly extends into the collar, but does not exceed ¼-in. (6-mm) above the top of the mold. If the third layer does extend above the top of the mold by more than ¼-in. (6-mm), the specimen shall be discarded. The specimen shall be discarded when the last blow on the rammer for the third layer results in the bottom of the rammer extending below the top of the compaction mold.

10.4.4 Compact each layer with 25 blows for the 4-in. (101.6-mm) mold or with 56 blows for the 6-in. (152.4-mm) mold.

NOTE 7—When compacting specimens wetter than optimum wa content, uneven compacted surfaces can occur and operator judgem is required as to the average height of the specimen.

10.4.5 In operating the manual rammer, take care avoid lifting the guide sleeve during the rammer upstrol Hold the guide sleeve steady and within 5° of vertical. App the blows at a uniform rate of approximately 25 blows/m and in such a manner as to provide complete, unifor coverage of the specimen surface.

10.4.6 Following compaction of the last layer, remove t collar and base plate from the mold, except as noted 10.4.7. A knife may be used to trim the soil adjacent to t collar to loosen the soil from the collar before removal avoid disrupting the soil below the top of the mold.

10.4.7 Carefully trim the compacted specimen even wi the top of the mold by means of the straightedge scrap across the top of the mold to form a plane surface even wi the top of the mold. Initial trimming of the specimen abo the top of the mold with a knife may prevent the soil fro tearing below the top of the mold. Fill any holes in the t surface with unused or trimmed soil from the specime press in with the fingers, and again scrape the straighted across the top of the mold. Repeat the appropriate precedi operations on the bottom of the specimen when the mc volume was determined without the base plate. For very w or dry soils, soil or water may be lost if the base plate removed. For these situations, leave the base plate attach to the mold. When the base plate is left attached, the volur of the mold must be calibrated with the base plate attach to the mold rather than a plastic or glass plate as noted Annex 1, A1.4.

10.4.8 Determine and record the mass of the specim and mold to the nearest gram. When the base plate is le attached, determine and record the mass of the specime mold and base plate to the nearest gram.

10.4.9 Remove the material from the mold. Obtain specimen for water content by using either the whc specimen (preferred method) or a representative portio When the entire specimen is used, break it up to facilita drying. Otherwise, obtain a portion by slicing the compact specimen axially through the center and removing abo 500-g of material from the cut faces. Obtain the wat content in accordance with Test Method D 2216.

10.5 Following compaction of the last specimen, compa the wet unit weights to ensure that a desired pattern obtaining data on each side of the optimum water conte will be attained for the dry unit weight compaction curv Plotting the wet unit weight and water content of ea compacted specimen can be an aid in making the abo evaluation. If the desired pattern is not obtained, addition compacted specimens will be required. Generally, one wat content value wet of the water content defining the ma imum wet unit weight is sufficient to ensure data on the w side of optimum water content for the maximum dry un weight.

11. Calculation

11.1 Calculate the dry unit weight and water content each compacted specimen as explained in 11.3 and 11.4. Pl the values and draw the compaction curve as a smooth cur through the points (see example, Fig. 3). Plot dry unit weig

000152

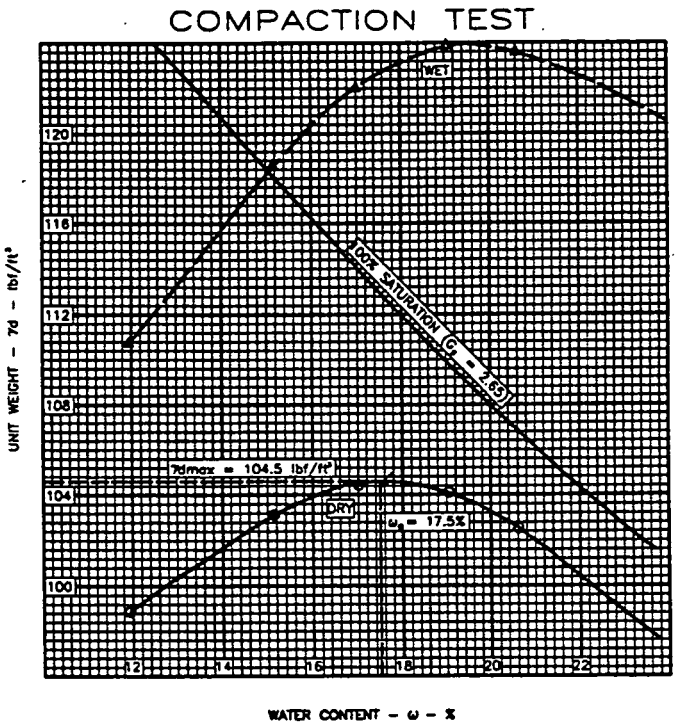

FIG. 3 Example Compaction Curve Plotting

to the nearest 0.1 lbf/ft³ (0.2 kN/m³) and water content to the nearest 0.1 %. From the compaction curve, determine the optimum water content and maximum dry unit weight. If more than 5 % by weight of oversize material was removed from the sample, calculate the corrected optimum water content and maximum dry unit weight of the total material using Practice D 4718. This correction may be made to the appropriate field in place density test specimen rather than to the laboratory test specimen.

11.2 Plot the 100 % saturation curve. Values of water content for the condition of 100 % saturation can be calculated as explained in 11.5 (see example, Fig. 3).

NOTE 8—The 100 % saturation curve is an aid in drawing the compaction curve. For soils containing more than approximately 10 % fines at water contents well above optimum, the two curves generally become roughly parallel with the wet side of the compaction curve between 92 % to 95 % saturation. Theoretically, the compaction curve cannot plot to the right of the 100 % saturation curve. If it does, there is an error in specific gravity, in measurements, in calculations, in test procedures, or in plotting.

NOTE 9—The 100 % saturation curve is sometimes referred to as the zero air voids curve or the complete saturation curve.

11.3 *Water Content, w*—Calculate in accordance with Test Method D 2216.

11.4 *Dry Unit Weights*—Calculate the moist density (Eq. 1), the dry density (Eq. 2), and then the dry unit weight (Eq. 3) as follows:

$$\rho_m = 1000(M_t - M_{md})/V \quad (1)$$

where:

ρ_m = moist density of compacted specimen, Mg/m³,
M_t = mass of moist specimen and mold, kg,
M_{md} = mass of compaction mold, kg, and
V = volume of compaction mold, m³ (see Annex 1)

$$\rho_d = \rho_m/(1 + w/100) \quad (2)$$

where:

ρ_d = dry density of compacted specimen, Mg/m³, and
w = water content, %.

$$\gamma_d = 62.43\ \rho_d \text{ in lbf/ft}^3 \quad (3)$$

or

$$\gamma_d = 9.807\ \rho_d \text{ in kN/m}^3$$

where:

γ_d = dry unit weight of compacted specimen.

11.5 To calculate points for plotting the 100 % saturation curve or zero air voids curve select values of dry unit weight, calculate corresponding values of water content corresponding to the condition of 100 % saturation as follows:

$$w_{sat} \frac{(\gamma_w)(G_s) - \gamma_d}{(\gamma_d)(G_s)} \times 100 \quad (4)$$

where:

w_{sat} = water content for complete saturation, %,
γ_w = unit weight of water, 62.43 lbf/ft³ (9.807 kn/m³),
γ_d = dry unit weight of soil, and
G_s = specific gravity of soil.

NOTE 10—Specific gravity may be estimated for the test specimen on the basis of test data from other samples of the same soil classification and source. Otherwise, a specific gravity test (Test Method C 127, Test Method D 854, or both) is necessary.

12. Report

12.1 The report shall contain the following information:

12.1.1 Procedure used (A, B, or C).

12.1.2 Preparation method used (moist or dry).

12.1.3 As received water content if determined.

12.1.4 Standard optimum water content, to the nearest 0.5 %.

12.1.5 Standard maximum dry unit weight, to the nearest 0.5 lbf/ft³.

12.1.6 Description of rammer (manual or mechanical).

12.1.7 Soil sieve data when applicable for determination of procedure (A, B, or C) used.

12.1.8 Description of material used in test, by Practice D 2488, or classification by Test Method D 2487.

12.1.9 Specific gravity and method of determination.

12.1.10 Origin of material used in test, for example, project, location, depth, and the like.

12.1.11 Compaction curve plot showing compaction points used to establish compaction curve, and 100 % saturation curve, point of maximum dry unit weight and optimum water content.

12.1.12 Oversize correction data if used, including the oversize fraction (coarse fraction), P_c in %.

13. Precision and Bias

13.1 *Precision*—Data are being evaluated to determine the precision of this test method. In addition, pertinent data is being solicited from users of the test method.

13.2 *Bias*—It is not possible to obtain information on bias because there is no other method of determining the values of standard maximum dry unit weight and optimum water content.

62

14. Keywords

14.1 NT—impact compaction using standard effort; RT—density; RT—moisture-density curves; RT—proctor test; UF—compaction characteristics; UF—soil compaction; USE—laboratory tests

ANNEX

(Mandatory Information)

A1. VOLUME OF COMPACTION MOLD

A1.1 Scope

A1.1.1 This annex describes the procedure for determining the volume of a compaction mold.

A1.1.2 The volume is determined by a water-filled method and checked by a linear-measurement method.

A1.2 Apparatus

A1.2.1 In addition to the apparatus listed in Section 6 the following items are required:

A1.2.1.1 *Vernier or Dial Caliper*—having a measuring range of at least 0 to 6 in. (0 to 150 mm) and readable to at least 0.001 in. (0.02 mm).

A1.2.1.2 *Inside Micrometer*—having a measuring range of at least 2 to 12 in. (50 to 300 mm) and readable to at least 0.001 in. (0.02 mm).

A1.2.1.3 *Plastic or Glass Plates*—Two plastic or glass plates approximately 8 in. square by ¼ in. thick (200 by 200 mm by 6 mm).

A1.2.1.4 *Thermometer*—0 to 50°C range, 0.5°C graduations, conforming to the requirements of Specification E 1.

A1.2.1.5 *Stopcock grease* or similar sealant.

A1.2.1.6 *Miscellaneous equipment*—Bulb syringe, towels, etc.

A1.3 Precautions

A1.3.1 Perform this procedure in an area isolated from drafts or extreme temperature fluctuations.

A1.4 Procedure

A1.4.1 *Water-Filling Method:*

A1.4.1.1 Lightly grease the bottom of the compaction mold and place it on one of the plastic or glass plates. Lightly grease the top of the mold. Be careful not to get grease on the inside of the mold. If it is necessary to use the base plate, as noted in 10.4.7, place the greased mold onto the base plate and secure with the locking studs.

A1.4.1.2 Determine the mass of the greased mold and both plastic or glass plates to the nearest 0.01-lbm (1-g) and record. When the base plate is being used in lieu of the bottom plastic or glass plate determine the mass of the mold, base plate and a single plastic or glass plate to be used on top of the mold to the nearest 0.01-lbm (1-g) and record.

A1.4.1.3 Place the mold and the bottom plastic or glass plate on a firm, level surface and fill the mold with water to slightly above its rim.

A1.4.1.4 Slide the second plate over the top surface of the mold so that the mold remains completely filled with water and air bubbles are not entrapped. Add or remove water as necessary with a bulb syringe.

A1.4.1.5 Completely dry any excess water from the outside of the mold and plates.

A1.4.1.6 Determine the mass of the mold, plates and water and record to the nearest 0.01-lbm (1-g).

A1.4.1.7 Determine the temperature of the water in the mold to the nearest 1°C and record. Determine and record the absolute density of water from Table A1.1.

A1.4.1.8 Calculate the mass of water in the mold by subtracting the mass determined in A1.4.1.2 from the mass determined in A1.4.1.6.

A1.4.1.9 Calculate the volume of water by dividing the mass of water by the density of water and record to the nearest 0.0001 ft^3 (1 cm^3).

A1.4.1.10 When the base plate is used for the calibration of the mold volume repeat A1.4.1.3 through A1.4.1.9.

A1.4.2 *Linear Measurement Method:*

A1.4.2.1 Using either the vernier caliper or the inside micrometer, measure the diameter of the mold 6 times at the top of the mold and 6 times at the bottom of the mold, spacing each of the six top and bottom measurements equally around the circumference of the mold. Record the values to the nearest 0.001-in. (0.02-mm).

A1.4.2.2 Using the vernier caliper, measure the inside height of the mold by making three measurements equally spaced around the circumference of the mold. Record values to the nearest 0.001-in. (0.02-mm).

A1.4.2.3 Calculate the average top diameter, average bottom diameter and average height.

A1.4.2.4 Calculate the volume of the mold and record to the nearest 0.0001 ft^3 (1 cm^3) as follows:

$$V = \frac{(\pi)(h)(d_t + d_b)^2}{(16)(1728)} \text{ (inch-pound)}$$

$$V = \frac{(\pi)(h)(d_t + d_b)^2}{(16)(10^3)} \text{ (SI)}$$

TABLE A1 Density of Water[A]

Temperature, °C (°F)	Density of Water, g/ml
18 (64.4)	0.99862
19 (66.2)	0.99843
20 (68.0)	0.99823
21 (69.8)	0.99802
22 (71.6)	0.99779
23 (73.4)	0.99756
24 (75.2)	0.99733
25 (77.0)	0.99707
26 (78.8)	0.99681

[A] Values other than shown may be obtained by referring to the Handbook of Chemistry and Physics, Chemical Rubber Publishing Co., Cleveland, Ohio.

000154

where:

V = volume of mold, ft^3 (cm^3),
h = average height, in. (mm),
d_t = average top diameter, in. (mm),
d_b = average bottom diameter, in. (mm),
$1/1728$ = constant to convert in^3 to ft^3, and
$1/10^3$ = constant to convert mm^3 to cm^3.

A1.5 Comparison of Results

A1.5.1 The volume obtained by either method should be within the volume tolerance requirements of 6.1.1 and 6.1.2.

A1.5.2 The difference between the two methods should not exceed 0.5 % of the nominal volume of the mold.

A1.5.3 Repeat the determination of volume if these criteria are not met.

A1.5.4 Failure to obtain satisfactory agreement between the two methods, even after several trials, is an indication that the mold is badly deformed and should be replaced.

A1.5.5 Use the volume of the mold determined using the water-filling method as the assigned volume value for calculating the moist and dry density (see 11.4).

The American Society for Testing and Materials takes no position respecting the validity of any patent rights asserted in connection with any item mentioned in this standard. Users of this standard are expressly advised that determination of the validity of any such patent rights, and the risk of infringement of such rights, are entirely their own responsibility.

This standard is subject to revision at any time by the responsible technical committee and must be reviewed every five years and if not revised, either reapproved or withdrawn. Your comments are invited either for revision of this standard or for additional standards and should be addressed to ASTM Headquarters. Your comments will receive careful consideration at a meeting of the responsible technical committee, which you may attend. If you feel that your comments have not received a fair hearing you should make your views known to the ASTM Committee on Standards, 1916 Race St., Philadelphia, PA 19103.

Designation: D 854 – 92

Standard Test Method for Specific Gravity of Soils[1]

This standard is issued under the fixed designation D 854; the number immediately following the designation indicates the year of original adoption or, in the case of revision, the year of last revision. A number in parentheses indicates the year of last reapproval. A superscript epsilon (ε) indicates an editorial change since the last revision or reapproval.

1. Scope

1.1 This test method covers the determination of the specific gravity of soils that pass the 4.75-mm (No. 4) sieve, by means of a pycnometer. When the soil contains particles larger than the 4.75-mm sieve, Test Method C 127 shall be used for the material retained on the 4.75-mm sieve and this test method shall be used for the material passing the 4.75-mm sieve.

1.1.1 Two procedures for performing the specific gravity are provided as follows:

1.1.1.1 *Method A*—Procedure for Oven-Dry Specimens, described in 9.1.

1.1.1.2 *Method B*—Procedure for Moist Specimens, described in 9.2. The procedure to be used shall be specified by the requesting authority. For specimens of organic soils and highly plastic, fine-grained soils, Procedure B shall be the preferred method.

1.2 When the specific gravity value is to be used in calculations in connection with the hydrometer portion of Test Method D 422, it is intended that the specific gravity test be made on that portion of the sample which passes the 2.00-mm (No. 10) sieve.

1.3 The values stated in acceptable metric units are to be regarded as standard.

1.4 *This standard does not purport to address all of the safety problems, if any, associated with its use. It is the responsibility of the user of this standard to establish appropriate safety and health practices and determine the applicability of regulatory limitations prior to use.*

2. Referenced Documents

2.1 *ASTM Standards:*

C 127 Test Method for Specific Gravity and Absorption of Coarse Aggregate[2]

C 670 Practice for Preparing Precision and Bias Statements for Test Methods for Construction Materials[2]

D 422 Test Method for Particle-Size Analysis of Soils[3]

D 653 Terminology Relating to Soil, Rock, and Contained Fluids[3]

D 2487 Test Method for Classification of Soils for Engineering Purposes[3]

D 4753 Specification for Evaluating, Selecting, and Specifying Balances and Scales for Use in Soil and Rock Testing[3]

E 1 Specification for ASTM Thermometers[4]

E 11 Specification for Wire-Cloth Sieves for Testing Purposes[5]

E 12 Terminology Relating to Density and Specific Gravity of Solids, Liquids, and Gases[6]

2.2 *AASHTO Standards:*[7]

AASHTO Test Method T100

3. Terminology

3.1 All definitions are in accordance with Terminology D 653 and E 12.

3.2 *Description of Term Specific to This Standard:*

3.2.1 *specific gravity*—the ratio of the mass of a unit volume of a material at a stated temperature to the mass of the same volume of gas-free distilled water at a stated temperature.

4. Significance and Use

4.1 The specific gravity of a soil is used in calculating the phase relationships of soils (that is, the relative volumes of solids to water and air in a given volume of soil).

4.2 The term solid particles is typically assumed to mean naturally occurring mineral particles that are not readily soluble in water. Therefore, the specific gravity of materials containing extraneous matter (such as cement, lime, and the like), water-soluble matter (such as sodium chloride), and soils containing matter with a specific gravity less than one, typically require special treatment or a qualified definition of their specific gravity.

5. Apparatus

5.1 *Pycnometer*—The pycnometer shall be one of the following:

5.1.1 *Volumetric Flask*, having a capacity of at least 100 mL.

5.1.2 *Stoppered Bottle*, having a capacity of at least 50 mL. The stopper shall be of the same material, and shall permit the emission of air and surplus water when it is put in place.

NOTE 1—Flask sizes of greater than the specified minimum capacity are recommended. Larger flasks are capable of holding larger specimens and tend to produce better statistical results.

[1] This test method is under the jurisdiction of ASTM Committee D-18 on Soil and Rock and is the direct responsibility of Subcommittee D18.03 on Texture, Plasticity and Density Characteristics of Soils.

Current edition approved Nov. 15, 1992. Published January 1993. Originally published as D 854 – 45. Last previous edition D 854 – 91.

[2] *Annual Book of ASTM Standards*, Vol 04.02.

[3] *Annual Book of ASTM Standards*, Vol 04.08.

[4] *Annual Book of ASTM Standards*, Vol 14.03.

[5] *Annual Book of ASTM Standards*, Vol 14.02.

[6] *Annual Book of ASTM Standards*, Vol 15.05.

[7] Available from American Association of State Highway and Transportation Officials, 444 N Capital St., NW, Washington, DC 20001.

5.2 *Balance*—Meeting the requirements of Specification D 4753 and readable, without estimation, to at least 0.1 % of the specimen mass.

5.3 *Drying Oven*—Thermostatically-controlled oven, capable of maintaining a uniform temperature of 110 ± 5°C (230 ± 9°F) throughout the drying chamber.

5.4 *Thermometer*, capable of measuring the temperature range within which the test is being performed, graduated in a 0.5°C (1.0°F) division scale and meeting the requirements of Specification E 1.

5.5 *Desiccator*—A desiccator cabinet or large desiccator jar of suitable size containing silica gel or anhydrous calcium sulfate.[8]

NOTE 2—It is preferable to use a desiccant that changes color to indicate when it needs reconstitution.

5.6 *Entrapped Air Removal Apparatus*—To remove entrapped air, use one of the following:

5.6.1 *Hot Plate or Bunsen Burner*, capable of maintaining a temperature adequate to boil water.

5.6.2 *Vacuum System*, a vacuum pump or water aspirator, capable of producing a partial vacuum of 100 min or less absolute pressure.

NOTE 3—A partial vacuum of 100 mm Hg absolute pressure is approximately equivalent to a 660 mm (26 in.) Hg reading on vacuum gauge at sea level.

5.7 *Miscellaneous Equipment*, specimen dishes and insulated gloves.

6. Reagents and Materials

6.1 *Purity of Water*—Where distilled water is referred to in this test method, either distilled or demineralized water may be used.

7. Test Specimen

7.1 The test specimen may be oven-dried or moistened soil and shall be representative of the total sample. In either case the specimen shall be large enough that its minimum mass in the oven-dried state is in accordance with the following:

Maximum Particle Size (100 % passing)	Standard Sieve Size	Minimum Mass of Test Specimen, g
2 mm	No. 10	20
4.75 mm	No. 4	100

8. Calibration of Pycnometer

8.1 Determine and record the mass of a clean, dry pycnometer, M_f.

8.2 Fill the pycnometer with distilled water to the calibration mark. Visually inspect the pycnometer and its contents to ensure that there are no air bubbles in the distilled water. Determine and record the mass of the pycnometer and water, M_a.

8.3 Insert a thermometer in the water, and determine and record its temperature, T_a, to the nearest 0.5°C (1.0°F).

8.4 From the mass, M_a, determined at the observed temperature, T_a, prepare a table of values of mass, M_a, for a series of temperatures that are likely to prevail when the mass of the pycnometer, soil, and water, M_b, is de later. These values of M_a can be determined experi or may be calculated as follows:

$$M_a \text{ (at } T_x) = [(\text{density of water at } T_x/\text{density of water at } T_a) \times (M_a \text{ (at } T_a) - M_f)] +$$

where:

M_a = mass of pycnometer and water, g,
M_f = mass of pycnometer, g,
T_a = observed temperature of water, °C, and
T_x = any other desired temperature, °C.

NOTE 4—This test method provides a procedure tha convenient for laboratories making many determinations wi pycnometer. It is equally applicable to a single determinatio the pycnometer and contents to some designated temper masses M_a and M_b are taken, requires considerable time. It i that masses M_a and M_b be based on water at the same te Values for the density of water at temperatures from 16.0 to given in Table 1.

9. Procedure

9.1 *Test Method A—Procedure For Oven-Dri mens:*

9.1.1 Dry the specimen to a constant mass in maintained at 110 ± 5°C (230 ± 9°F) (See Note 5) a in a desiccator.

NOTE 5—Drying of certain soils at 110°C (230°F) may loss of water of composition or hydration, and in such cases be done in reduced air pressure or at a lower temperature.

9.1.2 Determine and record the mass of a c calibrated pycnometer, M_f. Select a pycnometer of capacity that the volume filled to the mark will be percent greater than the space required to accomm test specimen. Place the specimen in the py

TABLE 1 Density of Water and Correction Factor K f Temperatures

Temperature, °C	Density of Water (g/mL)	Correctio
16.0	0.99897	1.0
16.5	0.99889	1.0
17.0	0.99880	1.0
17.5	0.99871	1.0
18.0	0.99862	1.0
18.5	0.99853	1.0
19.0	0.99843	1.0
19.5	0.99833	1.0
20.0	0.99823	1.0
20.5	0.99812	0.9
21.0	0.99802	0.9
21.5	0.99791	0.9
22.0	0.99780	0.9
22.5	0.99768	0.9
23.0	0.99757	0.9
23.5	0.99745	0.9
24.0	0.99732	0.9
24.5	0.99720	0.9
25.0	0.99707	0.9
25.5	0.99694	0.9
26.0	0.99681	0.9
26.5	0.99668	0.9
27.0	0.99654	0.9
27.5	0.99640	0.9
28.0	0.99626	0.9
28.5	0.99612	0.9
29.0	0.99597	0.9
29.5	0.99582	0.9
30.0	0.99567	0.9

[8] Anhydrous calcium sulfate is sold under the trade name Drierite.

000157

TABLE 2 Table of Precision Estimates[A]

Material and Type Index	Standard Deviation[B]		Acceptable Range of Two Results[C]	
	Passing No. 4 (4.75 mm)	Passing No. 10 (2.00 mm)	Passing No. 4 (4.75 mm)	Passing No. 10 (2.00 mm)
Single-operator precision:				
Cohesive soils	0.021	0.019	0.06	0.06
Noncohesive soils	B	B	B	B
Multilaboratory precision:				
Cohesive soils	0.056	0.041	0.16	0.12
Noncohesive soils	B	B	B	B

[A] The figures given in Columns 2 and 3 are the standard deviations that have been found to be appropriate for the materials described in Column 1. The figures given in Columns 4 and 5 are the limits that should not be exceeded by the difference between the two properly conducted tests.

[B] These numbers represent, respectively, the (1S) and (D2S) limits as described in Practice C 670.

[C] Criteria for assigning standard deviation values for noncohesive soils are not available at the present time.

Determine the mass of the specimen and pycnometer, and subtract the mass of the pycnometer, M_f, from this value to determine the mass of the oven-dry specimen, M_o.

9.1.3 Fill the pycnometer with distilled water to a level slightly above that required to cover the soil and soak the specimen for at least 12 h.

NOTE 6—For some soils containing a significant fraction of organic matter, kerosine is a better wetting agent than water and may be used in place of distilled water for oven-dried specimens. If kerosine is used, the entrapped air should only be removed by use of an aspirator. Kerosine is a flammable liquid that must be used with extreme caution.

NOTE 7—Adding distilled water to just cover the soil makes it easier to control boil-over during removal of entrapped air.

9.1.4 Remove the entrapped air by one of the following methods:

9.1.4.1 Boil the specimen gently for at least 10 min while agitating the pycnometer occasionally to assist in the removal of air. Then cool the heated specimen to room temperature.

9.1.4.2 Subject the contents to a vacuum (air pressure not exceeding 100 mm Hg) for at least 30 min (Note 8) either by connecting the pycnometer directly to an aspirator or vacuum pump or by use of a bell jar. While the vacuum is being applied, gently agitate the pycnometer periodically to assist in the removal of air. Some soils boil violently when subjected to reduced air pressure. It will be necessary in those cases to reduce the air pressure at a slower rate or to use a larger flask.

NOTE 8—Specimens with a high plasticity at the natural water content may require 6 to 8 h to remove entrapped air. Specimens with a low plasticity at the natural water content may require 4 to 6 h to remove entrapped air. Oven-dried specimens may require 2 to 4 h to remove entrapped air.

9.1.5 Fill the pycnometer to just below the calibration mark with distilled water at room temperature. Add the distilled water slowly and carefully to avoid the entrapment of air bubbles in the specimen (Note 9). Allow the pycnometer to obtain a uniform water temperature (Note 10).

NOTE 9—To avoid the entrapment of air bubbles, the distilled water can be introduced through a piece of small-diameter flexible tubing with its outlet end kept just below the surface of the distilled water in the pycnometer.

NOTE 10—To obtain a uniform water temperature the pycnometer may be allowed to sit overnight or be placed in a constant temperature bath.

9.1.6 Fill the pycnometer with distilled water at the same temperature to the mark, clean the outside, and dry with a clean, dry cloth. Determine and record the mass of the pycnometer filled with soil and water, M_b.

9.1.7 Insert a thermometer into the water, and determine and record its temperature, T_b, to the nearest 0.5°C (1.0°F).

9.2 *Test Method B—Procedure For Moist Specimens:*

9.2.1 Place the specimen in a calibrated pycnometer.

9.2.1.1 Disperse specimens of clay soils in distilled water before they are placed in the pycnometer, by use of the dispersing equipment specified in Test Method D 422. The minimum volume of slurry that can be prepared by this dispersing equipment is such that a 500-mL (or larger) flask is needed as a pycnometer.

9.2.2 Proceed as described in Sections 9.1.4 and 9.1.7.

9.2.3 Remove the specimen from the pycnometer, and dry it to a constant mass in an oven maintained at 110 ± 5°C (230 ± 9°F) (See Note 5). Cool the specimen in a desiccator.

9.2.4 Determine and record the mass of the oven-dried soil, M_o.

10. Calculation

10.1 Calculate the specific gravity of the soil, G, to the nearest 0.01, based on water at a temperature (T_b) as follows:

$$G \text{ at } T_b = M_o/[M_o + (M_a - M_b]$$

where:

M_o = mass of sample of oven-dry soil, g,
M_a = mass of pycnometer filled with water at temperature T_b (Note 11), g,
M_b = mass of pycnometer filled with water and soil at temperature T_x, g,
T_b = temperature of the contents of the pycnometer when mass M_b was determined, °C.

NOTE 11—This value can be obtained from the table of values of M_a, prepared in accordance with 6.2, for the temperatures prevailing when mass M_b was determined, °C.

NOTE 12—The equation shown in 9.1 is for computing the specific gravity of the soil tested in water. When kerosine is used, the Eq must be adjusted by multiplying the result by the specific gravity of kerosine at T_b and dividing it by the density of water at T_b.

10.2 Calculate the weighted average specific gravity for soils containing particles both larger and smaller than the 4.75-mm sieve using the following equation:

$$G_{avg} = \frac{1}{\frac{R_1}{100G_1} + \frac{P_1}{100G_2}}$$

where:

G_{avg} = weighted average specific gravity of soils composed of particles larger and smaller than the 4.75-mm sieve,
R_1 = percent of soil particles retained on 4.75-mm sieve,
P_1 = percent of soil particles passing the 4.75-mm sieve,
G_1 = apparent specific gravity of soil particles retained on the 4.75-mm sieve as determined by Test Method C 127, and

000158

G_2 = specific gravity of soil particles passing the 4.75-mm sieve as determined by this test method.

10.3 Unless otherwise required, specific gravity (G) values reported shall be based on water at 20°C. Calculate the value based on water at 20°C from the value based on water at the observed temperature T_b, as follows:

$$G \text{ at } 20°C = K \times (G \text{ at } T_b)$$

where:

K = a number found by dividing the density of water at temperature T_b by the density of water at 20°C. Values for the range of temperatures are given in Table 1.

10.4 In some cases, it is desired to report the specific gravity value based on water at a different temperature. In these cases, the specific gravity value, based on any temperature T_x, may be calculated as follows:

$$G \text{ at } T_x = \frac{G \text{ at } 20°C}{K}$$

11. Report

11.1 The report (data sheet) shall include the following:

11.1.1 Identification of the sample (material) being tested, such as boring number, sample number, test number, etc.

11.1.2 Specific gravity at 20°C to the nearest 0.01. Test procedure used (A or B).

11.1.3 Maximum particle size of the test specimen.

11.1.4 Specific gravity to the nearest 0.01 at a specified temperature other than 20°C, if applicable.

11.1.5 Type of fluid used, if other than distilled water.

11.1.6 When any portion of the original sample of soil is eliminated in the preparation of the test specimen, the portion on which the test has been made shall be reported.

12. Precision and Bias

12.1 *Precision*—Criteria for judging the acceptability of specific gravity test results obtained by this test method on material passing the 4.75-mm sieve are given as follows:

12.2 *Statement of Precision*—Criteria for judging the acceptability of specific gravity test results obtained by this test method on material passing the 4.75 (No. 4) or 2.00 mm (No. 10) sieve are given in Table 2. The estimates of precision for material passing the 2.00 mm sieve are based on results from the AASHTO Materials Reference Laboratory (AMRL) Proficiency Sample Program, of testing conducted on material passing the 2.00 (No. 10) sieve by this test method and AASHTO Test Method T100.

12.3 *Bias*—There is no acceptable reference value for this test method; therefore, bias cannot be determined.

13. Keywords

13.1 soil; specific gravity

The American Society for Testing and Materials takes no position respecting the validity of any patent rights asserted in connection with any item mentioned in this standard. Users of this standard are expressly advised that determination of the validity of any such patent rights, and the risk of infringement of such rights, are entirely their own responsibility.

This standard is subject to revision at any time by the responsible technical committee and must be reviewed every five years and if not revised, either reapproved or withdrawn. Your comments are invited either for revision of this standard or for additional standards and should be addressed to ASTM Headquarters. Your comments will receive careful consideration at a meeting of the responsible technical committee, which you may attend. If you feel that your comments have not received a fair hearing you should make your views known to the ASTM Committee on Standards, 1916 Race St., Philadelphia, PA 19103.

Designation: D 1452 – 80 (Reapproved 1990)[ε1]

Standard Practice for Soil Investigation and Sampling by Auger Borings[1]

This standard is issued under the fixed designation D 1452; the number immediately following the designation indicates the year of original adoption or, in the case of revision, the year of last revision. A number in parentheses indicates the year of last reapproval. A superscript epsilon (ε) indicates an editorial change since the last revision or reapproval.

This standard has been approved for use by agencies of the Department of Defense. Consult the DoD Index of Specifications and Standards for the specific year of issue which has been adopted by the Department of Defense.

[ε1] NOTE—Section 6 was added editorially in July 1990.

1. Scope

1.1 This practice covers equipment and procedures for the use of earth augers in shallow geotechnical exploration. This practice does not apply to sectional continuous flight augers.

1.2 *This standard does not purport to address the safety problems associated with its use. It is the responsibility of the user of this standard to establish appropriate safety and health practices and determine the applicability of regulatory limitations prior to use.*

2. Significance and Use

2.1 Auger borings often provide the simplest method of soil investigation and sampling. They may be used for any purpose where disturbed samples can be used and are valuable in connection with ground water level determination and indication of changes in strata and advancement of hole for spoon and tube sampling. Equipment required is simple and readily available. Depths of auger investigations are, however, limited by ground water conditions, soil characteristics, and the equipment used.

3. Apparatus

3.1 *Hand-Operated Augers*:

3.1.1 *Helical Augers*—Small lightweight augers generally available in sizes from 1 through 3 in. (25.4 through 76.2 mm).

3.1.1.1 *Spiral-Type Auger*, consisting of a flat thin metal strip, machine twisted to a spiral configuration of uniform pitch; having at one end, a sharpened or hardened point, with a means of attaching a shaft or extension at the opposite end.

3.1.1.2 *Ship-Type Auger*—Similar to a carpenter's wood bit. It is generally forged from steel and machined to the desired size and configuration. It is normally provided with sharpened and hardened nibs at the point end and with an integral shaft extending through its length for attachment of a handle or extension at the opposite end.

3.1.2 *Open Tubular Augers*, ranging in size from 1.5 through 8 in. (38.1 through 203.2 mm) and having the common characteristic of appearing essentially tubular when viewed from the digging end.

3.1.2.1 *Orchard-Barrel Type*, consisting essentially of a tube having cutting lips or nibs hardened and sharpened to penetrate the formation on one end and an adaptor fitting for an extension or handle on the opposite end.

3.1.2.2 *Open-Spiral Type*, consisting of a flat thin metal strip that has been helically wound around a circular mandrel to form a spiral in which the flat faces of the strip are parallel to the axis of the augered hole. The lower helix edges are hard-faced to improve wear characteristics. The opposite end is fitted with an adaptor for extension.

3.1.2.3 *Closed-Spiral Type*—Nearly identical to the open-spiral type except, the pitch of the helically wound spiral is much less than that of the open-spiral type.

3.1.3 *Post-Hole Augers*, generally 2 through 8 in. (50.8 through 203.2 mm), and having in common a means of blocking the escape of soil from the auger.

3.1.3.1 *Clam-Shell Type*, consisting of two halves, hinged to allow opening and closing for alternately digging and retrieving. It is not usable deeper than about 3.5 ft (1.07 m).

3.1.3.2 *Iwan Type*, consisting of two tubular steel segments, connected at the top to a common member to form a nearly complete tube, but with diametrically opposed openings. It is connected at the bottom by two radial blades pitched to serve as cutters which also block the escape of contained soil. Attachment of handle or extension is at the top connector.

3.2 *Machine-Operated Augers*:

3.2.1 *Helical Augers*, generally 8 through 48 in. (203.2 through 1219 mm), consisting essentially of a center shaft fitted with a shank or socket for application of power, and having one to three complete 360° (6.28-rad) spirals for conveyance and storage of cut soil. Cutter bits and pilot bits are available in moderate and hard formation types and normally replaceable in the field. They are normally operated by heavy-duty, high-torque machines, designed for heavy construction work.

3.2.2 *Stinger Augers*, generally 6 through 30 in. (152.4 through 762 mm), are similar to the helical auger in 3.2.1, but lighter and generally smaller. They are commonly operated by light-duty machines for post and power pole holes.

3.2.3 *Disk Augers*, generally 10 through 30 in. (254 through 762 mm), consisting essentially of a flat, steel disk with diametrically opposed segments removed and having a

[1] This practice is under the jurisdiction of ASTM Committee D-18 on Soil and Rock and is the direct responsibility of Subcommittee D18.02 on Sampling and Related Field Testing for Soil Investigations.

Current edition approved June 12, 1980. Published August 1980. Originally published as D 1452 – 57 T. Last previous edition D 1452 – 65 (1972).

shank or socket located centrally for application of power. Replaceable cutter bits, located downward from the leading edges of the remaining disk, dig and load soil that is held on the disk by valves or shutters hinged at the disk in order to close the removed segments. The disk auger is specifically designed to be operated by machines having limited vertical clearance between spindle and ground surface.

3.2.4 *Bucket Auger*, generally 12 through 48 in. (304.8 through 1219 mm), consisting essentially of a disk auger, without shank or socket, but hinge-mounted to the bottom of a steel tube or bucket of approximately the same diameter as the disk auger. A socket or shank for power application is located in the top center of the bucket diametral cross piece provided for the purpose.

3.3 *Casing* (when needed), consisting of pipe of slightly larger diameter than the auger used.

3.4 *Accessory Equipment*—Labels, field log sheets, sample jars, sealing wax, sample bags, and other necessary tools and supplies.

4. Procedure

4.1 Make the auger boring by rotating and advancing the desired distance into the soil. Withdraw the auger from the hole and remove the soil for examination and test. Return the empty auger to the hole and repeat the procedure. Continue the sequence until the required depth is reached.

4.2 Casing is required in unstable soil in which the bore hole fails to stay open and especially when the boring is extended below the ground-water level. The inside diameter of the casing must be slightly larger than the diameter of the auger used. The casing shall be driven to a depth not greater than the top of the next sample and shall be cleaned out by means of the auger. The auger can then be inserted into the bore hole and turned below the bottom of the casing to obtain a sample.

4.3 The soil auger can be used both for boring the hole and for bringing up disturbed samples of the soil encountered. The structure of a cohesive soil is completely destroyed and the moisture may be changed by the auger. Seal all samples in a jar or other airtight container and label appropriately. If more than one type of soil is picked up in the sample, prepare a separate container for each type of soil.

4.4 *Field Observations*—Record complete ground water information in the field logs. Where casing is used, measure ground water levels, both before and after the casing is pulled. In sands, determine the water level at least 30 min after the boring is completed; in silts, at least 24 h. In clays, no accurate water level determination is possible unless pervious seams are present. As a precaution, however, water levels in clays shall be taken after at least 24 h.

5. Report

5.1 The data obtained in boring shall be recorded in the field logs and shall include the following:

5.1.1 Date of start and completion of boring,

5.1.2 Identifying number of boring,

5.1.3 Reference datum including direction and distance of boring relative to reference line of project or other suitable reference points,

5.1.4 Type and size of auger used in boring,

5.1.5 Depth of changes in strata,

5.1.6 Description of soil in each major stratum,

5.1.7 Ground water elevation and location of seepage zones, when found, and

5.1.8 Condition of augered hole upon removal of auger, that is, whether the hole remains open or the sides cave, when such can be observed.

6. Keywords

Auger borings; sampling; soil investigations

The American Society for Testing and Materials takes no position respecting the validity of any patent rights asserted in connection with any item mentioned in this standard. Users of this standard are expressly advised that determination of the validity of any such patent rights, and the risk of infringement of such rights, are entirely their own responsibility.

This standard is subject to revision at any time by the responsible technical committee and must be reviewed every five years and if not revised, either reapproved or withdrawn. Your comments are invited either for revision of this standard or for additional standards and should be addressed to ASTM Headquarters. Your comments will receive careful consideration at a meeting of the responsible technical committee, which you may attend. If you feel that your comments have not received a fair hearing you should make your views known to the ASTM Committee on Standards, 1916 Race St., Philadelphia, PA 19103.

000161

Designation: D 1586 – 84 (Reapproved 1992)$^{\epsilon 1}$

Standard Test Method for Penetration Test and Split-Barrel Sampling of Soils[1]

This standard is issued under the fixed designation D 1586; the number immediately following the designation indicates the year of original adoption or, in the case of revision, the year of last revision. A number in parentheses indicates the year of last reapproval. A superscript epsilon (ε) indicates an editorial change since the last revision or reapproval.

This standard has been approved for use by agencies of the Department of Defense. Consult the DOD Index of Specifications and Standards for the specific year of issue which has been adopted by the Department of Defense.

$^{\epsilon 1}$NOTE—Editorial changes were made throughout October 1992.

1. Scope

1.1 This test method describes the procedure, generally known as the Standard Penetration Test (SPT), for driving a split-barrel sampler to obtain a representative soil sample and a measure of the resistance of the soil to penetration of the sampler.

1.2 *This standard does not purport to address all of the safety problems, if any, associated with its use. It is the responsibility of the user of this standard to establish appropriate safety and health practices and determine the applicability of regulatory limitations prior to use.* For a specific precautionary statement, see 5.4.1.

1.3 The values stated in inch-pound units are to be regarded as the standard.

2. Referenced Documents

2.1 *ASTM Standards:*

D 2487 Test Method for Classification of Soils for Engineering Purposes[2]

D 2488 Practice for Description and Identification of Soils (Visual-Manual Procedure)[2]

D 4220 Practices for Preserving and Transporting Soil Samples[2]

D 4633 Test Method for Stress Wave Energy Measurement for Dynamic Penetrometer Testing Systems[2]

3. Terminology

3.1 *Descriptions of Terms Specific to This Standard*

3.1.1 *anvil*—that portion of the drive-weight assembly which the hammer strikes and through which the hammer energy passes into the drill rods.

3.1.2 *cathead*—the rotating drum or windlass in the rope-cathead lift system around which the operator wraps a rope to lift and drop the hammer by successively tightening and loosening the rope turns around the drum.

3.1.3 *drill rods*—rods used to transmit downward force and torque to the drill bit while drilling a borehole.

3.1.4 *drive-weight assembly*—a device consisting of the hammer, hammer fall guide, the anvil, and any hammer drop system.

3.1.5 *hammer*—that portion of the drive-weight assembly consisting of the 140 ± 2 lb (63.5 ± 1 kg) impact weight which is successively lifted and dropped to provide the energy that accomplishes the sampling and penetration.

3.1.6 *hammer drop system*—that portion of the drive-weight assembly by which the operator accomplishes the lifting and dropping of the hammer to produce the blow.

3.1.7 *hammer fall guide*—that part of the drive-weight assembly used to guide the fall of the hammer.

3.1.8 *N-value*—the blowcount representation of the penetration resistance of the soil. The *N*-value, reported in blows per foot, equals the sum of the number of blows required to drive the sampler over the depth interval of 6 to 18 in. (150 to 450 mm) (see 7.3).

3.1.9 ΔN—the number of blows obtained from each of the 6-in. (150-mm) intervals of sampler penetration (see 7.3).

3.1.10 *number of rope turns*—the total contact angle between the rope and the cathead at the beginning of the operator's rope slackening to drop the hammer, divided by 360° (see Fig. 1).

3.1.11 *sampling rods*—rods that connect the drive-weight assembly to the sampler. Drill rods are often used for this purpose.

3.1.12 *SPT*—abbreviation for Standard Penetration Test, a term by which engineers commonly refer to this method.

4. Significance and Use

4.1 This test method provides a soil sample for identification purposes and for laboratory tests appropriate for soil obtained from a sampler that may produce large shear strain disturbance in the sample.

4.2 This test method is used extensively in a great variety of geotechnical exploration projects. Many local correlations and widely published correlations which relate SPT blowcount, or *N*-value, and the engineering behavior of earthworks and foundations are available.

5. Apparatus

5.1 *Drilling Equipment*—Any drilling equipment that provides at the time of sampling a suitably clean open hole before insertion of the sampler and ensures that the penetration test is performed on undisturbed soil shall be acceptable. The following pieces of equipment have proven to be

[1] This method is under the jurisdiction of ASTM Committee D-18 on Soil and Rock and is the direct responsibility of Subcommittee D18.02 on Sampling and Related Field Testing for Soil Investigations.

Current edition approved Sept. 11, 1984. Published November 1984. Originally published as D 1586 – 58 T. Last previous edition D 1586 – 67 (1974).

[2] *Annual Book of ASTM Standards*, Vol 04.08.

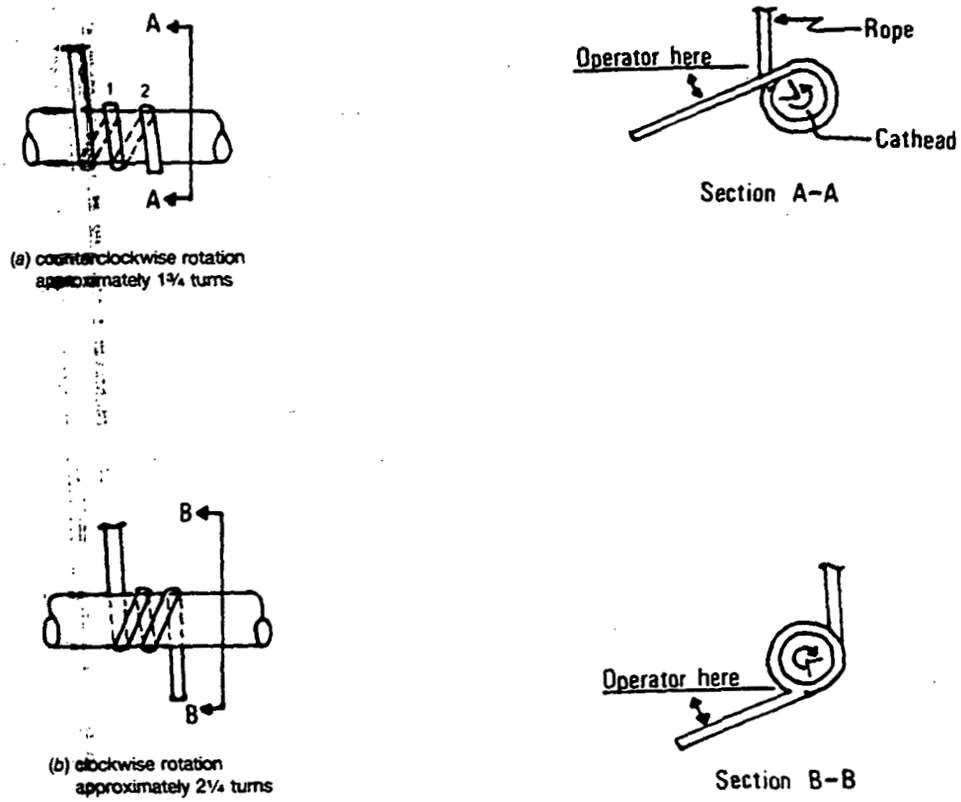

FIG. 1 Definitions of the Number of Rope Turns and the Angle for (a) Counterclockwise Rotation and (b) Clockwise Rotation of the Cathead

suitable for advancing a borehole in some subsurface conditions.

5.1.1 *Drag, Chopping, and Fishtail Bits*, less than 6.5 in. (162 mm) and greater than 2.2 in. (56 mm) in diameter may be used in conjuction with open-hole rotary drilling or casing-advancement drilling methods. To avoid disturbance of the underlying soil, bottom discharge bits are not permitted; only side discharge bits are permitted.

5.1.2 *Roller-Cone Bits*, less than 6.5 in. (162 mm) and greater than 2.2 in. (56 mm) in diameter may be used in conjunction with open-hole rotary drilling or casing-advancement drilling methods if the drilling fluid discharge is deflected.

5.1.3 *Hollow-Stem Continuous Flight Augers*, with or without a center bit assembly, may be used to drill the boring. The inside diameter of the hollow-stem augers shall be less than 6.5 in. (162 mm) and greater than 2.2 in. (56 mm).

5.1.4 *Solid, Continuous Flight, Bucket and Hand Augers*, less than 6.5 in. (162 mm) and greater than 2.2 in. (56 mm) in diameter may be used if the soil on the side of the boring does not cave onto the sampler or sampling rods during sampling.

5.2 *Sampling Rods*—Flush-joint steel drill rods shall be used to connect the split-barrel sampler to the drive-weight assembly. The sampling rod shall have a stiffness (moment of inertia) equal to or greater than that of parallel wall "A" rod (a steel rod which has an outside diameter of 1⅝ in. (41.2 mm) and an inside diameter of 1⅛ in. (28.5 mm).

NOTE 1—Recent research and comparative testing indicates the type rod used, with stiffness ranging from "A" size rod to "N" size rod, will usually have a negligible effect on the *N*-values to depths of at least 100 ft (30 m).

5.3 *Split-Barrel Sampler*—The sampler shall be constructed with the dimensions indicated in Fig. 2. The driving shoe shall be of hardened steel and shall be replaced or repaired when it becomes dented or distorted. The use of liners to produce a constant inside diameter of 1⅜ in. (35 mm) is permitted, but shall be noted on the penetration record if used. The use of a sample retainer basket is permitted, and should also be noted on the penetration record if used.

NOTE 2—Both theory and available test data suggest that *N*-values may increase between 10 to 30 % when liners are used.

5.4 *Drive-Weight Assembly:*

5.4.1 *Hammer and Anvil*—The hammer shall weigh 140 ± 2 lb (63.5 ± 1 kg) and shall be a solid rigid metallic mass. The hammer shall strike the anvil and make steel on steel contact when it is dropped. A hammer fall guide permitting a free fall shall be used. Hammers used with the cathead and rope method shall have an unimpeded overlift capacity of at least 4 in. (100 mm). For safety reasons, the use of a hammer assembly with an internal anvil is encouraged.

NOTE 3—It is suggested that the hammer fall guide be permanently marked to enable the operator or inspector to judge the hammer drop height.

5.4.2 *Hammer Drop System*—Rope-cathead, trip, semi-automatic, or automatic hammer drop systems may be used, providing the lifting apparatus will not cause penetration of

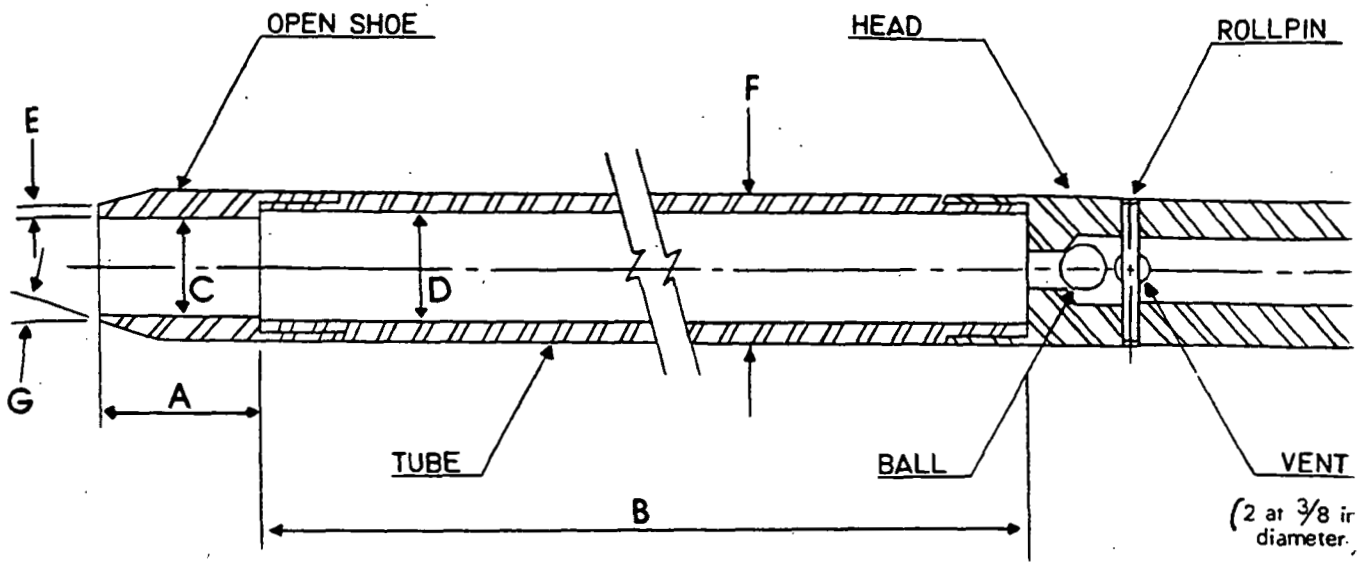

A = 1.0 to 2.0 in. (25 to 50 mm)
B = 18.0 to 30.0 in. (0.457 to 0.762 m)
C = 1.375 ± 0.005 in. (34.93 ± 0.13 mm)
D = 1.50 ± 0.05 − 0.00 in. (38.1 ± 1.3 − 0.0 mm)
E = 0.10 ± 0.02 in. (2.54 ± 0.25 mm)
F = 2.00 ± 0.05 − 0.00 in. (50.8 ± 1.3 − 0.0 mm)
G = 16.0° to 23.0°

The 1½ in. (38 mm) inside diameter split barrel may be used with a 16-gage wall thickness split liner. The penetrating end of the drive shoe may be slightly rounded. Me or plastic retainers may be used to retain soil samples.

FIG. 2 Split-Barrel Sampler

the sampler while re-engaging and lifting the hammer.

5.5 *Accessory Equipment*—Accessories such as labels, sample containers, data sheets, and groundwater level measuring devices shall be provided in accordance with the requirements of the project and other ASTM standards.

6. Drilling Procedure

6.1 The boring shall be advanced incrementally to permit intermittent or continuous sampling. Test intervals and locations are normally stipulated by the project engineer or geologist. Typically, the intervals selected are 5 ft (1.5 mm) or less in homogeneous strata with test and sampling locations at every change of strata.

6.2 Any drilling procedure that provides a suitably clean and stable hole before insertion of the sampler and assures that the penetration test is performed on essentially undisturbed soil shall be acceptable. Each of the following procedures have proven to be acceptable for some subsurface conditions. The subsurface conditions anticipated should be considered when selecting the drilling method to be used.

6.2.1 Open-hole rotary drilling method.

6.2.2 Continuous flight hollow-stem auger method.

6.2.3 Wash boring method.

6.2.4 Continuous flight solid auger method.

6.3 Several drilling methods produce unacceptable borings. The process of jetting through an open tube sampler and then sampling when the desired depth is reached shall not be permitted. The continuous flight solid auger method shall not be used for advancing the boring below a water table or below the upper confining bed of a confined non-cohesive stratum that is under artesian pressure. Casing may not be advanced below the sampling elevation prior : sampling. Advancing a boring with bottom discharge bits not permissible. It is not permissible to advance the borir for subsequent insertion of the sampler solely by means (previous sampling with the SPT sampler.

6.4 The drilling fluid level within the boring or hollov stem augers shall be maintained at or above the in sit groundwater level at all times during drilling, removal of dr: rods, and sampling.

7. Sampling and Testing Procedure

7.1 After the boring has been advanced to the desire sampling elevation and excessive cuttings have been r moved, prepare for the test with the following sequence (operations.

7.1.1 Attach the split-barrel sampler to the sampling roc and lower into the borehole. Do not allow the sampler t drop onto the soil to be sampled.

7.1.2 Position the hammer above and attach the anvil t the top of the sampling rods. This may be done before th sampling rods and sampler are lowered into the borehole.

7.1.3 Rest the dead weight of the sampler, rods, anvil, an drive weight on the bottom of the boring and apply a seatin blow. If excessive cuttings are encountered at the bottom c the boring, remove the sampler and sampling rods from th boring and remove the cuttings.

7.1.4 Mark the drill rods in three successive 6-in. (0.15-m increments so that the advance of the sampler under th impact of the hammer can be easily observed for each 6-in (0.15-m) increment.

7.2 Drive the sampler with blows from the 140-lb (63.5

kg) hammer and count the number of blows applied in each 6-in. (0.15-m) increment until one of the following occurs:

7.2.1 A total of 50 blows have been applied during any one of the three 6-in. (0.15-m) increments described in 7.1.4.

7.2.2 A total of 100 blows have been applied.

7.2.3 There is no observed advance of the sampler during the application of 10 successive blows of the hammer.

7.2.4 The sampler is advanced the complete 18 in. (0.45 m) without the limiting blow counts occurring as described in 7.2.1, 7.2.2, or 7.2.3.

7.3 Record the number of blows required to effect each 6 in. (0.15 m) of penetration or fraction thereof. The first 6 in. is considered to be a seating drive. The sum of the number of blows required for the second and third 6 in. of penetration is termed the "standard penetration resistance," or the "*N*-value." If the sampler is driven less than 18 in. (0.45 m), as permitted in 7.2.1, 7.2.2, or 7.2.3, the number of blows per each complete 6-in. (0.15-m) increment and per each partial increment shall be recorded on the boring log. For partial increments, the depth of penetration shall be reported to the nearest 1 in. (25 mm), in addition to the number of blows. If the sampler advances below the bottom of the boring under the static weight of the drill rods or the weight of the drill rods plus the static weight of the hammer, this information should be noted on the boring log.

7.4 The raising and dropping of the 140-lb (63.5-kg) hammer shall be accomplished using either of the following two methods:

7.4.1 By using a trip, automatic, or semi-automatic hammer drop system which lifts the 140-lb (63.5-kg) hammer and allows it to drop 30 ± 1.0 in. (0.76 m ± 25 mm) unimpeded.

7.4.2 By using a cathead to pull a rope attached to the hammer. When the cathead and rope method is used the system and operation shall conform to the following:

7.4.2.1 The cathead shall be essentially free of rust, oil, or grease and have a diameter in the range of 6 to 10 in. (150 to 250 mm).

7.4.2.2 The cathead should be operated at a minimum speed of rotation of 100 RPM, or the approximate speed of rotation shall be reported on the boring log.

7.4.2.3 No more than 2¼ rope turns on the cathead may be used during the performance of the penetration test, as shown in Fig. 1.

NOTE 4—The operator should generally use either 1¾ or 2¼ rope turns, depending upon whether or not the rope comes off the top (1¾ turns) or the bottom (2¼ turns) of the cathead. It is generally known and accepted that 2¾ or more rope turns considerably impedes the fall of the hammer and should not be used to perform the test. The cathead rope should be maintained in a relatively dry, clean, and unfrayed condition.

7.4.2.4 For each hammer blow, a 30-in. (0.76-m) lift and drop shall be employed by the operator. The operation of pulling and throwing the rope shall be performed rhythmically without holding the rope at the top of the stroke.

7.5 Bring the sampler to the surface and open. Record the percent recovery or the length of sample recovered. Describe the soil samples recovered as to composition, color, stratification, and condition, then place one or more representative portions of the sample into sealable moisture-proof containers (jars) without ramming or distorting any apparent stratification. Seal each container to prevent evaporation of soil moisture. Affix labels to the containers bearing job designation, boring number, sample depth, and the blow count per 6-in. (0.15-m) increment. Protect the samples against extreme temperature changes. If there is a soil change within the sampler, make a jar for each stratum and note its location in the sampler barrel.

8. Report

8.1 Drilling information shall be recorded in the field and shall include the following:

8.1.1 Name and location of job,

8.1.2 Names of crew,

8.1.3 Type and make of drilling machine,

8.1.4 Weather conditions,

8.1.5 Date and time of start and finish of boring,

8.1.6 Boring number and location (station and coordinates, if available and applicable),

8.1.7 Surface elevation, if available,

8.1.8 Method of advancing and cleaning the boring,

8.1.9 Method of keeping boring open,

8.1.10 Depth of water surface and drilling depth at the time of a noted loss of drilling fluid, and time and date when reading or notation was made,

8.1.11 Location of strata changes,

8.1.12 Size of casing, depth of cased portion of boring,

8.1.13 Equipment and method of driving sampler,

8.1.14 Type sampler and length and inside diameter of barrel (note use of liners),

8.1.15 Size, type, and section length of the sampling rods, and

8.1.16 Remarks.

8.2 Data obtained for each sample shall be recorded in the field and shall include the following:

8.2.1 Sample depth and, if utilized, the sample number,

8.2.2 Description of soil,

8.2.3 Strata changes within sample,

8.2.4 Sampler penetration and recovery lengths, and

8.2.5 Number of blows per 6-in. (0.15-m) or partial increment.

9. Precision and Bias

9.1 *Precision*—A valid estimate of test precision has not been determined because it is too costly to conduct the necessary inter-laboratory (field) tests. Subcommittee D18.02 welcomes proposals to allow development of a valid precision statement.

9.2 *Bias*—Because there is no reference material for this test method, there can be no bias statement.

9.3 Variations in *N*-values of 100 % or more have been observed when using different standard penetration test apparatus and drillers for adjacent borings in the same soil formation. Current opinion, based on field experience, indicates that when using the same apparatus and driller, *N*-values in the same soil can be reproduced with a coefficient of variation of about 10 %.

9.4 The use of faulty equipment, such as an extremely massive or damaged anvil, a rusty cathead, a low speed cathead, an old, oily rope, or massive or poorly lubricated rope sheaves can significantly contribute to differences in *N*-values obtained between operator-drill rig systems.

62

9.5 The variability in N-values produced by different drill rigs and operators may be reduced by measuring that part of the hammer energy delivered into the drill rods from the sampler and adjusting N on the basis of comparative energies. A method for energy measurement and N-value adjustment is given in Test Method D 4633.

10. Keywords

10.1 blow count; in-situ test; penetration resistance; split-barrel sampling; standard penetration test

The American Society for Testing and Materials takes no position respecting the validity of any patent rights asserted in connection with any item mentioned in this standard. Users of this standard are expressly advised that determination of the validity of any such patent rights, and the risk of infringement of such rights, are entirely their own responsibility.

This standard is subject to revision at any time by the responsible technical committee and must be reviewed every five years and if not revised, either reapproved or withdrawn. Your comments are invited either for revision of this standard or for additional standards and should be addressed to ASTM Headquarters. Your comments will receive careful consideration at a meeting of the responsible technical committee, which you may attend. If you feel that your comments have not received a fair hearing you should make your views known to the ASTM Committee on Standards, 1916 Race St., Philadelphia, PA 19103.

000166

Designation: D 1587 – 83

Standard Practice for Thin-Walled Tube Sampling of Soils[1]

This standard is issued under the fixed designation D 1587; the number immediately following the designation indicates the year of original adoption or, in the case of revision, the year of last revision. A number in parentheses indicates the year of last reapproval. A superscript epsilon (ε) indicates an editorial change since the last revision or reapproval.

This practice has been approved for use by agencies of the Department of Defense and for listing in the DOD Index of Specifications and Standards.

1. Scope

1.1 This practice covers a procedure for using a thin-walled metal tube to recover relatively undisturbed soil samples suitable for laboratory tests of structural properties. Thin-walled tubes used in piston, plug, or rotary-type samplers, such as the Denison or Pitcher, must comply with the portions of this practice which describe the thin-walled tubes (5.3).

NOTE 1—This practice does not apply to liners used within the above samplers.

2. Referenced Documents

2.1 *ASTM Standards:*

D 2488 Practice for Description and Identification of Soils (Visual-Manual Procedure)[2]

D 3550 Practice for Ring-Lined Barrel Sampling of Soils[2]

D 4220 Practices for Preserving and Transporting Soil Samples[2]

3. Summary of Practice

3.1 A relatively undisturbed sample is obtained by pressing a thin-walled metal tube into the in-situ soil, removing the soil-filled tube, and sealing the ends to prevent the soil from being disturbed or losing moisture.

4. Significance and Use

4.1 This practice, or Practice D 3550, is used when it is necessary to obtain a relatively undisturbed specimen suitable for laboratory tests of structural properties or other tests that might be influenced by soil disturbance.

5. Apparatus

5.1 *Drilling Equipment*—Any drilling equipment may be used that provides a reasonably clean hole; that does not disturb the soil to be sampled; and that does not hinder the penetration of the thin-walled sampler. Open borehole diameter and the inside diameter of driven casing or hollow stem auger shall not exceed 3.5 times the outside diameter of the thin-walled tube.

5.2 *Sampler Insertion Equipment,* shall be adequate to provide a relatively rapid continuous penetration force. For hard formations it may be necessary, although not recommended, to drive the thin-walled tube sampler.

5.3 *Thin-Walled Tubes,* should be manufactured as shown in Fig. 1. They should have an outside diameter of 2 to 5 in. and be made of metal having adequate strength for use in the soil and formation intended. Tubes shall be clean and free of all surface irregularities including projecting weld seams.

5.3.1 *Length of Tubes*—See Table 1 and 6.4.

5.3.2 *Tolerances,* shall be within the limits shown in Table 2.

5.3.3 *Inside Clearance Ratio,* should be 1 % or as specified by the engineer or geologist for the soil and formation to be sampled. Generally, the inside clearance ratio used should increase with the increase in plasticity of the soil being sampled. See Fig. 1 for definition of inside clearance ratio.

5.3.4 *Corrosion Protection*—Corrosion, whether from galvanic or chemical reaction, can damage or destroy both the thin-walled tube and the sample. Severity of damage is a function of time as well as interaction between the sample and the tube. Thin-walled tubes should have some form of protective coating. Tubes which will contain samples for more than 72 h shall be coated. The type of coating to be used may vary depending upon the material to be sampled. Coatings may include a light coat of lubricating oil, lacquer, epoxy, Teflon, and others. Type of coating must be specified by the engineer or geologist if storage will exceed 72 h. Plating of the tubes or alternate base metals may be specified by the engineer or geologist.

5.4 *Sampler Head,* serves to couple the thin-walled tube to the insertion equipment and, together with the thin-walled tube, comprises the thin-walled tube sampler. The sampler head shall contain a suitable check valve and a venting area to the outside equal to or greater than the area through the check valve. Attachment of the head to the tube shall be concentric and coaxial to assure uniform application of force to the tube by the sampler insertion equipment.

6. Procedure

6.1 Clean out the borehole to sampling elevation using whatever method is preferred that will ensure the material to be sampled is not disturbed. If groundwater is encountered, maintain the liquid level in the borehole at or above ground water level during the sampling operation.

6.2 Bottom discharge bits are not permitted. Side discharge bits may be used, with caution. Jetting through an open-tube sampler to clean out the borehole to sampling elevation is not permitted. Remove loose material from the center of a casing or hollow stem auger as carefully as

[1] This practice is under the jurisdiction of ASTM Committee D-18 on Soil and Rock and is the direct responsibility of Subcommittee D18.02 on Sampling and Related Field Testing for Soil Investigations.

Current edition approved Aug. 17, 1983. Published October 1983. Originally published as D 1587 – 58 T. Last previous edition D 1587 – 74.

[2] *Annual Book of ASTM Standards,* Vol 04.08.

000167

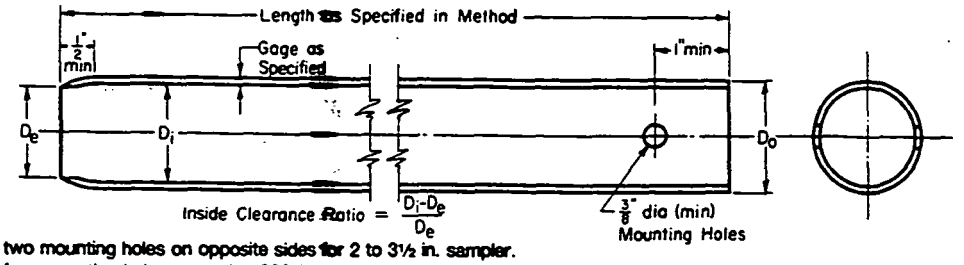

NOTE 1—Minimum of two mounting holes on opposite sides for 2 to 3½ in. sampler.
NOTE 2—Minimum of four mounting holes spaced at 90° for samplers 4 in. and larger.
NOTE 3—Tube held with hardened screws.
NOTE 4—Two-inch outside-diameter tubes are specified with an 18-gage wall thickness to comply with area ratio criteria accepted for "undisturbed samples." Users are advised that such tubing is difficult to locate and can be extremely expensive in small quantities. Sixteen-gage tubes are generally readily available.

Metric Equivalents

in.	mm
⅜	6.77
½	12.7
1	25.4
2	50.8
3½	88.9
4	101.6

FIG. 1 Thin-Walled Tube for Sampling

TABLE 1 Suitable Thin-Walled Steel Sample Tubes[A]

Outside diameter:			
in.	2	3	5
mm	50.8	76.2	127
Wall thickness:			
Bwg	18	16	11
in.	0.049	0.065	0.120
mm	1.24	1.65	3.05
Tube length:			
in.	36	36	54
m	0.91	0.91	1.45
Clearance ratio, %	1	1	1

[A] The three diameters recommended in Table 1 are indicated for purposes of standardization, and are not intended to indicate that sampling tubes of intermediate or larger diameters are not acceptable. Lengths of tubes shown are illustrative. Proper lengths to be determined as suited to field conditions.

TABLE 2 Dimensional Tolerances for Thin-Walled Tubes

	Nominal Tube Diameters from Table 1[A] Tolerances, in.		
Size Outside Diameter	2	3	5
Outside diameter	+0.007 −0.000	+0.010 −0.000	+0.015 −0.000
Inside diameter	+0.000 −0.007	+0.000 −0.010	+0.000 −0.015
Wall thickness	±0.007	±0.010	±0.015
Ovality	0.015	0.020	0.030
Straightness	0.030/ft	0.030/ft	0.030/ft

[A] Intermediate or larger diameters should be proportional. Tolerances shown are essentially standard commercial manufacturing tolerances for seamless steel mechanical tubing. Specify only two of the first three tolerances; that is, O.D. and I.D., or O.D. and Wall, or I.D. and Wall.

possible to avoid disturbance of the material to be sampled.

NOTE 2—Roller bits are available in downward-jetting and diffused-jet configurations. Downward-jetting configuration rock bits are not acceptable. Diffuse-jet configurations are generally acceptable.

6.3 Place the sample tube so that its bottom rests on the bottom of the hole. Advance the sampler without rotation by a continuous relatively rapid motion.

6.4 Determine the length of advance by the resistance and condition of the formation, but the length shall never exceed 5 to 10 diameters of the tube in sands and 10 to 15 diameters of the tube in clays.

NOTE 3—Weight of sample, laboratory handling capabilities, transportation problems, and commercial availability of tubes will generally limit maximum practical lengths to those shown in Table 1.

6.5 When the formation is too hard for push-type insertion, the tube may be driven or Practice D 3550 may be used. Other methods, as directed by the engineer or geologist, may be used. If driving methods are used, the data regarding weight and fall of the hammer and penetration achieved must be shown in the report. Additionally, that tube must be prominently labeled a "driven sample."

6.6 In no case shall a length of advance be greater than the sample-tube length minus an allowance for the sampler head and a minimum of 3 in. for sludge-end cuttings.

NOTE 4—The tube may be rotated to shear bottom of the sample after pressing is complete.

6.7 Withdraw the sampler from the formation as carefully as possible in order to minimize disturbance of the sample.

7. Preparation for Shipment

7.1 Upon removal of the tube, measure the length of sample in the tube. Remove the disturbed material in the upper end of the tube and measure the length again. Seal the upper end of the tube. Remove at least 1 in. of material from the lower end of the tube. Use this material for soil description in accordance with Practice D 2488. Measure the overall sample length. Seal the lower end of the tube. Alternatively, after measurement, the tube may be sealed without removal of soil from the ends of the tube if so directed by the engineer or geologist.

NOTE 5—Field extrusion and packaging of extruded samples under the specific direction of a geotechnical engineer or geologist is permitted.
NOTE 6—Tubes sealed over the ends as opposed to those sealed with expanding packers should contain end padding in end voids in order to prevent drainage or movement of the sample within the tube.

7.2 Prepare and immediately affix labels or apply markings as necessary to identify the sample. Assure that the

markings or labels are adequate to survive transportation and storage.

8. Report

8.1 The appropriate information is required as follows:

8.1.1 Name and location of the project,

8.1.2 Boring number and precise location on project,

8.1.3 Surface elevation or reference to a datum,

8.1.4 Date and time of boring—start and finish,

8.1.5 Depth to top of sample and number of sample,

8.1.6 Description of sampler: size, type of metal, type of coating,

8.1.7 Method of sampler insertion: push or drive,

8.1.8 Method of drilling, size of hole, casing, and drilling fluid used,

8.1.9 Depth to groundwater level: date and time measured,

8.1.10 Any possible current or tidal effect on water level,

8.1.11 Soil description in accordance with Practice D 2488,

8.1.12 Length of sampler advance, and

8.1.13 Recovery: length of sample obtained.

9. Precision and Bias

9.1 This practice does not produce numerical data; therefore, a precision and bias statement is not applicable.

The American Society for Testing and Materials takes no position respecting the validity of any patent rights asserted in connection with any item mentioned in this standard. Users of this standard are expressly advised that determination of the validity of any such patent rights, and the risk of infringement of such rights, are entirely their own responsibility.

This standard is subject to revision at any time by the responsible technical committee and must be reviewed every five years and if not revised, either reapproved or withdrawn. Your comments are invited either for revision of this standard or for additional standards and should be addressed to ASTM Headquarters. Your comments will receive careful consideration at a meeting of the responsible technical committee, which you may attend. If you feel that your comments have not received a fair hearing you should make your views known to the ASTM Committee on Standards, 1916 Race St., Philadelphia, PA 19103. known to the ASTM Committee on Standards, 1916 Race St., Philadelphia, PA 19103.

Standard Test Method for Laboratory Determination of Water (Moisture) Content of Soil and Rock[1]

This standard is issued under the fixed designation D 2216; the number immediately following the designation indicates the year of original adoption or, in the case of revision, the year of last revision. A number in parentheses indicates the year of last reapproval. A superscript epsilon (ε) indicates an editorial change since the last revision or reapproval.

1. Scope

1.1 This test method covers the laboratory determination of the water (moisture) content of soil, rock, and similar materials by mass. For simplicity, the word "material" hereinafter also refers to either soil or rock, whichever is most applicable.

1.2 The water content of a material is defined by this standard as the ratio, expressed as a percentage, of the mass of "pore" or "free" water in a given mass of material to the mass of the solid material.

1.3 The term "solid particles" as used in geotechnical engineering is typically assumed to mean naturally occurring mineral particles of soil and rock that are not readily soluble in water. Therefore, the water content of materials containing extraneous matter (such as cement, and the like) may require special treatment or a qualified definition of water content. In addition, some organic materials may be decomposed by oven drying at the standard drying temperature for this method (110°C). Materials containing gypsum (calcium sulfate dihydrate or other compounds having significant amounts of hydrated water) may present a special problem as this material slowly dehydrates at the standard drying temperature (110°C) and at very low relative humidities, forming a compound (calcium sulfate hemihydrate) which is not normally present in natural materials except in some desert soils. In order to reduce the degree of dehydration of gypsum in those materials containing gypsum, or to reduce decomposition in highly organic soils, it may be desirable to dry these materials at 60°C or in a desiccator at room temperature. Thus, when a drying temperature is used which is different from the standard drying temperature as defined by this test method, the resulting water content may be different from standard water content determined at the standard drying temperature.

NOTE 1—Test Methods D 2974 provides an alternate procedure for determining water content of peat materials.

1.4 Materials containing water with substantial amounts of soluble solids (such as salt in the case of marine sediments) when tested by this method will give a mass of solids which includes the previously soluble solids. These materials require special treatment to remove or account for the presence of precipitated solids in the dry mass of the specimen, or a qualified definition of water content must be used.

1.5 This test method requires several hours for proper drying of the water content specimen. Test Method D 4643 provides for drying of the test specimen in a microwave oven which is a shorter process.

1.6 This standard requires the drying of material in an oven at high temperatures. If the material being dried is contaminated with certain chemicals, health and safety hazards can exist. Therefore, this standard should not be used in determining the water content of contaminated soils unless adequate health and safety precautions are taken.

1.7 *This standard does not purport to address all of the safety problems, if any, associated with its use. It is the responsibility of the user of this standard to establish appropriate safety and health practices and determine the applicability of regulatory limitations prior to use.*

2. Referenced Documents

2.1 *ASTM Standards:*

D 653 Terminology Relating to Soil, Rock, and Contained Fluids[2]

D 2974 Test Methods for Moisture, Ash, and Organic Matter of Peat and Other Organic Soils[2]

D 4220 Practice for Preserving and Transporting Soil Samples[2]

D 4318 Test Method for Liquid Limit, Plastic Limit, and Plasticity Index of Soils[2]

D 4643 Test Method for Determination of Water (Moisture) Content of Soil by the Microwave Oven Method[2]

D 4753 Specification for Evaluating, Selecting, and Specifying Balances and Scales for Use in Soil and Rock Testing[2]

E 145 Specification for Gravity-Convection And Forced-Ventilation Ovens[3]

3. Terminology

3.1 Refer to Terminology D 653 for standard definitions of terms.

3.2 *Description of Term Specific to This Standard:*

3.2.1 *water content* (of a material)—the ratio of the mass of water contained in the pore spaces of soil or rock material, to the solid mass of particles in that material, expressed as a percentage.

[1] This method is under the jurisdiction of ASTM Committee D-18 on Soil and Rock and is the direct responsibility of Subcommittee D18.03 on Texture, Plasticity and Density Characteristics of Soils.

Current edition approved June 15, 1992. Published August 1992. Originally published as D 2216 – 63 T. Last previous edition D 2216 – 90[ε1].

[2] *Annual Book of ASTM Standards*, Vol 04.08.

[3] *Annual Book of ASTM Standards*, Vol 14.02.

4. Summary of Test Method

4.1 A test specimen is dried in an oven to a constant mass. The loss of mass due to drying is considered to be water. The water content is calculated using the mass of water and the mass of the dry specimen.

5. Significance and Use

5.1 For many materials, the water content is one of the most significant index properties used in establishing a correlation between soil behavior and its properties.

5.2 The water content of a material is used in expressing the phase relationships of air, water, and solids in a given volume of material.

5.3 In fine-grained (cohesive) soils, the consistency of a given soil type depends on its water content. The water content of a soil, along with its liquid and plastic limits as determined by Test Method D 4318, is used to express its relative consistency or liquidity index.

6. Apparatus

6.1 *Drying Oven*, thermostatically-controlled, preferably of the forced-draft type, meeting the requirements of Specification E 145 and capable of maintaining a uniform temperature of 110 ± 5°C throughout the drying chamber.

6.2 *Balances*—All balances must meet the requirements of Specification D 4753 and this Section. A Class GP1 balance of 0.01g readability is required for specimens having a mass of up to 200 g (excluding mass of specimen container) and a Class GP2 balance of 0.1g readability is required for specimens having a mass over 200 g.

6.3 *Specimen Containers*—Suitable containers made of material resistant to corrosion and change in mass upon repeated heating, cooling, exposure to materials of varying pH, and cleaning. Containers with close-fitting lids shall be used for testing specimens having a mass of less than about 200 g; while for specimens having a mass greater than about 200 g, containers without lids may be used. One container is needed for each water content determination.

NOTE 2—The purpose of close-fitting lids is to prevent loss of moisture from specimens before initial mass determination and to prevent absorption of moisture from the atmosphere following drying and before final mass determination.

6.4 *Desiccator*—A desiccator cabinet or large desiccator jar of suitable size containing silica gel or anhydrous calcium phosphate. It is preferable to use a desiccant which changes color to indicate it needs reconstitution. See Section 10.5.

NOTE 3—Anhydrous calcium sulfate is sold under the trade name Drierite.

6.5 *Container Handling Apparatus*, gloves, tongs, or suitable holder for moving and handling hot containers after drying.

6.6 *Miscellaneous*, knives, spatulas, scoops, quartering cloth, sample splitters, etc, as required.

7. Samples

7.1 Samples shall be preserved and transported in accordance with Practice 4220 Groups B, C, or D soils. Keep the samples that are stored prior to testing in noncorrodible airtight containers at a temperature between approximately 3 and 30°C and in an area that prevents direct contact with sunlight. Disturbed samples in jars or other containe: be stored in such a way as to prevent or minimize m condensation on the insides of the containers.

7.2 The water content determination should be d soon as practicable after sampling, especially if pot corrodible containers (such as thin-walled steel tubes cans, etc.) or plastic sample bags are used.

8. Test Specimen

8.1 For water contents being determined in conju with another ASTM method, the specimen mass r ment stated in that method shall be used if one is provi no minimum specimen mass is provided in that n then the values given before shall apply.

8.2 The minimum mass of moist material selectec representative of the total sample, if the total sample tested by this method, shall be in accordance wi following:

Maximum particle size (100 % passing)	Standard Sieve Size	Recommended minimum mass of moist test specimen for water content reported to ±0.1 %	Recomm minimum moist tes imen for content r to ±1
2 mm or less	No. 10	20 g	20 g
4.75 mm	No. 4	100 g	20 g
9.5 mm	⅜-in.	500 g	50 g
19.0 mm	¾-in.	2.5 kg	250 g
37.5 mm	1½ in.	10 kg	1 k
75.0 mm	3-in.	50 kg	5 k

NOTE—*To be representative not less than 20 g shall be used.

8.2.1 If the total sample is used it does not have tc the minimum mass requirements provided in the above. The report shall indicate that the entire sampl used.

8.3 Using a test specimen smaller than the min indicated in 8.2 requires discretion, though it m adequate for the purposes of the test. Any specimen us meeting these requirements shall be noted in the rep results.

8.4 When working with a small (less than 200g) spec containing a relatively large gravel particle, it is appro not to include this particle in the test specimen. Hov any discarded material shall be described and noted i report of the results.

8.5 For those samples consisting entirely of intact the minimum specimen mass shall be 500 g. Represen portions of the sample may be broken into smaller par depending on the sample's size, the container and ba being used and to facilitate drying to constant mas Section 10.4.

9. Test Specimen Selection

9.1 When the test specimen is a portion of a amount of material, the specimen must be selected representative of the water condition of the entire amou material. The manner in which the test specimen is sel depends on the purpose and application of the test, ty material being tested, the water condition, and the ty sample (from another test, bag, block, and the likes.)

9.2 For disturbed samples such as trimmings, bag ples, and the like, obtain the test specimen by one o

000171

following methods (listed in order of preference):

9.2.1 If the material is such that it can be manipulated and handled without significant moisture loss, the material should be mixed and then reduced to the required size by quartering or splitting.

9.2.2 If the material is such that it cannot be thoroughly mixed and/or split, form a stockpile of the material, mixing as much as possible. Take at least five portions of material at random locations using a sampling tube, shovel, scoop, trowel, or similar device appropriate to the maximum particle size present in the material. Combine all the portions for the test specimen.

9.2.3 If the material or conditions are such that a stockpile cannot be formed, take as many portions of the material as possible at random locations that will best represent the moisture condition. Combine all the portions for the test specimen.

9.3 Intact samples such as block, tube, split barrel, and the like, obtain the test specimen by one of the following methods depending on the purpose and potential use of the sample.

9.3.1 Carefully trim at least 3 mm of material from the outer surface of the sample to see if material is layered and to remove material that is drier or wetter than the main portion of the sample. Then carefully trim at least 5 mm, or a thickness equal to the maximum particle size present, from the entire exposed surface or from the interval being tested.

9.3.2 Slice the sample in half. If material is layered see Section 9.3.3. Then carefully trim at least 5 mm, or a thickness equal to the maximum particle size present, from the exposed surface of one half, or from the interval being tested. Avoid any material on the edges that may be wetter or drier than the main portion of the sample.

NOTE 4—Migration of moisture in some cohesionless soils may require that the full section be sampled.

9.3.3 If a layered material (or more than one material type is encountered), select an average specimen, or individual specimens, or both. Specimens must be properly identified as to location, or what they represent, and appropriate remarks entered on data sheets.

10. Procedure

10.1 Determine and record the mass of the clean and dry specimen container (and its lid, if used).

10.2 Select representative test specimens in accordance with Section 9.

10.3 Place the moist test specimen in the container and, if used, set the lid securely in position. Determine the mass of the container and moist material using a balance (See 6.2) selected on the basis of the specimen mass. Record this value.

NOTE 5—To prevent mixing of specimens and yielding of incorrect results, all containers, and lids if used, should be numbered and the container numbers shall be recorded on the laboratory data sheets. The lid numbers should match the container numbers to eliminate confusion.

NOTE 6—To assist in the oven-drying of large test specimens, they should be placed in containers having a large surface area (such as pans) and the material broken up into smaller aggregations.

10.4 Remove the lid (if used) and place the container with moist material in the drying oven. Dry the material to a constant mass. Maintain the drying oven at 110 ± 5°C unless otherwise specified (see 1.3). The time required to obtain constant mass will vary depending on the type of material, size of specimen, oven type and capacity, and other factors. The influence of these factors generally can be established by good judgment, and experience with the materials being tested and the apparatus being used.

NOTE 7—In most cases, drying a test specimen overnight (about 12 to 16 h) is sufficient. In cases where there is doubt concerning the adequacy of drying, drying should be continued until the change in mass after two successive periods (greater than 1 h) of drying is an insignificant amount (less than about 0.1 %). Specimens of sand may often be dried to constant mass in a period of about 4 h, when a forced-draft oven is used.

NOTE 8—Since some dry materials may absorb moisture from moist specimens, dried specimens should be removed before placing moist specimens in the same oven. However, this would not be applicable if the previously dried specimens will remain in the drying oven for an additional time period of about 16 h.

10.5 After the material has dried to constant mass remove the container from the oven (and replace the lid if used). Allow the material and container to cool to room temperature or until the container can be handled comfortably with bare hands and the operation of the balance will not be affected by convection currents and/or its being heated. Determine the mass of the container and oven-dried material using the same balance as used in 10.3. Record this value. Tight fitting lids shall be used if it appears that the specimen is absorbing moisture from the air prior to determination of its dry mass.

NOTE 9—Cooling in a desiccator is acceptable in place of tight fitting lids since it greatly reduces absorption of moisture from the atmosphere during cooling especially for containers without tight fitting lids.

11. Calculation

11.1 Calculate the water content of the material as follows:

$$w = [(M_{cws} - M_{cs})/(M_{cs} - M_c)] \times 100 = \frac{M_w}{M_s} \times 100$$

where:

w = water content, %,
M_{cws} = mass of container and wet specimen, g,
M_{cs} = mass of container and oven dry specimen, g,
M_c = mass of container, g,
M_w = mass of water ($M_w = M_{cws} - M_{cds}$), g, and
M_s = mass of solid particles ($M_s = M_{cds} - M_c$), g.

12. Report

12.1 The report (data sheet) shall include the following:

12.1.1 Identification of the sample (material) being tested, such as boring number, sample number, test number, container number etc.

12.1.2 Water content of the specimen to the nearest 1 % or 0.1 %, as appropriate based on the minimum sample used. If this method is used in concert with another method, the water content of the specimen should be reported to the value required by the test method for which the water content is being determined.

12.1.3 Indicate if test specimen had a mass less than the minimum indicated in 8.2.

12.1.4 Indicate if test specimen contained more than one material type (layered, etc.).

12.1.5 Indicate the method of drying if different from oven-drying at 110 ± 5°C.

12.1.6 Indicate if any material (size and amount) was excluded from the test specimen.

13. Precision and Bias

13.1 *Statement on Bias*—There is no accepted reference value for this test method; therefore, bias cannot be determined.

13.2 *Statements on Precision:*

13.2.1 *Single-Operator Precision*—The single-operator coefficient of variation has been found to be 2.7 percent. Therefore, results of two properly conducted tests by the same operator with the same equipment should not be considered suspect unless they differ by more than 7.8 percent of their mean.

13.2.2 *Multilaboratory Precision*—The multilaboratory coefficient of variation has been found to be 5.0 percent. Therefore, results of two properly conducted tests by different operators using different equipment should not be considered suspect unless they differ by more than 14.1 percent of their mean.

14. Keywords

14.1 consistency; index property; laboratory; moisture analysis; moisture content; soil aggregate; water content

The American Society for Testing and Materials takes no position respecting the validity of any patent rights asserted in connection with any item mentioned in this standard. Users of this standard are expressly advised that determination of the validity of any such patent rights, and the risk of infringement of such rights, are entirely their own responsibility.

This standard is subject to revision at any time by the responsible technical committee and must be reviewed every five years and if not revised, either reapproved or withdrawn. Your comments are invited either for revision of this standard or for additional standards and should be addressed to ASTM Headquarters. Your comments will receive careful consideration at a meeting of the responsible technical committee, which you may attend. If you feel that your comments have not received a fair hearing you should make your views known to the ASTM Committee on Standards, 1916 Race St., Philadelphia, PA 19103.

000173

Designation: D 2217 – 85

Standard Practice for Wet Preparation of Soil Samples for Particle-Size Analysis and Determination of Soil Constants[1]

This standard is issued under the fixed designation D 2217; the number immediately following the designation indicates the year of original adoption or, in the case of revision, the year of last revision. A number in parentheses indicates the year of last reapproval. A superscript epsilon (ε) indicates an editorial change since the last revision or reapproval.

This practice has been approved for use by agencies of the Department of Defense and for listing in the DoD Index of Specifications and Standards.

1. Scope

1.1 This practice covers the wet preparation of soil samples as received from the field for particle-size analysis and determination of soil constants.

1.2 Procedure A provides for drying the field sample at a temperature not exceeding 140°F (60°C), making a wet separation on the No. 10 (2.00-mm) sieve, or No. 40 (425-μm) sieve, or both, as needed, and finally drying at a temperature not exceeding 140°F. Procedure B provides that the sample shall be kept at a moisture content equal to or greater than the natural water content. The procedure to be used should be indicated in the specification for the material being tested. If no procedure is specified, the provisions of Procedure B shall govern.

1.3 *This standard may involve hazardous materials, operations, and equipment. This standard does not purport to address all of the safety problems associated with its use. It is the responsibility of whoever uses this standard to consult and establish appropriate safety and health practices and determine the applicability of regulatory limitations prior to use.*

2. Referenced Documents

2.1 *ASTM Standards:*

D 421 Practice for Dry Preparation of Soil Samples for Particle-Size Analysis and Determination of Soil Constants[2]

D 422 Method for Particle-Size Analysis of Soils[2]

E 11 Specification for Wire-Cloth Sieves for Testing Purposes[3]

3. Significance and Use

3.1 Procedure A is used to prepare soil samples for plasticity tests and particle-size analysis when the coarse-grained particles of a sample are soft and pulverize readily, as in Practice D 421, or when the fine particles are very cohesive and tend to resist removal from the coarse particles.

3.2 Some soils never dry out in nature and may change their characteristics greatly when dried. If the true natural gradation and plasticity characteristics of such soils are desired, these soils should be shipped to the laboratory in sealed containers and processed in accordance with Procedure B of this practice.

3.3 Liquid limit and plasticity index values derived from samples containing their natural moisture are usually, but not always, equal to or higher than values derived from similar samples of the dried soil. In the case of fine-grained organic soil, there is a radical drop in plasticity due to oven drying.

4. Apparatus

4.1 *Balance*, sensitive to 0.1 g.

4.2 *Mortar and Rubber-Covered Pestle*, suitable for breaking up the aggregations of soil particles.

4.3 *Sieves*, No. 10 (2.00-mm) and No. 40 (425-μm), of square mesh woven-wire cloth, conforming to Specification E 11.

4.4 *Sampler*—A riffle sampler or sample splitter for quartering the samples.

4.5 *Drying Apparatus*—Thermostatically controlled drying oven for use at 140°F (60°C) or below and at 230°F (110°C), infrared lamps; air drier; or other suitable device for drying samples.

4.6 *Filter Funnels or Candles*—Büchner funnels 10 in. (254 mm) in diameter and filter paper or filter candles.

4.7 *Miscellaneous Equipment*—Pans 12 in. (304.8 mm) in diameter and 3 in. (76.2 mm) in depth; a suitable container that will prevent loss of moisture during storage of the moist test sample prepared in Procedure B.

PROCEDURE A

5. Sampling

5.1 Dry the soil sample as received from the field, using one of the following methods: (*1*) in air at room temperature, (*2*) in a drying oven at a temperature not exceeding 140°F (60°C), or (*3*) using any warming device that will not raise the temperature of the sample above 140°F. Break up thoroughly any aggregations of particles using the mortar and rubber-covered pestle or other suitable device (Note 1). Select a representative portion by the method of quartering or by use of the sampler. This portion must be sufficient to provide samples for particle-size analyses of material retained on and passing the No. 10 (2.00-mm) sieve, and to provide an adequate amount of material passing the No. 40 (425-μm) sieve for the tests to determine soil constants. The amounts of material required to perform the individual tests are as follows:

[1] This practice is under the jurisdiction of ASTM Committee D-18 on Soil and Rock and is the direct responsibility of Subcommittee D18.03 on Texture, Plasticity, and Density Characteristics of Soils.

Current edition approved July 26, 1985. Published September 1985. Originally published as D 2217 – 63 T. Last previous edition D 2217 – 66 (1978)[ε1].

[2] *Annual Book of ASTM Standards*, Vol 04.08.

[3] *Annual Book of ASTM Standards*, Vol 14.02.

Particle-Size Analysis of Material Retained on No. 10 (2.00-mm) Sieve:	
Gravelly soils, g	4 000 to 10 000
Sandy soils, g	1 500
Silty or clayey soils, g	400
Particle-Size Analysis of Material Passing No. 10 (2.00-mm) Sieve:	
Sandy soils, g	115
Silty or clayey soils, g	65
Tests for Determination of Soil Constants:	
Liquid limit, g	100
Plastic limit, g	15
Centrifuge moisture equivalent, g	10
Shrinkage factors, g	30
Check tests, g	65

NOTE 1—When the sample contains particles of soft shale or sandstone or similar weak material, proper care must be exercised to avoid excessive reduction in the size of the particles.

6. Preparation of Test Samples

6.1 *For Particle-Size Analysis:*

6.1.1 Weigh the portion of the test sample selected for particle-size analysis and record as the weight of test sample uncorrected for hygroscopic moisture. Separate this material into two portions using the No. 10 (2.00-mm) sieve. Set aside the portion passing for later recombination with additional material washed from the portion retained on the No. 10 (2.00-mm) sieve.

6.1.2 Place the material retained on the No. 10 (2.00-mm) sieve in a pan, cover with water, and allow to soak until the particle aggregations become soft. After soaking, wash the material on a No. 10 (2.00-mm) sieve in the following manner: Place an empty No. 10 (2.00-mm) sieve on the bottom of a clean pan and pour the water from the soaked sample into the sieve. Add sufficient water to bring the level approximately ½ in. (12.7 mm) above the mesh of the sieve. Transfer the soaked material to the sieve in increments not exceeding 1 lb (0.45 kg), stirring each increment with the fingers while agitating the sieve up and down. Crumble or mash any lumps that have not slaked, using the thumb and fingers. Raise the sieve above the water in the pan and complete the washing operation using a small amount of clean water. Transfer the washed material on the sieve to a clean pan before placing another increment of soaked material on the sieve.

6.1.3 Dry the material retained on the No. 10 (2.00-mm) sieve at a temperature of 230 ± 9°F (110 ± 5°C), sieve on the No. 10 (2.00-mm) sieve, and add the material passing the sieve to similar material obtained in 6.1.1. Set aside the material retained on the sieve for use in the particle-size analysis.

6.1.4 Set aside the pan containing the washings for a period of several hours or until the water above the particles is clear. Decant, pipet, or siphon off as much of the clear water as possible (Note 2). Dry the soil remaining in the pan at a temperature not exceeding 140°F (60°C). Grind the dried soil in the mortar with the rubber-covered pestle or other suitable device, and combine with similar material obtained in 6.1.1.

6.1.5 Alternatively, after all the soaked material has been washed, remove most of the water by filtering the wash water on one or more Büchner funnels fitted with filter paper or by using filter candles. Remove the moist soil from the filter paper or filter candles, combine with any sediment remaining in the pan, and dry at a temperature not exceeding 140°F (60°C). Grind the dried soil in the mortar with a rubber-covered pestle or other suitable device and combine with similar material obtained in 6.1.1.

NOTE 2—In some instances, the wash water will not become clear in a reasonable length of time; in this case the entire volume must be evaporated.

6.2 *For Determination of Soil Constants*—Proceed in accordance with 6.1, substituting a No. 40 (425-µm) sieve for the No. 10 (2.00-mm) sieve.

NOTE 3—In some areas it is possible that the cations of salts present in the tap water may exchange with the natural cations in the soil and alter significantly the values of the soil constants should tap water be used in the soaking and washing operations. Unless it is known that such cations are not present in the tap water, distilled or demineralized water should be used. The soaking and washing operation will remove soluble salts contained in the soil. When soluble salts are present in the soil, the wash water should be saved and evaporated, and the salts returned to the soil sample.

7. Test Samples

7.1 Keeping each portion separate from the other portion, mix thoroughly the portions of the soil sample passing the No. 10 (2.00-mm) sieve and the No. 40 (425-µm) sieve. By the method of quartering or by the use of the sampler, select and weigh out test samples of the weights indicated in Section 5, as may be needed to make the required tests.

PROCEDURE B

8. Samples

8.1 Samples prepared in accordance with this procedure must be shipped from the field to the laboratory in sealed containers and must contain all their natural moisture. Samples obviously containing only particles passing the No. 10 (2.00-mm) sieve may be tested in the particle-size analysis without first washing on the No. 10 (2.00-mm) sieve. Samples obviously containing only particles passing the No. 40 (425-µm) sieve may be used in the tests to determine soil constants without first washing on the No. 40 (425-µm) sieve.

9. Preparation of Test Samples

9.1 *For Particle-Size Analysis:*

9.1.1 Select and weigh a representative portion of the moist sample estimated to contain 50 g of particles passing the No. 10 (2.00-mm) sieve for silty and clayey soil, or 100 g for sandy soil. For samples containing particles not passing the No. 10 (2.00-mm) sieve for which a particle-size analysis is required, select and weigh a representative sample estimated to contain the required amounts of particles both passing and not passing the No. 10 (2.00-mm) sieve. Determine the moisture content at 230 ± 9°F (110 ± 5°C) using an auxiliary sample, for use in Method D 422.

9.1.2 Soak the moist sample and wash on a No. 10 (2.00-mm) sieve as described in 6.1.2. After washing, dry the material retained on the No. 10 (2.00-mm) sieve in an oven at a temperature of 230 ± 9°F (110 ± 5°C), weigh, and retain for the particle-size analysis. If the volume of the wash water and soil is too large for use in the sedimentation procedure in the test for particle-size analysis, evaporate excess water by exposure to air at room temperature, by heating in an oven

62

at a temperature not exceeding 230°F (110°C), or by boiling. Regardless of the method of evaporation used, the following precautions must be taken: (*1*) stir the slurry from time to time to prevent a dry soil ring from forming on the walls of the evaporation vessel, and (*2*) return the temperature of the sample to room temperature before testing.

9.2 *For Determination of Soil Constants*—Select a representative portion of the moist sample estimated to contain sufficient particles passing the No. 40 (425-µm) sieve to make the required tests for determination of soil constants. Soak this selected portion of the moist sample and wash on the No. 40 (425-µm) sieve as described in 6.2 (Note 2). Reduce the moisture content of the material passing the No. 40 (425-µm) sieve until the mass reaches a putty-like consistency (such as 30 to 35 drops of the cup in the liquid limit test) but never below the natural moisture content. Reduction of moisture content may be accomplished as follows: by exposure to air at ordinary room temperature, by heating in an oven at a temperature not exceeding 230°F (110°C), by boiling, by filtering on a Büchner funnel, or by use of filter candles. During evaporation and cooling, stir the sample often enough to prevent overdrying of the fringes and soil pinnacles on the surface. Cool the heated samples to normal room temperature before testing. For soil samples containing soluble salts, use a method of water reduction that will not eliminate the soluble salts from the test sample. Protect the prepared sample in a suitable container from further drying until all required tests have been performed.

The American Society for Testing and Materials takes no position respecting the validity of any patent rights asserted in connection with any item mentioned in this standard. Users of this standard are expressly advised that determination of the validity of any such patent rights, and the risk of infringement of such rights, are entirely their own responsibility.

This standard is subject to revision at any time by the responsible technical committee and must be reviewed every five years and if not revised, either reapproved or withdrawn. Your comments are invited either for revision of this standard or for additional standards and should be addressed to ASTM Headquarters. Your comments will receive careful consideration at a meeting of the responsible technical committee, which you may attend. If you feel that your comments have not received a fair hearing you should make your views known to the ASTM Committee on Standards, 1916 Race St., Philadelphia, PA 19103.

000176

llows:

F) by
ter at
).

the

, and

rticle

y as

test

itory

aulic
and

Standard Test Method for One-Dimensional Consolidation Properties of Soils[1]

This standard is issued under the fixed designation D 2435; the number immediately following the designation indicates the year of original adoption or, in the case of revision, the year of last revision. A number in parentheses indicates the year of last reapproval. A superscript epsilon (ε) indicates an editorial change since the last revision or reapproval.

1. Scope

1.1 This test method covers procedures for determining the magnitude and rate of consolidation of soil when it is restrained laterally and drained axially while subjected to incrementally applied controlled-stress loading. Two alternative procedures are provided as follows:

1.1.1 *Test Method A*—This test method is performed with constant load increment duration of 24 h, or multiples thereof. Time-deformation readings are required on a minimum of two load increments.

1.1.2 Test Method B—Time-deformation readings are required on all load increments. Successive load increments are applied after 100 % primary consolidation is reached, or at constant time increments as described in Test Method A.

NOTE 1—The determination of the rate and magnitude of consolidation of soil when it is subjected to controlled-strain loading is covered by Test Method D 4186.

1.2 This test method is most commonly performed on undisturbed samples of fine grained soils naturally sedimented in water, however, the basic test procedure is applicable, as well, to specimens of compacted soils and undisturbed samples of soils formed by other processes such as weathering or chemical alteration. Evaluation techniques specified in this test method are generally applicable to soils naturally sedimented in water. Tests performed on other soils such as compacted and residual (weathered or chemically altered) soils may require special evaluation techniques.

1.3 It shall be the responsibility of the agency requesting this test to specify the magnitude and sequence of each load increment, including the location of a rebound cycle, if required, and, for Test Method A, the load increments for which time-deformation readings are desired.

NOTE 2—Time-deformation readings are required to determine the time for completion of primary consolidation and for evaluating the coefficient of consolidation, c_v. Since c_v varies with stress level and load increment (loading or unloading), the load increments with timed readings must be selected with specific reference to the individual project. Alternatively, the requesting agency may specify Test Method B wherein the time-deformation readings are taken on all load increments.

1.4 The values stated in SI units are to be regarded as the standard. The values stated in inch-pound units are approximate and given for guidance only. Reporting of test results in units other than SI shall not be regarded as nonconf mance with this test method.

1.4.1 In the engineering profession it is customary pr tice to use, interchangeably, units representing both m and force, unless dynamic calculations ($F = Ma$) a involved. This implicitly combines two separate systems units, that is, the absolute system and the gravimetric syste It is scientifically undesirable to combine two separ systems within a single standard. This test method has be written using SI units; however, inch-pound conversions a given in the gravimetric system, where the pound (lb represents a unit of force (weight). The use of balances scales recording pounds of mass (lbm), or the recording density in lb/ft^3 should not be regarded as nonconforman with this test method.

1.5 *This standard does not purport to address the saf problems associated with its use. It is the responsibility of t user of this standard to establish appropriate safety a health practices and determine the applicability of regulat limitations prior to use.*

2. Referenced Documents

2.1 *ASTM Standards:*

D 422 Method for Particle-Size Analysis of Soils[2]
D 653 Terminology Relating to Soil and Rock[2]
D 854 Test Method for Specific Gravity of Soils[2]
D 1587 Practice For Thin-Walled Tube Sampling of Soi
D 2216 Method for Laboratory Determination of Wa (Moisture) Content of Soil, Rock, and Soil-Aggreg Mixtures[2]
D 2487 Classification of Soils for Engineering Purposes
D 2488 Practice for Description and Identification of So (Visual-Manual Procedure)[3]
D 3550 Practice for Ring-Lined Barrel Sampling of Soil
D 4186 Test Method for One-Dimensional Consolidati Properties of Soils Using Controlled-Strain Loading[2]
D 4220 Practice for Preserving and Transporting S Samples[2]
D 4318 Test Method for Liquid Limit, Plastic Limit, a Plasticity Index of Soils[2]
D 4452 Methods for X-Ray Radiography of Soil Sample
D 4546 Test Methods for One-Dimensional Swell Settlement Potential of Cohesive Soils[3]

3. Terminology

3.1 *Definitions*—The definitions of terms used in this t method shall be in accordance with Terminology D 653.

[1] This test method is under the jurisdiction of ASTM Committee D-18 on Soil and Rock and is the direct responsibility of subcommittee D18.05 on Structural Properties of Soil.

Current edition approved June 29, 1990. Published November 1990. Originally published as D 2435 - 65T. Last previous edition D 2435 - 80.

[2] *Annual Book of ASTM Standards*, Vol 04.08.

[3] *Annual Book of ASTM Standards*, Vols 04.08 and 08.04.

000177

H_0=19.050 mm

H_s=8.538 mm

Void Ratio and Strain Information

Load Increment (kPa)	d_f corrected (mm)	$\Sigma\Delta H$ (mm)	ϵ $\Sigma\Delta H/H_0$ (%)	H $(H_0-\Delta H)$ (mm)	e $(H-H_s)/H_s$
initial	5.3300	0	0	19.0500	1.231
5	5.3012	0.0288	0.15	19.0212	1.228
10	5.2743	0.0557	0.29	18.9943	1.225
20	5.2167	0.1133	0.59	18.9367	1.218
40	5.1161	0.2139	1.12	18.8361	1.206
80	4.9433	0.3867	2.03	18.6633	1.186
160	4.4740	0.8560	4.49	18.1940	1.131
320	2.9804	2.3496	12.33	16.7004	0.956
640	1.8908	3.4392	18.05	15.6108	0.828
1280	0.9860	4.3440	22.80	14.7060	0.722
320	1.0747	4.2553	22.34	14.7947	0.733
80	1.4000	3.9300	20.63	15.1200	0.771
20	1.8169	3.5131	18.44	15.5369	0.820
5	2.2319	3.0981	16.26	15.9519	0.868

Coefficient of Consolidation, c_v

d_{50}corrected (mm)	$\Sigma\Delta H$ (mm)	ϵ_{50} (%)	H_{50} (mm)	e_{50}	t_{50} (sec)	c_v (mm^2/sec)
5.0604	0.2696	1.42	18.780	1.200	52	3.34×10^{-1}
4.7945	0.5355	2.81	18.515	1.169	144	1.17×10^{-1}
3.7861	1.5439	8.10	17.506	1.050	516	2.93×10^{-2}
2.4983	2.8317	14.86	16.218	0.900	282	4.59×10^{-2}
1.5077	3.8223	20.06	15.228	0.784	156	7.32×10^{-2}

FIG. 1 Consolidation Test Summary

4. Summary of Test Method

4.1 In this test method a soil specimen is restrained laterally and loaded axially with total stress increments. Each stress increment is maintained until excess pore water pressures are completely dissipated. During the consolidation process, measurements are made of change in the specimen height and these data are used to determine the relationship between the effective stress and void ratio or strain, and the rate at which consolidation can occur by evaluating the coefficient of consolidation.

5. Significance and Use

5.1 The data from the consolidation test are used to estimate the magnitude and rate of both differential and total settlement of a structure or earthfill. Estimates of this type are of key importance in the design of engineered structures and the evaluation of their performance.

5.2 The test results can be greatly affected by sample disturbance. Careful selection and preparation of test specimens is required to minimize disturbance.

5.3 Consolidation test results are dependent upon the magnitude of the load increments. Traditionally, the load is doubled for each increment resulting in a load-increment ratio of 1. For undisturbed samples, this load procedure has provided data from which estimates of the preconsolidation pressure also referred to as the maximum past pressure, using established evaluation techniques, compare directly with field measurement. Other load schedules may be used to model particular field conditions or meet special requirements. For example, it may be desirable to inundate and load the specimen in accordance with the wetting or loading pattern expected in the field in order to best simulate the response. Smaller than standard load increment ratios may be desirable for soils that are highly sensitive or whose response is highly dependent on strain rate. The test method specified to estimate the preconsolidation pressure provides a simple technique to verify that one set of time readings are taken after the preconsolidation pressure. Several other evaluation techniques exist and may yield different estimates of the preconsolidation pressure. Therefore, the requesting agency may specify an alternate technique to estimate the preconsolidation pressure.

5.4 Consolidation test results are dependent upon the duration of each load increment. Traditionally, the load duration is the same for each increment and equal to 24 h. For some soils, the rate of consolidation is such that complete consolidation (dissipation of excess pore pressure) will require more than 24 h. The apparatus in general use does not have provisions for formal verification of pore pressure dissipation. It is necessary to use an interpretation technique which indirectly determines that consolidation is complete. This test method specifies two techniques, however the requesting agency may specify an alternative technique and still be in conformance with this test method.

5.5 The apparatus in general use for this test method does not have provisions for verification of saturation. Most undisturbed samples taken from below the water table will be saturated. However, the time rate of deformation is very sensitive to degree of saturation and caution must be exercised regarding estimates for duration of settlements when partially saturated conditions prevail. The extent to which partial saturation influences the test results may be a part of the test evaluation and may include application of theoretical models other than conventional consolidation theory. Alternatively, the test may be performed using an apparatus equipped to saturate the specimen.

5.6 This test method uses conventional consolidation theory based on Terzaghi's consolidation equation to compute the coefficient of consolidation, c_v. The analysis is based upon the following assumptions:

5.6.1 The soil is saturated and has homogeneous properties;

5.6.2 The flow of pore water is in the vertical direction;

5.6.3 The compressibility of soil particles and pore water is negligible compared to the compressibility of the soil skeleton;

000178

5.6.4 The stress-strain relationship is linear over the load increment;

5.6.5 The ratio of soil permeability to soil compressibility is constant over the load increment; and

5.6.6 Darcy's law for flow through porous media applies.

6. Apparatus

6.1 *Load Device*—A suitable device for applying vertical loads or total stresses) to the specimen. The device should be capable of maintaining specified loads for long periods of time with an accuracy of ± 0.5 % of the applied load and should permit quick application of a given load increment without significant impact.

NOTE 3—Load application generally should be completed in a time corresponding to 0.01 t_{100} or less. For soils where primary consolidation is completed in 3 min, load application should be less than 2 s.

6.2 *Consolidometer*—A device to hold the specimen in a ring that is either fixed to the base or floating (supported by friction on periphery of specimen) with porous disks on each face of the specimen. The inside diameter of the ring shall be determined to a tolerance of 0.075 mm (0.003 in.). The consolidometer shall also provide a means of submerging the specimen, for transmitting the concentric vertical load to the porous disks, and for measuring the change in height of specimen.

6.2.1 *Minimum Specimen Diameter*—The minimum specimen diameter shall be 50 mm (2.00 in.).

6.2.2 *Minimum Specimen Height*—The minimum initial specimen height shall be 12 mm (0.5 in.), but shall be not less than ten times the maximum particle diameter.

NOTE 4—If large particles are found in the specimen after testing, include in the report this visual observation or the results of a particle size analysis in accordance with Method D 422 (except the minimum sample size requirement shall be waived).

6.2.3 *Minimum Specimen Diameter-to-Height Ratio*—The minimum specimen diameter-to-height ratio shall be 2.5.

NOTE 5—The use of greater diameter-to-height ratios is recommended. To minimize the effects of friction between the sides of the specimen and ring, a diameter-to-height ratio greater than four is preferable.

6.2.4 *Specimen Ring Rigidity*—The rigidity of the ring shall be such that, under hydrostatic stress conditions in the specimen, the change in diameter of the ring will not exceed 0.03 % of the diameter under the greatest load applied.

6.2.5 *Specimen Ring Material*—The ring shall be made of a material that is noncorrosive in relation to the soil tested. The inner surface shall be highly polished or shall be coated with a low-friction material. Silicone grease or molybdenum disulfide is recommended; polytetrafluoroethylene is recommended for nonsandy soils.

6.3 *Porous Disks*—The porous disks shall be of silicon carbide, aluminum oxide, or similar noncorrosive material. The grade of the disks shall be fine enough to prevent intrusion of soil into the pores. If necessary, a filter paper (see Note 6) may be used to prevent intrusion of the soil into the disks; however, the permeability of the disks, and filter paper, if used, must be at least one order of magnitude h than that of the specimen.

NOTE 6—Whatman No. 54 filter paper has been found to requirements for permeability and durability.

6.3.1 *Diameter*—The diameter of the top disk shall b to 0.5 mm (0.01 to 0.02 in.) less than the inside diame the ring. If a floating ring is used, the bottom disk shall the same diameter as the top disk.

NOTE 7—The use of tapered disks is recommended, with the diameter in contact with the soil.

6.3.2 *Thickness*—Thickness of the disks shall be suff to prevent breaking. The top disk shall be loaded throu corrosion-resistant plate of sufficient rigidity to pr breakage of the disk.

6.3.3 *Maintenance*—The disks shall be clean and from cracks, chips, and nonuniformities. New porous should be boiled for at least 10 minutes and left in the to cool to ambient temperature before use. Immediately each use, clean the porous disks with a nonabrasive and boil to remove clay particles that may reduce permeability. It is recommended that porous disks be s in a jar with deaired water between tests.

6.4 *Specimen Trimming Device*—A trimming turn or a cylindrical cutting ring may be used for trimmin sample down to the inside diameter of the consolido ring with a minimum of disturbance. A cutter havin same inside diameter as the specimen ring shall attach be integral with the specimen ring. The cutter shall h sharp edge, a highly polished surface and be coated v low-friction material. Alternatively, a turntable or trim lathe may be used. The cutting tool must be properly al to form a specimen of the same diameter as that of the

6.5 *Deformation Indicator*—To measure change in imen height, with a readability of 0.0025 mm (0.0001

6.6 *Miscellaneous Equipment*—Including timing c with 1 s readability, distilled or demineralized water, ulas, knives, and wire saws, used in preparing the spec

6.7 *Balances*, in accordance with Method D 2216.

6.8 *Drying Oven*, in accordance with Method D 221

6.9 *Water Content Containers*, in accordance Method D 2216.

6.10 Environment—Tests shall be performed in an ronment where temperature fluctuations are less than (± 7°F) and there is no direct exposure to sunlight.

7. Calibration

7.1 The measured vertical deformations must be rected for apparatus flexibility whenever the calib correction determined in 7.4 exceeds 5 % of the mea deformation and in all tests where filter paper disks are

7.2 Assemble the consolidometer with a copper or steel disk of approximately the same height as th specimen and 1 mm (0.04 in.) smaller in diameter tha ring, in place of the sample. Moisten the porous dis filter papers are to be used (see 6.3), they shou moistened and sufficient time (a minimum of 2 allowed for the moisture to be squeezed from them c each increment of the calibration process.

000179

7.3 Load and unload the consolidometer as in the test and measure the deformation for each load applied. When filter papers are used it is imperative that calibration be performed following the exact loading and unloading schedule to be used. This is due to the inelastic deformation characteristics of filter paper. Recalibration for tests without filter paper need be done only on an annual basis, or after replacement and reassembly of apparatus components.

7.4 At each load applied, plot or tabulate the corrections to be applied to the measured deformation of the test specimen. Note that the metal disk will deform also; however, the correction due to this deformation will be negligible for all but extremely stiff soils. If necessary, the compression of the metal disk can be computed and applied to the corrections.

8. Sampling

8.1 Practices D 1587 and D 3550 cover procedures and apparatus that may be used to obtain undisturbed samples generally satisfactory for testing. Specimens may also be trimmed from large undisturbed block samples fabricated and sealed in the field. Finally, remolded specimens may be prepared from bulk samples to density and moisture conditions stipulated by the agency requesting the test.

8.2 Undisturbed samples destined for testing in accordance with this test method shall be preserved, handled, and transported in accordance with the practices for Group C and D samples in Practices D 4220. Bulk samples for remolded specimens should be handled and transported in accordance with the practice for Group B samples.

8.3 *Storage*—Storage of sealed samples should be such that no moisture is lost during storage, that is, no evidence of partial drying of the ends of the samples or shrinkage. Time of storage should be minimized, particularly when the soil or soil moisture is expected to react with the sample tubes.

8.4 The quality of consolidation test results diminishes greatly with sample disturbance. It should be recognized that no sampling procedure can ensure completely undisturbed samples. Therefore, careful examination of the sample is essential in selection of specimens for testing.

NOTE 8—Examination for sample disturbance, stones, or other inclusions, and selection of specimen location is greatly facilitated by x-ray radiography of the samples (see Methods D 4452).

9. Specimen Preparation

9.1 All possible precautions should be taken to minimize disturbance of the soil or changes in moisture and density during specimen preparation. Avoid vibration, distortion, and compression.

9.2 Prepare test specimens in an environment where soil moisture change during preparation is minimized.

NOTE 9—A high humidity environment is usually used for this purpose.

9.3 Trim the specimen and insert it into the consolidation ring. When specimens come from undisturbed soil collected using sample tubes, the inside diameter of the tube shall be at least 5 mm (0.25 in.) greater than the inside diameter of the consolidation ring, except as noted in 9.4 and 9.5. It is recommended that either a trimming turntable or cylindrical cutting ring be used to cut the soil to the proper diameter. When using a trimming turntable, make a complete perimeter cut, reducing the specimen diameter to the inside diameter of the consolidation ring. Carefully insert the specimen into the consolidation ring, by the width of the cut, with a minimum of force. Repeat until the specimen protrudes from the bottom of the ring. When using a cylindrical cutting ring, trim the soil to a gentle taper in front of the cutting edge. After the taper is formed, advance the cutter a small distance to form the final diameter. Repeat the process until the specimen protrudes from the ring.

9.4 Fibrous soils, such as peat, and those soils that are easily damaged by trimming, may be transferred directly from the sampling tube to the ring, provided that the ring has the same diameter as the sample tube.

9.5 Specimens obtained using a ring-lined sampler may be used without prior trimming, provided they comply with the requirements of Practice D 3550 and this test method.

9.6 Trim the specimen flush with the plane ends of the ring. The specimen may be recessed slightly below the top of the ring, to facilitate centering of the top stone, by partial extrusion and trimming of the bottom surface. For soft to medium soils, a wire saw should be used for trimming the top and bottom of the specimen to minimize smearing. A straightedge with a sharp cutting edge may be used for the final trim after the excess soil has first been removed with a wire saw. For stiff soils, a sharpened straightedge alone may be used for trimming the top and bottom. If a small particle is encountered in any surface being trimmed, it should be removed and the resulting void filled with soil from the trimmings.

NOTE 10—If, at any stage of the test, the specimen swells beyond its initial height, the requirement of lateral restraint of the soil dictates the use of a recessed specimen or the use of a specimen ring equipped with an extension collar of the same inner diameter as the specimen ring. At no time should the specimen extend beyond the specimen ring or extension collar.

9.7 Determine the initial wet mass of the specimen, M_{T_o}, in the consolidation ring by measuring the mass of the ring with specimen and subtracting the tare mass of the ring.

9.8 Determine the initial height, H_o, of the specimen to the nearest 0.025 mm (0.001 in.) by taking the average of at least four evenly spaced measurements over the top and bottom surfaces of the specimen using a dial comparator or other suitable measuring device.

9.9 Compute the initial volume, V_o, of the specimen to the nearest 0.25 cm^3 (0.015 $in.^3$) from the diameter of the ring and the initial specimen height.

9.10 Obtain two or three natural water content determinations of the soil in accordance with Method D 2216 from material trimmed adjacent to the test specimen if sufficient material is available.

9.11 When index properties are specified by the requesting agency, store the remaining trimmings taken from around the specimen and determined to be similar material in a sealed container for determination as described in Section 10.

10. Soil Index Property Determinations

10.1 The determination of index properties is an important adjunct to but not a requirement of the consolidation test. These determinations when specified by the requesting agency should be made on the most representative material possible. When testing uniform materials, all index tests may be performed on adjacent trimmings collected in 9.11. When samples are heterogeneous or trimmings are in short supply, index tests should be performed on material from the test specimen as obtained in 11.6, plus representative trimmings collected in 9.11.

10.2 *Specific Gravity*—The specific gravity shall be determined in accordance with Test Method D 854 on material from the sample as specified in 10.1. The specific gravity from another sample judged to be similar to that of the test specimen may be used for calculation in 12.2.5 whenever an accurate void ratio is not needed.

10.3 *Atterberg Limits*—The liquid limit, plastic limit and plasticity index shall be determined in accordance with Test Method D 4318 using material from the sample as specified in 10.1. Determination of the Atterberg limits are necessary for proper material classification but are not a requirement of this test method.

10.4 *Particle Size Distribution*—The particle size distribution shall be determined in accordance with Method D 422 (except the minimum sample size requirement shall be waived) on a portion of the test specimen as obtained in 11.6. A particle size analysis may be helpful when visual inspection indicates that the specimen contains a substantial fraction of coarse grained material but is not a requirement of this test method.

11. Procedure

11.1 Preparation of the porous disks and other apparatus will depend on the specimen being tested. The consolidometer must be assembled in such a manner as to prevent a change in water content of the specimen. Dry porous disks and filters must be used with dry, highly expansive soils and may be used for all other soils. Damp disks may be used for partially saturated soils. Saturated disks may be used when the specimen is saturated and known to have a low affinity for water. Assemble the ring with specimen, porous disks, filter disks (when needed) and consolidometer. If the specimen will not be inundated shortly after application of the seating load (see 11.2), enclose the consolidometer in a loose fitting plastic or rubber membrane to prevent change in specimen volume due to evaporation.

NOTE 11—In order to meet the stated objectives of this test method, the specimen must not be allowed to swell in excess of its initial height prior to being loaded beyond its preconsolidation pressure. Detailed procedures for the determination of one-dimensional swell or settlement potential of cohesive soils is covered by Test Method D 4546.

11.2 Place the consolidometer in the loading device and apply a seating pressure of 5 kPa (100 lbf/ft^2). Immediately after application of the seating load, adjust the deformation indicator and record the initial zero reading, d_o. If necessary, add additional load to keep the specimen from swelling. Conversely, if it is anticipated that a load of 5 kPa (100 lbf/ft^2) will cause significant consolidation of the specimen, reduce the seating pressure to 2 or 3 kPa (about 50 lbf/ft^2) or less.

11.3 If the test is performed on an intact specimen that was either saturated under field conditions or obtained below the water table, inundate shortly after application of the seating load. As inundation and specimen wetting occur, increase the load as required to prevent swelling. Record the load required to prevent swelling and the resulting deformation reading. If specimen inundation is to be delayed to simulate specific conditions, then inundation must occur at a pressure that is sufficiently large to prevent swell. In such cases, apply the required load and inundate the specimen. Take time deformation readings during the inundation period as specified in 11.5. In such cases, note in the test report the pressure at inundation and the resulting changes in height.

11.4 The specimen is to be subjected to increments of constant total stress. The duration of each increment shall conform to guidelines specified in 11.5. The specific loading schedule will depend on the purpose of the test, but should conform to the following guidelines. If the slope and shape of a virgin compression curve or determination of the preconsolidation pressure is required, the final pressure shall be equal to or greater than four times the preconsolidation pressure. In the case of overconsolidated clays, a better evaluation of recompression parameters may be obtained by imposing an unload-reload cycle after the preconsolidation pressure has been defined. Details regarding location and extent of an unload-reload cycle is the option of the agency requesting the test (see 1.3), however, unloading shall always span at least two decrements of pressure.

11.4.1 The standard loading schedule shall consist of load increment ratio (LIR) of one which is obtained by doubling the pressure on the soil to obtain values approximately 12, 25, 50, 100, 200, etc. kPa (250, 500, 1000, 2000, 4000, etc. lbf/ft^2).

11.4.2 The standard rebound or unloading schedule should be selected by halving the pressure on the soil (that is, use the same increments of 11.4.1, but in reverse order). However, if desired, each successive load can be one-fourth as large as the preceding load, that is, skip one decrement.

11.4.3 An alternative loading, unloading, or reloading schedule may be employed that reproduces the construction stress changes or obtains better definition of some part of the stress deformation (compression) curve, or aids in interpreting the field behavior of the soil.

NOTE 12—Small increments may be desirable on highly compressible specimens or when it is desirable to determine the preconsolidation pressure with more precision. It should be cautioned, however, that increment ratios less than 0.7 and load increments very close to preconsolidation pressure may preclude evaluation for the coefficient of consolidation, c_v, and the end-of-primary consolidation as discussed in Section 12.

000181

11.5 Before each pressure increment is applied, record the height or change in height, d_f, of the specimen. Two alternative procedures are available that specify the time sequence of readings and the required minimum load duration. Longer durations are often required during specific load increments to define the slope of the characteristic straight line secondary compression portion of the deformation versus log of time graph. For such increments, sufficient readings should be taken near the end of the pressure increment to define this straight line portion. It is not necessary to increase the duration of other pressure increments during the test.

11.5.1 *Test Method A*—The standard load increment duration shall be 24 h. For at least two load increments, including at least one load increment after the preconsolidation pressure has been exceeded, record the height or change in height, d, at time intervals of approximately 0.1, 0.25, 0.5, 1, 2, 4, 8, 15 and 30 min, and 1, 2, 4, 8 and 24 h (or 0.09, 0.25, 0.49, 1, 4, 9 min etc. in using 12.3.2 to present time-deformation data), measured from the time of each incremental pressure application. Take sufficient readings near the end of the pressure increment period to verify that primary consolidation is completed. For some soils, a period of more than 24 h may be required to reach the end-of-primary consolidation (as determined in 12.3.1.1 or 12.3.2.3). In such cases, load increment durations greater than 24 h are required. The load increment duration for these tests is usually taken at some multiple of 24 h and should be the standard duration for all load increments of the test. The decision to use a time interval greater than 24 h is usually based on experience with particular types of soils. If, however, there is a question as to whether a 24 h period is adequate, a record of height or change in height with time should be made for the initial load increments in order to verify the adequacy of a 24 h period. Load increment durations other than 24 h shall be noted in the report. For pressure increments where time versus deformation data are not required, leave the load on the specimen for the same length of time as when time versus deformation readings are taken.

11.5.2 *Test Method B*—For each increment, record the height or change in height, d, at time intervals of approximately 0.1, 0.25, 0.5, 1, 2, 4, 8, 15, 30 min, and 1, 2, 4, 8 and 24 h (or 0.09, 0.25, 0.49, 1, 4, 9, min, etc. if using 12.3.2 to present time deformation data), measured from the time of each incremental pressure application. The standard load increment duration shall exceed the time required for completion of primary consolidation as determined by 12.3.1.1, 12.3.2.3 or a criterion set by the requesting agency. For each increment where it is impossible to verify the end of primary consolidation (for example, low LIR or rapid consolidation), the load increment duration shall be constant and exceed the time required for primary consolidation of an increment applied after the preconsolidation pressure and along the virgin compression curve. Where secondary compression must be evaluated, apply pressures for longer periods. The report shall contain the load increment duration for each increment.

NOTE 13—The suggested time intervals for recording height or change in height are for typical soils and load increments. It is often desirable to change the reading frequency to improve interpretation of the data. More rapid consolidation will require more frequent readings. For most soils, primary consolidation during the first load-decrements will be complete in less time (typically one-tenth) than would be required for a load increment along the virgin compression curve, however, at very low stresses the rebound time can be longer.

11.6 To minimize swell during disassembly, rebound the specimen back to the seating load (5 kPa). Once height changes have ceased (usually overnight), dismantle quickly after releasing the final small load on the specimen. Remove the specimen and the ring from the consolidometer and wipe any free water from the ring and specimen. Determine the mass of the specimen in the ring and subtract the tare mass of the ring to obtain the final wet specimen mass, M_{T_f}. The most accurate determination of the specimen dry mass and water content is found by drying the entire specimen at the end of the test. If the soil sample is homogeneous and sufficient trimmings are available for the specified index testing (see 9.11), then determine the final water content, w_f, in accordance with Method D 2216 and dry mass of solids, M_d, using the entire specimen. If the soil is heterogeneous or more material is required for the specified index testing, then determine the final water content, w_{f_p}, in accordance with Method D 2216 using a small wedge shaped section of the specimen. The remaining undried material should be used for the specified index testing.

12. Calculation

12.1 Calculations as shown are based on the use of SI units. Other units are permissible, provided the appropriate conversion factors are used to maintain consistency of units throughout the calculations. See 1.4.1 for additional comments on the use of inch-pound units.

12.2 *Specimen Properties:*

12.2.1 Obtain the dry mass of the total specimen, M_d, by direct measurement or for the case where part of the specimen is used for index testing, calculate the dry mass as follows:

$$M_d = \frac{M_{T_f}}{1 + w_{f_p}}$$

where:

M_{T_f} = moist mass of total specimen after test, g or Mg, and
w_{f_p} = water content (decimal form) wedge of specimen taken after test.

12.2.2 Calculate the initial and final water content, in percent, as follows:

$$\text{initial water content: } w_0 = \frac{M_{T_o} - M_d}{M_d} \times 100$$

$$\text{final water content: } w_f = \frac{M_{T_f} - M_d}{M_d} \times 100$$

where:

M_d = dry mass of specimen, g or Mg, and
M_{T_o} = moist mass of specimen before test, g or Mg.

12.2.3 Calculate the initial dry density of the specimen as follows:

$$\rho_d = \frac{M_d}{V_o}$$

000182

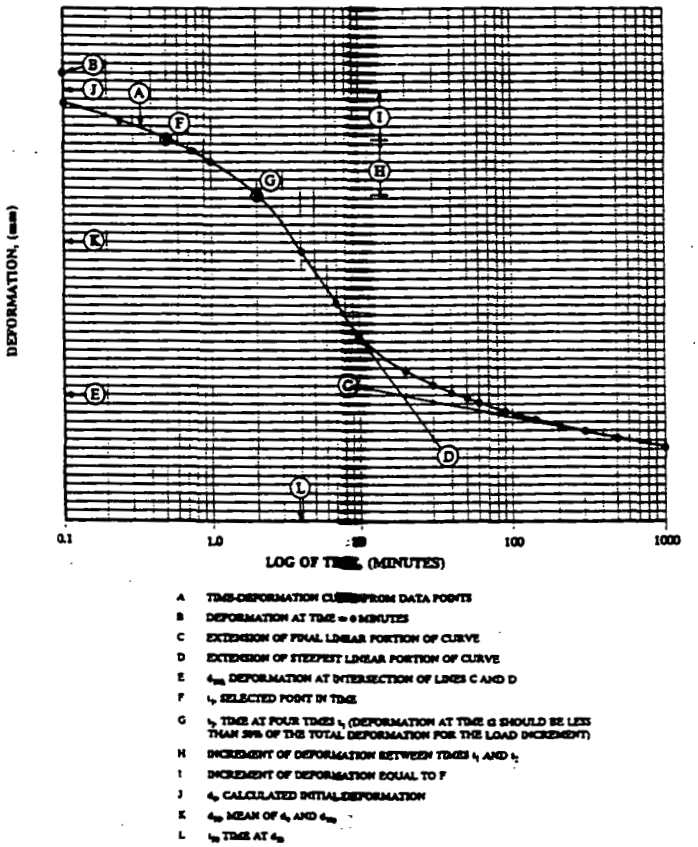

FIG. 2 Time-Deformation Curve From Log of Time Method

where:
ρ_d = dry density of specimen, g/cm^3 or Mg/m^3, and
V_o = initial volume of specimen, cm^3 or m^3.

12.2.4 Calculate the dry unit weight of the specimen as follows:

$$\gamma_d = 9.8 \times \rho_d, \text{ in kN/m}^3$$

$$\gamma_d = 62.43 \times \rho_d, \text{ in lbf/ft}^3$$

12.2.5 Compute the volume of solids as follows:

$$V_s = \frac{M_d}{G\rho_w}$$

where:
G = specific gravity of the solids, and
ρ_w = density of water, 1.0 g/cm^3 or Mg/m^3

12.2.6 Since the cross-sectional area of the specimen is constant throughout the test, it is convenient for subsequent calculations to introduce the term "equivalent height of solids," defined as follows:

$$H_s = \frac{V_s}{A}$$

where:
A = specimen area, cm^2 or m^2.

12.2.7 Calculate void ratio before and after test as follows:

$$\text{void ratio before test: } e_o = \frac{H_o - H_s}{H_s}$$

$$\text{void ratio after test: } e_f = \frac{H_f - H_s}{H_s}$$

where:
H_o = initial specimen height, cm or m, and
H_f = final specimen height, cm or m.

12.2.8 Calculate the degree of saturation, in perc before and after test as follows:

$$\text{initial degree of saturation: } S_o = \frac{M_{T_o} - M_d}{A\rho_w(H_o - H_s)} \times 100$$

$$\text{final degree of saturation: } S_f = \frac{M_{T_f} - M_d}{A\rho_w(H_f - H_s)} \times 100$$

12.3 *Time—Deformation Properties*—From those in ments of load where time-deformation readings are obtai two alternative procedures (see 12.3.1 or 12.3.2) are prov to present the data, determine the end-of-primary conso tion and compute the rate of consolidation. Alternati the requesting agency may specify a method of its choice still be in conformance with this test method. The defo tion readings may be presented as measured deforma deformation corrected for apparatus compressibility or verted to strain (see 12.4).

12.3.1 Referring to Fig. 2, plot the deformation read d, versus the log of time (normally in minutes) for increment of load.

12.3.1.1 First draw a straight line through the p representing the final readings which exhibit a straigh trend and constant slope (C).[4] Draw a second straigh tangent to the steepest part of the deformation-log time (D). The intersection represents the deformation, d_{100} time, t_{100}, corresponding to 100 % primary consolic (E). Compression in excess of the above estimated primary consolidation is defined as secondary compre

12.3.1.2 Find the deformation representing 0 % pr consolidation by selecting any two points that have a ratio of 1 to 4. The deformation at the larger of the two should be greater than ¼, but less than ½ of the deformation for the load increment. The deformation sponding to 0 % primary consolidation is equal deformation at the smaller time, less the differer deformation for the two selected times.

12.3.1.3 The deformation, d_{50}, corresponding to primary consolidation is equal to the average of the de tions corresponding to the 0 and 100 % deformation time, t_{50}, required for 50 % consolidation may be graphically from the deformation-log time curve serving the time that corresponds to 50 % of the p consolidation on the curve.

12.3.2 Referring to Fig. 3, plot the deformation re d, versus the square root of time (normally in minu each increment of load.

[4] The boldface numbers in parentheses refer to a list of references at the text.

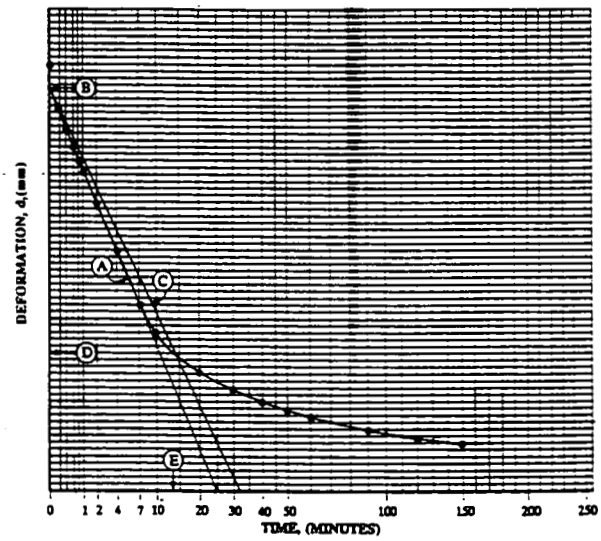

A TIME-DEFORMATION CURVE FROM DATA POINTS

B d_0, EXTENTION OF INITIAL LINEAR PORTION OF CURVE A TO TIME = 0 MINUTES

C CONSTRUCTION LINE WITH SLOPE = 1.15 TIMES INITIAL LINEAR PORTION OF CURVE A

D d_{90}, DEFORMATION AT POINT WHERE CURVE A CROSSES LINE C

E t_{90}, TIME AT POINT WHERE CURVE A CROSSES LINE C

FIG. 3 Time-Deformation Curve From Square Root of Time Method

12.3.2.1 First draw a straight line through the points representing the initial readings that exhibit a straight line trend. Extrapolate the line back to $t = 0$ and obtain the deformation ordinate representing 0 % primary consolidation.

12.3.2.2 Draw a second straight line through the 0 % ordinate so that the abscissa of this line is 1.15 times the abscissa of the first straight line through the data. The intersection of this second line with the deformation-square root of time curve is the deformation, d_{90}, and time, t_{90}, corresponding to 90 % primary consolidation.

12.3.2.3 The deformation at 100 % consolidation is 1/9 more than the difference in deformation between 0 and 90 % consolidation. The time of primary consolidation, t_{100}, may be taken at the intersection of the deformation-square root of time curve and this deformation ordinate. The deformation, d_{50}, corresponding to 50 % consolidation is equal to the deformation at 5/9 of the difference between 0 and 90 % consolidation.

12.3.3 Compute the coefficient of consolidation for each increment of load using the following equation and values appropriate to the chosen method of interpretation:

$$c_v = \frac{TH^2_{D_{50}}}{t}$$

where:

T = a dimensionless time factor:
for method 12.3.1 use 50 % consolidation with T = T_{50} = 0.197,
for method 12.3.2 use 90 % consolidation with T = T_{90} = 0.848,

t = time corresponding to the particular degree of consolidation, s or min;
for method 12.3.1 use $t = t_{50}$,
for method 12.3.2 use $t = t_{90}$, and

$H_{D_{50}}$ = length of the drainage path at 50 % consolidation, cm or m
for double-sided drainage $H_{D_{50}}$ is half the specimen height at the appropriate increment and for one-sided drainage $H_{D_{50}}$ is the full specimen height.

12.4 *Load-Deformation Properties:*

12.4.1 Tabulate the deformation or change in deformation, d_f, readings corresponding to the end of each increment and, if using Test Method B, corresponding to the end-of-primary consolidation, d_{100}.

12.4.2 Calculate the change in height, $\Delta H = d - d_o$, relative to the initial specimen height for each reading. If necessary, correct the deformation for the apparatus flexibility by subtracting the calibration value obtained in Section 9 from each reading.

12.4.3 Represent the deformation results in one of the following formats.

12.4.3.1 Calculate the void ratio as follows:

$$e = e_o - \frac{\Delta H}{H_s}$$

12.4.3.2 Alternatively, calculate the vertical strain, in percent, as follows:

$$\epsilon = \frac{\Delta H}{H_0} \times 100$$

12.4.4 Calculate the vertical stress as follows:

$$\sigma_v = \frac{P}{A}$$

where:

P = applied load in N
σ_v = vertical stress in kPa.

12.4.5 Referring to Fig. 4, plot the deformation results (void ratio or strain) corresponding to the end of each increment and, if using Test Method B, corresponding to the end-of-primary consolidation versus the logarithm of the pressure.

NOTE 14—In some cases, it may be preferable to present the load-deformation curve in arithmetic scale.

12.4.6 Referring to Fig. 4, determine the value of the preconsolidation pressure using the following procedure.

NOTE 15—Any other recognized method of estimating preconsolidation pressure (see references) may also be used, provided the method is identified in the report.

12.4.6.1 Estimate the point of maximum curvature on the consolidation curve (**B**).

12.4.6.2 Draw the tangent to the consolidation curve at this point (**C**), and a horizontal line through the point (**D**), both extended towards increasing values on the abscissa.

12.4.6.3 Draw the line bisecting the angle between these lines (**E**).

12.4.6.4 Extend the tangent to the steep, linear portion of the consolidation curve (virgin compression branch) (**F**) upwards to intersection with the bisector line (**E**). The

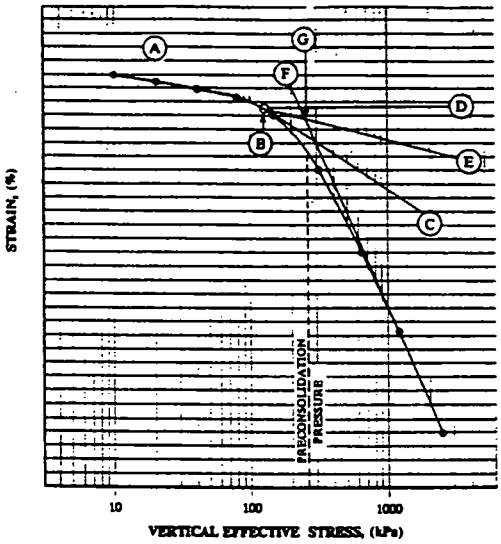

A STRESS STRAIN CURVE FROM DATA POINTS
B POINT OF MAXIMUM CURVATURE
C TANGENT LINE TO CURVE AT POINT B
D HORIZONTAL LINE THROUGH POINT B
E LINE BISECTING ANGLE BETWEEN LINES C AND D
F TANGENT TO LINEAR PORTION OF CURVE IN VIRGIN COMPRESSION RANGE
G INTERSECTION OF LINES E AND F (VERTICAL EFFECTIVE STRESS AT POINT G EQUALS THE PRECONSOLIDATION PRESSURE)

FIG. 4 Evaluation for Preconsolidation Pressure From Casagrande Method

pressure (G) (abscissa) corresponding to this point of intersection is the estimated preconsolidation pressure.

12.4.7 Complete evaluation often includes consideration of information not generally available to the laboratory performing the test. For this reason further evaluation of the test is not mandatory. Many recognized methods of evaluation are described in the literature. Some of these are discussed in the Refs. **(1)** through **(8)**.

13. Report

13.1 In addition to project name and location, boring number, sample number, and depth, report the following information.

13.1.1 Description and classification of the soil in accordance with Practice D 2488 or Test Method D 2487 when Atterberg limit data are available. Specific gravity of solids, Atterberg limits and grain size distribution shall also be reported when available plus the source of such information if other than measurements obtained on test specimen. Also note occurrence and approximate size of isolated large particles.

13.1.2 *Soil Condition:*

13.1.2.1 Average water content of trimmings,

13.1.2.2 Initial and final water content of specimen,

13.1.2.3 Initial and final dry unit weight of specimen,

13.1.2.4 Initial and final void ratio of specimen,

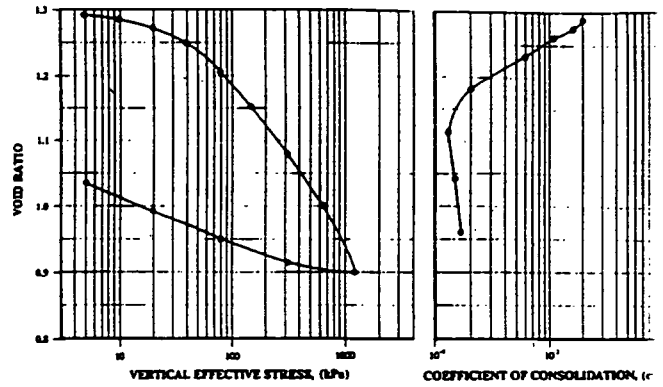

FIG. 5 Example of Consolidation Test Summary Plots

13.1.2.5 Initial and final degree of saturation of specim and

13.1.2.6 Preconsolidation pressure.

13.1.3 *Test Procedure:*

13.1.3.1 Preparation procedure used relative to trimmi state whether the specimen was trimmed using a trimm turntable, trimmed using a cutting shoe, or tested directl a ring from a ring lined sampler.

13.1.3.2 Condition of test (natural moisture or inunda pressure at inundation).

13.1.3.3 Method of testing (A or B).

13.1.3.4 Test Method used to compute coefficient consolidation.

13.1.3.5 Listing of loading increments and decreme and load increment duration, if differing from 24 h; enc increment deformation results and, for Test Method end-of-primary deformation results and coefficient of con idation (see Fig. 1).

13.1.3.6 All departures from the procedure outlined, cluding special loading sequences.

13.1.4 *Graphical Presentations:*

13.1.4.1 Graph of deformation versus log time (see Fi or square root of time (see Fig. 3) for those load increm where time rate readings were taken.

13.1.4.2 Graph of void ratio versus log of pressure c or percent compression versus log of pressure curve (see 4).

13.1.4.3 In cases where time rate of deformation read have been taken for several load increments, prepare a gr of the log of coefficient of consolidation versus average ratio or average percent compression for the respective increments (see Fig. 5). Alternatively, a graph of coeffic of consolidation or log of coefficient of consolidation ve log of average pressure may be used. If time rate read were obtained for only two load increments, simply tabu the values of c_v versus the average pressure for the increm

NOTE 16—The average pressure between two load incremen chosen because it is a convenient coordinate for plotting the r Unless the rate of pore pressure dissipation is measured, it is not po to determine the actual effective pressure at the time of 50 % consc tion. Furthermore, some ambiguity may arise in cases where the te been carried through one or more intermediate load-rebound cycl

000185

14. Precision and Bias

14.1 *Statement of Precision*—Due to the nature of the soil materials tested by this test method it is either not feasible or too costly at this time to produce multiple specimens which have uniform physical properties. Any variation observed in the data is just as likely to be due to specimen variation as to operator or laboratory testing variation. Subcommittee D18.05 welcomes proposals that would allow for development of a valid precision statement.

14.2 *Statement of Bias*—There is no acceptable reference value for this test method, therefore, bias cannot be determined.

15. Keywords

15.1 Compressibility; compression curves; consolidation; consolidation coefficient; consolidation test; consolidometer; preconsolidation pressure; primary consolidation; rebound; secondary compression; settlement; swelling.

REFERENCES

(1) Casagrande, A., "The Determination of the Pre-Consolidation Load and its Practical Significance," Proceedings 1st ICSMFE, III, 1936, p. 60.

(2) Taylor, D. W., *Fundamentals of Soil Mechanics*, John Wiley and Sons, New York, NY, 1948.

(3) Burmeister, D. M. "The Application of Controlled Test Methods in Consolidation Testing," ASTM STP 126, p. 83, ASTM 1951.

(4) Schmertmann, J. H. "The Undisturbed Consolidation Behavior of Clay" Trans. ASCE, 120, pp. 1201 through 1233, 1955.

(5) Leonards, G. A. "Engineering Properties of Soils," Chapter 2 in *Foundation Engineering* by Leonards, G. A., ed. McGraw-Hill, New York, NY, 1962.

(6) Winterkorn, H. F. and Fang, H. Y. eds. *Foundation Engineering Handbook*, Chapter 4, Von Nostrand Reinhold Co, New York, NY, 1975.

(7) Holtz, R. D. and Kovacs, W. D. *An Introduction to Geotechnical Engineering*, Prentice Hall, Englewood Cliffs, NJ, 1981.

(8) Yong, R. N. and Townsend, F. C. Eds. "Consolidation of Soils Testing and Evaluation," *ASTM STP 892*, ASTM, 1986.

000187

62

The American Society for Testing and Materials takes no position respecting the validity of any patent rights asserted in connection with any item mentioned in this standard. Users of this standard are expressly advised that determination of the validity of any such patent rights, and the risk of infringement of such rights, are entirely their own responsibility.

This standard is subject to revision at any time by the responsible technical committee and must be reviewed every five years and if not revised, either reapproved or withdrawn. Your comments are invited either for revision of this standard or for additional standards and should be addressed to ASTM Headquarters. Your comments will receive careful consideration at a meeting of the responsible technical committee, which you may attend. If you feel that your comments have not received a fair hearing you should make your views known to the ASTM Committee on Standards, 1916 Race St., Philadelphia, PA 19103. known to the ASTM Committee on Standards, 1916 Race St., Philadelphia, PA 19103.

000188

Standard Classification of Soils for Engineering Purposes (Unified Soil Classification System)[1]

This standard is issued under the fixed designation D 2487; the number immediately following the designation indicates the year of original adoption or, in the case of revision, the year of last revision. A number in parentheses indicates the year of last reapproval. A superscript epsilon (ε) indicates an editorial change since the last revision or reapproval.

This standard has been approved for use by agencies of the Department of Defense. Consult the DOD Index of Specifications and Standards for the specific year of issue which has been adopted by the Department of Defense.

1. Scope

1.1 This standard describes a system for classifying mineral and organo-mineral soils for engineering purposes based on laboratory determination of particle-size characteristics, liquid limit, and plasticity index and shall be used when precise classification is required.

NOTE 1—Use of this standard will result in a single classification group symbol and group name except when a soil contains 5 to 12 % fines or when the plot of the liquid limit and plasticity index values falls into the crosshatched area of the plasticity chart. In these two cases, a dual symbol is used, for example, GP-GM, CL-ML. When the laboratory test results indicate that the soil is close to another soil classification group, the borderline condition can be indicated with two symbols separated by a slash. The first symbol should be the one based on this standard, for example, CL/CH, GM/SM, SC/CL. Borderline symbols are particularly useful when the liquid limit value of clayey soils is close to 50. These soils can have expansive characteristics and the use of a borderline symbol (CL/CH, CH/CL) will alert the user of the assigned classifications of expansive potential.

1.2 The group symbol portion of this sytem is based on laboratory tests performed on the portion of a soil sample passing the 3-in. (75-mm) sieve (see Specification E 11).

1.3 As a classification system, this standard is limited to naturally occurring soils.

NOTE 2—The group names and symbols used in this test method may be used as a descriptive system applied to such materials as shale, claystone, shells, crushed rock, etc. See Appendix X2.

1.4 This standard is for qualitative application only.

NOTE 3—When quantitative information is required for detailed designs of important structures, this test method must be supplemented by laboratory tests or other quantitative data to determine performance characteristics under expected field conditions.

1.5 This standard is the ASTM version of the Unified Soil Classification System. The basis for the classification scheme is the Airfield Classification System developed by A. Casagrande in the early 1940's.[2] It became known as the Unified Soil Classification System when several U.S. Government Agencies adopted a modified version of the Airfield System in 1952.

1.6 *This standard does not purport to address all of the safety problems, if any, associated with its use. It is the responsibility of the user of this standard to establish appropriate safety and health practices and determine the applicability of regulatory limitations prior to use.*

2. Referenced Documents

2.1 *ASTM Standards:*

C 117 Test Method for Materials Finer Than 75-μm (No. 200) Sieve in Mineral Aggregates by Washing[3]

C 136 Method for Sieve Analysis of Fine and Coarse Aggregates[3]

C 702 Practice for Reducing Field Samples of Aggregate to Testing Size[3]

D 420 Guide for Investigating and Sampling Soil and Rock[4]

D 421 Practice for Dry Preparation of Soil Samples for Particle-Size Analysis and Determination of Soil Constants[4]

D 422 Test Method for Particle-Size Analysis of Soils[4]

D 653 Terminology Relating to Soil, Rock, and Contained Fluids[4]

D 1140 Test Method for Amount of Material in Soils Finer than the No. 200 (75-μm) Sieve[4]

D 2216 Test Method for Laboratory Determination of Water (Moisture) Content of Soil and Rock[4]

D 2217 Practice for Wet Preparation of Soil Samples for Particle-Size Analysis and Determination of Soil Constants[4]

D 2488 Practice for Description and Identification of Soils (Visual-Manual Procedure)[4]

D 4083 Practice for Description of Frozen Soils (Visual-Manual Procedure)[4]

D 4318 Test Method for Liquid Limit, Plastic Limit, and Plasticity Index of Soils[4]

D 4427 Classification of Peat Samples by Laboratory Testing[4]

E 11 Specification for Wire-Cloth Sieves for Testing Purposes[3]

3. Terminology

3.1 *Definitions*—Except as listed below, all definitions are in accordance with Terminology D 653.

[1] This standard is under the jurisdiction of ASTM Committee D-18 on Soil and Rock and is the direct responsibility of Subcommittee D18.07 on Identification and Classification of Soils.

Current edition approved May 15, 1992. Published July 1992. Originally published as D 2487 – 66 T. Last previous edition D 2487 – 90[ε1].

[2] Casagrande, A., "Classification and Identification of Soils," *Transactions*, ASCE, 1948, p. 901.

[3] *Annual Book of ASTM Standards*, Vol 04.02.

[4] *Annual Book of ASTM Standards*, Vol 04.08.

000189

NOTE 4—For particles retained on a 3-in. (75-mm) U.S. standard sieve, the following definitions are suggested:

Cobbles—particles of rock that will pass a 12-in. (300-mm) square opening and be retained on a 3-in. (75-mm) U.S. standard sieve, and

Boulders—particles of rock that will not pass a 12in. (300-mm) square opening

3.1.1 *gravel*—particles of rock that will pass a 3-in. (75-mm) sieve and be retained on a No. 4 (4.75-mm) U.S. standard sieve with the following subdivisions:

Coarse—passes 3-in. (75-mm) sieve and retained on ¾-in. (19-mm) sieve, and

Fine—passes ¾-in. (19-mm) sieve and retained on No. 4 (4.75-mm) sieve.

3.1.2 *sand*—particles of rock that will pass a No. 4 (4.75-mm) sieve and be retained on a No. 200 (75-µm) U.S. standard sieve with the following subdivisions:

Coarse—passes No. 4 (4.75-mm) sieve and retained on No. 10 (2.00-mm) sieve,

Medium—passes No. 10 (2.00-mm) sieve and retained on No. 40 (425-µm) sieve, and

Fine—passes No. 40 (425-µm) sieve and retained on No. 200 (75-µm) sieve.

3.1.3 *clay*—soil passing a No. 200 (75-µm) U.S. standard sieve that can be made to exhibit plasticity (putty-like properties) within a range of water contents and that exhibits considerable strength when air dry. For classification, a clay is a fine-grained soil, or the fine-grained portion of a soil, with a plasticity index equal to or greater than 4, and the plot of plasticity index versus liquid limit falls on or above the "A" line.

3.1.4 *silt*—soil passing a No. 200 (75-µm) U.S. standard sieve that is nonplastic or very slightly plastic and that exhibits little or no strength when air dry. For classification, a silt is a fine-grained soil, or the fine-grained portion of a soil, with a plasticity index less than 4 or if the plot of plasticity index versus liquid limit falls below the "A" line.

3.1.5 *organic clay*—a clay with sufficient organic content to influence the soil properties. For classification, an organic clay is a soil that would be classified as a clay except that its liquid limit value after oven drying is less than 75 % of its liquid limit value before oven drying.

3.1.6 *organic silt*—a silt with sufficient organic content to influence the soil properties. For classification, an organic silt is a soil that would be classified as a silt except that its liquid limit value after oven drying is less than 75 % of its liquid limit value before oven drying.

3.1.7 *peat*—a soil composed of vegetable tissue in various stages of decomposition usually with an organic odor, a dark-brown to black color, a spongy consistency, and a texture ranging from fibrous to amorphous.

3.2 *Descriptions of Terms Specific to This Standard:*

3.2.1 *coefficient of curvature*, Cc—the ratio $(D_{30})^2/(D_{10} \times D_{60})$, where D_{60}, D_{30}, and D_{10} are the particle diameters corresponding to 60, 30, and 10 % finer on the cumulative particle-size distribution curve, respectively.

3.2.2 *coefficient of uniformity*, Cu—the ratio D_{60}/D_{10}, where D_{60} and D_{10} are the particle diameters corresponding to 60 and 10 % finer on the cumulative particle-size distribution curve, respectively.

4. Summary

4.1 As illustrated in Table 1, this classification system identifies three major soil divisions: coarse-grained soils, fine-grained soils, and highly organic soils. These three divisions are further subdivided into a total of 15 basic soil groups.

4.2 Based on the results of visual observations and prescribed laboratory tests, a soil is catalogued according to the basic soil groups, assigned a group symbol(s) and name, and thereby classified. The flow charts, Fig. 1 for fine-grained soils, and Fig. 2 for coarse-grained soils, can be used to assign the appropriate group symbol(s) and name.

5. Significance and Use

5.1 This standard classifies soils from any geographic location into categories representing the results of prescribed laboratory tests to determine the particle-size characteristics, the liquid limit, and the plasticity index.

5.2 The assigning of a group name and symbol(s) along with the descriptive information required in Practice D 2488 can be used to describe a soil to aid in the evaluation of its significant properties for engineering use.

5.3 The various groupings of this classification system have been devised to correlate in a general way with the engineering behavior of soils. This standard provides a useful first step in any field or laboratory investigation for geotechnical engineering purposes.

5.4 This standard may also be used as an aid in training personnel in the use of Practice D 2488.

5.5 This standard may be used in combination with Practice D 4083 when working with frozen soils.

6. Apparatus

6.1 In addition to the apparatus that may be required for obtaining and preparing the samples and conducting the prescribed laboratory tests, a plasticity chart, similar to Fig. 3, and a cumulative particle-size distribution curve, similar to Fig. 4, are required.

NOTE 5—The "U" line shown on Fig. 3 has been empirically determined to be the approximate "upper limit" for natural soils. It is a good check against erroneous data, and any test results that plot above or to the left of it should be verified.

7. Sampling

7.1 Samples shall be obtained and identified in accordance with a method or methods, recommended in Recommended Guide D 420 or by other accepted procedures.

7.2 For accurate identification, the minimum amount of test sample required for this test method will depend on which of the laboratory tests need to be performed. Where only the particle-size analysis of the sample is required, specimens having the following minimum dry weights are required:

Maximum Particle Size, Sieve Opening	Minimum Specimen Size, Dry Weight
4.75 mm (No. 4)	100 g (0.25 lb)
9.5 mm (⅜ in.)	200 g (0.5 lb)
19.0 mm (¾ in.)	1.0 kg (2.2 lb)
38.1 mm (1½ in.)	8.0 kg (18 lb)
75.0 mm (3 in.)	60.0 kg (132 lb)

Whenever possible, the field samples should have weights two to four times larger than shown.

000190

TABLE 1 Soil Classification Chart

Criteria for Assigning Group Symbols and Group Names Using Laboratory Tests[A]				Soil Classification	
				Group Symbol	Group Name[B]
COARSE-GRAINED SOILS More than 50 % retained on No. 200 sieve	Gravels More than 50 % of coarse fraction retained on No. 4 sieve	Clean Gravels Less than 5 % fines[C]	$Cu \geq 4$ and $1 \leq Cc \leq 3$[E]	GW	Well-graded gravel[F]
			$Cu < 4$ and/or $1 > Cc > 3$[E]	GP	Poorly graded gravel[F]
		Gravels with Fines More than 12 % fines[C]	Fines classify as ML or MH	GM	Silty gravel[F,G,H]
			Fines classify as CL or CH	GC	Clayey gravel[F,G,H]
	Sands 50 % or more of coarse fraction passes No. 4 sieve	Clean Sands Less than 5 % fines[D]	$Cu \geq 6$ and $1 \leq Cc \leq 3$[E]	SW	Well-graded sand[I]
			$Cu < 6$ and/or $1 > Cc > 3$[E]	SP	Poorly graded sand[I]
		Sands with Fines More than 12 % fines[D]	Fines classify as ML or MH	SM	Silty sand[G,H,I]
			Fines classify as CL or CH	SC	Clayey sand[G,H,I]
FINE-GRAINED SOILS 50 % or more passes the No. 200 sieve	Silts and Clays Liquid limit less than 50	inorganic	PI > 7 and plots on or above "A" line[J]	CL	Lean clay[K,L,M]
			PI < 4 or plots below "A" line[J]	ML	Silt[K,L,M]
		organic	$\frac{\text{Liquid limit – oven dried}}{\text{Liquid limit – not dried}} < 0.75$	OL	Organic clay[K,L,M,N] / Organic silt[K,L,M,O]
	Silts and Clays Liquid limit 50 or more	inorganic	PI plots on or above "A" line	CH	Fat clay[K,L,M]
			PI plots below "A" line	MH	Elastic silt[K,L,M]
		organic	$\frac{\text{Liquid limit – oven dried}}{\text{Liquid limit – not dried}} < 0.75$	OH	Organic clay[K,L,M,P] / Organic silt[K,L,M,Q]
HIGHLY ORGANIC SOILS	Primarily organic matter, dark in color, and organic odor			PT	Peat

[A] Based on the material passing the 3-in. (75-mm) sieve.

[B] If field sample contained cobbles or boulders, or both, add "with cobbles or boulders, or both" to group name.

[C] Gravels with 5 to 12 % fines require dual symbols:
GW-GM well-graded gravel with silt
GW-GC well-graded gravel with clay
GP-GM poorly graded gravel with silt
GP-GC poorly graded gravel with clay

[D] Sands with 5 to 12 % fines require dual symbols:
SW-SM well-graded sand with silt
SW-SC well-graded sand with clay
SP-SM poorly graded sand with silt
SP-SC poorly graded sand with clay

[E] $Cu = D_{60}/D_{10}$ $Cc = \frac{(D_{30})^2}{D_{10} \times D_{60}}$

[F] If soil contains ≥ 15 % sand, add "with sand" to group name.

[G] If fines classify as CL-ML, use dual symbol GC-GM, or SC-SM.

[H] If fines are organic, add "with organic fines" to group name.

[I] If soil contains ≥ 15 % gravel, add "with gravel" to group name.

[J] If Atterberg limits plot in hatched area, soil is a CL-ML, silty clay.

[K] If soil contains 15 to 29 % plus No. 200, add "with sand" or "with gravel," whichever is predominant.

[L] If soil contains ≥ 30 % plus No. 200, predominantly sand, add "sandy" to group name.

[M] If soil contains ≥ 30 % plus No. 200, pr dominantly gravel, add "gravelly" to group name.

[N] PI ≥ 4 and plots on or above "A" line.

[O] PI < 4 or plots below "A" line.

[P] PI plots on or above "A" line.

[Q] PI plots below "A" line.

7.3 When the liquid and plastic limit tests must also be performed, additional material will be required sufficient to provide 150 g to 200 g of soil finer than the No. 40 (425-µm) sieve.

7.4 If the field sample or test specimen is smaller than the minimum recommended amount, the report shall include an appropriate remark.

8. Classification of Peat

8.1 A sample composed primarily of vegetable tissue in various stages of decomposition and has a fibrous to amorphous texture, a dark-brown to black color, and an organic odor should be designated as a highly organic soil and shall be classified as peat, PT, and not subjected to the classification procedures described hereafter.

8.2 If desired, classification of type of peat can be performed in accordance with Classification D 4427.

9. Preparation for Classification

9.1 Before a soil can be classified according to this standard, generally the particle-size distribution of the minus 3-in. (75-mm) material and the plasticity characteristics of the minus No. 40 (425-µm) sieve material must be determined. See 9.8 for the specific required tests.

9.2 The preparation of the soil specimen(s) and the testi for particle-size distribution and liquid limit and plastici index shall be in accordance with accepted standard proc dures. Two procedures for preparation of the soil specime for testing for soil classification purposes are given Appendixes X3 and X4. Appendix X3 describes the v preparation method and is the preferred method for cohesi soils that have never dried out and for organic soils.

9.3 When reporting soil classifications determined by t standard, the preparation and test procedures used shall reported or referenced.

9.4 Although the test procedure used in determining particle-size distribution or other considerations may requ a hydrometer analysis of the material, a hydrometer analy is not necessary for soil classification.

9.5 The percentage (by dry weight) of any plus 3- (75-mm) material must be determined and reported auxiliary information.

9.6 The maximum particle size shall be determined (m sured or estimated) and reported as auxiliary informatio

9.7 When the cumulative particle-size distribution is quired, a set of sieves shall be used which include

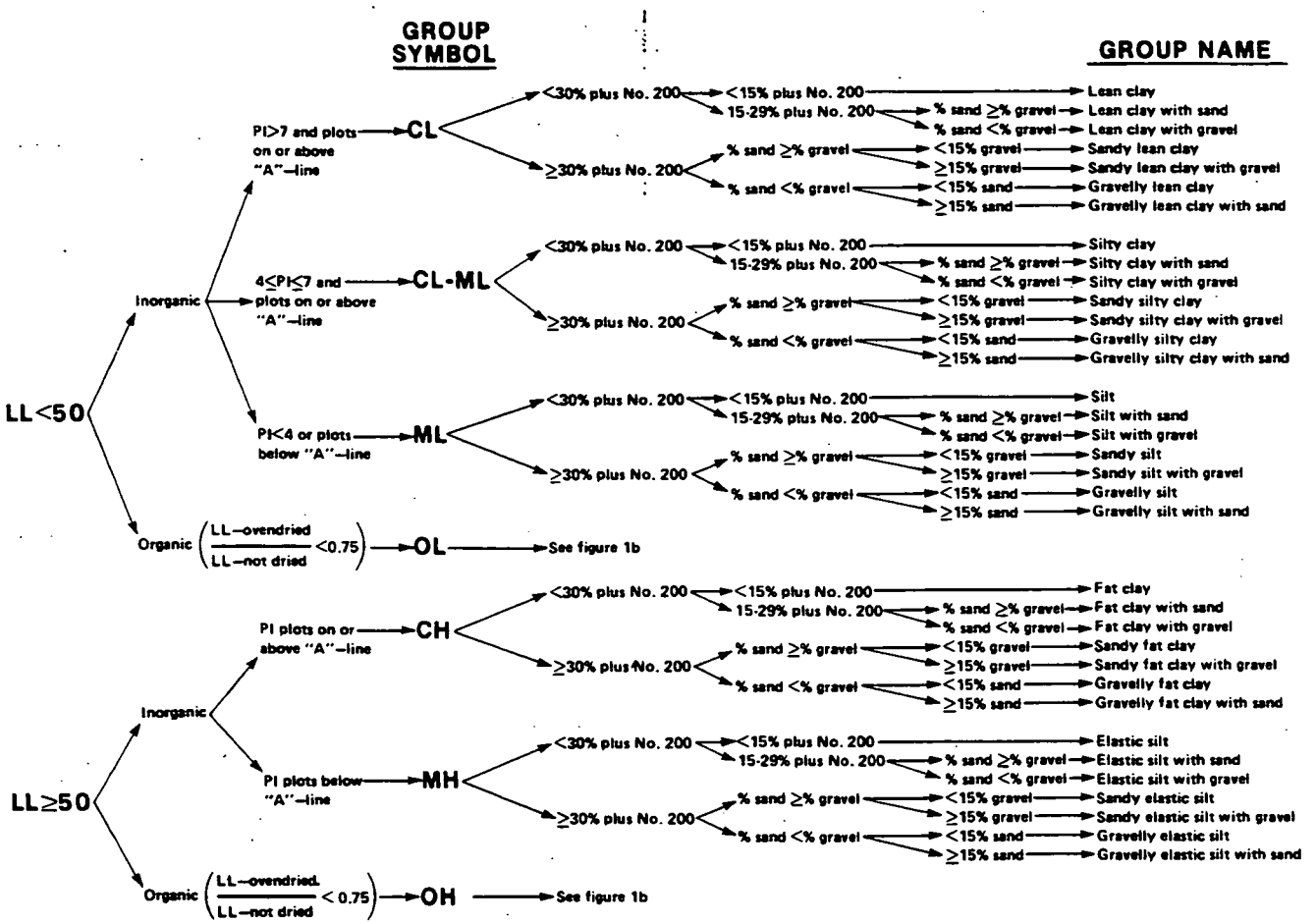

FIG. 1a Flow Chart for Classifying Fine-Grained Soil (50 % or More Passes No. 200 Sieve)

following sizes (with the largest size commensurate with the maximum particle size) with other sieve sizes as needed or required to define the particle-size distribution:

3-in. (75-mm)
¾-in.(19.0-mm)
No. 4 (4.75-mm)
No. 10 (2.00-mm)
No. 40 (425-µm)
No. 200 (75-µm)

9.8 The tests required to be performed in preparation for classification are as follows:

9.8.1 For soils estimated to contain less than 5 % fines, a plot of the cumulative particle-size distribution curve of the fraction coarser than the No. 200 (75-µm) sieve is required. The cumulative particle-size distribution curve may be plotted on a graph similar to that shown in Fig. 4.

9.8.2 For soils estimated to contain 5 to 15 % fines, a cumulative particle-size distribution curve, as described in 9.8.1, is required, and the liquid limit and plasticity index are required.

9.8.2.1 If sufficient material is not available to determine the liquid limit and plasticity index, the fines should be estimated to be either silty or clayey using the procedures described in Practice D 2488 and so noted in the report.

9.8.3 For soils estimated to contain 15 % or more fines, a determination of the percent fines, percent sand, and percent gravel is required, and the liquid limit and plasticity index are required. For soils estimated to contain 90 % fines or more, the percent fines, percent sand, and percent gravel may be estimated using the procedures described in Practice D 2488 and so noted in the report.

10. Preliminary Classification Procedure

10.1 Class the soil as fine-grained if 50 % or more by dry weight of the test specimen passes the No. 200 (75-µm) sieve and follow Section 11.

10.2 Class the soil as coarse-grained if more than 50 % by dry weight of the test specimen is retained on the No. 200 (75-µm) sieve and follow Section 12.

11. Procedure for Classification of Fine-Grained Soils (50 % or more by dry weight passing the No. 200 (75-µm) sieve)

11.1 The soil is an inorganic clay if the position of the plasticity index versus liquid limit plot, Fig. 3, falls on or above the "A" line, the plasticity index is greater than 4, and the presence of organic matter does not influence the liquid limit as determined in 11.3.2.

NOTE 6—The plasticity index and liquid limit are determined on the minus No. 40 (425 µm) sieve material.

11.1.1 Classify the soil as a *lean clay*, CL, if the liquid limit is less than 50. See area identified as CL on Fig. 3.

11.1.2 Classify the soil as a *fat clay*, CH, if the liquid limit

000192

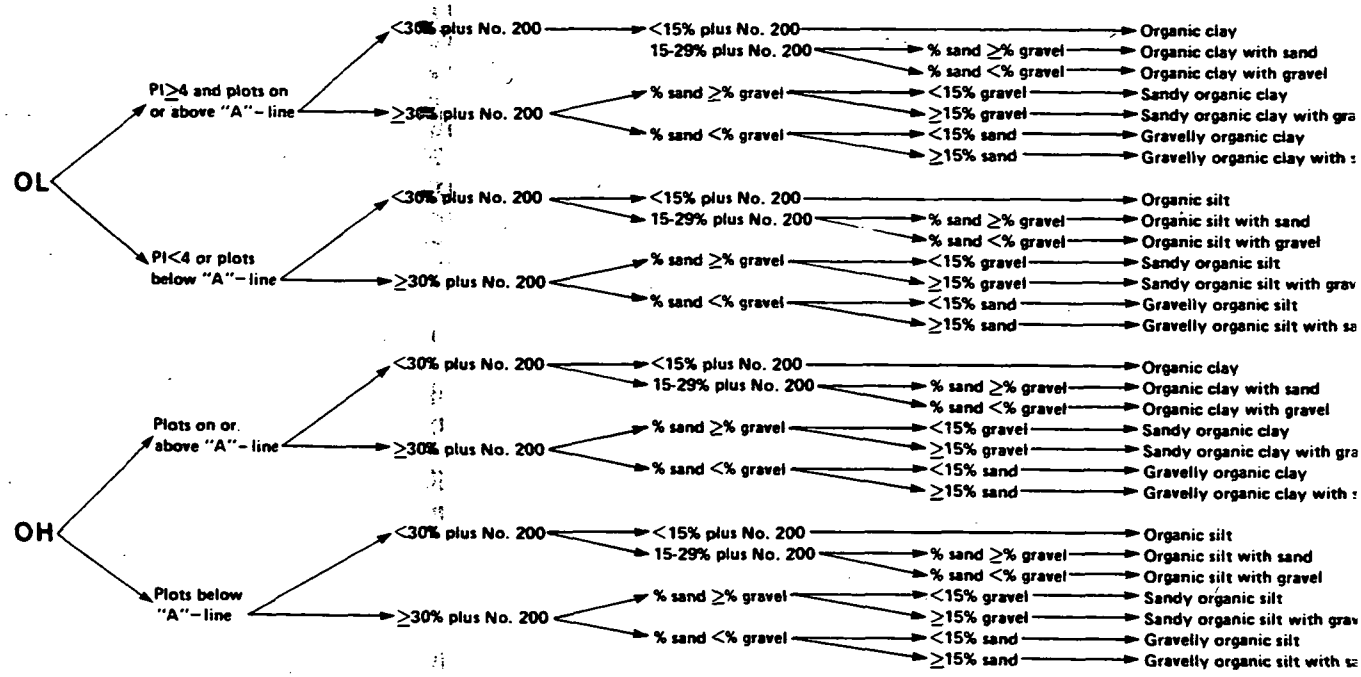

FIG. 1b Flow Chart for Classifying Organic Fine-Grained Soil (50 % or More Passes No. 200 Sieve)

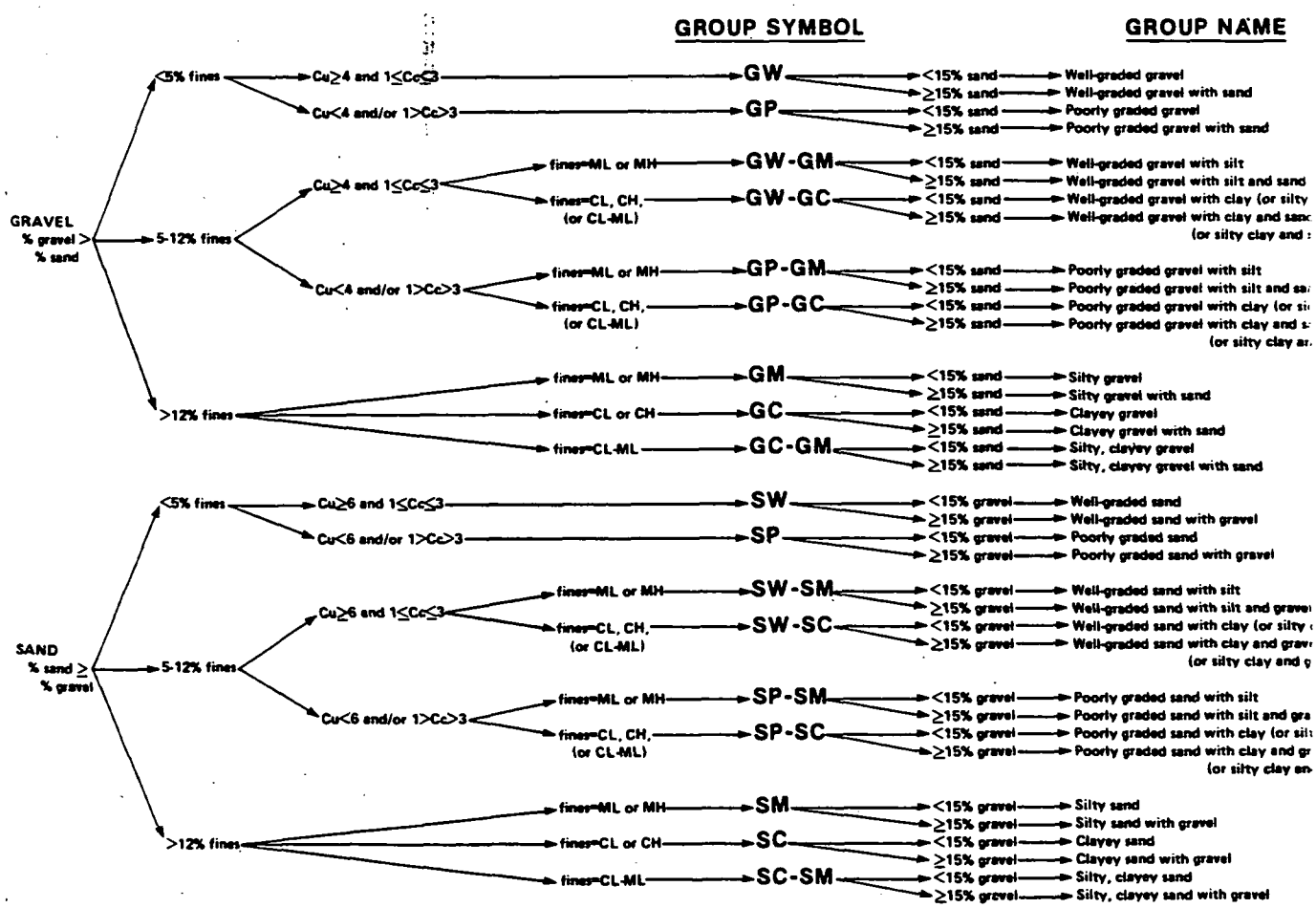

FIG. 2 Flow Chart for Classifying Coarse-Grained Soils (More Than 50 % Retained on No. 200 Sieve)

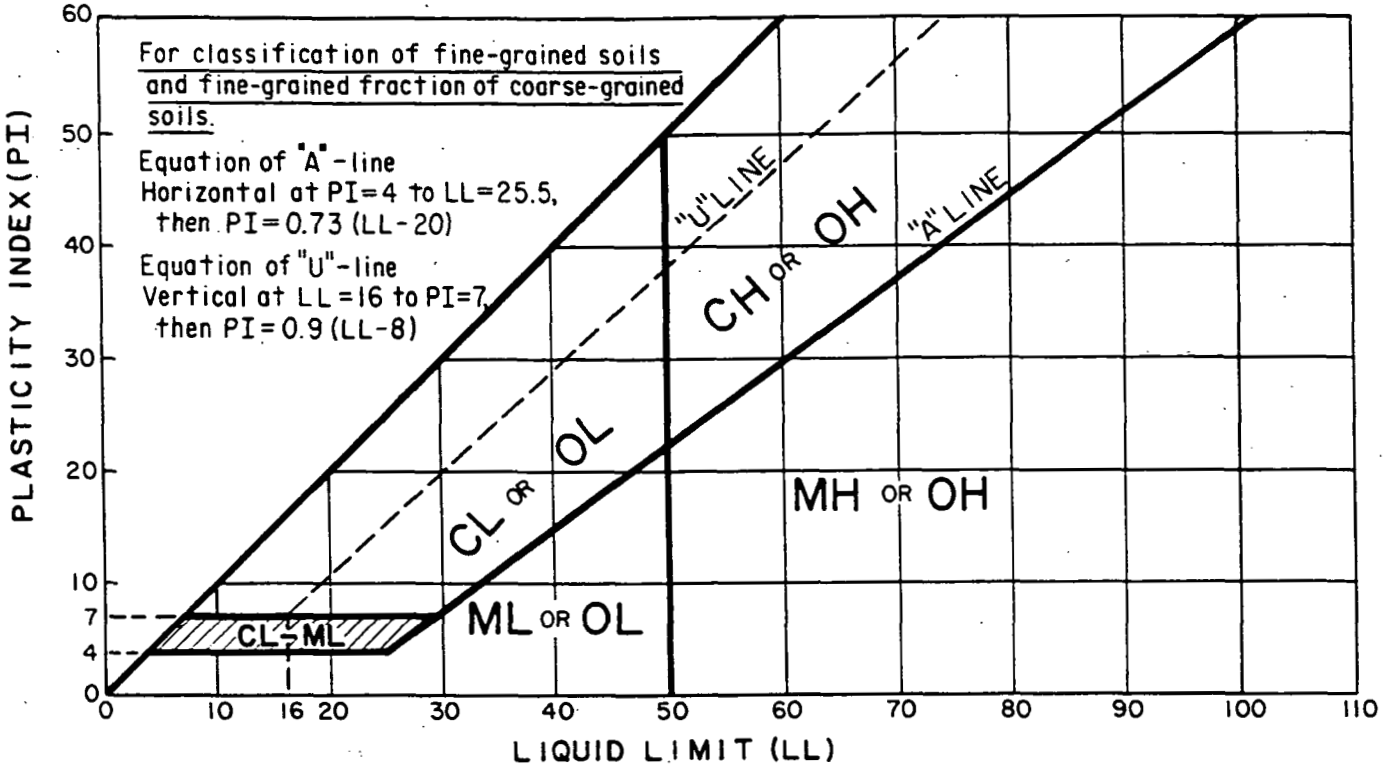

FIG. 3 Plasticity Chart

's 50 or greater. See area identified as CH on Fig. 3.

NOTE 7—In cases where the liquid limit exceeds 110 or the plasticity index exceeds 60, the plasticity chart may be expanded by maintaining the same scale on both axes and extending the "A" line at the indicated slope.

11.1.3 Classify the soil as a *silty clay*, CL-ML, if the position of the plasticity index versus liquid limit plot falls on or above the "A" line and the plasticity index is in the range of 4 to 7. See area identified as CL-ML on Fig. 3.

11.2 The soil is an inorganic silt if the position of the plasticity index versus liquid limit plot, Fig. 3, falls below the "A" line or the plasticity index is less than 4, and presence of organic matter does not influence the liquid limit as determined in 11.3.2.

11.2.1 Classify the soil as a *silt*, ML, if the liquid limit is less than 50. See area identified as ML on Fig. 3.

11.2.2 Classify the soil as an *elastic silt*, MH, if the liquid limit is 50 or greater. See area identified as MH on Fig. 3.

11.3 The soil is an organic silt or clay if organic matter is present in sufficient amounts to influence the liquid limit as determined in 11.3.2.

11.3.1 If the soil has a dark color and an organic odor when moist and warm, a second liquid limit test shall be performed on a test specimen which has been oven dried at 110 ± 5°C to a constant weight, typically over night.

11.3.2 The soil is an organic silt or organic clay if the liquid limit after oven drying is less than 75 % of the liquid limit of the original specimen determined before oven drying (see Procedure B of Practice D 2217).

11.3.3 Classify the soil as an *organic silt* or *organic clay*, OL, if the liquid limit (not oven dried) is less than 50 %. Classify the soil as an *organic silt*, OL, if the plasticity index is less than 4, or the position of the plasticity index versus liquid limit plot falls below the "A" line. Classify the soil as an *organic clay*, OL, if the plasticity index is 4 or greater and the position of the plasticity index versus liquid limit plot falls on or above the "A" line. See area identified as OL (or CL-ML) on Fig. 3.

11.3.4 Classify the soil as an *organic clay* or *organic silt*, OH, if the liquid limit (not oven dried) is 50 or greater. Classify the soil as an *organic silt*, OH, if the position of the plasticity index versus liquid limit plot falls below the "A" line. Classify the soil as an *organic clay*, OH, if the position of the plasticity index versus liquid-limit plot falls on or above the "A" line. See area identified as OH on Fig. 3.

11.4 If less than 30 % but 15 % or more of the test specimen is retained on the No. 200 (75-µm) sieve, the words "with sand" or "with gravel" (whichever is predominant) shall be added to the group name. For example, lean clay with sand, CL; silt with gravel, ML. If the percent of sand is equal to the percent of gravel, use "with sand."

11.5 If 30 % or more of the test specimen is retained on the No. 200 (75-µm) sieve, the words "sandy" or "gravelly" shall be added to the group name. Add the word "sandy" if 30 % or more of the test specimen is retained on the No. 200 (75-µm) sieve and the coarse-grained portion is predominantly sand. Add the word "gravelly" if 30 % or more of the test specimen is retained on the No. 200 (75-µm) sieve and the coarse-grained portion is predominantly gravel. For example, sandy lean clay, CL; gravelly fat clay, CH; sandy silt, ML. If the percent of sand is equal to the percent of gravel, use "sandy."

000194

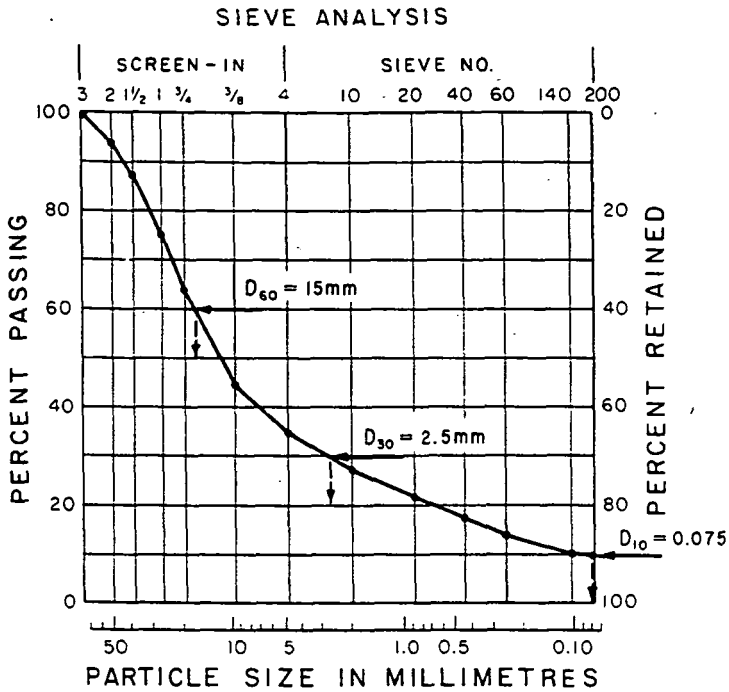

$$Cu = \frac{D_{60}}{D_{10}} = \frac{15}{0.075} = 200 \qquad Cc = \frac{(D_{30})^2}{D_{10} \times D_{60}} = \frac{(2.5)^2}{0.075 \times 15} = 5.6$$

FIG. 4 Cumulative Particle-Size Plot

12. Procedure for Classification of Coarse-Grained Soils (more than 50 % retained on the No. 200 (75-µm) sieve)

12.1 Class the soil as gravel if more than 50 % of the coarse fraction [plus No. 200 (75-µm) sieve] is retained on the No. 4 (4.75-mm) sieve.

12.2 Class the soil as sand if 50 % or more of the coarse fraction [plus No. 200 (75-µm) sieve] passes the No. 4 (4.75-mm) sieve.

12.3 If 12 % or less of the test specimen passes the No. 200 (75-µm) sieve, plot the cumulative particle-size distribution, Fig. 4, and compute the coefficient of uniformity, Cu, and coefficient of curvature, Cc, as given in Eqs 1 and 2.

$$Cu = D_{60}/D_{10} \quad (1)$$

$$Cc = (D_{30})^2/(D_{10} \times D_{60}) \quad (2)$$

where:

D_{10}, D_{30}, and D_{60} = the particle-size diameters corresponding to 10, 30, and 60 %, respectively, passing on the cumulative particle-size distribution curve, Fig. 4.

NOTE 8—It may be necessary to extrapolate the curve to obtain the D_{10} diameter.

12.3.1 If less than 5 % of the test specimen passes the No. 200 (75-µm) sieve, classify the soil as a *well-graded gravel*, GW, or *well-graded sand*, SW, if Cu is greater than 4.0 for gravel or greater than 6.0 for sand, and Cc is at least 1.0 but not more than 3.0.

12.3.2 If less than 5 % of the test specimen passes the No. 200 (75-µm) sieve, classify the soil as *poorly graded gravel*, GP, or *poorly graded sand*, SP, if either the Cu or the Cc criteria for well-graded soils are not satisfied.

12.4 If more than 12 % of the test specimen passes the No. 200 (75-µm) sieve, the soil shall be considered a coarse-grained soil with fines. The fines are determined to i either clayey or silty based on the plasticity index vers liquid limit plot on Fig. 3. (See 9.8.2.1 if insufficient materi available for testing). (See NOTE 6)

12.4.1 Classify the soil as a *clayey gravel*, GC, or *clay sand*, SC, if the fines are clayey, that is, the position of t plasticity index versus liquid limit plot, Fig. 3, falls on above the "A" line and the plasticity index is greater than

12.4.2 Classify the soil as a *silty gravel*, GM, or *silty san* SM, if the fines are silty, that is, the position of the plastici index versus liquid limit plot, Fig. 3, falls below the "A" li or the plasticity index is less than 4.

12.4.3 If the fines plot as a silty clay, CL-ML, classify t soil as a *silty, clayey gravel*, GC-GM, if it is a gravel or a *sil clayey sand*, SC-SM, if it is a sand.

12.5 If 5 to 12 % of the test specimen passes the No. 2((75-µm) sieve, give the soil a dual classification using tv group symbols.

12.5.1 The first group symbol shall correspond to that f a gravel or sand having less than 5 % fines (GW, GP, SV SP), and the second symbol shall correspond to a gravel sand having more than 12 % fines (GC, GM, SC, SM).

12.5.2 The group name shall correspond to the first grou symbol plus "with clay" or "with silt" to indicate t plasticity characteristics of the fines. For example, we graded gravel with clay, GW-GC; poorly graded sand wi silt, SP-SM (See 9.8.2.1 if insufficient material available f testing).

NOTE 9—If the fines plot as a *silty clay*, CL-ML, the second gro symbol should be either GC or SC. For example, a poorly graded sa with 10 % fines, a liquid limit of 20, and a plasticity index of 6 would classified as a poorly graded sand with silty clay, SP-SC.

000195

12.6 If the specimen is predominantly sand or gravel but contains 15 % or more of the other coarse-grained constituent, the words "with gravel" or "with sand" shall be added to the group name. For example, poorly graded gravel with sand, clayey sand with gravel.

12.7 If the field sample contained any cobbles or boulders or both, the words "with cobbles," or "with cobbles and boulders" shall be added to the group name. For example, silty gravel with cobbles, GM.

13. Report

13.1 The report should include the group name, group symbol, and the results of the laboratory tests. The particle-size distribution shall be given in terms of percent of gravel, sand, and fines. The plot of the cumulative particle-size distribution curve shall be reported if used in classifying the soil. Report appropriate descriptive information according to the procedures in Practice D 2488. A local or commercial name or geologic interpretation for the material may be added at the end of the descriptive information if identified as such. The test procedures used shall be referenced.

NOTE 10—*Example: Clayey Gravel with Sand and Cobbles* (GC)—46 % fine to coarse, hard, subrounded gravel; 30 % fine to coarse, hard, subrounded sand; 24 % clayey fines, LL = 38, PI = 19; weak reaction with HCl; original field sample had 4 % hard, subrounded cobbles; maximum dimension 150 mm.

In-Place Conditions—firm, homogeneous, dry, brown,

Geologic Interpretation—alluvial fan.

NOTE 11—Other examples of soil descriptions are given in Appendix X1.

14. Keywords

14.1 Atterberg limits; classification; clay; gradation; gravel; laboratory classification; organic soils; sand; silt; soil classification; soil tests

APPENDIXES

(Nonmandatory Information)

X1. EXAMPLES OF DESCRIPTIONS USING SOIL CLASSIFICATION

X1.1 The following examples show how the information required in 13.1 can be reported. The appropriate descriptive information from Practice D 2488 is included for illustrative purposes. The additional descriptive terms that would accompany the soil classification should be based on the intended use of the classification and the individual circumstances.

X1.1.1 *Well-Graded Gravel with Sand (GW)*—73 % fine to coarse, hard, subangular gravel; 23 % fine to coarse, hard, subangular sand; 4 % fines; Cc = 2.7, Cu = 12.4.

X1.1.2 *Silty Sand with Gravel (SM)*—61 % predominantly fine sand; 23 % silty fines, LL = 33, PI = 6; 16 % fine, hard, subrounded gravel; no reaction with HCl; (field sample smaller than recommended). *In-Place Conditions*—Firm, stratified and contains lenses of silt 1 to 2 in. thick, moist, brown to gray; in-place density = 106 lb/ft^3 and in-place moisture = 9 %.

X1.1.3 *Organic Clay (OL)*—100 % fines, LL (not dried) = 32, LL (oven dried) = 21, PI (not dried) = 10; wet, dark brown, organic odor, weak reaction with HCl.

X1.1.4 *Silty Sand with Organic Fines (SM)*—74 % fine to coarse, hard, subangular reddish sand; 26 % organic and silty dark-brown fines, LL (not dried) = 37, LL (oven dried) = 26, PI (not dried) = 6, wet, weak reaction with HCl.

X1.1.5 *Poorly Graded Gravel with Silt, Sand, Cobbles and Boulders (GP-GM)*—78 % fine to coarse, hard, subrounded to subangular gravel; 16 % fine to coarse, hard, subrounded to subangular sand; 6 % silty (estimated) fines; moist, brown; no reaction with HCl; original field sample had 7 % hard, subrounded cobbles and 2 % hard, subrounded boulders with a maximum dimension of 18 in.

X2. USING SOIL CLASSIFICATION AS A DESCRIPTIVE SYSTEM FOR SHALE, CLAYSTONE, SHELLS, SLAG, CRUSHED ROCK, ETC.

X2.1 The group names and symbols used in this standard may be used as a descriptive system applied to materials that exist in situ as shale, claystone, sandstone, siltstone, mudstone, etc., but convert to soils after field or laboratory processing (crushing, slaking, etc.).

X2.2 Materials such as shells, crushed rock, slag, etc., should be identified as such. However, the procedures used in this standard for describing the particle size and plasticity characteristics may be used in the description of the material. If desired, a classification in accordance with this standard may be assigned to aid in describing the material.

X2.3 If a classification is used, the group symbol(s) and group names should be placed in quotation marks or noted with some type of distinguishing symbol. See examples.

X2.4 Examples of how soil classifications could be incorporated into a description system for materials that are not naturally occurring soils are as follows:

X2.4.1 *Shale Chunks*—Retrieved as 2 to 4-in. pieces of shale from power auger hole, dry, brown, no reaction with HCl. After laboratory processing by slaking in water for 24 h, material classified as "Sandy Lean Clay (CL)"—61 % clayey fines, LL = 37, PI = 16; 33 % fine to medium sand; 6 % gravel-size pieces of shale.

X2.4.2 *Crushed Sandstone*—Product of commercial crushing operation; "Poorly Graded Sand with Silt (SP-SM)"—91 % fine to medium sand; 9 % silty (estimated) fines; dry, reddish-brown, strong reaction with HCl.

X2.4.3 *Broken Shells*—62 % gravel-size broken shells;

000196

31 % sand and sand-size shell pieces; 7 % fines; would be classified as "Poorly Graded Gravel with Sand (GP)".

X2.4.4 *Crushed Rock*—Processed gravel and cobbles from Pit No. 7; "Poorly Graded Gravel (GP)"—89 % fine, hard, angular gravel-size particles; 11 % coarse, hard, angul sand-size particles, dry, tan; no reaction with HCl; Cc = 2. Cu = 0.9.

X3. PREPARATION AND TESTING FOR CLASSIFICATION PURPOSES BY THE WET METHOD

X3.1 This appendix describes the steps in preparing a soil sample for testing for purposes of soil classification using a wet-preparation procedure.

X3.2 Samples prepared in accordance with this procedure should contain as much of their natural water content as possible and every effort should be made during obtaining, preparing, and transportating the samples to maintain the natural moisture.

X3.3 The procedures to be followed in this standard assume that the field sample contains fines, sand, gravel, and plus 3-in. (75-mm) particles and the cumulative particle-size distribution plus the liquid limit and plasticity index values are required (see 9.8). Some of the following steps may be omitted when they are not applicable to the soil being tested.

X3.4 If the soil contains plus No. 200 (75-µm) particles that would degrade during dry sieving, use a test procedure for determining the particle-size characteristics that prevents this degradation.

X3.5 Since this classification system is limited to the portion of a sample passing the 3-in. (75-mm) sieve, the plus 3-in. (75-mm) material shall be removed prior to the determination of the particle-size characteristics and the liquid limit and plasticity index.

X3.6 The portion of the field sample finer than the 3-in. (75-mm) sieve shall be obtained as follows:

X3.6.1 Separate the field sample into two fractions on a 3-in. (75-mm) sieve, being careful to maintain the natural water content in the minus 3-in. (75-mm) fraction. Any particles adhering to the plus 3-in. (75-mm) particles shall be brushed or wiped off and placed in the fraction passing the 3-in. (75-mm) sieve.

X3.6.2 Determine the air-dry or oven-dry weight of the fraction retained on the 3-in. (75-mm) sieve. Determine the total (wet) weight of the fraction passing the 3-in. (75-mm) sieve.

X3.6.3 Thoroughly mix the fraction passing the 3-in. (75-mm) sieve. Determine the water content, in accordance with Test Method D 2216, of a representative specimen with a minimum dry weight as required in 7.2. Save the water-content specimen for determination of the particle-size analysis in accordance with X3.8.

X3.6.4 Compute the dry weight of the fraction passing the 3-in. (75-mm) sieve based on the water content and total (wet) weight. Compute the total dry weight of the sample and calculate the percentage of material retained on the 3-in. (75-mm) sieve.

X3.7 Determine the liquid limit and plasticity index as follows:

X3.7.1 If the soil disaggregates readily, mix on a clean, hard surface and select a representative sample by quarter in accordance with Practice C 702.

X3.7.1.1 If the soil contains coarse-grained partic coated with and bound together by tough clayey mater take extreme care in obtaining a representative portion of No. 40 (425-µm) fraction. Typically, a larger portion th normal has to be selected, such as the minimum weig required in 7.2.

X3.7.1.2 To obtain a representative specimen of a b cally cohesive soil, it may be advantageous to pass the through a ¾-in. (19-mm) sieve or other convenient size the material can be more easily mixed and then quartere split to obtain the representative specimen.

X3.7.2 Process the representative specimen in accorda with Procedure B of Practice D 2217.

X3.7.3 Perform the liquid-limit test in accordance Test Method D 4318, except the soil shall not be air d prior to the test.

X3.7.4 Perform the plastic-limit test in accordance Test Method D 4318, except the soil shall not be air d prior to the test, and calculate the plasticity index.

X3.8 Determine the particle-size distribution as follo

X3.8.1 If the water content of the fraction passing 3-in. (75-mm) sieve was required (X3.6.3), use the w content specimen for determining the particle-size dist tion. Otherwise, select a representative specimen in ac dance with Practice C 702 with a minimum dry weig required in 7.2.

X3.8.2 If the cumulative particle-size distribution cluding a hydrometer analysis is required, determine particle-size distribution in accordance with Test Me D 422. See 9.7 for the set of required sieves.

X3.8.3 If the cumulative particle-size distribution wi a hydrometer analysis is required, determine the particl distribution in accordance with Method C 136. See 9. the set of required sieves. The specimen should be so until all clayey aggregations have softened and then w in accordance with Test Method C 117 prior to perfor the particle-size distribution.

X3.8.4 If the cumulative particle-size distribution required, determine the percent fines, percent sand percent gravel in the specimen in accordance with Method C 117, being sure to soak the specimen long e to soften all clayey aggregations, followed by Method using a nest of sieves which shall include a No. 4 (4.75 sieve and a No. 200 (75-µm) sieve.

X3.8.5 Calculate the percent fines, percent sand percent gravel in the minus 3-in. (75-mm) fractic classification purposes.

000197

62

X4. AIR-DRIED METHOD OF PREPARATION OF SOILS FOR TESTING FOR CLASSIFICATION PURPOSES

X4.1 This appendix describes the steps in preparing a soil sample for testing for purposes of soil classification when air-drying the soil before testing is specified or desired or when the natural moisture content is near that of an air-dried state.

X4.2 If the soil contains organic matter or mineral colloids that are irreversibly affected by air drying, the wet-preparation method as described in Appendix X3 should be used.

X4.3 Since this classification system is limited to the portion of a sample passing the 3-in. (75-mm) sieve, the plus 3-in. (75-mm) material shall be removed prior to the determination of the particle-size characteristics and the liquid limit and plasticity index.

X4.4 The portion of the field sample finer than the 3-in. (75-mm) sieve shall be obtained as follows:

X4.4.1 Air dry and weigh the field sample.

X4.4.2 Separate the field sample into two fractions on a 3-in. (75-mm) sieve.

X4.4.3 Weigh the two fractions and compute the percentage of the plus 3-in. (75-mm) material in the field sample.

X4.5 Determine the particle-size distribution and liquid limit and plasticity index as follows (see 9.8 for when these tests are required):

X4.5.1 Thoroughly mix the fraction passing the 3-in. (75-mm) sieve.

X4.5.2 If the cumulative particle-size distribution including a hydrometer analysis is required, determine the particle-size distribution in accordance with Test Method D 422. See 9.7 for the set of sieves that is required.

X4.5.3 If the cumulative particle-size distribution without a hydrometer analysis is required, determine the particle-size distribution in accordance with Test Method D 1140 followed by Method C 136. See 9.7 for the set of sieves that is required.

X4.5.4 If the cumulative particle-size distribution is not required, determine the percent fines, percent sand, and percent gravel in the specimen in accordance with Test Method D 1140 followed by Method C 136 using a nest of sieves which shall include a No. 4 (4.75-mm) sieve and a No. 200 (75-μm) sieve.

X4.5.5 If required, determine the liquid limit and the plasticity index of the test specimen in accordance with Test Method D 4318.

X5. RATIONALE

X5.1 Significant revisions were made to the standard which appeared as D 2487 – 83 from the previous version of D 2487 – 69 (1975). The changes are documented in the literature.[5]

X5.2 The 1992 edition differs from the previous edition in that the title was changed to better indicate the use of the standard and identifying it as the ASTM version of the Unified Soil Classification System.

[5] Howard, A.K., "The Revised ASTM Standard on the Unified Soil Classification System," Geotechnical Testing Journal, GTJODJ Vol 7, No. 4, December 1984.

000198

The American Society for Testing and Materials takes no position respecting the validity of any patent rights asserted in connection with any item mentioned in this standard. Users of this standard are expressly advised that determination of the validity of any such patent rights, and the risk of infringement of such rights, are entirely their own responsibility.

This standard is subject to revision at any time by the responsible technical committee and must be reviewed every five years and if not revised, either reapproved or withdrawn. Your comments are invited either for revision of this standard or for additional standards and should be addressed to ASTM Headquarters. Your comments will receive careful consideration at a meeting of the responsible technical committee, which you may attend. If you feel that your comments have not received a fair hearing you should make your views known to the ASTM Committee on Standards, 1916 Race St., Philadelphia, PA 19103.

000199

Designation: D 2488 – 90

Standard Practice for Description and Identification of Soils (Visual-Manual Procedure)[1]

This standard is issued under the fixed designation D 2488; the number immediately following the designation indicates the year of original adoption or, in the case of revision, the year of last revision. A number in parentheses indicates the year of last reapproval. A superscript epsilon (ε) indicates an editorial change since the last revision or reapproval.

This standard has been approved for use by agencies of the Department of Defense. Consult the DoD Index of Specifications and Standards for the specific year of issue which has been adopted by the Department of Defense.

1. Scope

1.1 This practice covers procedures for the description of soils for engineering purposes.

1.2 This practice also describes a procedure for identifying soils, at the option of the user, based on the classification system described in Test Method D 2487. The identification is based on visual examination and manual tests. It must be clearly stated in reporting an identification that it is based on visual-manual procedures.

1.2.1 When precise classification of soils for engineering purposes is required, the procedures prescribed in Test Method D 2487 shall be used.

1.2.2 In this practice, the identification portion assigning a group symbol and name is limited to soil particles smaller than 3 in. (75 mm).

1.2.3 The identification portion of this practice is limited to naturally occurring soils (disturbed and undisturbed).

NOTE 1—This practice may be used as a descriptive system applied to such materials as shale, claystone, shells, crushed rock, etc. (See Appendix X2).

1.3 The descriptive information in this practice may be used with other soil classification systems or for materials other than naturally occurring soils.

1.4 *This standard does not purport to address all of the safety problems, if any, associated with its use. It is the responsibility of the user of this standard to establish appropriate safety and health practices and determine the applicability of regulatory limitations prior to use.* For specific precautionary statements see Section 8.

1.5 The values stated in inch-pound units are to be regarded as the standard.

2. Referenced Documents

2.1 *ASTM Standards:*

D 653 Terminology Relating to Soil, Rock, and Contained Fluids[2]

D 1452 Practice for Soil Investigation and Sampling by Auger Borings[2]

D 1586 Method for Penetration Test and Split-Barrel Sampling of Soils[2]

D 1587 Practice for Thin-Walled Tube Sampling of Soils[2]

D 2113 Practice for Diamond Core Drilling for Site Investigation[2]

D 2487 Test Method for Classification of Soils for Engineering Purposes[2]

D 4083 Practice for Description of Frozen Soils (Visual-Manual Procedure)[2]

3. Terminology

3.1 *Definitions:*

3.1.1 Except as listed below, all definitions are in accordance with Terminology D 653.

NOTE 2—For particles retained on a 3-in. (75-mm) US standard sieve, the following definitions are suggested:

Cobbles—particles of rock that will pass a 12-in. (300-mm) square opening and be retained on a 3-in. (75-mm) sieve, and

Boulders—particles of rock that will not pass a 12-in. (300-mm) square opening.

3.1.1.2 *clay*—soil passing a No. 200 (75-µm) sieve that can be made to exhibit plasticity (putty-like properties) within a range of water contents, and that exhibits considerable strength when air-dry. For classification, a clay is a fine-grained soil, or the fine-grained portion of a soil, with a plasticity index equal to or greater than 4, and the plot of plasticity index versus liquid limit falls on or above the "A" line (see Fig. 3 of Test Method D 2487).

3.1.1.3 *gravel*—particles of rock that will pass a 3-in. (75-mm) sieve and be retained on a No. 4 (4.75-mm) sieve with the following subdivisions:

coarse—passes a 3-in. (75-mm) sieve and is retained on a ¾-in. (19-mm) sieve.

fine—passes a ¾-in. (19-mm) sieve and is retained on a No. 4 (4.75-mm) sieve.

3.1.1.4 *organic clay*—a clay with sufficient organic content to influence the soil properties. For classification, an organic clay is a soil that would be classified as a clay, except that its liquid limit value after oven drying is less than 75 % of its liquid limit value before oven drying.

3.1.1.5 *organic silt*—a silt with sufficient organic content to influence the soil properties. For classification, an organic silt is a soil that would be classified as a silt except that its liquid limit value after oven drying is less than 75 % of its liquid limit value before oven drying.

3.1.1.6 *peat*—a soil composed primarily of vegetable tissue in various stages of decomposition usually with an organic odor, a dark brown to black color, a spongy consistency, and a texture ranging from fibrous to amorphous.

3.1.1.7 *sand*—particles of rock that will pass a No. 4

[1] This practice is under the jurisdiction of ASTM Committee D-18 on Soil and Rock and is the direct responsibility of Subcommittee D18.07 on Identification and Classification of Soils.

Current edition approved June 29, 1990. Published August 1990. Originally published as D 2488 – 66 T. Last previous edition D 2488 – 84ε[1].

[2] *Annual Book of ASTM Standards*, Vol 04.08.

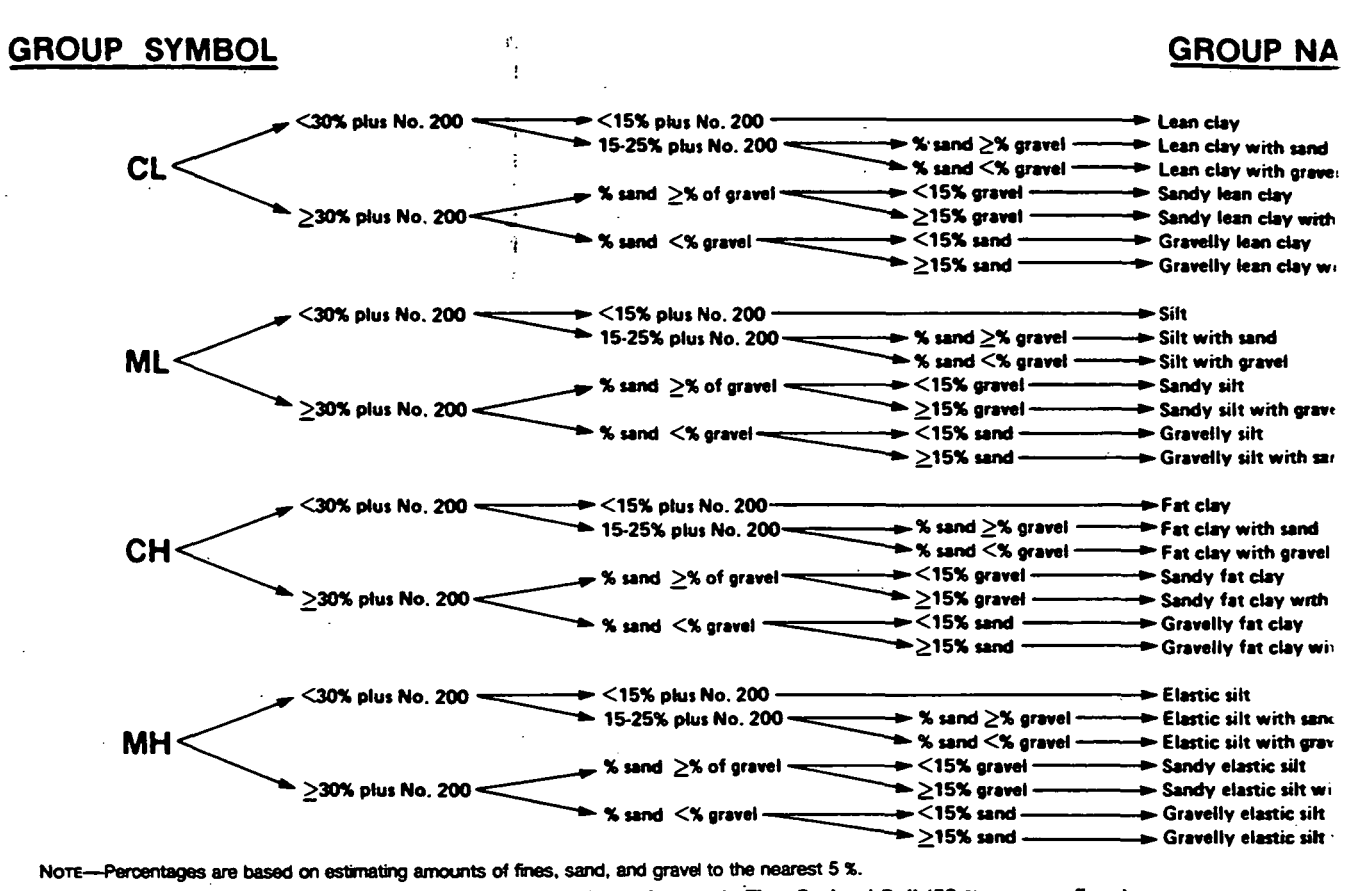

NOTE—Percentages are based on estimating amounts of fines, sand, and gravel to the nearest 5 %.

FIG. 1a Flow Chart for Identifying Inorganic Fine-Grained Soil (50 % or more fines)

(4.75-mm) sieve and be retained on a No. 200 (75-μm) sieve with the following subdivisions:

coarse—passes a No. 4 (4.75-mm) sieve and is retained on a No. 10 (2.00-mm) sieve.

medium—passes a No. 10 (2.00-mm) sieve and is retained on a No. 40 (425-μm) sieve.

fine—passes a No. 40 (425-μm) sieve and is retained on a No. 200 (75-μm) sieve.

3.1.1.8 *silt*—soil passing a No. 200 (75-μm) sieve that is nonplastic or very slightly plastic and that exhibits little or no strength when air dry. For classification, a silt is a fine-grained soil, or the fine-grained portion of a soil, with a plasticity index less than 4, or the plot of plasticity index versus liquid limit falls below the "A" line (see Fig. 3 of Test Method D 2487).

4. Summary of Practice

4.1 Using visual examination and simple manua this practice gives standardized criteria and procedu describing and identifying soils.

4.2 The soil can be given an identification by assi group symbol(s) and name. The flow charts, Figs. 1a for fine-grained soils, and Fig. 2, for coarse-grained so be used to assign the appropriate group symbol(s) and If the soil has properties which do not distinctly place a specific group, borderline symbols may be us Appendix X3.

NOTE 3—It is suggested that a distinction be made betw *symbols* and *borderline symbols.*

Dual Symbol—A dual symbol is two symbols separated by a for example, GP-GM, SW-SC, CL-ML used to indicate that th been identified as having the properties of a classification in ac with Test Method D 2487 where two symbols are requir symbols are required when the soil has between 5 and 12 %

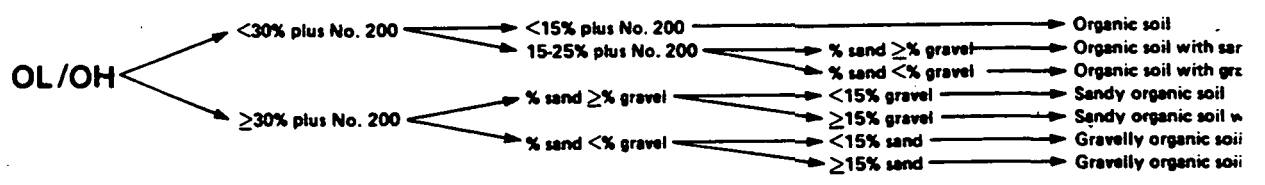

NOTE—Percentages are based on estimating amounts of fines, sand, and gravel to the nearest 5 %.

FIG. 1b Flow Chart for Identifying Organic Fine-Grained Soil (50 % or more fines)

000201

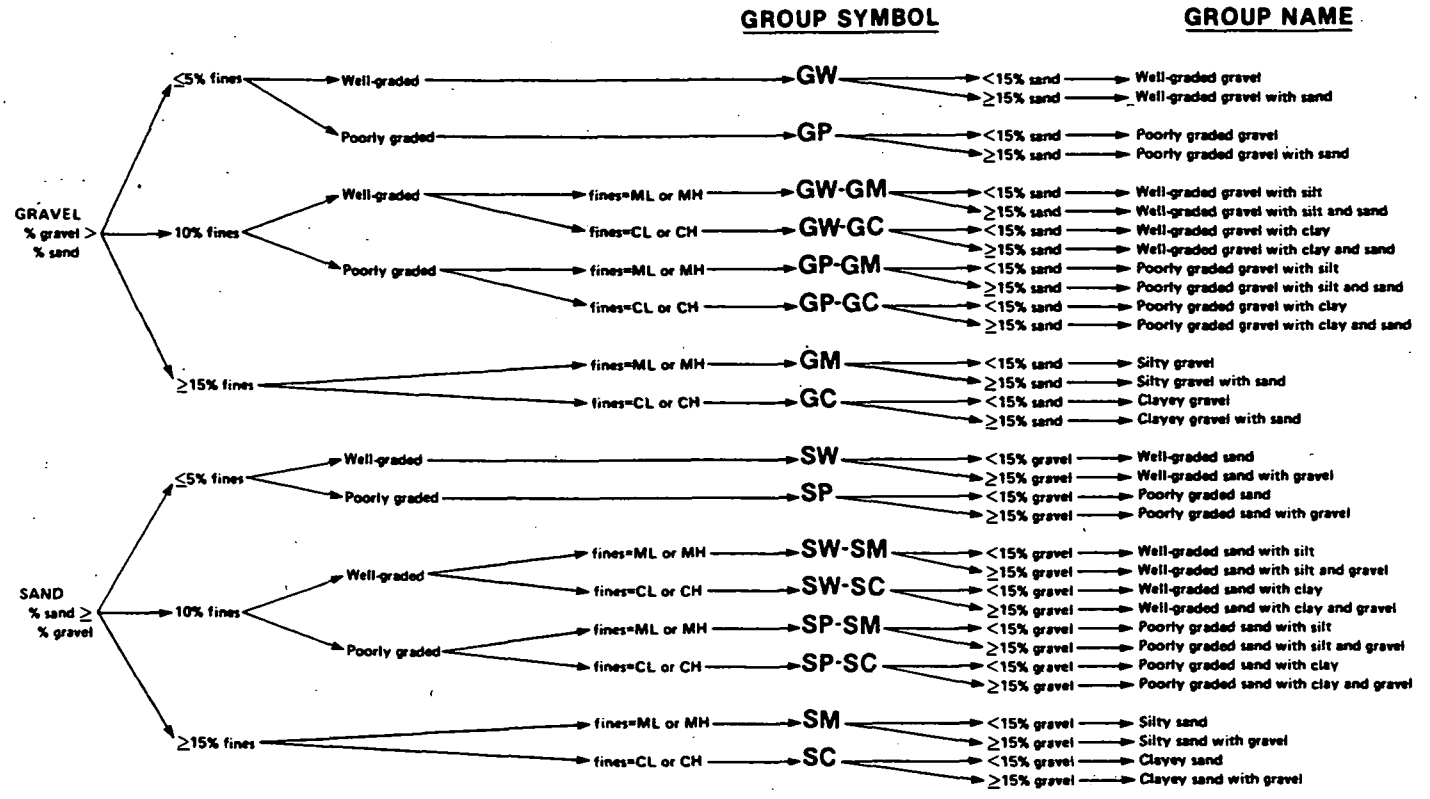

NOTE—Percentages are based on estimating amounts of fines, sand, and gravel to the nearest 5 %.

FIG. 2 Flow Chart for Identifying Coarse-Grained Soils (less than 50 % fines)

when the liquid limit and plasticity index values plot in the CL-ML area of the plasticity chart.

Borderline Symbol—A borderline symbol is two symbols separated by a slash, for example, CL/CH, GM/SM, CL/ML. A borderline symbol should be used to indicate that the soil has been identified as having properties that do not distinctly place the soil into a specific group (see Appendix X3).

5. Significance and Use

5.1 The descriptive information required in this practice can be used to describe a soil to aid in the evaluation of its significant properties for engineering use.

5.2 The descriptive information required in this practice should be used to supplement the classification of a soil as determined by Test Method D 2487.

5.3 This practice may be used in identifying soils using the classification group symbols and names as prescribed in Test Method D 2487. Since the names and symbols used in this practice to identify the soils are the same as those used in Test Method D 2487, it shall be clearly stated in reports and all other appropriate documents, that the classification symbol and name are based on visual-manual procedures.

5.4 This practice is to be used not only for identification of soils in the field, but also in the office, laboratory, or wherever soil samples are inspected and described.

5.5 This practice has particular value in grouping similar soil samples so that only a minimum number of laboratory tests need be run for positive soil classification.

NOTE 4—The ability to describe and identify soils correctly is learned more readily under the guidance of experienced personnel, but it may also be acquired systematically by comparing numerical laboratory test results for typical soils of each type with their visual and manual characteristics.

5.6 When describing and identifying soil samples from a given boring, test pit, or group of borings or pits, it is not necessary to follow all of the procedures in this practice for every sample. Soils which appear to be similar can be grouped together; one sample completely described and identified with the others referred to as similar based on performing only a few of the descriptive and identification procedures described in this practice.

5.7 This practice may be used in combination with Practice D 4083 when working with frozen soils.

6. Apparatus

6.1 *Required Apparatus:*

6.1.1 *Pocket Knife or Small Spatula.*

6.2 *Useful Auxiliary Apparatus:*

6.2.1 *Small Test Tube and Stopper* (or jar with a lid).

6.2.2 *Small Hand Lens.*

7. Reagents

7.1 *Purity of Water*—Unless otherwise indicated, references to water shall be understood to mean water from a city water supply or natural source, including non-potable water.

7.2 *Hydrochloric Acid*—A small bottle of dilute hydrochloric acid, HCl, one part HCl (10 *N*) to three parts water (This reagent is optional for use with this practice). See Section 8.

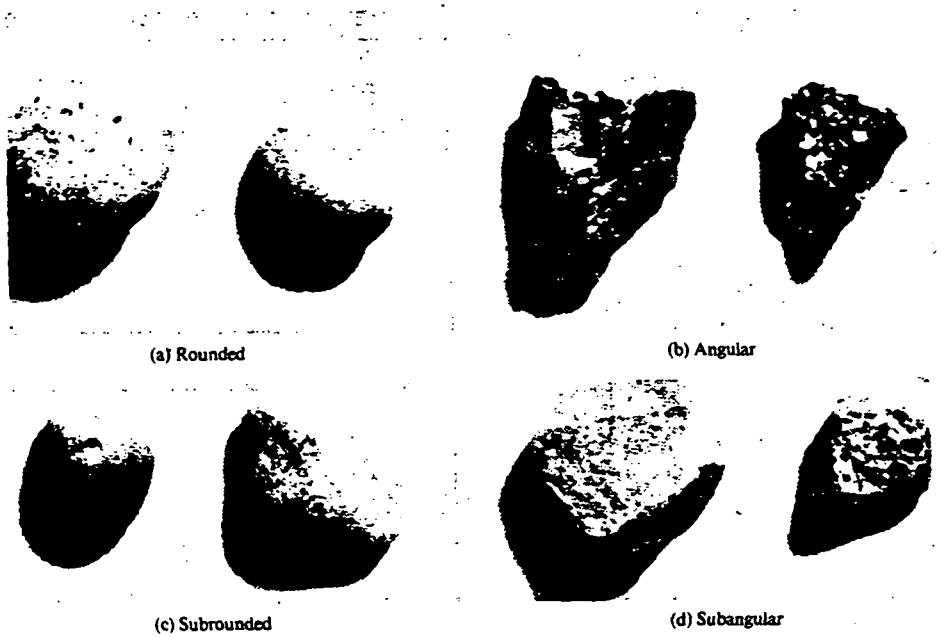

FIG. 3 Typical Angularity of Bulky Grains

8. Safety Precautions

8.1 When preparing the dilute HCl solution of one part concentrated hydrochloric acid (10 *N*) to three parts of distilled water, slowly add acid into water following necessary safety precautions. Handle with caution and store safely. If solution comes into contact with the skin, rinse thoroughly with water.

8.2 **Caution**—Do not add water to acid.

9. Sampling

9.1 The sample shall be considered to be representative of the stratum from which it was obtained by an appropriate, accepted, or standard procedure.

NOTE 5—Preferably, the sampling procedure should be identified as having been conducted in accordance with Practices D 1452, D 1587, or D 2113, or Method D 1586.

9.2 The sample shall be carefully identified as to origin.

NOTE 6—Remarks as to the origin may take the form of a boring number and sample number in conjunction with a job number, a geologic stratum, a pedologic horizon or a location description with respect to a permanent monument, a grid system or a station number and offset with respect to a stated centerline and a depth or elevation.

9.3 For accurate description and identification, the minimum amount of the specimen to be examined shall be in accordance with the following schedule:

Maximum Particle Size, Sieve Opening	Minimum Specimen Size, Dry Weight
4.75 mm (No. 4)	100 g (0..5 lb)
9.5 mm (3/8 in.)	200 g (0.5 lb)
19.0 mm (3/4 in.)	1.0 kg (2.2 lb)
38.1 mm (1 1/2 in.)	8.0 kg (18 lb)
75.0 mm (3 in.)	60.0 kg (132 lb)

NOTE 7—If random isolated particles are encountered th significantly larger than the particles in the soil matrix, the soil can be accurately described and identified in accordance w preceeding schedule.

9.4 If the field sample or specimen being exami smaller than the minimum recommended amoun report shall include an appropriate remark.

TABLE 1 Criteria for Describing Angularity of Coarse-Grained Particles (see Fig. 3)

Description	Criteria
Angular	Particles have sharp edges and relatively plane sides with unpolished surfaces
Subangular	Particles are similar to angular description but have rounded edges
Subrounded	Particles have nearly plane sides but have well-rounded corners and edges
Rounded	Particles have smoothly curved sides and no edges

10. Descriptive Information for Soils

10.1 *Angularity*—Describe the angularity of the (coarse sizes only), gravel, cobbles, and boulders, as a subangular, subrounded, or rounded in accordance w criteria in Table 1 and Fig. 3. A range of angularity stated, such as: subrounded to rounded.

10.2 *Shape*—Describe the shape of the gravel, c and boulders as flat, elongated, or flat and elongated meet the criteria in Table 2 and Fig. 4. Otherwise, mention the shape. Indicate the fraction of the partic have the shape, such as: one-third of the gravel parti flat.

10.3 *Color*—Describe the color. Color is an im property in identifying organic soils, and within

TABLE 2 Criteria for Describing Particle Shape (see F

The particle shape shall be described as follows where length, thickness refer to the greatest, intermediate, and least dimensions of respectively.

Flat	Particles with width/thickness > 3
Elongated	Particles with length/width > 3
Flat and elongated	Particles meet criteria for both flat and e

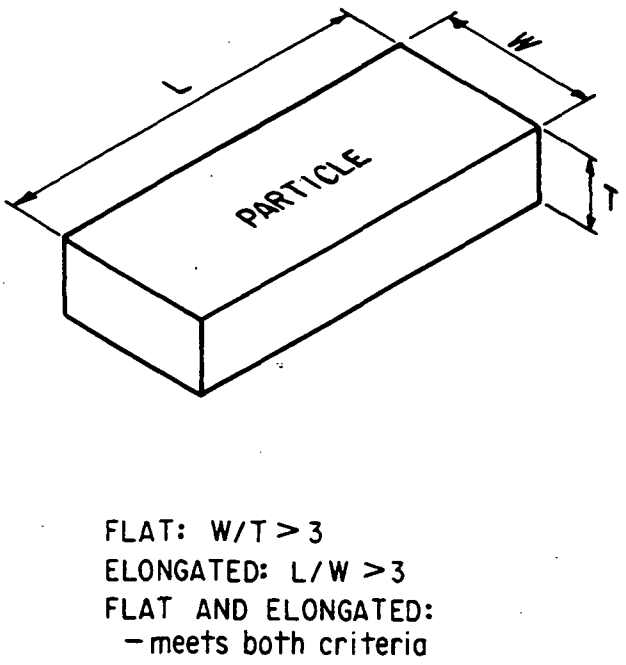

FIG. 4 Criteria for Particle Shape

TABLE 3 Criteria for Describing Moisture Condition

Description	Criteria
Dry	Absence of moisture, dusty, dry to the touch
Moist	Damp but no visible water
Wet	Visible free water, usually soil is below water table

locality it may also be useful in identifying materials of similar geologic origin. If the sample contains layers or patches of varying colors, this shall be noted and all representative colors shall be described. The color shall be described for moist samples. If the color represents a dry condition, this shall be stated in the report.

10.4 *Odor*—Describe the odor if organic or unusual. Soils containing a significant amount of organic material usually have a distinctive odor of decaying vegetation. This is especially apparent in fresh samples, but if the samples are dried, the odor may often be revived by heating a moistened sample. If the odor is unusual (petroleum product, chemical, and the like), it shall be described.

10.5 *Moisture Condition*—Describe the moisture condition as dry, moist, or wet, in accordance with the criteria in Table 3.

10.6 *HCl Reaction*—Describe the reaction with HCl as none, weak, or strong, in accordance with the critera in Table 4. Since calcium carbonate is a common cementing agent, a report of its presence on the basis of the reaction with dilute hydrochloric acid is important.

TABLE 4 Criteria for Describing the Reaction With HCl

Description	Criteria
None	No visible reaction
Weak	Some reaction, with bubbles forming slowly
Strong	Violent reaction, with bubbles forming immediately

TABLE 5 Criteria for Describing Consistency

Description	Criteria
Very soft	Thumb will penetrate soil more than 1 in. (25 mm)
Soft	Thumb will penetrate soil about 1 in. (25 mm)
Firm	Thumb will indent soil about ¼ in. (6 mm)
Hard	Thumb will not indent soil but readily indented with thumbnail
Very hard	Thumbnail will not indent soil

10.7 *Consistency*—For intact fine-grained soil, describe the consistency as very soft, soft, firm, hard, or very hard, in accordance with the criteria in Table 5. This observation is inappropriate for soils with significant amounts of gravel.

10.8 *Cementation*—Describe the cementation of intact coarse-grained soils as weak, moderate, or strong, in accordance with the criteria in Table 6.

10.9 *Structure*—Describe the structure of intact soils in accordance with the criteria in Table 7.

10.10 *Range of Particle Sizes*—For gravel and sand components, describe the range of particle sizes within each component as defined in 3.1.2 and 3.1.6. For example, about 20 % fine to coarse gravel, about 40 % fine to coarse sand.

10.11 *Maximum Particle Size*—Describe the maximum particle size found in the sample in accordance with the following information:

10.11.1 *Sand Size*—If the maximum particle size is a sand size, describe as fine, medium, or coarse as defined in 3.1.6. For example: maximum particle size, medium sand.

10.11.2 *Gravel Size*—If the maximum particle size is a gravel size, describe the maximum particle size as the smallest sieve opening that the particle will pass. For example, maximum particle size, 1½ in. (will pass a 1½-in. square opening but not a ¾-in. square opening).

10.11.3 *Cobble or Boulder Size*—If the maximum particle size is a cobble or boulder size, describe the maximum dimension of the largest particle. For example: maximum dimension, 18 in. (450 mm).

10.12 *Hardness*—Describe the hardness of coarse sand and larger particles as hard, or state what happens when the particles are hit by a hammer, for example, gravel-size particles fracture with considerable hammer blow, some gravel-size particles crumble with hammer blow. "Hard" means particles do not crack, fracture, or crumble under a hammer blow.

10.13 Additional comments shall be noted, such as the presence of roots or root holes, difficulty in drilling or augering hole, caving of trench or hole, or the presence of mica.

10.14 A local or commercial name or a geologic interpre-

TABLE 6 Criteria for Describing Cementation

Description	Criteria
Weak	Crumbles or breaks with handling or little finger pressure
Moderate	Crumbles or breaks with considerable finger pressure
Strong	Will not crumble or break with finger pressure

TABLE 7 Criteria for Describing Structure

Description	Criteria
Stratified	Alternating layers of varying material or color with layers at least 6 mm thick; note thickness
Laminated	Alternating layers of varying material or color with the layers less than 6 mm thick; note thickness
Fissured	Breaks along definite planes of fracture with little resistance to fracturing
Slickensided	Fracture planes appear polished or glossy, sometimes striated
Blocky	Cohesive soil that can be broken down into small angular lumps which resist further breakdown
Lensed	Inclusion of small pockets of different soils, such as small lenses of sand scattered through a mass of clay; note thickness
Homogeneous	Same color and appearance throughout

tation of the soil, or both, may be added if identified as such.

10.15 A classification or identification of the soil in accordance with other classification systems may be added if identified as such.

11. Identification of Peat

11.1 A sample composed primarily of vegetable tissue in various stages of decomposition that has a fibrous to amorphous texture, usually a dark brown to black color, and an organic odor, shall be designated as a highly organic soil and shall be identified as peat, PT, and not subjected to the identification procedures described hereafter.

12. Preparation for Identification

12.1 The soil identification portion of this practice is based on the portion of the soil sample that will pass a 3-in. (75-mm) sieve. The larger than 3-in. (75-mm) particles must be removed, manually, for a loose sample, or mentally, for an intact sample before classifying the soil.

12.2 Estimate and note the percentage of cobbles and the percentage of boulders. Performed visually, these estimates will be on the basis of volume percentage.

NOTE 8—Since the percentages of the particle-size distribution in Test Method D 2487 are by dry weight, and the estimates of percentages for gravel, sand, and fines in this practice are by dry weight, it is recommended that the report state that the percentages of cobbles and boulders are by volume.

12.3 Of the fraction of the soil smaller than 3 in. (75 mm), estimate and note the percentage, by dry weight, of the gravel, sand, and fines (see Appendix X4 for suggested procedures).

NOTE 9—Since the particle-size components appear visually on the basis of volume, considerable experience is required to estimate the percentages on the basis of dry weight. Frequent comparisons with laboratory particle-size analyses should be made.

12.3.1 The percentages shall be estimated to the closest 5 %. The percentages of gravel, sand, and fines must add up to 100 %.

12.3.2 If one of the components is present but not in sufficient quantity to be considered 5 % of the smaller than 3-in. (75-mm) portion, indicate its presence by the term *trace*, for example, trace of fines. A trace is not to be considered in the total of 100 % for the components.

13. Preliminary Identification

13.1 The soil is *fine grained* if it contains 50 % or more fines. Follow the procedures for identifying fine-grained soils of Section 14.

13.2 The soil is *coarse grained* if it contains less than 50 % fines. Follow the procedures for identifying coarse-grained soils of Section 15.

14. Procedure for Identifying Fine-Grained Soils

14.1 Select a representative sample of the material for examination. Remove particles larger than the No. 40 sieve (medium sand and larger) until a specimen equivalent to about a handful of material is available. Use this specimen for performing the dry strength, dilatancy, and toughness tests.

14.2 *Dry Strength:*

14.2.1 From the specimen, select enough material to mold into a ball about 1 in. (25 mm) in diameter. Mold the material until it has the consistency of putty, adding water if necessary.

14.2.2 From the molded material, make at least three test specimens. A test specimen shall be a ball of material about ½ in. (12 mm) in diameter. Allow the test specimens to dry in air, or sun, or by artificial means, as long as the temperature does not exceed 60°C.

14.2.3 If the test specimen contains natural dry lumps those that are about ½ in. (12 mm) in diameter may be use in place of the molded balls.

NOTE 10—The process of molding and drying usually produc higher strengths than are found in natural dry lumps of soil.

14.2.4 Test the strength of the dry balls or lumps b crushing between the fingers. Note the strength as none, lo medium, high, or very high in accorance with the criteria Table 8. If natural dry lumps are used, do not use the resu of any of the lumps that are found to contain particles coarse sand.

14.2.5 The presence of high-strength water-soluble menting materials, such as calcium carbonate, may ca exceptionally high dry strengths. The presence of calci carbonate can usually be detected from the intensity of reaction with dilute hydrochloric acid (see 10.6).

14.3 *Dilatancy:*

14.3.1 From the specimen, select enough material to m into a ball about ½ in. (12 mm) in diameter. Mold material, adding water if necessary, until it has a soft, but sticky, consistency.

14.3.2 Smooth the soil ball in the palm of one hand the blade of a knife or small spatula. Shake horizont striking the side of the hand vigorously against the c hand several times. Note the reaction of water appearin

TABLE 8 Criteria for Describing Dry Strength

Description	Criteria
None	The dry specimen crumbles into powder with mere p of handling
Low	The dry specimen crumbles into powder with some pressure
Medium	The dry specimen breaks into pieces or crumbl considerable finger pressure
High	The dry specimen cannot be broken with finger p Specimen will break into pieces between thumb an surface
Very high	The dry specimen cannot be broken between the thum hard surface

000205

TABLE 9 Criteria for Describing Dilatancy

Description	Criteria
None	No visible change in the specimen
Slow	Water appears slowly on the surface of the specimen during shaking and does not disappear or disappears slowly upon squeezing
Rapid	Water appears quickly on the surface of the specimen during shaking and disappears quickly upon squeezing

TABLE 10 Criteria for Describing Toughness

Description	Criteria
Low	Only slight pressure is required to roll the thread near the plastic limit. The thread and the lump are weak and soft
Medium	Medium pressure is required to roll the thread to near the plastic limit. The thread and the lump have medium stiffness
High	Considerable pressure is required to roll the thread to near the plastic limit. The thread and the lump have very high stiffness

the surface of the soil. Squeeze the sample by closing the hand or pinching the soil between the fingers, and note the reaction as none, slow, or rapid in accordance with the criteria in Table 9. The reaction is the speed with which water appears while shaking, and disappears while squeezing.

14.4 *Toughness:*

14.4.1 Following the completion of the dilatancy test, the test specimen is shaped into an elongated pat and rolled by hand on a smooth surface or between the palms into a thread about ⅛ in. (3 mm) in diameter. (If the sample is too wet to roll easily, it should be spread into a thin layer and allowed to lose some water by evaporation.) Fold the sample threads and reroll repeatedly until the thread crumbles at a diameter of about ⅛ in. The thread will crumble at a diameter of ⅛ in. when the soil is near the plastic limit. Note the pressure required to roll the thread near the plastic limit. Also, note the strength of the thread. After the thread crumbles, the pieces should be lumped together and kneaded until the lump crumbles. Note the toughness of the material during kneading.

14.4.2 Describe the toughness of the thread and lump as low, medium, or high in accordance with the criteria in Table 10.

14.5 *Plasticity*—On the basis of observations made during the toughness test, describe the plasticity of the material in accordance with the criteria given in Table 11.

14.6 Decide whether the soil is an *inorganic* or an *organic* fine-grained soil (see 14.8). If inorganic, follow the steps given in 14.7.

14.7 *Identification of Inorganic Fine-Grained Soils:*

TABLE 11 Criteria for Describing Plasticity

Description	Criteria
Nonplastic	A ⅛-in. (3-mm) thread cannot be rolled at any water content
Low	The thread can barely be rolled and the lump cannot be formed when drier than the plastic limit
Medium	The thread is easy to roll and not much time is required to reach the plastic limit. The thread cannot be rerolled after reaching the plastic limit. The lump crumbles when drier than the plastic limit
High	It takes considerable time rolling and kneading to reach the plastic limit. The thread can be rerolled several times after reaching the plastic limit. The lump can be formed without crumbling when drier than the plastic limit

14.7.1 Identify the soil as a *lean clay*, CL, if the soil has medium to high dry strength, no or slow dilatancy, and medium toughness and plasticity (see Table 12).

14.7.2 Identify the soil as a *fat clay*, CH, if the soil has high to very high dry strength, no dilatancy, and high toughness and plasticity (see Table 12).

14.7.3 Identify the soil as a *silt*, ML, if the soil has no to low dry strength, slow to rapid dilatancy, and low toughness and plasticity, or is nonplastic (see Table 12).

14.7.4 Identify the soil as an *elastic silt*, MH, if the soil has low to medium dry strength, no to slow dilatancy, and low to medium toughness and plasticity (see Table 12).

NOTE 11—These properties are similar to those for a lean clay. However, the silt will dry quickly on the hand and have a smooth, silky feel when dry. Some soils that would classify as MH in accordance with the criteria in Test Method D 2487 are visually difficult to distinguish from lean clays, CL. It may be necessary to perform laboratory testing for proper identification.

14.8 *Identification of Organic Fine-Grained Soils:*

14.8.1 Identify the soil as an *organic soil*, OL/OH, if the soil contains enough organic particles to influence the soil properties. Organic soils usually have a dark brown to black color and may have an organic odor. Often, organic soils will change color, for example, black to brown, when exposed to the air. Some organic soils will lighten in color significantly when air dried. Organic soils normally will not have a high toughness or plasticity. The thread for the toughness test will be spongy.

NOTE 12—In some cases, through practice and experience, it may be possible to further identify the organic soils as organic silts or organic clays, OL or OH. Correlations between the dilatancy, dry strength, toughness tests, and laboratory tests can be made to identify organic soils in certain deposits of similar materials of known geologic origin.

14.9 If the soil is estimated to have 15 to 25 % sand or gravel, or both, the words "with sand" or "with gravel" (whichever is more predominant) shall be added to the group name. For example: "lean clay with sand, CL" or "silt with gravel, ML" (see Figs. 1a and 1b). If the percentage of sand is equal to the percentage of gravel, use "with sand."

14.10 If the soil is estimated to have 30 % or more sand or gravel, or both, the words "sandy" or "gravelly" shall be added to the group name. Add the word "sandy" if there appears to be more sand than gravel. Add the word "gravelly" if there appears to be more gravel than sand. For example: "sandy lean clay, CL", "gravelly fat clay, CH", or "sandy silt, ML" (see Figs. 1a and 1b). If the percentage of sand is equal to the percent of gravel, use "sandy."

15. Procedure for Identifying Coarse-Grained Soils (Contains less than 50 % fines)

15.1 The soil is a *gravel* if the percentage of gravel is estimated to be more than the percentage of sand.

TABLE 12 Identification of Inorganic Fine-Grained Soils from Manual Tests

Soil Symbol	Dry Strength	Dilatancy	Toughness
ML	None to low	Slow to rapid	Low or thread cannot be formed
CL	Medium to high	None to slow	Medium
MH	Low to medium	None to slow	Low to medium
CH	High to very high	None	High

CC0206

15.2 The soil is a *sand* if the percentage of gravel is estimated to be equal to or less than the percentage of sand.

15.3 The soil is a *clean gravel* or *clean sand* if the percentage of fines is estimated to be 5 % or less.

15.3.1 Identify the soil as a *well-graded gravel*, GW, or as a *well-graded sand*, SW, if it has a wide range of particle sizes and substantial amounts of the intermediate particle sizes.

15.3.2 Identify the soil as a *poorly graded gravel*, GP, or as a *poorly graded sand*, SP, if it consists predominantly of one size (uniformly graded), or it has a wide range of sizes with some intermediate sizes obviously missing (gap or skip graded).

15.4 The soil is either a *gravel with fines* or a *sand with fines* if the percentage of fines is estimated to be 15 % or more.

15.4.1 Identify the soil as a *clayey gravel*, GC, or a *clayey sand*, SC, if the fines are clayey as determined by the procedures in Section 14.

15.4.2 Identify the soil as a *silty gravel*, GM, or a *silty sand*, SM, if the fines are silty as determined by the procedures in Section 14.

15.5 If the soil is estimated to contain 10 % fines, give the soil a dual identification using two group symbols.

15.5.1 The first group symbol shall correspond to a clean gravel or sand (GW, GP, SW, SP) and the second symbol shall correspond to a gravel or sand with fines (GC, GM, SC, SM).

15.5.2 The group name shall correspond to the first group symbol plus the words "with clay" or "with silt" to indicate the plasticity characteristics of the fines. For example: "well-graded gravel with clay, GW-GC" or "poorly graded sand with silt, SP-SM" (see Fig. 2).

15.6 If the specimen is predominantly sand or gravel but contains an estimated 15 % or more of the other coarse-grained constituent, the words "with gravel" or "with sand" shall be added to the group name. For example: "poorly graded gravel with sand, GP" or "clayey sand with gravel, SC" (see Fig. 2).

15.7 If the field sample contains any cobbles or boulders, or both, the words "with cobbles" or "with cobbles and boulders" shall be added to the group name. For example: "silty gravel with cobbles, GM."

16. Report

16.1 The report shall include the information as to origin, and the items indicated in Table 13.

NOTE 13—*Example: Clayey Gravel with Sand and Cobbles, GC*—About 50 % fine to coarse, subrounded to subangular gravel; about 30 % fine to coarse, subrounded sand; about 20 % fines with medium plasticity, high dry strength, no dilatancy, medium toughness; weak reaction with HCl; original field sample had about 5 % (by volume) subrounded cobbles, maximum dimension, 150 mm.

In-Place Conditions—Firm, homogeneous, dry, brown

Geologic Interpretation—Alluvial fan

NOTE 14—Other examples of soil descriptions and identification are given in Appendixes X1 and X2.

NOTE 15—If desired, the percentages of gravel, sand, and fines may be stated in terms indicating a range of percentages, as follows:

Trace—Particles are present but estimated to be less than 5 %
Few—5 to 10 %
Little—15 to 25 %
Some—30 to 45 %
Mostly—50 to 100 %

TABLE 13 Checklist for Description of Soils

1. Group name
2. Group symbol
3. Percent of cobbles or boulders, or both (by volume)
4. Percent of gravel, sand, or fines, or all three (by dry weight)
5. Particle-size range:
   Gravel—fine, coarse
   Sand—fine, medium, coarse
6. Particle angularity: angular, subangular, subrounded, rounded
7. Particle shape: (if appropriate) flat, elongated, flat and elongated
8. Maximum particle size or dimension
9. Hardness of coarse sand and larger particles
10. Plasticity of fines: nonplastic, low, medium, high
11. Dry strength: none, low, medium, high, very high
12. Dilatancy: none, slow, rapid
13. Toughness: low, medium, high
14. Color (in moist condition)
15. Odor (mention only if organic or unusual)
16. Moisture: dry, moist, wet
17. Reaction with HCl: none, weak, strong

For intact samples:

18. Consistency (fine-grained soils only): very soft, soft, firm, hard, very hard
19. Structure: stratified, laminated, fissured, slickensided, lensed, homogeneous
20. Cementation: weak, moderate, strong
21. Local name
22. Geologic interpretation
23. Additional comments: presence of roots or root holes, presence of mica, gypsum, etc., surface coatings on coarse-grained particles, caving or sloughing of auger hole or trench sides, difficulty in augering or excavating, etc.

16.2 If, in the soil description, the soil is identified using a classification group symbol and name as described in Test Method D 2487, it must be distinctly and clearly stated in log forms, summary tables, reports, and the like, that the symbol and name are based on visual-manual procedures.

17. Precision and Bias

17.1 This practice provides qualitative information only, therefore, a precision and bias statement is not applicable.

18. Keywords

18.1 classification; clay; gravel; organic soils; sand; silt; soil classification; soil description; visual classification

APPENDIXES

(Nonmandatory Information)

X1. EXAMPLES OF VISUAL SOIL DESCRIPTIONS

X1.1 The following examples show how the information required in 16.1 can be reported. The information that is included in descriptions should be based on individual circumstances and need.

X1.1.1 *Well-Graded Gravel with Sand (GW)*—About 75 % fine to coarse, hard, subangular gravel; about 25 % fine to coarse, hard, subangular sand; trace of fines; maximum size, 75 mm, brown, dry; no reaction with HCl.

X1.1.2 *Silty Sand with Gravel (SM)*—About 60 % predominantly fine sand; about 25 % silty fines with low plasticity, low dry strength, rapid dilatancy, and low toughness; about 15 % fine, hard, subrounded gravel, a few gravel-size particles fractured with hammer blow; maximum size, 25 mm; no reaction with HCl (Note—Field sample size smaller than recommended).

In-Place Conditions—Firm, stratified and contains lenses of silt 1 to 2 in. (25 to 50 mm) thick, moist, brown to gray; in-place density 106 lb/ft^3; in-place moisture 9 %.

X1.1.3 *Organic Soil (OL/OH)*—About 100 % fines with low plasticity, slow dilatancy, low dry strength, and low toughness; wet, dark brown, organic odor; weak reaction with HCl.

X1.1.4 *Silty Sand with Organic Fines (SM)*—About 75 % fine to coarse, hard, subangular reddish sand; about 25 % organic and silty dark brown nonplastic fines with no dry strength and slow dilatancy; wet; maximum size, coarse sand; weak reaction with HCl.

X1.1.5 *Poorly Graded Gravel with Silt, Sand, Cobbles and Boulders (GP-GM)*—About 75 % fine to coarse, hard, subrounded to subangular gravel; about 15 % fine, hard, subrounded to subangular sand; about 10 % silty nonplastic fines; moist, brown; no reaction with HCl; original field sample had about 5 % (by volume) hard, subrounded cobbles and a trace of hard, subrounded boulders, with a maximum dimension of 18 in. (450 mm).

X2. USING THE IDENTIFICATION PROCEDURE AS A DESCRIPTIVE SYSTEM FOR SHALE, CLAYSTONE, SHELLS, SLAG, CRUSHED ROCK, AND THE LIKE

X2.1 The identification procedure may be used as a descriptive system applied to materials that exist in-situ as shale, claystone, sandstone, siltstone, mudstone, etc., but convert to soils after field or laboratory processing (crushing, slaking, and the like).

X2.2 Materials such as shells, crushed rock, slag, and the like, should be identified as such. However, the procedures used in this practice for describing the particle size and plasticity characteristics may be used in the description of the material. If desired, an identification using a group name and symbol according to this practice may be assigned to aid in describing the material.

X2.3 The group symbol(s) and group names should be placed in quotation marks or noted with some type of distinguishing symbol. See examples.

X2.4 Examples of how group names and symbols can be incororated into a descriptive system for materials that are not naturally occurring soils are as follows:

X2.4.1 *Shale Chunks*—Retrieved as 2 to 4-in. (50 to 100-mm) pieces of shale from power auger hole, dry, brown, no reaction with HCl. After slaking in water for 24 h, material identified as "Sandy Lean Clay (CL)"; about 60 % fines with medium plasticity, high dry strength, no dilatancy, and medium toughness; about 35 % fine to medium, hard sand; about 5 % gravel-size pieces of shale.

X2.4.2 *Crushed Sandstone*—Product of commercial crushing operation; "Poorly Graded Sand with Silt (SP-SM)"; about 90 % fine to medium sand; about 10 % nonplastic fines; dry, reddish-brown, strong reaction with HCl.

X2.4.3 *Broken Shells*—About 60 % gravel-size broken shells; about 30 % sand and sand-size shell pieces; about 10 % fines; "Poorly Graded Gravel with Sand (GP)."

X2.4.4 *Crushed Rock*—Processed from gravel and cobbles in Pit No. 7; "Poorly Graded Gravel (GP)"; about 90 % fine, hard, angular gravel-size particles; about 10 % coarse, hard, angular sand-size particles; dry, tan; no reaction with HCl.

X3. SUGGESTED PROCEDURE FOR USING A BORDERLINE SYMBOL FOR SOILS WITH TWO POSSIBLE IDENTIFICATIONS.

X3.1 Since this practice is based on estimates of particle size distribution and plasticity characteristics, it may be difficult to clearly identify the soil as belonging to one category. To indicate that the soil may fall into one of two possible basic groups, a borderline symbol may be used with the two symbols separated by a slash. For example: SC/CL or CL/CH.

X3.1.1 A borderline symbol may be used when the

percentage of fines is estimated to be between 45 and 55 %. One symbol should be for a coarse-grained soil with fines and the other for a fine-grained soil. For example: GM/ML or CL/SC.

X3.1.2 A borderline symbol may be used when the percentage of sand and the percentage of gravel are estimated to be about the same. For example: GP/SP, SC/GC, GM/SM. It is practically impossible to have a soil that would have a borderline symbol of GW/SW.

X3.1.3 A borderline symbol may be used when the soil could be either well graded or poorly graded. For example: GW/GP, SW/SP.

X3.1.4 A borderline symbol may be used when the soil could either be a silt or a clay. For example: CL/ML, CH/MH, SC/SM.

X3.1.5 A borderline symbol may be used when a fine-grained soil has properties that indicate that it is at the boundary between a soil of low compressibility and a soil of high compressibility. For example: CL/CH, MH/ML.

X3.2 The order of the borderline symbols should reflect similarity to surrounding or adjacent soils. For example: soils in a borrow area have been identified as CH. One sample is considered to have a borderline symbol of CL and CH. To show similarity, the borderline symbol should be CH/CL.

X3.3 The group name for a soil with a borderline symbol should be the group name for the first symbol, except for:

CL/CH lean to fat clay
ML/CL clayey silt
CL/ML silty clay

X3.4 The use of a borderline symbol should not be used indiscriminately. Every effort shall be made to first place the soil into a single group.

X4. SUGGESTED PROCEDURES FOR ESTIMATING THE PERCENTAGES OF GRAVEL, SAND, AND FINES IN A SOIL SAMPLE

X4.1 *Jar Method*—The relative percentage of coarse- and fine-grained material may be estimated by thoroughly shaking a mixture of soil and water in a test tube or jar, and then allowing the mixture to settle. The coarse particles will fall to the bottom and successively finer particles will be deposited with increasing time; the sand sizes will fall out of suspension in 20 to 30 s. The relative proportions can be estimated from the relative volume of each size separate. This method should be correlated to particle-size laboratory determinations.

X4.2 *Visual Method*—Mentally visualize the gravel size particles placed in a sack (or other container) or sacks. Then, do the same with the sand size particles and the fines. Then, mentally compare the number of sacks to estimate the percentage of plus No. 4 sieve size and minus No. 4 sieve size present. The percentages of sand and fines in the minus sieve size No. 4 material can then be estimated from the wash test (X4.3).

X4.3 *Wash Test (for relative percentages of sand and fines)*—Select and moisten enough minus No. 4 sieve size material to form a 1-in (25-mm) cube of soil. Cut the cube in half, set one-half to the side, and place the other half in a small dish. Wash and decant the fines out of the material in the dish until the wash water is clear and then compare the two samples and estimate the percentage of sand and fines. Remember that the percentage is based on weight, not volume. However, the volume comparison will provide a reasonable indication of grain size percentages.

X4.3.1 While washing, it may be necessary to break down lumps of fines with the finger to get the correct percentages.

X5. RATIONALE

X5.1 This practice was significantly revised in the D 2488 – 84 version from the previous version D 2488 – 69 (1975). The revisions are documented in the literature.[3]

X5.2 Changes in this version from the previous version include rewording of 1.2.3 to say (disturbed and undisturbed), the addition of 5.7 to refer to the practice for describing frozen soils, and the addition of Appendix X5 on Rationale.

[3] Howard, A. K. "The Revised ASTM Standard on the Description and Identification of Soils (Visual-Manual Procedure)," *Geotechical Testing Journal*, GTJODJ Vol. 10, No. 4, December 1987.

The American Society for Testing and Materials takes no position respecting the validity of any patent rights asserted in connection with any item mentioned in this standard. Users of this standard are expressly advised that determination of the validity of any such patent rights, and the risk of infringement of such rights, are entirely their own responsibility.

This standard is subject to revision at any time by the responsible technical committee and must be reviewed every five years and if not revised, either reapproved or withdrawn. Your comments are invited either for revision of this standard or for additional standards and should be addressed to ASTM Headquarters. Your comments will receive careful consideration at a meeting of the responsible technical committee, which you may attend. If you feel that your comments have not received a fair hearing you should make your views known to the ASTM Committee on Standards, 1916 Race St., Philadelphia, PA 19103.

Designation: D 2573 – 72 (Reapproved 1978)

Standard Test Method for Field Vane Shear Test in Cohesive Soil[1]

This standard is issued under the fixed designation D 2573; the number immediately following the designation indicates the year of original adoption or, in the case of revision, the year of last revision. A number in parentheses indicates the year of last reapproval. A superscript epsilon (ε) indicates an editorial change since the last revision or reapproval.

This standard has been approved for use by agencies of the Department of Defense. Consult the DoD Index of Specifications and Standards for the specific year of issue which has been adopted by the Department of Defense.

1. Scope

1.1 This method covers the field vane test in soft, saturated, cohesive soils. Knowledge of the nature of the soil in which each vane test is to be made is necessary for assessment of the applicability and interpretation of the test.

2. Summary of Method

2.1 The vane shear test basically consists of placing a four-bladed vane in the undisturbed soil and rotating it from the surface to determine the torsional force required to cause a cylindrical surface to be sheared by the vane; this force is then converted to a unit shearing resistance of the cylindrical surface. It is of basic importance that the friction of the vane rod and instrument be accounted for; otherwise, the friction would be improperly recorded as soil strength. Friction measurements under no-load conditions (such as the use of a blank stem in place of the vanes, or a vane that allows some free rotation of the rod prior to loading) are satisfactory only provided that the torque is applied by a balanced moment that does not result in a side thrust. As torsional forces become greater during a test, a side thrust in the instrument will result in an increase in friction that is not accounted for by initial no-load readings. Instruments involving side thrust are not recommended. The vane rod may be of sufficient rigidity that it does not twist under full load conditions; otherwise a correction must be made for plotting torque-rotation curves.

3. Apparatus

3.1 The vane shall consist of a four-bladed vane as illustrated in Fig. 1. The height of the vane shall be twice the diameter. Vane dimensions shall be as specified in Table 1. Sizes other than those specified in Table 1 shall be used only with the permission of the engineer in charge of the boring program. The ends of the vane may be tapered (see Fig. 1). The penetrating edge of the vane blade shall be sharpened having an included angle of 90°.

3.2 The vane shall be connected to the surface by means of steel torque rods. These rods shall have sufficient diameter such that their elastic limit is not exceeded when the vane is stressed to its capacity (Note 1). They shall be so coupled that the shoulders of the male and female ends shall meet to prevent any possibility of the coupling tightening when the torque is applied during the test. If a vane housing is used, the torque rods shall be equipped with well-lubricated bearings where they pass through the housing. These bearings shall be provided with seals to prevent soil from entering them. The torque rods shall be guided so as to prevent friction from developing between the torque rods and the walls of casing or boring.

NOTE 1—If torque *versus* rotation curves are to be determined, it is essential that the torque rods be calibrated (prior to use in the field). The amount of rod twist (if any) must be established in degrees per foot per unit torque. This correction becomes progressively more important as the depth of the test increases and the calibration must be made at least to the maximum depth of testing anticipated.

3.3 Torque shall be applied to the torque rods, thence to the vane. The accuracy of the torque reading should be such that it will produce a variation not to exceed ±25 lb/ft^2 (1.20 kPa) shear strength.

3.4 It is preferable to apply torque to the vane with a geared drive. In the absence of a geared drive, it is acceptable to apply the torque directly by hand with a torque wrench or

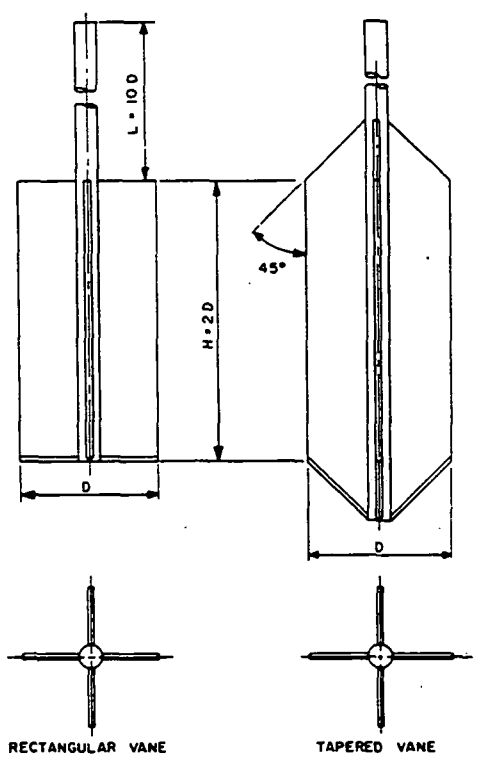

FIG. 1 Geometry of Field Vane

[1] This method is under the jurisdiction of ASTM Committee D-18 on Soil and Rock and is the direct responsibility of Subcommittee D18.02 on Sampling and Related Field Testing for Soil Investigations.

Current edition approved Jan. 17, 1972. Published February 1972. Originally published as D 2573 – 67 T. Last previous edition D 2573 – 67 T.

000210

TABLE 1 Recommended Dimensions of Field Vanes[A]

Casing Size	Diameter, in. (mm)	Height, in. (mm)	Thickness of Blade, in. (mm)	Diameter of Vane Rod, in. (mm)
AX	1½ (38.1)	3 (76.2)	1/16 (1.6)	½ (12.7)
BX	2 (50.8)	4 (101.6)	1/16 (1.6)	½ (12.7)
NX	2½ (63.5)	5 (127.0)	⅛ (3.2)	½ (12.7)
4 in. (101.6 mm)[B]	3⅝ (92.1)	7¼ (184.1)	⅛ (3.2)	½ (12.7)

[A] Selection of the vane size is directly related to the consistency of the soil being tested, that is, the softer the soil the larger the vane diameter.
[B] Inside diameter.

equivalent. The duration of the test should be controlled by the requirements of 4.3.

4. Procedure

4.1 In the case where a vane housing is used, advance the housing to a depth which is at least five vane housing diameters less than the desired depth of the vane tip. Where no vane housing is used, stop the hole in which the vane is lowered at a depth such that the vane tip may penetrate undisturbed soil for a depth of at least five times the diameter of the hole.

4.2 Advance the vane from the bottom of the hole or the vane housing in a single thrust to the depth at which the test is to be conducted. Take precautions to make sure no torque is applied to the torque rods during the thrust.

4.3 With the vane in position, apply the torque to the vane at a rate which should not exceed 0.1°/s. This generally requires a time to failure of from 2 to 5 min, except in very soft clays where the time to failure may be as much as 10 to 15 min. In stiffer materials, which reach failure at small deformations, it may be desirable to reduce the rate of angular displacement so that a reasonable determination of the stress-strain properties can be obtained. During the rotation of the vane, hold it at a fixed elevation. Record the maximum torque. With apparatus with geared drives, it is desirable to record intermediate values of torque at intervals of 15 s or at lesser frequency if conditions require.

4.4 Following the determination of the maximum torque, rotate the vane rapidly through a minimum of 10 revolutions; the determination of the remoulded strength should be started immediately after completion of rapid rotation and in all cases within 1 min after the remoulding process.

4.5 In the case where soil is in contact with the torque rods, determine the friction between the soil and the rod by means of torque tests conducted on similar rods at similar depths with no vane attached. Conduct the rod friction test at least once on each site; this shall consist of a series of torque tests at varying depths.

4.6 In apparatus in which the torque rod is completely isolated from the soil, conduct a friction test with a blank rod (Note 2) at least once on each site to determine the magnitude of the friction of the bearings. In a properly functioning vane apparatus, this friction should be negligible.

NOTE 2—In some cases it is not necessary to remove the vane for the friction test. As long as the vane is not in contact with the soil, that is, where it is retracted into a casing, the friction measurement is not affected.

4.7 Conduct undisturbed and remoulded vane tests at intervals of not less than 2½ ft (0.76 m) throughout the soil profile when conditions will permit vane testing (Note 3). Do not conduct the vane test in any soil that will permit drainage or dilates during the test period, such as sands silts or in soils where stones or shells are encountered by t vane in such a manner as to influence the results.

NOTE 3—This spacing may be varied only by the engineer in cha of the boring program.

5. Calculation

5.1 Calculate the shear strength of the soil in the followi manner: The turning moment required to shear the soil is follows:

$$T = s \times K$$

where:
T = torque, lbf·ft (or N·m),
s = shear strength of the clay, lbf/ft^2 (or kPa), and
K = constant, depending on dimensions and shape of vane, ft^3 (or m^3).

5.2 Assuming the distribution of the shear strength uniform across the ends of a cylinder and around perimeter, calculate the value of K as follows:

Inch-Pound Units:

$$K = (\pi/1728) \times (D^2H/2) \times [1 + (D/3H)]$$

Metric Units:

$$K = (\pi/10^6) \times (D^2H/2) \times [1 + D/3H)]$$

where:
D = measured diameter of the vane, in. (or cm), and
H = measured height of vane, in. (or cm).

It is important that these dimensions are checked peri cally to ensure the vane is not distorted or worn.

5.3 As the ratio of length to breadth of the vane is 2:1, value of K may be simplified in terms of the diameter so it becomes the following:

Inch-Pound Units:

$$K = 0.0021D^3$$

Metric Units:

$$K = 0.00000366D^3$$

5.4 Since the value of s is required, it is more usefu write the equation as follows:

$$s = T \times k$$

where:
k = $1/K$ and
T, the torque, is measured so that s can be calculated.

5.5 For the tapered vane of Fig. 1, the following mod equation may be used for the vane constant:

Inch-Pound Units:

$$K = 1/1728\ [\pi D^3 + 0.37\ (2D^3 - d^3)]$$

Metric Units:

$$K = 1/10^6\ [\pi D^3 + 0.37\ (2D^3 - d^3)]$$

000211

ere:

rod diameter, in. (cm). For a ½-in. (1.27-cm) rod this reduces to:

h-Pound Units:

$$K = 0.00225D^3 - 0.00003$$

tric Units:

$$K = 0.00000388D^3 - 0.00000076$$

Report

5.1 For each vane test record the following observations:

5.1.1 Date of the test,

5.1.2 Boring number,

5.1.3 Size and shape of the vane (tapered or rectangular),

5.1.4 Depth of the vane tip,

5.1.5 Depth of the vane tip below the housing or bottom the hole,

5.1.6 Maximum torque reading, and intermediate readings if required for the undisturbed test,

6.1.7 Time to failure of the test,

6.1.8 Rate of remoulding,

6.1.9 Maximum torque reading for the remoulded test. and

6.1.10 Notes on any deviations from standard test procedure.

6.2 In addition, record the following observations for the boring:

6.2.1 Boring number,

6.2.2 Location,

6.2.3 Log of the soil conditions,

6.2.4 Reference elevation,

6.2.5 Method of making the hole,

6.2.6 Description of the vane, that is, housed or not,

6.2.7 Description of the method of applying and measuring the torque,

6.2.8 Notes on the driving resistance,

6.2.9 Name of the drilling foreman, and

6.2.10 Name of the supervising engineer.

The American Society for Testing and Materials takes no position respecting the validity of any patent rights asserted in connection with any item mentioned in this standard. Users of this standard are expressly advised that determination of the validity of any such patent rights, and the risk of infringement of such rights, are entirely their own responsibility.

This standard is subject to revision at any time by the responsible technical committee and must be reviewed every five years and if not revised, either reapproved or withdrawn. Your comments are invited either for revision of this standard or for additional standards and should be addressed to ASTM Headquarters. Your comments will receive careful consideration at a meeting of the responsible technical committee, which you may attend. If you feel that your comments have not received a fair hearing you should make your views known to the ASTM Committee on Standards, 1916 Race St., Philadelphia, PA 19103.

000212

Designation: D 2844 – 89

Standard Test Method for Resistance *R*-Value and Expansion Pressure of Compacted Soils[1]

This standard is issued under the fixed designation D 2844; the number immediately following the designation indicates the year of original adoption or, in the case of revision, the year of last revision. A number in parentheses indicates the year of last reapproval. A superscript epsilon (ε) indicates an editorial change since the last revision or reapproval.

1. Scope

1.1 This test method covers the procedure for testing both treated and untreated laboratory compacted soils or aggregates with the stabilometer and expansion pressure devices to obtain results indicative of performance when placed in the base, subbase, or subgrade of a road subjected to traffic.

1.2 The values stated in inch-pound units are to be regarded as the standard.

1.3 *This standard may involve hazardous materials, operations, and equipment. This standard does not purport to address all of the safety problems associated with its use. It is the responsibility of the user of this standard to establish appropriate safety and health practices and determine the applicability of regulatory limitations prior to use.*

2. Referenced Documents

2.1 *ASTM Standards:*

C 670 Practice for Preparing Precision and Bias Statements for Test Methods of Construction Materials[2]

E 4 Practices for Loading Verification of Testing Machines[3]

E 11 Specification for Wire Cloth Sieves for Testing Purposes[4]

2.2 *AASHTO Documents:*

T 190 Test Method for Resistance R-Value and Expansion Pressure of Compacted Soils[5]

3. Significance and Use

3.1 This test method is used to measure the potential strength of subgrade, subbase, and base course materials for use in road and airfield pavements. The *R*-value is used by some agencies as a criteria for acceptance of aggregates for base course and bituminous courses.

3.2 The expansion pressure testing has been used in conjunction with the *R*-value test to determine cover requirements (thickness) and construction controls to reduce pavement distortion from expansive subgrade soils.

4. Apparatus

4.1 *Kneading Compactor*, capable of applying an average contact pressure of 350 ± 16 psi (2410 ± 110 kPa) to the tamper foot shown in Fig. 1 and with provisions for maintaining this pressure during changes in sample height. The load-time trace shall be free of "chatter" or evidence of impact-associated changes in slope. The rise time for application of foot pressure, in the range from 35 to 300 psi (240 to 2070 kPa), shall not be less than 0.07 nor more than 0.20: The dwell time, measured at 300 psi foot pressure, shall not be less than 0.15 nor more than 0.45 s: The pressure-release or removal time shall not be greater than 0.60 s.

4.1.1 The compactor shall include a counter or timer for measuring the number of tamps applied to a specimen and a mold holder, for use in compacting specimens, that rotates equally between tamps to give 5 to 7 tamps per revolution of the mold. The holder shall firmly restrain the mold during compaction. The base of the mold holder shall have a metal plate 3 31/32 in. (100.8 mm) in diameter and 0.5 in. (12.7 mm) high to which is cemented a rubber disk having a diameter of 3 15/16 in. (100.0 mm) and a height of 1/8 in. (3.2 mm). The plate shall be an integral part of the base of the mold holder. The compactor shall also include a trough for feeding the sample into the mold in 20 increments (Fig. 2). Troughs with a semicircular cross section of 6 in.^{3} (39 cm^2) in area and 20 in. (50.8 cm) long have proven satisfactory.

4.2 *Compression Testing Machine*, with a minimum capacity of 10 000 lbf (45 kN) and satisfying the requirements of Practices E 4.

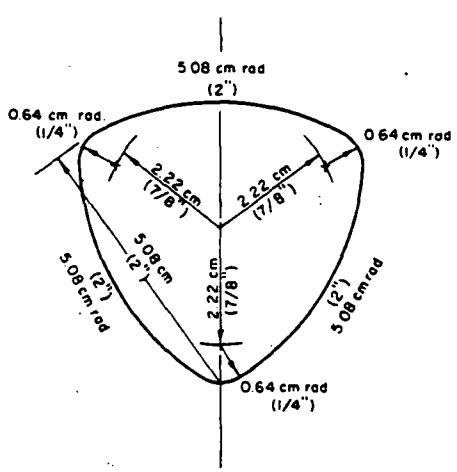

TOLERANCES

2.00 ± 0.002 inches or 5.08 ± 0.0051 cm

1/4" ± 0.020 inches or 0.64 ± 0.051 cm

Full Scale

FIG. 1 Tamper Shoe for Kneading Compactor

[1] This test method is under the jurisdiction of ASTM Committee D-18 on Soil and Rock and is the direct responsibility of Subcommittee D18.08 on Special and Construction Control Tests.

Current edition approved Oct. 27, 1989. Published December 1989. Originally published as D 2844 – 69. Last previous edition D 2844 – 68 (1975).

[2] *Annual Book of ASTM Standards*, Vols 04.01, 04.02, 04.03, and 04.08.

[3] *Annual Book of ASTM Standards*, Vols 03.01, 04.02, 07.01, and 08.03.

[4] *Annual Book of ASTM Standards*, Vol 14.02.

[5] Available from American Association of State Highway and Transportation Officials, 444 N. Capitol St., NW, Suite 225, Washington, DC 20001.

000213

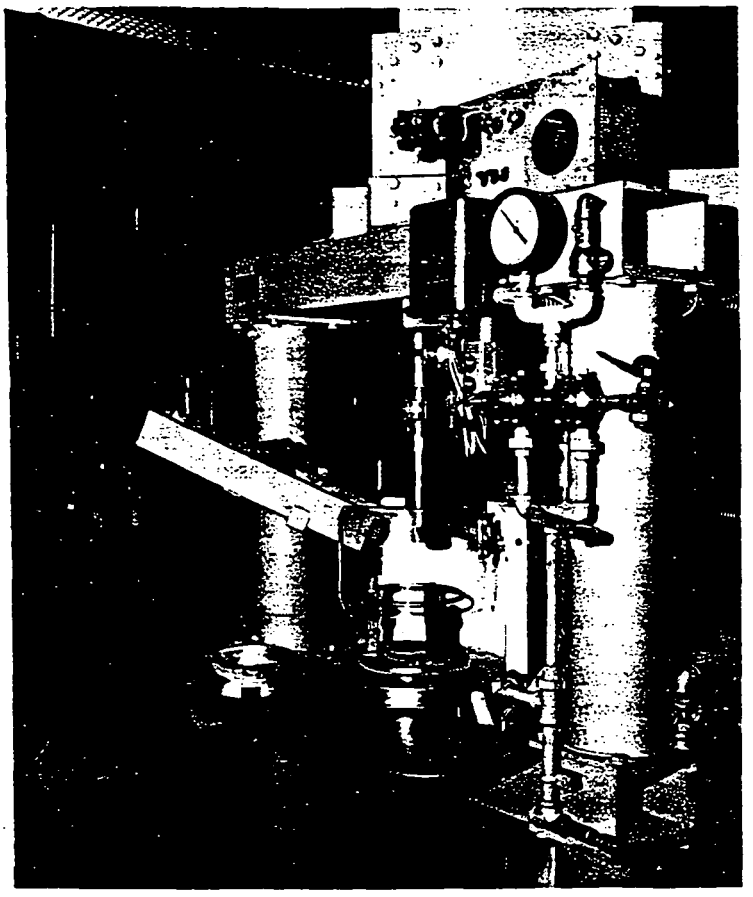

FIG. 2 Compactor with Sample Feed Trough

4.3 *Mold*, 4 ± 0.002 in. (101.6 ± 0.05 mm) inside diameter by 5 ± 0.008 in. (127 ± 0.20 mm) high. (See Fig. 3 for surface roughness.)

4.4 *Rubber Disks*, 3 15/16 in. (100 mm) in diameter by 1/8 in. (3 mm) thick and having a durometer hardness of 60 ± 15.

4.5 *Metal Follower*, solid-walled, metal specimen follower 3.95 ± 0.005 in. (100.33 ± 0.13 mm) in outside diameter by 5 in. (127 mm) long.

4.6 *Exudation Device*, as shown in Fig. 4.[6]

4.7 *Phosphor Bronze Disk*, as shown in Fig. 5.

4.8 *Filter Paper*, 100 mm in diameter and 0.006 in. (1.5 mm) thick, smooth surface, medium filtering speed, medium retention.

4.9 *Filter Paper*, 110 mm in diameter and 0.006 in. (1.5 mm) thick, creped surface, medium-fast filtering speed, medium retention.

4.10 *Expansion-Pressure Device*, with accessories as shown in Fig. 6.[6] There should be at least three of these devices for each sample to be tested within a day's time.

4.11 *Deflection Gage*, with divisions of 0.0001 in. (0.002 mm) and an allen wrench as shown in Fig. 6.

4.12 *Stabilometer*, with accessories, as shown in Figs. 7 and 8.[6]

4.13 *Standard Metal Specimen*, 4 in. (101.60 mm) in outside diameter by 6 in. (152.2 mm) high as shown in Fig. 8.

4.14 *Balance*, 5000-g capacity, accurate to 1 g.

4.15 *Sieves*, 1 in. (25.0 mm), 3/4 in. (19.0 mm) and No. 4 (4.75 mm) conforming to the requirements of Specification E 11.

4.16 *Miscellaneous Equipment*, including mixing pans, spoons, spatulas, and gallon cans with close-fitting lids.

5. Soil Preparation

5.1 Remove any coatings from coarse aggregate and break clay lumps to pass the No. 4 (4.75-mm) sieve.

5.2 Adjust the soil graduation when some of the material is retained on the 3/4-in. (19.0-mm) sieve. When 75 % or more passes the 3/4-in. sieve, use that part of the sample passing the 3/4-in. sieve. If less than 75 % of the sample passes the 3/4-in. sieve use that part of the sample passing the 1-in. (25.0-mm) sieve.

6. Preparation of Soil Specimens

6.1 Thoroughly mix four 1200-g samples of soil with the amount of water estimated to equal one half to two thirds of the water required to produce saturation as defined in 6.3 and 6.4. Place the samples in covered containers and allow

[6] Copies of detailed drawings of the apparatus shown in Figs. 4 (1 drawing), 6 (4 drawings), 7 and 8 (7 drawings) are available at a nominal cost from the American Society for Testing and Materials, 1916 Race St., Philadelphia, PA 19103. Request Adjunct No. 12-428440-10, 12-428440-20, and 12-428440-30, respectively.

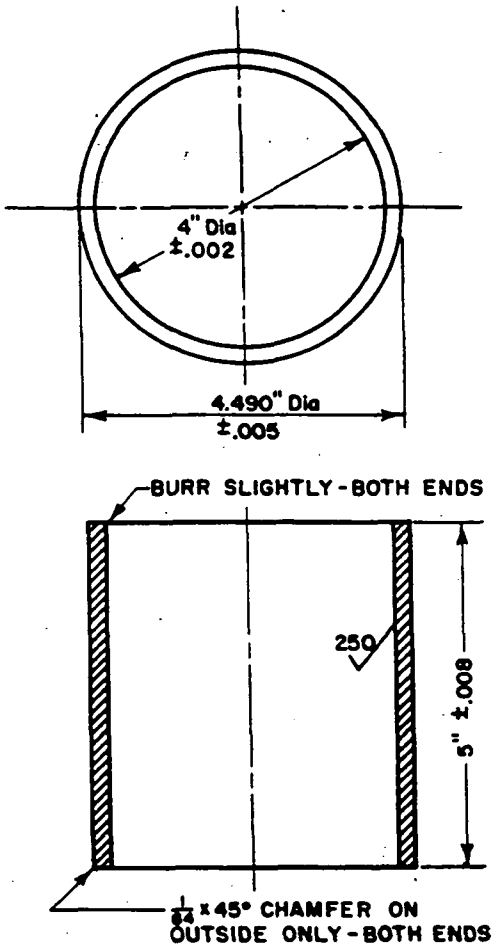

NOTE—Inside roughness is obtained by smooth machining inside to required diameter of 4.000 ± 0.002 in. followed on final operation with a boring tool bit ground to a 90° point with sharp point ground flat measuring 0.001 to 0.003 in. across. Depth of cut is 0.002 in. with 0.010 in. feed using sulfur-based oil coolant.

FIG. 3 Mold

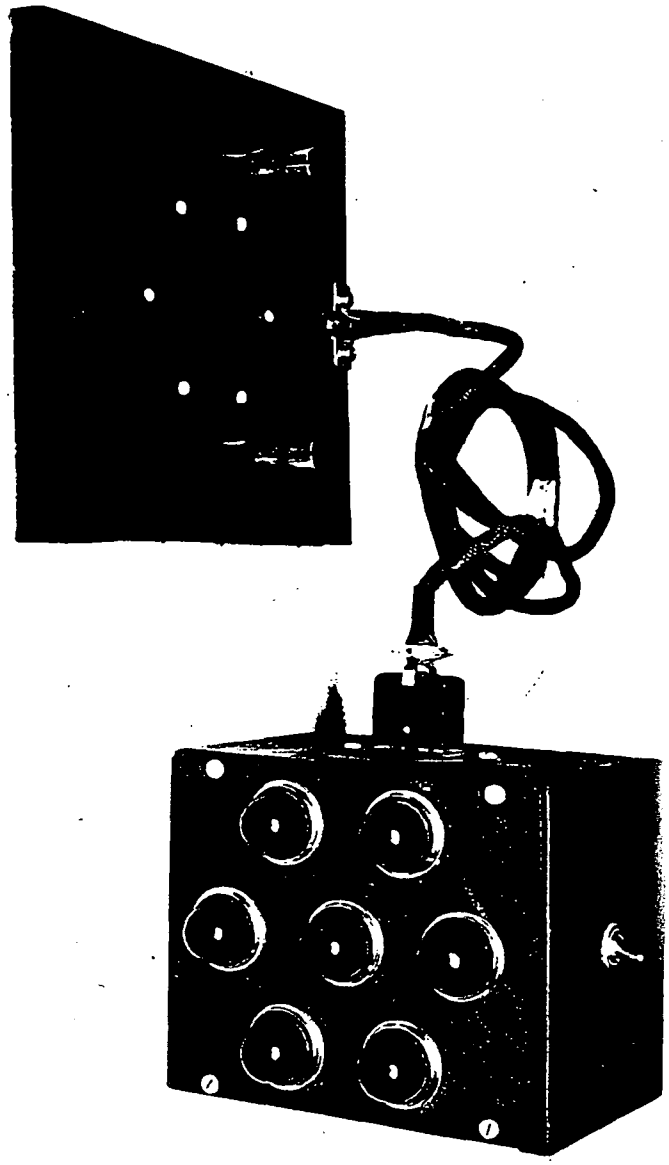

FIG. 4 Exudation-Indicator Device

them to stand overnight. Just prior to compaction, mix the samples with the final amount of water required to produce saturation. The first sample is used as a pilot specimen to assist in determining the final amount of water required.

6.2 Weigh out enough material to fabricate a compacted sample 4 in. (101.6 mm) in diameter by 2.5 in. (63 mm) high. Compacted specimens having heights from 2.3 to 2.7 in. (58 to 68 mm) are acceptable. Compact the soil into the mold by means of the kneading compactor as follows: Place the mold in the mold holder which has a rubber disk, 3 15/16 in. (100 mm) in diameter and 1/8 in. (3 mm) thick, cemented to the plate. Adjust the mold for approximately 1/8-in. (3-mm) clearance between the lower edge of the mold and base of the mold holder. With the compactor-foot pressure set at 250 ± 25 psi (1720 ± 170 kPa), feed 3 in. (76 mm) of the soil in the trough into the mold. Feed the balance of the soil into the mold in 20 equal increments with one application of the ram after each increment. Alloy 10 additional tamps to level the soil, then place a rubber disk on top of the specimen. Apply 100 additional tamps with a foot pressure of 350 psi (2410 kPa). Stop compacting the soil at any time before 100 tamps if water appears around the bottom of th mold.

NOTE 1—Use lower compaction pressures when necessary to lim penetration of the ram into the soil to not greater than 1/4 in. (6 mm).

6.3 Remove the mold containing the compacted spec imen from the compactor. Level the tamped surface by han tamping with a 1.5-in. (38-mm) diameter rod. Place phosphor-bronze disk on the tamped surface of the soil an place a filter paper on top of the bronze disk. Invert the mol and place it on the exudation device so that the filter paper on the bottom. Using the compression testing machin apply a uniformly increasing pressure to the soil at the rate 2000 lbf (8900 N)/min. Water should be exuded from th soil at 300 psi (2070 kPa) as evidence that enough moisture present to produce saturation. Stop the loading and recor the exudation pressure when either five of the six outer ligh

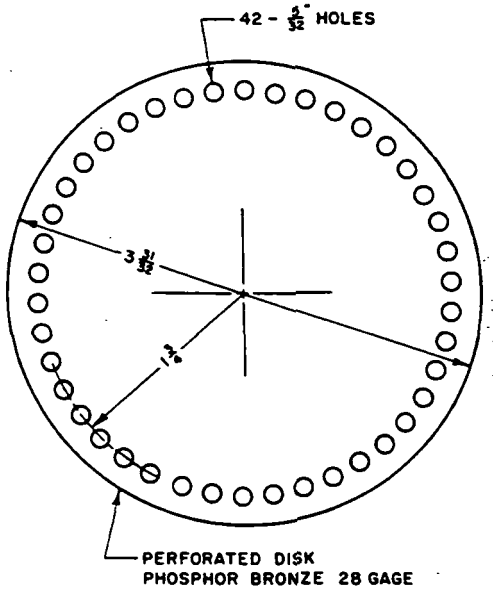

FIG. 5 Phosphor-Bronze Disk

on the exudation pressure device are lighted or three outer lights are lighted and free water is visible around the bottom of the mold. Do not exceed a loading of 800 psi (5520 kPa).

6.4 Mold at least two more specimens with different amounts of moisture so that a range of exudation pressures from 100 to 800 psi (690 to 5520 kPa) (Note 2) is obtained which brackets the 300 psi (2070 kPa) value. For some high volume-change soils, additional specimens having exudation pressures lower than 100 psi may be necessary to obtain expansion pressures that are low enough to provide a suitable range of data for a complete expansion pressure analysis of the soil.

NOTE 2—Occasionally, material from very plastic, clay-test specimens will extrude from under the mold and around the follower ram during the loading operation. If this occurs when the 800-psi (5520-kPa) point is reached and fewer than five lights are lighted, the soil should be reported as less than 5 *R*-value. Coarse granular materials and clean sands may require the use of paper baskets to permit testing.

7. Calibration of Expansion-Pressure Apparatus

7.1 Calibrate the spring-steel bar of the expansion-pressure device (Fig. 6) by applying upward measured loads at the center of the bar and measuring the respective deflections of the bar with the deflection gage.

7.2 The steel spring bar is considered in calibration when the deflections are within the following tolerances:

Applied Load	Dial Reading, in. (mm)
8 (3.75)	0.0021 ± 0.0002 (0.055 ± 0.005)
16 (7.50)	0.0042 ± 0.0002 (0.110 ± 0.005)
24 (11.25)	0.0063 ± 0.0002 (0.165 ± 0.005)
32 (15.00)	0.0084 ± 0.0002 (0.220 ± 0.005)

7.3 If the deflection gage does not check the above readings, loosen the top frame bar and adjust the position of the shims, between the frame and the spring steel bar, until the required readings are obtained.

NOTE 3—Some models of the expansion-pressure apparatus have set screw adjustments in lieu of shims.

8. Expansion-Pressure Testing

8.1 Allow the test specimen to rebound in a covered mold for at least 30 min after determination of the exudation pressure.

8.2 Place deflection gage in position on the expansion-pressure device with the single-bearing end of the gage base resting on the adjustment ring.

8.3 Using an allen wrench, raise or lower the adjustment plug until the deflection gage is on −1.0010 in. (0.025 mm). The deflection gage will read 0.0090 in. (0.229 mm).

8.4 Place the perforated disk with stem firmly on the face of the compacted specimen in the mold and place the mold in the expansion-pressure device after placing creped surface filter paper on the turntable.

8.5 Seat the perforated disk firmly on the specimen with

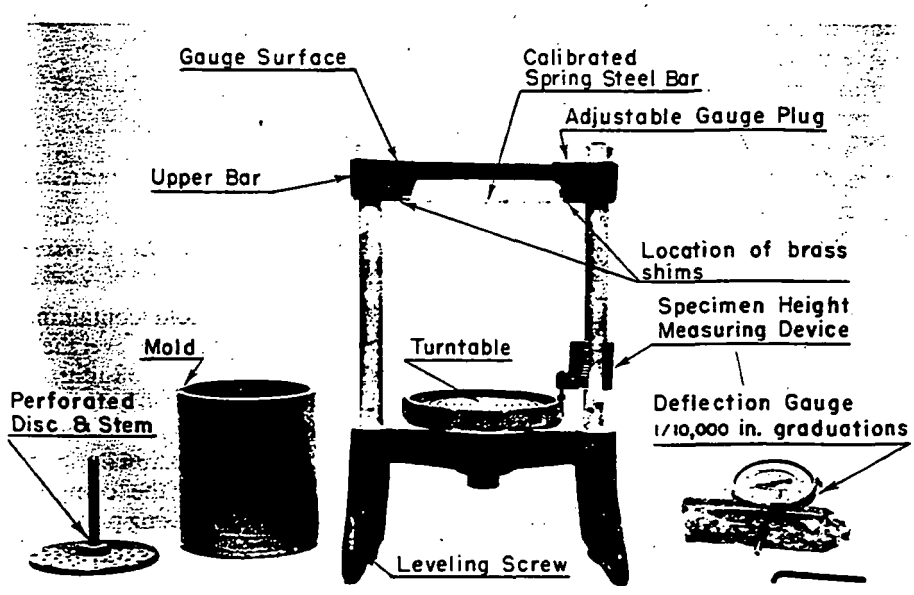

FIG. 6 Expansion-Pressure Device and Accessories

000216

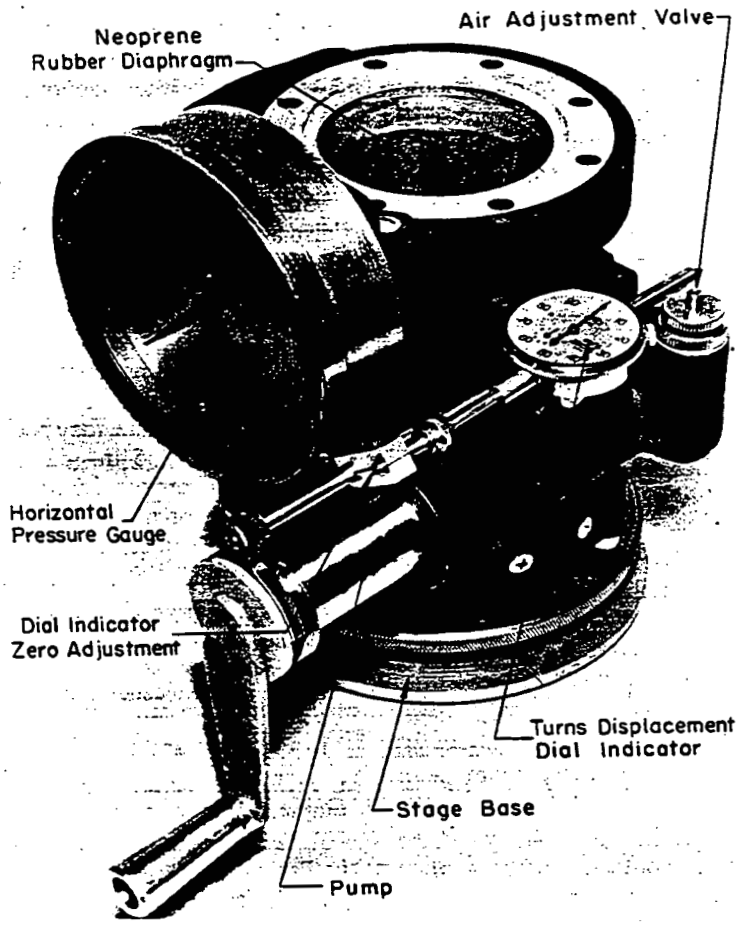

FIG. 7 Hveem Stabilometer.

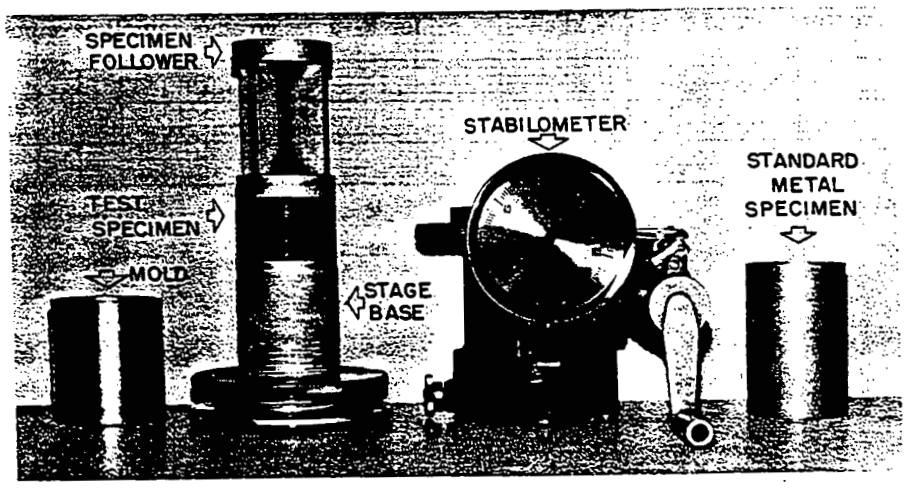

FIG. 8 Stabilometer and Accessories

pressure applied by the fingers. Raise the turntable on the expansion device until the deflection gage reads zero. If the device was properly adjusted, according to 6.3, this will apply the preset surcharge deflection of 0.0010 in. (0.025 mm).

8.6 Put approximately 200 mL of water into the mold and allow pressure from expansion of the specimen to develop for 16 to 24 h.

NOTE 4—Do not leave a test specimen unconfined by the expans pressure device while there is free water on top of the specimen in mold.

8.7 Read the deflection of the calibrated spring steel ba 0.0001 in. (0.002 mm). When the deflection is greater t 0.0100 in. (0.254 mm), the expansion-pressure device shc be recalibrated before using again.

8.8 Determine the expansion pressure, P, as follows:

$$P = kd$$

ıere:
= spring constant of steel bar calculated from calibration of the expansion-pressure apparatus and expressed in psi/0.0010 in. (or kPa/0.025 mm), and,
= deflection shown by deflection gage, in. (mm).

Adjustment of Stabilometer

9.1 Adjust the bronze nut on the stabilometer stage base that the top of the stage is 3½ in. (89 mm) below the ›ttom of the upper tapered ring of the stabilometer. :rform all tests at this setting.

9.2 Adjust the amount of air in the stabilometer cell so ıat 2 ± 0.05 turns of the pump handle increase the liquid :essure from 5 to 100 psi (34 to 690 kPa) with the standard ıetal specimen in the stabilometer chamber.

0. Resistance-Value Testing of Specimens

10.1 After testing for expansion pressure, pour water off ıe top of the specimen (Note 5) and place the mold with the ›ecimen on top of the stabilometer. Place the follower on ›p of the specimen and force the specimen from the mold ıto the stabilometer. Lower the testing machine head until : just engages the follower.

NOTE 5—If all the water has drained through the specimen, add ater to the top and allow to stand for 15 min. Pour off any excess water nd continue test.

'0.2 Apply a horizontal pressure of 5 psi (34 kPa) to the .imen by means of the displacement pump then apply a 'ertical load using a uniform rate of movement of 0.05 in. 1.3 mm)/min.

10.3 Record the horizontal pressure when the vertical oad is 2000 lbf (8900 N) and stop loading. Reduce the /ertical load to 1000 lbf (4450 N). With the displacement ›ump, adjust the horizontal pressure to 5 psi (34 kPa).

NOTE 6—This will result in a further reduction in the applied load, and should be ignored.

10.4 Turn the stabilometer pump handle at approximately two turns per second and measure the number of turns of the pump handle (using the turns-displacement dial indicator on the stabilometer) to raise the horizontal pressure from 5 to 100 psi (34 to 690 kPa). This is the turns displacement, D, of the specimen.

10.5 Determine the resistance, R, as follows:

$$R = 100 - [100/(2.5/D)(160/P_h - 1) + 1]$$

where:
P_h = horizontal pressure, psi, and
D = turns displacement reading.

This is the R-value for specimens with compacted heights from 2.45 to 2.55 in. (62 to 65 mm). If the height of the specimen is between 2.3 and 2.45 in. or 2.55 and 2.7 in. (58 and 62 mm or 65 and 68 mm, respectively) use the chart (Fig. 9) for correcting R-values to a specimen height of 2.5 in. (63 mm).

NOTE 7—If the R-value is desired at a specific exudation pressure, for example, 300 psi (2070 kPa), within the range of pressures measured in tests of the three specimens, it is convenient to construct a graph of R-value versus exudation pressure and interpolate.

11. Precision and Bias

11.1 Bias statements are not applicable to this test method.

11.2 The estimates of precision for this test method listed in Table 1 are based on the analysis of data from 13 pairs of AMRL soil reference samples. Participating laboratories were asked to perform AASHTO Test Method T190, which is equivalent to ASTM Test Method D 2844, at an exudation pressure of 300 psi. More than 100 paired test results from 16 to 23 laboratories were analyzed. Estimates of test precision for R-values greater than 50 have not been developed.

CHART FOR CORRECTING "R" VALUES TO SPECIMEN HEIGHT OF 2.50"

HEIGHT CORRECTION SHOULD BE MADE USING THE CHART BELOW.

NOTE: NO CORRECTION FOR SPECIMEN HEIGHTS BETWEEN 2.45" AND 2.55". INTERPRET R-VALUE CORRECTIONS FOR OTHER HEIGHTS.

EXAMPLE: OVERALL HEIGHT OF 2.65"
R-VALUE (UNCORRECTED) = 50
R-VALUE (CORRECTED) = 54

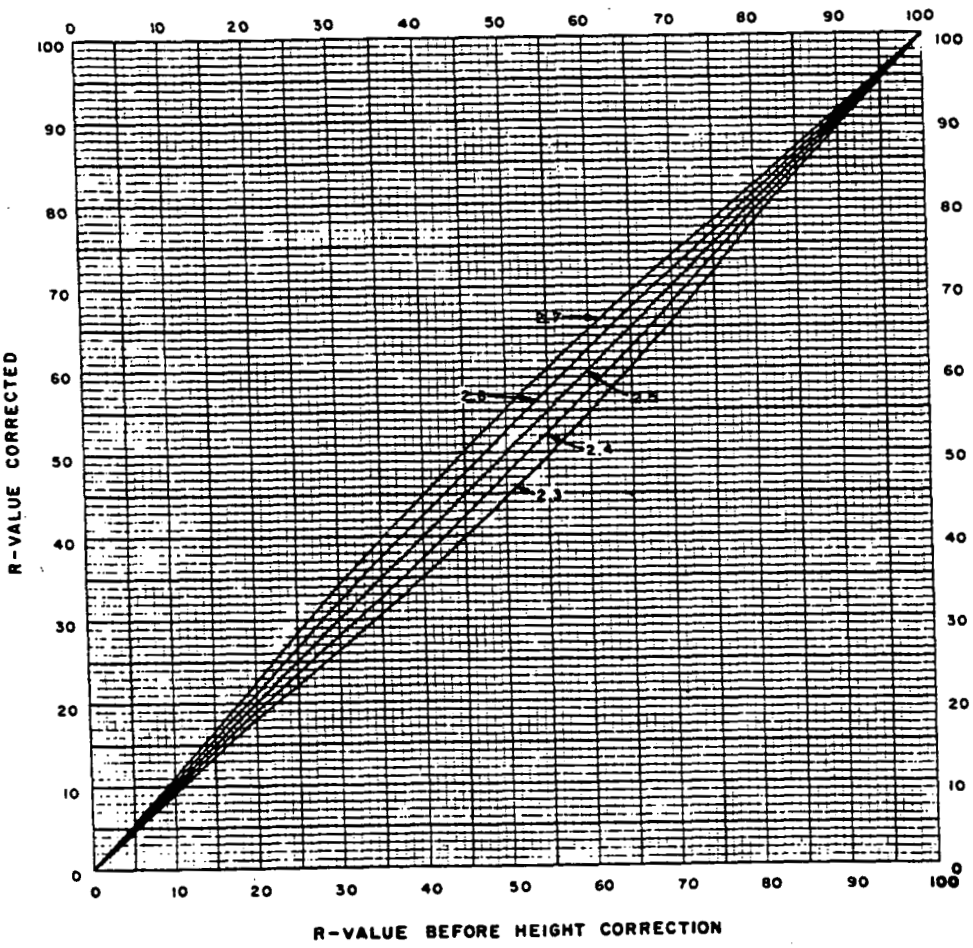

FIG. 9 Height-Correction Chart

TABLE 1 Estimates of Precision[A,B]

	Standard Deviation (1S)	Acceptable Range of Two Results (D2S)
Single-operator precision:		
R-values at 300 psi between 5 and 20	3	8
Single-operator precision:		
R-values at 300 psi between 21 and 50	4	12
Multilaboratory precision:		
R-values at 300 psi between 5 and 20	6	18
Multilaboratory precision:		
R-values at 300 psi between 21 and 50	13	37

[A] These numbers represent the (1S) and (D2S) limits as described in Practice C670.

[B] Supporting data are available from ASTM Headquarters. Request RR: D18-1000.

The American Society for Testing and Materials takes no position respecting the validity of any patent rights asserted in connection with any item mentioned in this standard. Users of this standard are expressly advised that determination of the validity of any such patent rights, and the risk of infringement of such rights, are entirely their own responsibility.

This standard is subject to revision at any time by the responsible technical committee and must be reviewed every five years and if not revised, either reapproved or withdrawn. Your comments are invited either for revision of this standard or for additional standards and should be addressed to ASTM Headquarters. Your comments will receive careful consideration at a meeting of the responsible technical committee, which you may attend. If you feel that your comments have not received a fair hearing you should make your views known to the ASTM Committee on Standards, 1916 Race St., Philadelphia, PA 19103.

Designation: D 2850 – 87[ε1]

Standard Test Method for Unconsolidated, Undrained Compressive Strength of Cohesive Soils in Triaxial Compression[1]

This standard is issued under the fixed designation D 2850; the number immediately following the designation indicates the year of original adoption or, in the case of revision, the year of last revision. A number in parentheses indicates the year of last reapproval. A superscript epsilon (ε) indicates an editorial change since the last revision or reapproval.

[ε1] NOTE—Section 11 was added editorially in January 1991.

1. Scope

1.1 This test method covers the determination of the unconsolidated, undrained compressive strength (or maximum principal stress difference) of cylindrical specimens of cohesive soils in undisturbed, remolded, or compacted conditions using constant rate of deformation (strain-controlled) application of the axial compression test load and where the specimen is subjected to a confining fluid pressure in a triaxial chamber. No drainage of the specimen is permitted during the test. The test method provides for the measurement of the total stresses applied to the specimen, that is, the stresses are not corrected for pore-water pressure. The total stress is the sum of the effective stress and the pore pressure.

1.2 This test method provides data for determining un-ined strength properties and stress-strain relations for ...s.

NOTE 1—The determination of the unconsolidated, undrained strength of cohesive soils without lateral confinement is covered by Test Methods D 2166.

NOTE 2—This test method does not provide a procedure for back pressure saturation of the test specimens. If back pressure saturation of the specimens is required, the test must be performed utilizing procedures and apparatus similar to those required for a consolidated undrained triaxial test. However, due to consolidation, which could occur during the saturation phase, this modified procedure is not truly unconsolidated. A test method for the consolidated undrained triaxial test is currently under development in Subcommittee D18.05.

NOTE 3—This test method does not include a procedure for obtaining pore pressure measurements. Furthermore, at the rapid strain rates used in this test method such measurements could be inaccurate. If pore pressure measurements are desired, alternative procedures such as the U.S. Bureau of Reclamation Method E-17 can be used.

1.3 The values stated in SI units are to be regarded as the standard.

1.4 *This standard may involve hazardous materials, operations, and equipment. This standard does not purport to address all of the safety problems associated with its use. It is the responsibility of the user of this standard to establish appropriate safety and health practices and determine the applicability of regulatory limitations prior to use.*

2. Referenced Documents

2.1 *ASTM Standards:*

D 422 Method for Particle-Size Analysis of Soils[2]

D 653 Terminology Relating to Soil, Rock, and Contained Fluids[2]

D 854 Test Method for Specific Gravity of Soils[2]

D 1587 Practice for Thin-Walled Tube Sampling of Soils[2]

D 2166 Test Methods for Unconfined Compressive Strength of Cohesive Soil[2]

D 2216 Method for Laboratory Determination of Water (Moisture) Content of Soil, Rock, and Soil-Aggregate Mixtures[2]

D 2487 Test Method for Classification of Soils for Engineering Purposes[2]

D 2488 Practice for Description and Identification of Soils (Visual-Manual Procedure)[2]

D 4220 Practices for Preserving and Transporting Soil Samples[2]

D 4318 Test Method for Liquid Limit, Plastic Limit, and Plasticity Index of Soils[2]

3. Terminology

3.1 *Definitions:*

3.1.1 *triaxial compression test*—a test in which a cylindrical specimen of soil encased in an impervious membrane is subjected to a confining pressure and then loaded axially to failure in compression (as defined in 3.2.1).

3.1.2 *principal stress difference or deviator stress*—the difference between the major and minor principal stresses in a triaxial test.

3.1.2.1 *Discussion*—The principal stress difference or deviator stress is equal to the axial load applied to the specimen divided by the corrected cross-sectional area of the specimen, as prescribed in Section 8. The major principal stress in the specimen is equal to the deviator stress plus the chamber pressure, and the minor principal stress in the specimen is equal to the chamber pressure.

3.2 *Descriptions of Terms Specific to This Standard:*

3.2.1 *failure*—the failure stresses are taken as the stresses in the specimen corresponding to the maximum principal stress difference (deviator stress) attained or the principal stress difference (deviator stress) at 15 % axial strain, whichever is obtained first during the performance of a test.

3.2.2 *unconsolidated-undrained compressive strength*—

[1] This test method is under the jurisdiction of ASTM Committee D-18 on Soil Rock and is the direct responsibility of Subcommittee D18.05 on Structural Properties of Soils.

Current edition approved April 24, 1987. Published June 1987. Originally published as D 2850 – 70. Last previous edition D 2850 – 82.

[2] *Annual Book of ASTM Standards*, Vol 04.08.

000221

the value of the maximum principal stress difference or deviator stress obtained during the test.

4. Significance and Use

4.1 In this test method, the compressive strength of a soil is determined in terms of the total stress, therefore, the resulting strength depends on the pressure developed in the pore fluid during loading. In this test method, fluid flow is not permitted from or into the soil specimen as the load is applied, therefore the resulting pore pressure, and hence strength, differs from that developed in the case where drainage can occur.

4.2 If the test specimens are 100 % saturated, consolidation cannot occur when the confining pressure is applied nor during the shear portion of the test since drainage is not permitted. Therefore, if several specimens of the same material are tested, and if they are all at approximately the same water content and void ratio when they are tested, they will have approximately the same undrained shear strength. The Mohr failure envelope will usually be a horizontal straight line over the entire range of confining stresses applied to the specimens if the specimens are fully saturated.

4.3 If the test specimens are partially saturated or compacted specimens, where the degree of saturation is less than 100 %, consolidation may occur when the confining pressure is applied and during shear, even though drainage is not permitted. Therefore, if several partially saturated specimens of the same material are tested at different confining stresses, they will not have the same undrained shear strength. Thus, the Mohr failure envelope for unconsolidated undrained triaxial tests on partially saturated soils is usually curved.

4.4 The unconsolidated undrained triaxial strength is applicable to certain design situations in geotechnical engineering practice where the loads are assumed to take place so rapidly that there is insufficient time for the induced pore-water pressure to dissipate and for consolidation to occur during the loading period (that is, drainage does not occur). The unconsolidated undrained triaxial strength is used to determine strengths at the end of construction.

4.5 Compressive strengths determined using this procedure may not apply in cases where the loading conditions in the field differ significantly from those used in this test method.

5. Apparatus

5.1 *Axial Loading Device*—The axial compression device may be screw jack driven by an electric motor through a geared transmission, a hydraulic or pneumatic loading device, or any other compression device with sufficient capacity and control to provide the rate of loading prescribed in 7.5. When the loading device is set to advance at a certain rate of strain, the actual rate of strain shall not deviate by more than ±10 %. Vibrations due to the operation of the loading device shall be kept at a minimum.

NOTE 4—A loading device may be said to provide sufficiently small vibrations if there are no visible ripples in a glass of water placed on the loading platen when the device is operating at the speed at which the test is performed.

5.2 *Axial Load-Measuring Device*—The axial load-measuring device shall be a load ring, electronic load cell, hydraulic load cell, or any other load-measuring device capable of the accuracy prescribed in this section and may be a part of the axial loading device. The axial load-measuring device shall be capable of measuring the axial load to an accuracy of 1 % of the estimated axial load at failure.

5.3 *Chamber Pressure-Maintaining and Measurement Device*—The chamber pressure-maintaining and measurement device shall be capable of applying and controlling the chamber pressure to within ±1 % of the applied chamber pressure. This device may consist of a reservoir connected to the triaxial chamber and partially filled with the chamber fluid (usually water), with the upper part of the reservoir connected to a compressed gas supply; the gas pressure being controlled by a pressure regulator and measured by a pressure gage, electronic pressure transducer, or any other device capable of measuring to the prescribed tolerance. However, a hydraulic system pressurized by deadweight acting on a piston or any other pressure-maintaining and measurement device capable of applying and controlling the chamber pressure to the tolerance prescribed in this section may be used.

5.4 *Triaxial Compression Chamber*—An apparatus shall be provided in which the cylindrical specimen, enclosed by a membrane sealed to the specimen cap and base, may be placed and subjected to a constant hydrostatic fluid pressure. The apparatus shall include a bushing and piston, aligned with the axis of the specimen, through which the load from the axial loading device is transmitted to the specimen axially between the specimen cap and base. The bushing and piston shall be designed to minimize friction and lateral thrust to the specimen cap.

5.5 *Specimen Cap and Base*—An impermeable rigid cap and base shall be used to prevent drainage of the specimen. The specimen cap and base shall be constructed of a noncorrosive impermeable material, and each shall have a circular plane surface of contact with the specimen and a circular cross section. The weight of the specimen cap shall produce an axial stress on the specimen of less than 1 kN/m^2. The diameter of the cap and base shall be equal to the initial diameter of the specimen. The specimen base shall be coupled to the triaxial compression chamber so as to prevent lateral motion or tilting and the specimen cap shall be designed to receive the piston such that the piston-to-cap contact area is concentric with the cap. The specimen cap during shear shall not tilt more than 5°. The cylindrical surface of the specimen base and cap that contacts the membrane to form a seal shall be smooth and free of scratches.

NOTE 5—The stress produced by the specimen cap can exceed 1 kN/m^2 provided the test data is corrected for the effects of that stress.

5.6 *Deformation Indicator*—The deformation indicator shall be a dial indicator capable of measuring axial deformation to within 0.03 % of the specimen height and having a travel range of at least 20 % of the initial height of the test specimen, or any other measuring device, such as electronic deformation measuring devices, meeting these requirements of readability and range.

5.7 *Rubber Membranes*—The rubber membrane used to encase the specimen shall provide reliable protection against leakage. Membranes shall be carefully inspected prior to use, and if any flaws or pinholes are evident, the membrane shall be discarded. In order to offer minimum restraint to the

specimen, the unstretched membrane diameter shall be between 90 and 95 % of that of the specimen. The membrane thickness shall not exceed 1 % of the diameter of the specimen. The membrane shall be sealed to the specimen base and cap by any method that will produce a positive seal. An equation for correcting the principal stress difference (deviator stress) for the effect of the stiffness of the membrane is given in 8.5.

NOTE 6—The membrane is typically sealed using O-rings with silicon grease between the cap and base and the membrane.

5.8 *Sample Extruder*—The sample extruder shall be capable of extruding the soil core from the sampling tube in the same direction of travel in which the sample entered the tube and with minimum disturbance of the sample. If the soil core is not extruded vertically, care should be taken to avoid bending stresses on the core due to gravity. Conditions at the time of sample removal may dictate the direction of removal, but the principal concern is to keep the degree of disturbance minimal.

5.9 *Specimen Size Measurement Devices*—Devices used to measure the height and diameter of the specimen shall be capable of measuring the desired dimension to within 0.1 % of its actual length and shall be constructed such that their use will not disturb the specimen.

5.10 *Timer*—A timing device indicating the elapsed testing time to the nearest 1 s shall be used for establishing the rate of strain application prescribed in 7.5.

5.11 *Balances*—The balance used to weigh specimens shall determine the mass of the specimens to within 0.1 % of the total mass.

5.12 *Apparatus for Water Content*, as specified in Method D 2216.

5.13 *Miscellaneous Apparatus*—Specimen trimming and carving tools, membrane and O-ring expanders, compaction apparatus, and data sheets as required.

6. Test Specimens

6.1 *Specimen Size*—Specimens shall have a minimum diameter of 30 mm and the largest particle contained within the test specimen shall be smaller than 1/6 of the specimen diameter. If, after completion of a test, it is found that oversize particles are present, indicate this information in the report of test data under remarks. Determine the average height and diameter of the test specimen using the apparatus specified in 5.9. Take a minimum of three height measurements (120° apart) and at least three diameter measurements at each of the quarter points of the height. The height-to-diameter ratio of the specimen shall be between 2 and 2.5.

NOTE 7—If large soil particles are found in the specimen after testing, a particle-size analysis in accordance with Method D 422 may be performed to confirm the visual observation and the results provided with the test report.

6.2 *Undisturbed Specimens*—Prepare undisturbed specimens from large undisturbed samples or from samples secured in accordance with Practice D 1587 or other acceptable undisturbed tube sampling procedures. Undisturbed samples shall be preserved and transported as outlined for Groups C or D samples in Practices D 4220. Specimens obtained by tube sampling may be tested without trimming, except for the squaring of ends, provided soil characteristics are such that no significant disturbance results from sampling and the specimen is uniformly circular. Handle specimens carefully to minimize disturbance, changes in cross section, or loss of water content. If compression or any type of noticeable disturbance would be caused by the extrusion device, split the sample tube lengthwise or cut it off in small sections to facilitate removal of the specimen with minimum disturbance. Prepare trimmed specimens in an environment where the change in the water content of the soil is minimized (Note 8). Specimens shall be of uniform, circular cross section perpendicular to the axis of the specimen. Where pebbles or crumbling result in excessive irregularity along the outside edges of the specimen or at the ends, pack soil from the trimmings in the irregularities to produce the desired surface. As an alternative, the ends of the specimen may be capped with a minimal thickness of plaster of paris, hydrostone, or similar material. Where soil conditions permit, a vertical lathe accommodating the total sample may be used as an aid in trimming the specimen to the required diameter. Determine the mass and dimensions of the test specimen in accordance with 5.9 and 5.11. If the specimen is to be capped, determine its mass and dimensions before capping. Enclose the specimen in the rubber membrane and seal the membrane to the specimen base and cap immediately after preparation.

NOTE 8—A controlled high-humidity room is usually used for this purpose.

6.3 *Remolded Specimens*—Prepare the specimen by first thoroughly working the undisturbed specimen, which has been tested and is still encased in the rubber membrane, with the fingers. Then reform the specimen by forming within a mold having dimensions such that the remolded specimen dimensions will be equal to those of the undisturbed specimen. Exercise care to avoid entrapping air in the specimen. This will aid in obtaining a uniform unit weight, in remolding to the same void ratio as the undisturbed specimen, and in preserving the natural water content of the soil.

6.4 *Compacted Specimens*—Prepare specimens using the compaction method, predetermined water content, and unit weight prescribed by the individual assigning the test. Compacted specimens may be prepared by compacting material in at least six layers, using a pressing or kneading action, into a split mold of circular cross section having dimensions meeting the requirements of 6.1. Material required for the specimen shall be batched by thoroughly mixing soil with sufficient water to produce the desired water content. After batching, store the material in a covered container for at least 16 h prior to compaction. Specimens may be molded to the desired density by either: (*1*) kneading or tamping each layer until the accumulative weight of the soil placed in the mold is compacted to a known volume or (*2*) by adjusting the number of layers, the number of tamps per layer, and the force per tamp. Scarify the top of each layer prior to the addition of material for the next layer. The tamper used to compact the material shall have an area in contact with the soil equal to or less than ½ the area of the mold. After a specimen is formed, with the ends perpendicular to the longitudinal axis, remove the mold and determine the mass and dimensions of the specimen using the devices described in 5.9 and 5.11. Perform one or more water content

determinations on excess material used to prepare the specimen in accordance with Method D 2216.

NOTE 9—It is common for the unit weight of the specimen after removal from the mold to be less than the value based on the volume of the mold. This occurs as a result of the specimen swelling after removal of the lateral confinement due to the mold.

NOTE 10—Experience indicates that it is difficult to compact, handle, and obtain valid results with specimens that have a degree of saturation that is greater than about 90 %.

7. Procedure

7.1 Place the membrane on the membrane expander or, if it is rolled onto the specimen, roll the membrane onto the cap or base. Place the specimen on the base. Place the rubber membrane around the specimen and seal it at the cap and base with O-rings or other positive seals at each end. A thin coating of silicon grease on the vertical surfaces of the cap or base will aid in sealing the membrane.

7.2 With the specimen encased in the rubber membrane, which is sealed to the specimen cap and base and positioned in the chamber, assemble the triaxial chamber. Bring the axial load piston into contact with the specimen cap several times to permit proper seating and alignment of the piston with the cap. When the piston is brought into contact the final time, record the reading on the deformation indicator. During this procedure, take care not to apply an axial stress to the specimen exceeding approximately 0.5 % of the estimated compressive strength. If the weight of the piston is sufficient to apply an axial stress exceeding approximately 0.5 % of the estimated compressive strength, lock the piston in place above the specimen cap after checking the seating and alignment and keep locked until application of the chamber pressure.

7.3 Place the chamber in position in the axial loading device. Be careful to align the axial loading device, the axial load-measuring device, and the triaxial chamber to prevent the application of a lateral force to the piston during testing. Attach the pressure-maintaining and measurement device and fill the chamber with the confining liquid. Adjust the pressure-maintaining and measurement device to the desired chamber pressure and apply the pressure to the chamber fluid. Wait approximately 10 min after the application of chamber pressure before continuing the test.

NOTE 11—In some cases the chamber will be filled and the chamber pressure applied before placement in the axial loading device.

NOTE 12—Make sure the piston is locked or held in place by the axial loading device before applying the chamber pressure.

NOTE 13—The purpose of the waiting period is to allow the specimen to stabilize under the chamber pressure prior to application of the axial load.

7.4 If the axial load-measuring device is located outside of the triaxial chamber, the chamber pressure will produce an upward force on the piston that will react against the axial loading device. In this case, start the test with the piston slightly above the specimen cap, and before the piston comes in contact with the specimen cap, either: (*1*) measure and record the initial piston friction and upward thrust of the piston produced by the chamber pressure and later correct the measured axial load, or (*2*) adjust the axial load-measuring device to compensate for the friction and thrust. If the axial load-measuring device is located inside the chamber, it will not be necessary to correct or compensate for the uplift force acting on the axial loading device or for piston friction. In both cases record the initial reading on the deformation indicator when the piston contacts the specimen cap.

7.5 Apply the axial load to produce axial strain at a rate of approximately 1 %/min for plastic materials and 0.3 %/min for brittle materials that achieve maximum deviator stress at approximately 3 to 6 % strain. At these rates, the elapsed time to reach maximum deviator stress will be approximately 15 to 20 min. Continue the loading to 15 % axial strain, except loading may be stopped when the deviator stress has peaked then dropped 20 % or the axial strain has reached 5 % beyond the strain at which the peak in deviator stress occurred.

7.6 Record load and deformation values at about 0.1, 0.2, 0.3, 0.4, and 0.5 % strain; then at increments of about 0.5 % strain to 3 %; and, thereafter at every 1 %. Take sufficient readings to define the stress - strain curve; hence, more frequent readings may be required in the early stages of the test and as failure is approached.

NOTE 14—Alternate intervals for the readings may be used provided sufficient points are obtained to define the stress - strain curve.

7.7 After completion of the tests, remove the test specimen from the chamber. Determine the water content of the test specimen in accordance with Method D 2216 using the entire specimen, unless representative cuttings are obtained for this purpose, as in the case of undisturbed specimens. Indicate on the test report whether the water content sample was obtained before or after the shear test, as required in 9.1.2.

7.8 Make a sketch, or take a photo, of the test specimen at failure and show the slope angle of the failure surface if the angle is visible and measurable.

8. Calculations

8.1 Calculate the axial strain, ϵ (expressed as a decimal), for a given applied axial load, as follows:

$$\epsilon = \Delta L / L_O$$

where:

ΔL = change in length of specimen as read from deformation indicator, and

L_O = initial length of test specimen minus any change in length prior to loading.

8.2 Calculate the average cross-sectional area, A, for a given applied axial load as follows:

$$A = A_O/(1 - \epsilon)$$

where:

A_O = initial average cross-sectional area of the specimen, and

ϵ = axial strain for the given axial load (expressed as a decimal).

NOTE 15—In the event that the application of the chamber pressure results in a change in the specimen length, A_O should be corrected to reflect this change in volume. Frequently, this is done by assuming that lateral strains are equal to vertical strains. The diameter after volume change would be given by $D = D_O(1 - \Delta L/L)$.

8.3 Calculate the principal stress difference (deviator stress), $\sigma_1 - \sigma_3$, for a given applied axial load as follows:

$$\sigma_1 - \sigma_3 = P/A$$

where:

P = measured applied axial load (corrected for uplift and piston friction, if required see 7.4), and

A = corresponding average cross-sectional area.

8.4 *Stress-Strain Curve*—Prepare a graph showing the relationship between principal stress difference (deviator stress) and axial strain, plotting deviator stress as ordinate and axial strain (in percent) as abscissa. Select the compressive strength and axial strain at failure in accordance with the definitions in 3.2.1 and 3.2.2.

8.5 *Correction of Strength Due to Stiffness of Rubber Membrane*—Assuming units are consistent, the following equation, or other acceptable equations, shall be used to correct the principal stress difference or deviator stress for the effect of the rubber membrane if the error in principal stress difference due to the stiffness of the membrane exceeds 5 %:

$$\Delta(\sigma_1 - \sigma_3) = \frac{4E_m t \epsilon_1}{D}$$

where:

$\Delta(\sigma_1 - \sigma_3)$ = correction to be subtracted from the measured principal stress difference,

D = $\sqrt{\frac{4A}{\pi}}$ = diameter of specimen,

E_m = Young's modulus for the membrane material,

t = thickness of the membrane, and

= axial strain.

8.5.1 The Young's modulus of the membrane material may be determined by hanging a 10.0-mm wide strip of membrane over a thin rod, placing another rod along the bottom of the hanging membrane, and measuring the force per unit strain obtained by stretching the membrane. The modulus value may be computed using the following equation assuming units are consistent:

$$E_m = \frac{FL}{A_m \Delta L}$$

where:

E_m = Young's modulus of the membrane material,

F = force applied to stretch the membrane,

A_m = twice the initial thickness of the membrane multiplied by the width of the membrane strip,

L = unstretched length of the membrane, and

ΔL = change in length of the membrane due to application of F.

A typical value of E_m for latex membrane is 1400 kN/m^2.

NOTE 16—The effect of the stiffness of the membrane on the lateral stress is usually assumed to be negligible.

NOTE 17—The correction for rubber membranes is based on simplified assumptions concerning their behavior during shear. Their actual behavior is complex and there is not a consensus on more exact corrections.

8.6 Calculate the major and minor principal total stresses at failure as follows:

σ_3 = minor principal total stress = chamber pressure, and

σ_1 = major principal total stress = deviator stress at failure plus chamber pressure.

8.7 Calculate the initial degree of saturation of the test specimen using the initial mass and dimensions.

NOTE 18—The specific gravity determined in accordance with Test Method D 854 is required for calculation of the degree of saturation, or an assumed value may be used provided it is noted in the test report that an assumed value was used.

9. Report

9.1 The report shall include the following:

9.1.1 Identification and visual description of specimen, including soil group name, symbol, whether specimen is undisturbed, remolded, or compacted, and the like. Also include specimen identifying information, such as project, location, boring number, sample number, depth, and the like. Visual descriptions shall be made in accordance with Practice D 2488.

9.1.2 Initial dry unit weight and water content (specify if the water content specimen was obtained before or after the shear and from cuttings or the entire specimen).

9.1.3 Degree of saturation.

9.1.4 Height and diameter of the specimen.

9.1.5 Height to diameter ratio.

9.1.6 The value of the compressive strength and the values of the minor and major principal stresses at failure.

9.1.7 Stress - strain curve as described in 8.4.

9.1.8 Axial strain at failure, in percent.

9.1.9 Average rate of axial strain to failure, percent per minute.

9.1.10 Liquid and plastic limits, if determined, in accordance with Test Method D 4318.

9.1.11 Sketch or photo showing type of failure, that is, bulge, diagonal shear, and the like.

9.1.12 Particle-size analysis, if determined, in accordance with Method D 422.

9.1.13 If a membrane correction was used, the report shall state that a membrane correction was used to adjust the compressive strength and must indicate the membrane correction equation that was used.

9.1.14 In a remarks section note any unusual conditions or other data that would be considered necessary to properly interpret the results obtained, for example, slickensides, stratification, shells, pebbles, roots, or brittleness.

10. Precision and Bias

10.1 No method presently exists to evaluate the precision of a group of triaxial compression tests on undisturbed specimens, due to specimen variability. Undisturbed soil specimens from apparently homogeneous soil deposits at the same location often exhibit significantly different strength and stress - strain properties.

10.2 A suitable test material and method of specimen preparation have not been developed for the determination of laboratory variances of compacted specimens due to the difficulty in producing identical cohesive soil specimens. No estimates of precision for this test method are available.

000225

62

The American Society for Testing and Materials takes no position respecting the validity of any patent rights asserted in connection with any item mentioned in this standard. Users of this standard are expressly advised that determination of the validity of any such patent rights, and the risk of infringement of such rights, are entirely their own responsibility.

This standard is subject to revision at any time by the responsible technical committee and must be reviewed every five years and if not revised, either reapproved or withdrawn. Your comments are invited either for revision of this standard or for additional standards and should be addressed to ASTM Headquarters. Your comments will receive careful consideration at a meeting of the responsible technical committee, which you may attend. If you feel that your comments have not received a fair hearing you should make your views known to the ASTM Committee on Standards, 1916 Race St., Philadelphia, PA 19103.

000226

Designation: D 2974 – 87

Standard Test Methods for Moisture, Ash, and Organic Matter of Peat and Other Organic Soils[1]

This standard is issued under the fixed designation D 2974; the number immediately following the designation indicates the year of original adoption or, in the case of revision, the year of last revision. A number in parentheses indicates the year of last reapproval. A superscript epsilon (ε) indicates an editorial change since the last revision or reapproval.

1. Scope

1.1 These test methods cover the measurement of moisture content, ash content, and organic matter in peats and other organic soils, such as organic clays, silts, and mucks.

1.2 The values stated in SI units are to be regarded as the standard.

1.3 *This standard may involve hazardous materials, operations, and equipment. This standard does not purport to address all of the safety problems associated with its use. It is the responsibility of the user of this standard to establish appropriate safety and health practices and determine the applicability of regulatory limitations prior to use.*

2. Summary of Methods

2.1 *Method A*—Moisture is determined by drying a peat or organic soil sample at 105°C. The moisture content is expressed either as a percent of the oven dry mass or of the received mass.

2.2 *Method B*—This is an alternative moisture method which removes the total moisture in two steps: (*1*) evaporation of moisture in air at room temperature (air-drying), and (*2*) the subsequent oven drying of the air-dried sample at 105°C. This method provides a more stable sample, the air-dried sample, when tests for nitrogen, pH, cation exchange, and the like are to be made.

2.3 *Methods C and D*—Ash content of a peat or organic soil sample is determined by igniting the oven-dried sample from the moisture content determination in a muffle furnace at 440°C (Method C) or 750°C (Method D). The substance remaining after ignition is the ash. The ash content is expressed as a percentage of the mass of the oven-dried sample.

2.4 Organic matter is determined by subtracting percent ash content from one hundred.

3. Apparatus

3.1 *Oven*, capable of being regulated to a constant temperature of 105 ± 5°C.

NOTE—The temperature of 105°C is quite critical for organic soils. The oven should be checked for "hot spots" to avoid possible ignition of the specimen.

3.2 *Muffle Furnace*, capable of producing constant temperatures of 440°C and 750°C.

3.3 *Evaporating Dishes*, of high silica or porcelain of not less than 100-mL capacity.

3.4 *Blender*, high-speed.

3.5 *Aluminum Foil*, heavy-duty.

3.6 *Porcelain Pan, Spoons*, and equipment of the like.

3.7 *Desiccator*.

4. Preparation of Sample

4.1 Place a representative field sample on a square rubber sheet, oil cloth, or equivalent material. Reduce the sample to the quantity required by quartering and place in a moisture-proof container. Work rapidly to prevent moisture loss or perform the operation in a room with a high humidity.

MOISTURE CONTENT

5. Method A

5.1 Record to the nearest 0.01 g the mass of a high silica or porcelain evaporating dish fitted with a heavy-duty aluminum foil cover. The dish shall have a capacity of not less than 100 mL.

5.2 Mix thoroughly the representative sample and place a test specimen of at least 50 g in the container described in 5.1. Crush soft lumps with a spoon or spatula. The thickness of peat in the container should not exceed 3 cm.

5.3 Cover immediately with the aluminum foil cover and record the mass to the nearest 0.01 g.

5.4 Dry uncovered for at least 16 h at 105°C or until there is no change in mass of the sample after further drying periods in excess of 1 h. Remove from the oven, cover tightly, cool in a desiccator, and record the mass.

6. Method A Calculation

6.1 Calculate the moisture content as follows:

$$\text{Moisture Content, \%} = [(A - B) \times 100]/A$$

where:

A = mass of the as-received test specimen, g, and

B = mass of the oven-dried specimen, g.

6.1.1 This calculation is used primarily for agriculture, forestry, energy, and horticultural purposes and the result should be referred to as the moisture content as a percentage of as-received or total mass.

6.2 An alternative calculation is as follows:

$$\text{Moisture Content, \%} = [(A - B) \times 100]/B$$

where:

A = as-received test specimen, g, and

B = mass of the oven-dried specimen, g.

[1] These test methods are under the jurisdiction of ASTM Committee D-18 on Soil and Rock and are the direct responsibility of Subcommittee D18.18 on Peats and Related Materials.

Current edition approved May 29, 1987. Published July 1987. Originally published as D 2974 – 71. Last previous edition D 2974 – 84.

000227

6.2.1 This calculation is used primarily for geotechnical purposes and the result should be referred to as the moisture content as a percentage of oven-dried mass.

6.3 Take care to indicate the calculation method used.

7. Method B

7.1 This method should be used if pH, nitrogen content, cation exchange capacity, and the like are to be tested.

7.2 Mix the sample thoroughly and select a 100 to 300 g representative sample. Determine the mass of this sample and spread evenly on a large flat pan. Crush soft lumps with a spoon or spatula and let the sample come to moisture equilibrium with room air. This will require at least 24 h. Stir occasionally to maintain maximum air exposure of the entire sample. When the mass of the sample reaches a constant value, calculate the moisture removed during air drying as a percentage of the as-received mass.

7.3 Grind a representative portion of the air-dried sample for 1 to 2 min in a high-speed blender. Use the ground portion for moisture, ash, nitrogen, cation exchange capacity tests, and the like.

7.4 Thoroughly mix the air-dried, ground sample. Weigh to the nearest 0.01 g the equivalent of 50 g of test specimen on an as-received basis. Determine the amount, in grams, of air-dried sample equivalent to 50 g of as-received sample, as follows:

$$\text{Equivalent Sample Mass, g} = 50.0 - [(50 \times M)/100]$$

where:

M = moisture removed in air drying, %.

7.5 Place the sample in a container as described in 5.1 and proceed as in Method A.

8. Method B Calculation

8.1 Calculate the moisture content as follows:

$$\text{Moisture Content, \%} = (50 - B) \times 2$$

where:

B = oven-dried sample, g.

8.1.1 This calculation gives moisture content as a percentage of as-received mass.

8.2 An alternative calculation is as follows:

$$\text{Moisture Content, \%} = [(50 - B) \times 100]/B$$

8.2.1 This calculation gives moisture content as a percentage of oven-dried mass.

ASH CONTENT

9. Method C

9.1 Determine the mass of a covered high-silica or porcelain dish.

9.2 Place a part of or all of the oven-dried test specimen from a moisture determination in the dish and determine the mass of the dish and specimen.

9.3 Remove the cover and place the dish in a muffle furnace. Gradually bring the temperature in the furnace to 440°C and hold until the specimen is completely ashed (no change of mass occurs after a further period of heating).

9.4 Cover with the retained aluminum foil cover, cool in a desiccator, and determine the mass.

9.5 This method should be used for all geotechnical and general classification purposes.

10. Method D

10.1 Determine the mass of a covered high-silica or porcelain dish.

10.2 Place a part of or all of the oven-dried test specimen from a moisture determination in the dish and determine the mass of the dish and specimen.

10.3 Remove the cover and place the dish in a muffle furnace. Gradually bring the temperature in the furnace to 750°C and hold until the specimen is completely ashed (no change of mass occurs after a further period of heating).

10.4 Cover with the retained aluminum foil cover, cool in a desiccator, and determine the mass.

10.5 This method should be used when peats are being evaluated for use as a fuel.

11. Calculation for Methods C and D

11.1 Calculate the ash content as follows:

$$\text{Ash Content, \%} = (C \times 100)/B$$

where:

C = ash, g, and

B = oven-dried test specimen, g.

ORGANIC MATTER

12. Calculation

12.1 Determine the amount of organic matter by difference, as follows:

$$\text{Organic matter, \%} = 100.0 - D$$

where:

D = ash content, %.

13. Report

13.1 Report the following information:

13.1.1 Results for organic matter and ash content, to the nearest 0.1 %.

13.1.2 Furnace temperature used for ash content determinations.

13.1.3 Whether moisture contents are by proportion of as-received mass or oven-dried mass.

13.1.3.1 Express results for moisture content as a percentage of as-received mass to the nearest 0.1 %.

13.1.3.2 Express results for moisture content as a percentage of oven-dried mass as follows:

(*a*) Below 100 % to the nearest 1 %.

(*b*) Between 100 % and 500 % to the nearest 5 %.

(*c*) Between 500 % and 1000 % to the nearest 10 %.

(*d*) Above 1000 % to the nearest 20 %.

14. Precision and Bias

14.1 The precision and bias of these test methods have not been determined. Data are being sought for use in developing a precision and bias statement.

The American Society for Testing and Materials takes no position respecting the validity of any patent rights asserted in connection with any item mentioned in this standard. Users of this standard are expressly advised that determination of the validity of any such patent rights, and the risk of infringement of such rights, are entirely their own responsibility.

This standard is subject to revision at any time by the responsible technical committee and must be reviewed every five years and if not revised, either reapproved or withdrawn. Your comments are invited either for revision of this standard or for additional standards and should be addressed to ASTM Headquarters. Your comments will receive careful consideration at a meeting of the responsible technical committee, which you may attend. If you feel that your comments have not received a fair hearing you should make your views known to the ASTM Committee on Standards, 1916 Race St., Philadelphia, PA 19103.

Designation: D 3080 – 90

Standard Test Method for Direct Shear Test of Soils Under Consolidated Drained Conditions[1]

This standard is issued under the fixed designation D 3080; the number immediately following the designation indicates the year of original adoption or, in the case of revision, the year of last revision. A number in parentheses indicates the year of last reapproval. A superscript epsilon (ε) indicates an editorial change since the last revision or reapproval.

1. Scope

1.1 This test method covers the determination of the consolidated drained shear strength of a soil material in direct shear. The test is performed by deforming a specimen at a controlled strain rate on or near a single shear plane determined by the configuration of the apparatus. Generally, three or more specimens are tested, each under a different normal load, to determine the effects upon shear resistance and displacement, and strength properties such as Mohr strength envelopes.

1.2 Shear stresses and displacements are nonuniformly distributed within the specimen. An appropriate height cannot be defined for calculation of shear strains. Therefore, stress-strain relationships or any associated quantity such as modulus, cannot be determined from this test.

1.3 The determination of strength envelopes and the development of criteria to interpret and evaluate test results are left to the engineer or office requesting the test.

1.4 The results of the test may be affected by the presence of soil or rock particles, or both, (see Section 7).

1.5 Test conditions including normal stress and moisture environment are selected which represent the field conditions being investigated. The rate of shearing should be slow enough to ensure drained conditions.

1.6 The values stated in inch-pound units are to be regarded as the standard. Within this test method the SI units are shown in brackets. The values stated in each system are not exact equivalents; therefore, each system must be used independently of each other.

1.7 *This standard does not purport to address the safety problems associated with its use. It is the responsibility of the user of this standard to establish appropriate safety and health practices and determine the applicability of regulatory limitations prior to use.*

2. Referenced Documents

2.1 *ASTM Standards:*

D 422 Method for Particle-Size Analysis of Soils[2]

D 653 Terminology Relating to Soil, Rock, and Contained Fluids[2]

D 698 Test Methods for Moisture-Density Relations of Soils and Soil Aggregate Mixtures Using 5.5 lb (2.49 kg) Rammer and 12-in. (305 mm) Drop[2]

D 854 Test Method for Specific Gravity of Soils[2]

D 1557 Test Methods for Moisture-Density Relations of Soils and Soil Aggregate Mixtures Using 10-lb (4.54 kg) Rammer and 18-in. (457 mm) Drop[2]

D 1587 Practice for Thin-Walled Tube Sampling of Soils[2]

D 2216 Method for Laboratory Determination of Water (Moisture) Content of Soil, Rock, and Soil Aggregate Mixtures[2]

D 2435 Test Method for One Dimensional Consolidation Properties of Soils[2]

D 2487 Test Method for Classification of Soils for Engineering Purposes[2]

D 2488 Practice for Description and Identification of Soils (Visual-Manual Procedure)[2]

D 4220 Practices for Preserving and Transporting Soil Samples[2]

D 4318 Test Method for Liquid Limit, Plastic Limit, and Plasticity Index of Soils[2]

D 4753 Specifications for Evaluating, Selecting, and Specifying Balances and Scales for Use in Soil and Rock Testing[2]

3. Terminology

3.1 *Definitions*—For definitions of terms used in this test method, refer to Terminology D 653

3.2 *Description of Terms Specific to This Standard:*

3.2.1 *Relative lateral displacement*—the horizontal displacement of the top and bottom shear box halves.

3.2.2 *Failure*—the stress condition at failure for a test specimen. Failure is often taken to correspond to the maximum shear stress attained, or the shear stress at 15 to 20 percent relative lateral displacement. Depending on soil behavior and field application, other suitable criteria may be defined.

4. Summary of Test Method

4.1 This test method consists of placing the test specimen in the direct shear device, applying a predetermined normal stress, providing for wetting or draining of the test specimen, or both, consolidating the specimen under the normal stress, unlocking the frames that hold the test specimen, and displacing one frame horizontally with respect to the other at a constant rate of shearing deformation and measuring the shearing force and horizontal displacements as the specimen is sheared (Fig. 1).

5. Significance and Use

5.1 The direct shear test is suited to the relatively rapid determination of consolidated drained strength properties

[1] This test method is under the jurisdiction of ASTM Committee D-18 on Soil and Rock and is the direct responsibility of Subcommittee D18.05 on Structural Properties of Soils.

Current edition approved Nov. 30, 1990. Published January 1991. Originally published as D 3080 – 72. Last previous edition D 3080 – 72(79).

[2] *Annual Book of ASTM Standards*, Vol 04.08.

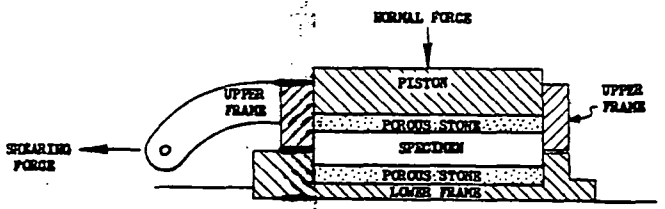

FIG. 1 Test Specimens (a) Single and (b) Double Shear

because the drainage paths through the test specimen are short, thereby allowing excess pore pressure to be dissipated more rapidly than with other drained stress tests. The test can be made on all soil materials and undisturbed, remolded or compacted materials. There is however, a limitation on maximum particle size (see 7.2).

5.2 The test results are applicable to assessing strength in a field situation where complete consolidation has occurred under the existing normal stresses. Failure is reached slowly under drained conditions so that excess pore pressures are dissipated. The results from several tests may be used to express the relationship between consolidation stress and drained shear strength.

5.3 During the direct shear test, there is rotation of principal stresses, which may or may not model field conditions. Moreover, failure may not occur on the weak plane since failure is forced to occur on or near a horizontal plane at the middle of the specimen. The fixed location of the plane in the test can be an advantage in determining the shear resistance along recognizable weak planes within the soil material and for testing interfaces between dissimilar materials.

5.4 Shear stresses and displacements are nonuniformly distributed within the specimen, and an appropriate height is not defined for calculating shear strains or any associated engineering quantity. The slow rate of displacement provides for dissipation of excess pore pressures, but it also permits plastic flow of soft cohesive soils. Care should be taken to ensure that the testing conditions represent those conditions being investigated.

5.5 The range in normal stresses, rate of shearing, and general test conditions should be selected to approximate the specific soil conditions being investigated.

6. Apparatus

6.1 *Shear Device*—a device to hold the specimen securely between two porous inserts in such a way that torque is not applied to the specimen. The shear device shall provide a means of applying a normal stress to the faces of the specimen, for measuring change in thickness of the specimen, for permitting drainage of water through the porous inserts at the top and bottom boundaries of the specimen, and for submerging the specimen in water. The device shall be capable of applying a shear force to the specimen in water. The device shall be capable of applying a shear force to the specimen along a predetermined shear plane (single shear) parallel to the faces of the specimen. The frames that hold the specimen shall be sufficiently rigid to prevent their distortion during shearing. The various parts of the shear device shall be made of material not subject to corrosion by moisture or substances within the soil, for example, stainless steel, bronze, or aluminum, etc. Dissimilar metals, which may cause galvanic action, are not permitted.

6.2 *Shear Box*, a shear box, either circular or square, made of stainless steel, bronze, or aluminum, with provisions for drainage through the top and bottom. The box is divided vertically by a horizontal plane into two halves of equal thickness which are fitted together with alignment screws. The shear box is also fitted with gap screws, which control the space (gap) between the top and bottom halves of the shear box.

6.3 *Porous Inserts*, Porous inserts function to allow drainage from the soil specimen along the top and bottom boundaries. They also function to transfer horizontal shear stress from the insert to the top and bottom boundaries of the specimen. Porous inserts shall consist of silicon carbide, aluminum oxide, or metal which is not subject to corrosion by soil substances or soil moisture. The proper grade of insert depends on the soil being tested. The permeability of the insert should be substantially greater than that of the soil, but should be textured fine enough to prevent excessive intrusion of the soil into the pores of the insert. The diameter or width of the top porous insert or plate shall be 0.01 to 0.02 in. (0.2 to 0.5 mm) less than that of the inside of the ring. If the insert functions to transfer the horizontal stress to the soil, it must be sufficiently coarse to develop interlock. Sandblasting or tooling the insert may help, but the surface of the insert should not be so irregular as to cause substantial stress concentrations in the soil.

NOTE 1—Exact criteria for insert texture and permeability have not been established. For normal soil testing, medium grade inserts with a permeability of about 0.5 to 1.0×10^{3} ft/yr (5.0×10^{-4} to 1.0×10^{-3} cm/s) are appropriate for testing silts and clays, and coarse grade inserts with a permeability of about 0.5 to 1.0×10^{5} ft/yr (0.05 to 0.10 cm/s) are appropriate for sands. It is important that the permeability of the porous insert is not reduced by the collection of soil particles in the pores of the insert; hence frequent checking and cleaning (by flushing and boiling, or by ultrasonic cleaning) are required to ensure the necessary permeability.

6.4 *Loading Devices:*

6.4.1 *Device for Applying and Measuring the Normal Force*—The normal force is applied by a lever loading yoke which is activated by dead weights (masses) or by a pneumatic loading device. The device shall be capable of maintaining the normal force to within ±1 percent of the specified force quickly without exceeding it.

6.4.2 *Device for Shearing the Specimen*—The device shall be capable of shearing the specimen at a uniform rate of displacement, with less than ±5 percent deviation, and should permit adjustment of the rate of displacement from 0.0001 to 0.04 in./min (.0025 to 1.0 mm/min). The rate to be applied depends upon the consolidation characteristics of the soils (see 9.12.1). The rate is usually maintained with an electric motor and gear box arrangement and the shear force is determined by a load indicating device such as a proving ring or load cell.

6.4.3 The weight of the top shear box should be less than 1 percent of the applied normal force: this may require that the top shear box be modified and supported by counter force.

NOTE 2—Shearing the test specimen at a rate greater than specified may produce partially drained shear results that will differ from the drained strength of the material.

000231

6.5 *Shear force measurement device*—A proving ring or load cell accurate to 0.5 lbf (2.5 *N*), or 1 percent of the shear force at failure, whichever is greater.

6.6 *Shear box bowl*—A metallic box which supports the shear box and provides either a reaction against which one half of the shear box is restrained, or a solid base with provisions for aligning one half of the shear box, which is free to move coincident with applied shear force in a horizontal plane.

6.7 *Controlled High Humidity Room*, if required, for preparing specimens, such that water content gain or loss during specimen preparation is minimized.

6.8 *Trimmer or Cutting Ring*, for trimming oversized samples to the inside dimensions of the shear box with a minimum of disturbance. An exterior jig may be needed to maintain the shear box alignment.

6.9 *Balances*—in accordance with Test Method D 2216.

6.10 *Deformation Indicators*—Either dial gages or displacement transformers capable of measuring the change in thickness of the specimen, with a sensitivity of at least 0.0001 in. (0.0025 mm) and to measure horizontal displacement with sensitivity of at least 0.001 in. (0.025 mm).

6.11 *Apparatus for Determination of Water Content*, as specified in Test Method D 2216.

6.12 *Equipment for Remolding or Compacting Specimens*, if applicable.

6.13 Miscellaneous Equipment, including timing device with a second hand, distilled or demineralized water, spatulas, knives, straightedge, wire saws, etc., used in preparing the specimen.

7. Test Specimen

7.1 The sample used for specimen preparation should be sufficiently large so that a minimum of three similar specimens can be prepared. Prepare the specimens in a controlled temperature and humidity environment to minimize moisture loss or gain.

7.1.1 Extreme care should be taken in preparing undisturbed specimens of sensitive soils to prevent disturbance to the natural soil structure. Determine the initial mass of the wet specimen for use in calculating the initial water content and unit weight of the specimen.

7.2 The minimum specimen diameter for circular specimens, or width for square specimens, shall be 2.0 in. (50 mm), or not less than 10 times the maximum particle size diameter, whichever is larger, and conform to the width to thickness ratio specified in 7.4.

7.3 The minimum initial specimen thickness shall be 0.5 in. (12 mm), but not less than six times the maximum particle diameter.

7.4 The minimum specimen diameter to thickness or width to thickness ratio shall be 2:1.

NOTE 3—If large soil particles are found in the soil after testing, a particle size analysis should be performed in accordance with Method D 422 to confirm the visual observations, and the result should be provided with the test report.

7.5 *Specimen Preparation:*

7.5.1 *Undisturbed specimens*—Prepare undisturbed specimens from large undisturbed samples or from samples secured in accordance with Practice D 1587, or other undisturbed tube sampling procedures. Undisturbed samples shall be preserved and transported as outlined for Group C or D samples in Practice D 4220. Handle specimens carefully to minimize disturbance, changes in cross section, or loss of water content. If compression or any type of noticeable disturbance would be caused by the extrusion device, split the sample tube lengthwise or cut it off in small sections to facilitate removal of the specimen with minimum disturbance. Prepare trimmed specimens, whenever possible, in an environment which will minimize the gain or loss of specimen moisture.

NOTE 4—A controlled high-humidity room is desirable for this purpose.

7.5.2 *Compacted specimens*—Specimens shall be prepared using the compaction method, water content, and unit weight prescribed by the individual assigning the test. Assemble and secure the shear box. Place a moist porous insert in the bottom of the shear box. Specimens may be molded by either kneading or tamping each layer until the accumulative mass of the soil placed in the shear box is compacted to a known volume, or by adjusting the number of layers, the number of tamps per layer, and the force per tamp. The top of each layer shall be scarified prior to the addition of material for the next layer. The compacted layer boundaries should be positioned so they are not coincident with the shear plane defined by the shear box halves, unless this is the stated purpose for a particular test. The tamper used to compact the material shall have an area in contact with the soil equal to or less than ½ the area of the mold. Determine the mass of wet soil required for a single compacted lift and place it in the shear box. Compact the soil until the desired unit weight is obtained. Continue placing and compacting soil until the entire specimen is compacted.

NOTE 5—A light coating of grease applied to the inside of the shear box may be used to reduce friction between the specimen and shear box during consolidation. However, the upper ring in some shear devices requires friction to support the ring after the shear plates have been gapped. A light coating of grease applied between the halves of the shear box may be used to reduce friction between the halves of the shear box during shear. TFE-fluorocarbon coating may also be used on these surfaces instead of grease to reduce friction.

NOTE 6—The required thickness of the compacted lift may be determined by directly measuring the thickness of the lift, or from the marks on the tamping rod which correspond to the thickness of the lift being placed.

NOTE 7—The decision to dampen the porous inserts by inundating the shear box before applying the normal force depends on the problem under study. For undisturbed samples obtained below the water table, the porous inserts are usually dampened. For swelling soils, the sequence of consolidation, wetting, and shearing should model field conditions. Determine the compacted mass of the specimen from either the measured mass placed and compacted in the mold, or the difference between the mass of the shear box and compacted specimen and the tare mass of the shear box.

7.6 Material required for the specimen shall be batched by thoroughly mixing soil with sufficient water to produce the desired water content. Allow the specimen to stand prior to compaction in accordance with the following guide:

Classification D2487	Minimum Standing Time, h
SW, SP	No Requirement
SM	3
SC, ML, CL	18
MH, CH	36

7.7 Compacted specimens may also be prepared by com-

pacting soil using the procedures and equipment used to determine moisture-density relationships of soils (Test Methods D 698 or D 1557), and trimming the direct shear test specimen from the larger test specimen as though it were an undisturbed specimen.

8. Calibration

8.1 The calibration is to determine the deformation of the apparatus when subject to the consolidation load, so that for each normal consolidation load the apparatus deflection may be subtracted from the observed deformations. Therefore, only deformation due to sample consolidation will be reported for complete tests. Calibration for the equipment load-deformation characteristics need to be performed on the apparatus when first placed in service, or when apparatus parts are changed.

8.2 Assemble the direct-shear device with a metal calibration disk or plate of a thickness approximately equal to the desired test specimen and about ¼ in. (5 mm) smaller in diameter or width.

8.3 Position the normal displacement indicator. Adjust this indicator so that it can be used to measure either consolidation or swell from the calibration disk or plate reading. Record the zero or "no load" reading.

8.4 Apply increments of normal force up to the equipment limitations, and record the normal displacement indicator reading and normal force. Remove the applied normal force in reverse sequence of the applied force, and record the normal displacement indicator readings and normal force. Average the values and plot the load deformation of the apparatus as a function of normal load. Retain the results for future reference in determining the thickness of the test specimen and compression within the test apparatus itself.

8.5 Remove the calibration disk or plate.

NOTE 8—Other methods of proven accuracy for calibrating the apparatus are acceptable.

9. Procedures

9.1 Assemble the shear box.

9.1.1 *Undisturbed Specimen*—Place moist porous inserts over the exposed ends of the specimen in the shear box; place the shear box containing the undisturbed specimen and porous inserts into the shear box bowl and attach the shear box.

NOTE 9—For some apparatus, the top half of the shear box is held in place by a notched rod which fits into a receptacle in the top half of the shear box. The bottom half of the shear box is held in place in the shear box bowl retaining bolts. For some apparatus, the top half of the shear box is held in placed by an anchor plate.

9.1.2 *Compacted Specimen*—Place the shear box containing the compacted specimen and porous inserts into the shear box bowl and attach the shear box.

9.2 Connect and adjust the shear force loading system so that no force is imposed on the load measuring device.

9.3 Properly position and adjust the horizontal displacement measurement device used to measure shear displacement. Obtain an initial reading or set the measurement device to indicate zero displacement.

9.4 Place a moist porous insert and load transfer plate on the top of the specimen in the shear box.

9.5 Place the normal force loading yoke into position and adjust it so the loading bar is horizontal. For dead load lever loading systems, level the lever. For pneumatic loading systems, adjust the yoke until it sits snugly against the recess in the load transfer plate, or place a ball bearing on the load transfer plate and adjust the yoke until the contact is snug.

9.6 Apply a small normal load to the specimen. Verify that all components of the loading system are seated and aligned. The top porous insert and load transfer plate must be aligned so that the movement of the load transfer plate into the shear box is not inhibited. Record the applied vertical load and horizontal load on the system.

NOTE 10—The normal stress applied to the specimen should be approximately 1 lbf/in.^{2} (7 kPa).

9.7 Attach and adjust the vertical displacement measurement device. Obtain initial reading for the vertical measurement device and a reading for the horizontal displacement measurement device.

9.8 If required, fill the shear box with water, and keep it full for the duration of the test.

9.9 Calculate and record the normal force required to achieve the desired normal stress or increment thereof. Apply the desired normal stress by adding the appropriate mass to the lever arm hanger, or by increasing the pneumatic pressure.

NOTE 11—The normal force used for the specimen will depend upon the data required. Application of the normal force in one increment may be appropriate for relatively firm soils. For relatively soft soils, application of the normal force in several increments may be necessary to prevent damage to the specimen.

9.10 Apply the desired normal load or increments thereof to the specimen and begin recording the normal deformation readings against elapsed time. For all load increments, verify completion of primary consolidation before proceeding (see Test Method D 2435). Plot the normal displacement versus either log of time or square root of time (in min).

9.11 After primary consolidation is completed, remove the alignment screws or pins from the shear box. Open the gap between the shear box halves to approximately 0.025 in. (0.64 mm) using the gap screws. Back out the gap screws.

NOTE 12—There may be instances when the gap between the plates should be increased to accommodate sand sizes greater than the specified gap. Presently there is insufficient information available for specifying gap dimension based on particle size distribution.

9.12 Shear the specimen.

9.12.1 Select the appropriate displacement rate. Shear the specimen at a relatively slow rate so that no excess pore pressure would exist at failure. The following equation shall be used as a guide to determine the estimated minimum time required from the start of the test to failure:

$$t_f = 50t_{50}$$

where:

t_f = total estimated elapsed time to failure, min,

t_{50} = time required for the specimen to achieve 50 percent consolidation under the specified normal stress (or increments thereof), min.

NOTE 13—If the normal displacement versus square root of time used, t_{50} can be calculated from the time to complete 90 % consolidation using the following expression:

000233

$$t_{50} = \frac{t_{90}}{4.28}$$

where:

t_{90} = time required for the specimen to achieve 90 percent consolidation under the specified normal stress (or increment thereof), min.

4.28 = constant, relates displacement and time factors at 50 and 90 percent consolidation.

NOTE 14—If the material exhibits a tendency to swell, the soil must be inundated with water and must be permitted to achieve equilibrium under an increment of normal stress large enough to counteract the swell tendency before the minimum time to failure can be determined. The time-consolidation curve for subsequent normal stress increments are then valid for use in determining t_f.

NOTE 15—Some soils, such as dense sands and over consolidated clays, may not exhibit well defined time-settlement curves. Consequently, the calculation of t_f may produce an inappropriate estimate of the time required to fail the specimen under drained conditions. For over consolidated clays which are tested under normal stresses less than the soil's pre-consolidation pressure, it is suggested that a time to failure be estimated using a value of t_{50} equivalent to one obtained from normal consolidation time-settlement behavior. For clean dense sands which drain quickly, a value of 10 min may be used for t_f. For dense sands with more than 5 % fines, a value of 60 min may be used for t_f. If an alternative value of t_f is selected, the rationale for the selection shall be explained with the test results.

9.13 Determine the appropriate displacement from the following equation:

$$d_r = d_f / t_f$$

where:

d_r = displacement rate (in./min, mm/min),

d_f = estimated horizontal displacement at failure (in., mm),

t_f = total estimate elapsed time to failure, min.

NOTE 16—The magnitude of the estimated displacement at failure is dependent on many factors including the type and the stress history of the soil. As a guide, use d_f = 0.5 in. (12 mm) if the material is normally or lightly over consolidated fine-grained soil, otherwise use d_f = 0.2 in. (5 mm).

9.13.1 *Select and set the displacement rate*—For some types of apparatus, the displacement rate is achieved using combinations of gear wheels and gear lever positions. For other types the displacement rate is achieved by adjusting the motor speed.

9.13.2 Record the initial time, vertical and horizontal displacements, and normal and shear forces.

9.13.3 Start the apparatus and initiate shear.

9.13.4 Obtain data readings of time, vertical and horizontal displacement, and shear force at desired interval of displacement. Data readings should be taken at displacement intervals equal to 2 percent of the specimen diameter or width to accurately define a shear stress-displacement curve.

NOTE 17—Additional readings may be helpful in identifying the value of peak shear stress of over consolidated or brittle material.

NOTE 18—It may be necessary to stop the test and re-gap the shear box halves to maintain clearance between the shear box halves.

9.13.5 After reaching failure, stop the test apparatus. This displacement may range from 10 to 20 percent of the specimen's original diameter or length.

9.13.6 Remove the normal force from the specimen by removing the mass from the lever and hanger, or by releasing the pressure.

9.14 For cohesive test specimens, separate the shear box halves with a sliding motion along the failure plane. Do not pull the shear box halves apart perpendicularly to the failure surface, since it would damage the specimen. Photograph, sketch, or described in writing the failure surface. This procedure is not applicable to cohesionless specimens.

9.15 Remove the specimen from the shear box and determine its water content according to Test Method D 2216.

9.16 *Calculate and plot the following:*

9.16.1 Nominal shear stress versus relative lateral displacement.

10. Calculation

10.1 Calculate the following:

10.1.1 Nominal shear stress, acting on the specimen is,

$$\tau = \frac{F}{A}$$

where:

τ = nominal shear stress (lbf/in.^{2}, kPa),

F = shear force (lbf, N),

A = initial area of the specimen (in.^{2}, mm^2).

10.1.2 Normal stress acting on the specimen is,

$$\sigma_n = \frac{N}{A}$$

where:

σ_n = normal stress (lbf/in.^{2}, kPa),

N = normal vertical force acting on the specimen (lbf, N).

NOTE 19—Factors which incorporate assumptions regarding the actual specimen surface area over which the shear and normal forces are measured can be applied to the calculated values of shear or normal stress, or both. If a correction(s) is made, the factor(s) and rationale for using the correction shall be explained with the test results.

10.1.3 *Displacement rate*—Calculate the actual displacement rate by dividing the relative lateral displacement by the elapsed time, or report the rate used for the test.

$$d_r = d_h / t_e$$

where:

d_r = displacement rate (in./min, mm/min),

d_h = relative lateral displacement (in./mm),

t_e = elapsed time of test (min).

10.1.4 Compute the initial void ratio, water content, dry unit weight and degree of saturation based on the specific gravity, and mass of the total specimen. Specimen volume is determined by measurements of the shear box lengths or diameter and of the measured thickness of the specimen.

11. Report

11.1 The report shall include the following:

11.1.1 Sample identification, project and location.

11.1.2 Description of type of shear device used in test.

11.1.3 Description of appearance of the specimen, based on Practice D 2488 (Test Method C 2487 may be used as an alternative), Atterberg limits (Test Method D 4318), and grain size data (Method D 422), if obtained (see 7.4).

11.1.4 Description of soil structure, that is whether the specimen is undisturbed, remolded, compacted, or otherwise prepared.

11.1.5 Initial and final water content.

11.1.6 Dry mass and initial and final wet unit weight.

11.1.7 Initial and final dry unit weight.

11.1.8 Initial thickness and diameter (width for square shear boxes).

11.1.9 Normal stress, rate of deformation, shear displacement, and corresponding nominal shear stress values and specimen thickness changes.

11.1.10 Plot of log of time or square root of time versus deformation of those load increments where t_{50} was determined.

11.1.11 Plot of nominal shear stress versus percent relative lateral displacement.

11.1.12 Departure from the procedure outlines, such as special loading sequences or special wetting requirements.

12. Precision and Bias

12.1 *Precision*—Data are being evaluated to determine the precision of this test method. In addition, subcommittee D 18.05 is seeking pertinent data from users of the test method.

12.2 *Bias*—There is no accepted reference value for this test method, therefore, bias cannot be determined.

13. Keywords

13.1 compacted specimens; consolidated; direct-shear test; drained test conditions; Mohr strength envelope; shear strength; undisturbed

The American Society for Testing and Materials takes no position respecting the validity of any patent rights asserted in connection with any item mentioned in this standard. Users of this standard are expressly advised that determination of the validity of any such patent rights, and the risk of infringement of such rights, are entirely their own responsibility.

This standard is subject to revision at any time by the responsible technical committee and must be reviewed every five years and if not revised, either reapproved or withdrawn. Your comments are invited either for revision of this standard or for additional standards and should be addressed to ASTM Headquarters. Your comments will receive careful consideration at a meeting of the responsible technical committee, which you may attend. If you feel that your comments have not received a fair hearing you should make your views known to the ASTM Committee on Standards, 1916 Race St., Philadelphia, PA 19103.

000235

62

Standard Test Method for Deep, Quasi-Static, Cone and Friction-Cone Penetration Tests of Soil[1]

This standard is issued under the fixed designation D 3441; the number immediately following the designation indicates the year of original adoption or, in the case of revision, the year of last revision. A number in parentheses indicates the year of last reapproval. A superscript epsilon (ε) indicates an editorial change since the last revision or reapproval.

This standard has been approved for use by agencies of the Department of Defense. Consult the DoD Index of Specifications and Standards for the specific year of issue which has been adopted by the Department of Defense.

1. Scope

1.1 This test method covers the determination of end bearing and side friction, the components of penetration resistance which are developed during the steady slow penetration of a pointed rod into soil. This method is sometimes referred to as the "Dutch Cone Test," or "Cone Penetration Test" and is often abbreviated as the "CPT."

1.2 This test method includes the use of both cone and friction-cone penetrometers, of both the mechanical and electric types. It does not include data interpretation. It also includes the penetrometer aspects of piezocone soundings, but does not include the details of piezometer construction, location, measurement, or data interpretation.

NOTE 1—The European Standard for the CPT uses a tip of right cylindrical shape as shown in Fig. 3, as their reference test against which other CPTs may be compared.

1.3 Mechanical penetrometers of the type described in this method operate incrementally, using a telescoping penetrometer tip, resulting in no movement of the push rods during the measurement of the resistance components. Design constraints for mechanical penetrometers preclude a complete separation of the end-bearing and side-friction components. Electric penetrometers are advanced continuously and permit separate measurement of both components. Differences in shape and method of advance between cone penetrometer tips may result in significant differences in one or both resistance components.

1.4 *This standard may involve hazardous materials, operations, and equipment. This standard does not purport to address all of the safety problems associated with its use. It is the responsibility of the user of this standard to establish appropriate safety and health practices and determine the applicability of regulatory limitations prior to use.*

2. Definitions

2.1 *cone*—the cone-shaped point of the penetrometer tip, upon which the end-bearing resistance develops.

2.2 *cone penetrometer*—an instrument in the form of a cylindrical rod with a conical point designed for penetrating soil and soft rock and for measuring the end-bearing component of penetration resistance.

2.3 *cone resistance or end-bearing resistance,* q_c—the resistance to penetration developed by the cone, equal to the vertical force applied to the cone divided by its horizontally projected area.

2.4 *cone sounding*—the entire series of penetration tests performed at one location when using a cone penetrometer.

2.5 *electric penetrometer*—a penetrometer that uses electric-force transducers built into a nontelescoping penetrometer tip for measuring, within the tip, the component(s) of penetration resistance.

2.6 *friction-cone penetrometer*—a cone penetrometer with the additional capability of measuring the local side friction component of penetration resistance.

2.7 *friction-cone sounding*—the entire series of penetration tests performed at one location when using a friction-cone penetrometer.

2.8 *friction ratio,* R_f—the ratio of friction resistance to cone resistance, f_s/q_c, expressed in percent.

2.9 *friction resistance,* f_s—the resistance to penetration developed by the friction sleeve, equal to the vertical force applied to the sleeve divided by its surface area. This resistance consists of the sum of friction and adhesion.

2.10 *friction sleeve*—a section of the penetrometer tip upon which the local side-friction resistance develops.

2.11 *inner rods*—rods that slide inside the push rods to extend the tip of a mechanical penetrometer.

2.12 *mechanical penetrometer*—a penetrometer that uses a set of inner rods to operate a telescoping penetrometer tip and to transmit the component(s) of penetration resistance to the surface for measurement.

2.13 *penetrometer tip*—the end section of the penetrometer, which comprises the active elements that sense the soil resistance, the cone, and in the case of the friction-cone penetrometer, the friction sleeve.

2.13.1 *Discussion*—The addition of a piezometer to the electric penetrometer tip permits the measurement of pore water pressure during and after stopping tip penetration. A penetrometer including a piezometer is known as a piezocone penetrometer, or just piezocone.

2.14 *piezocone sounding*—the entire series of penetration tests performed at one location when using a piezocone penetrometer.

2.15 *push rods*—the thick-walled tubes, or other suitable rods, used for advancing the penetrometer tip to the required test depth.

3. Significance and Use

3.1 This test method supplies data on the engineering

[1] This test method is under the jurisdiction of ASTM Committee D-18 on Soil and Rock and is the direct responsibility of Subcommittee D18.02 on Sampling and Related Field Testing for Soil Investigations.

Current edition approved Oct. 31, 1986. Published December 1986. Originally published as D 3441 - 75 T. Last previous edition D 3441 - 79.

000236

properties of soil intended to help with the design and construction of earthworks and the foundations for structures.

3.2 This test method tests the soil in place and does not obtain soil samples. The interpretation of the results from this method requires knowledge of the types of soil penetrated. Engineers usually obtain this soil information from parallel borings and soil sampling methods, but prior information or experience may preclude the need for borings.

3.3 Engineers often correlate the results of tests by this test method with laboratory or other types of field tests, or directly with performance. The accuracy of such correlations will vary with the type of soil involved. Engineers usually rely on local experience to judge this accuracy.

3.4 Most engineers with offshore experience have also found this test method suitable for offshore use.

4. Apparatus

4.1 *General:*

4.1.1 *Cone*—The cone shall have a 60° (±5°) point angle and a base diameter of 1.406 ± 0.016 in. (35.7 ± 0.4 mm), resulting in a projected area of 1.55 in.^{2} (10 cm^2). The point of the cone shall have a radius less than ⅛ in. (3 mm).

NOTE 2—Cone tips with larger end areas may be used to increase measurement sensitivity in weak soils. Experience with electrical tips with end area between 0.78 in.^{2} (5 cm^2) and 3.10 in.^{2} (20 cm^2) has shown that they produce data similar to the 1.55 in.^{2} (10 cm^2) standard provided they maintain the same tip geometry. Cone tip sizes in this range may be used for special circumstances provided the cone tip and friction sleeve (if any) area is noted.

4.1.2 *Friction Sleeve,* having the same outside diameter +0.024 to −0.000 in. (+0.5 to −0.0 mm) as the base diameter of the cone (see 4.1.1). No other part of the penetrometer tip shall project outside the sleeve diameter. The surface area of the sleeve shall be 23.2 in.^{2} (150 cm^2) ±2 %.

4.1.3 *Steel*—The cone and friction sleeve shall be made from steel of a type and hardness suitable to resist wear due to abrasion by soil. The friction sleeve shall have and maintain with use a roughness of 20 µin. (0.5 µm) AA, ±50 %.

4.1.4 *Push Rods*—Made of suitable steel, these rods must have a section adequate to sustain, without buckling, the thrust required to advance the penetrometer tip. They must have an outside diameter not greater than the diameter of the base of the cone for a length of at least 1.3 ft (0.4 m) above the base, or, in the case of the friction-cone penetrometer, at least 1.0 ft (0.3 m) above the top of the friction sleeve. Each push rod must have the same constant inside diameter. They must screw or attach together to bear against each other and form a rigid-jointed string of rods with a continuous, straight axis.

4.1.5 *Inner Rods*—Mechanical penetrometers require a separate set of steel, or other metal alloy, inner rods within the steel push rods. The inner rods must have a constant outside diameter with a roughness, excluding waviness, less than 10 µin. (0.25 µm) AA. They must have the same length as the push rods (±0.004 in. or ±0.1 mm) and a cross section adequate to transmit the cone resistance without buckling or other damage. Clearance between inner rods and push rods shall be between 0.020 and 0.040 in. (0.5 and 1.0 mm). See 6.8.1.

4.1.6 *Measurement Accuracy*—Maintain the thrust-measuring instrumentation to obtain thrust measurements within ±5 % of the correct values.

NOTE 3—Special, and preferably redundant, instrumentation may be required in the offshore environment to assure this accuracy and the proper operation of all the remote systems involved.

4.2 *Mechanical Penetrometers:*

4.2.1 The sliding mechanism necessary in a mechanical penetrometer tip must allow a downward movement of the cone in relation to the push rods of at least 1.2 in. (30.5 mm).

NOTE 4—At certain combinations of depth and tip resistance(s), the elastic compression of the inner rods may exceed the downward stroke that the thrust machine can apply to the inner rods relative to the push rods. In this case, the tip will not extend and the thrust readings will rise elastically to the end of the machine stroke and then jump abruptly when the thrust machine makes contact with the push rods.

4.2.2 Mechanical penetrometer tip design shall include protection against soil entering the sliding mechanism and affecting the resistance component(s) (see 4.2.3 and Note 5).

4.2.3 *Cone Penetrometer*—Figure 1 shows the design and action of one mechanical cone penetrometer tip. A mantle of reduced diameter is attached above the cone to minimize possible soil contamination of the sliding mechanism.

NOTE 5—An unknown amount of side friction may develop along this mantle and be included in the cone resistance.

4.2.4 *Friction-Cone Penetrometer*—Figure 2 shows the design and action of one telescoping mechanical friction cone penetrometer tip. The lower part of the tip, including mantle to which the cone attaches, advances first until the flange engages the friction sleeve and then both advance.

NOTE 6—The shoulder at the lower end of the friction sleeve encounters end-bearing resistance. In sands as much as two thirds of the sleeve resistance may consist of bearing on this shoulder. Ignore the effect in soft to medium clays.

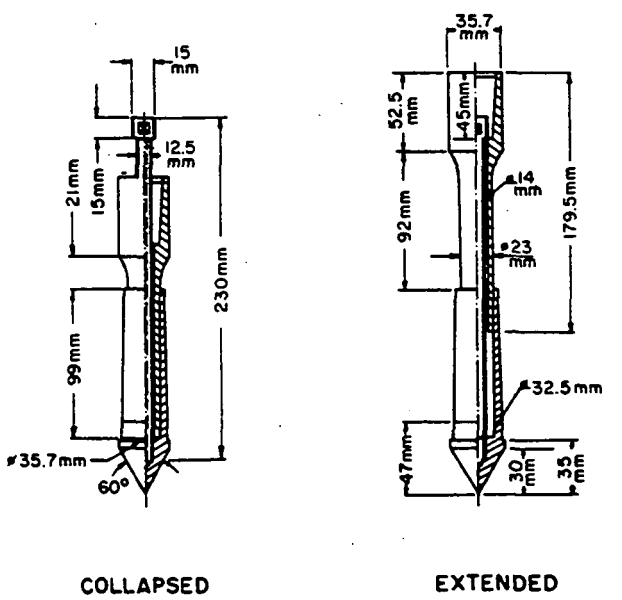

FIG. 1 Example of a Mechanical Cone Penetrometer Tip (Dutch Mantle Cone)

000237

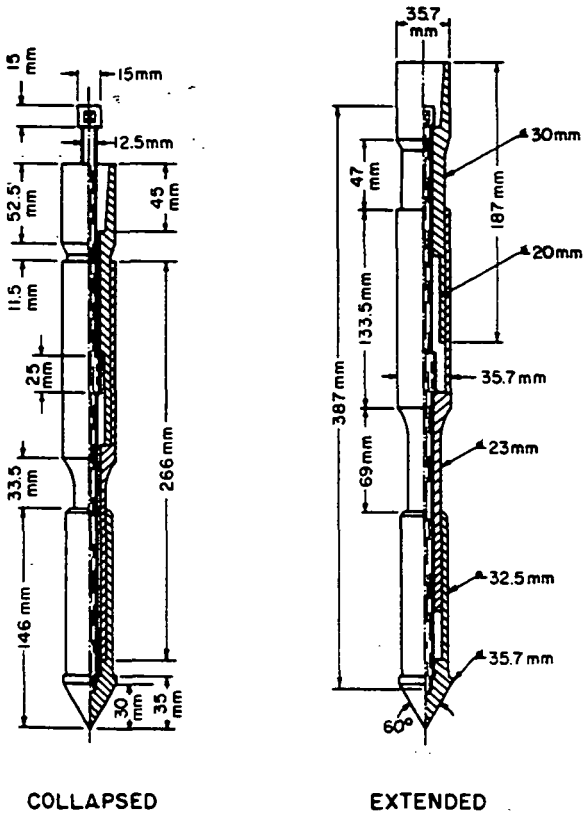

FIG. 2 Example of a Mechanical Friction-Cone Penetrometer Tip (Begemann Friction-Cone)

4.2.5 *Measuring Equipment*—Measure the penetration resistance(s) at the surface by a suitable device such as a hydraulic or electric load cell or proving ring.

4.3 *Electric Penetrometers:*

4.3.1 *Cone Penetrometer*—Figure 3 shows one design for an electric-cone penetrometer tip. The cone resistance is measured by means of a force transducer attached to the cone. An electric cable or other suitable system transmits the transducer signals to a data recording system. Electric-cone penetrometers shall permit continuous advance and recording over each push rod-length interval.

4.3.2 *Friction-Cone Penetrometer*—The bottom of the friction sleeve shall not be more than 0.4 in. (10 mm) above the base of the cone. The same requirements as 4.3.1 apply. Figure 4 shows one design for an electric friction-cone penetrometer tip.

4.3.3 *Other Penetrometers*—Electric penetrometers may include other transducer measurements as well as, or instead of, the friction sleeve measurement. Common ones are inclinometers to assist with the alignment control of the tip (see 6.3) and piezometers to provide additional data on soil stratigraphy and behavior.

4.4 *Thrust Machine*—This machine shall provide a continuous stroke, preferably over a distance greater than one push rod length. The machine must advance the penetrometer tip at a constant rate while the magnitude of the thrust required fluctuates (see 5.1.2).

NOTE 7—Deep penetration soundings usually require a thrust capability of at least 5 tons (45 kN). Most modern machines use hydraulic pistons with 10 to 20-ton (90 to 180-kN) thrust capability.

4.5 *Reaction Equipment*—The proper performance of the static-thrust machine requires a stable, static reaction.

NOTE 8—The type of reaction provided may affect the penetrometer resistance(s) measured, particularly in the surface or near-surface layers.

5. Procedure

5.1 *General:*

5.1.1 Set up the thrust machine for a thrust direction as near vertical as practical.

5.1.2 *Rate of Penetration*—Maintain a rate of depth penetration of 2 to 4 ft/min (10 to 20 mm/s) ±25 % when obtaining resistance data. Other rates of penetration may be used between tests.

NOTE 9—The rate of 2 ft/min (10 mm/s) provides the time the operator needs to read properly the resistance values when using the mechanical friction-cone penetrometer. The rate of 4 ft/min (20 mm/s) is suitable for the single resistance reading required when using the

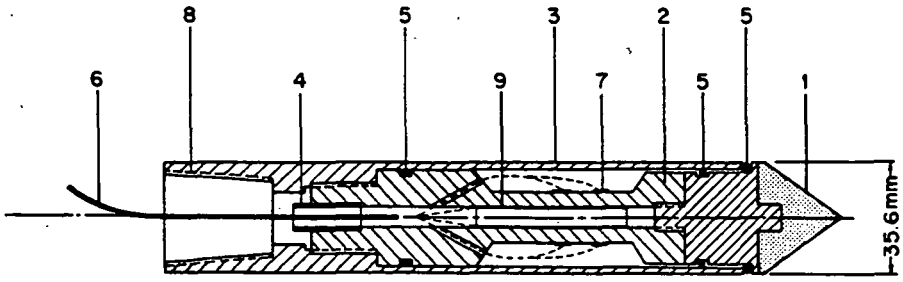

1 Conical point (10 cm²)
2 Load cell
3 Protective mantle
4 Waterproof bushing
5 O-rings
6 Cable
7 Strain gages
8 Connection with rods
9 Inclinometer

FIG. 3 Electric-Cone Penetrometer Tip

000238

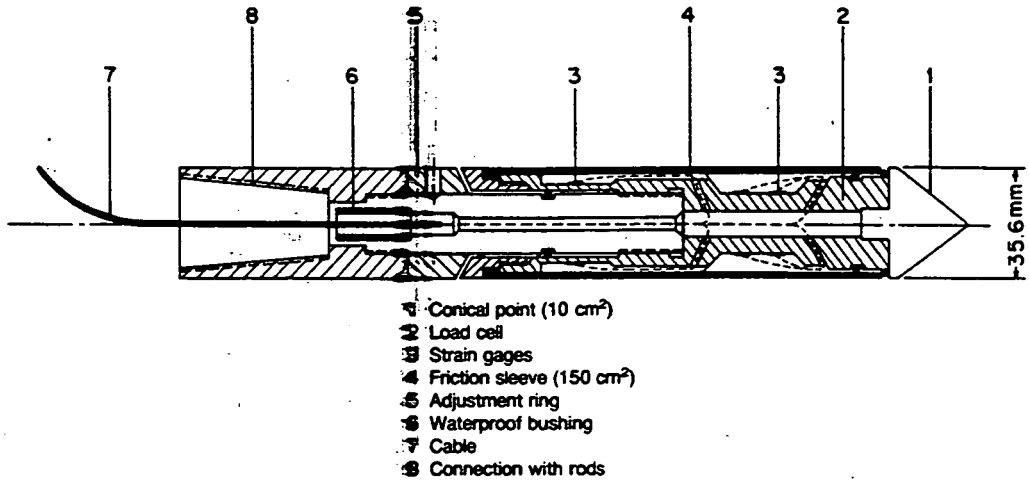

FIG. 4 Electric Friction-Cone Penetrometer Tip

mechanical cone penetrometer and provides for the efficient operation of electric penetrometers. The European standard requires 4 ft/min (20 mm/s).

NOTE 10—Rates of penetration either slower or faster than the standard rate may be used for special circumstances, such as pore pressure measurements. This is permissible provided the rate actually used and the reason for the deviation is noted on the test record.

NOTE 11—Pore pressures generated ahead of and around the penetrating cone or friction cone penetrometer tip can have an important effect on the q_c and f_s values measured. Piezocone tips with simultaneous pore pressure measurement capability have proven useful to help evaluate such effects and to provide additional data about the stratigraphy and engineering properties of the soils penetrated.

5.2 *Mechanical Penetrometers:*

5.2.1 *Cone Penetrometer*—(*1*) Advance penetrometer tip to the required test depth by applying sufficient thrust on the push rods; and (*2*) Apply sufficient thrust on the inner rods to extend the penetrometer tip (see Fig. 1). Obtain the cone resistance at a specific point (see 5.2.3) during the downward movement of the inner rods relative to the stationary push rods. Repeat step *(1)*. Apply sufficient thrust on the push rods to collapse the extended tip and advance it to a new test depth. By continually repeating this two-step cycle, obtain cone resistance data at increments of depth. This increment shall not ordinarily exceed 8 in. (203 mm).

5.2.2 *Friction-Cone Penetrometer*—Use this penetrometer as described in 5.2.1 but obtain two resistances during the step *(2)* extension of the tip (see Figs. 2 and 5). First obtain the cone resistance during the initial phase of the extension. When the lower part of the tip engages and pulls down the friction sleeve, obtain a second measurement of the total resistance of the cone plus the sleeve. Subtraction gives the sleeve resistance.

NOTE 12—Because of soil layering, the cone resistance may change during the additional downward movement of the tip required to obtain the friction measurement.

NOTE 13—The soil friction along the sleeve puts an additional overburden load on the soil above the cone and may increase cone resistance above that measured during the initial phase of the tip extension by an unknown, but probably small amount. Ignore this effect.

5.2.3 *Recording Data*—To obtain reproducible cone-resistance test data, or cone and friction-resistance test data when using a friction-cone tip, record only those thrust readings that occur at a well-defined point during the downward movement of the top of the inner rods in relation to the top of the push rods. Because of the elastic compression of inner rods (see Note 4), this point ordinarily should be at not less than 1.0 in. (25 mm) apparent relative movement of the inner rods. When using the friction-cone penetrometer, this point shall be just before the cone engages the friction sleeve.

NOTE 14—Figure 5 shows one example of how the thrust in the hydraulic load cell can vary during the extension of the friction-cone tip. Note the jump in gage pressure when the cone engages the sleeve.

5.2.3.1 Obtain the cone plus friction-resistance reading as soon as possible after the jump so as to minimize the error described in Fig. 5. Unless using continuous recording as in Fig. 5, the operator should not record a cone plus friction resistance if he suspects the cone resistance is changing abruptly or erratically.

5.3 *Electric Penetrometers:*

5.3.1 If using continuous electric cable, prethread it through the push rods.

5.3.2 Record the initial reading(s) with the penetrometer tip hanging freely in air or in water, out of direct sunlight, and after an initial, short penetration, test hole so that the tip temperature is at soil temperature.

5.3.3 Record the cone resistance, or cone resistance and friction resistance, continuously with depth or note them at intervals of depth not exceeding 8 in. (203 mm).

5.3.4 At the end of a sounding, obtain a final set of readings as in 5.3.2 and check them against the initial set. Discard the sounding, and repair or replace the tip if this check is not satisfactory for the accuracy desired for the resistance component(s).

6. Special Techniques and Precautions

6.1 *Reduction of Friction Along Push Rods*—The purpose of this friction reduction is to increase the penetrometer depth capability, and not to reduce any differences between resistance components determined by mechanical and electric tips as noted in 1.3. To accomplish the friction reduction, introduce a special rod with an enlarged diameter or

000239

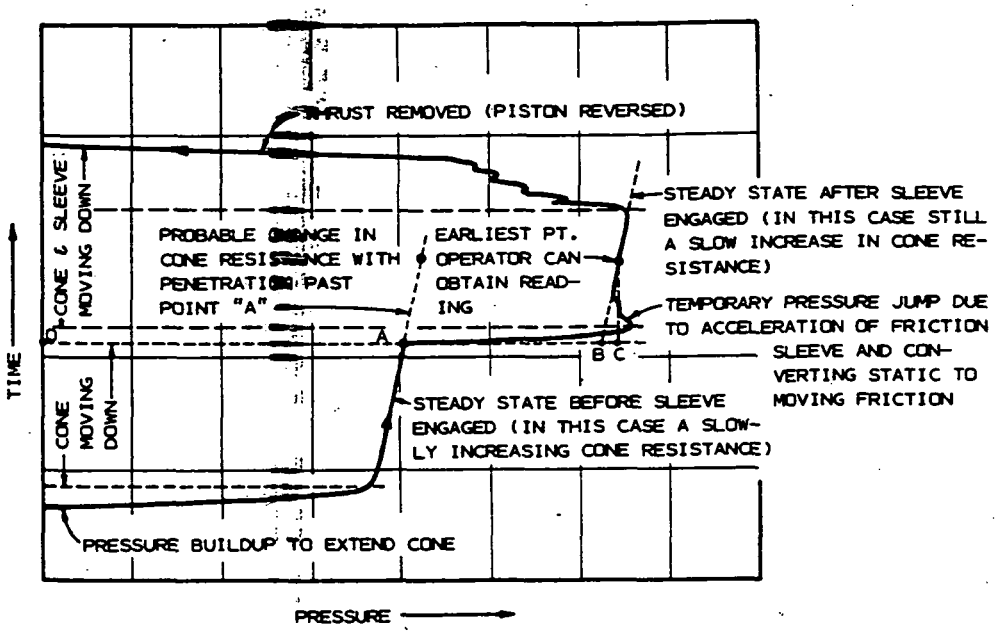

NOTE—"o-a" represents the correct cone resistance reading just before the pressure jump associated with engaging the friction sleeve during the continuing downward extension of the tip. "a-b" is the correct friction resistance if the friction sleeve could be engaged instantaneously and the cone plus friction resistance read instantaneously. However, the operator cannot read a pressure gage dial until it steadies, such as at point "c." By this forced wait, the operator has introduced a friction resistance error of "b-c." The operator must read the gage as soon as possible after the jump to minimize this error. Erratic or abrupt changes in cone resistance may make this error unacceptable.

FIG. 5 Annotated Chart Record of the Pressure Changes in the Hydraulic Load Cell Measuring Thrust on Top of the Inner Rods During an Example Extension of the Mechanical Friction-Cone Penetrometer Tip

special projections, called a "friction reducer," into the string of push rods or between the push rods and the tip. Another allowable method to reduce friction is to use push rods with a diameter less than that of the tip. In accordance with 4.1.4, any such projections or changes in diameter must begin no closer than 1.0 ft (0.3 m) from the base of the cone or the top of the friction sleeve when using cones with the standard 4.1.1 diameter. For other cones (see Note 2) use no closer than 8 diameters.

NOTE 15—Non-mechanical techniques to reduce friction, such as the use of drilling mud above the tip, are also allowable.

6.2 *Prevention of Rod Bending Above Surface*—Use a tubular rod guide, at the base of the thrust machine, of sufficient length to prevent significant bending of the push rods between the machine and the ground surface.

NOTE 16—Special situations, such as when working through water, will require a special system of casing support to restrict adequately the buckling of the push rods.

6.3 *Drift of Tip*—For penetration depths exceeding about 40 ft (12 m), the tip will probably drift away from a vertical alignment. Occasionally, serious drifting occurs, even at less depth. Reduce drifting by using push rods that are initially straight and by making sure that the initial cone penetration into soil does not involve unwanted, initial lateral thrust. Passing through or alongside an obstruction such as boulders, soil concretions, thin rock layers, or inclined dense layers may deflect the tip and induce drifting. Note any indications of encountering such obstructions and be alert for possible subsequent improper tip operation as a sign of serious drifting.

NOTE 17—Electric penetrometer tips may also incorporate an inclinometer to monitor drift and provide a warning when it becomes excessive.

6.4 *Wear of Tip*—Penetration into abrasive soils eventually wears down or scours the penetrometer tip. Discard tips, or parts thereof, whose wear changes their geometry or surface roughness so they no longer meet the requirements of 4.1. Permit minor scratches.

6.5 *Distance Between Cone and Friction Sleeve*—The friction resistance of the sleeve applies to the soil at some distance above the soil in which the cone resistance was obtained at the same time. When comparing these resistances for the soil at a specified depth, for example when computing friction ratios or when plotting these data on graphs, take proper account of the vertical distance between the base of the cone and the midheight of the friction sleeve.

6.6 *Interruptions*—The engineer may have to interrupt the normal advance of a static penetration test for purposes such as removing the penetrometer and drilling through layers or obstructions too strong to penetrate statically. If the penetrometer is designed to be driven dynamically without damage to its subsequent static performance (those illustrated herein in Figs. 1 to 4 are not so designed), the engineer may drive past such layers or obstructions. Delays of over 10 min due to personnel or equipment problems shall be considered an interruption. Continuing the static penetration test after an interruption is permitted provided this additional testing remains in conformance with this standard. Obtain further resistance component data only after the tip passes through the engineer's estimate of the disturbed zone resulting from the nature and depth of the interruption. As an alternative, readings may be continued without first

making the additional tip penetration and the disturbed zone evaluated from these data. Then disregard data within the disturbed zone.

NOTE 18—Interruption of the piezocone sounding after a push allows the engineer to examine the dissipation of positive or negative excess pore water pressure.

6.7 *Below or Adjacent to Borings*—A cone or friction-cone sounding shall not be performed any closer than 25 boring diameters from an existing, unbackfilled, uncased boring hole. When performed at the bottom of a boring, the engineer should estimate the depth below the boring of the disturbed zone and disregard penetration test data in this zone. The depth may vary from one to five diameters. Where the engineer does not have sufficient experience with this variable a depth of at least three boring diameters should be used.

6.8 *Mechanical Penetrometers:*

6.8.1 *Inner Rod Friction*—Soil particles and corrosion can increase the friction between inner rods and push rods, possibly resulting in significant errors in the measurement of the resistance component(s). Clean and lubricate the inner rods.

6.8.2 *Weight of Inner Rods*—For improved accuracy at low values of cone resistance, correct the thrust data to include the accumulated weight of the inner rods from the tip to the topmost rod.

6.8.3 *Jamming*—Soil particles between sliding surfaces or bending of the tip may jam the mechanism during the many extensions and collapses of the telescoping mechanical tip. Stop the sounding as soon as uncorrectable jamming occurs.

6.9 *Electric Penetrometers:*

6.9.1 *Water Seal*—Provide adequate waterproofing for the electric transducer. Make periodic checks to assure that no water has passed the seals.

NOTE 19—Some electric tip sleeve designs are not compensated for hydrostatic end area effects and require a calibration correction. Determining the net end area of the cone under hydrostatic pressure also requires a hydrostatic calibration measurement. The tip manufacturer can usually supply these calibration correction constants. Their importance increases as the soil being tested becomes weaker.

7. Report

7.1 *Graph of Cone Resistance, q_c*—Every report of a cone or friction-cone sounding shall include a graph of the variation of cone resistance (in units of tons or kPa) with depth (in feet or metres). Successive cone-resistance test values from the mechanical cone and friction-cone penetrometers, usually determined at equal increments of depth and plotted at the depth corresponding to the depth of the measurement, may be connected with straight lines as an approximation for a continuous graph.

7.2 *Friction-Cone Penetrometer:*

7.2.1 *Graph of Friction Resistance, f_s*—In addition to the graph of cone resistance (7.1) the report may include an adjacent or superposed graph of friction resistance or friction ratio, or both, with depth. Use the same depth scale as in 7.1 (see 6.5).

7.2.2 *Graph of Friction Ratio, R_f*—If the report includes soil descriptions estimated from the friction-cone penetrometer data, include a graph of the variation of friction ratio with depth. Place this graph adjacent to the graph for cone resistance, using the same depth scale (see 6.5).

7.3 *Piezocone Penetrometer*—In addition to the 7.1 and 7.2 report requirements, a piezocone sounding shall include a parallel graph, to the same depth scale, of measured pore water pressure during the penetration versus depth. Excess pore water pressure versus time plots may also be constructed at those depths where the piezocone sounding is interrupted (see Note 1).

7.4 *General*—The operator shall record his name, the name and location of the job, date of sounding, sounding number, location coordinates, and soil and water surface elevations (if available). The report shall also include a note as to the type of penetrometer tip used, the type of thrust machine, tip and thrust calibration information, or both, any zero-drift noted, the method used to provide the reaction force, if a friction reducer was used, the method of tip advancement, the method of recording, the condition of the rods and tip after withdrawal, and any special difficulties or other observations concerning the performance of the equipment.

7.5 *Deviations from Standard*—The report shall state that the test procedures were in accordance with this Test Method D 3441. Describe completely any deviations from this test method.

8. Precision and Bias

8.1 Because of the many variables involved and the lack of a superior standard, engineers have no direct data to determine the bias of this method. Judging from its observed reproducibility in approximately uniform soil deposits, plus the q_c and f_s measurement effects of special equipment and operator care, persons familiar with this method estimate its precision as follows:

8.1.1 *Mechanical Tips*—Standard deviation of 10 % in q_c and 20 % in f_s.

8.1.2 *Electric Tips*—Standard deviation of 5 % in q_c and 10 % in f_s.

NOTE 20—These data may not match similar data from mechanical tips (see 1.3).

The American Society for Testing and Materials takes no position respecting the validity of any patent rights asserted in connection with any item mentioned in this standard. Users of this standard are expressly advised that determination of the validity of any such patent rights, and the risk of infringement of such rights, are entirely their own responsibility.

This standard is subject to revision at any time by the responsible technical committee and must be reviewed every five years and if not revised, either reapproved or withdrawn. Your comments are invited either for revision of this standard or for additional standards and should be addressed to ASTM Headquarters. Your comments will receive careful consideration at a meeting of the responsible technical committee, which you may attend. If you feel that your comments have not received a fair hearing you should make your views known to the ASTM Committee on Standards, 1916 Race St., Philadelphia, PA 19103.

Designation: D 3550 – 84 (Reapproved 1991)$^{\epsilon 1}$

Standard Practice for Ring-Lines Barrel Sampling of Soils[1]

This standard is issued under the fixed designation D 3550; the number immediately following the designation indicates the year of original adoption or, in the case of revision, the year of last revision. A number in parentheses indicates the year of last reapproval. A superscript epsilon (ε) indicates an editorial change since the last revision or reapproval.

This standard has been approved for use by agencies of the Department of Defense. Consult the DoD Index of Specifications and Standards for the specific year of issue which has been adopted by the Department of Defense.

$^{\epsilon 1}$ NOTE—Section 8 was added editorially in November 1991.

1. Scope

1.1 This practice covers a procedure for using a ring-lined barrel sampler to obtain representative samples of soil for identification purposes and other laboratory tests. In cases where it has been established that the quality of the sample is adequate, this practice provides shear and consolidation specimens that can be used directly in the test apparatus without prior trimming. Some types of soils may gain or lose significant shear strength or compressibility, or both, as a result of sampling. In cases like these, suitable comparison tests should be made to evaluate the effect of sample disturbance on shear strength and compressibility.

1.2 This practice is not intended to be used as a penetration test; however, the force required to achieve penetration or a blow count, when driving is necessary, is recommended as supplemental information.

1.3 *This standard does not purport to address all of the safety problems, if any, associated with its use. It is the responsibility of the user of this standard to establish appropriate safety and health practices and determine the applicability of regulatory limitations prior to use.*

2. Referenced Documents

2.1 *ASTM Standards:*

D 1586 Method for Penetration Test and Split-Barrel Sampling of Soils[2]

D 1587 Practice for Thin-Walled Tube Sampling of Soils[2]

D 2113 Practice for Diamond Core Drilling for Site Investigation[2]

D 2488 Practice for Description and Identification of Soils (Visual-Manual Procedure)[2]

3. Significance and Use

3.1 This practice is used where soil condition and resistance to advance of the sampler do not permit the use of a thin-wall tube (Practice D 1587) and where the formation does not require diamond coring (Practice D 2113).

4. Apparatus

4.1 *Drilling Equipment*—Any drilling equipment may be used that provides a reasonably clean hole before insertion of the sampler and that does not disturb the soil to be sampled. However, in no case shall a bottom-discharge bit be permitted. Side-discharge bits are permissible.

4.2 *Drive Weight Assembly*—Any drive weight assembly that will provide penetration in the range from 1 to 20 blows per foot (65 blows per metre) may be used. Whenever possible, soils are to be sampled by pushing instead of driving (see Section 5).

4.3 *Ring-Lined Barrel Sampling Assembly*—This shall consist of a shoe, sampler, and waste barrel, as shown in Fig. 1.

4.4 *Ring-Lined Sampler*—Test specimens shall be obtained using a suitable one piece or split sampling barrel lined on the inside with removable rings. These rings shall be thin-walled and shall conform to the size requirements of the particular laboratory test determinations employed. They shall fit snugly inside the sampler with no discernible free play in any direction. The sampler may be sectionalized to allow end-to-end make up of sections as necessary. Each section shall be designed so that addition or removal of sections will not loosen, permit movement, or otherwise adversely affect retention of the rings within the sampler. The sampler and rings shall be free of bumps, dents, scratches, rust, dirt, and corrosion.

NOTE 1—It is recommended that the sampler contain at least six rings in order to provide samples for a variety of tests.

4.5 *Waste Barrel*—A waste barrel that can be removed from the sampler in the field shall be provided to contain space for disturbed soil originally at the bottom of the hole. The length of the waste barrel shall be at least three times its interior diameter, and the inside diameter shall be the same, or slightly larger than, the inside diameter of the rings.

4.5.1 An attachment, check valve, and one or more vents is required. The design of these items is optional.

4.6 *Shoe*—The shoe shall be machined as shown in Fig. 1. The inside of the assembled shoe and ring-lined sampler shall be smooth, straight, and uniform. The thin-walled extension of the shoe shall be 2 to 4 in. (51 to 102 mm) in outside diameter and made of any materials of adequate strength and resistance to corrosion. The length of the thin-walled extension shall be equal to three times the diameter of its opening, but shall not exceed 8 in. (203 mm). The inside clearance ratio shall be between 0.5 and 3.0 %. (See Fig. 1 for

[1] This practice is under the jurisdiction of ASTM Committee D-18 on Soil and Rock and is the direct responsibility of Subcommittee D18.02 on Sampling and Related Field Testing for Soil Investigations.

Current edition approved Jan. 27, 1984. Published April 1984. Originally published as D 3550 – 77. Last previous edition D 3550 – 77$^{\epsilon 1}$.

[2] *Annual Book of ASTM Standards*, Vol 04.08.

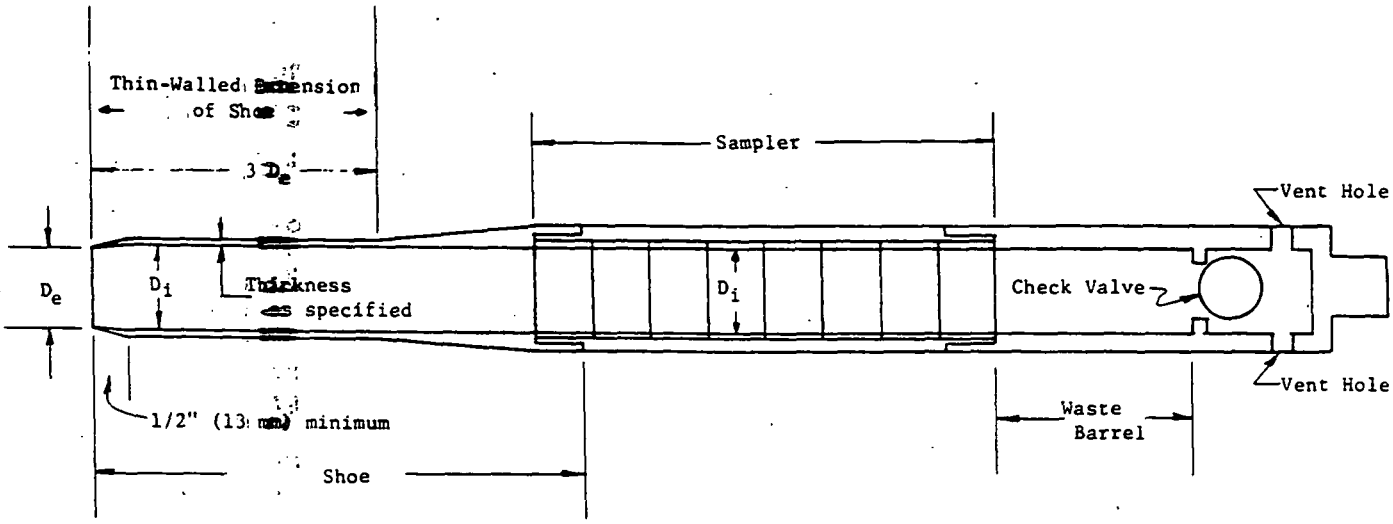

NOTE 1—Inside clearance ratio = $(D_i - D_e)/D_e$
NOTE 2—Dimensional tolerance of D_i = ±0.003 in. (±0.08 mm)

FIG. 1 Ring-Lined Barrel Sampling Assembly

inside clearance ratio formula.) The wall thickness of the thin-walled extension shall conform to Table 1.

4.6.1 The thin-walled extension of the shoe shall be perfectly round. Shoes that have become out-of-round for any reason shall not be used. If the thin-walled extension of the shoe deforms during sampling, the sample obtained shall not be used for tests, such as shear strength, where soil disturbance is a factor.

NOTE 2—The thin-walled extension of the shoe is not suitable for stiff or gravelly soils. In cases such as these, a shoe similar to the type specified in Method D 1586 is required for penetration. The use of this type of shoe, however, may result in excessive disturbance of the soil so that it is no longer suitable for shear or consolidation determinations, or both.

4.7 *Sample Extractor*—Specimen-filled rings shall be removed from the sampler by pressing them out or alternatively by the use of a split barrel. The extractor disk shall be at least 0.5 in. (13 mm) thick and shall bear solidly against the sample rings at all points. It shall slide easily inside the sampler barrel without jamming and without free play.

4.8 *Containers for Specimen-Filled Rings*—These shall be snug fitting, tightly sealed (watertight), rigid containers that will not permit movement of the specimen-filled rings inside. They shall be noncorrosive.

4.9 *Miscellaneous Equipment*—This includes a pipe vise, pipe wrenches, spatulas, cleaning brushes, buckets, rags, data sheets, transporting boxes, etc. Water must be available for cleaning the equipment.

5. Procedure

5.1 Clean the hole to sampling elevation using whatever method is preferred that will ensure that the material to be sampled is not disturbed. In saturated sands and silts, withdraw the drill bit slowly to prevent loosening of the soil around the hole. When casing is used, it shall not be driven below sampling elevation. Water or drilling liquid within the casing must be maintained at all times at or above the natural ground water level; it is preferable to keep the hole filled.

5.2 Keep a careful record of drill penetration and sampler depth to ensure that the soil being sampled is the original soil at the bottom of the hole and is not contaminated by soil falling down from the sides of the hole. If there is any significant tendency for soil to fall from the sides of the hole to the bottom, use water, drilling mud, or casing, as necessary, in order to prevent this from happening. The process of jetting through an open-tube sampler and then sampling when the desired depth is reached shall not be permitted. The use of bottom-discharge bits shall not be allowed.

5.3 Assemble the sampling assembly and lower it carefully into the hole. With the cutting edge of the shoe resting on the bottom of the hole and the water level in the boring at the ground water level or above, push the sampling assembly into the soil by a continuous and rapid motion without impact or twisting. Push the assembly in far enough so that all cuttings, sludge, and soil disturbed by drilling are in the waste barrel; however, in no case push the assembly farther than the total length of the shoe, sampler, and waste barrel. Take care that none of the sample is lost due to improper operation of the check valve.

5.4 When the soils are so hard that they cannot be penetrated by pushing, using generally acceptable field procedures, and where recovery by pushing in sands is poor, use a driving hammer to drive the sampling assembly. In such a case, record the hammer weight, height of drop, and number of blows.

5.5 Carefully disassemble the sampling assembly in such a manner as to minimize soil disturbance as much as possible. Trim the soil flush with the ends of the sampling barrel, and remove the specimen (consisting of soil plus rings). Slip the container over the specimen-filled rings and cap both ends. Be certain that there is no movement of the specimen-filled rings inside the container and that the specimen was not disturbed while being removed from the barrel and placed in the container. Label the container in a suitable manner. If the soil in the bottom end ring does not protrude from the ring after removing the shoe, do not use the soil in the

bottom ring for tests other than soil classification and moisture content. If the top ring or rings contain voids, depressions, or any material other than the soil which is being sampled, do not use the soil in this ring (or rings) for any purpose whatsoever. The filling of depressions in the end rings with additional soil shall not be permitted. Discard samples that appear to be disturbed or questionable.

5.6 Examine the soil remaining in the shoe for structure, consistency, color, and condition. Record these observations and include them in the report (see 6.1.8).

NOTE 3—The soil remaining in the shoe is relatively undisturbed and therefore may be suitable for a variety of laboratory tests.

6. Report

6.1 Data obtained in each boring shall be recorded in the field and shall contain the following:

6.1.1 Name and location of job,

6.1.2 Date of boring and times of start and finish,

6.1.3 Boring number and location,

6.1.4 Surface elevation, if available,

6.1.5 Sample number and depth,

6.1.6 Method of advancing sampler, penetration, and recovery lengths,

6.1.7 Description and size of sampler,

6.1.8 Description of soil (see Practice D 2488),

6.1.9 Thickness of layer,

6.1.10 Depth to water table or depth of overlying water and time of reading,

6.1.11 Size of casing, depth of cased hole,

6.1.12 Type of drilling equipment—description,

6.1.13 Names of personnel: crewman, field engineer, technician, etc.,

6.1.14 Weather conditions, and

6.1.15 General remarks.

7. Precision and Bias

7.1 This practice does not produce numerical or repeatable data and therefore a precision and bias statement is not applicable.

8. Keywords

8.1 consolidation; direct shear; identification; liner; representative; ring; sampling

The American Society for Testing and Materials takes no position respecting the validity of any patent rights asserted in connection with any item mentioned in this standard. Users of this standard are expressly advised that determination of the validity of any such patent rights, and the risk of infringement of such rights, are entirely their own responsibility.

This standard is subject to revision at any time by the responsible technical committee and must be reviewed every five years and if not revised, either reapproved or withdrawn. Your comments are invited either for revision of this standard or for additional standards and should be addressed to ASTM Headquarters. Your comments will receive careful consideration at a meeting of the responsible technical committee, which you may attend. If you feel that your comments have not received a fair hearing you should make your views known to the ASTM Committee on Standards, 1916 Race St., Philadelphia, PA 19103.

Standard Test Method for (Field Procedure) for Instantaneous Change in Head (Slug Tests) for Determining Hydraulic Properties of Aquifiers[1]

This standard is issued under the fixed designation D 4044; the number immediately following the designation indicates the year of original adoption or, in the case of revision, the year of last revision. A number in parentheses indicates the year of last reapproval. A superscript epsilon (ε) indicates an editorial change since the last revision or reapproval.

1. Scope

1.1 This test method covers the field procedure for performing an in situ instantaneous change in head (slug) test.

1.2 This test method is used in conjunction with an analytical procedure such as Test Method D 4104 to determine aquifer properties.

1.3 The values stated in the SI units are to be regarded as standard.

1.4 *This standard does not purport to address all of the safety problems, if any, associated with its use. It is the responsibility of the user of this standard to establish appropriate safety and health practices and determine the applicability of regulatory limitations prior to use.*

2. Referenced Documents

2.1 *ASTM Standards:*

D 653 Terminology Relating to Soil, Rock, and Contained Fluids[2]

D 4043 Guide for Selection of Aquifer-Test Method in Determination of Hydraulic Properties by Well Techniques[2]

D 4104 Test Method (Analytical Procedure) for Determining Transmissivity of Confined Nonleaky Aquifers by Overdamped Well Response to Instantaneous Change in Head (Slug Test)[2]

D 4750 Test Method for Determining Subsurface Liquid Levels in a Borehole or Monitoring Well (Observation Well)[2]

3. Terminology

3.1 *Definitions:*

3.1.1 *control well*—well by which the aquifer is stressed, for example, by pumping, injection, or imposing a constant change of head.

3.1.2 *hydraulic conductivity—(field aquifer tests)*, the volume of water at the existing kinematic viscosity that will move in a unit time under a unit hydraulic gradient through a unit area measured at right angles to the direction of flow.

3.1.3 *observation well*—a well open to all or part of an aquifer.

3.1.4 *overdamped-well response*—characterized by the water level returning to the static level in an approximately exponential manner following a sudden change in wat level. (See for comparison *underdamped well.*)

3.1.5 *slug*—a volume of water or solid object used induce a sudden change of head in a well.

3.1.6 *storage coefficient*—the volume of water an aqui releases from or takes into storage per unit surface area of t aquifer per unit change in head. For a confined aquifer, it equal to the product of specific storage and aquifer thickne For an unconfined aquifer, the storage coefficient is appr imately equal to the specific yield.

3.1.7 *transmissivity*—the volume of water at the existi kinematic viscosity that will move in a unit time under a u hydraulic gradient through a unit width of the aquifer.

3.1.8 *underdamped-well response*—characterized by water level oscillating about the static water level followin sudden change in water level. (See for compari *overdamped well.*)

3.1.9 For definitions of other terms used in this method, refer to Terminology D 653.

4. Summary of Test Method

4.1 This test method describes the field procedures volved in conducting an instantaneous head (slug) test. slug test method involves causing a sudden change in hea a control well and measuring the water level response wit that control well. Head change may be induced by sudd injecting or removing a known quantity or "slug" of w into the well, rapid removal of a mechanical "slug" f below the water level, increasing or decreasing the pressure in the well casing, or emplacement of a mechar slug into the water column.

4.2 The water-level response in the well is a functio the mass of water in the well and the transmissivity coefficient of storage of the aquifer. One method of ana of the data from this field practice is described in Method D 4104.

5. Significance and Use

5.1 This slug test field procedure is used in conjun with a slug test analytical procedure, such as Test Me D 4104 to provide quick and relatively inexpensive estir of transmissivity. The value of coefficient of storage c mined from this test method is considered less reliable the value of transmissivity.

5.2 The slug test provides an advantage over pun tests in that it does not require the disposal of the quantities of water that may be produced. This is of sp importance when testing a potentially contaminated aq However, slug tests reflect conditions near the well, the

[1] This test method is under the jurisdiction of ASTM Committee D-18 on Soil and Rock and is the direct responsibility of Subcommittee D18.21 on Ground Water and Vadose Zone Investigations.

Current edition approved June 15, 1991. Published August 1991.

[2] *Annual Book of ASTM Standards*, Vol 04.08.

are influenced by near-well conditions, such as gravel pack, poor well development, and skin effects.

5.3 Slug tests may be made in aquifer materials of lower hydraulic conductivity than generally considered suitable for hydraulic testing with pumping tests.

5.4 The method of data analysis (analytical procedure) should be known prior to the field testing to ensure that all appropriate dimensions and measurements are properly recorded. Selection of the analytical procedure can be aided by using Guide D 4043.

6. Apparatus

6.1 *Slug-Inducing Equipment*—This test method describes the types of equipment that can be used. Because of the infinite variety of testing conditions and because similar results can be achieved with different apparatus, engineering specifications for apparatus are not appropriate. This test method specifies the results to be achieved by the equipment to satisfy the requirements of this practice.

6.2 *Water-Level Measurement Equipment*—The method of water level measurement may be dependent on the method selected for injection or withdrawal of water, and the nature of the response of the well. For an open-well test, that is, where access to the water level is open to the surface, measure water levels manually as described in Test Method D 4750, by an automatic recording device linked to a float, or with a pressure transducer linked to a data logger or display device. A pressure transducer linked to a data logger will be necessary for a test in a closed well in which water-level changes are induced by vacuum or pressure on the control well and where manual measurements do not provide measurements of adequate frequency (see 9.3).

7. Conditioning

7.1 *Pre-Test Procedure:*

7.1.1 *Measuring Pre-Test Water Levels*—Measure the water level in the control well before beginning the test for a period of about the duration of the test to determine the pre-test water level fluctuations and to determine a reference static water level.

8. Procedure

8.1 Cause a change in water level, either a rise or decline, by one of the following methods:

8.1.1 *Water Slug*—Inject or withdraw water of a known quantity into or from the control well.

8.1.2 *Mechanical Slug*—Inject or withdraw a mechanical slug below or above the water level. The water within the control well will then rise or decline an amount equal to the volume of the mechanical slug.

8.1.3 *Release Vacuum or Pressure*—A method of simulating the injection or withdrawal of a slug of water is by the release of a vacuum or pressure on a tightly capped (shut-in) control well. After the release, the vacuum or pressure is held constant.

NOTE—There is no fixed requirement for the magnitude of the change in water level. Similar results can be achieved with a wide range in induced head change. Some considerations include a magnitude of change that can be readily measured with the apparatus selected, for example the head change should be such that the method of measurement should be accurate to 1 % of the maximum head change. Generally, an induced head change of from one-third to one meter is adequate.

The mechanical model for the test assumes the head change is induced instantaneously. Practically, a finite time is required to effect a head change. Selection of time zero can be selected experimentally. Refer to the method of analysis (such as Test Method D 4104) to determine time zero and to evaluate the suitability of the change effected in the well.

8.2 Measure water-level response to the change in water level. The frequency of water-level measurement during the test is dependent upon the hydraulic conductivity of the material being tested. During the early portions of the test, measure water levels at closely-spaced intervals. Measurements of water level made manually with a tape should be made as frequently as possible until the water level has recovered about 60 to 80 %. Increase the length of time between measurements with increasing duration of the test. Since most methods of data analysis are curve-fitting techniques, it is essential that water levels are measured frequently enough to define the water-level response curve (see Test Method D 4104).

8.2.1 In aquifer-well systems where water-level changes are rapid, it may be necessary to use a pressure transducer linked to an electronic data logger to measure and record the water levels frequently enough to adequately define the water-level response. The use of transducers and data loggers generally provides a greater than adequate frequency of measurements, ranging from several measurements per second in the early part of the test to a specified frequency in the later portions of a test. With such equipment, the test analysis may use a reduced data set of measurements to calculate the hydraulic properties (see Test Method D 4104 for analysis of water level data).

8.3 *Post-Test Procedure*—Make preliminary analysis of data before leaving the field and evaluate the test regarding the criteria given in this test method and the method of analysis, such as Test Method D 4104 to determine if the test should be rerun.

9. Report

9.1 Include the information listed below in the report of the field procedure:

9.2 All test reports should include the following:

9.2.1 Date, time, and well identification,

9.2.2 Method of slug withdrawal or injection, as well as whether the test is a falling head (injection) or a rising head (withdrawal) test,

9.2.3 Inside diameter of well screen and well casing above screen,

9.2.4 Depth of well,

9.2.5 Length and depth setting of screen,

9.2.6 Volume of mechanical slug or pressure change imposed on water level, and

9.2.7 Pre-testing water-level trend.

9.3 Establish and record the measurement point from which all measurements of water level are made. Record date, time, and depth to water level below measurement point of all water levels.

9.4 Water levels measured during the test should be recorded with information on date, clock time, and time

since test started. If the water levels are measured with a pressure transducer and recorded with an electronic data logger, record the name of the data file on the data logger.

10. Precision and Bias

10.1 It is not practical to specify the precision of this test method because the response of aquifer systems during aquifer tests is dependent upon ambient system stresses. No statement can be made about bias because no true reference values exist.

11. Keywords

11.1 aquifers; aquifer tests; ground water; hydraulic conductivity; hydraulic properties; instantaneous head test; slug tests; storage coefficient; transmissivity

The American Society for Testing and Materials takes no position respecting the validity of any patent rights asserted in connection with any item mentioned in this standard. Users of this standard are expressly advised that determination of the validity of any such patent rights, and the risk of infringement of such rights, are entirely their own responsibility.

This standard is subject to revision at any time by the responsible technical committee and must be reviewed every five years and if not revised, either reapproved or withdrawn. Your comments are invited either for revision of this standard or for additional standards and should be addressed to ASTM Headquarters. Your comments will receive careful consideration at a meeting of the responsible technical committee, which you may attend. If you feel that your comments have not received a fair hearing you should make your views known to the ASTM Committee on Standards, 1916 Race St., Philadelphia, PA 19103.

000247

Designation: D 4104 - 91

Standard Test Method (Analytical Procedure) for Determining Transmissivity of Nonleaky Confined Aquifers by Overdamped Well Response to Instantaneous Change in Head (Slug Test)[1]

This standard is issued under the fixed designation D 4104; the number immediately following the designation indicates the year of original adoption or, in the case of revision, the year of last revision. A number in parentheses indicates the year of last reapproval. A superscript epsilon (ε) indicates an editorial change since the last revision or reapproval.

1. Scope

1.1 This test method covers the determination of transmissivity from the measurement of force-free (overdamped) response of a well-aquifer system to a sudden change of water level in a well. Force-free response of water level in a well to a sudden change in water level is characterized by recovery to initial water level in an approximate exponential manner with negligible inertial effects.

1.2 The analytical procedure in this test method is used in conjunction with the field procedure in Test Method D 4044 for collection of test data.

1.3 *Limitations*—Slug tests are considered to provide an estimate of transmissivity. The determination of aquifer storage coefficient is less reliable. Although the assumptions of this test method prescribe a fully penetrating well (a well open through the full thickness of the aquifer), the slug test method is commonly conducted using a partially penetrating well. Such a practice may be acceptable for application under conditions in which the aquifer is stratified and horizontal hydraulic conductivity is much greater than vertical hydraulic conductivity. In such a case the test would be considered to be representative of the average hydraulic conductivity of the portion of the aquifer adjacent to the open interval of the well.

1.4 The values stated in SI units are to be regarded as standard.

1.5 *This standard does not purport to address all of the safety problems, if any, associated with its use. It is the responsibility of the user of this standard to establish appropriate safety and health practices and determine the applicability of regulatory limitations prior to use.*

2. Referenced Documents

2.1 *ASTM Standards:*

D 653 Terminology Relating to Soil, Rock, and Contained Fluids[2]

D 4043 Guide for Selection of Aquifer-Test Method in Determining of Hydraulic Properties by Well Techniques[3]

D 4044 Test Method (Field Procedure) for Instantaneous Change in Head (Slug Test) for Determining Hydraulic Properties of Aquifers[3]

D 4750 Test Method for Determining Subsurface Liquid Levels in a Borehole or Monitoring Well (Observation Well)[2]

3. Terminology

3.1 *Definitions:*

3.1.1 *aquifer, confined*—an aquifer bounded above and below by confining beds and in which the static head is above the top of the aquifer.

3.1.2 *confining bed*—a hydrogeologic unit of less permeable material bounding one or more aquifers.

3.1.3 *control well*—well by which the aquifer is stressed, for example, by pumping, injection, or change of head.

3.1.4 *head, static*—the height above a standard datum of the surface of a column of water (or other liquid) that can be supported by the static pressure at a given point.

3.1.5 *hydraulic conductivity—(field aquifer tests)*, the volume of water at the existing kinematic viscosity that will move in a unit time under a unit hydraulic gradient through a unit area measured at right angles to the direction of flow.

3.1.6 *observation well*—a well open to all or part of an aquifer.

3.1.7 *overdamped-well response*—characterized by the water level returning to the static level in an approximately exponential manner following a sudden change in water level. (See for comparison *underdamped-well response.*)

3.1.8 *slug*—a volume of water or solid object used to induce a sudden change of head in a well.

3.1.9 *specific storage*—the volume of water released from or taken into storage per unit volume of the porous medium per unit change in head.

3.1.10 *storage coefficient*—the volume of water an aquifer releases from or takes into storage per unit surface area of the aquifer per unit change in head. For a confined aquifer, the storage coefficient is equal to the product of specific storage and aquifer thickness. For an unconfined aquifer, the storage coefficient is approximately equal to the specific yield.

3.1.11 *transmissivity*—the volume of water at the existing kinematic viscosity that will move in a unit time under a unit hydraulic gradient through a unit width of the aquifer.

3.1.12 *underdamped-well response*—response characterized by the water level oscillating about the static water level following a sudden change in water level. (See for comparison *overdamped-well response.*)

3.1.13 For definitions of other terms used in this test method, see Terminology D 653.

3.2 *Symbols and Dimensions:*

3.2.1 J_0 [nd]—zero-order Bessel function of the first kind.

[1] This test method is under the jurisdiction of ASTM Committee D-18 on Soil and Rock and is the direct responsibility of Subcommittee D18.21 on Ground Water and Vadose Zone Investigations.

Current edition approved June 15, 1991. Published August 1991.

[2] *Annual Book of ASTM Standards*, Vol 04.08.

[3] *Annual Book of ASTM Standards*, Vol

248

3.2.2 J_1 [nd]—first-order Bessel function of the first kind.
3.2.3 K [LT^{-1}]—hydraulic conductivity.
3.2.4 T [L^2T^{-1}]—transmissivity.
3.2.5 S [nd]—storage coefficient.
3.2.6 Y_0 [nd]—zero order Bessel function of the second kind.
3.2.7 Y_1 [nd]—first order Bessel function of the second kind.
3.2.8 r_c [L]—radius of control-well casing or open hole in interval where water level changes.
3.2.9 r_w [L]—radius of control well screen or open hole adjacent to water bearing unit.
3.2.10 u—variable of integration.
3.2.11 H [L]—change in head in control well.
3.2.12 H_o [L]—initial head rise (or decline) in control well.
3.2.13 t—time.
3.2.14 β—Tt/r_c^2.
3.2.15 α—r_w^2S/r_c^2.

4. Summary of Test Method

4.1 This test method describes the analytical procedure for analyzing data collected during an instantaneous head (slug) test using an overdamped well. The field procedures in conducting a slug test are given in Test Method D 4044. The analytical procedure consists of analyzing the recovery of water level in the well following the change in water level induced in the well.

4.2 *Solution*—The solution given by Cooper et al (**1**)[4] is as follows:

$$H = \frac{2H_o}{\pi}\int_0^\infty [[\exp(-\beta u^2/\alpha)[J_0(ur/r_w)[uY_0(u) - 2\alpha Y_1(u)] - Y_0(ur/r_w)[uJ_0(u) - 2\alpha J_1(u)]]/\Delta(u)]]du \quad (1)$$

where:

$$\alpha = r_w^2S/r_c^2,$$
$$\beta = Tt/r_c^2,$$

and:

$$\Delta(u) = [uJ_0(u) - 2\alpha J_1(u)]^2 + [uY_0(u) - 2\alpha Y_1(u)]^2$$

NOTE 1—Other analytical solutions are described by Hvorslev (**2**) Bouwer and Rice (**3**), and Bouwer (**4**).

5. Significance and Use

5.1 *Assumptions of Solution of Cooper et al* (**1**):

5.1.1 The head change in the control well is instantaneous at time $t = 0$.

5.1.2 Well is of finite diameter and fully penetrates the aquifer.

5.1.3 Flow in the nonleaky aquifer is radial.

5.2 *Implications of Assumptions:*

5.2.1 The mathematical equations applied ignore inertial effects and assume the water level returns the static level in an approximate exponential manner. The geometric configuration of the well and aquifer are shown in Fig. 1.

5.2.2 Assumptions are applicable to artesian or confined conditions and fully penetrating wells. However, this test method is commonly applied to partially penetrating wells and in unconfined aquifers where it may provide estimates of hydraulic conductivity for the aquifer interval adjacent to the open interval of the well if the horizontal hydraulic conductivity is significantly greater than the vertical hydraulic conductivity.

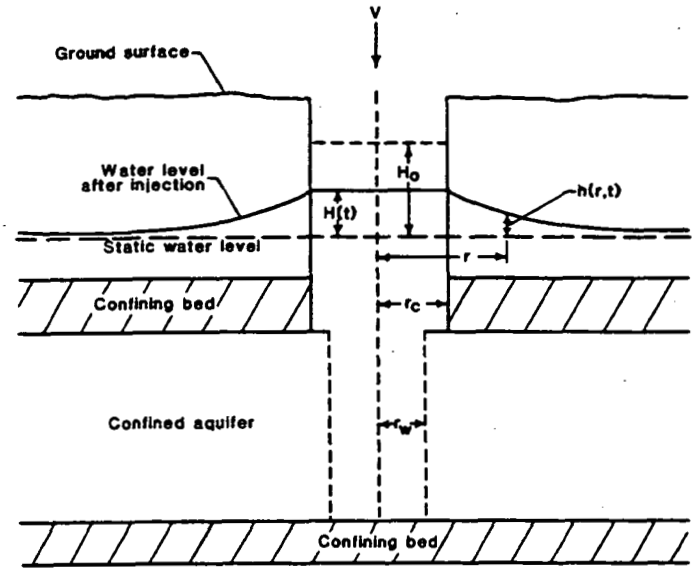

FIG. 1 Cross Section Through a Well in Which a Slug of Water is Suddenly Injected

5.2.3 As pointed out by Cooper et al (**1**) the determination of storage coefficient by this test method has questionable reliability because of the similar shape of the curves, whereas, the determination of transmissivity is not as sensitive to choosing the correct curve. However, the curve selected should not imply a storage coefficient unrealistically large or small.

6. Procedure

6.1 The overall procedure consists of conducting the slug test field procedure (see Test Method D 4044) and analysis of the field data, that is addressed in this test method.

6.2 The integral expression in the solution given in Eq (1) cannot be evaluated analytically. A graphical solution for determination of transmissivity and coefficient of storage can be made using a set of type curves that can be drawn from the values in Table 1.

7. Calculation

7.1 Plot, on semilogarithmic paper, a set of type curves of values of $F(\beta, \alpha) = H/H_o$, on the arithmetic scale, as a function of β, on the logarithmic scale from the values of the functions in Table 1.

7.2 Plot, on semilogarithmic paper of the same scale as that of the type-curve plot, the water level data in the control well, expressed as a fraction, H/H_o, on the arithmetic scale, versus time, t, on the logarithmic scale.

NOTE 2—If the water level rise is very rapid with a small disparity between the calculated and measured change in water level, then time = 0 can be used as the instant the change was initiated and H_o can be the calculated rise. If there is a significant time lag between initiation of the head change and the peak rise or decline is significantly less than the

[4] The boldface numbers in parentheses refer to a list of references at the end of the text.

000249

TABLE 1 Values of H/H_o

$\beta = Tt/r_c^2$	α	10^{-1}	10^{-2}	10^{-3}	10^{-4}	10^{-5}
	From Cooper, Bredehoeft, and Papadopulos (1)					
	1.00	0.9771	0.9920	0.9969	0.9985	0.9992
10^{-3}	2.15	0.9658	0.9876	0.9949	0.9974	0.9985
	4.64	0.9490	0.9807	0.9914	0.9954	0.9970
	1.00	0.9238	0.9693	0.9853	0.9915	0.9942
10^{-2}	2.15	0.8860	0.9505	0.9744	0.9841	0.9883
	4.64	0.8293	0.9187	0.9545	0.9701	0.9781
	1.00	0.7460	0.8655	0.9183	0.9434	0.9572
10^{-1}	2.15	0.6289	0.7782	0.8538	0.8935	0.9167
	4.64	0.4782	0.6436	0.7436	0.8031	0.8410
	1.00	0.3117	0.4598	0.5729	0.6520	0.7080
10^{0}	2.15	0.1665	0.2597	0.3543	0.4364	0.5038
	4.64	0.07415	0.1086	0.1554	0.2082	0.2620
	7.00	0.04625	0.06204	0.08519	0.1161	0.1521
	1.00	0.03065	0.03780	0.04821	0.06355	0.08378
	1.40	0.02092	0.02414	0.02844	0.03492	0.04426
10^{1}	2.15	0.01297	0.01414	0.01545	0.01723	0.01999
	3.00	0.009070	0.009615	0.01016	0.01083	0.01169
	4.64	0.005711	0.004919	0.006111	0.006319	0.006554
	7.00	0.003722	0.003809	0.003884	0.003962	0.004046
	1.00	0.002577	0.002618	0.002653	0.002688	0.002725
10^{2}	2.15	0.001179	0.001187	0.001194	0.001201	0.001208
	From Papadopulos, Bredehoeft, and Cooper (5)					
$\beta = Tt/r_c^2$	α	10^{-6}	10^{-7}	10^{-8}	10^{-9}	10^{-10}
	1	0.9994	0.9996	0.9996	0.9997	0.9997
	2	0.9989	0.9992	0.9993	0.9994	0.9995
10^{-3}	4	0.9980	0.9985	0.9987	0.9989	0.9991
	6	0.9972	0.9978	0.9982	0.9984	0.9986
	8	0.9964	0.9971	0.9976	0.9980	0.9982
	1	0.9956	0.9965	0.9971	0.9975	0.9978
	2	0.9919	0.9934	0.9944	0.9952	0.9958
10^{-2}	4	0.9848	0.9875	0.9894	0.9908	0.9919
	6	0.9782	0.9819	0.9846	0.9866	0.9881
	8	0.9718	0.9765	0.9799	0.9824	0.9844
	1	0.9655	0.9712	0.9753	0.9784	0.9807
	2	0.9361	0.9459	0.9532	0.9587	0.9631
10^{-1}	4	0.8828	0.8995	0.9122	0.9220	0.9298
	6	0.8345	0.8569	0.8741	0.8875	0.8984
	8	0.7901	0.8173	0.8383	0.8550	0.8686
	1	0.7489	0.7801	0.8045	0.8240	0.8401
	2	0.5800	0.6235	0.6591	0.6889	0.7139
	3	0.4554	0.5033	0.5442	0.5792	0.6096
	4	0.3613	0.4093	0.4517	0.4891	0.5222
10^{0}	5	0.2893	0.3351	0.3768	0.4146	0.4487
	6	0.2337	0.2759	0.3157	0.3525	0.3865
	7	0.1903	0.2285	0.2655	0.3007	0.3337
	8	0.1562	0.1903	0.2243	0.2573	0.2888
	9	0.1292	0.1594	0.1902	0.2208	0.2505
	1	0.1078	0.1343	0.1620	0.1900	0.2178
	2	0.02720	0.03343	0.04129	0.05071	0.06149
	3	0.01286	0.01448	0.01667	0.01956	0.02320
10^{1}	4	0.008337	0.008898	0.009637	0.01062	0.01190
	5	0.006209	0.006470	0.006789	0.007192	0.007709
	6	0.004961	0.005111	0.005283	0.005487	0.005735
	8	0.003547	0.003617	0.003691	0.003773	0.003863
	1	0.002763	0.002803	0.002845	0.002890	0.002938
10^{2}	2	0.001313	0.001322	0.001330	0.001339	0.001348

calculated change use $t = 0$ as the time of maximum observed change and take H_o as the maximum observed change.

7.3 Overlay the data plot on the set of type curve plots and, with the arithmetic axes coincident, shift the data plot to match one curve or an interpolated curve of the type curve set.

7.4 Using the coordinates of the point, determine the transmissivity and storage coefficient from the following equations:

$$T = \beta r_c^2/t$$

and:

$$S = \alpha r_c^2/r_w^2$$

8. Report

8.1 Prepare a report including the information described in this section. The final report of the analytical procedure will include information from the report on test method selection (see Guide D 4043) and the field testing procedure (see Test Method D 4044).

8.1.1 *Introduction*—The introductory section is intended to present the scope and purpose of the slug test method for determining transmissivity and storage coefficient. Summarize the field hydrogeologic conditions and the field equipment and instrumentation including the construction of the control well, and the method of measurement and of effecting a change in head. Discuss the rationale for selecting the method used (see Guide D 4043).

8.1.2 *Hydrogeologic Setting*—Review information available on the hydrogeology of the site; interpret and describe the hydrogeology of the site as it pertains to the method selected for conducting and analyzing an aquifer test. Compare hydrogeologic characteristics of the site as it conforms and differs from assumptions made in the solution to the aquifer test method.

8.1.3 *Equipment*—Report the field installation and equipment for the aquifer test. Include in the report, well construction information, diameter, depth, and open interval to the aquifer, and location of control well.

8.1.3.1 Report the techniques used for observing water levels, pumping rate, barometric changes, and other environmental conditions pertinent to the test. Include a list of measuring devices used during the test, the manufacturers name, model number, and basic specifications for each major item, and the name and date of the last calibration, if applicable.

8.1.4 *Testing Procedures*—Report the steps taken in conducting the pretest and test phases. Include the frequency of head measurements made in the control well, and other environmental data recorded before and during the testing procedure.

8.1.5 *Presentation and Interpretation of Test Results:*

8.1.5.1 *Data*—Present tables of data collected during the test.

8.1.5.2 *Data Plots*—Present data plots used in analysis of the data. Show overlays of data plots and type curve with match points and corresponding values of parameters at match points.

8.1.5.3 Show calculation of transmissivity and storage coefficient.

8.1.5.4 Evaluate the overall quality of the test on the basis of the adequacy of instrumentation and observations of stress and response and the conformance of the hydrogeologic conditions and the performance of the test to the assumptions (see 5.1).

9. Precision and Bias

9.1 It is not practical to specify the precision of this test method because the response of aquifer systems during aquifer tests is dependent upon ambient system stresses. No statement can be made about bias because no true reference values exist.

10. Keywords

10.1 Aquifers; aquifer tests; control wells; ground water; hydraulic conductivity; observation wells; storage coefficient storativity; transmissivity

REFERENCES

(1) Cooper, H. H., Jr., Bredehoeft, J. D., and Papadopulos, I. S., "Response of a Finite-Diameter Well to an Instantaneous Charge of Water," *Water Resources Research*, Vol 3, No. 1, 1967, pp. 263–269.

(2) Hvorslev, M. J., "Time Lag and Soil Permeability in Ground-Water Observations," Waterways Experiment Station, Corps of Engineers, U.S. Army, Bulletin No. 36, 1951, p. 50.

(3) Bouwer, H., and Rice, R. C., "A Slug Test for Determining Hydraulic Conductivity of Unconfined Aquifers with Completely or Partially Penetrating Wells," *Water Resources Research*, Vol 12, No. 3, 1976, pp. 423–423.

(4) Bouwer, H., "The Bouwer-Rice Slug Test—An Update," *Ground Water*, Vol 27, No. 3, 1989, pp. 304–309.

(5) Papadopulos, I. S., Bredehoeft, J. D., and Cooper, H. H., Jr., "On the Analysis of Slug Test Data," *Water Resources Research*, Vol 9, No. 4, 1973, pp. 1087–1089.

The American Society for Testing and Materials takes no position respecting the validity of any patent rights asserted in connection with any item mentioned in this standard. Users of this standard are expressly advised that determination of the validity of any such patent rights, and the risk of infringement of such rights, are entirely their own responsibility.

This standard is subject to revision at any time by the responsible technical committee and must be reviewed every five years and if not revised, either reapproved or withdrawn. Your comments are invited either for revision of this standard or for additional standards and should be addressed to ASTM Headquarters. Your comments will receive careful consideration at a meeting of the responsible technical committee, which you may attend. If you feel that your comments have not received a fair hearing you should make your views known to the ASTM Committee on Standards, 1916 Race St., Philadelphia, PA 19103.

000251

62

Standard Test Method for One-Dimensional Consolidation Properties of Soils Using Controlled-Strain Loading[1]

This standard is issued under the fixed designation D 4186; the number immediately following the designation indicates the year of original adoption or, in the case of revision, the year of last revision. A number in parentheses indicates the year of last reapproval. A superscript epsilon (ε) indicates an editorial change since the last revision or reapproval.

1. Scope

1.1 This test method covers the determination of the rate and magnitude of consolidation of soil when it is restrained laterally and drained axially and subjected to controlled-strain loading.

NOTE 1—The determination of the rate and magnitude of consolidation of soil when it is subjected to incremental loading is covered by Test Method D 2435.

1.2 The values stated in SI units are to be regarded as the standard. The values stated in inch-pound units are approximate.

1.3 *This standard may involve hazardous materials, operations, and equipment. This standard does not purport to address all of the safety problems associated with its use. It is the responsibility of the user of this standard to establish appropriate safety and health practices and determine the applicability of regulatory limitations prior to use.*

2. Referenced Documents

2.1 *ASTM Standards:*

D 422 Test Method for Particle-Size Analysis of Soils[2]

D 653 Terminology Relating to Soil, Rock, and Contained Fluids[2]

D 854 Test Method for Specific Gravity of Soils[2]

D 1587 Practice for Thin-Walled Tube Sampling of Soils[2]

D 2216 Test Method for Laboratory Determination of Water (Moisture) Content of Soil, Rock, and Soil-Aggregate Mixtures[2]

D 2435 Test Method for One-Dimensional Consolidation Properties of Soils[2]

D 3550 Practice for Ring-Lined Barrel Sampling of Soils[2]

D 4220 Practices for Perserving and Transporting Soil Samples[2]

D 4318 Test Method for Liquid Limit, Plastic Limit, and Plasticity Index of Soils[2]

3. Significance and Use

3.1 Information concerning rate and magnitude of consolidation settlement of soil is essential in the design of earth and earth-supported structures. The results of this method may be used to analyze or estimate one-dimensional consolidation settlements and rates.

3.2 *Strain Rate:*

3.2.1 It is recognized that consolidation test results are strain-rate dependent. Strain rates recommended in this standard are within the range usually encountered in Test Method D 2435.

3.2.2 Field strain rates vary greatly with time, depth below the loaded area, and radial distance from the loaded area. Because field rates cannot be accurately determined or predicted, it is not feasible to relate the laboratory-test strain rate to the field strain rate. However, it may be feasible to relate field pore pressure ratios (u_b σ_v) to laboratory pore pressure ratios. Further research is needed in this area.

3.2.3 The constant-rate-of-strain consolidation test does not address the problem of strain-rate effects but does provide a means for studying strain rate effects.

3.3 This method is not applicable to soils of high permeability, such as sands and other coarse-grained soils, or to partially saturated soils.

3.4 This method makes the following assumptions:

3.4.1 The ratio of soil permeability to soil compressibility is constant,

3.4.2 Flow of soil pore water occurs only in the vertical direction,

3.4.3 Darcy's law for flow through porous media applies,

3.4.4 The soil is saturated,

3.4.5 The soil is homogeneous,

3.4.6 The compressibility of the soil grains and water is negligible,

3.4.7 The log stress versus strain relationship is linear during a short-time interval of loading, and

3.4.8 The distribution of excess pore-water pressures across the specimen is parabolic.

4. Terminology

4.1 *Definitions*—The definitions of terms used in this method shall be in accordance with Terminology D 653.

4.2 *Descriptions of Terms Specific to this Standard:*

4.2.1 *back pressure*—the pore-water pressure at the drainage boundary.

4.2.2 *excess pore-water pressure*, u_b—the pore-water pressure developed at the impervious end of the specimen (usually the base of the specimen) in excess of the back pressure.

4.2.3 *applied vertical stress*, σ_v—the axial stress applied at the drainage boundary in excess of the back pressure.

4.2.4 *pore pressure ratio*—the excess pore water pressure divided by the applied vertical stress.

5. Apparatus

5.1 *Axial Loading Device*—The axial compression device

[1] This test method is under the jurisdiction of ASTM Committee D-18 on Soil and Rock and is the direct responsibility of Subcommittee D18.05 on Structural Properties of Soils.

Current edition approved June 30, 1989. Published October 1989. Originally published as D 4186 – 82. Last previous edition D 4186 – 82.

[2] *Annual Book of ASTM Standards*, Vol 04.08.

000252

may be a screw jack driven by an electric motor through a geared transmission, a platform weighing scale equipped with a screw-jack activated yoke, a hydraulic or pneumatic loading device, or any other compression device with sufficient capacity and control to axially compress the specimen at the constant rate of strain prescribed in 9.6. If the axial loading device is outside the consolidometer, see 5.8.

5.2 *Axial Load-Measuring Device*—The axial load-measuring device may be a load ring, strain-gage load cell, hydraulic load cell, or any other load-measuring device capable of the accuracy prescribed in this paragraph and may be a part of the axial loading device. The axial load-measuring device shall be capable of measuring the axial load to an accuracy of 0.25 % of the maximum load applied to the specimen.

NOTE 2—For a constant rate of deformation to be transmitted from the axial loading device through the load-measuring device, it is important that the load-measuring device be relatively stiff. Some hydraulic load cells or proving rings may not provide sufficient stiffness.

5.3 *Pore-Water Pressure-Measuring Device*—The pore-water pressure-measuring device shall be a differential pressure transducer. Separate pressure transducers for measuring pore-water pressure at the base of the specimen and back pressures may be used if both have the required accuracy and both are monitored during the test. The device shall be constructed and located such that the pore-water pressure at the base of the specimen can be measured with negligible drainage of pore water from the base of the specimen on one side of the transducer. The other side of the transducer measures the back pressure applied to the specimen. Negligible drainage of pore water from the base of the specimen can be attained if the coefficient of volume change of the pore pressure-measuring device and de-aired, water-filled cavities connecting the device to the base of the specimen is less than 10^{-5} in.^{3}/psi (10^{-8} m^3/Pa). The pore pressure-measuring device shall be capable of measuring the pore-water pressure at the base of the specimen to an accuracy of 0.25 % of the maximum anticipated pore pressure.

5.4 *Back Pressure-Maintaining Device*, capable of applying and controlling the back pressure to within ±2.0 %. This device may consist of a reservoir, it may have reservoirs connected to the top and bottom of the specimen and partially filled with de-aired water; the upper part of the reservoir shall be connected to a compressed gas supply, the gas pressure being controlled by a pressure regulator and measured by a pressure gage. (See Note 3.) However, a hydraulic system pressurized by a deadweight acting on a piston or any other pressure-maintaining device capable of applying and controlling the back pressure to the tolerance prescribed in this paragraph may be used. A low volume-change valve shall be provided in the back-pressure measuring device as near as possible to the base of the specimen. This valve, when open, shall permit the application of back pressure to the base of the specimen; when closed, shall prevent the drainage of water from the specimen base and pore-water pressure-measuring device to the reservoir of the back pressure-maintaining device.

NOTE 3—All gas-water interfaces should be small in area relative to area of the specimen and should be in reservoirs connected to the consolidometer by a length of small diameter tubing.

5.5 *Deformation Indicator*—The deformation indicator shall be a dial indicator or displacement transducer having a sensitivity of 0.002 mm (0.0001 in.) and a range of at least 50 % of the specimen height, or other measuring device meeting these requirements for sensitivity and range.

5.6 *Timer*, indicating the elapsed testing time to the nearest 1 s for establishing the rates of strain application prescribed in 9.6.

5.7 *Balances*, devices for determining the mass of the soil specimens as well as portions of the apparatus. All measurements of mass should be accurate to 0.1 %.

5.8 *Consolidometer*, to hold the specimen in a ring that is fixed to a rigid base, with porous stones on each face of the specimen. Any potentially submerged parts of the consolidometer shall be made of a material that is noncorrosive in relation to the soil or other parts of the consolidometer. The bottom of the ring shall form a leak-proof seal with the rigid base capable of withstanding internal pressures of 1400 kPa (200 psi). The consolidometer shall be constructed such that placement of the specimen into the ring and consolidometer will not entrap air at the base of the specimen. The axial loading device and back pressure-maintaining device may be an integral part of the consolidometer. If the design of the consolidometer is such that back pressures affect axial load readings (due to pressure pushing the piston from the consolidometer), the change in readings with changes in back pressure shall be determined by calibration. The consolidometer shall conform to the following requirements:

5.8.1 *Minimum Specimen Diameter* shall be 50 mm (2.0 in.) and shall be at least 6 mm (0.25 in.) less than the diameter of the sample tube if using undisturbed samples, except as indicated in 7.2.

5.8.2 *Minimum Specimen Thickness* shall be 20 mm (0.75 in.) but shall be not less than 10 times the maximum grain diameter as determined in accordance with Method D 422.

5.8.3 *Minimum-Specimen-Diameter-to-Thickness Ratio* shall be 2.5.

5.8.4 *Thickness of the Ring* shall be such that, under assumed hydrostatic stress conditions in the specimen, the change in diameter of the ring will not exceed 0.03 % under the greatest load applied.

5.8.5 *Ring* shall be made of a material that is noncorrosive in relation to the soil and pore fluid being tested. The inner surface shall be highly polished or shall be coated with a low-friction material.

5.9 *Porous Disk:*

5.9.1 The porous stones shall be of silicon carbide, aluminum oxide, metal, or other suitable material that is not attacked by the soil or soil moisture and shall be of medium grade. For soft fine-grain soils, a fine-grade porous stone shall be used. The stone shall be fine enough that the soil will not extrude into the pores, but have sufficient permeability so as not to impede the flow of water from the specimen. (Exact criteria have not been established.)

5.9.2 The diameter of the top stone shall be 0.2 to 0.5 mm (0.01 to 0.02 in.) less than that of the ring.

5.9.3 The stone shall be thick enough to prevent breaking. The top stone shall be loaded through a corrosion-resistant plate of sufficient rigidity to prevent breakage of the stone.

5.10 *Moist Room*—In climates where moisture loss

000253

during preparation exceeds 0.1 %, the specimen shall be prepared in a moist room.

5.11 *Trimmer or Cylindrical Cutter*, for trimming the specimen down to the inside diameter of the consolidometer ring with a minimum of disturbance.

5.12 *Specimen-Measuring Device*, capable of measuring specimen height and diameter to the nearest 0.02 mm (0.001 in.).

5.13 *Drying Oven*, that can be maintained at 230 ± 9°F (110 ± 5°C).

5.14 *Miscellaneous Equipment*—Specimen trimming and carving tools, including spatulas, knives, and wire saws, moisture content cans, and data sheets as required.

6. Sampling

6.1 Sampling and field investigation shall be conducted in accordance with Practice D 1587. Specimens cut from block samples may also be used.

6.2 If suitable specimens can be obtained using Practice D 3550, then they may be used.

6.3 Transport and handling of samples shall be conducted in accordance with Practice D 4220.

7. Specimens

7.1 Prepare the specimen so moisture loss is less than 0.1 %; if necessary, prepare the specimen in a moist room. Trim the specimen to the inside diameter of the consolidometer ring. Fill with remolded soil any minor indentations in the specimen that would leave voids between the specimen and the ring. Place the specimen in the ring and trim it flush with the plane surface of the ring. The surface must be smooth. A specimen ring with the cutting edge attached provides the most accurate fit in most soils.

7.2 Organic soils, such as peat, and those soils that are easily damaged, may be transferred directly from the sampling tube to the ring where the ring and tube sizes have been selected for this purpose, provided that the cutting edge of the ring has the same diameter as the sample.

7.3 Determine the mass and height of the specimen. Record the specimen mass, height, and diameter.

NOTE 4—Precautions should be taken to minimize disturbance of the soil or changes in moisture and density during specimen preparation; vibration, distortion, and compression must be avoided.

7.4 Use the material trimmed adjacent to the specimen (see 7.1) to determine the natural moisture content (based on dry mass) in accordance with Method D 2216 and the specific gravity in accordance with Test Method D 854. Determine initial wet weight of the specimen and its volume from the mass, diameter, and height of the specimen ring. A more accurate determination of the specimen dry weight and moisture is found by drying the specimen at the end of the test (see 9.11). The value determined from the trimmings is approximate but permits determining the void ratio before the test is complete. The specific gravity can be estimated where an accurate void ratio is not needed.

7.5 The liquid and plastic limits as determined by Test Method D 4318, are useful in identifying the soil and in correlating the results of tests on different soils. These tests may also be performed on the trimmings.

8. Preparation of Apparatus

8.1 De-air the water in the back pressure-maintaining device and pore-water pressure-measuring system (see 5.3 and 5.4).

8.2 Saturate the porous stones with de-aired water.

8.3 Place the bottom porous stone in the consolidometer so as not to entrap any air in the pore water pressure-measuring system.

NOTE 5—Guidelines for system saturation may be found in one or more of the references listed at the end of this method.

9. Procedure

9.1 Assemble the specimen, ring, porous stones, and loading plate in the consolidometer. Avoid entrapping any air between the bottom porous stone and the specimen.

9.2 Place the consolidometer in the axial loading device, adjust the deformation indicator for the initial or zero reading, and apply a seating pressure of 5 kPa (100 lbf/ft^2). The axial loading device may be set to maintain constant seating pressure or maintain a constant specimen height. If a constant specimen height is desired, the seating pressure required to maintain constant specimen height must be recorded. (For very soft soils, a seating pressure of 2.5 kPa (50 lbf/ft^2), or less, is desirable.)

9.3 Check to ensure that the system formed by the water reservoirs of the back pressure-maintaining device and the consolidometer is completely de-aired. Open the valve connecting the consolidometer base to a de-aired water source and fill the reservoir to the appropriate level. Apply the appropriate value of back pressure simultaneously to the top and bottom of the specimen for the appropriate length of time to ensure complete saturation of the specimen, or to ensure as near complete saturation of the specimen as practical. The back pressure shall be applied slowly to specimens having low initial degrees of saturation to minimize deformation of the specimen and prestressing.

9.4 If necessary (see 5.8), adjust the axial load-measuring device to compensate for the load produced by the back pressure, or record the axial load produced on the axial load-measuring device by the back pressure (no volume change), and subtract this value from all load readings.

9.5 If the axial loading device is set to maintain constant seating pressure, record the amount of consolidation or swell that occurs prior to controlled-strain loading. If the axial loading device is set to maintain constant specimen height, record the decrease or increase in axial load that occurs prior to controlled-strain loading.

9.6 *Strain Rate Selection*—It is desirable to select a strain rate that will cause the absolute value of the excess pore-water pressure to be between 3 and 30 % (See Note 6) of the applied vertical stress at any time during the test.

NOTE 6—To achieve this, it is good practice to target a maximum value of 20 % and in no case may the maximum valve exceed 30 %. Guidelines for strain rate selection may be found in one or more of the references listed at the end of this method. The excess pore-water pressure may be limited to values less than 30 % for purposes of getting results consistent with incremental loading tests (Test Method D 2435).

9.7 *Axial Loading*—Close the valve connecting the specimen base to the back pressure-maintaining device and begin to apply the axial load so as to produce axial strain at the constant rate selected in 9.6. Record axial load, excess

000254

pore-water pressure, deformation, and elapsed time values at approximately 1-min intervals for the first 10 min, 5-min intervals for the next 1 h, and 15-min intervals thereafter. Take sufficient readings to define the stress-strain curve; hence more frequent readings may be required when significant changes in test parameters occur. Continuous recording or plotting, or both, may be used to obtain necessary data. Continue the loading until the desired stress or strain is obtained. When axial loading is complete, allow the excess pore-water pressure to dissipate at constant axial load or constant deformation and monitor axial load, deformation, and excess pore pressure.

9.8 *Secondary Compression* may be evaluated at any time during the test. To obtain secondary compression data, interrupt the controlled-strain axial loading at any preselected axial load and maintain the axial-load constant. Continue to record axial load, excess pore-water pressure, deformation, and elapsed time as suggested in 9.7. In addition, record deformation and elapsed time at time intervals of 0.1, 0.25, 0.5, 1, 2, 4, 8, 15, and 30 min and 1, 2, 4, 8, etc. h, measured from the time of interruption of controlled-strain loading. Readings shall continue at least until the slope of the characteristic linear secondary portion of the deformation versus log of time plot is apparent. If further axial loading is required, resume the controlled-strain axial loading at the previous constant strain rate and record axial load, excess pore water pressure, deformation, and elapsed time at the 1, 5, and 15-min intervals described in 9.7. The procedure in this paragraph may be repeated at subsequent higher stress levels, when necessary.

NOTE 7—Interruption of the controlled-strain test to obtain secondary compression data under constant load may affect the void ratio-effective stress relationship. Further research is needed to define these effects.

9.9 *Rebound*—When rebound or unloading characteristics are desired, unload the specimen at a constant strain rate so that a positive total vertical stress is maintained. (See Note 8.) The excess pore water pressure will become negative. Back pressures must be sufficiently high or strain rates sufficiently low to maintain the pressure at the base of the specimen greater than atmospheric pressure. If the coefficient of consolidation for the rebound portion is desired, back pressures must be sufficiently high or strain rates sufficiently low to maintain a greater pressure at the base of the specimen than the back pressure required for saturation. Record axial load, excess pore-water pressure, deformation, and elapsed time at the 1, 5, and 15-min intervals described in 9.7. When rebound is complete, allow the excess pore water pressure to dissipate at constant axial load or constant deformation.

NOTE 8—Some have found that unloading strain rates on the order of one-tenth the loading strain rates are sufficient to maintain positive total vertical stress on the specimen and keep reasonable values of pore water pressures at the base.

9.10 An alternative loading, unloading, or reloading schedule may be employed that reproduces the construction stress changes, or obtains better definition of some part of the stress-strain (or stress-void ratio) curve, or aids in interpreting the field behavior of the soil. This shall be indicated clearly on the test results.

9.11 At the completion of the test, remove the entire specimen from the consolidometer, weigh, oven-dry, and reweigh to obtain the weight of solids.

10. Calculation

10.1 Calculate the initial void ratio, water content, unit weight, and degree of saturation, based on the dry weight of the total specimen. Specimen volume is computed from values measured in 7.3. Compute volume of solids by dividing the dry weight of specimen by the specific gravity of the solids. The volume of voids is assumed to be the difference between the specimen volume and the volume of the solids.

10.2 Calculate void ratio, e (or alternatively, axial strain, ϵ), total vertical stress, σ_v, and average effective vertical stress, σ'_v for each set of values recorded in 9.7 through 9.9.

10.2.1 Calculate the void ratio as follows:

$$e = e_0 - \Delta H/H_s$$

where:

e_0 = initial void ratio,
ΔH = deformation,
H_s = height of solids; volume of solids divided by the cross-sectional area of the specimen.

10.2.2 Calculate the axial strain as follows:

$$\epsilon = \Delta H/H_0$$

where:

H_0 = initial height of the specimen as measured in 7.3.

10.2.3 Calculate the applied axial stress as follows:

$$\sigma_v = P/A$$

where:

P = applied axial load (see Note 9), and
A = cross-sectional area of the specimen.

10.2.4 Calculate the average effective vertical stress (see 3.4.8) as follows:

NOTE 9—If applied axial load is measured outside the cell, the load must be corrected to account for the force caused by the back pressure acting on the piston.

$$\sigma'_v = (\sigma_v^3 - 2\sigma_v^2 u_b + \sigma_v u_b^2)^{1/3}$$

where:

u_b = excess pore-water pressure measured at the base of the specimen.

10.3 When the excess pore-water pressure measured at the base of the specimen exceeds 3 kPa (0.5 psi), calculate the coefficient of consolidation, C_v, for the interval between two sets of readings (see 3.4.7), recorded in 9.7 through 9.9, as follows:

$$c_v = -\frac{H^2 \log\left[\frac{\sigma_{v2}}{\sigma_{v1}}\right]}{2\Delta t \log\left[1 - \frac{u_b}{\sigma_v}\right]}$$

where:

σ_{v1} = applied axial stress at time t_1
σ_{v2} = applied axial stress at time t_2
H = average specimen height between t_1 and t_2
Δt = elapsed time between t_1 and $t_2 = t_2 - t_1$
u_b = average excess pore pressure between t_2 and t_1, and
σ_v = average total applied axial stress between t_2 and t_1.

000255

If strain rates are changed at any time during the test, the values of C_v calculated at those times may be inaccurate.

NOTE 10—The above averages are obtained from one-half the sum of the two values.

10.3.1 It is best to compute C_v between consecutive readings and assign the value of C_v to the average value of σ'_v between the two readings.

10.3.2 If the values of effective vertical stress do not change significantly between consecutive readings, the time interval may be increased.

11. Report

11.1 The report shall include the following information:

11.1.1 Identification and description of sample, including whether soil is undisturbed, remolded, compacted, or otherwise prepared,

11.1.2 Initial moisture content,

11.1.3 Initial wet unit weight,

11.1.4 Initial percent saturation,

11.1.5 If void ratio calculations are made, value of specific gravity of solids in the calculations,

11.1.6 Condition of test (value of back pressure, swell or consolidation during backpressure or seating pressure necessary to maintain constant height, strain rate(s) during loading and unloading),

11.1.7 Plot of void ratio versus log of average effective vertical stress or axial strain versus log of average effective vertical stress,

11.1.8 Plot of coefficient of consolidation versus log of average effective vertical stress,

11.1.9 Plot of pore pressure versus log of average effective vertical stress.

11.1.10 Plot of pore pressure ratio versus log of average effective vertical stress.

11.1.11 For tests in which secondary compression data were obtained, a plot of deformation versus log of time shall be provided, and

11.1.12 Departures from the procedure outlined, including special loading sequences.

12. Precision

12.1 Undisturbed soil samples from homogeneous soil deposits at the same location often exhibit significantly different consolidation properties. No method exists to evaluate the precision of a group of consolidation tests on undisturbed samples, due to sample variability.

12.2 A suitable test material and method of sample preparation have not been developed for the determination of laboratory variances, due to the difficulty in producing identical cohesive soil samples. No estimates of precision for this test method are available.

REFERENCES

(1) Black, D. K., and Lee, K. L., "Saturated Laboratory Samples by Back Pressure," *Journal of the Soil Mechanics and Foundations Division*, ASCE, Vol 99, No. SM1, Proc Paper 9484, 1973, pp. 75–93.

(2) Gorman, C. T., "Constant-Rate-of-Strain and Controlled-Gradient Consolidation Testing," *Research Report 448*, Division of Research, Kentucky Department of Transportation, May 1976.

(3) Gorman, C. T., "Strain-Rate Selection in the Constant-Rate-of-Strain Consolidation Test," *Research Report 556*, Division of Research, Kentucky Department of Transportation, October 1980.

(4) Deen, R. C., Drnevich, V. P., Gorman, C. T., and Hopkins, T. C., "Constant-Rate-of-Strain and Controlled-Gradient Consolidation Testing," *Geotechnical Testing Journal*, ASTM, Vol 1, No. 1, March 1978, pp. 3–15.

(5) Lowe, John, III, "New Concepts in Consolidation and Settlement Analysis," *Journal of Geotechnical Division*, ASCE, Vol 100, No.GT6, Proc Paper 10623, June 1974, pp. 571–612.

(6) Lowe, John, III, Jonas, E., and Obrician, V., "Controlled Gradient Consolidation Test," *Journal of the Soil Mechanics and Foundations Division*, ASCE, Vol 95, No. SM1, January 1969.

(7) Lowe, John, III, Zaccheo, P. F., and Feldman, H. S., "Consolidation Testing with Back Pressure," *Journal of the Soil Mechanics and Foundations Division*, ASCE, Vol 90, No. SM5, September 1964.

(8) Smith, R. E., and Wahls, H. E., "Consolidation under Constant Rates of Strain," *Journal of the Soil Mechanics and Foundations Division*, ASCE, Vol 95, No. SM2, March 1969.

(9) Wissa, A. E. Z., Christian, J. T., Davis, E. H., and Heiberg, S., "Consolidation at Constant Rate of Strain," *Journal of the Soil Mechanics and Foundations Division*, ASCE, Vol 97, No. SM10, October 1971.

(10) Armour, D.W., Jr., and Drnevich, V.P., "Improved Techinques for the Constant-Rate-of-Strain Consolidation of Soils: Testing and Evaluation, ASTM STP 892, Yong R.N. and Townsend F.C., Eds., American Society for Testing Materials, Phiadelphia, 1986, pp. 170-183.

(11) Mesri, G., and Castro, A., "C/C Concept and K During Secondary Compression," Journal of the Geotechnical Engineering Div., ASCE, Vol. 113, No. GT3, March 1987, pp. 230-247.

The American Society for Testing and Materials takes no position respecting the validity of any patent rights asserted in connection with any item mentioned in this standard. Users of this standard are expressly advised that determination of the validity of any such patent rights, and the risk of infringement of such rights, are entirely their own responsibility.

This standard is subject to revision at any time by the responsible technical committee and must be reviewed every five years and if not revised, either reapproved or withdrawn. Your comments are invited either for revision of this standard or for additional standards and should be addressed to ASTM Headquarters. Your comments will receive careful consideration at a meeting of the responsible technical committee, which you may attend. If you feel that your comments have not received a fair hearing you should make your views known to the ASTM Committee on Standards, 1916 Race St., Philadelphia, PA 19103.

000256

Designation: D 4220 – 89

Standard Practices for Preserving and Transporting Soil Samples[1]

This standard is issued under the fixed designation D 4220; the number immediately following the designation indicates the year of original adoption or, in the case of revision, the year of last revision. A number in parentheses indicates the year of last reapproval. A superscript epsilon (ε) indicates an editorial change since the last revision or reapproval.

1. Scope

1.1 These practices cover procedures for preserving soil samples immediately after they are obtained in the field and accompanying procedures for transporting and handling the samples.

1.2 *Limitations*—These practices are not intended to address requirements applicable to transporting of soil samples known or suspected to contain hazardous materials.

1.3 *This standard may involve hazardous materials, operations, and equipment. This standard does not purport to address all of the safety problems associated with its use. It is the responsibility of the user of this standard to establish appropriate safety and health practices and determine the applicability of regulatory limitations prior to use.* See Section 7.

2. Referenced Documents

2.1 *ASTM Standards:*

D 420 Practice for Investigating and Sampling Soil and Rock for Engineering Purposes[2]

D 653 Terminology Relating to Soil, Rock, and Contained Fluids[2]

D 1452 Practice for Soil Investigation and Sampling by Auger Borings[2]

D 1586 Method for Penetration Test and Split-Barrel Sampling of Soils[2]

D 1587 Practice for Thin-Walled Tube Sampling of Soils[2]

D 2488 Practice for Description and Identification of Soils (Visual-Manual Procedure)[2]

D 3550 Practice for Ring-Lined Barrel Sampling of Soils[2]

3. Terminology

3.1 Terminology in these practices is in accordance with Terminology D 653.

4. Summary of Practices

4.1 The various procedures are given under four groupings as follows:

4.1.1 *Group A*—Samples for which only general visual identification is necessary.

4.1.2 *Group B*—Samples for which only water content and classification tests, proctor and relative density, or profile logging is required, and bulk samples that will be remolded or compacted into specimens for swell pressure, percent swell, consolidation, permeability, shear testing, CBR, stabilimeter, etc.

4.1.3 *Group C*—Intact, naturally formed or field fabricated, samples for density determinations; or for swell pressure, percent swell, consolidation, permeability testing and shear testing with or without stress-strain and volume change measurements, to include dynamic and cyclic testing.

4.1.4 *Group D*—Samples that are fragile or highly sensitive for which tests in Group C are required.

4.2 The procedure(s) to be used should be included in the project specifications or defined by the designated responsible person.

5. Significance and Use

5.1 Use of the various procedures recommended in these practices is dependent on the type of samples obtained (Practice D 420), the type of testing and engineering properties required, the fragility and sensitivity of the soil, and the climatic conditions. In all cases, the primary purpose is to preserve the desired inherent conditions.

5.2 The procedures presented in these practices were primarily developed for soil samples that are to be tested for engineering properties, however, they may be applicable for samples of soil and other materials obtained for other purposes.

6. Apparatus

6.1 The type of materials and containers needed depend upon the conditions and requirements listed under the four groupings A to D in Section 4, and also on the climate and transporting mode and distance.

6.1.1 *Sealing Wax*, includes microcrystalline wax, paraffin, beeswax, ceresine, carnaubawax, or combinations thereof.

6.1.2 *Metal Disks*, about 1/16 in. (about 2 mm) thick and having a diameter slightly less than the inside diameter of the tube, liner, or ring and to be used in union with wax or caps and tape, or both.

6.1.3 *Wood Disks*, prewaxed, 1 in. (25 mm) thick and having a diameter slightly less than the inside diameter of the liner or tube.

6.1.4 *Tape*, either waterproof plastic, adhesive friction, or duct tape.

6.1.5 *Cheesecloth*, to be used in union with wax in alternative layers.

6.1.6 *Caps*, either plastic, rubber or metal, to be placed over the end of thin-walled tubes (Practice D 1587), liners and rings (Practice D 3550), in union with tape or wax.

6.1.7 *O'ring (Sealing End Caps)*, used to seal the ends of samples within thin-walled tubes, by mechanically expanding an O'ring against the tube wall.

[1] These practices are under the jurisdiction of ASTM Committee D-18 on Soil and Rock and are the direct responsibility of Subcommittee D18.02 on Sampling and Related Field Testing for Soil Investigations.

Current edition approved July 13, 1989. Published September 1989. Originally published as D 4220 – 83. Last previous edition D 4220 – 83.

[2] *Annual Book of ASTM Standards*, Vol 04.08.

000257

NOTE 1—Plastic expandable end caps are preferred. Metal expandable end caps seal equally well; however, long-term storage may cause corrosion problems.

6.1.8 *Jars*, wide mouthed, with rubber-ringed lids or lids lined with a coated paper seal and of a size to comfortably receive the sample, commonly ½ pt (250 mL), 1 pt (500 mL) and quart-sized (1000 mL).

6.1.9 *Bag*, either plastic, burlap with liner, burlap or cloth type (Practice D 1452).

6.1.10 *Packing Material*, to protect against vibration and shock.

6.1.11 *Insulation*, either granule (bead), sheet or foam type, to resist temperature change of soil or to prevent freezing.

6.1.12 *Sample Cube Boxes*, for transporting cube (block) samples. Constructed with ½ to ¾ in. (13 to 19 mm) thick plywood (marine type).

6.1.13 *Cylindrical Sample Containers*, somewhat larger in dimension than the thin-walled tube or liner samples, such as cylindrical frozen food cartons.

6.1.14 *Shipping Containers*, either box or cylindrical type and of proper construction to protect against vibration, shock, and the elements, to the degree required.

NOTE 2—The length, girth and weight restrictions for commercial transportation must be considered.

6.1.15 *Identification Material*—This includes the necessary writing pens, tags, and labels to properly identify the sample(s).

7. Precautions

7.1 Special instructions, descriptions, and marking of containers must accompany any sample that may include radioactive, chemical, toxic, or other contaminant material.

7.2 Interstate transportation containment, storage, and disposal of soil samples obtained from certain areas within the United States and the transportation of foreign soils into or through the United States are subject to regulations established by the U.S. Department of Agriculture, Animal, and Plant Health Service, Plant Protection and Quarantine Programs, and possibly to regulations of other federal, state, or local agencies.

7.2.1 Samples shipped by way of common carrier or U.S. Postal Service must comply with the Department of Transportation Hazardous Materials Regulation, 49CRF Part 172.

7.3 Sample traceability records (see Fig. 1) are encouraged and should be required for suspected contaminated samples.

7.3.1 The possession of all samples must be traceable, from collection to shipment to laboratory to disposition, and should be handled by as few persons as possible.

7.3.2 The sample collector(s) should be responsible for initiating the sample traceability record; recording the project, sample identification and location, sample type, date, and the number and types of containers.

7.3.3 A separate traceability record shall accompany each shipment.

7.3.4 When transferring the possession of samples the person(s) relinquishing and receiving the samples shall sign, date, record the time, and check for completeness of the traceability record.

8. Procedure

8.1 *All Samples*—Properly identify samples with tags, labels, and markings prior to transporting them as follows:

8.1.1 Job name or number, or both,

8.1.2 Sampling date,

8.1.3 Sample/boring number and location,

8.1.4 Depth or elevation, or both,

8.1.5 Sample orientation,

8.1.6 Special shipping or laboratory handling instructions, or both, including sampling orientation, and

8.1.7 Penetration test data, if applicable (Test Method D 1586).

8.1.8 Subdivided samples must be identified while maintaining association to the original sample.

8.1.9 If required, sample traceability record.

8.2 *Group A*—Transport samples in any type of container by way of available transportation. If transported commercially, the container need only meet the minimum requirements of the transporting agency and any other requirements necessary to assure against sample loss.

8.3 *Group B:*

8.3.1 Preserve and transport these samples in sealed, moistureproof containers. All containers shall be of sufficient thickness and strength to ensure against breakage and moisture loss. The container types include: plastic bags or pails, glass or plastic (provided they are waterproof) jars, thin walled tubes, liners, and rings. Wrap cylindrical and cube samples in suitable plastic film or aluminum foil, or both, (Note 3) and coat with several layers of wax, or seal in several layers of cheesecloth and wax.

8.3.2 Transport these samples by any available transportation. Ship these samples as prepared or placed in larger shipping containers, including bags, cardboard, or wooden boxes or barrels.

NOTE 3—Some soils may cause holes to develop in aluminum foil, due to corrosion. Avoid direct contact where adverse affects to sample composition are a concern.

8.3.3 *Plastic Bags*—Place the plastic bags as tightly as possible around the sample, squeezing out as much air as possible. They shall be 3 mil or thicker to prevent leakage.

8.3.4 *Glass-Plastic Jars*—If the jar lids are not rubber ringed or lined with new waxed paper seals, seal the lids with wax.

8.3.5 *Plastic Pails*—If the plastic pail lids are not air tight, seal them with wax or tape.

8.3.6 *Thin-Walled Tubes:*

8.3.6.1 *Expandable Packers*—The preferred method of sealing sample ends within tubes is with plastic, expandable packers.

8.3.6.2 *Wax With Disks*—For short-term sealing, paraffin wax is acceptable. For long term sealing (in excess of 3 days) use microcrystalline waxes or combine with up to 15 % beeswax or resin, for better adherence to the wall of the tube and to reduce shrinkage. Several thin layers of wax are preferred over one thick layer. The minimum final thickness shall be 0.4 in. (10 mm).

000258

8.3.6.3 *End Caps*—Seal metal, rubber, or plastic end caps with tape. For long term storage (longer than 3 days), also dip them in wax, applying two or more layers of wax.

8.3.6.4 *Cheesecloth and Wax*—Use alternating layers (a minimum of two each) of cheesecloth and wax to seal each end of the tube and stabilize the sample.

NOTE 4—Where necessary, spacers or appropriate packing materials, or both, must be placed prior to sealing the tube ends to provide proper confinement. Packing material must be nonabsorbent and must maintain its properties to provide the same degree of continued sample support.

8.3.7 *Liners and Rings*—Refer to 8.3.6.3 or 8.3.6.4.

8.3.8 *Exposed Samples:*

8.3.8.1 *Cylindrical, Cubical or Other Samples Wrapped in Plastic*, such as polyethylene and polypropylene, or foil should be further protected with a minimum of three coats of wax.

8.3.8.2 *Cylindrical and Cube Samples Wrapped in Cheesecloth and Wax*, shall be sealed with a minimum of three layers of each, placed alternatively.

8.3.8.3 *Carton Samples (Frozen Food Cartons)*—Samples placed in these containers must be situated so that wax can be poured completely around the sample. The wax should fill the void between the sample and container wall. The wax should be sufficiently warm to flow, but not so hot that it penetrates the pores of the soil. Generally, the samples should be wrapped in plastic or foil before being surrounded with wax.

8.4 *Group C:*

8.4.1 Preserve and seal these samples in containers as covered in 8.3. In addition, they must be protected against vibration and shock, and protected from extreme heat or cold.

8.4.2 Samples transported by the sampling or testing agency personnel on seats of automobiles and trucks need only be placed in cardboard boxes, or similar containers into which the sealed samples fit snugly, preventing bumping, rolling, dropping, etc.

8.4.3 For all other methods of transporting samples, including automobile trunk, bus, parcel services, truck, boat, air, etc., place the sealed samples in wood, metal, or other type of suitable shipping containers that provide cushioning or insulation, or both, for each sample and container. Avoid transporting by any agency whose handling of containers is suspect.

8.4.4 The cushioning material (sawdust, rubber, polystyrene, urethane foam, or material with similar resiliency) should completely encase each sample. The cushioning between the samples and walls of the shipping containers should have a minimum thickness of 1 in. (25 mm). A minimum thickness of 2 in. (50 mm) shall be provided on the container floor.

8.4.5 When required, the samples should be shipped in the same orientation in which they were sampled. Otherwise, special conditions shall be provided such as freezing, controlled drainage, or sufficient confinement, or a combination thereof, to maintain sample integrity.

8.5 *Group D:*

8.5.1 The requirements of 8.4 must be met, in addition to the following:

8.5.1.1 Samples should be handled in the same orientation in which they were sampled, including during transportation or shipping, with appropriate markings on the shipping container.

8.5.1.2 For all modes of private or commercial transportation, the loading, transporting and unloading of the shipment containers should be supervised as much as possible by a qualified person.

NOTE 5—A qualified person may be an engineer, geologist, soil scientist, soils technician or responsible person designated by the project manager.

8.6 *Shipping Containers* (see Figs. 2 to 7 for typical containers):

8.6.1 The following features should be included in the design of the shipping container for Groups C and D.

8.6.1.1 It should be reuseable,

8.6.1.2 It should be constructed so that the samples can be maintained, at all times, in the same position as when sampled or packed, or both,

8.6.1.3 It should include sufficient packing material to cushion or isolate, or both, the tubes from the adverse effect of vibration and shock, and

8.6.1.4 It should include sufficient insulating material to prevent freezing, sublimation and thawing, or undesirable temperature changes.

8.6.2 *Wood Shipping Containers:*

8.6.2.1 Wood is preferred over metal. Outdoor (marine) plywood having a thickness of ½ and ¾ in. (13 to 19 mm) may be used. The top (cover) should be hinged and latched. or fastened with screws.

8.6.2.2 The cushioning requirements are given in 8.4.4.

8.6.2.3 For protection against freezing or extreme temperature variation, the entire shipping container should be lined with a minimum insulation thickness of 2 in. (50 mm).

8.6.3 *Metal Shipping Containers*—The metal shipping containers must incorporate cushioning and insulation material to minimum thicknesses in accordance with 8.6.2. although slightly greater thicknesses would be appropriate. Alternatively, the cushion effect could be achieved with a spring suspension system, or any other means that would provide similar protection.

8.6.4 *Styrene Shipping Containers*—Bulk styrene with slots cut to the dimensions of the sample tube or liner. A protective outer box of plywood or reinforced cardboard is recommended.

8.6.5 *Other Containers*—Containers constructed with laminated fiberboard, plastic or reinforced cardboard outer walls, and properly lined, may also be used.

9. Reporting

9.1 The data obtained in the field shall be recorded and should include the following:

9.1.1 Job name or number, or both,

9.1.2 Sampling date(s),

9.1.3 Sample/boring number(s) and location(s),

9.1.4 Depth(s) or elevation(s), or both,

9.1.5 Sample orientation,

000259

Sample Identification/Traceability Record
(Controlled Document)

Project: _____ W.O. _____

Shipped by: _____

Shipped to: _____ Attention of:

Comments: _____ Hazardous materials suspected? (yes/no)

Sampling Point	Location	Field ID #	Date	Sample Type	No. of Containers	Analysis/Test Required	(optional) Lab ID

Sampler(s) (signature) _____

Field ID	Relinquished by: (signature)	Date/Time		Received by: (signature)	Date/Time		Comments

Shipment prepared by: (signature) _____ Date/Time _____ Shipment method: _____

Received for Lab by: (signature) _____ Date/Time _____ Comments _____

Receiving Laboratory: Please return original form after signing for receipt of samples.

FIG. 1 Example Layout of Record Form

9.1.6 Groundwater observation, if any,

9.1.7 Method of sampling, and penetration test data, if applicable,

9.1.8 Sample dimensions,

9.1.9 Soil description (Practice D 2488),

9.1.10 Names of technician/crewman, engineer, project chief, etc.,

9.1.11 Comments regarding contaminated or possible contaminated samples,

9.1.12 If used, a copy of traceability records,

9.1.13 Weather conditions, and

9.1.14 General remarks.

10. Precision and Bias

10.1 This practice provides qualitative and general information only. Therefore, a precision and bias statement is not applicable.

000260

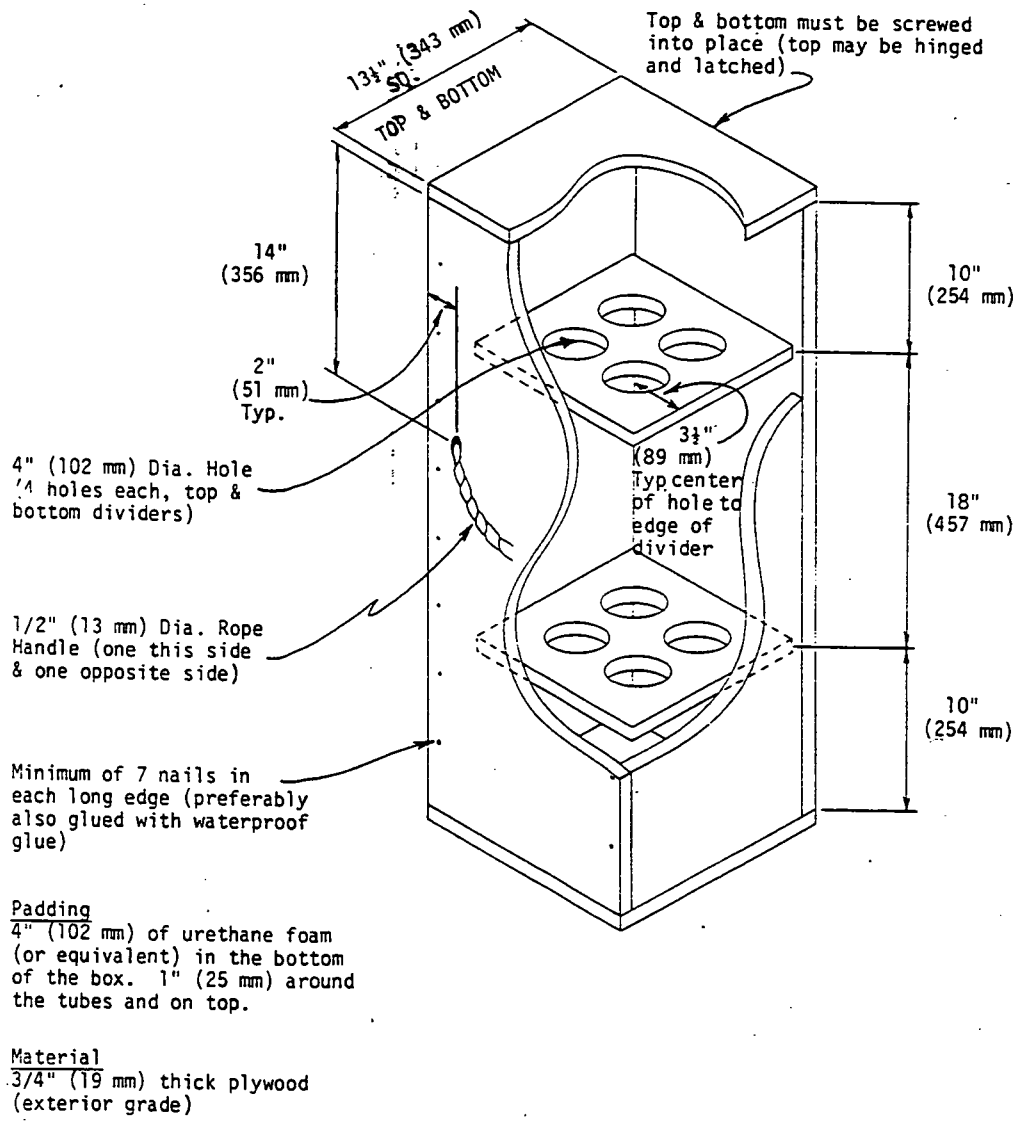

Padding
4" (102 mm) of urethane foam (or equivalent) in the bottom of the box. 1" (25 mm) around the tubes and on top.

Material
3/4" (19 mm) thick plywood (exterior grade)

FIG. 2 Shipping Box for 3-in. (76-mm) Thin-Walled Tubes

000261

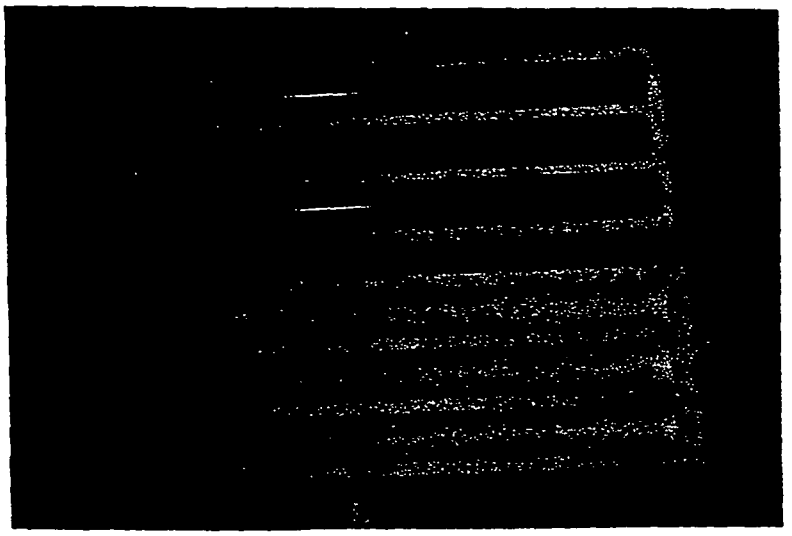

(a) Photo of Open Box For 5" (127 mm) Tubes

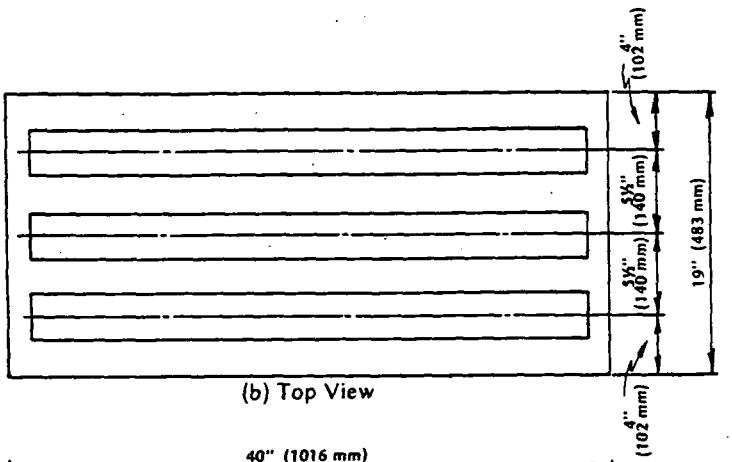

(b) Top View

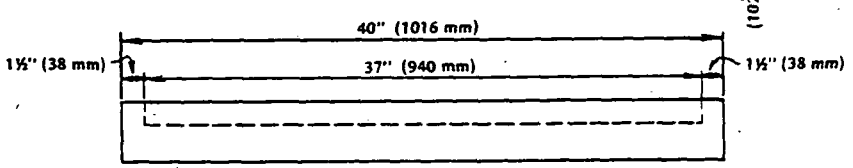

(c) Front View

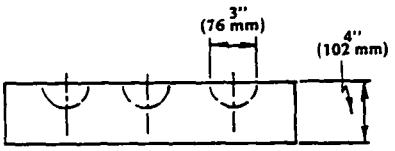

(d) Side View

NOTE—Top and bottom halves are identical.

FIG. 3 Styrene Shipping Container for 3-in. (76-mm) Thin-Walled Tubes

000262

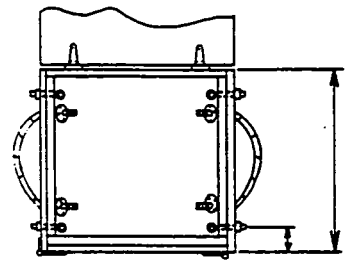

A. TOP VIEW
(lid open)

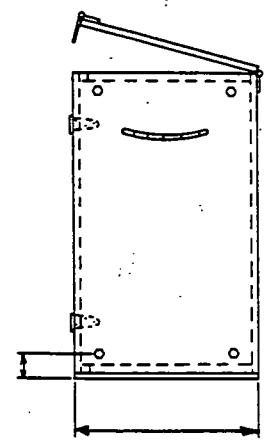

C. SIDE VIEW

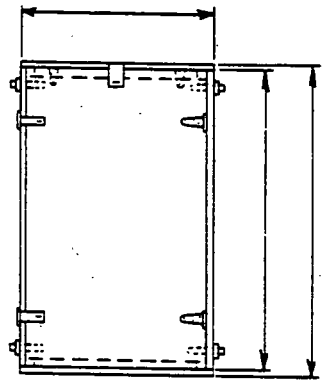

B. FRONT VIEW

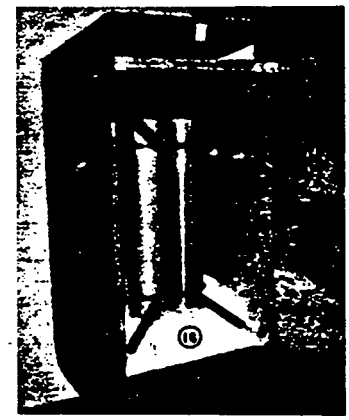

D. PHOTOGRAPH OF OPEN BOX

BILL OF MATERIALS

Item No.	Description of Item	Quantity
1	*Plywood*, 4 ft by 8 ft by ¾ in. (1220 mm by 2440 mm by 19.1 mm) exterior, Grade AC	1 Sheet
2	*Hinge*, strap, 4 in. (102 mm), heavy duty with screws	4 Each
3	*Hasp*, hinged, 4½ in. (114 mm), with screws	3 Each
4	*Screw, Wood, Steel, Flathead*, No. 10 by 1¾ in. (44.5 mm)	72 Each
5	*Bolt, Machine*, ⅜ in. (9.5 mm), with nut to secure hasps	3 Each
6	*Washer*, flat, ⅜ in. (9.5 mm)	3 Each
7	*Eye Bolt*, ½ by 2 in. (6.4 mm by 51 mm), zinc-plated, with nut	8 Each
8	*Washer*, flat, ¼ in. (6.4 mm), for hasp bolt	8 Each
9	*S Hooks*, 2 in. (51 mm), open, zinc-plated	8 Each
10	*Clamp*, adjustable, hose, steel, worm screw adjustment	2 Each
11	*Spring*, expansion	8 Each
12	*Adhesive*, woodworking	1 lb (454 g)
13	*Rope*, nylon, ½-in. (12.7-mm) diameter, solid braided	5 ft (1524 mm)
14	*Cushioning Material*, expanded polystyrene foam	10 ft^3 (0.28 m^3)

NOTES—(a) All wooden components can be sawed from one sheet of plywood.
(b) This shipping box will accommodate approximately three 3-in. (76-mm) diameter tubes or two 5-in (127-mm) diameter tubes up to 30 in. (762 mm) in length. For longer tubes the inside height of the box must be a minimum of 6-in. (152 mm) greater than the length of the tube.
(c) All joints to be glued and fastened with screws.
(d) Stencil all sides as follows (See Views B and C).
TO PROTECT FROM FREEZING
(e) After suspending samples as indicated above, all void space must be filled with a suitable resilient packing material.

FIG. 4 Suspension System Container for Thin-Walled Tubes

000263

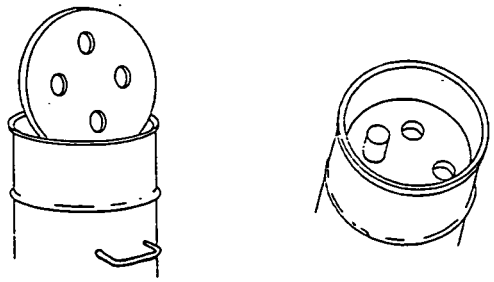

(a) 55-gallon (0.21 m^3) oil barrels with sections of styrofoam insulation; welded handles on each side.

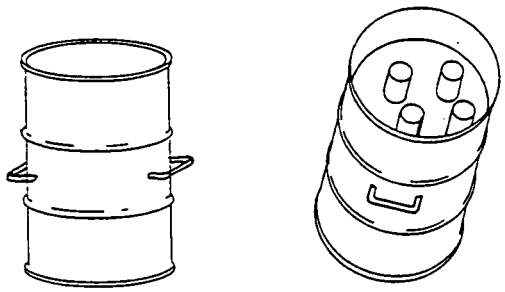

(b) Same as (a) showing barrel ready for shipment. Steel lids bolted on to provide tight seal.

NOTE—Two in. (51 mm) of foam rubber covers 2 in. of styrofoam at the base. One in. (25 mm) of foam rubber overlays the top of the tubes, and the remaining space to the lid is filled with styrofoam.

FIG. 5 Shipping Barrel for Thin-Walled Tubes

000264

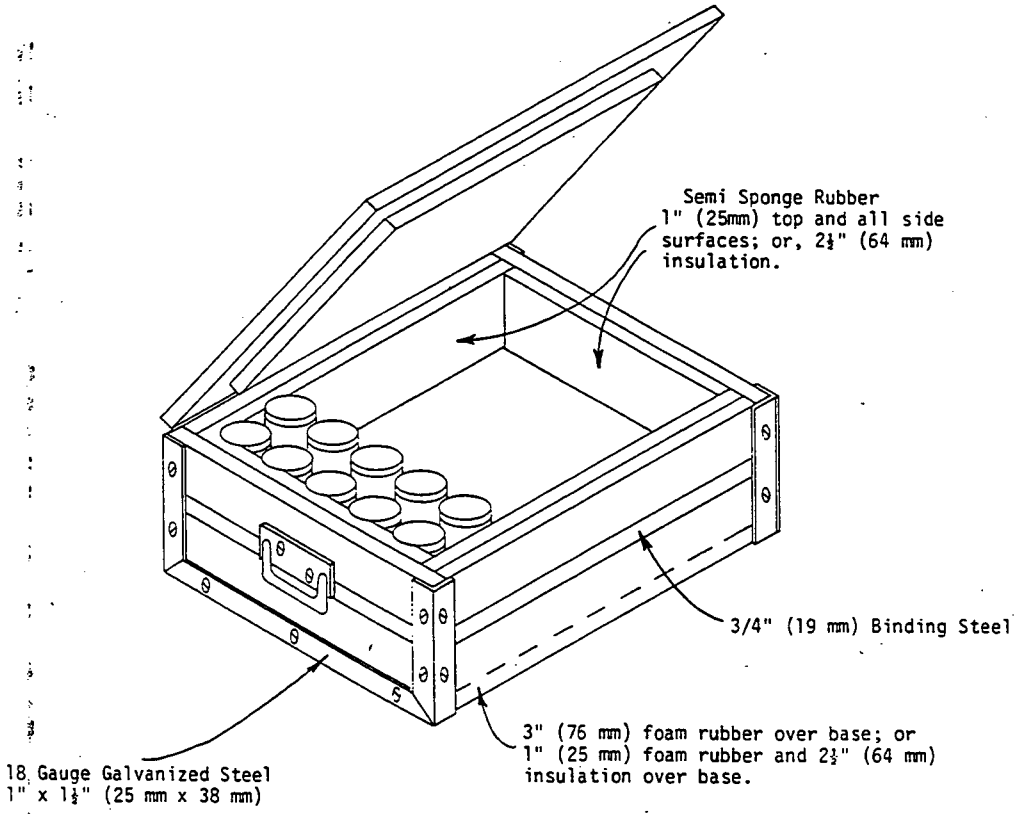

FIG. 6 Shipping Box for Liner (Short Tube) or Ring Samples

000265

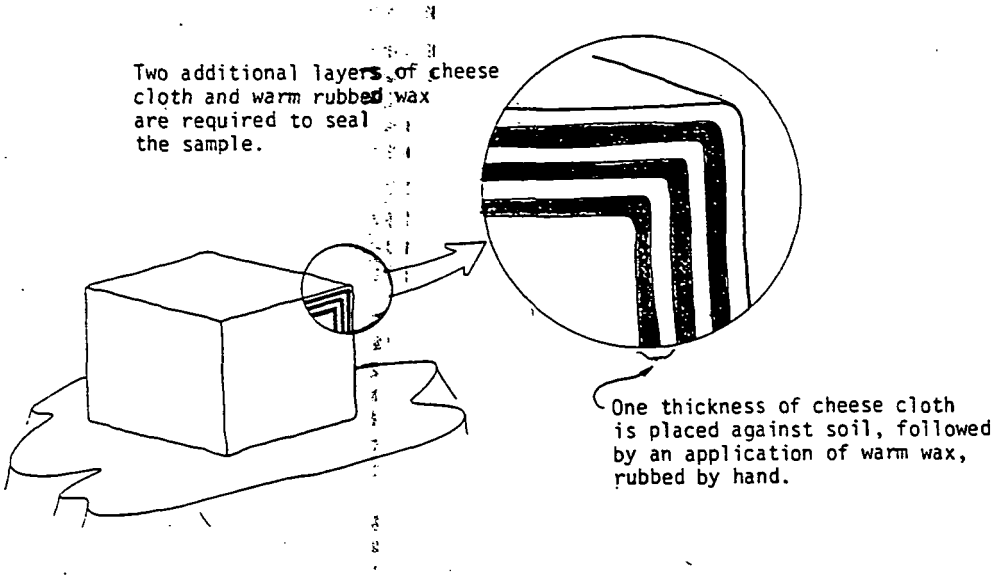

A. METHOD FOR SEALING HAND-CUT UNDISTURBED SAMPLES

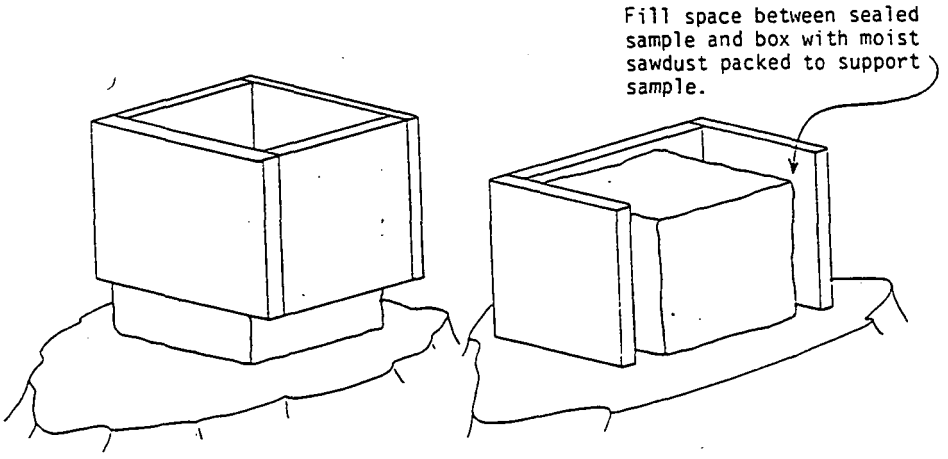

B. ENCASE EASILY DISTURBED SAMPLES IN BOX PRIOR TO CUTTING

Box constructed with 1/2"-3/4" (13 - 19 mm) exterior plywood.

FIG. 7 Preparing and Packaging a Block Sample

The American Society for Testing and Materials takes no position respecting the validity of any patent rights asserted in connection with any item mentioned in this standard. Users of this standard are expressly advised that determination of the validity of any such patent rights, and the risk of infringement of such rights, are entirely their own responsibility.

This standard is subject to revision at any time by the responsible technical committee and must be reviewed every five years and if not revised, either reapproved or withdrawn. Your comments are invited either for revision of this standard or for additional standards and should be addressed to ASTM Headquarters. Your comments will receive careful consideration at a meeting of the responsible technical committee, which you may attend. If you feel that your comments have not received a fair hearing you should make your views known to the ASTM Committee on Standards, 1916 Race St., Philadelphia, PA 19103.

000266

Designation: D 4318 – 84

Standard Test Method for Liquid Limit, Plastic Limit, and Plasticity Index of Soils[1]

This standard is issued under the fixed designation D 4318; the number immediately following the designation indicates the year of original adoption or, in the case of revision, the year of last revision. A number in parentheses indicates the year of last reapproval. A superscript epsilon (ε) indicates an editorial change since the last revision or reapproval.

This standard has been approved for use by agencies of the Department of Defense. Consult the DoD Index of Specifications and Standards for the specific year of issue which has been adopted by the Department of Defense.

1. Scope

1.1 This test method covers the determination of the liquid limit, plastic limit, and the plasticity index of soils as defined in Section 3.

1.1.1 Two procedures for preparing test specimens and two procedures for performing the liquid limit are provided as follows:

A Multipoint test using a wet preparation procedure, described in Sections 10.1, 11, and 12.

B Multipoint test using a dry preparation procedure, described in Sections 10.2, 11, and 12.

C One-point test using a wet preparation procedure, described in Sections 13, 14, and 15.

D One-point test using a dry preparation procedure, described in Sections 13, 14, and 15.

The procedure to be used shall be specified by the requesting authority. If no procedure is specified, Procedure A shall be used.

NOTE 1—Prior to the adoption of this test method, a curved grooving tool was specified as part of the apparatus for performing the liquid limit test. The curved tool is not considered to be as accurate as the flat tool described in 6.2 since it does not control the depth of the soil in the liquid limit cup. However, there are some data which indicate that typically the liquid limit is slightly increased when the flat tool is used instead of the curved tool.

1.1.2 The plastic limit test procedure is described in Sections 16, 17, and 18. The plastic limit test is performed on material prepared for the liquid limit test. In effect, there are two procedures for preparing test specimens for the plastic limit test.

1.1.3 The procedure for calculating the plasticity index is given in Section 19.

1.2 The liquid limit and plastic limit of soils (along with the shrinkage limit) are often collectively referred to as the Atterberg limits in recognition of their formation by Swedish soil scientist, A. Atterberg. These limits distinguish the boundaries of the several consistency states of plastic soils.

1.3 As used in this test method, soil is any natural aggregation of mineral or organic materials, mixtures of such materials, or artificial mixtures of aggregates and natural mineral and organic particles.

1.4 The multipoint liquid limit procedure is somewhat more time consuming than the one-point procedure when both are performed by experienced operators. However, the one-point procedure requires the operator to judge when the test specimen is approximately at its liquid limit. In cases where this is not done reliably, the multipoint procedure is as fast as the one-point procedure and provides additional precision due to the information obtained from additional trials. It is particularly recommended that the multipoint procedure be used by inexperienced operators.

1.5 The correlations on which the calculations of the one-point procedure are based may not be valid for certain soils, such as organic soils or soils from a marine environment. The liquid limit of these soils should therefore be determined by the multipoint procedure (Procedure A).

1.6 The liquid and plastic limits of many soils that have been allowed to dry before testing may be considerably different from values obtained on undried samples. If the liquid and plastic limits of soils are used to correlate or estimate the engineering behavior of soils in their natural moist state, samples should not be permitted to dry before testing unless data on dried samples are specifically desired.

1.7 The composition and concentration of soluble salts in a soil affect the values of the liquid and plastic limits as well as the water content values of soils (see Method D 2216). Special consideration should therefore be given to soils from a marine environment or other sources where high soluble salt concentrations may be present. The degree to which the salts present in these soils are diluted or concentrated must be given consideration if meaningful results are to be obtained.

1.8 Since the tests described herein are performed only on that portion of a soil which passes the 425-μm (No. 40) sieve, the relative contribution of this portion of the soil to the properties of the sample as a whole must be considered when using these tests to evaluate the properties of a soil.

1.9 The values stated in acceptable metric units are to be regarded as the standard. The values given in parentheses are for information only.

1.10 *This standard may involve hazardous materials, operations, and equipment. This standard does not purport to address all of the safety problems associated with its use. It is the responsibility of whoever uses this standard to consult and establish appropriate safety and health practices and determine the applicability of regulatory limitations prior to use.*

[1] This test method is under the jurisdiction of ASTM Committee D-18 on Soil and Rock and is the direct responsibility of Subcommittee D18.03 on Texture, Plasticity, and Density Characteristics of Soils.

Current edition approved Oct. 26, 1984. Published December 1984. Originally published as D 4318 – 83. Last previous edition D 4318 – 83[ε1].

000267

2. Referenced Documents

2.1 *ASTM Standards:*

C 702 Methods for Reducing Field Samples of Aggregate to Testing Size[2]

D 75 Practice for Sampling Aggregates[4]

D 420 Practice for Investigating and Sampling Soil and Rock for Engineering Purposes[4]

D 653 Terminology Relating to Soil, Rock, and Contained Fluids[4]

D 1241 Specification for Materials for Soil-Aggregate Subbase, Base, and Surface Courses[4]

D 2216 Method for Laboratory Determination of Water (Moisture) Content of Soil, Rock, and Soil-Aggregate Mixtures[4]

D 2240 Test Method for Rubber Property—Durometer Hardness[5]

D 2487 Test Method for Classification of Soils for Engineering Purposes[4]

D 2488 Practice for Description and Identification of Soils (Visual-Manual Procedure)[4]

D 3282 Practice for Classification of Soils and Soil-Aggregate Mixtures for Highway Construction Purposes[4]

E 11 Specification for Wire-Cloth Sieves for Testing Purposes[6]

E 319 Methods of Testing Single-Arm Balances[6]

E 898 Method of Testing Top-Loading, Direct-Reading Laboratory Scales and Balances[6]

3. Definitions

3.1 *Atterberg limits*—originally, seven "limits of consistency" of fine-grained soils were defined by Albert Atterberg. In current engineering usage, the term usually refers only to the liquid limit, plastic limit, and in some references, the shrinkage limit.

3.2 *consistency*—the relative ease with which a soil can be deformed.

3.3 *liquid limit (LL)*—the water content, in percent, of a soil at the arbitrarily defined boundary between the liquid and plastic states. This water content is defined as the water content at which a pat of soil placed in a standard cup and cut by a groove of standard dimensions will flow together at the base of the groove for a distance of 13 mm (½ in.) when subjected to 25 shocks from the cup being dropped 10 mm in a standard liquid limit apparatus operated at a rate of 2 shocks per second.

NOTE 2—The undrained shear strength of soil at the liquid limit is considered to be 2 ± 0.2 kPa (0.28 psi).

3.4 *plastic limit (PL)*—the water content, in percent, of a soil at the boundary between the plastic and brittle states. The water content at this boundary is the water content at which a soil can no longer be deformed by rolling into 3.2 mm (⅛ in.) in diameter threads without crumbling.

3.5 *plastic soil*—a soil which has a range of water content over which it exhibits plasticity and which will retain its shape on drying.

3.6 *plasticity index (PI)*—the range of water content over which a soil behaves plastically. Numerically, it is the difference between the liquid limit and the plastic limit.

3.7 *liquidity index*—the ratio, expressed as a percentage, of (*1*) the natural water content of a soil minus its plastic limit, to (*2*) its plasticity index.

3.8 *activity number (A)*—the ratio of (*1*) the plasticity index of a soil to (*2*) the percent by weight of particles having an equivalent diameter smaller than 0.002 mm.

4. Summary of Method

4.1 The sample is processed to remove any material retained on a 425-µm (No. 40) sieve. The liquid limit is determined by performing trials in which a portion of the sample is spread in a brass cup, divided in two by a grooving tool, and then allowed to flow together from the shocks caused by repeatedly dropping the cup in a standard mechanical device. The multipoint liquid limit, Procedures A and B, requires three or more trials over a range of water contents to be performed and the data from the trials plotted or calculated to make a relationship from which the liquid limit is determined. The one-point liquid limit, Procedures C and D, uses the data from two trials at one water content multiplied by a correction factor to determine the liquid limit.

4.2 The plastic limit is determined by alternately pressing together and rolling into a 3.2 mm (⅛ in.) diameter thread a small portion of plastic soil until its water content is reduced to a point at which the thread crumbles and is no longer able to be pressed together and rerolled. The water content of the soil at this stage is reported as the plastic limit.

4.3 The plasticity index is calculated as the difference between the liquid limit and the plastic limit.

5. Significance and Use

5.1 This test method is used as an integral part of several engineering classification systems to characterize the fine-grained fractions of soils (see Test Method D 2487 and Practice D 3282) and to specify the fine-grained fraction of construction materials (see Specification D 1241). The liquid limit, plastic limit, and plasticity index of soils are also used extensively, either individually or together with other soil properties to correlate with engineering behavior such as compressibility, permeability, compactibility, shrink-swell, and shear strength.

5.2 The liquid and plastic limits of a soil can be used with the natural water content of the soil to express its relative consistency or liquidity index and can be used with the percentage finer than 2-µm size to determine its activity number.

5.3 The one-point liquid limit procedure is frequently used for routine classification purposes. When greater precision is required, as when used for the acceptance of a material or for correlation with other test data, the multipoint procedure should be used.

5.4 These methods are sometimes used to evaluate the weathering characteristics of clay-shale materials. When subjected to repeated wetting and drying cycles, the liquid limits of these materials tend to increase. The amount of increase is considered to be a measure of a shale's susceptibility to weathering.

[2] *Annual Book of ASTM Standards*, Vol 04.02.
[3] *Annual Book of ASTM Standards*, Vols 04.02, 04.03, and 04.08.
[4] *Annual Book of ASTM Standards*, Vol 04.08.
[5] *Annual Book of ASTM Standards*, Vol 09.01.
[6] *Annual Book of ASTM Standards*, Vol 14.02.

5.5 The liquid limit of a soil containing substantial amounts of organic matter decreases dramatically when the soil is oven-dried before testing. Comparison of the liquid limit of a sample before and after oven-drying can therefore be used as a qualitative measure of organic matter content of a soil.

6. Apparatus

6.1 *Liquid Limit Device*—A mechanical device consisting of a brass cup suspended from a carriage designed to control its drop onto a hard rubber base. A drawing showing the essential features of the device and the critical dimensions is given in Fig. 1. The design of the device may vary provided that the essential functions are preserved. The device may be operated either by a hand crank or by an electric motor.

6.1.1 *Base*—The base shall be hard rubber having a D Durometer hardness of 80 to 90, and a resilience such that an 8-mm (5/16-in.) diameter polished steel ball, when dropped from a height of 25 cm (9.84 in.) will have an average rebound of at least 80 % but no more than 90 %. The tests shall be conducted on the finished base with feet attached.

6.1.2 *Feet*—The base shall be supported by rubber feet designed to provide isolation of the base from the work surface and having an A Durometer hardness no greater than 60 as measured on the finished feet attached to the base.

6.1.3 *Cup*—The cup shall be brass and have a weight, including cup hanger, of 185 to 215 g.

6.1.4 *Cam*—The cam shall raise the cup smoothly and continuously to its maximum height, over a distance of at least 180° of cam rotation. The preferred cam motion is a uniformly accelerated lift curve. The design of the cam and follower combination shall be such that there is no upward or downward velocity of the cup when the cam follower leaves the cam.

NOTE 3—The cam and follower design in Fig. 1 is for uniformly accelerated (parabolic) motion after contact and assures that the cup has no velocity at drop off. Other cam designs also provide this feature and may be used. However, if the cam-follower lift pattern is not known, zero velocity at drop off can be assured by carefully filing or machining the cam and follower so that the cup height remains constant over the last 20 to 45° of cam rotation.

6.1.5 *Carriage*—The cup carriage shall be constructed in a way that allows convenient but secure adjustment of the height of drop of the cup to 10 mm (0.394 in.). The cup hanger shall be attached to the carriage by means of a pin which allows removal of the cup and cup hanger for cleaning and inspection.

6.1.6 *Optional Motor Drive*—As an alternative to the hand crank shown in Fig. 1, the device may be equipped with a motor to turn the cam. Such a motor must turn the cam at 2 ± 0.1 revolutions per second and must be isolated from the rest of the device by rubber mounts or in some other way that prevents vibration from the motor being transmitted to the rest of the apparatus. It must be equipped with an ON-OFF switch and a means of conveniently positioning the cam for height of drop adjustments. The results obtained using a motor-driven device must not differ from those obtained using a manually operated device.

DIMENSIONS

LETTER	A△	B△	C△	E△	F	G	H	J△	K△	L△	M△
MM	54 ± 0.5	2 ± 0.1	27 ± 0.5	56 ± 2.0	32	10	16	60 ± 1.0	50 ± 2.0	150 ± 2.0	125 ± 2.0

LETTER	N	P	R	T	U△	V	W	Z
MM	24	28	24	45	47 ± 1.0	3.8	13	6.5

△ ESSENTIAL DIMENSIONS

CAM ANGLE DEGREES	CAM RADIUS
0	0.742 R
30	0.753 R
60	0.764 R
90	0.773 R
120	0.784 R
150	0.796 R
180	0.818 R
210	0.854 R
240	0.901 R
270	0.945 R
300	0.974 R
330	0.995 R
360	1.000 R

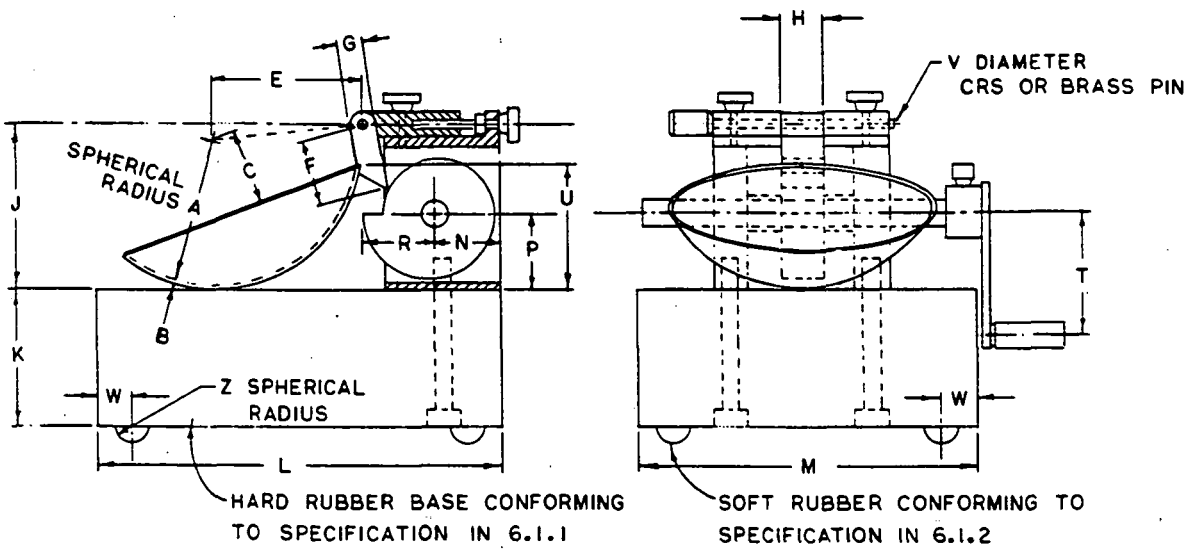

FIG. 1 Hand-Operated Liquid Limit Device

DIMENSIONS

LETTER	A△	B△	C△	D△	E△	F△
MM	2 ± 0.1	11 ± 0.2	40 ± 0.5	8 ± 0.1	50 ± 0.5	2 ± 0.1
LETTER	G	H	J	K△	L△	N
MM	10 MINIMUM	13	60	10 ±0.05	60 DEG ± 1 DEG	20

△ ESSENTIAL DIMENSIONS

□ BACK AT LEAST 15 MM FROM TIP

NOTE : DIMENSION A SHOULD BE 1.9–2.0 AND DIMENSION D SHOULD BE 8.0–8.1 WHEN NEW TO ALLOW FOR ADEQUATE SERVICE LIFE

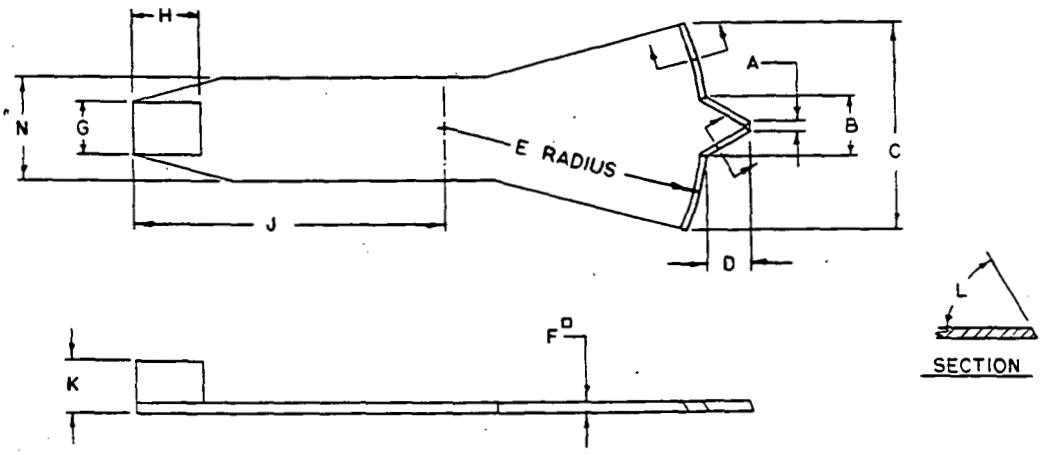

FIG. 2 Grooving Tool (Optional Height-of-Drop Gage Attached)

6.2 *Flat Grooving Tool*—A grooving tool having dimensions shown in Fig. 2. The tool shall be made of plastic or noncorroding metal. The design of the tool may vary as long as the essential dimensions are maintained. The tool may, but need not, incorporate the gage for adjusting the height of drop of the liquid limit device.

6.3 *Gage*—A metal gage block for adjusting the height of drop of the cup, having the dimensions shown in Fig. 3. The design of the tool may vary provided the gage will rest securely on the base without being susceptible to rocking, and the edge which contacts the cup during adjustment is straight, at least 10 mm (⅜ in.) wide, and without bevel or radius.

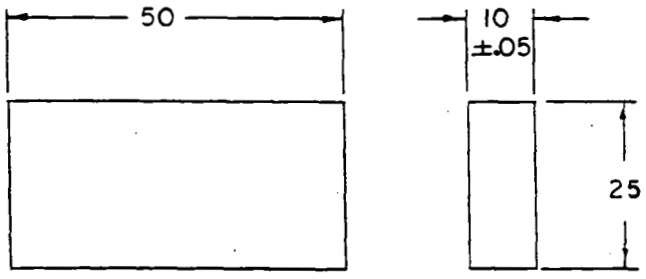

DIMENSIONS IN MILLIMETRES

FIG. 3 Height of Drop Gage

6.4 *Containers*—Small corrosion-resistant containers with snug-fitting lids for water content specimens. Aluminum or stainless steel cans 2.5 cm (1 in.) high by 5 cm (2 in.) in diameter are appropriate.

6.5 *Balance*—A balance readable to at least 0.01 g and having an accuracy of 0.03 g within three standard deviations within the range of use. Within any 15-g range, a difference between readings shall be accurate within 0.01 g (Notes 4 and 5).

NOTE 4—See Methods E 898 and E 319 for an explanation of terms relating to balance performance.

NOTE 5—For frequent use, a top-loading type balance with automatic load indication, readable to 0.01 g, and having an index of precision (standard deviation) of 0.003 or better is most suitable for this method. However, nonautomatic indicating equal-arm analytical balances and some small equal arm top pan balances having readabilities and sensitivities of 0.002 g or better provide the required accuracy when used with a weight set of ASTM Class 4 (National Bureau of Standards Class P) or better. Ordinary commercial and classroom type balances such as beam balances are not suitable for this method.

6.6 *Storage Container*—A container in which to store the prepared soil specimen that will not contaminate the specimen in any way, and which prevents moisture loss. A porcelain, glass, or plastic dish about 11.4 cm (4½ in.) in diameter and a plastic bag large enough to enclose the dish and be folded over is adequate.

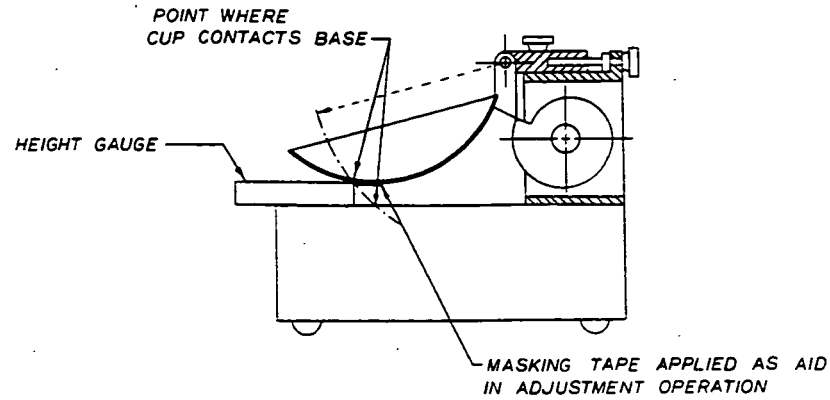

FIG. 4 Calibration for Height of Drop

6.7 *Ground Glass Plate*—A ground glass plate at least 30 cm (12 in.) square by 1 cm (⅜ in.) thick for mixing soil and rolling plastic limit threads.

6.8 *Spatula*—A spatula or pill knife having a blade about 2 cm (¾ in.) wide by about 10 cm (4 in.) long. In addition, a spatula having a blade about 2.5 cm (1 in.) wide and 15 cm (6 in.) long has been found useful for initial mixing of samples.

6.9 *Sieve*—A 20.3 cm (8 in.) diameter, 425-µm (No. 40) sieve conforming to the requirements of Specification E 11 and having a rim at least 5 cm (2 in.) above the mesh. A 2-mm (No. 10) sieve meeting the same requirements may also be needed.

6.10 *Wash Bottle*, or similar container for adding controlled amounts of water to soil and washing fines from coarse particles.

6.11 *Drying Oven*—A thermostatically controlled oven, preferably of the forced-draft type, capable of continuously maintaining a temperature of 110 ± 5°C throughout the drying chamber. The oven shall be equipped with a thermometer of suitable range and accuracy for monitoring oven temperature.

6.12 *Washing Pan*—A round, flat-bottomed pan at least 7.6 cm (3 in.) deep, slightly larger at the bottom than a 20.3-cm (8-in.) diameter sieve.

6.13 *Rod* (optional)—A metal or plastic rod or tube 3.2 mm (⅛ in.) in diameter and about 10 cm (4 in.) long for judging the size of plastic limit threads.

7. Materials

7.1 A supply of distilled or demineralized water.

8. Sampling

8.1 Samples may be taken from any location that satisfies testing needs. However, Methods C 702, Practice D 75, and Recommended Practice D 420 should be used as guides for selecting and preserving samples from various types of sampling operations. Samples which will be prepared using the wet preparation procedure, 10.1, must be kept at their natural water content prior to preparation.

8.2 Where sampling operations have preserved the natural stratification of a sample, the various strata must be kept separated and tests performed on the particular stratum of interest with as little contamination as possible from other strata. Where a mixture of materials will be used in construction, combine the various components in such proportions that the resultant sample represents the actual construction case.

8.3 Where data from this test method are to be used for correlation with other laboratory or field test data, use the same material as used for these tests where possible.

8.4 Obtain a representative portion from the total sample sufficient to provide 150 to 200 g of material passing the 425-µm (No. 40) sieve. Free flowing samples may be reduced by the methods of quartering or splitting. Cohesive samples shall be mixed thoroughly in a pan with a spatula, or scoop and a representative portion scooped from the total mass by making one or more sweeps with a scoop through the mixed mass.

9. Calibration of Apparatus

9.1 *Inspection of Wear:*

9.1.1 *Liquid Limit Device*—Determine that the liquid limit device is clean and in good working order. The following specific points should be checked:

9.1.1.1 *Wear of Base*—The spot on the base where the cup makes contact should be worn no greater than 10 mm (⅜ in.) in diameter. If the wear spot is greater than this, the base can be machined to remove the worn spot provided the resurfacing does not make the base thinner than specified in 6.1 and the other dimensional relationships are maintained.

9.1.1.2 *Wear of Cup*—The cup must be replaced when the grooving tool has worn a depression in the cup 0.1 mm (0.004 in.) deep or when the edge of the cup has been reduced to half its original thickness. Verify that the cup is firmly attached to the cup hanger.

9.1.1.3 *Wear of Cup Hanger*—Verify that the cup hanger pivot does not bind and is not worn to an extent that allows more than 3-mm (⅛-in.) side-to-side movement of the lower point on the rim.

9.1.1.4 *Wear of Cam*—The cam shall not be worn to an extent that the cup drops before the cup hanger (cam follower) loses contact with the cam.

9.1.2 *Grooving Tools*—Inspect grooving tools for wear on a frequent and regular basis. The rapidity of wear depends on the material from which the tool is made and the types of soils being tested. Sandy soils cause rapid wear of grooving tools; therefore, when testing these materials, tools should be inspected more frequently than for other soils. Any tool with a tip width greater than 2.1 mm must not be used. The depth

of the tip of the grooving tool must be 7.9 to 8.1 mm.

NOTE 6—The width of the tip of grooving tools is conveniently checked using a pocket-sized measuring magnifier equipped with a millimetre scale. Magnifiers of this type are available from most laboratory supply companies. The depth of the tip of grooving tools can be checked using the depth measuring feature of vernier calipers.

9.2 *Adjustment of Height of Drop*—Adjust the height of drop of the cup so that the point on the cup that comes in contact with the base rises to a height of 10 ± 0.2 mm. See Fig. 4 for proper location of the gage relative to the cup during adjustment.

NOTE 7—A convenient procedure for adjusting the height of drop is as follows: place a piece of masking tape across the outside bottom of the cup parallel with the axis of the cup hanger pivot. The edge of the tape away from the cup hanger should bisect the spot on the cup that contacts the base. For new cups, placing a piece of carbon paper on the base and allowing the cup to drop several times will mark the contact spot. Attach the cup to the device and turn the crank until the cup is raised to its maximum height. Slide the height gage under the cup from the front, and observe whether the gage contacts the cup or the tape. See Fig. 4. If the tape and cup are both contacted, the height of drop is approximately correct. If not, adjust the cup until simultaneous contact is made. Check adjustment by turning the crank at 2 revolutions per second while holding the gage in position against the tape and cup. If a ringing or clicking sound is heard without the cup rising from the gage, the adjustment is correct. If no ringing is heard or if the cup rises from the gage, readjust the height of drop. If the cup rocks on the gage during this checking operation, the cam follower pivot is excessively worn and the worn parts should be replaced. Always remove tape after completion of adjustment operation.

MULTIPOINT LIQUID LIMIT—PROCEDURES A AND B

10. Preparation of Test Specimens

10.1 *Wet Preparation*—Except where the dry method of specimen preparation is specified (10.2), prepare specimens for test as described in the following sections.

10.1.1 *Samples Passing the 425-µm (No. 40) Sieve*—When by visual and manual procedures it is determined that the sample has little or no material retained on a 425-µm (No. 40) sieve, prepare a specimen of 150 to 200 g by mixing thoroughly with distilled or demineralized water on the glass plate using the spatula. If desired, soak soil in a storage dish with small amount of water to soften the soil before the start of mixing. Adjust the water content of the soil to bring it to a consistency that would require 25 to 35 blows of the liquid limit device to close the groove (Note 8). If, during mixing, a small percentage of material is encountered that would be retained on a 425-µm (No. 40) sieve, remove these particles by hand, if possible. If it is impractical to remove the coarser material by hand, remove small percentages (less than about 15 %) of coarser material by working the specimen through a 425-µm (No. 40) sieve using a piece of rubber sheeting, rubber stopper, or other convenient device provided the operation does not distort the sieve or degrade material that would be retained if the washing method described in 10.1.2 were used. If larger percentages of coarse material are encountered during mixing, or it is considered impractical to remove the coarser material by the methods just described, wash the sample as described in 10.1.2. When the coarse particles found during mixing are concretions, shells, or other fragile particles, do not crush these particles to make them pass a 425-µm (No. 40) sieve, but remove by hand or by washing. Place the mixed soil in the storage dish, cover to prevent loss of moisture, and allow to stand for at least 16 h (overnight). After the standing period and immediately before starting the test, thoroughly remix the soil.

NOTE 8—The time taken to adequately mix a soil will vary greatly, depending on the plasticity and initial water content. Initial mixing times of more than 30 min may be needed for stiff, fat clays.

10.1.2 *Samples Containing Material Retained on a 425-µm (No. 40) Sieve:*

10.1.2.1 Select a sufficient quantity of soil at natural water content to provide 150 to 200 g of material passing the 425-µm (No. 40) sieve. Place in a pan or dish and add sufficient water to cover the soil. Allow to soak until all lumps have softened and the fines no longer adhere to the surfaces of the coarse particles (Note 9).

NOTE 9—In some cases, the cations of salts present in tap water will exchange with the natural cations in the soil and significantly alter the test results should tap water be used in the soaking and washing operations. Unless it is known that such cations are not present in the tap water, distilled or demineralized water should be used. As a general rule, water containing more than 100 mg/L of dissolved solids should not be used for washing operations.

10.1.2.2 When the sample contains a large percentage of material retained on the 425-µm (No. 40) sieve, perform the following washing operation in increments, washing no more than 0.5 kg (1 lb) of material at one time. Place the 425-µm (No. 40) sieve in the bottom of the clean pan. Pour the soil water mixture onto the sieve. If gravel or coarse sand particles are present, rinse as many of these as possible with small quantities of water from a wash bottle, and discard. Alternatively, pour the soil water mixture over a 2-mm (No. 10) sieve nested atop the 425-µm (No. 40) sieve, rinse the fine material through and remove the 2-mm (No. 10) sieve. After washing and removing as much of the coarser material as possible, add sufficient water to the pan to bring the level to about 13 mm (½ in.) above the surface of the 425-µm (No. 40) sieve. Agitate the slurry by stirring with the fingers while raising and lowering the sieve in the pan and swirling the suspension so that fine material is washed from the coarser particles. Disaggregate fine soil lumps that have not slaked by gently rubbing them over the sieve with the fingertips. Complete the washing operation by raising the sieve above the water surface and rinsing the material retained with a small amount of clean water. Discard material retained on the 425-µm (No. 40) sieve.

10.1.2.3 Reduce the water content of the material passing the 425-µm (No. 40) sieve until it approaches the liquid limit. Reduction of water content may be accomplished by one or a combination of the following methods: (*a*) exposing the air currents at ordinary room temperature, (*b*) exposing to warm air currents from a source such as an electric hair dryer, (*c*) filtering in a Büchner funnel or using filter candles, (*d*) decanting clear water from surface of suspension, or (*e*) draining in a colander or plaster of paris dish lined with high retentivity, high wet-strength filter paper.[7] If a plaster of paris dish is used, take care that the dish never becomes sufficiently saturated that it fails to actively absorb water into its surface. Thoroughly dry dishes between uses. During evaporation and cooling, stir the sample often enough to prevent

[7] S and S 595 filter paper available in 32-cm circles, has proven satisfactory.

overdrying of the fringes and soil pinnacles on the surface of the mixture. For soil samples containing soluble salts, use a method of water reduction such as *a* or *b* that will not eliminate the soluble salts from the test specimen.

10.1.2.4 Thoroughly mix the material passing the 425-µm (No. 40) sieve on the glass plate using the spatula. Adjust the water content of the mixture, if necessary, by adding small increments of distilled or demineralized water or by allowing the mixture to dry at room temperature while mixing on the glass plate. The soil should be at a water content that will result in closure of the groove in 25 to 35 blows. Return the mixed soil to the mixing dish, cover to prevent loss of moisture, and allow to stand for at least 16 h. After the standing period, and immediately before starting the test, remix the soil thoroughly.

10.2 *Dry Preparation:*

10.2.1 Select sufficient soil to provide 150 to 200 g of material passing the 425-µm (No. 40) sieve after processing. Dry the sample at room temperature or in an oven at a temperature not exceeding 60°C until the soil clods will pulverize readily. Disaggregation is expedited if the sample is not allowed to completely dry. However, the soil should have a dry appearance when pulverized. Pulverize the sample in a mortar with a rubber tipped pestle or in some other way that does not cause breakdown of individual grains. When the coarse particles found during pulverization are concretions, shells, or other fragile particles, do not crush these particles to make them pass a 425-µm (No. 40) sieve, but remove by hand or other suitable means, such as washing.

10.2.2 Separate the sample on a 425-µm (No. 40) sieve, shaking the sieve by hand to assure thorough separation of the finer fraction. Return the material retained on the 425-µm (No. 40) sieve to the pulverizing apparatus and repeat the pulverizing and sieving operations as many times as necessary to assure that all finer material has been disaggregated and material retained on the 425-µm (No. 40) sieve consists only of individual sand or gravel grains.

10.2.3 Place material remaining on the 425-µm (No. 40) sieve after the final pulverizing operations in a dish and soak in a small amount of water. Stir the soil water mixture and pour over the 425-µm (No. 40) sieve, catching the water and any suspended fines in the washing pan. Pour this suspension into a dish containing the dry soil previously sieved through the 425-µm (No. 40) sieve. Discard material retained on the 425-µm (No. 40) sieve.

10.2.4 Adjust the water content as necessary by drying as described in 10.1.2.3 or by mixing on the glass plate, using the spatula while adding increments of distilled or demineralized water, until the soil is at a water content that will result in closure of the groove in 25 to 35 blows.

10.2.5 Put soil in the storage dish, cover to prevent loss of moisture and allow to stand for at least 16 h. After the standing period, and immediately before starting the test, thoroughly remix the soil (Note 8).

11. Procedure

11.1 Place a portion of the prepared soil in the cup of the liquid limit device at the point where the cup rests on the base, squeeze it down, and spread it into the cup to a depth of about 10 mm at its deepest point, tapering to form an approximately horizontal surface. Take care to eliminate air bubbles from the soil pat but form the pat with as few strokes as possible. Heap the unused soil on the glass plate and cover with the inverted storage dish or a wet towel.

11.2 Form a groove in the soil pat by drawing the tool, beveled edge forward, through the soil on a line joining the highest point to the lowest point on the rim of the cup. When cutting the groove, hold the grooving tool against the surface of the cup and draw in an arc, maintaining the tool perpendicular to the surface of the cup throughout its

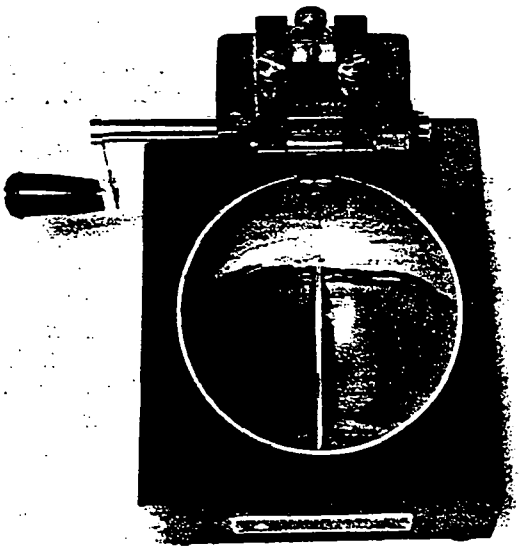

FIG. 5 Grooved Soil Pat in Liquid Limit Device

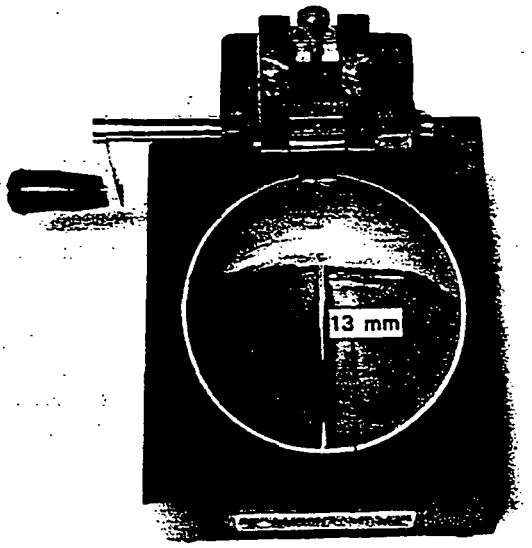

FIG. 6 Soil Pat After Groove Has Closed

movement. See Fig. 5. In soils where a groove cannot be made in one stroke without tearing the soil, cut the groove with several strokes of the grooving tool. Alternatively, cut the groove to slightly less than required dimensions with a spatula and use the grooving tool to bring the groove to final dimensions. Exercise extreme care to prevent sliding the soil pat relative to the surface of the cup.

11.3 Verify that no crumbs of soil are present on the base or the underside of the cup. Lift and drop the cup by turning the crank at a rate of 1.9 to 2.1 drops per second until the two halves of the soil pat come in contact at the bottom of the groove along a distance of 13 mm (½ in.). See Fig. 6.

NOTE 10—Use the end of the grooving tool, Fig. 2, or a scale to verify that the groove has closed 13 mm (½ in.).

11.4 Verify that an air bubble has not caused premature closing of the groove by observing that both sides of the groove have flowed together with approximately the same shape. If a bubble has caused premature closing of the groove, reform the soil in the cup, adding a small amount of soil to make up for that lost in the grooving operation and repeat 11.1 to 11.3. If the soil slides on the surface of the cup, repeat 11.1 through 11.3 at a higher water content. If, after several trials at successively higher water contents, the soil pat continues to slide in the cup or if the number of blows required to close the groove is always less than 25, record that the liquid limit could not be determined, and report the soil as nonplastic without performing the plastic limit test.

11.5 Record the number of drops, N, required to close the groove. Remove a slice of soil approximately the width of the spatula, extending from edge to edge of the soil cake at right angles to the groove and including that portion of the groove in which the soil flowed together, place in a weighed container, and cover.

11.6 Return the soil remaining in the cup to the glass plate. Wash and dry the cup and grooving tool and reattach the cup to the carriage in preparation for the next trial.

11.7 Remix the entire soil specimen on the glass plate adding distilled water to increase the water content of the soil and decrease the number of blows required to close the groove. Repeat 11.1 through 11.6 for at least two additional trials producing successively lower numbers of blows to close the groove. One of the trials shall be for a closure requiring 25 to 35 blows, one for closure between 20 and 30 blows, and one trial for a closure requiring 15 to 25 blows.

11.8 Determine the water content, W_N, of the soil specimen from each trial in accordance with Method D 2216. Make all weighings on the same balance. Initial weighings should be performed immediately after completion of the test. If the test is to be interrupted for more than about 15 min, the specimens already obtained should be weighed at the time of the interruption.

12. Calculations

12.1 Plot the relationship between the water content, W_N, and the corresponding number of drops, N, of the cup on a semilogarithmic graph with the water content as ordinates on the arithmetical scale, and the number of drops as abscissas on the logarithmic scale. Draw the best straight line through the three or more plotted points.

12.2 Take the water content corresponding to the intersection of the line with the 25-drop abscissa as the liquid limit of the soil. Computational methods may be substituted for the graphical method for fitting a straight line to the data and determining the liquid limit.

ONE-POINT LIQUID LIMIT—PROCEDURES C AND D

13. Preparation of Test Specimens

13.1 Prepare the specimen in the same manner as described in Section 10, except that at mixing, adjust the water content to a consistency requiring 20 to 30 drops of the

TABLE 1 Factors for Obtaining Liquid Limit from Water Content and Number of Drops Causing Closure of Groove

N (Number of Drops)	K (Factor for Liquid Limit)
20	0.974
21	0.979
22	0.985
23	0.990
24	0.995
25	1.000
26	1.005
27	1.009
28	1.014
29	1.018
30	1.022

liquid limit cup to close the groove.

14. Procedure

14.1 Proceed as described in 11.1 through 11.5 except that the number of blows required to close the groove shall be 20 to 30. If less than 20 or more than 30 blows are required, adjust the water content of the soil and repeat the procedure.

14.2 Immediately after removing a water content specimen as described in 11.5, reform the soil in the cup, adding a small amount of soil to make up for that lost in the grooving and water content sampling operations. Repeat 11.2 through 11.5, and, if the second closing of the groove requires the same number of drops or no more than two drops difference, secure another water content specimen. Otherwise, remix the entire specimen and repeat.

NOTE 11—Excessive drying or inadequate mixing will cause the number of blows to vary.

14.3 Determine water contents of specimens as described in 11.8.

15. Calculations

15.1 Determine the liquid limit for each water content specimen using one of the following equations:

$$LL = W_N \left(\frac{N}{25}\right)^{0.121} \quad \text{or}$$

$$LL = K(W_N)$$

where:

N = the number of blows causing closure of the groove at water content,

W_N = water content, and

K = a factor given in Table 1.

The liquid limit is the average of the two trial liquid limit values.

15.2 If the difference between the two trial liquid limit values is greater than one percentage point, repeat the test.

PLASTIC LIMIT

16. Preparation of Test Specimen

16.1 Select a 20-g portion of soil from the material prepared for the liquid limit test, either after the second mixing before the test, or from the soil remaining after completion of the test. Reduce the water content of the soil to a consistency at which it can be rolled without sticking to the hands by spreading and mixing continuously on the glass plate. The drying process may be accelerated by exposing the soil to the air current from an electric fan, or by blotting with paper that does not add any fiber to the soil, such as hard surface paper toweling or high wet-strength filter paper.

17. Procedure

17.1 From the 20-g mass, select a portion of 1.5 to 2.0 g. Form the test specimen into an ellipsoidal mass. Roll this mass between the palm or fingers and the ground-glass plate with just sufficient pressure to roll the mass into a thread of uniform diameter throughout its length (Note 12). The thread shall be further deformed on each stroke so that its diameter is continuously reduced and its length extended until the diameter reaches 3.2 ± 0.5 mm (0.125 ± .020 in.), taking no more than 2 min (Note 13). The amount of hand or finger pressure required will vary greatly, according to the soil. Fragile soils of low plasticity are best rolled under the outer edge of the palm or at the base of the thumb.

NOTE 12—A normal rate of rolling for most soils should be 80 to 90 strokes per minute, counting a stroke as one complete motion of the hand forward and back to the starting position. This rate of rolling may have to be decreased for very fragile soils.

NOTE 13—A 3.2-mm (⅛-in.) diameter rod or tube is useful for frequent comparison with the soil thread to ascertain when the thread has reached the proper diameter, especially for inexperienced operators.

17.1.1 When the diameter of the thread becomes 3.2 mm, break the thread into several pieces. Squeeze the pieces together, knead between the thumb and first finger of each hand, reform into an ellipsoidal mass, and reroll. Continue this alternate rolling to a thread 3.2 mm in diameter, gathering together, kneading and rerolling, until the thread crumbles under the pressure required for rolling and the soil can no longer be rolled into a 3.2-mm diameter thread (See Fig. 7). It has no significance if the thread breaks into threads of shorter length. Roll each of these shorter threads to 3.2 mm in diameter. The only requirement for continuing the test is that they are able to be reformed into an ellipsoidal mass and rolled out again. The operator shall at no time attempt to produce failure at exactly 3.2 mm diameter by allowing the thread to reach 3.2 mm, then reducing the rate of rolling or the hand pressure, or both, while continuing the rolling without further deformation until the thread falls apart. It is permissible, however, to reduce the total amount of deformation for feebly plastic soils by making the initial diameter of the ellipsoidal mass nearer to the required 3.2-mm final diameter. If crumbling occurs when the thread has a diameter greater than 3.2 mm, this shall be considered a satisfactory end point, provided the soil has been previously rolled into a thread 3.2 mm in diameter. Crumbling of the thread will manifest itself differently with the various types of soil. Some soils fall apart in numerous small aggregations of particles, others may form an outside tubular layer that starts splitting at both ends. The splitting progresses toward the middle, and finally, the thread falls apart in many small platy particles. Fat clay soils require much pressure to deform the thread, particularly as they approach the plastic limit. With these soils, the thread breaks into a series of barrel-shaped segments about 3.2 to 9.5 mm (⅛ to ⅜ in.) in length.

17.2 Gather the portions of the crumbled thread together and place in a weighed container. Immediately cover the container.

000275

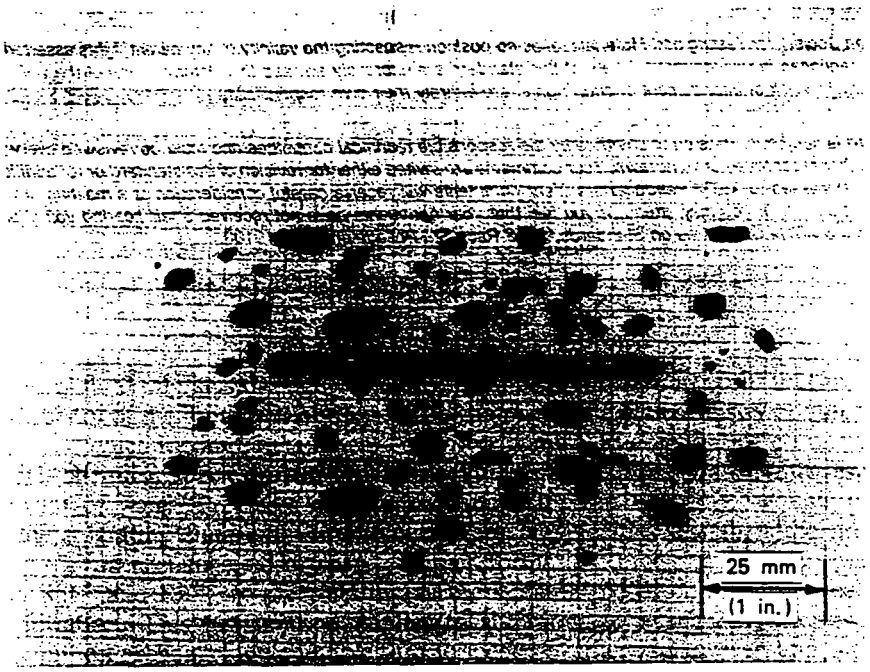

FIG. 7 Lean Clay Soil at the Plastic Limit

17.3 Select another 1.5 to 2.0 g portion of soil from the original 20-g specimen and repeat the operations described in 17.1 and 17.2 until the container has at least 6 g of soil.

17.4 Repeat 17.1 through 17.3 to make another container holding at least 6 g of soil. Determine the water content, in percent, of the soil contained in the containers in accordance with Method D 2216. Make all weighings on the same balance.

NOTE 14—The intent of performing two plastic limit trials is to verify the consistency of the test results. It is acceptable practice to perform only one plastic limit trial when the consistency in the test results can be confirmed by other means.

18. Calculations

18.1 Compute the average of the two water contents. If the difference between the two water contents is greater than two percentage points, repeat the test. The plastic limit is the average of the two water contents.

PLASTICITY INDEX

19. Calculations

19.1 Calculate the plasticity index as follows:

$$PI = LL - PL$$

where:

LL = the liquid limit,

PL = the plastic limit.

Both LL and PL are whole numbers. If either the liquid limit or plastic limit could not be determined, or if the plastic limit is equal to or greater than the liquid limit, report the soil as nonplastic, NP.

20. Report

20.1 Report the following information:

20.1.1 Sample identifying information,

20.1.2 Any special specimen selection process used, such as removal of sand lenses from undisturbed sample,

20.1.3 Report sample as airdried if the sample was airdried before or during preparation,

20.1.4 Liquid limit, plastic limit, and plasticity index to the nearest whole number and omitting the percent designation. If the liquid limit or plastic limit tests could not be performed, or if the plastic limit is equal to or greater than the liquid limit, report the soil as nonplastic, NP,

20.1.5 An estimate of the percentage of sample retained on the 425-µm (No. 40) sieve, and

20.1.6 Procedure by which liquid limit was performed, if it differs from the multipoint method.

21. Precision and Bias

21.1 No interlaboratory testing program has as yet been conducted using this test method to determine multilaboratory precision.

21.2 The within laboratory precision of the results of tests performed by different operators at one laboratory on two soils using Procedure A for the liquid limit is shown in Table 2.

TABLE 2 Within Laboratory Precision for Liquid Limit

	Average Value, $\bar{x}$	Standard Deviation, s
Soil A:		
PL	21.9	1.07
LL	27.9	1.07
Soil B:		
PL	20.1	1.21
LL	32.6	0.98

The American Society for Testing and Materials takes no position respecting the validity of any patent rights asserted in connection with any item mentioned in this standard. Users of this standard are expressly advised that determination of the validity of any such patent rights, and the risk of infringement of such rights, are entirely their own responsibility.

This standard is subject to revision at any time by the responsible technical committee and must be reviewed every five years and if not revised, either reapproved or withdrawn. Your comments are invited either for revision of this standard or for additional standards and should be addressed to ASTM Headquarters. Your comments will receive careful consideration at a meeting of the responsible technical committee, which you may attend. If you feel that your comments have not received a fair hearing you should make your views known to the ASTM Committee on Standards, 1916 Race St., Philadelphia, PA 19103.

Designation: D 4546 – 90

Standard Test Methods for One-Dimensional Swell or Settlement Potential of Cohesive Soils[1]

This standard is issued under the fixed designation D 4546; the number immediately following the designation indicates the year of original adoption or, in the case of revision, the year of last revision. A number in parentheses indicates the year of last reapproval. A superscript epsilon (ε) indicates an editorial change since the last revision or reapproval.

1. Scope

1.1 These test methods cover three alternative laboratory methods for determining the magnitude of swell or settlement of relatively undisturbed or compacted cohesive soil.

NOTE 1—Refer to Section 5 to determine the best method for a particular application.

1.2 The test methods can be used to determine (*a*) the magnitude of swell or settlement under known vertical (axial) pressure, or (*b*) the magnitude of vertical pressure needed to maintain no volume change of laterally constrained, axially loaded specimens.

1.3 The values stated in SI units are to be regarded as the standard. The values stated in inch-pound units are approximate.

1.4 *This standard does not purport to address all of the safety problems associated with its use. It is the responsibility of the user of this standard to establish appropriate safety and health practices and determine the applicability of regulatory limitations prior to use.*

2. Referenced Documents

2.1 *ASTM Standards:*

D 422 Method for Particle-Size Analysis of Soils[2]

D 653 Terminology Relating to Soil, Rock, and Contained Fluids[2]

D 698 Test Methods for Moisture-Density Relations of Soils and Soil-Aggregate Mixtures Using 5.5-lb (2.49-kg) Rammer and 12-in. (305-mm) Drop[2]

D 854 Test Method for Specific Gravity of Soils[2]

D 1557 Test Methods for Moisture-Density Relations of Soils and Soil-Aggregate Mixtures Using 10-lb (4.54-kg) Rammer and 18-in. (457-mm) Drop[2]

D 1587 Practice for Thin-Walled Tube Sampling of Soils[2]

D 2216 Method for Laboratory Determination of Water (Moisture) Content of Soil, Rock, and Soil-Aggregate Mixtures[2]

D 2435 Test Method for One-Dimensional Consolidation Properties of Soils[2]

D 3550 Practice for Ring-Lined Barrel Sampling of Soils[2]

D 3877 Test Methods for One-Dimensional Expansion, Shrinkage, and Uplift Pressure of Soil-Lime Mixtures[2]

D 4220 Practices for Preserving and Transporting Soil Samples[2]

D 4318 Test Method for Liquid Limit, Plastic Limit, and Plasticity Index of Soils[2]

3. Terminology

3.1 *Definitions*—Refer to Terminology D 653 for standard definitions of terms.

3.2 *Descriptions of Terms Specific to This Standard:*

3.2.1 *heave (L)*—increase in vertical height, Δh, of a column of in situ soil of height h following sorption of water.

3.2.2 *percent heave or settlement, %*—increase or decrease in the ratio of the change in vertical height, Δh, to the original height of a column of in situ soil; $h \times 100$ or $\Delta h/h \times 100$.

3.2.3 *settlement, L*—decrease in vertical height, Δh, of a column of in situ soil of height h.

3.2.4 *swell, L*—increase in elevation or dilation of soil column following sorption of water.

3.2.5 *free swell, %*—percent heave, $\Delta h/h \times 100$, following sorption of water at the seating pressure σ_{se}.

3.2.6 *primary swell, L*—an arbitrary short-term swell usually characterized as being completed at the intersection of the tangent of reverse curvature to the curve of a dimensional change-logarithm of time plot with the tangent to the straight line portion representing long-term or secondary swell (Fig. 1).

3.2.7 *secondary swell, L*—an arbitrary long-term swell usually characterized as the linear portion of a dimensional change-logarithm of time plot following completion of short-term or primary swell (Fig. 1).

3.2.8 *swell index*—slope of the rebound pressure - void ratio curve on a semi-log plot.

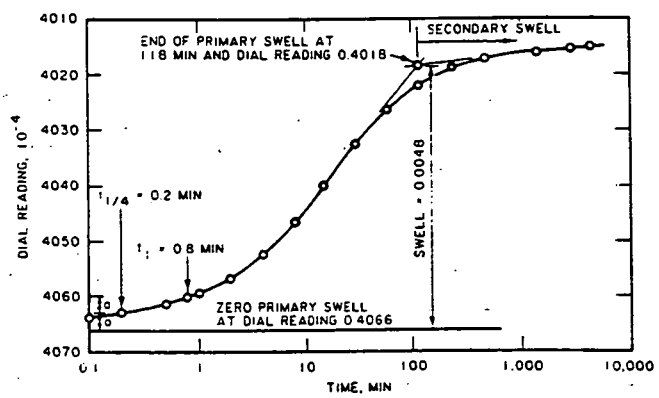

FIG. 1 Time - Swell Curve

[1] These test methods are under the jurisdiction of ASTM Committee D-18 on Soil and Rock and are the direct responsibility of Subcommittee D18.05 on Structural Properties of Soils.

Current edition approved Oct. 26, 1990. Published December 1990. Originally published as D 4546 – 85. Last previous edition D 4546 – 85.

[2] *Annual Book of ASTM Standards*, Vol. 04.08.

000278

3.2.9 *swell pressure*, FL^{-2}—(*1*) a pressure which prevents the specimen from swelling as obtained in Method C, or (*2*) that pressure which is required to return the specimen back to its original state (void ratio, height) after swelling in Method A or B.

NOTE 2—Swell pressures by Method C corrected for specimen disturbance may be similar to or slightly greater than those by Method A.

4. Summary of Test Methods

4.1 The following three alternative test methods require that a soil specimen be restrained laterally and loaded axially in a consolidometer with access to free water.

4.1.1 *Method A*—The specimen is inundated and allowed to swell vertically at the seating pressure (pressure of at least 1 kPa (20 lbf/ft^2) applied by the weight of the top porous stone and load plate) until primary swell is complete. The specimen is loaded after primary swell has occurred until its initial void ratio/height is obtained.

4.1.2 *Method B*—A vertical pressure exceeding the seating pressure is applied to the specimen before placement of free water into the consolidometer. The magnitude of vertical pressure is usually equivalent to the in situ vertical overburden pressure or structural loading, or both, but may vary depending on application of the test results. The specimen is given access to free water. This may result in swell, swell then contraction, contraction, or contraction then swell. The amount of swell or settlement is measured at the applied pressure after movement is negligible.

4.1.3 *Method C*—The specimen is maintained at constant height by adjustments in vertical pressure after the specimen is inundated in free water to obtain swell pressure. A consolidation test is subsequently performed in accordance with Test Method D 2435. Rebound data is used to estimate potential heave.

5. Significance and Use

5.1 The relative swell/settlement potential of soil determined from these test methods can be used to develop estimates of heave or settlement for given final moisture and loading conditions. The initial water content and void ratio should be representative of the in situ soil immediately prior to construction. Selection of test method, loading, and inundation sequences should, as closely as possible, simulate any construction and post-construction wetting and drying effects and changes in loading conditions.

5.2 Soils containing montmorillonites (Smectite) are likely to have a significant potential for swell and are commonly tested by these test methods.

NOTE 3—Montmorillonites with divalent cations usually swell less than with monovalent cations. It is useful to know the type of cation as well as the cation exchange capacity of montmorillonite.

5.3 Laboratory-prepared test specimens should duplicate the in situ soil or field-compacted soil conditions as closely as possible because relatively small variations in unit weight and water content can significantly alter the measured heave and swell pressure. Differences in soil fabric of the compacted specimens, such as obtained by kneading or static compaction, could also have a significant impact on the swell/settlement behavior of cohesive soils.

5.4 These test methods are applicable to undisturbed test or remolded specimens, or both, as follows:

5.4.1 *Method A*—This test method measures (*a*) the free swell, (*b*) percent heave for vertical confining pressures up to the swell pressure, and (*c*) the swell pressure.

5.4.2 *Method B*—This test method measures (*a*) the percent heave or settlement for vertical pressure usually equivalent to the estimated in situ vertical overburden and other vertical pressure up to the swell pressure, and (*b*) the swell pressure.

5.4.3 *Method C*—This test method measures (*a*) the swell pressure, (*b*) preconsolidation pressure, and (*c*) percent heave or settlement within the range of applied vertical pressures.

NOTE 4—Methods A and C have produced estimates of heave consistent with observed heave. Method B may lead to estimates of heave less than observed heave. Method A has not been recommended for evaluation of swell pressure and consolidation parameters for settlement estimates because sorption of water under practically no restraint may disturb the soil structure.

6. Interferences

6.1 Estimates of the swell and settlement of soil determined by these test methods are often of key importance in design of floor slabs on grade and evaluation of their performance. However, when using these estimates it is recognized that swell parameters determined from these test methods for the purpose of estimating in situ heave of foundations and compacted soils may not be representative of many field conditions because:

6.1.1 Lateral swell and lateral confining pressure are not simulated.

6.1.2 Swell in the field usually occurs under constant overburden pressure, depending on the availability of water. Swell in the laboratory is evaluated by observing changes in volume due to changes in applied pressure while the specimen is inundated with water. Method B is designed to avoid this limitation.

6.1.3 Rates of swell indicated by swell tests are not always reliable indicators of field rates of heave due to fissures in the in situ soil mass and inadequate simulation of the actual availability of water to the soil. The actual availability of water to the foundation may be cyclic, intermittent, or depend on in-place situations, such as pervious soil-filled trenches and broken water and drain lines.

6.1.4 Secondary or long-term swell may be significant for some soils and should be added to primary swell.

6.1.5 Chemical content of the inundating water affects volume changes and swell pressure; that is, field water containing large concentrations of calcium ions will produce less swelling than field water containing large concentrations of sodium ions or even rain water.

6.1.6 Disturbance of naturally occurring soil samples greatly diminishes the meaningfulness of the results.

7. Apparatus and Materials

7.1 *Consolidometer*—The apparatus shall comply with the requirements of Test Method D 2435. The apparatus shall be capable of exerting a pressure on the specimen of (*1*) at least 200 % of the maximum anticipated design pressure, or (*2*) the pressure required to maintain the original spec-

imen height when the specimen is inundated (Method C), whichever is greatest.

7.1.1 Consolidometer rigidity influences the observed swell, particularly with Method C. Therefore, consolidometers of high rigidity should be used with Method C (see Test Method D 2435).

NOTE 5—Small increases in soil volume can significantly relieve swell pressures. Therefore, variations in displacements that occur during determination of swell pressures by Method C should be as small as possible to reduce the magnitude of correction required in 13.2.5. The measurements, especially swell pressure measurements, should be based on corrections for compression of members.

7.2 *Porous Stones*—The stones shall be smooth ground and fine enough to minimize intrusion of soil into the stones if filter paper is not used and shall reduce false displacements caused by seating of the specimen against the surface of porous stones (Note 6). Such displacements may be significant, especially if displacements and applied vertical pressures are small.

7.2.1 Porous stones shall be air dry.

7.2.2 Porous stones shall fit close to the consolidometer ring to avoid extrusion or punching at high vertical pressures. Suitable stone dimensions are described in 5.3 of Test Method D 2435.

NOTE 6—A suitable pore size is 10 μm if filter paper is not used. Filter paper is not recommended because of its high compressibility and should not be used when measuring the swell/settlement of stiff clays and when measuring swell pressure by Method C.

7.3 *Plastic Membrane, Aluminum Foil, or Moist Paper Towel*, a loose fitting cover to enclose the specimen, ring, and porous stones prior to inundating the specimen, used to minimize evaporation from the specimen.

8. Sampling of Naturally Occurring Soils

8.1 Disturbance of the soil sample from which specimens are to be obtained greatly diminishes the meaningfulness of results and should be minimized. Practice D 1587 and Practice D 3550 cover procedures and apparatus that may be used to obtain satisfactory undisturbed samples.

8.2 Storage in sampling tubes is not recommended for swelling soils even though stress relief may be minimal. The influence of rust and penetration of drilling fluid or free water into the sample may adversely influence laboratory test results. Water and oxygen from the sample could cause the formation of rust within the tube which could result in the sample adhering to the tube. Therefore, sampling tubes should be brass, stainless steel, or galvanized or lacquered inside to inhibit corrosion in accordance with Practice D 1587.

8.3 If samples are to be stored prior to testing, they should be extruded from the sampling tubes as quickly as possible after sampling and thoroughly sealed to minimize further stress relief and moisture loss. The sample should be extruded from the sampling tube in the same direction as sampled, to minimize further sample disturbance. If the sample cannot be extruded from the tubes immediately, they should be handled and shipped in accordance with Practices D 4220, Group D.

8.4 Prior to sealing in storage containers, samples extruded from tubes that were obtained with slurry drilling techniques should be wiped clean to remove drilling fluid adhering to the surface of the sample. An outer layer of 3 to 6 mm (0.1 to 0.3 in.) should be trimmed from the cylindrical surface of the samples so that moisture or the slurry will not penetrate into the sample and alter the swell potential, swell pressure, and other soil parameters. Such trimming will also remove some disturbance at the periphery due to sidewall friction. Drilling with air or foam instead of slurry will reduce moisture penetration.

8.5 Containers for storage of extruded samples may be either cardboard or metal and should be approximately 25 mm (1 in.) greater in diameter and 40 to 50 mm (1.5 to 2.0 in.) greater in length than the sample to be encased.

8.6 Soil samples stored in containers should be completely sealed in wax. The temperature of the wax should be 8 to 14°C (15 to 25°F) above the melting point when applied to the soil sample; wax that is too hot will penetrate pores and cracks in the sample and render it useless and will also dry the sample. Aluminum foil, cheese cloth, or plastic wrap may be placed around the sample to prevent penetration of molten wax into open fissures. A small amount of wax (about 113-mm or 0.5-in. thickness) should be placed in the bottom of the container and allowed to partly congeal. The sample should subsequently be placed in the container, completely immersed and covered with molten wax, and then allowed to cool before moving.

NOTE 7—A good wax for sealing expansive soils consists of a 1 to 1 mixture of paraffin and microcrystalline wax or 100 % beeswax.

8.7 Examine and test samples as soon as possible after receipt; however, samples required to be stored should be kept in a humid room and may require rewaxing and relabeling before storage. Samples encased in wax or sampling tubes may be cut using a band-saw. The soil specimen should be adequately supported while trimming to size using sharp and clean instruments. The specimen may be extruded from a section of sampling tube and trimmed in one continuous operation to minimize sampling disturbance.

9. Specimen Preparation

9.1 Undisturbed or laboratory-compacted specimens may be used for testing. Prepare laboratory-compacted specimens to duplicate compacted fills as closely as possible.

NOTE 8—The compaction method, such as kneading or static compaction, may influence the volume change behavior when prepared wet of optimum water content. Compaction of laboratory specimens is described in Test Methods D 698 and Test Methods D 1557. Swelling soil is sometimes adequately treated with lime and test specimens compacted as described in Test Methods D 3877.

9.2 Trim the specime[illegible] -dance with Test Method D 2435. A ring extensi[illegible] in Test Methods D 3877 may [illegible] assembly to accommod[illegible] thin hard disk may be i[illegible] ring during compactio[illegible] ring. Turn the ring an[illegible] the thin disk insert to [illegible] precaution to minimi[illegible] moisture and unit w[illegible] preparation. Vibrati[illegible] avoided.

[illegible] ment [illegible] as pur- [illegible] ate move- [illegible] ted tensioned [illegible] specimen may be [illegible] must conform with [illegible] needed in this respect [illegible] atic recording equipment.

[illegible] This test [illegible] and Rock and [illegible] Mechanics. Current edition approved [illegible] published as D 4554 – 85.

000280

NOTE 9—Tests with specimens recessed 5 mm (0.2 in.) in rings of 25-mm (1.0-in.) height have performed adequately.

10. Calibration

10.1 Calibrate the consolidation machine in accordance with Test Method D 2435.

10.2 Measure the compressibility of the apparatus with a smooth copper, brass, or hard steel disk substituted for the soil specimen. The disk should be approximately the same height as the specimen and 1 mm (0.04 in.) smaller in diameter than that of the ring. Place moistened filter papers between the porous stones and metal disk if filter papers are to be used during the test. Allow sufficient time for moisture to be squeezed from the filter paper during each load increment and decrement. The deflections of the calibration test are subtracted from the deflections of the soil test for each load increment and decrement.

NOTE 10—When filter paper is used, calibration must duplicate the exact load increment/decrement sequence due to inelastic compression of paper; thus, calibration is needed for each test. Periodic calibration will suffice for tests without filter paper.

11. Associated Soil Properties

11.1 Determine the initial (or natural) water content, wet and dry unit weights, volume, and initial void ratio in accordance with Test Method D 2435. Determine the specific gravity in accordance with Test Method D 854 when results are required in terms of void ratio. The liquid limit, plastic limit, and plasticity index as determined in accordance with Test Method D 4318 and the particle size distribution for soils with substantial granular material as determined in accordance with Method D 422 are useful in identifying the soil and correlating results of tests on different soils.

12. Procedure

12.1 Assemble the ring with the specimen recessed in the ring, dry filter paper if used, and air-dry porous stones in the loading device. Enclose the specimen, ring, filter paper, if any, and porous stones as soon as possible with a loose fitting plastic membrane, moist paper towel, or aluminum foil to minimize change in specimen water content and volume due to evaporation. This wrapping may be cut away and discarded at the time of specimen inundation.

12.2 Apply a seating pressure, σ_{se}, of at least 1 kPa (20 lbf/ft^2). Within 5 min after application of σ_{se}, adjust the extensometer deformation device for the initial or zero reading.

12.3 A graphical representation of results of the three alternative test methods shown in Fig. 2 includes corrections for consolidometer compressibility. These test methods are performed in accordance with Test Method D 2435 except as follows:

12.3.1 *Method A*—After the initial deformation reading at the seating pressure is recorded, inundate the specimen and record deformations after various elapsed times. Readings at 0.1, 0.2, 0.5, 1.0, 2.0, 4.0, 8.0, 15.0, and 30.0 min and 1, 2, 4, 8, 24, 48, and 72 h are usually satisfactory. Continue readings until primary swell is complete, as determined by the method illustrated in Fig. 1. After completion of swell, apply a vertical pressure of approximately 5, 10, 20, 40, 80, etc., kPa (100, 200, 400, 800, 1600, etc., lbf/ft^2) with each pressure maintained constant in accordance with 10.4 of Test Method D 2435. Maintain pressure until the specimen is recompressed to its initial void ratio/height. The duration of each load increment shall be equal and of a duration which assures 100 % primary consolidation (see 11.2 or 11.6 of Test Method D 2435).

NOTE 11—Some secondary swell must be recorded in order to determine graphically the end of primary swell.

NOTE 12—The duration of a typical loading increment is 1 day.

NOTE 13—Vertical pressures may be applied to recompress the specimen to void ratios less than the initial void ratio (point 6, Fig. 2 (Method A)) because the exact magnitude of vertical pressure required to recompress the specimen to its initial void ratio is unknown. Loading units equipped with pneumatic regulators are ideally suited for this purpose.

12.3.2 Method A may be modified to place an initial vertical stress, σ_1, on the specimen equivalent to the estimated vertical pressure on the in situ soil within 5 min of placing the seating pressure and securing the zero deformation reading. Read the deformation within 5 min and remove the vertical stress, except for the seating pressure. Record the deformation within 5 min after removal of σ_1, inundate the specimen, and continue the test as in 12.3.1. This modification provides a correction to the initial deformation reading at σ_{se} in an effort to more closely duplicate the in situ void ratio of the soil.

12.3.3 *Method B*—Apply a vertical pressure exceeding the seating pressure within 5 min of placing the seating pressure. Read the deformation within 5 min of placing the vertical pressure. The specimen is inundated immediately after the deformation is read and deformation recorded after elapsed times similar to 12.3.1 until primary swell is complete. Continue the test as in 12.3.1.

12.3.4 *Method C*—Apply an initial stress, σ_1, equivalent to the estimated vertical in situ pressure or swell pressure within 5 min after placement of the seating pressure. Read the deformation within 5 min after placing σ_1, and immediately inundate the specimen with water. Apply increments of vertical stress as needed to prevent swell (see Note 14). Variations from the deformation reading at the time the specimen is inundated at stress σ_1 shall be kept preferably within 0.005 mm (0.0002 in.) and not more than 0.010 mm (0.0004 in.). Load the specimen in accordance with 12.3.1, following no further tendency to swell (usually overnight). Load increments shall be sufficient to define the maximum point of curvature on the consolidation curve and to determine the slope of the virgin compression curve. The rebound curve following consolidation shall also be determined as illustrated in Fig. 2 (Method C). Duration of rebound load decrements shall be in accordance with 10.6 of Test Method D 2435.

NOTE 14—The use of small weight increments, such as lead shot, provide adequate control as needed to prevent swell.

12.4 Measurements shall include the time of reading, applied stress, observed deformation, and corrections for compression of members.

13. Calculations

13.1 Compute the initial void ratio or height, water content, wet and dry unit weights, and degree of saturation

000281

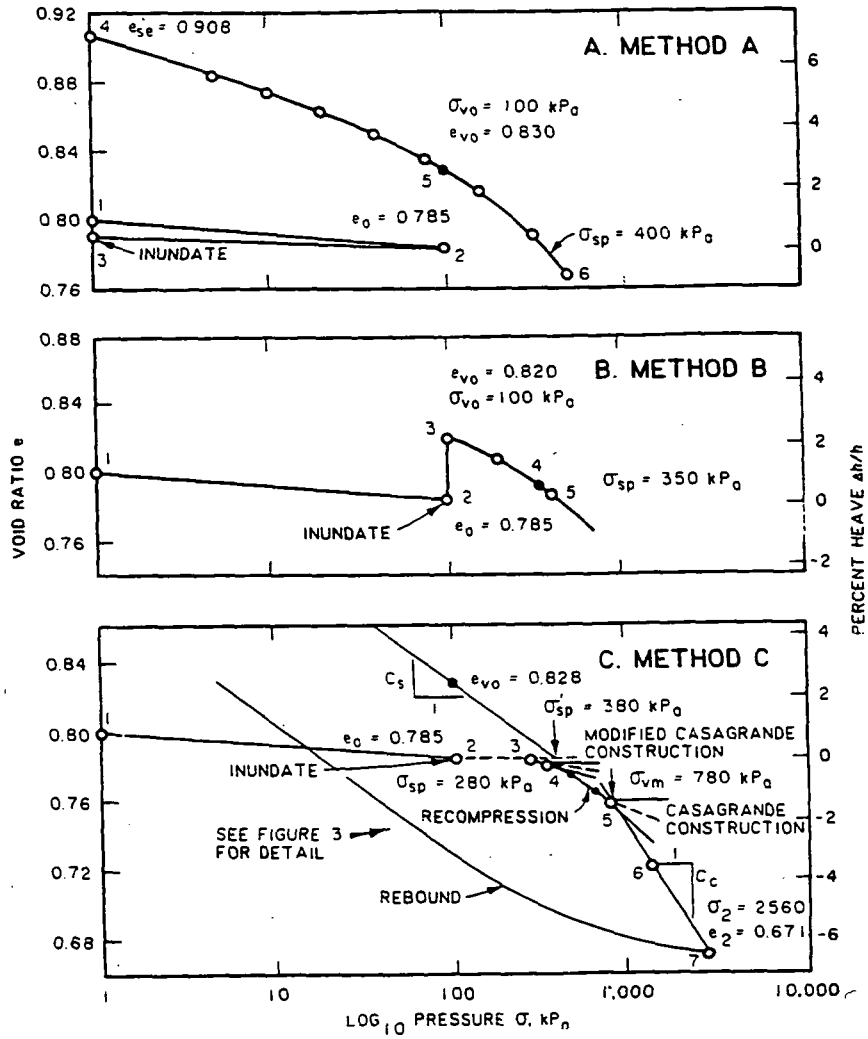

FIG. 2 Void Ratio - Log Pressure Curves

in accordance with Test Method D 2435. The void ratio or percent heave calculations are based on the final dial reading for each swell increment and load increment or decrement. The void ratio or percent heave may be plotted versus logarithm of the vertical pressure, as for examples of the three methods graphically illustrated in Fig. 2. The percent heave shall be relative to an initial specimen height, h_o, observed for an appropriate applied vertical pressure, σ (see 4.1.2). Void ratio or percent heave versus vertical pressure on an arithmetic scale may also be useful for practical applications.

13.2 The data points from a plot of e versus $\log_{10} \sigma$ (Fig. 2) may be used to evaluate the swell and settlement parameters of the tested soil.

13.2.1 *Method A*—The free swell at the seating pressure relative to the initial void ratio, e_o, is given as follows (see Fig. 2 (Method A)):

$$\frac{\Delta h}{h_o} \times 100 = \frac{e_{se} - e_o}{1 + e_o} \times 100 = \left(\frac{\gamma_{do}}{\gamma_{dse}} - 1\right) 100$$

where:

Δh = change in specimen height,
h_o = initial specimen height,
e_{se} = void ratio after stabilized swell at the seating pressure σ_{se},
e_o = initial void ratio,
γ_{do} = dry unit weight at void ratio e_o, and
γ_{dse} = dry unit weight at void ratio e_{se}.

NOTE 15—Figure 2 (Method A) illustrates the free swell at a seating pressure σ_{se} = 1 kPa (20 lbf/ft²).

$$\frac{\Delta h}{h_o} \times 100 = \frac{0.908 - 0.785}{1.000 + 0.785} \times 100 = 6.9\ \%$$

The percent heave of 6.9 % may be read directly from the right ordinate of Fig. 2 (Method A) for e_{se} = 0.908, point 4.

13.2.2 The percent heave at a vertical pressure, σ, up to the swell pressure σ_{sp}, relative to e_o or an appropriate initial vertical pressure σ_{vo}, is as follows (see Fig. 2 (Method A)):

$$\frac{\Delta h}{h_o} \times 100 = \frac{e - e_o}{1 + e_o} \times 100 = \left(\frac{\gamma_{do}}{\gamma_d} - 1\right) 100$$

where:

e = void ratio at vertical pressure, and
γ_d = dry unit weight at void ratio e.

282

NOTE 16—Figure 2 (Method A) illustrates a percent heave, as follows:

$$\frac{\Delta h}{h_o} \times 100 = \frac{0.830 - 0.785}{1.000 + 0.785} \times 100 = 2.5\ \%.$$

where:
$e = e_{vo} = 0.830$, and
$\sigma = \sigma_{vo} = 100$ kPa (2000 lbf/ft²).
The swell pressure, σ_{sp}, is given by 400 kPa (8350 lbf/ft²) relative to e_o = 0.785.

13.2.3 Figure 2 may be plotted with dry unit weight, γ_d, versus logarithm of applied pressure, σ, instead of void ratio e versus logarithm σ if specific gravities were not determined. The swell for any change in dry unit weight within limits of the test results may be determined in a manner similar to that described in 13.2.1.

13.2.4 *Method B*—The percent heave at the vertical pressure σ_{vo}, applied following the seating pressure, (see 4.1.2) relative to e_o is given as follows (see Fig. 2 (Method B)):

$$\frac{\Delta h}{h_o} \times 100 = \frac{e_{vo} - e_o}{1 + e_o} \times 100 = \left(\frac{\gamma_{do}}{\gamma_{dvo}} - 1\right) 100$$

where:
e_{vo} = void ratio after stabilized swell at the applied vertical pressure σ_{vo}, and
γ_{dvo} = unit dry weight at void ratio e_{vo}.

NOTE 17—Figure 2 (Method B) illustrates a percent heave, as follows:

$$\frac{\Delta h}{h_o} \times 100 = \frac{0.820 - 0.785}{1.000 + 0.785} \times 100 = 2.0\ \%$$

where
$\sigma = \sigma_{vo} = 100$ kPa (2000 lbf/ft²), and
σ_{sp} = swell pressure = 350 kPa (7300 lbf/ft²) for $e_o = 0.785$.
Computations of settlement are similar if the specimen contracts at the applied vertical pressure following access to water.

13.2.5 *Method C*—The swell pressure σ_{sp} (point 3, Fig. 2 (Method C)) shall be corrected upward by a suitable construction procedure. Soil disturbance and the process of adjusting vertical pressures may allow some volume expansion to occur, which reduces the maximum observed swell pressure.

NOTE 18—Suitable correction procedures include those based on the preconsolidation pressure σ_{vm}. A construction procedure for soils that break onto a "virgin compression" curve when the recompression curve is not apparent is as follows: (*a*) locate the point of maximum curvature (point 5, Fig. 2 (Method C)), (*b*) draw horizontal, tangential, and bisector lines through the point of maximum curvature, (*c*) draw the virgin part of the compression curve backward to intersect the bisector at the preconsolidation pressure σ_{vm}, or 780 kPa (Fig. 2 (Method C)). The swell pressure is taken as the preconsolidation pressure. The slope of the rebound curve of these soils is usually much less than that of the compression curve.

NOTE 19—A modified construction procedure may be used for soils that break onto the recompression curve, Fig. 2 (Method C). The construction procedure is as follows: (*a*) locate the point of maximum curvature (point 4, Fig. 2 (Method C)), (*b*) draw horizontal, tangential, and bisector lines through the point of maximum curvature, (*c*) extend the recompression line through the bisector line. Intersection of the recompression line with the bisector line is designated the corrected swell pressure, σ'_{sp}, which is 380 kPa for the example in Fig. 2 (Method C). A detail of this construction is shown in Fig. 3. σ'_{sp} in this case is less than σ_{vm}. If the recompression line is not well defined, draw a line parallel with the rebound curve for void ratios greater than e_o through the bisector line. Frequent load increments may be necessary to define any recompression curve.

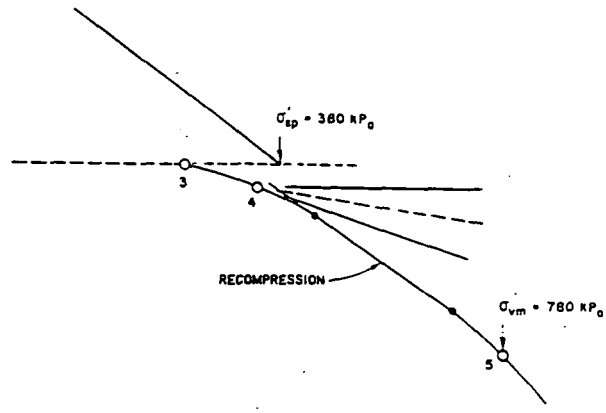

FIG. 3 Construction Detail for Method C

13.2.6 Draw a suitable curve parallel with the rebound (or recompression) curve for void ratios greater than e_o through the corrected swell pressure σ'_{sp} at the initial void ratio e_o given by point 3, Fig. 2 (Method C), to obtain the percent heave for any vertical pressure relative to σ'_{sp} and e_o within the range of test results.

NOTE 20—Percent heave calculated by Method C for $\sigma_{vo} = 100$ kPa (2000 lbf/ft²) is as follows:

$$\frac{\Delta h}{h_o} \times 100 = \frac{e_{vo} - e_o}{1 + e_o} \times 100 = \frac{0.828 - 0.785}{1.000 + 0.785} \times 100 = 2.4\ \%$$

13.2.7 The percent settlement (negative percent heave) may be evaluated from the void ratio e_2 exceeding the corrected swell pressure, as follows:

$$\frac{\Delta h}{h_o} \times 100 = \frac{e_2 - e_o}{1 + e_o} \times 100$$

NOTE 21—Figure 2 (Method C) illustrates the percent settlement, as follows:

$$\frac{\Delta h}{h_o} \times 100 = \frac{0.671 - 0.785}{1.000 + 0.785} \times 100 = -6.4\ \%$$

where:
$e_2 = 0.671$, and
$\sigma_2 = 2560$ kPa (53 000 lbf/ft²).

14. Report

14.1 The report shall include the information required in Test Method D 2435, and shall also include the following:

14.1.1 All departures from procedures, including changes in loading sequences.

14.1.2 The percent heave or settlement for the given vertical pressure and swell pressure σ_{sp}, or corrected swell pressure σ'_{sp}. The compression index, C_c, and swell index, C_s, should be reported if these are evaluated. All departures from the described procedures for computing these parameters and correction procedures used to determine percent heave or settlement and σ'_{sp} shall be described.

14.1.3 The type of water used to inundate the specimen.

15. Precision and Bias

15.1 *Precision*—Data are being evaluated to determine the precision of this test method. In addition, Subcommittee

000283

62

D18.05 is seeking pertinent data from users of the test method.

15.2 *Bias*—There is no accepted reference value for this test method, therefore, bias cannot be determined.

16. Keywords

16.1 Expansive soil; heave; laboratory tests; settlement; swell pressure; swell index.

The American Society for Testing and Materials takes no position respecting the validity of any patent rights asserted in connection with any item mentioned in this standard. Users of this standard are expressly advised that determination of the validity of any such patent rights, and the risk of infringement of such rights, are entirely their own responsibility.

This standard is subject to revision at any time by the responsible technical committee and must be reviewed every five years and if not revised, either reapproved or withdrawn. Your comments are invited either for revision of this standard or for additional standards and should be addressed to ASTM Headquarters. Your comments will receive careful consideration at a meeting of the responsible technical committee, which you may attend. If you feel that your comments have not received a fair hearing you should make your views known to the ASTM Committee on Standards, 1916 Race St., Philadelphia, PA 19103.

000284

Designation: D 4643 – 87

Standard Test Method for Determination of Water (Moisture) Content of Soil by the Microwave Oven Method[1]

This standard is issued under the fixed designation D 4643; the number immediately following the designation indicates the year of original adoption or, in the case of revision, the year of last revision. A number in parentheses indicates the year of last reapproval. A superscript epsilon (ε) indicates an editorial change since the last revision or reapproval.

This standard has been approved for use by agencies of the Department of Defense. Consult the DoD Index of Specifications and Standards for the specific year of issue which has been adopted by the Department of Defense.

1. Scope

1.1 This test method outlines procedures for determining the water (moisture) content of soils by incrementally drying soil in a microwave oven.

1.2 This test method is not intended as a replacement for Method D 2216; but, rather as a supplement when more rapid results are required or desired to expedite other phases of testing. Method D 2216 is to be used as the method to compare for accuracy checks and correction.

1.3 When questions of accuracy between this test method and Method D 2216 arise, Method D 2216 shall be the referee method.

1.4 This test method is applicable for most soil types. For some soils, such as those containing significant amounts of halloysite, mica, montmorillonite, gypsum or other hydrated materials, highly organic soils, or soils in which the pore water contains dissolved solids (such as salt in the case of marine deposits), this test method may not yield reliable water content values.

1.5 The values stated in SI units are to be regarded as the standard.

1.6 *This standard may involve hazardous materials, operations, and equipment. This standard does not purport to address all of the safety problems associated with its use. It is the responsibility of the user of this standard to establish appropriate safety and health practices and determine the applicability of regulatory limitations prior to use.* See Section 7.

2. Referenced Documents

2.1 *ASTM Standards:*

D 653 Terminology Relating to Soil, Rock, and Contained Fluids[2]

D 2216 Method for Laboratory Determination of Water (Moisture) Content of Soil, Rock, and Soil-Aggregate Mixtures[2]

3. Terminology

3.1 *Definitions:*

3.1.1 All definitions are in accordance with Terminology D 653.

3.2 *Descriptions of Terms Specific to this Standard:*

3.2.1 *water (moisture) content*—the ratio, expressed as a percentage, of the mass of "pore" or "free" water in a given mass of soil to the mass of the solid particles.

3.2.2 *microwave heating*—a process by which heat is induced within a material due to the interaction between dipolar molecules of the material and an alternating, high frequency electric field. Microwaves are electromagnetic waves with 1 mm to 1 m wavelengths.

4. Summary of Method

4.1 A moist soil specimen is placed in a suitable container and its mass is determined. It is then placed in a microwave oven, subjected to an interval of drying, and removed from the oven and its new mass is determined. This procedure is repeated until the mass becomes nearly constant.

4.2 The difference between the mass of the moist specimen and the dried specimen is used as the mass of water originally contained in the specimen. The water content is determined by dividing the mass of water by the dry mass of soil, multiplied by 100. For a given soil and sample size, the time to achieve a constant dry mass can be noted and used as a minimum drying time for subsequent tests using the same size specimen of the same soil.

5. Significance and Use

5.1 The water content of a soil is used throughout geotechnical engineering practice both in the laboratory and in the field. The use of Method D 2216 for water content determination can be time consuming and there are occasions when a more expedient method is desirable. The use of a microwave oven is one such method.

5.2 The principal objection to the use of the microwave oven for water-content determination has been the possibility of overheating the soil, thereby yielding a water content higher than would be determined by Method D 2216. While not eliminating this possibility, the incremental drying procedure described in this test method will minimize its effects. Some microwave ovens have settings at less than full power, which can also be used to reduce overheating.

5.3 The behavior of a soil, when subjected to microwave energy, is dependent on its mineralogical compositions, and as a result no one procedure is applicable for all types of soil. Therefore, the procedure recommended in this test method is meant to serve as a guide when using the microwave oven.

[1] This test method is under the jurisdiction of ASTM Committee D-18 on Soil and Rock and is the direct responsibility of Subcommittee D18.08 on Special and Construction Control Tests.

Current edition approved Feb. 2, 1987. Published April 1987.

[2] *Annual Book of ASTM Standards*, Vol 04.08.

000285

5.4 This test method is best suited for minus No. 4 sized material. Larger size particles can be tested; however, care must be taken because of the increased chance of particle shattering.

5.5 The use of this method may not be appropriate when highly accurate results are required, or the test using the data is extremely sensitive to moisture variations.

5.6 Due to the localized high temperatures that the specimen is exposed to in microwave heating, the physical characteristics of the soil may be altered. Degregation of individual particles may occur, along with vaporization or chemical transition. It is therefore recommended that samples used in this test method not be used for other tests subsequent to drying.

6. Apparatus

6.1 *Microwave Oven*—A household-type microwave oven, preferably with a vented chamber is suitable. The required size and power rating of the oven is dependent on its intended use.

NOTE 1—For routine laboratory applications, ovens with input power ratings between 1 and 2 kW have proven to be adequate.

6.2 *Balances,* having a precision (repeatability) of +0.01 g for specimens having a mass of 200 g or less, +0.1 g for specimens having a mass between 200 and 1000 g, or +1 g for specimens having a mass greater than 1000 g.

6.3 *Specimen Containers*—Suitable containers made of a nonmetallic nonabsorbant material, resistant to thermal shock, and not subject to changes in mass or shape when subjected to repeated heating, cooling, or cleaning. Porcelain evaporating dishes and standard borosilicate glass dishes perform satisfactorily. Other containers, such as paper cups or plates, also have been used satisfactorily; however, they may require pre-drying prior to use.

6.4 *Container Handling Apparatus*—A glove or holder, suitable for removing hot containers from the oven.

7. Hazards

7.1 Handle hot containers with a container holder. Some soil types can retain considerable heat, and serious burns could result from improper handling.

7.2 Suitable eye protection is recommended due to the possibility of particle shattering during the heating, mixing, or mass determinations.

7.3 Safety precautions supplied by the manufacturer of the microwave should be observed. Particular attention should be paid to keeping the door sealing gasket clean and in good working condition.

NOTE 2—The use of a microwave oven for the drying of soils may be considered abusive by the manufacturers and consitute voiding of warranties. Microwave drying of soils containing metallic materials may cause arcing in the oven. Highly organic soils and soils containing oils and coal may ignite and burn during microwave drying. Continued operation of the oven after the soil has reached constant weight may also cause damage or premature failure of the microwave oven.

NOTE 3—When first introduced, microwave ovens were reported to affect heart pacemakers, primarily because of the operating frequencies of the two devices. Since that time, pacemakers have been redesigned, and the microwave oven is not regarded as the health hazard it once was. However, it is advisable to post warnings that a microwave is in use.

7.4 Highly organic soils and soils containing oil or other contaminates may ignite into flames during microwave drying. Means for smothering flames to prevent operator injury or oven damage should be available during testing. Fumes given off from contaminated soils or wastes may be toxic, and the oven should be vented accordingly.

7.5 Due to the possibility of steam explosions, or thermal stress shattering porous or brittle aggregates, a covering over the sample container may be appropriate to prevent operator injury or oven damage. A cover of heavy paper toweling has been found satisfactory for this purpose. This also prevents scattering of the test sample in the oven during the drying cycle.

7.6 Do not use metallic containers in a microwave oven because arcing and oven damage may result.

7.7 Observe manufacturer's operating instructions when installing and using the oven.

8. Samples

8.1 Keep the samples that are stored prior to testing in noncorrodible airtight containers at a temperature between approximately 3 and 30°C in an area that prevents direct exposure to sunlight.

8.2 The water content determination should be performed as soon as practical after sampling, especially if potentially corrodible containers (such as steel thin-walled tubes, paint cans, and the like) or unsealed sample bags are used.

9. Test Specimen

9.1 For water contents being determined in conjunction with another ASTM method, the method of specimen selection specified in that method controls.

9.2 The manner in which the test specimen is selected and its required mass is basically dependent on the purpose (application) of the test, type of material being tested, and the type of sample (specimen from another test, bag, tube, split-barrel, and the like). In all cases, however, a representative portion of the total sample shall be selected. If a thinly layered soil or more than one soil type is encountered, select an average portion or individual portions, or both, and note which portion(s) was tested in the report of the results.

9.2.1 For bulk samples, select the test specimen from the material after it has been mixed thoroughly. The mass of moist material selected shall be in accordance with Table 1.

9.2.2 For small (jar) samples, select a representative portion in accordance with the following procedure:

9.2.2.1 For cohesionless soils, mix thoroughly the material, then select a test specimen having a mass of moist material in accordance with Table 1.

9.2.2.2 For cohesive soils, remove about 3 mm of material from the exposed periphery of the sample and slice the remaining specimen in half (to check if the material is layered), prior to selecting the test specimen. If the soil is layered, see 9.2. The mass of moist material selected should be in accordance with Table 1, if coarse-grained particles are

TABLE 1 Test Specimen Masses

Sieve Retaining Not More Than About 10 % of Sample	Recommended Mass of Moist Specimen, g
2.0 mm (No. 10)	100 to 200
4.75 mm (No. 4)	300 to 500
19 mm (¾ in.)	500 to 1000

noted. Breaking or cutting of cohesive samples to approximately 6-mm (¼-in.) particles will speed drying and prevent crusting or the overheating of the surface while drying the interior.

9.3 Using a test specimen smaller than the minimum mass indicated previously requires discretion, though it may be adequate for the purpose of the test. A specimen having a mass less than the previously indicated value shall be noted in the report of the results.

NOTE 4—In many cases, when working with a small sample containing a relatively large coarse-grained particle, it is appropriate not to include this particle in the test specimen. If this occurs, it should be noted in the report of the results.

9.4 When results of a water (moisture) content determination by the use of this test method are to be compared to the results of another method, such as Method D 2216, a second sample should be obtained during the selection of the sample for this test method. Precautions should be taken to obtain a sample of the same water (moisture) content. The comparison sample should be processed as quickly as possible to avoid unrecorded moisture losses.

10. Conditioning

10.1 Prepare and process the specimens as quickly as possible to minimize unrecorded moisture loss that will result in erroneous water content determinations.

10.2 Cut or break up the soil into small size aggregations to aid in obtaining more uniform drying of the specimen.

10.3 If the specimens are not to be tested immediately, place in containers that can be closed to prevent loss of moisture prior to the initial weighing.

11. Procedure

11.1 Determine the mass of a clean, dry container or dish, and record.

11.2 Place the soil specimen in the container, and immediately determine and record the mass.

11.3 Place the soil and container in a microwave oven and turn the oven on for 3 min. If experience with a particular soil type and specimen size indicates shorter or longer initial drying times can be used without overheating, the initial and subsequent drying times may be adjusted.

NOTE 5—The 3-min initial setting is for a minimum sample mass of 100 g, as indicated in Table 1. Smaller samples are not recommended when using the microwave oven because drying may be too rapid for proper control. When very large samples are needed to represent soil containing large gravel particles, the sample may need to be split into segments and dried separately to obtain the dry mass of the total sample.

NOTE 6—Most ovens have a variable power setting. For the majority of soils tested, a setting of "high" should be satisfactory; however, for some soils such a setting may be too severe. The proper setting can be determined only through the use of and experience with a particular oven for various soil types and sample sizes. The energy output of microwave ovens may decrease with age and usage; therefore, power settings and drying times should be established for each oven.

11.4 After the set time has elapsed, remove the container and soil from the oven and cool to allow handling and to prevent damage to the balance. Determine and record the mass.

11.5 With a small spatula or knife carefully mix the soil, taking special precaution not to lose any soil.

11.6 Return the container and soil to the oven and reheat in the oven for 1 min.

11.7 Repeat 11.4 through 11.6, until the change between two consecutive mass determinations would have an insignificant affect on the calculated moisture content. A change of 0.1 % or less of the initial wet mass of the soil should be acceptable for most specimens.

11.8 Use the final mass determination in calculating the water content. Obtain this value immediately after removing the container and soil from the oven and cooling.

11.9 When routine testing of similar soils is contemplated, the drying times and number of cycles may be standardized for each oven. When standardized drying times and cycles are utilized, periodic verification to assure that the results of the final dry mass determination are equivalent to the procedure in 11.7 should be performed.

NOTE 7—Incremental heating, together with stirring, will minimize overheating and localized drying of the soil, thereby yielding results more consistent with results obtained by Method D 2216. The recommended time increments have been suitable for most specimens having particles smaller than a No. 4 sieve and with a mass of approximately 200 g; however, they may not be appropriate for all soils and ovens, and adjustment may be necessary.

NOTE 8—Water content specimens should be discarded after testing and not used in any other tests due to particle breakdown, chemical changes or losses, melting, or losses of organic constituencies.

12. Calculations

12.1 Calculate the water content of the soil as follows:

$$w = [(\text{mass of water})/(\text{mass of ovendried soil})] \times 100$$

$$w = [(M_1 - M_2)/(M_2 - M_c)] \times 100 = M_w/M_s \times 100$$

where:

w = water content, %,
M_1 = mass of container and moist specimen, g,
M_2 = mass of container and ovendried specimen, g,
M_c = mass of container, g,
M_w = mass of water, g, and
M_s = mass of solid particles, g,

13. Report

13.1 The report (data sheet) shall include the following:

13.1.1 Identification of the sample (material) being tested, by boring number, sample number, test number, and the like.

13.1.2 Water content of the specimen to the nearest 0.1 or 1 %, depending on the purpose of the test.

13.1.3 Indicate if test specimen has a mass less than the minimum indicated in Table 1.

13.1.4 Indicate if test specimen contains more than one soil type (layered, and the like).

13.1.5 Indication of any material (size and amount) excluded from the test specimen.

13.1.6 Time and setting of initial drying period and subsequent incremental drying periods.

13.1.7 Initial mass of test specimen prior to drying, and the mass after the incremental drying periods.

13.1.8 Identification of comparison test(s) if performed, and the method of test utilized.

13.1.9 Identification of the microwave oven and the drying settings and cycles used, when standardized drying is utilized.

62

NOTE 9—Water (moisture) content determinations conducted in accordance with Method D 2216 or other methods may be recorded on the same report. This is not a mandatory requirement, but may be convenient when the results of the two methods are to be compared.

14. Precision and Bias

14.1 Limited data is being evaluated to determine the precision of this test method. The subcommittee is seeking pertinent data from users of the test method.

14.2 Preliminary studies to determine bias indicate the mean difference between the absolute value of water content, expressed as a percentage, when tested by the microwave oven and convection oven is 0.24 % for micaceous soils (having 5 to 25 % mica particles by mass) and 0.61 % for other soils. The standard deviation of the absolute value of the difference between the water content, expressed as a percentage, by the microwave oven and convection oven is 0.2 % for the micaceous soils and 0.3 % for other soils.

The American Society for Testing and Materials takes no position respecting the validity of any patent rights asserted in connection with any item mentioned in this standard. Users of this standard are expressly advised that determination of the validity of any such patent rights, and the risk of infringement of such rights, are entirely their own responsibility.

This standard is subject to revision at any time by the responsible technical committee and must be reviewed every five years and if not revised, either reapproved or withdrawn. Your comments are invited either for revision of this standard or for additional standards and should be addressed to ASTM Headquarters. Your comments will receive careful consideration at a meeting of the responsible technical committee, which you may attend. If you feel that your comments have not received a fair hearing you should make your views known to the ASTM Committee on Standards, 1916 Race St., Philadelphia, PA 19103.

000288

Designation: D 4767 – 88[ε1]

Standard Test Method for Consolidated-Undrained Triaxial Compression Test on Cohesive Soils[1]

This standard is issued under the fixed designation D 4767; the number immediately following the designation indicates the year of original adoption or, in the case of revision, the year of last revision. A number in parentheses indicates the year of last reapproval. A superscript epsilon (ε) indicates an editorial change since the last revision or reapproval.

[ε1] NOTE—Section 13 was added editorially January 1991.

1. Scope

1.1 This test method covers the determination of strength and stress-strain relationships for a cylindrical specimen of either an undisturbed or remolded saturated cohesive soil when it is isotropically consolidated and sheared undrained in compression at a constant rate of axial deformation (strain controlled).

1.2 The test method provides for the calculation of total and effective stresses on, and axial compression of the test specimen by measurement of axial load, axial deformation, and pore-water pressure.

1.3 The test provides data useful in determining strength and deformation properties of cohesive soils such as Mohr strength envelopes and Young's modulus. Generally, three specimens are tested at different effective consolidation stresses to define a strength envelope.

1.4 The determination of strength envelopes and the development of relationships to aid in interpreting and evaluating test results are left to the engineer or office requesting the test.

1.5 The values stated in either SI or non-SI units shall be regarded separately as standard. The values in each system may not be exact equivalents, therefore, each system must be used independently of the other, without combining values in any way.

1.6 *This standard may involve hazardous materials, operations, and equipment. This standard does not purport to address all of the safety problems associated with its use. It is the responsibility of the user of this standard to establish appropriate safety and health practices and determine the applicability of regulatory limitations prior to use.*

2. Referenced Documents

2.1 *ASTM Standards:*

D 422 Method for Particle-Size Analysis of Soils[2]

D 653 Terminology Relating to Soil, Rock, and Contained Fluids[2]

D 854 Test Method for Specific Gravity of Soils[2]

D 1587 Practice for Thin-Walled Tube Sampling of Soils[2]

D 2166 Test Method for Unconfined Compressive Strength of Cohesive Soil[2]

D 2216 Method for Laboratory Determination of Wa Content of Soil, Rock, and Soil-Aggregate Mixtures[2]

D 2435 Test Method for One-Dimensional Consolidati Properties of Soils[2]

D 2487 Test Method for Classification of Soils for En neering Purposes[2]

D 2850 Test Method for Unconsolidated, Undrain Compressive Strength of Cohesive Soils in Triax Compression[2]

D 4220 Practices for Preserving and Transporting S Samples[2]

D 4318 Test Method for Liquid Limit, Plastic Limit, a Plasticity Index of Soils[2]

3. Terminology

3.1 *Definitions*—The definitions of terms used in this t method shall be in accordance with Terminology D 653.

3.2 *Description of Terms Specific to this Standard:*

3.2.1 *back pressure*—a pressure applied to the specim pore-water to cause air in the pore space to pass into soluti in the pore-water, that is, to saturate the specimen.

3.2.2 *effective consolidation stress*—the difference tween the cell pressure and the pore-water pressure prior shearing the specimen.

3.2.3 *failure*—the stress condition at failure for a specimen. Failure is often taken to correspond to maximum principal stress difference (maximum devia stress) attained or the principal stress difference (devia stress) at 15 % axial strain, whichever is obtained first dur the performance of a test. Depending on soil behavior field application, other suitable failure criteria may defined, such as maximum effective stress obliquity, $\sigma'_1/$ or the principal stress difference (deviator stress) at a selec axial strain other than 15 %.

4. Significance and Use

4.1 The shear strength of a saturated soil in tria compression depends on the stresses applied, time of con idation, strain rate, and the stress history experienced by soil.

4.2 The strength in this test is measured under undrai conditions and is applicable to field conditions where s that have been fully consolidated under one set of stresses subjected to a change in stress without time for fur consolidation to take place (undrained condition), and field stress conditions are similar to those in the test.

[1] This test method is under the jurisdiction of ASTM Committee D-18 on Soil and Rock and is the direct responsibility of Subcommittee D18.05 on Structural Properties of Soils.

Current edition approved May 3, 1988. Published July 1988.

[2] *Annual Book of ASTM Standards*, Vol 04.08.

000289

NOTE 1—If the strength is required for the case where the soil is not consolidated during testing prior to shear, refer to Test Method D 2850 or Test Method D 2166.

4.3 Using the pore-water pressure measured during the test, the shear strength determined from this test can be expressed in terms of effective stress. This shear strength may be applied to field conditions where full drainage can occur (drained conditions) or where pore pressures induced by loading can be estimated, and the field stress conditions are similar to those in the test.

4.4 The shear strength determined from the test expressed in terms of total stresses (undrained conditions) or effective stresses (drained conditions) is commonly used in embankment stability analyses, earth pressure calculations, and foundation design.

5. Apparatus

5.1 A schematic diagram of a triaxial compression apparatus suitable for the performance of consolidated-undrained tests is shown in Fig. 1. The requirements for equipment needed to perform satisfactory tests are given in the following sections.

5.2 *Axial Loading Device*—The axial compression device may be a screw jack driven by an electric motor through a geared transmission, a hydraulic or pneumatic loading device, or any other compression device with sufficient capacity and control to provide the rate of axial strain (loading) described in 8.4.2. The rate of advance of the loading device should not deviate by more than ±1 % from the selected value. Vibration due to the operation of the loading device shall be sufficiently small to not cause dimensional changes in the specimen or to produce changes in pore-water pressure when the drainage valves are closed.

NOTE 2—A loading device may be judged to produce sufficiently small vibrations if there are no visible ripples in a glass of water placed on the loading platform when the device is operating.

5.3 *Axial Load-Measuring Device*—The axial load-measuring device may be a load ring, electronic load cell, hydraulic load cell, or any other load-measuring device capable of the accuracy prescribed in this paragraph and may be a part of the axial loading device. The axial load-measuring device shall be capable of measuring the axial load to an accuracy of within ±1 % of the axial load at failure. If the load-measuring device is located inside the triaxial compression chamber, it shall be insensitive to horizontal forces and to the magnitude of the chamber pressure.

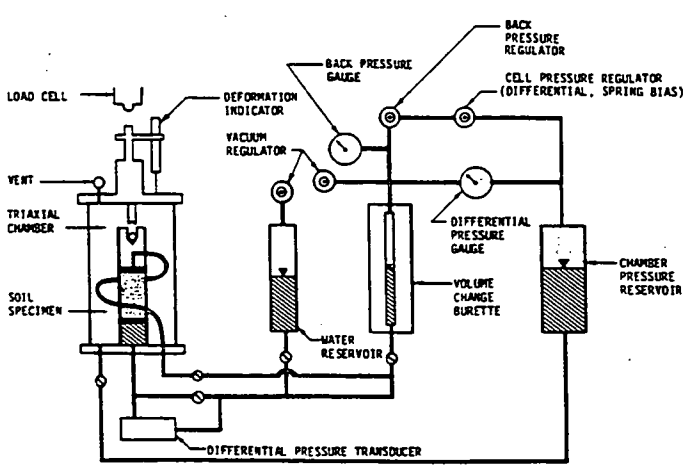

FIG. 1 Schematic Diagram of a Typical Consolidated Undrained Triaxial Apparatus

5.4 *Triaxial Compression Chamber*—The triaxial chamber must be able to withstand a chamber pressure equal to the sum of the effective consolidation stress and the back pressure. It shall consist of a top plate and a baseplate separated by a cylinder. The cylinder may be constructed of any material capable of withstanding the applied pressures. It is desirable to use a transparent material or have a cylinder provided with viewing ports so the behavior of the specimen may be observed. The top plate shall have a vent valve such that air can be forced out of the chamber as it is filled. The baseplate shall have an inlet through which the pressure liquid is supplied to the chamber, and inlets leading to the specimen base and provide for connection to the cap to allow saturation and drainage of the specimen when required.

5.5 *Axial Load Piston*—The piston passing through the top of the chamber and its seal must be designed so the variation in axial load due to friction does not exceed 0.1 % of the axial load at failure and so there is negligible lateral bending of the piston during loading.

NOTE 3—The use of two linear ball bushings to guide the piston is recommended to minimize friction and maintain alignment.

NOTE 4—A minimum piston diameter of ⅙ the specimen diameter has been used successfully in many laboratories to minimize lateral bending.

5.6 *Pressure- and Vacuum-Control Devices*—The chamber pressure and back pressure control devices shall be capable of applying and controlling pressures to within ±0.25 psi (2 kPa) for effective consolidation pressures less than 28 psi (200 kPa) and to within ±1 % for effective consolidation pressures greater than 28 psi (200 kPa). The vacuum control device shall be capable of applying and controlling partial vacuums to within ±0.25 psi (2 kPa). The devices may consist of self-compensating mercury pots, pneumatic pressure regulators, combination pneumatic pressure and vacuum regulators, or any other device capable of applying and controlling pressures or partial vacuums to the required tolerances.

5.7 *Pressure- and Vacuum-Measurement Devices*—The chamber pressure, back pressure, and vacuum measuring devices shall be capable of measuring pressures or partial vacuums to the tolerances given in 5.6. They may consist of Bourdon gages, pressure manometers, electronic pressure transducers, or any other device capable of measuring pressures, or partial vacuums to the stated tolerances. If separate devices are used to measure the chamber pressure and back pressure, the devices must be calibrated simultaneously and against the same pressure source. Since the chamber and back pressure are the pressures taken at the midheight of the specimen, it may be necessary to adjust the calibration of the devices to reflect the hydraulic head of fluids in the chamber and back pressure control systems (Fig. 1).

5.8 *Pore-Water Pressure Measurement Device*—The specimen pore-water pressure shall also be measured to the tolerances given in 5.6. During undrained shear, the pore-

000290

water pressure shall be measured in such a manner that as little water as possible is allowed to go into or out of the specimen. To achieve this requirement, a very stiff electronic pressure transducer or null-indicating device must be used. With an electronic pressure transducer the pore-water pressure is read directly. With a null-indicating device a pressure control is continuously adjusted to maintain a constant level of the water/mercury interface in the capillary bore of the device. The pressure required to prevent movement of the water is equal to the pore-water pressure. Both measuring devices shall have a rigidity of all the assembled parts of the pore-water pressure measurement system relative to the total volume of the specimen, satisfying the following requirement:

$$\frac{(\Delta V/V)}{\Delta u} < 2.2 \times 10^{-5}\ \text{in.}^2/\text{lb}\ (3.2 \times 10^{-6}\ \text{m}^2/\text{kN}) \qquad (1)$$

where:

ΔV = change in volume of the pore-water measurement system due to a pore pressure change, in.^{3} (mm^3),
V = the total volume of the specimen, in.^{3} (mm^3), and
Δu = the change in pore pressure, psi (kPa).

NOTE 5—To meet the rigidity requirement, tubing between the specimen and the measuring device should be short and thick walled with small bores. Thermoplastic, copper, and stainless steel tubing have been used successfully in many laboratories.

5.9 *Volume Change Measurement Device*—The volume of water entering or leaving the specimen shall be measured with an accuracy of within ±0.05 % of the total volume of the specimen. The volume measuring device is usually a burette but may be any other device meeting the accuracy requirement. The device must be able to withstand the maximum chamber pressure.

5.10 *Deformation Indicator*—The vertical deformation of the specimen is usually determined from the travel of the piston acting on the top of the specimen. The piston travel shall be measured with an accuracy of at least ±0.02 % of the initial specimen height. The deformation indicator shall have a travel range of at least 20 % of the initial height of the specimen and may be a dial indicator, linear variable differential transformer (LVDT), extensiometer, or other measuring device meeting the requirements for accuracy and range.

5.11 *Specimen Cap and Base*—The specimen cap and base shall be designed to provide drainage from both ends of the specimen. They shall be constructed of a rigid, noncorrosive, impermeable material, and each shall, except for the drainage provision, have a circular plane surface of contact with the porous discs and a circular cross section. The weight of the specimen cap and top porous disc shall be less than 0.5 % of the applied axial load at failure or less than 0.1 lb (50 g). The diameter of the cap and base shall be equal to the initial diameter of the specimen. The specimen base shall be connected to the triaxial compression chamber to prevent lateral motion or tilting, and the specimen cap shall be designed such that eccentricity of the piston-to-cap contact relative to the vertical axis of the specimen does not exceed 0.05 in. (1.3 mm). The end of the piston and specimen cap contact area shall be designed so that tilting of the specimen cap during the test is minimal. The cylindrical surface of the specimen base and cap that contacts the membrane to form a seal shall be smooth and free scratches.

5.12 *Porous Discs*—The specimen shall be separated fro the specimen cap and base by rigid porous discs of diameter equal to that of the specimen. The coefficient permeability of the discs shall be approximately equal to th of fine sand (4×10^{-5} in./s (1×10^{-4} cm/s)). The discs sh be regularly checked to determine whether they have beco clogged.

NOTE 6—Filter-paper discs of a diameter equal to that of specimen may be placed between the porous discs and specimen avoid clogging of the porous discs when accurate moduli values are required.

5.13 *Filter-Paper Strips and Discs*—Filter-paper strips used by many laboratories to decrease the time required testing. If filter strips and discs are used, they shall be c type that does not dissolve in water. The coefficient permeability of the filter paper shall not be less than 4 × 1 in./s (1×10^{-5} cm/s) for a normal pressure of 80 psi (kPa). To avoid hoop tension, filter strips should cover more than 50 % of the specimen periphery. Filter-strip c similar to that shown in Fig. 2 have been successfully usec many laboratories. An equation for correcting the princ stress difference (deviator stress) for the effect of the stre of vertical filter strips is given in 10.6.

NOTE 7—Whatman's No. 54 Filter Paper has been found to mee permeability and durability requirements.

5.14 *Rubber Membrane*—The rubber membrane use encase the specimen shall provide reliable protection ag leakage. To check a membrane for leakage, the memb shall be placed around a cylindrical form, sealed at both with rubber O-rings, subjected to a small air pressure or inside, and immersed in water. If air bubbles appear any point on the membrane it shall be rejected. To minimum restraint to the specimen, the unstretched m brane diameter shall be between 90 and 95 % of that o specimen. The membrane thickness shall not exceed 1 the diameter of the specimen. The membrane shall be s

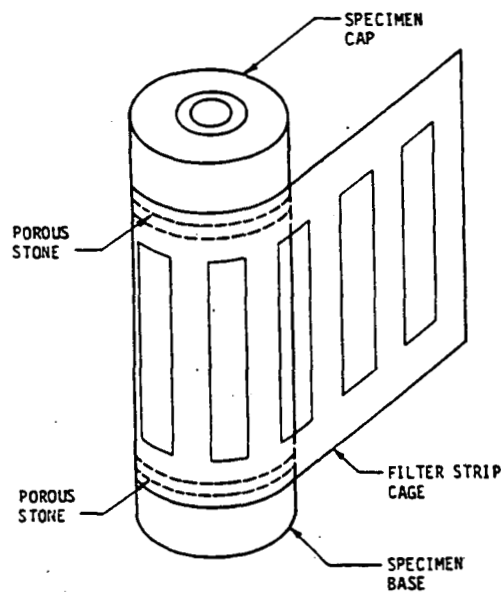

FIG. 2 Filter Strip Cage

to the specimen cap and base with rubber O-rings for which the unstressed inside diameter is between 75 and 85 % of the diameter of the cap and base, or by other means that will provide a positive seal. An equation for correcting the principal stress difference (deviator stress) for the effect of the stiffness of the membrane is given in 10.7.

5.15 *Valves*—Changes in volume due to opening and closing valves may result in inaccurate volume change and pore-water pressure measurements. For this reason, valves in the specimen drainage system shall be of the type that produce minimum volume changes due to their operation. A valve may be assumed to produce minimum volume change if opening or closing the valve in a closed, saturated pore-water pressure system does not induce a pressure change of greater than ±0.1 psi (0.7 kPa). All valves must be capable of withstanding applied pressures without leakage.

NOTE 8—Ball valves have been found to provide minimum volume-change characteristics; however, any other type of valve having suitable volume-change characteristics may be used.

5.16 *Specimen-Size Measurement Devices*—Devices used to determine the height and diameter of the specimen shall measure the respective dimensions to within ±0.1 % of the total dimension and shall be constructed such that their use will not disturb the specimen.

NOTE 9—Circumferential measuring tapes are recommended over calipers for measuring the diameter.

5.17 *Recorders*—Specimen behavior may be recorded manually or by electronic digital or analog recorders. If electronic recorders are used, it shall be necessary to calibrate the measuring devices through the recorder using known input standards.

5.18 *Sample Extruder*—The sample extruder shall be capable of extruding the soil core from the sampling tube at a uniform rate in the same direction of travel as the sample entered the tube and with minimum disturbance of the sample. If the soil core is not extruded vertically, care should be taken to avoid bending stresses on the core due to gravity. Conditions at the time of sample removal may dictate the direction of removal, but the principal concern is to minimize the degree of disturbance.

5.19 *Timer*—A timing device indicating the elapsed testing time to the nearest 1 s shall be used to obtain consolidation data (8.3.3).

5.20 *Weighing Device*—The specimen weighing device shall determine the mass of the specimen to an accuracy of within ±0.05 % of the total mass of the specimen.

5.21 *Water Deaeration Device*—The amount of dissolved gas (air) in the water used to saturate the specimen may be decreased by boiling, by heating and spraying into a vacuum, or by any other method that will satisfy the requirement for saturating the specimen within the limits imposed by the available maximum back pressure and time to perform the test.

5.22 *Testing Environment*—The consolidation and shear portion of the test shall be performed in an environment where temperature fluctuations are less than ±7.2°F (±4°C) and there is no direct contact with sunlight.

5.23 *Miscellaneous Apparatus*—Specimen trimming and carving tools including a wire saw, steel straightedge, miter box, and vertical trimming lathe, apparatus for preparing compacted specimens, membrane and O-ring expander, water content cans, and data sheets shall be provided as required.

6. Test Specimen Preparation

6.1 *Specimen Size*—Specimens shall be cylindrical and have a minimum diameter of 1.3 in. (3.3 cm). The height-to-diameter ratio shall be between 2 and 2.5. The largest particle size shall be smaller than ⅙ the specimen diameter. If, after completion of a test, it is found based on visual observation that oversize particles are present, indicate this information in the report of test data (11.1.22).

NOTE 10—If oversize particles are found in the specimen after testing, a particle-size analysis may be performed in accordance with Method D 422 to confirm the visual observation and the results provided with the test report (11.1.4).

6.2 *Undisturbed Specimens*—Prepare undisturbed specimens from large undisturbed samples or from samples secured in accordance with Practice D 1587 or other acceptable undisturbed tube sampling procedures and preserved and transported in accordance with the practices for Group C samples in Practices D 4220. Specimens obtained by tube sampling may be tested without trimming except for cutting the end surfaces plane and perpendicular to the longitudinal axis of the specimen, provided soil characteristics are such that no significant disturbance results from sampling. Handle specimens carefully to minimize disturbance. changes in cross section, or change in water content. If compression or any type of noticeable disturbance would be caused by the extrusion device, split the sample tube lengthwise or cut the tube in suitable sections to facilitate removal of the specimen with minimum disturbance. Prepare trimmed specimens, in an environment such as a controlled high-humidity room where soil water content change is minimized. Where removal of pebbles or crumbling resulting from trimming causes voids on the surface of the specimen, carefully fill the voids with remolded soil obtained from the trimmings. Where the sample condition permits a vertical trimming lathe that will accommodate the total sample may be used as an aid in preparing the specimen to the required diameter. After obtaining the desired diameter, place the specimen in a miter box and cut the specimen to the final length with a wire saw or other suitable device. Trim the surfaces with the steel straightedge. Perform one or more water content determinations on material trimmed from the specimen in accordance with Method D 2216. Determine the mass and dimensions of the specimen using the devices described in 5.16 and 5.20. A minimum of three height measurements (120° apart) and at least three diameter measurements at the quarter points of the height shall be made to determine the average height and diameter of the specimen.

6.3 *Compacted Specimens*—Compacted specimens may be prepared by compacting material in at least six layers using a pressing or kneading action into a split mold of circular cross section having dimensions meeting the requirements enumerated in 6.1. Material required for the specimen shall be batched by thoroughly mixing soil with sufficient water to produce the desired water content. After batching. store the material in a covered container for at least 16 h prior to compaction. Specimens may be compacted to the

desired density by either: (*1*) kneading or tamping each layer until the accumulative mass of the soil placed in the mold is compacted to a known volume; or (*2*) by adjusting the number of layers, the number of tamps per layer, and the force per tamp. The top of each layer shall be scarified prior to the addition of material for the next layer. The tamper used to compact the material shall have diameter equal to or less than ½ the diameter of the mold. After a specimen is formed, with the ends perpendicular to the longitudinal axis, remove the mold and determine the mass and dimensions of the specimen using the devices described in 5.16 and 5.20. Perform one or more water content determinations on excess material used to prepare the specimen in accordance with Method D 2216.

NOTE 11—It is common for the unit weight of the specimen after removal from the mold to be less than the value based on the volume of the mold. This occurs as a result of the specimen swelling after removal of the lateral confinement due to the mold.

7. Mounting Specimen

7.1 *Preparations*—Before mounting the specimen in the triaxial chamber, make the following preparations:

7.1.1 If deemed necessary, check the rubber membrane for leaks (see 5.14).

7.1.2 Place the membrane on the membrane expander or, if it is to be rolled onto the specimen, roll the membrane on the cap or base.

7.1.3 Check that the porous discs and specimen drainage tubes are not obstructed by passing air or water through the appropriate lines.

7.1.4 Attach the pressure-control and volume-measurement system, and a pore-pressure measurement device to the chamber base.

7.2 Depending on whether the saturation portion of the test will be initiated with either a wet or dry drainage system, mount the specimen using the appropriate method, as follows in either 7.2.1 or 7.2.2:

NOTE 12—It is recommended that the dry mounting method be used for specimens of soils that swell appreciably when in contact with water. If the wet mounting method is used for such soils, it will be necessary to obtain the specimen dimensions after the specimen has been mounted. In such cases, it will be necessary to determine the double thickness of the membrane, the double thickness of the wet filter paper strips (if used), and the combined height of the cap, base, and porous discs (including the thickness of filter discs if they are used) so that the appropriate values may be subtracted from the measurements.

7.2.1 *Wet Mounting Method:*

7.2.1.1 Fill the specimen drainage lines and the pore-water pressure measurement device with deaired water.

7.2.1.2 Saturate the porous discs by boiling them in water for at least 10 min and allow to cool to room temperature.

7.2.1.3 Place a saturated porous disc on the specimen base and after wiping away all free water on the disc, place the specimen on the disc. Next, place another porous disc and the specimen cap on top of the specimen. Check that the specimen cap, specimen, and porous discs are centered on the specimen base.

NOTE 13—If filter-paper discs are to be placed between the porous discs and specimen, they should be dipped in water prior to placement.

7.2.1.4 If filter-paper strips or a filter-paper cage (Fig. 2) are to be used, saturate the paper with water prior to placing it on the specimen. To avoid hoop tension, do not cover more than 50 % of the specimen periphery with vertical strips of filter paper.

7.2.1.5 Proceed with Section 7.3.

7.2.2 *Dry Mounting Method:*

7.2.2.1 Dry the specimen drainage system. This may be accomplished by allowing dry air to flow through the system prior to mounting the specimen.

7.2.2.2 Dry the porous discs in the oven overnight prior to mounting the specimen and place in a desiccator while allowing the discs to cool to room temperature.

7.2.2.3 Place a dry porous disc on the specimen base and place the specimen on the disc. Next, place a dry porous disc and the specimen cap on the specimen. Check that the specimen cap, porous discs, and specimen are centered on the specimen base.

NOTE 14—If desired, dry filter-paper discs may be placed between the porous discs and specimen.

7.2.2.4 If filter-paper strips or a filter-paper cage (Fig. 2) are to be used, the cage or strips may be held in place by small pieces of tape at the top and bottom.

7.3 Place the rubber membrane around the specimen and seal it at the cap and base with two rubber O-rings or other positive seal at each end. A thin coating of silicon grease on the vertical surfaces of the cap and base will aid in sealing the membrane. If filter-paper strips or a filter-paper cage are used, do not apply grease to surfaces in contact with the filter-paper.

7.4 Attach the top drainage line and check the alignment of the specimen and the specimen cap. If the dry mounting method has been used, apply a partial vacuum of approximately 5 psi (35 kPa) (not to exceed the consolidation stress) to the specimen through the top drainage line prior to checking the alignment. If there is any eccentricity, release the partial vacuum, realign the specimen and cap, and then reapply the partial vacuum. If the wet mounting method has been used, the alignment of the specimen and the specimen cap may be checked and adjusted without the use of a partial vacuum.

8. Procedure

8.1 *Prior to Saturation*—After assembling the triaxial chamber, perform the following operations:

8.1.1 Bring the axial load piston into contact with the specimen cap several times to permit proper seating and alignment of the piston with the cap. During this procedure take care not to apply an axial load to the specimen exceeding 0.5 % of the estimated axial load at failure. When the piston is brought into contact, record the reading of the deformation indicator.

8.1.2 Fill the chamber with the chamber liquid, being careful to avoid trapping air or leaving an air space in the chamber.

8.2 *Saturation*—The objective of the saturation phase of the test is to fill all voids in the specimen with water without undesirable prestressing of the specimen or allowing the specimen to swell. Saturation is usually accomplished by applying back pressure to the specimen pore water to drive air into solution after either: (*1*) applying vacuum to the specimen and dry drainage system (lines, porous discs, pore-pressure device, filter-strips or cage, and discs) and

000293

allowing deaired water to saturate the system while maintaining the vacuum; or (2) saturating the drainage system by boiling the porous discs in water and allowing water to flow through the system prior to mounting the specimen. It should be noted that time is required to place air into solution. Accordingly, removing as much air as possible prior to applying back pressure will decrease the amount of air that will have to be placed into solution and will also decrease the back pressure required for saturation. In addition, air remaining in the specimen and drainage system just prior to applying back pressure will go into solution much more readily if deaired water is used for saturation. The use of deaired water will also decrease the time and back pressure required for saturation. Many procedures have been developed to accomplish saturation. The following are suggested procedures:

8.2.1 *Starting with Initially Dry Drainage System*—Increase the partial vacuum acting on top of the specimen to the maximum available vacuum. If the effective consolidation stress under which the strength is to be determined is less than the maximum partial vacuum, apply a lower partial vacuum to the chamber. The difference between the partial vacuum applied to the specimen and the chamber should never exceed the effective consolidation stress for the test and should not be less than 5 psi (35 kPa) to allow for flow through the sample. After approximately 2 h, allow deaired water to percolate from the bottom to the top of the specimen under a differential vacuum of less than 3 psi (20 kPa) (Note 15).

8.2.1.1 There should always be a positive effective stress of at least 2 psi (13 kPa) at the bottom of the specimen during this part of the procedure. When water appears in the burette connected to the top of the specimen, close the valve to the bottom of the specimen and fill the burette with deaired water. Next, reduce the vacuum acting on top of the specimen through the burette to atmospheric pressure while simultaneously increasing the chamber pressure by an equal amount. During this process, the difference between the pore pressure measured at the bottom of the specimen and the chamber pressure should not be allowed to exceed the desired effective consolidation pressure. When the pore pressure at the bottom of the specimen stabilizes, proceed with back pressuring of the specimen pore-water as described in 8.2.3. To check for equalization, close the drainage valves to the specimen and measure the pore pressure change over a 1-min interval. If the change is less than 1 % of the chamber pressure, the pore pressure may be assumed to be stabilized.

NOTE 15—For saturated clays, percolation may not be necessary and water can be added simultaneously at both top and bottom.

8.2.2 *Starting with Initially Saturated Drainage System*—After filling the burette connected to the top of the specimen with deaired water, apply a chamber pressure of 5 psi (35 kPa) or less and open the specimen drainage valves. When the pore pressure at the bottom of the specimen stabilizes, according to the method described in 8.2.1, or when the burette reading stabilizes, back pressuring of the specimen pore-water may be initiated.

8.2.3 *Applying Back Pressure*—Simultaneously increase the chamber and back pressure in steps with specimen drainage valves opened so that deaired water from the burette connected to the top and bottom of the specimen may flow into the specimen. To avoid undesirable prestressing of the specimen while applying back pressure, the pressures must be applied incrementally with adequate time between increments to permit equalization of pore-water pressure throughout the specimen. The size of each increment might be 5 psi (35 kPa), 10 psi (70 kPa), or even 20 psi (140 kPa), depending on the compressibility of the soil specimen, the magnitude of the desired effective consolidation stress, and the degree of saturation of the specimen just prior to the addition of the increment. The difference between the chamber pressure and the back pressure during back pressuring should not exceed 5 psi (35 kPa) unless it is deemed necessary to control swelling of the specimen during the procedure. The difference between the chamber and back pressure must also remain within ±5 % when the pressures are raised and within ±2 % when the pressures are constant. To check for equalization after application of a back pressure increment or after the full value of back pressure has been applied, close the specimen drainage valves and measure the change in pore-pressure over a 1-min interval. If the change in pore pressure is less than 1 % of the difference between the chamber pressure and the back pressure, another back pressure increment may be added or a measurement may be taken of the pore pressure parameter B (see 8.2.4) to determine if saturation is completed. Specimens shall be considered to be saturated if the value of B is equal to or greater than 0.95, or if B remains unchanged with addition of back pressure increments.

NOTE 16—Although the pore pressure parameter B is used to measure the degree of saturation, the B-value is also a function of soil stiffness. If the degree of saturation of the sample is 100 %, the B-value measurement will increase with decreasing soil stiffness. Therefore, when testing soft soil samples, a B-value of 95 % may indicate a degree of saturation less than 100 %.

NOTE 17—The back pressure required to saturate a compacted specimen may be higher for the wet mounting method than for the dry mounting method and may be as high as 200 psi (1400 kPa).

NOTE 18—Many laboratories use differential pressure regulators and transducers to achieve the requirements for small differences between chamber and back pressure.

8.2.4 *Measurement of the Pore Pressure Parameter B*—Determine the value of the pore pressure parameter B in accordance with 8.2.4.1 through 8.2.4.4. The pore pressure parameter B is defined by the following equation:

$$B = \Delta u / \Delta \sigma_3 \quad (2)$$

where:

Δu = the change in the specimen pore pressure that occurs as a result of a change in the chamber pressure when the specimen drainage valves are closed, and

$\Delta \sigma_3$ = the change in the chamber pressure.

8.2.4.1 Close the specimen drainage valves and increase the chamber pressure 10 psi (70 kPa).

8.2.4.2 After approximately 2 min, determine and record the maximum value of the induced pore pressure. For many specimens, the pore pressure may decrease after the immediate response and then increase slightly with time. If this occurs, values of Δu should be plotted with time and the asymptotic pore pressure used as the change in pore pressure. A large increase in Δu with time or values of Δu greater than $\Delta \sigma_3$ indicate a leak of chamber fluid into the specimen. Decreasing values of Δu with time may indicate a leak in that

000294

part of the pore pressure measurement system located outside of the chamber.

8.2.4.3 Calculate the B-value using Eq 2.

8.2.4.4 Reapply the same effective consolidation stress as existed prior to the B-value by reducing the chamber pressure by 10 psi (70 kPa) or by alternatively, increasing the back pressure by 10 psi (70 kPa). If B is continuing to increase with increasing back pressure, continue with back pressure saturation. If B is equal to or greater than 0.95 or if a plot of B versus back pressure indicates no further increase in B with increasing back pressure, initiate consolidation.

8.3 *Consolidation*—The objective of the consolidation phase of the test is to allow the specimen to reach equilibrium in a drained state under the effective consolidation stress for which a strength determination is required. During consolidation, data is obtained for use in determining when consolidation is complete and for computing a rate of strain to be used for the shear portion of the test. The consolidation procedure is as follows:

8.3.1 When the saturation phase of the test is completed, bring the axial load piston into contact with the specimen cap and record the reading on the deformation indicator. During this procedure, take care not to apply an axial load to the specimen exceeding 0.5 % of the estimated axial load at failure. After recording the reading, raise the piston a small distance above the specimen cap and lock the piston in place.

8.3.2 With the specimen drainage valves closed, hold the maximum back pressure constant and increase the chamber pressure until the difference between the chamber pressure and the back pressure equals the desired effective consolidation pressure.

NOTE 19—In certain circumstances, consolidation in stages may be desirable, especially when radial drainage is used.

8.3.3 Obtain an initial burette reading and then open appropriate drainage valves so that the specimen may drain from both ends into the burette. At increasing intervals of elapsed time (0.1, 0.2, 0.5, 1, 2, 4, 8, 15, and 30 min and at 1, 2, 4, and 8 h, etc.) observe and record the burette readings and after the 15-min reading record the accompanying deformation indicator readings obtained by carefully coupling the piston with the specimen cap. If burette and deformation indicator readings are to be plotted against the square root of time, the time intervals at which readings are taken may be adjusted to those that have easily obtained square roots, for example, 0.09, 0.25, 0.49, 1, 4, 9 min, etc. Depending on soil type, time intervals may be changed to convenient time intervals which allow for adequate definition of volume change versus time.

NOTE 20—In cases where significant amounts of fines may be washed from the specimen because of high initial hydraulic gradients, it is permissible to gradually increase the chamber pressure to the total desired pressure over a period of up to 10 min with the drainage valves open. If this is done, recording of data should begin immediately after the total pressure is reached.

8.3.4 Plot the burette and deformation indicator readings versus either the logarithm or square root of elapsed time. Allow consolidation to continue for at least one log cycle of time or one overnight period after 100 % primary consolidation has been achieved as determined in accordance with one of the procedures outlined in Test Method D 2435. A marked deviation between the slopes of the burette and deformation indicator curves toward the end of consolidation based on deformation indicator readings indicates leakage of fluid from the chamber into the specimen and the test should be terminated.

8.3.5 Determine the time for 50 % primary consolidation, t_{50}, in accordance with one of the procedures outlined in Test Method D 2435.

8.4 *Shear*—During shear, the chamber pressure shall be kept constant while advancing the axial load piston downward against the specimen cap using controlled axial strain as the loading criterion. Specimen drainage is not permitted during shear.

8.4.1 *Prior to Axial Loading*—Before initiating shear, perform the following steps:

8.4.1.1 By opening or closing the appropriate valves isolate the specimen so that during shear the specimen pore-water pressure will be measured by the pore-pressure measurement device and no drainage will occur.

8.4.1.2 Place the chamber in position in the axial loading device. Be careful to align the axial loading device, the axial load-measuring device, and the triaxial chamber to prevent the application of a lateral force to the piston during shear.

8.4.1.3 Bring the axial load piston into contact with the specimen cap to permit proper seating and realignment of the piston with the cap. Remember that during this procedure, care should be taken not to apply an axial load to the specimen exceeding 0.5 % of the estimated axial load at failure. If the axial load-measuring device is located outside of the triaxial chamber, the chamber pressure will produce an upward force on the piston that will react against the axial loading device. In this case, start shear with the piston slightly above the specimen cap, and before the piston comes into contact with the specimen cap, either (*1*) measure and record the initial piston friction and upward thrust of the piston produced by the chamber pressure and later correct the measured axial load, or (*2*) adjust the axial load measuring device to compensate for the friction and thrust. The variation in the axial load-measuring device reading should not exceed 0.1 % of the estimated failure load when the piston is moving downward prior to contacting the specimen cap. If the axial load-measuring device is located inside the chamber, it will not be necessary to correct or compensate for the uplift force acting on the axial loading device or for piston friction. However, if an internal load measuring device of significant flexibility is used in combination with an external deformation indicator, correction of the deformation readings may be necessary. In both cases record the initial reading on the pore-water pressure measurement device immediately prior to when the piston contacts the specimen cap and the reading on the deformation indicator when the piston contacts the specimen cap.

8.4.2 *Axial Loading*—Apply axial load to the specimen using a rate of axial strain that will produce approximate equalization of pore pressures throughout the specimen at failure. Assuming failure will occur after 4 %, a suitable rate of strain may be obtained by dividing 4 % by ten times the value of t_{50} (obtained in 8.3.5). This rate of strain will provide for determination of accurate effective stress paths in the range necessary to define effective strength envelopes. However, it is estimated that failure will occur at a strain value lower than 4 %, it will be necessary to obtain a suitable

strain rate by dividing the estimated failure strain by ten times the value of t_{50}. At a minimum, record load, deformation, and pore-water pressure values at increments of 0.1 % to 1 % strain and, thereafter, at every 1 %. Take sufficient readings to define the stress-strain curve; hence, more frequent readings may be required in the early stages of the test and as failure is approached. Continue the loading to 15 % strain, except loading may be stopped when the principal stress difference (deviator stress) has dropped 20 % or when 5 % additional axial strain occurs after a peak in principal stress difference (deviator stress).

NOTE 21—The use of a manually adjusted null-indicating device will require nearly continuous attention to ensure the criterion for undrained shear.

9. Removing Specimen

9.1 When shear is completed, perform the following steps:

9.1.1 Remove the axial load and reduce the chamber and back pressures to zero.

9.1.2 With the specimen drainage valves remaining closed, quickly remove the specimen from the apparatus so that the specimen will not have time to absorb water from the porous discs.

9.1.3 Remove the rubber membrane (and the filter-paper strips or cage from the specimen if they were used) and determine the water content of the total specimen in accordance with the procedure outlined in Method D 2216. (Free water remaining on the specimen after removal of the membrane should be blotted away before obtaining the water content.) In cases where there is insufficient material rom trimmings for index property tests, that is, where specimens have the same diameter as the sampling tube, the specimen should be weighed prior to removing material for index property tests and a representative portion of the specimen used to determine its final water content. Prior to placing the specimen (or portion thereof) in the oven to dry, sketch a picture or take a photograph of the specimen showing the mode of failure (shear plane, bulging, etc.).

10. Calculations

10.1 *Initial Specimen Properties*—Using the dry mass of the total specimen, calculate and record on the appropriate data sheet the initial water content, volume of solids, initial void ratio, initial degree of saturation, and initial dry unit weight. Calculate the specimen volume from values measured in 6.2 or 6.3. Calculate the volume of solids by dividing the dry mass of the specimen by the specific gravity of the solids (Note 22) and dividing by the density of water. Calculate the void ratio by dividing the volume of voids by the volume of solids where the volume of voids is assumed to be the difference between the specimen volume and the volume of the solids. Calculate dry density by dividing the dry mass of the specimen by the specimen volume.

NOTE 22—The specific gravity of solids can be determined in accordance with Test Method D 854 or it may be assumed based on previous test results.

10.2 *Specimen Properties After Consolidation*—Calculate ıe specimen height and area after consolidation as follows:

10.2.1 Height of specimen after consolidation, H_c, is determined from the following equation:

$$H_c = H_o - \Delta H_o \quad (3)$$

where:

H_o = initial height of specimen, in. (mm), and

ΔH_o = change in height of specimen at end of consolidation, in. (mm).

10.2.2 The cross-sectional area of the specimen after consolidation, A_c, shall be computed using one of the following methods (assuming consistent units are used). The choice of the method to be used depends on whether shear data are to be computed as the test is performed (in which case Method A would be used) or on which of the two methods in the opinion of a qualified person yield specimen conditions considered to be most representative of those after consolidation.

10.2.2.1 *Method A:*

$$A_c = (V_o - \Delta V_{sat} - \Delta V_c)/H_c \quad (4)$$

where:

V_o = initial volume of specimen, in.^{3} (mm^3),

ΔV_c = change in volume of specimen during consolidation as indicated by burette readings, in.^{3} (mm^3), and

ΔV_{sat} = change in volume of specimen during saturation, in.^{3} (mm^3), as follows:

$$\Delta V_{sat} = 3V_o\,\Delta H_s/H_o$$

where:

ΔH_s = change in height of the specimen during saturation, in. (mm).

10.2.2.2 *Method B:*

$$A_c = (V_{wf} + V_s)/H_c \quad (5)$$

where:

V_{wf} = final volume of water (based on final water content), in.^{3} (mm^3), and

V_s = volume of solids, in.^{3} (mm^3), as follows:

$$V_s = w_s/(G_s\rho_w)$$

where:

w_s = specimen dry mass, lb (kg),

G_s = specific gravity of solids, and

ρ_w = density of water, lb/in.^{3} (kg/mm^3).

10.2.3 Using the calculated dimensions of the specimen after consolidation, and assuming that the water content after consolidation is the same as the final water content, calculate the consolidated void ratio and degree of saturation.

NOTE 23—If the specimen absorbs water from the porous discs during the time it is being removed from the apparatus, the calculated degree of saturation based on the final water content will exceed 100 %.

NOTE 24—In this test method, the equations are written such that compression and consolidation are considered positive.

10.3 *Shear Data:*

10.3.1 Calculate the axial strain, ϵ_1, for a given applied axial load as follows:

$$\epsilon_1 = \Delta H/H_c \quad (6)$$

where:

ΔH = change in height of specimen during loading as read from deformation indicator, in. (mm), and

H_c = height of specimen after consolidation, in. (mm).

10.3.2 Calculate the cross-sectional area, A, for a given applied axial load as follows:

$$A = A_c/(1 - \epsilon_1) \quad (7)$$

where:

A_c = average cross-sectional area of the specimen after consolidation, in.^{2} (mm^2), and

ϵ_1 = axial strain for the given axial load.

NOTE 25—The cross-sectional area computed in this manner is based on the assumption that the specimen deforms as a right circular cylinder during shear. In cases where there is localized bulging, it may be possible to determine more accurate values for the area based on specimen dimension measurements obtained after shear.

10.3.3 Calculate the principal stress difference (deviator stress), $\sigma_1 - \sigma_3$, for a given applied axial load as follows:

$$\sigma_1 - \sigma_3 = P/A \quad (8)$$

where:

P = given applied axial load (corrected for uplift and piston friction if required as obtained in 8.4.1.3), lb (kN), and

A = corresponding cross-sectional area, in.^{2} (mm^2).

10.3.4 Calculate the effective minor principal stress, σ'_3 for a given applied axial load as follows:

$$\sigma'_3 = \sigma_3 - \Delta u \quad (9)$$

where:

σ_3 = effective consolidation stress, psi (kPa), and

Δu = induced pore-water pressure at the given axial load (total pore-water pressure minus the total back pressure), psi (kPa).

10.4 *Principal Stress Difference (Deviator Stress) and Induced Pore-Water Pressure versus Strain Curves*—Prepare graphs showing relationships between principal stress difference (deviator stress) and induced pore-water pressure with axial strain, plotting deviator stress and induced pore-water pressure as ordinates and axial strain as abscissa. Select the principal stress difference (deviator stress) and axial strain at failure in accordance with a definition in 3.2.3.

10.5 *$p' - q$ Diagram*—Prepare a graph showing the relationship between p', $(\sigma'_1 + \sigma'_3)/2$ and q, $(\sigma_1 - \sigma_3)/2$, plotting q as ordinate and p' as abscissa using the same scale. The value of p' for a given axial load may be computed as follows:

$$p' = ((\sigma_1 - \sigma_3) + 2\sigma'_3)/2 \quad (10)$$

where:

$\sigma_1 - \sigma_3$ = principal stress difference (deviator stress), psi (kPa), and

σ'_3 = effective minor principal stress, psi (kPa).

10.6 *Correction for Filter-Paper Strips*—For vertical filter-paper strips which extend over the total length of the specimen, apply a filter-paper strip correction to the computed values of the principal stress difference (deviator stress), if the error in principal stress difference (deviator stress) due to the strength of the filter-paper strips exceeds 5 %.

10.6.1 For values of axial strain above 2 %, use the following equation to compute the correction:

$$\Delta(\sigma_1 - \sigma_3) = K_{fp}P_{fp}/A_c \quad (11)$$

where:

$\Delta(\sigma_1 - \sigma_3)$ = correction to be subtracted from the measured principal stress difference (deviator stress), psi (kPa),

K_{fp} = load carried by filter-paper strips per unit length of perimeter covered by filter-paper, lbf/in. (kN/mm),

P_{fp} = perimeter covered by filter-paper, in. (mm), and

A_c = cross-sectional area of specimen after consolidation, in.^{2} (mm^2).

10.6.2 For values of axial strain of 2 % or less, use the following equation to compute the correction:

$$\Delta(\sigma_1 - \sigma_3) = 50\epsilon_1 K_{fp}P_{fp}/A_c \quad (12)$$

where:

ϵ_1 = axial strain (decimal form) and other terms are the same as those defined in 10.6.1.

NOTE 26—For filter-paper generally used in triaxial testing, K_{fp} is approximately 1.1 lb/in. (0.19 kN/m).

10.7 *Correction for Rubber Membrane*—Use the following equation to correct the principal stress difference (deviator stress) for the effect of the rubber membrane if the error in principal stress difference (deviator stress) due to the strength of the membrane exceeds 5 %:

$$\Delta(\sigma_1 - \sigma_3) = (4E_m t_m \epsilon_1)/D_c \quad (13)$$

where:

$\Delta(\sigma_1 - \sigma_3)$ = the correction to be subtracted from the measured principal stress difference (deviator stress), psi (kPa),

D_c = $\sqrt{4A_c/\pi}$ = diameter of specimen after consolidation, in. (mm),

E_m = Young's modulus for the membrane material, psi (kPa),

t_m = thickness of the membrane, in. (mm), and

ϵ_1 = axial strain (decimal form).

10.7.1 The Young's modulus of the membrane material may be determined by hanging a 0.5-in. (15-mm) circumferential strip of membrane using a thin rod, placing another rod through the bottom of the hanging membrane, and measuring the force per unit strain obtained by stretching the membrane. The modulus value may be computed using the following equation:

$$E_m = (F/A_m)/(\Delta L/L) \quad (14)$$

where:

E_m = Young's modulus of the membrane material, psi (kPa),

F = force applied to stretch the membrane, lbf (kN),

L = unstretched length of the membrane, in. (mm),

ΔL = change in length of the membrane due to application of the force, F, in. (mm), and

A_m = area of the membrane = 2 t_m W_s, in.^{2} (m^2 = mm^2/1 000 000)

where:

t_m = thickness of the membrane, and

W_s = width of circumferential strip (4.5 in. or 15 mm).

NOTE 27—A typical value of E_m for latex membranes is 200 psi (1400 kPa).

NOTE 28—The effect of the membrane on the lateral stress is usually assumed to be negligible.

NOTE 29—The corrections for filter-paper strips and membranes are based on simplified assumptions concerning their behavior during shear. Their actual behavior is complex and there is not a consensus on more exact corrections.

000297

10.8 Determine the major and minor principal stresses at failure based on total stresses, σ_{1f} and σ_{3f} respectively, and on effective stresses, σ'_{1f} and σ'_{3f} respectively, as follows:

σ_{3f} = effective consolidation stress, psi (kPa),

σ_{1f} = $(\sigma_1 - \sigma_3)$ at failure + σ_{3f}, psi (kPa),

σ'_{3f} = $\sigma_{3f} - \Delta u_f$, psi (kPa), and

σ'_{1f} = $(\sigma_1 - \sigma_3)$ at failure + σ'_{3f}, psi (kPa), where Δu is the induced pore-water pressure at failure.

10.9 *Mohr Stress Circles*—Construct Mohr stress circles at failure based on total and effective stresses on an arithmetic plot with shear stress as ordinate and normal stress as abscissa using the same scales. As shown in Fig. 3, the circle based on total stresses is drawn with a radius of one-half the principal stress difference (deviator stress) at failure with its center at a value equal to one-half the sum of the major and minor total principal stresses. The Mohr stress circle based on effective stresses is drawn in a similar manner except that its center is at a value equal to one-half the sum of the major and minor effective principal stresses.

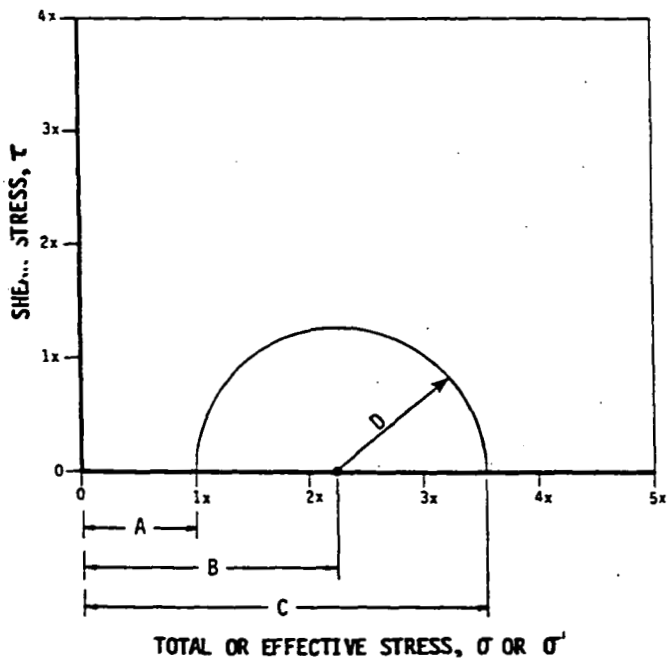

A = TOTAL OR EFFECTIVE MINOR PRINCIPAL STRESS (σ_3 or σ'_3)
B = AVERAGE OF TOTAL OR EFFECTIVE PRINCIPAL STRESSES
C = TOTAL OR EFFECTIVE MAJOR PRINCIPAL STRESS (σ_1 or σ'_1)
D = RADIUS OF THE MOHR'S CIRCLE; HALF THE PRINCIPAL STRESS DIFFERENCE

FIG. 3 Construction of Mohr Stress Circle

11. Report

11.1 The report shall include the following:

11.1.1 Identification data and visual description of specimen, including soil classification and whether the specimen is undisturbed, compacted, or otherwise prepared.

11.1.2 Values of plastic limit and liquid limit, if determined in accordance with Test Method D 4318.

11.1.3 Value of specific gravity of solids and notation if the value was determined in accordance with Test Method D 854 or assumed.

11.1.4 Particle-size analysis, if determined in accordance with Method D 422.

11.1.5 Initial specimen dry unit weight, void ratio, water content, and percent saturation.

11.1.6 Initial height and diameter of specimen.

11.1.7 Method followed for specimen saturation (that is, dry or wet method).

11.1.8 Total back pressure.

11.1.9 The pore pressure parameter B at the end of saturation.

11.1.10 Effective consolidation stress.

11.1.11 Time to 50 % primary consolidation.

11.1.12 Specimen dry unit weight, void ratio, water content, and degree of saturation after consolidation.

11.1.13 Specimen cross-sectional area after consolidation and method used for determination.

11.1.14 Failure criterion used.

11.1.15 The value of the principal stress difference (deviator stress) at failure and the values of the effective minor and major principal stresses at failure.

11.1.16 Axial strain at failure, percent

11.1.17 Rate of strain, percent/min.

11.1.18 Principal stress difference (deviator stress) and induced pore-water pressure versus axial strain curves as described in 10.4.

11.1.19 The $p' - q$ diagram for the test results.

11.1.20 Mohr stress circles based on total and effective stresses.

11.1.21 Failure sketch or photograph of the specimen.

11.1.22 Remarks and notations regarding any unusual conditions or other information necessary to properly interpret the results obtained, including any departures from the procedure outlined.

12. Precision and Bias

12.1 The variability of soil and resultant inability to determine a true reference value prevent development of a meaningful statement of bias. Data are being evaluated to determine the precision of this test method. In addition, the subcommittee is seeking pertinent data from users of this test method.

13. Keywords

13.1 Back pressure situation; cohesive soils; consolidated-undrained-triaxial compression test; consolidated undrained triaxial compressive strength; effective consolidation stress; shear strength; strength envelope.

000298

The American Society for Testing and Materials takes no position respecting the validity of any patent rights asserted in connection with any item mentioned in this standard. Users of this standard are expressly advised that determination of the validity of any such patent rights, and the risk of infringement of such rights, are entirely their own responsibility.

This standard is subject to revision at any time by the responsible technical committee and must be reviewed every five years and if not revised, either reapproved or withdrawn. Your comments are invited either for revision of this standard or for additional standards and should be addressed to ASTM Headquarters. Your comments will receive careful consideration at a meeting of the responsible technical committee, which you may attend. If you feel that your comments have not received a fair hearing you should make your views known to the ASTM Committee on Standards, 1916 Race St., Philadelphia, PA 19103.

Designation: D 5084 – 90

Standard Test Method for Measurement of Hydraulic Conductivity of Saturated Porous Materials Using a Flexible Wall Permeameter[1]

This standard is issued under the fixed designation D 5084; the number immediately following the designation indicates the year of original adoption or, in the case of revision, the year of last revision. A number in parentheses indicates the year of last reapproval. A superscript epsilon (ε) indicates an editorial change since the last revision or reapproval.

1. Scope

1.1 This test method covers laboratory measurement of the hydraulic conductivity (also referred to as *coefficient of permeability*) of water-saturated porous materials with a flexible wall permeameter.

1.2 This test method may be utilized with undisturbed or compacted specimens that have a hydraulic conductivity less than or equal to 1×10^{-5} m/s (1×10^{-3} cm/s).

1.3 The hydraulic conductivity of materials with hydraulic conductivities greater than 1×10^{-5} m/s may be determined by Test Method D 2434.

1.4 The values stated in SI units are to be regarded as the standard, unless other units are specifically given. By tradition in U.S. practice, hydraulic conductivity is reported in centimetres per second, although the common SI units for hydraulic conductivity are metres per second.

1.5 *This standard does not purport to address the safety problems associated with its use. It is the responsibility of the user of this standard to establish appropriate safety and health practices and determine the applicability of regulatory limitations prior to use.*

2. Referenced Documents

2.1 *ASTM Standards:*

D 653 Terminology Relating to Soil, Rock, and Contained Fluids[2]

D 698 Test Methods for Moisture-Density Relations of Soils and Soil-Aggregate Mixtures Using 5.5-lb (2.49-kg) Rammer and 12-in. (305-mm) Drop[2]

D 1557 Test Methods for Moisture-Density Relations of Soils and Soil-Aggregate Mixtures Using 10-lb (4.54-kg) Rammer and 18-in. (457-mm) Drop[2]

D 1587 Practice of Thin-Walled Tube Sampling of Soils[2]

D 2113 Practice for Diamond Core Drilling for Site Investigation[2]

D 2216 Method for Laboratory Determination of Water (Moisture) Content in Soil, Rock, and Soil-Aggregate Mixtures[2]

D 2434 Test Method for Permeability of Granular Soils (Constant Head)[2]

D 4220 Practices for Preserving and Transporting Soil Samples[2]

D 4753 Specification for Evaluating, Selecting and Specifying Balances and Scales for Use in Soil and Rock Testing[2]

D 4767 Test Method for Consolidated-Undrained Triaxial Compression[2]

E 145 Specification for Gravity-Convection and Forced-Ventilation Ovens[3]

3. Terminology

3.1 *Definitions:*

3.1.1 *hydraulic conductivity, k*—the rate of discharge of water under laminar flow conditions through a unit cross-sectional area of a porous medium under a unit hydraulic gradient and standard temperature conditions (20°C).

DISCUSSION—The term *coefficient of permeability* is often used instead of *hydraulic conductivity*, but *hydraulic conductivity* is used exclusively in this test method. A more complete discussion of the terminology associated with Darcy's law is given in the literature.[4]

3.1.2 *pore volume of flow*—the cumulative quantity of flow into a test specimen divided by the volume of voids in the specimen.

3.1.3 For definitions of other terms used in this test method, see Terminology D 653.

4. Significance and Use

4.1 This test method applies to one-dimensional, laminar flow of water within porous materials such as soil and rock.

4.2 The hydraulic conductivity of porous materials generally decreases with an increasing amount of air in the pores of the material. This test method applies to water-saturated porous materials containing virtually no air.

4.3 This test method applies to permeation of porous materials with water. Permeation with other liquids, such as chemical wastes, can be accomplished using procedures similar to those described in this test method. However, this test method is only intended to be used when water is the permeant liquid.

4.4 It is assumed that Darcy's law is valid and that the hydraulic conductivity is essentially unaffected by hydraulic gradient. The validity of Darcy's law may be evaluated by measuring the hydraulic conductivity of the specimen at three hydraulic gradients; if all measured values are similar (within about 25 %), then Darcy's law may be taken as valid. However, when the hydraulic gradient acting on a test

[1] This test method is under the jurisdiction of ASTM Committee D-18 on Soil and Rock and is the direct responsibility of Subcommittee D18.04 on Hydrologic Properties of Soil and Rocks.

Current edition approved June 29, 1990. Published October 1990.

[2] *Annual Book of ASTM Standards*, Vol 04.08.

[3] *Annual Book of ASTM Standards*, Vol 04.02.

[4] Olson, R. E., and Daniel, D. E., "Measurement of the Hydraulic Conductivity of Fine-Grained Soils," *Symposium on Permeability and Groundwater Contaminant Transport, ASTM STP 746*, ASTM, 1981, pp. 18–64.

000300

specimen is changed, the state of stress will also change, and, if the specimen is compressible, the volume of the specimen will change. Thus, some change in hydraulic conductivity may occur when the hydraulic gradient is altered, even in cases where Darcy's law is valid.

4.5 This test method provides a means for determining hydraulic conductivity at a controlled level of effective stress. Hydraulic conductivity varies with varying void ratio, which in turn changes when the effective stress changes. If the void ratio is changed, the hydraulic conductivity of the test specimen will likely change. To determine the relationship between hydraulic conductivity and void ratio, the hydraulic conductivity test would have to be repeated at different effective stresses.

4.6 The correlation between results obtained with this test method and the hydraulic conductivities of in-place field materials has not been fully investigated. Experience has sometimes shown that flow patterns in small test specimens do not necessarily follow the same patterns on large field scales and that hydraulic conductivities measured on small test specimens are not necessarily the same as larger-scale values. Therefore, the results should be applied to field situations with caution and by qualified personnel.

5. Apparatus

5.1 *Hydraulic System*—Constant head (Method A), falling head (Methods B and C), or constant rate of flow (Method D) systems may be utilized provided they meet the criteria outlined as follows:

5.1.1 *Constant Head*—The system must be capable of maintaining constant hydraulic pressures to within ±5 % and shall include means to measure the hydraulic pressures to within the prescribed tolerance. In addition, the head loss across the test specimen must be held constant to within ±5 % and shall be measured with the same accuracy or better. Pressures shall be measured by a pressure gage, electronic pressure transducer, or any other device of suitable accuracy.

5.1.2 *Falling Head*—The system shall allow for measurement of the applied head loss, thus hydraulic gradient, to within 5 % or better at any time. In addition, the ratio of initial head loss divided by final head loss over an interval of time shall be measured such that this computed ratio is accurate to within ±5 %. The head loss shall be measured with a pressure gage, electronic pressure transducer, engineer's scale, graduated pipette, or any other device of suitable accuracy. Falling head tests may be performed with either a constant tailwater elevation (Method B) or a rising tailwater elevation (Method C).

5.1.3 *Constant Rate of Flow*—The system must be capable of maintaining a constant rate of flow through the specimen to within 5 % or better. Flow measurement shall be by calibrated syringe, graduated pipette, or other device of suitable accuracy. The head loss across the specimen shall be measured to an accuracy of 5 % or better using an electronic pressure transducer or other device of suitable accuracy. More information on testing with a constant rate of flow is given in the literature.[5]

5.1.4 *System De-airing*—The hydraulic system shall be designed to facilitate rapid and complete removal of free air bubbles from flow lines.

5.1.5 *Back Pressure System*—The hydraulic system shall have the capability to apply back pressure to the specimen to facilitate saturation. The system shall be capable of maintaining the applied back pressure throughout the duration of hydraulic conductivity measurements. The back pressure system shall be capable of applying, controlling, and measuring the back pressure to 5 % or better of the applied pressure. The back pressure may be provided by a compressed gas supply, a deadweight acting on a piston, or any other method capable of applying and controlling the back pressure to the tolerance prescribed in this paragraph.

NOTE 1—Application of gas pressure directly to a fluid will dissolve gas in the fluid. A variety of techniques are available to minimize dissolution of gas in the back pressure fluid, including separation of gas and liquid phases with a bladder and frequent replacement of the liquid with de-aired water.

5.2 *Flow Measurement System*—Both inflow and outflow volumes shall be measured unless the lack of leakage, continuity of flow, and cessation of consolidation or swelling can be verified by other means. Flow volumes shall be measured by a graduated accumulator, graduated pipette, vertical standpipe in conjunction with an electronic pressure transducer, or other volume-measuring device of suitable accuracy.

5.2.1 *Flow Accuracy*—Required accuracy for the quantity of flow measured over an interval of time is 5 % or better.

5.2.2 *De-airing and Compliance of the System*—The flow-measurement system shall contain a minimum of dead space and be capable of complete and rapid de-airing. Compliance of the system in response to changes in pressure shall be minimized by using a stiff flow measurement system. Rigid tubing, such as metallic or rigid thermoplastic tubing, shall be used.

5.2.3 *Head Losses*—Head losses in the tubes, valves, porous end pieces, and filter paper may lead to error. To guard against such errors, the permeameter shall be assembled with no specimen inside and then the hydraulic system filled. If a constant or falling head test is to be used, the hydraulic pressures or heads that will be used in testing a specimen shall be applied, and the rate of flow measured with an accuracy of 5 % or better. This rate of flow shall be at least ten times greater than the rate of flow that is measured when a specimen is placed inside the permeameter and the same hydraulic pressures or heads are applied. If a constant rate of flow test is to be used, the rate of flow to be used in testing a specimen shall be supplied to the permeameter and the head loss measured. The head loss without a specimen shall be less than 0.1 times the head loss when a specimen is present.

5.3 *Permeameter Cell Pressure System*—The system for pressurizing the permeameter cell shall be capable of applying and controlling the cell pressure to within 5 % of the applied pressure. However, the effective stress on the test specimen (which is the difference between the cell pressure and the pore water pressure) shall be maintained to the desired value with an accuracy of 10 % or better. The device for pressurizing the cell may consist of a reservoir connected to the permeameter cell and partially filled with de-aired

[5] Olson, H. W., Morin, R. H., and Nichols, R. W., "Flow Pump Applications in Triaxial Testing," *Symposium on Advanced Triaxial Testing of Soil and Rock, ASTM STP 977*, ASTM, 1988, pp. 68–81.

water, with the upper part of the reservoir connected to a compressed gas supply or other source of pressure (see Note 2). The gas pressure shall be controlled by a pressure regulator and measured by a pressure gage, electronic pressure transducer, or any other device capable of measuring to the prescribed tolerance. A hydraulic system pressurized by deadweight acting on a piston or any other pressure device capable of applying and controlling the permeameter cell pressure to the tolerance prescribed in this paragraph may be used.

NOTE 2—De-aired water is commonly used for the cell fluid to minimize potential for diffusion of air through the membrane into the specimen. Other fluids, such as oils, which have low gas solubilities are also acceptable, provided they do not react with components of the permeameter. Also, use of a long (approximately 5 to 7 m) tube connecting the pressurized cell liquid to the cell helps to delay the appearance of air in the cell fluid and to reduce the flux of dissolved air into the cell.

5.4 *Permeameter Cell*—An apparatus shall be provided in which the specimen and porous end pieces, enclosed by a membrane sealed to the cap and base, are subjected to controlled fluid pressures. A schematic diagram of a typical cell is shown in Fig. 1.

5.4.1 The permeameter cell may allow for observation of changes in height of the specimen, either by observation through the cell wall using a cathetometer or other instrument, or by monitoring of either a loading piston or an extensometer extending through the top plate of the cell bearing on the top cap and attached to a dial indicator or other measuring device. The piston or extensometer should pass through a bushing and seal incorporated into the top plate and shall be loaded with sufficient force to compensate for the cell pressure acting over the cross-sectional area of the piston where it passes through the seal. If deformations are measured, the deformation indicator shall be a dial indicator or cathetometer graduated to 0.3 mm (0.01 in.) or better and having an adequate travel range. Any other measuring device meeting these requirements is acceptable.

5.4.2 In order to facilitate gas removal, and thus saturation of the hydraulic system, four drainage lines leading to the specimen, two each to the base and top cap, are recommended. The drainage lines shall be controlled by no-volume-change valves, such as ball valves, and shall be designed to minimize dead space in the lines.

5.5 *Top Cap and Base*—An impermeable, rigid top cap and base shall be used to support the specimen and provide for transmission of permeant liquid to and from the specimen. The diameter or width of the top cap and base shall be equal to the diameter or width of the specimen ±5 %. The base shall prevent leakage, lateral motion, or tilting, and the top cap shall be designed to receive the piston or extensometer, if used, such that the piston-to-top cap contact area is concentric with the cap. The surface of the base and top cap that contacts the membrane to form a seal shall be smooth and free of scratches.

5.6 *Flexible Membranes*—The flexible membrane used to encase the specimen shall provide reliable protection against leakage. The membrane shall be carefully inspected prior to use and if any flaws or pinholes are evident, the membrane shall be discarded. To minimize restrain to the specimen, the diameter or width of the unstretched membrane shall be

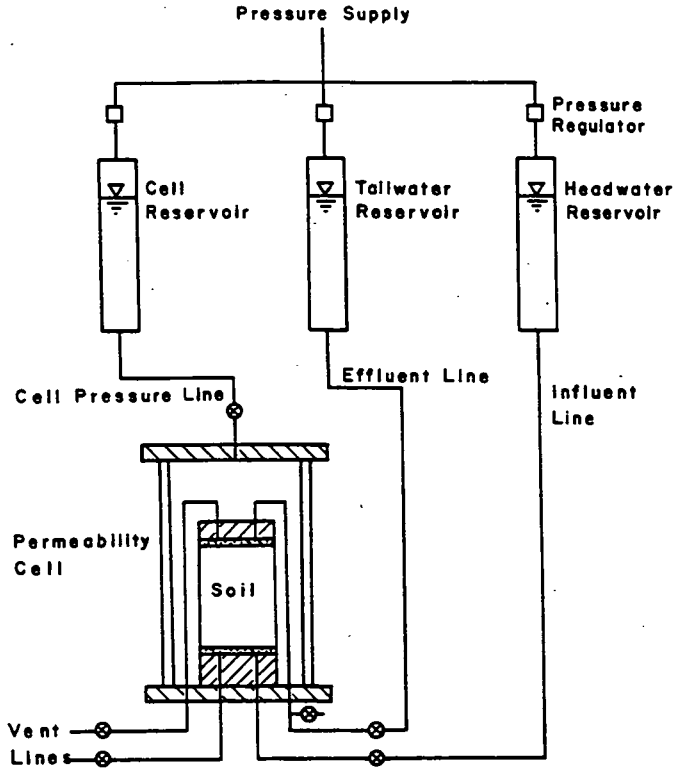

FIG. 1 Permeameter Cell

between 90 and 95 % of that of the specimen. The membrane shall be sealed to the specimen base and cap with rubber O-rings for which the unstressed, inside diameter or width is less than 90 % of the diameter or width of the base and cap, or by any other method that will produce an adequate seal.

NOTE 3—Membranes may be tested for flaws by placing them around a form sealed at both ends with rubber O-rings, subjecting them to a small air pressure on the inside, and then dipping them into water. If air bubbles come up from any point on the membrane, or if any visible flaws are observed, the membrane shall be discarded.

5.7 *Porous End Pieces*—The porous end pieces shall be of silicon carbide, aluminum oxide, or other material that is not attacked by the specimen or permeant liquid. The end pieces shall have plane and smooth surfaces and be free of cracks, chips, and nonuniformities. They shall be checked regularly to ensure that they are not clogged.

5.7.1 The porous end pieces shall be the same diameter or width (±5 %) as the specimen, and the thickness shall be sufficient to prevent breaking.

5.7.2 The hydraulic conductivity of the porous end pieces shall be significantly greater than that of the specimen to be tested. The requirements outlined in 5.2.3 ensure this.

5.8 *Filter Paper*—If necessary to prevent intrusion of material into the pores of the porous end pieces, one or more sheets of filter paper shall be placed between the top and bottom porous end pieces and the specimen. The paper shall have a negligibly small hydraulic impedance. The requirements outlined in 5.2.3 ensure that the impedance is small.

5.9 *Equipment for Compacting a Specimen*—Equipment (including compactor and mold) suitable for the method of compaction specified by the requester shall be used.

000202

5.10 *Sample Extruder*—When the material being tested is a soil core, the soil core shall usually be removed from the sampler with an extruder. The sample extruder shall be capable of extruding the soil core from the sampling tube in the same direction of travel in which the sample entered the tube and with minimum disturbance of the sample. If the soil core is not extruded vertically, care should be taken to avoid bending stresses on the core due to gravity. Conditions at the time of sample extrusion may dictate the direction of removal, but the principal concern is to keep the degree of disturbance minimal.

5.11 *Trimming Equipment*—Specific equipment for trimming the specimen to the desired dimensions will vary depending on quality and characteristics of the sample; however, the following items listed may be used: lathe, wire saw with a wire about 0.3 mm (0.01 in.) in diameter, spatulas, knives, steel rasp for very hard clay specimens, cradle or split mold for trimming specimen ends, and steel straight edge for final trimming of specimen ends.

5.12 *Devices for Measuring the Dimensions of the Specimen*—Devices used to measure the dimensions of the specimen shall be capable of measuring to the nearest 0.3 mm (0.01 in.) or better and shall be constructed such that their use will not disturb the specimen.

5.13 *Balances*—The balance shall be suitable for determining the mass of the specimen and shall be selected as discussed in Specification D 4753. The mass of specimens less than 100 g shall be determined to the nearest 0.01 g. The mass of specimens 100 g or larger shall be determined to the nearest 0.1 g. The mass of specimens >1000 g shall be determined to the nearest 1.0 g.

5.14 *Equipment for Mounting the Specimen*—Equipment for mounting the specimen in the permeameter cell shall include a membrane stretcher or cylinder, and ring for expanding and placing O-rings on the base and top cap to seal the membrane.

5.15 *Vacuum Pump*—To assist with de-airing of permeameter system and saturation of specimens.

5.16 *Temperature Maintaining Device*—The temperature of the permeameter, test specimen, and reservoir of permeant liquid shall not vary more than ±3°C (±5.7°F). Normally, this is accomplished by performing the test in a room with a relatively constant temperature. If such a room is not available, the apparatus shall be placed in a water bath, insulated chamber, or other device that maintains a temperature within the tolerance specified in 5.16. The temperature shall be periodically measured and recorded.

5.17 *Water Content Containers*—The containers shall be in accordance with Method D 2216.

5.18 *Drying Oven*—The oven shall be in accordance with Specification E 145.

6. Reagents

6.1 *Permeant Water:*

6.1.1 The permeant water is the liquid used to permeate the test specimen and is also the liquid used in backpressuring the specimen.

1.2 The type of permeant water should be specified by the requestor. If no specification is made, tap water shall be used for the permeant liquid. The type of water utilized shall be indicated in the report.

NOTE 4—Chemical interactions between a permeant liquid and the porous material may lead to variations in hydraulic conductivity. Distilled water can significantly lower the hydraulic conductivity of clayey soils (see the literature).[4] For this reason, distilled water is not usually recommended as a permeant liquid. A permeant liquid used by some is 0.005 N $CaSO_4$, which can be obtained for example, by dissolving 6.8 g of nonhydrated, reagent-grade $CaSO_4$ in 10 L of de-aired, distilled water. This $CaSO_4$ solution is thought to neither increase nor decrease significantly the hydraulic conductivity of clayey soils. In areas with extremely brackish tap water, the $CaSO_4$ solution is recommended.

6.1.3 *Deaired Water*—To aid in removing as much air from the test specimen as possible, deaired water shall be used. The water is usually deaired by boiling, by spraying a fine mist of water into an evacuated vessel attached to a vacuum source, or by forceful agitation of water in a container attached to a vacuum source. If boiling is used, care shall be taken not to evaporate an excessive amount of water, which can lead to a larger salt concentration in the permeant water than desired. To prevent dissolution of air back into the water, deaired water shall not be exposed to air for prolonged periods.

7. Test Specimens

7.1 *Size*—Specimens shall have a minimum diameter of 25 mm (1.0 in.) and a minimum height of 25 mm. The height and diameter of the specimen shall be measured to the nearest 0.3 mm (0.01 in.) or better. The length and diameter shall vary by no more than ±5 %. The surface of the test specimen may be uneven, but indentations must not be so deep that the length or diameter vary by more than ±5 %. The diameter and height of the specimen shall each be at least 6 times greater than the largest particle size within the specimen. If, after completion of a test, it is found based on visual observation that oversized particles are present, that information shall be indicated on the report.

NOTE 5—Most hydraulic conductivity tests are performed on cylindrical test specimens. It is possible to utilize special equipment for testing prismatic test specimens, in which case reference to "diameter" in 7.1 applies to the least width of the prismatic test specimen.

7.2 *Undisturbed Specimens*—Undisturbed test specimens shall be prepared from a representative portion of undisturbed samples secured in accordance with Practice D 1587 or Practice D 2113, and preserved and transported in accordance with requirements for Group C materials in Practice D 4220. Specimens obtained by tube sampling or coring may be tested without trimming except for cutting the end surfaces plane and perpendicular to the longitudinal axis of the specimen, provided soil characteristics are such that no significant disturbance results from sampling. Where the sampling operation has caused disturbance of the soil, the disturbed material shall be trimmed. Where removal of pebbles or crumbling resulting from trimming causes voids on the surface of the specimen that cause the length or diameter to vary by more than ±5 %, the voids shall be filled with remolded material obtained from the trimmings. The ends of the test specimen shall be cut and not troweled (troweling can seal off cracks, slickensides, or other secondary features that might conduct water flow). Specimens shall be trimmed, whenever possible, in an environment where changes in moisture content are minimized. A controlled high-humidity room is usually used for this purpose. The mass and dimensions of the test specimen shall be

determined to the tolerances given in 5.12 and 5.13. The test specimen shall be mounted immediately in the permeameter. The water content of the trimmings shall be determined in accordance with Method D 2216.

7.3 *Laboratory-Compacted Specimens*—The material to be tested shall be prepared and compacted inside a mold in a manner specified by the requestor. If the specimen is placed and compacted in layers, the surface of each previously-compacted layer shall be lightly scarified (roughened) with a fork, ice pick, or other suitable object, unless the requester specifically states that scarification is not to be performed. Test Methods D 698 and D 1557 describe two methods of compaction, but any other method specified by the requestor may be used as long as the method is described in the report. Large clods of material should not be broken down prior to compaction unless it is known that they will be broken in field construction, as well, or the requestor specifically requests that the clod size be reduced. Neither hard clods nor individual particles of the material shall exceed ⅙ of either the height or diameter of the specimen. After compaction, the test specimen shall be removed from the mold, the ends scarified, and the dimensions and weight determined within the tolerances given in 5.12 and 5.13. After the dimensions and mass are determined, the test specimen shall be immediately mounted in the permeameter. The water content of the trimmings shall be determined in accordance with Method D 2216.

7.4 *Other Preparation Methods*—Other methods of preparation of a test specimen are permitted if specifically requested. The method of specimen preparation shall be identified in the report.

7.5 After the height, diameter, mass, and water content of the test specimen have been determined, the dry unit weight shall be calculated. Also, the initial degree of saturation shall be estimated (this information may be used later in the backpressure stage).

8. Procedure

8.1 *Specimen Setup:*

8.1.1 Cut two filter paper sheets to approximately the same shape as the cross section of the test specimen. Soak the two porous end pieces and filter paper sheets, if used, in a container of permeant water.

8.1.2 Place the membrane on the membrane expander. Apply a thin coat of silicon high-vacuum grease to the sides of the end caps. Place one porous end piece on the base and place one filter paper sheet, if used, on the porous end piece, followed by the test specimen. Place the second filter paper sheet, if used, on top of the specimen followed by the second porous end piece and the top cap. Place the membrane around the specimen, and using the membrane expander or other suitable O-ring expander, place one or more O-rings to seal the membrane to the base and one or more additional O-rings to seal the membrane to the top cap.

8.1.3 Attach flow tubing to the top cap, if not already attached, assemble the permeameter cell, and fill it with de-aired water or other cell fluid. Attach the cell pressure reservoir to the permeameter cell line and the hydraulic system to the influent and effluent lines. Fill the cell pressure reservoir with deaired water, or other suitable liquid, and the hydraulic system with deaired permeant water. Apply a small

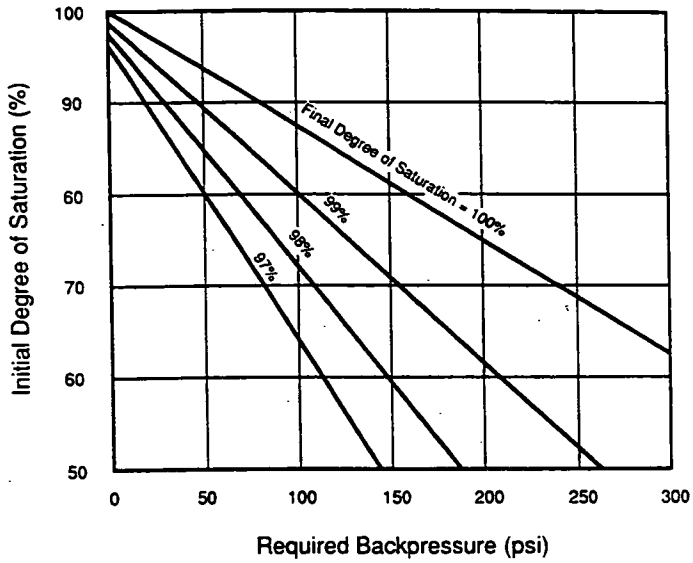

FIG. 2 Back Pressure to Attain Various Degrees of Saturation[6]

confining pressure of 7 to 35 kPa (1 to 5 psi) to the cell and apply a pressure less than the confining pressure to both the influent and effluent systems, and flush permeant water through the flow system. After all visible air has been removed from the flow lines, close the control valves. At no time during saturation of the system and specimen or hydraulic conductivity measurements shall the maximum applied effective stress be allowed to exceed that to which the specimen is to be consolidated.

8.2 *Specimen Soaking (Optional)*—To aid in saturation, specimens may be soaked under partial vacuum applied to the top of the specimen. Atmospheric pressure shall be applied to the specimen base through the influent lines, and the magnitude of the vacuum set to generate a hydraulic gradient across the sample less than that which will be used during hydraulic conductivity measurements.

NOTE 6—Soaking under vacuum is applicable when there are continuous air voids in the specimen. Soaking under vacuum is only recommended for test specimens with initial degrees of saturation below 70 %. The specimen may swell when exposed to water; the effective stress will tend to counteract the swelling. However, for materials that tend to swell, unless the applied effective stress is greater than or equal to the swell pressure, the specimen will swell.

8.3 *Backpressure Saturation*—To saturate the specimen, backpressuring is usually necessary. Figure 2 provides guidance on back pressure required to attain saturation.

NOTE 7—Figure 2 assumes that the water used for back pressure is deaired and that the only source for air to dissolve into the water is air from the test specimen. If air pressure is used to control the back pressure, pressurized air will dissolve into the water, thus reducing the capacity of the water used for back pressure to dissolve air located in the pores of the test specimen. The problem is minimized by using a long (>5 m) tube that is impermeable to air between the air-water interface and test specimen, by separating the back-pressure water from the air by a material or fluid that is relatively impermeable to air, by periodically replacing the back-pressure water with deaired water, or by other means.

[6] Lowe, J., and Johnson, T. C., "Use of Back Pressure to Increase Degree of Saturation of Triaxial Test Specimens," *Proceedings, ASCE Research Conference on Shear Strength of Cohesive Soils*, Boulder, CO, 1960.

8.3.1 Open the flow line valves and flush out of the system any free air bubbles using the procedure outlined in 8.1.3. If electronic pressure transducer or other measuring device is to be used during the test to measure pore pressures or applied hydraulic gradient, it should be bled of any trapped air. Take and record an initial reading of specimen height, if being monitored.

8.3.2 Adjust the applied confining pressure to the value to be used during saturation of the sample. Apply backpressure by simultaneously increasing the cell pressure and the influent and effluent pressures in increments. The maximum value of an increment in backpressure shall be sufficiently low so that no point in the specimen is exposed to an effective stress in excess of that to which the specimen will be subsequently consolidated. At no time shall a head be applied so that the effective confining stress is <7 kPa (1 psi) because of the danger of separation of the membrane from the test specimen. Maintain each increment of pressure for a period of a few minutes to a few hours, depending upon the characteristics of the specimen. To assist in removal of trapped air, a small hydraulic gradient may be applied across the specimen to induce flow.

8.3.3 Saturation shall be verified with one of the three following techniques:

8.3.3.1 Saturation may be verified by measuring the *B* coefficient as described in Test Method D 4767 (see Note 8). The test specimen shall be considered to be adequately saturated if (*1*) the *B* value is ≥0.95, or (*2*) for relatively incompressible materials, for example, rock, if the *B* value remains unchanged with application of larger values of back pressure. The *B* value may be measured prior to or after completion of the consolidation phase (see 8.4). Accurate *B*-value determination can only be made if no gradient is acting on the specimen and all pore pressure induced by consolidation has dissipated.

NOTE 8—The *B* coefficient is defined for this type of test as the change in pore water pressure in the porous material divided by the change in confining pressure. Compressible materials that are fully saturated with water will have a *B* value of 1.0. Relatively incompressible, saturated materials have *B* values which are somewhat less than 1.0.

8.3.3.2 Saturation of the test specimen may be confirmed at the completion of the test by calculation of the final degree of saturation. The final degree of saturation shall be 100 ± 5 %. However, measurement of the *B* coefficient as described in 8.3.3.1 or use of some other technique (8.3.3.3) is strongly recommended because it is much better to confirm saturation prior to permeation than to wait until after the test to determine if the test was valid.

8.3.3.3 Other means for verifying saturation, such as measurement of the volume change of the specimen when the pore water pressure has been changed, can be used for verifying saturation provided data are available for similar materials to establish that the procedure used confirms saturation as required in 8.3.3.1 or 8.3.3.2.

8.4 *Consolidation*—The specimen shall be consolidated to the effective stress specified by the requestor. Consolidation may be accomplished in stages, if desired.

NOTE 9—The test specimen may be consolidated prior to application of backpressure. Also, the backpressure and consolidation phases may be completed concurrently if backpressures are applied sufficiently slowly to minimize potential for overconsolidation of the specimen.

8.4.1 Record the specimen height, if being monitored, prior to application of consolidation pressure and periodically during consolidation.

8.4.2 Increase the cell pressure to the level necessary to develop the desired effective stress, and begin consolidation. Drainage may be allowed from the base or top of the specimen, or simultaneously from both ends.

8.4.3 (Optional) Record outflow volumes to confirm that primary consolidation has been completed prior to initiation of the hydraulic conductivity test. Alternatively, measurements of the change in height of the test specimen can be used to confirm completion of consolidation.

NOTE 10—The procedure in 8.4.3 is optional because the requirements of 8.5 ensure that the test specimen is adequately consolidated during permeation because if it is not, inflow and outflow volumes will differ significantly. However, for accurate *B*-value determination, completion of consolidation should be confirmed (see 8.3.3.1). It is recommended that outflow volumes or height changes be recorded as a means for verifying the completion of consolidation prior to initialization of permeation. Also, measurements in the change in height of the test specimen, coupled with knowledge of the initial height, provide a means for checking the final height of the specimen.

8.5 *Permeation:*

8.5.1 *Hydraulic Gradient*—When possible, the hydraulic gradient used for hydraulic conductivity measurements should be similar to that expected to occur in the field. In general, hydraulic gradients from <1 to 5 cover most field conditions. However, the use of small hydraulic gradients can lead to very long testing times for materials having low hydraulic conductivity (less than about 1×10^{-6} cm/s). Somewhat larger hydraulic gradients are usually used in the laboratory to accelerate testing, but excessive gradients must be avoided because high seepage pressures may consolidate the material, material may be washed from the specimen, or fine particles may be washed downstream and plug the effluent end of the test specimen. These effects could increase or decrease hydraulic conductivity. If no gradient is specified by the requestor, the following guidelines may be followed:

Hydraulic Conductivity, cm/s	Recommended Maximum Hydraulic Gradient
1×10^{-3} to 1×10^{-4}	2
1×10^{-4} to 1×10^{-5}	5
1×10^{-5} to 1×10^{-6}	10
1×10^{-6} to 1×10^{-7}	20
less than 1×10^{-7}	30

NOTE 11—Seepage pressures associated with large hydraulic gradients can consolidate soft, compressible specimens and reduce their hydraulic conductivity. It may be necessary to use smaller hydraulic gradients (<10) for such specimens.

8.5.2 *Initialization*—Initiate permeation of the specimen by increasing the influent pressure (see 8.3.2). The effluent pressure shall not be decreased because air bubbles that were dissolved by the specimen water during backpressuring may come out of solution if the pressure is decreased. The back pressure shall be maintained throughout the permeation phase.

8.5.3 *Constant Head Test (Method A)*—Measure and record the required head loss across the test specimen to the tolerances stated in 5.1.1 and 5.2.3. The head loss across the specimen shall be kept constant ±5 %. Measure and record periodically the quantity of inflow as well as the quantity of outflow. Also measure and record any changes in height of the test specimen, if being monitored (see Note 11). Con-

tinue permeation until at least four values of hydraulic conductivity are obtained over an interval of time in which: (*1*) the ratio of outflow to inflow rate is between 0.75 and 1.25, and (*2*) the hydraulic conductivity is steady. The hydraulic conductivity shall be considered steady if four or more consecutive hydraulic conductivity determinations fall within ±25 % of the mean value for $k \geq 1 \times 10^{-10}$ m/s or within ±50 % for $k < 1 \times 10^{-10}$ m/s, and a plot of the hydraulic conductivity versus time shows no significant upward or downward trend.

8.5.4 *Falling-Head Tests (Methods B and C)*—Measure and record the required head loss across the test specimen to the tolerances stated in 5.1.2. For falling-head tests, at no time shall the applied head loss across the specimen be less than 75 % of the initial (maximum) head loss during each individual hydraulic conductivity determination (see Note 12). Periodically measure and record any changes in the height of the specimen, if being monitored. Continue permeation until at least four values of hydraulic conductivity are obtained over an interval of time in which: (*1*) the ratio of outflow to inflow rate is between 0.75 and 1.25, and (*2*) the hydraulic conductivity is steady (see 8.5.3).

NOTE 12—When the water pressure in a test specimen changes and the applied total stress is constant, the effective stress in the test specimen changes, which can cause volume changes that can invalidate the test results. The requirement that the head loss not decrease very much is intended to keep the effective stress from changing too much. For extremely soft, compressible test specimens, even more restrictive criteria might be needed. Also, when the initial and final head losses across the test specimen do not differ by much, great accuracy is needed to comply with the requirement of 5.1.2 that the ratio of initial to final head loss be determined with an accuracy of ±5 % or better. When the initial and final head loss over an interval of time do not differ very much, it may be possible to comply with the requirements for a constant head test (8.5.3) in which the head loss must not differ by more than ±5 % and to treat the test as a constant head test.

8.5.4.1 *Test with Constant Tailwater Level (Method B)*—If the water pressure at the downstream (tailwater) end of the test specimen is kept constant, periodically measure and record either the quantity of inflow or the level of water in the influent standpipe; measure and record the quantity of outflow from the test specimen.

8.5.4.2 *Test with Increasing Tailwater Level (Method C)*—If the water pressure at the downstream end of the test specimen rises during an interval of time, periodically measure and record either the quantity or inflow and outflow or the changes in water levels in the influent and effluent standpipes.

8.5.5 *Constant Rate of Flow Tests (Method D)*—Initiate permeation of the specimen by imposing a constant flow rate. Choose the flow rate so the hydraulic gradient does not exceed the value specified, or if none is specified, the value recommended in 8.5.1. Periodically measure the rate of inflow, the rate of outflow, and head loss across the test specimen to the tolerances given in 5.1.3. Also, measure and record any changes in specimen height, if being monitored. Continue permeation until at least four values of hydraulic conductivity are obtained over an interval of time in which (*1*) the ratio of inflow to outflow rates is between 0.75 and 1.25, and (*2*) hydraulic conductivity is steady (see 8.5.3).

8.6 *Final Dimensions of the Specimen*—After completion of permeation, reduce the applied confining, influent, and effluent pressures in a manner that does not generate significant volume change of the test specimen. Then carefully disassemble the permeater cell and remove the specimen. Measure and record the final height, diameter, and total mass of the specimen. Then determine the final water content of the specimen by the procedure of Method D 2216. Dimensions and mass of the test specimen shall be measured to the tolerances specified in 5.13 and 7.1.

NOTE 13—The specimen may swell after removal of back pressure as a result of air coming out of solution. A correction may be made for this effect, provided that changes in the length of the specimen are monitored during the test. The strain caused by dismantling the cell is computed from the length of the specimen before and after dismantling the cell. The same strain is assumed to have occurred in the diameter. The corrected diameter and actual length before the back pressure was removed are used to compute the volume of the test specimen prior to dismantling the cell. The volume prior to dismantling the cell is used to determine the final dry density and degree of saturation.

9. Calculation

9.1 *Constant Head and Constant Rate of Flow Tests (Methods A and D)*—Calculate the hydraulic conductivity, k, as follows:

$$k = QL/Ath \tag{1}$$

where:

k = hydraulic conductivity, m/s,
Q = quantity of flow, taken as the average of inflow and outflow, m^3,
L = length of specimen along path of flow, m,
A = cross-sectional area of specimen, m^2,
t = interval of time, s, over which the flow Q occurs, and
h = difference in hydraulic head across the specimen, m of water.

9.2 *Falling-Head Tests:*

9.2.1 *Constant Tailwater Pressure (Method B)*—Calculate the hydraulic conductivity, k, as follows:

$$k = \frac{aL}{At} \ln\left(\frac{h_1}{h_2}\right) \tag{2}$$

where:

a = cross-sectional area of the reservoir containing the influent liquid, m^2,
L = length of the specimen, m,
A = cross-sectional area of the specimen, m^2,
t = elapsed time between determination of h_1 and h_2, s,
h_1 = head loss across the specimen at time t_1, m, and
h_2 = head loss across the specimen at time t_2, m.

9.2.2 *Increasing Tailwater Pressure (Method C)*—Calculate the hydraulic conductivity, k, as follows:

$$k = \frac{a_{in}\, a_{out}\, L}{A\, t\, (a_{in} + a_{out})} \ln(h_1/h_2) \tag{3}$$

where:

a_{in} = cross-sectional area of the reservoir containing the influent liquid, m^2,
a_{out} = cross-sectional area of the reservoir containing the effluent liquid, m^2,
L = length of the specimen, m,
A = cross-sectional area of the specimen, m^2,
t = elapsed time between determination of h_1 and h_2, s,
h_1 = head loss across the specimen at time t, m, and
h_2 = head loss across the specimen at time t_2, m.

NOTE 14—For the case in which $a_{out} = a_{in} = a$, the equation for calculating k for a falling head test with a rising tailwater level is:

$$k = \frac{a\,L}{-2\,A\,t} \ln\left(\frac{h_1}{h_2}\right) \quad (4)$$

9.3 Correct the hydraulic conductivity to that for 20°C (68°F), k_{20}, by multiplying k by the ratio of the viscosity of water at test temperature to the viscosity of water at 20°C (68°F), R_T, from Table 1, as follows:

$$k_{20} = R_T k \quad (5)$$

10. Report

10.1 Report the following information:

10.1.1 Sample identifying information,

10.1.2 Any special selection and preparation process, such as removal of stones or other materials, or indication of their presence, if undisturbed specimen,

10.1.3 Descriptive information on method of compaction,

10.1.4 Initial dimensions of the specimen,

10.1.5 Initial water content and dry unit weight of the specimen,

10.1.6 Type of permeant liquid used,

10.1.7 Magnitude of total back pressure,

10.1.8 Maximum and minimum effective consolidation stress,

NOTE 15—The maximum effective stress exists at the effluent end of the test specimen and the minimum stress at the influent end.

10.1.9 Height of specimen after completion of consolidation, if monitored,

10.1.10 Range of hydraulic gradient used,

10.1.11 Final length, diameter, water content, dry unit weight, and degree of saturation of the test specimen,

10.1.12 Average hydraulic conductivity for the last four determinations of hydraulic conductivity (obtained as described in 8.5.3 to 8.5.5), reported with two significant figures, for example, 7.1×10^{-10} m/s, and reported in units of m/s (plus additional units, if requested or customary),

10.1.13 Graph or table of hydraulic conductivity versus time or pore volumes of flow is recommended.

TABLE 1 Correction Factor R_T for Viscosity of Water at Various Temperatures[A]

Temperature, °C	R_T	Temperature, °C	R_T
0	1.783	25	0.889
1	1.723	26	0.869
2	1.664	27	0.850
3	1.611	28	0.832
4	1.560	29	0.814
5	1.511	30	0.797
6	1.465	31	0.780
7	1.421	32	0.764
8	1.379	33	0.749
9	1.339	34	0.733
10	1.301	35	0.719
11	1.265	36	0.705
12	1.230	37	0.692
13	1.197	38	0.678
14	1.165	39	0.665
15	1.135	40	0.653
16	1.106	41	0.641
17	1.077	42	0.629
18	1.051	43	0.618
19	1.025	44	0.607
20	1.000	45	0.598
21	0.976	46	0.585
22	0.953	47	0.575
23	0.931	48	0.565
24	0.910	49	0.556

[A] $R_T = (-0.02452\,T + 1.495)$ where T is the degrees celsius.

11. Precision and Bias

11.1 *Precision*—Data are being evaluated to determine the precision of this test method. In addition, Subcommittee D18.04 on Hydrologic Properties of Soil and Rocks, is seeking pertinent data from users of this test method.

11.2 *Bias*—There is no accepted reference value for this test method, therefore, bias cannot be determined.

12. Keywords

12.1 coefficient of permeability; hydraulic barriers; hydraulic conductivity; liner; permeameter

The American Society for Testing and Materials takes no position respecting the validity of any patent rights asserted in connection with any item mentioned in this standard. Users of this standard are expressly advised that determination of the validity of any such patent rights, and the risk of infringement of such rights, are entirely their own responsibility.

This standard is subject to revision at any time by the responsible technical committee and must be reviewed every five years and if not revised, either reapproved or withdrawn. Your comments are invited either for revision of this standard or for additional standards and should be addressed to ASTM Headquarters. Your comments will receive careful consideration at a meeting of the responsible technical committee, which you may attend. If you feel that your comments have not received a fair hearing you should make your views known to the ASTM Committee on Standards, 1916 Race St., Philadelphia, PA 19103.

Standard Practice for Design and Installation of Ground Water Monitoring Wells in Aquifers[1]

This standard is issued under the fixed designation D 5092; the number immediately following the designation indicates the year of original adoption or, in the case of revision, the year of last revision. A number in parentheses indicates the year of last reapproval. A superscript epsilon (ε) indicates an editorial change since the last revision or reapproval.

INTRODUCTION

This practice for the design and installation of ground water monitoring wells in aquifers will promote (*1*) durable and reliable construction, (*2*) extraction of representative ground water quality samples, and (*3*) efficient and site hydrogeological characterizations. The guidelines established herein are affected by governmental regulations and by site specific geological, hydrogeological, climatological, topographical, and subsurface chemistry conditions. To meet these geoenvironmental challenges, this guidance promotes the development of a conceptual hydrogeologic model prior to monitoring well design and installation.

1. Scope

1.1 This practice considers the selection and characterization (that is, defining soil, rock types, and hydraulic gradients) of the target monitoring zone as an integral component of monitoring well design and installation. Hence, the development of a conceptual hydrogeologic model for the intended monitoring zone(s) is recommended prior to the design and installation of a monitoring well.

1.2 These guidelines are based on recognized methods by which monitoring wells may be designed and installed for the purpose of detecting the presence or absence of a contaminant, and collecting representative ground water quality data. The design standards and installation procedures herein are applicable to both detection and assessment monitoring programs for facilities.

1.3 The recommended monitoring well design, as presented in this practice, is based on the assumption that the objective of the program is to obtain representative ground water information and water quality samples from aquifers. Monitoring wells constructed following this practice should produce relatively turbidity-free samples for granular aquifer materials ranging from gravels to silty sand and sufficiently permeable consolidated and fractured strata. Strata having grain sizes smaller than the recommended design for the smallest diameter filter pack materials should be monitored by alternative monitoring well designs which are not addressed in this practice.

1.4 The values stated in inch-pound units are to be regarded as standard. The values in parentheses are for information only.

1.5 *This standard does not purport to address the safety problems associated with its use. It is the responsibility of the user of this standard to establish appropriate safety and health practices and determine the applicability of regulatory limitations prior to use.*

2. Referenced Documents

2.1 *ASTM Standards:*

C 150 Specification for Portland Cement[2]

C 294 Descriptive Nomenclature of Constituents of Natural Mineral Aggregates[3]

D 653 Terminology Relating to Soil, Rock, and Contained Fluids[4]

D 1452 Practice for Soil Investigation and Sampling by Auger Borings[4]

D 1586 Method for Penetration Test and Split-Barrel Sampling of Soils[4]

D 1587 Practice for Thin-Walled Tube Sampling of Soils[4]

D 2113 Practice for Diamond Core Drilling for Site Investigation[4]

D 2487 Test Method for Classification of Soils for Engineering Purposes[4]

D 2488 Practice for Description and Identification of Soils (Visual-Manual Procedure)[4]

D 3282 Practice for Classification of Soils and Soil Aggregate Mixtures for Highway Construction Purposes[4]

D 3550 Practice for Ring Lined Barrel Sampling of Soils[4]

D 4220 Practice for Preserving and Transporting Soil Samples[4]

3. Significance and Use

3.1 An adequately designed and installed ground water monitoring well system for aqueousphase liquids provides essential information for decisions pertaining to one or more of the following subjects:

3.1.1 Aquifer and aquitard properties, both geologic and hydraulic;

[1] This practice is under the jurisdiction of ASTM Committee D-18 on Soil and Rock and is the direct responsibility of Subcommittee D18.21.05 on Design and Installation of Ground-Water Monitoring Wells.

Current edition approved June 29, 1990. Published October 1990.

[2] *Annual Book of ASTM Standards*, Vol 04.01.

[3] *Annual Book of ASTM Standards*, Vol 04.02.

[4] *Annual Book of ASTM Standards*, Vol 04.08.

3.1.2 Potentiometric surface of a particular hydrologic unit(s);

3.1.3 Water quality with respect to various indicator parameters;

3.1.4 Migration characteristics of a contaminant release;

3.1.5 Additional installations or decommissioning of installations, or both, no longer needed.

4. Terminology

4.1 *Definitions:*

4.1.1 *annular space; annulus*—the space between two concentric tubes or casings, or between the casing and the borehole wall. This would include the space(s) between multiple strings of tubing/casings in a borehole installed either concentrically or multi-cased adjacent to each other.

4.1.2 *assessment monitoring*—an investigative monitoring program that is initiated after the presence of a contaminant in ground water has been detected. The objective of this program is to determine the concentration of constituents that have contaminated the ground water and to quantify the rate and extent of migration of these constituents.

4.1.3 *ASTM cement types*—Portland cements meeting the requirements of Specifications C 150. Cement types have slightly different formulations that result in various characteristics which address different construction conditions and different physical and chemical environments. They are as follows:

4.1.3.1 *Type I (Portland)*—a general-purpose construction cement with no special properties.

4.1.3.2 *Type II (Portland)*—a construction cement that is moderately resistant to sulfates and generates a lower head of hydration at a slower rate than Type I.

4.1.3.3 *Type III (Portland; high early strength)*—a construction cement that produces a high early strength. This cement reduces the curing time required when used in cold environments, and produces a higher heat of hydration than Type I.

4.1.3.4 *Type IV (Portland)*—a construction cement that produces a low head of hydration (lower than Types I and II) and develops strength at a slower rate.

4.1.3.5 *Type V (Portland)*—a construction cement that is a high sulfate resistant formulation. Used when there is severe sulfate action from soils and ground water.

4.1.4 *bailer*—a hollow tubular receptacle used to facilitate withdrawal of fluid from a well or borehole.

4.1.5 *ballast*—materials used to provide stability to a buoyant object (such as casing within a borehole filled with water).

4.1.6 *blow-in*—the inflow of ground water and unconsolidated material into a borehole or casing caused by differential hydraulic heads; that is, caused by the presence of a greater hydraulic head outside of a borehole/casing than inside.

4.1.7 *borehole* a circular open or uncased subsurface hole created by drilling.

4.1.8 *borehole log*—the record of geologic units penetrated, drilling progress, depth, water level, sample recovery, volumes, and types of materials used, and other significant facts regarding the drilling of an exploratory borehole or well.

DISCUSSION—The definition of aquifer as currently included in Terminology D 653 varies from the definition as prescribed by US federal regulations. Since this federal definition is associated the installation of many monitoring wells it is provided herein technical note:

aquifer—a geologic formation, group of formation, or part formation that is saturated, and is capable of providing a signif quantity of water.

4.1.9 *bridge*—an obstruction within the annulus w may prevent circulation or proper emplacement of anı materials.

4.1.10 *casing*—pipe, finished in sections with e threaded connections or bevelled edges to be field we which is installed temporarily or permanently to count caving, to advance the borehole, or to isolate the zone i monitored, or combination thereof.

4.1.11 *casing, protective*—a section of larger diar pipe that is emplaced over the upper end of a smaller c eter monitoring well riser or casing to provide struc protection to the well and restrict unauthorized access the well.

4.1.12 *casing, surface*—pipe used to stabilize a bor near the surface during the drilling of a borehole that m left in place or removed once drilling is completed.

4.1.13 *caving; sloughing*—the inflow of unconsoli material into a borehole which occurs when the bor walls lose their cohesive strength.

4.1.14 *cement; Portland cement*—commonly knov Portland cement. A mixture that consists of a calca argillaceous, or other silica-, alumina-, and iron- bearing materials that is manufactured and formulat produce various types which are defined in Specific C 150. Portland cement is also considered a hyd cement because it must be mixed with water to fc cement-water paste that has the ability to harder develop strength even if cured under water (see *cement types*).

4.1.15 *centralizer*—a device that assists in the center a casing or riser within a borehole or another casing.

4.1.16 *circulation*—applies to the fluid rotary c method; drilling fluid movement from the mud pit, th the pump, hose and swivel, drill pipe, annular space hole and returning to the mud pit.

4.1.17 *conductance (specific)*—a measure of the abi the water to conduct an electric current at 77°F (25°C related to the total concentration of ionizable solids water. It is inversely proportional to electrical resistan

4.1.18 *confining unit*—a term that is synonymou "aquiclude," "aquitard," and "aquifuge;" defined as of relatively low permeable material stratigraphically cent to one or more aquifers.

4.1.19 *contaminant*—an undesirable substance nc mally present in water or soil.

4.1.20 *detection monitoring*—a program of mon for the express purpose of determining whether or nc has been a contaminant release to ground water.

4.1.21 *drill cuttings*—fragments or particles of rock, with or without free water, created by the process.

4.1.22 *drilling fluid*—a fluid (liquid or gas) that used in drilling operations to remove cuttings frc borehole, to clean and cool the drill bit, and to maint integrity of the borehole during drilling.

4.1.23 *d-10*—the diameter of a soil particle (preferably in millimetres) at which 10 % by weight (dry) of the particles of a particular sample are finer. Synonymous with the effective size or effective grain size.

4.1.24 *d-60*—the diameter of a soil particle (preferably in millimetres) at which 60 % by weight (dry) of the particles of a particular sample are finer.

4.1.25 *flow path*—represents the area between two flow lines along which ground water can flow.

4.1.26 *flush joint or flush coupled*—casing or riser with ends threaded such that a consistent inside and outside diameter is maintained across the threaded joints or couplings.

4.1.27 *gravel pack*—common nomenclature for the terminology, primary filter of a well (see *primary filter pack*).

4.1.28 *grout (monitoring wells)*—a low permeability material placed in the annulus between the well casing or riser pipe and the borehole wall (that is, in a single-cased monitoring well), or between the riser and casing (that is, in a multi-cased monitoring well), to maintain the alignment of the casing and riser and to prevent movement of ground water or surface water within the annular space.

4.1.29 *grout shoe*—a *plug* fabricated of relatively inert materials that is positioned within the lowermost section of a permanent casing and fitted with a passageway, often with a flow check device, through which grout is injected under pressure to fill the annular space. After the grout has set, the grout shoe is usually drilled out.

4.1.30 *head (static)*—the height above a standard datum of the surface of a column of water (or other liquid) that can be supported by the static pressure at a given point. The static head is the sum of the elevation head and the pressure head.

4.1.31 *head (total)*—the sum of three components at a point: (*1*) elevation head, h_e, which is equal to the elevation of the point above a datum; (*2*) pressure head, hp, which is the height of a column of static water than can be supported by the static pressure at the point; and (*3*) velocity head, hv, which is the height the kinetic energy of the liquid is capable of lifting the liquid.

4.1.32 *hydrologic unit*—geologic strata that can be distinguished on the basis of capacity to yield and transmit fluids. Aquifers and confining units are types of hydrologic units. Boundaries of a hydrologic unit may not necessarily correspond either laterally or vertically to lithostratigraphic formations.

4.1.33 *jetting*—when applied as a drilling method, water is forced down through the drill rods or casings and out through the end aperture. The jetting water then transports the generated cuttings to the ground surface in the annulus of the drill rods or casing and the borehole. The term jetting may also refer to a development technique (see well screen jetting).

4.1.34 *loss of circulation*—the loss of drilling fluid into strata to the extent that circulation does not return to the surface.

4.1.35 *mud pit*—usually a shallow, rectangular, open, portable container with baffles into which drilling fluid and cuttings are discharged from a borehole and that serves as a reservoir and settling tank during recirculation of the drilling fluids. Under some circumstances, an excavated pit with a lining material may be used.

4.1.36 *multi-cased well*—a well constructed by using successively smaller diameter casings with depth.

4.1.37 *neat cement*—a mixture of Portland cement (Specification 150) and water.

4.1.38 *observation well*—typically, a small diameter well used to measure changes in hydraulic heads, usually in response to a nearby pumping well.

4.1.39 *oil air filter*—a filter or series of filters placed in the air flow line from an air compressor to reduce the oil content of the air.

4.1.40 *oil trap*—a device used to remove oil from the compressed air discharged from an air compressor.

4.1.41 *packer (monitoring wells)*—a transient or dedicated device placed in a well that isolates or seals a portion of the well, well annulus, or borehole at a specific level.

4.1.42 *potentiometric surface*—an imaginary surface representing the static head of ground water. The water table is a particular potentiometric surface.

DISCUSSION—Where the head varies with depth in the aquifer, a potentiometric surface is meaningful only if it describes the static head along a particular specified surface or stratum in that aquifer. More than one potentiometric surface is required to describe the distribution of head in this case.

4.1.43 *primary filter pack*—a clean silica sand or sand and gravel mixture of selected grain size and gradation that is installed in the annular space between the borehole wall and the well screen, extending an appropriate distance above the screen, for the purpose of retaining and stabilizing the particles from the adjacent strata. The term is used in place of *gravel pack*.

4.1.44 *PTFE tape*—joint sealing tape composed of polytetrafluoroethylene.

4.1.45 *riser*—the pipe extending from the well screen to or above the ground surface.

4.1.46 *secondary filter pack*—a clean, uniformly graded sand that is placed in the annulus between the primary filter pack and the over-lying seal, or between the seal and overlying grout backfill, or both, to prevent movement of seal or grout, or both, into the primary filter pack.

4.1.47 *sediment sump*—a blank extension beneath the well screen used to collect fine-grained material from the filter pack and adjacent strata. The term is synonymous with rat trap or tail pipe.

4.1.48 *shear strength (monitoring wells)*—a measure of the shear or gel properties of a drilling fluid or grout.

4.1.49 *single-cased well*—a monitoring well constructed with a riser but without an exterior casing.

4.1.50 *static water level*—the elevation of the top of a column of water in a monitoring well or piezometer that is not influenced by pumping or conditions related to well installation, hydrologic testing, or nearby pumpage.

4.1.51 *tamper*—a heavy cylindrical metal section of tubing that is operated on a wire rope or cable. It slips over the riser and fits inside the casing or borehole annulus. It is generally used to tamp annular sealants or filter pack materials into place and prevent bridging.

4.1.52 *target monitoring zone*—the ground water flow path from a particular area or facility in which monitoring wells will be screened. The target monitoring zone should be

a stratum (strata) in which there is a reasonable expectation that a vertically placed well will intercept migrating contaminants.

4.1.53 *test pit*—a shallow excavation made to characterize the subsurface.

4.1.54 *transmissivity*—the rate at which water of the prevailing kinematic viscosity is transmitted through a unit width of the aquifer under a unit hydraulic gradient.

DISCUSSION—It is equal to an integration of the hydraulic conductivities across the saturated part of the aquifer perpendicular to the flow paths.

4.1.55 *tremie pipe*—a pipe or tube that is used to transport filter pack materials and annular sealant materials from the ground surface into the borehole annulus or between casings and casings or riser pipe of a monitoring well.

4.1.56 *uniformly graded*—a quantitative definition of the particle size distribution of a soil which consists of a majority of particles being of the same approximate diameter. A granular material is considered uniformly graded when the uniformity coefficient is less than about five (Test Method D 2487). Comparable to the geologic term *well sorted.*

4.1.57 *vented cap*—a cap with a small hole that is installed on top of the riser.

4.1.58 *washout nozzle*—a tubular extension with a check valve utilized at the end of a string of casing through which water can be injected to displace drilling fluids and cuttings from the annular space of a borehole.

4.1.59 *weep hole*—a small diameter hole (usually ¼ in.) drilled into the protective casing above the ground surface that serves as a drain hole for water that may enter the protective casing annulus.

4.1.60 *well completion diagram*—a record that illustrates the details of a well installation.

4.1.61 *well screen*—a filtering device used to retain the primary or natural filter pack; usually a cylindrical pipe with openings of a uniform width, orientation, and spacing.

4.1.62 *well screen jetting (hydraulic jetting)*—when jetting is used for development, a jetting tool with nozzles and a high-pressure pump is used to force water outwardly through the screen, the filter pack, and sometimes into the adjacent geologic unit.

4.1.63 *zone of saturation*—a hydrologic zone in which all the interstices between particles of geologic material or all of the joints, fractures, or solution channels in a consolidated rock unit are filled with water under pressure greater than that of the atmosphere.

5. Site Characterization

5.1 *General*—Soil mechanics, geomorphological concepts, geologic structure, stratigraphy, and sedimentary concepts, as well as the nature and behavior of the solutes of interest, must be combined with a knowledge of ground water movement to make a complete application of the results of the monitoring well design and installation guidance. Therefore, development of a conceptual hydrogeologic model that identifies potential flow paths and the target monitoring zone(s) is recommended prior to monitoring well design and installation. Development of the conceptual model is accomplished in two phases—an initial reconnaissance and a field investigation. When the hydrogeology of a project area is relatively uncomplicated and well documented in the literature, the initial reconnaissance m provide sufficient information to identify flow paths and target monitoring zone(s). However, where little backgrou data is available or the geology is complicated, a fi investigation will generally be necessary to completely velop a conceptual hydrogeologic model.

5.2 *Initial Reconnaissance of Project Area*—The goa the initial reconnaissance of the project area is to iden and locate those zones with the greatest potential to trans a fluid from the project area. Identifying these flow path the first step in selecting the target ground water monito zone(s).

5.2.1 *Literature Search*—Every effort should be mad collect and review all applicable field and laboratory from previous investigations of the project area. Data s as, but not limited to, topographic maps, aerial imagery, ownership and utilization records, geologic hydrogeologic maps and reports, mineral resource surv water well logs, personal information from local well dril agricultural soil reports, geotechnical engineering rep and other engineering maps and report related to the pr area should be reviewed.

5.2.2 *Field Reconnaissance*—Early in the investiga the soil and rocks in open cut areas in the vicinity o project should be studied, and various soil and rock pr noted. Special consideration should be given to soil colo textural changes, landslides, seeps, and springs within or the project area.

5.2.3 *Preliminary Conceptual Model*—The distributi the predominant soil and rock units likely to be found d subsurface exploration may be hypothesized at this time preliminary hydrogeologic conceptual model using obtained in the literature search and field reconnaissanc areas where the geology is relatively uniform, well mented in the literature, and substantiated by the reconnaissance, further refinement of the conceptual may not be necessary unless anomalies are discovered i well drilling stage.

5.3 *Field Investigation*—The goal of the field inve tion is to refine the preliminary conceptual hydroge model so that the target monitoring zone(s) is selected to monitoring well installation.

5.3.1 *Exploratory Borings and Test Pits*—Charact tion of the flow paths conceptualized in the initial reco sance involves defining the porosity, hydraulic conduc gradation, stratigraphy, lithology, and structure of hydrologic unit. The characteristics are defined by ducting an exploratory boring program which may i test pits. Exploratory borings and test pits should be enough to develop the required engineering hydrogeologic data for determining the flow path(s), monitoring zone, or both.

5.3.1.1 *Sampling*—Soil and rock properties should predicted wholly on field identification or classificatio should be checked by laboratory and field tests m samples. Representative soil or rock samples, or b each material that is significant to the analysis and de the monitoring system should be obtained and evalu a geologist, hydrogeologist, or engineer trained and enced in soil and rock analysis. Soil sample extraction be conducted according to Practice D 1452, Method D

Practice D 3550, or Practice D 1587, whichever is appropriate given the anticipated characteristics of the soil samples. Rock samples should be extracted according to Practice D 2113. Soil samples obtained for evaluation of hydraulic properties should be containerized and identified for shipment to a laboratory. Special measures to preserve either the continuity of the sample or the natural moisture are not usually required. However, soil and rock samples obtained for evaluation of chemical properties often require special field preparation and preservation to prevent significant alteration of the chemical constituents during transportation to a laboratory (see Practice D 4220). Rock samples for evaluation of hydraulic properties are usually obtained using a split-inner-tube core barrel. Evaluation and logging of the core samples is usually made in the field before the core is removed from half of the split inner tube core barrel.

5.3.1.2 *Boring Logs*—Care should be taken to prepare and retain a complete boring log and sampling record for each exploratory borehole and test pit.

NOTE 1—Site investigations for the installation of ground-water monitoring wells can vary greatly due to the availability of reliable site data or the lack thereof. The general procedure would however be as follows: (*1*) gather factual data regarding the surficial and subsurface conditions, (*2*) analyze the data, (*3*) develop a conceptual model of the site conditions, (*4*) locate the monitoring wells based on the first three steps. Monitoring wells should only be installed with sufficient understanding of the geologic and hydrogeologic conditions present on site. Monitoring wells often serve as part of an overall site investigation for a specific purpose, such as determining the extent of contamination present, or for prediction of the effectiveness of aquifer remediations. In these cases extensive additional geotechnical and hydrogeologic information may be required that would go beyond the Section 5 Site Characterization description.

Boring logs should include the location, geotechnical (that is, penetration rates or blow counts), and sampling information for each material identified in the borehole either by symbol or word description, or both. Identification of all soils should be in accordance with Practice D 2488 or Practice D 3282. Identification of rock material should be based on Nomenclature C 294 or by an appropriate geologic classification system. Observations of seepage, free water, and water levels should also be noted. The boring logs should be accompanied by a report that includes a description of the area investigated; a map illustrating the vertical and horizontal location (with reference to nearest National Geodetic Vertical Datum [NGVD] and to a standardized survey grid, respectively) of each exploratory borehole or test pit, or both; and color photographs of rock cores, soil samples, and exposed strata labeled with a date and identification.

5.3.2 *Geophysical Exploration*—Geophysical surveys may be used to supplement borehole and outcrop data and to aid in interpretation between boreholes. Surface geophysical methods such as seismic surveys, and electrical-resistivity and electromagnetic conductance surveys can be particularly valuable when distinct differences in the properties of contiguous subsurface materials are indicated. Borehole methods such as resistivity, gamma, gamma-gamma, neutron, and caliper logs can be useful to confirm specific subsurface geologic conditions. Gamma logs are particularly useful in existing cased wells.

5.3.3 *Ground Water Flow Direction*—Ground water flow direction is generally determined by measuring the vertical and horizontal hydraulic gradient within each conceptualized flow path. However, because water will flow along the path of least resistance, flow direction may be oblique to the hydraulic gradient (buried stream channels or glacial valleys, for example). Flow direction is determined by first installing piezometers in the exploratory boreholes. The depth and location of the piezometers will depend upon anticipated hydraulic connections between conceptualized flow paths and their respective lateral direction of flow. Following careful evaluation, it may be possible to utilize existing private or public wells to obtain water level data. The construction integrity of such wells should be verified to ensure that the water levels obtained from the wells are representative only of the zones of interest. Following water level data acquisition, a potentiometric surface map should be prepared. Flow paths are ordinarily determined to be at right angles, or nearly so, to the equipotential lines.

5.4 *Completing the Conceptual Model*—A series of hydrogeologic cross sections should be developed to refine the conceptual model. This is accomplished by first plotting logs of soil and rock observed in the exploratory borings or test pits, and interpreting between these logs using the geologic and engineering interrelationships between other soil and rock data observed in the initial reconnaissance or with geophysical techniques. Extrapolation of data into adjacent areas should be done only where geologically uniform subsurface conditions are known to exist. The next step is to integrate the profile data with the piezometer data for both vertical and horizontal hydraulic gradients. Plan view and cross-sectional flow nets may need to be constructed. Following the analysis of these data, conclusions can be made as to which flow path(s) is the appropriate target monitoring zone(s).

NOTE 2—Ground water monitoring is difficult and may not be a reliable technology in fine-grain, low hydraulic conductivity, primary porosity strata because of (*1*) the disproportionate influence that microstratigraphy has on ground water flow in fine-grain strata; (*2*) flow lines proportionally higher for the vertical flow component in low hydraulic conductivity strata; and (*3*) the presence of indigenous metallic and inorganic constituents that make water quality data evaluation difficult.

6. Monitoring Well Construction Materials

6.1 *General*—The materials that are used in the construction of a monitoring well and that come in contact with the water sample should not measurably alter the chemical quality of the sample for the constituents being examined using the appropriate sampling protocols. Furthermore, the riser, well screen, and annular sealant injection equipment should be steam cleaned or high-pressure water cleaned (if appropriate for the selected riser material) immediately prior to well installation or certified clean from the manufacturer and delivered to site in a protective wrapping. Samples of the cleaning water, filter pack, annular seal, and mixed grout should be retained to serve as quality control until the completion of at least one round of ground water quality sampling and analysis.

6.2 *Water*—Water used in the drilling process, to prepare grout mixtures and to decontaminate the well screen, riser, and annular sealant injection equipment, should be obtained from a source of known chemistry that does not contain

constituents that could compromise the integrity of the well installation.

6.3 *Primary Filter Pack:*

6.3.1 *Materials*—The primary filter pack (gravel pack) consists of a granular material of known chemistry and selected grain size and gradation that is installed in the annulus between the screen and the borehole wall. The filter pack is usually selected to have a 30 % finer (d-30) grain size that is about 4 to 10 times greater than the 30 % finer (d-30) grain size of the hydrologic unit being filtered (see Fig. 1). Usually, the filter is selected to have a low (that is, less than 2.5) uniformity coefficient. The grain size and gradation of the filter are selected to stabilize the hydrologic unit adjacent to the screen and permit only the finest soil grains to enter the screen during development. Thus, after development, a correctly filtered monitoring well is relatively turbid-free.

NOTE 3—When installing a monitoring well in Karst or highly fractured bedrock, the borehole configuration of void spaces within the formation surrounding the borehole is often unknown. Therefore, the installation of a filter pack becomes difficult and may not be possible.

6.3.2 *Gradation*—The filter pack should be uniformly graded and comprised of hard, durable siliceous particles washed and screened with a particle size distribution derived by multiplying the d-30 size of the finest-grained screened stratum by a factor between 4 and 10. Use a number between four and six as the multiplier if the stratum is fine and uniform; use a factor between six and ten where the material has highly nonuniform gradation and includes silt-sized particles. The grain-size distribution of the filter pack is then plotted using the d-30 size as the control point on the graph. The selected filter pack should have a uniformity coefficient of approximately 2.5 or less.

NOTE 4—This practice presents a design for monitoring wells that will be effective in the majority of aquifers. Applicable state guidance may differ from the designs contained in this practice.

NOTE 5—Because the well screen slots have uniform openings, the filter pack should be composed of particles that are as uniform in size as is practical. Ideally, the uniformity coefficient (the quotient of the 60 % passing, D-60 size divided by the 10 % passing D-10 size [effective size]) of the filter pack should be 1.0 (that is, the D-60 % and the D-10 % sizes should be identical). However, a more practical and consistently achievable uniformity coefficient for all ranges of filter pack sizes is 2.5. This value of 2.5 should represent a maximum value, not an ideal.

NOTE 6—Although not recommended as standard practice, often a project requires drilling and installing the well in one phase of work.

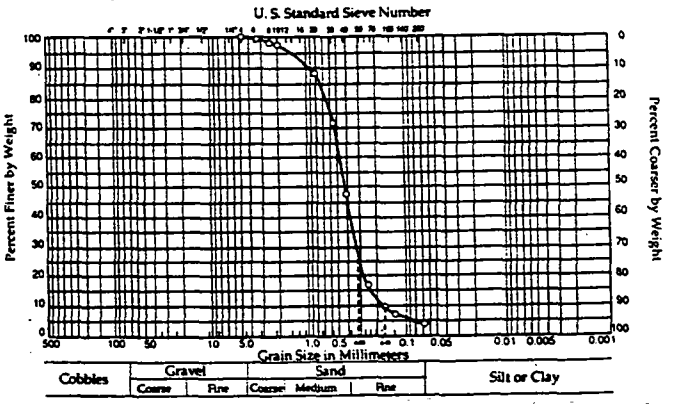

FIG. 1 Example Grading Curve for Design of Monitoring Well Screens

Therefore, the filter pack materials must be ordered and delivered to th drill site before soil samples can be collected. In these cases, th suggested well screen slot size and filter pack materials are presented i Table 1.

6.4 *Well Screen:*

6.4.1 *Materials*—The well screen should be new, ma chine-slotted or continuous wrapped wire-wound and com posed of materials most suited for the monitoring enviro ment and site characterization findings. The screen should b plugged at the bottom. The plug should be of the sam material as the well screen. This assembly must have th capability to withstand installation and development stress without becoming dislodged or damaged. The length of th slotted area should reflect the interval to be monitore Immediately prior to installation, the well screen should steam cleaned or high-pressure water cleaned (if appropria for the selected well screen materials) with water from source of known chemistry if not certified by the manufa turer, delivered, and maintained clean at the site.

NOTE 7—Well screens are most commonly composed of PV stainless steel, fiberglass, or fluoropolymer materials.

6.4.2 *Diameter*—The minimum nominal internal dia eter of the well screen should be chosen based on particular application. However, in most instances, a m imum of 2 in. (50 mm) is needed to allow for the introd tion and withdrawal of sampling devices.

6.4.3 *Slot Size*—The slot size of the well screen should determined relative to the grain size analysis of the stra interval to be monitored and the gradation of the filter p material. In granular non-cohesive strata that will fall easily around the screen, filter packs are not necessary. these cases of natural development, the slot size of the screen is to be determined using the grain size of materials in the surrounding strata. The slot size arrangement should retain at least 90 % and preferably 9 of the filter pack. The method for determining the co gradation of filter pack material is described in 6.3.2.

6.5 *Riser:*

6.5.1 *Materials*—The riser should be new and comp of materials that will not alter the quality of water sam for the constituents of concern and that are appropriate the monitoring environment. The riser should have adeq wall thickness and coupling strength to withstand installa and development stresses. Each section of riser shoul steam cleaned or high-pressure water cleaned (if appro for the selected material) using water from a source of kn chemistry immediately prior to installation.

NOTE 8—Risers are generally constructed of PVC, stainless fiberglass, or fluoropolymer materials.

6.5.2 *Diameter*—The minimum nominal internal d eter of the riser should be chosen based on the partic application. However, in most instances, a minimum of (50 mm) is needed to accommodate sampling devices.

6.5.3 *Joints (Couplings)*—Threaded joints are re mended. Glued or solvent welded joints of any type ar recommended since glues and solvents may alter the c istry of the water samples. In most cases, square profile joint threads do not require PTFE taping, however, ta thread joints should be PTFE taped to prevent leaka water into the riser. Alternatively, O-rings compose

TABLE 1 Recommended (Achievable) Filter Pack Characteristics for Common Screen Slot Sizes

Size of Screen Opening, mm (in.)	Slot No.	Sand Pack Mesh Size Name(s)	1 % Passing Size (D-1), mm	Effective Size, (D-10), mm	30 % Passing Size (D-30), mm	Range of Uniformity Coefficient	Roundness (Powers Scale)
0.125 (0.005)	5[A]	100	0.09 to 0.12	0.14 to 0.17	0.17 to 0.21	1.3 to 2.0	2 to 5
0.25 (0.010)	10	20 to 40	0.25 to 0.35	0.4 to 0.5	0.5 to 0.6	1.1 to 1.6	3 to 5
0.50 (0.020)	20	10 to 20	0.7 to 0.9	1.0 to 1.2	1.2 to 1.5	1.1 to 1.6	3 to 6
0.75 (0.030)	30	10 to 20	0.7 to 0.9	1.0 to 1.2	1.2 to 1.5	1.1 to 1.6	3 to 6
1.0 (0.040)	40	8 to 12	1.2 to 1.4	1.6 to 1.8	1.7 to 2.0	1.1 to 1.6	4 to 6
1.5 (0.060)	60	6 to 9	1.5 to 1.8	2.3 to 2.8	2.5 to 3.0	1.1 to 1.7	4 to 6
2.0 (0.080)	80	4 to 8	2.0 to 2.4	2.4 to 3.0	2.6 to 3.1	1.1 to 1.7	4 to 6

[A] A 5-slot (0.152-mm) opening is not currently available in slotted PVC but is available in Vee wire PVC and Stainless; 6-slot opening may be substituted in these cases.

materials that would not impact the water sample for the constituents of concern may be selected for use on flush joint threads.

6.6 *Casing*—Where conditions warrant, the use of permanent casing installed to prevent communication between water-bearing zones is encouraged. The following subsections address both temporary and permanent casings.

6.6.1 *Materials*—The material type and minimum wall thickness of the casing should be adequate to withstand the forces of installation. All casing that is to remain as a permanent part of the installation (that is, multi-cased wells) should be new and cleaned to be free of interior and exterior protective coatings.

NOTE 9—The exterior casing (temporary or permanent multi-cased) is generally composed of steel, although other appropriate materials may be used.

6.6.2 *Diameter*—Several different casing sizes may be required depending on the subsurface geologic conditions penetrated. The diameter of the casing for filter packed wells should be selected so that a minimum annular space of 2 in. (50 mm) is maintained between the inside diameter of the casing and outside diameter of the riser. In addition, the diameter of the casings in multi-cased wells should be selected so that a minimum annular space of 2 in. is maintained between the casing and the borehole (that is, a 2-in. diameter screen will require first setting a 6-in. (152-mm) diameter casing in a 10-in. (254-mm) diameter boring).

NOTE 10—Under difficult drilling conditions (collapsing soils, rock, or cobbles), it may be necessary to advance temporary casing, under these conditions a smaller annular space may be maintained.

6.6.3 *Joints (Couplings)*—The ends of each casing section should be either flush-threaded or bevelled for welding.

6.7 *Protective Casing:*

6.7.1 *Materials*—Protective casings may be made of aluminum, steel, stainless steel, cast iron, or a structural plastic. The protective casing should have a lid capable of being locked shut by a locking device.

6.7.2 *Diameter*—The inside dimensions of the protective casing should be a minimum of 2 in. (50 mm) and preferably 4 in. (101 mm) larger than the nominal diameter of the riser to facilitate the installation and operation of sampling equipment.

6.8 *Annular Sealants*—The materials used to seal the annulus may be prepared as a slurry or used un-mixed in a dry pellet, granular, or chip form. Sealants should be selected to be compatible with ambient geologic, hydrogeologic, and climatic conditions and any man-induced conditions anticipated to occur during the life of the well.

6.8.1 *Bentonite*—Bentonite should be powdered, granular, pelletized, or chipped sodium montmorillonite furnished in sacks or buckets from a commercial source and free of impurities which adversely impact the water quality in the well. Pellets consist of roughly spherical or disk shaped units of compressed bentonite powder. Chips are large, irregularly shaped, and coarse granular units of bentonite free of additives. The diameter of pellets or chips selected for monitoring well construction should be less than one fifth the width of the annular space into which they are placed to reduce the potential for bridging. Granules consist of coarse particles of unaltered bentonite, typically smaller than 0.2 in. (50 mm).

6.8.2 *Cement*—Each type of cement has slightly different characteristics that may be appropriate under various physical and chemical conditions. Cement should be one of the five Portland cement types that are specified in Specification C 150. The use of quick-setting cements containing additives is not recommended for use in monitoring well installation. Additives may leach from the cement and influence the chemistry of the water samples.

6.8.3 *Grout*—The grout backfill that is placed above the bentonite annular seal and secondary filters (see Fig. 2) is ordinarily a liquid slurry consisting of either a bentonite (powder or granules, or both) base and water, or a Portland cement base and water. Often, bentonite-based grouts are used when it is desired that the grout remain flexible (that is, to accommodate freeze-thaw) during the life of the installation. Cement or bentonite-based grouts are often used when the filling in of cracks in the surrounding geologic material, adherence to rock units, or a rigid setting is desired.

6.8.3.1 *Mixing*—The mixing (and placing) of a grout backfill should be performed with precisely recorded weights and volumes of materials, and according to procedures stipulated by the manufacturer that often include the order of component mixing. The grout should be thoroughly mixed with a paddle type mechanical mixer or by recirculating the mix through a pump until all lumps are disintegrated. Lumpy grout should not be used in the construction of a monitoring well to prevent bridging within the tremie.

NOTE 11—Lumps do not include lost circulation materials that may be added to the grout if excessive grout losses occur.

6.8.3.2 *Typical Bentonite Base Grout*—When a bentonite base grout is used, bentonite, usually unaltered, *must* be the first additive placed in the water through a venturi device. A typical unbeneficiated bentonite base grout consists of about 1 to 1.25 lb (0.57 kg) of unaltered bentonite to each 1 gal (3.8 L) of water. After the bentonite is mixed and allowed to "yield or hydrate," up to 2 lb (0.9 kg) of Type I Portland cement (per gallon of water) is often added to stiffen the mix.

000314

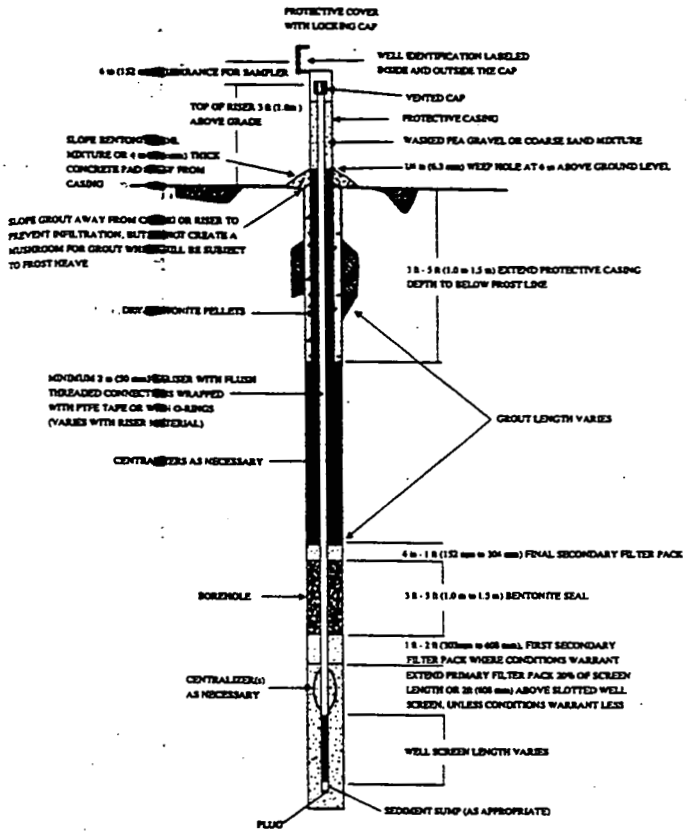

FIG. 2 Monitoring Well Design—Single-Cased Well

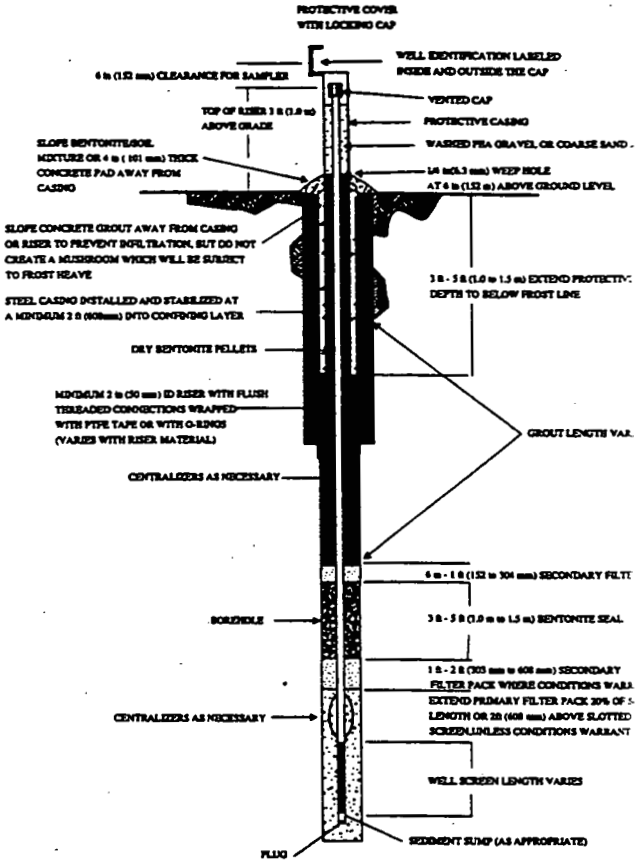

FIG. 3 Monitoring Well Design—Multi-Cased Well

100 % Bentonite grouts should not be used solely for monitoring well annular sealants in the vadose zone of arid regions because of their propensity to desiccate. This could result in non-representative waters affecting the target monitoring zone.

NOTE 12—High solids bentonite grouts (minimum 20 % by weight with water) and other bentonite-based grouts may contain granular bentonite to increase the solids content and other components added under manufacturer's directions to either stiffen or retard stiffening of the mix.

All additives to grouts should be evaluated for their effects on subsequent water samples.

6.8.3.3 *Typical Cement Base Grout*—When a cement-based grout is used, cement is usually the first additive placed in the water. A typical cement-based grout consists of about 6 to 7 gal (23 to 26 L) of water per 94-lb (43-kg) bag of Type I Portland cement. From 0 to 10 % (by dry weight of cement) of unaltered bentonite powder is often added after the initial mixing of cement and water to retard shrinkage and provide plasticity. The bentonite is added *dry* to the cement-water slurry without first mixing it with water.

6.9 *Secondary Filter Packs:*

6.9.1 *Materials*—A secondary filter pack is a layer of material placed in the annulus between the primary filter pack and the bentonite seal, and between the bentonite seal and the grout backfill (see Figs. 2 and 3).

6.9.2 *Gradation*—The secondary filter pack should be uniformly graded fine sand with a 100 % by weight passing the No. 30 U.S. Standard sieve, and less than 2 % by weight passing the 200 U.S. Standard sieve.

6.10 *Annular Seal Equipment*—The equipment use inject the annular seals and filter pack should be s cleaned or high-pressure water cleaned (if appropriate fo selected material) using water from a source or kn quality prior to use. This procedure is performed to pre the introduction of materials that may ultimately alte water sample quality.

7. Drilling Methods

7.1 The type of equipment required to create a st open, vertical borehole for installation of a monitoring depends upon the site geology, hydrology, and the inte use of the data. Engineering and geological judgme required for the selection of the drilling methods utilize drilling the exploratory boreholes and monitoring v Whenever feasible, drilling procedures should be utilized do not require the introduction of water or liquid fluids the borehole, and that optimize cuttings control at gr surface. Where the use of drilling fluid is unavoidable selected fluid should have as little impact as possible o water samples for the constituents of interest. In addi care should be taken to remove as much drilling flu possible from the well and the aquifer during the development process. It is recommended that if ar compressor is used, it is equipped with an oil air filter c trap.

8. Monitoring Well Installation

8.1 *Stable Borehole*—A stable borehole must be

structed prior to attempting to install the monitoring well screen and riser. Steps must be taken to stabilize the borehole before attempting installation if the borehole tends to cave or blow-in, or both. Boreholes that are not straight or are partially obstructed should be corrected prior to attempting the installations described herein.

8.2 *Assembly of Well Screen and Riser:*

8.2.1 *Handling*—The well screen, bottom plug, riser, should be either certified clean from the manufacturer or steam cleaned or high-pressure water cleaned (if appropriate for the selected material) using water from a source of known chemistry immediately prior to assembly. Personnel should take precautions to assure that grease, oil, or other contaminants that may ultimately alter the water sample do not contact any portion of the well screen and riser assembly. As one precaution, for example, personnel should wear a clean pair of cotton or surgical (or equivalent) gloves while handling the assembly.

8.2.2 *Riser Joints (Couplings)*—Flush joint risers with square profile threads normally do not require additional PTFE taping to obtain a water tight seal. In addition, O-rings of known chemistry, selected on the basis of prevailing environmental or physical conditions, may be used to assure a tight seal of flush-joint couplings. Couplings are often tightened by hand; however, if necessary, steam cleaned or high-pressure water cleaned wrenches may be utilized. Precautions should be taken to prevent damage to the threaded joints during installation.

8.3 *Setting the Well Screen and Riser Assembly*—When the well screen and riser assembly is lowered to the predetermined level and held into position, the assembly may require ballast to counteract the tendency to float in the borehole. Ballasting may be accomplished by continuously filling the riser with water from a source of known chemistry or, preferably, water which was previously removed from the borehole. Alternatively, the riser may be slowly pushed into the fluid in the borehole with the aid of hydraulic rams on the drill rig and held in place as additional sections of riser are added to the column. Care must be taken to secure the riser assembly so that personnel safety is assured during the installation. The assembly must be installed straight with the appropriate centralizers to allow for the introduction and withdrawal of sampling devices. Difficulty in maintaining a straight installation may be encountered where the weight of the well screen and riser assembly is significantly less than the buoyant force of the fluid in the borehole. The riser should extend above grade and be capped temporarily to deter entrance of foreign materials during completion operations.

8.4 *Installation of the Primary Filter Pack:*

8.4.1 *Volume of Filter Pack*—The volume of filter pack required to fill the annular space between the well screen and borehole should be computed, measured, and recorded on the well completion diagram during installation. To be effective, the filter pack should extend above the screen for a distance of about 20 % of the length of the well screen but not less than 2 ft (600 mm) (see Figs. 2 and 3). Where there is hydraulic connection between the zone to be monitored and the overlying strata, this upward extension should be gauged to prevent seepage from overlying hydrologic units into the filter pack. Seepage from other units may alter the water sample.

8.4.2 *Placement of Primary Filter Pack*—Placement of the well screen is preceded by placing no less than 2 % and no more than 10 % of the primary filter pack into the bottom of the borehole using a decontaminated, flush threaded, 1-in. (25-mm) minimum internal diameter tremie pipe. Alternatively, the filter pack may be added directly between the riser pipe and the auger or borehole or casing and the top of the filter pack located using a tamper or a weighted line. The well screen and riser assembly is then centered in the borehole using one or more centralizer(s) or alternative centering device located not more than 10 ft (3 m) above the bottom of the well screen (see Figs. 2 and 3). The centralizer should not be located in the bentonite seal. The remaining primary filter pack is then placed in increments as the tremie is gradually raised. As primary filter pack material is poured into the tremie pipe, water from a source of known chemistry may be added to help move the filter pack. The tremie pipe or a weighed line inserted through the tremie pipe can be used to measure the top of the primary filter pack as work progresses. If bridging of the primary filter pack occurs, the bridged material should be broken mechanically prior to proceeding with the addition of more filter pack material. The elevation, volume, and gradation of primary filter pack is recorded on the well completion diagram.

8.4.3 *Withdrawal of the Temporary Casing/Augers*—If used, the temporary casing or hollow stem auger is withdrawn, usually in stipulated increments. Care should be taken to minimize lifting the riser with the withdrawal of the temporary casing/augers. To limit borehole collapse, the temporary casing or hollow stem auger is usually withdrawn until the lower most point on the temporary casing or hollow stem auger is at least 2 ft (608 mm), but no more than 5 ft (1.5 m), above the filter pack for unconsolidated materials; or at least 5 ft, but no more than 10 ft (3.0 m), for consolidated materials. In highly unstable formations, withdrawal intervals may be much less. After each increment, it should be ascertained that the primary filter pack has not been displaced during the withdrawal operation (that is, a weighed measuring device).

8.5 *Placement of First Secondary Filter*—A secondary filter pack may be installed above the primary filter pack to prevent the intrusion of the bentonite grout seal into the primary filter pack (see Figs. 2 and 3). To be effective, measured and recorded volume of secondary filter material should be added to extend 1 to 2 ft (304 to 608 mm) above the primary filter pack. As with the primary filter, a secondary filter must not extend into an overlying hydrologic unit (see 8.4.1). The well designer should evaluate the need for this filter pack by considering the gradation of the primary filter pack, the hydraulic heads between adjacent units, and the potential for grout intrusion into the primary filter pack. The secondary filter material is poured into the annular space through a decontaminated, flush threaded, 1-in. (25-mm) minimum internal diameter tremie pipe lowered to within 3 ft (1.0 m) of the placement interval. Water from a source of known chemistry may be added to help move the filter pack into its proper location. The tremie pipe or weighed line inserted through the tremie pipe can be

used to measure the top of the secondary filter pack as work progresses. The elevation, volume, and gradation of the secondary filter pack is recorded on the well completion diagram.

8.6 *Installation of the Bentonite Seal*—A bentonite pellet or a slurry seal is placed in the annulus between the borehole and the riser pipe on top of the secondary or primary filter pack (see Figs. 2 and 3). This seal retards the movement of cement-based grout backfill into the primary or secondary filter packs. To be effective, the bentonite seal should extend above the filter packs approximately 3 to 5 ft (1.0 to 1.5 m)—depending on local conditions. The bentonite seal should be installed using a tremie pipe lowered to the top of the filter packs and slowly raised as the bentonite pellets or the slurry fill the annular space. Bentonite pellets may bridge and block the tremie pipe in deep wells. In these cases, pellets may be allowed to free-fall into the borehole. As a bentonite pellet seal is poured into the tremie pipe or allowed to free-fall into the borehole, a tamper or weighed line may be necessary to tamp pellets into place. If the seal is installed above the water level, water from a source of known chemistry would be added to allow proper hydration of the annular seal. The tremie pipe or a weighed line inserted through the tremie pipe can be used to measure the top of the bentonite seal as the work progresses. If a bentonite pellet seal is being constructed above the water level, approximately 5 gal (20 L) of water from a source of known chemistry can be poured into the annulus to ensure that the pellets hydrate. Sufficient time should be allowed for the bentonite pellet seal to hydrate or the slurry annular seal to expand prior to grouting the remaining annulus. The volume and elevation of the bentonite seal material should be measured and recorded on the well completion diagram.

8.7 *Final Secondary Filter Pack*—A 6-in. to 1-ft (152 to 304-mm) secondary filter may be placed above the bentonite seal in the same manner described in 8.5 (see Figs. 2 and 3). This secondary filter pack will provide a confining layer over the bentonite seal to limit the downward movement of cement-based grout backfill into the bentonite seal. The volume, elevation, and gradation of this final secondary filter pack should be documented on the well completion diagram.

8.8 *Grouting the Annular Space:*

8.8.1 *General*—Grouting procedures vary with the type of well design. The following procedures will apply to both single- and multi-cased monitoring wells. Paragraphs 8.8.2 and 8.8.3 detail those procedures unique to single- and multi-cased installations, respectively.

8.8.1.1 *Volume of Grout*—The volume and location of grout used to backfill the remaining annular space is recorded on the well completion diagram. An ample volume of grout should be premixed on site to compensate for unexpected losses. The use of alternate grout materials, including grouts containing gravel, may be necessary to control zones of high grout loss.

8.8.1.2 *Injection Procedures*—The grout backfill should be injected under pressure to reduce the chance of leaving voids in the grout, and to displace any liquids and drill cuttings that may remain in the annulus. Depending upon the well design, grouting may be accomplished using a pressure grouting technique or by gravity feed through a tremie pipe. With either method, grout is introduced in one continuous operation until full strength grout flows out at the ground surface without evidence of drill cuttings or fluid. The grout should slope away from the riser or casing at the surface, but care should be taken not to create a grout mushroom that would be subjected to frost heave.

8.8.1.3 *Grout Setting and Curing*—The riser or casing or both should not be disturbed until the grout sets and cures for the amount of time necessary to prevent a break in the seal between the grout and riser or grout and casing or both. The amount of time required will vary with grout content and climatic conditions and should be documented on the well completion diagram.

8.8.2 *Specific Procedures for Single-Cased Wells*—Grouting should begin at a level directly above the final secondary filter pack (see Fig. 2). Grout should be injected using a tremie pipe equipped with a side discharge; this dissipates the fluid-pumping energy against the borehole wall and riser, reducing the potential for infiltration of grout into the primary filter pack. The tremie pipe should be kept full of grout from start to finish with the discharge end of the pipe completely submerged as it is slowly and continuously lifted. Approximately 5 to 10 ft (1.5 to 3.0 m) of tremie pipe should remained submerged until grouting is complete. For deep installations or where the joints or couplings of the selected riser cannot withstand the shear or collapse stress exerted by a full column of grout as it sets, a staged grouting procedure may be considered. If used, the temporary casing or hollow stem auger should be removed in increments immediately following each increment of grout installation and in advance of the time when the grout begins to set. If casing removal does not commence until grout injection is completed, then, after the casing is removed, additional grout may be periodically injected into the annular space to maintain a continuous column of grout up to the ground surface.

8.8.3 *Specific Procedures for Multi-Cased Wells*—If the outer casing of a multi-cased well cannot be driven to form a tight seal between the surrounding stratum (strata) and the casing, it should be installed in a predrilled borehole. After the borehole has penetrated not less than 2 ft (608 mm) of the first targeted confining stratum, the outer casing is lowered to the bottom of the boring and the annular space is filled with grout. Grouting may be accomplished using a pressure grouting method or gravity feed through a tremie pipe. Pressure grouting will require the use of a grout shoe packer installed at the end of the outer casing to prevent grout from moving up into the casing. If a tremie pipe is used to inject grout into the annular space, it should be equipped with a side discharge. With each alternative, the grout must be allowed to cure and form a seal between the casing and the grout prior to advancing the hole to the next hydrologic unit. This procedure is repeated as necessary to advance the borehole to the desired depth. Upon reaching the final target depth, the riser and screen is set through the inner casing. Subsequent to the placement of the filter packs and bentonite seal, the remaining annular space is grouted as described in 8.8.2 (see Fig. 3).

NOTE 13—When using a packer, pressure may build up during grout injection and force grout up the sides of the packer and into the casing.

8.9 *Well Protection*—Well protection refers specifically to installations made at the ground surface to deter unauthorized

rized entry to the monitoring well and to prevent surface water from entering the annulus.

8.9.1 *Protective Casing*—The protective casing should extend from below the frost line (3 to 5 ft [1.0 to 1.5 m]) below the grade depending on local conditions to slightly above the well casing tip. The protective casing should be initially placed before final set of the grout backfill. The protective casing should be sealed and immobilized in concrete placed around the outside of the protective casing above the set grout backfill. The casing should be positioned and stabilized in a position concentric with the riser (see Figs. 1 and 2). Sufficient clearance, usually 6 in. (152 mm) should be maintained between the lid of the protective casing and the top of the riser to accommodate sampling equipment. A ¼-in. (6.3-mm) diameter weep hole should be drilled in the casing 6 in. above the ground surface to permit water to drain out of the annular space. In cold climates, this hole will also prevent water freezing between the well protector and the well casing. Dry bentonite pellets, granules, or chips should then be placed in the annular space below ground level within the protective casing. Coarse sand or pea gravel or both is placed in the annular space above the dry bentonite pellets and above the weep hole to prevent entry of insects. All materials chosen should be documented on the well completion diagram. The monitoring well identification number should be clearly visible on the inside and outside of the lid of the protective casing.

8.9.2 *Completion of Surface Installation*—The well protection installation may be completed in one of three ways:

8.9.2.1 In areas subject to frost heave, place a soil or bentonite/sand layer adjacent to the protective casing sloped to direct water drainage away from the well.

8.9.2.2 In regions *not* subject to frost heave, a 4-in. (101-mm) thick concrete pad sloped to provide water drainage away from the well may be placed around the installation. Care must be taken not to lock the concrete pad onto the protective casing if subsidence of the surface may occur in the future.

8.9.2.3 Where monitoring well protection must be flushed with the ground, an internal cap should be fitted on top of the riser within the manhole or vault. This cap should be leak-proof so that if the vault or manhole should fill with water, the water will not enter the well casing. Ideally, the manhole cover cap should also be leak-proof.

8.9.3 *Additional Protection*—In areas where there is a high probability of damaging the well (high traffic, heavy equipment, poor visibility), it may be necessary to enhance the normal protection of the monitoring well through the use of posts, markers, signs, etc. The level of protection should meet the damage threat posed by the location of the well.

9. Well Development

9.1 *General*—The development serves to remove the finer grained material from the well screen and filter pack that may otherwise interfere with water quality analyses, restore the ground-water properties disturbed during the drilling process and to improve the hydraulic characteristics of the filter pack and hydraulic communication between the well and the hydrologic unit adjacent to the well screen. Methods of well development vary with the physical characteristics of hydrologic units in which the monitoring well is screened and with the drilling method used.

9.2 *Development Methods*—Methods of development most often used include mechanical surging and bailing or pumping, over-pumping, air-lift pumping, and jetting. An important factor in any method is that the development work be stated slowly and gently and be increased in vigor as the well is developed. Most methods of well development require the application of sufficient energy to disturb the filter pack, thereby freeing the fines and allowing them to be drawn into the well. The coarser fractions then settle around and stabilize the screen. The well development method chosen should be documented on the well completion diagram.

NOTE 14—Any time an air compressor is used, it should be equipped with an oil air filter or oil trap to minimize the introduction of oil into the screen area. The presence of oil would impact the organic constituent concentrations of the water samples.

NOTE 15—Development procedures for wells completed in fine sand and silt strata should involve methods that are relatively gentle so that the strain material will not be incorporated into the filter pack. Vigorous surging for development can produce mixing of the fine strata and filter pack and produce turbid samples from the installation. Also, development methods should be carefully selected based upon the potential contaminant(s) present, quality of waste water generated, and requirements for containerization or treatment of waste water.

9.2.1 *Mechanical Surging*—In this method, water is forced to flow into and out of the well screen by operating a plunger (or surge block) or bailer up and down in the riser. A pump or bailer should then be used to remove the dislodged sediments following surging.

9.2.2 *Over Pumping*—With this method, the monitoring well is pumped at a rate considerably higher than it would be during normal operation. The fine-grain materials would be dislodged from the filter pack and surrounding strata influenced by the higher pumping rate. This method is usually conducted in conjunction with mechanical surging.

9.2.3 *Air Lift Pumping*—In this method, an air lift pump is operated by cycling the air pressure on and off for short periods of time. This operation will provide a surging action that will dislodge fine-grained particles. Applying a steady, low pressure will remove the fines that have been drawn into the well by the surging action. Efforts should be made (that is, through the use of a foot valve) to avoid pumping air into the filter pack and adjacent hydrologic unit because the air may lodge there and inhibit future sampling efforts and may alter ambient water chemistry. Furthermore, application of high air pressures should be avoided to prevent damage to small diameter PVC risers, screens, and filter packs.

9.2.4 *Well Jetting*—Another method of development involves jetting the well screen area with water while simultaneously air-lift pumping the well. However, the water added during this development procedure will alter the natural, ambient water quality and may be difficult to remove. Therefore, the water added should be obtained from a source of known chemistry. Water from the monitoring well being developed may also be used if the suspended sediments are first removed.

9.3 *Duration of Well Development*—Well development should begin after the monitoring well is completely installed and prior to water sampling. Development should be continued until representative water, free of the drilling fluids, cuttings, or other materials introduced during well construc-

tion is obtained. Representative water is assumed to have been obtained when pH, temperature, and specific conductivity readings stabilize and the water is visually clear of suspended solids. The minimum duration of well development should vary in accordance with the method used to develop the well. For example, surging and pumping the well may provide a stable, sediment-free sample in a matter of minutes; whereas, bailing the well may require several hours of continuous effort to obtain a clear sample. The duration of well development and the pH, temperature, and specific conductivity readings should be recorded on the well completion diagram.

9.4 *Well Recovery Test*—A well recovery test should be performed immediately after and in conjunction with well development. The well recovery test not only provides an indication of well performance but also provides data for determining the transmissivity of the screened hydrologic unit. Estimates of the hydraulic conductivity of the unit can then be determined. Readings should be taken at intervals suggested in the table below until the well has recovered to 90 % of its static water level.

NOTE 16—If a monitoring well does not recover sufficiently for sampling within a 24-h period and the well has been properly developed, the installation should not generally be used as a monitoring well for detecting or assessing low level organic constituents. The installation may, however, be used for long-term water level monitoring if measurements of shorter frequency water level changes are not required.

10. Installation Survey

10.1 *General*—The vertical and horizontal position of each monitoring well in the monitoring system should be surveyed and subsequently mapped by a licensed surveyor. The well location map should include the location of all monitoring wells in the system and their respective identification numbers, elevations of the top of riser position to be used as the reference point for water level measuremen and the elevations of the ground surface protective instal tions. The locations and elevations of all permanent benc mark(s) and pertinent boundary marker(s) located on-site used in the survey should also be noted on the map.

10.2 *Water Level Measurement Reference*—The wa level measurement reference point should be permanen marked, for instance, by cutting a V-notch into the top ec of the riser pipe. This reference point should be surveyed reference to the nearest NGVD reference point.

10.3 *Location Coordinates*—The horizontal location all monitoring wells (active or decommissioned) should surveyed by reference to a standardized survey grid or metes and bounds.

TABLE 2 Suggested Recording Intervals for Well Recovery Tests

Time Since Starting Test	Time Interval
0 to 15 min	1 min
15 to 50 min	5 min
50 to 100 min	10 min
100 to 300 min (5 h)	30 min
300 to 1440 min (24 h)	60 min

11. Monitoring Well Network Report

11.1 To demonstrate that the goals as set forth in Secti 1, the Scope, have been met, a monitoring well netw report should be prepared. This report should:

11.1.1 Locate the area investigated in terms pertinent the project. This should include sketch maps or aerial pho on which the exploratory borings, piezometers, sample are and monitoring wells are located, as well as topograp items relevant to the determination of the various soil a rock types, such as contours, streambeds, etc. Where feasil include a geologic map and geologic cross sections of the a being investigated.

11.1.2 Include copies of all well boring test pits a exploratory borehole logs, initial and post-completion wa levels, all laboratory test results, and all well complet diagrams.

11.1.3 Include the well installation survey.

11.1.4 Describe and relate the findings obtained in initial reconnaissance and field investigation (Section 5) the design and installation procedures selected (Sections 7 9) and the surveyed locations (Section 10).

11.1.5 This report should include a recommended decc mission procedure that is consistent with the well constr tion and local regulatory requirements.

12. Keywords

12.1 aquifer; borehole drilling; geophysical explorati ground water; monitoring well; site investigation

The American Society for Testing and Materials takes no position respecting the validity of any patent rights asserted in connection with any item mentioned in this standard. Users of this standard are expressly advised that determination of the validity of any such patent rights, and the risk of infringement of such rights, are entirely their own responsibility.

This standard is subject to revision at any time by the responsible technical committee and must be reviewed every five years and if not revised, either reapproved or withdrawn. Your comments are invited either for revision of this standard or for additional standards and should be addressed to ASTM Headquarters. Your comments will receive careful consideration at a meeting of the responsible technical committee, which you may attend. If you feel that your comments have not received a fair hearing you should make your views known to the ASTM Committee on Standards, 1916 Race St., Philadelphia, PA 19103.

000319