4936

SILOS DOME PENETRATION AND RISER INSTALLATION PLAN FOR THE ACCELERATED WASTE RETRIEVAL PROJECT

Document No. 40710-PL-0018
Rev. 1
July 7, 2003

AUTHORIZED BY: Ray A Conrad for. 7/8/03
Dennis Carr, Sr. Project Director — Date

APPROVED BY: Robert Fellman 7/8/03
Robert Fellman, — Date
Accelerated Waste Retrieval Project Manager

FLUOR FERNALD
Fernald Closure Project
P. O. Box 538704
Cincinnati, Ohio 45253-8704

1.0 INTRODUCTION

Silos 1 & 2 are prestressed concrete tanks built by The Preload Company in the early 1950's at the Department of Energy's Feed Materials Production Center (currently known as the Fernald Closure Project) site in Fernald, Ohio. In order to facilitate the installation of equipment designed for the removal of wastes stored in Silos 1 & 2, penetrations must be cut through the concrete domes and equipment risers installed in each silo dome. This work plan will provide an overview of the cutting technology selected to penetrate the silo domes and construction activities required for riser installation.

The Accelerated Waste Retrieval (AWR) project has selected a slurry retrieval system to remove the wastes stored in Silos 1 & 2. Deployment of this system requires the installation of one slurry pump riser, approximately 50 inches in diameter, to be located in the center of each silo dome. Two sluicing nozzle risers, approximately 36 inches in diameter, will be located collinearly with the slurry pump riser approximately 25 feet from the center of the dome. In addition, three camera risers approximately 12 inches in diameter will also be installed in each silo to support monitoring of the retrieval system during operation. The six riser penetration locations are identified in drawing 94X-3900-M-01984.

In October 2002, Jacobs Engineering developed the *Silo Penetration and Riser Installation Plan,* Rev. 0 for the Accelerated Water Retrieval Project. This document was used as guide in the development of the Fluor Fernald work plan. This initial document was intended as a conceptual design, based on perceived needs before the Radon Control System was operational or the concrete cutting method finalized. The subjective information used to develop the initial plan has been revisited based on known conditions and many of the original assumptions have been revised. The Radon Control System is operational and configuration requirements to support the penetration and riser installation activities are more accurately defined. The methodology to be used in cutting the concrete has been finalized, demonstrated on Silo 4, and lessons learned incorporated into this plan revision. The Radiological Engineering, Construction Safety, and Industrial Hygiene concerns have also been reviewed and addressed as a result of the Silo 4 demonstration. This revision of the plan accurately reflects the activities, as they will take place in the field and the safeguards that will be taken for protection of the workers, the environment, and the public.

2.0 PROGRAMMATIC CONSIDERATIONS

2.1 Unreviewed Safety Question (USQ) Issues

The silo domes have been identified as Safety Significant Structures in the Documented Safety Analysis for Silos 1 & 2 (*Technical Safety Requirements Document for the Operable Unit 4 Silos,* Rev. 1 and *Hazard Analysis Report of Operable Unit 4 Silos,* Rev. 0). Since both of these documents are DOE approved and the riser installation involves physical modifications to the silo containment, the Management of Change process employs the Unreviewed Safety Question (USQ) system.

An Unreviewed Safety Question screen, USQD-2003-0008 - *Silos 1 & 2 Dome Penetration and Riser Installation* was developed to address the impact of the work activities described in this plan. The screen included both the impact of the penetrations and the addition of approximately 600 gallons of water to each silo as a result of concrete cutting operations. A review of the technical requirements and safety basis authorization documents determined this issue did not constitute a USQ condition (Attachment A).

4936

2.2 Engineering Evaluations

Prior to developing the work plan and initiating activities to support the silo dome penetrations and riser installation, several engineering evaluations were performed.

2.2.1 *Silos 1, 2, and 4 Dome Penetrations Structural Evaluation*

Engineering calculations were performed to determine the affect of the proposed penetrations on structural integrity of Silos 1, 2 and 4. The report (Reference A) concluded the concrete cutting and riser installation would not adversely affect the silos structural integrity. Additionally, the evaluation stipulated the water jet cutting system would induce extremely small vibration and impact loads on the silos and these levels would be well within acceptable limits.

An independent concrete engineering consultant, Charles S. Hanskat P.E., reviewed the structural engineering review and calculations performed in Reference A. His report (Reference B) stated the calculations were clear and concise, and more important accurately reflected the stresses Mr. Hanskat would expect on the domes from these activities. He concurred with the conclusions based on the calculations.

2.2.2 *Silo 4 Inspection Report and Analysis*

The focus of this report, prepared by Charles Hanskat P.E., based on a site inspection of Silo 4 and review of the impact of the Silo 3 wall cutting demonstration, conducted on Silo 4 in March of 2003, was to evaluate the impact of the proposed riser installation and equipment loads for the solids retrieval system on the concrete dome roofs of Silos 1 & 2. His report (Reference C) addressed several observations and recommendations he proposed for consideration during the planning and execution of the Silos 1 & 2 Dome Penetration and Riser Installation demonstration, which was to be conducted on Silo 4 in June 2003.

One of the recommendations proposed in Mr. Hanskat's report was to develop a lifting process designed to remove concrete section by a mechanism that grips on the underside of the dome (such as with a toggle bolt anchor), rather than depending on anchor bolts and epoxy as originally proposed in the Jacobs Engineering plan. This recommendation was effectively implemented during the Silo 4 demonstration.

2.2.3 *Silo 4 Penetration Lifting Plate Evaluation*

This report (Reference D) provided an engineering evaluation of the lifting plates designed for removing concrete cutouts during the Silo 4 Demonstrations of the Silos 1 & 2 Dome Penetration and Riser Installation activities. The review determined the plates were adequately designed for lifting the concrete sections from the silo domes. Additionally, these plates were designed to effectively incorporate the toggle bolt recommendation proposed by Mr. Hanskat in 2.2.3.

4936

2.2.4 *Radiological Engineering Evaluation*

Based in the proposed operational configuration of the Radon Control System, available Personal Protective Equipment, conditions observed during Silo Dome Cap Removal Project, and work activities as proposed in this work plan, the requirement for using containment structures has been removed from the work plan. Silo's Project Radiological Engineering performed an evaluation (Reference E) of radiological protection requirements during Silos 1 & 2 Dome Penetration and Riser Installation activities, in order to:

- Calculate and compare, the potential release of headspace radon inventory during an upset condition such as loss of RCS, against the RQ for radon of .1 Ci.

- Predict the effects and potential worker exposure, during normal operating conditions at established flow rate(s) maintained by Radon Control System (RCS) during the cutting and removal of the concrete plugs and installation of the equipment.

- Calculate potential worker exposure due to a release of headspace radon inventory, during an upset condition such as loss of RCS.

- Establish monitoring protocols and actions to be implemented in the case of abnormal and/or unexpected conditions, based on the potential radiological consequences.

Radiological Engineering was present during a penetration and riser installation demonstration conducted on Silo 4 under conditions representative of those expected during the actual operations to be performed on Silos 1 and 2. Observations, recommendations for process improvement, and time-motion factors gathered during this mock-up were incorporated into their report, addressing the issues listed above.

The following is a summary of their conclusions and recommendations regarding monitoring and construction contingencies based on RCS operation during penetration and riser installation activities:

<u>Monitoring</u>

- One radon gas monitor, reading in one-minute increments, is to be placed adjacent to the penetration area for indications of radon gas emanating from the headspace.

- Two working level monitors reading out in one-hour increments, are to be placed in the work area for monitoring personnel exposure to radon progeny.

- A Radiological Control Technician (RCT) will be in the immediate work area reviewing the air sampling data and performing alpha frisk surveys during the operation for contamination control and/or indications of radon gas and progeny plate-out.

<u>Conclusions</u>

- It was expected that the penetration and riser installation operation, *without upset condition*, could be performed without release of any appreciable quantity of radon and progeny to the environment and potentially no internal exposure to the workforce.

- Based on the potential radiological exposure to an "unprotected" worker, resulting from an emanation of the headspace during an upset condition, personnel performing this operation and/or in the immediate area would be required to wear personal air purifying respirators (PAPR).

- During the mock-up performed for this operation, no conditions were identified that could lead to the penetration being uncontrolled or exposed for more than a few minutes were observed. Therefore, it was not reasonable to expect that during upset conditions such as the loss of RCS that the RQ of 0.1 Ci would be exceeded.

Contingencies

The following conditional criteria need to be included in the final work plans and work permits for the silos penetration and riser installation activities:

- If RCS is lost prior to initiating cutting activities, the operation should hold until RCS is restored.

- If RCS is lost during cutting activities, the operation should continue until the cutting is completed and the cut-gaps should then be covered.

- If the RCS is lost during the removal of the plug, construction supervision and Radiological Control should immediately evaluate, concur and ensure that if the penetration is exposed, it can be covered within a short period-of-time.

- If Radiological Control has indications of significant emanation from the headspace through the penetration, all personnel not wearing PAPR's will be required to leave the area.

2.3 Notifications

The site DOE will be given sufficient notification of intent to initiate work activities to allow DOE to notify the USEPA, OEPA, and local residents at least 24 hours in advance of commencing actual work on this project.

Site notification will be made to the Emergency Duty Officer and the Assistant Emergency Duty Officer prior to commencement of the activity.

3.0 WORKER PROTECTION / HEALTH & SAFETY ISSUES

3.1 Radon Control System

The Radon Control System (RCS) will be used to control airflow through the silos and contain the radon within the silos during cutting, cutout removal and riser installation activities. Prior to starting dome penetration activities radon levels in the silos will be low enough to provide a safe work environment for the workers.

During the cutting activity the RCS will be operated normally, maintaining a slightly negative pressure (-0.1 to -0.5 in. wg.) inside the silo dome. In the event that negative pressure cannot be maintained, operations will inform the contractor what portion of the penetrations needs to be resealed.

During concrete cutout removal and riser installation, flow may be discontinued through the silo not being worked, to ensure interlocks associated with that silo (e.g. high pressure) do not cause a shutdown of the RCS fan.

The next step will be to discontinue the return airflow to the silo being worked , reducing the possibility of positive pressure in the silo. With this step fresh air will be brought into the silo through the Silo Pressure Control Valve (PCV) once the negative set point (-3.0 in. wg.) of the PCV is reached. As the concrete cutout is removed fresh air will be drawn into the silo through the opening and the PCV will close as the negative pressure inside the silo decreases.

To maximize the velocity of air entering the active penetration and significantly minimize the chance for radon release during this activity, flow from the silo may be increased to as high as 1000 cfm to maximize inflow through the penetration, depending on the size of the penetration.

Riser installation will occur immediately after the concrete cutout is removed. As the riser is placed into the opening the flow to the silo will be decreased to 500 cfm. If any problems should arise and a cover placed over the opening (as described in section 4.2.3) then the flow will be decreased to 500 cfm as the cover is put into place.

All concrete cutout removal and riser installations will be complete on one silo before work commences on the second silo. Normal RCS operations will resume after all risers have been installed in the silo(s). The order in which the silos are worked does not have an impact on RCS operations. Initiating penetration of the second silo may not begin until radon levels in the silo are low enough to provide a safe work environment for the workers.

If there is an extensive downtime between activities on the silos, openings in the silo will be temporarily covered and/or sealed, as directed by Radiological Safety personnel, to reduce the potential for releasing radon. Temporary covers are described in Section 4.2.3. Additionally, if during this activity an RCS shutdown occurs, activities on the silo dome will be discontinued until the system can be returned to operation. Communication will be maintained between the RCS Control Room and construction crew using radios and area cameras.

3.2 Work Plans/Dome Access Permit

This activity will be performed in accordance with approved construction work plans and work permits; including the Silos Project Health & Safety Plan, task specific Work Permit, and Critical Lift Plan. Prior to any work activities being conducted on the silo domes, a task specific Dome Access Permit will be issued. Deviations from the approved work permit are not allowed. If deviations are deemed necessary each item will have to be evaluated for approval.

Limiting conditions for operation (Technical Safety Requirements Document for the Operable Unit 4 (OU4) Silos, 40000-H&S-0001, Rev. 1, dated May 9, 2000) restrict the placement of loads on the dome of Silos 1 or 2 so that no live load greater than 700 pounds (including up to three persons), other than snow, is applied to the dome. Potential live load scenarios are reviewed as part of the Dome Access Permit and controlled by the facility owner during work evolutions.

Personal Protective Equipment

During the silo dome penetration and riser installation process, all workers accessing the silo dome will be protected from radiological hazards using the appropriate personal protective equipment, as prescribed in the work permits and directed by Radiation Control Technicians (RCT).

Anti-contamination clothing (Anti-Cs) will be required through Radiological Work Permits based on potential for removable contamination.

Fall Protection

Silos 1 & 2 are bermed and do not normally require workers to utilize fall protection when on the domes. However, during the concrete penetration and riser installation process workers will be exposed to openings greater than 18 inches and will be required to use fall protection when within 6 feet of any unprotected dome opening.

Lifting

A crane with sufficient reach and load capacity will be positioned adjacent to the silo to provide a means to lift and remove the concrete cutouts and install risers. Trained and qualified riggers will be used to properly secure the loads and operate the equipment in accordance with critical lift plans, approved by the Fluor Fernald Rigging Department, as required for any lifts over the silos.

Exposure/Contamination Control

3.6.1 ***Site Radon Monitors***

The environmental radon monitors located on the K-65 exclusion area perimeter and those located in the Silos Project will assure that a release of radon is identified and quantified.

3.6.2 ***Occupational Radon Monitoring***

- One of the most useful indicators of radon release will be the use of portable radiological monitoring instrumentation being used by the Radiological Control Technician who will provide full coverage and perform continuous monitoring. Other working level monitors will be used in the area to determine ambient radon working levels.

  Penetration specific radiological monitoring is addressed in Section 2.2.4. *Radiological Engineering Evaluation*

4.2 Dome Penetration and Riser Installation Activities

4.2.1 *Pre-cutting Activities*

After the foam has been removed, each riser location will be re-measured and center location clearly identified. The riser clamping plate anchor bolts will be drilled and set and riser leveling shims installed prior to actual concrete cutting. Setting the anchors prior to cutting the concrete will limit worker exposure after the concrete is cut.

The riser clamping ring and concrete lifting & cutting jig will be used as templates to identify the specific location for anchor bolts, riser leveling shims, and toggle bolt cores which need to be drilled and/or installed prior the to initiation of concrete cutting.

The concrete lifting/cutting jig was designed to mitigate the impact of a number of issues of concern or conditions that could arise during concrete cutting and removal. (Drawing A: D-K Sketch # 4 Sluicer Lifting and Cutting Jig Detail). The primary issued addressed included:

- Lamination – A previous demonstration conducted on Silo 4 identified concrete lamination as a concern. It was recommend that some type of compression system be utilized when removing concrete to prevent lamination. The lifting jig was designed utilizing toggle bolts, set through the concrete and sealed, to reduce the potential lamination during cutting and lifting.

- Flex and Cracking - Another issue of concern was the weight of the concrete causing the cutouts to flex and break apart during cutting and lifting. The lifting jig was designed with flexible steel plates to provide even weight distribution and stability during lifting to reduce the potential for flexing and cracking.

- Tool Mounting - The water jet cutting tool required a stable surface for mounting and operation. The tool employed earth magnets and 3/8 inch all-thread stability rod, centered over the penetration, to hold it securely in place during cutting. A center mounting plate for the earth magnets and center mounted stability rod were incorporated into the jig design.

4.2.2 *Concrete Cutting*

A high-pressure water jet cutting system will be employed to cut the silo dome concrete. The cutting system uses garnet abrasive grit, approved by Fluor Fernald Safety and Industrial Hygiene, and water to accomplish the cutting. A high-pressure cutting tool (Attachment B) will be mounted on the concrete lift/cutting jig. The cutting arm will be set at approximately a 30° angle to the radius required, started at a pre-drilled 3/8 inch pilot hole, then rotating around the base unit making a single cut through concrete, wire support mesh, and rebar at a rate of 2 – 3 inches per minute. The 30° inward angle will provide additional assurance that the cutout will not fall into the silo when completed.

The system requires approximately 30 gpm of water to support cutting operations. The truck-mounted motor requires approximately 28.5 gpm for cooling and the cutting arm requires 1.5 gpm for operation. The clean cooling water (approximately 4,000 gallons per silo) will be directed to an approved drainage location and the cutting water (approximately 200 gallons per silo) will be allowed to enter the silo dome.

The high-pressure water jet system will make single pass cuts, approximately 3/16 inch wide, at a 30° angle to the surface of the concrete dome. During cutting, wood wedges will be inserted into the slot created by the water jet while cutting the concrete and steel braces will bolted to the lifting jig. The wood wedges and steel braces will prevent the cutout from settling and cracking or getting stuck in the penetration prior to removal. After each cut is complete the cutting equipment will be removed and the cutouts will be attached to a crane, in accordance with the critical lift plan. The crane will lift each cutout 12-18 inches then hold the cutout in place while the cutout is wrapped for contamination control. The crane will then remove the concrete and place it in a pre-determined storage location, pending disposal.

4.2.3 *Sluice and Slurry Riser Installation*

The design of the new sluice and slurry risers consists of a round pipe protruding through the silo dome, a base plate fitted with level-adjustment bolts to ensure appropriate orientation to the bridge and equipment nozzle locations, and a clamping plate to secure the riser to the dome (Drawing A: D-K Sketch # 4 Sluicer Lifting and Cutting Jig Detail). Each riser has a cover plate to maintain the silo boundary.

See attached drawings for riser details: 94X-3900-M-01985, Slurry Module Riser Details, 94X-3900-M-01986, Sluicer Module Riser Details, and 94X-3900-M-01987, Camera Riser Details.

When the riser is ready for installation, sealant will be applied and the riser lowered into the penetration. The riser will be leveled using the base plate adjustment bolts set on a leveling shim ring. The shim ring was designed to ensure the even distribution of weight over a greater bearing surface as the riser is leveled. The clamping plate will be placed over the riser and anchored in place with the pre-set anchors, securing the riser in place. Remaining openings will be sealed with grout or foam, depending on dimensions of openings between clamping plate and dome surface, after all the risers on each dome have been installed.

Once the penetrations have been made and the concrete cutout removed, the riser will be installed in a matter of minutes. However, if the riser installation were to be interrupted, temporary plywood covers have been fabricated as a contingency measure to allow any penetration to be quickly sealed. A temporary cover has been designed for each size penetration and pre-drilled to match the anchor bolt installation pattern of the riser clamping plate. Since the clamping plate anchor bolts will be installed prior to initiating the penetrations, the temporary cover could be quickly installed and sealed until work may again be resumed. If an unplanned interruption were to occur during cutting, the opening would be sealed, with either a tarp or a sealant, depending on the nature of the interruption.

4.2.4 *Camera Riser Installation*

The design of the camera riser is similar to the sluice and slurry riser. Since the camera risers do not require leveling, the base plate is not fitted with level-adjusting bolts or shim rings. The riser will be installed using the same techniques as described for the other risers, with the exception of being leveled. The base plate will be set using a sealant and the clamping ring will be secured using the pre-set anchors, securing the riser to the dome.

5.0 WASTE MANAGEMENT

The waste generated from this project will include personal protective clothing and supplies, bulk foam, tools, and silo dome concrete cutouts. The personal protective clothing and bulk foam will be placed in roll-off boxes at the project site. These items will be evaluated, chemically and radiologically, to ensure they meet the Waste Acceptance Criteria for off-site disposal.

Since the removed concrete may have silo material on the underside of the cutouts, the dome pieces will be stored in an approved location until they can be disposed of with the remainder of the silo concrete during Demolition & Disposal activities. At this time a waste acceptance profile has not been established with any licensed disposal facility to accept material from Silos 1 or 2. When a waste acceptance profile is established that would allow for the disposal of Silos 1 & 2 material, and if the concrete cutouts meet the waste acceptance criteria, they will be disposed of earlier.

6.0 SILO 4 DEMONSTRATION and LESSONS LEARNED

6.1 *Silo 4 Demonstration*

Prior to the finalization of the Fluor Fernald Silo Dome Penetrations and Riser Installation work plan, a mock-up of the construction activities anticipated to be performed on Silos 1 & 2 were conducted on Silo 4. Although Silo 4 was constructed at the same time as Silos 1 & 2, it had many differences that had to be taken into consideration when setting the demonstration:

- Silo 4 had not been used for material storage and the concrete was in a more degradated condition,
- Silo 4 had a different bridge configuration,
- Silo 4 had previously existing risers, preventing the demonstration of slurry penetration, and
- Silo 4 did not have a berm and required fall protection for all workers on the domes.

The mock-up consisted of performing the same steps outlined for the dome penetrations and riser installation activities to be conducted on Silos 1 & 2, including:

- Same level of personal protective equipment,
- Identical riser design, and
- Same riser installation contractor and concrete cutting specialty subcontractor.

Since an existing riser was located on Silo 4 in the exact location the slurry riser would have been installed, the slurry riser penetration and riser installation activities were deleted from the demonstration. It was determined that the sluicer riser would be more difficult to cut, due to dome curvature, and since both the slurry and sluicer risers were comparative in size and weight the experience gained and lessons learned from the abbreviated demonstration would be sufficient validate the proposed work plan.

6.2 Lessons Learned

The concrete cutting tool was much louder than originally anticipated by Safety/Industrial Hygiene and an increase in hearing protection was required. Refer to 3.6.3 Hearing Protection.

- The original plan called for metal shims plates to be placed under the leveling bolts on slurry and sluicer risers. The plan has been altered to reflect the use of a solid shim rings instead of individual shim plates. The rings are easier to install, provide a more even distribution of force across the bearing surface, and allow for more flexibility in seating the riser during installation.

- The concrete cutouts were easily removed and little spalling was observed at either the edges from water jet cutting or underneath from toggle installation. The lifting/cutting jig, combined with the use of toggle bolts, appeared to have successfully mitigated the concerns regarding concrete lamination during cutting and lifting.

- The high-pressure water jet cutting rates and water usage appeared to be consistent with original expectations. Sufficient water pressure could to be obtained, through utilization of a site fire main, to provide support for cutting operation. Although a different connection site will be utilized during cutting of Silos 1 & 2, it is anticipated sufficient water pressure will be available.

7.0 ATTACHMENTS

Attachment A – USQD-2003-0008 - Silos 1 & 2 Dome Penetration and Riser Installation
Attachment B – Photo of High-Pressure Water Jet Cutting Tool

8.0 DRAWINGS

D-K Sketch #4 Sluicer Lifting and Cutting Jig Detail
94X-3900-M-01984, Silo Riser Assembly General Arrangement
94X-3900-M-01985, Slurry Module Riser Details
94X-3900-M-01986, Sluicer Module Riser Details
94X-3900-M-01987, Camera Riser Details

4936

9.0 REFERENCES

Reference A: Shiner, Tom, *Silos 1, 2, and 4 Dome Penetration Structural Evaluation*, M:SP:2003-0021, March 6, 2003

Reference B: Hanskat, Charles, *Review of Silos 1, 2, and 4 Penetrations and Riser Installation*, March 24, 2003

Reference C: Shiner, Tom, *Silo 4 Inspection Report and Analysis*, M:SP:2003-0036, April 28, 2003

Reference D: Shiner, Tom, *Silo 4 Penetrations Lifting Plate Evaluation*, M:SP:2003-0045, June 11, 2003

Reference E: *Decision Basis for Penetrating Silos 1 and 2 Domes Facilitating Sluicing Pump and Nozzle Riser Installation*, Document No. SD-2076, July 2, 2003

FCP USQ SCREEN

USQD-2003-0008

(Obtain USQD/SE Log number from Document Control (formerly ECDC))

ISSUE TITLE (Enter brief title identifying issue being evaluated):
Silos 1&2 Dome Penetration for Riser Installation

FACILITY AND LOCATION (Enter building or facility, including number, where issue exists or issue will be):
Silos Project, Silos 1 and 2

AUTHORIZATION BASIS DOCUMENTS & REFERENCE DOCUMENTS (Enter the DOE-approved safety basis documentation such as DSA/HAR/BIO/SER/TSR/SBR/NHASP. Identify additional reference documents. If NO DOE-approved safety documentation exists that addresses the issue, activity or facility, go to NS-0003 to initiate a safety assessment or NS-0008 for SBDR Process) List documents: Document number, revision, title.

- PL-3049, Rev. 3, *Implementation Plan for SARs and TSRs at the FEMP*
- 40000-RP-0028, Rev. 0, *Hazard Analysis Report for Operable Unit 4 (OU4) Silos*
- 624-P622-50, Rev. 0, *PHAR for the Silos 1 and 2 Accelerated Waste Retrieval Project*
- 40000-H&S-0001, Rev. 1, *Technical Safety Requirements Document for the Operable Unit 4 (OU4) Silos*
- 40710-PL-0013, Rev. 0, *Silo Penetration and Riser Installation Plan*
- M:SP:2003-0021, *Silos 1, 2 & 4 Dome Penetration Structural Evaluation* and Attachment 40710-CA-0021 Rev. 0.
- Memo, Review of Silos 1, 2, and 4 Penetrations and Riser Installation, Charles Hanscat to Jack Hughes, March 24, 2003.

BRIEF DESCRIPTION OF ISSUE (Obtain and present a brief description of the issue to be evaluated. Attach or reference here a copy of the issue package, such as a proposed work plan):
New access risers need to be installed in Silos 1&2 to support Accelerated Waste Retrieval, which will require six new penetrations in each silo. Details of the dome penetration are documented in Plan 40710-PL-0013, and include operation of the Radon Control System (RCS) to draw down any silo headspace radon before penetration. Structural analysis of the proposed penetrations is documented in M:SP:2003-0021 and the attachment, and independent verification of the analysis is documented in memo *Review of Silos 1, 2, and 4 Penetrations and Riser Installation*, March 24, 2003. Cutting will be achieved by a water stream which will add approximately 600 pounds of grit and water to the silo contents.

USQ SCREEN RESULTS SUMMARY

NOTE: If the answers to the questions posed on page 2 of this form are all NO, a USQD/Safety Evaluation is not required; a potential USQ does not exist. A YES answer to any of the questions 1, 3-7 shall require a safety evaluation. If question 1 is answered NO, and question 2 is answered YES, then the issue is excluded from further screening and a safety evaluation is NOT required.

☐ TSR/SBR Change Required. (Perform a USQD/SE and obtain DOE Approval)

■ Safety Evaluation Required. (Question 2 is NO *and* at least one question 1, 3-7 is YES)

☐ Safety Evaluation Not Required. (Either item 1 is NO *and* item 2 is YES, *OR* all are NO)

SIGNATURES: (Print name/signature)	DATE
Scott Manley/	6/10/03
Technically Responsible Individual	
Patricia L. Fisk/	6-10-03
Qualified Safety Evaluator	
Tulanda Brown/	6/10/03
Manager, Nuclear & System Safety	

FCP USQ SCREEN (cont.) USQD-2003-0008

USQ SCREEN PREVENTS UNNECESSARY SAFETY EVALUATIONS: (Use NS-0002 to aid determination of responses.)

1. Does this issue change, or add to, the descriptions/discussions or activities of nearby or adjacent facilities/activities addressed in any DOE-approved documented safety analysis?

   ■ YES ☐ NO Explain (include the number and title of the document being impacted):
   The change could impact the Radon Control System.

If YES is the answer to item 1, skip item 2 (the Issue cannot be excluded) and continue the screen.

2. IF the answer to item 1 is NO, THEN is this issue Excluded from the USQD/SE System? (GO to NS-0002, Attachment 1):

   ■ NO

   ☐ YES, list the exclusion:

If question 1 is answered NO, and question 2 is answered YES, then the issue is excluded from further screening and a safety evaluation is NOT required. Refer to NS-0002, Section 7.5, for instructions for completing the Results Summary and Signatures blocks. If question 2 is answered NO, continue the screen.

3. Does the issue involve changes to the facility description/discussion, including equipment, operations/activities, and building contents, in the applicable DOE-approved documented safety analysis?

   ■ YES ☐ NO Explain:
   The current DOE-approved OU4 HAR, PHAR for AWR, and the TSR document silo containment as equipment important to safety. Penetration of this containment does involve changes to the facility description/discussion, including equipment, operations/activities, and building contents, in the applicable DOE-approved safety documentation.

4. Does the issue involve significant changes to the procedures described in the applicable DOE-approved documented safety analysis? (As a reminder, inconsequential changes such as spelling or typographical corrections, grammatical changes, clarifications, or note references, are not considered significant changes.)

   ☐ YES ■ NO Explain:
   Specific procedures are not discussed in the current DOE approved OU4 HAR, PHAR for AWR, or the TSR.

5. Does the issue involve tests, experiments, or processes NOT described and considered in the applicable DOE-approved documented safety analysis?

   ■ YES ☐ NO Explain:
   The installation of risers is a process not described and considered in the applicable DOE-approved safety documentation.

6. Does the issue involve non-radiological hazardous materials NOT described and considered in the applicable DOE-approved documented safety analysis?

   ☐ YES ■ NO Explain:
   This activity does not involve non-radiological hazardous materials not described and considered in the applicable DOE-approved safety documentation.

7. Could the issue affect nuclear criticality safety in a way NOT previously evaluated?

   ☐ YES ■ NO Explain:
   Per the OU4 HAR, criticality is not a concern with the Silos Project.

USQD/SE SUMMARY & EVALUATION

Log No.: USQD-2003-0008

Charge No:	Issue (Project/Activity) Title: Silos 1&2 Dome Penetration for Riser Installation	
TR Printed Name: Scott Manley	TR Organization/Project: Project/Safety & Health	TR Phone: 4846

QSE Printed Name:	Organization:	Badge No:
Project/Safety & Health	SH&Q/NSS	10710
QSE Signature:	Phone:	Date:
	3889	6/10/03

CONCLUSIONS:

Discovered Inadequacy	Change to DOE-approved TSR/SBR?	If YES, enter TSR/SBR document number:	Does Issue Constitute USQ?:
☒ Proposed Activity/Change	NO		NO

SIGNATURES: [Print name/signature]

Tulanda Brown — Date: 6/10/03
Manager, Nuclear & System Safety

If a USQ, SRC REVIEW RESULTS: _____ Concur

Don Paine — Date: _____
Safety Review Committee Chair

If a USQ, APPROVAL SIGNATURE:

Fluor Fernald Executive Project Director: Jamie Jameson — Date: _____

* *

ISSUE DESCRIPTION:

FACILITY AND LOCATION (Enter building or facility, including the number, where issue exists or proposed activity will be. Be as specific as possible.):
Silos Project, Silos 1 and 2

AUTHORIZATION BASIS DOCUMENTS (Enter the applicable DOE-approved safety documentation. Identify additional reference documents.):

- PL-3049, Rev. 3, *Implementation Plan for SARs and TSRs at the FEMP*
- 40000-RP-0028, Rev. 0, *Hazard Analysis Report for Operable Unit 4 (OU4) Silos*
- 624-P622-50, Rev. 0, *PHAR for the Silos 1 and 2 Accelerated Waste Retrieval Project*
- 40000-H&S-0001, Rev. 1, *Technical Safety Requirements Document for the Operable Unit 4 (OU4) Silos*
- 40710-PL-0013, Rev. 0, *Silo Penetration and Riser Installation Plan*
- M:SP:2003-0021, *Silos 1, 2 & 4 Dome Penetration Structural Evaluation* and Attachment 40710-CA-0021 Rev. 0.
- Memo, *Review of Silos 1, 2, and 4 Penetrations and Riser Installation*, Charles Hanscat to Jack Hughes, March 24,2003.

BRIEF DESCRIPTION OF ISSUE (Obtain and present a brief description of the issue to be evaluated, including any potentially affected adjacent systems or facilities. Attach and reference here the USQ Screen AND a copy of the issue package such as: a proposed activity package, a deficiency report, or a discovered inadequacy, reduction of TSR/SBR margin of safety, or unauthorized change description.)

New access risers need to be installed in Silos 1&2 to support Accelerated Waste Retrieval, which will require six new penetrations in each silo. Details of the dome penetration are documented in Plan 40710-PL-0013, and include operation of the Radon Control System (RCS) to draw down any silo headspace radon before penetration. Structural analysis of the proposed penetrations is documented in M:SP:2003-0021 and the attachment, and independent verification of the analysis is documented in memo *Review of Silos 1, 2, and 4 Penetrations and Riser Installation*, March 24, 2003. Cutting will be achieved by a water stream which will add approximately 600 pounds of grit and water to the Silo contents.

SUMMARY OF SAFETY EVALUATION RESULTS: List in the table the responses to the USQD/Safety Evaluation.

Quest No.	Question	Reference (DS no.)	Response (YES/NO)
1	Could the issue increase the probability of occurrence of an accident previously evaluated in applicable DOE-approved documented safety analysis?	DS- 1	NO
2	Could the issue increase the consequences of an accident previously evaluated in applicable DOE-approved documented safety analysis?	DS- 1	NO
3	Could the issue increase the probability of occurrence of a malfunction of equipment important to safety previously evaluated in applicable DOE-approved documented safety analysis?	DS- 1	NO
4	Could the issue increase the consequences of a malfunction of equipment important to safety previously evaluated in applicable DOE-approved documented safety analysis?	DS- 2	NO
5	Could the issue create the possibility of an accident of a different type than any previously evaluated in applicable DOE-approved documented safety analysis?	DS- 2	NO
6	Could the issue create the possibility of a malfunction of equipment important to safety of a different type than any previously evaluated in applicable DOE-approved documented safety analysis?	DS- 2	NO
7	Does the issue reduce the margin of safety as defined in the basis for any Technical Safety Requirement (TSR) or DOE-approved Safety Basis Requirement (SBR)?	DS- 2	NO

USQD/SE DOCUMENTATION SHEET(s)

Log No.: USQD-2003-0008

Complete the discussion and justification as described in NS-0002, the USQD/SE System procedure. Ensure that the justification for the response is sufficiently detailed and understandable that others, such as members of the SRC, could come to the same response or at least understand why you chose the response you did. This table is an electronic form and will expand to however many number of pages are needed to adequately address the required responses for each question.

Question No. & Response	USQD Questions/ Discussion & Justification
1 NO	Could the issue increase the probability of occurrence of an accident previously evaluated in applicable DOE-approved documented safety analysis?

The accident analyses are documented in Chapter 3 of the OU4 HAR, and Chapter 3 and Appendix G of the Silos 1 and 2 AWR PHAR.

The Silo 1 & 2 Project has six Evaluation Basis Accidents (EBA), including containment failure, radon control system failure, carbon bed failure, transfer line break, TTA tank failure, sample tank spill. Only one of these six EBAs is relevant to Silo dome penetration; the Catastrophic Failure of Silo Containment, with a frequency category of "anticipated".

The TSR for Silos defines a dome live load limit of up to 700 pounds, and requires evaluation of all dead loads with respect to their impact on structural integrity. The TSR also requires an Approved Critical Lift Plan for hoisting and rigging over the silo structures. The live load for this activity will be administratively controlled in the Critical Lift Plan to remain below the proposed limits, and there is no additional dead load as a result of this activity. Working within these controls will assure that this activity will not increase the probability of occurrence of an accident previously evaluated in the applicable DOE-approved safety documentation.

2 NO	Could the issue increase the consequences of an accident previously evaluated in applicable DOE-approved documented safety analysis?

The accident analyses are documented in Chapter 3 of the OU4 HAR, and Chapter 3 and Appendix G of the Silos 1 and 2 AWR PHAR.

The Silo 1 & 2 Project has six Evaluation Basis Accidents (EBA), including containment failure, radon control system failure, carbon bed failure, transfer line break, TTA tank failure, sample tank spill. Only one of these six EBAs is relevant to Silo dome penetration; the Catastrophic Failure of Silo Containment.

The consequences of these accidents are calculated in their respective safety bases, and are conservatively modeled. The consequence analyses were not dependent on the cause of catastrophic failure, therefore this issue will not increase the consequences of accidents previously evaluated.

3 NO	Could the issue increase the probability of occurrence of a malfunction of equipment important to safety previously evaluated in applicable DOE-approved documented safety analysis?

The Silo Containment Structure is identified in Chapter 4 of the AWR PHAR as the only Safety-Significant Structure. Failure of the Silo Containment Structure is analyzed as EBA-1 in the AWR PHAR.

Probability for containment failure is documented in the PHAR to be in the "anticipated" range, (less than 1.0E-01 per year but greater than or equal to 1.0E-02 per year). This is already the highest-frequency category.

The TSR for Silos defines a dome live load limit of up to 700 pounds, and requires evaluation of all dead loads with respect to their impact on structural integrity. The TSR also requires an Approved Critical Lift Plan for hoisting and rigging over the silo structures. The live load for this activity will be administratively controlled in the Critical Lift Plan to remain below the proposed limits, and there is no additional dead load as a result of this activity. Working within these controls will assure that this activity will not increase the probability of occurrence of a malfunction of safety-significant SSCs nor equipment important to safety previously evaluated in applicable DOE-approved safety documentation.

4 NO	Could the issue increase the consequences of a malfunction of equipment important to safety previously evaluated in applicable DOE-approved documented safety analysis?

The Silo Containment Structure is identified in Chapter 4 of the AWR PHAR as the only Safety-Significant Structure. Failure of the Silo Containment Structure is analyzed as EBA-1 in the AWR PHAR.

The consequences of containment failure are calculated, and are conservatively modeled. The consequence analyses were not dependent on the cause of catastrophic failure; therefore this issue will not increase the consequences of accidents previously evaluated.

5 NO	Could the issue create the possibility of an accident of a different type than any previously evaluated in applicable DOE-approved documented safety analysis?

The accident analyses are documented in Chapter 3 of the OU4 HAR, and Chapter 3 and Appendix G of the Silos 1 and 2 AWR PHAR.

The Silo 1 & 2 Project has six Evaluation Basis Accidents (EBA), including containment failure, radon control system failure, carbon bed failure, transfer line break, TTA tank failure, sample tank spill.

Accident types have been thoroughly analyzed in the safety basis documents, and Silo dome penetration will not create the possibility of an accident of a different type than any previously evaluated in applicable DOE-approved safety documentation.

6 NO	Could the issue create the possibility of a malfunction of equipment important to safety of a different type than any previously evaluated in applicable DOE-approved documented safety analysis?

The Silo Containment Structure is identified in Chapter 4 of the AWR PHAR as the only Safety-Significant Structure. Failure of the Silo Containment Structure is analyzed as EBA-1 in the AWR PHAR.

The Silo 1 & 2 Project has six Evaluation Basis Accidents (EBA), including containment failure, radon control system failure, carbon bed failure, transfer line break, TTA tank failure, sample tank spill.

Accident types have been thoroughly analyzed in the safety basis documents, and Silo dome penetration will not create the possibility of a malfunction of equipment important to safety of a different type than any previously evaluated in applicable DOE-approved safety documentation.

7 NO	Does the issue reduce the margin of safety as defined in the basis for any Technical Safety Requirement (TSR) or DOE-approved Safety Basis Requirement (SBR)?

The TSR for Silos defines a dome live load limit of up to 700 pounds, and requires evaluation of all dead loads with respect to their impact on structural integrity. The TSR also requires an Approved Critical Lift Plan for hoisting and rigging over the silo structures. The live load for this activity will be administratively controlled in the Critical Lift Plan to remain below the proposed limits, and there is no additional dead load as a result of this activity.

Therefore this activity will not reduce the margin of safety as defined in the TSR.

4936

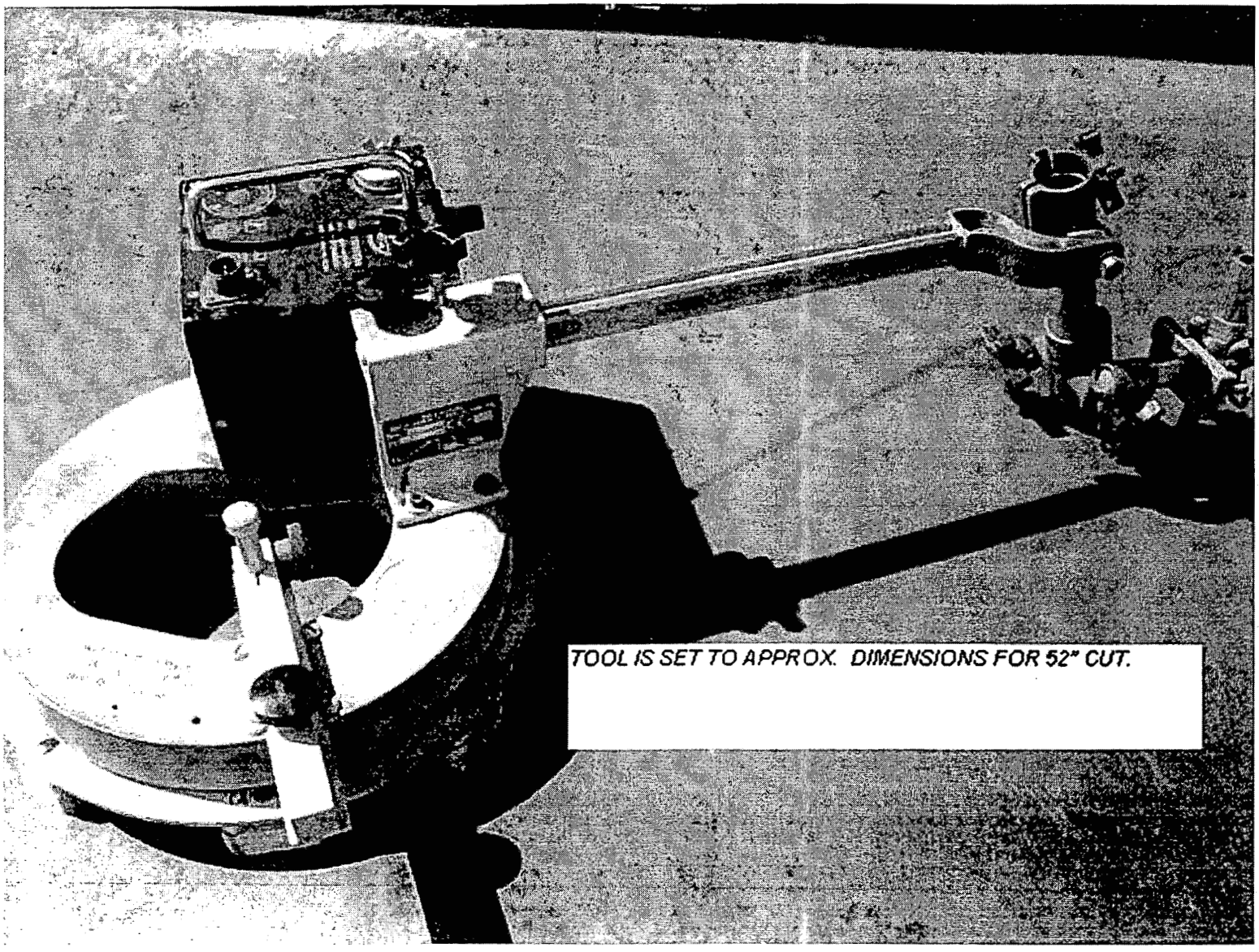

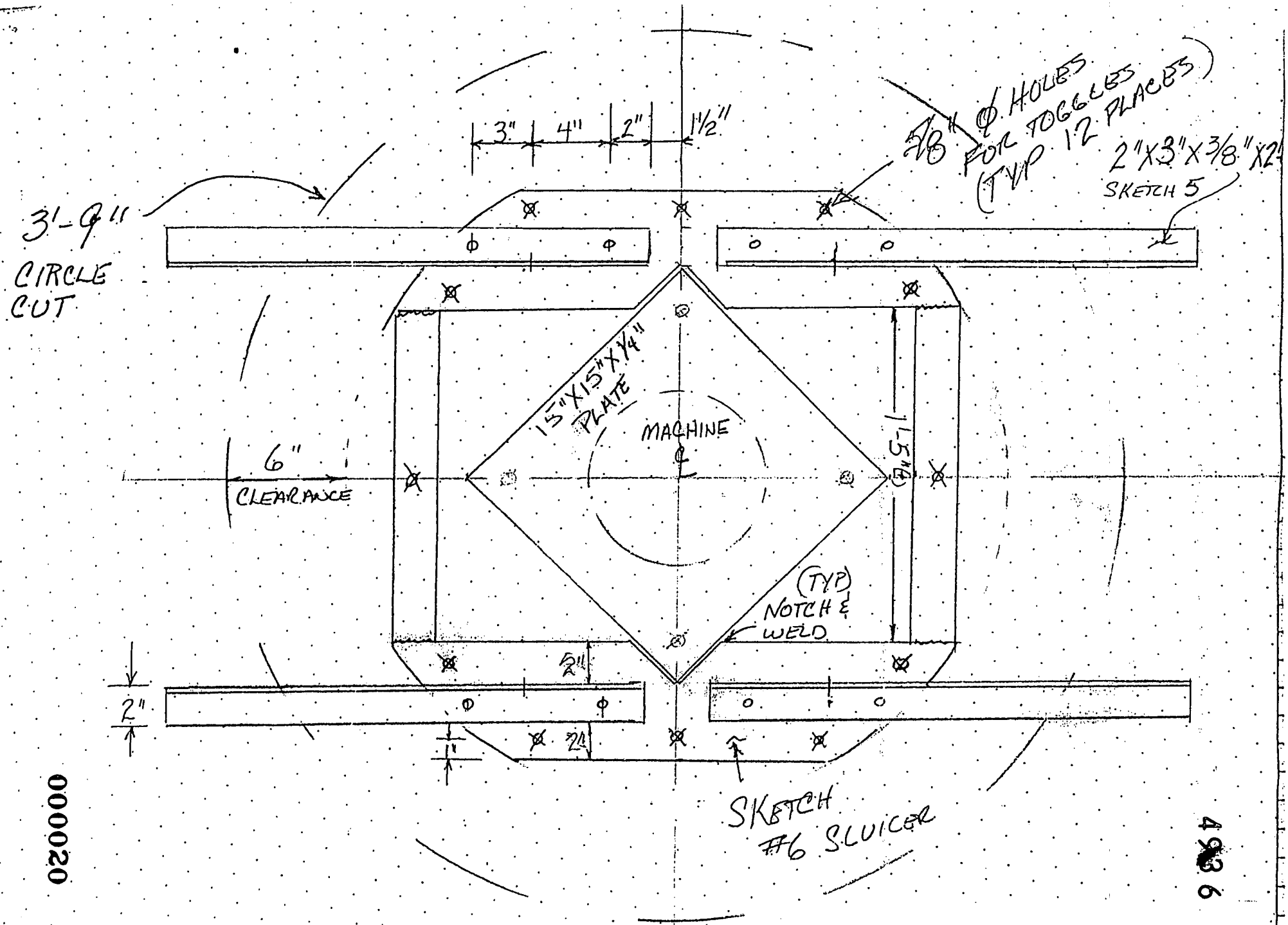

Sketch A
D-K Sketch #4 Sluicer Lifting & Cutting 'JIG' Detail

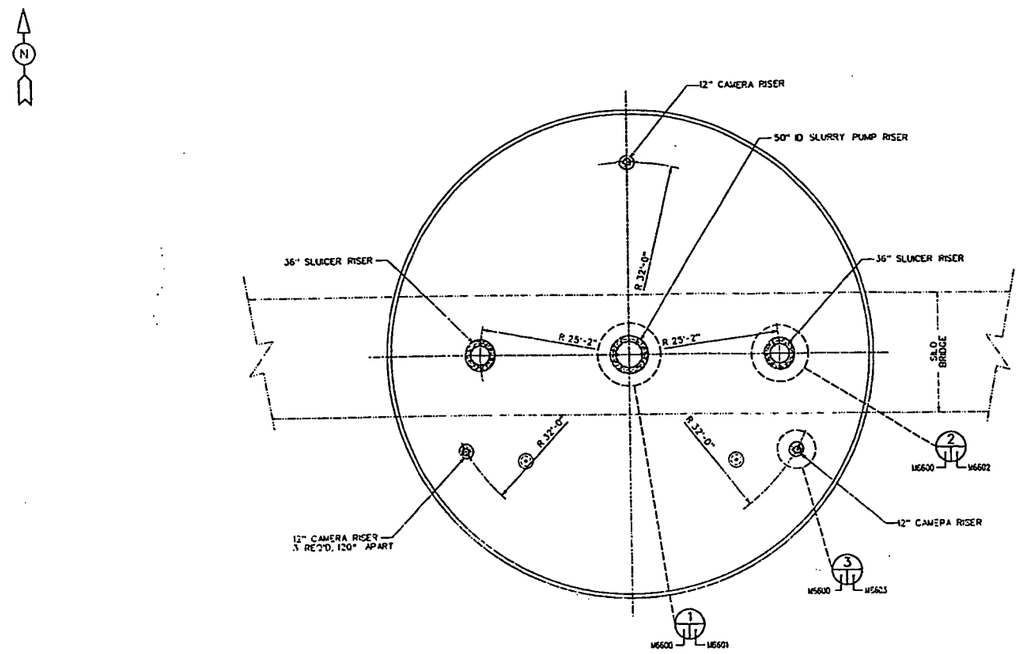

PLAN

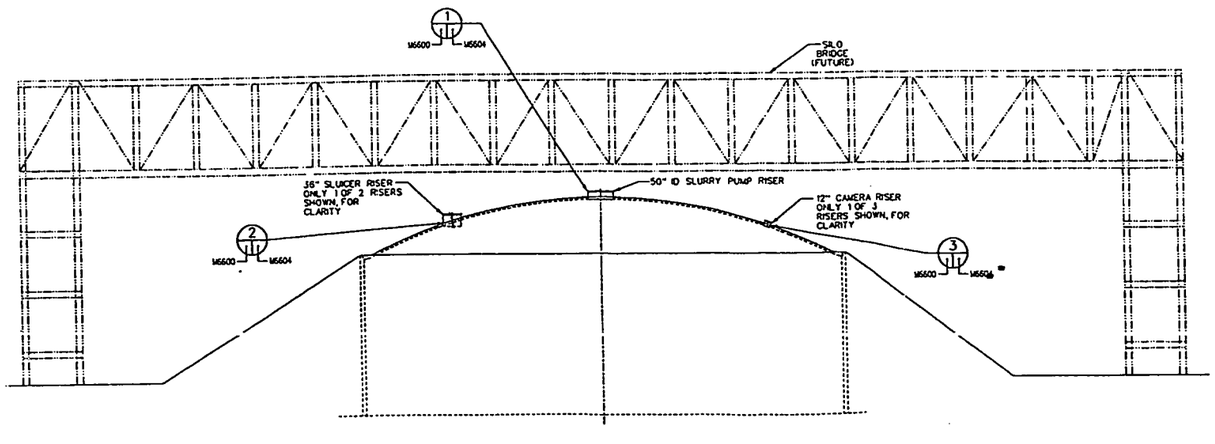

ELEVATION

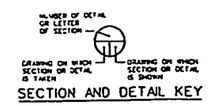

SECTION AND DETAIL KEY

NOTES:

1. ACTUAL LOCATIONS AND ELEVATION DETERMINED IN THE FIELD.
2. EXISTING RISERS OR OTHER APPURTENANCE SHOWN SINCE EXACT LOCATIONS AND ELEVAT. NOT KNOWN.

GENERAL NOTES:

1. THE REVISION 0 DRAWING SHALL BE USED TO PERFORM THE SILO 4 PENETRATION AND RISER INSTALLATION DEMONSTRATION.

REF DWG NO.	DRAWING TITLE
M6601	SLUICER MODULE RISER DETAILS
M6602	SLURRY MODULE RISER DETAILS
M6603	CAMERA RISER DETAILS
M6604	RISER PENETRATION CUTOUT DETAILS

REV. NO.	ISSUE OR REVISION PURPOSE - DESCRIPTION	DATE	REV. BY	APPR.
0	ISSUED FOR CONSTRUCTION	10/02/02	[illegible]	[illegible]

INITIALS AND DATE

UNITED STATES DEPARTMENT OF ENERGY
FERNALD ENVIRONMENTAL MANAGEMENT PROJECT

THIS DRAWING PREPARED BY
JACOBS

PROJECT NAME
AWR BOP OPTIMIZATION

DRAWING TITLE
MECHANICAL
SILO RISER ASSEMBLY GENERAL ARRANGEMENT
SILOS 1 AND 2

DRAWN BY	DATE	TECHNICAL LEAD	DATE	CHECKED BY	DATE
[illegible]	[illegible]	[illegible]	[illegible]	[illegible]	[illegible]

PLANT/BLDG NO.	FLOOR	SCALE	CLASS
		1/8"=1'-0"	U

SUBMITTED FOR 30% ISSUE	SUBMITTED FOR 60% ISSUE	SUBMITTED FOR 90% ISSUE
TECH LEAD	TECH LEAD	TECH LEAD
DATE	DATE	DATE

T.O. NUMBER	PROJECT NO.	DRAWING INDEX CODE NO.	SHEET NO.	REV. NO.
N/A	40710	94X-3900-M-01984	M6600	0

JEC PROJECT NO.	FILENAME
35M19606	94X3M1984.DGN

000021

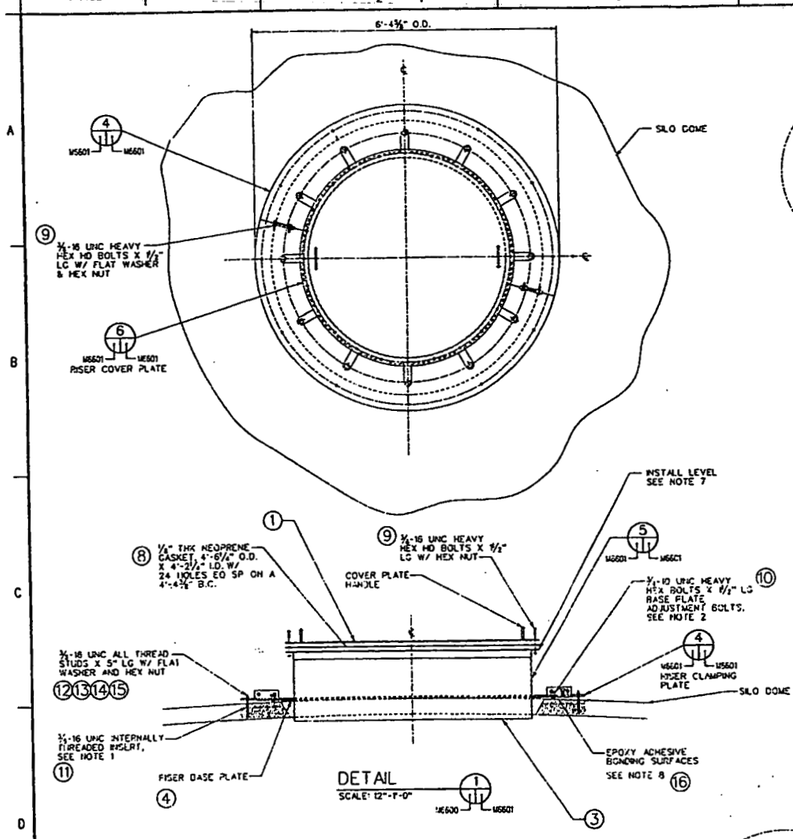

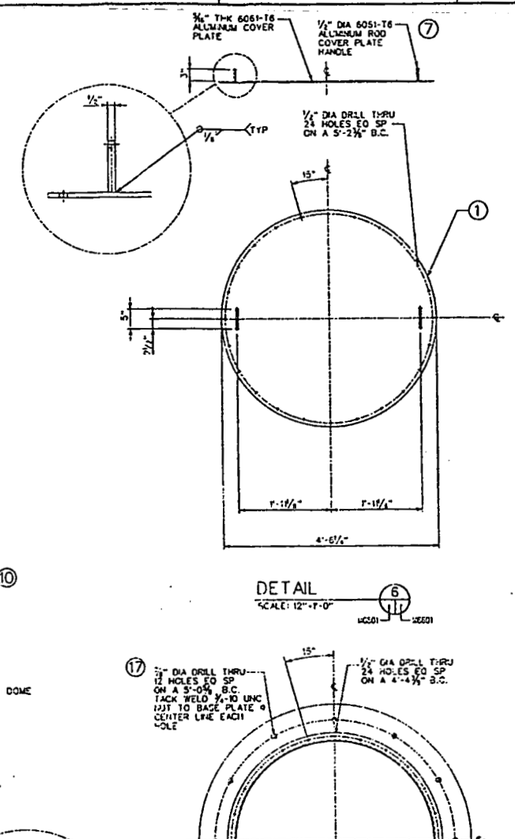

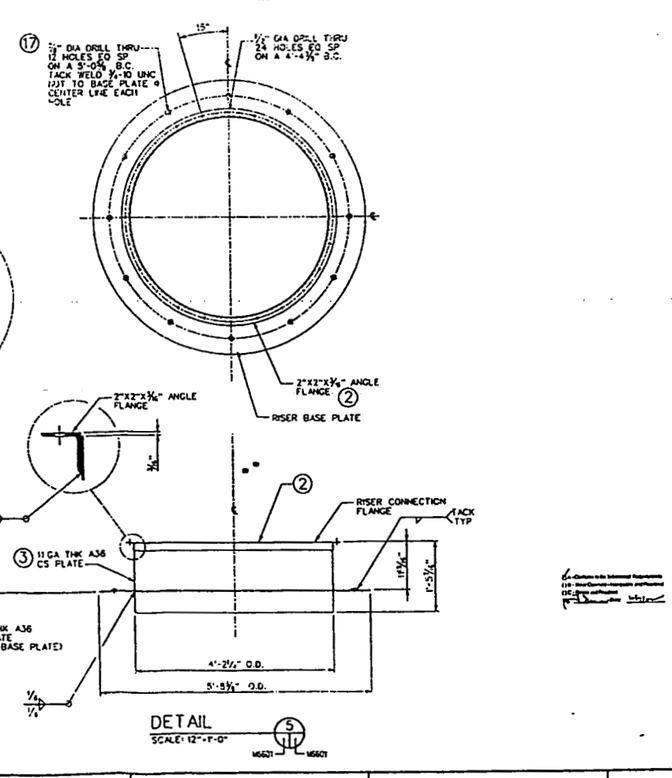

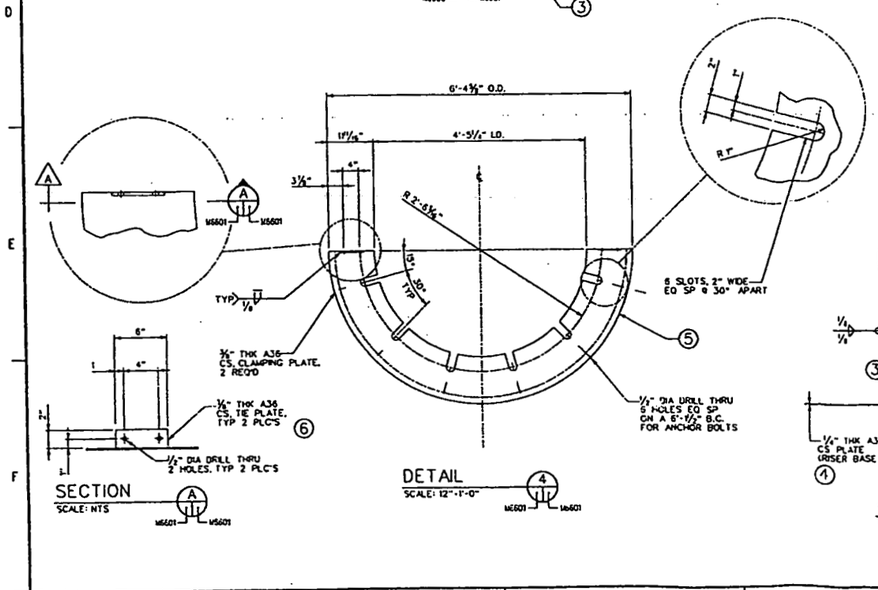

MATERIALS LIST (FOR ONE ASSEMBLY)		
ITEM	DESCRIPTION	QTY
1	3/4" THK 6061-T6 ALUM. COVER PLATE X 4'-6 1/4" O.D.	1
2	2"X2"X3/8" A36 CS ANGLE ROLLED TO 4'-2 1/2" I.D.	1
3	11 GA A36 CS SHEET 1'-5 1/4" WIDE ROLLED TO 4'-2 1/2" O.D.	1
4	1/4" THK A36 CS PLATE 4'-2 3/8" I.D. X 5'-8 3/8" O.D.	1
5	3/8" THK A36 CS PLATE 4'-5 1/4" I.D. X 6'-4 3/8" O.D.	2
6	1/2" THK A36 CS PLATE 0'-2" X 0'-6"	4
7	1/2" DIA 6061-T6 ALUM. ROD X 11" LG	2
8	1/4" THK NEOPRENE GASKET 4'-2 1/2" I.D. X 4'-6 1/4" O.D.	1
9	3/4"-16 UNC HEAVY HEX HEAD BOLTS X 1 1/2" LG W/HEX NUTS A-193 GR B7 STL AND ASTM A-194 GR 2H	28
10	3/4"-10 UNC HEAVY HEX HEAD BOLTS X 1 1/2" ASTM A-193-GR B7 STL	12
11	3/4"-16 UNC "HILTI" HIT-1SHORT INTERNALLY THREADED INSERTS	12
12	3/4"-16 UNC ALL THREAD STUDS X 5" LG ASTM A-193-B7-GR 2H STL	12
13	3/4"-16 UNC HEX NUTS ASTM A-194 GR 2H	12
14	3/4" FLAT WASHERS	12
15	3/4" HELICAL SPRING LOCK WASHERS	12
16	EPOXY ADHESIVE	.5 GAL
17	3/4"-10 UNC HEX NUTS ASTM A-194 GR 2H	12

NOTES:

1. "HILTI" HIT HY 150 INJECTION ADHESIVE ANCHORING SYSTEM WILL BE USED WITH HIT-1SHORT INTERNALLY THREADED INSERTS. ANCHOR STUDS SHALL BE PROVIDED WITH CHAMFERED ENDS.
2. WELDING PLAN TO BE SUBMITTED TO FLUOR FERNALD, INC. FOR APPROVAL.
3. ALL SHARP EDGES TO BE DEBURRED.
4. TO BE PAINTED IN ACCORDANCE WITH CONSTRUCTION SPECIFICATION SECTION 05900.
5. SEE SILO PENETRATION AND RISER INSTALLATION PLAN, DOC. No. 40710-PL-0013, FOR ADDITIONAL INSTALLATION DETAILS.
6. ONE (1) COMPLETE SLURRY RISER ASSEMBLY REQUIRED PER SILO.
7. THE RISER CONNECTION FLANGE SHALL BE LEVEL TO THE HORIZON ± 1/4" WHEN MEASURED FROM THE CENTER TO ANY POINT ON THE FLANGE PERIMETER.
8. THE MINIMUM EPOXY THICKNESS BETWEEN THE RISER BASE PLATE AND THE SILO DOME SHALL BE 1/4" ± 1/16".
9. SILO DOME THICKNESS VARIES FROM 4" TO 8" IN PLAN.

GENERAL NOTES:

1. THE REVISION 0 DRAWING SHALL BE USED TO PERFORM THE SILO & PENETRATION AND RISER INSTALLATION DEMONSTRATION.

STANDARD TOLERANCES UNLESS OTHERWISE SPECIFIED
UNDER 24"
X.XX ±0.01
X.XXX ±0.005
FRACTION ±1/16
ANGLES ±1°
OVER 24"
X.XX ±0.05
FRACTION ±1/8
ANGLES ±1°

DO NOT SCALE! WORK TO DIMENSIONS ONLY

REF DWG NO.	DRAWING TITLE
M6600	SILO RISER ASSEMBLY GENERAL ARRANGEMENT
M6602	SLURCER MODULE RISER DETAILS
M6603	CAMERA RISER DETAILS
M6604	RISER PENETRATION CUTOUT DETAILS

REV. NO.	ISSUE OR REVISION PURPOSE - DESCRIPTION	DATE	REV. BY	APPR.
0	ISSUED FOR CONSTRUCTION	12/02/02		

INITIALS AND DATE

UNITED STATES
DEPARTMENT OF ENERGY
FERNALD ENVIRONMENTAL MANAGEMENT PROJECT

THIS DRAWING PREPARED BY
JE JACOBS

PROJECT NAME
AWR BOP OPTIMIZATION

DRAWING TITLE
MECHANICAL
SLURRY MODULE RISER DETAILS
SILOS 1 AND 2

DRAWN BY	DATE	TECHNICAL LEAD	DATE	CHECKED BY	DATE

PLANT/BLDG. NO. | FLOOR | SCALE 12"=1'-0" | CLASS U

SUBMITTED FOR 30% CODE | SUBMITTED FOR 90% CODE | SUBMITTED FOR 100% CODE
TECH LEAD | TECH LEAD | TECH LEAD
DATE | DATE | DATE

I.D. NUMBER	PROJECT NO.	DRAWING INDEX CODE NO.	SHEET NO.	REV. NO.
N/A	40710	94X-3900-M-01985	M6601	0

JG PROJECT NO. 3SM19506 | FLOOR 5 4 3 2 1 BASEMENTS DOH

000022

4936

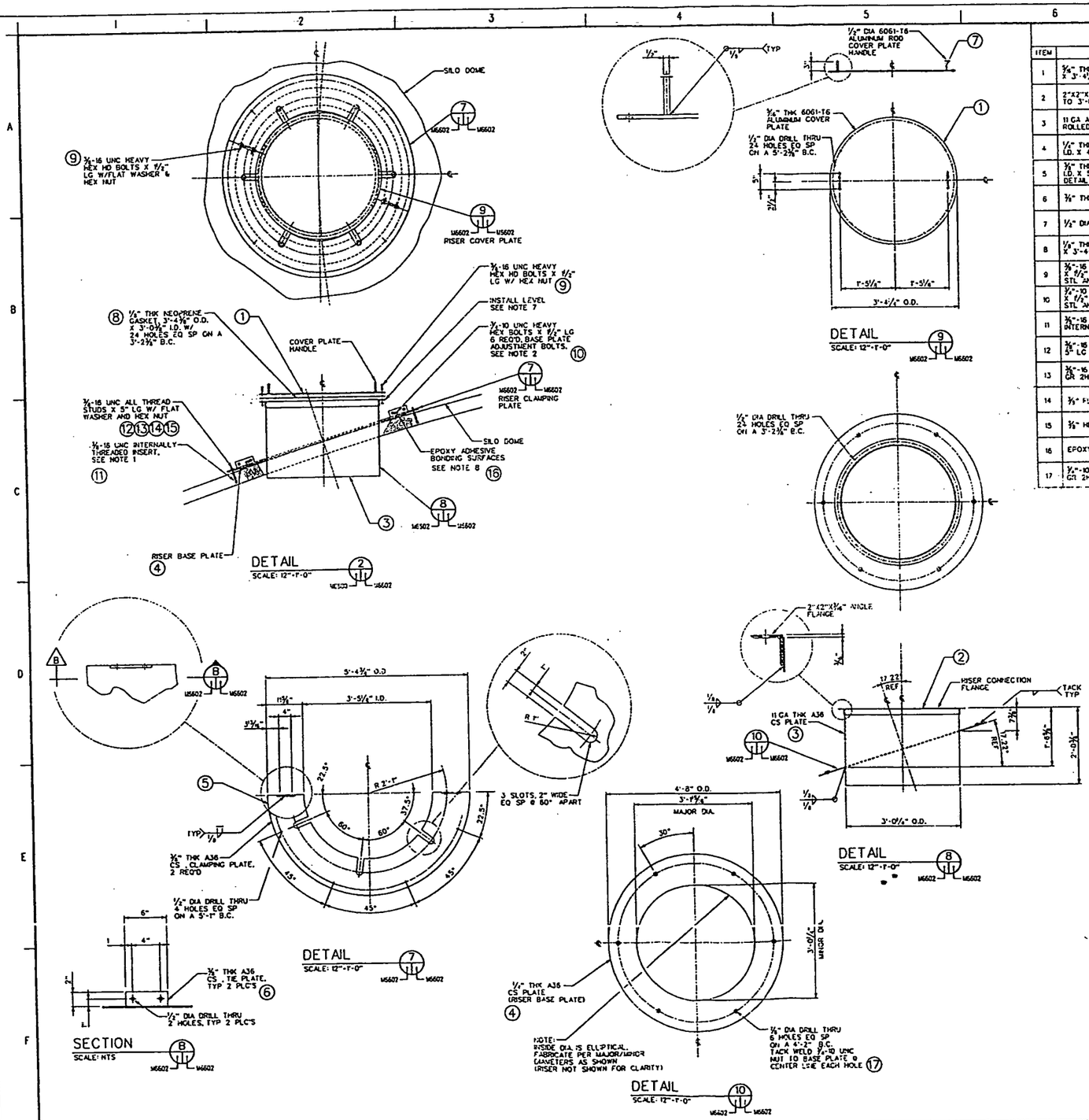

MATERIALS LIST (FOR ONE ASSEMBLY)

ITEM	DESCRIPTION	QTY
1	3/8" THK 6061-T6 ALUM. COVER PLATE X 3'-4 1/4" O.D.	1
2	2"x2"x1/4" A36 CS ANGLE ROLLED TO 3'-0 1/2" I.D.	1
3	11 GA A36 CS SHEET 2'-0 3/8" WIDE ROLLED TO 3'-0 1/4" O.D.	1
4	1/4" THK A36 CS PLATE 3'-0 1/2" I.D. X 4'-8" O.D. PER DETAIL 6	1
5	3/8" THK A36 CS PLATE 3'-5 1/4" I.D. X 5'-4 1/2" O.D. (11 CUTS 2, PER DETAIL 3)	1
6	3/8" THK A36 CS PLATE 0'-2" X 0'-6"	4
7	1/2" DIA 6061-T6 ALUM. ROD X 11" LG	2
8	1/2" THK NEOPRENE GASKET 3'-0 3/8" I.D. X 3'-4 7/8" O.D.	1
9	3/4"-16 UNC HEAVY HEX HEAD BOLTS X 1 1/2" LG W/HEX NUTS A1-3 GR B7 STL AND A-194 GR 2H	28
10	3/4"-10 UNC HEAVY HEX HEAD BOLTS X 1 1/2" LG W/HEX NUTS A1-3 GR B7 STL AND A-194 GR 2H	6
11	3/4"-16 UNC "HILTI" HIT-1 SHORT INTERNALLY THREADED INSERTS	8
12	3/4"-16 UNC ALL THREAD STUDS X 5" LG A-193 GR B7 STL	8
13	3/4"-16 UNC HEX NUTS ASTM A-194 GR 2H	8
14	3/4" FLAT WASHERS	8
15	3/4" HELICAL SPRING LOCK WASHERS	5
16	EPOXY ADHESIVE	2 GAL
17	3/4"-10 UNC HEX NUTS ASTM A-194 GR 2H	6

NOTES:

1. "HILTI" HIT HY 150 INJECTION ADHESIVE ANCHORAG SYSTEM WILL BE USED WITH HIT-1 SHORT INTERNALLY THREADED INSERTS. ANCHOR STUDS SHALL BE PROVIDED WITH CHAMFERED ENDS.
2. WELDING PLAN TO BE SUBMITTED TO FLUOR FERNALD, INC. FOR APPROVAL.
3. ALL SHARP EDGES TO BE DEBURRED.
4. TO BE PAINTED IN ACCORDANCE WITH CONSTRUCTION SPECIFICATION SECTION 09900.
5. SEE SILO PENETRATION AND RISER INSTALLATION PLAN, DOC. No. 40710-PL-0013, FOR ADDITIONAL INSTALLATION DETAILS.
6. TWO (2) COMPLETE SLUICER RISER ASSEMBLIES REQUIRED PER SILO.
7. THE RISER CONNECTION FLANGE SHALL BE LEVEL TO THE HORIZON ± 1/8" WHEN MEASURED FROM THE CENTER TO ANY POINT ON THE FLANGE PERIMETER.
8. THE MINIMUM EPOXY THICKNESS BETWEEN THE RISER BASE PLATE AND THE SILO DOME SHALL BE 1/4" ± 1/16".

GENERAL NOTES:

1. THE REVISION 0 DRAWING SHALL BE USED TO PERFORM THE SILO 4 PENETRATION AND RISER INSTALLATION DEMONSTRATION.

STANDARD TOLERANCES UNLESS OTHERWISE SPECIFIED
UNDER 24": X.XX ±0.01; X.XXX ±0.005; FRACTION ±1/32; ANGLES ±1°
OVER 24": X.XX ±0.05; FRACTION ±1/16; ANGLES ±1°

DO NOT SCALE! WORK TO DIMENSIONS ONLY

REF DWG NO.	DRAWING TITLE
M6600	SILO RISER ASSEMBLY GENERAL ARRANGEMENT
M6601	SLURRY MODULE RISER DETAILS
M6603	CAMERA RISER DETAILS
M6604	RISER PENETRATION CUTOUT DETAILS

REV. NO.	ISSUE OR REVISION PURPOSE - DESCRIPTION	DATE	REV. BY	APPR.
0	ISSUED FOR CONSTRUCTION	10/02/02		

INITIALS AND DATE

UNITED STATES DEPARTMENT OF ENERGY
FERNALD ENVIRONMENTAL MANAGEMENT PROJECT

THIS DRAWING PREPARED BY JACOBS

PROJECT NAME: AWR BOP OPTIMIZATION

DRAWING TITLE: MECHANICAL SLUICER MODULE RISER DETAILS SILOS 1 AND 2

SCALE: 12"=1'-0" | CLASS: U

FSI NUMBER: N/A | PROJECT NO. 40710 | DRAWING INDEX CODE NO. 94X-3900-M-01986 | SHEET NO. M6602 | REV. NO. 0

JE PROJECT NO. 35H19606 | FILENAME 94-01986 DGN

000023

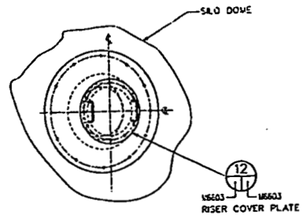

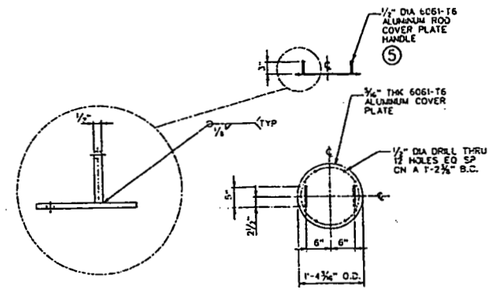

DETAIL
SCALE: 12"=1'-0"

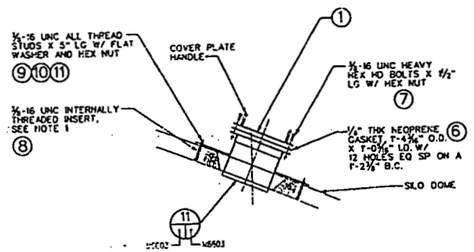

DETAIL
SCALE: 12"=1'-0"

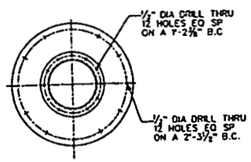

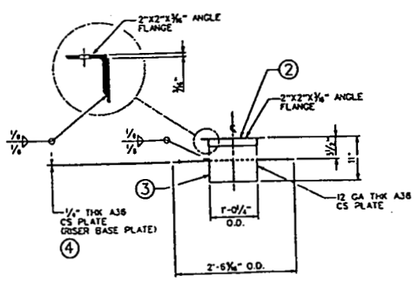

DETAIL
SCALE: 12"=1'-0"

MATERIALS LIST
(FOR ONE ASSEMBLY)

ITEM	DESCRIPTION	QTY
1	3/16" THK 6061-T6 ALUM. COVER PLATE X 1'-4 3/16" O.D.	1
2	2"X2"X3/16" A36 CS ANGLE ROLLED TO 1'-0 7/16" I.D.	1
3	11 GA A36 CS SHEET 10 13/16" WIDE ROLLED TO 1'-0 1/4" O.D.	1
4	1/4" THK A36 CS PLATE 1'-0 3/16" I.D. X 2'-6 3/16" O.D.	1
5	1/2" DIA 6061-T6 ALUM. ROD X 11" LG	2
6	1/8" THK NEOPRENE GASKET 1'-0 3/16" I.D. X 1'-4 3/16" O.D.	1
7	3/8"-16 UNC HEAVY HEX HEAD BOLTS X 1 1/2" LG W/HEX NUTS ASTM A-193 GR B7 STL AND 194 GR 2H	12
8	3/8"-16 UNC "HILTI" HIT-1SHORT INTERNALLY THREADED INSERTS	12
9	3/8"-16 UNC ALL THREAD STUDS X 5" LG ASTM A-193 GR B7 STL	12
10	3/8"-16 UNC HEX NUTS ASTM A-194 GR 2H	12
11	3/8" FLAT WASHERS	12
12	EPOXY ADHESIVE	1 GAL
13		
14		
15		

NOTES:

1. "HILTI" HIT HY 150 INJECTION ADHESIVE ANCHORING SYSTEM WILL BE USED WITH HIT-1SHORT INTERNALLY THREADED INSERTS. ANCHOR STUDS SHALL BE PROVIDED WITH CHAMFERED ENDS.
2. WELDING PLAN TO BE SUBMITTED TO FLUOR FERNALD, INC. FOR APPROVAL.
3. ALL SHARP EDGES TO BE DEBURRED.
4. TO BE PAINTED IN ACCORDANCE WITH CONSTRUCTION SPECIFICATION SECTION C9900.
5. SEE SILO PENETRATION AND RISER INSTALLATION PLAN, DOC. No. 40710-PL-0013, FOR ADDITIONAL INSTALLATION DETAILS.
6. THREE (3) COMPLETE CAMERA RISER ASSEMBLIES REQUIRED PER SILO.

GENERAL NOTES:

1. THE REVISION 0 DRAWING SHALL BE USED TO PERFORM THE SILO 4 PENETRATION AND RISER INSTALLATION DEMONSTRATION.

STANDARD TOLERANCES UNLESS OTHERWISE SPECIFIED:
UNDER 24"
X.XX : ±0.01
X.XXX : ±0.005
FRACTION : ±1/32
ANGLES : ±1°
OVER 24"
X.XX : ±0.05
FRACTION : ±1/16
ANGLES : ±1°

DO NOT SCALE! WORK TO DIMENSIONS ONLY

REF DWG NO.	DRAWING TITLE
M6600	SILO RISER ASSEMBLY GENERAL ARRANGEMENT
M6601	SLURRY MODULE RISER DETAILS
M6602	SLUICER MODULE RISER DETAILS
M6604	RISER PENETRATION CUTOUT DETAILS

REV. NO.	ISSUE OR REVISION PURPOSE - DESCRIPTION	DATE	REV. BY	APPR.
0	ISSUED FOR CONSTRUCTION	03/02/02		

UNITED STATES
DEPARTMENT OF ENERGY
FERNALD ENVIRONMENTAL MANAGEMENT PROJECT

THIS DRAWING PREPARED BY
JACOBS

PROJECT NAME
AWR BOP OPTIMIZATION

DRAWING TITLE
MECHANICAL
CAMERA RISER DETAILS
SILOS 1 AND 2

DRAWN BY | DATE | TECHNICAL LEAD | DATE | CHECKED BY | DATE
FLUOR | SCALE 12"=1'-0" | CLASS U
SUBMITTED FOR 30% ISSUE | SUBMITTED FOR 90% ISSUE | SUBMITTED FOR 100% ISSUE
TECH LEAD | TECH LEAD | TECH LEAD
DATE | DATE | DATE

FIL NUMBER	PROJECT NO.	DRAWING NUMB. CODE NO.	SHEET NO.	REV. NO.
N/A	40710	94X-3900-M-01987	M6603	0

JE PROJECT NO. 35H19606 | FILENAME 94X3987.DGN

000024