5442

40430-RP-0032

Compliance of the Fernald Silo 3: 4-ft Stack Sampling Location with ANSI N13.1Mixing Requirements

Prepared by:

Andrew R. McFarland, Ph.D, P.E., Inc.
Drawer S
College Station, TX 77841

Prepared for:

Mr. E.A. "Skip" Danielson IV
USDOE C/O Fluor Fernald Inc.
7400 Willey Road
Hamilton, OH 45013

Ref: Purchase Order Number 04FF0003-0000-000

December 21, 2003

000001

EXECUTIVE SUMMARY

A new stack (Silo 3: 4-ft), which is a potential source of radionuclide emissions that must be continuously monitored under 40CFR60, Subpart H, is being constructed at the Fernald Facility. The stack is 1.21 m (47.6 inches) diameter and will have a flow rate of 6.56 std m^3/s (13,900 scfm). Federal regulations require that the guidance of ANSI N13.1 must be used for the sampling protocol. This ANSI standard is based on the concept of single point representative sampling, where the sample is extracted from a location in the flow where both the fluid momentum and contaminant concentration are well mixed as manifested by the uniformity of velocity and tracer concentration profiles. The standard gives criteria that must be met for a sampling location to be acceptable. Results from mixing tests for one stack may be used to demonstrate acceptability of another (candidate) stack provided there is geometrical similarity and there is assurance of similarity of the flows as indicated by criteria placed on flow Reynolds numbers in the stacks.

The Silo 3: 4-ft stack is to be fitted with a commercially-available device (Air Blender®) to enhance the mixing as a means of achieving compliance with the ANSI requirements. This mixer has been previously tested and found to produce conditions suitable for single point representative sampling at a distance of 3.6 stack diameters downstream from its exit plane. Because the proposed sampling location in the Silo 3: 4-ft stack is 4.6 diameters from the mixing element, even better mixing should be obtained than was observed in the previous testing.

Tests with the similar arrangement, where there was an Air Blender® followed by a straight duct, were performed on a 1:5.1 scale model of a stack that is to be constructed at a Mixed Fuel Fabrication Facility (MFFF) in Savannah River. The MFFF stack is to be 2.59 m (102 inches) diameter and will operate under normal conditions of 90.4 std m^3/s (190,000 scfm) although there is a possible emergency condition with a flow rate of 38.4 std m^3/s (81,000 cfm). When the scale model of the MFFF stack was tested without a mixing element, the coefficient of variation (*COV*) of tracer gas measurements at the sampling location was 77%. After insertion of an Air Blender® into the flow system the *COV* was 11.2% at the normal flow rate operating condition. The ANSI standard stipulates the *COV* must not exceed 20%. Additionally, tests were performed, with the mixer in place, to determine the *COV*s of velocity and 10 μm aerodynamic diameter aerosol particles. For the 1:5.1 scale model of the MFFF stack, the results showed values significantly below the ANSI requirements. At the normal operating condition, the *COV*s for velocity and aerosol particles were 5.9% and 5.4%, respectively; whereas, the ANSI requirement is that the *COV*s of both must be ≤20%. Flow swirl in the scale model of the MFFF was 4.9° at the normal operating condition as compared with the ANSI upper acceptable limit of 20°.

Because the ANSI standard permits use of an existing body of data from tests with an acceptable sampling location in a geometrically similar stack as a means for demonstrating the suitability of the sampling location in the candidate stack, and because the use of an Air Blender® has been shown to produce acceptable mixing in the geometrically similar mixing configuration; it is recommended that qualification of the sampling location in the Silo 3: 4-ft stack be based on the use of this surrogate approach. Results of the experiments with the MFFF stack and a second set of data, which was obtained with a laboratory-scale model, suggest that the 4.6 diameter sampling location in the Silo 3: 4-ft stack will be acceptable

under the mixing requirements of ANSI N13.1. Field tests will need to be performed to verify the suitability of the sampling location, which will involve measurement of the velocity profile at the sampling location. Essentially, those data must show that the velocity *COV* is between 0.9% and 12.9%.

TABLE OF CONTENTS

EXECUTIVE SUMMARY i

INTRODUCTION 1

Mixing Requirements of ANSI N13.1 1

Sampling Locations in Geometrically Similar Stacks 3

Means for Demonstrating Compliance of Fernald Silo 3: 4-ft Stack with ANSI N13.1 Mixing Requirements 5

DESCRIPTION OF FERNALD SILO 3: 4-FT STACK 5

RESULTS FROM PREVIOUS TESTS WITH AIR BLENDER® MIXERS 6

Laboratory-Scale Research Tests of Air Blender® 6

Savannah River Mixed Oxide Fuel Fabrication Facility Main Stack 8

Facility Description 8

Modeling Effort 9

Results and Discussion 11

Use of MFFF Test to Demonstrate Compliance of the Fernald Silo 3: 4-ft Stack. 13

SUMMARY STATEMENT 15

REFERENCES 16

LIST OF TABLES

Table 1. Results from selected tests on a 1:5.1 scale model of the MFFF stack with and without an Air Blender® (from Han et al., 2003). 18

Table 2. Comparison of mixing results from a 1:5.1 scale model of the proposed Savannah River MFFF stack with ANSI criteria. 19

LIST OF FIGURES

Figure 1. The Silo 3: 4-ft stack at Fernald. 20

Figure 2. An S-Series Air Blender® that is used to enhance mixing of fluid momentum and tracers with the bulk flow. 21

Figure 3. Laboratory-scale apparatus used to characterize mixing. 22

Figure 4. Results of laboratory-scale experiments with an Air Blender®. 23

Figure 5. The main stack of the planned MFFF stack at the Savannah River Site. 24

INTRODUCTION

Silo 3 of the DOE Fernald Facility contains "cold" metal oxide waste that was generated during the now-terminated operation of the Feed Materials Production Center (presently known as the Fernald Closure Project). The air flow associated with processing of this waste material will be discharged through the Silo 3: 4 ft stack.

The US EPA has cognizance over emissions of radionuclides from stacks and ducts at DOE facilities, and they have promulgated in 40CFR61, Subpart H (U.S. EPA, 2002a) a standard that limits the dose of any member of the public to 10 mrem/year. For assurance of compliance with the dose standard, EPA requires continuous monitoring of any emission point that could contribute a dose of more than 0.1 mrem/year. Meteorological models for dispersion of contaminants are used to predict the dose. When determining which emission points must be monitored, no credit is given for any air pollution control equipment in the air flow system (e.g., HEPA filters). The Silo 3: 4 ft stack of the DOE Fernald facility, which is currently under construction, must be monitored under this Federal Regulation.

Mixing Requirements of ANSI N13.1

For monitoring the emissions of particulate matter, EPA considers continuous collection of samples on filters, with retrospective analysis, to be the equivalent of continuous monitoring. Real time data do not need to be collected to fulfill the monitoring requirements. Under 40CFR61, Subpart H, EPA specifies that the sampling should follow the guidance of ANSI N13.1 (ANSI/HPS, 1999). The ANSI standard is based on the concept of single point representative sampling, where a sample is extracted from a stack or duct at a location where both the fluid momentum and contaminant concentration are well-mixed as manifested by the

shape of the velocity and tracer concentration profiles. For assurance that representative samples are acquired from a particular location in a stack or duct, ANSI N1.31 requires:

1. *The coefficients of variation of the velocity, tracer gas concentration, and 10 μm aerodynamic diameter (AD) aerosol particle concentration profiles must be ≤20% over an area that includes at least the center 2/3 of the cross sectional area of the stack or duct.*

   An EPA Method 1 grid of traverse points (EPA, 2002b) is generally used to establish the points in the flow cross section at the sampling location where measurements are made of tracer concentration and velocity. The coefficient of variation (*COV*) for variables such as the stack gas velocity or tracer concentration is defined as:

$$COV = \frac{s_x}{\bar{X}} \tag{1}$$

where:

$$s_x = \frac{1}{N-1}\sum_{i=1}^{N}\left(x_i - \bar{X}\right)^2 \tag{2}$$

and:

$$\bar{X} = \frac{1}{N}\sum_{i=1}^{N} x_i \tag{3}$$

Here: x_i is the value of the variable (e.g., velocity) at the ith traverse point in the flow cross section at the sampling location; s_x is the unbiased standard deviation of the set of measurements, and $\bar{X}$ is the mean value of the measurements.

2. *At no point on an EPA Method 1 grid shall the concentration of tracer gas be more than 30% greater than the mean concentration.*

   If this criterion and those of Item 1 are not met at the sampling location, it may be possible to enhance the mixing through engineering the flow as a means of meeting the compliance criteria.

3. *The flow swirl shall not exceed 20°.*

   Here the flow swirl is defined as the average, across an EPA Method 1 grid, of the absolute values of the angles between the velocity vectors and the duct centerline. This parameter is measured using protocol given in EPA Method 1 (EPA, 2002b).

Sampling Locations in Geometrically Similar Stacks.

The ANSI standard states that compliance with mixing requirements can be demonstrated by conducting tests on an existing stack; however, the standard also allows testing on a geometrically similar scale model of a stack. This is in recognition that testing may be impractical for some of the existing nuclear stacks because of contamination and access issues. In addition, the use of scale model testing allows sampling locations to be selected and qualified in new facilities prior to the time construction commences. Scale model testing is also of great benefit in situations where the mixing must be enhanced, as tests on proposed mixing concepts are much easier to conduct in a laboratory environment than in the field.

The ANSI Standard recognizes that there are often multiple stacks of similar design. Because mixing is primarily controlled by stack geometry, if one stack of a given design is qualified, then the mixing should be similar in other stacks of the common design, For such

situations it is not necessary to completely evaluate the sampling location in a candidate stack, provided:

1. *A geometrically similar stack has been tested and the sampling location has been found to comply with the mixing requirements. The prior testing may have been conducted in either a stack or duct in the field, or with a scale model.*
2. *The product of the mean velocity and the hydraulic diameter at the test section of the candidate stack or duct is within a factor of six of that of the tested stack or duct. Also, the diameter of the candidate stack or duct shall be at least 250 mm at the sampling location. The Reynolds numbers of both the candidate stack and the tested stack must be greater than 10,000.*

   The Reynolds number, *Re*, is defined as:

$$Re = \frac{\rho V_{ave} D}{\mu} \tag{4}$$

   where: ρ = air density; V_{ave} = average air velocity at the sampling location; D = duct diameter; and, μ = air viscosity.

3. *The COV of velocity in the candidate stack must not exceed 20% over an area that includes at least the center 2/3 of the cross section of the stack or duct at the test section.*
4. *The velocity coefficients in the candidate stack and the previously tested stack must not differ by more than 5%.*
5. *The sampling location in the candidate stack is placed at a geometrically similar location to that in the previously tested stack.*

Essentially these clauses of the ANSI standard allow a stack to be qualified if a similar unit has been previously tested and if the velocity profiles in the candidate stack and the previously tested stack are approximately the same. This requires that velocity measurements be made on the candidate stack; however, those measurements would normally be required as part of a radiological compliance program anyway.

Means for Demonstrating Compliance of Fernald Silo 3: 4-ft Stack with ANSI N13.1 Mixing Requirements.

A mixing element (Blender Products Inc, Denver, CO), which has been tested at Texas A&M University (Han et al., 2003), will be placed in the Fernald Silo 3: 4-ft stack at the location shown in Figure 1. The Air Blender® (Figure 2) mixes a flow by creating two counter-rotating vortices, which cause an intermingling of large-scale flow eddies. In this report, the mixing results from the previous studies will be used to show the degree of mixing that is to be anticipated in the Fernald Silo 3: 4-ft stack.

DESCRIPTION OF FERNALD SILO 3: 4-FT STACK

The Silo 3: 4-ft stack discharges effluent air from the Silo 3 remediation process. With reference to Figure 1, three flow streams enter the stack near its base. The total flow rate into the stack is 6.56 std m^3/s (13,900 scfm), which is comprised of 3.40 std m^3/s (7,200 scfm) of building ventilation air entering through a 24-inch diameter port, 2.60 std m^3/s (5,500 scfm) of process ventilation air entering through a 20-inch diameter port, and 56.7 std m^3/s (1,200 scfm) of pneumatic retrieval air entering through a 10-inch diameter port. Process ventilation

air will be HEPA-filtered upstream of the stack, essentially leaving only low levels of Radon-222 to be discharged to the environment. The flow through the entry ports is anticipated to be constant; and, when there is airflow through one port, there will be airflow through all.

It is to be anticipated that there will be significant mixing of the airflows through the three inlet ports within the base of the stack. Indeed, it may be that the mixing action in the base of the stack together with the mixing distance of 8.9 diameters between the exit plane of the stack base (Elevation 27'-2") and sampling probe entrance plane, would be adequate for compliance with the mixing criteria of ANSI N13.1. By adding the mixing element at the 44'-2" Elevation, compliance should be assured.

RESULTS FROM PREVIOUS TESTS WITH AIR BLENDER® MIXERS

An Air Blender® was tested in the laboratory to characterize the mixing as a function of downstream distance in a succeeding straight circular duct (McFarland et al., 1999). Tests have also been conducted where an Air Blender® was inserted into a scale model of a nuclear stack (Han et al., 2003) and the results are being used to demonstrate compliance with ANSI N13.1. The results of these previous tests will be considered herein with respect to predicting the degree of mixing at the sampling location of the Fernald Silo 3:4-ft stack.

Laboratory-Scale Research Tests of Air Blender®.

Tests with various types of mixing elements were conducted in a laboratory environment by McFarland et al (1999). Airflow from a blower was passed through a 'Generic' mixer (McFarland et al., 1998), Figure 3, to uniformize the velocity profile and then into a154 mm

(6.05 inch) diameter duct. The air was then passed through a flow straightener (a set of soda straws), which eliminated any flow swirl and reduced the scale of the flow turbulence to about 6 mm (the diameter of the soda straws). A gas injection location was setup at a distance of one diameter downstream from the exit plane of the flow straightener. Dilute SF_6 was introduced at the center of the duct and at four locations that were 90° apart and were within 20% of the duct diameter from the wall. The mixing element was placed in the duct at a distance of 1D from the gas injection port. Measurements were made of the tracer gas concentration across an EPA Method 1 grid at various locations downstream from the mixing element. The downstream face of the mixing element was designated as the "zero" point for mixing distances. Velocity measurements were also made at the traverse points of the EPA Method 1 grid.

The *COV* of tracer gas for a given downstream sampling location is reported as the highest value for any of the five release points. Results of these experiments are shown in Figure 4. At the distance of 4.6 D, which is the dimensionless distance between the Air Blender® and the sampling location in the Silo 3: 4-ft stack, the *COV* of velocity is 2% and the *COV* of tracer gas is 8%. Also, it should be noted that the *COV* of tracer gas decreases as the downstream distance from the mixing element increases. However, as a seeming paradox, for a flow that has an initially uniform velocity profile, as the downstream distance increases there could be a slight increase in the *COV* of the velocity profile due to the development of the boundary layers. At very large distances downstream, e.g., 100D, the flow would be fully developed and velocity profile would have asymptotically reached a *COV* value of about 5%. On the other hand, the SF_6 gas concentration *COV*s, should

asymptotically approach 0%, as SF_6 is an inert gas that is reflected from the duct walls and therefore will become completely mixed with the bulk flow.

The tests were run at two velocities, 5.6 m/s and 12.2 m/s, which provide Reynolds numbers of 5.4×10^4 and 1.17×10^5, respectively. ANSI N13.1 requires that the Reynolds numbers be greater than 10,000, which is satisfied by these experiments. However, for the data to be used for demonstrating the suitability of the sampling location in a geometrically similar stack, the product of stack diameter and velocity of one stack must not differ from that product for the second stack by a factor of more than six. This latter requirement is tantamount to stipulating that the Reynolds numbers of the two stacks must not differ by a factor of more than 6.0. For the Silo 3: 4-ft stack, the Reynolds number is 4.2×10^5, which implies that the Reynolds number ratio between prototype (the Silo 3: 4-ft stacks and the laboratory-scale model) is 7.7 for the lower velocity in the laboratory scale model (5.6 m/s) and 3.6 for the higher velocity (12.2 m/s). Thus, the higher velocity values in the laboratory-model results could be used to show that acceptable velocity and tracer gas profiles were obtained; however, data on flow swirl and 10 μm AD aerosol particle concentration profiles are not available, so the complete qualification cannot be achieved by reference to the laboratory-scale experiments.

Savannah River Mixed Oxide Fuel Fabrication Facility Main Stack.

Facility Description. A new mixed oxide fuel fabrication facility (MFFF) is planned for the DOE Savannah River Site. The MFFF will have a main exhaust air stack that is 2.59 m (102 inches) in diameter with a flow rate of 90.4 std m^3 /s (190,000 scfm) under normal conditions and 38.4 std. m^3/s (81,000 scfm) under potential emergency conditions. The stack will

discharge a mixture of clean ventilation air from occupied environments and airflows from potential radionuclide emission sources (e.g., glove box exhausts). As a consequence, the stack must be continuously monitored in accordance with the requirements of ANSI N13.1. During the design phase of the project, a 1:5.1 scale model of a proposed stack was constructed and tested to select a suitable sampling location.

Modeling Effort. The model of the MFFF stack, Figure 5, has a single inflow that handles the air flow from several locations, which are designated as MDE, POE, HDE and VHDE. The flow enters a plenum chamber that contains a tornado damper, which directs the flow downwards. Subsequent to the dampers, the flow is directed upwards by a ramp and then enters the base of the stack. In the stack, the flow passes through four layers of security grilles and then into an Air Blender®. The sampling location is 3.25 diameters downstream of the exit plane of the Air Blender®.

Without the Air Blender®, the geometry of this particular exhaust airflow does not lend itself well to producing mixing that is acceptable for single point representative sampling. As an example, assume that there is contamination in the flow at the bottom of the inlet duct (Figure 1). As the flow passes into the tornado damper, there is little opportunity for cross stream mixing, and as the flow passes through the damper, the large scale eddies, which are essential for attaining adequate mixing, are eliminated. When the flow passes through the ramp area, there is not only little opportunity for mixing, but the flow is forced by inertial effects to the outer edge (side away from the flow entrance) of the plenum prior to entering the stack. As the flow passes through the security grilles, the large scale eddies are again eliminated, so any irregularities in the concentration profile are retained when the flow enters the stack. This results in persistence into the stack of any initially high contaminant

concentration region of the bulk flow, which in the case of this example would be on the left side of the stack.

It would be possible to simply use a higher stack to achieve mixing; however, this would require a significant addition to the originally proposed stack height, which was on the order of 4 diameters. As an example, Anand et al. (2003) has shown that a distance of approximately 28D was required to attain 20% *COV* values for tracer gas concentration in a straight duct, when the initial flow was unidirectional with an initial turbulent intensity of 10%, and a small value of turbulence scale (about 6% of the duct diameter). Because the turbulent scale would be larger in the MFFF stack, suitable mixing would be obtained at a shorter distance than the 28D observed by Anand.

To achieve suitable mixing in a short stack at the MFFF, an Air Blender® was added just downstream of the security grills. However, before making the decision to use an Air Blender®, tests were conducted without the mixing element in the flow system. With reference to Table 1, a comparison is shown of the velocity and 10 μm AD aerosol particle profiles at a sampling location of 3.25D. Two velocities, which are associated with the normal and emergency conditions, were tested. The velocity profiles are acceptable even without a mixing element, having a value of 8.7% for the emergency flow condition. However, the *COV* for aerosol particles is unacceptable, having a value of 77% for the emergency flow condition. In contrast, when the Air Blender® was placed in the flow system, the corresponding emergency flow *COV* values for velocity and 10 μm AD aerosol particles were 7.9% and 4.3%, respectively.

000015

Results and Discussion. Data for the complete set of tests, at a sampling station located 3.25D downstream of the Air Blender®, are given in Table 2. From this data summary, it may be noted that the results are all in compliance with the requirements of ANSI N13.1. In particular, these requirements of ANSI N13.1 and the comparative experimental data are:

1) *The COVs of velocity, tracer gas, and 10 μm AD aerosol particles must not exceed 20% over a set of EPA Method 1 traverse points that encompasses at least the center 2/3 of the stack area.*

- The *COV*s for velocity were 7.9% for the emergency flow condition and 5.9% for normal flow. The grid used for these tests was the center 12 points of an EPA Method 1 grid, so the test area encompasses the center ¾ of the stack area.
- The *COV*s for tracer gas were 10.2% for the emergency flow condition and 11.2% for the normal condition. These *COV*s are the highest values for any of the five release points, where the release points were upstream of the security grilles. Again, these measured values are well within the ANSI requirement.
- The *COV*s for 10 μm diameter aerosol particles were 4.3% for the emergency flow condition and 5.4% for the normal condition. For these tests, a single release point was used, namely, at the center of the stack just upstream of the security grilles. The test protocol involved generation of a heterogeneous oil mist that was analyzed with an optical particle counter (OPC). The OPC had an electronic window to count particles in the size range of 9 – 11 μm optical diameter, which, because the density of the oil was 870 kg/m^3, provided a size range of 8.9 to 10.7 μm AD.

The results from these experiments show the *COV*s of velocity, tracer gas, and 10 μm AD (nominal size) aerosol particles are all well within the limits specified in ANSI N13.1. These data are for a sampling location of 3.25D and even better results would be obtained at a distance of 4.6D. Also, the fact that approximately the same *COV* values are obtained for both the emergency and normal flow conditions shows the mixing is controlled by the geometry of the system rather than flow conditions, i.e., Reynolds number.

2) *The concentration of tracer gas at any traverse point on an EPA Method 1 grid shall not exceed the mean value by more than 30%.*

For the emergency flow condition, the maximum tracer gas concentration at any traverse point and for any release location was 18% greater than the mean concentration. The corresponding value for the normal flow condition was 17%. These values are well within the ANSI N13.1 limit of 30%.

3). *The flow swirl must not exceed 20°.*

For these tests, the EPA Method 1 protocol was used, where an S-type pitot is placed in the flow with the pitot tube ports oriented normal to the duct axis. The pitot tube is rotated until a null reading is obtained, and the angle of rotation is noted. The average over all traverse points of the absolute values of the rotational angle is used as the swirl angle. The values of the swirl angle associated with the emergency and normal flow conditions were 2.8° and 4.9°, respectively. These values are well within the ANSI N13.1 limit of 20°.

Use of MFFF Tests to Demonstre Compliance of the Fernald Silo 3: 4 -ft Stack. The protocol of the ANSI Standard for using data from one stack to qualify a second stack places requirements on the modeling effort. With respect to qualifying the Fernald stack through use of the MFFF data, the issues that must be considered the corresponding responses, are:

1. *A geometrically similar stack must have been tested and found to be acceptable for single point representative sampling.*

   Here, the controlling element for effecting stack mixing is the Air Blender®. The mixing created by this device is quite independent of upstream flow conditions as may be noted from a comparison of the test results from the laboratory-scale device and the MFFF scale model. Upstream of the Air Blender® in the laboratory-scale device, the flow was made unidirectional and low turbulence through use of flow straighteners, while the flow entering the MFFF model was highly disturbed by the presence of tornado dampers and a flow ramp. Yet, at a distance of 3.6D downstream from the Air Blender® in the laboratory scale system, the *COV*s of velocity and tracer gas were approximately 2% and 12%; while at that same distance in the MFFF stack the *COV*s of velocity and tracer gas were about 6% and 11%, respectively, for the normal flow condition. For the laboratory-scale device, at the distance of 4.6D, the velocity and concentration profile *COV*s were 2% and 8%, respectively.

   Because mixing is dependent on the Air Blender®, the geometrically similar requirement of the ANSI standard is met by the MFFF and Silo 3: 4-ft stacks by considering the relevant geometry to be the Air Blenders® followed by straight ducting. The downstream distance between the mixing element and the sampling

location in the MFFF stack is 3.6D while that of the Silo 3:4-ft stack is 4.6D, so even better mixing could be anticipated with the Silo 3 stack (Figure 4).

2. *The product of the flow velocity and stack diameter of the candidate stack and the tested stack must be within a factor of six. The candidate stack must be at least 250 mm diameter and the Reynolds numbers of both stacks must be greater than 10,000.* First, the requirement for the product of flow velocity and stack diameter to be within a factor of six for the two stacks is equivalent to requiring the Reynolds numbers to be within a factor of six (provided the flow density and viscosity are approximately the same). The two flow conditions in the scale model of the MFFF stack provided Reynolds numbers of 4.9×10^5 (normal flow condition) and 2.4×10^5 (emergency flow condition). For the Silo 3: 4-ft stack, the Reynolds number will be 4.2×10^5. Thus, the Reynolds numbers for the tested stack (MFFF) and the candidate stack are a factor of 1.17 for the normal operating condition of the MFFF stack and a factor of 1.75 for the emergency condition of the MFFF stack. Second, the Silo 3: 4-ft stack will be 2590 mm diameter, which is well in excess of the minimum stack size of 250 mm. Third, Reynolds numbers (test conditions for the MFFF scale model and operating conditions for the Silo 3: 4-ft stack) are all $>10^4$.

3. *The COV of velocity in the candidate stack must not exceed 20% at the test location.* Field tests will need to be performed to demonstrate that the velocity *COV* of the Silo 3: 4-ft stack does not exceed 20% at the sampling location. It is likely that field tests to determine flow rate through the Silo 3: 4 ft stack will be performed as part of a compliance program. The individual data points that are used in the flow rate calculation can also serve as the data base for calculating the velocity *COV*.

4. *The COVs of velocity of the tested stack and the candidate stack must not differ by more than 5%.*

   The results of the field tests with stack velocity must also show *COV*s that are between 0.9% (5% less than the value observed for the MFFF stack at normal conditions) and 12.9% (5% more than the value observed for the MFFF stack at emergency conditions.

SUMMARY STATEMENT

Mixing in the Fernald Silo 3: 4-ft stack of both fluid momentum and tracer contaminants, as manifested by the *COV*s of velocity, tracer gas and 10 μm AD aerosol particles, will be controlled by an Air Blender® rather than by either flow properties (e.g., Reynolds number) or flow disturbances upstream of the Air Blender®. The ANSI standard allows acceptable mixing data from a geometrically similar stack to be used to qualify a candidate stack provided certain criteria are met.

Tests to verify compliance with ANSI N13.1 have been performed on a model of the Mixed Fuel Fabrication Facility. That model utilized an Air Blender® and the test results showed the mixing was well within the compliance bounds of the ANSI standard. The mixing region of the Fernald Silo 3: 4-ft stack is geometrically similar to that of the MFFF stack, except that the distance between the mixing element and the sampling location in the Silo 3: 4-ft stack is greater than that in the MFFF stack. As a consequence, the mixing should be even better in the Silo 3: 4-ft stack. The ANSI N13.1 criteria for use of surrogate testing are met by using the MFFF results for the Silo 3:4-ft stack; however, the velocity

profile in the actual Silo 3: 4-ft stack will need to be tested for assurance that the velocity *COV* is between 0.9% and 12.9%.

REFERENCES

Anand, M.; McFarland, A.R.; Rajagopal, K.R. (2003). Gas mixing for achieving suitable conditions for single point aerosol sampling in a straight tube: Experimental and numerical results. *Health Physics* 84: 82-91).

ANSI/HPS (1999). Sampling and monitoring releases of airborne radioactive substances from the stacks and ducts of nuclear facilities. American National Standard ANSI/HPS N13.1-1999. Health Physics Society, McLean, VA.

Han, T.; Ortiz, C.A.; O'Neal, D.L.; McFarland, A.R. (2003). Main stack sampling system for the mixed oxide fuel fabrication facility with tornado dampers upstream of mixing plenum. Final Report, Part III. Prepared for Duke Cogema Stone & Webster, LLC, Charlotte, NC. Department of Mechanical Engineering, Texas A&M University, College Station, TX.

McFarland, A.R.; Anand, N.K.; Ortiz, C.A.; Gupta, R.; Candra, S.; McManigle, A.P. (1998). A generic mixer for achieving suitable conditions for single point representative sampling. *Health Physics* 76:1-10.

McFarland, A.R.; Gupta, R.; Anand, N.K. (1999). Suitability of air sampling locations downstream of bends and static mixing elements. *Health Physics* 77: 703-712.

U.S. EPA. (2002a). National emissions standards for emissions of radionuclides other than radon from Department of Energy facilities. 40CFR61, Subpart H. U.S. Code of Federal Regulations. Government Printing Office, Washington, DC.

U.S. EPA. (2002b). Method 1 – Sample and velocity traverses for stationary sources. U.S. Environmental Protection Agency. 40CFR60, Appendix A, Method 1. U.S. Government Printing Office, Washington, DC.

Table 1. Results from selected tests on a 1:5.1 scale model of the MFFF stack with and without an Air Blender® (from Han et al., 2003).

Criterion	ANSI/HPS N13.1 Requirement	Stack without Air Blender®	Stack with Air Blender®
COV of velocity over the center 2/3 if the stack area	≤20%	8.7%[a,c]	7.9%[a,c], 5.9%[b,c]
COV of 10 μm AD aerosol particle concentration over the center 2/3 of the stack area	≤20%	77.2%[a,c,d]	4.3%[a,c,d], 5.4%[b,c,d]

a) Stack velocity for emergency conditions: ME+VDE. Velocity: 7.9 m/s (1499 ft/min).

b) Stack velocity for normal conditions: ME+VDE and HDE+VHDE. Velocity: 15.6 m/s (3078 ft/min).

c) Based on use of the center 12 traverse points of a 16 point EPA Method 1 grid.

d) Based on use of an optical particle counter with a 9 – 11 μm electronic particle size window.

Table 2. Comparison of mixing results from a 1:5.1 scale model of the proposed Savannah River MFFF stack with ANSI criteria.

Criterion	ANSI N13.1 Requirement	Measured Value
COV of velocity over the center 2/3 of the stack area	≤20%	7.9%[a,c], 5.9%[b,c]
COV of tracer gas over the center 2/3 of the stack area	≤20%	10.2%[a,c], 11.2%[b,c]
COV of 10 μm AD aerosol particle concentration over the center 2/3 of the stack area	≤20%	4.3%[a,c,e], 5.4%[b,c,e]
Maximum tracer gas concentration over an EPA Method 1 grid	No more than 30% higher than mean concentration	18%[a,d], 17%[b,d] higher than the mean value
Average swirl angle	≤20°	2.8° [a,d], 4.9° [b,d] for yaw angle

a) Stack velocity for emergency conditions: ME+VDE. Velocity: 7.9 m/s (1499 ft/min).

b) Stack velocity for normal conditions: ME+VDE and HDE+VHDE. Velocity: 15.6 m/s (3078 ft/min)

c) Based on use of the center 12 traverse points of a 16 point EPA Method 1 grid.

d) Based on use of all traverse points of a 16 point EPA Method 1 grid.

e) Based on use of an optical particle counter with a 9 – 11 μm electronic particle size window.

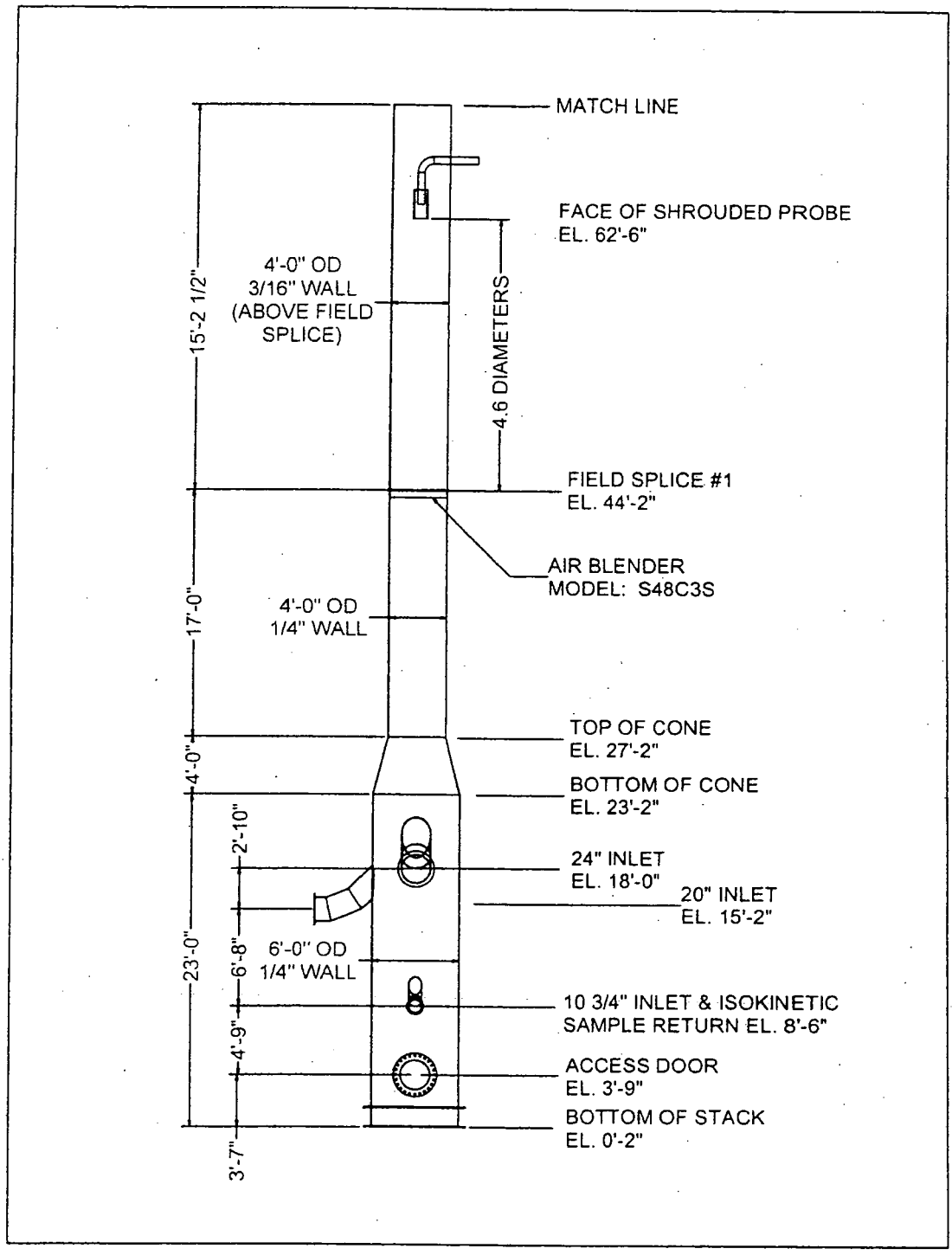

Figure 1. The Silo 3: 4-ft stack at Fernald. The downstream face of the Air Blender® is at an Elevation of 44'-2". The entrance of the sampling probe is at an Elevation of 62'-6", which provides a distance of 18'-4" for mixing of the flow after it passes through the Air Blender®. Because the inside diameter of the stack is 47.6" in this mixing zone, the mixing distance is specified as 4.6 diameters.

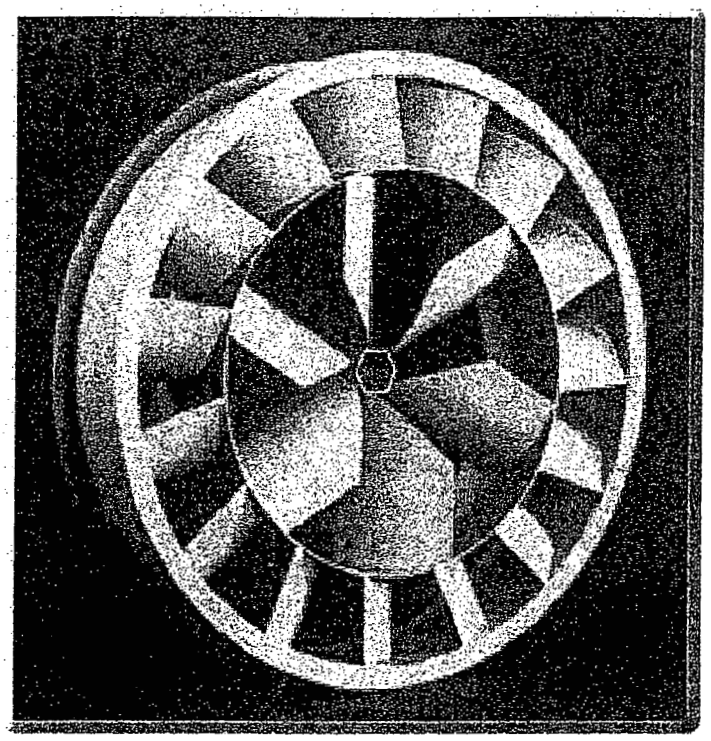

Figure 2. An S-Series Air Blender® that is used to enhance mixing of fluid momentum and tracers with the bulk flow. The mixing is effected by two counter-rotating vortices setup by the inner and outer sets of vanes.

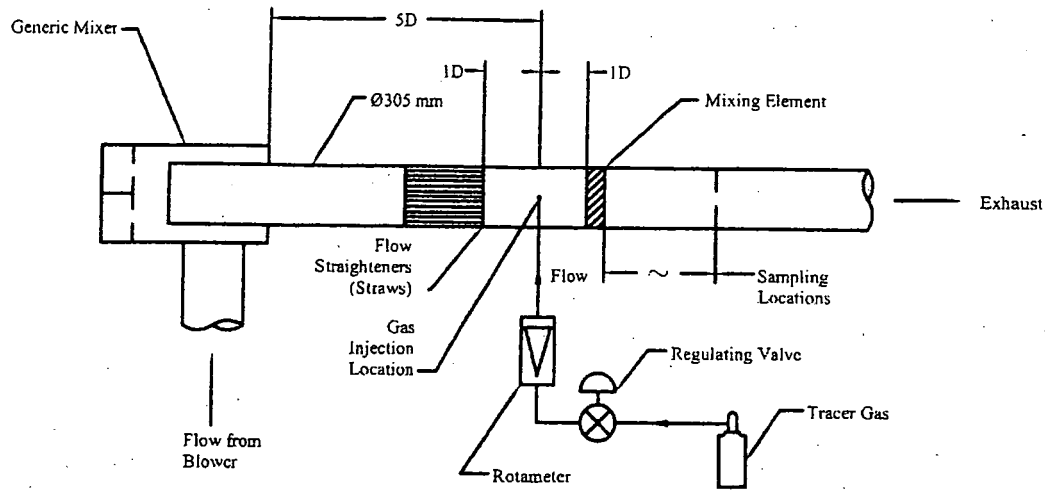

Figure 3. Laboratory-scale apparatus used to characterize mixing. The inside diameter of the duct was 154 mm (6.05 inches). Experiments were conducted with the sampling location set at various distances downstream of the mixing element.

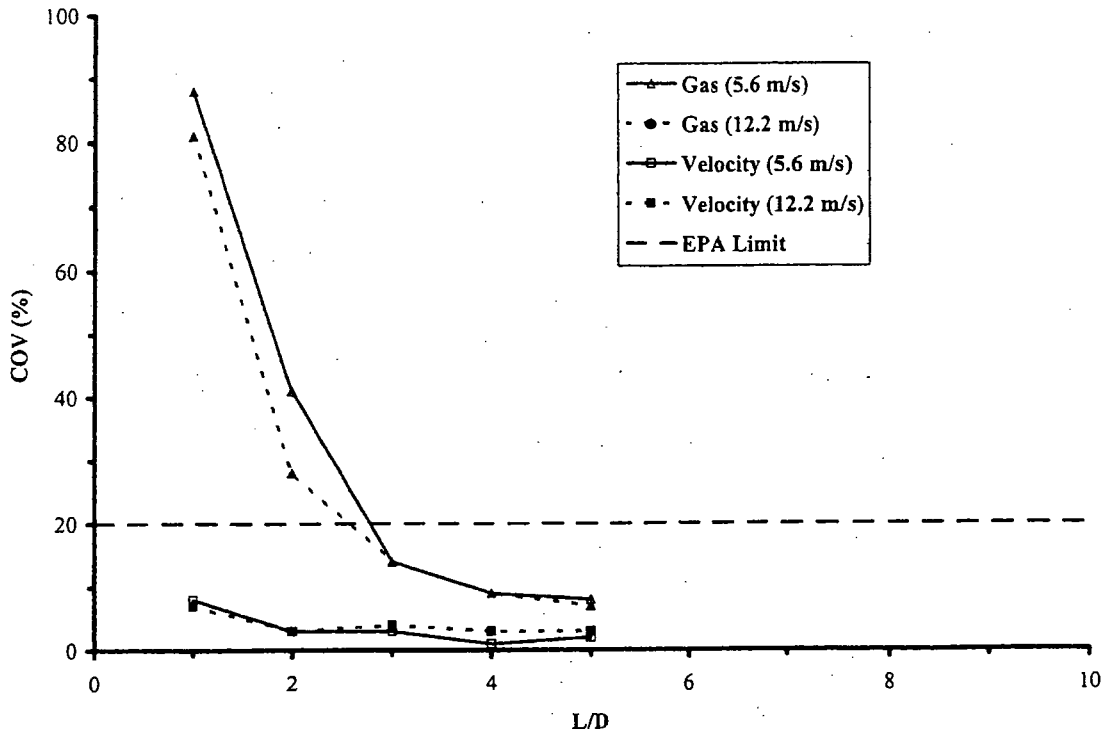

Figure 4. Results of laboratory-scale experiments with an Air Blender®. At a distance of 4.6 diameters (the distance between the mixing element and the sampling probe in the Silo 3: 4-ft stack), the *COV*s of tracer gas and velocity are 8% and 2%, respectively.

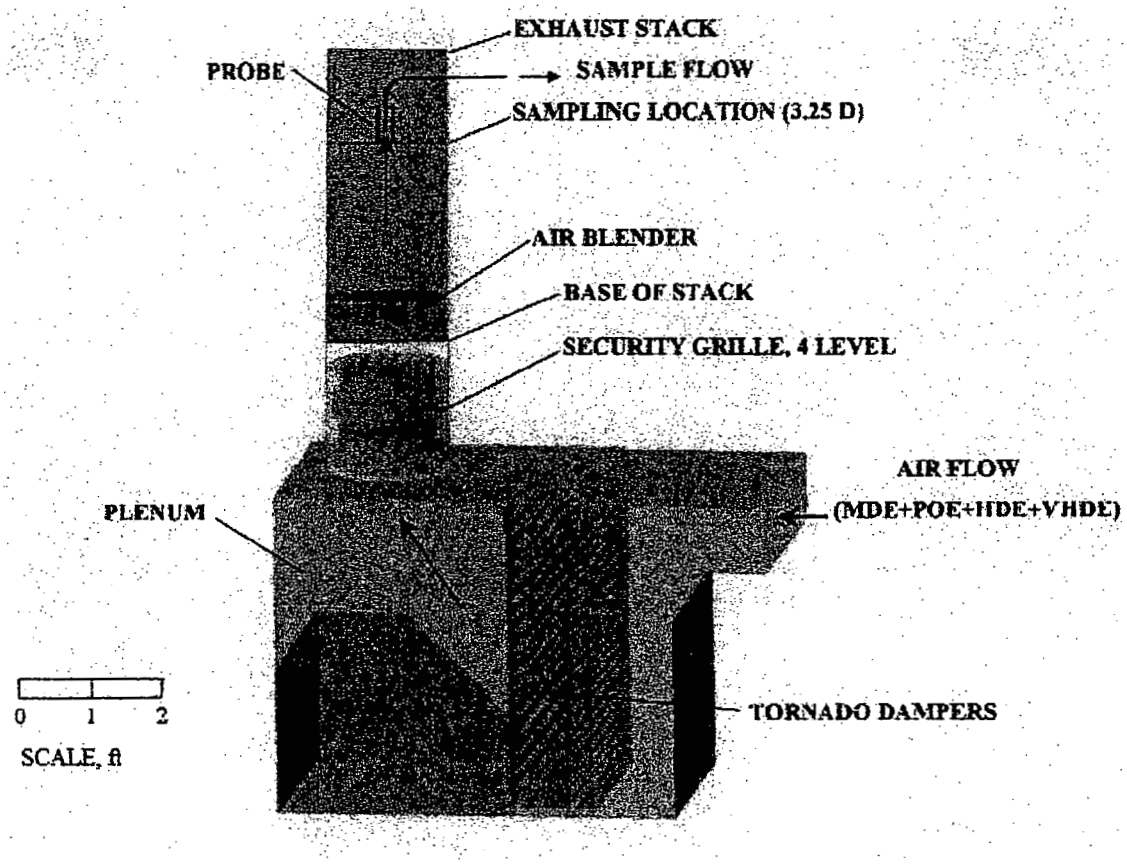

Figure 5. The main stack of the planned MFFF stack at the Savannah River Site. The dimensional reference in the figure is for the 1:5.1 scale model. The actual stack is 1.59 m (102 inches) diameter. Distance between the exit plane of the mixing element (Air Blender®) and the entrance plane of the sampling probe is 4.6 stack diameters.

UNITED STATES DEPARTMENT OF ENERGY
FERNALD ENVIRONMENTAL MANAGEMENT PROJECT

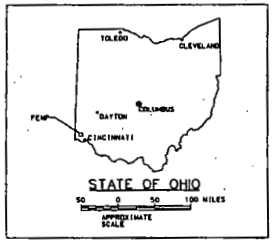

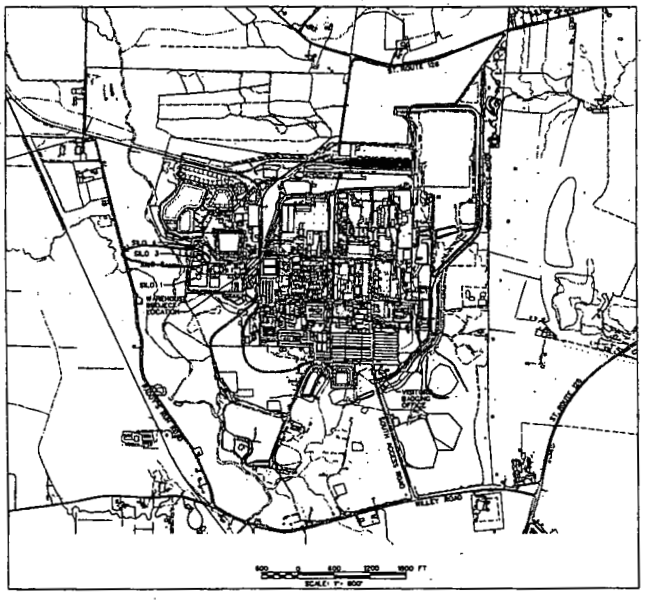

REF DWG NO.	DRAWING TITLE

0 ISSUED FOR BID

UNITED STATES
DEPARTMENT OF ENERGY
FERNALD ENVIRONMENTAL MANAGEMENT PROJECT

JACOBS

94X-3900-G-01340 G3100 0

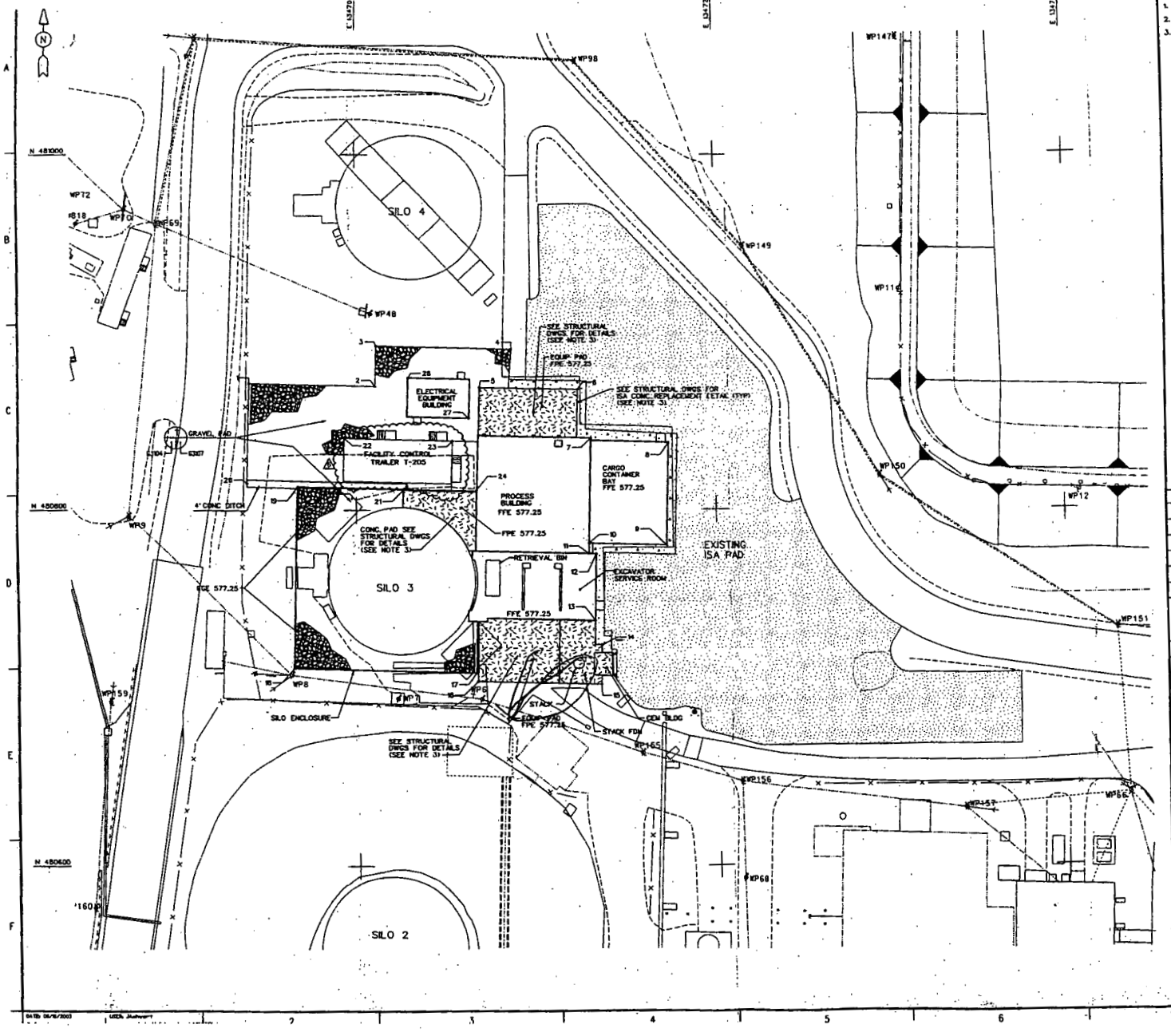

NOTES:

1. FOR GENERAL NOTES AND LEGEND SEE SHEET G3102.
2. FOR GENERAL ARRANGEMENT SEE SHEET M0001.
3. FOR STRUCTURAL FOUNDATIONS AND BUILDINGS SEE SHEET S0120.

COORDINATE LISTING

POINT NO.	NORTHING	EASTING
1	480871.54	1346938.77
2	480869.58	1347010.47
3	480892.57	1347011.10
4	480890.54	1347065.39
5	480868.71	1347067.59
6	480867.24	1347121.57
7	480839.85	1347129.07
8	480837.32	1347172.94
9	480780.01	1347171.37
10	480781.21	1347127.47
11	480775.38	1347127.31
12	480775.26	1347131.56
13	480737.94	1347130.54
14	480724.50	1347134.17
15	480702.26	1347133.56
16	480704.12	1347065.59
17	480708.98	1347064.80
18	480711.76	1346963.34
19	480813.22	1346966.12
20	480815.17	1346937.57
21	480813.28	1347027.44
22	480840.25	1346992.78
23	480838.61	1347052.78
24	480811.10	1347065.85
25		
26		
27	480851.35	1347061.75
28	480874.36	1347028.29

REF DWG NO.	DRAWING TITLE
M0001	MECHANICAL/GENERAL ARRANGEMENT PLOT PLAN
S0120	STRUCTURAL/FOUNDATIONS GENERAL SITE PLAN

20 0 20 40 60 FT
SCALE: 1"= 20'

REV. NO.	ISSUE OR REVISION PURPOSE - DESCRIPTION	DATE	REV. BY	APPR.
6	REVISED PER DCN 40430-JEG-073	06/14/03		

UNITED STATES
DEPARTMENT OF ENERGY
FERNALD ENVIRONMENTAL MANAGEMENT PROJECT

THIS DRAWING PREPARED BY
JACOBS

PROJECT NAME
SILO 3

DRAWING TITLE
CIVIL

SITE PLAN

DRAWN BY	DATE	MECHANICAL LEAD	DATE	CHECKED BY	DATE
W.JANEVIN	04/19/02	F.PARTON, JR.	04/19/02	W.D.BARTON III	04/19/02
PLANT/BLDG NO.		FLOOR		SCALE 1"=20'	CLASS U
SUBMITTED FOR 30% ISSUE		SUBMITTED FOR 60% ISSUE		SUBMITTED FOR 90% ISSUE	
TECH LEAD		TECH LEAD		TECH LEAD	
DATE		DATE		DATE	

T.A. NUMBER	PROJECT NO.	DRAWING INDEX CODE NO.	SHEET NO.	REV. NO.
N/A	40430	94X-3900-G-01297	G3104	6
JEM PROJECT NO. 35H19605	FILENAME 94XG1297.DCN			

000031

5442

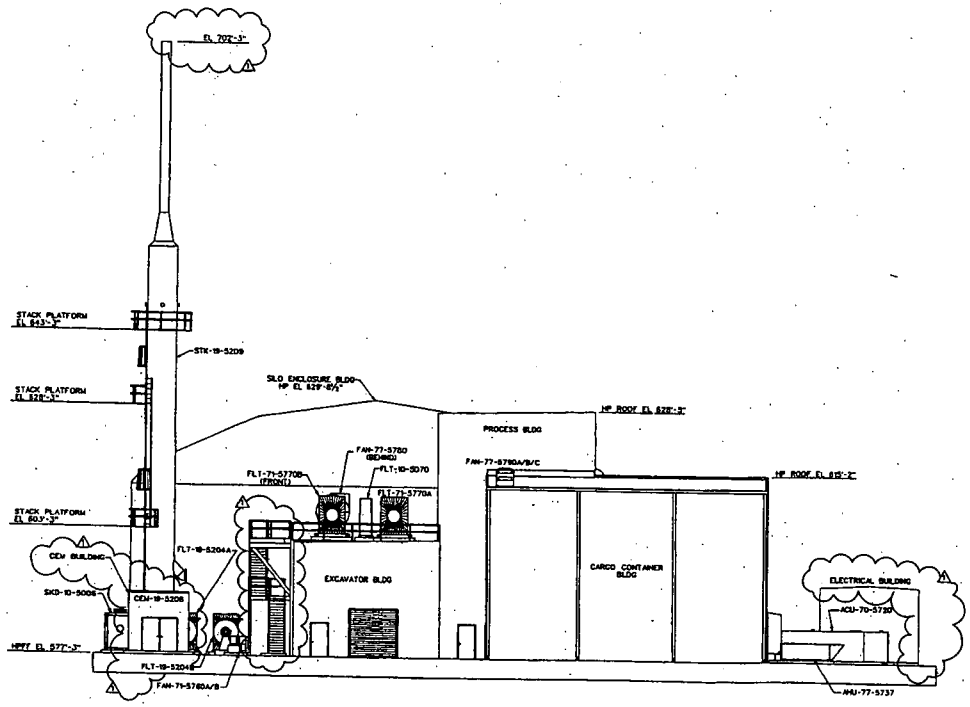

EAST ELEVATION

SCALE: ½" = 1'-0"

GENERAL NOTES:

1. ALL EQUIPMENT DESIGNATORS ARE EXPLAINED ON THE P&ID LEAD SHEETS (i.e. M0001, M0002, AND M0003).
2. ABBREVIATIONS ARE AS FOLLOWS:
   HP HIGH POINT
   EL ELEVATION
   HPFF HIGH POINT OF FINISHED FLOOR
3. ALL DIMENSIONS NOT LOCATING EQUIPMENT ARE REFERENCE ONLY.

REF DWG NO.	DRAWING TITLE

REV NO.	REVISIONS AND DATE			
1	REVISED PER DCN 40430-JEG-043, -034, -042	4-7-03	MPM	JTM
0	ISSUED TO CONSTRUCTION	07/09/02	MPM	JTM

UNITED STATES
DEPARTMENT OF ENERGY
FERNALD ENVIRONMENTAL MANAGEMENT PROJECT

THIS DRAWING PREPARED BY
JE JACOBS

PROJECT NAME
SILO 3

DRAWING TITLE
MECHANICAL
GENERAL ARRANGEMENT
EAST ELEVATION

DRAWN BY	DATE	MECHANICAL LEAD	DATE	CHECKED BY	DATE
D. BANKS	07/9/02	J.L. WILSON	07/9/02	MICHAEL WALDNE	07/10/02
PLANT/BLDG NO.		FLOW		SCALE	SIZE
		N/A		½" = 1'-0"	D
CLASSIFIED PER DOE GUIDE		CLASSIFIED PER DOE GUIDE		CLASSIFIED PER DOE GUIDE	
TECH LEAD		TECH LEAD		TECH LEAD	
DATE		DATE		DATE	

U.S. DOE/OR	PROJECT NO.	DRAWING SHEET SHEET NO.	SHEET NO.	REV NO.
N/A	40430			
JE PROJECT NO.	DRAWING			
3001F0000	M-DRAWING	94X-3900-M-01463	M0002	1

000032

5442

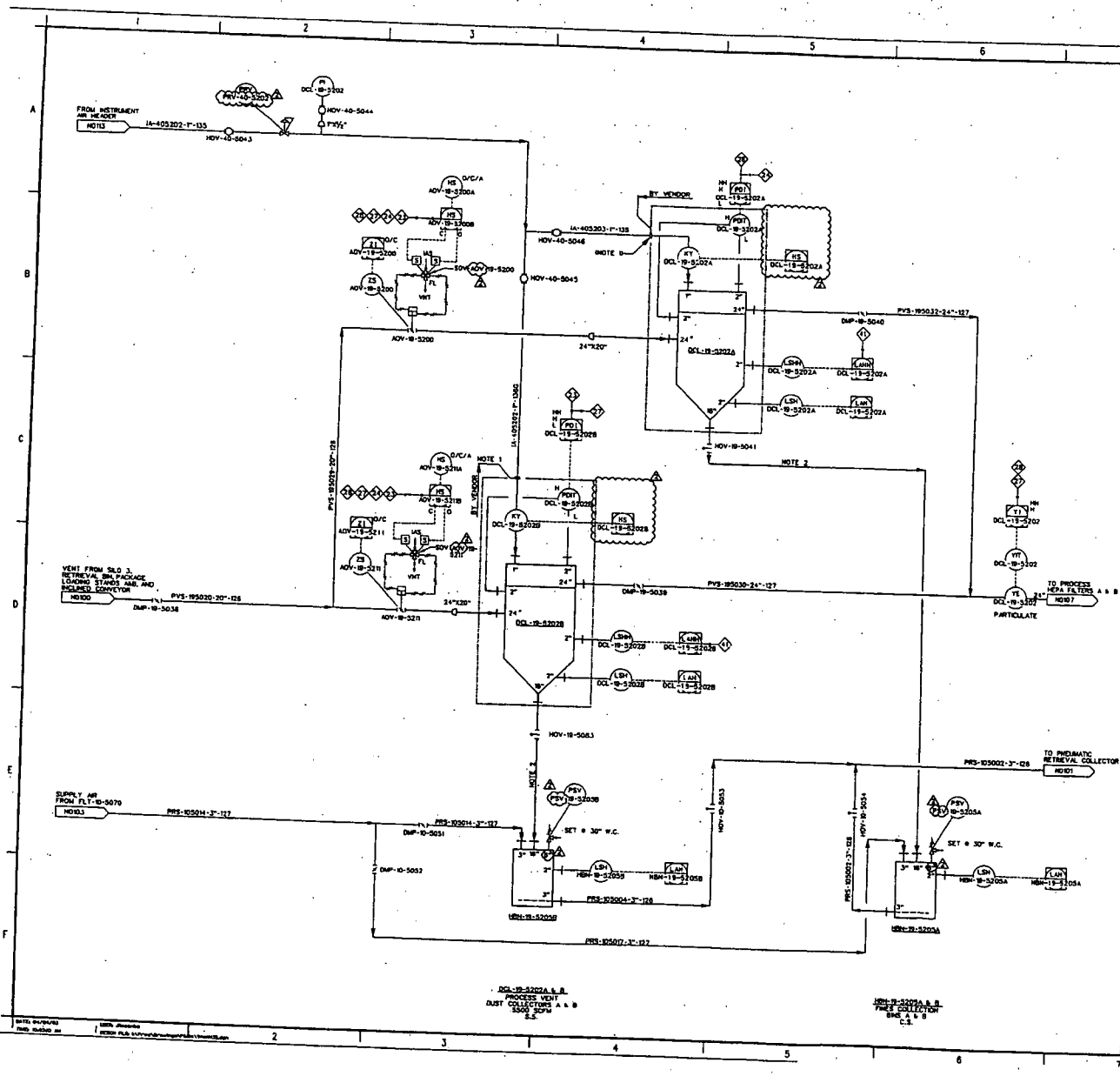

NOTES:

1. ONLY SELECTED EQUIPMENT ITEMS SHOWN FOR VENDOR DESIGNED AND SUPPLIED SKIDS. INTERNAL VALVING, CONTROLS AND INSTRUMENTATION, AND ACCESSORIES ARE NOT DETAILED ON DRAWINGS. ALL PROCESS CONNECTIONS TO AND FROM THE SKIDS SHALL BE 150 LB RAISED FACE FLANGED CONNECTIONS.

2. DIRECT MECHANICAL CONNECTION; NO PIPING REQUIRED.

INTERLOCKS:

(3) OPEN AOV-19-5200 AND CLOSE AOV-19-5211 ON POAH OR POAL IN DCL-19-5202B.

(4) OPEN AOV-19-5211 AND CLOSE AOV-19-5200 ON POAH OR POAL ON DCL-19-5202A.

(7) OPEN AOV-19-5200 AND CLOSE AOV-19-5211 ON HIGH HIGH PARTICULATE ON DCL-19-5202B.

(10) OPEN AOV-19-5211 AND CLOSE AOV-19-5200 ON HIGH HIGH PARTICULATE ON DCL-19-5202A.

(11) SWITCH TO ALTERNATE DUST COLLECTOR ON LSHH IN EITHER DUST COLLECTOR.

REF DWG NO.	DRAWING TITLE
N0001	PIPING, VALVES, AND MISCELLANEOUS
N0002	INSTRUMENTATION
N0003	EQUIPMENT AND MISCELLANEOUS

REV. NO.	REVISION PURPOSE - DESCRIPTION	DATE	REV. BY	APPD
2	REVISED PER DCN 40430-JEO-043	4-5-93	[illegible]	JTH
1	REVISED PER DCN 40430-JEO-027	02/20/93	MDL	JTH
0	ISSUED TO CONSTRUCTION	07/9/92	MPM	JTH

UNITED STATES DEPARTMENT OF ENERGY
FERNALD ENVIRONMENTAL MANAGEMENT PROJECT

THIS DRAWING PREPARED BY JACOBS

PROJECT NAME: SILO 3

DRAWING TITLE: INSTRUMENTATION PIPING AND INSTRUMENT DIAGRAM PROCESS VENT SYSTEM SHEET 1 OF 2

DRAWN BY	DATE	REVIEWED BY	DATE	CHECKED BY	DATE
K.L. REED	07/9/92	M.MELCUK	07/9/92	K.A. ROBETT	07/9/92
SCALE				SCALE	
NONE				U	

CONTRACT NO.	PROJECT NO.	DRAWING SHEET SIZE NO.	SHEET NO.	REV NO.
N/A	40430	94X-3900-N-01439	N0106	2

000033

5442

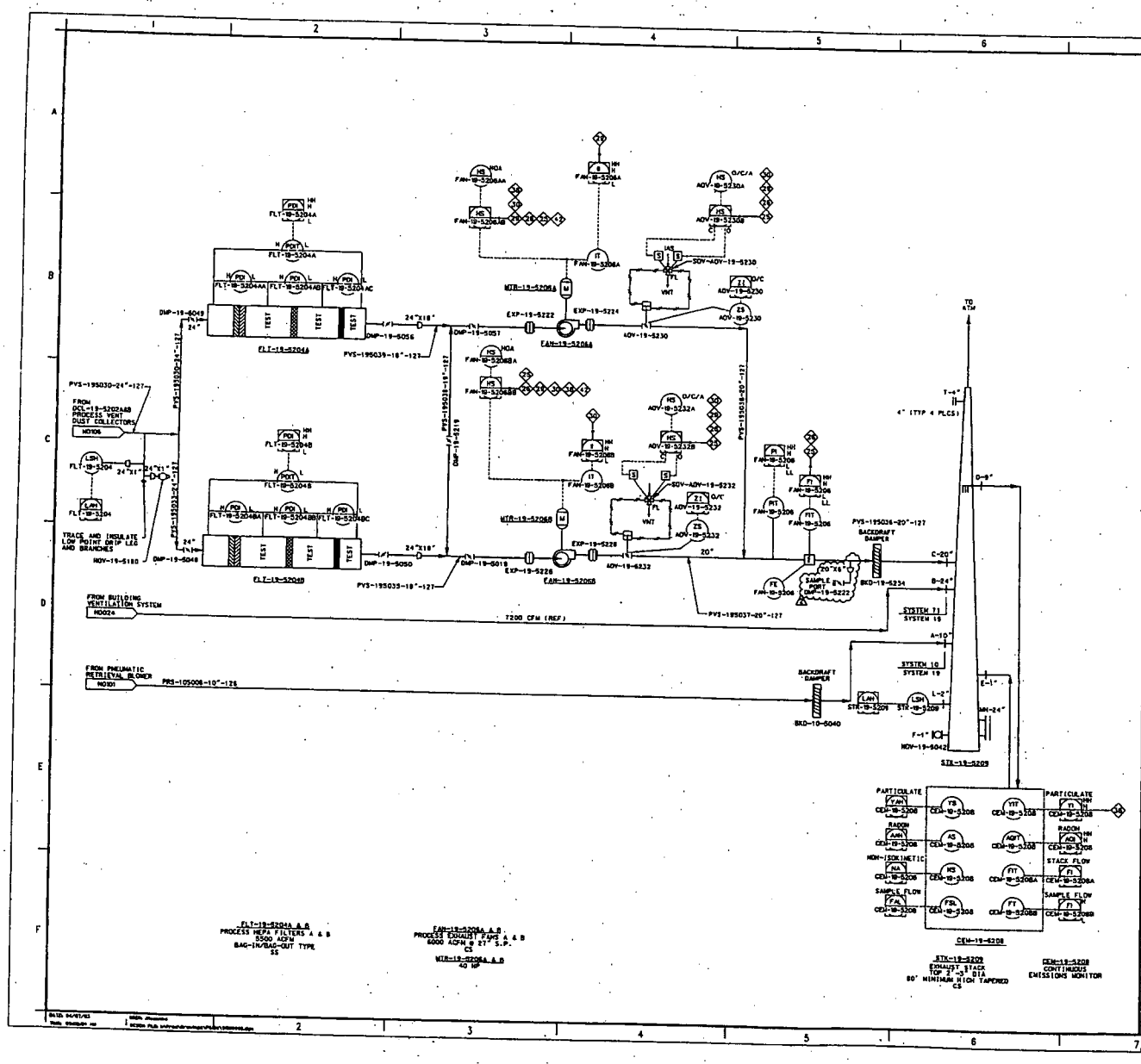

NOTES:

1. SAMPLE LINES FOR CEM-19-5208 SHALL BE HEAT TRACED AND INSULATED. SAMPLING LINES WILL BE 1" O.D. 316SS FOOD GRADE TUBING. BENDS FOR SAMPLE INTAKE TUBING TO CEM SHALL BE A MINIMUM OF 10 D. HORIZONTAL RUN OF SAMPLE INTAKE LINE WILL BE MINIMIZED. CONNECTING DETAILS WILL BE SUPPLIED BY CEM VENDOR.

INTERLOCKS:

- SHUT DOWN FAN-19-5206A ON LOW FLOW AND OPEN ADV-19-5232 AND START FAN-19-5206B AND CLOSE ADV-19-5230.
- SHUT DOWN FAN-19-5206B ON LOW FLOW AND OPEN ADV-19-5230. THEN START FAN-19-5206A AND CLOSE ADV-19-5232.
- OPEN ADV-19-5232 AND CLOSE ADV-19-5230 ON HIGH HIGH CURRENT ON FAN-19-5206A. SHUTDOWN FAN-19-5206A AND START FAN-19-5206B.
- OPEN ADV-19-5230 AND CLOSE ADV-19-5232 ON HIGH-HIGH CURRENT ON FAN-19-5206B. AND SHUTDOWN FAN-19-5206B AND START FAN-19-5206A.
- SHUT DOWN FAN-19-5206A OR FAN-19-5206B AND BLR-10-5006 OR BLR-10-5008 ON HIGH-HIGH PARTICULATE LEVELS IN EXHAUST STACK.
- SHUT DOWN FAN-19-5206 A&B ON SIGNAL FROM EMERGENCY EGRESS DOOR 0088 (FROM EXCAVATOR SERVICE ROOM)

REF DWG NO.	DRAWING TITLE
H0001	PIPING, VALVES, AND MISCELLANEOUS
H0002	INSTRUMENTATION
H0003	EQUIPMENT AND MISCELLANEOUS
H0024	HVAC CONTROL DIAGRAM

REV. NO.	DESC. OF REVISION PURPOSE - DESCRIPTION	DATE	DRN BY	CHK'D BY
2	REVISED PER DCN 40430-JEG-043	10-3-95	[illegible]	JCM
1	REVISED PER DCN 40430-JEG-027 AND -035	02/28/95	MDL	JTN
0	ISSUED TO CONSTRUCTION	02/09/95	MPM	JTN

UNITED STATES
DEPARTMENT OF ENERGY
FERNALD ENVIRONMENTAL MANAGEMENT PROJECT

THIS DRAWING PREPARED BY JACOBS

PROJECT IMAGE: SILO 3

DRAWING TITLE
INSTRUMENTATION
PIPING AND INSTRUMENT DIAGRAM
PROCESS VENT SYSTEM SHEET 2 OF 2

DRAWN BY	DATE	DESIGN LEAD	DATE	CHECKED BY	DATE
W.T. REED	02/09/95	K.D. BICKETT	02/09/95	H. MALONE	02/09/95

DRAWING NO. | SCALE: NONE | SIZE: D

TCA DRAWING	PROJECT NO.	DRAWING SHEET CODE NO.	SHEET NO.	REV NO.
N/A	40430	94X-3900-N-01440	N0107	2

CDR PROJECT NO. 3301D905 | DESIGNATE H0000-H0-DCN

000034

5442

Silos Project Design Change Notification Review and Concurrence Form
Fluor Fernald Project No.: 40430
Project Name: Silo 3
Design Change Notice (DCN) No.: 40430-JEG-115
Document Change Notice: Silo 3 Exhaust Stack Static Mixer
Summary of Change: Provide sketches SK-40430-DCN-115-01 and SK-40430-DCN-115-02 to show where and how the static mixer should be mounted.

	REQUIRED CONCURRENCES:	NO	YES	COMMENTS
1	Safety Basis Doc. Acceptable?		X	
	Safety & Health (Signature)	P.L. Fisk / P.L. M		11-19-03 Date
2	SRC Review Required?	X		
3	Engineering (Signature)	[illegible]		11/18/03 Date
4	Construction (Signature)	NA		Date
5	QA/QC	NA		Date
6	Environmental Compliance	NA		Date
7	Operations	NA		Signatures Date

Fluor Fernald PE [illegible] Date: 11/19/03

Concurrence: ✓ Rejected: ____

Verification that change has been incorporated into approved design documents and/or implemented in the field:

Fluor Fernald
PE or CE Concurrence: [illegible] Date: 11/19/03

ORIGINAL

000035

SILOS PROJECT SAFETY BASIS IMPACT SCREEN

Design Document No. DCN # 40430-JEG-115 Silo 3 Exhaust Stack Static Mixer	Change Originator: Mike Griffin
Safety Basis Screen Originator Brenda Kuhnel	Date of Safety Basis Screen: 11/19/03

1	Does the proposed change affect the SSCs identified in Chapter 4 of the PHAR or the draft DSA, such as Safety-Class SSCs, Safety Significant SSCs, or Equipment Important to Safety? ☐**Yes** **x No** Explain: No SSC's identified in chapter 4 of the PHAR or the draft DSA are impacted by these revisions to describe mounting of the static mixer.
2	Will the proposed change affect any parameters used in calculations supporting the Hazard Analyses documented in Chapter 3 of the PHAR or the draft DSA? ☐ **Yes** **x No** Explain: Parameters used in the calculations supporting Hazard Analysis include inventory and assumptions regarding release. The hazard analyses parameters are not impacted by these revisions to describe mounting of the static mixer.
3	Will the proposed change affect any of the Safety Basis Requirements established in the PHAR or draft DSA, for example: • Technical Safety Requirements (TSR) • Inventory Threshold Limits • Dose Thresholds identified in DOE-STD-1027-92 • Limitation of material types, characteristics, and unique properties ☐ **Yes** **x No** Explain: The Safety Basis Requirements are not impacted by these revisions to describe mounting of the static mixer.
4	Does the proposed change identify a potential inadequacy (e.g. new accident) in the PHAR or draft DSA, or any potential reduction in any TSR? ☐ **Yes** **x No** Explain: These revisions to describe mounting of the static mixer will not identify any new potential inadequacies.
5	Does the proposed change affect the activities or requirements of a nearby or adjacent facility or activity? ☐ **Yes** **x No** Explain: No adjacent facilities or activities will be impacted as a result of these revisions to describe mounting of the static mixer.
6	Does the proposed change result in a change in the inventory or amount of hazardous material? ☐ **Yes** **x No** Explain: The proposed changes do not change inventory of hazardous material.

If the answer to any of these questions is 'Yes', update analysis to reflect change and incorporate change into the final DSA.

Per this Safety Basis Impact Screen, the proposed change ☐does **x** does not impact the Silo 3 Safety Basis.

Signature: P.L. Fisk / P.L. Fi Date 11-19-03
Safety Analysis Lead

SILOS PROJECT DESIGN CHANGE NOTIFICATION

(1) SUBJECT: **SILO 3 EXHAUST STACK STATIC MIXER**

DCN No.: 40430-JEG- 115

(2) DESCRIPTION OF PROBLEM/REQUESTED CHANGE:

Add static mixer to stack design and construction.

See Attachment A. BH 11/18/03

(3) JUSTIFICATION/REASON FOR CHANGE:

Static mixer required to achieve exhaust air mixing requirements associated with exhaust sampling, Per ANSI N13.1.

(4) REQUESTED BY: M W Griffin

DATE: 9/4/03

(6) REVIEWED BY: [signature] (ENGINEERING MANAGER)

DATE: 9/4/03

(5) NEED DATE 9/5/03

(7) SOLUTION WORK TO BE PERFORMED BY

☒ Title III - Site ☐ Jacobs (Oak Ridge)

(8) PROPOSED SOLUTION: (See attached)

Install mixer at location shown in Sketch 01. Install supports for mixer and weld per EMail from Tom Shiner dated 9-03-03 (attached).

[signature] (Jacobs Responsible Engineer) JCG 11/18/03

[signature] 11-18-03 Date

MWG 11/18/03

(9) APPROVALS TO PROCEED WITH DESIGN:

J.R. Hughes by JCG ENGINEERING MANAGER 11/18/03 DATE

Proceed with DCN approval prior to RDP development. ☐ NO ☒ YES

[signature] PROJECT MANAGER 11/19/03 DATE

000037

DUPLICATE ORIGINAL

~~ORIGINAL~~

The Gas Blender™

With its tremendous flexibility and unparalleled reliability, the Gas Blender™ static mixing device is the practical answer for mixing gases, vapors, liquids and powders into gas streams. It is a solution that combines low-pressure drop, low maintenance and long life with efficient, predictable performance. Designed with the most demanding customer in mind, using state-of -the art FEA (Finite Element Analysis) and CFD (Computational Fluid Dynamics) software in conjunction with decades of test and application experience, there are few mixing problems the Gas Blender™ can not solve.

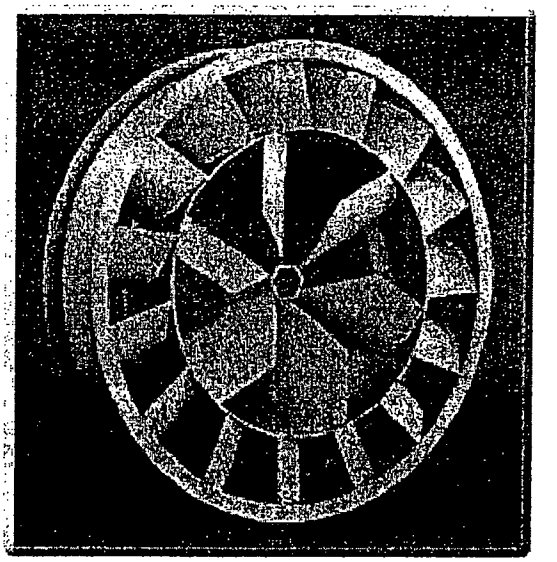

The patented design of the Gas Blender™ Static Mixer provides high, predictable levels of mixing effectiveness. Flows entering the static mixer are forced into swirling vortices by the geometrically scaled blades. This "swirling action" forces all the gas within a given flow toward the center of the duct, causing mixing to occur.

Applications

Since the Gas Blender™ uses the velocity of the gas stream, it can effectively operate over very broad thermal and flow ranges. The mixing units are successfully installed in applications where temperatures range from below 0°F (-18°C) to more than 2000°F (1093°C), and flow rates from less than 175 cfm (5 cmm) to flows exceeding 850,000 cfm (24,072 cmm). Because of the broad flow ranges and a low-pressure drop, the Gas Blender™ is the ideal solution for many industrial process system and environmental control system applications. These applications are grouped into three major categories; Thermal Mixing, Concentration Mixing, and Velocity Profiling.

www.airblender.com

Blender Products Inc. 5010 Cook St. Denver, Colorado 80216
Phone: 800-523-5705 Fax: 303-296-1520 Email: info@airblender.com ©Blender Products, Inc. 2001

S-Series Gas Blender™ Static Mixer (Low Pressure Drop)

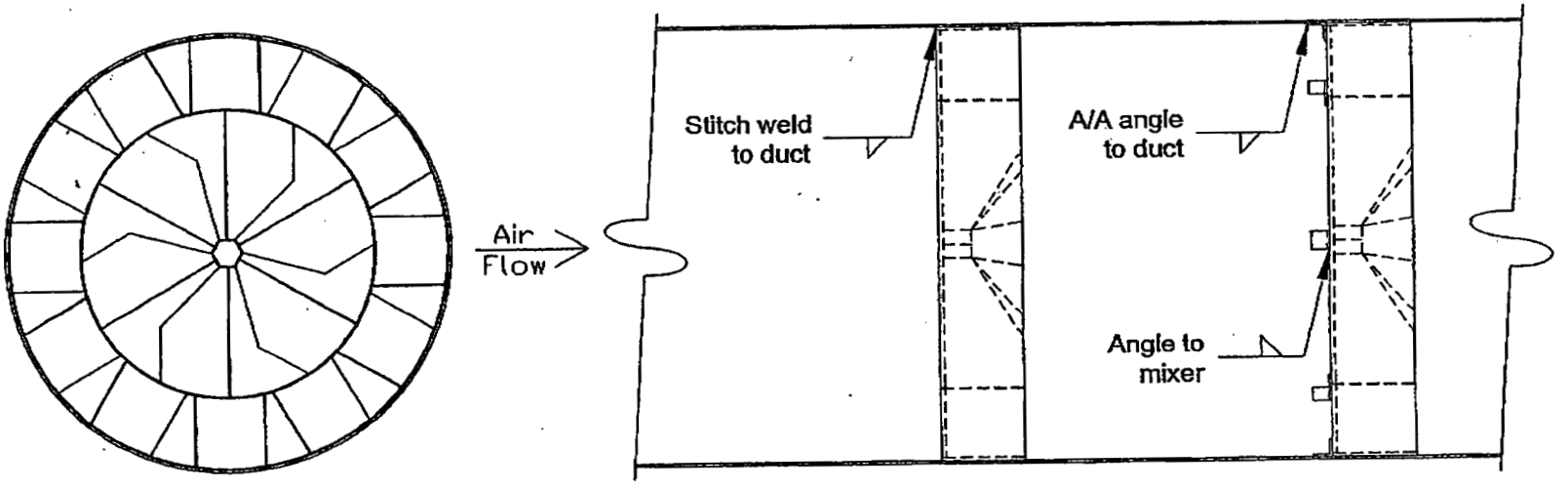

Method 1
Stitch weld mixer directly to duct.

Method 2
Weld angle clips to mixer and to duct.

1½ x 1½ x ¼ · 8 clips
2" long

Notes:

1. Mounting methods shown are typical. Other methods to secure the mixer within the duct/stack may be used.
2. Weld specifications and mounting clips or angles used must be sufficient to structurally support the load (mixer weight and pressure drop).
3. Welding specification must be appropriate for the duct/stack material being used.

S-Series GAS BLENDER™ Mounting Details	
Low Pressure Drop Model	Drawn By: KDR
	Date: 08/26/2003
	Quote No.:
	Drawing: S-Series LP

DCN 40430-JE6-115
Attachment A
Page 2 of 4

000039

5442

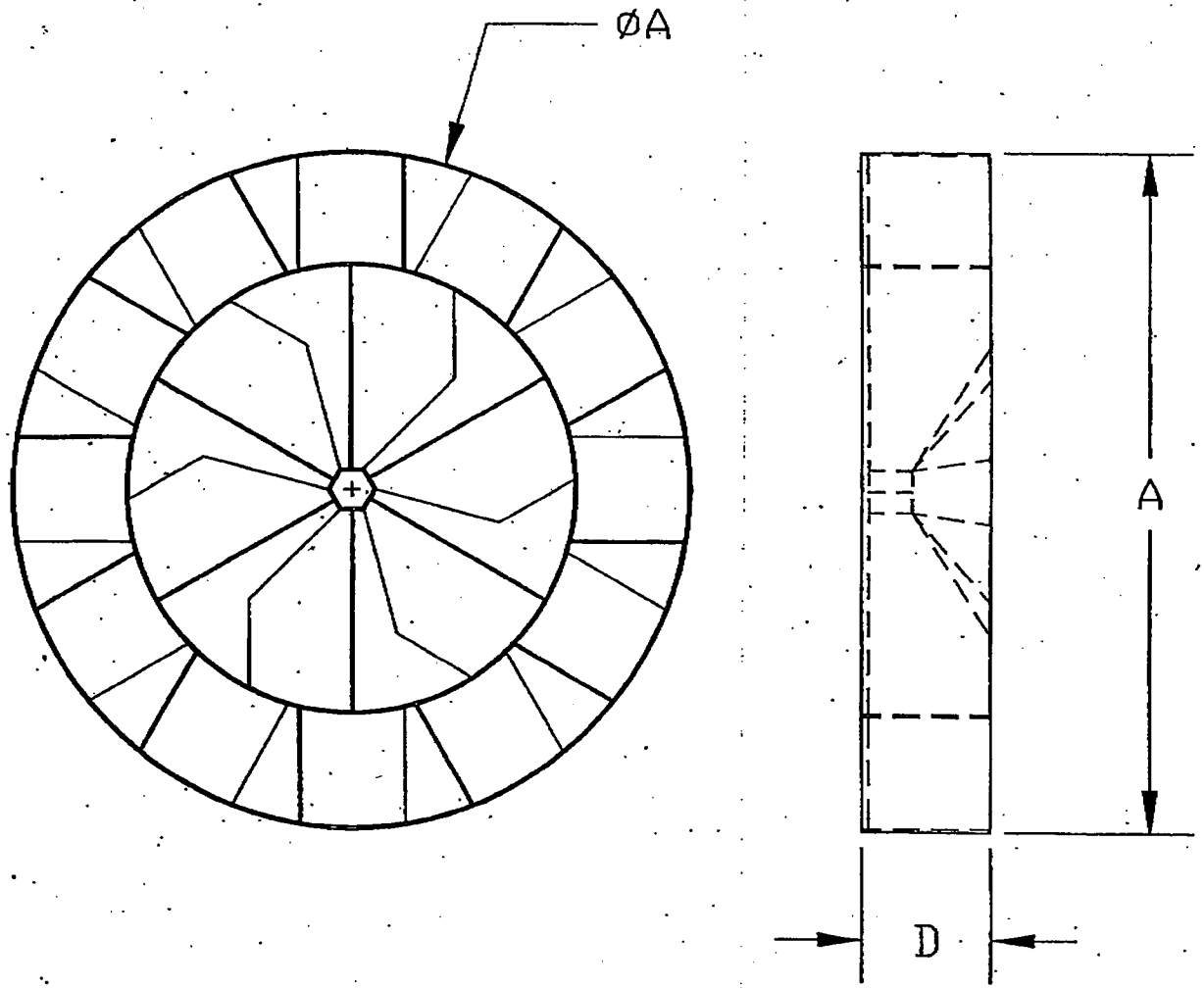

DCN 40430-JEG-115
Attachment A
Page 3 of 4

5442

Model	A	D	Weight
S48C3S	47.875 ±0.063	9.0	250 Lbs.
~~S72C3S~~	~~71.875 ±0.063~~	~~10.5~~	~~575 Lbs.~~

Material:
7Ga hot rolled steel (wraps)
10Ga hot rolled steel (blades)

Tolerances (except as noted)	Revisions			Blender Products, Inc.		
Decimal ±	No.	Date	By	S48C3S & S72C3S GAS BLENDER static mixers		
Fractional	1			Drawn By: KDR	Scale: NTS	Material: HRS
Angular ±	2			Chk'd	Date: 08/15/03	Drawing No. Q872
	3			Traced	App'd	
	4					
	5					

000040

DCN 40430-JEG-115

Attachment A
Page 4 of 4

Griffin, Michael

From: Danielson, Edwin
Sent: Thursday, September 04, 2003 11:17 AM
To: Edwards, Doris; Griffin, Michael
Cc: Tomczak, Larry; Houchins, Ronald
Subject: FW: Locations for mixer and sampling station/Silo 3

Here is Dr. McFarland's response to blender and single point sample extraction locations for Silo3...

Skip

-----Original Message-----
From: McFarland, Andrew R [mailto:arm@neo.tamu.edu]
Sent: Thursday, September 04, 2003 10:17 AM
To: edwin.danielson@fernald.gov
Subject: Locations for mixer and sampling station/Silo 3

Mr. Danielson:

Pursuant to our telephone discussions, I would like to state that I have

reviewed the layout drawings for Silo 3 with respect to geometrical considerations for achieving compliance of your sampling location with the mixing requirements of ANSI N13.1.

First, with respect to the AirBlender, I suggest that you locate it at the upstream end of the 4'-0" diameter section (i.e., at the flange between the transition section that reduces the diameter from 6'-0" to 4'-0" and the 4'-0" straight section). The diameter of the AirBlender will be 4'-0".

Second, with respect to the Sampling Location (SL), I suggest that it be

placed no closer than 5 diameters downstream from the face of the AirBlender and no closer than 3 diameters upstream of the start of the transition section that reduces the stack diameter from 4'-0" to 2'-3". If we consider an elevation view of the stack, and assign the upper edge of the AirBlender a value of 0-diameters, the SL should be located at an elevation of at least 5-diameters. Also, assuming the total length of the 4'-0" diameter section is 12.8-diameters, the SL should be at an elevation no greater than 9.8-diameters from the AirBlender.

Sincerely,

Andrew R. McFarland, Ph.D., P.E.

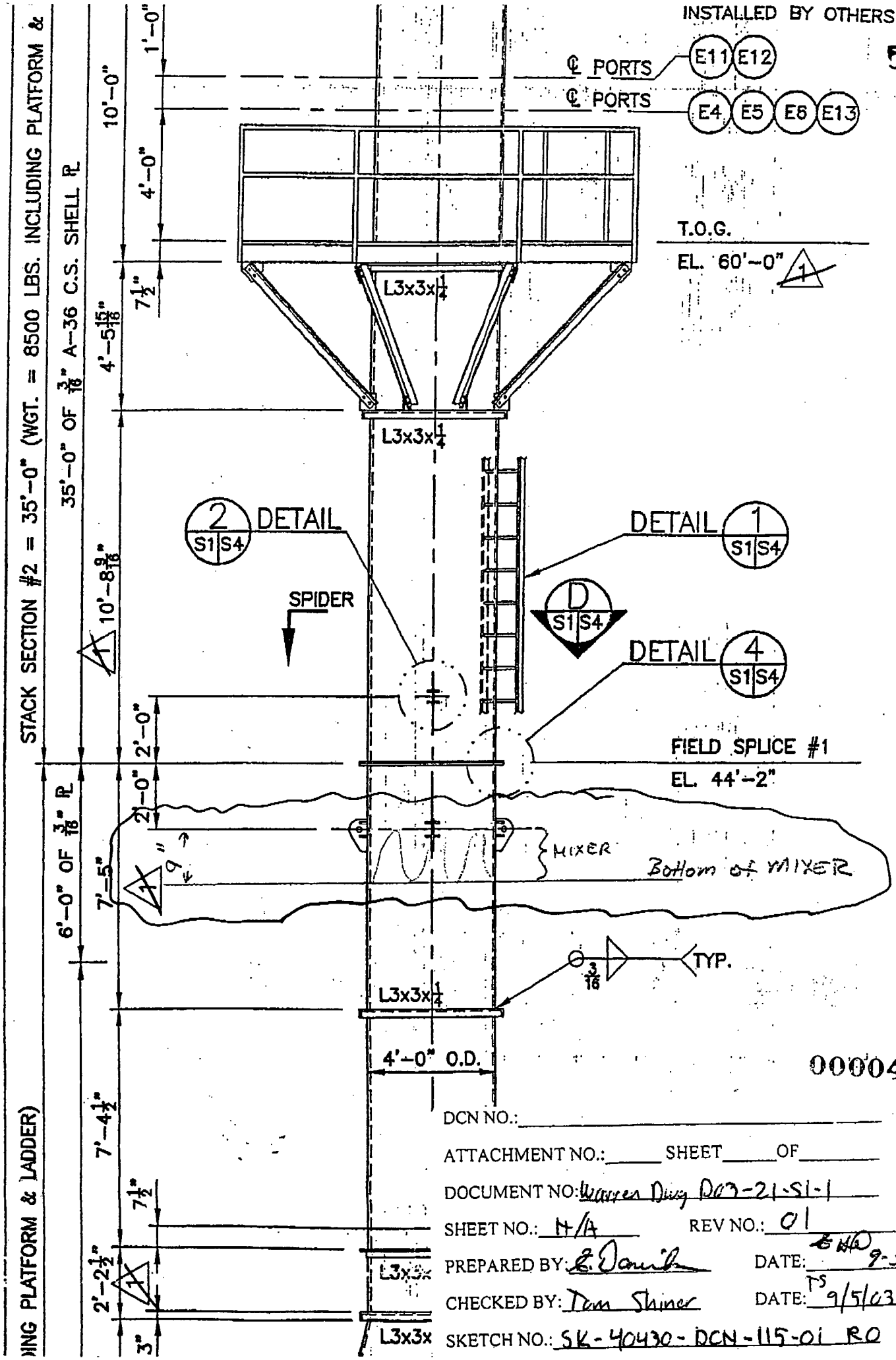
INSTALLED BY OTHERS.
5442
℄ PORTS
E11 E12
℄ PORTS
E4 E5 E6 E13
T.O.G.
EL. 60'-0"
1
1'-0"
10'-0"
4'-0"
7½"
4'-5 15/16"
L3x3x¼
L3x3x¼
35'-0" OF 3/16" A-36 C.S. SHELL ℞
STACK SECTION #2 = 35'-0" (WGT. = 8500 LBS. INCLUDING PLATFORM &
125'-0" FROM BOTTOM OF BASE PLATE TO TOP OF STACK
DING PLATFORM & LADDER)
2 DETAIL S1 S4
DETAIL 1 S1 S4
SPIDER
D S1 S4
DETAIL 4 S1 S4
10'-8 9/16"
2'-0"
FIELD SPLICE #1
EL. 44'-2"
2'-0"
6'-0" OF 3/16" ℞
7'-5"
9"
MIXER
Bottom of MIXER
TYP.
3/16
L3x3x¼
4'-0" O.D.
000042
7'-4½"
7½"
2'-2½"
3"
L3x3x
L3x3x
DCN NO.:
ATTACHMENT NO.: SHEET OF
DOCUMENT NO: Warren Dwg D03-21-S1-1
SHEET NO.: N/A REV NO.: 01
PREPARED BY: DATE: 9-5-03
CHECKED BY: Tom Shiner DATE: 9/5/03
SKETCH NO.: SK-40430-DCN-115-01 R0

SM-40430-DCN-115-02,

From: Shiner, Thomas
Sent: Wednesday, September 03, 2003 9:58 AM
To: Howard, Lorie
Cc: Jenkins, James
Subject: RE: GAS BLENDER static mixer mounting and Performance information

Lorie:

Angle clips are to be A36 or equivalent.

Tom

-----Original Message-----
From: Shiner, Thomas
Sent: Thursday, August 28, 2003 10:17 AM
To: Jenkins, James
Cc: Edwards, Doris; Hughes, Jack; Stone, Jeff; Danielson, Edwin; Mcguire, Rick; Myers, Bruce
Subject: RE: GAS BLENDER static mixer mounting and Performance information

Jim:

I recommend welding angle clips to the inside of the stack. This can be done at the stack manufacturer's prior to shipping if desired. I talked with Blender Products and they are OK with this installation method.

NOTE: Elevation of the mixers within each stack is to be determined by others. I've heard at least 3 different locations so I'm staying out of it.

The mixer is to be supported by 1-1/2" x 1-1/2" x 1/4" thick angles. Each angle clip is to be 2" long. For Silos 3 stack, 8 clips are required, evenly spaced approximately 19" apart inside the stack. For Silo 1 and 2 stack, 12 clips are required, also spaced approximately 19" apart.

Each clip is to be welded to the inside of the stack on both sides of its vertical 1-1/2" leg with a 3/16" fillet.

At the time the mixer is set in place (possibly in the field), it is to be tack welded to the horizontal leg of each clip angle.

If you need further information or a sketch (I don't have one prepared so please don't ask), let me know.

Tom

-----Original Message-----
From: Jenkins, James
Sent: Tuesday, August 26, 2003 5:18 PM
To: Shiner, Thomas
Cc: Edwards, Doris
Subject: FW: GAS BLENDER static mixer mounting and Performance information

TOM: TAKE SOME TIME TO LOOK AT THE "CONNECTION" MENTIONED BELOW FOR THE GAS BLENDER TO THE STACK. GIVE ME YOUR COMMENTS ASAP.

THANKS JIM J.

-----Original Message-----
From: Edwards, Doris
Sent: Tuesday, August 26, 2003 12:50 PM
To: Jenkins, James; Beckman, Stephen; Barber, James
Cc: Danielson, Edwin; Tomczak, Larry; Howard, Lorie; Myers, Bruce

Silos Project Design Change Notification Review and Concurrence Form
Fluor Fernald Project No.: 40430
Project Name: Silo 3
Design Change Notice (DCN) No.: 40430-JEG-056
Document Change Notice Title: Silo 3 Exhaust Stack Diameter
Summary of Change: Revise Exhibit 3, Sketch 1 of Specification ES-JM-STK-19-5209 (document 40430-TS-0010). This DCN reduces the diameter of the stack to provide for greater velocity pressure. This change is a result from operational experience gained on the AWR RCS stack.

	REQUIRED CONCURRENCES:	NO	YES	COMMENTS
1	Safety Basis Doc. Acceptable?		X	
	Safety & Health (Signature)	C. Nelson		04/16/03 Date
2	SRC Review Required?	X		
3	Land Use Review Required?	X		
	Engineering (Signature)			4/16/03 Date
4	Construction (Signature)			Date
5	QA/QC	N/A		Date
6	Environmental Compliance			4/16/03 Date
7	Operations	N/A		Signatures Date

Fluor Fernald PE _____ Date: 4/16/03

Concurrence: ✓ Rejected: ____

Verification that change has been incorporated into approved design documents and/or implemented in the field:

Fluor Fernald
PE or CE Concurrence: _____ Date: 12/19/03

ORIGINAL

SILOS PROJECT SAFETY BASIS IMPACT SCREEN

Design Document No. DCN 40430-JEG-056	Change Originator M. Griffin
Safety Basis Screen Originator Charles Nelson	Date of Safety Basis Screen 04/16/03

1	Does the proposed change affect the SSCs identified in Chapter 4 of the PHAR such as Safety-Class SSCs, Safety Significant SSCs, or Equipment Important to Safety? ☐ **Yes** X **No** Explain: The proposed change will only affect the diameter of the stack to provide adequate velocity of air within the stack to enhance performance. This change does not affect any of the SSCs as identified in chapter 4 of the PHAR for Silo 3.
2	Will the proposed change affect any parameters used in calculations supporting the Hazard Analyses documented in Chapter 3 of the PHAR? ☐ **Yes** X **No** Explain: The proposed change does not affect the accidents analyzed and will not change any parameters used in calculations supporting the hazard analyses in the PHAR.
3	Will the proposed change affect any of the Safety Basis Requirements established in the PHAR, for example: • Technical Safety Requirements (TSR) • Inventory Threshold Limits • Dose Thresholds identified in DOE-STD-1027-92 • Limitation of material types, characteristics, and unique properties ☐ **Yes** X **No** Explain: The proposed change will only enhance the the performance of the Stack and does not affect any hazard analysis parameters used in the calculations in support of the PHAR. The TSR refers only to the silos.
4	Does the proposed change identify a potential inadequacy (e.g. new accident) in the PHAR or any potential reduction in any TSR? ☐ **Yes** X **No** Explain: This change will not cause any new accidents and has no affect on the hazard analysis parameters used in calculations in support of the PHAR. Therefore, the change does not identify a potential inadequacy in the PHAR.
5	Does the proposed change affect the activities or requirements of a nearby or adjacent facility or activity? ☐ **Yes** X **No** Explain:The proposed change will only affect a the stack diameter and will have no affect to nearby or adjacent facilities.
6	Does the proposed change result in a change in the inventory or amount of hazardous material? ☐ **Yes** X **No** Explain: This change only affects the diameter of the stack and has no affect on the hazardous or radiological inventory.

If the answer to any of these questions is 'Yes', update analysis to reflect change and incorporate change into the final DSA.

Per this Safety Basis Impact Screen, the proposed change ☐ does X does not impact the AWR Safety Basis.

Signature: C. Nelson
Safety Analysis Lead

Date 04/16/03

SILOS PROJECT DESIGN CHANGE NOTIFICATION

(1) SUBJECT: **SILO 3 Exhaust Stack Diameter**

DCN No.: 40430-JEG-056

(2) DESCRIPTION OF PROBLEM/REQUESTED CHANGE:

The diameter of the stack needs to be reduced to provide for greater velocity pressures. This could be accomplished by reducing the diameter from 6 foot to 4 foot. The sampling rake/probe will need to be located from 6-8 stack diameters from the last influent pipe on the stack preferable 8.

(3) **JUSTIFICATION/REASON FOR CHANGE:**

This change is a result from operational experience gained on the AWR RCS stack.

(4) **REQUESTED BY:** _MIKE GRIFFIN_

DATE: __3/18/03_____

(6) **REVIEWED BY:** J P Hughes (ENGINEERING MANAGER)

DATE: 4/3/03

(5) NEED DATE ___3/20/03_____

(7) SOLUTION WORK TO BE PERFORMED BY

X Title III - Site ☐ Jacobs (Oak Ridge)

(8) PROPOSED SOLUTION:

- REVISE EXHIBIT 3, SKETCH 1 OF SPECIFICATION ES-JM-STK-19-5209
- SEE ATTACHMENT 1

James C Jenkins
(Jacobs Responsible Engineer)

Date 4/15/03

(9) APPROVALS TO PROCEED WITH DESIGN:

J P Hughes
ENGINEERING MANAGER

4/15/03
DATE

Proceed with DCN approval prior to RDP development. ☐ NO X YES

MW Griffin MW GRIFFIN for Doris Edwards
PROJECT MANAGER

4/16/03
DATE

ORIGINAL

Equipment Specification	Document No.: 40430-TS-0010	Exhibit 3	ISSUE DATE 01/22/03
	Specification No. ES-JM-STK-19-5209	REV. ~~1~~ 2	
	Page 2 of 6	REQUISITION NO.	
PROJECT TITLE Silo 3 Project	CONTRACT NO. DE-AC24-01OH20115	PLANT LOCATION Fernald, Ohio	
EQUIPMENT Exhaust Stack	EQUIPMENT NO. STK-19-5209		

5442

Sketch 1

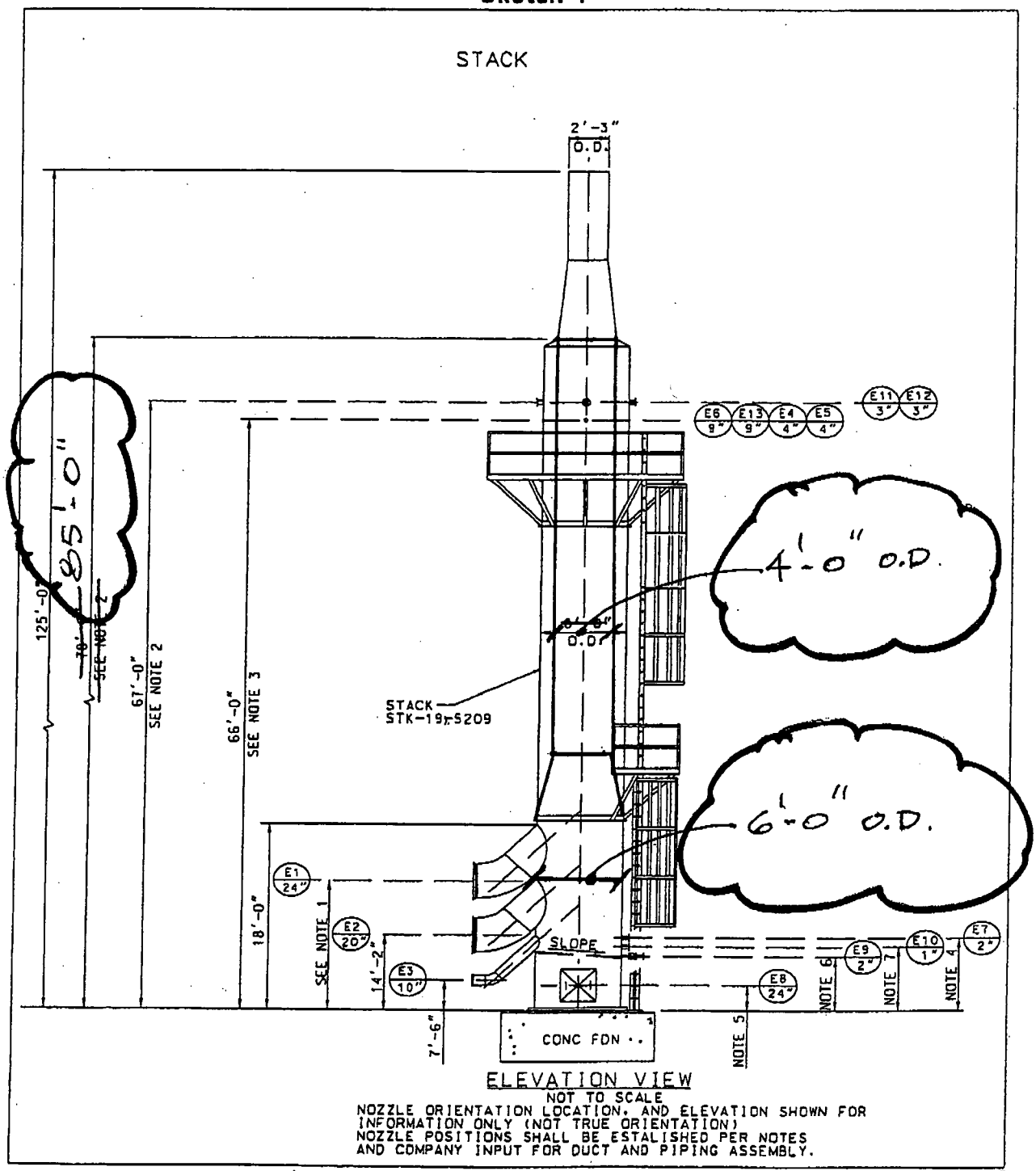

ATTACHMENT 1 DCN 40430-JEG-056