5449

AIR MONITOR CORPORATION
1050 Hopper Avenue • Santa Rosa, CA 95403

Corporate Offices
P.O. Box 6358
Santa Rosa, CA 95406
Tel: (707) 544-2706
Fax: (707) 526-2825

INFORMATION ONLY

SEQUENCE OF OPERATIONS

Air Sampling and Radon Monitoring System

For

Flour Global Services - Fernald

Silo 3 Radon Control System Stack Monitor

PO No. 03FF0783

AMC W.O. No. 49242

The Automatic Air Sampling, Beta Monitoring System measures the Silo 3 Radon Control System Exhaust Stack flow and withdraws a constant volume sample for Beta particle monitoring. System is provided with a sub-sample take-off after the sample LO-flo element and return upstream of the sample flow control valve FCV-1 for customer use. Use the following drawings in conjunction with this Sequence of Operations: W49242AA, W49242AB, W49242AC, & W49242AD.

Exhaust Stack Flow Loop

The flow measuring probe FE-1 located in the Exhaust Stack (part of FLO-samplr) sends total and static pressure signals to the stack mass flow transmitter FT-1. The temperature probe TE-1 sends a temperature signal to TT-1, which in turn sends a temperature signal (4-20mADC) to FT-1 as well. The transducer in the FT-1 converts the differential pressure signal into a voltage signal, which is sent to the microprocessor where density compensation occurs for stack air temperature and static pressure changes. This signal is made linear to mass flow and is displayed in SCFM on FT-1's integral LCD.

FT-1 sends a stack mass flow signal to signal isolator SI-1 and data logger channel #1. SI-1 sends the stack mass flow (4-20mADC) signal to Fluor Fernald's system PLC via terminals #0 & 9 on TB-2.

Sample Flow Loop

A vacuum pump P-1 (P-2 stand by and vice versa) creates a manifold vacuum that withdraws a stack air sample through extraction nozzle on the sample probe SP-1 (part of FLO-samplr). Once the sample is withdrawn from the stack, it is routed to the inline Beta Particulate Detector head located in the instrument enclosure via associated transport piping. After the Beta Particulate Detector head, the sample flows through the LO-flo measuring station FE-2, also located in the instrument enclosure.

The LO-flo station FE-2 sends total and static pressure signals to the sample mass flow transmitter FT-2. The sample temperature is measured by a 100 Ohm platinum RTD and temperature transmitter TT-2. The transducer in FT-2 converts differential pressure signal into a voltage signal, which is sent to the microprocessor where density compensation occurs for sample air temperature and static pressure changes. This signal is made linear to mass flow and is displayed in SCFM on FT-2's integral LCD.

FT-2 sends a sample mass flow signal to A/I #1 of Control Module CM-1 and data logger channel #4. FT-2 also sends an isolated sample mass flow signal (4-20mADC) via signal isolator SI-2 to Fluor Federal's system PLC via terminals #7 & 8 on TB-2.

Constant Volume Sample Flow Control & Flow Alarms

Control Module CM-1 compares the sample mass flow signal to the internal control setpoint (3.00 SCFM) and issues a 2-10 Vdc control signal via A/O #1 to the sample flow control valve FCV-1. This allows the sample flow rate to remain constant.

CM-1 compares the sample mass flow rate signal to the internal control setpoint and determines the % deviation for the sample mass flow rate to the setpoint. The absolute value of this % deviation is compared to the preset *"Sample Deviation"* Alarm setpoint of 10%. When the % deviation value exceeds the setpoint value for longer than 5 minutes, CM-1 opens N.C. contact D/O #1 which denergizes Relay R-1, activating alarm light L-6 and opening contacts across terminals #5 and #6 on TB-3. CM-1 also sends a 0-5VDC signal (A/O #2) linear and proportional to the absolute value of % deviation to data logger channel #5.

Beta Particulate Detector

The customer-provided remote Beta Particulate Detector head is located in the instrumentation enclosure. As the sample air passes through the detector head, particles are deposited in a filter paper and the amount of Beta radiation level is measured. A representative isolated signal is sent to the customer provided Ludlum Ratemeter also located in the instrumentation enclosure which provides an isolated 4–20 mA analog signal (via signal isolator SI-3) to Fluor's PLC via terminals #5 & 6 on TB-2.

The customer-provided Radon Detector is also located in the main instrumentation enclosure. As the sample air passes through the detector, the concentration is measured and reported via a pulse signal to Fluor's PLC via terminals on TB-4 (to be wired by customer).

Electrical Power Distribution in the Instrument Enclosure

Electrical power to the main instrument enclosure is provided by a single 120 Vac, 20 Amp line connected at terminals L, N and G of TB-1. Power to the enclosure is indicated by instrumentation light L-1. Power is switched through SW-1/F-1 for the pumps and SW-2/F-2 for the instrumentation.

Vacuum Pump System

Vacuum Pumps #1 and #2 provide the manifold vacuum by which the sample flow is extracted from the exhaust stack airflow. Two pumps are provided for redundancy and are controlled by Control Module CM-1. Pressure switches PS-1 and PS-2 are provided to sense for pump failure. Vacuum relief valves VRV-1 and VRV-2 are provided to protect Pumps #1 and #2 from damage in case of airflow starvation. Two automatic isolation valves ICV-1 and ICV-2 provide pump intake and exhaust swing-over. Vacuum gauge PI-1 provides visual indication of pump vacuum in inches of mercury.

Auto Pump Control

Switch SW-3 selects whether Pump #1 or #2 is the lead pump. The following sequence is written with Pump #1 selected as lead. When ***Pump Start/Stop*** push-button PB-1 is activated, a signal is sent to D/I #1 of Control Module CM-1 to initiate pump start sequence. CM-1 then closes N.O. contact D/O #2 which energizes Relay R-2, which in turn sends power to isolation valves ICV-1 and ICV-2 to position themselves to Pump #1. CM-1 allows 30 seconds to complete rotation. After 30 seconds, CM-1 closes D/O #3, energizing relay R-3, which closes a N.O. contact sending power to motor starter M-1. M-1 sends power to Pump #1, and through its auxiliary contact, illuminates ***Pump #1 On*** light L-2.

As Pump #1 starts running, it creates sufficient vacuum to close the N.O. contact of pressure switch PS-1, which sends the signal to D/I #3 of CM-1. CM-1 allows 15 seconds for this to occur. If PS-1 fails to close its contact to D/I #3 within 15 seconds, CM-1 will assume Pump #1 has failed and initiate pump swing-over to Pump #2 (see below).

INFORMATION ONLY

Auto Pump Control (continued)

Pump #1 will continue to run until:
1) It is manually turned off by PB-1; or,
2) The selector switch SW-3 is changed to Pump #2; or,
3) It fails to produce sufficient vacuum (for any reason).

Pump Swing-over

If for any reason the pump selected to run fails to produce sufficient vacuum to operate its pressure switch, Control Module CM-1 will initiate pump swing-over.

If Pump #1 is running and selected as lead, but fails to keep pressure switch PS-1 contact closed because of lack of vacuum, a signal is sent to D/I #3 of CM-1 causing CM-1 to open N.O. contacts D/O #2 and D/O #3. Isolation valves ICV-1 and ICV-2 will begin to reposition themselves to Pump #2 and power to Pump #1 will be removed. CM-1 will also close N.O. contact D/O #5, which energizes Relay R-5, activating alarm light L-4 and closing contacts across terminals #0 and 9 on TB-3.

After 30 seconds, CM-1 will close N.O. contact D/O #4 energizing R-4, which closes a N.O. contact sending power to motor starter M-2. M-2 sends power to Pump #2, and through its auxiliary contact, illuminates ***Pump #2 On*** light L-3. As Pump #2 starts running, it will create sufficient vacuum to close the N.O. contact of pressure switch PS-2.

Similarly, if Pump #2 is running and selected as lead, but fails to keep pressure switch PS-2 contact closed because of lack of vacuum, a signal is sent to D/I #4 of CM-1 causing CM-1 to open N.O. contacts D/O #2 and D/O #4. Isolation valves ICV-1 and ICV-2 will begin to reposition themselves to Pump #1, and power to Pump #2 will be removed. CM-1 will also close N.O. contact D/O #6, which energizes Relay R-6, activating alarm light L-5 and closing contacts across terminals #7 and #8 on TB-3.

After 30 seconds, CM-1 will close N.O. contact D/O #3, energizing R-3, which closes a N.O. contact sending power to motor starter M-1. M-1 sends power to Pump #1, and through its auxiliary contact, illuminates ***Pump #1 On*** light L-2. As Pump #1 starts running, it will create sufficient vacuum to close the N.O. contact of pressure switch PS-1.

Either alarm light can be reset by momentarily depressing pushbutton PB-2.

REV	DESCRIPTION	DATE	DWN	APV
1	PER DCO #1784	8-25-03	RVP	DBM

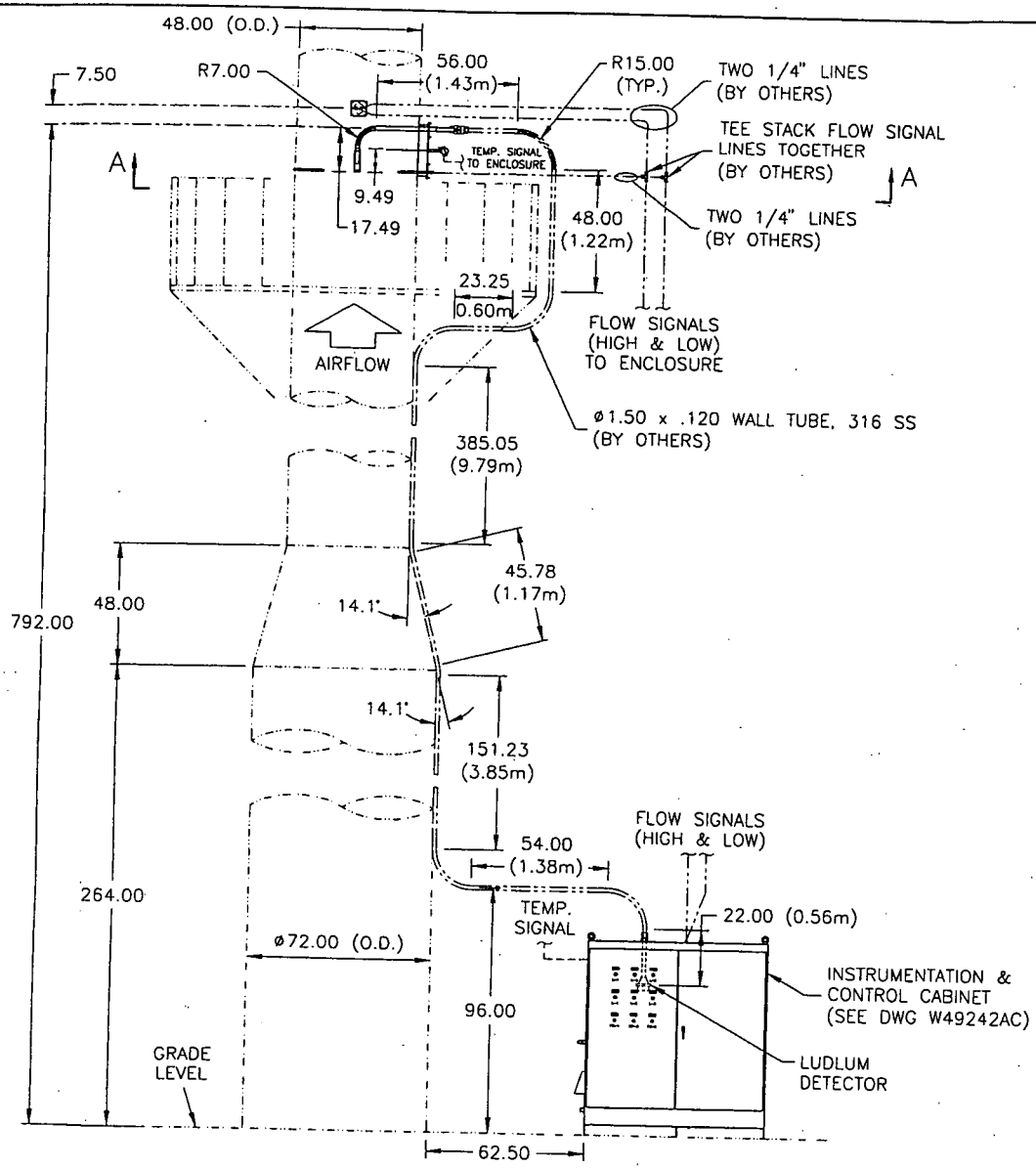

STACK ELEVATION

PER CUSTOMER SKETCH DATED 6-26-03

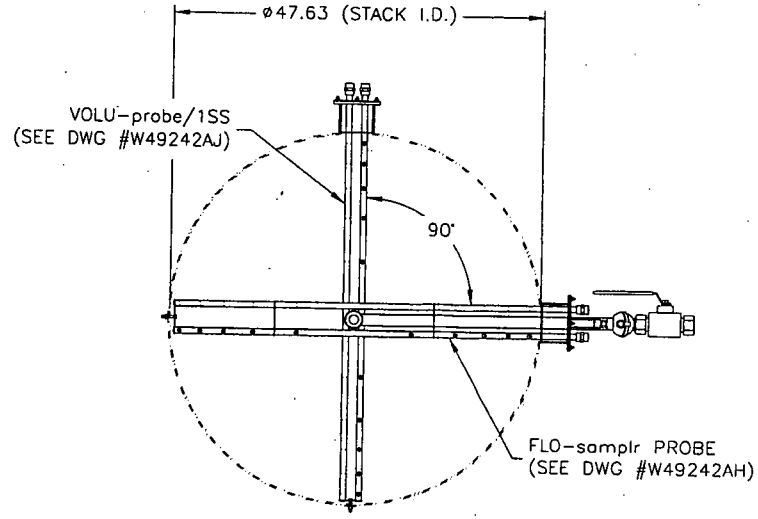

SECTION A-A

INFORMATION ONLY

PROJECT:
FLUOR FERNALD SILO 3 RADON CONTROL SYSTEM
FERNALD, OH
FLUOR P.O. #03FF0783
AIR MONITOR W.O. #49242

UNLESS OTHERWISE SPECIFIED, DIMENSIONS ARE IN INCHES, TOLERANCES ARE:

FRACTIONS	DECIMALS	ANGLES
± 1/16"	.XX ± .03 .XXX ± .010 .XXXX ± .0050	± 2°

DRAWN BY:	RVP	DATE:	6-27-03
DESIGN BY:	DARREN McGREGOR	DATE:	6-27-03
DESIGN VERIF:	PARESH DAVE	DATE:	6-27-03
QA REVIEW BY:	DAVID SILZLE	DATE:	6-27-03
APPROVED BY:	DEAN DeBAUN	DATE:	6-27-03

AIR MONITOR CORPORATION
P.O. BOX 6358 SANTA ROSA CA 95405
TELEPHONE (707) 544-2706

THIS DOCUMENT CONTAINS PROPRIETARY INFORMATION WHICH SHALL NOT BE REPRODUCED, DISCLOSED TO OTHERS, USED FOR MANUFACTURING OR ANY OTHER PURPOSE WITHOUT WRITTEN PERMISSION FROM AIR MONITOR CORP.

SAMPLING SYSTEM
EQUIPMENT LOCATION

CAD PLOT	FORMAT	DWG NO.	REV
08/29/03 12:30:00	B	W49242AA	1
SCALE FACTOR: 48.00	SCALE: 1:48.00	DO NOT SCALE DRAWING	

5

5445

REV	DESCRIPTION	DATE	DWN	APV
1	DCO #1784	9-25-03	PN	DS

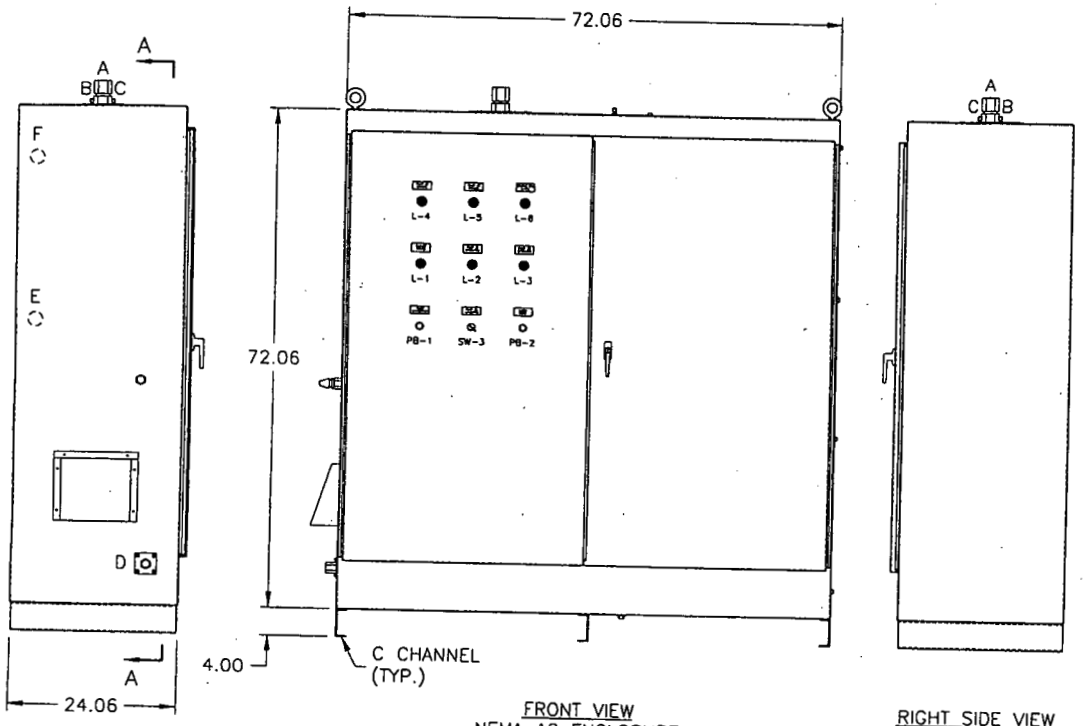

LEFT SIDE VIEW

FRONT VIEW
NEMA 12 ENCLOSURE

RIGHT SIDE VIEW

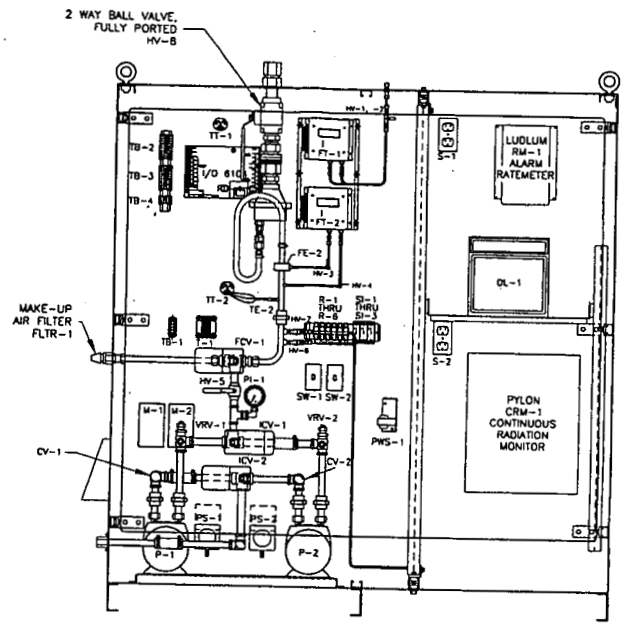

SECTION A–A
(DOORS NOT SHOWN FOR CLARITY)

INFORMATION ONLY

NOTES:
1. QUANTITY: 1

PROJECT:
FLUOR FERNALD SILO 3 RADON CONTROL SYSTEM
FERNALD, OH
FLUOR P.O. #03FF0783
AIR MONITOR W.O. #49242

CONNECTION CODE:

A. SAMPLE INLET
B. STACK FLOW HIGH PRESSURE SIGNAL
C. STACK FLOW LOW PRESSURE SIGNAL
D. RETURN TO STACK
E. POWER WIRING INLET
F. SIGNAL WIRING INLET/OUTLET

CONNECTION SIZE:

Ø1.50" COMPRESSION, S.ST.
1/4" COMPRESSION, S.ST.
1/4" COMPRESSION, S.ST.
3/4" (F)NPT, S.ST.
1" CONDUIT (BY OTHERS)
1" CONDUIT (BY OTHERS)

UNLESS OTHERWISE SPECIFIED, DIMENSIONS ARE IN INCHES, TOLERANCES ARE:
PER S.O.P #4.0

DRAWN BY:	D. McGREGOR	DATE:	6/12/03
DESIGN BY:	D. McGREGOR	DATE:	7/2/03
DESIGN VERIF:	P. DAVE	DATE:	7/2/03
QA REVIEW BY:	D. SILZLE	DATE:	7/2/03
APPROVED BY:	D. DeBAUN	DATE:	7/2/03

AIR MONITOR CORPORATION
P.O. BOX 6358 SANTA ROSA CA 95406
TELEPHONE (707) 544-2708

THIS DOCUMENT CONTAINS PROPRIETARY INFORMATION WHICH SHALL NOT BE REPRODUCED, DISCLOSED TO OTHERS, USED FOR MANUFACTURING OR ANY OTHER PURPOSE WITHOUT WRITTEN PERMISSION FROM AIR MONITOR CORP.

SILO 3 PUMP & INSTRUMENT ENCLOSURE

CAD PLOT	FORMAT	DWG NO.	REV
09/25/03 13:45:53	B	W49242AC	1
SCALE FACTOR: 18.00	SCALE: 1:18.00	DO NOT SCALE DRAWING	

6

5445

REV	DESCRIPTION	DATE	DWN	APV
1	PER DCO #1784	8-25-03	RVP	DBM

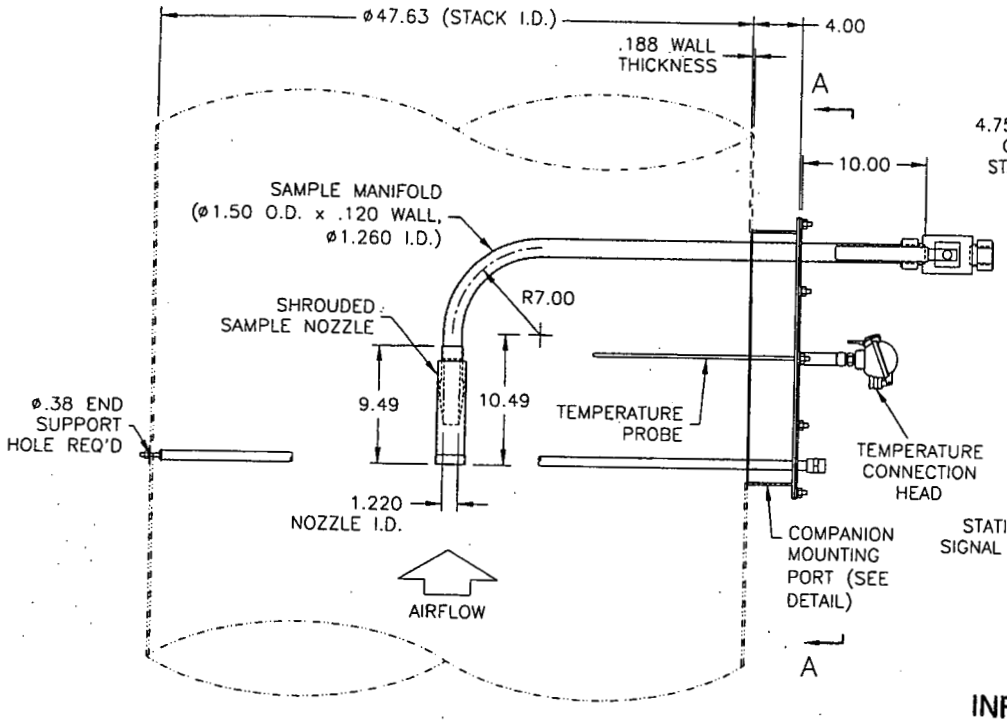

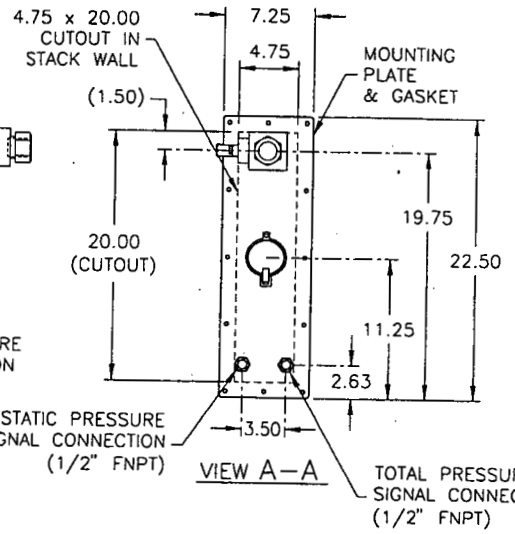

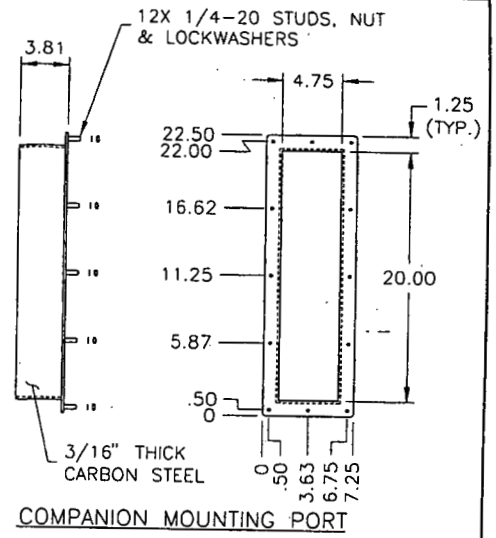

INFORMATION ONLY

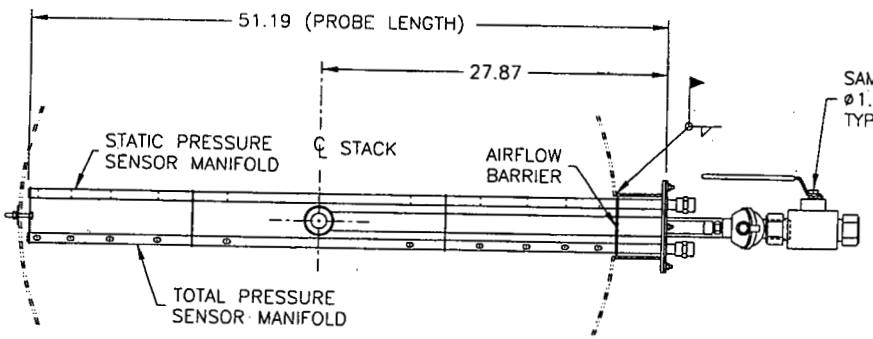

NOTES:

1. QUANTITY: 1

PROJECT:
FLUOR FERNALD SILO 3 RADON CONTROL SYSTEM
FERNALD, OH
FLUOR P.O. #03FF0783
AIR MONITOR W.O. #49242

FEATURE	MATERIAL
TEMP PROBE CONNECTION HEAD	ALUMINUM, NEMA 1
TEMPERATURE PROBE	SINGLE-PT., 100Ω, PLT. RTD
END SUPPORT STUD/NUT/WASHER	5/16-18, 316 SS
SIGNAL CONNECTIONS	1/2" FNPT, 316 SS
MOUNTING GASKETS	NEOPRENE
PROBE MOUNTING PLATE	10 GA. 316 SS
COMPANION MOUNTING PORT	3/16" THICK CARBON STEEL
SHROUDED SAMPLE NOZZLE	316 SS
T.P. & S.P. MANIFOLDS	ø.75 O.D. 316 SS
SAMPLE MANIFOLD	ø1.50 O.D. x .120 WALL, 316 SS

UNLESS OTHERWISE SPECIFIED, DIMENSIONS ARE IN INCHES, TOLERANCES ARE:

FRACTIONS	DECIMALS	ANGLES
± 1/16"	.XX ± .03 .XXX ± .010 .XXXX ± .0050	± 2°

DRAWN BY:	RVP	DATE:	6-23-03
DESIGN BY:	DARREN McGREGOR	DATE:	6-27-03
DESIGN VERIF:	PARESH DAVE	DATE:	6-27-03
QA REVIEW BY:	DAVID SILZLE	DATE:	6-27-03
APPROVED BY:	DEAN DeBAUN	DATE:	6-27-03

AIR MONITOR CORPORATION
P.O. BOX 6358 SANTA ROSA CA 95406
TELEPHONE (707) 544-2706

THIS DOCUMENT CONTAINS PROPRIETARY INFORMATION WHICH SHALL NOT BE REPRODUCED, DISCLOSED TO OTHERS, USED FOR MANUFACTURING OR ANY OTHER PURPOSE WITHOUT WRITTEN PERMISSION FROM AIR MONITOR CORP.

FLO-samplr
GENERAL ARRANGEMENT

CAD PLOT	FORMAT	DWG NO.	REV
08/25/03 13:23:40	B	W49242AH	1

SCALE FACTOR: 10.00 SCALE: 1:10.00 DO NOT SCALE DRAWING

5445

7

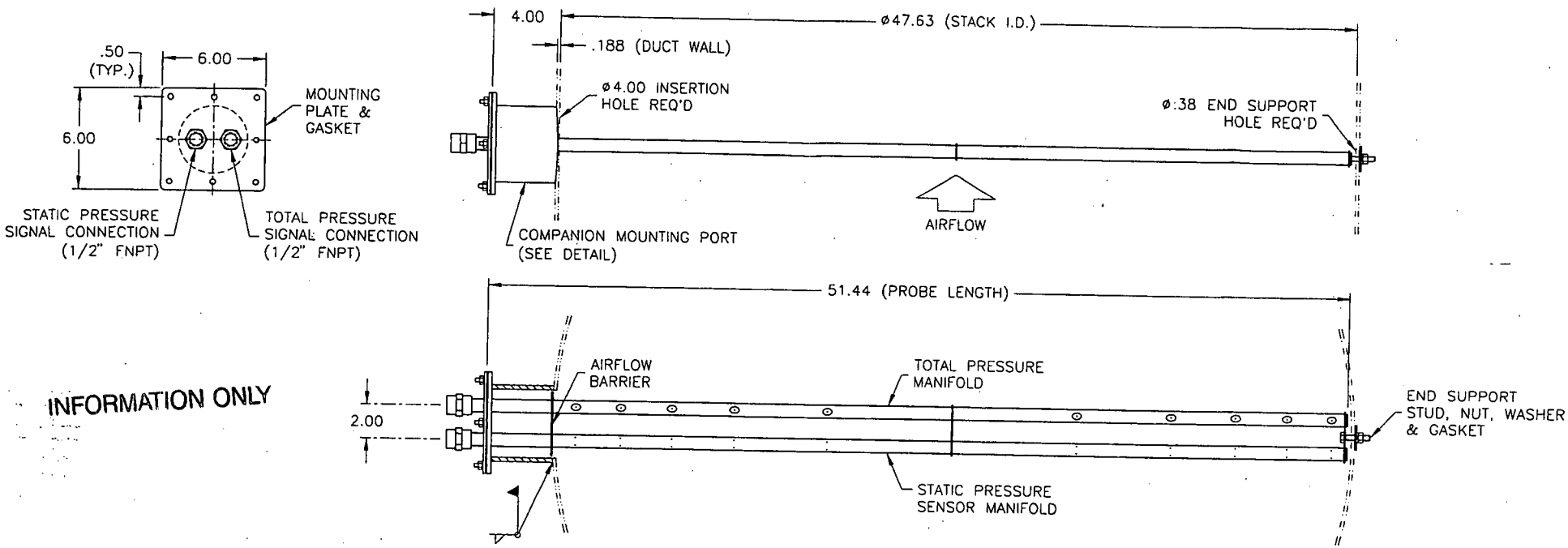

INFORMATION ONLY

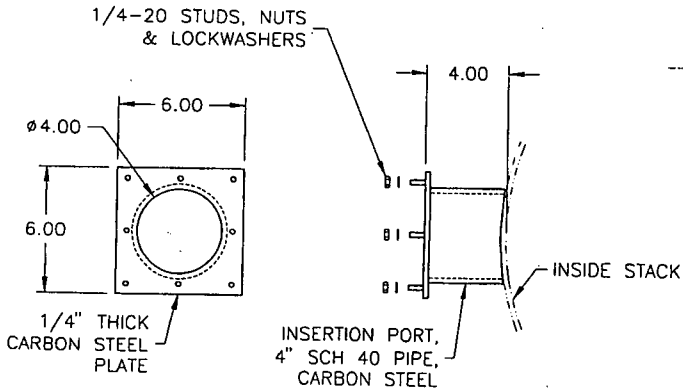

COMPANION MOUNTING PORT

PROJECT:
FLUOR FERNALD SILO 3 RADON CONTROL SYSTEM
FERNALD, OH
FLUOR P.O. #03FF0783
AIR MONITOR W.O. #49242

NOTES:
1. QUANTITY: 1

FEATURE	MATERIAL
INSERTION PORT	4" SCH 40 PIPE, CARBON STEEL
COMPANION MOUNTING PLATE	1/4" THICK CARBON STEEL
END SUPPORT STUD/NUT/WASHER	5/16-18, 316 SS
GASKETS	NEOPRENE
T.P. & S.P. SENSING MANIFOLDS	ø.75 O.D. TUBE, 316 SS
SIGNAL CONNECTIONS	1/2" FNPT, 316 SS
PROBE MOUNTING PLATE	10 GA., 316 SS

UNLESS OTHERWISE SPECIFIED, DIMENSIONS ARE IN INCHES, TOLERANCES ARE:

FRACTIONS	DECIMALS	ANGLES
± 1/16"	.XX ± .03 .XXX ± .010 .XXXX ± .0050	± 2°

DRAWN BY: RVP DATE: 6-23-03
DESIGN BY: [signature] DATE: 6/27/03
DESIGN VERIF: P. Dave DATE: 6-27-03
QA REVIEW BY: [signature] DATE: 6-27-03
APPROVED BY: [signature] DATE: 6-27-03

AIR MONITOR CORPORATION
P.O. BOX 6358 SANTA ROSA CA 95406
TELEPHONE (707) 544-2706

THIS DOCUMENT CONTAINS PROPRIETARY INFORMATION WHICH SHALL NOT BE REPRODUCED, DISCLOSED TO OTHERS, USED FOR MANUFACTURING OR ANY OTHER PURPOSE WITHOUT WRITTEN PERMISSION FROM AIR MONITOR CORP.

VOLU-probe/1SS
GENERAL ARRANGEMENT

CAD PLOT	FORMAT	DWG NO.	REV
06/24/03 07:40:42	B	W49242AJ	0

SCALE FACTOR: 6.00 SCALE: 1:6.00 DO NOT SCALE DRAWING