Department of Energy
Ohio Field Office
Fernald Environmental Management Project
P. O. Box 538705
Cincinnati, Ohio 45253-8705
(513) 648-3155

5728

SEP 2 7 2004

Mr. James A. Saric, Remedial Project Manager
United States Environmental Protection Agency
Region V, SR-6J
77 West Jackson Boulevard
Chicago, Illinois 60604-3590

DOE-0419-04

Mr. Tom Schneider, Project Manager
Ohio Environmental Protection Agency
401 East 5th Street
Dayton, Ohio 45402-2911

Dear Mr. Saric and Mr. Schneider:

TRANSMITTAL OF REVISION 0 (CERTIFIED FOR CONSTRUCTION) DESIGN PACKAGE FOR STAGE I OF THE CONVERTED ADVANCED WASTEWATER TREATMENT FACILITY – INSTRUMENTS AND CONTROLS – FERNALD CLOSURE PROJECT

Reference: Letter DOE-0371-04 from W. Taylor to J. Saric and T. Schneider, "Transmittal of Revision 0 (Certified for Construction) Design Package for Stage I of the Converted Advanced Waste Water Treatment Fernald Closure Project," dated August 19, 2004

The purpose of this letter is to transmit the Instrument and Controls Certified for Construction Drawings for Stage I of the Converted Advanced Waste Water Treatment (CAWWT) to your agency for information. These drawings complete the CAWWT Stage I design package previously transmitted under the referenced letter. The drawings specify the use of a Programmable Logic Controller (PLC)-based system. This system will bring the CAWWT controls up-to-date and the new control system will be much more serviceable than the 12-year-old Distributed Control System (DCS) currently used to control the AWWT.

As noted in the referenced letter, the design package for Stage II of the project will be completed and forwarded to you in early 2005. Stage II of the project will include removing the out of service AWWT Phases I and II equipment from the CAWWT area, closing up the remaining building and relocating support facilities into the renovated space.

Recycled and Recyclable

If you have any questions regarding this transmittal, please contact Dave Lojek at (513) 648-3127.

Sincerely,

W J Taylor

FCP:Lojek

William J. Taylor
Director

Enclosure: As Stated

cc w/enclosure:
T. Schneider, OEPA-Dayton (three copies of enclosure)
G. Jablonowski, USEPA-V, SR-6J
M. Murphy, USEPA-V, AE-17J
M. Cullerton, Tetra Tech
M. Shupe, HSI GeoTrans
AR Coordinator, Fluor Fernald, Inc./MS78

cc w/o enclosure:
D. Lojek, OH/Springdale
K. Johnson, OH/Springdale
J. Reising, OH/Springdale
D. Riley, OH/Springdale
F. Bell, ATSDR
R. Vandegrift, ODH
K. Alkema, Fluor Fernald, Inc./MS01
W. Hertel, Fluor Fernald, Inc./MS52-5
M. Kopp, Fluor Fernald, Inc./MS52-5
T. Poff, Fluor Fernald, Inc./MS65-2
D. Powell, Fluor Fernald, Inc./MS64
ECDC, Fluor Fernald, Inc./MS52-7

5728

DATE	SYM	REVISION RECORD	AUTH	DR	CK
8/19/04	A	FOR APPROVAL	CUST	PW	JK
9/14/04	0	FOR CONSTRUCTION	CUST	PW	JK

FERNALD CLOSURE PROJECT

CAWWT CONTROL SYSTEM

DTSI Drawing #	FCP Drawing #	Description
DTSI-04177-01	51D-5500-N-01374	Cover Sheet & Drawing Index
DTSI-04177-02	51D-5500-N-01375	Symbols
DTSI-04177-03	51D-5500-N-01376	Spare
DTSI-04177-04	51D-5500-N-01377	Spare
DTSI-04177-05	51D-5500-N-01378	System Architecture Drawing
DTSI-04177-06	51D-5500-N-01379	Radio System Information
DTSI-04177-07	51D-5500-N-01380	Well Field Fiber Optic System Diagram
DTSI-04177-08	51D-5500-N-01381	Spare
DTSI-04177-09	51D-5500-N-01382	RTU-9 Panel Layout and Bill of Material
DTSI-04177-10	51D-5500-N-01383	RTU-9 Terminal Layout and Bill of Material Sheet 1 of 2
DTSI-04177-11	51D-5500-N-01384	RTU-9 Terminal Layout Sheet 2 of 2
DTSI-04177-12	51D-5500-N-01385	RTU-9 Panel Wiring Schematic 1 of 2
DTSI-04177-13	51D-5500-N-01386	RTU-9 Panel Wiring Schematic 2 of 2
DTSI-04177-14	51D-5500-N-01387	RTU-9 Analog Input Module, Rack 1, Slots 4 & 5
DTSI-04177-15	51D-5500-N-01388	RTU-9 Analog Input Module, Rack 1, Slots 6 & 7
DTSI-04177-16	51D-5500-N-01389	RTU-9 Analog Output Module, Rack 1, Slots 8 & 9
DTSI-04177-17	51D-5500-N-01390	RTU-9 Discrete Input Module, Rack 2, Slot 4
DTSI-04177-18	51D-5500-N-01391	RTU-9 Discrete Input Module, Rack 2, Slot 5
DTSI-04177-19	51D-5500-N-01392	RTU-9 Discrete Input Module, Rack 2, Slot 6
DTSI-04177-20	51D-5500-N-01393	RTU-9 Discrete Input Module, Rack 2, Slot 7
DTSI-04177-21	51D-5500-N-01394	RTU-9 Discrete Input Module, Rack 2, Slot 8
DTSI-04177-22	51D-5500-N-01395	RTU-9 Discrete Output Module, Rack 2, Slot 9
DTSI-04177-23	51D-5500-N-01396	RTU-9 Discrete Output Module, Rack 2, Slot 10
DTSI-04177-24	51D-5500-N-01397	RTU-9 Discrete Output Module, Rack 2, Slot 11

DTSI Drawing #	FCP Drawing #	Description
DTSI-04177-25	51D-5500-N-01398	RTU-10 Panel Layout and Bill of Material
DTSI-04177-26	51D-5500-N-01399	RTU-10 Terminal Layout and Bill of Material
DTSI-04177-27	51D-5500-N-01400	RTU-10 Panel Wiring Schematic
DTSI-04177-28	51D-5500-N-01401	RTU-10 Analog Input Module, Slots 4 & 5
DTSI-04177-29	51D-5500-N-01402	RTU-10 Analog Output Module, Slots 6 & 7
DTSI-04177-30	51D-5500-N-01403	RTU-10 Discrete Input Module, Slot 8
DTSI-04177-31	51D-5500-N-01404	RTU-10 Discrete Input Module, Slot 9
DTSI-04177-32	51D-5500-N-01405	RTU-10 Discrete Output Module, Slot 10
DTSI-04177-33	51D-5500-N-01406	Spare
DTSI-04177-34	51D-5500-N-01407	Spare
DTSI-04177-35	51D-5500-N-01408	RTU-7 Panel Layout and Bill of Material
DTSI-04177-36	51D-5500-N-01409	RTU-7 Terminal Layout and Bill of Material
DTSI-04177-37	51D-5500-N-01410	RTU-7 Panel Wiring Schematic
DTSI-04177-38	51D-5500-N-01411	RTU-7 Analog Inputs
DTSI-04177-39	51D-5500-N-01412	RTU-7 Analog Outputs
DTSI-04177-40	51D-5500-N-01413	RTU-7 Discrete Inputs
DTSI-04177-41	51D-5500-N-01414	RTU-7 Discrete Outputs
DTSI-04177-42	51D-5500-N-01415	Spare
DTSI-04177-43	51D-5500-N-01416	Spare
DTSI-04177-44	51D-5500-N-01417	Spare
DTSI-04177-45	51D-5500-N-01418	RTU-11 Panel Layout and Bill of Material
DTSI-04177-46	51D-5500-N-01419	RTU-11 Terminal Layout and Bill of Material
DTSI-04177-47	51D-5500-N-01420	RTU-11 Panel Wiring Schematic
DTSI-04177-48	51D-5500-N-01421	RTU-11 Analog Inputs
DTSI-04177-49	51D-5500-N-01422	RTU-11 Discrete Inputs
DTSI-04177-50	51D-5500-N-01423	RTU-11 Discrete Outputs

(X)A-CONFORMS TO THE SUBCONTRACT REQUIREMENTS
( )B-MINOR COMMENT-INCORPORATE & RESUBMIT
( )C-REVISE & RESUBMIT
SIG: S. Bogjok DATE: 9/21/04

RES 4518 PROJECT NO. 59600

INDEX CODE				
PL. & AR.	ORG.	CL.	SER. NO.	REV.
51D	5500	N	01374	

WIRE LUGS - NO ☒ YES ☐ RING ☐ LOCKING SPADE ☐
INSULATION: NYLON ☐ PVC ☒ POLYETHYLENE ☐

WIRE SPECIFICATIONS:

USAGE	COLOR
480 VAC POWER (A, B, C, NEUTRAL)	BROWN, VIOLET, ORANGE, GRAY
120 AC POWER (HOT, NEUTRAL, GND)	BLK, WHT, GRN
120 AC CONTROL (CONTROL, NEUTRAL, GND)	RED, WHT, GRN
DC POWER	BLUE
DC SIGNAL (+, -, GND)	RED , BLK, GRN/YLW STRIPE
FOREIGN SIGNAL / INSTRUMENTS	YELLOW 2 CONDUCTOR SHL'D

STATE OF OHIO ROBERT A. LANDTHORN E-37992 REGISTERED PROFESSIONAL ENGINEER

United States Dept. of Energy
Fernald Closure Project
P.O. #040400290

DUBLIN TECHNICAL SYSTEMS INC.
CONTRACT # 04177

TOLERANCES: ± DECIMAL: ± .03 FRACTIONAL: ± 1/64" ANGULAR: ± 1°

DUBLIN TECHNICAL SYSTEMS, INC.

Fluor Fernald CAWWT Control System

SCALE: NONE DRAWN BY: PW APPROVED BY: JK

TITLE: COVER SHEET AND DRAWING INDEX

DATE: 8/30/04 DRAWING NUMBER: DTSI-04177-001

5728

DATE	SYM	REVISION RECORD	AUTH	DR	CK
8/19/04	A	FOR APPROVAL	CUST	PW	JK
9/14/04	0	FOR CONSTRUCTION	CUST	PW	JK

SYMBOL LEGEND

CRXX — CONTROL RELAY
XX: RELAY NUMBER

TRX — TIME DELAY RELAY
X: TIME DELAY RELAY NUMBER

CRXX — RELAY DESIGNATION
RELAY CONTACT, NO

CRXX — RELAY DESIGNATION
RELAY CONTACT, NC

PS XXX — TAG #
PRESSURE SWITCH, NC

PS XXX — TAG #
PRESSURE SWITCH, NO

TS XXX — TAG #
TEMPERATURE SWITCH, NC

TS XXX — TAG #
TEMPERATURE SWITCH, NO

FS XXX — TAG #
FLOW SWITCH, NC

FS XXX — TAG #
FLOW SWITCH, NO

LS XXX — TAG #
FLOAT SWITCH, NC

LS XXX — TAG #
FLOAT SWITCH, NO

ZS XXX — TAG #
LIMIT SWITCH, NC

ZS XXX — TAG #
LIMIT SWITCH, NO

MX — MOTOR STARTER COIL
X: MOTOR STARTER NUMBER

X — TERMINAL
X: DESIGNATED TERMINAL NUMBERS
SH: SHIELD

XF — X: FUSE NUMBER
XA — FUSE
FUSE SIZE X AMPS

GROUND BUS

GND STUD

FIELD WIRE

INSTRUMENTATION SYMBOLS

	FIRST LETTER		SUCCEEDING LETTERS		
	MEASURED OR INITIATING VARIABLE	MODIFIER	READOUT OR PASSIVE FUNCTION	OUTPUT FUNCTION	MODIFIER
A	ANALYSIS		ALARM		
B	BURNER FLAME		USER'S CHOICE	USER'S CHOICE	USER'S CHOICE
C	CONDUCTIVITY (ELECTRICAL)			CONTROL	
D	DENSITY (MASS) OR SPECIFIC GRAVITY	DIFFERENTIAL		USER'S CHOICE	
E	VOLTAGE (EMF)		PRIMARY ELEMENT		
F	FLOW RATE	RATIO (FRACTION)		GATE	
G	GAGING (DIMENSIONAL)		GLASS		
H	HAND (MANUALLY INITIATED)				HIGH OR OPENED
I	CURRENT (ELECTRICAL)		INDICATE		
J	POWER	SCAN			
K	TIME OR TIME SCHEDULE	TIME RATE OF CHANGE		CONTROL STATION	
L	LEVEL		PILOT (LIGHT)		LOW OR CLOSED
M	MOTOR OR MOTION				MIDDLE OR INTERMEDIATE
N	USER'S CHOICE		USER'S CHOICE	USER'S CHOICE	ON, OPERATE OR RUNNING
O	USER'S CHOICE OR TORQUE	OVERLOAD	ORIFICE (RESTRICTION)		
P	PRESSURE OR VACUUM		POINT (TEST CONNECTION)		
Q	QUANTITY OR EVENT	INTEGRATE OR TOTALIZE			
R	RADIOACTIVITY		RECORD OR PRINT		
S	SPEED OR FREQUENCY	SAFETY		SWITCH	OFF OR STOPPED
T	TEMPERATURE			TRANSMIT	
U	MULTIVARIABLE		MULTIFUNCTION	MULTIFUNCTION	MULTIFUNCTION
V	VISCOSITY			VALVE, DAMPER OR LOUVER	
W	WEIGHT OR FORCE		WELL		
X	UNCLASSIFIED		UNCLASSIFIED	UNCLASSIFIED	UNCLASSIFIED
Y	USER'S CHOICE			RELAY OR COMPUTE	
Z	POSITION			DRIVE, ACTUATE, OR UNCLASSIFIED FINAL CONTROL ELEMENT	

(X)A-CONFORMS TO THE SUBCONTRACT REQUIREMENTS
( )B-MINOR COMMENT-INCORPORATE & RESUBMIT
( )C-REVISE & RESUBMIT
SIG: J. Bryk DATE: 9/21/04

RES 4518 PROJECT NO. 59600

INDEX CODE				
PL. & AR.	ORG.	CL.	SER. NO.	REV.
51D	5500	N	01375	

WIRE LUGS – NO ☒. YES ☐ RING ☐. LOCKING SPADE ☐
INSULATION: NYLON ☐. PVC ☒ POLYETHYLENE ☐

WIRE SPECIFICATIONS:

USAGE	COLOR
480 VAC POWER (A, B, C, NEUTRAL)	BROWN, VIOLET, ORANGE, GRAY
120 AC POWER (HOT, NEUTRAL, GND)	BLK, WHT, GRN
120 AC CONTROL (CONTROL, NEUTRAL, GND)	RED, WHT, GRN
DC POWER	BLUE
DC SIGNAL (+, –, GND)	RED , BLK, GRN/YLW STRIPE
FOREIGN	YELLOW
SIGNAL / INSTRUMENTS	2 CONDUCTOR SHL'D

STATE OF OHIO
ROBERT A. LANDTHORN
E-37992
REGISTERED PROFESSIONAL ENGINEER

United States Dept. of Energy
Fernald Closure Project
P.O. #040400290

DUBLIN TECHNICAL SYSTEMS INC.
CONTRACT # 04177

TOLERANCES: ±
DECIMAL: ± .03
FRACTIONAL: ± 1/64"
ANGULAR: ± 1°

DUBLIN TECHNICAL SYSTEMS, INC.

Fluor Fernald
CAWWT Control System

SCALE: NONE
DRAWN BY: PW
APPROVED BY: JK

TITLE: SYMBOLS

DATE: 8/30/04
DRAWING NUMBER: DTSI-04177-002

5728

DATE	SYM	REVISION RECORD	AUTH	DR	CK
8/19/04	A	FOR APPROVAL	CUST	PW	JK
9/14/04	0	FOR CONSTRUCTION	CUST	PW	JK

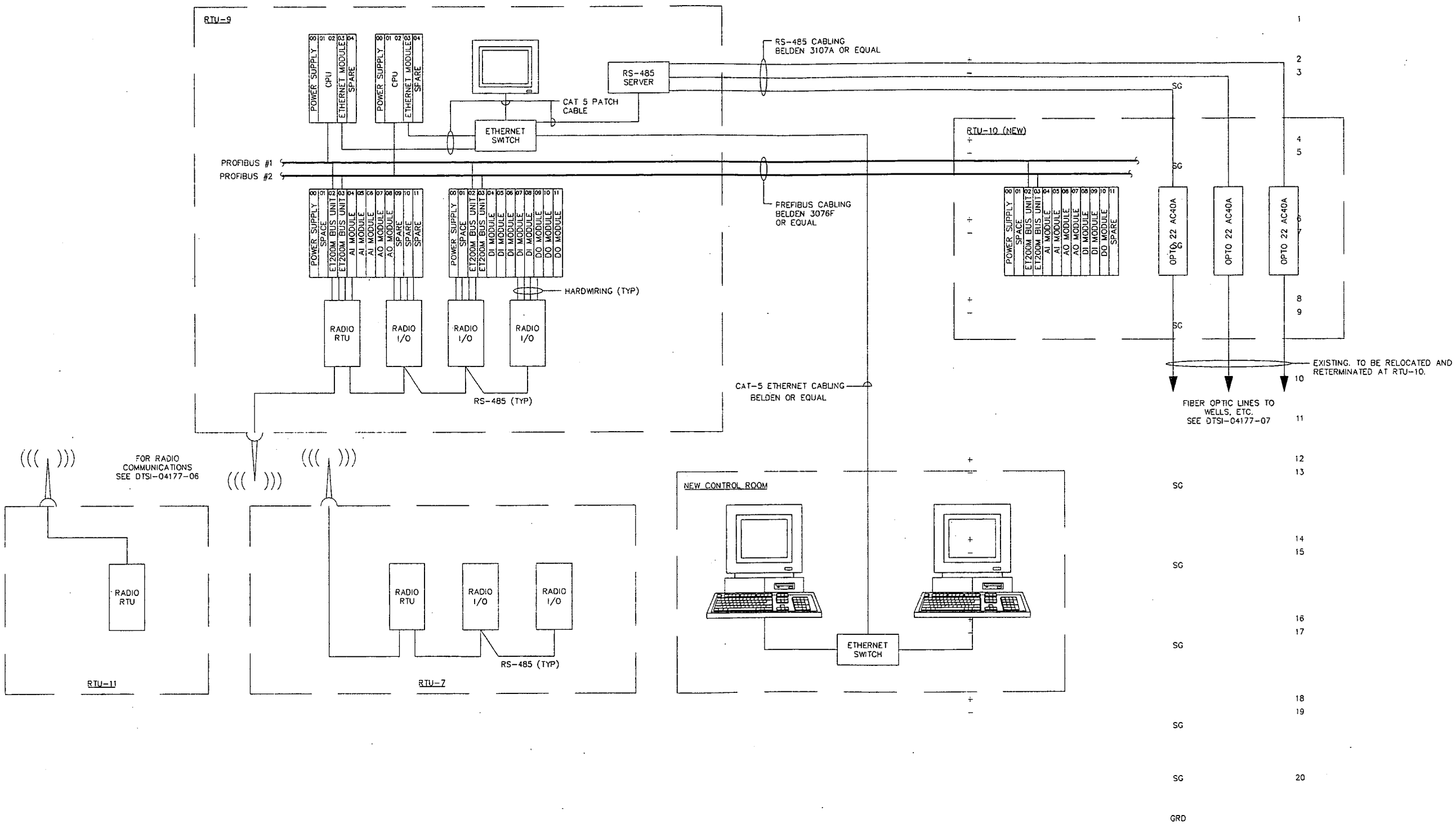

(X)A-CONFORMS TO THE SUBCONTRACT REQUIREMENTS
( )B-MINOR COMMENT-INCORPORATE & RESUBMIT
( )C-REVISE & RESUBMIT
SIG: [signature] DATE: 9/14/04

RES 4518 PROJECT NO. 59600

INDEX CODE				
PL. & AR.	ORG.	CL.	SER. NO.	REV.
51D	5500	N	01378	

WIRE LUGS - NO ☒. YES ☐ RING ☐. LOCKING SPADE ☐
INSULATION: NYLON ☐. PVC ☒ POLYETHYLENE ☐

WIRE SPECIFICATIONS:

USAGE	COLOR
480 VAC POWER (A, B, C, NEUTRAL)	BROWN, VIOLET, ORANGE, GRAY
120 AC POWER (HOT, NEUTRAL, GND)	BLK, WHT, GRN
120 AC CONTROL (CONTROL, NEUTRAL, GND)	RED, WHT, GRN
DC POWER	BLUE
DC SIGNAL (+, -, GND)	RED , BLK, GRN/YLW STRIPE
FOREIGN	YELLOW
SIGNAL / INSTRUMENTS	2 CONDUCTOR SHL'D

STATE OF OHIO
ROBERT A. LANDTHORN
E-37992
REGISTERED PROFESSIONAL ENGINEER

United States Dept. of Energy
Fernald Closure Project
P.O. #040400290

DUBLIN TECHNICAL SYSTEMS INC.
CONTRACT # 04177

TOLERANCES: ±
DECIMAL: ± .03
FRACTIONAL: ± 1/64"
ANGULAR: ± 1°

DUBLIN TECHNICAL SYSTEMS, INC.

Fluor Fernald CAWWT Control System
SCALE: NONE
DRAWN BY: PW
APPROVED BY: JK

TITLE: SYSTEM ARCHITECTURE DRAWING

DATE: 8/19/04
DRAWING NUMBER: DTSI-04177-005

--5728

DATE	SYM	REVISION RECORD	AUTH	DR	CK
9/01/04	A	FOR APPROVAL	CUST	PW	JK
9/14/04	0	FOR CONSTRUCTION	CUST	PW	JK

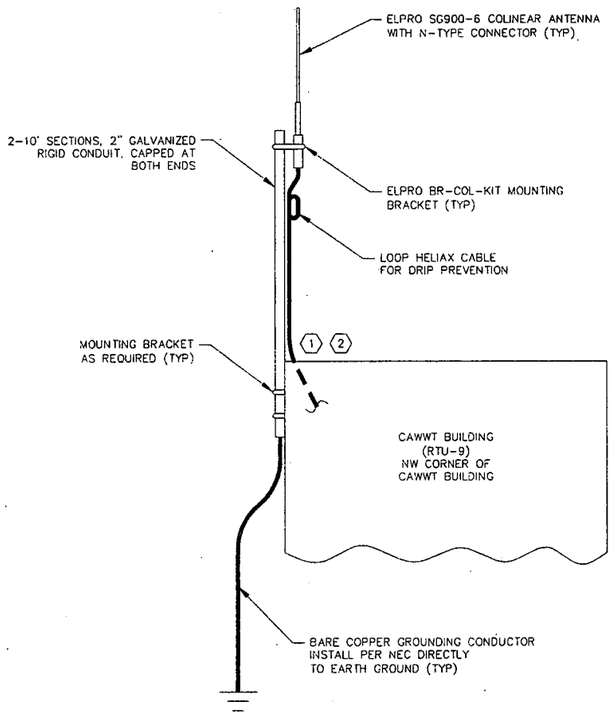

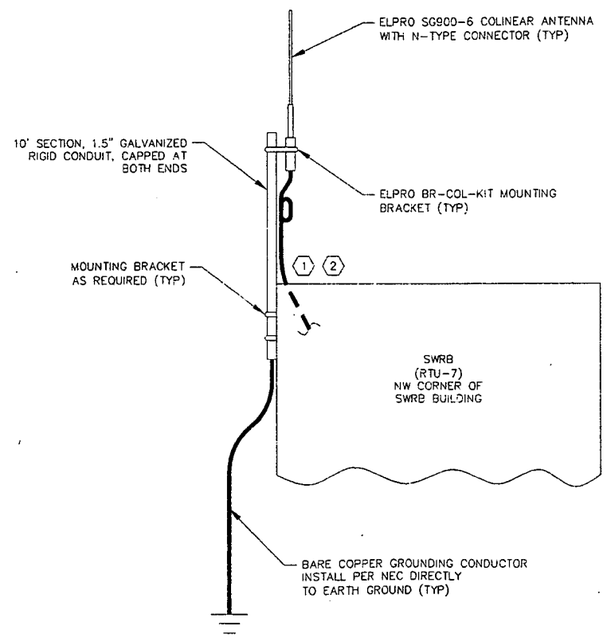

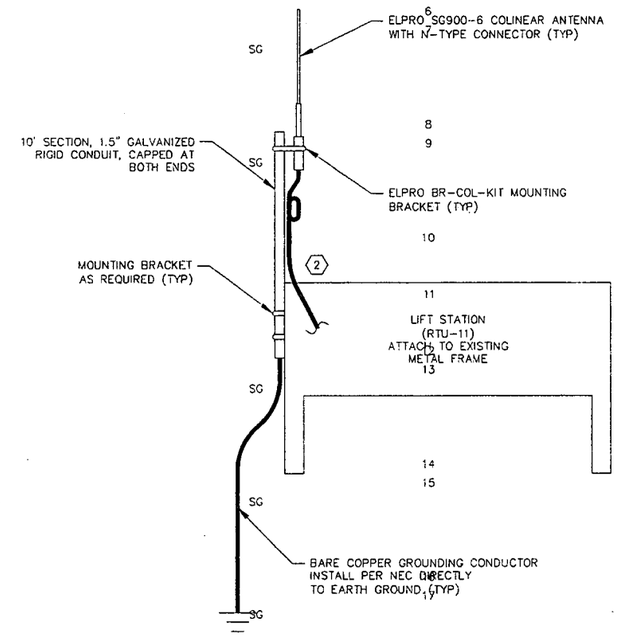

1 2 3 SG 4 5 SG 6 SG 8 9 SG 10 11 13 SG 14 15 SG 17 SG 18 19 SG 20 SG GRD

NOTES:

1. PENETRATE BUILDINGS WITH RADIO COAXIAL CABLE ON SIDE OF BUILDING.
2. USE FOLLOWING EQUIPMENT:
   ANTENNA CONNECTOR: ANDREW 300APNM-C
   RADIO CONNECTOR: ANDREW 300APSR-C
   HELIAX CABLE: ANDREW CNT-300
   LENGHT AS REQUIRED.

(X)A-CONFORMS TO THE SUBCONTRACT REQUIREMENTS
( )B-MINOR COMMENT-INCORPORATE & RESUBMIT
( )C-REVISE & RESUBMIT
SIG: S. Kogish DATE: 9/21/04

RES 4518 PROJECT NO. 59600

INDEX CODE				
PL. & AR.	ORG.	CL.	SER. NO.	REV.
51D	5500	N	01379	

WIRE LUGS - NO ☒, YES ☐ RING ☐, LOCKING SPADE ☐
INSULATION: NYLON ☐, PVC ☒ POLYETHYLENE ☐

WIRE SPECIFICATIONS:

USAGE	COLOR
480 VAC POWER (A, B, C, NEUTRAL)	BROWN, VIOLET, ORANGE, GRAY
120 AC POWER (HOT, NEUTRAL, GND)	BLK, WHT, GRN
120 AC CONTROL (CONTROL, NEUTRAL, GND)	RED, WHT, GRN
DC POWER	BLUE
DC SIGNAL (+, -, GND)	RED , BLK, GRN/YLW STRIPE
FOREIGN	YELLOW
SIGNAL / INSTRUMENTS	2 CONDUCTOR SHL'D

STATE OF OHIO ROBERT A. LANDTHORN E-37992 REGISTERED PROFESSIONAL ENGINEER

United States Dept. of Energy
Fernald Closure Project
P.O. #040400290

DUBLIN TECHNICAL SYSTEMS INC.
CONTRACT # 04177

TOLERANCES: ±
DECIMAL: ± .03
FRACTIONAL: ± 1/64"
ANGULAR: ± 1°

DUBLIN TECHNICAL SYSTEMS, INC.

Fluor Fernald
CAWWT Control System

SCALE: NONE
DRAWN BY: PW
APPROVED BY: JK

TITLE: RADIO SYSTEM INFORMATION

DATE: 9/01/04
DRAWING NUMBER: DTSI-04177-006

5728

DATE	SYM	REVISION RECORD	DR TH	DR	CK
8/20/04	A	FOR APPROVAL	CUST	PW	JK
9/14/04	0	FOR CONSTRUCTION	CUST	PW	JK

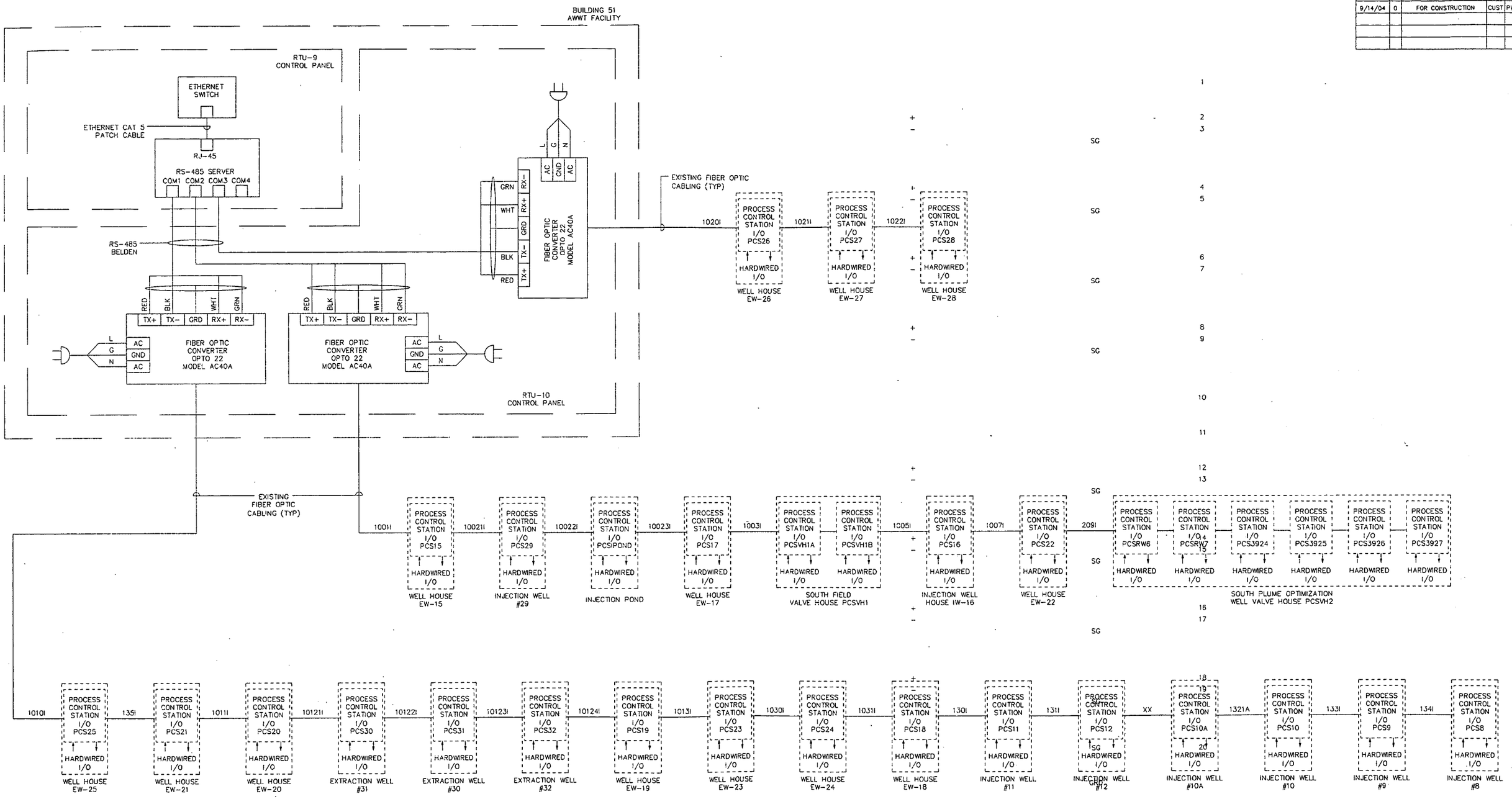

(X)A-CONFORMS TO THE SUBCONTRACT REQUIREMENTS
( )B-MINOR COMMENT-INCORPORATE & RESUBMIT
( )C-REVISE & RESUBMIT
SIG: S. Boyd DATE: 9/21/04

RES 4518 PROJECT NO. 59600

INDEX CODE				
PL. & AR.	ORG.	CL.	SER. NO.	REV.
51D	5500	N	01380	

WIRE LUGS - NO ☒ YES ☐ RING ☐ LOCKING SPADE ☐
INSULATION: NYLON ☐ PVC ☒ POLYETHYLENE ☐

WIRE SPECIFICATIONS:

USAGE	COLOR
480 VAC POWER (A, B, C, NEUTRAL)	BROWN, VIOLET, ORANGE, GRAY
120 AC POWER (HOT, NEUTRAL, GND)	BLK, WHT, GRN
120 AC CONTROL (CONTROL, NEUTRAL, GND)	RED, WHT, GRN
DC POWER	BLUE
DC SIGNAL (+, -, GND)	RED , BLK, GRN/YLW STRIPE
FOREIGN	YELLOW
SIGNAL / INSTRUMENTS	2 CONDUCTOR SHL'D

STATE OF OHIO
ROBERT A. LANDTHORN
E-37992
REGISTERED PROFESSIONAL ENGINEER

United States Dept. of Energy
Fernald Closure Project
P.O. #040400290

DUBLIN TECHNICAL SYSTEMS INC.
CONTRACT # 04177

TOLERANCES
DECIMAL ± .03
FRACTIONAL ± 1/64"
ANGULAR ± 1°

DUBLIN TECHNICAL SYSTEMS, INC.

Fluor Fernald
CAWWT Control System

SCALE NONE
DRAWN BY PW
APPROVED BY JK

TITLE WELL FIELD FIBER OPTIC SYSTEM DIAGRAM

DATE 8/20/04
DRAWING NUMBER DTSI-04177-007

DATE	SYM	REVISION RECORD	AUTH	DR	CK
8/18/04	A	FOR APPROVAL	CUST	PW	JK
9/14/04	0	FOR CONSTRUCTION	CUST	PW	JK

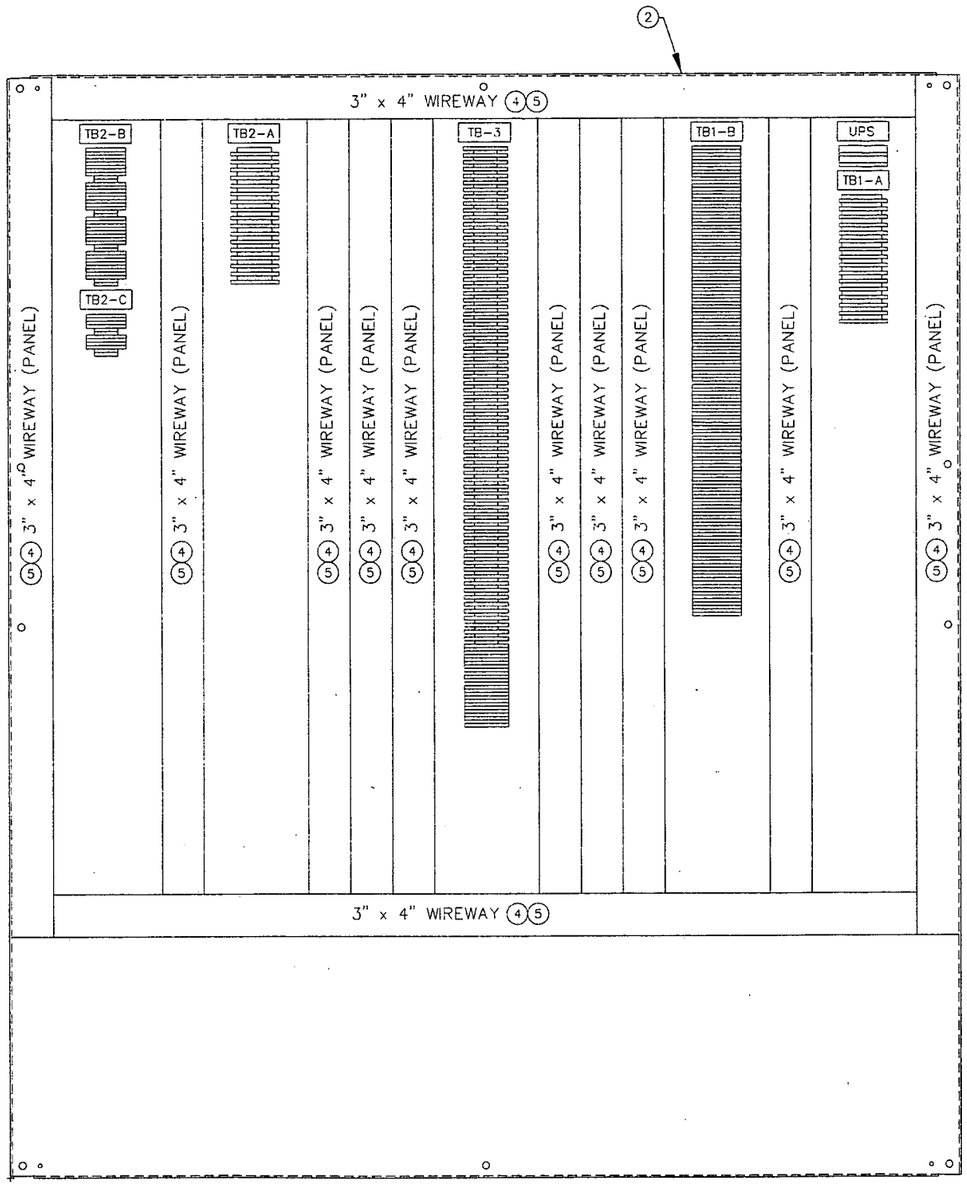

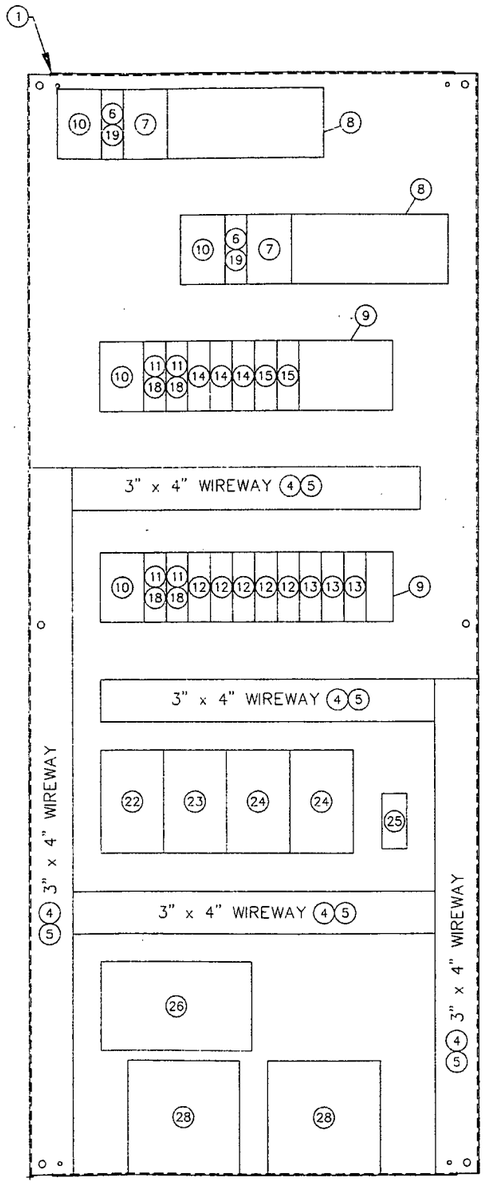

NOTES:

1.) ALL DEVICES TO BE SUPPLIED WITH APPROPRIATE MOUNTING HARDWARE.

2.) ALL LETTERING TO BE ENGRAVED ON LAMINATED NAMEPLATES TO BE 3/16" HIGH UNLESS OTHERWISE NOTED. BLACK TEXT ON WHITE BACKGROUND.

3.) TOLERANCES TO BE ±1/2" EXCEPT AS NOTED.

4.) ALL 120VAC WIRING SHALL BE ROUTED TO AND TERMINATED ON TB1, AND ROUTED IN WIRE DUCT SEPARATE FROM 24VDC WIRING.

5.) ALL 24VDC WIRING SHALL BE ROUTED TO AND TERMINATED ON TB2, AND ROUTED IN WIRE DUCT SEPARATE FROM 120VAC WIRING.

BILL OF MATERIAL

ITEM	QTY	PART NUMBER	DESCRIPTION
1	1	A-90P36F1	HOFFMAN, SUBPANEL, STEEL
2	1	A-90P72F1	HOFFMAN, SUBPANEL, STEEL
3	1	X-GS2K	HOFFMAN, GROUND BAR
4	LOT	E3X4LG6	PANDUIT, 3" x 4" CHANNEL
5	LOT	C3LG6	PANDUIT, 3" CHANNEL COVER
6	2	6ES7 315-2AG10-0AB0	SIEMENS, S7-300 CPU 315-2DP, 128 KB MEMORY
7	2	6EK7 343-1EX11-0XE0	SIEMENS, CP343-1 ETHERNET OP, 100 MBIT/S
8	2	6ES7 195-1GA00-0XA0	SIEMENS, ET200M ACTIVE BUS DIN RAIL, 483 MM
9	2	6ES7 195-1GF30-0XA0	SIEMENS, ET200M ACTIVE BUS DIN RAIL, 530MM
10	4	6ES7 307-1EA00-0AA0	SIEMENS, S7-300 24VDC POWER SUPPLY, 5A
11	7	6ES7 195-7HB00-0XA0	SIEMENS, ET200M INTERFACE MODULE, IM153-2 BUS MODULE FOR REDUNDANCY
12	5	6ES7 321-1EL00-0AA0	SIEMENS, S7-300 DIGITAL INPUT MODULE, 32PT, 120VAC
13	3	6ES7 322-1BL00-0AA0	SIEMENS, S7-300 DIGITAL OUTPUT MODULE, 32PT, 24VDC
14	4	6ES7 331-7KF02-0AB0	SIEMENS, S7-300 ANALOG INPUT MODULE, 8CH
15	2	6ES7 332-5HD01-0AB0	SIEMENS, S7-300 ANALOG OUTPUT MODULE, 4CH
16	6	6ES7 392-1AJ00-0AA0	SIEMENS, S7-300 TERMINAL CONNECTOR, SCREW TYPE, 20 PIN.
17	8	6ES7 392-1AM00-0AA0	SIEMENS, S7-300 TERMINAL CONNECTOR, SCREW TYPE, 40 PIN
18	2	6ES7 153-2AR01-0XA0	SIEMENS, S7-300 ET200M REDUNDANCY BUNDLE
19	2	6ES7 953-8LJ11-0AA0	SIEMENS, S7 MICRO MEMORY CARD, 512 KB
20	4	6ES7 972-0BA50-0XA0	SIEMENS, 90 DEGREE PROFIBUS CONNECTOR
21		NOT USED	
22	1	905U-1	ELPRO INDUSTRIAL RADIO MODEM
23	1	105S-3	ELPRO INDUSTRIAL RADIO RTU I/O EXPANSION MODULE
24	2	105S-4	ELPRO INDUSTRIAL RADIO RTU I/O EXPANSION MODULE
25	1	FL SWITCH 8TX	PHOENIX CONTACT UNMANAGED ETHERNET SWITCH, 2832218, 8-PORT, 10/100
26	1	DEVICE MASTER RTS	B&B ELECTRONICS, MODEL 98751-2, 4-PORT RS-485/ETHERNET SERVER
27		NOT USED	
(1) 28	2	BR1500 & BR24BP	APC UPS, 1500VA WITH BATTERY PACK
(2) 29	1	6AG7011-1BA00-0AE0T	SIEMENS, INDUSTRIAL COMPUTER (NOT SHOWN)
30		NOT USED	

(K) A-CONFORMS TO THE SUBCONTRACT REQUIREMENTS
( ) B-MINOR COMMENT-INCORPORATE & RESUBMIT
( ) C-REVISE & RESUBMIT
SIGN: J. Bright DATE: 9/21/04

RES 4518 PROJECT NO. 59600

INDEX CODE				
PL. & AR.	ORG.	CL.	SER. NO.	REV.
51D	5500	N	01382	

NAMEPLATES WHITE WITH BLACK LETTERING

	QTY	SIZE	LETTER SIZE	MTG. HOLES	LINE 1	LINE 2
N1	1	AS NEEDED	1/2"	YES	RTU-9	

NOTES:

(1) TO BE PLACED ON FLOOR OF ENCLOSURE AND WIRE ACCORDINGLY.

(2) TO BE MOUNTED ON DOOR OF SMALLER ENCLOSURE BY INSTALLING CONTRACTOR.

WIRE LUGS - NO ☒, YES ☐ RING ☐, LOCKING SPADE ☐
INSULATION: NYLON ☐, PVC ☒ POLYETHYLENE ☐

WIRE SPECIFICATIONS:

USAGE	COLOR
480 VAC POWER (A, B, C, NEUTRAL)	BROWN, VIOLET, ORANGE, GRAY
120 AC POWER (HOT, NEUTRAL, GND)	BLK, WHT, GRN
120 AC CONTROL (CONTROL, NEUTRAL, GND)	RED, WHT, GRN
DC POWER	BLUE
DC SIGNAL (+, -, GND)	RED , BLK, GRN/YLW STRIPE
FOREIGN	YELLOW
SIGNAL / INSTRUMENTS	2 CONDUCTOR SHL'D

STATE OF OHIO ROBERT A. LANDTHORN E-37992 REGISTERED PROFESSIONAL ENGINEER

United States Dept. of Energy
Fernald Closure Project
P.O. #040400290

DUBLIN TECHNICAL SYSTEMS INC.
CONTRACT # 04177

TOLERANCES: ± DECIMAL ± .03 FRACTIONAL ± 1/64" ANGULAR ± 1°

DUBLIN TECHNICAL SYSTEMS, INC.

Fluor Fernald CAWWT Control System

SCALE: NONE | DRAWN BY: PW | APPROVED BY: JK

TITLE: RTU-9 PANEL LAYOUT AND BILL OF MATERIAL

DATE: 8/18/04 | DRAWING NUMBER: DTSI-04177-009

--5728

DATE	SYM	REVISION RECORD	AUTH	DR	CK
7/16/04	A	FOR APPROVAL	CUST	PW	JK
9/14/04	0	FOR CONSTRUCTION	CUST	PW	JK

TB1-B

	44	43	43	44
	46	45	45	46
	48	47	47	48
	50	49	49	50
	52	51	51	52
	54	53	53	54
	56	55	55	56
	58	57	57	58
	60	59	59	60
	62	61	61	62
	64	63	63	64
	66	65	65	66
	68	67	67	68
	70	69	69	70
	72	71	71	72
	74	73	73	74
	76	75	75	76
	78	77	77	78
	80	79	79	80
	82	81	81	82
	84	83	83	84
	86	85	85	86
	88	87	87	88
	90	89	89	90
	92	91	91	92
	94	93	93	94
	96	95	95	96
	98	97	97	98
	100	99	99	100
	102	101	101	102
	104	103	103	104
	106	105	105	106
	108	107	107	108
	110	109	109	110
	112	111	111	112
	114	113	113	114
	116	115	115	116
	118	117	117	118
	120	119	119	120
	122	121	121	122
	124	123	123	124
	126	125	125	126
	128	127	127	128
	130	129	129	130
	132	131	131	132
	134	133	133	134
	136	135	135	136
	138	137	137	138
	140	139	139	140
	142	141	141	142
	144	143	143	144
	146	145	145	146
	148	147	147	148
	150	149	149	150
	152	151	151	152
	154	153	153	154
	156	155	155	156
	158	157	157	158
	160	159	159	160
	162	161	161	162
	164	163	163	164
	166	165	165	166
	168	167	167	168
	170	169	169	170

DIGITAL INPUTS RACK 2, SLOT 4 — 6 / 32

DIGITAL INPUTS RACK 2, SLOT 5 — 6 / 32

(CONTINUED)

	172	171	171	172
	174	173	173	174
	176	175	175	176
	178	177	177	178
	180	179	179	180
	182	181	181	182
	184	183	183	184
	186	185	185	186
	188	187	187	188
	190	189	189	190
	192	191	191	192
	194	193	193	194
	196	195	195	196
	198	197	197	198
	200	199	199	200
	202	201	201	202
	204	203	203	204
	206	205	205	206
	208	207	207	208
	210	209	209	210
	212	211	211	212
	214	213	213	214
	216	215	215	216
	218	217	217	218
	220	219	219	220
	222	221	221	222
	224	223	223	224
	226	225	225	226
	228	227	227	228
	230	229	229	230
	232	231	231	232
	234	233	233	234
	236	235	235	236
	238	237	237	238
	240	239	239	240
	242	241	241	242
	244	243	243	244
	246	245	245	246
	248	247	247	248
	250	249	249	250
	252	251	251	252
	254	253	253	254
	256	255	255	256
	258	257	257	258
	260	259	259	260
	262	261	261	262
	264	263	263	264
	266	265	265	266
	268	267	267	268
	270	269	269	270
	272	271	271	272
	274	273	273	274
	276	275	275	276
	278	277	277	278
	280	279	279	280
	282	281	281	282
	284	283	283	284
	286	285	285	286
	288	287	287	288
	290	289	289	290
	292	291	291	292
	294	293	293	294
	296	295	295	296
	298	297	297	298
	300	299	299	300
	302	301	301	302
	304	303	303	304
	306	305	305	306
	308	307	307	308
	310	309	309	310
	312	311	311	312
	314	313	313	314

DIGITAL INPUTS RACK 2, SLOT 6 — 6 / 32

DIGITAL INPUTS RACK 2, SLOT 7 — 6 / 32

DIGITAL INPUTS RACK 2, SLOT 8 — 6 / 8

TB2-B

SG	44	43	43	44	SG
SG	46	45	45	46	SG
SG	48	47	47	48	SG
SG	50	49	49	50	SG
SG	52	51	51	52	SG
SG	54	53	53	54	SG
SG	56	55	55	56	SG
SG	58	57	57	58	SG
	SG				
	GRD				
SG	60	59	59	60	SG
SG	62	61	61	62	SG
SG	64	63	63	64	SG
SG	66	65	65	66	SG
SG	68	67	67	68	SG
SG	70	69	69	70	SG
SG	72	71	71	72	SG
SG	74	73	73	74	SG
	SG				
	GRD				
SG	76	75	75	76	SG
SG	78	77	77	78	SG
SG	80	79	79	80	SG
SG	82	81	81	82	SG
SG	84	83	83	84	SG
SG	86	85	85	86	SG
SG	88	87	87	88	SG
SG	90	89	89	90	SG
	SG				
	GRD				
SG	92	91	91	92	SG
SG	94	93	93	94	SG
SG	95	95	95	96	SG
SG	98	97	97	98	SG
SG	100	99	99	100	SG
SG	102	101	101	102	SG
SG	104	103	103	104	SG
SG	106	105	105	106	SG
	SG				
	GRD				

ANALOG INPUTS RACK 1, SLOT 4 — 7 5 / 8 2

ANALOG INPUTS RACK 1, SLOT 5 — 7 5 / 8 2

ANALOG INPUTS RACK 1, SLOT 6 — 7 5 / 8 2

ANALOG INPUTS RACK 1, SLOT 7 — 7 5 / 8 2

TB2-C

SG	108	107	107	108	SG
SG	110	109	109	110	SG
SG	112	111	111	112	SG
SG	114	113	113	114	SG
	SG				
	GRD				
SG	116	115	115	116	SG
SG	118	117	117	118	SG
SG	120	119	119	120	SG
SG	122	121	121	122	SG
	SG				
	GRD				

ANALOG OUTPUTS RACK 1, SLOT 8 — 7 5 / 4 2

ANALOG OUTPUTS RACK 1, SLOT 9 — 8 5 / 4 2

UPS

CB1				
	UPS1G	UPS1N	UPS1N	UPS1G
CB2				
	UPS2G	UPS2N	UPS2N	UPS2G

UPS CIRCUITS — 11 6 / 2 2

TB1-A

		1F		
	3	2	2	3
		4F		
	6	5	5	6
		7F		
	9	8	8	9
		10F		
	12	11	11	12
		13F		
	15	14	14	15
		387F		
	389	388	388	389
		390F		
	392	391	391	392
		16F		
	18	17	17	18
		19F		
	21	20	20	21
		22F		
	24	23	23	24
		25F		
	27	26	26	27
		28F		
	30	29	29	30
		31F		
	33	32	32	33
		34F		
	36	35	35	36
		37F		
	39	38	38	39
		40F		
	42	41	41	42

UPS #1 120VAC POWER DISTRIBUTION — 2 6 / 7 7

UPS #2 120VAC POWER DISTRIBUTION — 2 6 / 9 9

BILL OF MATERIAL

ITEM	QTY	PART NUMBER	DESCRIPTION
1	A/R	NS35/7.5	PHOENIX CONTACT, 0801733 DIN RAIL, 7.5mm HEIGHT
2	16	UK5-HESI	PHOENIX CONTACT, 3004100 FUSE BLOCK, 120 VAC
3	17	UK 6-FSI/C	PHOENIX CONTACT, 3118203 FUSE BLOCK, 24 VDC
4	72	UK 5N	PHOENIX CONTACT, 3004362 TERMINAL BLOCK, 1 LEVEL
5	12	USLKG-5	PHOENIX CONTACT, 0441504 TERMINAL BLOCK, GROUNDING
6	171	PIK 4-L/LB	PHOENIX CONTACT, 3000117 TERMINAL BLOCK, 2 LEVEL
7	40	DIKD 1.5	PHOENIX CONTACT, 2715979 TERMINAL BLOCK, 3 LEVEL
8	6	D-PIK-4-PE/L/NTB	PHOENIX CONTACT, 2714161 END COVERS FOR 2 LEVEL TERMINALS
9	6	ATP-DIKD 1.5	PHOENIX CONTACT, 1413285 END COVERS FOR 3 LEVEL TERMINALS
10	72	PLC-RSC-24DC/21	PHOENIX CONTACT, 2966171 RELAY MODULE, SPDT, 24 VDC COIL
11	2	TMCMI-10015A	PHOENIX CONTACT, 5510757 CIRCUIT BREAKER, 120 VAC, 15A
12	17	09-13-68-9	PHOENIX CONTACT FUSE 2 A, FLAT TYPE, SIFORM C2A, 24 VDC
13	16	217-005	LITTLE FUSE FUSE 5 A, FAST ACTING
14	14	E/UK-1	PHOENIX CONTACT, 1201413 END BRACKET
15	24	PLC-RSC-120UC/21	PHOENIX CONTACT, 2966197 RELAY MODULE, SPDT, 120 VAC COIL
16	0	NOT USED	
17	0	NOT USED	
18	0	NOT USED	

(X)A-CONFORMS TO THE SUBCONTRACT REQUIREMENTS
( )B-MINOR COMMENT-INCORPORATE & RESUBMIT
( )C-REVISE & RESUBMIT
SIG: S. Bright DATE: 9/21/04

RES 4518 PROJECT NO. 59600

INDEX CODE				
PL. & AR.	ORIG.	CL.	SER. NO.	REV.
51D	5500	N	01383	

WIRE LUGS - NO ☒ YES ☐ RING ☐ LOCKING SPADE ☐
INSULATION: NYLON ☐ PVC ☒ POLYETHYLENE ☐

WIRE SPECIFICATIONS:

USAGE	COLOR
480 VAC POWER (A, B, C, NEUTRAL)	BROWN, VIOLET, ORANGE, GRAY
120 AC POWER (HOT, NEUTRAL, GND)	BLK, WHT, GRN
120 AC CONTROL (CONTROL, NEUTRAL, GND)	RED, WHT, GRN
DC POWER	BLUE
DC SIGNAL (+, -, GND)	RED , BLK, GRN/YLW STRIPE
FOREIGN	YELLOW
SIGNAL / INSTRUMENTS	2 CONDUCTOR SHL'D

STATE OF OHIO — ROBERT A. LANDTHORN — E-37992 — REGISTERED PROFESSIONAL ENGINEER

United States Dept. of Energy
Fernald Closure Project
P.O. #040400290

DUBLIN TECHNICAL SYSTEMS INC.
CONTRACT # 04177

TOLERANCES: ± ; DECIMAL ± .03 ; FRACTIONAL ± 1/64" ; ANGULAR ± 1°

DUBLIN TECHNICAL SYSTEMS, INC.

Fluor Fernald CAWWT Control System

SCALE: NONE ; DRAWN BY: PW ; APPROVED BY: JK

TITLE: RTU-9 TERMINAL LAYOUT AND BILL OF MATERIAL SHEET 1 OF 2

DATE: 7/27/04 ; DRAWING NUMBER: DTSI-04177-010

--5728

DATE	SYM	REVISION RECORD	AUTH	DR	CK
7/16/04	A	FOR APPROVAL	CUST	PW	JK
9/14/04	0	FOR CONSTRUCTION	CUST	PW	JK

TB2-A

1F			
3	2	2	3
4F			
6	5	5	6
7F			
9	8	8	9
10F			
12	11	11	12
13F			
15	14	14	15
16F			
18	17	17	18
19F			
21	20	20	21
22F			
24	23	23	24
25F			
27	26	26	27
28F			
30	29	29	30
31F			
33	32	32	33
34F			
36	35	35	36
37F			
39	38	38	39
40F			
42	41	41	42
123F			
125	124	124	125
126F			
128	127	127	128
129F			
131	130	130	131

24VDC POWER DISTRIBUTION (3)(6) 6 6

24VDC POWER DISTRIBUTION (3)(6) 4 4

24VDC POWER DISTRIBUTION (3)(6) 7 7

TB3

R1	315
R2	316
R3	317
R4	318
R5	319
R6	320
R7	321
R8	322
R9	323
R10	324
R11	325
R12	326
R13	327
R14	328
R15	329
R16	330
R17	331
R18	332
R19	333
R20	334
R21	335
R22	336
R23	337
R24	338
R25	339
R26	340
R27	341
R28	342
R29	343
R30	344
R31	345
R32	346

DIGITAL OUTPUTS RACK 2, SLOT 9 (10)(4) 32 32

(CONTINUED)

R33	347
R34	348
R35	349
R36	350
R37	351
R38	352
R39	353
R40	354
R41	355
R42	356
R43	357
R44	358
R45	359
R46	360
R47	361
R48	362
R49	363
R50	364
R51	365
R52	366
R53	367
R54	368
R55	369
R56	370
R57	371
R58	372
R59	373
R60	374
R61	375
R62	376
R63	377
R64	378

DIGITAL OUTPUTS RACK 2, SLOT 10 (10)(4) 32 32

(CONTINUED)

R65	379
R66	380
R67	381
R68	382
R69	383
R70	384
R71	385
R72	386
R73	
R74	
R75	
R76	
R77	
R78	
R79	
R80	
R81	
R82	
R83	
R84	
R85	
R86	
R87	
R88	
R89	
R90	
R91	
R92	
R93	
R94	
R95	
R96	

DIGITAL OUTPUTS RACK 2, SLOT 11 (10)(4) 8 8

DIGITAL INPUTS RACK 2, SLOT 8 (15) 24

(X)A-CONFORMS TO THE SUBCONTRACT REQUIREMENTS
( )B-MINOR COMMENT-INCORPORATE & RESUBMIT
( )C-REVISE & RESUBMIT
SIG: [signature] DATE: 9/21/04

RES 4518 PROJECT NO. 59600

INDEX CODE				
PL. & AR.	ORG.	CL.	SER. NO.	REV.
51D	5500	N	01384	

WIRE LUGS - NO ☒, YES ☐ RING ☐, LOCKING SPADE ☐
INSULATION: NYLON ☐, PVC ☒ POLYETHYLENE ☐

WIRE SPECIFICATIONS:

USAGE	COLOR
480 VAC POWER (A, B, C, NEUTRAL)	BROWN, VIOLET, ORANGE, GRAY
120 AC POWER (HOT, NEUTRAL, GND)	BLK, WHT, GRN
120 AC CONTROL (CONTROL, NEUTRAL, GND)	RED, WHT, GRN
DC POWER	BLUE
DC SIGNAL (+, -, GND)	RED , BLK, GRN/YLW STRIPE
FOREIGN	YELLOW
SIGNAL / INSTRUMENTS	2 CONDUCTOR SHL'D

STATE OF OHIO ROBERT A. LANDTHORN E-37992 REGISTERED PROFESSIONAL ENGINEER

United States Dept. of Energy
Fernald Closure
Project
P.O. #040400290

DUBLIN TECHNICAL SYSTEMS INC.
CONTRACT # 04177

TOLERANCES ±
DECIMAL ± .03
FRACTIONAL ± 1/64"
ANGULAR ± 1°

DUBLIN TECHNICAL SYSTEMS, INC.

Fluor Fernald
CAWWT Control System

SCALE NONE
DRAWN BY PW
APPROVED BY JK

TITLE RTU-9 TERMINAL LAYOUT
SHEET 2 OF 2

DATE 7/27/04
DRAWING NUMBER DTSI-04177-011

- 5728

DATE	SYM	REVISION RECORD	AUTH	DR	CK
7/16/04	A	FOR APPROVAL	CUST	RTR	JK
9/14/04	0	FOR CONSTRUCTION	CUST	PW	JK

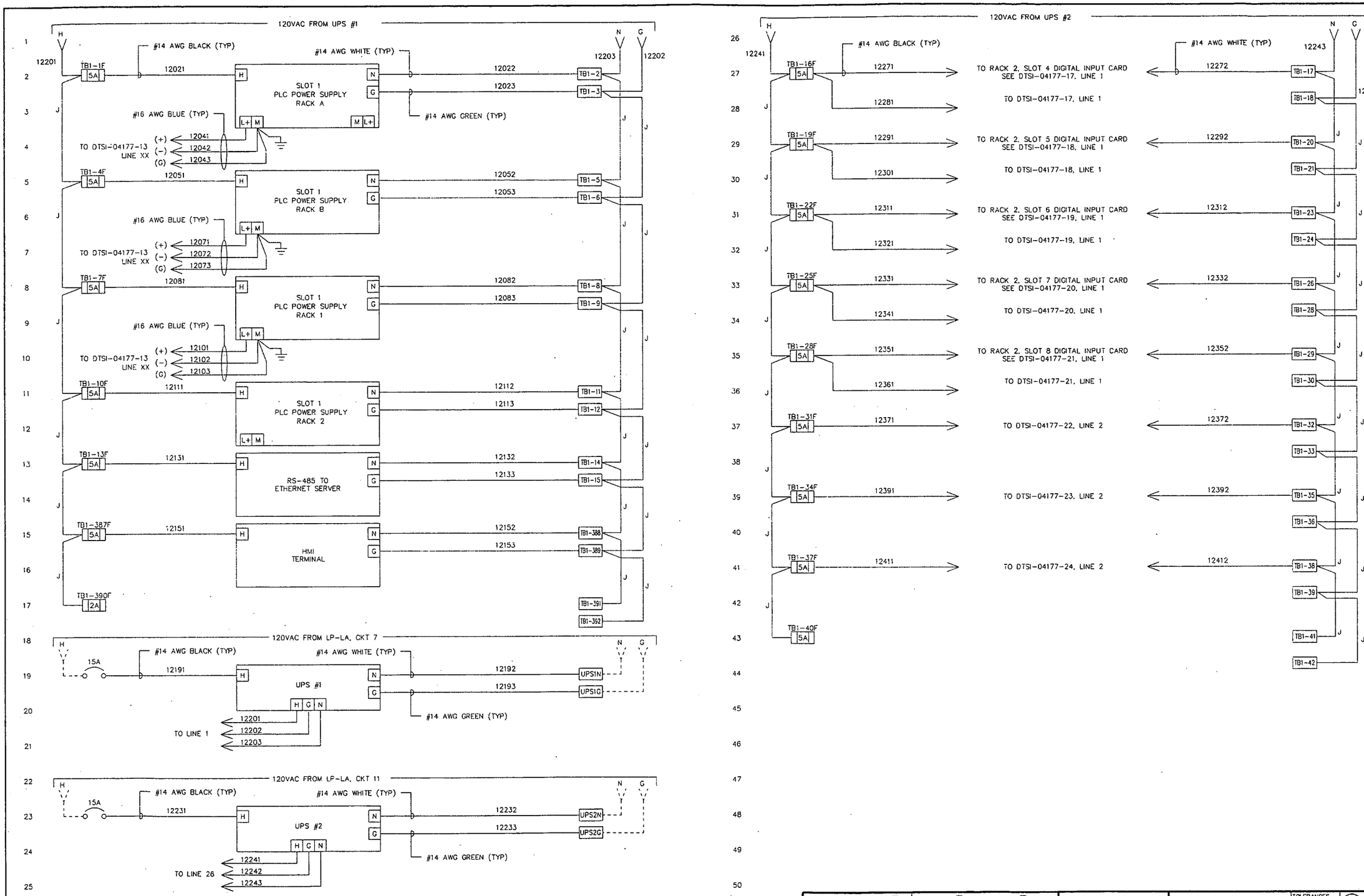

(X)A-CONFORMS TO THE SUBCONTRACT REQUIREMENTS
( )B-MINOR COMMENT-INCORPORATE & RESUBMIT
( )C-REVISE & RESUBMIT
SIG: J. Bright DATE: 9/21/04

RES 4518 PROJECT NO. 59600

INDEX CODE				
PL. & AR.	ORIG.	CL.	SER. NO.	REV.
51D	5500	N	01385	

WIRE LUGS – NO ☒, YES ☐ RING ☐, LOCKING SPADE ☐
INSULATION: NYLON ☐, PVC ☒ POLYETHYLENE ☐

WIRE SPECIFICATIONS:

USAGE	COLOR
480 VAC POWER (A, B, C, NEUTRAL)	BROWN, VIOLET, ORANGE, GRAY
120 AC POWER (HOT, NEUTRAL, GND)	BLK, WHT, GRN
120 AC CONTROL (CONTROL, NEUTRAL, GND)	RED, WHT, GRN
DC POWER	BLUE
DC SIGNAL (+, –, GND)	RED , BLK, GRN/YLW STRIPE
FOREIGN	YELLOW
SIGNAL / INSTRUMENTS	2 CONDUCTOR SHL'D

STATE OF OHIO ROBERT A. LANDTHORN E-37992 REGISTERED PROFESSIONAL ENGINEER

United States Dept. of Energy
Fernald Closure
Project
P.O. #040400290

DUBLIN TECHNICAL SYSTEMS INC.
CONTRACT # 04177

TOLERANCES: DECIMAL ± .03; FRACTIONAL ± 1/64"; ANGULAR ± 1°

DUBLIN TECHNICAL SYSTEMS, INC.

Fluor Fernald
CAWWT Control System

SCALE: NONE
DRAWN BY: RTR
APPROVED BY: JK

TITLE: RTU-9 PANEL WIRING SCHEMATIC
SHEET 1 OF 2

DATE: 7/27/04
DRAWING NUMBER: DTSI-04177-012

DATE	SYM	REVISION RECORD	AUTH	DR	CK
7/16/04	A	FOR APPROVAL	CUST	RTR	JK
9/14/04	0	FOR CONSTRUCTION	CUST	PW	JK

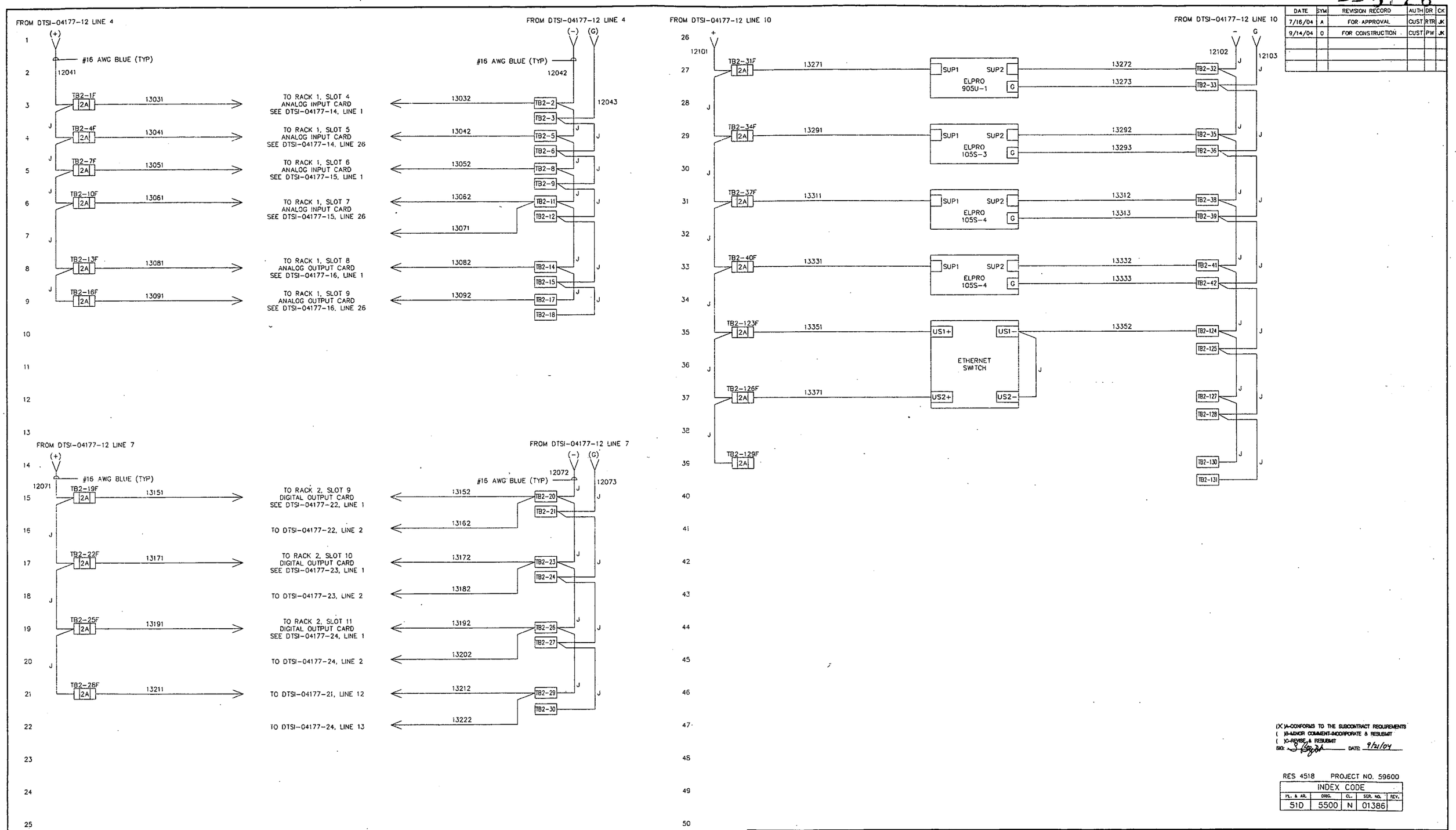

(X) A-CONFORMS TO THE SUBCONTRACT REQUIREMENTS
( ) B-MINOR COMMENT-INCORPORATE & RESUBMIT
( ) C-REVISE & RESUBMIT
SIG: S. Gaylord DATE: 9/21/04

RES 4518 PROJECT NO. 59600

INDEX CODE				
PL. & AR.	ORG.	CL.	SER. NO.	REV.
51D	5500	N	01386	

WIRE LUGS - NO ☒ YES ☐ RING ☐ LOCKING SPADE ☐
INSULATION: NYLON ☐ PVC ☒ POLYETHYLENE ☐

WIRE SPECIFICATIONS:

USAGE	COLOR
480 VAC POWER (A, B, C, NEUTRAL)	BROWN, VIOLET, ORANGE, GRAY
120 AC POWER (HOT, NEUTRAL, GND)	BLK, WHT, GRN
120 AC CONTROL (CONTROL, NEUTRAL, GND)	RED, WHT, GRN
DC POWER	BLUE
DC SIGNAL (+, -, GND)	RED , BLK, GRN/YLW STRIPE
FOREIGN	YELLOW
SIGNAL / INSTRUMENTS	2 CONDUCTOR SHL'D

STATE OF OHIO ROBERT A. LANDTHORN E-37992 REGISTERED PROFESSIONAL ENGINEER

United States Dept. of Energy
Fernald Closure Project
P.O. #040400290

DUBLIN TECHNICAL SYSTEMS INC.
CONTRACT # 04177

TOLERANCES: ±
DECIMAL: ± .03
FRACTIONAL: ± 1/64"
ANGULAR: ± 1°

DUBLIN TECHNICAL SYSTEMS, INC.

Fluor Fernald CAWWT Control System
SCALE: NONE
DRAWN BY: RTR
APPROVED BY: JK

TITLE: RTU-9 PANEL WIRING SCHEMATIC SHEET 2 OF 2

DATE: 7/27/04
DRAWING NUMBER: DTSI-04177-013

DATE	SYM	REVISION RECORD	AUTH	DR	CK
7/16/04	A	FOR APPROVAL	CUST	PW	JK
9/14/04	0	FOR CONSTRUCTION	CUST	PW	JK

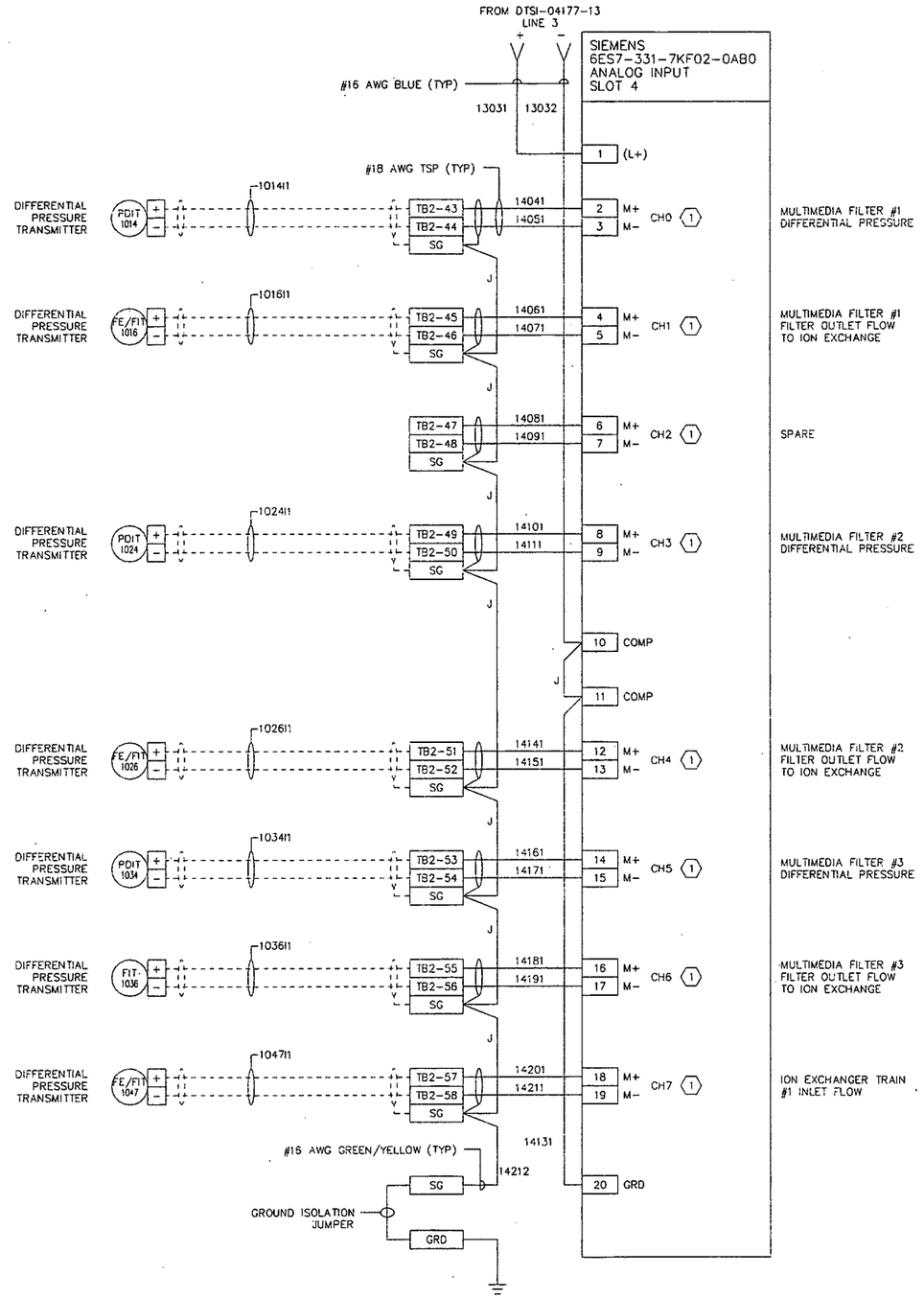

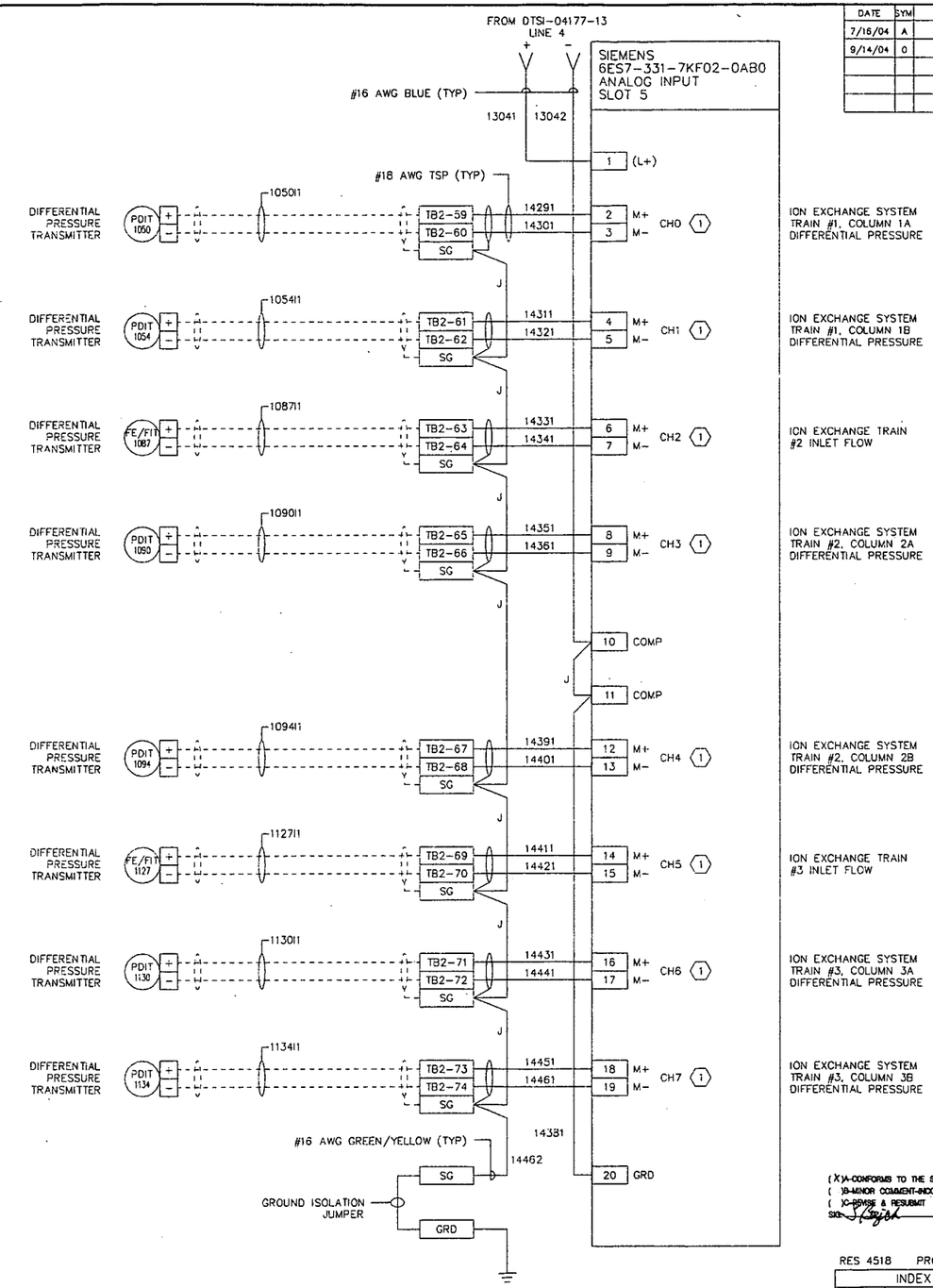

NOTES:

(1) PROGRAMMING PARAMETERS FOR THE 2-WIRE TRANSMITTERS MUST BE SETUP AS A 4-WIRE TRANSMITTER IN ORDER FOR THE CARD TO SOURCE POWER TO THE TRANSMITTER.

(X)A-CONFORMS TO THE SUBCONTRACT REQUIREMENTS
( )B-MINOR COMMENT-INCORPORATE & RESUBMIT
( )C-REVISE & RESUBMIT
SIGN: [signature] DATE: 9/21/04

RES 4518 PROJECT NO. 59600

INDEX CODE				
PL. & AR.	ORIG.	CL.	SER. NO.	REV.
51D	5500	N	01387	

WIRE LUGS - NO ☒, YES ☐ RING ☐, LOCKING SPADE ☐
INSULATION: NYLON ☐, PVC ☒ POLYETHYLENE ☐

WIRE SPECIFICATIONS:

USAGE	COLOR
480 VAC POWER (A, B, C, NEUTRAL)	BROWN, VIOLET, ORANGE, GRAY
120 AC POWER (HOT, NEUTRAL, GND)	BLK, WHT, GRN
120 AC CONTROL (CONTROL, NEUTRAL, GND)	RED, WHT, GRN
DC POWER	BLUE
DC SIGNAL (+, -, GND)	RED , BLK, GRN/YLW STRIPE
FOREIGN SIGNAL / INSTRUMENTS	YELLOW 2 CONDUCTOR SHL'D

STATE OF OHIO ROBERT A. LANDTHORN E-37992 REGISTERED PROFESSIONAL ENGINEER

United States Dept. of Energy
Fernald Closure Project
P.O. #040400290

DUBLIN TECHNICAL SYSTEMS INC.
CONTRACT # 04177

TOLERANCES: ±
DECIMAL: ± .03
FRACTIONAL: ± 1/64"
ANGULAR: ± 1°

DUBLIN TECHNICAL SYSTEMS, INC.

Fluor Fernald
CAWWT Control System

SCALE: NONE
DRAWN BY: RTR
APPROVED BY: JK

TITLE: RTU-9 ANALOG INPUT MODULE
RACK 1, SLOTS 4 & 5

DATE: 7/27/04
DRAWING NUMBER: DTSI-04177-014

DATE	SYM.	REVISION RECORD	AUTH	DR	CK
7/16/04	A	FOR APPROVAL	CUST	PW	JK
9/14/04	0	FOR CONSTRUCTION	CUST	PW	JK

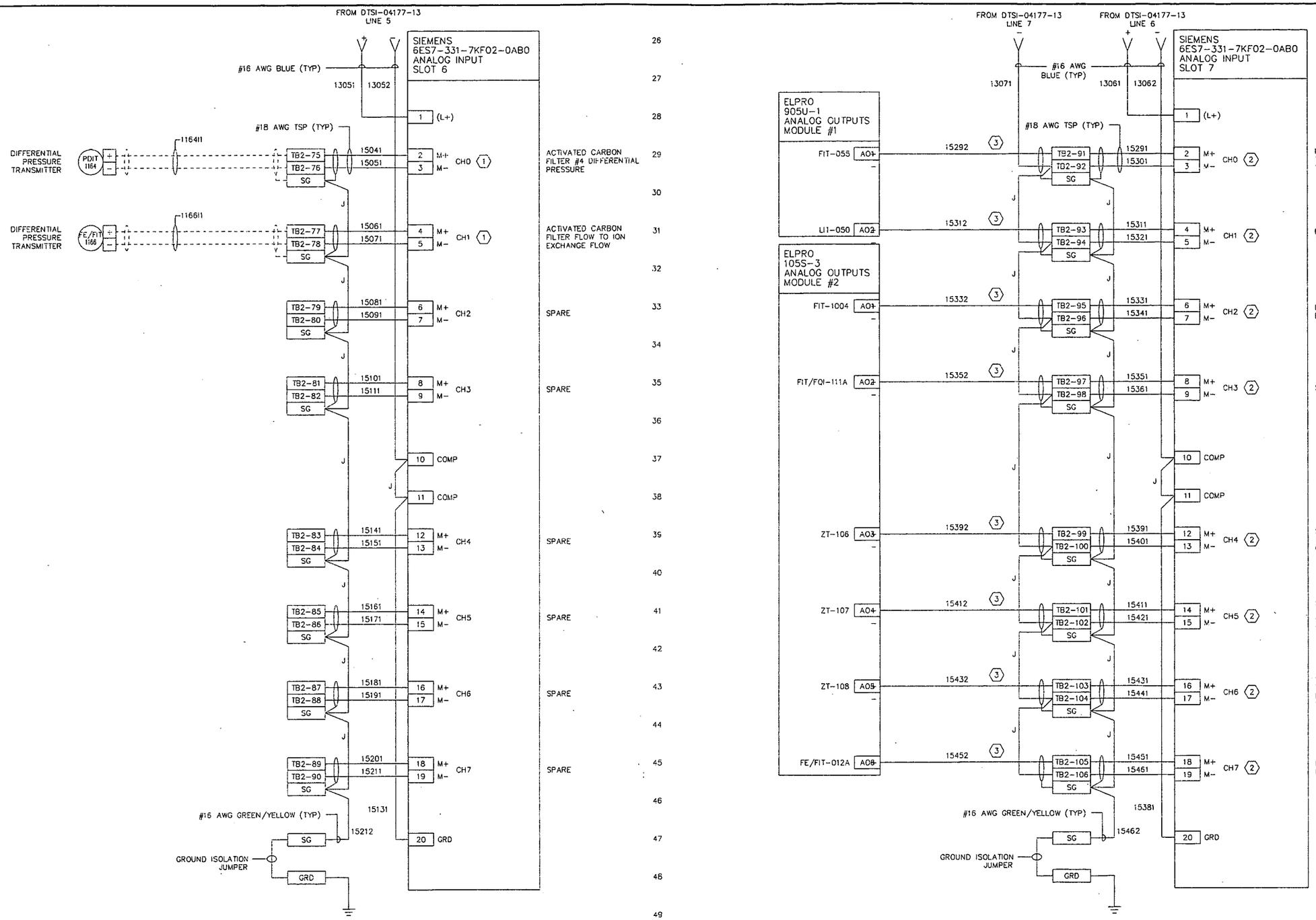

NOTES:

(1) PROGRAMMING PARAMETERS FOR THE 2-WIRE TRANSMITTERS MUST BE SETUP AS A 4-WIRE TRANSMITTER IN ORDER FOR THE CARD TO SOURCE POWER TO THE TRANSMITTER.

(2) SET CARD JUMPERS TO 2-WIRE TRANSMITTER SETTING TO SOURCE POWER TO ELPRO ANALOG OUTPUTS.

(3) #18 AWG TSP CLIP SECOND WIRE AND COVER WITH HEAT SHRINK AT BOTH ENDS.

( )A-CONFORMS TO THE SUBCONTRACT REQUIREMENTS
( )B-MINOR COMMENT-INCORPORATE & RESUBMIT
( )C-REVISE & RESUBMIT
SIG: S. Bajish DATE: 9/21/04

RES 4518 PROJECT NO. 59600

INDEX CODE				
PL. & AR.	ORG.	CL.	SER. NO.	REV.
51D	5500	N	01388	

WIRE LUGS - NO ☒, YES ☐ RING ☐, LOCKING SPADE ☐
INSULATION: NYLON ☐, PVC ☒ POLYETHYLENE ☐

WIRE SPECIFICATIONS:

USAGE	COLOR
480 VAC POWER (A, B, C, NEUTRAL)	BROWN, VIOLET, ORANGE, GRAY
120 AC POWER (HOT, NEUTRAL, GND)	BLK, WHT, GRN
120 AC CONTROL (CONTROL, NEUTRAL, GND)	RED, WHT, GRN
DC POWER	BLUE
DC SIGNAL (+, -, GND)	RED, BLK, GRN/YLW STRIPE
FOREIGN	YELLOW
SIGNAL / INSTRUMENTS	2 CONDUCTOR SHL'D

STATE OF OHIO ROBERT A. LANDTHORN E-37992 REGISTERED PROFESSIONAL ENGINEER

United States Dept. of Energy
Fernald Closure Project
P.O. #040400290

DUBLIN TECHNICAL SYSTEMS INC.
CONTRACT # 04177

TOLERANCES ±
DECIMAL ± .03
FRACTIONAL ± 1/64"
ANGULAR ± 1°

DUBLIN TECHNICAL SYSTEMS, INC.

Fluor Fernald CAWWT Control System
SCALE NONE
DRAWN BY RTR
APPROVED BY JK

TITLE RTU-9 ANALOG INPUT MODULE RACK 1, SLOT 6 & 7

DATE 7/27/04
DRAWING NUMBER DTSI-04177-015

DATE	SYM	REVISION RECORD	AU	DR	CK
7/16/04	A	FOR APPROVAL	CUST	PW	JK
9/14/04	0	FOR CONSTRUCTION	CUST	PW	JK

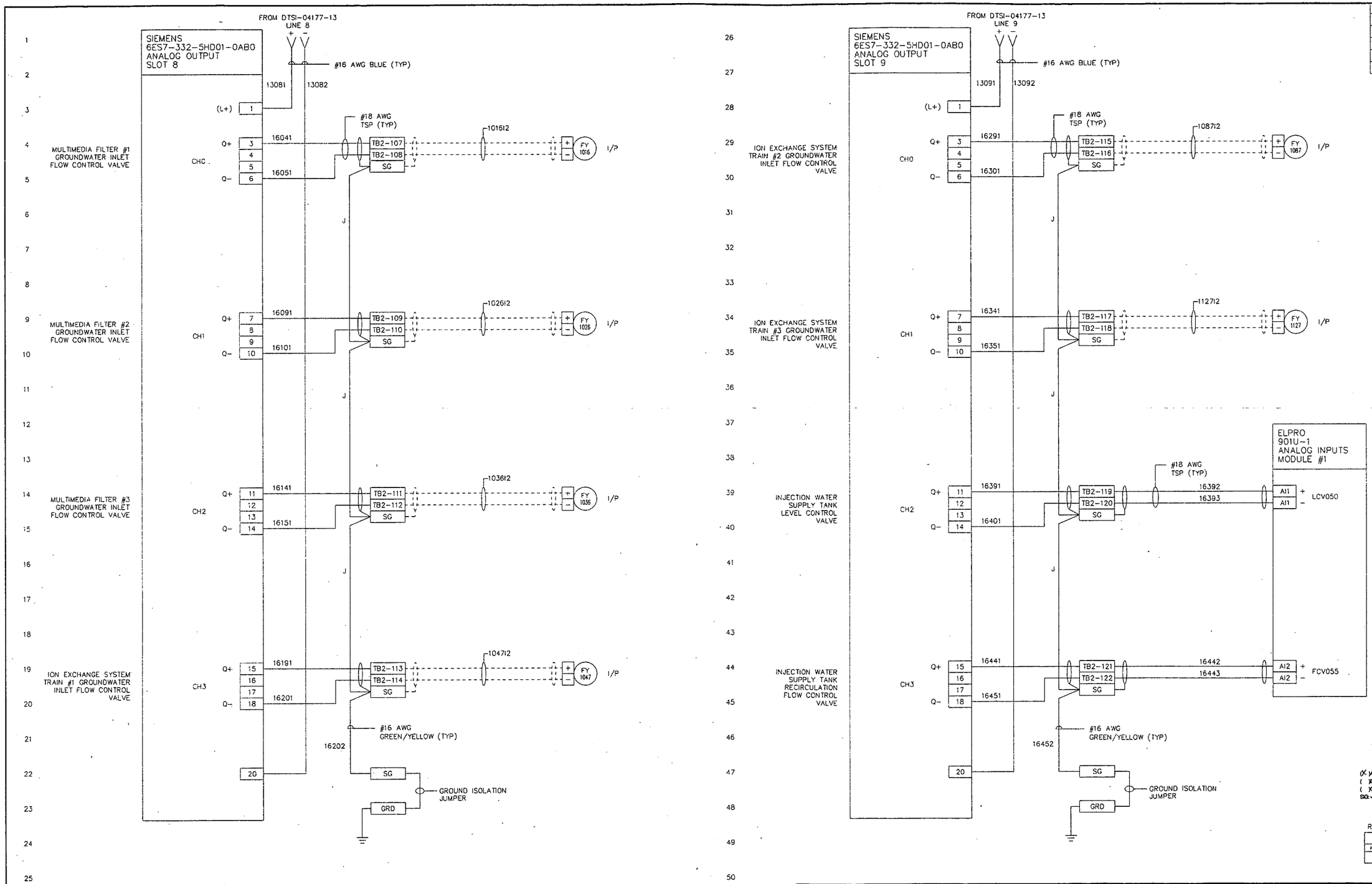

(X) A-CONFORMS TO THE SUBCONTRACT REQUIREMENTS
( ) B-MINOR COMMENT-INCORPORATE & RESUBMIT
( ) C-REVISE & RESUBMIT
SIG: S. Bryan DATE: 9/21/04

RES 4518 PROJECT NO. 59600

INDEX CODE				
PL. & AR.	ORG.	CL.	SER. NO.	REV.
51D	5500	N	01389	

WIRE LUGS - NO ☒, YES ☐ RING ☐, LOCKING SPADE ☐
INSULATION: NYLON ☐, PVC ☒ POLYETHYLENE ☐

WIRE SPECIFICATIONS:

USAGE	COLOR
480 VAC POWER (A, B, C, NEUTRAL)	BROWN, VIOLET, ORANGE, GRAY
120 AC POWER (HOT, NEUTRAL, GND)	BLK, WHT, GRN
120 AC CONTROL (CONTROL, NEUTRAL, GND)	RED, WHT, GRN
DC POWER	BLUE
DC SIGNAL (+, -, GND)	RED , BLK, GRN/YLW STRIPE
FOREIGN	YELLOW
SIGNAL / INSTRUMENTS	2 CONDUCTOR SHL'D

STATE OF OHIO
ROBERT A. LANDTHORN
E-37992
REGISTERED PROFESSIONAL ENGINEER

United States Dept. of Energy
Fernald Closure Project
P.O. #040400290

DUBLIN TECHNICAL SYSTEMS INC.
CONTRACT # 04177

TOLERANCES: ±
DECIMAL: ± .03
FRACTIONAL: ± 1/64"
ANGULAR: ± 1°

DUBLIN TECHNICAL SYSTEMS, INC.

Fluor Fernald
CAWWT Control System

SCALE: NONE
DRAWN BY: RTR
APPROVED BY: JK

TITLE: RTU-9 ANALOG OUTPUT MODULE
RACK 1, SLOTS 8 & 9

DATE: 7/27/04
DRAWING NUMBER: DTSI-04177-016

DATE	SYM	REVISION RECORD	AUTH	DR	CK
7/16/04	A	FOR APPROVAL	CUST	PW	JK
9/14/04	0	FOR CONSTRUCTION	CUST	PW	JK

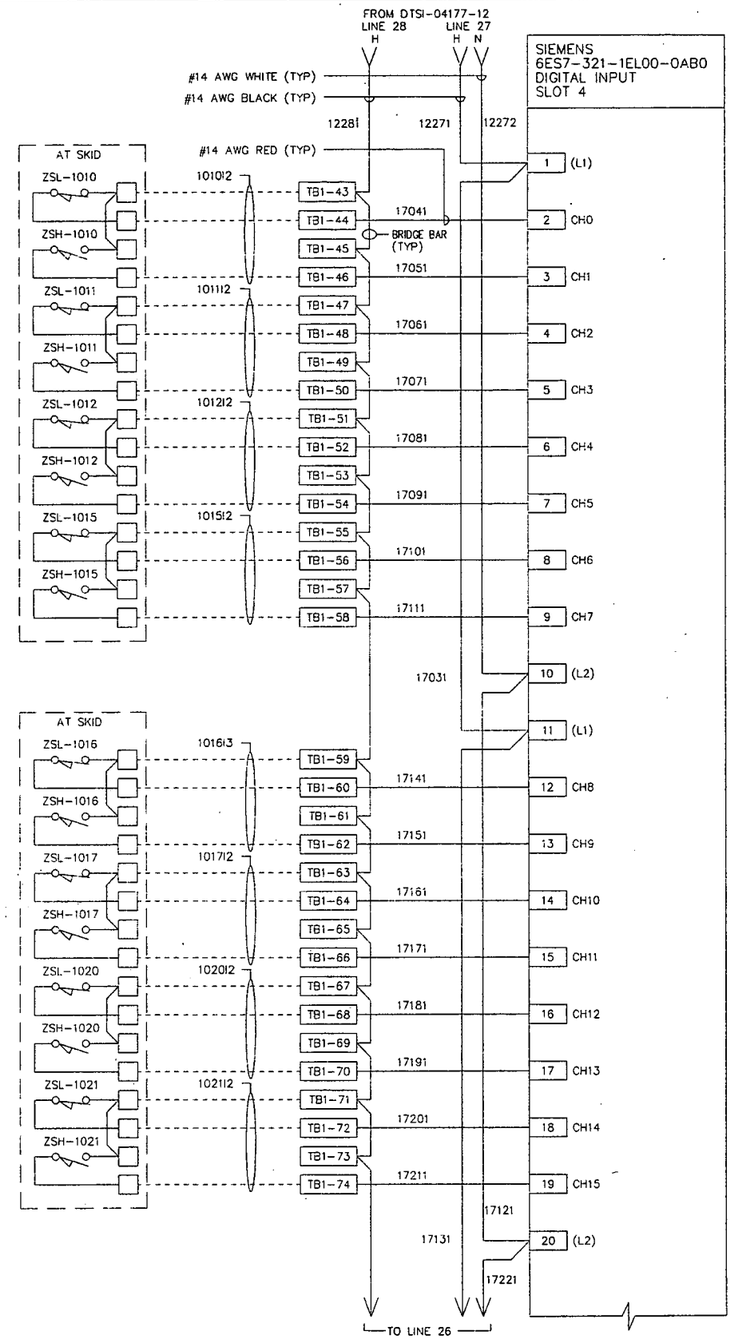

MULTIMEDIA FILTER #1 OUTLET GROUNDWATER VALVE CLOSED

MULTIMEDIA FILTER #1 OUTLET GROUNDWATER VALVE OPEN

MULTIMEDIA FILTER #1 INLET RINSE VALVE CLOSED

MULTIMEDIA FILTER #1 INLET RINSE VALVE OPEN

MULTIMEDIA FILTER #1 OUTLET BACKWASH VALVE CLOSED

MULTIMEDIA FILTER #1 OUTLET BACKWASH VALVE OPEN

MULTIMEDIA FILTER #1 INLET BACKWASH VALVE CLOSED

MULTIMEDIA FILTER #1 INLET BACKWASH VALVE OPEN

MULTIMEDIA FILTER #1 GROUNDWATER INLET VALVE CLOSED

MULTIMEDIA FILTER #1 GROUNDWATER INLET VALVE OPEN

MULTIMEDIA FILTER #1 OUTLET RINSE VALVE CLOSED

MULTIMEDIA FILTER #1 OUTLET RINSE VALVE OPEN

MULTIMEDIA FILTER #2 OUTLET GROUNDWATER VALVE CLOSED

MULTIMEDIA FILTER #2 OUTLET GROUNDWATER VALVE OPEN

MULTIMEDIA FILTER #2 INLET RINSE VALVE CLOSED

MULTIMEDIA FILTER #2 INLET RINSE VALVE OPEN

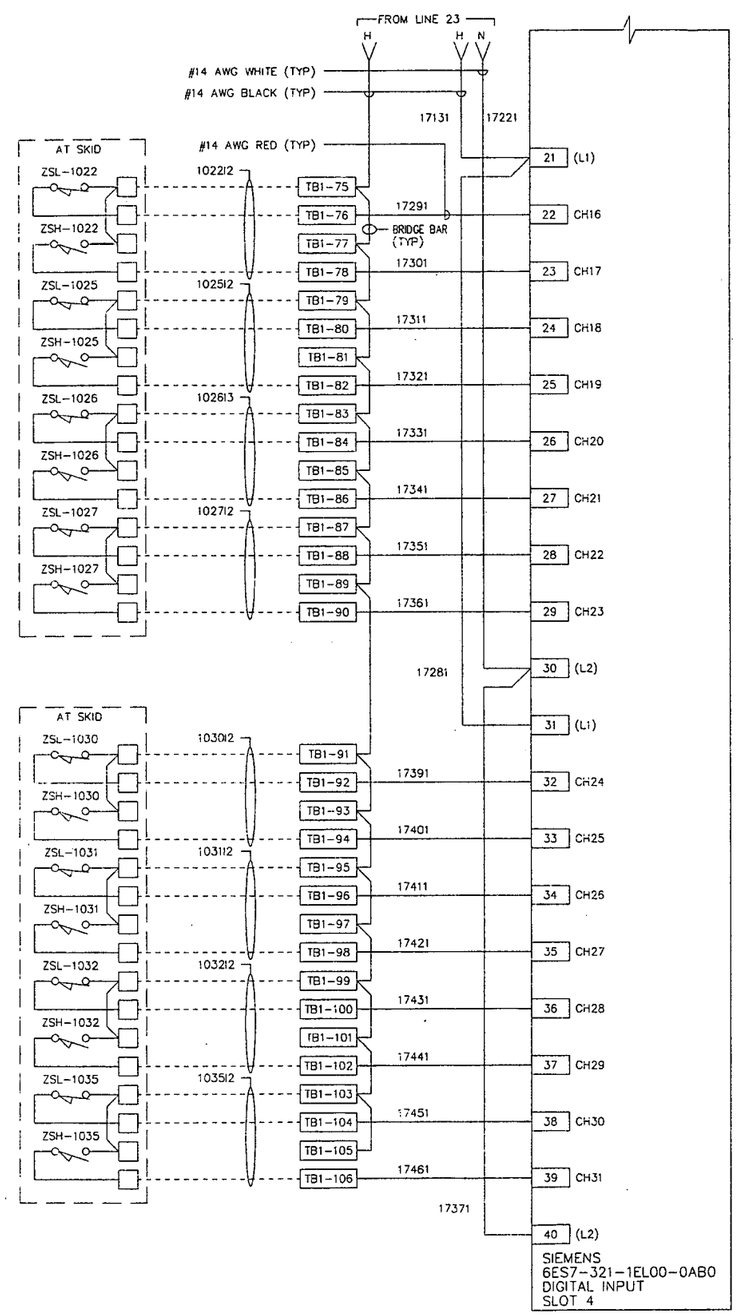

MULTIMEDIA FILTER #2 OUTLET BACKWASH VALVE CLOSED

MULTIMEDIA FILTER #2 OUTLET BACKWASH VALVE OPEN

MULTIMEDIA FILTER #2 INLET BACKWASH VALVE CLOSED

MULTIMEDIA FILTER #2 INLET BACKWASH VALVE OPEN

MULTIMEDIA FILTER #2 GROUNDWATER INLET VALVE CLOSED

MULTIMEDIA FILTER #2 GROUNDWATER INLET VALVE OPEN

MULTIMEDIA FILTER #2 OUTLET RINSE VALVE CLOSED

MULTIMEDIA FILTER #2 OUTLET RINSE VALVE OPEN

MULTIMEDIA FILTER #3 OUTLET GROUNDWATER VALVE CLOSED

MULTIMEDIA FILTER #3 OUTLET GROUNDWATER VALVE OPEN

MULTIMEDIA FILTER #3 INLET RINSE VALVE CLOSED

MULTIMEDIA FILTER #3 INLET RINSE VALVE OPEN

MULTIMEDIA FILTER #3 OUTLET BACKWASH VALVE CLOSED

MULTIMEDIA FILTER #3 OUTLET BACKWASH VALVE OPEN

MULTIMEDIA FILTER #3 INLET BACKWASH VALVE CLOSED

MULTIMEDIA FILTER #3 INLET BACKWASH VALVE OPEN

(X)A-CONFORMS TO THE SUBCONTRACT REQUIREMENTS
( )B-MINOR COMMENT-INCORPORATE & RESUBMIT
( )C-REVISE & RESUBMIT
SIG: DATE: 9/21/04

RES 4518 PROJECT NO. 59600

INDEX CODE				
PL. & AR.	ORG.	CL.	SCH. NO.	REV.
51D	5500	N	01390	

WIRE LUGS - NO ☒, YES ☐ RING ☐, LOCKING SPADE ☐
INSULATION: NYLON ☐, PVC ☒ POLYETHYLENE ☐

WIRE SPECIFICATIONS:

USAGE	COLOR
480 VAC POWER (A, B, C, NEUTRAL)	BROWN, VIOLET, ORANGE, GRAY
120 AC POWER (HOT, NEUTRAL, GND)	BLK, WHT, GRN
120 AC CONTROL (CONTROL, NEUTRAL, GND)	RED, WHT, GRN
DC POWER	BLUE
DC SIGNAL (+, -, GND)	RED , BLK, GRN/YLW STRIPE
FOREIGN	YELLOW
SIGNAL / INSTRUMENTS	2 CONDUCTOR SHL'D

STATE OF OHIO
ROBERT A. LANDTHORN
E-37992
REGISTERED PROFESSIONAL ENGINEER

United States Dept. of Energy
Fernald Closure
Project
P.O. #040400290

DUBLIN TECHNICAL SYSTEMS INC.
CONTRACT # 04177

TOLERANCES: ±
DECIMAL: ± .03
FRACTIONAL: ± 1/64"
ANGULAR: ± 1°

DUBLIN TECHNICAL SYSTEMS, INC.

Fluor Fernald
CAWWT Control System

SCALE: NONE
DRAWN BY: RTR
APPROVED BY: JK

TITLE: RTU-9 DISCRETE INPUT MODULE
RACK 2, SLOT 4

DATE: 7/27/04
DRAWING NUMBER: DTSI-04177-017

DATE	SYM	REVISION RECORD	AUTH	DR	CK
7/16/04	A	FOR APPROVAL	CUST	PW	JK
9/14/04	0	FOR CONSTRUCTION	CUST	PW	JK

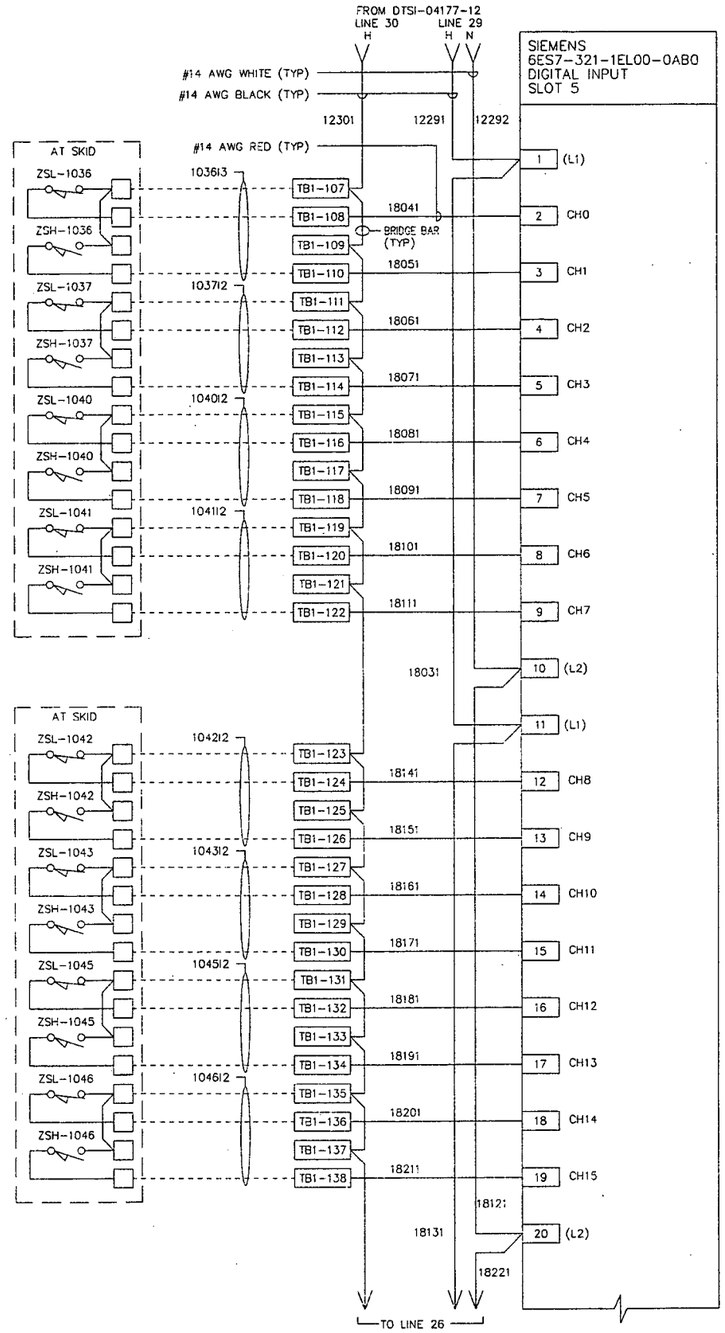

MULTIMEDIA FILTER #3 GROUNDWATER INLET VALVE CLOSED

MULTIMEDIA FILTER #3 GROUNDWATER INLET VALVE OPEN

MULTIMEDIA FILTER #3 OUTLET RINSE VALVE CLOSED

MULTIMEDIA FILTER #3 OUTLET RINSE VALVE OPEN

ION EXCHANGE SYSTEM TRAIN #1 COLUMN 1B LEAD VALVE CLOSED

ION EXCHANGE SYSTEM TRAIN #1 COLUMN 1B LEAD VALVE OPEN

ION EXCHANGE SYSTEM TRAIN #1 COLUMN 1A INLET GROUNDWATER VALVE CLOSED

ION EXCHANGE SYSTEM TRAIN #1 COLUMN 1A INLET GROUNDWATER VALVE OPEN

ION EXCHANGE SYSTEM TRAIN #1 COLUMN 1A GROUNDWATER DISCHARGE VALVE CLOSED

ION EXCHANGE SYSTEM TRAIN #1 COLUMN 1A GROUNDWATER DISCHARGE VALVE OPEN

ION EXCHANGE SYSTEM TRAIN #1 COLUMN 1A GROUNDWATER TO COLUMN 1B VALVE OPEN

ION EXCHANGE SYSTEM TRAIN #1 COLUMN 1A GROUNDWATER TO COLUMN 1B VALVE CLOSED

ION EXCHANGE SYSTEM TRAIN #1 COLUMN 1B GROUNDWATER TO COLUMN 1A VALVE CLOSED

ION EXCHANGE SYSTEM TRAIN #1 COLUMN 1B GROUNDWATER TO COLUMN 1A VALVE OPEN

ION EXCHANGE SYSTEM TRAIN #1 COLUMN 1B OUTLET GROUNDWATER VALVE CLOSED

ION EXCHANGE SYSTEM TRAIN #1 COLUMN 1B OUTLET GROUNDWATER VALVE OPEN

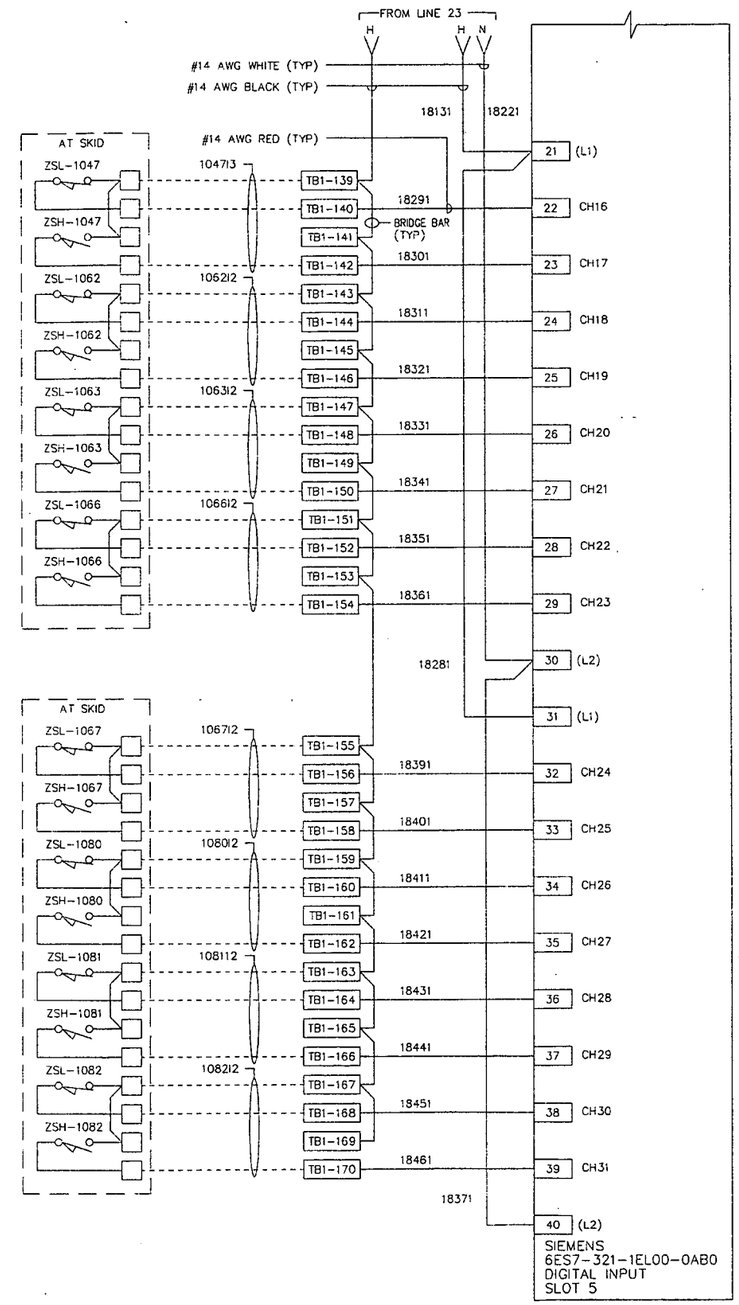

ION EXCHANGE SYSTEM TRAIN #1 INLET GROUNDWATER VALVE CLOSED

ION EXCHANGE SYSTEM TRAIN #1 INLET GROUNDWATER VALVE OPEN

ION EXCHANGE SYSTEM TRAIN #1 COLUMN 1A INLET BACKWASH VALVE CLOSED

ION EXCHANGE SYSTEM TRAIN #1 COLUMN 1A INLET BACKWASH VALVE OPEN

ION EXCHANGE SYSTEM TRAIN #1 COLUMN 1A OUTLET BACKWASH VALVE CLOSED

ION EXCHANGE SYSTEM TRAIN #1 COLUMN 1A OUTLET BACKWASH VALVE OPEN

ION EXCHANGE SYSTEM TRAIN #1 COLUMN 1B INLET BACKWASH VALVE CLOSED

ION EXCHANGE SYSTEM TRAIN #1 COLUMN 1B INLET BACKWASH VALVE OPEN

ION EXCHANGE SYSTEM TRAIN #1 COLUMN 1B OUTLET BACKWASH VALVE CLOSED

ION EXCHANGE SYSTEM TRAIN #1 COLUMN 1B OUTLET BACKWASH VALVE OPEN

ION EXCHANGE SYSTEM TRAIN #2 COLUMN 2B LEAD VALVE CLOSED

ION EXCHANGE SYSTEM TRAIN #2 COLUMN 2B LEAD VALVE OPEN

ION EXCHANGE SYSTEM TRAIN #2 COLUMN 2A INLET GROUNDWATER VALVE CLOSED

ION EXCHANGE SYSTEM TRAIN #2 COLUMN 2A INLET GROUNDWATER VALVE OPEN

ION EXCHANGE SYSTEM TRAIN #2 COLUMN 2A GROUNDWATER DISCHARGE VALVE CLOSED

ION EXCHANGE SYSTEM TRAIN #2 COLUMN 2A GROUNDWATER DISCHARGE VALVE OPEN

(X) A-CONFORMS TO THE SUBCONTRACT REQUIREMENTS
( ) B-MINOR COMMENT-INCORPORATE & RESUBMIT.
( ) C-REVISE & RESUBMIT
SIG: S. Bozich DATE: 9/21/04

RES 4518 PROJECT NO. 59600

INDEX CODE				
PL. & AR.	ORIG.	CL.	SER. NO.	REV.
51D	5500	N	01391	

WIRE LUGS - NO ☒, YES ☐ RING ☐, LOCKING SPADE ☐
INSULATION: NYLON ☐, PVC ☒ POLYETHYLENE ☐

WIRE SPECIFICATIONS:

USAGE	COLOR
480 VAC POWER (A, B, C, NEUTRAL)	BROWN, VIOLET, ORANGE, GRAY
120 AC POWER (HOT, NEUTRAL, GND)	BLK, WHT, GRN
120 AC CONTROL (CONTROL, NEUTRAL, GND)	RED, WHT, GRN
DC POWER	BLUE
DC SIGNAL (+, -, GND)	RED, BLK, GRN/YLW STRIPE
FOREIGN	YELLOW
SIGNAL / INSTRUMENTS	2 CONDUCTOR SHL'D

STATE OF OHIO
ROBERT A. LANDTHORN
E-37992
REGISTERED PROFESSIONAL ENGINEER

United States Dept. of Energy
Fernald Closure Project
P.O. #040400290

DUBLIN TECHNICAL SYSTEMS INC.
CONTRACT # 04177

DUBLIN TECHNICAL SYSTEMS, INC.

TOLERANCES ±	Fluor Fernald CAWWT Control System	SCALE NONE	DRAWN BY RTR / APPROVED BY JK
DECIMAL ± .03			
FRACTIONAL ± 1/64"	TITLE RTU-9 DISCRETE INPUT MODULE RACK 2, SLOT 5		
ANGULAR ± 1°	DATE 7/27/04	DRAWING NUMBER DTSI-04177-018	

DATE	SYM	REVISION RECORD	AUTH	DR	CK
7/16/04	A	FOR APPROVAL	CUST	PW	JK
9/14/04	0	FOR CONSTRUCTION	CUST	PW	JK

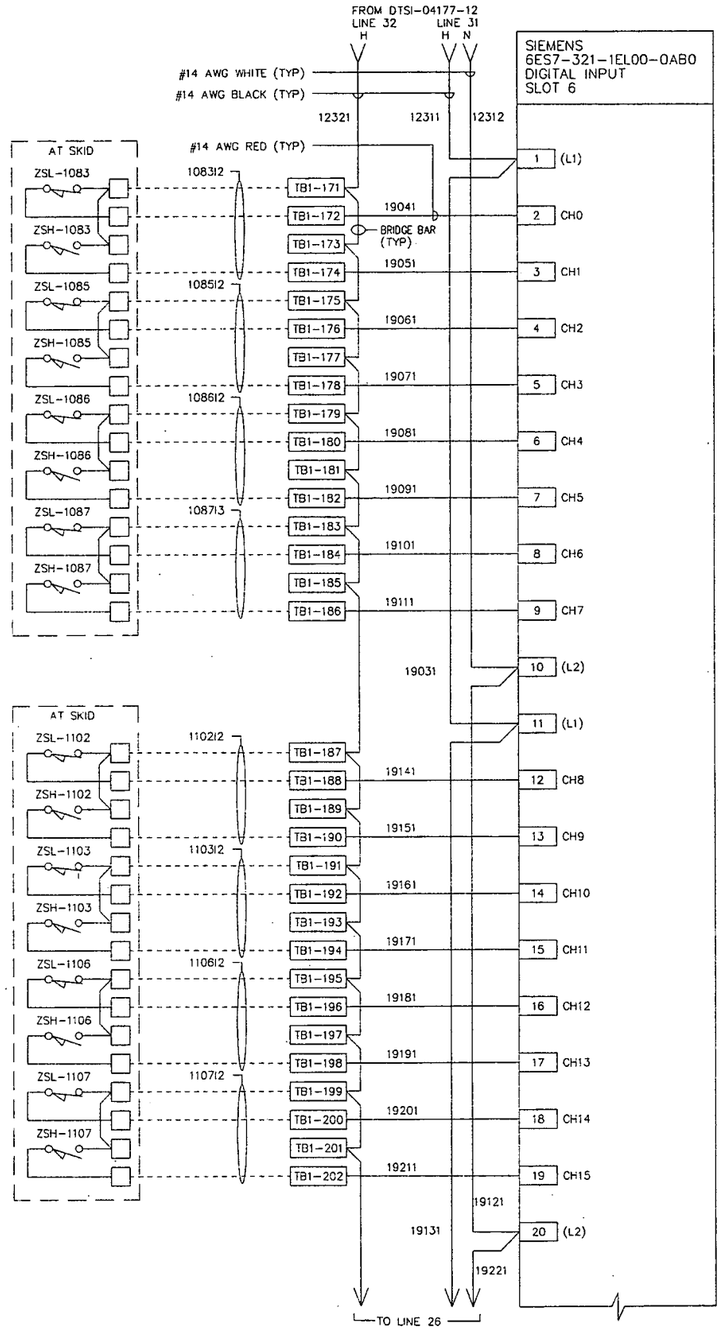

ION EXCHANGE SYSTEM TRAIN #2 COLUMN 2A GROUNDWATER TO COLUMN 2B VALVE CLOSED

ION EXCHANGE SYSTEM TRAIN #2 COLUMN 2A GROUNDWATER TO COLUMN 2B VALVE OPEN

ION EXCHANGE SYSTEM TRAIN #2 COLUMN 2B GROUNDWATER TO COLUMN 2A VALVE CLOSED

ION EXCHANGE SYSTEM TRAIN #2 COLUMN 2B GROUNDWATER TO COLUMN 2A VALVE OPEN

ION EXCHANGE SYSTEM TRAIN #2 COLUMN 2B OUTLET GROUNDWATER VALVE CLOSED

ION EXCHANGE SYSTEM TRAIN #2 COLUMN 2B OUTLET GROUNDWATER VALVE OPEN

ION EXCHANGE SYSTEM TRAIN #2 INLET GROUNDWATER VALVE CLOSED

ION EXCHANGE SYSTEM TRAIN #2 INLET GROUNDWATER VALVE OPEN

ION EXCHANGE SYSTEM TRAIN #2 COLUMN 2A INLET BACKWASH VALVE CLOSED

ION EXCHANGE SYSTEM TRAIN #2 COLUMN 2A INLET BACKWASH VALVE OPEN

ION EXCHANGE SYSTEM TRAIN #2 COLUMN 2A OUTLET BACKWASH VALVE CLOSED

ION EXCHANGE SYSTEM TRAIN #2 COLUMN 2A OUTLET BACKWASH VALVE OPEN

ION EXCHANGE SYSTEM TRAIN #2 COLUMN 2B INLET BACKWASH VALVE CLOSED

ION EXCHANGE SYSTEM TRAIN #2 COLUMN 2B INLET BACKWASH VALVE OPEN

ION EXCHANGE SYSTEM TRAIN #2 COLUMN 2B OUTLET BACKWASH VALVE CLOSED

ION EXCHANGE SYSTEM TRAIN #2 COLUMN 2B OUTLET BACKWASH VALVE OPEN

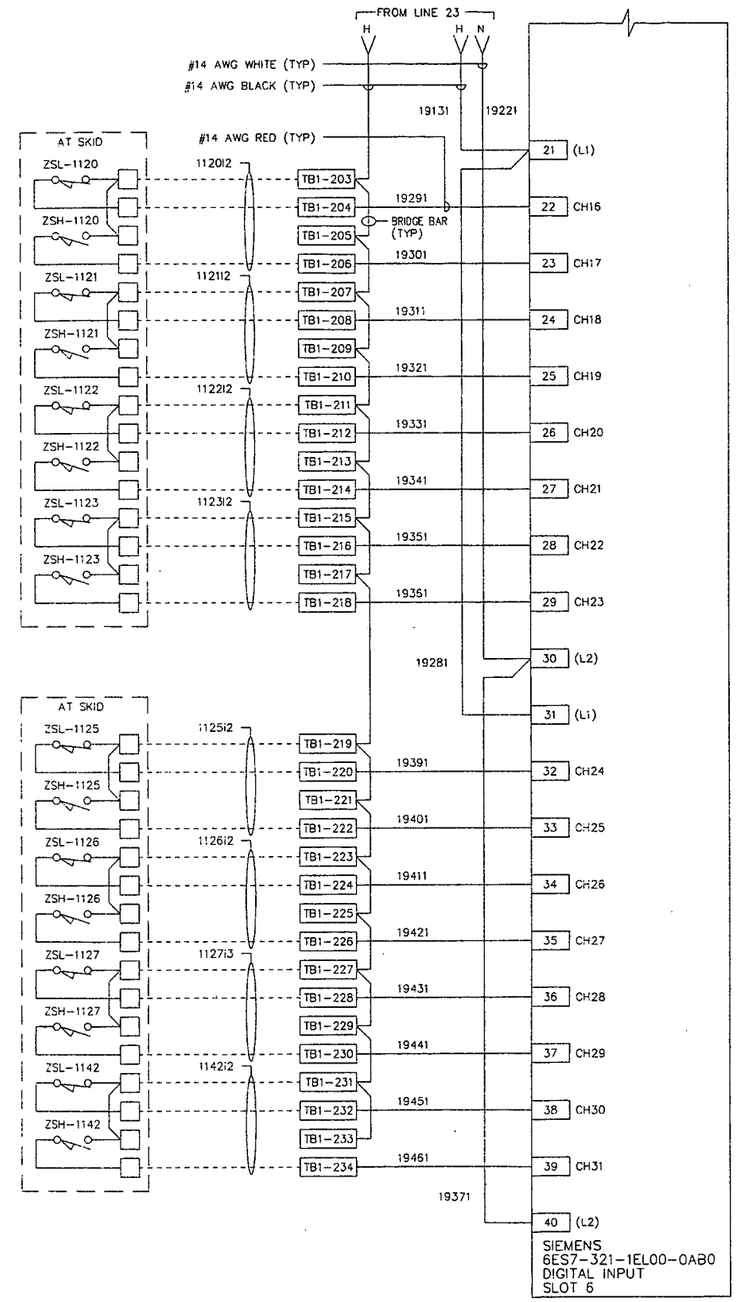

ION EXCHANGE SYSTEM TRAIN #3 COLUMN 3B LEAD VALVE CLOSED

ION EXCHANGE SYSTEM TRAIN #3 COLUMN 3B LEAD VALVE OPEN

ION EXCHANGE SYSTEM TRAIN #3 COLUMN 3A INLET GROUNDWATER VALVE CLOSED

ION EXCHANGE SYSTEM TRAIN #3 COLUMN 3A INLET GROUNDWATER VALVE OPEN

ION EXCHANGE SYSTEM TRAIN #3 COLUMN 3A GROUNDWATER DISCHARGE VALVE CLOSED

ION EXCHANGE SYSTEM TRAIN #3 COLUMN 3A GROUNDWATER DISCHARGE VALVE OPEN

ION EXCHANGE SYSTEM TRAIN #3 COLUMN 3A GROUNDWATER TO COLUMN 3B VALVE CLOSED

ION EXCHANGE SYSTEM TRAIN #3 COLUMN 3A GROUNDWATER TO COLUMN 3B VALVE OPEN

ION EXCHANGE SYSTEM TRAIN #3 COLUMN 3B GROUNDWATER TO COLUMN 3A VALVE CLOSED

ION EXCHANGE SYSTEM TRAIN #3 COLUMN 3B GROUNDWATER TO COLUMN 3A VALVE OPEN

ION EXCHANGE SYSTEM TRAIN #3 COLUMN 3B OUTLET GROUNDWATER VALVE CLOSED

ION EXCHANGE SYSTEM TRAIN #3 COLUMN 3B OUTLET GROUNDWATER VALVE OPEN

ION EXCHANGE SYSTEM TRAIN #3 INLET GROUNDWATER VALVE CLOSED

ION EXCHANGE SYSTEM TRAIN #3 INLET GROUNDWATER VALVE OPEN

ION EXCHANGE SYSTEM TRAIN #3 COLUMN 3A INLET BACKWASH VALVE CLOSED

ION EXCHANGE SYSTEM TRAIN #3 COLUMN 3A INLET BACKWASH VALVE OPEN

(X)A-CONFORMS TO THE SUBCONTRACT REQUIREMENTS
( )B-MINOR COMMENT-INCORPORATE & RESUBMIT
( )C-REVISE & RESUBMIT
SIGN: [signature] DATE: 9/21/04

RES 4518 PROJECT NO. 59600

INDEX CODE				
PL. & AR.	ORG.	CL.	SER. NO.	REV.
51D	5500	N	.01392	

WIRE LUGS - NO ☒ YES ☐ RING ☐ LOCKING SPADE ☐
INSULATION: NYLON ☐ PVC ☒ POLYETHYLENE ☐

WIRE SPECIFICATIONS:

USAGE	COLOR
480 VAC POWER (A, B, C, NEUTRAL)	BROWN, VIOLET, ORANGE, GRAY
120 AC POWER (HOT, NEUTRAL, GND)	BLK, WHT, GRN
120 AC CONTROL (CONTROL, NEUTRAL, GND)	RED, WHT, GRN
DC POWER	BLUE
DC SIGNAL (+, -, GND)	RED , BLK, GRN/YLW STRIPE
FOREIGN	YELLOW
SIGNAL / INSTRUMENTS	2 CONDUCTOR SHL'D

STATE OF OHIO
ROBERT A. LANDTHORN
E-37992
REGISTERED PROFESSIONAL ENGINEER

United States Dept. of Energy
Fernald Closure Project
P.O. #040400290

DUBLIN TECHNICAL SYSTEMS INC.
CONTRACT # 04177

TOLERANCES
±
DECIMAL ± .03
FRACTIONAL ± 1/64"
ANGULAR ± 1°

DUBLIN TECHNICAL SYSTEMS, INC.

Fluor Fernald
CAWWT Control System

SCALE: NONE
DRAWN BY: RTR
APPROVED BY: JK

TITLE: RTU-9 DISCRETE INPUT MODULE
RACK 2, SLOT 6

DATE: 7/27/04
DRAWING NUMBER: DTSI-04177-019

5728

DATE	SYM	REVISION RECORD	AUTH	DR	CK
7/16/04	A	FOR APPROVAL	CUST	PW	JK
9/14/04	0	FOR CONSTRUCTION	CUST	PW	JK

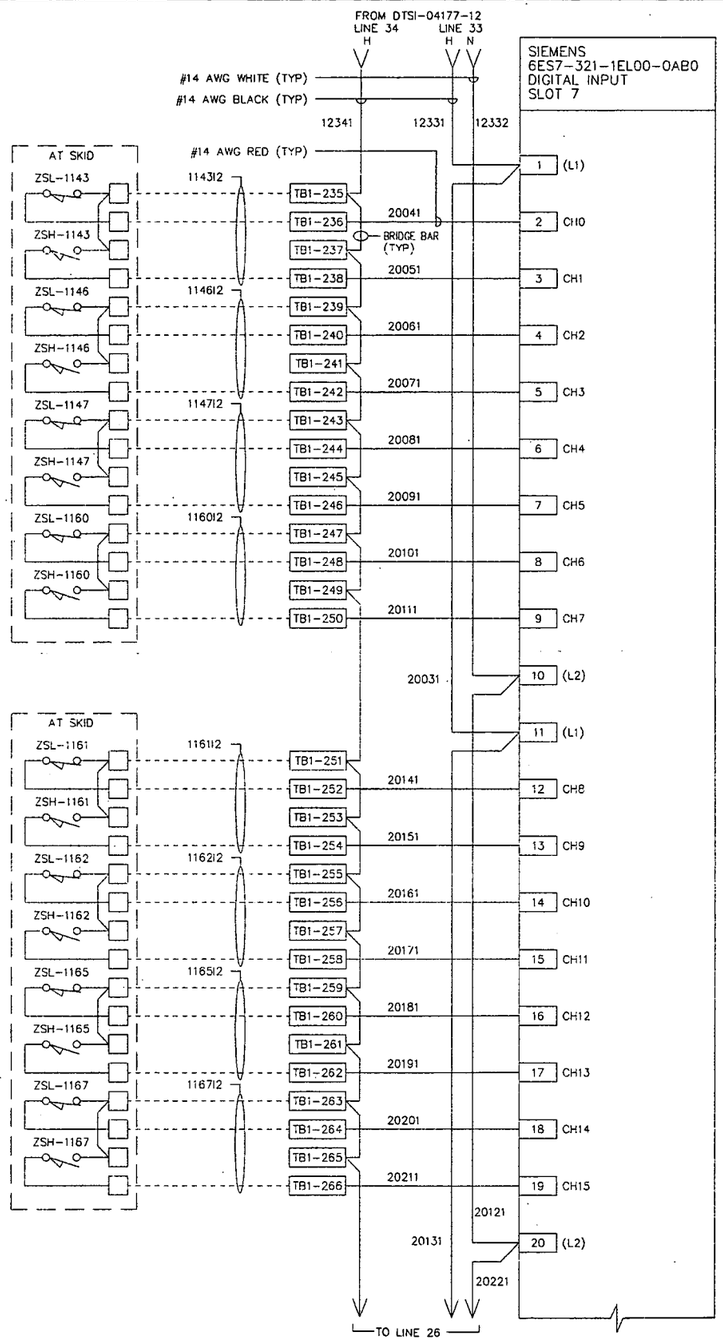

ION EXCHANGE SYSTEM TRAIN #3 COLUMN 3A OUTLET BACKWASH VALVE CLOSED

ION EXCHANGE SYSTEM TRAIN #3 COLUMN 3A OUTLET BACKWASH VALVE OPEN

ION EXCHANGE SYSTEM TRAIN #3 COLUMN 3B INLET BACKWASH VALVE CLOSED

ION EXCHANGE SYSTEM TRAIN #3 COLUMN 3B INLET BACKWASH VALVE OPEN

ION EXCHANGE SYSTEM TRAIN #3 COLUMN 3B OUTLET BACKWASH VALVE CLOSED

ION EXCHANGE SYSTEM TRAIN #3 COLUMN 3B OUTLET BACKWASH VALVE OPEN

ACTIVATED CARBON OUTLET GROUNDWATER VALVE CLOSED

ACTIVATED CARBON OUTLET GROUNDWATER VALVE OPEN

ACTIVATED CARBON INLET RINSE VALVE CLOSED

ACTIVATED CARBON INLET RINSE VALVE OPEN

ACTIVATED CARBON OUTLET BACKWASH VALVE CLOSED

ACTIVATED CARBON OUTLET BACKWASH VALVE OPEN

ACTIVATED CARBON INLET BACKWASH VALVE CLOSED

ACTIVATED CARBON INLET BACKWASH VALVE OPEN

ACTIVATED CARBON OUTLET RINSE VALVE CLOSED

ACTIVATED CARBON OUTLET RINSE VALVE OPEN

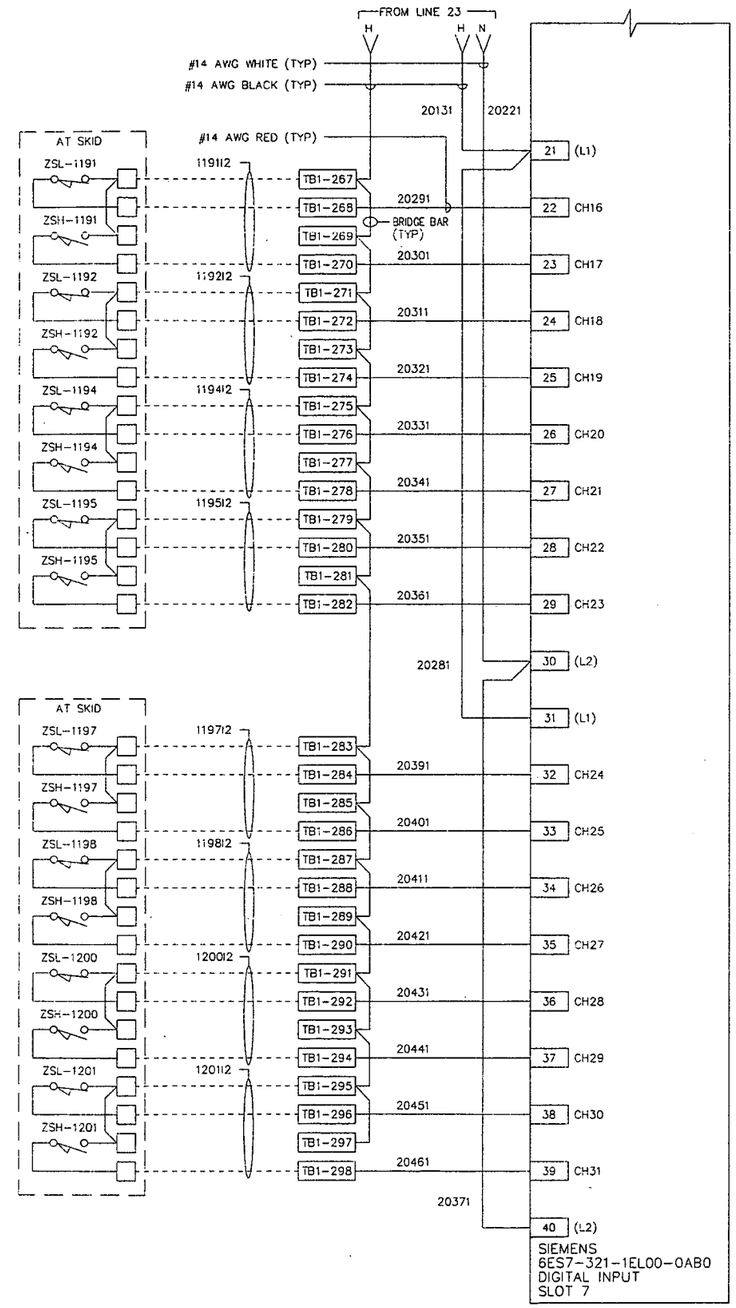

MULTIMEDIA FILTER #1 AIR VENT VALVE CLOSED

MULTIMEDIA FILTER #1 AIR VENT VALVE OPEN

MULTIMEDIA FILTER #1 UPPER DRAIN VALVE CLOSED

MULTIMEDIA FILTER #1 UPPER DRAIN VALVE OPEN

MULTIMEDIA FILTER #2 AIR VENT VALVE CLOSED

MULTIMEDIA FILTER #2 AIR VENT VALVE OPEN

MULTIMEDIA FILTER #2 UPPER DRAIN VALVE CLOSED

MULTIMEDIA FILTER #2 UPPER DRAIN VALVE OPEN

MULTIMEDIA FILTER #3 AIR VENT VALVE CLOSED

MULTIMEDIA FILTER #3 AIR VENT VALVE OPEN

MULTIMEDIA FILTER #3 UPPER DRAIN VALVE CLOSED

MULTIMEDIA FILTER #3 UPPER DRAIN VALVE OPEN

MULTIMEDIA FILTER #4 AIR VENT VALVE CLOSED

MULTIMEDIA FILTER #4 AIR VENT VALVE OPEN

MULTIMEDIA FILTER #4 UPPER DRAIN VALVE CLOSED

MULTIMEDIA FILTER #4 UPPER DRAIN VALVE OPEN

( )A-CONFORMS TO THE SUBCONTRACT REQUIREMENTS
( )B-MINOR COMMENT-INCORPORATE & RESUBMIT
( )C-REVISE & RESUBMIT
SIG. [signature] DATE 9/1/04

RES 4518 PROJECT NO. 59600

INDEX CODE				
PL. & AR.	ORG.	CL.	SER. NO.	REV.
51D	5500	N	01393	

WIRE LUGS - NO ☒ YES ☐ RING ☐ LOCKING SPADE ☐
INSULATION: NYLON ☐ PVC ☒ POLYETHYLENE ☐

WIRE SPECIFICATIONS:

USAGE	COLOR
480 VAC POWER (A, B, C, NEUTRAL)	BROWN, VIOLET, ORANGE, GRAY
120 AC POWER (HOT, NEUTRAL, GND)	BLK, WHT, GRN
120 AC CONTROL (CONTROL, NEUTRAL, GND)	RED, WHT, GRN
DC POWER	BLUE
DC SIGNAL (+, -, GND)	RED , BLK, GRN/YLW STRIPE
FOREIGN	YELLOW
SIGNAL / INSTRUMENTS	2 CONDUCTOR SHL'D

STATE OF OHIO ROBERT A. LANDTHORN E-37992 REGISTERED PROFESSIONAL ENGINEER

United States Dept. of Energy
Fernald Closure Project
P.O. #040400290

DUBLIN TECHNICAL SYSTEMS INC.
CONTRACT # 04177

TOLERANCES ±
DECIMAL ± .03
FRACTIONAL ± 1/64"
ANGULAR ± 1°

DUBLIN TECHNICAL SYSTEMS, INC.

Fluor Fernald CAWWT Control System

SCALE NONE | DRAWN BY RTR | APPROVED BY JK

TITLE RTU-9 DISCRETE INPUT MODULE RACK 2, SLOT 7

DATE 7/27/04 | DRAWING NUMBER DTSI-04177-020

DATE	SYM	REVISION RECORD	AUTH	DR	CK
7/16/04	A	FOR APPROVAL	CUST	PW	JK
9/14/04	0	FOR CONSTRUCTION	CUST	PW	JK

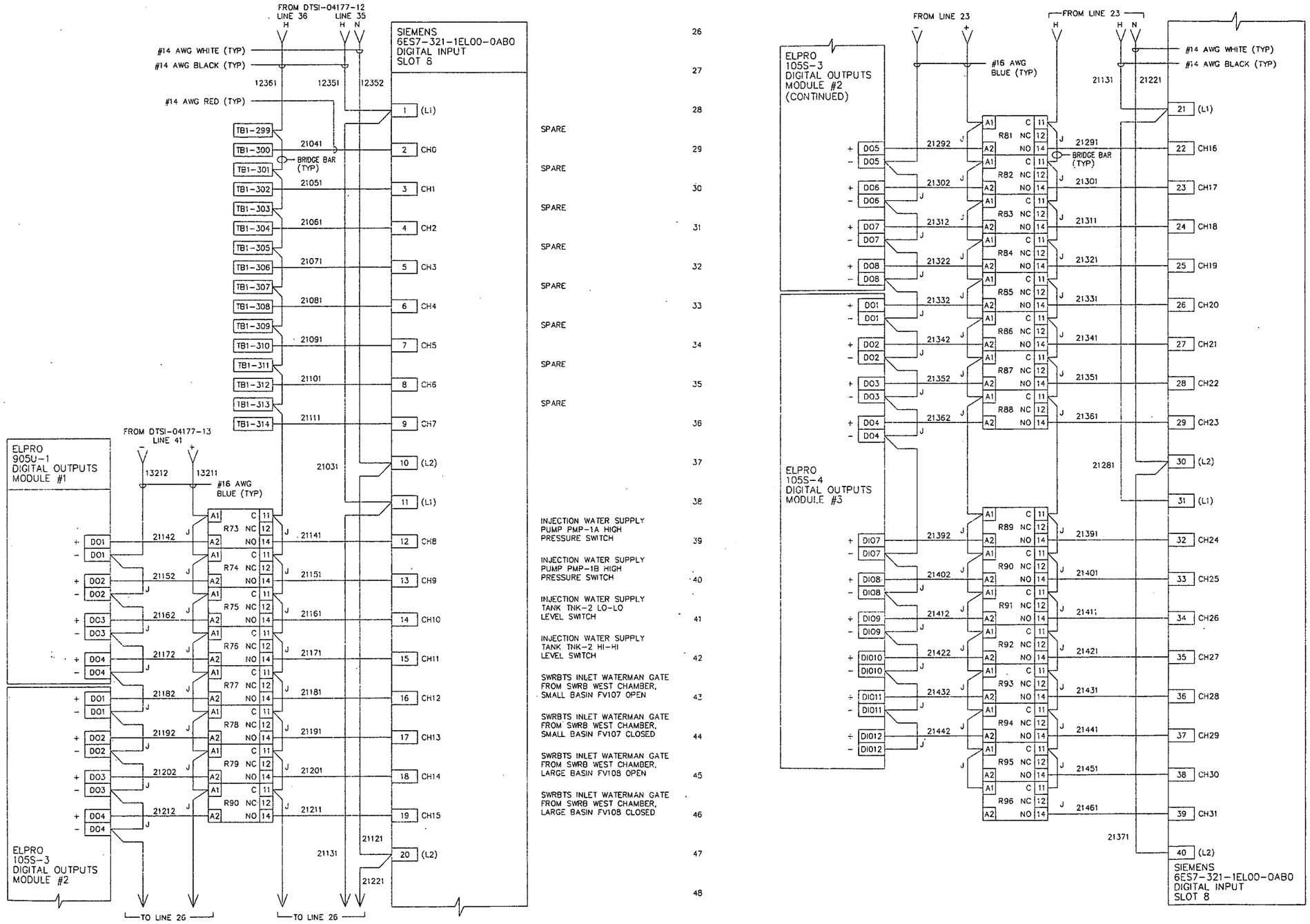

(X)A-CONFORMS TO THE SUBCONTRACT REQUIREMENTS
( )B-MINOR COMMENT-INCORPORATE & RESUBMIT
( )C-REVISE & RESUBMIT
SIG: [signature] DATE: 9/14/04

RES 4518 PROJECT NO. 59600

INDEX CODE				
PL. & AR.	ORG.	CL.	SER. NO.	REV.
51D	5500	N	01394	

WIRE LUGS – NO ☒ YES ☐ RING ☐ LOCKING SPADE ☐
INSULATION: NYLON ☐ PVC ☒ POLYETHYLENE ☐

WIRE SPECIFICATIONS:

USAGE	COLOR
480 VAC POWER (A, B, C, NEUTRAL)	BROWN, VIOLET, ORANGE, GRAY
120 AC POWER (HOT, NEUTRAL, GND)	BLK, WHT, GRN
120 AC CONTROL (CONTROL, NEUTRAL, GND)	RED, WHT, GRN
DC POWER	BLUE
DC SIGNAL (+, –, GND)	RED , BLK, GRN/YLW STRIPE
FOREIGN	YELLOW
SIGNAL / INSTRUMENTS	2 CONDUCTOR SHL'D

STATE OF OHIO ROBERT A. LANDTHORN E-37992 REGISTERED PROFESSIONAL ENGINEER

United States Dept. of Energy
Fernald Closure Project
P.O. #040400290

DUBLIN TECHNICAL SYSTEMS INC.
CONTRACT # 04177

TOLERANCES: ±
DECIMAL: ± .03
FRACTIONAL: ± 1/64"
ANGULAR: ± 1°

DUBLIN TECHNICAL SYSTEMS, INC.

Fluor Fernald CAWWT Control System

SCALE: NONE
DRAWN BY: RTR
APPROVED BY: JK

TITLE: RTU-9 DISCRETE INPUT MODULE RACK 2, SLOT 8

DATE: 7/27/04
DRAWING NUMBER: DTSI-04177-021

-5728

DATE	SYM	REVISION RECORD	AUTH	DR	CK
7/16/04	A	FOR APPROVAL	CUST	PW	JK
9/14/04	0	FOR CONSTRUCTION	CUST	PW	JK

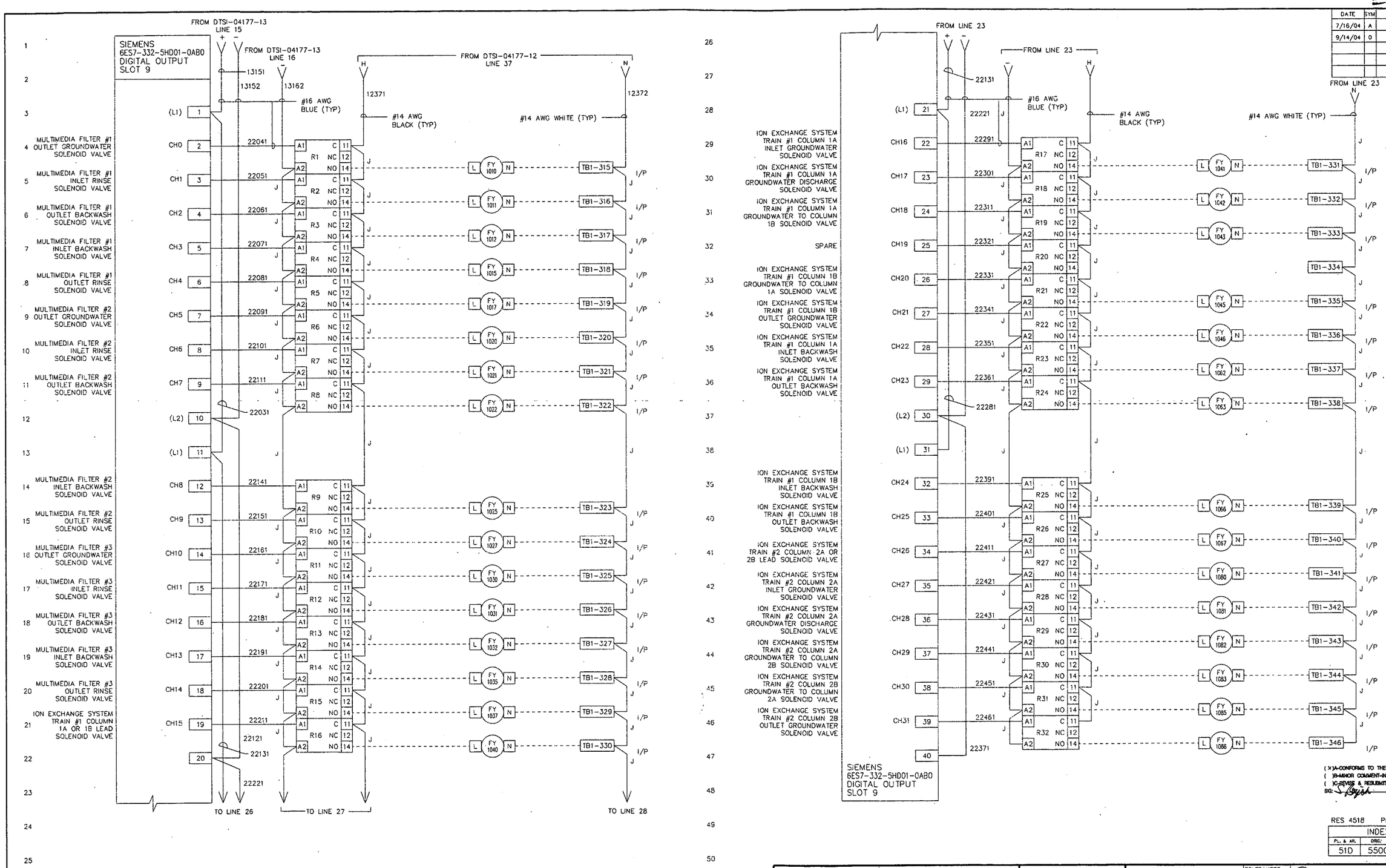

(X)A-CONFORMS TO THE SUBCONTRACT REQUIREMENTS
( )B-MINOR COMMENT-INCORPORATE & RESUBMIT
( )C-REVISE & RESUBMIT
SIG: S. Bezek DATE: 9/21/04

RES 4518 PROJECT NO. 59600

INDEX CODE				
PL. & AR.	ORIG.	CL.	SER. NO.	REV.
51D	5500	N	01395	

WIRE LUGS – NO ☒ YES ☐ RING ☐ LOCKING SPADE ☐
INSULATION: NYLON ☐ PVC ☒ POLYETHYLENE ☐

WIRE SPECIFICATIONS:

USAGE	COLOR
480 VAC POWER (A, B, C, NEUTRAL)	BROWN, VIOLET, ORANGE, GRAY
120 AC POWER (HOT, NEUTRAL, GND)	BLK, WHT, GRN
120 AC CONTROL (CONTROL, NEUTRAL, GND)	RED, WHT, GRN
DC POWER	BLUE
DC SIGNAL (+, –, GND)	RED , BLK, GRN/YLW STRIPE
FOREIGN	YELLOW
SIGNAL / INSTRUMENTS	2 CONDUCTOR SHL'D

STATE OF OHIO
ROBERT A. LANDTHORN
E-37992
REGISTERED PROFESSIONAL ENGINEER

United States Dept. of Energy
Fernald Closure Project
P.O. #040400290

DUBLIN TECHNICAL SYSTEMS INC.
CONTRACT # 04177

TOLERANCES	DUBLIN TECHNICAL SYSTEMS, INC.		
±			
DECIMAL ± .03	Fluor Fernald CAWWT Control System	SCALE NONE	DRAWN BY RTR / APPROVED BY JK
FRACTIONAL ± 1/64"	TITLE RTU-9 DISCRETE OUTPUT MODULE RACK 2, SLOT 9		
ANGULAR ± 1°	DATE 7/27/04	DRAWING NUMBER DTSI-04177-22	

- 5728

DATE	SYM	REVISION RECORD	AUTH	DR	CK
7/16/04	A	FOR APPROVAL	CUST	PW	JK
9/14/04	0	FOR CONSTRUCTION	CUST	PW	JK

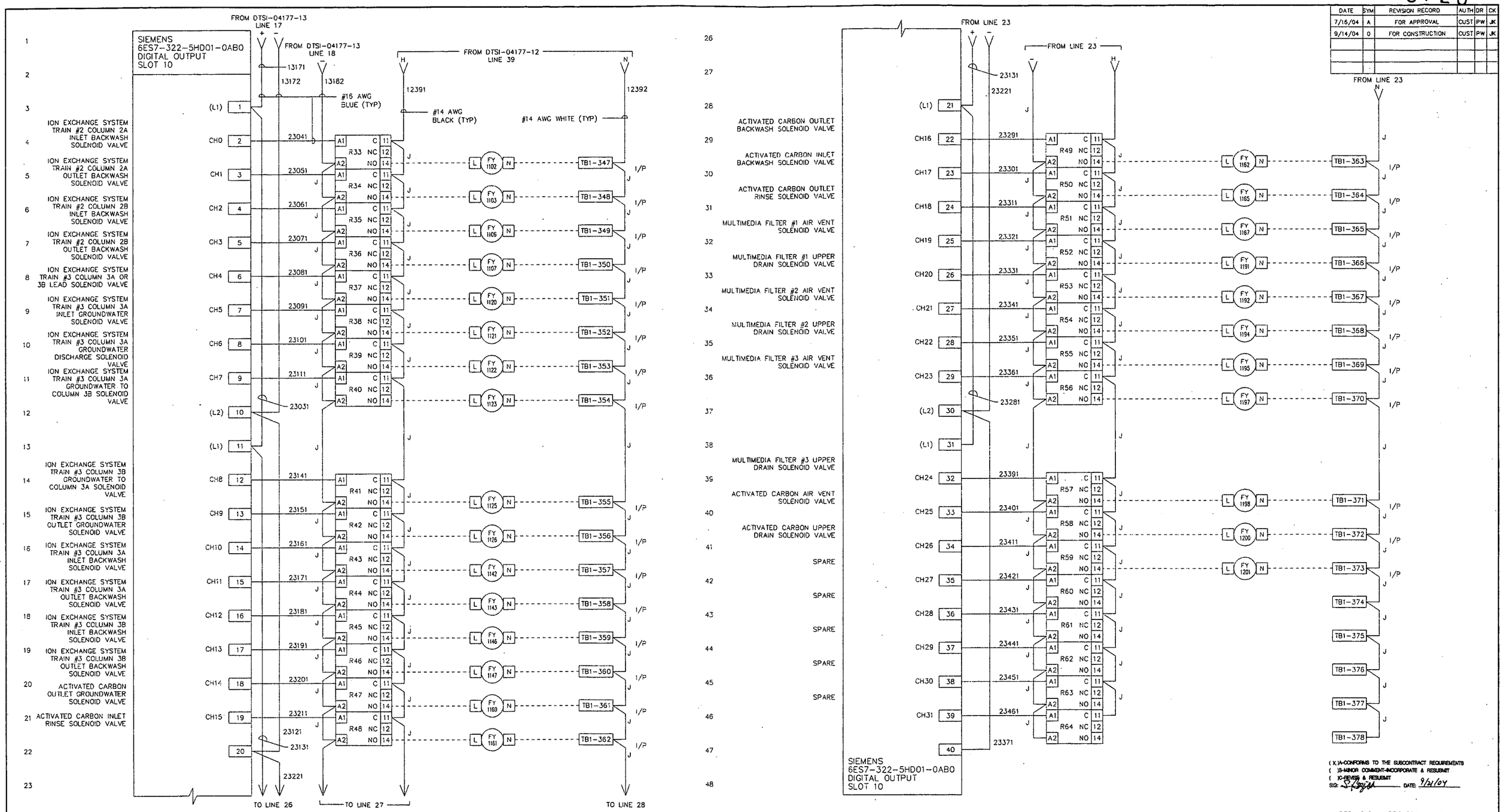

(X)A-CONFORMS TO THE SUBCONTRACT REQUIREMENTS
( )B-MINOR COMMENT-INCORPORATE & RESUBMIT
( )C-REVISE & RESUBMIT
SIG: [signature] DATE: 9/21/04

RES 4518 PROJECT NO. 59600

INDEX CODE				
PL. & AR.	ORG.	CL.	SER. NO.	REV.
51D	5500	N	01396	

WIRE LUGS – NO ☒, YES ☐ RING ☐, LOCKING SPADE ☐
INSULATION: NYLON ☐, PVC ☒ POLYETHYLENE ☐

WIRE SPECIFICATIONS:

USAGE	COLOR
480 VAC POWER (A, B, C, NEUTRAL)	BROWN, VIOLET, ORANGE, GRAY
120 AC POWER (HOT, NEUTRAL, GND)	BLK, WHT, GRN
120 AC CONTROL (CONTROL, NEUTRAL, GND)	RED, WHT, GRN
DC POWER	BLUE
DC SIGNAL (+, –, GND)	RED , BLK, GRN/YLW STRIPE
FOREIGN	YELLOW
SIGNAL / INSTRUMENTS	2 CONDUCTOR SHL'D

STATE OF OHIO ROBERT A. LANDTHORN E-37992 REGISTERED PROFESSIONAL ENGINEER

United States Dept. of Energy
Fernald Closure Project
P.O. #040400290

DUBLIN TECHNICAL SYSTEMS INC.
CONTRACT # 04177

DUBLIN TECHNICAL SYSTEMS, INC.

TOLERANCES ±	Fluor Fernald CAWWT Control System	SCALE NONE	DRAWN BY RTR / APPROVED BY JK
DECIMAL ± .03			
FRACTIONAL ± 1/64"	TITLE RTU-9 DISCRETE OUTPUT MODULE RACK 2, SLOT 10		
ANGULAR ± 1°	DATE 7/27/04	DRAWING NUMBER DTSI-04177-023	

-- 5728

DATE	SYM	REVISION RECORD	AUTH	DR	CK
7/16/04	A	FOR APPROVAL	CUST	PW	JK
9/14/04	0	FOR CONSTRUCTION	CUST	PW	JK

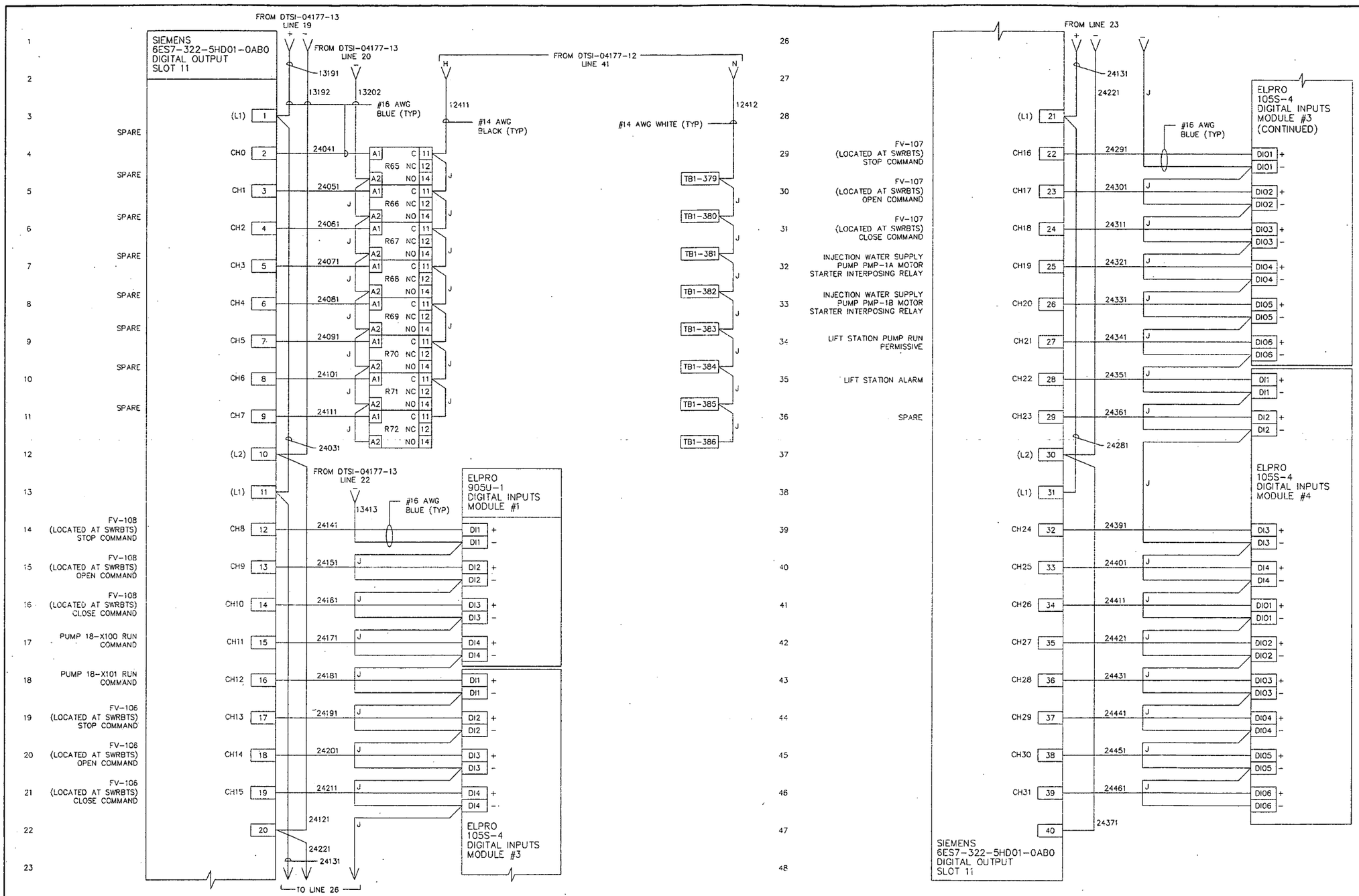

(X)A-CONFORMS TO THE SUBCONTRACT REQUIREMENTS
( )B-MINOR COMMENT-INCORPORATE & RESUBMIT
( )C-REVISE & RESUBMIT
SIGN: [signature] DATE: 9/21/04

RES 4518 PROJECT NO. 59600

INDEX CODE				
PL. & AR.	ORIG.	CL.	SER. NO.	REV.
51D	5500	N	01397	

WIRE LUGS – NO ☒, YES ☐ RING ☐, LOCKING SPADE ☐
INSULATION: NYLON ☐, PVC ☒ POLYETHYLENE ☐

WIRE SPECIFICATIONS:

USAGE	COLOR
480 VAC POWER (A, B, C, NEUTRAL)	BROWN, VIOLET, ORANGE, GRAY
120 AC POWER (HOT, NEUTRAL, GND)	BLK, WHT, GRN
120 AC CONTROL (CONTROL, NEUTRAL, GND)	RED, WHT, GRN
DC POWER	BLUE
DC SIGNAL (+, –, GND)	RED , BLK, GRN/YLW STRIPE
FOREIGN	YELLOW
SIGNAL / INSTRUMENTS	2 CONDUCTOR SHL'D

STATE OF OHIO
ROBERT A. LANDTHORN
E-37992
REGISTERED PROFESSIONAL ENGINEER

United States Dept. of Energy
Fernald Closure
Project
P.O. #040400290

DUBLIN TECHNICAL SYSTEMS INC.
CONTRACT # 04177

TOLERANCES: ±
DECIMAL: ± .03
FRACTIONAL: ± 1/64"
ANGULAR: ± 1°

DUBLIN TECHNICAL SYSTEMS, INC.

Fluor Fernald
CAWWT Control System

SCALE: NONE
DRAWN BY: RTR
APPROVED BY: JK

TITLE: RTU-9 DISCRETE OUTPUT MODULE
RACK 2, SLOT 11

DATE: 7/27/04
DRAWING NUMBER: DTSI-04177-024

5728

DATE	SYM	REVISION RECORD	AUTH	DR	CK
8/18/04	A	FOR APPROVAL	CUST	PW	JK
9/14/04	0	FOR CONSTRUCTION	CUST	PW	JK

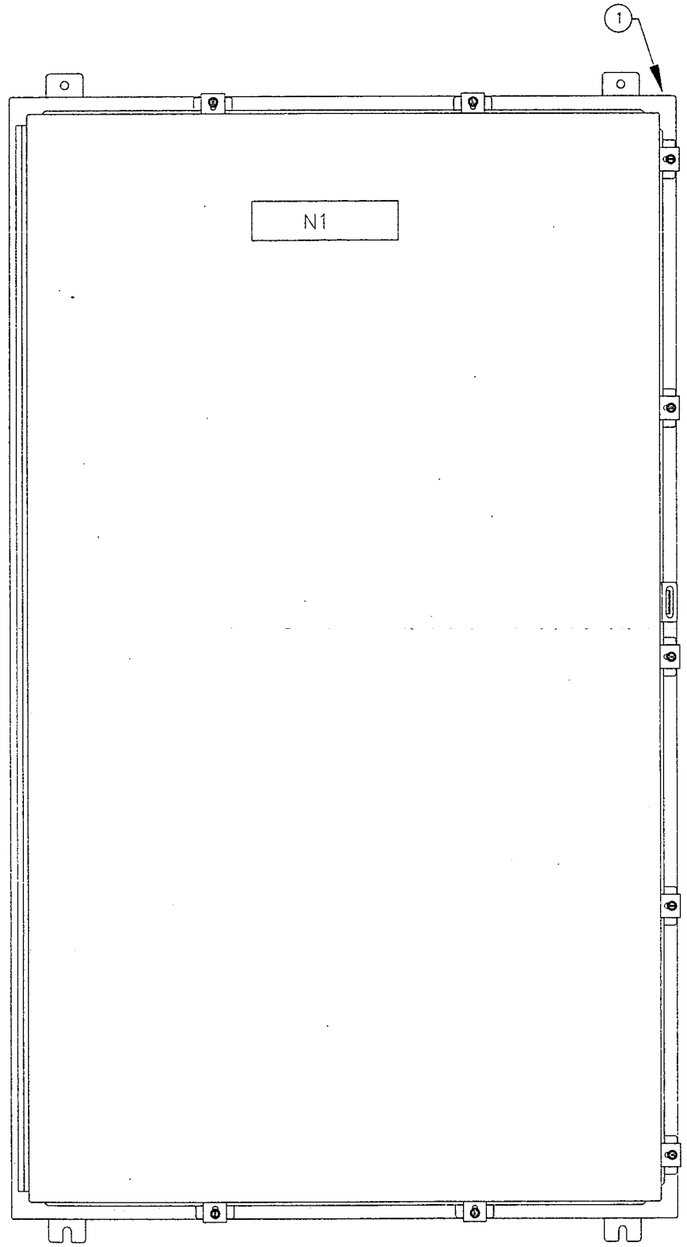

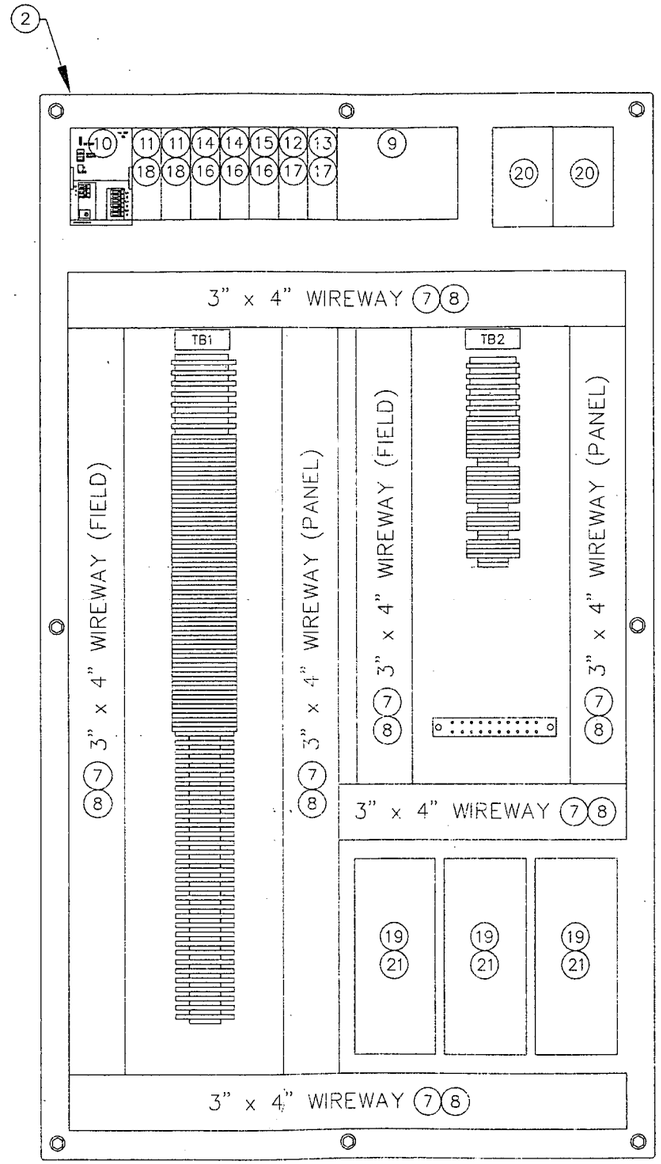

NOTES:

1.) ALL DEVICES TO BE SUPPLIED WITH APPROPRIATE MOUNTING HARDWARE.

2.) ALL LETTERING TO BE ENGRAVED ON LAMINATED NAMEPLATES TO BE 3/16" HIGH UNLESS OTHERWISE NOTED. BLACK TEXT ON WHITE BACKGROUND.

3.) TOLERANCES TO BE ±1/2" EXCEPT AS NOTED.

4.) ALL 120VAC WIRING SHALL BE ROUTED TO AND TERMINATED ON TB1, AND ROUTED IN WIRE DUCT SEPARATE FROM 24VDC WIRING.

5.) ALL 24VDC WIRING SHALL BE ROUTED TO AND TERMINATED ON TB2, AND ROUTED IN WIRE DUCT SEPARATE FROM 120VAC WIRING.

BILL OF MATERIAL

ITEM	QTY	PART NUMBER	DESCRIPTION
1	1	A-60H36FLP	HOFFMAN, NEMA 4 ENCLOSURE, 16" DEEP
2	1	A-60P36	HOFFMAN, SUBPANEL, STEEL
3	1	NOT USED	
4	1	NOT USED	
5	1	NOT USED	
6	1	X-GS2K	HOFFMAN, GROUND BAR
7	LOT	E3X4LG6	PANDUIT, 3" x 4" CHANNEL
8	LOT	C3LG6	PANDUIT, 3" CHANNEL COVER
9	1	6ES7 195-1GF30-0XA0	SIEMENS, ET200M ACTIVE BUS DIN RAIL, 530MM
10	1	6ES7 307-1EA00-0AA0	SIEMENS, S7-300 24VDC POWER SUPPLY, 5A
11	4	6ES7 195-7HB00-0XA0	SIEMENS, ET200M INTERFACE MODULE, IM153-1 BUS MODULE FOR REDUNDANCY
12	2	6ES7 321-1EL00-0AA0	SIEMENS, S7-300 DIGITAL INPUT MODULE, 32PT, 120VAC
13	1	6ES7 322-1BL00-0AA0	SIEMENS, S7-300 DIGITAL OUTPUT MODULE, 32PT, 24VDC
14	2	6ES7 331-7KF02-0AB0	SIEMENS, S7-300 ANALOG INPUT MODULE, 8CH
15	2	6ES7 332-5HD01-0AB0	SIEMENS, S7-300 ANALOG OUTPUT MODULE, 4CH
16	4	6ES7 392-1AJ00-0AA0	SIEMENS, S7-300 TERMINAL CONNECTOR, SCREW TYPE, 20 PIN
17	3	6ES7 392-1AM00-0AA0	SIEMENS, S7-300 TERMINAL CONNECTOR, SCREW TYPE, 40 PIN
18	1	6ES7 153-2AR01-0XA0	SIEMENS, S7-300 ET200M REDUNDANCY BUNDLE
19	3	AC40A	OPTO 22 FIBER OPTIC REPEATER, 120 VAC POWER
20	2	EM-DUO-120/15	PHOENIX CONTACT DUPLEX RECEPTACLE, 5600461
21	3	CUSTOM	120 VAC POWER CORDS CUSTOM MANUFACTURE
22	2	6ES7 972-0BA50-0XA0	SIEMENS, 90 DEGREE PROFIBUS CONNECTOR
23		NOT USED	
24		NOT USED	
25		NOT USED	

(X)A-CONFORMS TO THE SUBCONTRACT REQUIREMENTS
( )B-MINOR COMMENT-INCORPORATE & RESUBMIT
( )C-REVISE & RESUBMIT
SIG: J. Boyd DATE: 9/21/04

RES 4518 PROJECT NO. 59600

INDEX CODE				
PL. & AR.	ORG.	CL.	SER. NO.	REV.
51D	5500	N	01398	

NAMEPLATES WHITE WITH BLACK LETTERING

	QTY	SIZE	LETTER SIZE	MTG. HOLES	LINE 1	LINE 2
N1	1	AS NEEDED	1/2"	YES	RTU-10	

WIRE LUGS - NO ☒, YES ☐ RING ☐, LOCKING SPADE ☐
INSULATION: NYLON ☐, PVC ☒ POLYETHYLENE ☐

WIRE SPECIFICATIONS:

USAGE	COLOR
480 VAC POWER (A, B, C, NEUTRAL)	BROWN, VIOLET, ORANGE, GRAY
120 AC POWER (HOT, NEUTRAL, GND)	BLK, WHT, GRN
120 AC CONTROL (CONTROL, NEUTRAL, GND)	RED, WHT, GRN
DC POWER	BLUE
DC SIGNAL (+, -, GND)	RED, BLK, GRN/YLW STRIPE
FOREIGN SIGNAL / INSTRUMENTS	YELLOW 2 CONDUCTOR SHL'D

STATE OF OHIO ROBERT A. LANDTHORN E-37992 REGISTERED PROFESSIONAL ENGINEER

United States Dept. of Energy
Fernald Closure Project
P.O. #040400290

DUBLIN TECHNICAL SYSTEMS INC.
CONTRACT # 04177

TOLERANCES: ±
DECIMAL: ± .03
FRACTIONAL: ± 1/64"
ANGULAR: ± 1°

DUBLIN TECHNICAL SYSTEMS, INC.

Fluor Fernald
CAWWT Control System

SCALE: NONE
DRAWN BY: PW
APPROVED BY: JK

TITLE: RTU-10 PANEL LAYOUT AND BILL OF MATERIAL

DATE: 8/18/04
DRAWING NUMBER: DTSI-04177-025

- 5728

DATE	SYM	REVISION RECORD	AUTH	DR	CK
7/16/04	A	FOR APPROVAL	CUST	PW	JK
9/14/04	0	FOR CONSTRUCTION	CUST	PW	JK

TB1

		1F		
	2	3	3	2
		4F		
	5	6	6	5
		7F		
	8	9	9	8
		10F		
	11	12	12	11
		13F		
	14	15	15	14
		16F		
	18	17	17	18
		19F		
	21	20	20	21
		22F		
	24	23	23	24
	26	25	25	26
	28	27	27	28
	30	29	29	30
	32	31	31	32
	34	33	33	34
	36	35	35	36
	38	37	37	38
	40	39	39	40
	42	41	41	42
	44	43	43	44
	46	45	45	46
	48	47	47	48
	50	49	49	50
	52	51	51	52
	54	53	53	54
	56	55	55	56
	58	57	57	58
	60	59	59	60
	62	61	61	62
	64	63	63	64
	66	65	65	66
	68	67	67	68
	70	69	69	70
	72	71	71	72
	74	73	73	74
	76	75	75	76
	78	77	77	78
	80	79	79	80
	82	81	81	82
	84	83	83	84
	86	85	85	86
	88	87	87	88
	90	89	89	90
	92	91	91	92
	94	93	93	94
	96	95	95	96
	98	97	97	98
	100	99	99	100
	102	101	101	102
	104	103	103	104
	106	105	105	106
	108	107	107	108
	110	109	109	110
	112	111	111	112
	114	113	113	114
	116	115	115	116
	118	117	117	118
	120	119	119	120
	122	121	121	122
	124	123	123	124
	126	125	125	126
	128	127	127	128
	130	129	129	130
	132	131	131	132
	134	133	133	134
	136	135	135	136
	138	137	137	138
	140	139	139	140
	142	141	141	142

120VAC POWER DISTRIBUTION (2) (6) 8 8

DIGITAL INPUTS (6) 59

(TB1 CONTINUED)

144	143	143	144
146	145	145	146
148	147	147	148
150	149	149	150
152	151	151	152
	R1		
	153		
	R2		
	154		
	R3		
	155		
	R4		
	156		
	R5		
	157		
	R6		
	158		
	R7		
	159		
	R8		
	160		
	R9		
	161		
	R10		
	162		
	R11		
	163		
	R12		
	164		
	R13		
	165		
	R14		
	166		
	R15		
	167		
	R16		
	168		
	R17		
	169		
	R18		
	170		
	R19		
	171		
	R20		
	172		
	R21		
	173		
	R22		
	174		
	R23		
	175		
	R24		
	176		
	R25		
	177		
	R26		
	178		
	R27		
	179		
	R28		
	180		
	R29		
	181		
	R30		
	182		
	R31		
	183		
	R32		
	184		

DIGITAL INPUTS (6) 5

DIGITAL OUTPUTS (10) (4) 32 32

TB2

		1F			
SG	2	3	3	2	SG
		4F			
SG	6	5	5	6	SG
		7F			
SG	8	9	9	8	SG
		10F			
SG	11	12	12	11	SG
		13F			
SG	15	14	14	15	SG
		16F			
SG	18	17	17	18	SG
SG	20	19	19	20	SG
SG	22	21	21	22	SG
SG	24	23	23	24	SG
SG	26	25	25	26	SG
SG	28	27	27	28	SG
SG	30	29	29	30	SG
SG	32	31	31	32	SG
SG	34	33	33	34	SG
		SG			
		GRD			
SG	36	35	35	36	SG
SG	38	37	37	38	SG
SG	40	39	39	40	SG
SG	42	41	41	42	SG
SG	44	43	43	44	SG
SG	46	45	45	46	SG
SG	48	47	47	48	SG
SG	50	49	49	50	SG
		SG			
		GRD			
SG	52	51	51	52	SG
SG	54	53	53	54	SG
SG	56	55	55	56	SG
SG	58	57	57	58	SG
		SG			
		GRD			
SG	60	59	59	60	SG
SG	62	61	61	62	SG
SG	64	63	63	64	SG
SG	66	65	65	66	SG
		SG			
		GRD			

24VDC POWER DISTRIBUTION (3) (7) 5 6

ANALOG INPUTS (7) (5) 8 2

ANALOG INPUTS (7) (5) 8 2

ANALOG OUTPUTS (7) (5) 4 2

ANALOG OUTPUTS (8) (5) 4 2

BILL OF MATERIAL

ITEM	QTY	PART NUMBER	DESCRIPTION
1	A/R	NS35/7.5	PHOENIX CONTACT, 0801733 DIN RAIL, 7.5mm HEIGHT
2	8	UK5-HESI	PHOENIX CONTACT, 3004100 FUSE BLOCK, 120 VAC
3	6	UK 6-FSI/C	PHOENIX CONTACT, 3118203 FUSE BLOCK, 24 VDC
4	32	UK 5N	PHOENIX CONTACT, 3004362 TERMINAL BLOCK, 1 LEVEL
5	8	USLKG-5	PHOENIX CONTACT, 0441504 TERMINAL BLOCK, GROUNDING
6	72	PIK 4-L/LB	PHOENIX CONTACT, 3000117 TERMINAL BLOCK, 2 LEVEL
7	30	DIKD 1.5	PHOENIX CONTACT, 2715979 TERMINAL BLOCK, 3 LEVEL
8	2	D-PIK- 4-PE/L/NTB	PHOENIX CONTACT, 2714161 END COVERS FOR 2 LEVEL TERMINALS
9	2	ATP-DIKD 1.5	PHOENIX CONTACT, 1413285 END COVERS FOR 3 LEVEL TERMINALS
10	32	PLC-RSC- 24DC/21	PHOENIX CONTACT, 2966171 RELAY MODULE, SPOT, 24 VDC COIL
11	0	NOT USED	
12	6	09-13-68-9	PHOENIX CONTACT FUSE 2 A, FLAT TYPE, SIFORM C2A, 24 VDC
13	8	217-005	LITTLE FUSE FUSE 5 A, FAST ACTING
14	4	E/UK-1	PHOENIX CONTACT, 1201413 END BRACKET
15	0	NOT USED	
16	0	NOT USED	
17	0	NOT USED	
18	0	NOT USED	

(X)A-CONFORMS TO THE SUBCONTRACT REQUIREMENTS
( )B-MINOR COMMENT-INCORPORATE & RESUBMIT
( )C-REVISE & RESUBMIT
SIG: [signature] DATE: 9/21/04

RES 4518 PROJECT NO. 59600

INDEX CODE				
PL. & AR.	ORIG.	CL.	SER. NO.	REV.
51D	5500	N	01399	

WIRE LUGS – NO ☒, YES ☐ RING ☐, LOCKING SPADE ☐
INSULATION: NYLON ☐, PVC ☒ POLYETHYLENE ☐

WIRE SPECIFICATIONS:

USAGE	COLOR
480 VAC POWER (A, B, C, NEUTRAL)	BROWN, VIOLET, ORANGE, GRAY
120 AC POWER (HOT, NEUTRAL, GND)	BLK, WHT, GRN
120 AC CONTROL (CONTROL, NEUTRAL, GND)	RED, WHT, GRN
DC POWER	BLUE
DC SIGNAL (+, –, GND)	RED , BLK, GRN/YLW STRIPE
FOREIGN	YELLOW
SIGNAL / INSTRUMENTS	2 CONDUCTOR SHL'D.

STATE OF OHIO
ROBERT A. LANDTHORN
E-37992
REGISTERED PROFESSIONAL ENGINEER

United States Dept. of Energy
Fernald Closure Project
P.O. #040400290

DUBLIN TECHNICAL SYSTEMS INC.
CONTRACT # 04177

TOLERANCES
DECIMAL ± .03
FRACTIONAL ± 1/64"
ANGULAR ± 1°

DUBLIN TECHNICAL SYSTEMS, INC.

Fluor Fernald
CAWWT Control System

SCALE NONE
DRAWN BY PW
APPROVED BY JK

TITLE RTU-10 TERMINAL LAYOUT AND BILL OF MATERIAL

DATE 7/27/04
DRAWING NUMBER DTSI-04177-026

--5728

DATE	SYM	REVISION RECORD	AUTH	DR	CK
8/18/04	A	FOR APPROVAL	CUST	PW	JK
9/14/04	0	FOR CONSTRUCTION	CUST	PW	JK

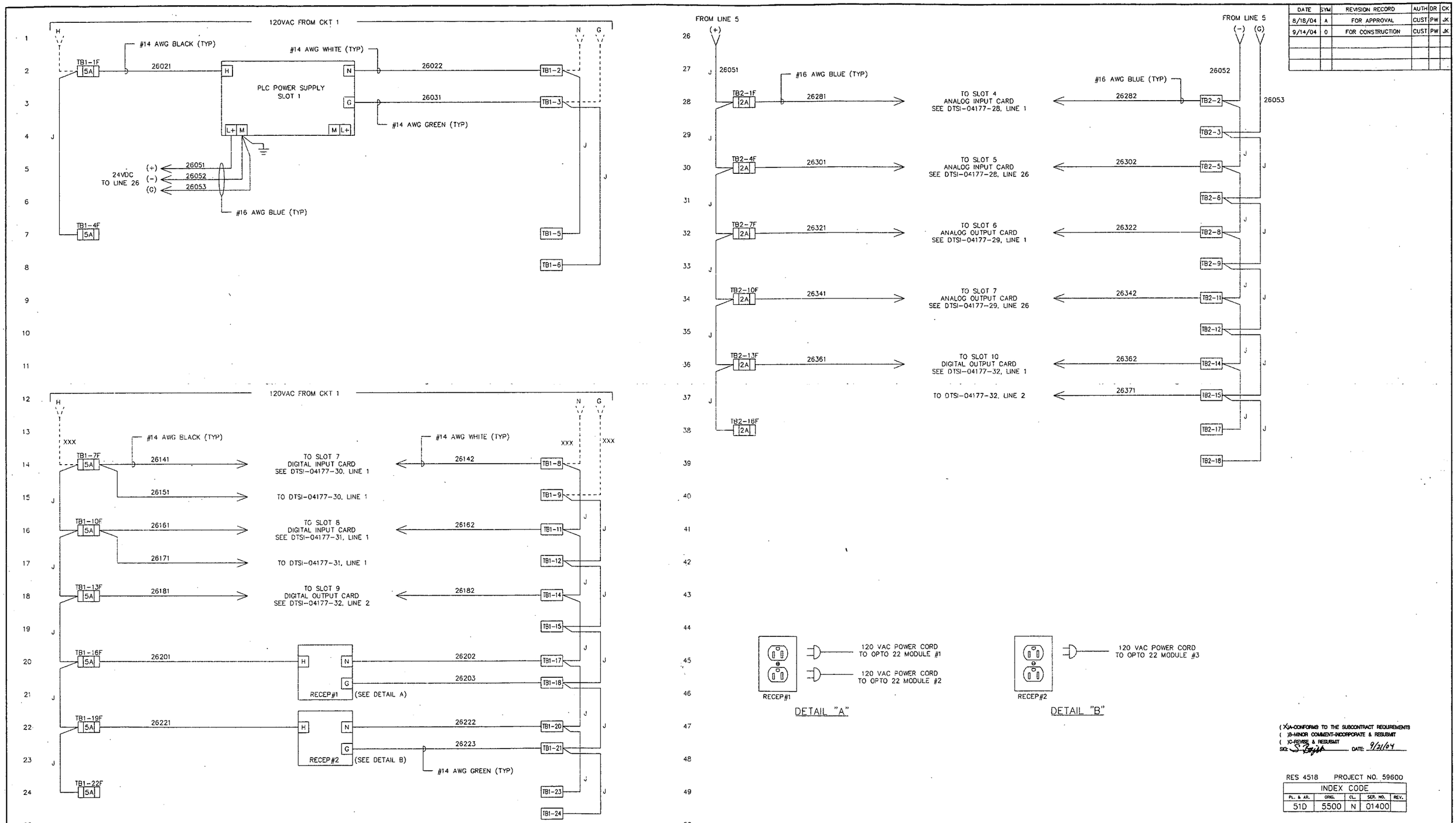

(X)A-CONFORMS TO THE SUBCONTRACT REQUIREMENTS
( )B-MINOR COMMENT-INCORPORATE & RESUBMIT
( )C-REVISE & RESUBMIT
SIG: S. Boyle DATE: 9/21/04

RES 4518 PROJECT NO. 59600

INDEX CODE				
PL. & AR.	ORIG.	CL.	SER. NO.	REV.
51D	5500	N	01400	

WIRE LUGS - NO ☒ YES ☐ RING ☐ LOCKING SPADE ☐
INSULATION: NYLON ☐ PVC ☒ POLYETHYLENE ☐

WIRE SPECIFICATIONS:

USAGE	COLOR
480 VAC POWER (A, B, C, NEUTRAL)	BROWN, VIOLET, ORANGE, GRAY
120 AC POWER (HOT, NEUTRAL, GND)	BLK, WHT, GRN
120 AC CONTROL (CONTROL, NEUTRAL, GND)	RED, WHT, GRN
DC POWER	BLUE
DC SIGNAL (+, -, GND)	RED , BLK, GRN/YLW STRIPE
FOREIGN	YELLOW
SIGNAL / INSTRUMENTS	2 CONDUCTOR SHL'D

STATE OF OHIO
ROBERT A. LANDTHORN
E-37992
REGISTERED PROFESSIONAL ENGINEER

United States Dept. of Energy
Fernald Closure Project
P.O. #040400290

DUBLIN TECHNICAL SYSTEMS INC.
CONTRACT # 04177

TOLERANCES: ±
DECIMAL: ± .03
FRACTIONAL: ± 1/64"
ANGULAR: ± 1°

DUBLIN TECHNICAL SYSTEMS, INC.

Fluor Fernald CAWWT Control System
SCALE: NONE
DRAWN BY: PW
APPROVED BY: JK

TITLE: RTU-10 PANEL WIRING SCHEMATIC

DATE: 8/18/04
DRAWING NUMBER: DTSI-04177-027

DATE	SYM	REVISION RECORD	AUTH	DR	CK
7/16/04	A	FOR APPROVAL	CUST	RTR	JK
9/14/04	0	FOR CONSTRUCTION	CUST	PW	JK

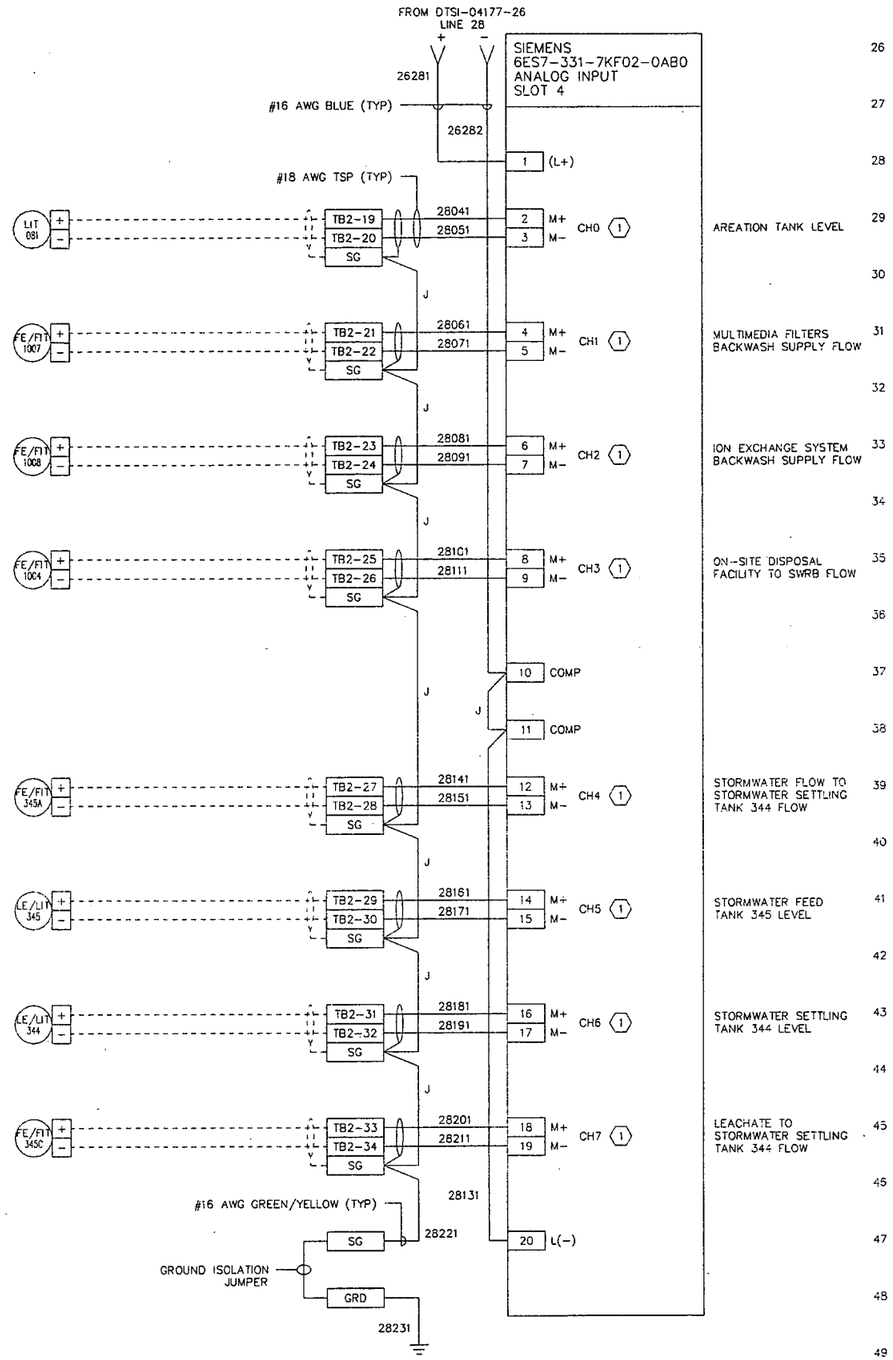

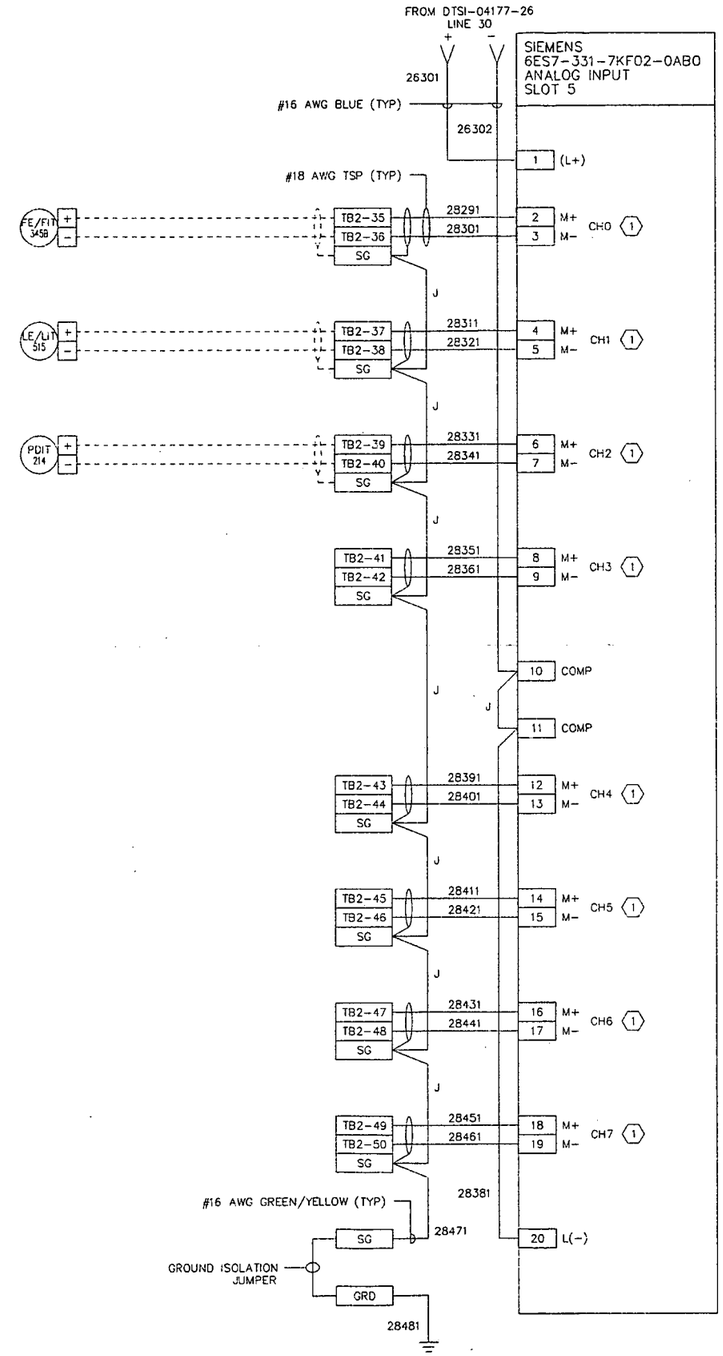

NOTES:

(1) PROGRAMMING PARAMETERS FOR THE 2-WIRE TRANSMITTERS MUST BE SETUP AS A 4-WIRE TRANSMITTER IN ORDER FOR THE CARD TO SOURCE POWER TO THE TRANSMITTER.

(X)A-CONFORMS TO THE SUBCONTRACT REQUIREMENTS
( )B-MINOR COMMENT-INCORPORATE & RESUBMIT
( )C-REVISE & RESUBMIT
SIG: S. Bergh DATE: 9/14/04

RES 4518 PROJECT NO. 59600

INDEX CODE				
PL. & AR.	ORIG.	CL.	SER. NO.	REV.
51D	5500	N	01401	

WIRE LUGS - NO ☒, YES ☐ RING ☐, LOCKING SPADE ☐
INSULATION: NYLON ☐, PVC ☒ POLYETHYLENE ☐

WIRE SPECIFICATIONS:

USAGE	COLOR
480 VAC POWER (A, B, C, NEUTRAL)	BROWN, VIOLET, ORANGE, GRAY
120 AC POWER (HOT, NEUTRAL, GND)	BLK, WHT, GRN
120 AC CONTROL (CONTROL, NEUTRAL, GND)	RED, WHT, GRN
DC POWER	BLUE
DC SIGNAL (+, -, GND)	RED , BLK, GRN/YLW STRIPE
FOREIGN	YELLOW
SIGNAL / INSTRUMENTS	2 CONDUCTOR SHL'D

STATE OF OHIO ROBERT A. LANDTHORN E-37992 REGISTERED PROFESSIONAL ENGINEER

United States Dept. of Energy
Fernald Closure Project
P.O. #040400290

DUBLIN TECHNICAL SYSTEMS INC.
CONTRACT # 04177

TOLERANCES: ± ; DECIMAL ± .03 ; FRACTIONAL ± 1/64" ; ANGULAR ± 1°

DUBLIN TECHNICAL SYSTEMS, INC.

Fluor Fernald CAWWT Control System

SCALE: NONE ; DRAWN BY: RTR ; APPROVED BY: JK

TITLE: RTU-10 ANALOG INPUT MODULES SLOT 4 & 5

DATE: 7/27/04 ; DRAWING NUMBER: DTSI-04177-028

DATE	SYM	REVISION RECORD	AUTH	DR	CK
7/16/04	A	FOR APPROVAL	CUST	RTR	JK
9/14/04	0	FOR CONSTRUCTION	CUST	PW	JK

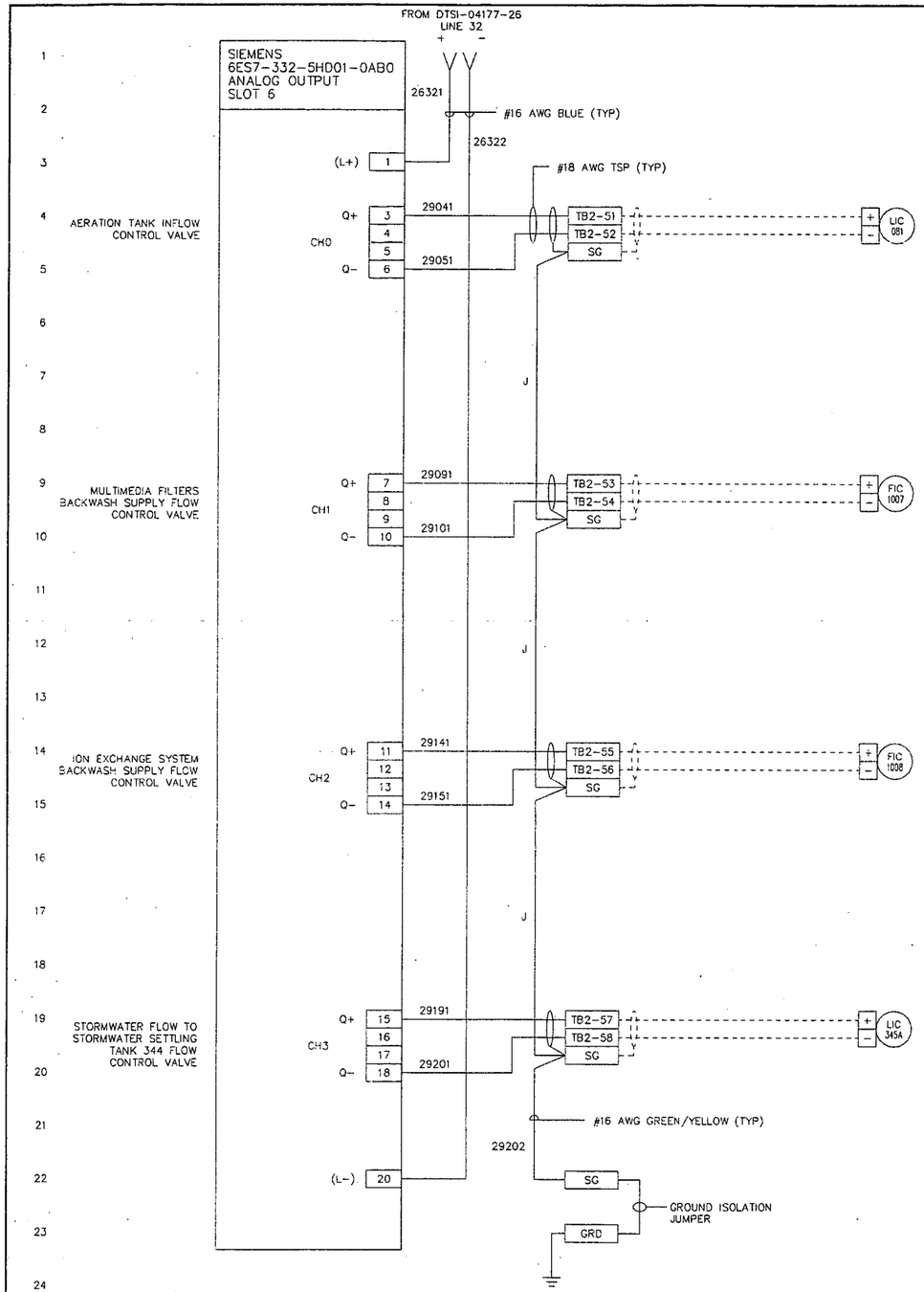

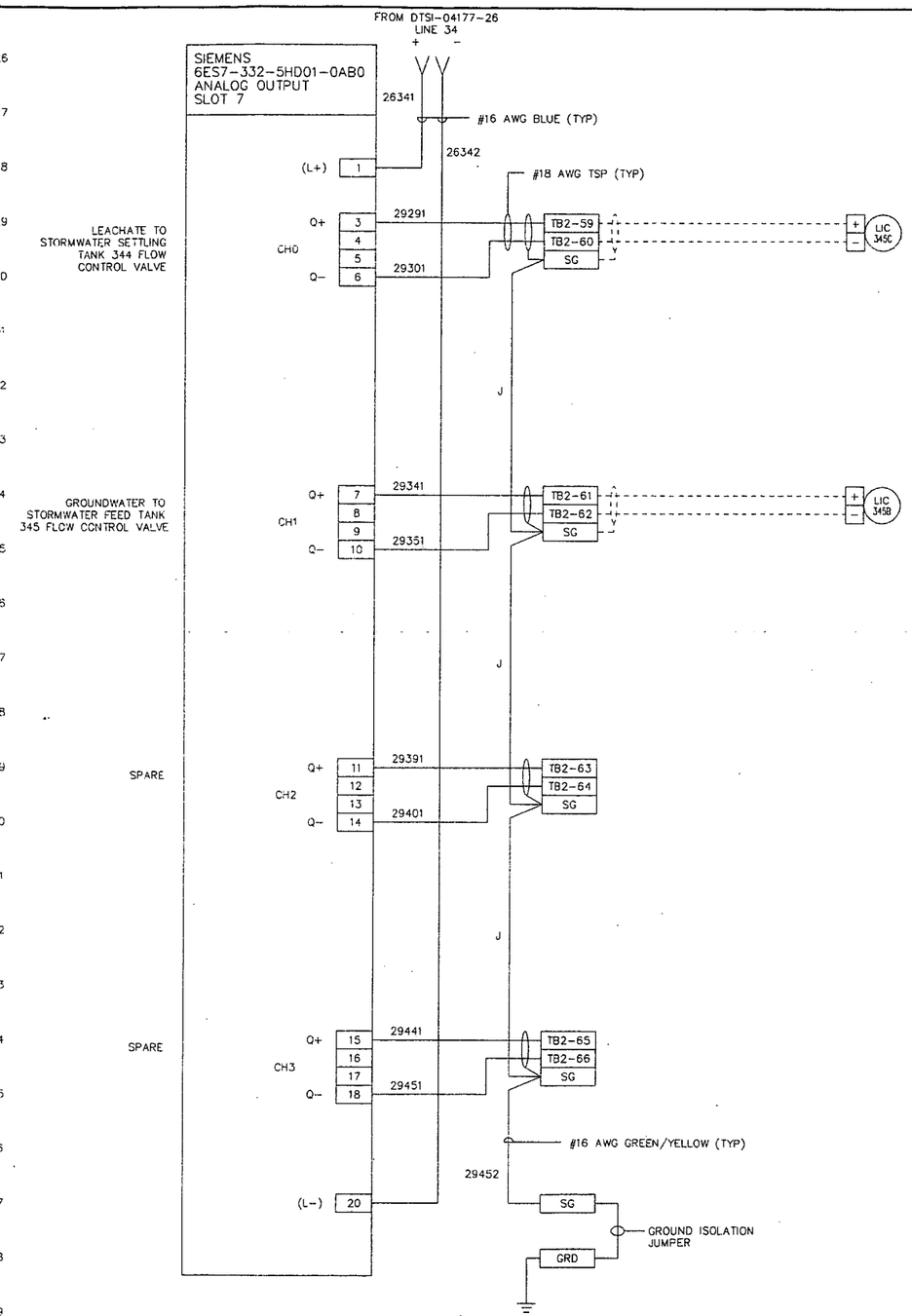

(X)A-CONFORMS TO THE SUBCONTRACT REQUIREMENTS
( )B-MINOR COMMENT-INCORPORATE & RESUBMIT
( )C-REVISE & RESUBMIT
SIG: [signature] DATE: 9/21/04

RES 4518 PROJECT NO. 59600

INDEX CODE				
PL. & AR.	ORIG.	CL.	SER. NO.	REV.
51D	5500	N	01402	

WIRE LUGS - NO ☒, YES ☐ RING ☐, LOCKING SPADE ☐
INSULATION: NYLON ☐, PVC ☒ POLYETHYLENE ☐

WIRE SPECIFICATIONS:

USAGE	COLOR
480 VAC POWER (A, B, C, NEUTRAL)	BROWN, VIOLET, ORANGE, GRAY
120 AC POWER (HOT, NEUTRAL, GND)	BLK, WHT, GRN
120 AC CONTROL (CONTROL, NEUTRAL, GND)	RED, WHT, GRN
DC POWER	BLUE
DC SIGNAL (+, -, GND)	RED , BLK, GRN/YLW STRIPE
FOREIGN	YELLOW
SIGNAL / INSTRUMENTS	2 CONDUCTOR SHL'D

STATE OF OHIO
ROBERT A. LANDTHORN
E-37992
REGISTERED PROFESSIONAL ENGINEER

United States Dept. of Energy
Fernald Closure Project
P.O. #040400290

DUBLIN TECHNICAL SYSTEMS INC.
CONTRACT # 04177

TOLERANCES ±
DECIMAL ± .03
FRACTIONAL ± 1/64"
ANGULAR ± 1°

DUBLIN TECHNICAL SYSTEMS, INC.

Fluor Fernald
CAWWT Control System

SCALE NONE
DRAWN BY RTR
APPROVED BY JK

TITLE RTU-10 ANALOG OUTPUT MODULES SLOT 6 & 7

DATE 7/27/04
DRAWING NUMBER DTSI-04177-029

DATE	SYM	REVISION RECORD	AUTH	DR	CK
7/16/04	A	FOR APPROVAL	CUST	RTR	JK
9/14/04	0	FOR CONSTRUCTION	CUST	PW	JK

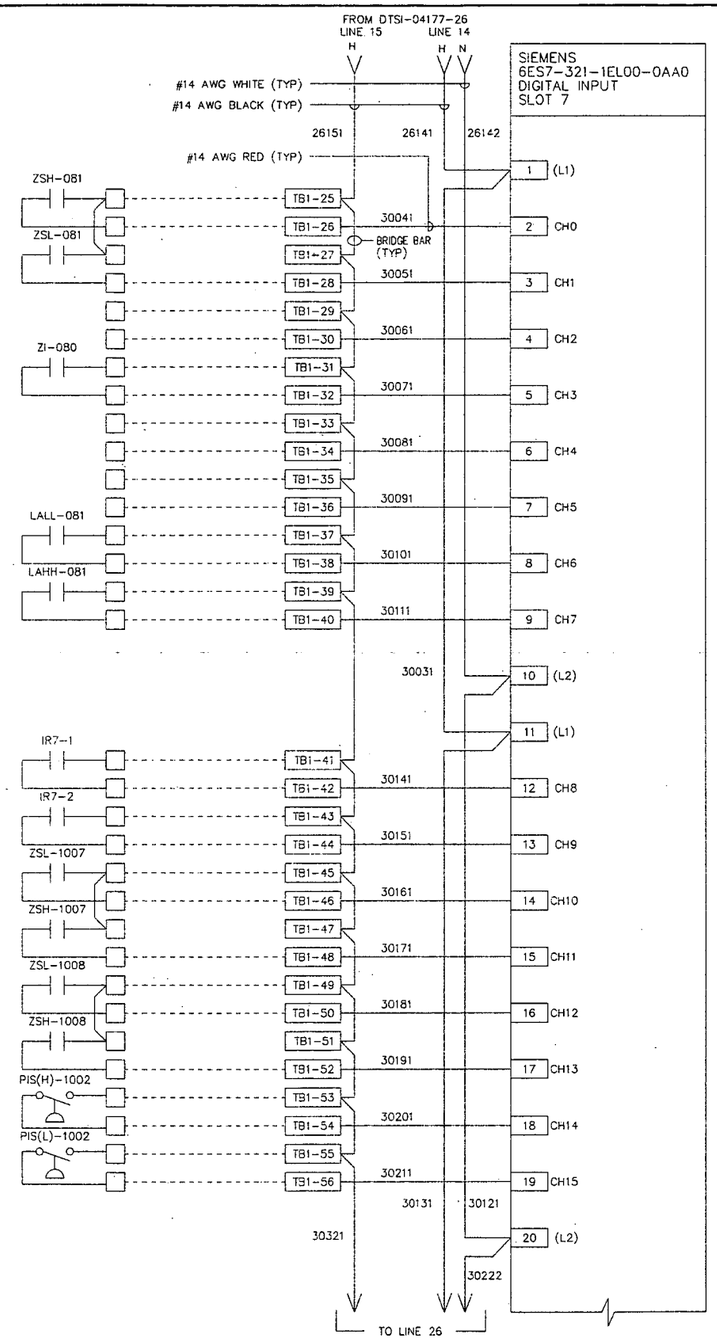

AERATION TANK INFLOW CONTROL VALVE CLOSED	
AERATION TANK INFLOW CONTROL VALVE OPEN	
SPARE	
BLOWER BLW-1 RUNNING	
SPARE	
SPARE	
AERATION TANK LEVEL LOW-LOW ALARM	
AERATION TANK LEVEL HIGH-HIGH ALARM	
HEAT TRACE POWER DISTRIBUTION PANEL HT-7 POWER INDICATION	
HEAT TRACE POWER DISTRIBUTION PANEL HT-7 CIRCUIT BREAKER STATUS INDICATION	
MULTIMEDIA FILTERS BACKWASH SUPPLY VALVE CLOSED	
MULTIMEDIA FILTERS BACKWASH SUPPLY VALVE OPEN	
ION EXCHANGE SYSTEM BACKWASH SUPPLY VALVE CLOSED	
ION EXCHANGE SYSTEM BACKWASH SUPPLY VALVE OPEN	
GROUNDWATER SUPPLY PMP-1C HIGH PRESSURE SWITCH	
GROUNDWATER SUPPLY PMP-1C LOW PRESSURE SWITCH	

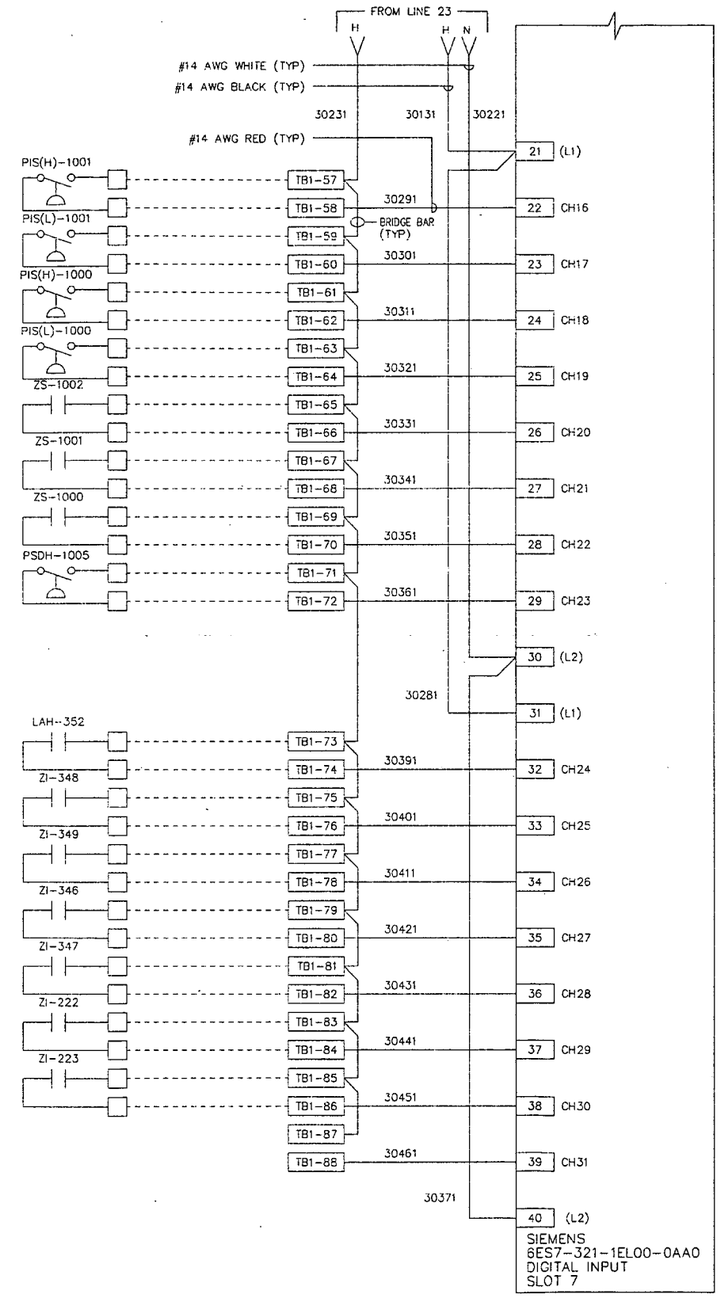

GROUNDWATER SUPPLY PMP-1B HIGH PRESSURE SWITCH	
GROUNDWATER SUPPLY PMP-1B LOW PRESSURE SWITCH	
GROUNDWATER SUPPLY PMP-1A HIGH PRESSURE SWITCH	
GROUNDWATER SUPPLY PMP-1A LOW PRESSURE SWITCH	
GROUNDWATER SUPPLY PMP-1C PUMP RUNNING	
GROUNDWATER SUPPLY PMP-1B PUMP RUNNING	
GROUNDWATER SUPPLY PMP-1A PUMP RUNNING	
STRAINER DIFFERENTIAL PRESSURE HIGH ALARM	
CONTAINMENT SUMP HIGH-HIGH LEVEL ALARM	
STORMWATER TO BACKWASH SURGE PUMP #1 RUNNING	
STORMWATER TO BACKWASH SURGE PUMP #2 RUNNING	
STORMWATER FEED TANK 345 TO FILTRATION PUMP #1 RUNNING	
STORMWATER FEED TANK 345 TO FILTRATION PUMP #2 RUNNING	
BACKWASH SURGE TANK 221 TO STORMWATER SETTLING TANK 344 PUMP #1 RUNNING	
BACKWASH SURGE TANK 221 TO STORMWATER SETTLING TANK 344 PUMP #2 RUNNING	
SPARE	

(X)A-CONFORMS TO THE SUBCONTRACT REQUIREMENTS
( )B-MINOR COMMENT-INCORPORATE & RESUBMIT
( )C-REVISE & RESUBMIT
SIG: [signature] DATE: 9/14/04

RES 4518 PROJECT NO. 59600

INDEX CODE				
PL. & AR.	ORG.	CL.	SER. NO.	REV.
51D	5500	N	01403	

WIRE LUGS - NO ☒, YES ☐ RING ☐, LOCKING SPADE ☐
INSULATION: NYLON ☐, PVC ☒ POLYETHYLENE ☐

WIRE SPECIFICATIONS:

USAGE	COLOR
480 VAC POWER (A, B, C, NEUTRAL)	BROWN, VIOLET, ORANGE, GRAY
120 AC POWER (HOT, NEUTRAL, GND)	BLK, WHT, GRN
120 AC CONTROL (CONTROL, NEUTRAL, GND)	RED, WHT, GRN
DC POWER	BLUE
DC SIGNAL (+, -, GND)	RED , BLK, GRN/YLW STRIPE
FOREIGN	YELLOW
SIGNAL / INSTRUMENTS	2 CONDUCTOR SHL'D

STATE OF OHIO
ROBERT A. LANDTHORN
E-37992
REGISTERED PROFESSIONAL ENGINEER

United States Dept. of Energy
Fernald Closure Project
P.O. #040400290

DUBLIN TECHNICAL SYSTEMS INC.
CONTRACT # 04177

TOLERANCES	DUBLIN TECHNICAL SYSTEMS, INC.		
±			
DECIMAL ± .03	Fluor Fernald CAWWT Control System	SCALE NONE	DRAWN BY RTR / APPROVED BY JK
FRACTIONAL ± 1/64"	TITLE RTU-10 DIGITAL INPUT MODULE SLOT 7		
ANGULAR ± 1°	DATE 7/27/04	DRAWING NUMBER DTSI-04177-030	

5728

DATE	SYM	REVISION RECORD	AUTH	DR	CK
7/16/04	A	FOR APPROVAL	CUST	RTR	JK
9/14/04	0	FOR CONSTRUCTION	CUST	PW	JK

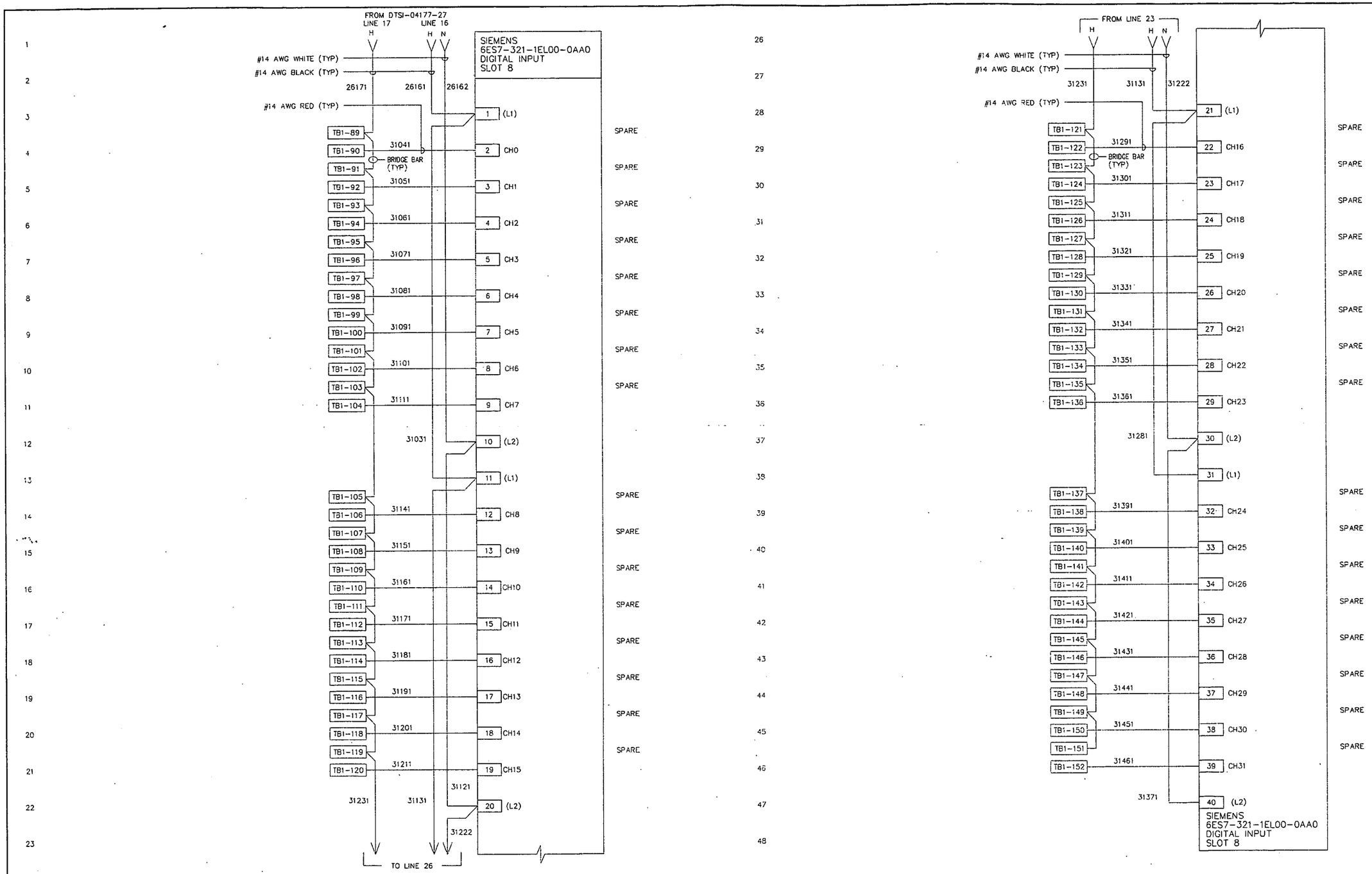

(X)A-CONFORMS TO THE SUBCONTRACT REQUIREMENTS
( )B-MINOR COMMENT-INCORPORATE & RESUBMIT
( )C-REVISE & RESUBMIT
SIG: [signature] DATE: 9/14/04

RES 4518 PROJECT NO. 59600

INDEX CODE				
PL. & AR.	ORIG.	CL.	SER. NO.	REV.
51D	5500	N	01404	

WIRE LUGS – NO ☒, YES ☐ RING ☐, LOCKING SPADE ☐
INSULATION: NYLON ☐, PVC ☒ POLYETHYLENE ☐

WIRE SPECIFICATIONS:

USAGE	COLOR
480 VAC POWER (A, B, C, NEUTRAL)	BROWN, VIOLET, ORANGE, GRAY
120 AC POWER (HOT, NEUTRAL, GND)	BLK, WHT, GRN
120 AC CONTROL (CONTROL, NEUTRAL, GND)	RED, WHT, GRN
DC POWER	BLUE
DC SIGNAL (+, –, GND)	RED , BLK, GRN/YLW STRIPE
FOREIGN	YELLOW
SIGNAL / INSTRUMENTS	2 CONDUCTOR SHL'D

STATE OF OHIO ROBERT A. LANDTHORN E-37992 REGISTERED PROFESSIONAL ENGINEER

United States Dept. of Energy
Fernald Closure
Project
P.O. #040400290

DUBLIN TECHNICAL SYSTEMS INC.
CONTRACT # 04177

TOLERANCES: ±; DECIMAL ± .03; FRACTIONAL ± 1/64"; ANGULAR ± 1°

DUBLIN TECHNICAL SYSTEMS, INC.

Fluor Fernald
CAWWT Control System

SCALE: NONE
DRAWN BY: RTR
APPROVED BY: JK

TITLE: RTU-10 DIGITAL INPUT MODULE
SLOT 8

DATE: 7/27/04
DRAWING NUMBER: DTSI-04177-031

5128

DATE	SYM	REVISION RECORD	AUTH	DR	CK
7/16/04	A	FOR APPROVAL	CUST	RTR	JK
9/14/04	0	FOR CONSTRUCTION	CUST	PW	JK

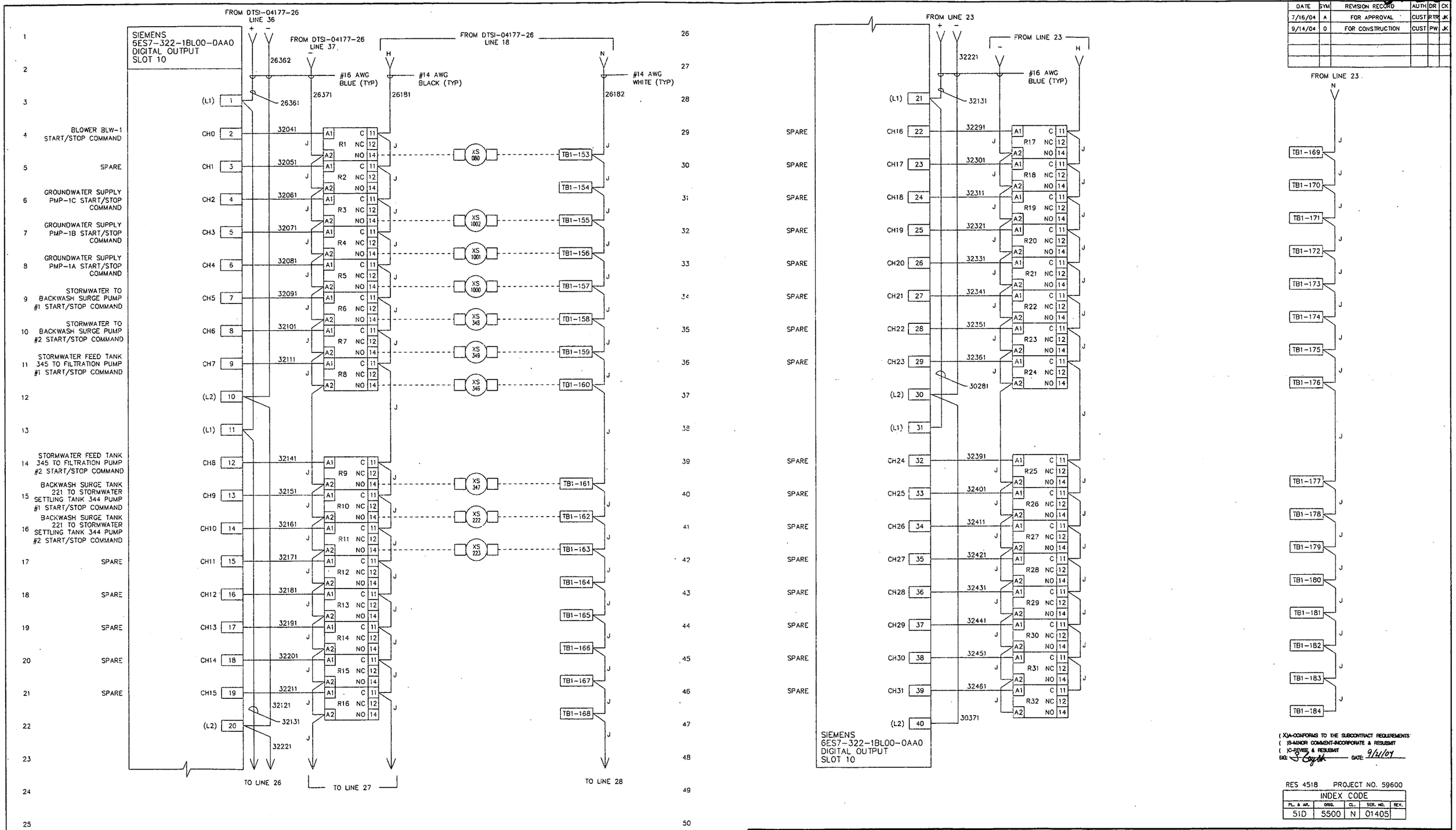

(X)A-CONFORMS TO THE SUBCONTRACT REQUIREMENTS
( )B-MINOR COMMENT-INCORPORATE & RESUBMIT
( )C-REVISE & RESUBMIT
SIG: DATE: 9/21/04

RES 4518 PROJECT NO. 59600

INDEX CODE				
PL. & AR.	ORIG.	CL.	SER. NO.	REV.
51D	5500	N	01405	

WIRE LUGS - NO ☒ YES ☐ RING ☐ LOCKING SPADE ☐
INSULATION: NYLON ☐ PVC ☒ POLYETHYLENE ☐

WIRE SPECIFICATIONS:

USAGE	COLOR
480 VAC POWER (A, B, C, NEUTRAL)	BROWN, VIOLET, ORANGE, GRAY
120 AC POWER (HOT, NEUTRAL, GND)	BLK, WHT, GRN
120 AC CONTROL (CONTROL, NEUTRAL, GND)	RED, WHT, GRN
DC POWER	BLUE
DC SIGNAL (+, -, GND)	RED , BLK, GRN/YLW STRIPE
FOREIGN	YELLOW
SIGNAL / INSTRUMENTS	2 CONDUCTOR SHL'D

STATE OF OHIO ROBERT A. LANDTHORN E-37992 REGISTERED PROFESSIONAL ENGINEER

United States Dept. of Energy
Fernald Closure
Project
P.O. #040400290

DUBLIN TECHNICAL SYSTEMS INC.
CONTRACT # 04177

TOLERANCES ±
DECIMAL ± .03
FRACTIONAL ± 1/64"
ANGULAR ± 1°

DUBLIN TECHNICAL SYSTEMS, INC.

Fluor Fernald
CAWWT Control System

SCALE NONE
DRAWN BY RTR
APPROVED BY JK

TITLE RTU-10 DIGITAL OUTPUT MODULE SLOT 10

DATE 7/27/04
DRAWING NUMBER DTSI-04177-032

DATE	SYM	REVISION RECORD	AUTH	DR	CK
7/16/04	A	FOR APPROVAL	CUST	RTR	JK
9/14/04	0	FOR CONSTRUCTION	CUST	PW	JK

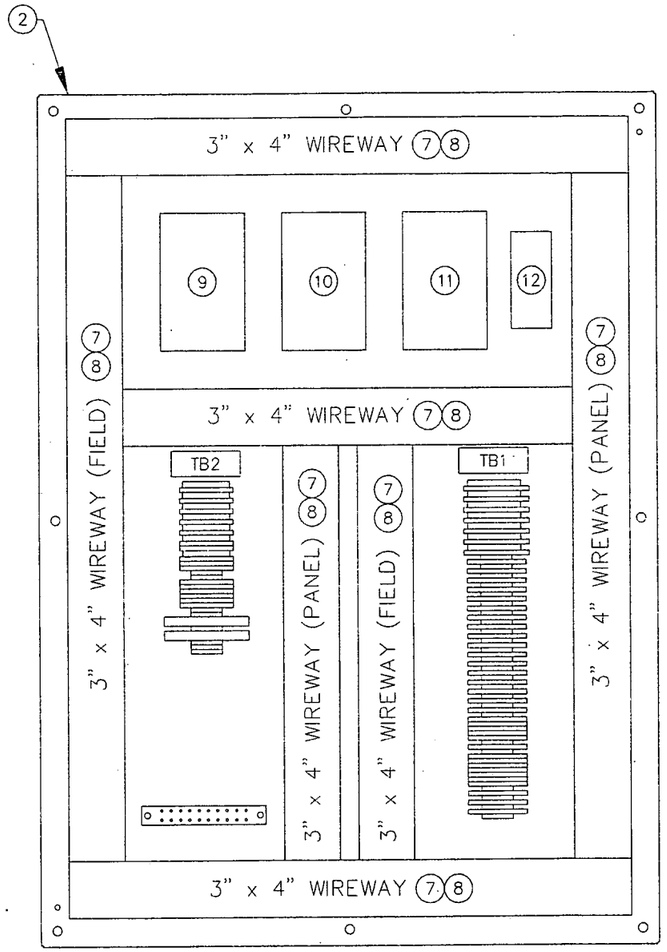

NOTES:

1.) ALL DEVICES TO BE SUPPLIED WITH APPROPRIATE MOUNTING HARDWARE.

2.) ALL LETTERING TO BE ENGRAVED ON LAMINATED NAMEPLATES TO BE 3/16" HIGH UNLESS OTHERWISE NOTED. BLACK TEXT ON WHITE BACKGROUND.

3.) TOLERANCES TO BE ±1/2" EXCEPT AS NOTED.

4.) ALL 120VAC WIRING SHALL BE ROUTED TO AND TERMINATED ON TB1, AND ROUTED IN WIRE DUCT SEPARATE FROM 24VDC WIRING.

5.) ALL 24VDC WIRING SHALL BE ROUTED TO AND TERMINATED ON TB2, AND ROUTED IN WIRE DUCT SEPARATE FROM 120VAC WIRING.

BILL OF MATERIAL

ITEM	QTY	PART NUMBER	DESCRIPTION
1		NOT USED	
2	1	A-48PJ6	HOFFMAN, SUBPANEL, STEEL
3		NOT USED	
4		NOT USED	
5		NOT USED	
6	1	X-GS2K	HOFFMAN, GROUND BAR
7	LOT	E3X4LG6	PANDUIT, 3" x 4" CHANNEL
8	LOT	C3LG6	PANDUIT, 3" CHANNEL COVER
9	1	905U-1	ELPRO INDUSTRIAL RADIO MODEM
10	1	105S-2	ELPRO INDUSTRIAL RADIO RTU I/O EXPANSION MODULE
11	1	105S-4	ELPRO INDUSTRIAL RADIO RTU I/O EXPANSION MODULE
12	1	QUINT-PS-100-240AC/24DC/5	PHOENIX CONTACT, 2938581 24VAC POWER SUPPLY, 120VAC, 5A
13		NOT USED	
14		NOT USED	
15		NOT USED	

(X)A-CONFORMS TO THE SUBCONTRACT REQUIREMENTS
( )B-MINOR COMMENT-INCORPORATE & RESUBMIT
( )C-REVISE & RESUBMIT
SIG: [signature] DATE: 9/21/04

RES 4518 PROJECT NO. 59600

INDEX CODE				
PL. & AR.	DRG.	CL.	SER. NO.	REV.
51D	5500	N	01408	

WIRE LUGS - NO ☒, YES ☐ RING ☐, LOCKING SPADE ☐
INSULATION: NYLON ☐, PVC ☒ POLYETHYLENE ☐

WIRE SPECIFICATIONS:

USAGE	COLOR
480 VAC POWER (A, B, C, NEUTRAL)	BROWN, VIOLET, ORANGE, GRAY
120 AC POWER (HOT, NEUTRAL, GND)	BLK, WHT, GRN
120 AC CONTROL (CONTROL, NEUTRAL, GND)	RED, WHT, GRN
DC POWER	BLUE
DC SIGNAL (+, -, GND)	RED , BLK, GRN/YLW STRIPE
FOREIGN SIGNAL / INSTRUMENTS	YELLOW 2 CONDUCTOR SHL'D

STATE OF OHIO ROBERT A. LANDTHORN E-37992 REGISTERED PROFESSIONAL ENGINEER

United States Dept. of Energy
Fernald Closure Project
P.O. #040400290

DUBLIN TECHNICAL SYSTEMS INC.
CONTRACT # 04177

TOLERANCES: ± ; DECIMAL ± .03 ; FRACTIONAL ± 1/64" ; ANGULAR ± 1°

DUBLIN TECHNICAL SYSTEMS, INC.

Fluor Fernald CAWWT Control System

SCALE: NONE | DRAWN BY: RTR | APPROVED BY: JK

TITLE: RTU-7 PANEL LAYOUT AND BILL OF MATERIAL

DATE: 7/27/04 | DRAWING NUMBER: DTSI-04177-035

5728

DATE	SYM	REVISION RECORD	AUTH	DR	CK
7/16/04	A	FOR APPROVAL	CUST	RTR	JK
9/14/04	0	FOR CONSTRUCTION	CUST	PW	JK

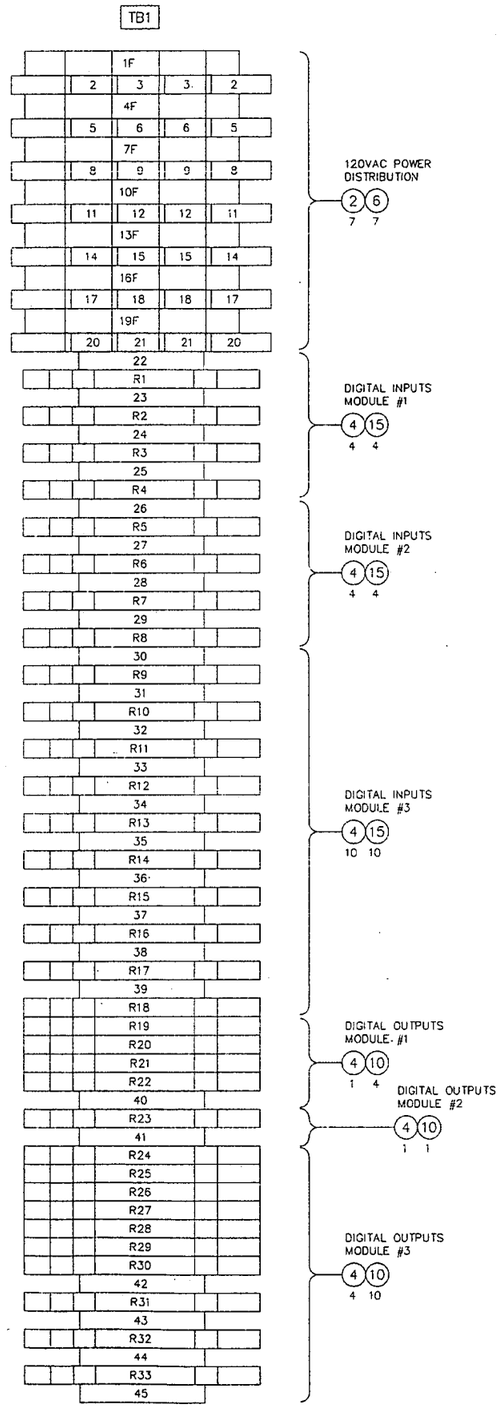

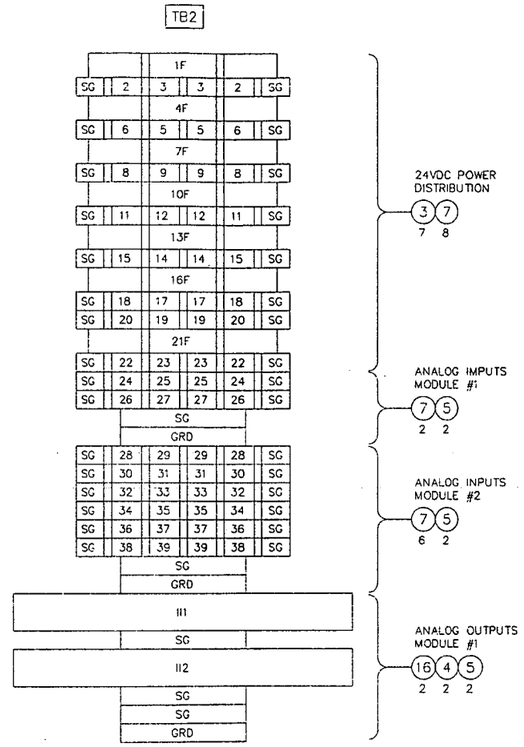

BILL OF MATERIAL

ITEM	QTY	PART NUMBER	DESCRIPTION
1	A/R	NS35/7.5	PHOENIX CONTACT, 0801733 DIN RAIL, 7.5mm HEIGHT
2	5	UK5-HESI	PHOENIX CONTACT, 3004100 FUSE BLOCK, 120 VAC
3	5	UK 6-FSI/C	PHOENIX CONTACT, 3118203 FUSE BLOCK, 24 VDC
4	23	UK 5N	PHOENIX CONTACT, 3004362 TERMINAL BLOCK, 1 LEVEL
5	6	USLKG-5	PHOENIX CONTACT, 0441504 TERMINAL BLOCK, GROUNDING
6	38	PIK 4-L/LB	PHOENIX CONTACT, 3000117 TERMINAL BLOCK, 2 LEVEL
7	25	DIKD 1.5	PHOENIX CONTACT, 2715979 TERMINAL BLOCK, 3 LEVEL
8	2	D-PIK- 4-PE/L/NTB	PHOENIX CONTACT, 2714161 END COVERS FOR 2 LEVEL TERMINALS
9	2	ATP-DIKD 1.5	PHOENIX CONTACT, 1413285 END COVERS FOR 3 LEVEL TERMINALS
10	15	PLC-RSC- 24DC/21	PHOENIX CONTACT, 2966171 RELAY MODULE, SPDT, 24 VDC COIL
11	0	NOT USED	
12	5	09-13-68-9	PHOENIX CONTACT FUSE 2 A, FLAT TYPE, SIFORM C2A, 24 VDC
13	5	217-005	LITTLE FUSE FUSE 5 A, FAST ACTING
14	4	E/UK-1	PHOENIX CONTACT, 1201413 END BRACKET
15	18	PLC-RSC- 120VC/21	PHOENIX CONTACT, 2966197 RELAY MODULE, SPDT, 120VDC COIL
16	2	MCR-SL-C-I/I- 00-DC-600-24/230	PHOENIX CONTACT, 2814980 SIGNAL ISOLATOR, 4-20ma/4-20ma
17	0	NOT USED	
18	0	NOT USED	

(X)A-CONFORMS TO THE SUBCONTRACT REQUIREMENTS
( )B-MINOR COMMENT-INCORPORATE & RESUBMIT
( )C-REVISE & RESUBMIT
SIG: DATE: 9/1/04

RES 4518 PROJECT NO. 59600

INDEX CODE				
PL. & AR.	ORG.	CL.	SER. NO.	REV.
51D	5500	N	01409	

WIRE LUGS - NO ☒, YES ☐ RING ☐, LOCKING SPADE ☐
INSULATION: NYLON ☐, PVC ☒ POLYETHYLENE ☐

WIRE SPECIFICATIONS:

USAGE	COLOR
480 VAC POWER (A, B, C, NEUTRAL)	BROWN, VIOLET, ORANGE, GRAY
120 AC POWER (HOT, NEUTRAL, GND)	BLK, WHT, GRN
120 AC CONTROL (CONTROL, NEUTRAL, GND)	RED, WHT, GRN
DC POWER	BLUE
DC SIGNAL (+, -, GND)	RED , BLK, GRN/YLW STRIPE
FOREIGN	YELLOW
SIGNAL / INSTRUMENTS	2 CONDUCTOR SHL'D

STATE OF OHIO
ROBERT A. LANDTHORN
E-37992
REGISTERED PROFESSIONAL ENGINEER

United States Dept. of Energy
Fernald Closure Project
P.O. #040400290

DUBLIN TECHNICAL SYSTEMS INC.
CONTRACT # 04177

TOLERANCES	DUBLIN TECHNICAL SYSTEMS, INC.		
±			
DECIMAL ± .03	Fluor Fernald CAWWT Control System	SCALE NONE	DRAWN BY RTR APPROVED BY JK
FRACTIONAL ± 1/64"	TITLE RTU-7 TERMINAL LAYOUT AND BILL OF MATERIAL		
ANGULAR ± 1°	DATE 7/27/04	DRAWING NUMBER DTSI-04177-036	

DATE	SYM	REVISION RECORD	AUTH	DR	CK
7/16/04	A	FOR APPROVAL	CUST	RTR	JK
9/14/04	0	FOR CONSTRUCTION	CUST	PW	JK

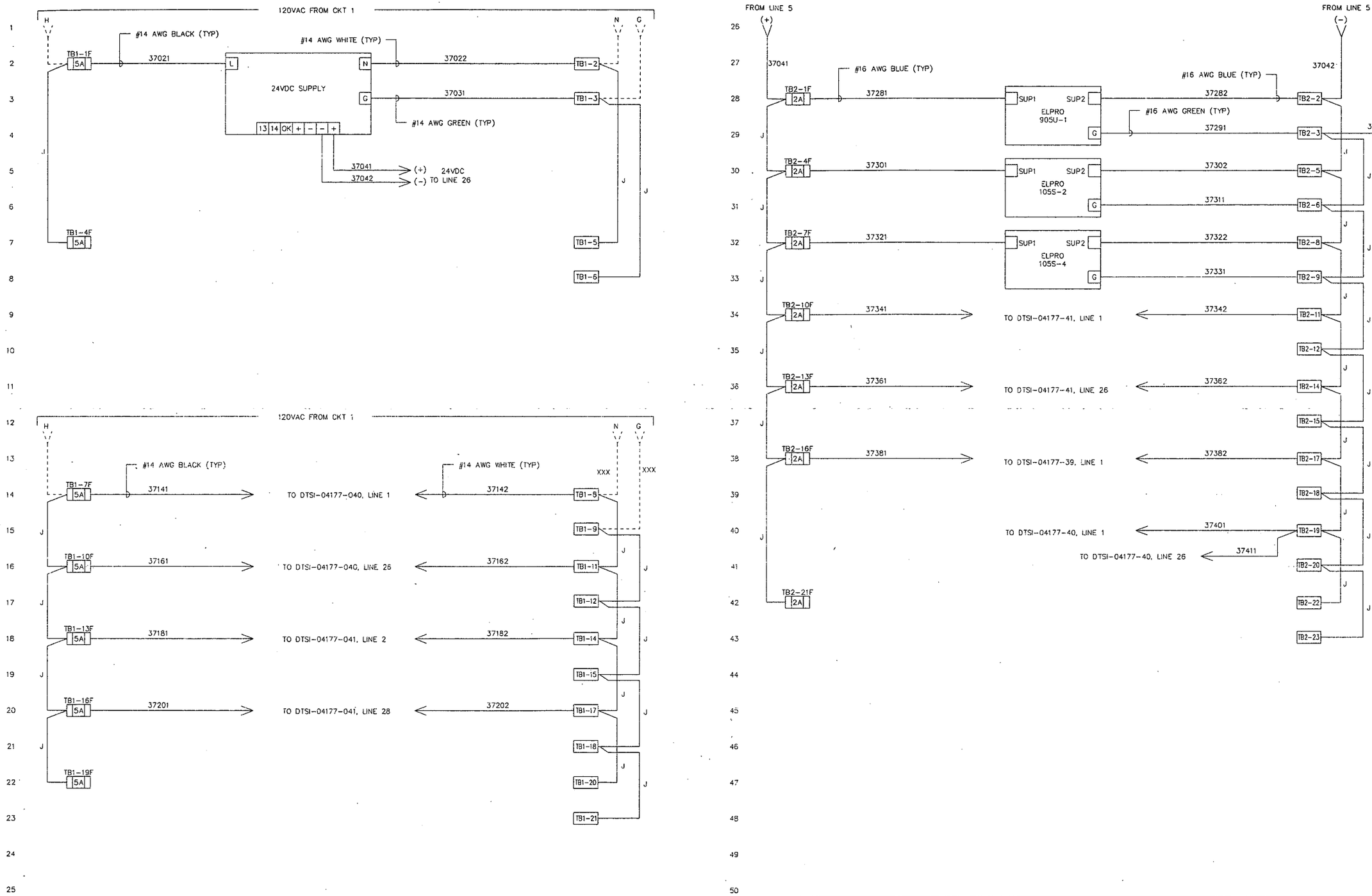

( )A-CONFORMS TO THE SUBCONTRACT REQUIREMENTS
( )B-MINOR COMMENT-INCORPORATE & RESUBMIT
( )C-REVISE & RESUBMIT
SIG: J. Hogish DATE: 9/21/04

RES 4518 PROJECT NO. 59600

INDEX CODE				
FL. & AR.	ORIG.	CL.	SER. NO.	REV.
51D	5500	N	01410	

WIRE LUGS - NO ☒ YES ☐ RING ☐ LOCKING SPADE ☐
INSULATION: NYLON ☐ PVC ☒ POLYETHYLENE ☐

WIRE SPECIFICATIONS:

USAGE	COLOR
480 VAC POWER (A, B, C, NEUTRAL)	BROWN, VIOLET, ORANGE, GRAY
120 AC POWER (HOT, NEUTRAL, GND)	BLK, WHT, GRN
120 AC CONTROL (CONTROL, NEUTRAL, GND)	RED, WHT, GRN
DC POWER	BLUE
DC SIGNAL (+, -, GND)	RED , BLK, GRN/YLW STRIPE
FOREIGN	YELLOW
SIGNAL / INSTRUMENTS	2 CONDUCTOR SHL'D

STATE OF OHIO
ROBERT A. LANDTHORN
E-37992
REGISTERED PROFESSIONAL ENGINEER

United States Dept. of Energy
Fernald Closure Project
P.O. #040400290

DUBLIN TECHNICAL SYSTEMS INC.
CONTRACT # 04177

TOLERANCES
± .
DECIMAL ± .03
FRACTIONAL ± 1/64"
ANGULAR ± 1°

DUBLIN TECHNICAL SYSTEMS, INC.

Fluor Fernald
CAWWT Control System

SCALE NONE
DRAWN BY: RTR
APPROVED BY JK

TITLE RTU-7 PANEL WIRING SCHEMATIC

DATE 7/27/04
DRAWING NUMBER DTSI-04177-037

DATE	SYM	REVISION RECORD	AUTH	DR	CK
7/16/04	A	FOR APPROVAL	CUST	RTR	JK
9/14/04	0	FOR CONSTRUCTION	CUST	PW	JK

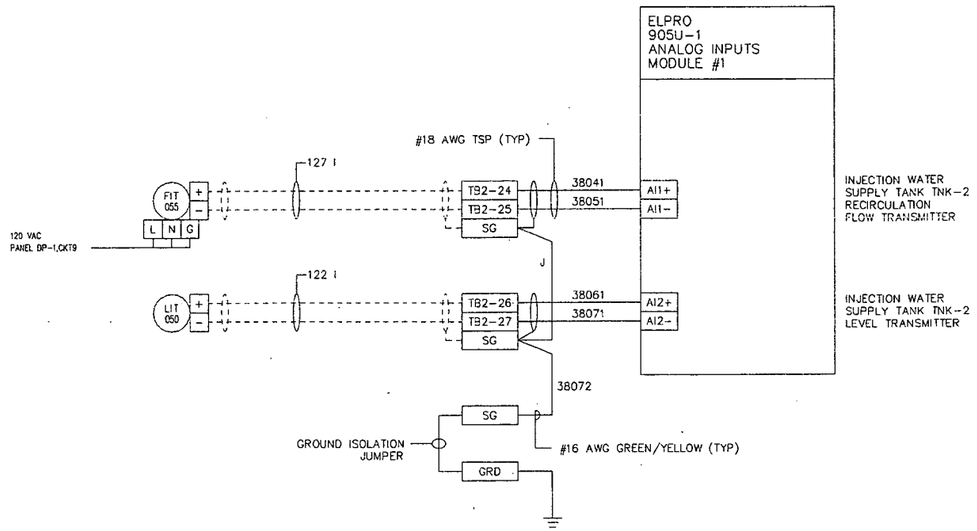

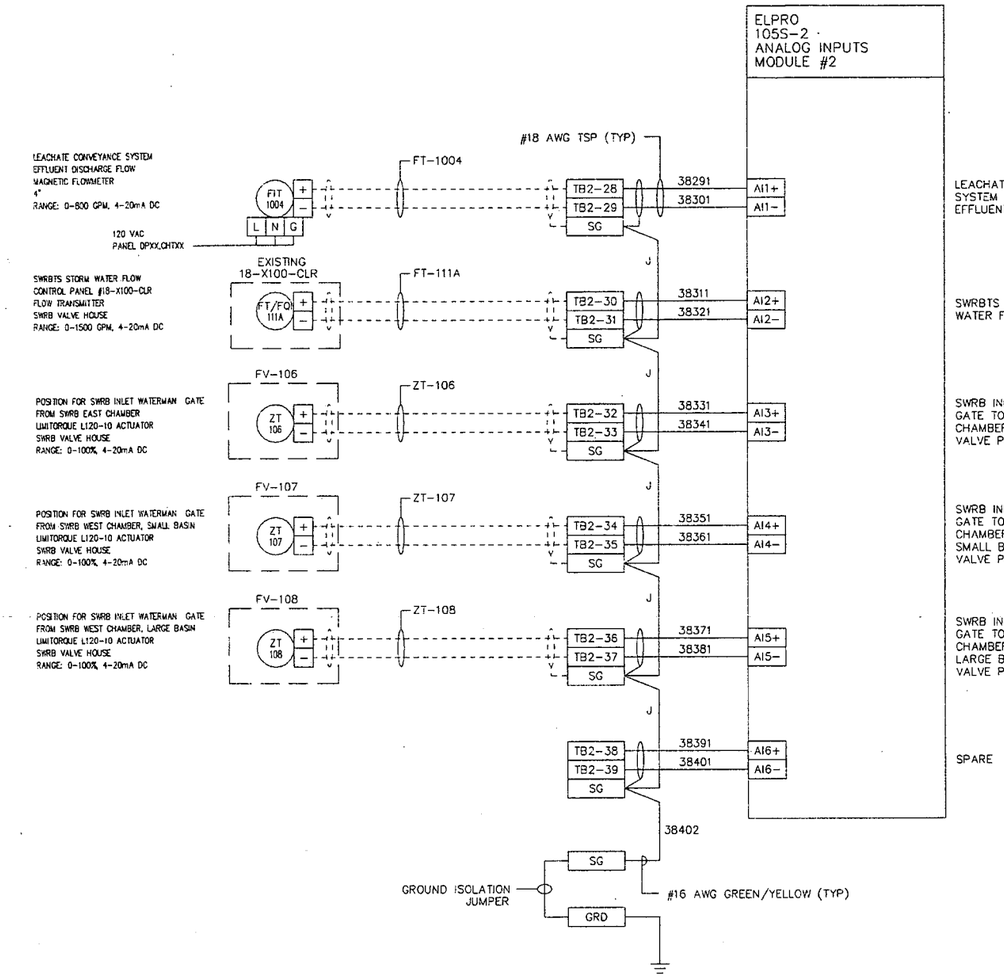

(X)A-CONFORMS TO THE SUBCONTRACT REQUIREMENTS
( )B-MINOR COMMENT-INCORPORATE & RESUBMIT
( )C-REVISE & RESUBMIT
SIG: [signature] DATE: 9/21/04

RES 4518 PROJECT NO. 59600

INDEX CODE				
PL. & AR.	ORG.	CL.	SER. NO.	REV.
51D	5500	N	01411	

WIRE LUGS ~ NO ☒. YES ☐ RING ☐. LOCKING SPADE ☐
INSULATION: NYLON ☐. PVC ☒ POLYETHYLENE ☐

WIRE SPECIFICATIONS:

USAGE	COLOR
480 VAC POWER (A, B, C, NEUTRAL)	BROWN, VIOLET, ORANGE, GRAY
120 AC POWER (HOT, NEUTRAL, GND)	BLK, WHT, GRN
120 AC CONTROL (CONTROL, NEUTRAL, GND)	RED, WHT, GRN
DC POWER	BLUE
DC SIGNAL (+, -, GND)	RED , BLK, GRN/YLW STRIPE
FOREIGN	YELLOW
SIGNAL / INSTRUMENTS	2 CONDUCTOR SHL'D

STATE OF OHIO
ROBERT A. LANDTHORN
E-37992
REGISTERED PROFESSIONAL ENGINEER

United States Dept. of Energy
Fernald Closure Project
P.O. #040400290

DUBLIN TECHNICAL SYSTEMS INC.
CONTRACT # 04177

TOLERANCES: ± ; DECIMAL ± .03 ; FRACTIONAL ± 1/64" ; ANGULAR ± 1°

DUBLIN TECHNICAL SYSTEMS, INC.

Fluor Fernald
CAWWT Control System

SCALE: NONE
DRAWN BY: RTR
APPROVED BY: JK

TITLE: RTU-7 ANALOG INPUTS

DATE: 7/27/04
DRAWING NUMBER: DTSI-04177-038

DATE	SYM	REVISION RECORD	AUTH	DR	CK
7/16/04	A	FOR APPROVAL	CUST	RTR	JK
9/14/04	0	FOR CONSTRUCTION	CUST	PW	JK

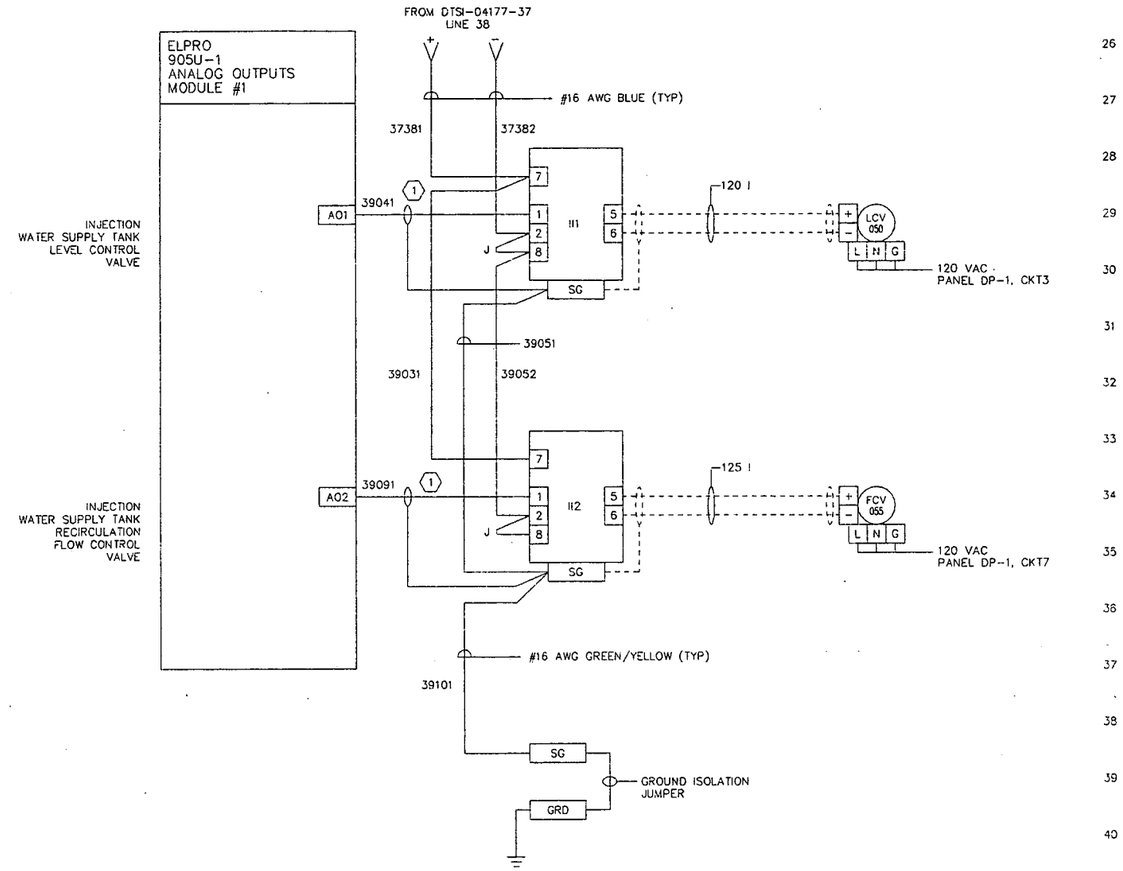

NOTES:

(1) #18 AWG, TSP. CLIP SECOND CONDUCTOR AND COVER WITH HEAT SHRINK

(X)A-CONFORMS TO THE SUBCONTRACT REQUIREMENTS
( )B-MINOR COMMENT-INCORPORATE & RESUBMIT
( )C-REVISE & RESUBMIT
SIGN: [signature] DATE: 9/21/04

RES 4518 PROJECT NO. 59600

INDEX CODE				
PL. & AR.	ORIG.	CL.	SER. NO.	REV.
51D	5500	N	01412	

WIRE LUGS - NO ☒ YES ☐ RING ☐ LOCKING SPADE ☐
INSULATION: NYLON ☐ PVC ☒ POLYETHYLENE ☐

WIRE SPECIFICATIONS:

USAGE	COLOR
480 VAC POWER (A, B, C, NEUTRAL)	BROWN, VIOLET, ORANGE, GRAY
120 AC POWER (HOT, NEUTRAL, GND)	BLK, WHT, GRN
120 AC CONTROL (CONTROL, NEUTRAL, GND)	RED, WHT, GRN
DC POWER	BLUE
DC SIGNAL (+, -, GND)	RED , BLK, GRN/YLW STRIPE
FOREIGN	YELLOW
SIGNAL / INSTRUMENTS	2 CONDUCTOR SHL'D

STATE OF OHIO
ROBERT A. LANDTHORN
E-37992
REGISTERED PROFESSIONAL ENGINEER

United States Dept. of Energy
Fernald Closure Project
P.O. #040400290

DUBLIN TECHNICAL SYSTEMS INC.
CONTRACT # 04177

TOLERANCES: ±
DECIMAL: ± .03
FRACTIONAL: ± 1/64"
ANGULAR: ± 1°

DUBLIN TECHNICAL SYSTEMS, INC.

Fluor Fernald
CAWWT Control System

SCALE: NONE
DRAWN BY: RTR
APPROVED BY: JK

TITLE: RTU-7 ANALOG OUTPUTS

DATE: 7/27/04
DRAWING NUMBER: DTSI-04177-039

DATE	SYM	REVISION RECORD	AUTH	DR	CK
7/16/04	A	FOR APPOVAL	CUST	RTR	JK
9/14/04	0	FOR CONSTRUCTION	CUST	PW	JK

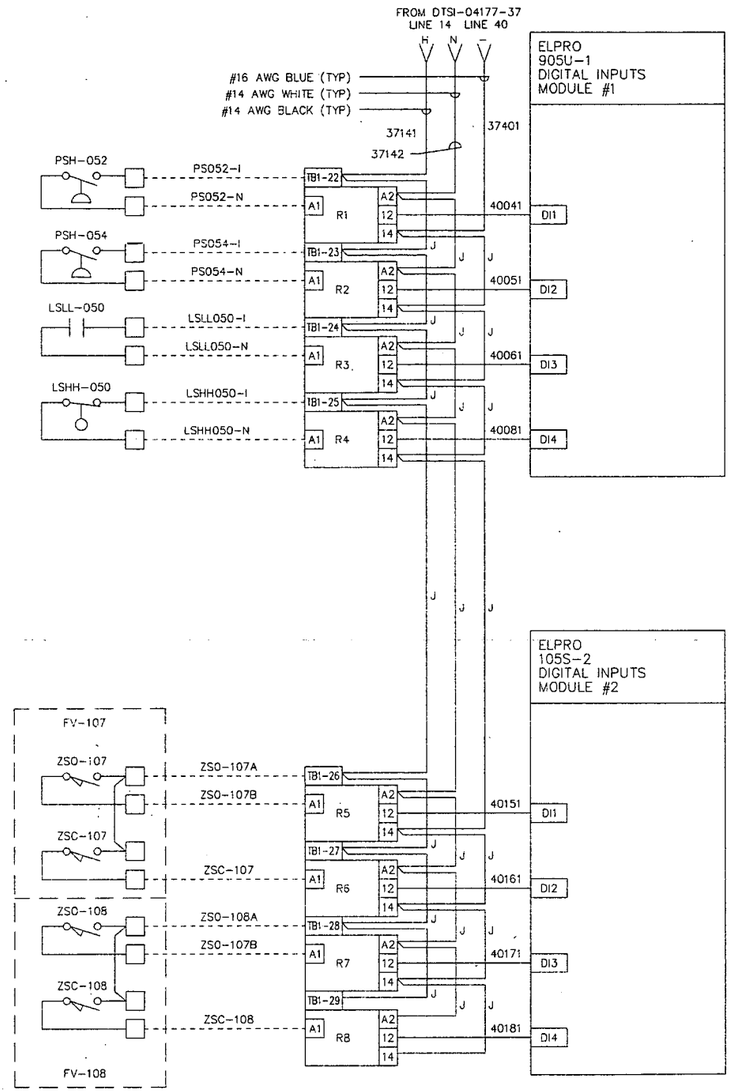

INJECTION WATER SUPPLY PUMP PMP-1A HIGH PRESSURE SWITCH

INJECTION WATER SUPPLY PUMP PMP-1B HIGH PRESSURE SWITCH

INJECTION WATER SUPPLY TANK TNK-2 LO-LO LEVEL SWITCH

INJECTION WATER SUPPLY TANK TNK-2 HI-HI LEVEL SWITCH

SWRBTS INLET WATERMAN GATE FROM SWRB WEST CHAMBER, SMALL BASIN FV107 OPEN

SWRBTS INLET WATERMAN GATE FROM SWRB WEST CHAMBER, SMALL BASIN FV107 CLOSED

SWRBTS INLET WATERMAN GATE FROM SWRB WEST CHAMBER, LARGE BASIN FV108 OPEN

SWRBTS INLET WATERMAN GATE FROM SWRB WEST CHAMBER, LARGE BASIN FV108 CLOSED

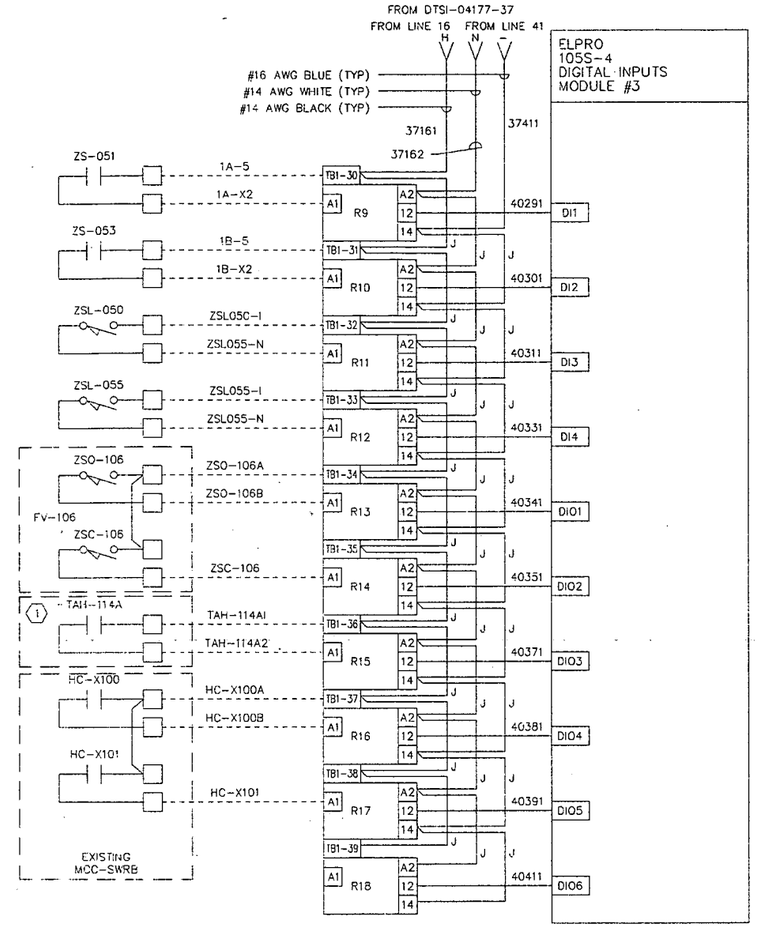

INJECTION WATER SUPPLY PUMP PMP-1A RUNNING

INJECTION WATER SUPPLY PUMP PMP-1B RUNNING

INJECTION WATER SUPPLY TANK LEVEL CONTROL VALVE LCV050 VALVE CLOSED LIMIT SWITCH

INJECTION WATER SUPPLY TANK RECIRCULATION FLOW CONTROL VALVE FCV-055 VALVE CLOSED LIMIT SWITCH

SWRBTS INLET WATERMAN GATE FROM SWRB EAST CHAMBER FV106 OPEN

SWRBTS INLET WATERMAN GATE FROM SWRB EAST CHAMBER FV106 CLOSED

PUMP X100 & X101 HIGH TEMP. HIGH LEAKAGE, & LOSS OF LOCAL POWER ALARM

PUMP X101 MOTOR RUNNING

PUMP X100 MOTOR RUNNING

SPARE

NOTES:

(1) FROM EXISTING CONTROL PANEL 18-X100-CLR. REPRESENTS CONTROL PANEL RELAYS R7 & R8 (NORMALLY CLOSED CONTACTS) WIRED IN SERIES WITHIN THE CONTROL PANEL.

(X)A-CONFORMS TO THE SUBCONTRACT REQUIREMENTS
( )B-MINOR COMMENT-INCORPORATE & RESUBMIT
( )C-REVISE & RESUBMIT
SIG: [signature] DATE: 9/21/04

RES 4518 PROJECT NO. 59600

INDEX CODE				
FL. & AR.	ORIG.	CL.	SER. NO.	REV.
51D	5500	N	01413	

WIRE LUGS - NO ☒ YES ☐ RING ☐ LOCKING SPADE ☐
INSULATION: NYLON ☐ PVC ☒ POLYETHYLENE ☐

WIRE SPECIFICATIONS:

USAGE	COLOR
480 VAC POWER (A, B, C, NEUTRAL)	BROWN, VIOLET, ORANGE, GRAY
120 AC POWER (HOT, NEUTRAL, GND)	BLK, WHT, GRN
120 AC CONTROL (CONTROL, NEUTRAL, GND)	RED, WHT, GRN
DC POWER	BLUE
DC SIGNAL (+, -, GND)	RED , BLK, GRN/YLW STRIPE
FOREIGN	YELLOW
SIGNAL / INSTRUMENTS	2 CONDUCTOR SHL'D

STATE OF OHIO
ROBERT A. LANDTHORN
E-37992
REGISTERED PROFESSIONAL ENGINEER

United States Dept. of Energy
Fernald Closure Project
P.O. #040400290

DUBLIN TECHNICAL SYSTEMS INC.
CONTRACT # 04177

TOLERANCES ±
DECIMAL ± .03
FRACTIONAL ± 1/64"
ANGULAR ± 1°

DUBLIN TECHNICAL SYSTEMS, INC.

Fluor Fernald CAWWT Control System

SCALE NONE

DRAWN BY RTR
APPROVED BY JK

TITLE RTU-7 DIGITAL INPUTS

DATE 7/27/04

DRAWING NUMBER DTSI-04177-040

DATE	SYM	REVISION RECORD	AUTH	DR	CK
7/16/04	A	FOR APPROVAL	CUST	RTR	JK
9/14/04	0	FOR CONSTRUCTION	CUST	PW	JK

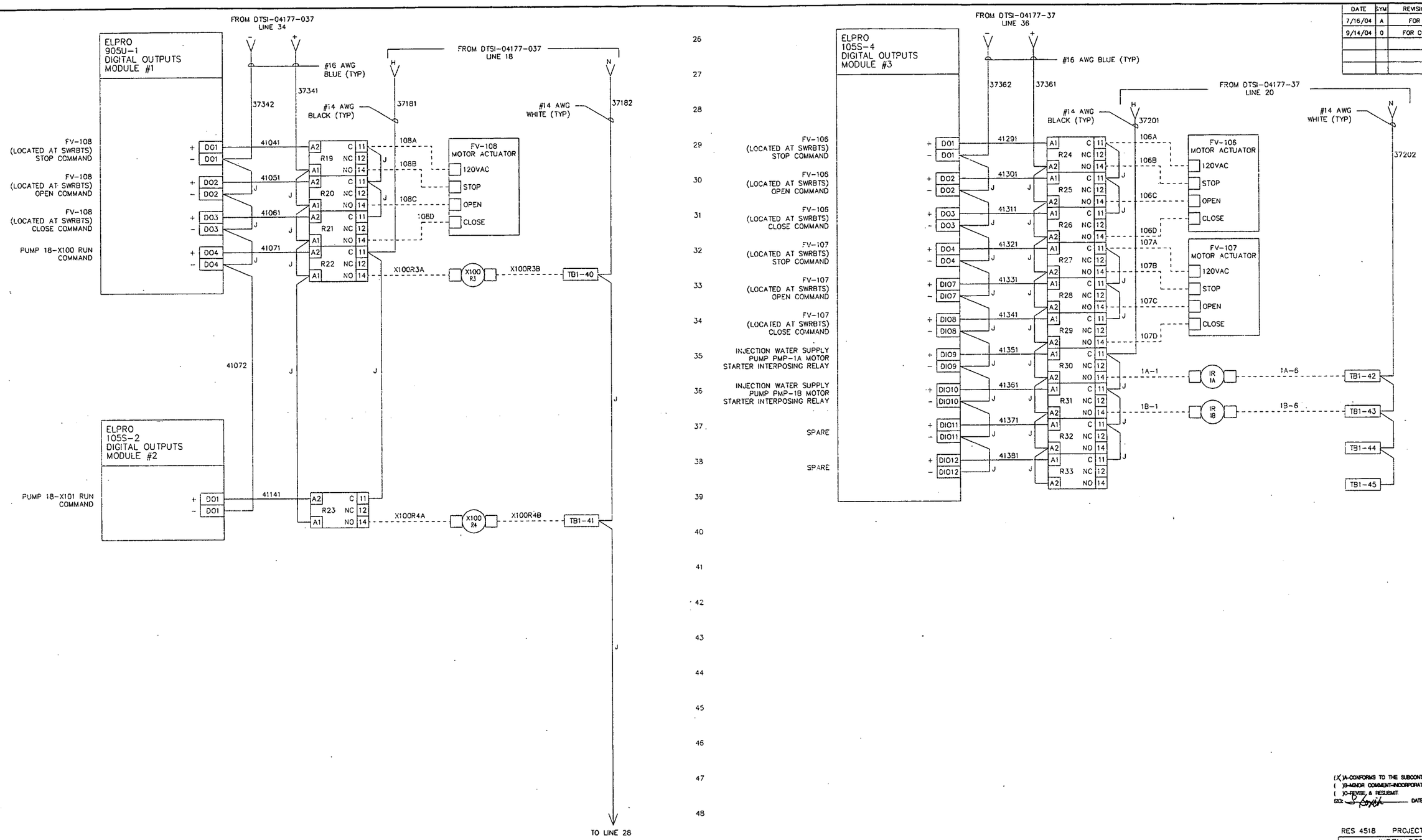

(X) A-CONFORMS TO THE SUBCONTRACT REQUIREMENTS
( ) B-MINOR COMMENT-INCORPORATE & RESUBMIT
( ) C-REVISE, & RESUBMIT
SIG: B. Konish DATE: 9/21/04

RES 4518 PROJECT NO. 59600

INDEX CODE				
PL. & AR.	ORG.	CL.	SER. NO.	REV.
51D	5500	N	01414	

WIRE LUGS - NO ☒, YES ☐ RING ☐, LOCKING SPADE ☐
INSULATION: NYLON ☐, PVC ☒ POLYETHYLENE ☐

WIRE SPECIFICATIONS:

USAGE	COLOR
480 VAC POWER (A, B, C, NEUTRAL)	BROWN, VIOLET, ORANGE, GRAY
120 AC POWER (HOT, NEUTRAL, GND)	BLK, WHT, GRN
120 AC CONTROL (CONTROL, NEUTRAL, GND)	RED, WHT, GRN
DC POWER	BLUE
DC SIGNAL (+, -, GND)	RED , BLK, GRN/YLW STRIPE
FOREIGN	YELLOW
SIGNAL / INSTRUMENTS	2 CONDUCTOR SHL'D

STATE OF OHIO ROBERT A. LANDTHORN E-37992 REGISTERED PROFESSIONAL ENGINEER

United States Dept. of Energy
Fernald Closure
Project
P.O. #040400290

DUBLIN TECHNICAL SYSTEMS INC.
CONTRACT # 04177

TOLERANCES: ±
DECIMAL: ± .03
FRACTIONAL: ± 1/64"
ANGULAR: ± 1°

DUBLIN TECHNICAL SYSTEMS, INC.

Fluor Fernald
CAWWT Control System

SCALE: NONE
DRAWN BY: RTR
APPROVED BY: JK

TITLE: RTU-7 DIGITAL OUTPUTS

DATE: 7/27/04
DRAWING NUMBER: DTSI-04177-041

5728

DATE	SYM	REVISION RECORD	AUTH	DR	CK
8/18/04	A	FOR APPROVAL	CUST	PW	JK
9/14/04	0	FOR CONSTRUCTION	CUST	PW	JK

NOTES:

1.) ALL DEVICES TO BE SUPPLIED WITH APPROPRIATE MOUNTING HARDWARE.

2.) ALL LETTERING TO BE ENGRAVED ON LAMINATED NAMEPLATES TO BE 3/16" HIGH UNLESS OTHERWISE NOTED. BLACK TEXT ON WHITE BACKGROUND.

3.) TOLERANCES TO BE ±1/2" EXCEPT AS NOTED.

4.) ALL 120VAC WIRING SHALL BE ROUTED TO AND TERMINATED ON TB1, AND ROUTED IN WIRE DUCT SEPARATE FROM 24VDC WIRING.

5.) ALL 24VDC WIRING SHALL BE ROUTED TO AND TERMINATED ON TB2, AND ROUTED IN WIRE DUCT SEPARATE FROM 120VAC WIRING.

BILL OF MATERIAL

ITEM	QTY	PART NUMBER	DESCRIPTION
1	1	A-36H30DLP	HOFFMAN, NEMA 4 ENCLOSURE, 12" DEEP
2	1	A-36P30	HOFFMAN, SUBPANEL, STEEL
3	0	NOT USED	
4	1	905U-1	ELPRO INDUSTRIAL RADIO MODEM
5	1	QUINT-PS-100-240AC/24DC/5	PHOENIX CONTACT, 2938581 24VDC POWER SUPPLY, 120VAC, 5A
6	1	X-GS2K	HOFFMAN, GROUND BAR
7	LOT	E2X4LG6	PANDUIT, 2" x 4" CHANNEL
8	LOT	C2LG6	PANDUIT, 2" CHANNEL COVER
9	0	NOT USED	
10	0	NOT USED	

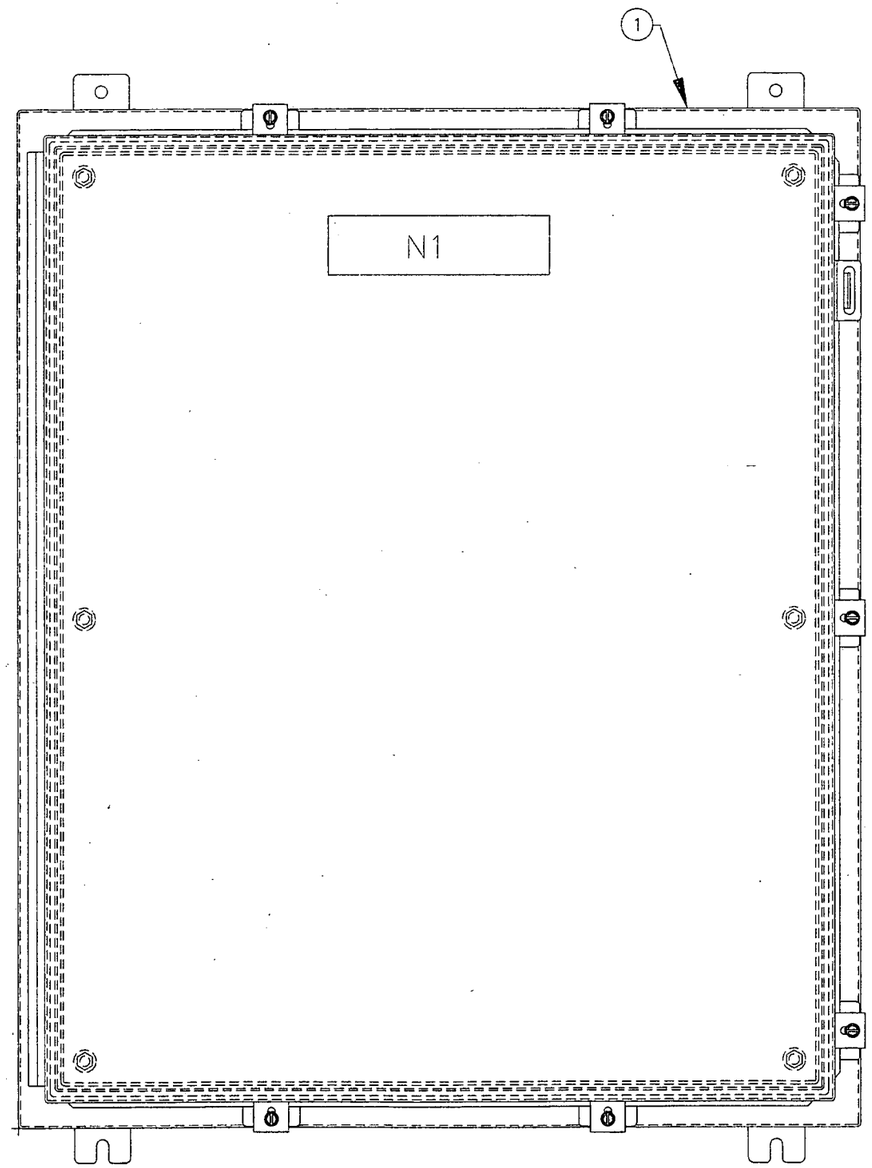

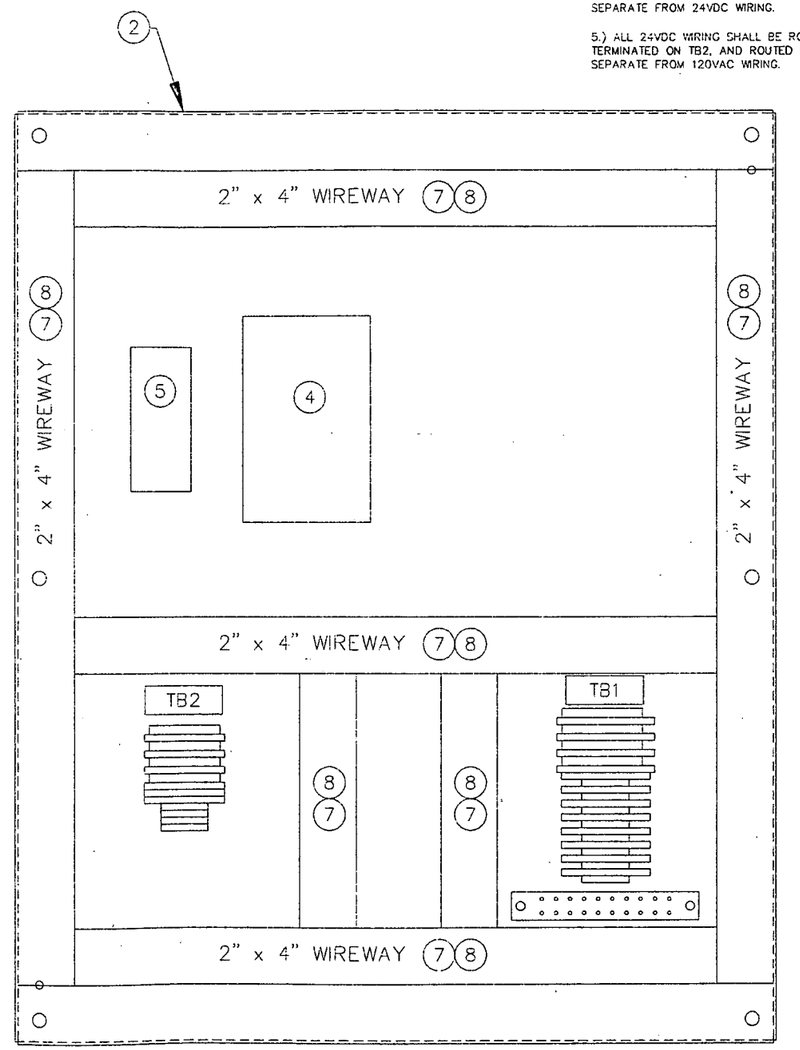

NAMEPLATES WHITE WITH BLACK LETTERING

	QTY	SIZE	LETTER SIZE	MTG. HOLES	LINE 1	LINE 2
N1	1	AS NEEDED	1/2"	YES	RTU-11	

(X)A-CONFORMS TO THE SUBCONTRACT REQUIREMENTS
( )B-MINOR COMMENT-INCORPORATE & RESUBMIT
( )C-REVISE & RESUBMIT
SIG: S Boyd DATE: 9/21/04

RES 4518 PROJECT NO. 59600

INDEX CODE				
PL. & AR.	ORIG.	CL.	SER. NO.	REV.
51D	5500	N	01418	

WIRE LUGS - NO ☒ YES ☐ RING ☐ LOCKING SPADE ☐
INSULATION: NYLON ☐ PVC ☒ POLYETHYLENE ☐

WIRE SPECIFICATIONS:

USAGE	COLOR
480 VAC POWER (A, B, C, NEUTRAL)	BROWN, VIOLET, ORANGE, GRAY
120 AC POWER (HOT, NEUTRAL, GND)	BLK, WHT, GRN
120 AC CONTROL (CONTROL, NEUTRAL, GND)	RED, WHT, GRN
DC POWER	BLUE
DC SIGNAL (+, -, GND)	RED , BLK, GRN/YLW STRIPE
FOREIGN	YELLOW
SIGNAL / INSTRUMENTS	2 CONDUCTOR SHL'D

STATE OF OHIO ROBERT A. LANDTHORN E-37992 REGISTERED PROFESSIONAL ENGINEER

United States Dept. of Energy
Fernald Closure
Project
P.O. #040400290

DUBLIN TECHNICAL SYSTEMS INC.
CONTRACT # 04177

TOLERANCES: ±
DECIMAL: ± .03
FRACTIONAL: ± 1/64"
ANGULAR: ± 1°

DUBLIN TECHNICAL SYSTEMS, INC.

Fluor Fernald
CAWWT Control System

SCALE: NONE
DRAWN BY: PW
APPROVED BY: JK

TITLE: RTU-11 PANEL LAYOUT AND BILL OF MATERIAL

DATE: 8/18/04
DRAWING NUMBER: DTSI-04177-045

-- 5728

DATE	SYM	REVISION RECORD	AUTH	DR	CK
7/16/04	A	FOR APPROVAL	CUST	PW	JK
9/14/04	0	FOR CONSTRUCTION	CUST	PW	JK

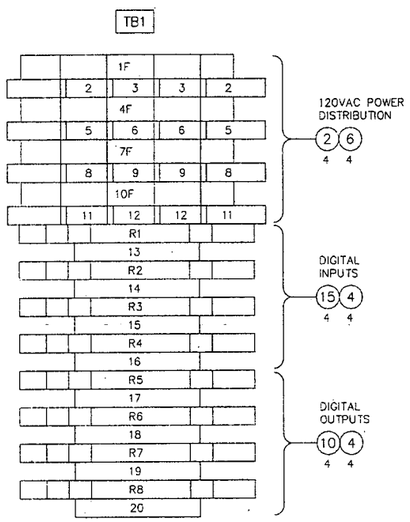

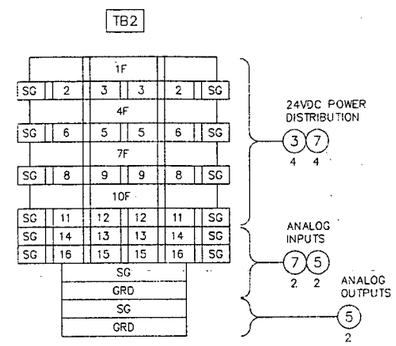

BILL OF MATERIAL

ITEM	QTY	PART NUMBER	DESCRIPTION
1	A/R	NS35/7,5	PHOENIX CONTACT, 0801733 DIN RAIL, 7.5mm HEIGHT
2	4	UK5-HESI	PHOENIX CONTACT, 3004100 FUSE BLOCK, 120 VAC
3	4	UK 6-FSI/C	PHOENIX CONTACT, 3118203 FUSE BLOCK, 24 VDC
4	8	UK 5N	PHOENIX CONTACT, 3004362 TERMINAL BLOCK, 1 LEVEL
5	4	USLKG-5	PHOENIX CONTACT, 0441504 TERMINAL BLOCK, GROUNDING
6	4	PIK 4-L/LB	PHOENIX CONTACT, 3000117 TERMINAL BLOCK, 2 LEVEL
7	6	DIKD 1.5	PHOENIX CONTACT, 2715979 TERMINAL BLOCK, 3 LEVEL
8	2	D-PIK- 4-PE/L/NTB	PHOENIX CONTACT, 2714161 END COVERS FOR 2 LEVEL TERMINALS
9	2	ATP-DIKD 1.5	PHOENIX CONTACT, 1413285 END COVERS FOR 3 LEVEL TERMINALS
10	4	PLC-RSC- 24DC/21	PHOENIX CONTACT, 2966171 RELAY MODULE, SPDT, 24 VDC COIL
11	0	NOT USED	
12	4	09-13-68-9	PHOENIX CONTACT FUSE 2 A, FLAT TYPE, SIFORM C2A, 24 VDC
13	4	217-005	LITTLE FUSE FUSE 5 A, FAST ACTING
14	4	E/UK-1	PHOENIX CONTACT, 1201413 END BRACKET
15	4	PLC-RSC- 120UC/21	PHOENIX CONTACT, 2966197 RELAY MODULE, SPDT, 120 VAC COIL
16	0	NOT USED	
17	0	NOT USED	
18	0	NOT USED	

(X)A-CONFORMS TO THE SUBCONTRACT REQUIREMENTS
( )B-MINOR COMMENT-INCORPORATE & RESUBMIT.
( )C-REVISE & RESUBMIT
SIGN: [signature] DATE: 9/21/04

RES 4518 PROJECT NO. 59600

INDEX CODE				
PL. & AR.	ORG.	CL.	SER. NO.	REV.
51D	5500	N	01419	

WIRE LUGS – NO ☒, YES ☐ RING ☐, LOCKING SPADE ☐
INSULATION: NYLON ☐, PVC ☒ POLYETHYLENE ☐

WIRE SPECIFICATIONS:

USAGE	COLOR
480 VAC POWER (A, B, C, NEUTRAL)	BROWN, VIOLET, ORANGE, GRAY
120 AC POWER (HOT, NEUTRAL, GND)	BLK, WHT, GRN
120 AC CONTROL (CONTROL, NEUTRAL, GND)	RED, WHT, GRN
DC POWER	BLUE
DC SIGNAL (+, –, GND)	RED , BLK, GRN/YLW STRIPE
FOREIGN	YELLOW
SIGNAL / INSTRUMENTS	2 CONDUCTOR SHL'D

STATE OF OHIO
ROBERT A. LANDTHORN
E-37992
REGISTERED PROFESSIONAL ENGINEER

United States Dept. of Energy
Fernald Closure Project
P.O. #040400290

DUBLIN TECHNICAL SYSTEMS INC.
CONTRACT # 04177

TOLERANCES: ± ; DECIMAL ± .03 ; FRACTIONAL ± 1/64" ; ANGULAR ± 1°

DUBLIN TECHNICAL SYSTEMS, INC.

Fluor Fernald
CAWWT Control System

SCALE: NONE
DRAWN BY: PW
APPROVED BY: JK

TITLE: RTU-11 TERMINAL LAYOUT AND BILL OF MATERIAL

DATE: 7/27/04
DRAWING NUMBER: DTSI-04177-046

DATE	SYM	REVISION RECORD	AUTH	DR	CK
8/18/04	A	FOR APPROVAL	CUST	PW	JK
9/14/04	0	FOR CONSTRUCTION	CUST	PW	JK

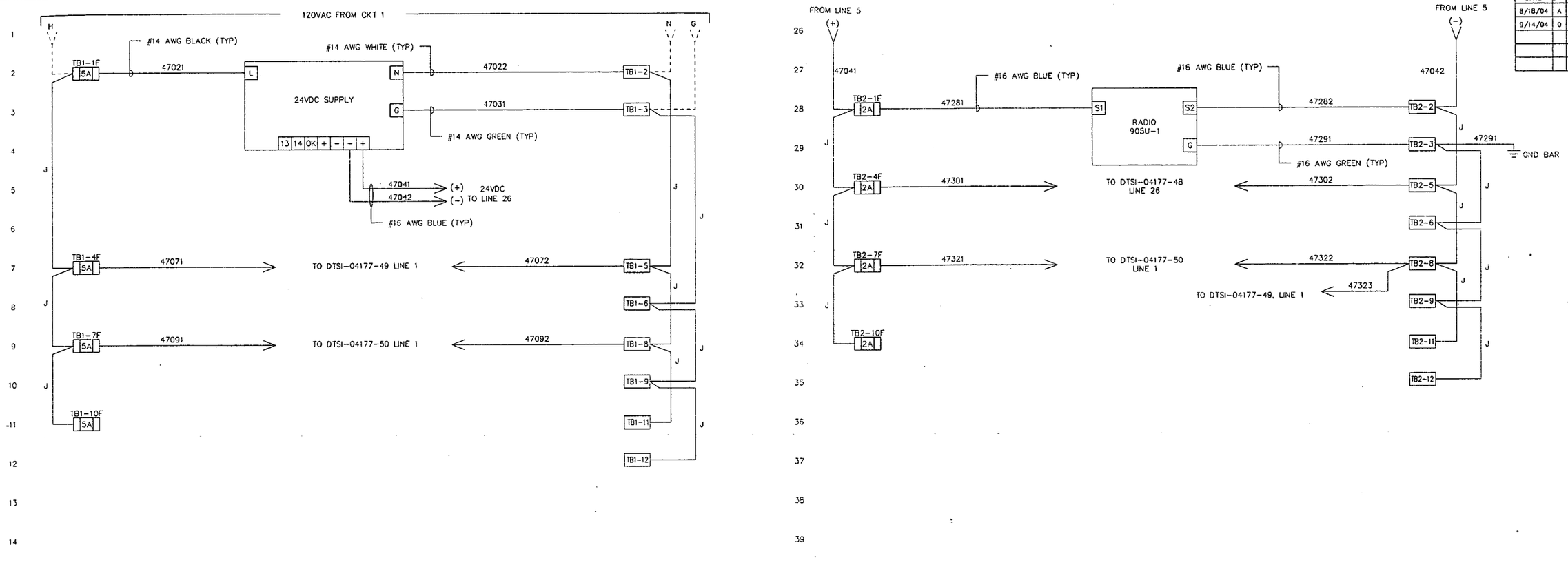

(X)A-CONFORMS TO THE SUBCONTRACT REQUIREMENTS
( )B-MINOR COMMENT-INCORPORATE & RESUBMIT
( )C-REVISE & RESUBMIT
SIG: B. Forgish DATE: 9/21/04

RES 4518 PROJECT NO. 59600

INDEX CODE				
PL. & AR.	ORIG.	CL.	SER. NO.	REV.
51D	5500	N	01420	

WIRE LUGS - NO ☒, YES ☐ RING ☐, LOCKING SPADE ☐
INSULATION: NYLON ☐, PVC ☒ POLYETHYLENE ☐

WIRE SPECIFICATIONS:

USAGE	COLOR
480 VAC POWER (A, B, C, NEUTRAL)	BROWN, VIOLET, ORANGE, GRAY
120 AC POWER (HOT, NEUTRAL, GND)	BLK, WHT, GRN
120 AC CONTROL (CONTROL, NEUTRAL, GND)	RED, WHT, GRN
DC POWER	BLUE
DC SIGNAL (+, -, GND)	RED , BLK, GRN/YLW STRIPE
FOREIGN	YELLOW
SIGNAL / INSTRUMENTS	2 CONDUCTOR SHL'D

STATE OF OHIO
ROBERT A. LANDTHORN
E-37992
REGISTERED PROFESSIONAL ENGINEER

United States Dept. of Energy
Fernald Closure Project
P.O. #D40400290

DUBLIN TECHNICAL SYSTEMS INC.
CONTRACT # 04177

TOLERANCES: ± ; DECIMAL ± .03 ; FRACTIONAL ± 1/64" ; ANGULAR ± 1°

DUBLIN TECHNICAL SYSTEMS, INC.

Fluor Fernald
CAWWT Control System

SCALE: NONE

DRAWN BY: PW
APPROVED BY: JK

TITLE: RTU-11 PANEL WIRING SCHEMATIC

DATE: 8/18/04

DRAWING NUMBER: DTSI-04177-047

DATE	SYM	REVISION RECORD	AUTH	DR	CK
7/16/04	A	FOR APPROVAL	CUST	PW	JK
9/14/04	0	FOR CONSTRUCTION	CUST	PW	JK

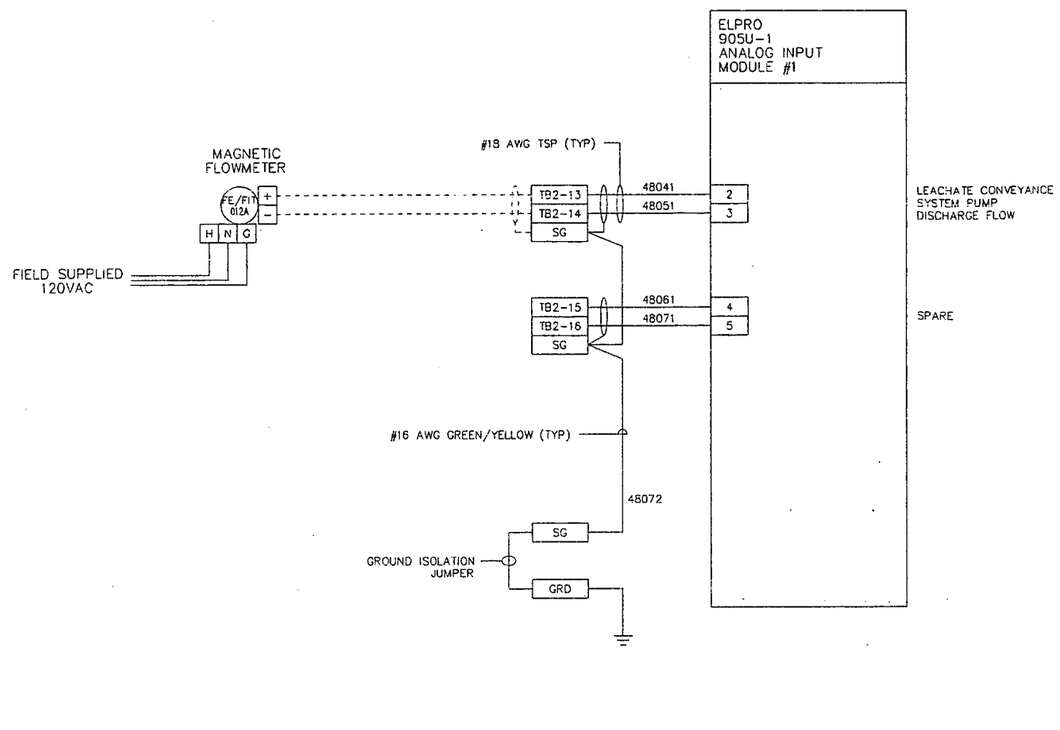

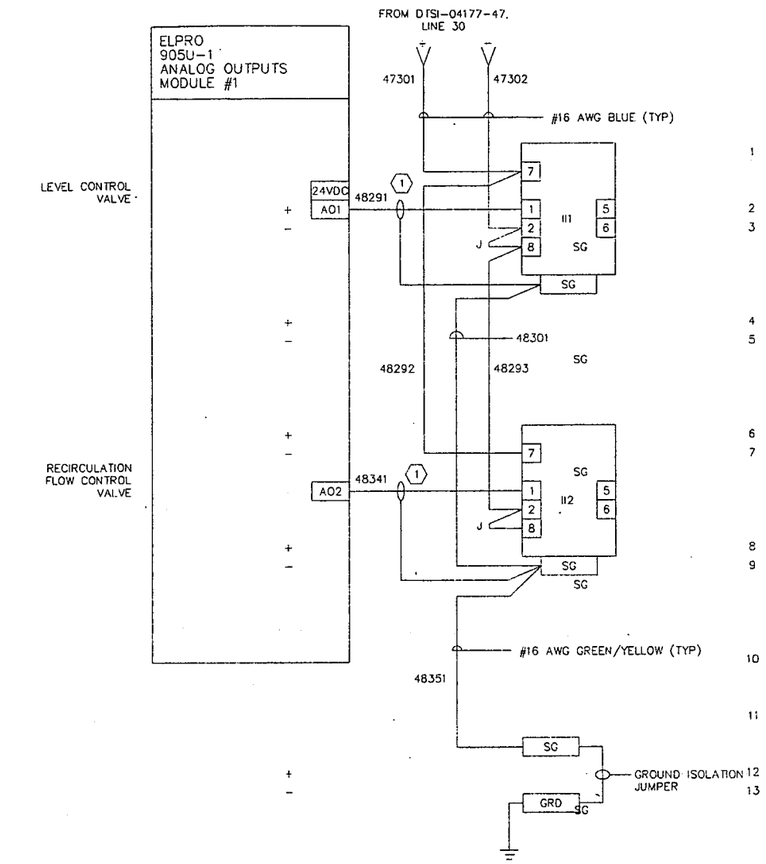

NOTES:

(1) #18 AWG, TSP. CLIP SECOND CONDUCTOR AND COVER WITH HEAT SHRINK

(X)A-CONFORMS TO THE SUBCONTRACT REQUIREMENTS
( )B-MINOR COMMENT-INCORPORATE & RESUBMIT
( )C-REVISE & RESUBMIT
SIG: [signature] DATE: 9/21/04

RES 4518 PROJECT NO. 59600

INDEX CODE				
PL. & AR.	GRG.	CL.	SER. NO.	REV.
51D	5500	N	01421	

WIRE LUGS – NO ☒, YES ☐ RING ☐, LOCKING SPADE ☐
INSULATION: NYLON ☐, PVC ☒ POLYETHYLENE ☐

WIRE SPECIFICATIONS:

USAGE	COLOR
480 VAC POWER (A, B, C, NEUTRAL)	BROWN, VIOLET, ORANGE, GRAY
120 AC POWER (HOT, NEUTRAL, GND)	BLK, WHT, GRN
120 AC CONTROL (CONTROL, NEUTRAL, GND)	RED, WHT, GRN
DC POWER	BLUE
DC SIGNAL (+, –, GND)	RED , BLK, GRN/YLW STRIPE
FOREIGN	YELLOW
SIGNAL / INSTRUMENTS	2 CONDUCTOR SHL'D

STATE OF OHIO
ROBERT A. LANDTHORN
E-37992
REGISTERED
PROFESSIONAL ENGINEER

United States Dept. of Energy
Fernald Closure Project
P.O. #040400290

DUBLIN TECHNICAL SYSTEMS INC.
CONTRACT # 04177

TOLERANCES: ±
DECIMAL: ± .03
FRACTIONAL: ± 1/64"
ANGULAR: ± 1°

DUBLIN TECHNICAL SYSTEMS, INC.

Fluor Fernald
CAWWT Control System

SCALE: NONE
DRAWN BY: RTR
APPROVED BY: JK

TITLE: RTU-11 ANALOG INPUTS/OUTPUTS

DATE: 7/27/04
DRAWING NUMBER: DTSI-04177-048

DATE	SYM	REVISION RECORD	AUTH	DR	CK
7/16/04	A	FOR APPROVAL	CUST	PW	JK
9/14/04	0	FOR CONSTRUCTION	CUST	PW	JK

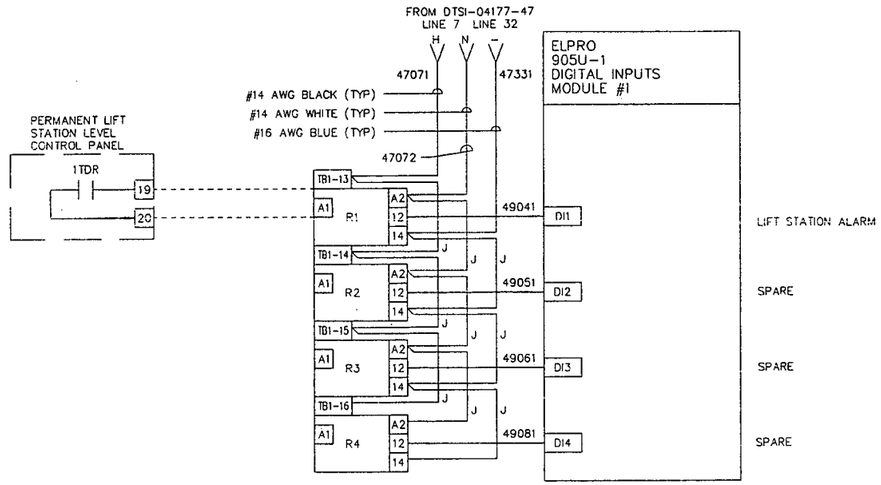

(X)A-CONFORMS TO THE SUBCONTRACT REQUIREMENTS
( )B-MINOR COMMENT-INCORPORATE & RESUBMIT
( )C-REVISE & RESUBMIT
SIG: [signature] DATE: 9/14/04

RES 4518 PROJECT NO. 59600

INDEX CODE				
PL. & AR.	ORG.	CL.	SER. NO.	REV.
51D	5500	N	01422	

WIRE LUGS - NO ☒, YES ☐ RING ☐, LOCKING SPADE ☐
INSULATION: NYLON ☐, PVC ☒ POLYETHYLENE ☐

WIRE SPECIFICATIONS:

USAGE	COLOR
480 VAC POWER (A, B, C, NEUTRAL)	BROWN, VIOLET, ORANGE, GRAY
120 AC POWER (HOT, NEUTRAL, GND)	BLK, WHT, GRN
120 AC CONTROL (CONTROL, NEUTRAL, GND)	RED, WHT, GRN
DC POWER	BLUE
DC SIGNAL (+, -, GND)	RED , BLK, GRN/YLW STRIPE
FOREIGN	YELLOW
SIGNAL / INSTRUMENTS	2 CONDUCTOR SHL'D

STATE OF OHIO
ROBERT A. LANDTHORN
E-37992
REGISTERED PROFESSIONAL ENGINEER

United States Dept. of Energy
Fernald Closure Project
P.O. #040400290

DUBLIN TECHNICAL SYSTEMS INC.
CONTRACT # 04177

TOLERANCES ±
DECIMAL ± .03
FRACTIONAL ± 1/64"
ANGULAR ± 1°

DUBLIN TECHNICAL SYSTEMS, INC.

Fluor Fernald
CAWWT Control System

SCALE NONE
DRAWN BY RTR
APPROVED BY JK

TITLE RTU-11 DIGITAL INPUTS

DATE 7/27/04
DRAWING NUMBER DTSI-04177-049

DATE	SYM	REVISION RECORD	AUTH	DR	CK
7/16/04	A	FOR APPROVAL	CUST	RTR	JK
9/14/04	0	FOR CONSTRUCTION	CUST	PW	JK

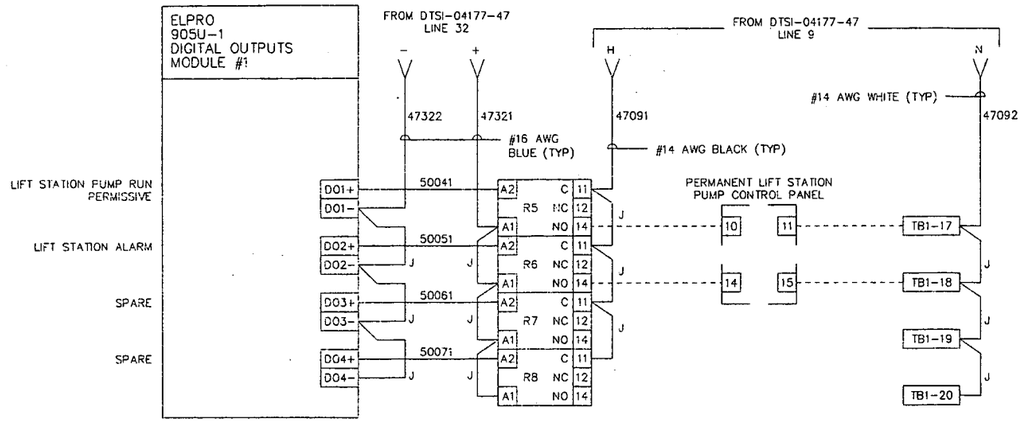

(X)A-CONFORMS TO THE SUBCONTRACT REQUIREMENTS
( )B-MINOR COMMENT-INCORPORATE & RESUBMIT
( )C-REVISE & RESUBMIT
SIGN: _____ DATE: 7/21/04

RES 4518 PROJECT NO. 59600

INDEX CODE				
PL. & AR.	ORIG.	CL.	SER. NO.	REV.
51D	5500	N	01423	

WIRE LUGS - NO ☒, YES ☐ RING ☐, LOCKING SPADE ☐
INSULATION: NYLON ☐, PVC ☒ POLYETHYLENE ☐

WIRE SPECIFICATIONS:

USAGE	COLOR
480 VAC POWER (A, B, C, NEUTRAL)	BROWN, VIOLET, ORANGE, GRAY
120 AC POWER (HOT, NEUTRAL, GND)	BLK, WHT, GRN
120 AC CONTROL (CONTROL, NEUTRAL, GND)	RED, WHT, GRN
DC POWER	BLUE
DC SIGNAL (+, -, GND)	RED , BLK, GRN/YLW STRIPE
FOREIGN	YELLOW
SIGNAL / INSTRUMENTS	2 CONDUCTOR SHL'D

STATE OF OHIO
ROBERT A. LANDTHORN
E-37992
REGISTERED PROFESSIONAL ENGINEER

United States Dept. of Energy
Fernald Closure Project
P.O. #040400290

DUBLIN TECHNICAL SYSTEMS INC.
CONTRACT # 04177

TOLERANCES ±
DECIMAL ± .03
FRACTIONAL ± 1/64"
ANGULAR ± 1°

DUBLIN TECHNICAL SYSTEMS, INC.

Fluor Fernald
CAWWT Control System

SCALE: NONE
DRAWN BY: RTR
APPROVED BY: JK

TITLE: RTU-11 DIGITAL OUTPUTS

DATE: 7/27/04
DRAWING NUMBER: DTSI-04177-050