IA-5794

PROJECT DRAWINGS

CONVERTED AWWT (CAWWT) PROJECT

STAGE 2 PROJECT NO. 59600 RES 4518

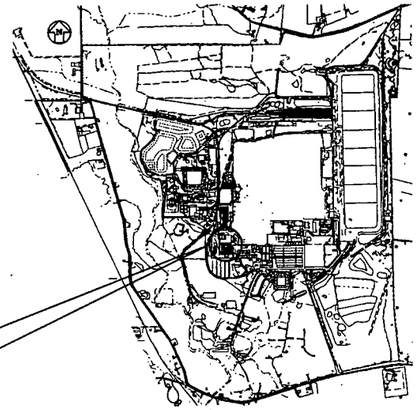

FCP VICINITY MAP

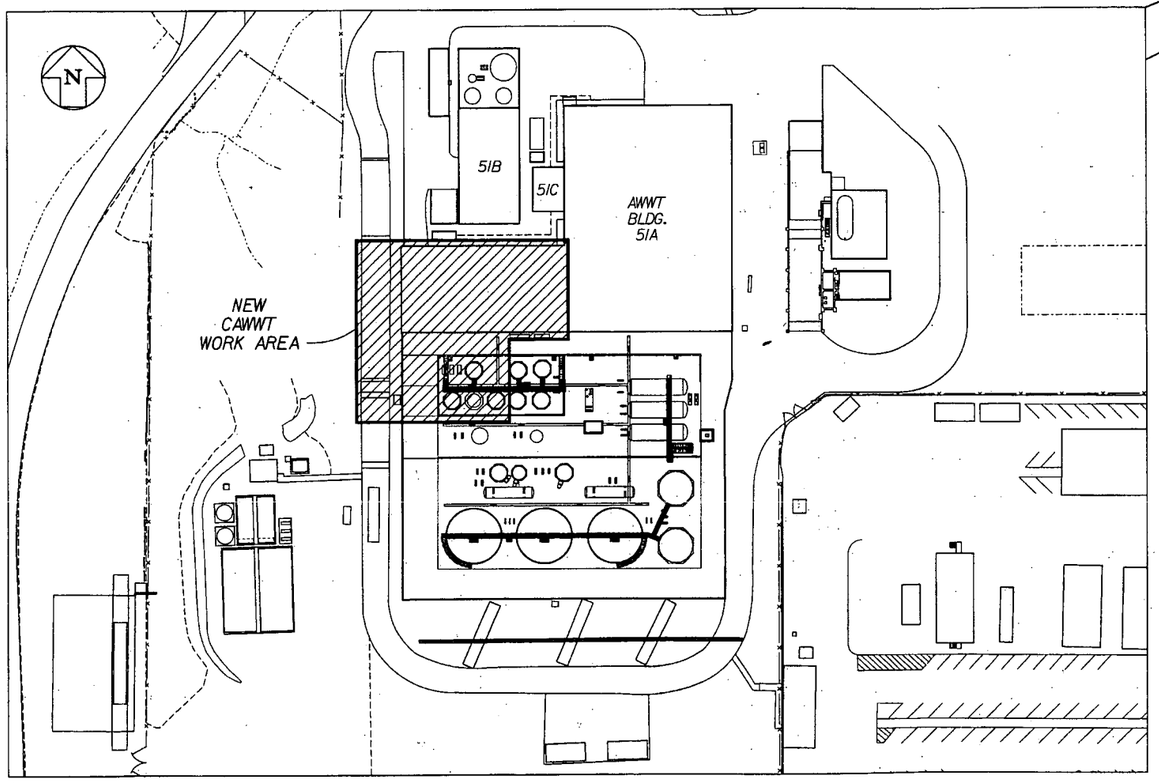

DRAWING INDEX

DRAWING NO.	FILENAME	TITLE DESCRIPTION
51D-5500-X-01356	51DX1356.DGN	MASTER COVER SHEET
51D-5500-X-01357	51DX1357.DGN	SYMBOLS & LEGEND FOR ARCH., CIVIL, HVAC, PIPING & STRUCT.
51D-5500-X-01358	51DX1358.DGN	INTERIOR DEMOLITION PLAN
51D-5500-X-01359	51DX1359.DGN	EXTERIOR DEMOLITION PLAN
51D-5500-A-01360	51DA1360.DGN	NEW EQUIPMENT, LAB & PERSONNEL LAYOUT
51D-5500-A-01361	51DA1361.DGN	ENLARGED PLAN & ELEVATIONS FOR NEW LAB
51D-5500-A-01362	51DA1362.DGN	ENLARGED PLAN & ELEVATIONS FOR PERSONNEL AREA
51D-5500-A-01363	51DA1363.DGN	BUILDING 51A SPACE PLAN
51D-5500-A-01424	51DA1424.DGN	NEW EAST WALL - PLAN, SECTIONS & DETAILS
51D-5500-E-01331	51DE1331.DGN	SINGLE LINE DIAGRAM (REV. 1)
51D-5500-E-01364	51DE1364.DGN	ELECTRICAL SYMBOLS & LEGEND SHEET 1 OF 2
51D-5500-E-01365	51DE1365.DGN	ELECTRICAL SYMBOLS & LEGEND SHEET 2 OF 2
51D-5500-E-01366	51DE1366.DGN	ELECTRICAL PANEL SCHEDULES
51D-5500-E-01425	51DE1425.DGN	GROUNDING PLAN
51D-5500-E-01426	51DE1426.DGN	LIGHTING & RECEPTACLE PLAN
51D-5500-E-01427	51DE1427.DGN	POWER PLAN
51D-5500-E-01428	51DE1428.DGN	COMMUNICATIONS PLAN - PHONE/LAN/WELLHOUSE FIBER OPTIC
51D-5500-E-01429	51DE1429.DGN	BUILDING COMMUNICATIONS & FIRE ALARM PLAN
51D-5500-E-01430	51DE1430.DGN	FIRE ALARM LEGEND & MATERIAL LISTS
51D-5500-E-01431	51DE1431.DGN	FIRE ALARM SYSTEM WIRING DETAIL & RISER DIAGRAM
51D-5500-G-01367	51DG1367.DGN	SITE PLAN AND DETAILS
51D-5500-H-01432	51DH1432.DGN	HVAC PLAN
51D-5500-N-01368	51DN1368.DGN	P & ID FOR COMPRESSED AIR SYSTEM
51D-5500-P-01369	51DP1369.DGN	FIRE PROTECTION PLANS, BUILDING 51A MODIFIED & NEW MODULAR BUILDING
51D-5500-P-01433	51DP1433.DGN	PIPING & PLUMBING PLAN
51D-5500-P-01436	51DP1436.DGN	PIPING PLAN, ELEVATIONS & SECTIONS
51D-5500-S-01370	51DS1370.DGN	EAST WALL DEMOLITION PLAN & ELEVATION
51D-5500-S-01371	51DS1371.DGN	NEW EAST WALL @ COL. 7 MODIFICATIONS, ELEVATION
51D-5500-S-01372	51DS1372.DGN	NEW EAST WALL MODIFICATIONS, SECTIONS AND DETAILS
51D-5500-S-01373	51DS1373.DGN	ROOF LADDER PLAN AND DETAILS
51D-5500-S-01374	51DS1374.DGN	ROOF PLAN & DETAILS
51D-5500-S-01434	51DS1434.DGN	MISC. STRUCTURAL DETAILS
51D-5500-S-01435	51DS1435.DGN	FOUNDATION FOR LAB AND PERSONNEL STRUCTURES

REFERENCE DRAWINGS

00X-5500-S-02651	/RES4268/00XS2651.DGN	THRUST BLOCK DETAILS
00X-5500-S-02652	/RES4268/00XS2652.DGN	BOLLARD DETAILS
00X-5500-G-02655	00XG2655.DGN	STANDARD FENCE AND GATE DETAILS
44A-5500-P-00500	/RES4401/44AP0500.DGN	FIRE HYDRANT AND CONTROL VALVE DETAIL
51D-4445-A-00451	/AWWT/AWWT0A201.001	WASTEWATER TREATMENT IMPROVEMENTS - BUILDING 51 GROUND FLOOR PLAN
51D-4445-A-00455	/AWWT/AWWT0A450.001	WASTEWATER TREATMENT IMPROVEMENTS - BUILDING 51 SECTIONS & DETAILS
51D-4445-A-00456	/AWWT/AWWT0A006.001	WASTEWATER TREATMENT IMPROVEMENTS - BUILDING 51 MISC. DETAILS
51D-4445-S-00435	/AWWT/AWWT0C010.001	WASTEWATER TREATMENT IMPROVEMENTS - SOUTH CONTAINMENT PIPE RACKS
51D-4445-S-00446	/AWWT/AWWT0C017.001	WASTEWATER TREATMENT IMPROVEMENTS - BUILDING 51 PARTIAL PLANS
51D-4445-S-00448	/AWWT/AWWT0C015.001	WASTEWATER TREATMENT IMPROVEMENTS - BUILDING 51 SECTIONS & DETAILS
51D-5500-N-01374	0417700I.DGN	DUBLIN TECH CAWWT COVER SHEET & DRAWING INDEX
95X-5900-S-00335	/P0126/95XS00335.DGN	ADVANCED WASTEWATER IMPROVEMENTS - ION EXCHANGE PLATFORMS AND OUTSIDE PIPE SUPPORTS
95X-5900-S-00336	/P0126/95S00336.DGN	ADVANCED WASTEWATER IMPROVEMENTS - ELEVATIONS & DETAILS OF OUTSIDE PIPE SUPPORTS
95X-5900-S-00338	/P0126/95S00338.DGN	ADVANCED WASTEWATER IMPROVEMENTS - PLAN, SECTIONS & DETAILS OF ION EXCHANGE PLATFORM
95X-5500-G-02073	/RES4340/95XG2073.DGN	POST INDICATOR VALVE DETAIL

NO.	REVISIONS	DATE	DWN. BY	APPD.
0	ISSUED FOR CAWWT 'STAGE 2' CONSTRUCTION	12/6/04	GEP	
B	ISSUED FOR 90% REVIEW	10/29/04	GEP	
A	ISSUED FOR 60% REVIEW	9/23/04	GEP	

REF. DWG. NO.

NOTE: FLUOR FERNALD CADD DRAWING, DO NOT REVISE MANUALLY.

CONFIGURATION MANAGEMENT DRAWING — SYSTEMS, STRUCTURES OR COMPONENTS SUBJECT TO THE DOE/AMC CONFIGURATION MANAGEMENT CONTROL. SEE NOTES. — COGNIZANT ENGINEER — DATE

APPROVALS: CIVIL & STR. — SAFETY ENG. — ELECTRICAL — MAINTENANCE — ENGINEER — FIRE PROTECT. — INSTRUMENT — WASTE MANAGE. — MECHANICAL — SECURITY — PROJECTS — CHECKED — APPROVED

Fernald Closure Project

FLUOR FERNALD, INC.

U.S. DEPARTMENT OF ENERGY

PROJECT 59600 STAGE 2

BLDG. 51A ADVANCED WASTEWATER TREATMENT (AWWT)

CONVERTED AWWT (CAWWT)

MASTER COVER SHEET

RES #4518 DATE 8/30/04 DRAWN G.E. PAIS

51D-5500-X-01356 0

FILE NAME: /RES4518/CAWWT/STAGE2/51DX1356.DGN

FCP5.DGN 5/30/03

2

GENERAL LEGEND

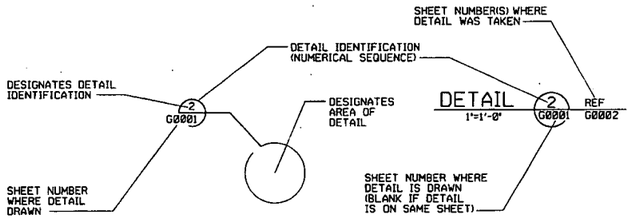

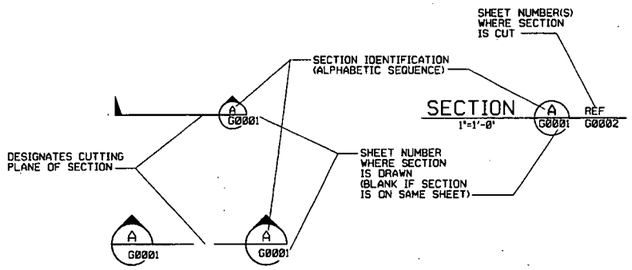

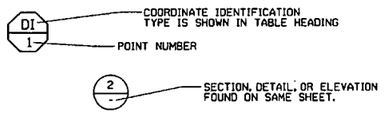

DIMENSIONING:

DIMENSIONS AND/OR ELEVATIONS MARKED THUS (+/-) SHALL BE VERIFIED IN THE FIELD BY CONTRACTOR.

USE DIMENSIONS AS SHOWN, DO NOT SCALE.

NTS (NOT TO SCALE) IS SHOWN ONLY WHERE DIMENSION IS OBVIOUSLY OUT OF SCALE.

UTILITY SYMBOLS

ABANDONED		EXISTING
ST	STORM SEWER	ST
SN	SANITARY SEWER	SN
FG	FUEL GAS	FG
DW	DRINKING WATER	DW
FQ1	FIRE PROTECTION	FQ1
LS	LIVE STEAM	LS
WS	COOLING WATER SUPPLY	WS
WR	COOLING WATER RETURN	WR
TW	TREATED WATER	TW
CE	CONTAMINATE WATER	CE
FT	FILTRATE OR EFFLUENT	FT
DF	DEIONIZED FEED	DF
PW	DEIONIZED WATER	PW
BR	BRINE	BR
RW	RAW WATER	RW
A	ALARM	A
CN	STEAM CONDENSATE	CN
VE	VENT LINES	VE
SD	SUB-SURFACE DRAINAGE	SD
SL	SUMP LIQUOR	SL
E	ELECTRICAL	E
OE	OVERHEAD ELECTRICAL	OE
T	TELEPHONE	T
G	ELECTRIC GROUND	G
PA	PLANT AIR	PA
SA	INSTRUMENT AIR SUPPLY	SA
LW	LEACHATE WATER	LW
GW	GROUND WATER	GW
WW	WASTE WATER	WW

GRADING SYMBOLS

EXISTING		PROPOSED
X 584.9	SPOT ELEVATION	X 585.4
584	CONTOUR - MINOR	584
585	CONTOUR - MAJOR	585
	SLOPE INDICATOR	

SYMBOLS LEGEND

	EXISTING		PROPOSED	
PIV		POST INDICATOR VALVE (PIV)		
FH		FIRE HYDRANT (FH)		
MH		MANHOLE (MH)	S OR D	
CB		CATCH BASIN (CB)	D	
		PIPE SUPPORT		
EMH		ELECTRICAL MANHOLE		EMH
TMH		TELEPHONE MANHOLE		TMH
		STREET WASHERS		
V		VALVE BOX		
MW	1313	TEST BORING OR MONITORING WELL		
	PB	ELECTRICAL PULL BOX		
		ELECTRICAL TRANSFORMER	T	
POLE		POWER POLE W/ GUY OR ANCHOR		POLE
PLPOLE		POWER POLE W/ LIGHT		PLPOLE
LPOLE		LIGHT POLE		LPOLE
T-T		TRANSMISSION TOWER		
		BUILDING/TRAILER		
		ROAD CENTERLINE OR BASELINE		
		GRAVEL ROADWAY/DRIVEWAY		
		ASPHALT ROADWAY/DRIVEWAY		
		CONCRETE PAD/ ROADWAY/DRIVEWAY		
		RAILROAD TRACK		
		RAILROAD TIES		
GATE		FENCE GATE		GATE
		CHAIN-LINK FENCE		
		CONSTRUCTION FENCE		
		SILT FENCE		
		CONSTRUCTION/WIND BARRIER FENCE		
		CERTIFICATION ROPE FENCE		

NOTE:

THIS DRAWING DEPICTS GENERIC SYMBOLOGY AND ABBREVIATIONS. ALL ITEMS SHOWN ARE NOT NECESSARILY INCLUDED IN THIS PROJECT.

NORTH ARROWS

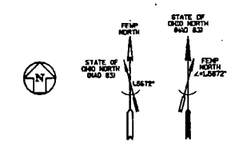

MATL. CODE	DESCRIPTION
A	A53 SEAMLESS CARBON STEEL
A6	PLASTIC LINED STEEL PIPE
A7	CORRUGATED METAL PIPE
B	PVC
B1	PVDF
B2	PVDF, 100PSI
B3	CPVC
B4	HDPE
B5	CORRUGATED HDPE
C1	CLASS 150, COPPER TUBING
L	FIBERGLASS REINFORCED PLASTIC
M	DUCTILE IRON
T	304L, STAINLESS STEEL
T1	316L, STAINLESS STEEL
T4	316, STAINLESS STEEL
W	A53, GR, A, GALVANIZED STEEL

INSUL. CODE	DESCRIPTION
ET	ELECTRIC TRACED AND INSULATED
IC	ANTI-CONDENSATION INSULATION
ST	STEAM TRACED AND INSULATED

HVAC SYMBOLS

30x18	DUCTWORK SIZE-FIRST NUMBER IS WIDTH OF SIDE SHOWN
	DUCTWORK TURN AWAY - EXHAUST (RETURN)
	DUCTWORK TURN AWAY - SUPPLY
	DUCTWORK TURN TOWARD - EXHAUST (RETURN)
	DUCTWORK TURN TOWARD - SUPPLY
	SQUARE OR RECTANGULAR CEILING DIFFUSER WITH NECK SIZE AND CFM (12x12NK-800)
	SINGLE-LINE EXISTING WORK
	SINGLE-LINE NEW WORK
	POINT OF TIE-IN BETWEEN NEW & EXISTING WORK
NO.	NOTE REFERS TO SPECIFIC LOCATION
	AIR FLOW SUCTION
	AIR FLOW SUPPLY

HVAC ABBREVIATIONS

AC	AIR CONDITIONER	HGT	HEIGHT
AHU	AIR HANDLING UNIT	HORIZ	HORIZONTAL
AMB	AMBIENT	HP	HORSEPOWER
AP	ACCESS PANEL	HR	HOUR
ARCH	ARCHITECTURAL	HU	HUMIDIFIER
ATM	ATMOSPHERE	ID	INSIDE DIAMETER
AVG	AVERAGE	IN	INCHES
BOD	BOTTOM OF DUCT	MTR	MOTOR
BOS	BOTTOM OF STEEL	N/A	NOT APPLICABLE
BTUH	BRITISH THERMAL UNIT PER HOUR	OA	OUTSIDE AIR
B/M	BILL OF MATERIAL	OAI	OUTSIDE AIR INTAKE
C	CONDENSATE	OD	OUTSIDE DIAMETER
CD	CEILING DIFFUSER	OPNG	OPENING
CFM	CUBIC FEET PER MINUTE	RA	RETURN AIR
CL/℄	CENTER LINE	REQ	REQUIRED
CO	CLEAN OUT	RH	RELATIVE HUMIDITY
COD	CENTER OF DUCT	RO	ROOF OPENING
CON	CONNECTION	RTU	ROOF TOP UNIT
CU FT	CUBIC FEET	SA	SUPPLY AIR
CW	CLOCKWISE	SM	SHEET METAL
D	DRAIN	SP	STATIC PRESSURE
DN	DOWN	TEMP	TEMPERATURE
DP	DIFFERENTIAL PRESSURE	TOC	TOP OF CONCRETE
DPR	DAMPER	TOD	TOP OF DUCT
D/W	DUCTWORK	TOS	TOP OF STEEL
FF	FINISHED FLOOR	TYP	TYPICAL
FH	FUME HOOD	VENT	VENTILATION
FJ	FIELD JOINT	VERT	VERTICAL
FLEX	FLEXIBLE	WT	WEIGHT
FOB	FLAT ON BOTTOM	YR	YEAR
FOT	FLAT ON TOP		
FPM	FEET PER MINUTE		
GA	GAUGE		
GALV	GALVANIZED		

ARCHITECTURAL LEGEND/ABBREVIATIONS

&	AND
@	AT
AFF	ABOVE FINISHED FLOOR
BLDG	BUILDING
(BLDG)	(BUILDING ROOF)
CONC	CONCRETE
CJ	CONSTRUCTION JOINT
DS	DOWNSPOUT
EA	EACH
EXP	EXPANSION
EW	EYE WASH
FH	FLAT HEAD
FL	FLOOR
GA	GAUGE
GALV	GALVANIZED
(HP)	(HIGH POINT)
HM	HOLLOW METAL
HWD	HARDWARE
ISUL	INSULATION
JT	JOINT
MD	MASONARY OPENING
MTL	METAL
MAT'L	MATERIAL
OC	ON CENTER
OPNG	OPENING
PL	PLATE
PMF	PRE MOLDED FILLER
REINF	REINFORCING
RF	ROOF
SK	SINK
SS	STAINLESS STEEL
STL	STEEL
T&B	TOP AND BOTTOM
THK	THICKNESS
TRTD	TREATED
W/	WITH
WC	WATERCLOSET
WD	WOOD

	EARTH
	CONCRETE (SECTION)
	RIGID INSULATION
	CONCRETE (ELEVATION)
	WOOD
	GRAVEL
	GLAZING (ELEVATION)
001	DOOR NUMBER
	ELEVATION

LINE DESIGNATION

ELECTRICAL CONTROL SIGNAL	
FLOW DIRECTION	

EQUIPMENT DESIGNATION

AIR CONDITIONING UNIT	AC
EXHAUST FAN	EF
HEATING AND VENTILATION AIR HANDLING UNIT	HV
AIR COMPRESSOR	ACP or ICP

PIPING SYMBOLS

ELBOW	
PIPE DROP	G
PIPE RISER	O
UNION	

CONTROL SYMBOLS

FLOW SWITCH	FS
SMOKE DETECTOR	SD
THERMOSTAT	T

GENERAL ABBREVIATIONS

AFF	ABOVE FINISHED FLOOR	N	NORTH
CONT	CONTINUOUS	NTS	NOT TO SCALE
DIA	DIAMETER	No.	NUMBER
DWG	DRAWING	REF	REFERENCE
E	EAST	S	SOUTH
ELEC	ELECTRIC	SHT	SHEET
EL	ELEVATION	SPECS	SPECIFICATIONS
EXIST	EXISTING	STRUC	STRUCTURAL
MIN	MINIMUM	TYP	TYPICAL
MAX	MAXIMUM	W	WEST

NO.	REVISIONS	DATE	DWN. BY	APPD.	NO.	REVISIONS	DATE	DWN. BY	APPD.	REF. DWG. NO.
					O	ISSUED FOR CAWWT 'STAGE 2' CONSTRUCTION	2/6/01	JMG	KES	
					B	ISSUED FOR 90% REVIEW	01/19/01	JMG		
					A	ISSUED FOR 60% REVIEW	9/21/01	JMG		

NOTE:
FLUOR FERNALD CADD DRAWING, DO NOT REVISE MANUALLY.

CONFIGURATION MANAGEMENT DRAWING
EXISTING STRUCTURES OR COMPONENTS MODIFIED PER RS-2001-0004, CONTROL NUMBER. SEE NOTES.
COGNIZANT ENGINEER DATE

APPROVALS

CIVIL & STR.		SAFETY ENG.	
ELECTRICAL		MAINTENANCE	
ENGINEER		FIRE PROTECT.	
INSTRUMENT		WASTE MANAGE	
MECHANICAL		SECURITY	
		PROJECTS	
CHECKED			
APPROVED			

Fernald Closure Project

FLUOR FERNALD, INC.

U.S. DEPARTMENT OF ENERGY

PROJECT 59600 STAGE 2

BLDG. 51A

CONVERTED AWWT (CAWWT)
SYMBOLS & LEGEND
FOR
ARCH., CIVIL, HVAC, PIPING & STRUCT.

RES4548
DATE SEPT. 6, 2004
DRAWN J.M.C.

51D-5500-X-01357 | 0

FILE NAME: /res4518/cawwt/phase2/51dx1357.dgn

FCPS.DGN 5/30/03

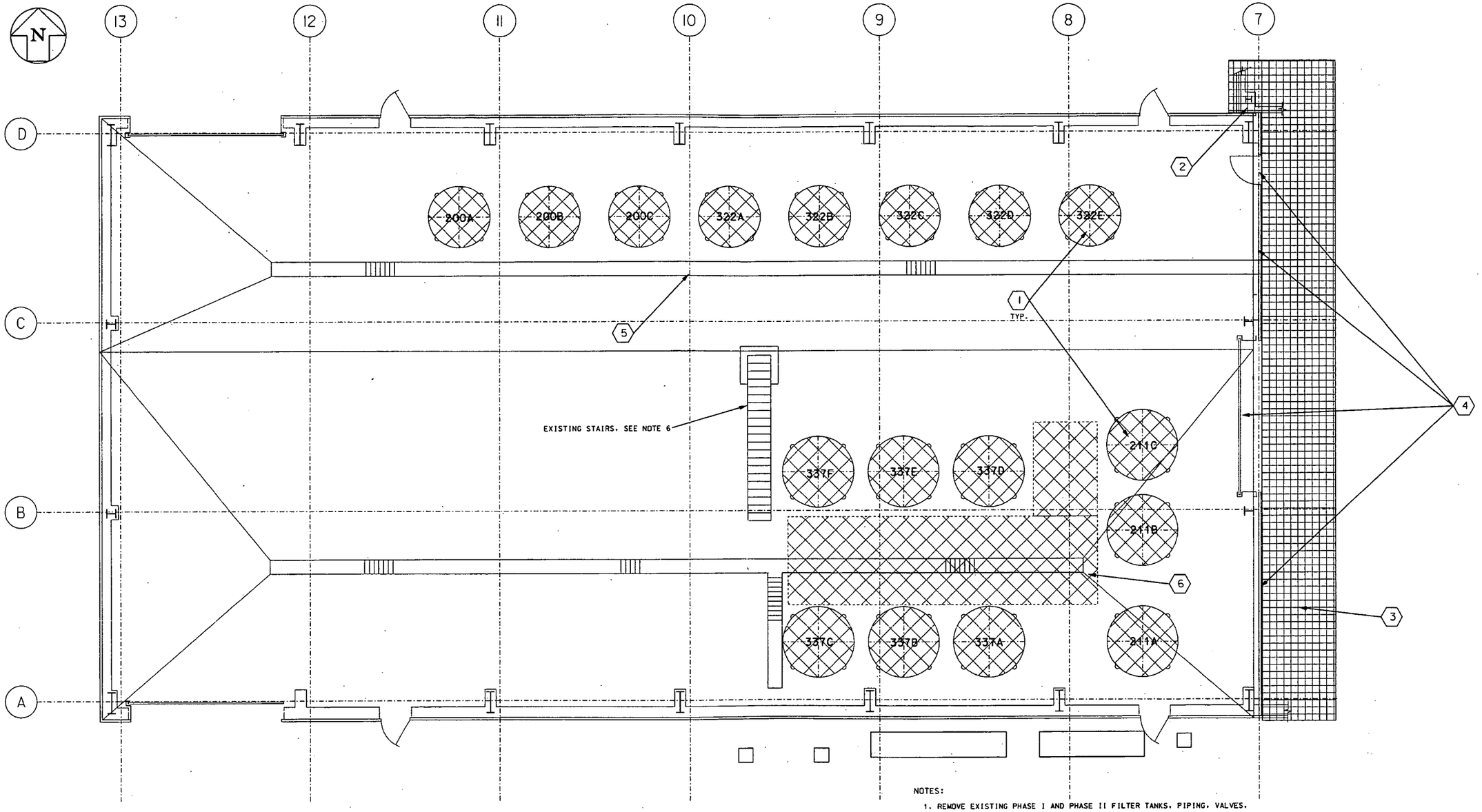

ITEMS TO BE REMOVED IN 'CAWWT STAGE 2'

ITEMS TO BE REMOVED DURING D & D

INTERIOR DEMOLITION PLAN

NOTES:

1. REMOVE EXISTING PHASE I AND PHASE II FILTER TANKS, PIPING, VALVES, CONTROL WIRING AND CONDUIT, INSULATION, MISCELLANEOUS SUPPORT STRUCTURES, CATWALKS, STAIRS, EQUIPMENT SUPPORT PADS AND ANCILLARY EQUIPMENT AS DIRECTED. REMOVE CONCRETE PIERS FLUSH WITH TOP OF F.F.
2. REMOVE CORNER WALLS AND ROOF OF EXISTING BREAK AREA AS DIRECTED.
3. REMOVE EXISTING PIPE RACK AND PIPING AS REQUIRED TO CLEAR ACCESS FOR COLUMN 7 WALL. (REF. DWG. 51D-4445-S-00446).
4. REMOVE EXISTING WALL PANEL, OVERHEAD DOOR AND FRAMING, FIRE SHUTTERS AND PEDESTRIAN DOOR.
5. EXISTING TRENCH. REMOVE GRATING AND FILL WITH CONCRETE. NOTE – PORTION OF NORTH TRENCH TO BE USED AS PIPE CHASE. SEE DRAWING 51D-5500-P-01433.
6. DEMO CATWALK IN AREA OF TANK DEMO (AS SHOWN). EXISTING STAIRS TO REMAIN. MODIFY PER DRAWING 51D-5500-S-01434. (REF. DWGS. 95X-5900-S-00336 & 00338)

NO.	REVISIONS	DATE	DWN. BY	APPD.	NO.	REVISIONS	DATE	DWN. BY	APPD.	REF. DWG. NO.
					0	ISSUED FOR CAWWT 'STAGE 2' CONSTRUCTION	12/6/04	JSW		
					B	ISSUED FOR 90% REVIEW	11/29/04	JSW		
					A	ISSUED FOR 60% REVIEW	9/23/04	JSW		

NOTE: FLUOR FERNALD CADD DRAWING. DO NOT REVISE MANUALLY.

CONFIGURATION MANAGEMENT DRAWING — SYSTEMS, STRUCTURES OR COMPONENTS AFFECTED BY THIS DRAWING ARE UNDER CONFIGURATION MANAGEMENT CONTROL. SEE NOTES.

COGNIZANT ENGINEER — DATE

APPROVALS

CIVIL & STR.			SAFETY ENG.		
ELECTRICAL			MAINTENANCE		
ENGINEER			FIRE PROTECT.		
INSTRUMENT			WASTE MANAGE.		
MECHANICAL			SECURITY		
			PROJECTS		
CHECKED					
APPROVED					

Fernald Closure Project

FLUOR FERNALD, INC.

U.S. DEPARTMENT OF ENERGY

PROJECT 59600 STAGE 2

BLDG. 51A ADVANCED WASTEWATER TREATMENT (AWWT)

CONVERTED AWWT (CAWWT)
INTERIOR DEMOLITION PLAN
SCALE: 1"=4'-0"

RES 4518
DATE Sept. 23,2004
DRAWN JSW

51D-5500-X-01358 | 0

FILE NAME: res4518/51dx1358.dgn

FDP6.DGN 5/30/03

NOTES:

1. REMOVE CATWALK AS DIRECTED.

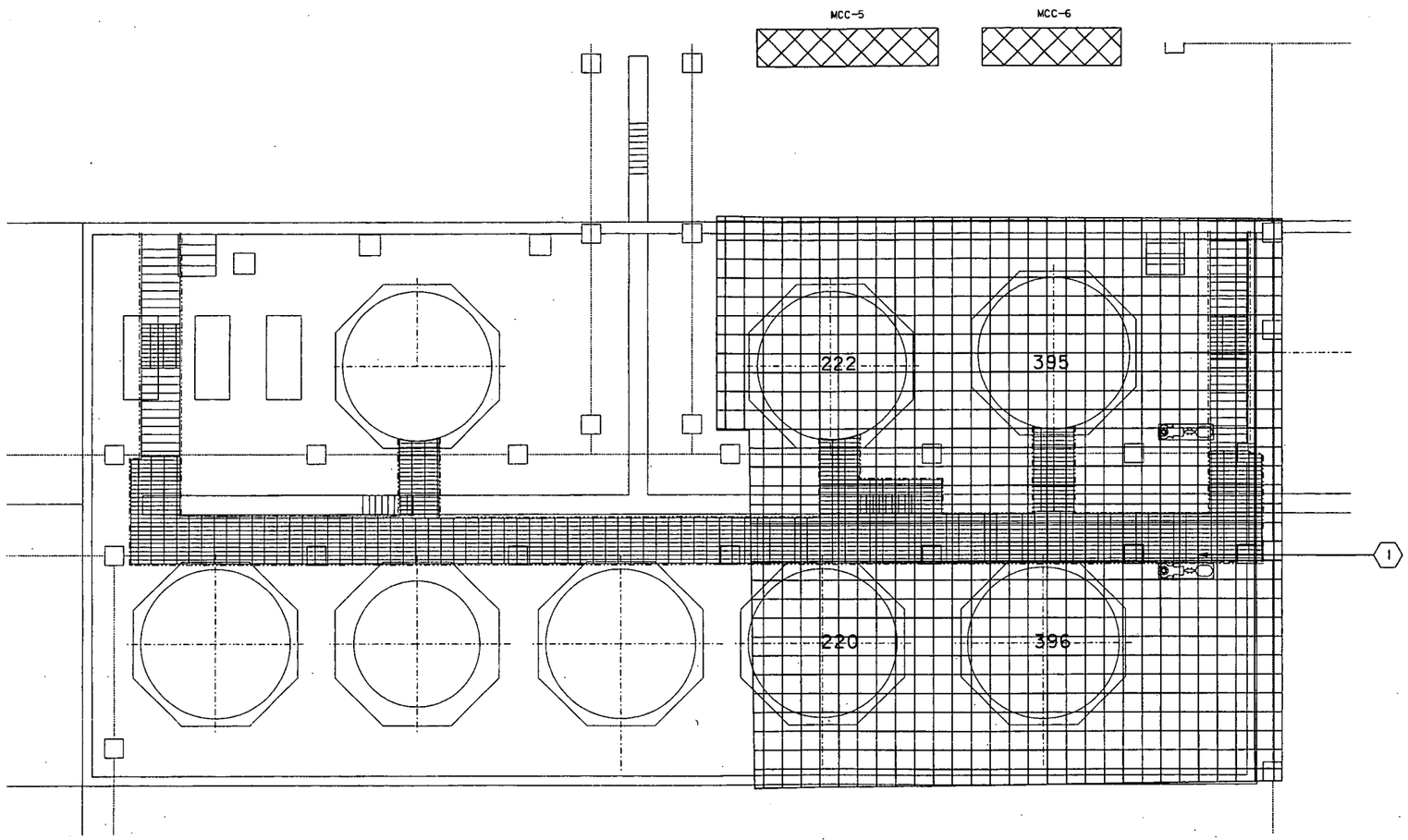

EXTERIOR DEMOLITION PLAN

EXISTING PLATFORM GRATING

ITEMS TO BE REMOVED DURING D & D
SEE REF. DWG. 51D-4445-S-00435

ITEMS TO BE REMOVED
IN 'CAWWT STAGE 2'

NO.	REVISIONS	DATE	DWN. BY	APPD.
0	ISSUED FOR CAWWT 'STAGE 2' CONSTRUCTION	12/6/04	JSW	
B	ISSUED FOR 90% REVIEW	10/25/04	JSW	
A	ISSUED FOR 60% REVIEW	9/23/04	JSW	

NO.	REVISIONS	DATE	DWN. BY	APPD.	REF. DWG. NO.

NOTE:
FLUOR FERNALD CADD DRAWING, DO NOT REVISE MANUALLY.

CONFIGURATION MANAGEMENT DRAWING
SYSTEMS, STRUCTURES OR COMPONENTS CONTROLLED BY DRAWING ARE UNDER CONFIGURATION MANAGEMENT CONTROL. SEE NOTES.

COGNIZANT ENGINEER DATE

APPROVALS

CIVIL & STR.		SAFETY ENG.	
ELECTRICAL		MAINTENANCE	
ENGINEER		FIRE PROTECT.	
INSTRUMENT		WASTE MANAGE	
MECHANICAL		SECURITY	
		PROJECTS	
CHECKED			
APPROVED			

Fernald Closure Project

FLUOR FERNALD, INC.

U.S. DEPARTMENT OF ENERGY

PROJECT 59600 STAGE 2

BLDG. 51A ADVANCED WASTEWATER TREATMENT (AWWT)

CONVERTED AWWT (CAWWT)
EXTERIOR DEMOLITION PLAN
SCALE: 1"=8'-0"

RES. 4518
DATE Sept. 23,2004
DRAWN JeW

51D-5500-X-01359 0

FILE NAME: res4518/51dx1359.dgn

FCMLDGN 3/30/03

5794

9

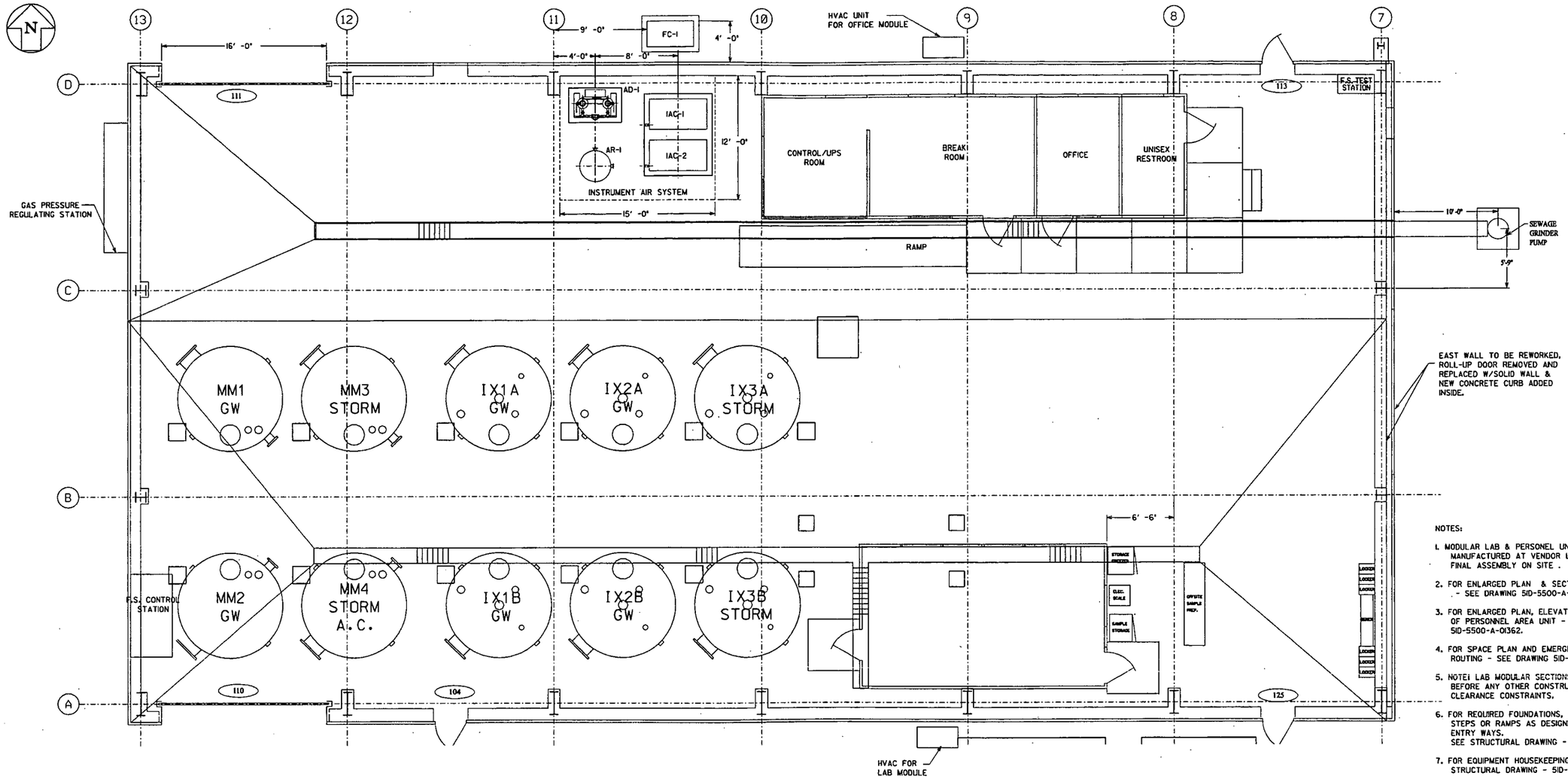

NOTES:

1. MODULAR LAB & PERSONEL UNITS WILL BE MANUFACTURED AT VENDOR LOCATION AND FINAL ASSEMBLY ON SITE .
2. FOR ENLARGED PLAN & SECTIONS OF LAB UNIT - SEE DRAWING 51D-5500-A-01361.
3. FOR ENLARGED PLAN, ELEVATIONS & SECTIONS OF PERSONNEL AREA UNIT - SEE DRAWING 51D-5500-A-01362.
4. FOR SPACE PLAN AND EMERGENCY EGRESS ROUTING - SEE DRAWING 51D-5500-A-01363.
5. NOTE: LAB MODULAR SECTIONS MUST BE INSTALLED BEFORE ANY OTHER CONSTRUCTION DUE TO CLEARANCE CONSTRAINTS.
6. FOR REQUIRED FOUNDATIONS, ACCESS LANDINGS, STEPS OR RAMPS AS DESIGNED FOR MODULAR UNIT ENTRY WAYS. SEE STRUCTURAL DRAWING - 51D-5500-S-XXXX.
7. FOR EQUIPMENT HOUSEKEEPING PADS - SEE STRUCTURAL DRAWING - 51D-5500-S-XXXX.

DOOR SCHEDULE

DOOR NO.	DOOR SIZE			DOOR		FRAME TYPE			HARD-WARE	LABEL	REMARKS
	WIDTH	HEIGHT	THK.	TYPE	MAT'L.	HEAD	JAMB	MAT'L.			
104	3'-0"	7'-0"	1¾"	C	HM	III	III	HM	2	-	UNINSULATED
110	16'-0"	18'-0"	-	B	STL	I	I	-	-	-	-
111	16'-0"	18'-0"	-	B	STL	I	I	-	-	-	-
~~112~~	~~3'-0"~~	~~7'-0"~~	~~1¾"~~	~~C~~	~~HM~~	~~VII~~	~~III~~	~~HM~~	~~1~~		
113	3'-0"	7'-0"	1¾"	C	HM	VII	III	HM	1	-	-
125	3'-0"	7'-0"	1¾"	C	HM	VII	III	HM	2	-	UNINSULATED

ABOVE INFORMATION IS BASED ON 'SANDERS & THOMAS' DESIGN 1984 (51X-1910-A-00018)

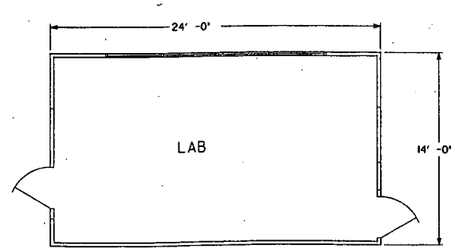

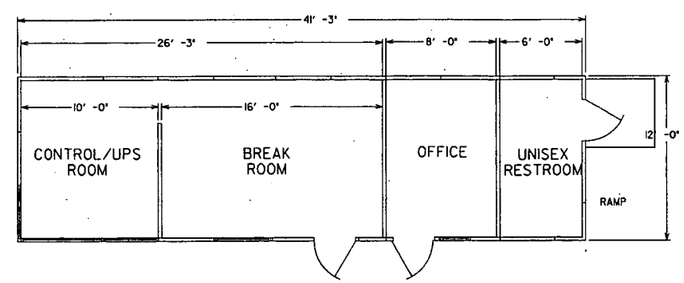

NO.	REVISIONS	DATE	DWN. BY	APPD.
0	ISSUED FOR CAWWT 'STAGE 2' CONSTRUCTION	2/16/04	JMG	MCB
B	ISSUES FOR 90% REVIEW	10/29/04	JMG	
A	ISSUES FOR 60% REVIEW	9/23/04	JMG	

REF. DWG. NO.

NOTE: FLUOR FERNALD CADD DRAWING, DO NOT REVISE MANUALLY.

CONFIGURATION MANAGEMENT DRAWING — USE / DO NOT USE. EXISTING STRUCTURES OR COMPONENTS DEPICTED ON THIS DRAWING ARE UNDER CONFIGURATION MANAGEMENT CONTROL. SEE NOTES.

COGNIZANT ENGINEER — DATE

APPROVALS: CIVIL & STR., ELECTRICAL, ENGINEER, INSTRUMENT, MECHANICAL, CHECKED, APPROVED; SAFETY ENG., MAINTENANCE, FIRE PROTECT., WASTE MANAGE, SECURITY, PROJECTS

Fernald Closure Project

FLUOR FERNALD, INC.

U.S. DEPARTMENT OF ENERGY

PROJECT 59600 STAGE 2

BLDG. 51A AWWT

CONVERTED AWWT (CAWWT)
NEW EQUIP./LAB/PERSONNEL LAYOUT
PLAN - SCALE 1/4"=1'-0"

RES 4518
DATE June 16, 2004
DRAWN C.E. PAUL

51D-5500-A-01360 | 0

FILE NAME: res4518/51da5100l.dgn

FDPSLOGN 5/30/03

579A

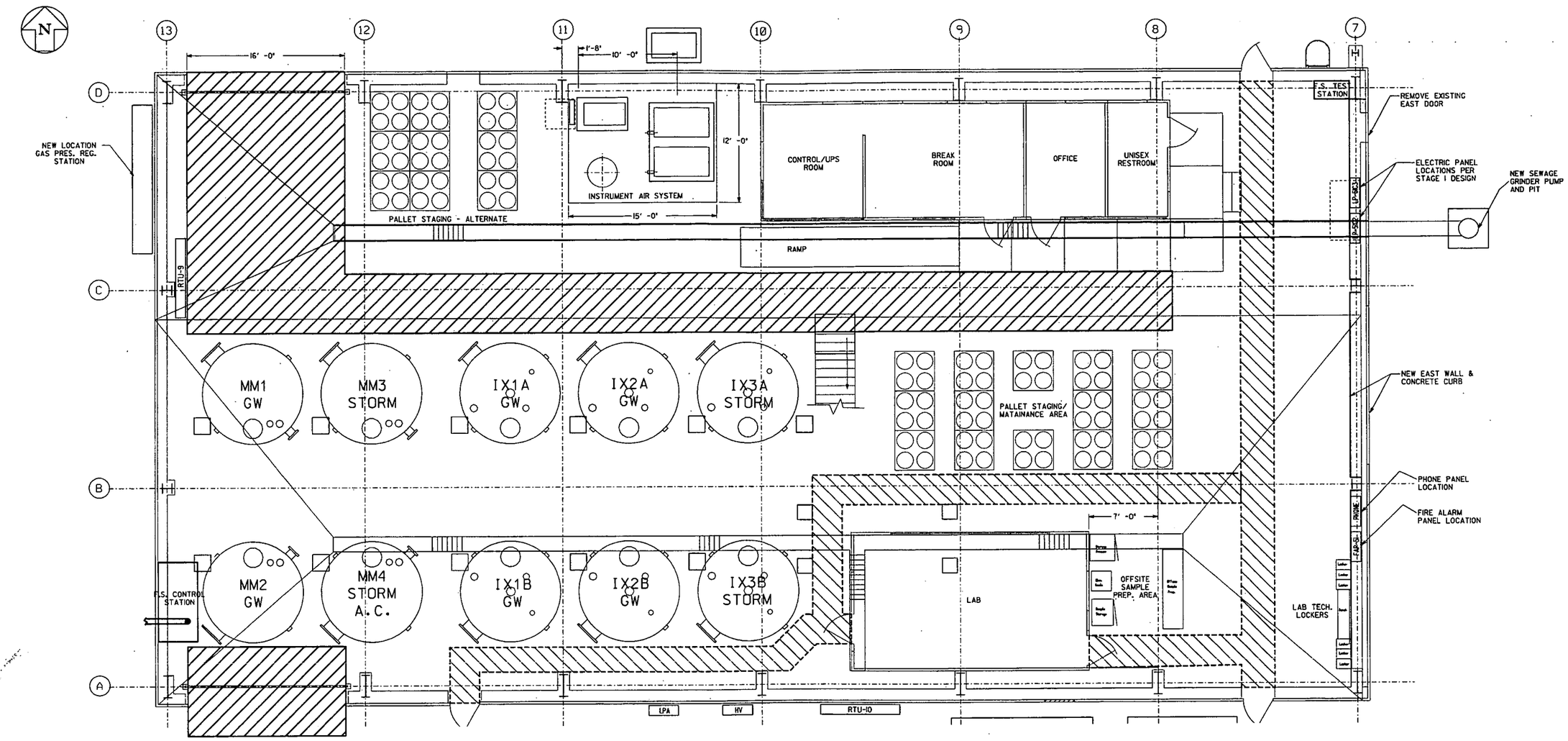

FORKLIFT TRAFFIC AISLE (MIN. WIDTH 6'-0")

PERSONNEL WALKWAY (MIN. WIDTH 36")

NO.	REVISIONS	DATE	DWN. BY	APPD.
0	ISSUED FOR CAWWT 'STAGE 2' CONSTRUCTION	8/6/04	JMG	HES
B	ISSUED 90% REVIEW	8/2/04	JMG	
A	60% REVIEW	5/23/04	JMG	

REF. DWG. NO.

NOTE: FLUOR FERNALD CADD DRAWING. DO NOT REVISE MANUALLY.

CONFIGURATION MANAGEMENT DRAWING

STATUS: STRUCTURES OR COMPONENTS SHOWN ON THIS DRAWING ARE UNDER CONFIGURATION MANAGEMENT CONTROL. SEE NOTES.

COGNIZANT ENGINEER DATE

APPROVALS

CIVIL & STR.		SAFETY ENG.	
ELECTRICAL		MAINTENANCE	
ENGINEER		FIRE PROTECT.	
INSTRUMENT		WASTE MANAGE	
MECHANICAL		SECURITY	
		PROJECTS	
CHECKED			
APPROVED			

Fernald Closure Project

FLUOR FERNALD, INC.

U.S. DEPARTMENT OF ENERGY

PROJECT 59600 STAGE 2

BLDG. 51A AWWT

CONVERTED AWWT (CAWWT)
BLDG. 51 SPACE PLAN
PLAN - SCALE 1/4"=1'-0"

RES 4518
DATE June 16, 2004
DRAWN C.E. PAUL

51D-5500-A-01363 0

FILE NAME: res4518/51da01363.dgn

FCPLDGN 5/30/03

-5794

8

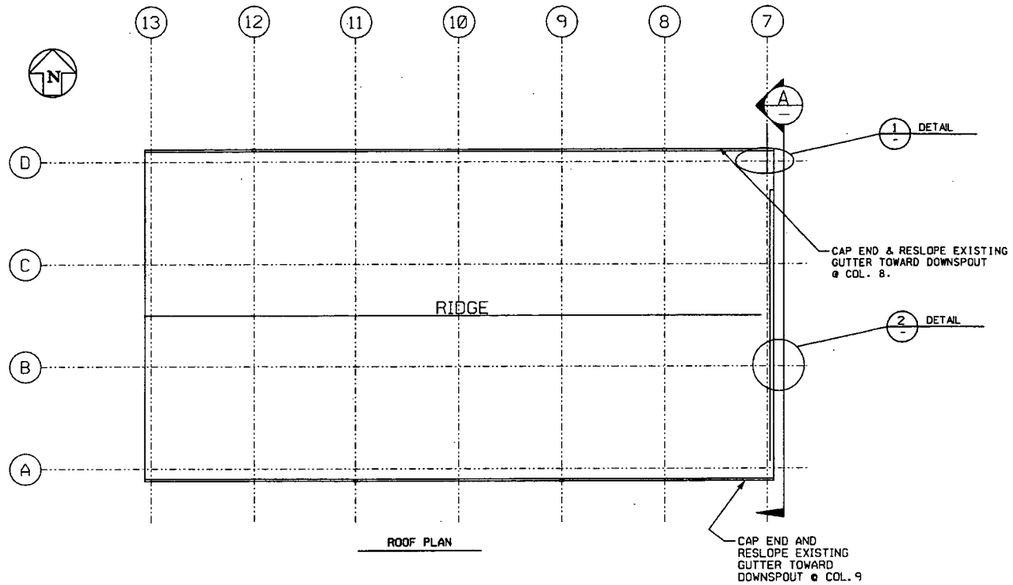

ROOF PLAN

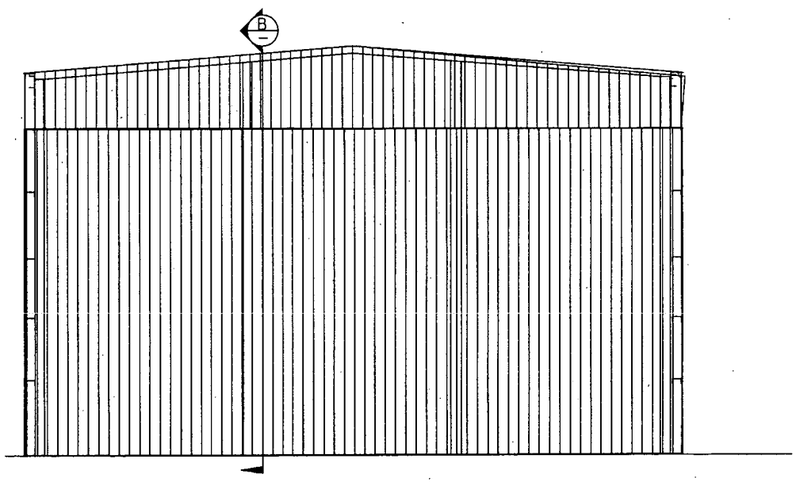

NEW EAST WALL SECTION A

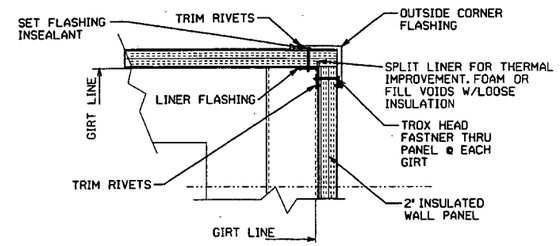

DETAIL 1

NOTES

1. EXTERIOR INTERLOCKING SIDING PANELS ARE TO BE 'ALUMASHIELD' AN-200 (COLOR AS SELECTED).
2. NOT USED
3. SIDING, INSULATION AND LINER PANELS TO BE ATTACHED TO OUTSIDE OF STRUCTURAL GIRTS.
4. GUTTERS TO BE MODIFIED AND RESLOPED AS SHOWN. DOWNSPOUTS TO BE REWORKED AS SHOWN. UNDERGROUND STORM WATER LINES REROUTE - TBD.

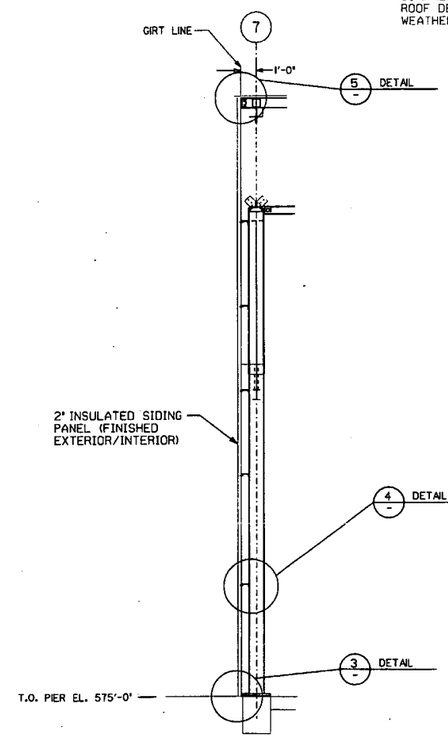

SECTION B

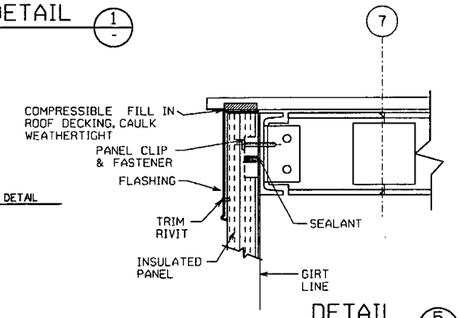

DETAIL 5

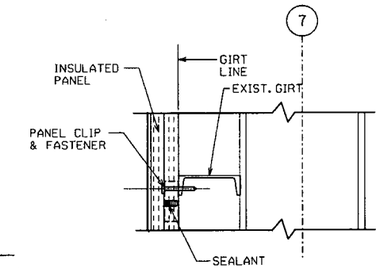

DETAIL 4

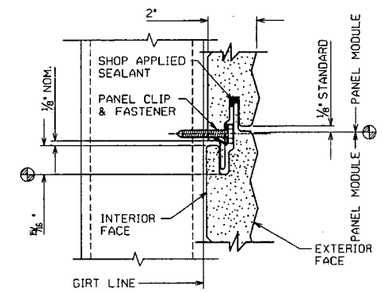

DETAIL 2

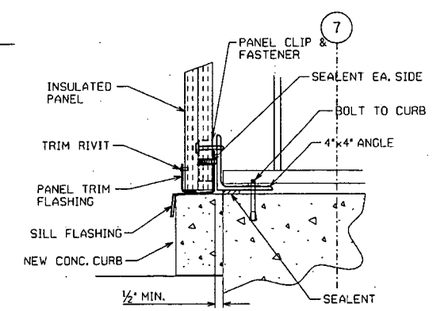

DETAIL 3

NO.	REVISIONS	DATE	DWN. BY	APPD.	NO.	REVISIONS	DATE	DWN. BY	APPD.	REF. DWG. NO.
					0	ISSUED FOR CAWWT 'STAGE 2' CONSTRUCTION	12/8/04	JMG	HCB	5IX-4445-A-08455
					B	ISSUED FOR 90% REVIEW	10/20/04	JMG		5IX-1910-A-00016

NOTE: FLUOR FERNALD CADD DRAWING. DO NOT REVISE MANUALLY.

CONFIGURATION MANAGEMENT DRAWING — USE / DO NOT USE

SYSTEMS, STRUCTURES OR COMPONENTS INCLUDED ON THIS DRAWING ARE UNDER CONFIGURATION MANAGEMENT CONTROL. SEE NOTES.

COGNIZANT ENGINEER DATE

APPROVALS				
CIVIL & STR.			SAFETY ENG.	
ELECTRICAL			MAINTENANCE	
ENGINEER			FIRE PROTECT.	
INSTRUMENT			WASTE MANAGE	
MECHANICAL			SECURITY	
			PROJECTS	
CHECKED				
APPROVED				

Fernald Closure Project

FLUOR FERNALD, INC.

U.S. DEPARTMENT OF ENERGY

PROJECT 59600 STAGE 2

BLDG. 5ID ADVANCED WASTEWATER TREATMENT (AWWT)

CONVERTED AWWT (CAWWT)

BLDG. 51 - NEW EAST WALL

PLAN, SECTIONS & DETAILS

RES 4518

DATE OCT. 12, 2004

DRAWN JMG

5ID-5500-A-01424 0

FILE NAME: res4518/5idal424.dgn

FOPS.DGN 5/30/03

579

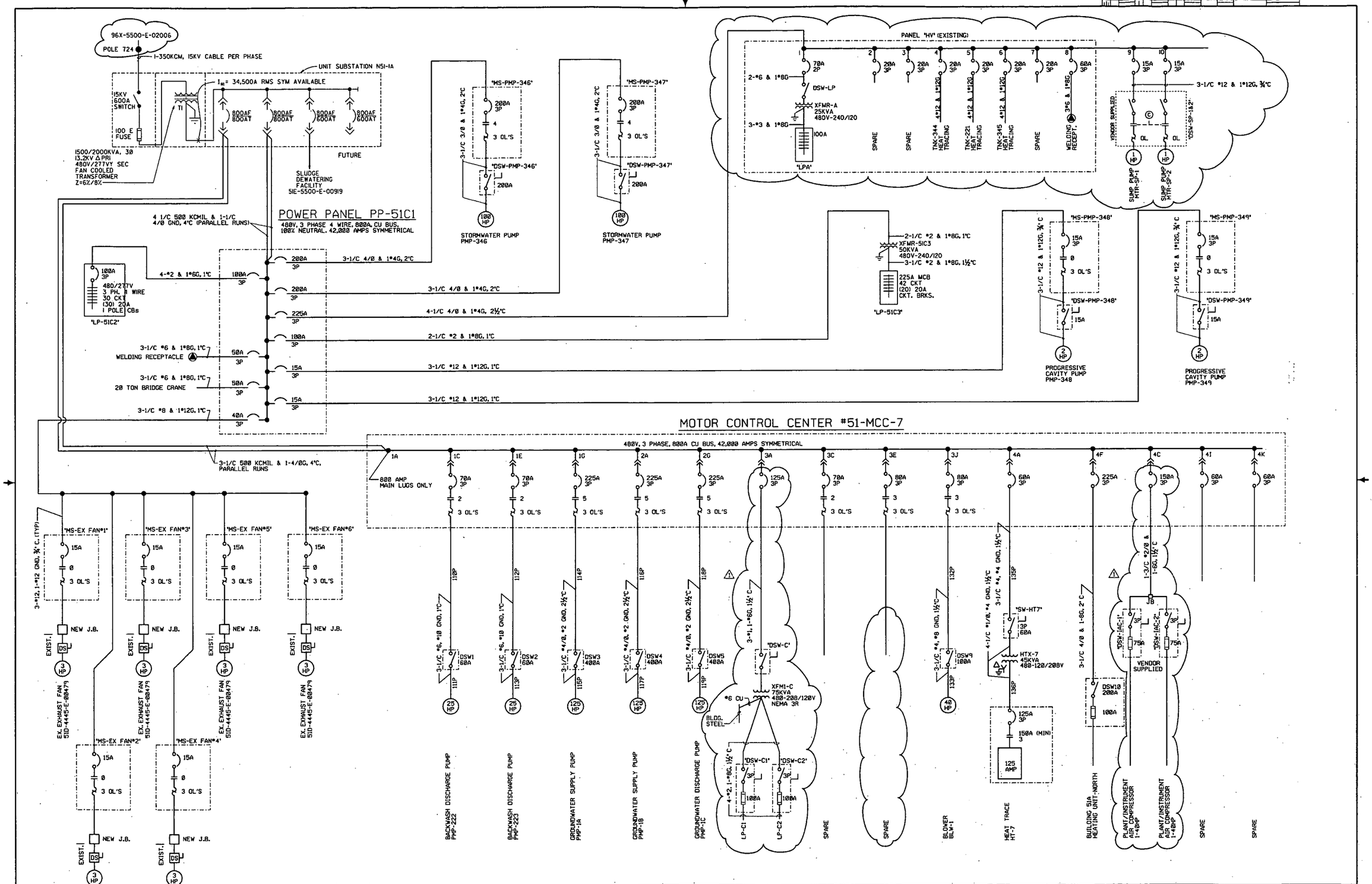

NO.	REVISIONS	DATE	DWN. BY	APPD.	NO.	REVISIONS	DATE	DWN. BY	APPD.	REF. DWG. NO.
					I	ISSUED FOR CAWWT 'STAGE 2' CONSTRUCTION AND DCN: 59600-004	12/6/04	GEP		
					IB	ISSUE FOR 90% CAWWT 'STAGE 2' CONSTRUCTION	10/29/04	GEP		
					IA	ISSUE FOR 60% CAWWT 'STAGE 2' CONSTRUCTION	9/23/04	GEP		
					O	ISSUE FOR CAWWT 'STAGE 1' CONSTRUCTION	1/12/04	GEP		

NOTE: FLUOR FERNALD CADD DRAWING. DO NOT REVISE MANUALLY.

CONFIGURATION MANAGEMENT DRAWING — YES / NO — SYSTEMS, STRUCTURES OR COMPONENTS CONTROLLED BY THIS DRAWING ARE SUBJECT TO CONFIGURATION MANAGEMENT CONTROL. SEE NOTES.

COGNIZANT ENGINEER — DATE

APPROVALS			
CIVIL & STR.		SAFETY ENG.	
ELECTRICAL	G.E. Paul 12/6/04	MAINTENANCE	
ENGINEER		FIRE PROTECT.	
INSTRUMENT		WASTE MANAGE	
MECHANICAL		SECURITY	
		PROJECTS	
CHECKED			
APPROVED	for G.E. PAUL 12-6-04		

Fernald Closure Project

FLUOR FERNALD, INC.

U.S. DEPARTMENT OF ENERGY

BLDG. 51A ADVANCED WASTEWATER TREATMENT (AWWT)

CONVERTED AWWT (CAWWT)

SINGLE LINE DIAGRAM

NO SCALE

RCS 4518

DATE 5/24/04

DRAWN G.E. PAUL

51D-5500-E-01331 | I

FDPSLDGN 5/30/03

FILE NAME: /RES4518/CAWWT/STAGE 1/51DE133LDGN

SINGLE LINE DIAGRAM SYMBOLS

ARRESTER	YY-XXXX	'YY' INDICATES SPECIAL IDENTIFIER 'XXXX' INDICATES ID NO.
CIRCUIT BREAKER, LOW VOLTAGE	FFFF TTTT	'FFFF' INDICATES FRAME RATING AMPS (SHOWN ON SWITCHGEAR ONLY) 'TTTT' INDICATES TRIP RATING AMPS
CIRCUIT BREAKER, MEDIUM VOLTAGE	FFFF TTTT	'FFFF' INDICATES FRAME RATING AMPS 'TTTT' INDICATES TRIP RATING AMPS
COMBINATION STARTER, NON-REVERSING	TTTT ZZZZ	'TTTT' INDICATES TRIP RATING AMPS 'ZZZZ' INDICATES NEMA SIZE EQUIPMENT OUTLINE (TYP)
CURRENT TRANSFORMER	YY ZZZZ	'YY' INDICATES NO. OF CT(S) 'ZZZZ' INDICATES CT RATIO(S)
DISCONNECT SWITCH	FFFF	'FFFF' INDICATES FRAME RATING AMPS
DRAW-OUT DEVICE/ RECEPTACLE		
FUSED DISCONNECT SWITCH	FFFF TTTT	'FFFF' INDICATES FRAME RATING AMPS 'TTTT' INDICATES TRIP RATING AMPS
FUSE	XXXX YY TTTT	'XXXX' INDICATES ID NO. 'YY' INDICATES SPECIAL IDENTIFIER 'TTTT' INDICATES TRIP RATING AMPS
GENERATOR		
INDICATING METER	XXXX YYY	'XXXX' INDICATES ID NO. 'YYY' INDICATES SPECIAL INDICATOR
LOAD, NON-MOTOR	ZZZ ZZZ	'ZZZ' INDICATES EQUIPMENT SIZE IN KVA OR KW
MOTOR	ZZZ HP	'ZZZ' INDICATES HORSEPOWER SIZE
MOTOR OVERLOAD RELAY		
MOTOR STARTER CONTACT	ZZ	'ZZ' INDICATES NEMA SIZE
PANEL MOUNTED SWITCH	XXXX YY	'YY' INDICATES SPECIAL IDENTIFIER 'XXXX' INDICATES ID NO.
POTENTIAL TRANSFORMER	ZZZZ 3E	'ZZZZ' INDICATES VOLTAGE RATIO (TYP. 14.4K/120)
SYMBOL 3 PHASE DELTA	Δ	
SYMBOL, 3 PHASE WYE GROUNDED	Y	
TRANSFER SWITCH	YY-XXXX	'YY' INDICATES SPECIAL IDENTIFIER 'XXXX' INDICATES ID NO.
WELDING/POWER RECEPTACLE		
TRANSFORMER	XXXX ZZZZ	'XXXX' INDICATES ID NO. 'ZZZZ' INDICATES TRANSFORMER RATINGS - KVA, 1 OR 3 PHASE, VOLTAGE RATIO, IMPEDANCE

ELEMENTARY DIAGRAM SYMBOLS

CIRCUIT BREAKER	TTTT	'TTTT' INDICATES TRIP RATING AMPS
CONTACT	YY-XXXX	NORMALLY OPEN, CLOSES WHEN COIL IS ENERGIZED, 'XXXX' INDICATES ID NO., 'YY' INDICATES SPECIAL IDENTIFIER
CONTACT	YY-XXXX	NORMALLY CLOSED, OPENS WHEN COIL IS ENERGIZED, 'XXXX' INDICATES ID NO., 'YY' INDICATES SPECIAL IDENTIFIER
CONTROL POWER XFMR	H1 480V H2 CPT X1 120V X2	
DISCONNECT SWITCH	FFFF	'FFFF' INDICATES FRAME RATING AMPS
DISCONNECT SWITCH, 3 PHASE	DSWXXXX FFFF	'XXXX' INDICATES ID NO., 'FFFF' INDICATES FRAME RATING AMPS
EQUIPMENT LOAD, 1 PHASE	H1 H2 ZZZZ ZZZZ	'ZZZZ' INDICATES EQUIPMENT SIZE IN 'KVA' OR 'KW'
EQUIPMENT LOAD, 1 PHASE	H1 ZZZZ ZZZZ H2	'ZZZZ' INDICATES EQUIPMENT SIZE IN 'KVA' OR 'KW'
EQUIPMENT LOAD, 3 PHASE	H1 H2 H3 ZZZZ ZZZZ	'ZZZZ' INDICATES EQUIPMENT SIZE IN 'KVA' OR 'KW'
FUSE	XXXX TTTT YY	'XXXX' INDICATES ID NO., 'TTTT' INDICATES TRIP RATING AMPS 'Y' INDICATES SPECIAL IDENTIFIER
GROUND		
MOTOR, 1 PHASE	T1 T2 ZZZ HP	'ZZZ' INDICATES HP SIZE
MOTOR, 1 PHASE	T1 ZZZ HP T2	'ZZZ' INDICATES HP SIZE
MOTOR, 3 PHASE	T1 T2 T3 ZZZ HP	'ZZZ' INDICATES HP SIZE
OVERLOAD ELEMENT	OL	
PILOT LIGHT	XXXX YY	'XXXX' INDICATES ID NO., 'YY' INDICATES SPECIAL IDENTIFIER
PUSH-TO-TEST LIGHT	XXXX YY	'XXXX' INDICATES ID NO., 'YY' INDICATES SPECIAL IDENTIFIER
RELAY	XXXX YY	'XXXX' INDICATES ID NO., 'YY' INDICATES SPECIAL IDENTIFIER
RELAY, TIME DELAY	TDR-XXXX TDAE TTTT	TIME DELAY AFTER ENERGIZED, 'XXXX' INDICATES ID NO. 'TTTT' INDICATES TIMING SET POINT
RELAY, TIME DELAY	TDR-XXXX TDAD TTTT	TIME DELAY AFTER DE-ENERGIZED, 'XXXX' INDICATES ID NO. 'TTTT' INDICATES TIMING SET POINT
RESISTOR	XXXX ZZZZ	'XXXX' INDICATES ID NO. 'ZZZZ' INDICATES SIZE IN OHMS

WIRING BY SUB-CONTRACTOR ————————

WIRING BY VENDOR - - - - - - - - - - - -

SWITCHES

FLOW SWITCH	NORMALLY CLOSED, OPENS ABOVE SET FLOW
FLOW SWITCH	NORMALLY OPEN, CLOSES ABOVE SET FLOW
FOOT SWITCH	NORMALLY OPEN, CLOSES WHEN ACTUATED
FOOT SWITCH	NORMALLY CLOSED, OPENS WHEN ACTUATED
LEVEL SWITCH	NORMALLY CLOSED, OPENS ABOVE SET LEVEL
LEVEL SWITCH	NORMALLY OPEN, CLOSES ABOVE SET LEVEL
LIMIT SWITCH	NORMALLY OPEN, SHOWN CLOSED BY MECHANICAL OPERATION
LIMIT SWITCH	NORMALLY CLOSED, SHOWN OPEN BY MECHANICAL OPERATION
LIMIT SWITCH	NORMALLY OPEN, CLOSES BY MECHANICAL OPERATION
LIMIT SWITCH	NORMALLY CLOSED, OPENS BY MECHANICAL OPERATION
VACUUM SWITCH	NORMALLY OPEN, CLOSES BELOW SET PRESSURE
VACUUM SWITCH	NORMALLY CLOSED, OPENS BELOW SET PRESSURE
PRESSURE SWITCH	NORMALLY CLOSED, OPENS ABOVE SET PRESSURE
PRESSURE SWITCH	NORMALLY OPEN, CLOSES ABOVE SET PRESSURE
PUSHBUTTON	XX — MOMENTARY OR MAINTAIN CONTACT (XX = MC), NORMALLY OPEN CONTACT
PUSHBUTTON	XX — MOMENTARY OR MAINTAIN CONTACT (XX = MC), NORMALLY CLOSED CONTACT
PUSHBUTTON, MUSHROOM HEAD	XX — MOMENTARY OR MAINTAIN CONTACT (XX = MC), NORMALLY OPEN CONTACT
PUSHBUTTON, MUSHROOM HEAD	XX — MOMENTARY OR MAINTAIN CONTACT (XX = MC), NORMALLY CLOSED CONTACT
SELECTOR SWITCH (GENERAL)	XXXX YY ZZ (X0) (0X) — 'XXXX' INDICATES ID NO. 'YY' INDICATES NAME OF CURRENT SWITCH POSITION, 'ZZ' INDICATES NAME OF OTHER SWITCH POSITION(S) 'X' INDICATES CLOSED CIRCUIT POSITION 'O' INDICATES OPEN CIRCUIT POSITION (CONTACTS DIAGRAMMATICALLY SHOWN CLOSED)
TEMPERATURE SWITCH	NORMALLY CLOSED, OPENS ABOVE SET TEMPERATURE
TEMPERATURE SWITCH	NORMALLY OPEN, CLOSES ABOVE SET TEMPERATURE
TIMER SWITCH	NORMALLY CLOSED, OPENS ON TIME DELAY AFTER COIL IS ENERGIZED
TIMER SWITCH	NORMALLY OPEN, CLOSES ON TIME DELAY AFTER COIL IS ENERGIZED
TIMER SWITCH	NORMALLY CLOSED, CLOSES ON TIME DELAY AFTER COIL IS DE-ENERGIZED
TIMER SWITCH	NORMALLY OPEN, OPENS ON TIME DELAY AFTER COIL IS DE-ENERGIZED
TORQUE SWITCH	NORMALLY OPEN, CLOSES BELOW SET POINT
TORQUE SWITCH	NORMALLY CLOSED, OPENS ABOVE SET POINT
SOLENOID VALVE COIL	XXXX — 'XXXX' INDICATES ID NO.
THERMAL OVERLOAD CONTACT	OL — NORMALLY CLOSED, OPENS WHEN OVERLOAD RELAY(S) TRIP

1. SEE DRAWING 95X-5900-E-00302 FOR SINGLE LINE DIAGRAM.
2. THE SYMBOLS SHOWN ARE TYPICAL GENERIC SYMBOLS USED TO REPRESENT EQUIPMENT IN THE ELECTRICAL DRAWINGS. SYMBOLS RELATING TO SPECIFIC ITEMS WILL BE DEFINED ON THE ASSOCIATED DRAWING.

SPECIAL IDENTIFIERS

A	AMBER LIGHT OR AMMETER
AS	AMMETER SWITCH
ATS	AUTOMATIC TRANSFER SWITCH
C	CLEAR LIGHT
CB	CIRCUIT BREAKER
CL	CURRENT LIMITING FUSE
CR	CONTROL RELAY
CS	CONTROL SWITCH
E	HIGH SPEED, MEDIUM VOLTAGE FUSE
G	GREEN LIGHT
LA	LIGHTNING ARRESTER
LR	LATCHING RELAY
M	MOTOR RELAY
MTS	MANUAL TRANSFER SWITCH
PF	POWER FACTOR METER
R	RED LIGHT
SA	SURGE ARRESTER
SP	SPARE
T	TIME DELAY FUSE
V	VOLTMETER
VS	VOLTMETER SWITCH
W	WATTMETER
WH	WATTHOUR METER
WHD	WATTHOUR DEMAND METER

NO.	REVISIONS	DATE	DWN. BY	APPD.	NO.	REVISIONS	DATE	DWN. BY	APPD.	REF. DWG. NO.
					O	ISSUED FOR CAWWT 'STAGE 2' CONSTRUCTION	2/6/04	GEP		
					B	ISSUE FOR 90% REVIEW	10/29/03	GEP		
					A	ISSUE FOR 60% REVIEW	5/23/03	GEP		

NOTE: FLUOR FERNALD CADD DRAWING. DO NOT REVISE MANUALLY.

CONFIGURATION MANAGEMENT DRAWING — USE / DO NOT USE

SYSTEMS, STRUCTURES OR COMPONENTS SHOWN ON THIS DRAWING ARE UNDER CONFIGURATION MANAGEMENT CONTROL. SEE NOTES.

COGNIZANT ENGINEER — DATE

APPROVALS: CIVIL & STR., ELECTRICAL, ENGINEER, INSTRUMENT, MECHANICAL, CHECKED, APPROVED — SAFETY ENG., MAINTENANCE, FIRE PROTECT., WASTE MANAGE., SECURITY, PROJECTS

Fernald Closure Project

FLUOR FERNALD, INC.

U.S. DEPARTMENT OF ENERGY

PROJECT 59600 STAGE 2

BLDG. 51A ADVANCED WASTEWATER TREATMENT (AWWT)

CONVERTED AWWT (CAWWT)

ELETRICAL SYMBOLS & LEGEND

SHEET 1 OF 2

RES #458 DATE 9/9/04 DRAWN G.E. PAUL

51D-5500-E-01364 | 0

FILE NAME: /RES451B/CAWWT/STAGE2/51DE1364.DGN

FCPSLDGN 5/30/03

91

5794

ELECTRICAL PLAN SYMBOLS

1. SEE DRAWING 95X-5900-E-00300 FOR SYMBOLS AND LEGENDS.
2. SEE DRAWING 95X-5900-E-00302 FOR SINGLE LINE DIAGRAM.
3. THE SYMBOLS SHOWN ARE TYPICAL GENERIC SYMBOLS USED TO REPRESENT EQUIPMENT IN THE ELECTRICAL DRAWINGS. SYMBOLS RELATING TO SPECIFIC ITEMS WILL BE DEFINED ON THE ASSOCIATED DRAWING.

SWITCH AND RECEPTACLE SYMBOLS

- $ CKT — SWITCH, SINGLE POLE WALL MOUNTED FLUSH
- 3 $ CKT — SWITCH, THREE-WAY
- 4 $ CKT — SWITCH, FOUR-WAY
  - CKT — INDICATES DISTRIBUTION PANEL AND CIRCUIT BREAKER NUMBER FROM WHICH POWER IS SUPPLIED (TYPICAL)
- CKT — SINGLE RECEPTACLE
- WP CKT — SINGLE RECEPTACLE WP = WEATHER PROOF
- G CKT — DUPLEX RECEPTACLE G = GROUND FAULT TYPE (GFCI)
- WELDING OR POWER RECEPTACLE
- DS(X) 100A — DISCONNECT SWITCH WITH AMP RATING
- T(X) 50KVA — TRANSFORMER WITH KVA RATING
- T — THERMOSTAT

LIGHTING SYMBOLS

- CKT — FLUORESCENT FIXTURE
- 70W CKT — WALL MOUNTED LIGHT FIXTURE WITH LAMP WATTAGE AS SHOWN
- CKT — EMERGENCY LIGHT WITH RECHARGEABLE BATTERIES
- EXIT CKT — EXIT LIGHT
- 250W HPS CKT — CEILING OR PENDANT MOUNTED HIGH PRESSURE SODIUM LIGHT, WITH LAMP WATTAGE AS SHOWN
- P 70W HPS CKT — POLE MOUNTED, WITH PHOTO CONTROL HIGH PRESSURE SODIUM FLOOD LIGHT, WITH LAMP WATTAGE AS SHOWN
- 150W INC CKT — STANCHION MOUNTED INCANDESCENT LIGHT WITH LAMP WATTAGE AS SHOWN
- 150W INC CKT — WALL MOUNTED INCANDESCENT LIGHT WITH LAMP WATTAGE SHOWN

COMMUNICATIONS SYMBOLS

- PA — PUBLIC ADDRESS SPEAKER WITH SINGLE HORN.
- PA — PUBLIC ADDRESS SPEAKER WITH DUAL HORN.
- PA — PUBLIC ADDRESS SPEAKER FLUSH CEILING MOUNTED
- TEL — TELEPHONE & LAN OUTLET
- B — BELL
- H — HORN
- EH — EVACUATION SYSTEM HORN/SPEAKER

FIRE ALARM SYMBOLS

- SD — SMOKE DETECTOR
- HD — HEAT DETECTOR
- MS — MANUAL PULL STATION
- LP — LIGHTNING PROTECTOR
- H — HORN
- TS — TAMPER SWITCH
- FS — FLOW SWITCH
- FIRE ALARM PANEL

GROUNDING SYMBOLS

- G — GROUNDING CABLE EXPOSED
- G — GROUNDING CABLE EMBEDDED OR DIRECT BURIED
- G — GROUNDING CONNECTION
- GROUNDING ROD CONNECTION TO GROUNDING CABLE
- GROUNDING ROD TEST WELL, BOLTED CONNECTIONS TO GROUNDING CABLE
- G — GROUNDING CABLE WITH PARALLEL TAP TO TO STUB-UP WITH PIGTAIL

CABLE TRAY SYMBOLS

- COVER
- CABLE TRAY - END VIEW
- CABLE TRAY - SIDE VIEW
- CABLE TRAY - VERTICAL CURVE (TURNING DOWN)
- CABLE TRAY - VERTICAL CURVE (TURNING UP)
- P1. 12" — TRAY SECTION DESIGNATION
  - I = INSTRUMENTATION (ANALOG)
  - P = POWER
  - C = CONTROL (DIGITAL)
  - TRAY WIDTH

CONDUIT, LINE AND DUCTBANK SYMBOLS

- CONDUIT, EXPOSED
- CONDUIT, ROUTED BELOW PLAN ELEVATION, EMBEDDED OR DIRECT BURIED
- CONDUIT TURNING TOWARDS
- CONDUIT TURNING AWAY
- CONDUIT AND CABLE HOMERUN TO LOCATION INDICATED
- DISCONNECT AND REMOVE CONDUIT (D&R)
- FLEXIBLE CONDUIT AND CONNECTOR AT END OF RIGID CONDUIT RUN
- SEALED CONDUIT CONNECTOR FOR FIRE PROTECTION, VAPOR BARRIER
- CONDUIT GROUPINGS ALONG FLOOR OR WALL
- CONDUIT AND CABLE RUNS NOT LISTED IN CONDUIT AND CABLE SCHEDULE
- WEATHERHEAD AT END OF RIGID CONDUIT RUN
- 3-1/C#10 ,3/4"C — CONDUIT NUMBER AS IDENTIFIED ON CONDUIT SCHEDULE
- C1 — CONDUIT IDENTIFICATION BUBBLE
- 1" — CONDUIT SIZE AS IDENTIFIED ON CONDUIT SCHEDULE

PUSHBUTTON AND PANEL SYMBOLS

- PUSH BUTTON OR SELECTOR SWITCH , REMOTE MOUNTED, SINGLE
- PUSH BUTTON OR SELECTOR SWITCH , REMOTE MOUNTED, TWO OR MORE
- LP(X) — LIGHTING PANEL, SURFACE MOUNTED AND I.D. NUMBER
- PP(X) — POWER PANEL, FLUSH MOUNTED AND I.D. NUMBER
- TEL(X) — TELEPHONE PANEL
- ANNUN — ANNUNCIATOR

MONITOR SYMBOLS

- CM — CRITICALITY MONITOR WITH EMERGENCY POWER CIRCUIT
- RM — RADIATION MONITOR
- AM — AIR MONITOR STATION
- CO — CARBON MONOXIDE MONITOR PANEL
- INSTRUMENT
- XXXX — XXXX - DEVICE NUMBER

MISCELLANEOUS SYMBOLS

- M — HORIZONTAL MOTOR
- M — VERTICAL MOTOR
- EXISTING POWER POLE
- EXISTING CG&E POWER POLE
- EXISTING LIGHT POLE
- 12 / 35-5 — POLE NUMBER (12) POLE HEIGHT-CLASS (35-5)
- NEW LIGHT POLE
- EXISTING LIGHT POLE
- POLE DOWN-GUY AND ANCHOR

NO.	REVISIONS	DATE	DWN. BY	APPD.	NO.	REVISIONS	DATE	DWN. BY	APPD.	REF. DWG. NO.
					0	ISSUED FOR CAWWT 'STAGE 2' CONSTRUCTION	2/6/04	GEP		
					B	ISSUE FOR 90% REVIEW	8/25/03	GEP		
					A	ISSUE FOR 60% REVIEW	9/23/03	GEP		

NOTE: FLUOR FERNALD CADD DRAWING. DO NOT REVISE MANUALLY.

CONFIGURATION MANAGEMENT DRAWING — ENTIRE DRAWING OR COMPONENTS DESIGNATED AS CONFIGURATION MANAGEMENT CONTROL ARE NOTED. — COGNIZANT ENGINEER — DATE

APPROVALS				
CIVIL & STR.			SAFETY ENG.	
ELECTRICAL	J. Karl	2/4/04	MAINTENANCE	
ENGINEER			FIRE PROTECT.	
INSTRUMENT			WASTE MANAGE	
MECHANICAL			SECURITY	
			PROJECTS	2/4/04
CHECKED				
APPROVED				

Fernald Closure Project

FLUOR FERNALD, INC.

U.S. DEPARTMENT OF ENERGY

PROJECT 59600 STAGE 2

BLDG. 51A ADVANCED WASTEWATER TREATMENT (AWWT)

CONVERTED AWWT (CAWWT)

ELECTRICAL SYMBOLS & LEGEND

SHEET 2 OF 2

RES #4518 DATE 9/9/04 DRAWN G.E. PAUL

51D-5500-E-01365 0

FILE NAME: /RES4518/CAWWT/STAGE2/51DE1365.DGN

FCP&DGN 5/30/03

-5794

PANELBOARD LP-51C3

LOCATION: COLUMN D-7

VOLTAGE: [X] 120/240V., 1 PHASE, 3 WIRE [ ]

MOUNTING: [ ] FLUSH [ ] COLUMN [ ] SURFACE [ ]

COVER: [ ] DOOR WITH LOCK [ ] DOOR WITHOUT LOCK

MAINS: [ ] LUGS ONLY AMP. [ ] TOP [X] MAIN BREAKER 225 AMP. [ ] BOTTOM

NEUTRAL: [ ] 50% [ ] NONE [ ] 100%

TOTAL LOAD VA
LOAD PHASE B VA
LOAD PHASE A VA

ALL BRANCH BREAKERS 20 AMP. UNLESS NOTED. BREAKER INTERRUPTING CAPACITY: RMS SYM. AMPS

DESCRIPTION	LOAD	NO.	NO.	LOAD	DESCRIPTION	A	B
SPARE		1	2		BUILDING RECEPTACLES		
SPARE		3	4		BUILDING RECEPTACLES		
RTU-9		5	6		FIRE ALARM PANEL (FAP-51)		
DRYER CONTROLS		7	8		TELEPHONE BOARD		
SPARE		9	10		SEWAGE GRINDER PUMP		
OFFICE/LP-B MODULE (NORTH)		11	12		SEWAGE GRINDER PUMP		
OFFICE/LP-B MODULE (NORTH)		13	14		RESTROOM EXHAUST FAN (VF-1)		
DRYER BLOWDOWN TIMER		15	16				
		17	18				
		19	20				
		21	22				
		23	24				
		25	26				
		27	28				
		29	30				
		31	32				
		33	34				
		35	36				
		37	38				
		39	40				
		41	42				

PANELBOARD LP-51C2

LOCATION: COLUMN D-7

VOLTAGE: [ ] 208Y/120V., 3 PHASE, 4 WIRE [ ] 240V., 3 PHASE, 3 WIRE [X] 480Y/277V., 3 PHASE, 4 WIRE [ ]

MOUNTING: [ ] FLUSH [ ] COLUMN [X] SURFACE [ ]

COVER: [ ] DOOR WITH LOCK [X] DOOR WITHOUT LOCK

MAINS: [ ] LUGS ONLY AMP. [X] TOP [X] MAIN BREAKER 100 AMP. [ ] BOTTOM

NEUTRAL: [ ] 50% [ ] NONE [X] 100%

TOTAL LOAD
LOAD PHASE C
LOAD PHASE B
LOAD PHASE A

ALL BRANCH BREAKERS 20 AMP. UNLESS NOTED. BREAKER INTERRUPTING CAPACITY: 10000 RMS SYM. AMPS

DESCRIPTION	LOAD	NO.	NO.	LOAD	DESCRIPTION	A	B	C
BUILDING LIGHTS		1	2		EXIT SIGN & LIGHTS			
BUILDING LIGHTS		3	4		SPARE			
BUILDING LIGHTS		5	6		OUTDOOR LIGHTS			
AIR CONDITIONER - AC-1		7	8		DRYER HEATER			
AIR CONDITIONER - AC-1		9	10		DRYER HEATER			
AIR CONDITIONER - AC-1		11	12		DRYER HEATER			
AIR CONDITIONER - AC-2		13	14		SPARE			
AIR CONDITIONER - AC-2		15	16		SPARE			
AIR CONDITIONER - AC-2		17	18		SPARE			
SPARE		19	20		PLANT A/C COOLING PUMP & FAN			
SPARE		21	22		PLANT A/C COOLING PUMP & FAN			
SPARE		23	24		PLANT A/C COOLING PUMP & FAN			
		25	26					
		27	28					
		29	30					
		31	32					
		33	34					
		35	36					
		37	38					
		39	40					
		41	42					

PANELBOARD HV

LOCATION: OUTSIDE COLUMN A-10

VOLTAGE: [ ] 208Y/120V., 3 PHASE, 4 WIRE [ ] 240V., 3 PHASE, 3 WIRE [X] 480Y/277V., 3 PHASE, 4 WIRE [ ]

MOUNTING: [ ] FLUSH [ ] COLUMN [X] SURFACE [ ]

COVER: [ ] DOOR WITH LOCK [X] DOOR WITHOUT LOCK

MAINS: [ ] LUGS ONLY AMP. [X] TOP [X] MAIN BREAKER 100 AMP. [ ] BOTTOM

NEUTRAL: [ ] 50% [ ] NONE [X] 100%

TOTAL LOAD
LOAD PHASE C
LOAD PHASE B
LOAD PHASE A

ALL BRANCH BREAKERS 20 AMP. UNLESS NOTED. BREAKER INTERRUPTING CAPACITY: 10000 RMS SYM. AMPS

PANEL NO.	DESCRIPTION	LOAD	NO.	NO.	LOAD	DESCRIPTION	PANEL NO.	A	B	C
1	XFMR TO PNL-A		1	2		SPARE				
	XFMR TO PNL-A		3	4		SPARE	2			
	↓ PUSH TO TEST		5	6		SPARE				
	SPARE		7	8		PUSH TO TEST ↑				
3	SPARE		9	10		TNK-344 HEAT TRACING				
	SPARE		11	12		TNK-344 HEAT TRACING	4			
	SPACE		13	14		TNK-344 HEAT TRACING				
	↓ PUSH TO TEST		15	16		PUSH TO TEST ↑				
	TNK-221 HEAT TRACING		17	18		TNK-345 HEAT TRACING				
5	TNK-221 HEAT TRACING		19	20		TNK-345 HEAT TRACING	6			
	TNK-221 HEAT TRACING		21	22		TNK-345 HEAT TRACING				
	↓ PUSH TO TEST		23	24		PUSH TO TEST ↑				
	SPACE		25	26		SPACE				
	SPARE		27	28		WELDING RECEPTACLE				
7	SPARE		29	30		WELDING RECEPTACLE	8			
	SPARE		31	32		WELDING RECEPTACLE				
	SUMP PUMP MTR-SP-1		33	34		SUMP PUMP MTR-SP-2				
9	SUMP PUMP MTR-SP-1		35	36		SUMP PUMP MTR-SP-2	10			
	SUMP PUMP MTR-SP-1		37	38		SUMP PUMP MTR-SP-2				
	SPACE		39	40		SPACE				
	SPACE		41	42		SPACE				
	SPACE		43	44		SPACE				
	SPACE		45	46		SPACE				
	SPACE		47	48		SPACE				
	SPACE		49	50		SPACE				
	SPACE		51	52		SPACE				
	SPACE		53	54		SPACE				

PANELBOARD LPA

LOCATION: COLUMN A-11

VOLTAGE: [X] 120/240V., 1 PHASE, 3 WIRE [ ]

MOUNTING: [ ] FLUSH [ ] COLUMN [ ] SURFACE [ ]

COVER: [ ] DOOR WITH LOCK [ ] DOOR WITHOUT LOCK

MAINS: [ ] LUGS ONLY AMP. [ ] TOP [X] MAIN BREAKER 100 AMP. [ ] BOTTOM

NEUTRAL: [ ] 50% [ ] NONE [ ] 100%

TOTAL LOAD VA
LOAD PHASE B VA
LOAD PHASE A VA

ALL BRANCH BREAKERS 20 AMP. UNLESS NOTED. BREAKER INTERRUPTING CAPACITY: RMS SYM. AMPS

DESCRIPTION	LOAD	NO.	NO.	LOAD	DESCRIPTION	A	B
INSIDE LIGHTS & RECEPTACLES		1	2		OUTSIDE LIGHTS SOUTH CONTAINMENT		
OUTSIDE RECEPTACLES SOUTH CONTAINMENT		3	4		FIT-1056		
FIT-1007		5	6		FIT-1008		
FIT-1056		7	8		TURBIDITY CLARIFIER INSTRUMENTS		
LSLL-081		9	10		RTU-10 POWER		
OUTDOOR RECEPTACLE		11	12		SPACE		
SPACE		13	14		SPACE		
SPACE		15	16		SPACE		
SPACE		17	18		SPACE		
SPACE		19	20		SPACE		
SPACE		21	22		SPACE		
SPACE		23	24		SPACE		
SPACE		25	26		SPACE		
SPACE		27	28		SPACE		
SPACE		29	30		SPACE		
		31	32				
		33	34				
		35	36				
		37	38				
		39	40				
		41	42				

NO.	REVISIONS	DATE	DWN. BY	APPD.
O	ISSUED FOR CAWWT 'STAGE 2' CONSTRUCTION AND DCN: 59600-004	12/6/04	GEP	
B	ISSUED FOR 90% REVIEW	10/29/04	GEP	
A	ISSUED FOR 60% REVIEW	9/23/04	GEP	

NO.	REVISIONS	DATE	DWN. BY	APPD.

REF. DWG. NO.

NOTE: FLUOR FERNALD CADD DRAWING. DO NOT REVISE MANUALLY.

CONFIGURATION MANAGEMENT DRAWING [ ] [ ]

SYSTEMS, STRUCTURES OR COMPONENTS CONSIDERED AS FIELD DRAWN THE FIELD CONTROLLED UNDER MANAGEMENT CONTROL SEE NOTES.

COGNIZANT ENGINEER DATE

APPROVALS

CIVIL & STR.			SAFETY ENG.	
ELECTRICAL	S.J. Kent	12/6/04	MAINTENANCE	
ENGINEER			FIRE PROTECT.	
INSTRUMENT			WASTE MANAGE	
MECHANICAL			SECURITY	
			PROJECTS	Vogel 12/6/04
CHECKED	Mark Peckard	12/6/04		
APPROVED				

Fernald Closure Project

FLUOR FERNALD, INC.

U.S. DEPARTMENT OF ENERGY

PROJECT 59600 STAGE 2

BLDG. 51A ADVANCED WASTEWATER TREATMENT (AWWT)

CONVERTED AWWT (CAWWT)
PANEL SCHEDULES
NO SCALE

RES 4518
DATE 9/8/04
DRAWN G.E. PAUL

51D-5500-E-01366 0

FILE NAME: /RES4518/CAWWT/STAGE2/51DE1366.DGN

FDMS.DGN 5/30/03

5794

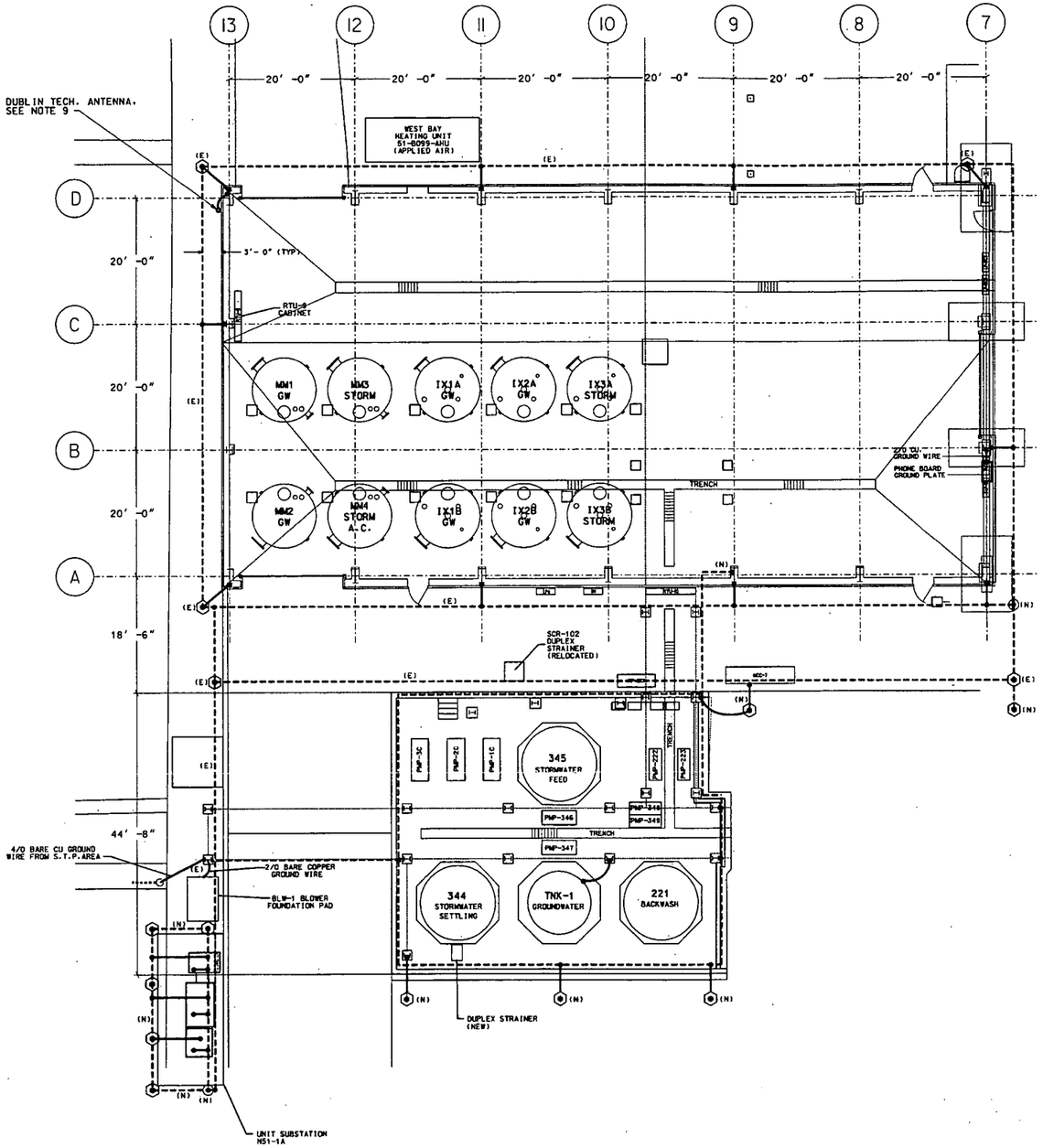

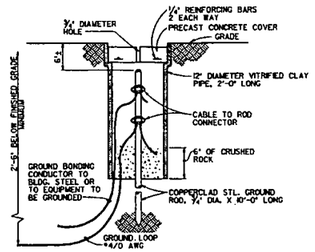

GROUND TEST WELL DETAIL
SCALE: NONE

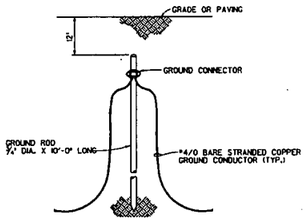

TYPICAL GROUND ROD INSTALLATION
SCALE: NONE

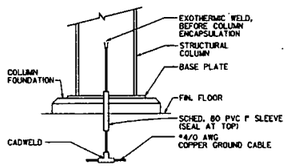

DETAIL STRUCTURE GROUNDING
NTS

LEGEND

- GROUND ROD (SEE TYPICAL GROUND ROD INSTALLATION)
- GROUND TEST WELL (SEE TYPICAL GROUND WELL INSTALLATION DETAIL)
- 2/0 BONDING TYPE GROUND CONNECTOR
- 4/0 COPPER GROUND CONDUCTOR
- (E) EXISTING
- (N) NEW

NOTES:

1. INSTALL 4/0 LOOP AROUND THE TANK AREA CONTAINMENT ATTACHED TO THE CURVE.
2. INSTALL 4/0 CABLE CONNECTED TO THE LOOP AND RUN OVER NORTH PIPE BRIDGE TO THE NEAREST BUILDING COLUMN WITH A VISIBLE GROUND CABLE ON IT.
3. INSTALL 4/0 CABLE CONNECTED TO THE LOOP AND RUN OVER THE WEST PIPE BRIDGE TO EXISTING GROUND GRID.
4. INSTALL 3 - 10' 3/4" COPPER CLAD GROUND RODS SPACED EVENLY EAST TO WEST, SOUTH OF THE CONTAINMENT AREA AND CONNECTED TO THE GROUND LOOP WITH 4/0 CABLE.
5. ALL THE ABOVE CONNECTIONS SHOULD BE MADE WITH 'CALDWELL' CONNECTIONS.
6. INSTALL 2/0 CABLE FROM THE LOOP TO EACH PIECE OF ELECTRICAL EQUIPMENT. CONNECT THESE CABLES WITH APPROVED MECHANICAL CONNECTIONS (NOT SHOWN ON DRAWING).
7. ALL CABLE SHALL BE COPPER WITH SILVER TIN.
8. SECURE CABLE WITH METAL CLAMPS AND PROTECT CABLE WITH CONDUIT OR APPROVED EQUAL AT AREAS LIKELY TO BE DAMAGED.
9. TIE-IN NEW DUBLIN TECH. RADIO ANTENNA BARE COPPER GROUNDING CONDUCTOR TO EXISTING BUILDING GROUND POINT ON COL. D-13.

NO.	REVISIONS	DATE	DWN. BY	APPD.	NO.	REVISIONS	DATE	DWN. BY	APPD.	REF. DWG. NO.
										51D-4445-E-00461
										51D-5500-E-01351
					0	ISSUED FOR CAWWT 'STAGE 2' CONSTRUCTION	12/6/04	GEP		51D-4445-E-00464
					B	ISSUED FOR 90% REVIEW	8/23/04	GEP		51X-1910-E-00082

NOTE: FLUOR FERNALD CADD DRAWING. DO NOT REVISE MANUALLY.

CONFIGURATION MANAGEMENT DRAWING
SYSTEMS, STRUCTURES OR COMPONENTS DEPICTED ON THIS DRAWING ARE UNDER CONFIGURATION MANAGEMENT CONTROL. SEE NOTES.
COGNIZANT ENGINEER DATE

APPROVALS

CIVIL & STR.			SAFETY ENG.	
ELECTRICAL	J. L. Kent	12/6/04	MAINTENANCE	
ENGINEER			FIRE PROTECT.	
INSTRUMENT			WASTE MANAGE.	
MECHANICAL			SECURITY	
			PROJECTS	12/6/04
CHECKED				
APPROVED		12/6/04		

Fernald Closure Project
FLUOR FERNALD, INC.
U.S. DEPARTMENT OF ENERGY

PROJECT 59600 STAGE 2
BLDG. 51A ADVANCED WASTEWATER TREATMENT (AWWT)
CONVERTED AWWT (CAWWT)
GROUNDING PLAN
SCALE: 1"=8'-0"
RES 4518
DATE Oct. 4, 2004
DRAWN C.E. PAUL
51D-5500-E-01425 0

FILE NAME: /RES4518/CAWWT/STAGE 2/51DE1425.DGN

FCPS.DGN 5/30/03

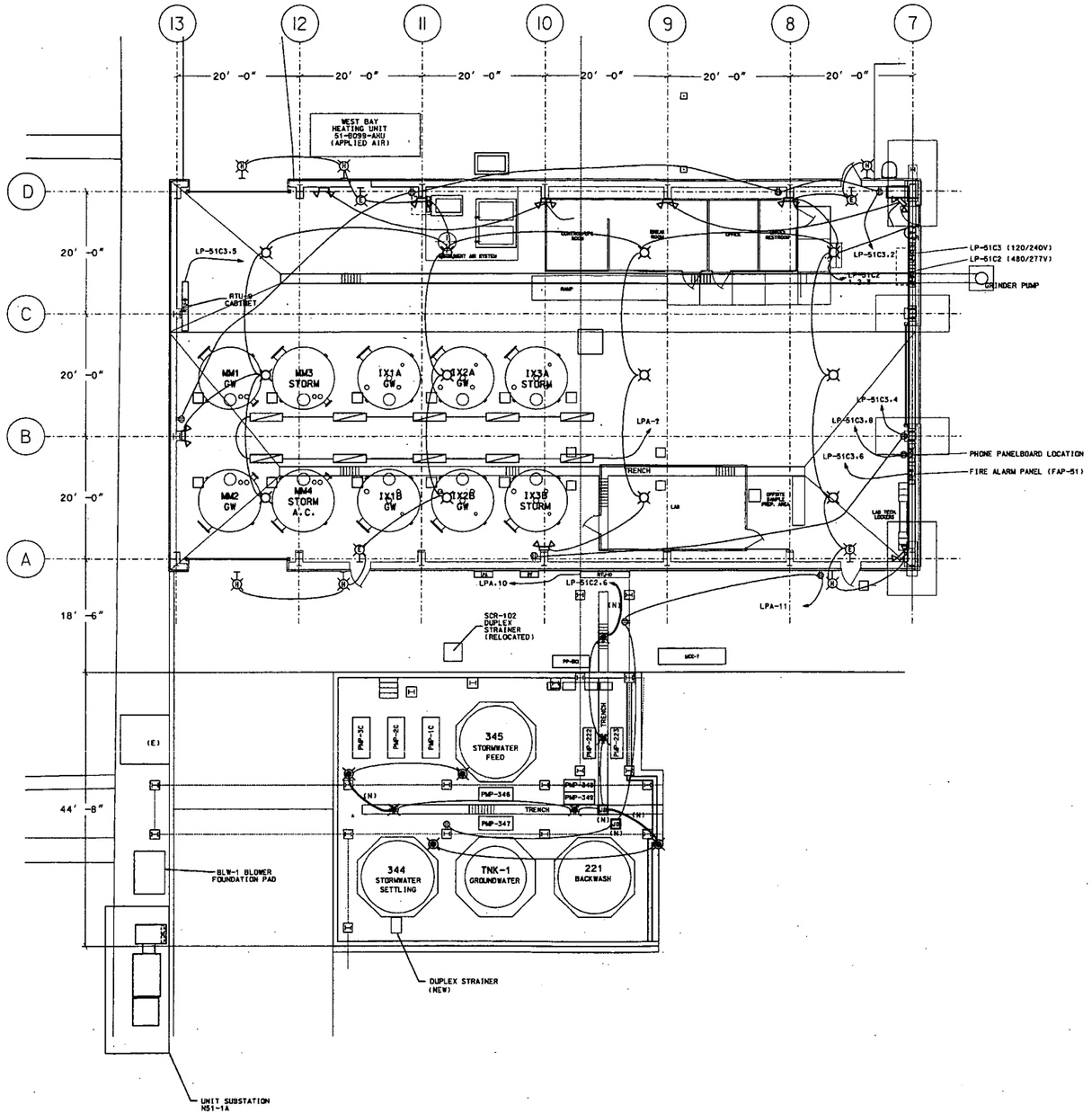

LEGEND

- 2L/15W EXTENDED LIFE INCANDESCENT EXIT SIGN. WALL MOUNTED WITH 6" RED STENCIL LETTERS. SATIN ALUMINUM FINISH. BATTERY. SOLID STATE CHARGER. CHARGER INDICATOR & TEST CIRCUIT & 4.2W EMERGENCY LAMP. 277V OPERATION. MILLER CAT. NO. EX-1000KB-277V
- 1L/100W HPS WALL MOUNTED FIXTURE WITH WEATHER-PROOF DIE-CAST ALUMINUM HOUSING. THERMAL RESISTANT GASKETED GLASS. PRISMATIC REFLECTOR. PHOTO CONTROL & 277V HPF BALLAST. MOUNT 9' 0" AFG UNLESS NOTED OTHERWISE. MILLER CAT. NO. LSWOOTHANL-P
- 1L/250W HPS PENDANT MOUNTED FIXTURE. HIGH BAY TYPE WITH CAST BODY. OPEN VENTILATED GLASS REFLECTOR & 277V HPF BALLAST. MOUNT 52' 6" AFF HOLOPANE CAT NO. PP4K-250HP27-OD-J39-F1
- 2L/12W EMERGENCY LIGHT UNIT. WALL MOUNT WITH A SOLID STATE BATTERY CHARGER. 6V. 5 CELL SEALED LEAD ACID. CALCIUM-ALLOY GRID BATTERY. INTERNAL READY/STANDBY & EXTERNAL "PRESS-TO-TEST" SWITCHES READY LIGHT. FAST CHARGE RATE INDICATING LIGHT. SIDE MOUNTED VOLTMETER. TWO (2) HALOGEN 6V. 12W LAMPS & 277V OPERATION. MOUNT 7'-6" AFF. UNLESS OTHERWISE NOTED. EXIDE CAT. NO. LIGHT UNIT: L-100-2H. MOUNTING BRACKET: MBB. BEIGE REMOTE HEAD: H126
- S_A SINGLE POLE SWITCH - MOUNT 4' 6" AFF. "A" INDICATES FIXTURES CONTROLLER
- S_B SINGLE POLE SWITCH - MOUNT 4' 6" AFF. "B" INDICATES FIXTURES CONTROLLER
- DUPLEX CONVIENCE OUTLET. NEMA 5-20R. MOUNT AT 1' 6" AFF UNLESS OTHERWISE NOTED
- FLUORESCENT (2) LIGHT FIXTURE. TYP. (10) PLACES MOUNTED FROM PIPE RACK STEEL TO MINIMIZE PIPE INTERFERENCES. METALUX CAT NO. VT-24B-HO-DR-120V-WL
- 120V INCANDENCENT PENDANT LIGHT FIXTURE. ABOVE CATWALK
- (N) NEW

NOTES

1. ALL WIRING TO BE #12 CU WITH THWN INSULATION IN 3/4" C CONDUIT MINIMUM. UNLESS OTHERWISE STATED.
2. FOR OFFICE MODULE ELECTRIC. SEE DWG. 51D-5500-A-01362.
3. FOR LAB MODULE ELECTRIC. SEE DWG. 51D-5500-A-01361.

NO.	REVISIONS	DATE	DWN.	BY	APPD.	NO.	REVISIONS	DATE	DWN.	BY	APPD.	REF. DWG. NO.
												51D-5500-E-01351
												51D-4445-E-00464
												51D-4445-E-00461
						0	ISSUED FOR CAWWT 'STAGE 2' CONSTRUCTION AND	12/5/04	GEP			51X-1910-E-00081
							AND DCN: 59600-004					51X-1910-E-00073
						B	ISSUED FOR 90% REVIEW	10/25/04	GEP			51X-1910-E-00071

NOTE: FLUOR FERNALD CADD DRAWING. DO NOT REVISE MANUALLY.

CONFIGURATION MANAGEMENT DRAWING — SYSTEMS, STRUCTURES OR COMPONENTS IDENTIFIED ON THIS DRAWING ARE UNDER CONFIGURATION MANAGEMENT CONTROL. SEE NOTES. — COGNIZANT ENGINEER — DATE

APPROVALS					
CIVIL & STR.			SAFETY ENG.		
ELECTRICAL	G. L. Kind	12/6/04	MAINTENANCE		
ENGINEER			FIRE PROTECT.		
INSTRUMENT			WASTE MANAGE		
MECHANICAL			SECURITY		
			PROJECTS		12/6/04
CHECKED					
APPROVED		12/6/04			

Fernald Closure Project

FLUOR FERNALD, INC.

U.S. DEPARTMENT OF ENERGY

PROJECT 59600 STAGE 2

BLDG. 51A ADVANCED WASTEWATER TREATMENT (AWWT)

CONVERTED AWWT (CAWWT) LIGHTING AND RECEPTACLE PLAN

SCALE: 1"=8'-0"

RES 4548

DATE Oct. 4, 2004

DRAWN G.E. PALE

51D-5500-E-01426 | 0

FILE NAME: /RES4518/CAWWT/STAGE 2/51DE1426.DGN

FCPS.DGN 5/30/03

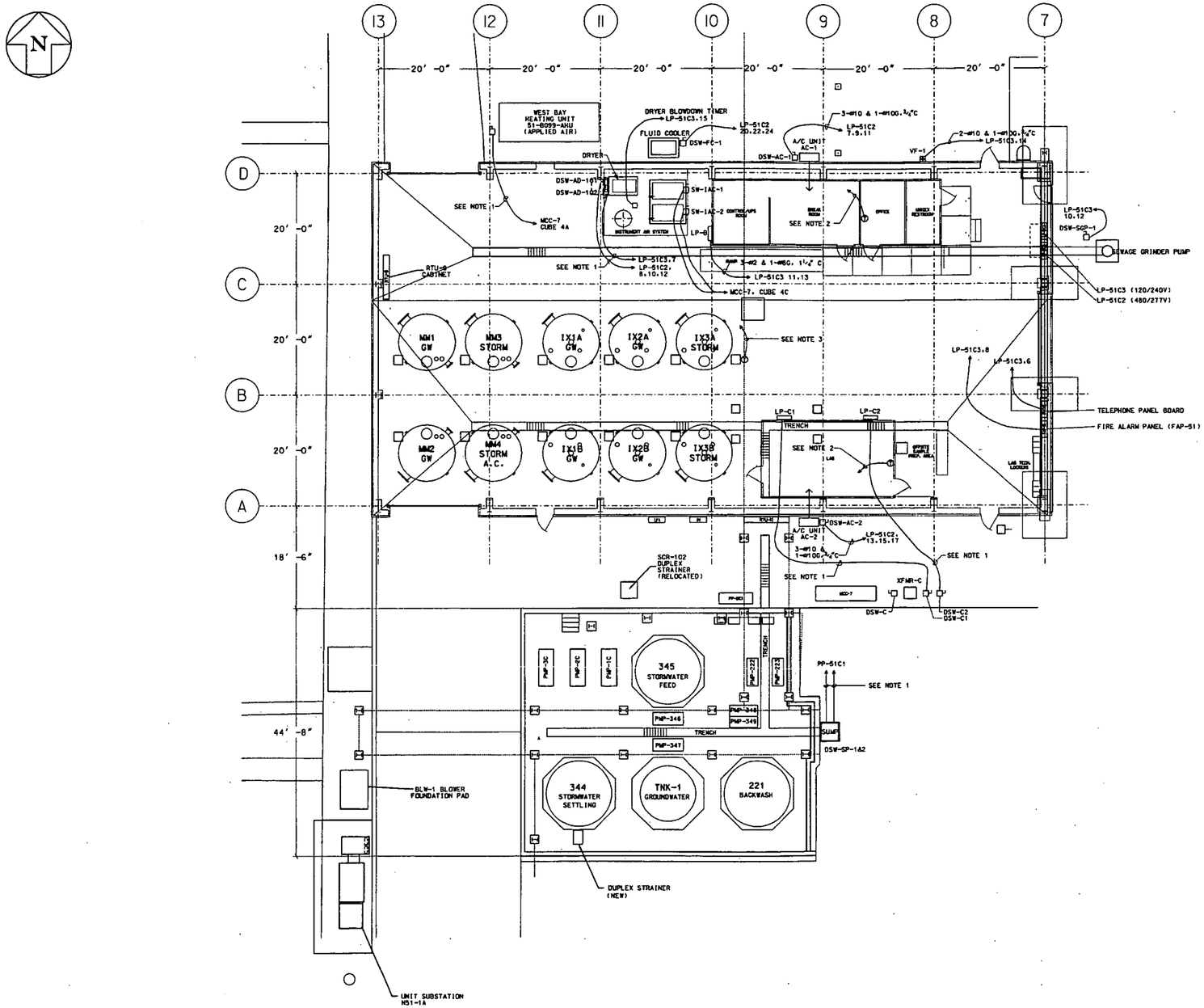

DISCONNECT SWITCH (DSW) SCHEDULE

NAME	TYPE	FUSE SIZE	ENCLOSURE	COMMENTS
DSW-FC-1	480V.3P.30A	15	3R	
DSW-AC-1	480V.3P.30A	25	3R	
DSW-AC-1	480V.3P.30A	25	3R	
DSW-SGP-1	240V.2P.30A	NF	3R	
DSW-AD-101	480V.3P.30A	20	1	
DSW-AD-102	240V.1P.30A	20	1	
DSW-IAC-1	480V.3P.100A	T5	1	VENDOR SUPPLIED
DSW-IAC-2	480V.3P.100A	T5	1	VENDOR SUPPLIED
DSW-C	480V.3P.200A	NF	3R	
DSW-C1	480V.3P.100A	100	3R	
DSW-C2	480V.3P.100A	100	3R	

NOTE

1. SEE SINGLE LINE FOR WIRE AND CONDUIT SIZES. ON DRAWING 51D-5500-E-01331
2. RUN 3/4" C. AND WIRING FROM THERMOSTAT/HUMIDISTAT TO AIR CONDITIONING UNIT
3. RUN 3/4" C. AND WIRING FROM RELOCATED HEATING UNIT CONTROLS TO HEATING UNIT 51-8099-AHU.

LEGEND

(T) - THERMOSTAT/HUMIDISTAT

(VF) - VENTILATION FAN

NO.	REVISIONS	DATE	DWN. BY	APPD.	NO.	REVISIONS	DATE	DWN. BY	APPD.	REF. DWG. NO.
										51D-5500-E-01351
										51D-4445-E-00464
										51D-4445-E-00461
					0	ISSUED FOR CAWWT 'STAGE 2' CONSTRUCTION AND	D/5/04	GEP		51X-1910-E-00081
						DCN: 59600-004				51X-1910-E-00073
					B	ISSUED FOR 90% REVIEW	D/29/04	GEP		51X-1910-E-00071

NOTE: FLUOR FERNALD CADD DRAWING, DO NOT REVISE MANUALLY.

CONFIGURATION MANAGEMENT DRAWING — YES / NO
EXISTING STRUCTURES OR COMPONENTS MAY BE AFFECTED BY ACTIVITIES. CONFIGURATION MANAGEMENT CONTROL SEE NOTES.
COGNIZANT ENGINEER — DATE

APPROVALS

CIVIL & STR.			SAFETY ENG.		
ELECTRICAL	J.T. Kal	12/4/04	MAINTENANCE		
ENGINEER			FIRE PROTECT.		
INSTRUMENT			WASTE MANAGE		
MECHANICAL			SECURITY		
			PROJECTS	P. Engel	12/5/04
CHECKED					
APPROVED					

Fernald Closure Project

FLUOR FERNALD, INC.

U.S. DEPARTMENT OF ENERGY

PROJECT 59600 STAGE 2

BLDG. 51A ADVANCED WASTEWATER TREATMENT (AWWT)

CONVERTED AWWT (CAWWT)

POWER PLAN

SCALE: 1"=8'-0"

RES 4518

DATE Oct. 4, 2004

DRAWN G.E. PAUL

51D-5500-E-01427 | 0

FILE NAME: /RES4518/CAWWT/STAGE 2/51DE1427.DGN

FCPSLDGN 5/30/03

91

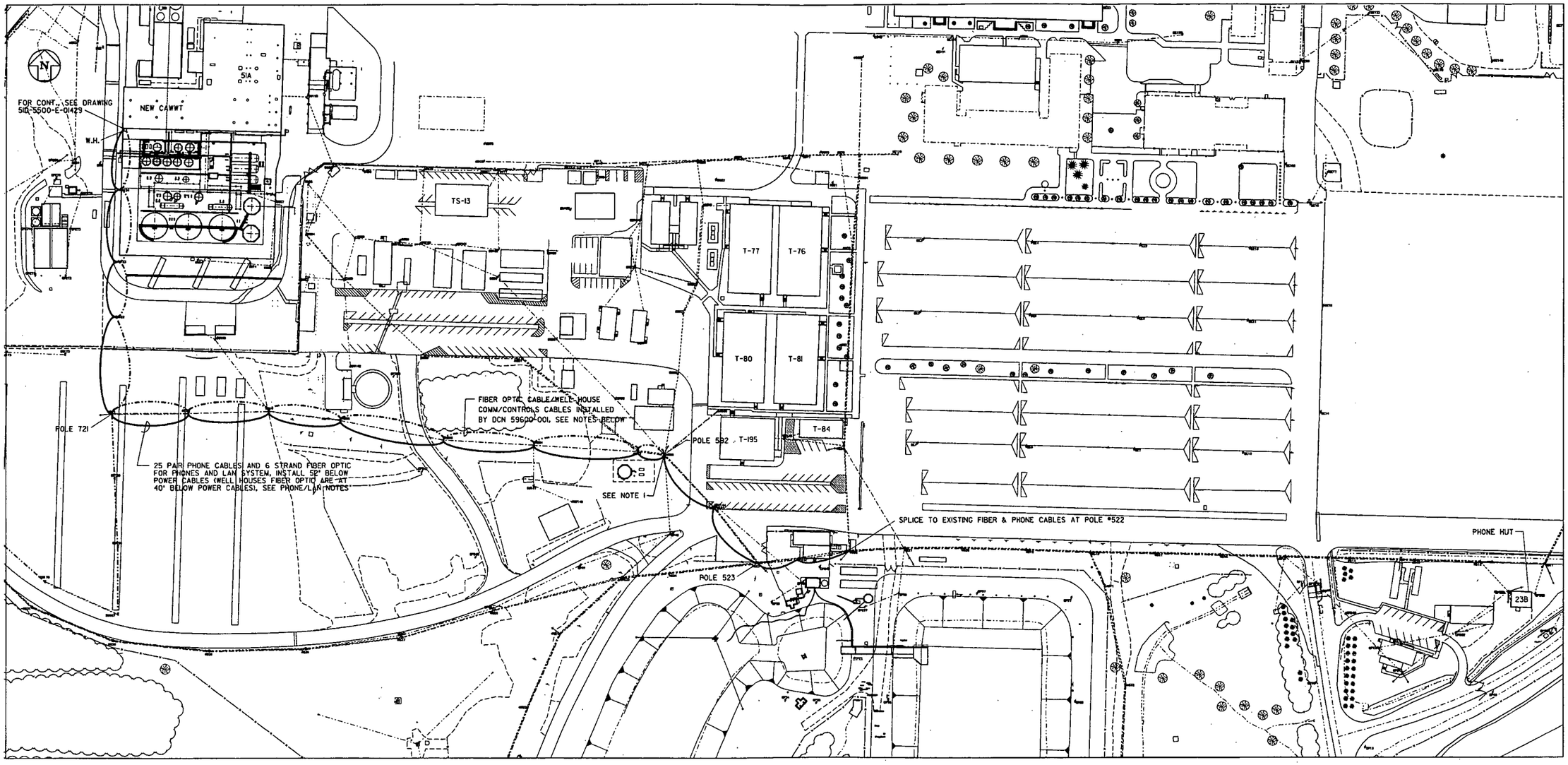

COMMUNICATIONS PLAN

SCALE: 1"=60'-0"

PHONE / LAN NOTES

1. FURNISH & INSTALL 1 - 25 PAIR, 24 GAUGE, AIRCORE COPPER AND A 6 STRAND 62.5/125 UMMM AIRCORE FIBER IN ACCCORDANCE WITH ANSI/EIA/TIA 568-A. CABLES TO BE ROUTED FROM POLE #522 TO PHONE EQUIPMENT BACKBOARD IN CAWWT. INSTALL 3" CONDUIT FROM CAWWT BUILDING SOUTHWEST CORNER TO PHONE BACKBOARD ON EAST WALL. BACKBOARD TO BE 4'x8'x¾" AC PLYWOOD WITH 2 COATS OF FIRE RETARDANT PAINT. COPPER WIRES TO BE TERMINATED TO A 110V PROTECTOR UNIT WITH SOLID STATE GAS TUBE PROTECTORS WITH #6 GREEN INSULATED COPPER GROUND WIRE TO BUILDING GROUND SYSTEM.

2. INSTALL CABLES ON POLES INDICATED BY LASHING CABLES TO A ⅜" MESSENGER INSTALLED PER DWG. 23X-5500-E-00269. GROUND BOTH ENDS AND AT EACH POLE WITH #6 CU GROUND WIRE PER DWG. 23X-5500-E-00268. INSTALL ON POLES TO MAINTAIN 18.5 FEET ABOVE GRADE AT MAX. SAG. MAINTAIN A MINIMUM OF 52" BELOW 600V INSULATED POWER WIRING.
PLEASE NOTE THAT 2 FIBER OPTIC CABLES FOR WELL HOUSES COMM-CONTROL WILL HAVE INSTALLED 40" BELOW POWER WIRING AS STATED ON DCN 59600-001.

NOTES FOR WELL HOUSE FIBER OPTICS

1. SPLICE FIBER OPTIC CABLES FROM SOUTHWEST & SOUTHEAST WELL HOUSES AT POLE 592.

2. FURNISH AND INSTALL 2 MS2 SPLICING MODULES, ANIXTER #131610, WITH A #171529 CLOSURE, ONE FOR THE 2 STRAND SOUTHEAST FIBER OPTIC CABLE AND ONE FOR THE 2 STRAND SOUTHWEST FIBER OPTIC CABLE.

3. INSTALL 2 NEW 2 STRAND 62.5/125 MUTLTIMODE (BELDEN 225702) FIBER OPTIC CABLES FROM POLE 592 TO RTU-10. SEE DRAWING FOR ROUTING. LASH CABLES TO A ⅜" GALV. MESSENGER. INSTALL PER DRAWING 23X-5500-E-00269. GROUND BOTH ENDS AT EACH POLE WITH A #6 GROUND WIRE PER DRAWING 23X-5500-E-00268. INSTALL ON POLES TO MAINTAIN 19.5 FEET ABOVE GRADE AT MAX. SAG. MAINTAIN A MIN. OF 40" BELOW 600V INSULATED POWER WIRING.
PLEASE NOTE A 100 PAIR COPPER PHONE CABLE AND 6 STRAND FIBER OPTIC CABLE ON A ⅜" MESSENGER WILL BE ADDED 1 FOOT BELOW WELL HOUSE COMM/CONTROL FIBER OPTIC CABLES.

4. FIBER OPTIC CABLES SHALL BE TERMINATED WITH ST CONNECTORS AND TESTED FOR LOSES. SEE DOCUMENT SFESII/RES 4341/53600, SECTION 16129 "FIBER OPTIC CABLE AND ACCESSORIES" FOR PARTS AND TEST DETAILS.

NO.	REVISIONS	DATE	DWN. BY	APPD.	NO.	REVISIONS	DATE	DWN. BY	APPD.	REF. DWG. NO.
					0	ISSUED FOR CAWWT 'STAGE 2' CONSTRUCTION	12-6-01	GEP		
					B	ISSUED FOR 90% REVIEW	10-23-01	GEP		

NOTE: FLUOR FERNALD CADD DRAWING. DO NOT REVISE MANUALLY.

CONFIGURATION MANAGEMENT DRAWING — STATUS: ATTRIBUTES OR COMPONENTS DEPICTED ON THIS DRAWING ARE UNDER CONFIGURATION MANAGEMENT CONTROL. SEE NOTES.

COGNIZANT ENGINEER — DATE

APPROVALS

CIVIL & STR.			SAFETY ENG.	
ELECTRICAL	J.E. Kent		MAINTENANCE	
ENGINEER			FIRE PROTECT.	
INSTRUMENT			WASTE MANAGE.	
MECHANICAL			SECURITY	
			PROJECTS	
CHECKED				
APPROVED				

Fernald Closure Project

FLUOR FERNALD, INC.

U.S. DEPARTMENT OF ENERGY

PROJECT 59600 STAGE 2

BLDG. 51A ADVANCED WASTEWATER TREATMENT FACILITY

CONVERTED AWWT (CAWWT)

COMMUNICATIONS PLAN

PHONE/LAN/WELL HOUSE FIBER OPTIC

RES 458 | DATE OCT. 6, 2004 | DRAWN G.E. PAUL | 5ID-5500-E-01428 | 0

FILE NAME: /RES4518/CAWWT/STAGE2/5IDE1428.DGN

FOPS.DGN 5/30/03

579

L1

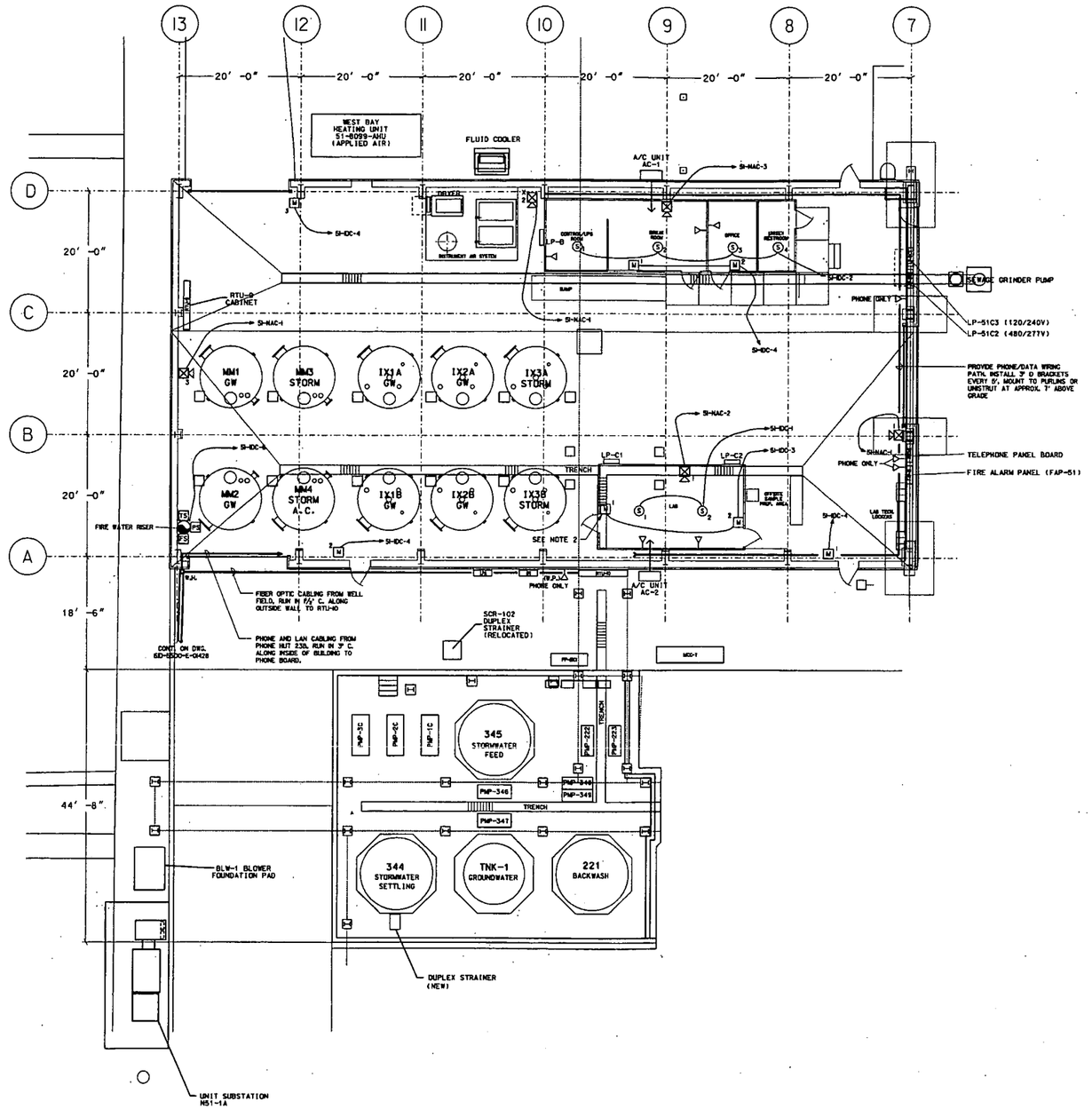

NOTE

1. SEE DRAWING 51D-5500-E-01430 FOR FIRE ALARM PARTS AND NOTES.
2. PUT FIRE ALARM PULL STATION M-1 IN WEATHER PROOF COVER

NO.	REVISIONS	DATE	DWN. BY	APPD.	NO.	REVISIONS	DATE	DWN. BY	APPD.	REF. DWG. NO.
										51D-5500-E-01351
										51D-4445-E-00464
										51D-4445-E-00461
										51X-1910-E-00081
					0	ISSUED FOR CAWWT 'STAGE 2' CONSTRUCTION	8/6/04	GEP		51X-1910-E-00073
					B	ISSUED FOR 90% REVIEW	8/2/04	GEP		51X-1910-E-00071

NOTE: FLUOR FERNALD CADD DRAWING. DO NOT REVISE MANUALLY.

CONFIGURATION MANAGEMENT DRAWING — YES / NO

SYSTEMS, STRUCTURES OR COMPONENTS IDENTIFIED ON THIS DRAWING ARE UNDER CONFIGURATION MANAGEMENT CONTROL. SEE NOTES.

COGNIZANT ENGINEER — DATE

APPROVALS

CIVIL & STR.			SAFETY ENG.	
ELECTRICAL			MAINTENANCE	
ENGINEER			FIRE PROTECT.	
INSTRUMENT			WASTE MANAGE.	
MECHANICAL			SECURITY	
			PROJECTS	
CHECKED				
APPROVED				

Fernald Closure Project

FLUOR FERNALD, INC.

U.S. DEPARTMENT OF ENERGY

PROJECT 59600 STAGE 2

BLDG. 51A ADVANCED WASTEWATER TREATMENT (AWWT)

CONVERTED AWWT (CAWWT)
BUILDING COMMUNICATIONS & FIRE ALARM
PLAN - SCALE: 1"=8'-0"

RES 4518
DATE Oct. 4, 2004
DRAWN G.E. PAUL

51D-5500-E-01429 0

FILE NAME: /RES4518/CAWWT/STAGE 2/51DE1429.DGN

FCPS.DGN 5/30/03

5794

81

HONEYWELL FIRE ALARM MATERIAL LIST

ITEM NO.	QTY.	DESCRIPTION	PART NUMBER
1		BF INDICATING CARD	HONEYWELL P/N 14505110-002
2		AA INITIATING CARD	HONEYWELL P/N 14505106-001
3		PHOTO ELECTRIC SMOKE DETECTORS	HONEYWELL P/N TC804C
4		SMOKE DETECTOR BASES	HONEYWELL P/N 14506587-001
5		RATE OF RISE/FIXED TEMPERATURE HEAT DETECTORS	HONEYWELL P/N T4057A
6		MANUAL PULL STATIONS - WEATHERPROOF	HONEYWELL P/N S464A1128
7		HORN/STROBE UNITS	HONEYWELL P/N SC716B-1019
8		STROBES	HONEYWELL P/N SC813B-2001
9		EVAC SPEAKERS	HONEYWELL P/N SC81A1015
10		LIGHTNING SUPPRESSORS FOR EVAC	HONEYWELL P/N 14502412-018
11		LIGHTNING SUPPRESSORS FOR HORN CIRCUIT	HONEYWELL P/N 14502412-018
12		LIGHTNING SUPPRESSORS FOR SMOKE DETECTORS AND MANUAL PULL STATIONS	HONEYWELL P/N 14502412-005
13		1.9K (UL) LISTED END OF LINE RESISTORS FOR SMOKE DETECTORS, HEAT DETECTORS, MANUAL PULL AND HORN/STROBE CIRCUITS	HONEYWELL P/N 14501600-001
14	TBD	8 PAIR 16/2 OVERHEAD CABLE	BELDEN P/N 1071A
15	TBD	18/2 RED/YELLOW STATION WIRING FOR SMOKE DETECTORS AND MANUAL PULL STATIONS	HONEYWELL P/N AK3702R
16	TBD	18/2 YELLOW/BROWN STATION WIRING FOR HORN/STROBES	HONEYWELL P/N AK3702B
17	TBD	16/2 BLACK/WHITE SPEAKER WIRE FOR EVAC SPEAKERS	ANY COMMERCIAL SPEAKER CABLE IS ACCEPTABLE
18A	TBD	PLENUM CABLE - 2 PR (SEE NOTE 2)	HONEYWELL P/N B6222UL
18B	TBD	PLENUM CABLE - 1 PR (SEE NOTE 2)	HONEYWELL P/N B6220UL
19		MOBILE EVAC CABLE	HONEYWELL MOBILE EVAC

MATERIAL LIST

DESCRIPTION	MANUFACTURER	MODEL NUMBER	QUANTITY
FIRE ALARM CONTROL PANEL	SILENT KNIGHT	SK-5208	1
ZONE EXPANDER	SILENT KNIGHT	SK-5217	0
ACCESSORY BATTERY CABINET	SILENT KNIGHT	33-AB	AS REQUIRED
FIRE ALARM PANEL ENCLOSURE	SILENT KNIGHT	SK-2190	AS REQUIRED
STATUS DISPLAY MODULE	SILENT KNIGHT	SK-5280	0
REMOTE ANNUNCIATOR	SILENT KNIGHT	SK-5235	0
DISTRIBUTED POWER MODULE	SILENT KNIGHT	5495	3
PHOTOELECTRIC DUCT SMOKE DETECTOR	SYSTEM SENSOR	DH100LP	0
REMOTE TEST STATION (WHERE REQUIRED)	SYSTEM SENSOR	RTS451	AS REQUIRED
LED ANNUNCIATOR (WHERE REQUIRED)	SYSTEM SENSOR	RA400Z	AS REQUIRED
SAMPLING TUBE (LENGTH AS REQUIRED)	SYSTEM SENSOR	ST-1.5, ST-3, ST-5, ST-10	AS REQUIRED
PHOTOELECTRIC SMOKE DETECTOR	HONEYWELL	TC804C	6
SMOKE DETECTOR BASE	HONEYWELL	14506587-001	6
RATE OF RISE/FIXED TEMPERATURE HEAT DETECTOR 200 °F	HONEYWELL	T4057A	0
LINEAR BEAM SMOKE DETECTOR	SIEMENS	PBA1191	0
LINEAR BEAM SMOKE DETECTOR BASE	SIEMENS	PBB1191	0
LINEAR BEAM REFLECTOR	SIEMENS	PBR1192	0
LINEAR BEAM DETECTOR ADJUSTMENT KIT	SIEMENS	PBL1191	0
MANUAL PULL BOX	HONEYWELL	S464A1128	8
COMBINATION HORN/STROBE	HONEYWELL	SC716B-1019	5
WEATHERPROOF BACKBOX	HONEYWELL	14507438-001	0
STROBE	HONEYWELL	SC813B-2001	0
EVAC SPEAKER	HONEYWELL	SC81A1015	0
EVAC SPEAKER WEATHERPROOF	HONEYWELL	ATLAP15TUC	0
LIGHTNING SUPPRESSION MODULE FOR NOTIFICATION CIRCUIT.	HONEYWELL	14502412-018	0
LIGHTNING SUPPRESSION MODULE FOR EVAC SPEAKER CIRCUIT.	HONEYWELL	14502412-018	0
LIGHTNING SUPPRESSION MODULE FOR INITIATION CIRCUIT.	HONEYWELL	14502412-005	0
END OF LINE RESISTOR FOR INITIATION AND NOTIFICATION CIRCUITS 4.7k OHM	SILENT KNIGHT	7628	AS REQUIRED
MULTI-VOLTAGE CONTROL RELAY (9-35VDC INPUT)	HONEYWELL	RB466A	AS REQUIRED
POWER SUPERVISION RELAY (9-35VDC INPUT)	HONEYWELL	RB466A	AS REQUIRED
WIRE FOR IDC - 18/2 AWG, 300 VOLT	HONEYWELL	AK3702R	AS REQUIRED
WIRE FOR NAC - 18/2 AWG, 300 VOLT	HONEYWELL	AK3702B	AS REQUIRED

LEGEND

SYMBOL	DESCRIPTION
[2]	DUCT SMOKE DETECTOR (PHOTOELECTRIC)
(2)	SMOKE DETECTOR (PHOTOELECTRIC)
(BD)	LINEAR BEAM SMOKE DETECTOR
(R)	REFLECTOR FOR LINEAR BEAM SMOKE DETECTOR
[F]	MANUAL PULL BOX SURFACE MOUNTED
(H)	HEAT DETECTOR
W X	EVACUATION SPEAKER SURFACE MOUNTED (W = WATTS) (X = DEVICE NUMBER)
cd X	STROBE DEVICE (cd = CANDELA) (X = DEVICE NUMBER) SURFACE MOUNTED
cd X	COMBINATION HORN/STROBE DEVICE (cd = CANDELA) SURFACE MOUNTED (X = DEVICE NUMBER)
[TS]	TAMPER SWITCH (NOTE B)
[PS]	PRESSURE SWITCH (NOTE B)
[FS]	WATER FLOW SWITCH (NOTE B)
[FACP]	FIRE ALARM CONTROL PANEL
[LPP]	LIGHTNING PROTECTION PANEL (SEE NOTE A)
[DPM]	DISTRIBUTED POWER MODULE
[ANN]	REMOTE ANNUNCIATOR
[R]	RELAY
—●—	CONDUIT JUCTION BOX

NOTES:
A. FOR LIGHTNING PROTECTION PANEL SEE DWG. 44X-5500-E-00366
B.

DESIGN CRITERIA

INITIATION CIRCUITS: NFPA 72 CLASS B, STYLE B.

NOTIFICATION CIRCUITS: NFPA 72, CLASS B, STYLE Y.

AUDIBLE NOTIFICATION ALL AREAS: 85dBA MINIMUM.

VISIBLE NOTIFICATION ALL AREAS: 0.0375 LUMENS PER SQUARE FOOT.

GENERAL NOTES

1. THE FIRE ALARM DRAWINGS ARE DIAGRAMMATIC AND FOR GENERAL ARRANGEMENT AND SCOPE OF WORK ONLY. THE FIRE ALARM CONTRACTOR SHALL BE RESPONSIBLE FOR DEVELOPMENT AND OBTAINING APPROVAL OF WORKING DRAWINGS FROM THE JURISDICTIONAL AUTHORITIES PRIOR TO INSTALLATION.
2. REFER TO CONSTRUCTION SPECIFICATON SECTION 16721.
3. WORK SHALL BE EQUAL OR SUPERIOR TO NFPA 72 AND GOVERNING RULES, CODES, ORDERS, REGULATIONS, ORDINANCES, AND LAWS RELATED TO THE WORK. NOTHING IN THE DRAWINGS OR SPECIFICATIONS PERMIT VIOLATION OF SUCH DIRECTIVES AND WHERE CONFLICT OCCURS THE DIRECTIVE SHALL GOVERN.
4. THE FIRE ALARM CONTRACTOR SHALL COORDINATE THE FIRE ALARM DESIGN WITH ALL OTHER TRADES AND DISCIPLINES. REFER TO ARCHITECTURAL, STRUCTURAL, PROCESS, ELECTRICAL, PIPING, AND MECHANICAL DRAWINGS.
5. FIRE ALARM WIRING SHALL RUN IN A DEDICATED CONDUIT. CONDUIT SHALL BE 3/4 " UNLESS NOTED OTHERWISE AND SHALL INCLUDE PULL STRING. FIRE ALARM CIRCUIT WIRING SHALL BE 18 AWG UNLESS NOTED OTHERWISE. EVAC CIRCUIT WIRING SHALL BE 18 AWG UNLESS NOTED OTHERWISE.
6. WHERE FIRE ALARM INITIATING DEVICES ARE INACCESSIBLE, PROVIDE REMOTE LED INDICATOR AND TEST SWITCH FOR EACH DEVICE.
7. PROVIDE SUPPORT STEEL FOR DEVICES AND EQUIPMENT WHERE REQUIRED. SUPPORTS SHALL BE GALVANIZED STEEL.
8. PROVIDE AS-BUILT DRAWINGS SHOWING DEVICES AT INSTALLED LOCATIONS AND AS-BUILT RISER DIAGRAMS INDICATING ALL DEVICE CIRCUITING.
9. NOTIFICATION DEVICES SHALL BE SYNCHRONIZED.
10. NOT USED
11. CIRCUIT INSTALLATION:
    - NO "T" TAPPING PERMITTED.
    - MAINTAIN CONSISTENT WIRING POLARITY.
12. NOT USED

NOTES:
1. FINAL HONEYWELL WIRING CONNECTIONS SHALL BE DONE BY ON-SITE FIRE ALARM CONTRACTOR.
2. PLENUM CABLE TO BE USED WITHOUT PROTECTION ONLY 7FT. ABOVE FINISH FLOOR (A.F.F.). USE EMT CONDUIT BELOW 7FT. A.F.F.

NO.	REVISIONS	DATE	DWN. BY	APPD.	NO.	REVISIONS	DATE	DWN. BY	APPD.	REF. DWG. NO.
										51D-5500-E-01351
										51D-4445-E-00464
										51D-4445-E-00461
										51X-1910-E-00081
					0	ISSUED FOR CAWWT 'STAGE 2' CONSTRUCTION	01/16/01	GEP		51X-1910-E-00073
					B	ISSUED FOR 90% REVIEW	01/25/01	GEP		51X-1910-E-00071

NOTE: FLUOR FERNALD CADD DRAWING. DO NOT REVISE MANUALLY.

CONFIGURATION MANAGEMENT DRAWING — YES / NO
SYSTEMS, STRUCTURES, OR COMPONENTS IDENTIFIED ON THIS DRAWING ARE UNDER CONFIGURATION MANAGEMENT CONTROL. SEE NOTES.
COGNIZANT ENGINEER — DATE

APPROVALS

CIVIL & STR.			SAFETY ENG.	
ELECTRICAL	J.E. Hurd	11/6/01	MAINTENANCE	
ENGINEER			FIRE PROTECT.	
INSTRUMENT			WASTE MANAGE.	
MECHANICAL			SECURITY	
			PROJECTS	S. Sayre 11/6/01
CHECKED	Richards			
APPROVED	McBride	Hughes		

Fernald Closure Project

FLUOR FERNALD, INC.

U.S. DEPARTMENT OF ENERGY

PROJECT 59600 STAGE 2

BLDG. 51A ADVANCED WASTEWATER TREATMENT (AWWT)

CONVERTED AWWT (CAWWT)
FIRE ALARM LEGEND AND MATERIAL LISTS
NO SCALE

RES 4548
DATE Oct. 15, 2004
DRAWN G.E. PAUL
51D-5500-E-01430 0

FILE NAME: /RES451B/CAWWT/STAGE 2/51DE1430.DGN

FGPS.DGN 5/30/03

E-570

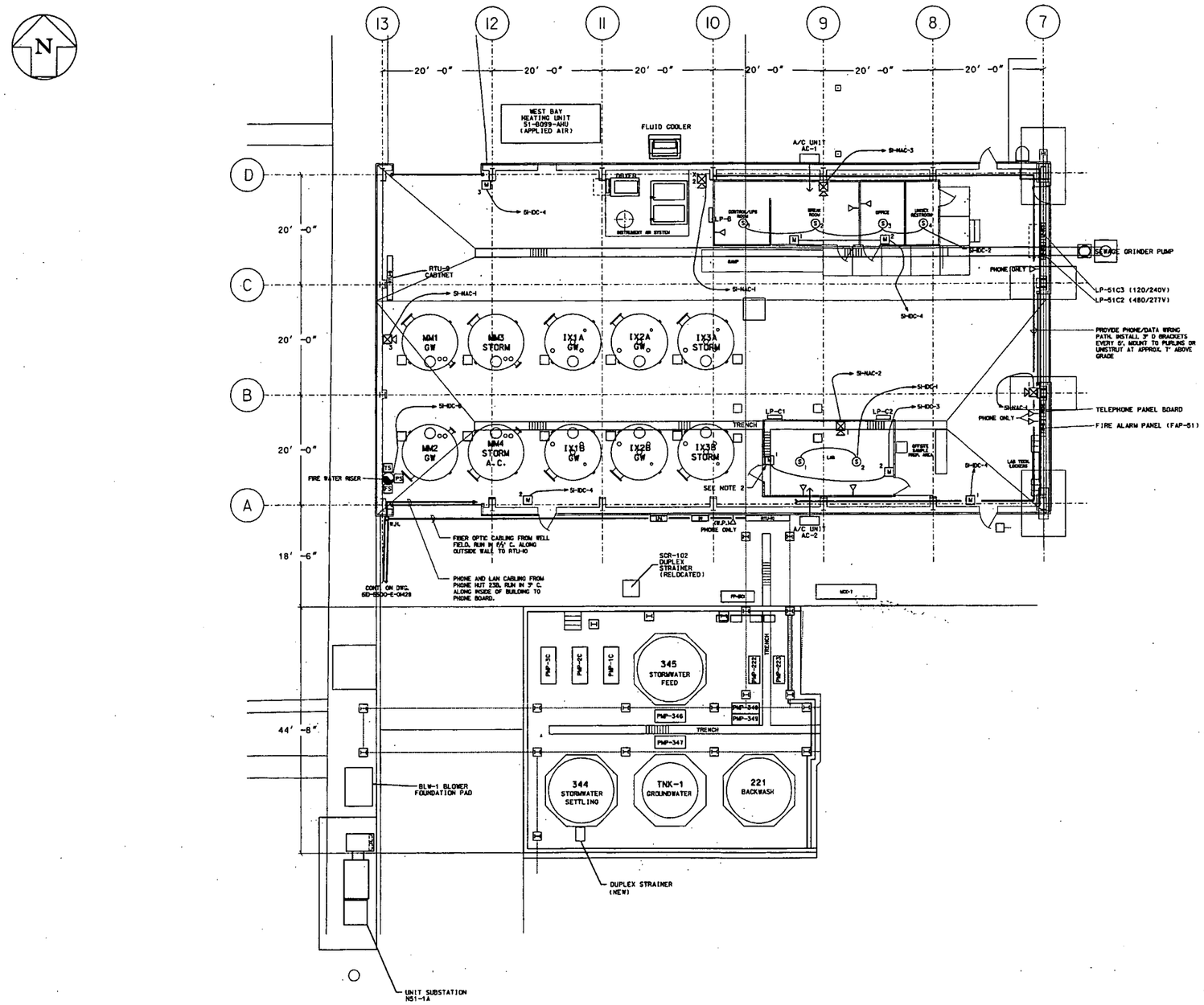

NOTE

1. SEE DRAWING 51D-5500-E-01430 FOR FIRE ALARM PARTS AND NOTES.
2. PUT FIRE ALARM PULL STATION M-1 IN WEATHER PROOF COVER

NO.	REVISIONS	DATE	DWN. BY	APPD.
0	ISSUED FOR CAWWT 'STAGE 2' CONSTRUCTION	12/5/04	GEP	
B	ISSUED FOR 90% REVIEW	11/29/04	GEP	

REF. DWG. NO.
51D-5500-E-01351
51D-4445-E-00464
51D-4445-E-00461
51X-1910-E-00081
51X-1910-E-00073
51X-1910-E-00071

NOTE: FLUOR FERNALD CADD DRAWING. DO NOT REVISE MANUALLY.

CONFIGURATION MANAGEMENT DRAWING — YES / NO

EXISTING STRUCTURES OR COMPONENTS AFFECTED BY CONFIGURATION CONTROL. SEE NOTES.

COGNIZANT ENGINEER — DATE

APPROVALS				
CIVIL & STR.			SAFETY ENG.	
ELECTRICAL	J.E. Kirl	12/6/04	MAINTENANCE	
ENGINEER			FRS PROJECT	
INSTRUMENT			WASTE MANAGE	
MECHANICAL			SECURITY	
			PROJECTS	J. Lloyd
CHECKED				
APPROVED				

Fernald Closure Project

FLUOR FERNALD, INC.

U.S. DEPARTMENT OF ENERGY

PROJECT 59600 STAGE 2

BLDG. 51A ADVANCED WASTEWATER TREATMENT (AWWT)

CONVERTED AWWT (CAWWT)

BUILDING COMMUNICATIONS & FIRE ALARM PLAN - SCALE: 1"=8'-0"

RES 4518

DATE Oct. 4, 2004

DRAWN G.E. PAUL

51D-5500-E-01429 | 0

FILE NAME: /RES4518/CAWWT/STAGE 2/51DE1429.DGN

FCPS.DGN 5/30/03

5794

HONEYWELL FIRE ALARM MATERIAL LIST

ITEM NO.	QTY.	DESCRIPTION	PART NUMBER
1		BF INDICATING CARD	HONEYWELL P/N 14505110-002
2		AA INITIATING CARD	HONEYWELL P/N 14505106-001
3		PHOTO ELECTRIC SMOKE DETECTORS	HONEYWELL P/N TC804C
4		SMOKE DETECTOR BASES	HONEYWELL P/N 14506587-001
5		RATE OF RISE/FIXED TEMPERATURE HEAT DETECTORS	HONEYWELL P/N T4057A
6		MANUAL PULL STATIONS - WEATHERPROOF	HONEYWELL P/N S464A1128
7		HORN/STROBE UNITS	HONEYWELL P/N SC716B-1019
8		STROBES	HONEYWELL P/N SC813B-2001
9		EVAC SPEAKERS	HONEYWELL P/N SC811A1015
10		LIGHTNING SUPPRESSORS FOR EVAC	HONEYWELL P/N 14502412-018
11		LIGHTNING SUPPRESSORS FOR HORN CIRCUIT	HONEYWELL P/N 14502412-018
12		LIGHTNING SUPPRESSORS FOR SMOKE DETECTORS AND MANUAL PULL STATIONS	HONEYWELL P/N 14502412-005
13		1.9k (UL) LISTED END OF LINE RESISTORS FOR SMOKE DETECTORS, HEAT DETECTORS, MANUAL PULL AND HORN/STROBE CIRCUITS	HONEYWELL P/N 14501600-001
14	TBD	8 PAIR 16/2 OVERHEAD CABLE	BELDEN P/N 1071A
15	TBD	18/2 RED/YELLOW STATION WIRING FOR SMOKE DETECTORS AND MANUAL PULL STATIONS	HONEYWELL P/N AK3702R
16	TBD	18/2 YELLOW/BROWN STATION WIRING FOR HORN/STROBES	HONEYWELL P/N AK3702B
17	TBD	16/2 BLACK/WHITE SPEAKER WIRE FOR EVAC SPEAKERS	ANY COMMERCIAL SPEAKER CABLE IS ACCEPTABLE
18A	TBD	PLENUM CABLE - 2 PR (SEE NOTE 2)	HONEYWELL P/N B6222UL
18B	TBD	PLENUM CABLE - 1 PR (SEE NOTE 2)	HONEYWELL P/N B6220UL
19		MOBILE EVAC CABLE	HONEYWELL MOBILE EVAC

MATERIAL LIST

DESCRIPTION	MANUFACTURER	MODEL NUMBER	QUANTITY
FIRE ALARM CONTROL PANEL	SILENT KNIGHT	SK-5208	1
ZONE EXPANDER	SILENT KNIGHT	SK-5217	0
ACCESSORY BATTERY CABINET	SILENT KNIGHT	33-AB	AS REQUIRED
FIRE ALARM PANEL ENCLOSURE	SILENT KNIGHT	SK-2190	AS REQUIRED
STATUS DISPLAY MODULE	SILENT KNIGHT	SK-5280	0
REMOTE ANNUNCIATOR	SILENT KNIGHT	SK-5235	0
DISTRIBUTED POWER MODULE	SILENT KNIGHT	5495	3
PHOTOELECTRIC DUCT SMOKE DETECTOR	SYSTEM SENSOR	DH100LP	0
REMOTE TEST STATION (WHERE REQUIRED)	SYSTEM SENSOR	RTS451	AS REQUIRED
LED ANNUNCIATOR (WHERE REQUIRED)	SYSTEM SENSOR	RA400Z	AS REQUIRED
SAMPLING TUBE (LENGTH AS REQUIRED)	SYSTEM SENSOR	ST-1.5, ST-3, ST-5, ST-10	AS REQUIRED
PHOTOELECTRIC SMOKE DETECTOR	HONEYWELL	TC804C	6
SMOKE DETECTOR BASE	HONEYWELL	14506587-001	6
RATE OF RISE/FIXED TEMPERATURE HEAT DETECTOR 200 °F	HONEYWELL	T4057A	0
LINEAR BEAM SMOKE DETECTOR	SIEMENS	PBA1191	0
LINEAR BEAM SMOKE DETECTOR BASE	SIEMENS	PBB1191	0
LINEAR BEAM REFLECTOR	SIEMENS	PBR1192	0
LINEAR BEAM DETECTOR ADJUSTMENT KIT	SIEMENS	PBL1191	0
MANUAL PULL BOX	HONEYWELL	S464A1128	8
COMBINATION HORN/STROBE	HONEYWELL	SC716B-1019	5
WEATHERPROOF BACKBOX	HONEYWELL	14507438-001	0
STROBE	HONEYWELL	SC813B-2001	0
EVAC SPEAKER	HONEYWELL	SC811A1015	0
EVAC SPEAKER WEATHERPROOF	HONEYWELL	ATLAP15TUC	0
LIGHTNING SUPPRESSION MODULE FOR NOTIFICATION CIRCUIT.	HONEYWELL	14502412-018	0
LIGHTNING SUPPRESSION MODULE FOR EVAC SPEAKER CIRCUIT.	HONEYWELL	14502412-018	0
LIGHTNING SUPPRESSION MODULE FOR INITIATION CIRCUIT.	HONEYWELL	14502412-005	0
END OF LINE RESISTOR FOR INITIATION AND NOTIFICATION CIRCUITS 4.7K OHM	SILENT KNIGHT	7628	AS REQUIRED
MULTI-VOLTAGE CONTROL RELAY (9-35VDC INPUT)	HONEYWELL	R8466A	AS REQUIRED
POWER SUPERVISION RELAY (9-35VDC INPUT)	HONEYWELL	R8466A	AS REQUIRED
WIRE FOR IDC - 18/2 AWG, 300 VOLT	HONEYWELL	AK3702R	AS REQUIRED
WIRE FOR NAC - 18/2 AWG, 300 VOLT	HONEYWELL	AK3702B	AS REQUIRED

LEGEND

SYMBOL	DESCRIPTION
[2]	DUCT SMOKE DETECTOR (PHOTOELECTRIC)
(2)	SMOKE DETECTOR (PHOTOELECTRIC)
(BD)	LINEAR BEAM SMOKE DETECTOR
(R)	REFLECTOR FOR LINEAR BEAM SMOKE DETECTOR
[F]	MANUAL PULL BOX SURFACE MOUNTED
(H)	HEAT DETECTOR
[X] W	EVACUATION SPEAKER SURFACE MOUNTED (W = WATTS) (X = DEVICE NUMBER)
⊠ cd X	STROBE DEVICE (cd = CANDELA) (X = DEVICE NUMBER) SURFACE MOUNTED
⊠ cd X	COMBINATION HORN/STROBE DEVICE (cd = CANDELA) SURFACE MOUNTED (X = DEVICE NUMBER)
[TS]	TAMPER SWITCH (NOTE B)
[PS]	PRESSURE SWITCH (NOTE B)
[FS]	WATER FLOW SWITCH (NOTE B)
[FACP]	FIRE ALARM CONTROL PANEL
[LPP]	LIGHTNING PROTECTION PANEL (SEE NOTE A)
[DPM]	DISTRIBUTED POWER MODULE
[ANN]	REMOTE ANNUNCIATOR
[R]	RELAY
—●—	CONDUIT JUCTION BOX

NOTES:
A. FOR LIGHTNING PROTECTION PANEL SEE DWG. 44X-5500-E-00366
B.

DESIGN CRITERIA

INITIATION CIRCUITS: NFPA 72 CLASS B, STYLE B.

NOTIFICATION CIRCUITS: NFPA 72, CLASS B, STYLE Y.

AUDIBLE NOTIFICATION ALL AREAS: 85dBA MINIMUM.

VISIBLE NOTIFICATION ALL AREAS: 0.0375 LUMENS PER SQUARE FOOT.

GENERAL NOTES

1. THE FIRE ALARM DRAWINGS ARE DIAGRAMMATIC AND FOR GENERAL ARRANGEMENT AND SCOPE OF WORK ONLY. THE FIRE ALARM CONTRACTOR SHALL BE RESPONSIBLE FOR DEVELOPMENT AND OBTAINING APPROVAL OF WORKING DRAWINGS FROM THE JURISDICTIONAL AUTHORITIES PRIOR TO INSTALLATION.
2. REFER TO CONSTRUCTION SPECIFICATON SECTION 16721.
3. WORK SHALL BE EQUAL OR SUPERIOR TO NFPA 72 AND GOVERNING RULES, CODES, ORDERS, REGULATIONS, ORDINANCES, AND LAWS RELATED TO THE WORK. NOTHING IN THE DRAWINGS OR SPECIFICATIONS PERMIT VIOLATION OF SUCH DIRECTIVES AND WHERE CONFLICT OCCURS THE DIRECTIVE SHALL GOVERN.
4. THE FIRE ALARM CONTRACTOR SHALL COORDINATE THE FIRE ALARM DESIGN WITH ALL OTHER TRADES AND DISCIPLINES. REFER TO ARCHITECTURAL, STRUCTURAL, PROCESS, ELECTRICAL, PIPING, AND MECHANICAL DRAWINGS.
5. FIRE ALARM WIRING SHALL RUN IN A DEDICATED CONDUIT. CONDUIT SHALL BE 3/4 " UNLESS NOTED OTHERWISE AND SHALL INCLUDE PULL STRING. FIRE ALARM CIRCUIT WIRING SHALL BE 18 AWG UNLESS NOTED OTHERWISE. EVAC CIRCUIT WIRING SHALL BE 18 AWG UNLESS NOTED OTHERWISE.
6. WHERE FIRE ALARM INITIATING DEVICES ARE INACCESSIBLE, PROVIDE REMOTE LED INDICATOR AND TEST SWITCH FOR EACH DEVICE.
7. PROVIDE SUPPORT STEEL FOR DEVICES AND EQUIPMENT WHERE REQUIRED. SUPPORTS SHALL BE GALVANIZED STEEL.
8. PROVIDE AS-BUILT DRAWINGS SHOWING DEVICES AT INSTALLED LOCATIONS AND AS-BUILT RISER DIAGRAMS INDICATING ALL DEVICE CIRCUITING.
9. NOTIFICATION DEVICES SHALL BE SYNCHRONIZED.
10. NOT USED
11. CIRCUIT INSTALLATION:
    - NO "T" TAPPING PERMITTED.
    - MAINTAIN CONSISTENT WIRING POLARITY.
12. NOT USED

NOTES:

1. FINAL HONEYWELL WIRING CONNECTIONS SHALL BE DONE BY ON-SITE FIRE ALARM CONTRACTOR.
2. PLENUM CABLE TO BE USED WITHOUT PROTECTION ONLY 7FT. ABOVE FINISH FLOOR (A.F.F.). USE EMT CONDUIT BELOW 7FT. A.F.F.

NO.	REVISIONS	DATE	DWN. BY	APPD.	NO.	REVISIONS	DATE	DWN. BY	APPD.
					0	ISSUED FOR CAWWT 'STAGE 2' CONSTRUCTION	12/5/04	GEP	
					B	ISSUED FOR 90% REVIEW	10/29/04	GEP	

REF. DWG. NO.: 51D-5500-E-01351; 51D-4445-E-00464; 51D-4445-E-00461; 51X-1910-E-00081; 51X-1910-E-00073; 51X-1910-E-00071

NOTE: FLUOR FERNALD CADD DRAWING. DO NOT REVISE MANUALLY.

CONFIGURATION MANAGEMENT DRAWING — STATUS: ALTHOUGH AN COMPONENTS OF THIS DRAWING ARE UNDER CONFIGURATION MANAGEMENT CONTROL, SEE NOTES.

COGNIZANT ENGINEER DATE

APPROVALS

CIVIL & STR.			SAFETY ENG.	
ELECTRICAL	J.L. Ford	12/6/04	MAINTENANCE	
ENGINEER			FIRE PROTECT.	
INSTRUMENT			WASTE MANAGE.	
MECHANICAL			SECURITY	
			PROJECTS	S. Lloyd 12/6/04
CHECKED	Richard Bechtold			
APPROVED	Richard Bechtold			

Fernald Closure Project

FLUOR FERNALD, INC.

U.S. DEPARTMENT OF ENERGY

PROJECT 59600 STAGE 2

BLDG. 51A ADVANCED WASTEWATER TREATMENT (AWWT)

CONVERTED AWWT (CAWWT)
FIRE ALARM LEGEND AND MATERIAL LISTS
NO SCALE

RES 4518
DATE Oct. 15, 2004
DRAWN G.E. PAUL

51D-5500-E-01430 | 0

FILE NAME: /RES4518/CAWWT/STAGE 2/51DE1430.DGN

FCPS.DGN 5/30/03

5794

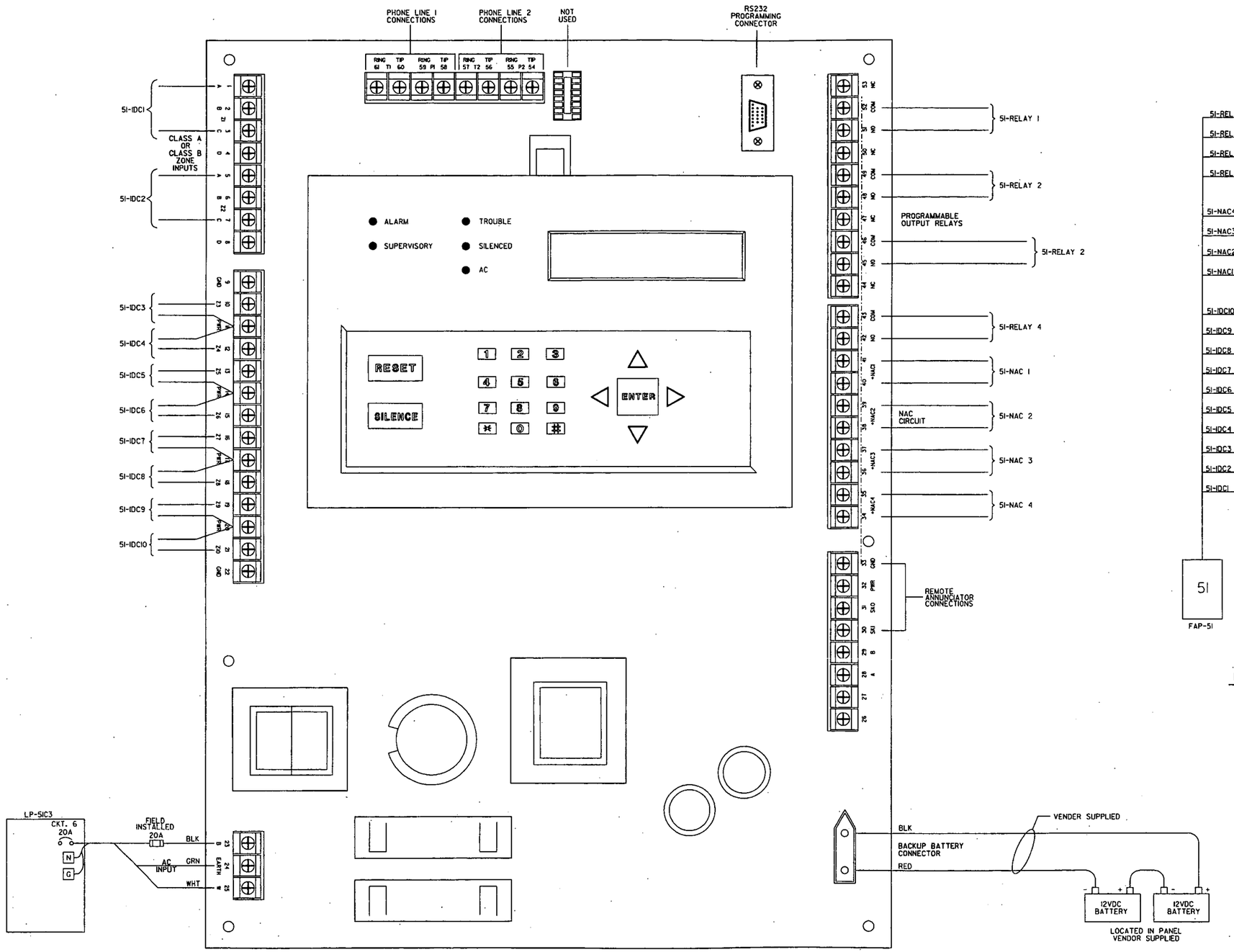

MODEL SK-5208 BOARD LAYOUT
PREACTION FIRE ALARM SYSTEM
FAP-51 WIRING DETAIL

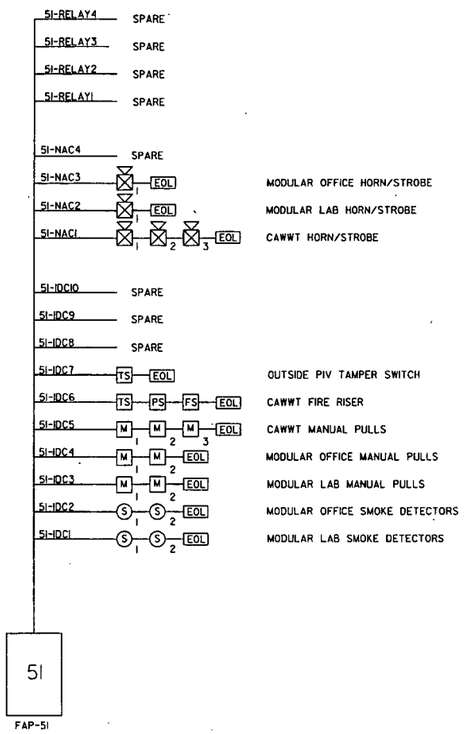

FAP-51 RISER DIAGRAM

NOTE:

1. FOR LEGEND DESIGN CRITERIA AND GENERAL NOTES, SEE DRAWING 51D-5500-E-01430

NO.	REVISIONS	DATE	DWN. BY	APPD.	NO.	REVISIONS	DATE	DWN. BY	APPD.	REF. DWG. NO.
										51D-5500-E-01351
										51D-4445-E-00464
										51D-4445-E-00461
										51X-1910-E-00081
					0	ISSUED FOR CAWWT 'STAGE 2' CONSTRUCTION	07/17/03	GEP	RWS	51X-1910-E-00073
					B	ISSUED FOR 90% REVIEW	07/29/03	GEP		51X-1910-E-00071

NOTE:
FLUOR FERNALD CADD DRAWING. DO NOT REVISE MANUALLY.

CONFIGURATION MANAGEMENT DRAWING
YES / NO
DESIGNED STRUCTURES OR COMPONENTS (SAFETY SYSTEM, SEISMIC, CRITICAL COMPONENT, MAINTENANCE, SECURITY, CONTROL, ETC. NOTED.

COGNIZANT ENGINEER DATE

APPROVALS

CIVIL & STR.		SAFETY ENG.	
ELECTRICAL		MAINTENANCE	
ENGINEER		WASTE MANAGE.	
INSTRUMENT		SECURITY	
MECHANICAL		PROJECTS	
CHECKED			
APPROVED			

Fernald Closure Project
FLUOR FERNALD, INC.
U.S. DEPARTMENT OF ENERGY

PROJECT 59600 STAGE 2
BLDG. 51A ADVANCED WASTEWATER TREATMENT (AWWT)
CONVERTED AWWT (CAWWT)
FIRE ALARM SYSTEM
WIRING DETAIL & RISER DIAGRAM
RES 4518
DATE Oct. 4, 2004
DRAWN G.E. PAUL
51D-5500-E-01431 0

FILE NAME: /RES4518/CAWWT/STAGE 2/51DE1431.DGN

FCPS.DGN 5/30/03

5794

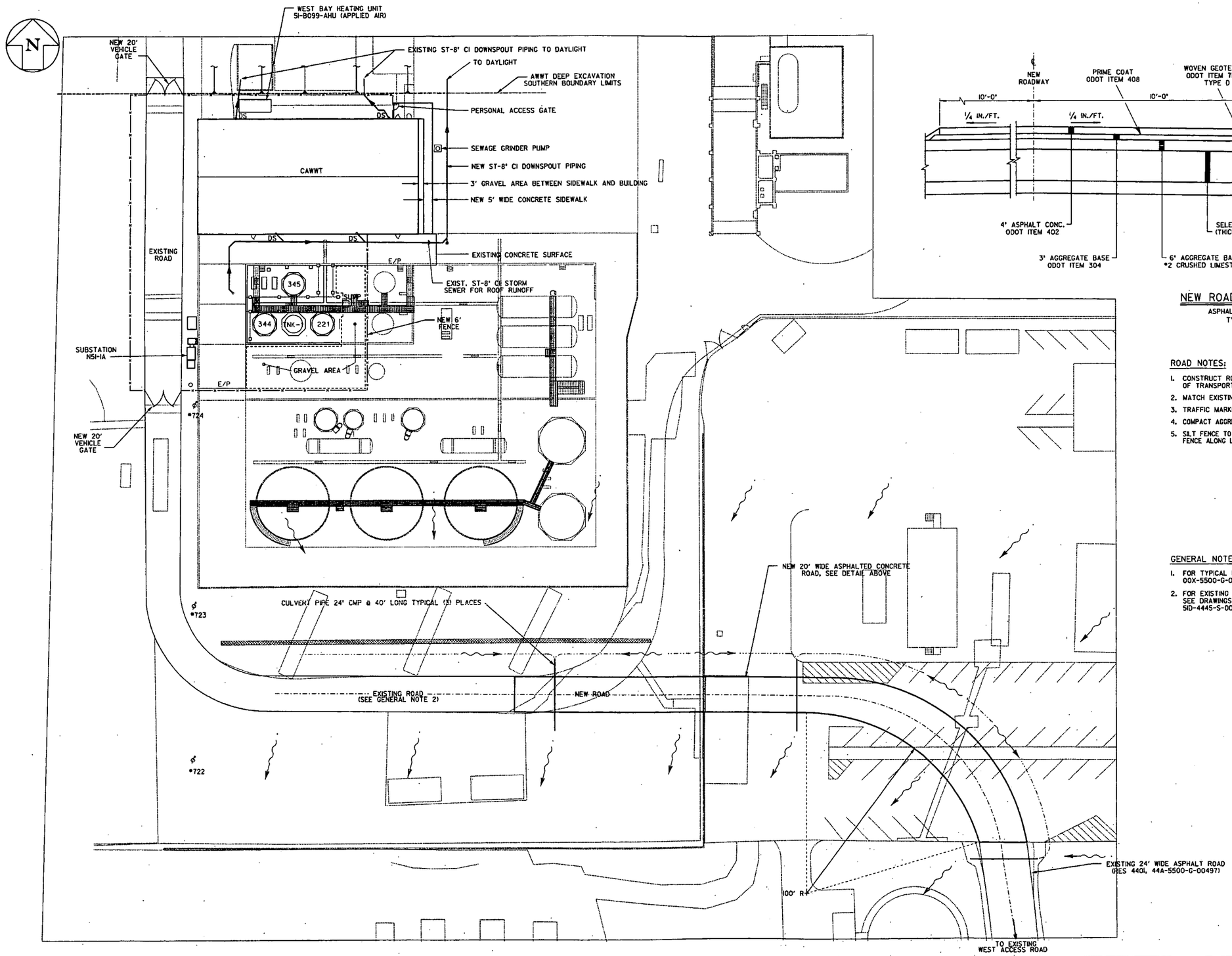

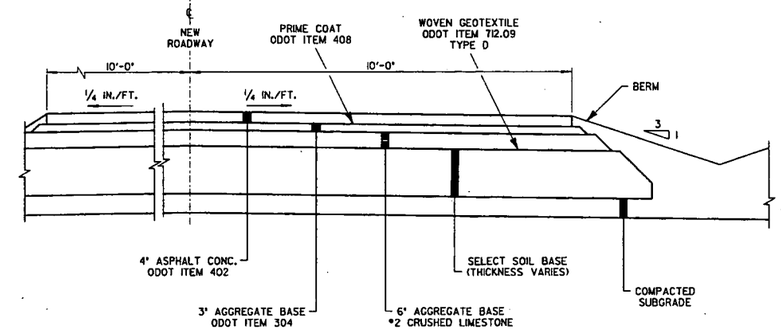

NEW ROAD SECTION

ASPHALT ROAD
TYP.

ROAD NOTES:

1. CONSTRUCT ROADWAY IN ACCORDANCE WITH OHIO DEPARTMENT OF TRANSPORTATION (ODOT) SPECIFICATIONS.
2. MATCH EXISTING PAVEMENT AT EACH ROAD INTERSECTION.
3. TRAFFIC MARKER PAINTING AND SIGNAGE BY OTHERS.
4. COMPACT AGGREGATE AND SUBGRADE TO 98% STANDARD PROCTOR.
5. SILT FENCE TO BE ODOT ITEM 712.09, TYPE C. INSTALL SILT FENCE ALONG LOW POINT ON EXCAVAVTED AREA.

GENERAL NOTES:

1. FOR TYPICAL FENCE AND GATE DETAILS, SEE DRAWING 00X-5500-G-02655
2. FOR EXISTING AWWT EXTERIOR PAD AND ROAD DETAILS, SEE DRAWINGS 51D-5500-S-01212, 51D-4445-S-00437, 51D-4445-S-00439 & 51D-4445-G-00427.

NO.	REVISIONS	DATE	DWN. BY	APPD.	NO.	REVISIONS	DATE	DWN. BY	APPD.	REF. DWG. NO.
					O	ISSUED FOR CAWWT 'STAGE 2' CONSTRUCTION	12/15/04	JSW	RBB	
					B	ISSUED FOR 90% REVIEW	11/19/04	JSW		
					A	ISSUED FOR 60% REVIEW	9/21/04	JSW		

NOTE:
FLUOR FERNALD CADD DRAWING. DO NOT REVISE MANUALLY.

CONFIGURATION MANAGEMENT DRAWING
EXISTING STRUCTURES AS COMPUTED FROM FIELD DATA. NO ORIGINAL FOR USAGE SEE NOTES.
YES / NO
COGNIZANT ENGINEER DATE

APPROVALS

CIVIL & STR.			SAFETY ENG.	
ELECTRICAL			MAINTENANCE	
ENGINEER			FIRE PROTECT.	
INSTRUMENT			WASTE MANAGE.	
MECHANICAL			SECURITY	
			PROJECTS	
CHECKED				
APPROVED				

Fernald Closure Project

FLUOR FERNALD, INC.

U.S. DEPARTMENT OF ENERGY

PROJECT 59600 STAGE 2
BLDG. 51A ADVANCED WASTEWATER TREATMENT (AWWT)
CONVERTED AWWT (CAWWT)
SITE PLAN AND DETAILS
SCALE: 1"=30'-0"
RES 4518
DATE Sept. 23,2004
DRAWN JMW
51D-5500-G-01367 0

FILE NAME: res4518/51dgl367.dgn

FDPS.DGN 5/30/03

-5794

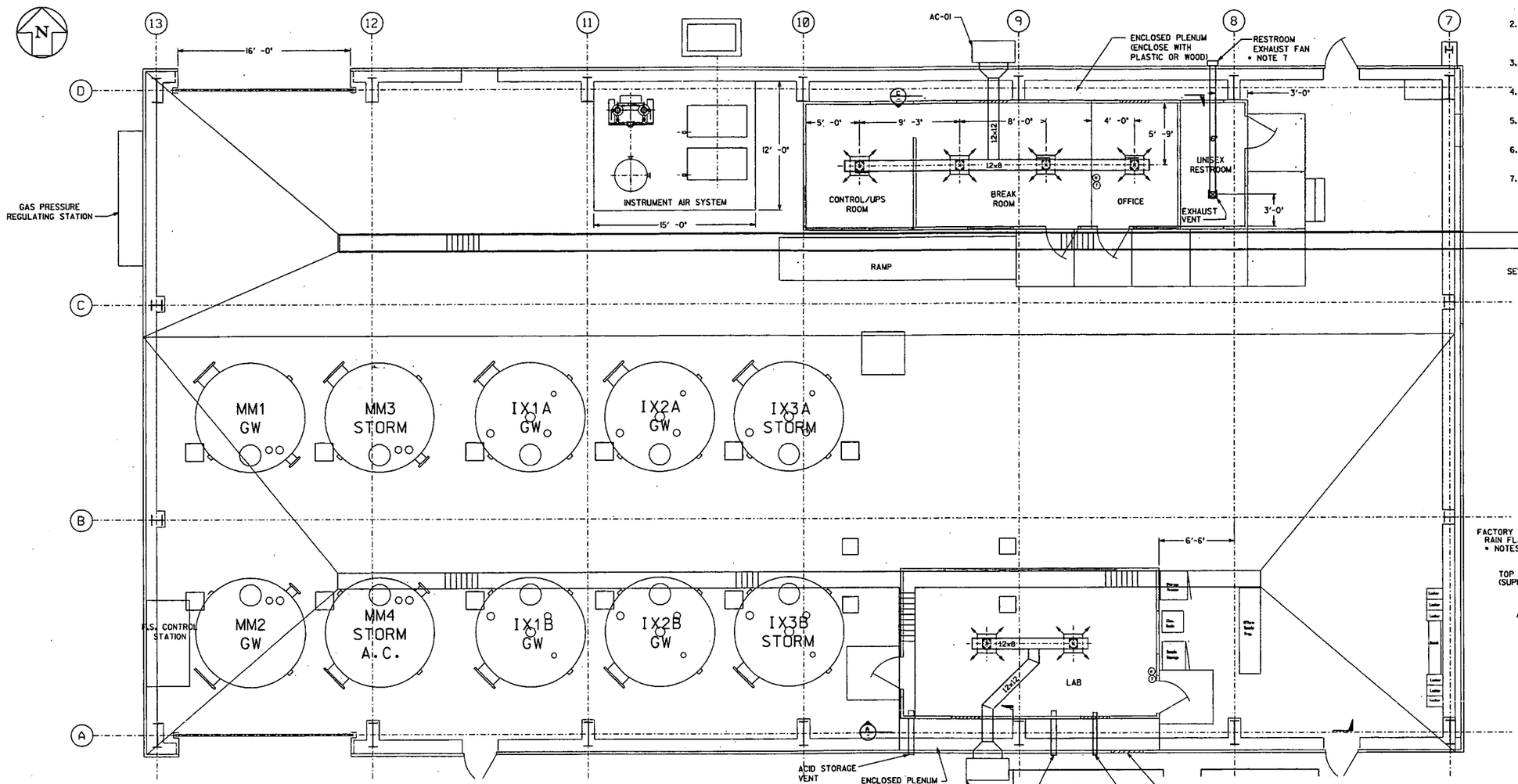

NOTES:

1. ATTACH FACTORY SUPPLIED BOTTOM MOUNTING BRACKET TO OUTSIDE WALL BEFORE INSTALLING UNIT.
2. FACTORY SUPPLIED RAIN FLASHING, TO BE MOUNTED ON UNIT BEFORE INSTALLATION.
3. VERIFY ALL DIMENSIONS BEFORE CUTTING WALL OR INSTALLING UNIT.
4. RUN BEAD OF SILICONE CAULKING UNDER TOP FLASHING AND SIDE MOUNT FLANGES.
5. ALL DIFFUSERS AND GRILLES ARE TO BE INSTALLED BY MODULAR UNIT MANUFACTURER.
6. DUCTWORK TO BE 20 GAUGE GALV. STEEL, LFO 141" Fg bd, INSULATE & VAPOR SEAL.
7. RESTROOM EXHAUST FAN TO BE INSTALLED ON SITE.

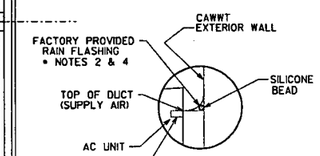

DETAIL 1
SCALE: NTS

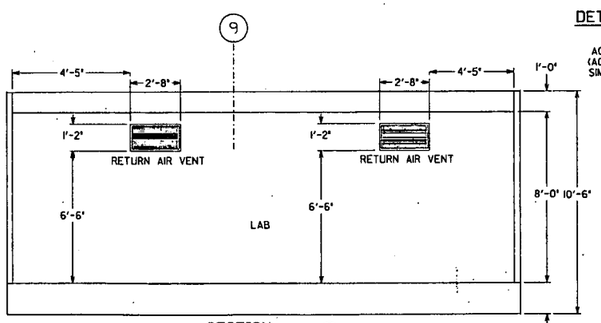

SECTION A
SCALE: 3/8" = 1'-0"

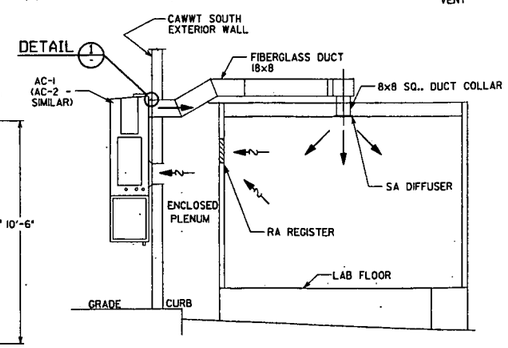

SECTION B
SCALE: 3/8" = 1'-0"

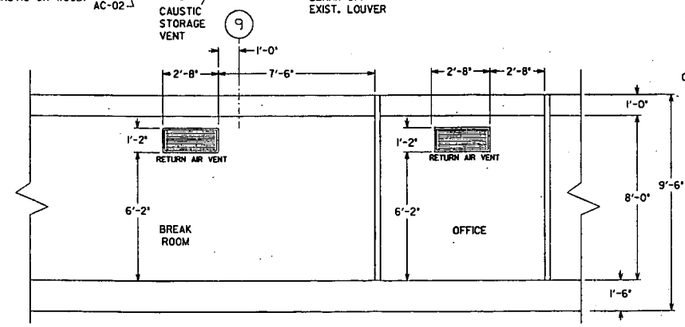

SECTION C
SCALE: 3/8" = 1'-0"

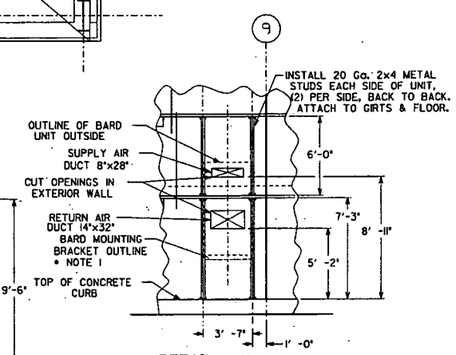

DETAIL 2
SCALE: NTS

NO.	REVISIONS	DATE	DWN. BY	APPD.	NO.	REVISIONS	DATE	DWN. BY	APPD.	REF. DWG. NO.
					1	ISSUED FOR CAWWT 'STAGE 2' CONSTRUCTION	2/11/04	JMG	MAB	
					0	ISSUED FOR PROCUREMENT REFERENCE	2/11/04	JMG	GEP	

NOTE: FLUOR FERNALD CADD DRAWING. DO NOT REVISE MANUALLY.

CONFIGURATION MANAGEMENT DRAWING — STATUS: STRUCTURES OR COMPONENTS SHOWN ON THIS DRAWING ARE UNDER CONFIGURATION MANAGEMENT CONTROL. SEE NOTES.

COGNIZANT ENGINEER — DATE

APPROVALS

CIVIL & STR.			SAFETY ENG.		
ELECTRICAL			MAINTENANCE		
ENGINEER			FIRE PROTECT.		
INSTRUMENT			WASTE MANAGE		
MECHANICAL			SECURITY		
			PROJECTS		
CHECKED	BY				
APPROVED		2/11/04			

Fernald Closure Project

FLUOR FERNALD, INC.

U.S. DEPARTMENT OF ENERGY

PROJECT 59600 STAGE 2

BLDG. 51A AWWT

CONVERTED AWWT (CAWWT)
HVAC PLAN, SECTIONS & DETAILS
PLAN - SCALE 1/4"=1'-0"

RES 4518
DATE Oct. 14, 2004
DRAWN JMC

51D-5500-H-01432 | 1

FILE NAME: res4518/cawwt/stage2/51dh1432.dgn

FCPS.DGN 5/30/03

43

5794

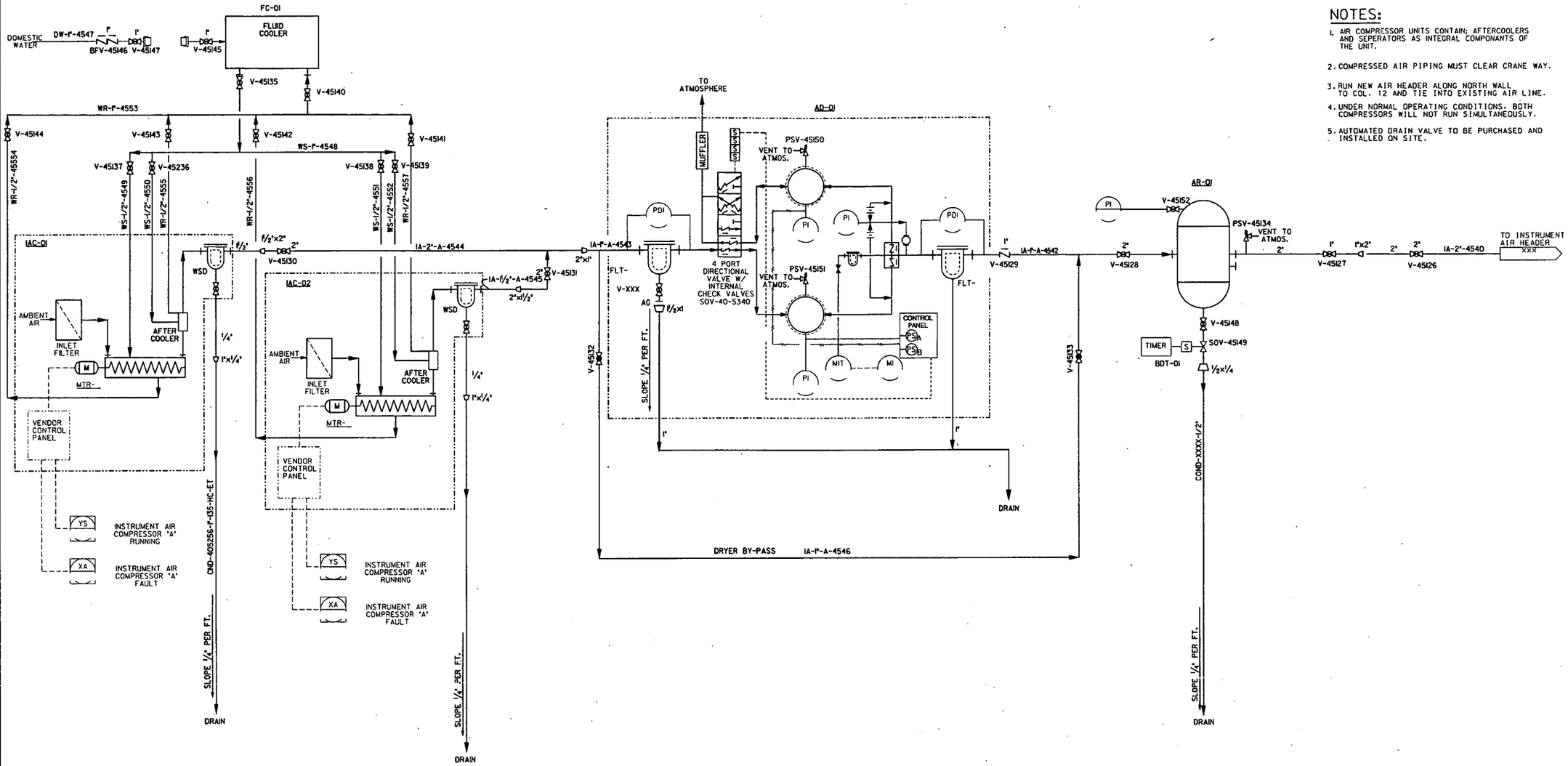

NOTES:

1. AIR COMPRESSOR UNITS CONTAIN; AFTERCOOLERS AND SEPERATORS AS INTEGRAL COMPONANTS OF THE UNIT.
2. COMPRESSED AIR PIPING MUST CLEAR CRANE WAY.
3. RUN NEW AIR HEADER ALONG NORTH WALL TO COL. 12 AND TIE INTO EXISTING AIR LINE.
4. UNDER NORMAL OPERATING CONDITIONS. BOTH COMPRESSORS WILL NOT RUN SIMULTANEOUSLY.
5. AUTOMATED DRAIN VALVE TO BE PURCHASED AND INSTALLED ON SITE.

IAC-01
AIR COMPRESSOR
181 SCFM @ 125 PSIG
CS

MT-01
40 HP
460V/3ph/60HZ

FC-01
AIR FLUID COOLER

IAC-02
AIR COMPRESSOR
181 SCFM @ 125 PSIG
CS

MT-02
40 HP
460V/3ph/60HZ

AD-01
COMPRESSED AIR DRYER
DESICCANT PURGE TYPE
OUTLET FLOW: 133 SCFM @ 125 PSIG

FLT-01
AIR DRYER INLET SEPARATOR/FILTER
181 SCFM @ 125 PSIG
CS

FLT-02
AIR DRYER OUTLET FILTER
133 SCFM @ 125 PSIG
CS

AR-01
PLANT AIR
RECEIVER TANK
400 GALLON, CS

NO.	REVISIONS	DATE	DWN. BY	APPD.	NO.	REVISIONS	DATE	DWN. BY	APPD.	REF. DWG. NO.
					0	ISSUED FOR CAWWT 'STAGE 2' CONSTRUCTION	12/16/04	JMG		
					B	ISSUED FOR 90% REVIEW	10/29/04	JMG		
					A	ISSUED FOR 60% REVIEW	9/23/04	JMG		

NOTE:
FLUOR FERNALD CADD DRAWING, DO NOT REVISE MANUALLY.

CONFIGURATION MANAGEMENT DRAWING
USE
REF
INFO
SYSTEMS, STRUCTURES OR COMPONENTS SHOWN ON THIS DRAWING ARE UNDER CONFIGURATION MANAGEMENT CONTROL. SEE NOTES.
COGNIZANT ENGINEER DATE

APPROVALS

CIVIL & STR.		SAFETY ENG.	
ELECTRICAL		MAINTENANCE	
ENGINEER		FIRE PROTECT.	
INSTRUMENT		WASTE MANAGE	
MECHANICAL		SECURITY	
		PROJECTS	
CHECKED			
APPROVED			

Fernald Closure Project
FLUOR FERNALD, INC.
U.S. DEPARTMENT OF ENERGY

PROJECT 59600 STAGE 2
BLDG. 51A ADVANCED WASTEWATER TREATMENT (AWWT)
CONVERTED AWWT (CAWWT)
PIPING & INSTRUMENTATION DIAGRAM
COMPRESSED AIR SYSTEM
RES #4518
DATE 8/20/04
DRAWN JAN. GOLDSBERRY
51D-5500-N-01368 0

FILE NAME: /RES4518/CAWWT/STAGE2/51DN1368.DGN

FOFLOGN 5/30/03

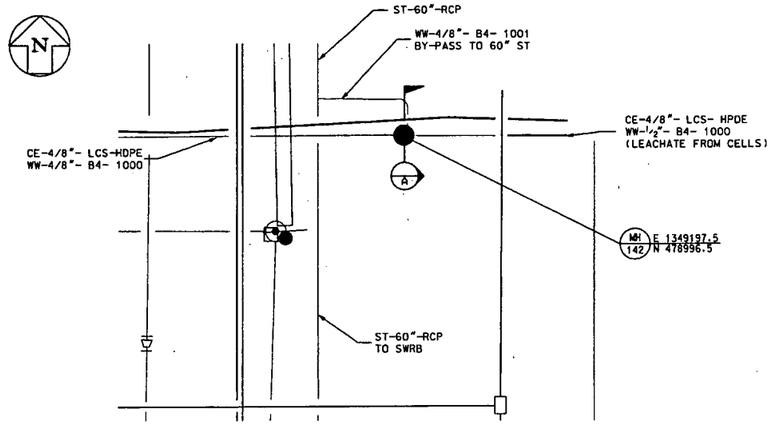

DETAIL 1 (51D-5500-P-01325)
LEACHATE AND BACKWASH TIE-IN TO SWRB
SCALE: 1"= 8'-0"

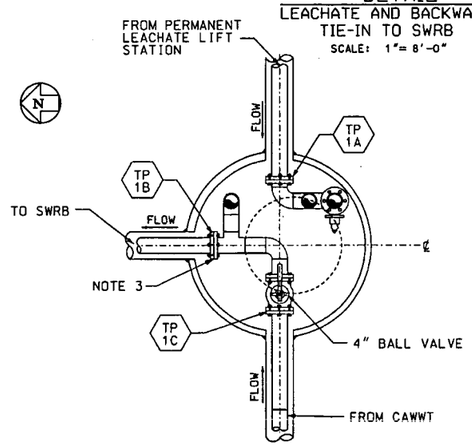

SECTION B (-)
LEACHATE REROUTE
SCALE: 3/4"=1'-0"

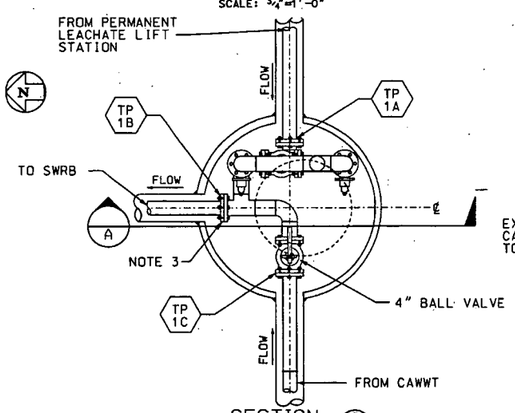

SECTION C (-)
LEACHATE REROUTE
SCALE: 3/4"=1'-0"

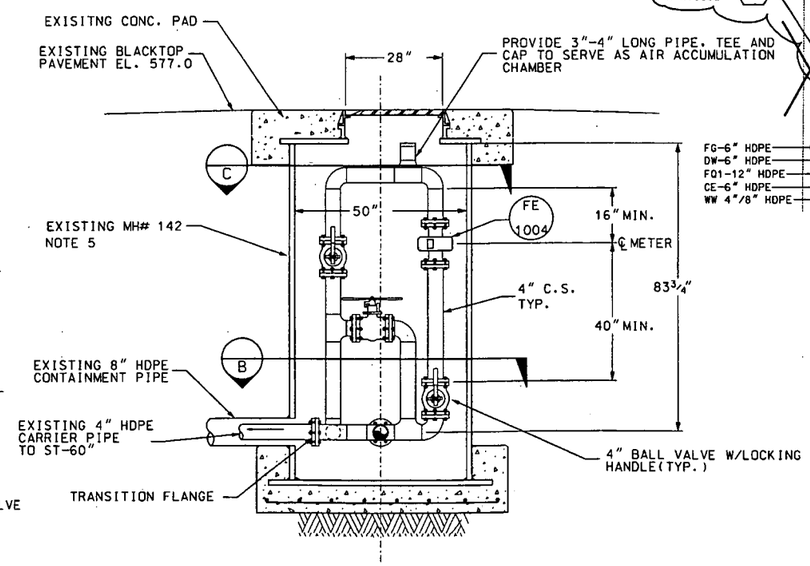

SECTION A (-)
LEACHATE REROUTE
SCALE: 3/4"=1'-0"

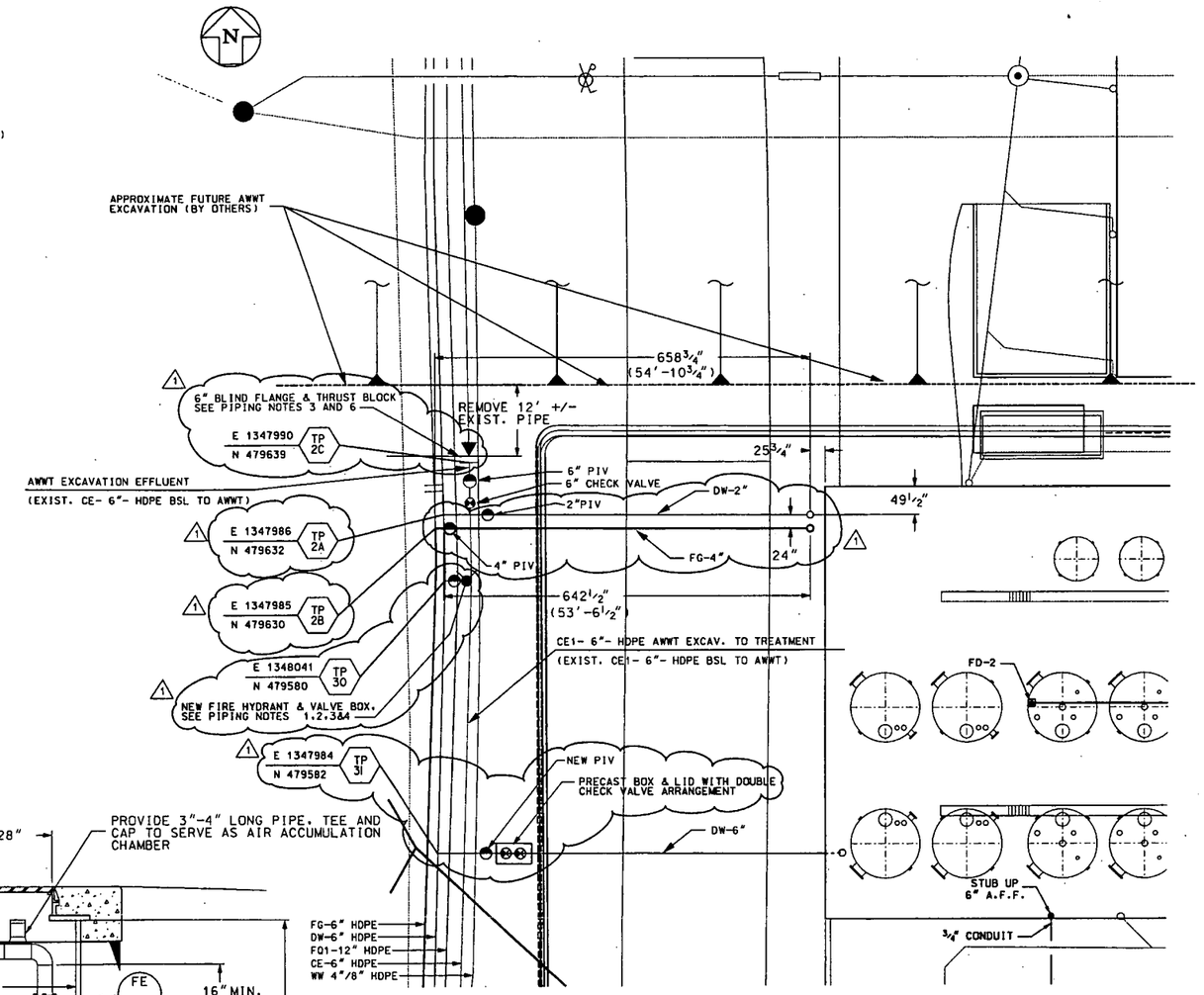

DETAIL 2 (51D-5500-G-01325)
AWWT EXCAVATION TO TREATMENT, FG AND DW TIE-INS
SCALE: 1"= 8'-0"

NOTE:

1. PIPELINE(S) SHOWN ON THIS DRAWING ARE DEVELOPED BY CONNECTING SEVERAL EXISTING PIPELINES. WHERE APPLICABLE THE NEW PIPELINE IDENTIFICATION AND SERVICE DESCRIPTION IS NOTED ON TOP OF PIPELINE IDENTIFICATION ARROW AND THE EXISTING ON THE BOTTOM.

NEW PIPE ID.
(EXIST. PIPE ID.)

1

GENERAL PIPING NOTES:

1. FOR TYPICAL FIRE HYDRANT AND CONTROL ISOLATION VALVE INSTALLATION, SEE DRAWING 44A-5500-P-00500.
2. FOR TYPICAL BOLLARD INSTALLATION DETAIL, SEE DRAWING 00X-5500-S-02652.
3. FOR TYPICAL THRUST BLOCK INSTALLATION DETAIL, SEE DRAWING 00X-5500-S-02651.
4. FOR TYPICAL INSTALLATION DETAIL OF A POST INDICATOR VALVE, SEE DRAWING 95X-5500-G-02073.
5. REMOVE EXISTING PIPE VALVES INSIDE MANHOLE.
6. INSTALL 6" BLIND FLANGE ON CE-6" HDPE BSL LINE WHEN IT GOES OUT OF SERVICE.

NO.	REVISIONS	DATE	DWN. BY	APPD.	NO.	REVISIONS	DATE	DWN. BY	APPD.	REF. DWG. NO.
					1	ISSUED FOR CAWWT 'STAGE 2' CONSTRUCTION	01/15/04	JMG	MPS	
						REV. TIE POINT COORDINATES, ADDED PIPING NOTES				
					0	ISSUED FOR CAWWT 'STAGE 1' CONSTRUCTION	6/2/04	JMG		
					B	90% REVIEW	6/25/04	JSW		
					A	60% REVIEW	6/30/04	JSW		

NOTE:
FLUOR FERNALD CADD DRAWING. DO NOT REVISE MANUALLY.

CONFIGURATION MANAGEMENT DRAWING
YES / NO
EXISTING STRUCTURES AND COMPONENTS DEPICTED ON THIS DRAWING ARE UNDER CONFIGURATION MANAGEMENT CONTROL. SEE NOTES.
COGNIZANT ENGINEER DATE

APPROVALS

CIVIL & STR.			SAFETY ENG.	
ELECTRICAL			MAINTENANCE	
ENGINEER			FIRE PROTECT.	
INSTRUMENT			WASTE MANAGE	
MECHANICAL			SECURITY	
			PROJECTS	
CHECKED				
APPROVED	JB for GJ. FIEL	6-10-04		

Fernald Closure Project
FLUOR FERNALD, INC.
U.S. DEPARTMENT OF ENERGY

PROJECT 59600 STAGE I
BLDG. 51A ADVANCED WASTEWATER TREATMENT(AWWT)
CONVERTED AWWT (CAWWT)
PIPING DETAILS
SHEET 1 OF 3

RES 4518
DATE April 26, 2004
DRAWN JSW

51D-5500-P-01328 | 1

FILE NAME: res4518/51dp1328.dgn

FDFLDCH 5/30/03

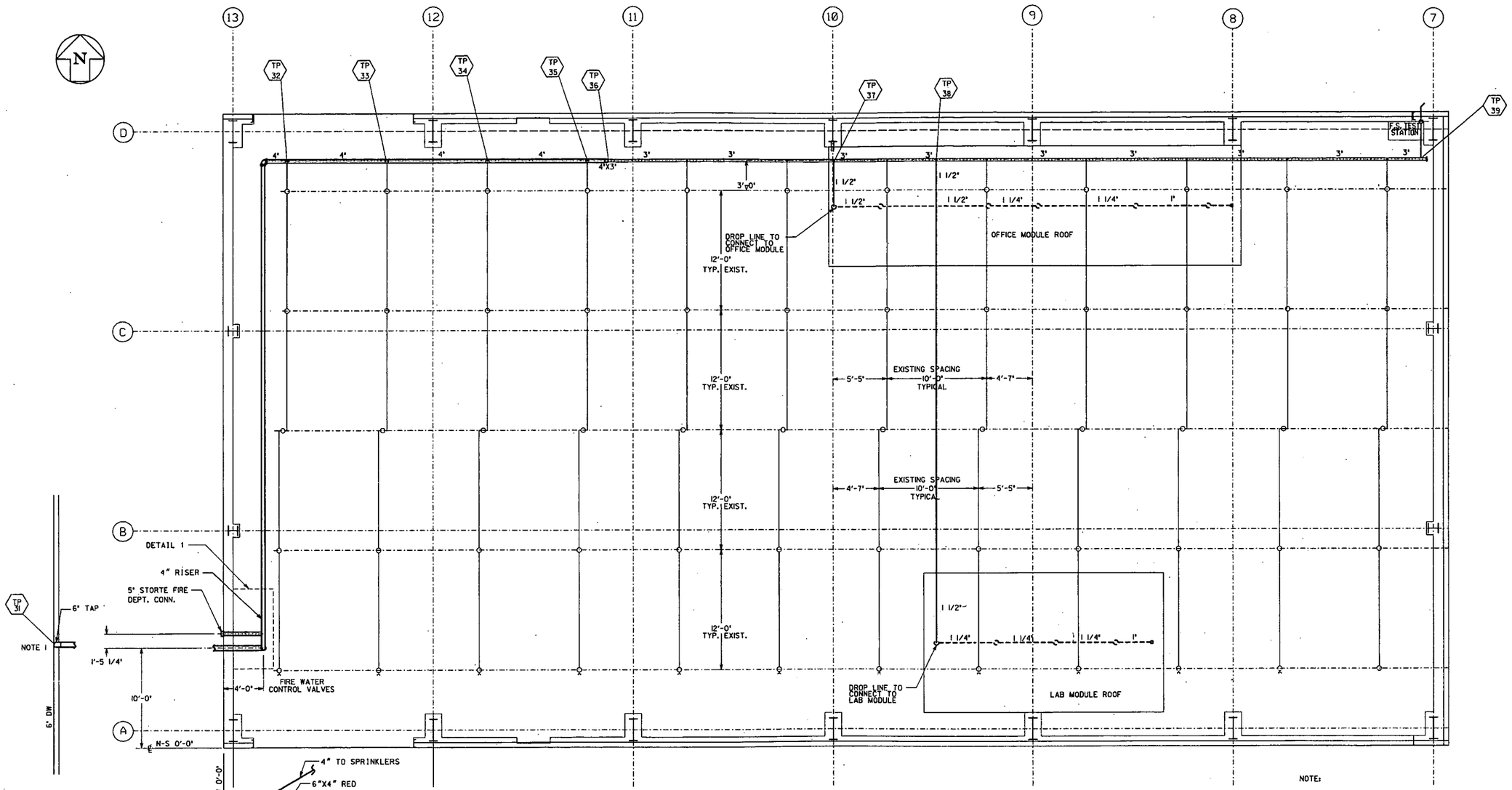

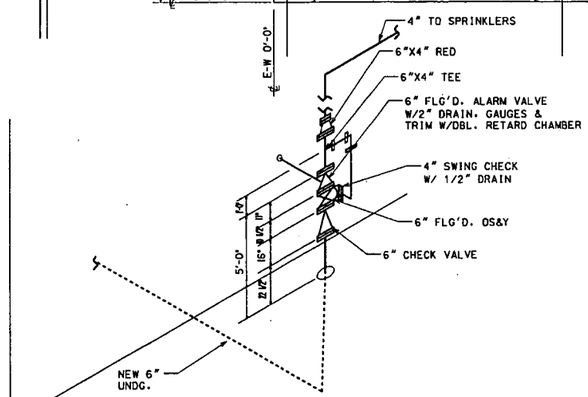

SPRINKLER PLAN

SCALE: 1/4" = 1'-0"

NOTE:

1. CONNECT NEW 6" FIRE WATER LINE TO EXISTING 6" DOMESTIC WATER LINE. FOR CONNECTION DETAILS SEE MECH. DRAWING 51D-5500-P-01328.

2. ORDINARY HAZARD, WET PIPE, FIRE SPRINKLER SYSTEM DESIGN TO BE DESIGNED BY CERTIFIED FIRE SYSTEM VENDOR. (VENDOR TBD)

3. FIRE SPRINKLER SYSTEM WITHIN MODULAR UNITS TO BE DESIGNED BY CERTIFIED FIRE SYSTEM VENDOR. (VENDOR TBD)

NO.	REVISIONS	DATE	DWN. BY	APPD.	NO.	REVISIONS	DATE	DWN. BY	APPD.	REF. DWG. NO.
					0	ISSUED FOR CAWWT 'STAGE 2' CONSTRUCTION	2/16/04	JMG		
					B	ISSUED FOR 90% REVIEW	8/25/04	JMG		
					A	ISSUED FOR 60% REVIEW	1/23/04	JMG		51-D-1, FIRE PROTECTION KEY PLAN, SHT. 1 OF 1 (51-D-1)

NOTE: FLUOR FERNALD CADD DRAWING, DO NOT REVISE MANUALLY.

CONFIGURATION MANAGEMENT DRAWING — YES / NO

EXISTING STRUCTURES OR COMPONENTS AFFECTED BY THIS DRAWING ARE UNDER CONFIGURATION MANAGEMENT CONTROL. SEE NOTES.

COGNIZANT ENGINEER — DATE

APPROVALS

CIVIL & STR.		SAFETY ENG.	
ELECTRICAL		MAINTENANCE	
ENGINEER		FIRE PROTECT.	C. EVANS
INSTRUMENT		WASTE MANAGE.	
MECHANICAL		SECURITY	
		PROJECTS	
CHECKED			
APPROVED			

Fernald Closure Project

FLUOR FERNALD, INC.

U.S. DEPARTMENT OF ENERGY

PROJECT 59600 STAGE 2

BLDG. 51A AWWT

CONVERTED AWWT (CAWWT)
FIRE PROTECTION PLAN
BLDG. 51A (MODIFIED) & NEW MODULAR BLDG.

RES 4518
DATE Sept. 8, 2004
DRAWN J. M. C.

51D-5500-P-01369 | 0

FILE NAME: res4518/cawwt/phase2/51dp1369.dgn

FDP5.DGN 5/30/03

NOTES:

1. TIE NEW 2" AIR LINE IN AT EXISTING 4" HEADER. PROVIDE SHUT-OFF VALVE AT HEADER.
2. RELOCATE EXISTING GAS PRESSURE REGULATOR STATION TO WEST SIDE OF BUILDING 51, BETWEEN COLUMNS 'D' AND 'C'.
3. ROUTE NEW GAS PIPING ALONG WEST WALL TO COL. 'D', TURN EAST TO CONNECT TO EXISTING LINE ON NORTH WALL (CONNECTS TO EXIST. HEATING UNITS).
4. FOR INSTRUMENT AIR PIPING ELEVATIONS, SEE DETAIL DRAWING 51D-5500-P-01436.
5. FIELD ROUTE NEW INSTRUMENT AIR HEADER TO TIE-IN OF EXISTING INSTRUMENT AIR HEADER.

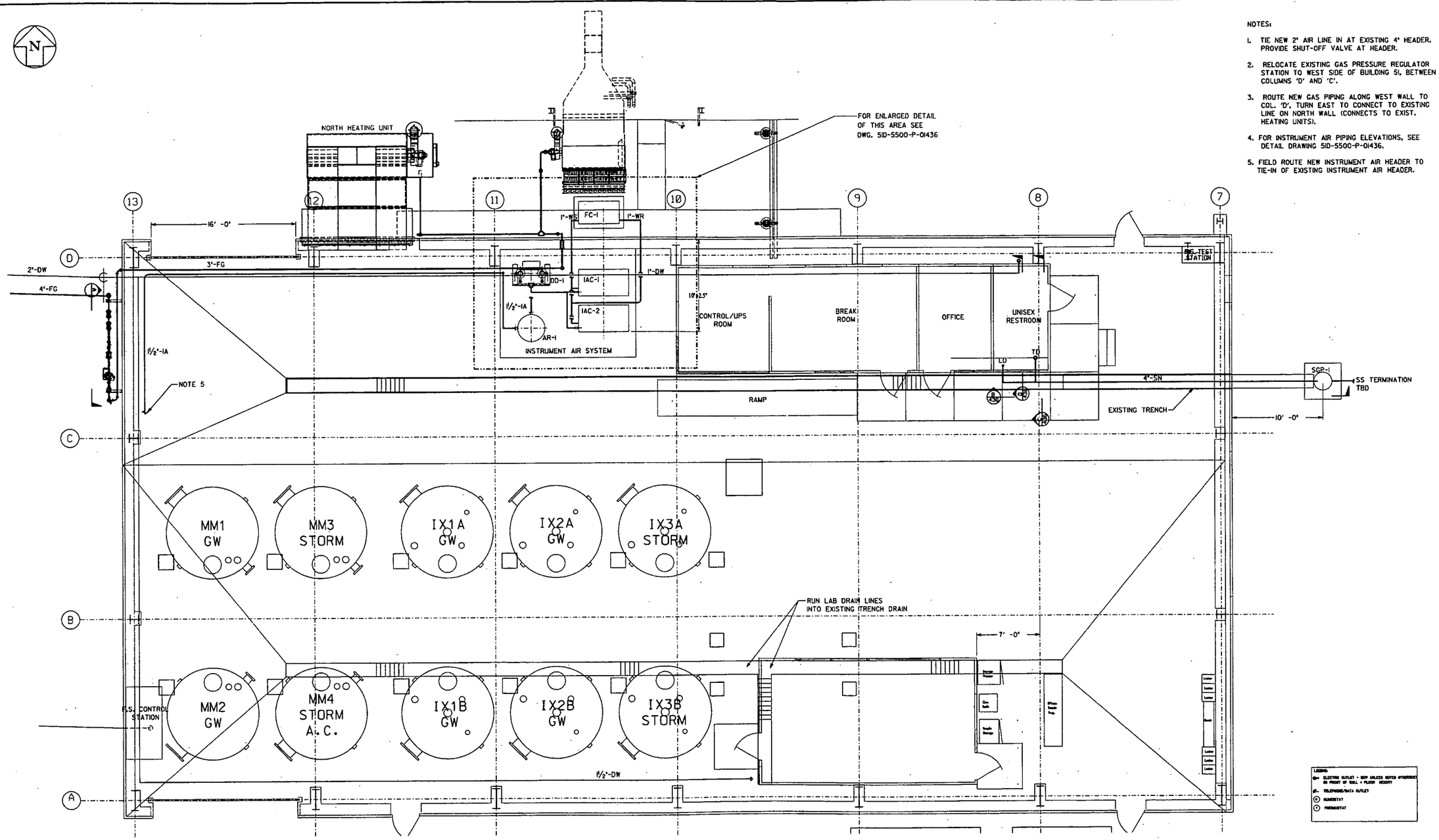

NO.	REVISIONS	DATE	DWN. BY	APPD.	NO.	REVISIONS	DATE	DWN. BY	APPD.	REF. DWG. NO.
					0	ISSUED FOR CAWWT 'STAGE 2' CONSTRUCTION	8/16/04	JMG		
					A	ISSUES FOR 90% REVIEW	8/27/04	JMG		

NOTE: FLUOR FERNALD CADD DRAWING. DO NOT REVISE MANUALLY.

CONFIGURATION MANAGEMENT DRAWING — YES / NO — STATIONS, ATTACHMENTS OR COMPONENTS CONSTRUCTED AND TESTED PER THIS DRAWING ARE UNDER CONFIGURATION MANAGEMENT CONTROL. SEE NOTES.

COGNIZANT ENGINEER — DATE

APPROVALS

CIVIL & STR.			SAFETY ENG.		
ELECTRICAL			MAINTENANCE		
ENGINEER			FIRE PROTECT.		
INSTRUMENT			WASTE MANAGE.		
MECHANICAL			SECURITY		
			PROJECTS		
CHECKED					
APPROVED					

Fernald Closure Project

FLUOR FERNALD, INC.

U.S. DEPARTMENT OF ENERGY

PROJECT 59600 STAGE 2

BLDG. 51A AWWT

CONVERTED AWWT (CAWWT)
PIPING/PLUMBING PLAN
PLAN - SCALE 1/4"=1'-0"

RES 4518
DATE Oct. 12, 2004
DRAWN J. COLDSBERRY

51D-5500-P-01433 | 0

FILE NAME: /RES451B/CAWWT/STAGE 2/51DP1433.DGN

FGPS.DGN 5/30/03

E-5794

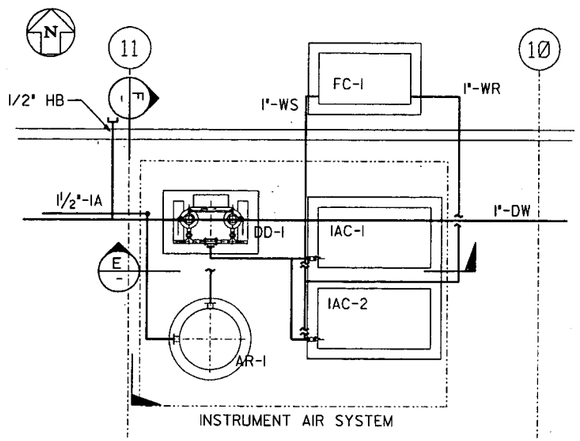

ENLARGED PLAN (F)
SCALE: NTS

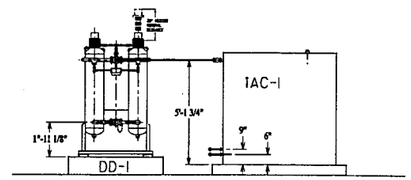

SECTION (E)
SCALE: NTS

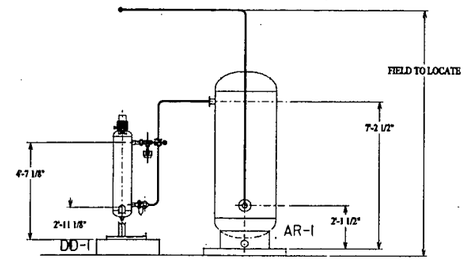

SECTION (F)
SCALE: NTS

NOTES:

1. TIE NEW 2" AIR LINE IN AT EXISTING 4" HEADER. PROVIDE SHUT-OFF VALVE AT HEADER.
2. RELOCATE EXISTING GAS PRESSURE REGULATOR STATION TO WEST SIDE OF BUILDING 51, BETWEEN COLUMNS 'D' AND 'C'.
3. ROUTE NEW GAS PIPING ALONG WEST WALL TO COL. 'D', TURN EAST TO CONNECT TO EXISTING LINE ON NORTH WALL (CONNECTS TO EXIST. HEATING UNITS).

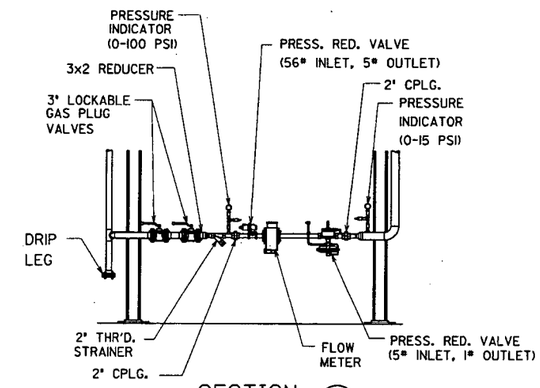

SECTION (A / 433)

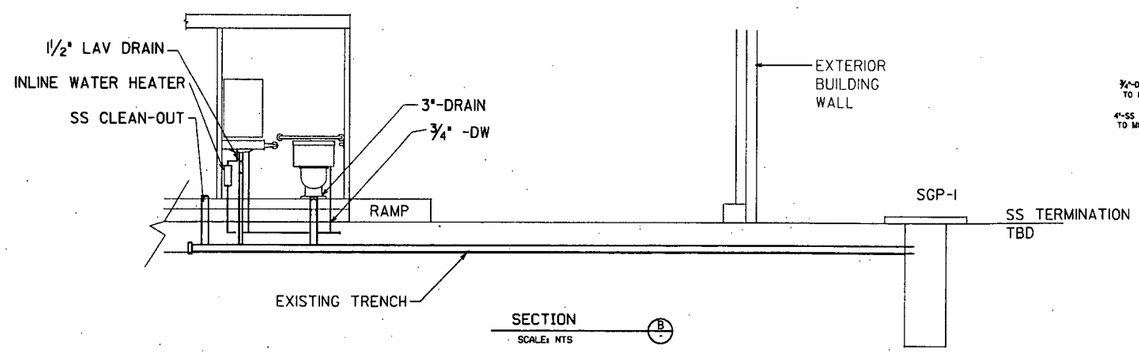

SECTION (B)
SCALE: NTS

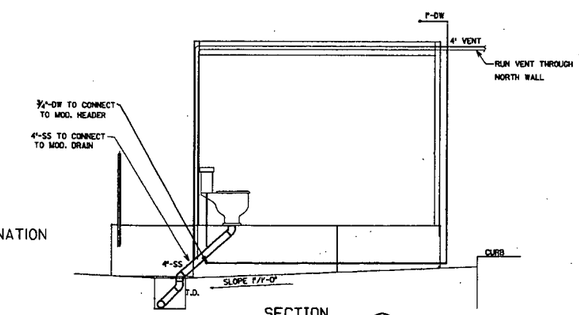

SECTION (C)
SCALE: NTS

NO.	REVISIONS	DATE	DWN. BY	APPD.
0	ISSUED FOR CAWWT 'STAGE 2' CONSTRUCTION	8/6/04	JMG	[illegible]

NO.	REVISIONS	DATE	DWN. BY	APPD.	REF. DWG. NO.

NOTE: FLUOR FERNALD CADD DRAWING, DO NOT REVISE MANUALLY.

CONFIGURATION MANAGEMENT DRAWING — YES / NO
SYSTEMS, STRUCTURES, OR COMPONENTS CONSIDERED SAFETY RELEVANT, OR SUBJECT TO CONFIGURATION MANAGEMENT CONTROL. SEE NOTES.
COGNIZANT ENGINEER — DATE

APPROVALS

CIVIL & STR.		SAFETY ENG.	
ELECTRICAL		MAINTENANCE	
ENGINEER		FIRE PROTECT.	
INSTRUMENT		WASTE MANAGE.	
MECHANICAL		SECURITY	
		PROJECTS	
CHECKED			
APPROVED			

Fernald Closure Project
FLUOR FERNALD, INC.
U.S. DEPARTMENT OF ENERGY

PROJECT 59600 STAGE 2
BLDG. 51A AWWT
CONVERTED AWWT (CAWWT)
PIPING PLAN, ELEVATIONS & SECTIONS
SCALE: AS NOTED
RES 4518
DATE Oct. 13, 2004
DRAWN J. GOLDSBERRY
51D-5500-P-01436 0

FILE NAME: res4518/51dpl436.dgn

FDFSLDGN 5/30/03

38

5794

GENERAL NOTES

1. FOR DETAILS AND SECTIONS ON THE LADDER SEE DRAWING 51D-5500-S-01373.
2. FOR THE EXISTING STEEL SPECS. SEE DRAWING 51X-1910-S-00030

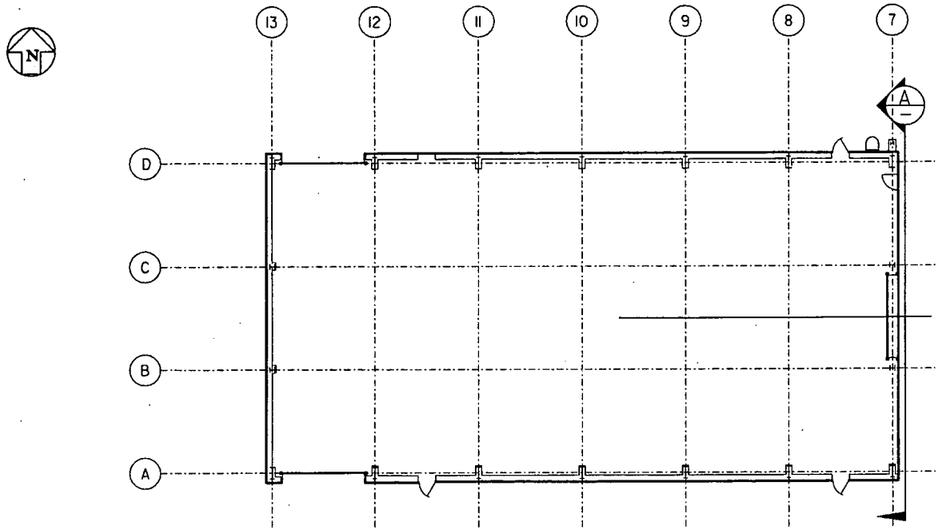

PLAN

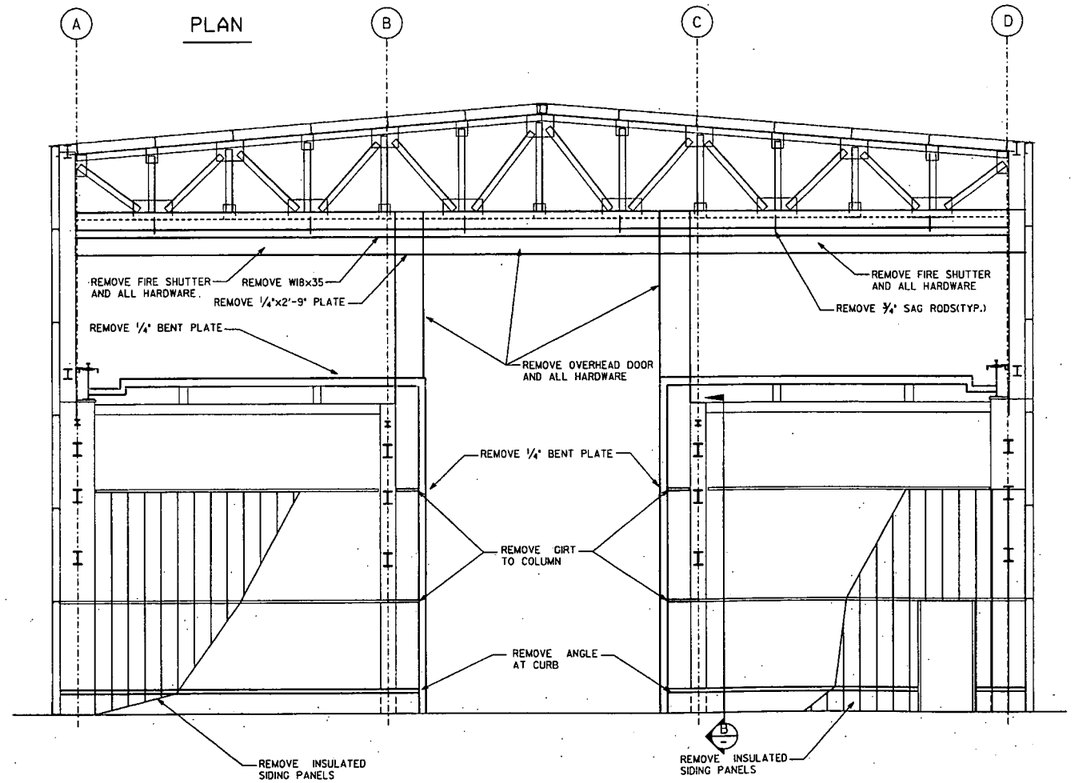

EXISTING EAST WALL COLUMN 7 (A)
SECTION

SECTION B NOTES:
1. PIPE RACK MEMBERS BOLTED TO SPLICE PLATES @ COL. A,B&C. MEMBERS WELDED AND 'W4' NOT PRESENT @ COL. D.
2. ITEMS ▨ TO BE REMOVED.
3. THIS VIEW LOOKING SOUTH.
4. FOR EXISTING PIPERACK DETAIL DRAWING SEE 51D-4445-S-00446

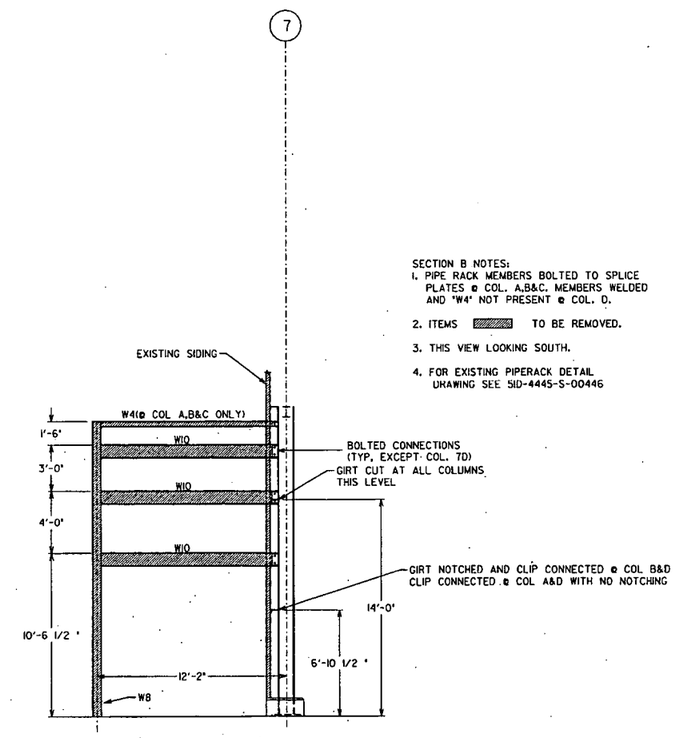

COLUMN 7 (B)
SECTION

NO.	REVISIONS	DATE	DWN.	BY	APPD.	NO.	REVISIONS	DATE	DWN.	BY	APPD.	REF. DWG. NO.
												51X-1910-S-00032
						0	ISSUED FOR CAWWT 'STAGE 2' CONSTRUCTION	2/16/04	JSW			51X-1910-S-00030
						B	ISSUED FOR 90% REVIEW	12/29/03	JSW			51X-1910-S-00028
						A	ISSUED FOR 60% REVIEW	9/23/03	JSW			51X-1910-S-00027

NOTE: FLUOR FERNALD CADD DRAWING, DO NOT REVISE MANUALLY.

CONFIGURATION MANAGEMENT DRAWING — YES / NO
EXISTING ATTACHMENT OR COMPONENT DRAWING ON THIS DRAWING, NO TRACK CHANGES, CONFIGURATION MANAGEMENT CONTROL, SEE NOTES.
COGNIZANT ENGINEER — DATE

APPROVALS

CIVIL & STR.	H.J. Bonacci	7/16/04	SAFETY ENG.		
ELECTRICAL			MAINTENANCE		
ENGINEER			FIRE PROTECT.		
INSTRUMENT			WASTE MANAGE		
MECHANICAL			SECURITY		
			PROJECTS	F. Boesch	7/16/04
CHECKED					
APPROVED					

Fernald Closure Project
FLUOR FERNALD, INC.
U.S. DEPARTMENT OF ENERGY

PROJECT 59600 STAGE 2
BLDG. 51D — COLUMN 7 'EAST WALL'
CONVERTED AWWT (CAWWT)
DEMOLITION PLAN EAST WALL
ELEVATION

RES. 4518
DATE Sept. 23, 2004
DRAWN JSW
51D-5500-S-01370 0

FILE NAME: res4518/51dsl370.dgn

FCPSLDGN 5/30/03

-5794

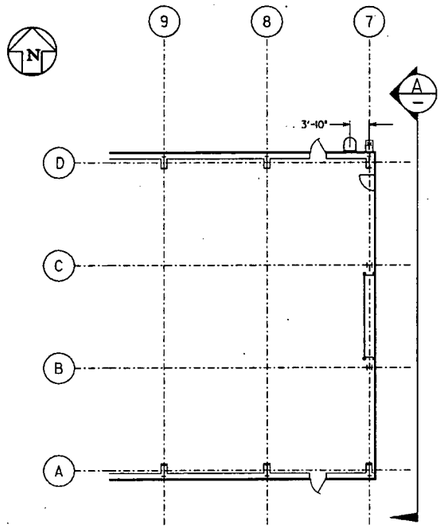

PARTIAL PLAN

GENERAL NOTES

1. FIELD VERIFY LOCATION AND SIZES OF EXISTING STEEL PRIOR TO RELEASE OF NEW STEEL FABRICATION.
2. DEMOLITION OF BUILDING COLUMN LINE 6 AND ALL BUILDING STEEL BETWEEN COLUMN LINE 6 AND 7 SHALL NOT BEGIN PRIOR TO NEW STEEL INSTALLATIONS ALONG COLUMN LINE 7.
3. FOR THE EXISTING BUILDING STEEL SPECIFICATIONS, SEE DRAWING 51X-1910-S-00030.
4. FOR DETAILS AND SECTIONS ON THE ROOF LADDER, SEE DRAWING 51D-5500-S-01373.

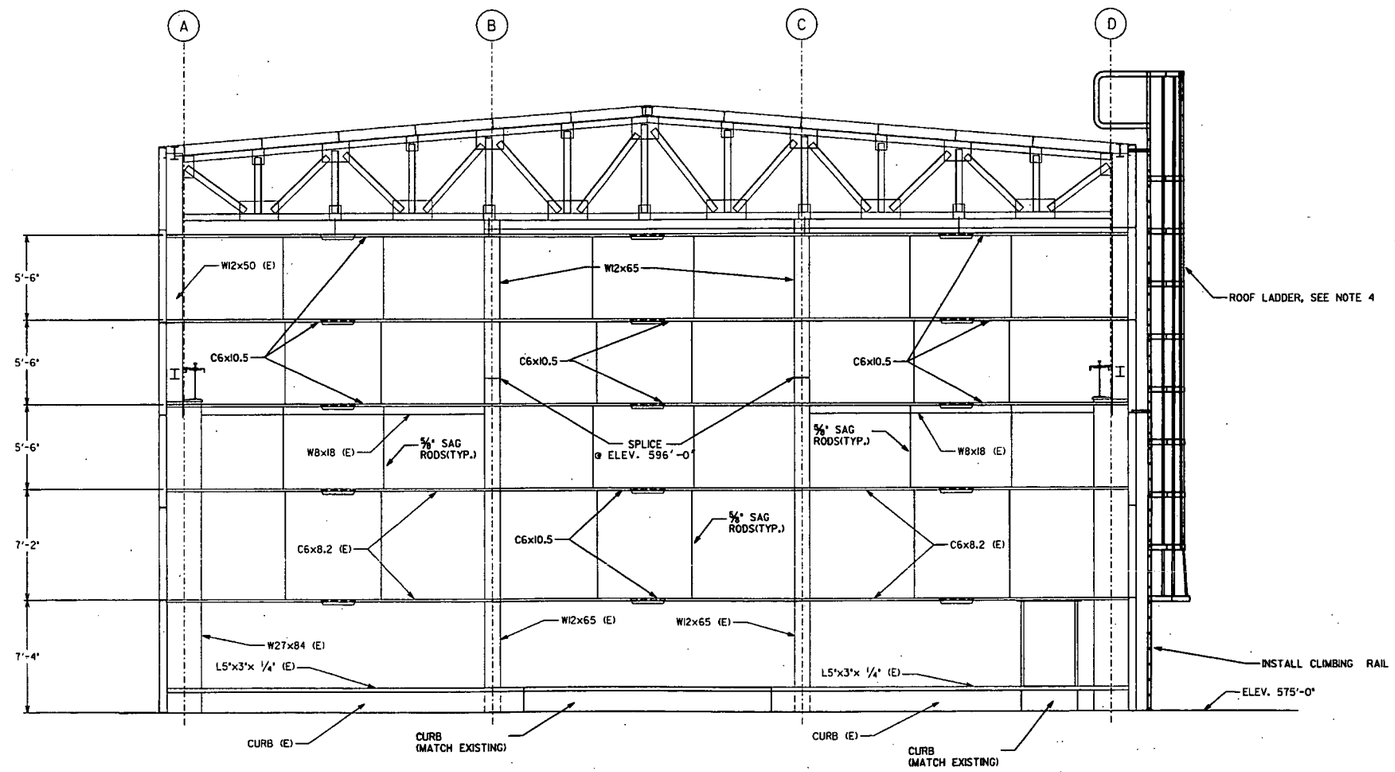

EAST WALL @ COLUMN 7 MODIFICATIONS (A/-)
ELEVATION

NO.	REVISIONS	DATE	DWN. BY	APPD.	NO.	REVISIONS	DATE	DWN. BY	APPD.	REF. DWG. NO.
										51X-1910-S-00032
					0	ISSUED FOR CAWWT 'STAGE 2' CONSTRUCTION	12/6/01	JSW	KWB	51X-1910-S-00030
					B	ISSUED FOR 90% REVIEW	10/19/01	JSW		51X-1910-S-00028
					A	ISSUED FOR 60% REVIEW	9/13/01	JSW		51X-1910-S-00027

NOTE: FLUOR FERNALD CADD DRAWING, DO NOT REVISE MANUALLY.

CONFIGURATION MANAGEMENT DRAWING — YES / NO
SYSTEMS, STRUCTURES, OR COMPONENTS SHOWN ON THIS DRAWING ARE UNDER CONFIGURATION MANAGEMENT CONTROL. SEE NOTES.
COGNIZANT ENGINEER — DATE

APPROVALS

CIVIL & STR.			SAFETY ENG.	
ELECTRICAL			MAINTENANCE	
ENGINEER			FIRE PROTECT.	
INSTRUMENT			WASTE MANAGE	
MECHANICAL			SECURITY	
			PROJECTS	
CHECKED				
APPROVED				

Fernald Closure Project
FLUOR FERNALD, INC.
U.S. DEPARTMENT OF ENERGY

PROJECT 59600 STAGE 2
BLDG. 51D ADVANCED WASTEWATER TREATMENT (AWWT)
CONVERTED AWWT (CAWWT)
NEW EAST WALL @ COLUMN 7 MODIFICATIONS
ELEVATION

RES 4518
DATE Sept. 23,2004
DRAWN JSW
51D-5500-S-01371 | 0

FILE NAME: res4518/51dsl371.dgn

POPSLOGN 5/30/03

F-5194

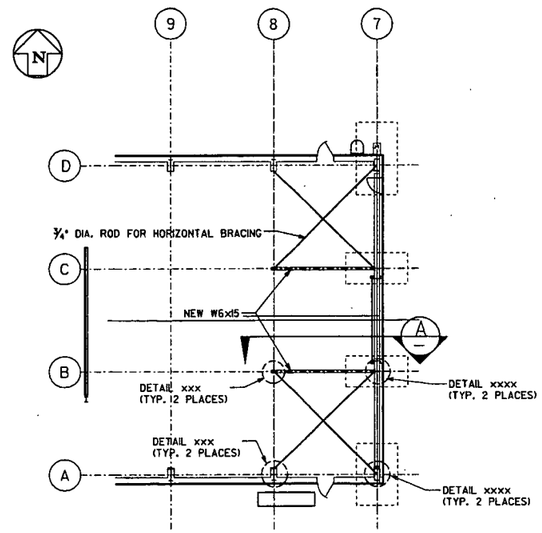

PLAN

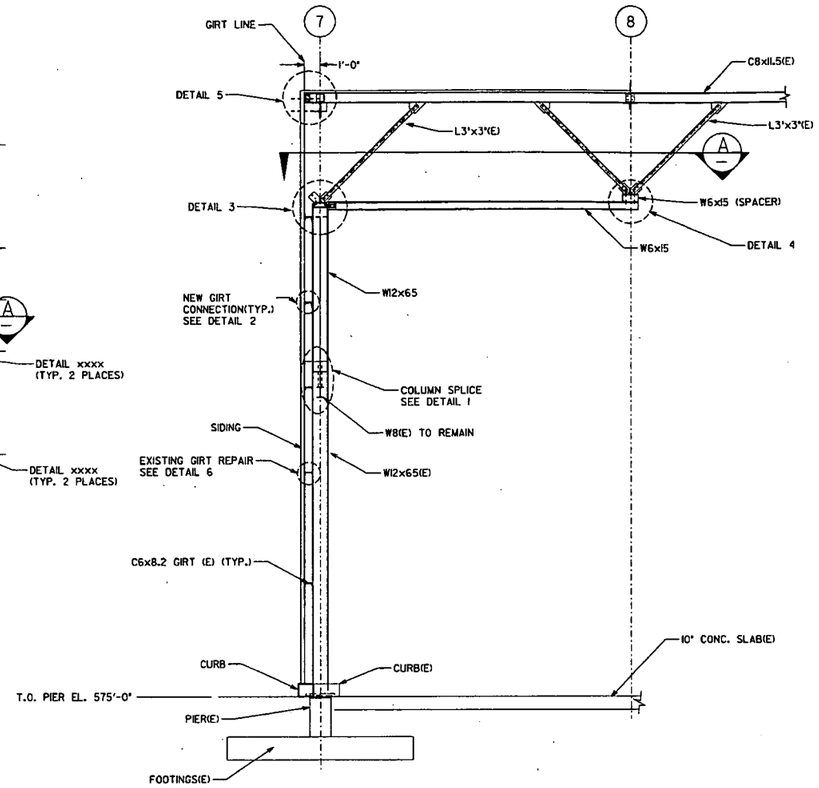

COLUMN 7 "B & C" (A)
SECTION

GENERAL NOTES

1) STEEL SHAPES AND PLATES TO BE ASTM A36.
2) WELDING PER AWS D1.1 VISUAL INSPECTION REQUIRED.
3) WELDING ELECTRODES TO BE E70XX.
4) USE SIMPLE FRAMED BOLTED CONNECTIONS PER AISC UNLESS SHOWN OTHERWISE.
5) BOLTED CONNECTIONS TO BE 3/4" ASTM A325N.

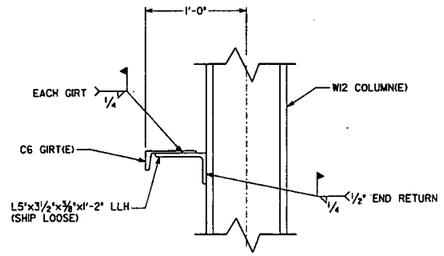

EXISTING GIRT REPAIR (6)
DETAIL

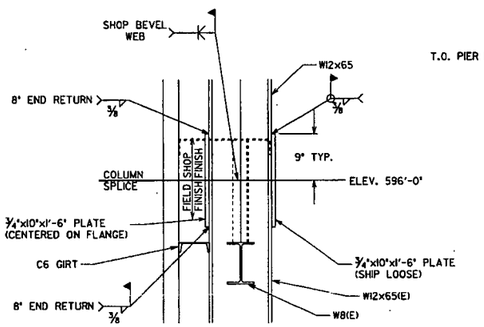

SPLICE JOINT (1)
DETAIL

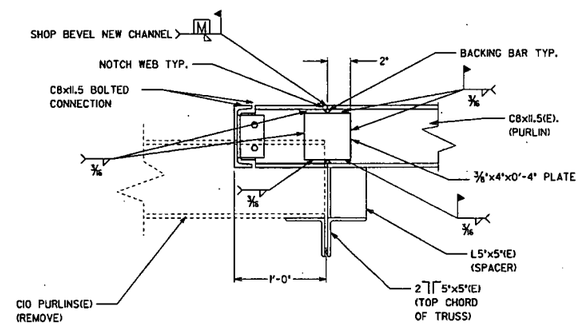

ROOF PURLINS/COLUMN 7 (5)
DETAIL

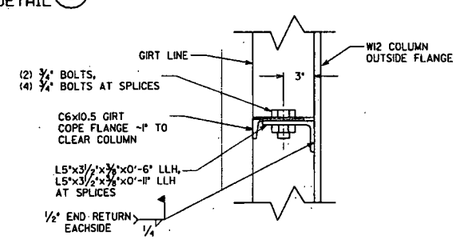

NEW GIRT DETAIL (2)
DETAIL

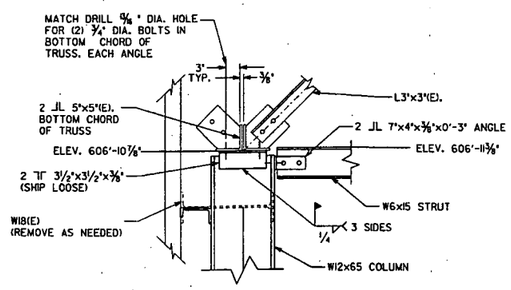

COLUMN 7 "B & C" (3)
DETAIL

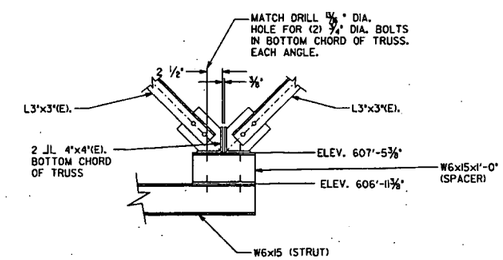

STRUT CONNECTION (4)
DETAIL

NO.	REVISIONS	DATE	DWN. BY	APPD.	NO.	REVISIONS	DATE	DWN. BY	APPD.	REF. DWG. NO.
										5IX-1910-S-00033
										5IX-1910-S-00032
										5IX-1910-S-00030
					0	ISSUED FOR CAWWT 'STAGE 2' CONSTRUCTION	01/6/04	JSW		5IX-1910-S-00028
					B	ISSUED FOR 90% REVIEW	12/19/03	JSW		5IX-1910-S-00027
					A	ISSUED FOR 60% REVIEW	9/23/03	JSW		5IX-1910-S-00026

NOTE:
FLUOR FERNALD CADD DRAWING. DO NOT REVISE MANUALLY.

CONFIGURATION MANAGEMENT DRAWING YES / NO
SYSTEMS, STRUCTURES OR COMPONENTS CONTROLLED BY CONFIGURATION MANAGEMENT. CONTROL SEE NOTES.
COGNIZANT ENGINEER DATE

APPROVALS

CIVIL & STR.			SAFETY ENG.	
ELECTRICAL			MAINTENANCE	
ENGINEER			FIRE PROTECT.	
INSTRUMENT			WASTE MANAGE	
MECHANICAL			SECURITY	
			PROJECTS	
CHECKED				
APPROVED				

Fernald Closure Project
FLUOR FERNALD, INC.
U.S. DEPARTMENT OF ENERGY

PROJECT 59600 STAGE 2
BLDG. 51D ADVANCED WASTEWATER TREATMENT (AWWT)
CONVERTED AWWT (CAWWT)
NEW EAST WALL MODIFICATIONS
SECTIONS & DETAILS
RES 4518
DATE Sept. 23,2004
DRAWN JSW
51D-5500-S-01372 | 0

FILE NAME: res4518/51ds1372.dgn

FOPSLOGN 5/30/03

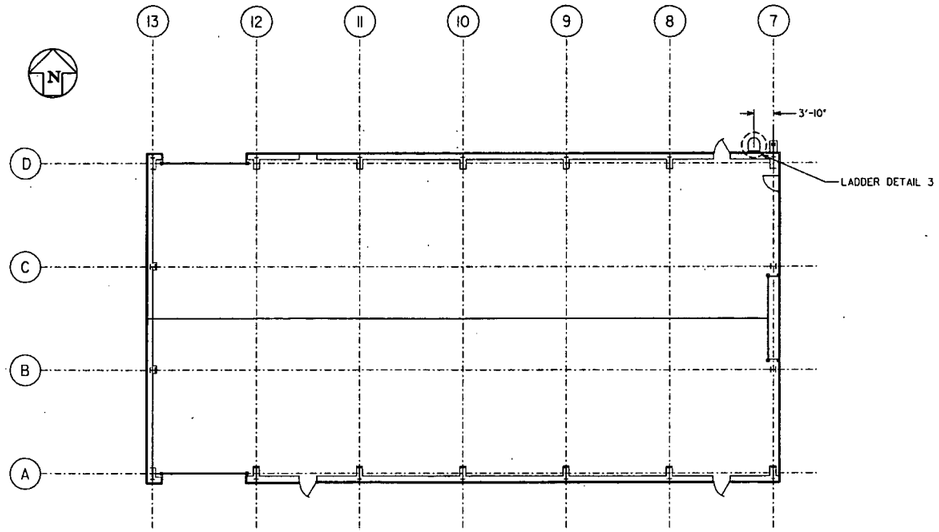

PLAN

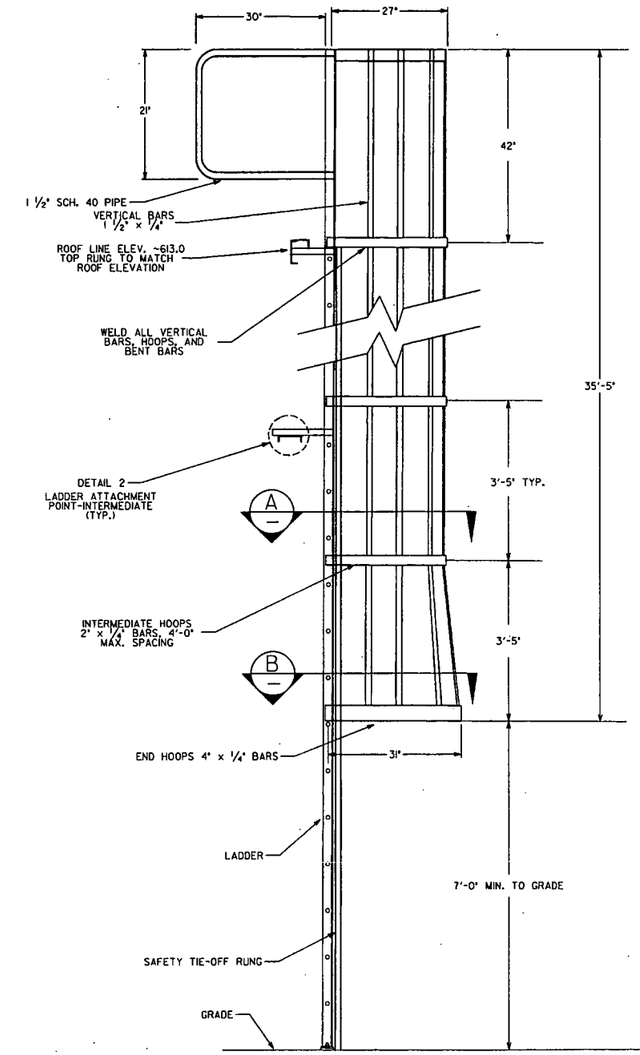

NOTE:
RENETRATE EXISTING SIDING. PATCH OPENING AND CAULK WATER TIGHT.

LADDER CAGE (8) DETAIL

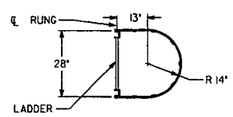

LADDER CAGE (A) SECTION

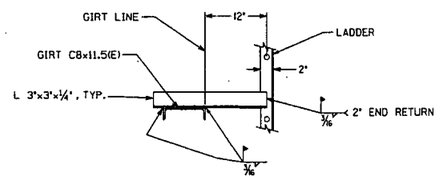

LADDER ATTACHMENT POINT INTERMEDIATE (2) DETAIL

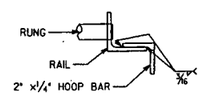

CAGE ATTACHMENT POINT (1) DETAIL

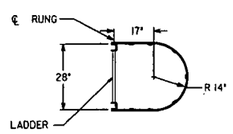

LADDER CAGE-FLAIR (B) SECTION

NO.	REVISIONS	DATE	DWN. BY	APPD.	NO.	REVISIONS	DATE	DWN. BY	APPD.	REF. DWG. NO.
					O	ISSUED FOR CAWWT 'STAGE 2' CONSTRUCTION	2/6/04	JSW	MEB	
					B	ISSUED FOR 90% REVIEW	10/28/04	JSW		SIX-1910-S-00027
					A	ISSUED FOR 60% REVIEW	9/21/04	JSW		SIX-1910-S-00030

NOTE:
FLUOR FERNALD CADD DRAWING. DO NOT REVISE MANUALLY.

CONFIGURATION MANAGEMENT DRAWING
EXISTING STRUCTURES OR COMPONENTS CONFIGURE AS THIS DRAWING. ALL UNDER CONTROL OF CONFIGURATION MANAGEMENT CONTROL. SEE NOTES.

COGNIZANT ENGINEER DATE

APPROVALS				
CIVIL & STR.	M.J. Bussell		SAFETY ENG.	
ELECTRICAL			MAINTENANCE	
ENGINEER			FRE PROJECT.	
INSTRUMENT			WASTE MANAGE	
MECHANICAL			SECURITY	
			PROJECTS	
CHECKED				
APPROVED				

Fernald Closure Project
FLUOR FERNALD, INC.
U.S. DEPARTMENT OF ENERGY

PROJECT 59600 STAGE 2
BLDG. 51A ADVANCED WASTEWATER TREATMENT (AWWT)
CONVERTED AWWT (CAWWT)
ROOF LADDER
PLAN & DETAILS
RES 4518
DATE Sept. 23,2004
DRAWN JSW
51D-5500-S-01373 0

FILE NAME: res4518/51dsl373.dgn

FCPS.DGN 5/30/03

GENERAL NOTES

1. INSTALL NEW 3/8" WIRE ROPE
2. WIRE ROPE SHALL BE 3/8" DIAMETER, 6x19 IWRC, AND BE GALVANIZED.
3. INSTALL WIRE ROPE WITH A MINIMUM ONE FOOT OF SAG FOR EVERY TWENTY FEET OF LENGTH.
4. ALL CONNECTING HARDWARE SHALL BE GALVANIZED.
5. WRAP WIRE ROPE AROUND VENTILATOR CURB.
6. CONNECT NEW 3/8" WIRE ROPE TO LADDER RAIL WITH 3 WIRE ROPE CLIPS.

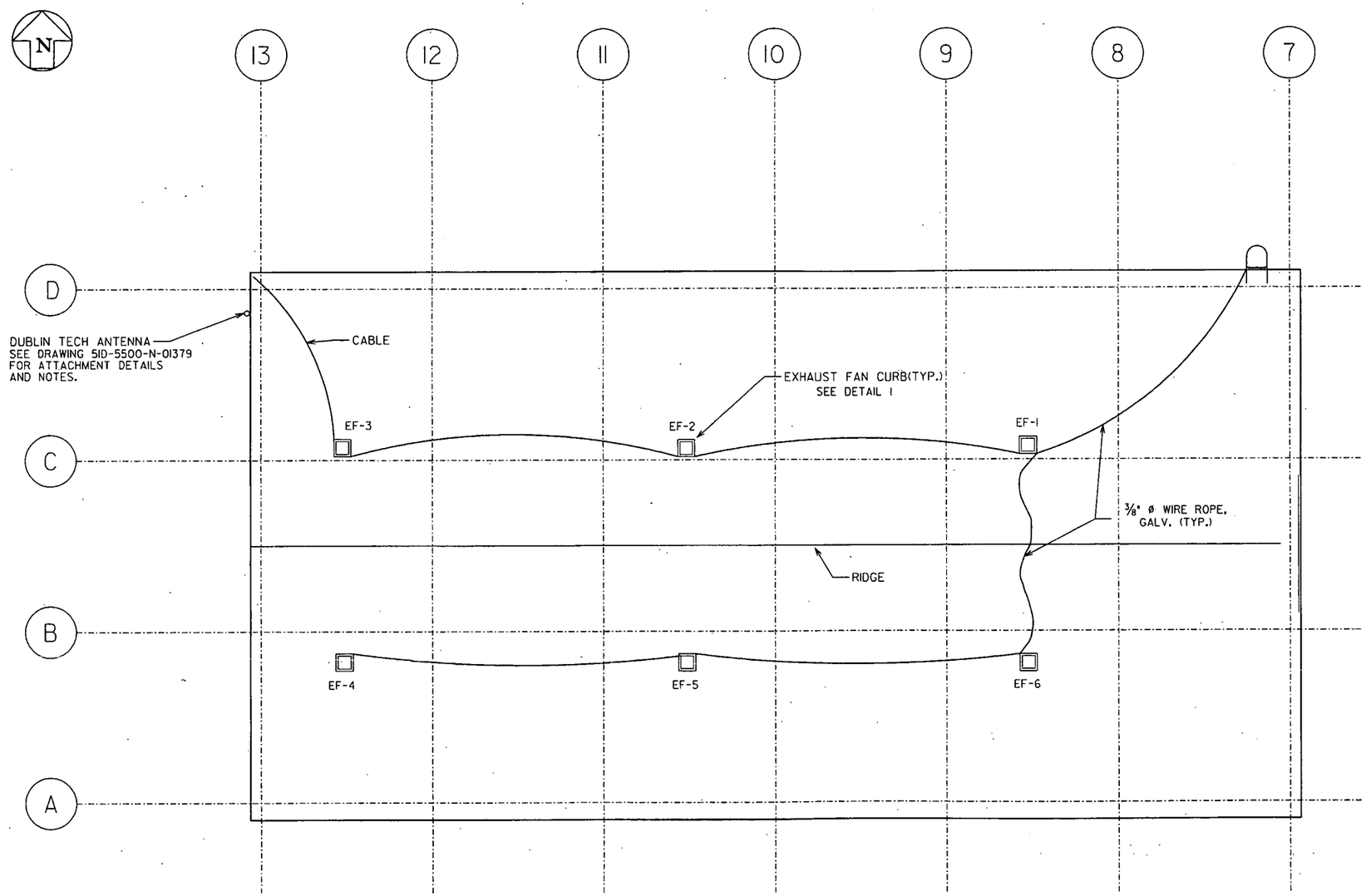

ROOF PLAN

SCALE 3/16" = 1'-0"

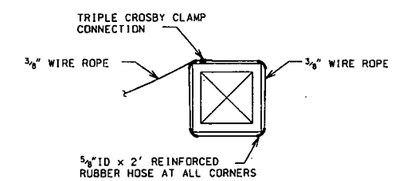

TYPICAL VENTILATOR CONNECTION DETAIL 1

NO.	REVISIONS	DATE	DWN. BY	APPD.	NO.	REVISIONS	DATE	DWN. BY	APPD.	REF. DWG. NO.
					O	ISSUED FOR CAWWT 'STAGE 2' CONSTRUCTION	2/6/04	JSW		
					B	ISSUED FOR 90% REVIEW	12/29/03	JSW		5IX-5500-S-00952
					A	ISSUED FOR 60% REVIEW	9/23/03	JSW		5IX-1910-A-00013

NOTE: FLUOR FERNALD CADD DRAWING, DO NOT REVISE MANUALLY.

CONFIGURATION MANAGEMENT DRAWING — YES / NO

SYSTEMS, STRUCTURES OR COMPONENTS DEPICTED ON THIS DRAWING ARE UNDER CONFIGURATION MANAGEMENT CONTROL. SEE NOTES.

COGNIZANT ENGINEER — DATE

APPROVALS

CIVIL & STR.			SAFETY ENG.		
ELECTRICAL			MAINTENANCE		
ENGINEER			FIRE PROTECT.		
INSTRUMENT			WASTE MANAGE.		
MECHANICAL			SECURITY		
			PROJECTS		
CHECKED					
APPROVED					

Fernald Closure Project

FLUOR FERNALD, INC.

U.S. DEPARTMENT OF ENERGY

PROJECT 59600 STAGE 2

BLDG. 51A ADVANCED WASTEWATER TREATMENT (AWWT)

CONVERTED AWWT (CAWWT)

ROOF PLAN

PLAN & DETAILS

RES 458

DATE Sept. 23,2004

DRAWN JSW

5ID-5500-S-01374 | 0

FILE NAME: res458/5idsl374.dgn

FDPS.DGN 5/30/03

33

579 4

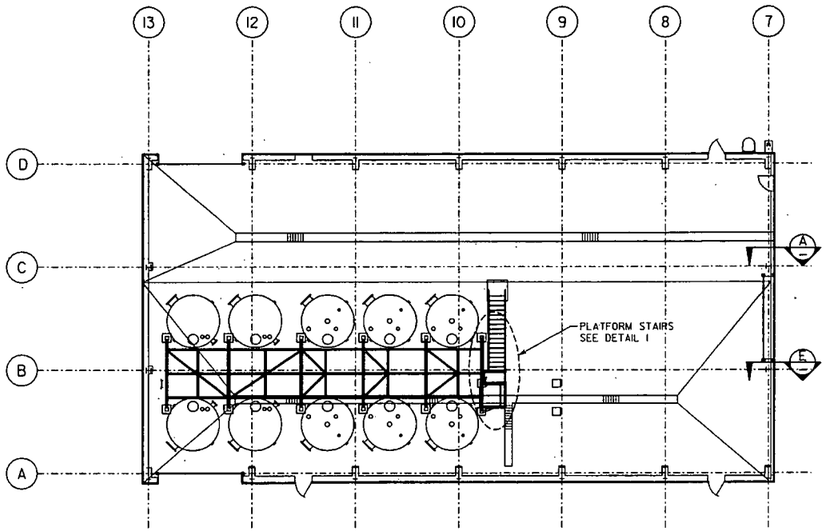

PLAN

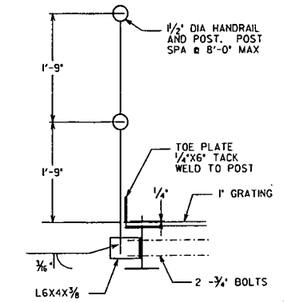

TYPICAL HANDRAIL SIDE BEAM MOUNTED (3)
DETAIL

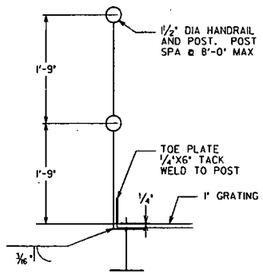

TYPICAL HANDRAIL TOP BEAM MOUNTED (4)
DETAIL

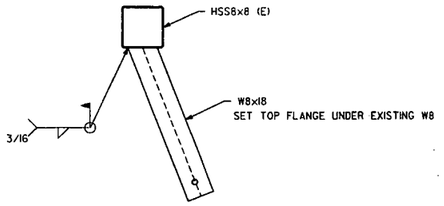

PLATFORM BRACE (2)
DETAIL

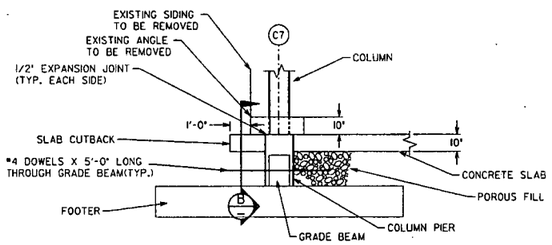

TYPICAL COL. 7 (A)
SECTION

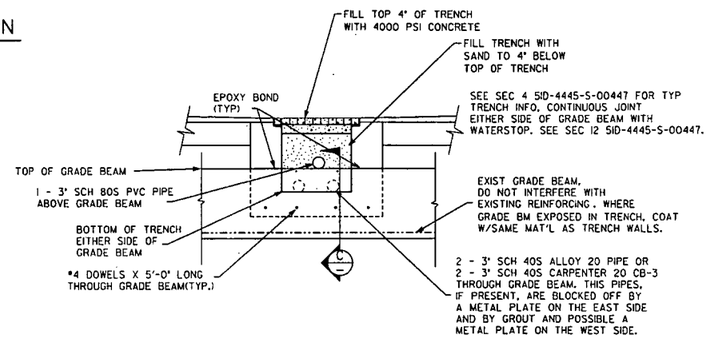

TRENCH @ COL. 7 (B)
SECTION

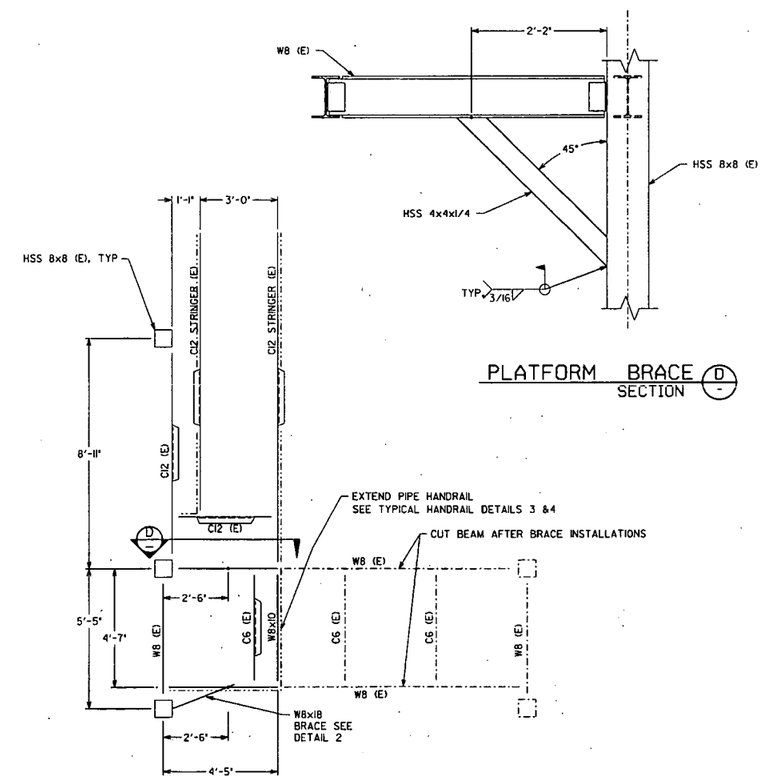

PLATFORM BRACE (D)
SECTION

STAIR LANDING MODIFICATION (1)
DETAIL

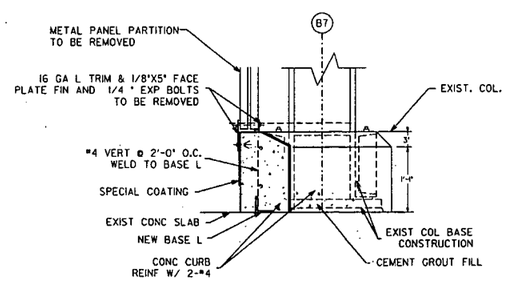

CURB BASE COL 7-B&C (E)
SECTION

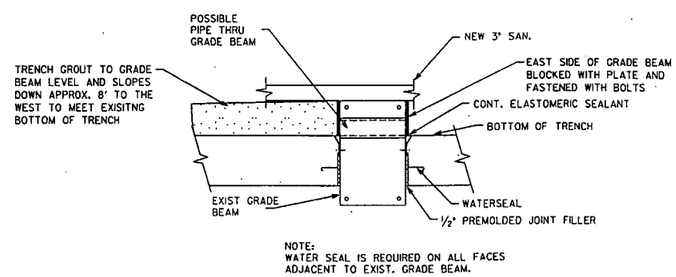

NOTE:
WATER SEAL IS REQUIRED ON ALL FACES
ADJACENT TO EXIST. GRADE BEAM.

GRADE BEAM AND TRENCH @ COL. 7 (C)
SECTION

NO.	REVISIONS	DATE	DWN. BY	APPD.	NO.	REVISIONS	DATE	DWN. BY	APPD.	REF. DWG. NO.
										5ID-4445-S-00466
										5ID-4445-S-00448
										5ID-4445-A-00456
										5IX-1910-S-00033
										5IX-1910-S-00031
					0	ISSUED FOR CAWWT 'STAGE 2' CONSTRUCTION	12/6/01	JSW		5IX-1910-S-00026
					B	ISSUED FOR 90% REVIEW	8/29/01	JSW		5IX-1910-S-00025

NOTE:
FLUOR FERNALD
CADD DRAWING.
DO NOT REVISE
MANUALLY.

CONFIGURATION MANAGEMENT DRAWING
EXISTING STRUCTURES AND COMPONENTS MAY NOT MEET CURRENT CONFIGURATION MANAGEMENT CONTROL LEVEL NOTED.
COGNIZANT ENGINEER DATE

APPROVALS

CIVIL & STR.			SAFETY ENG.	
ELECTRICAL			MAINTENANCE	
ENGINEER			FIRE PROTECT.	
INSTRUMENT			WASTE MANAGE.	
MECHANICAL			SECURITY	
			PROJECTS	
CHECKED				
APPROVED				

Fernald Closure Project

FLUOR FERNALD, INC.

U.S. DEPARTMENT OF ENERGY

PROJECT 59600 STAGE 2

BLDG. 51A ADVANCED WASTEWATER TREATMENT (AWWT)

CONVERTED AWWT (CAWWT)
MISC. STRUCTURAL DETAILS
PLAN & DETAILS

RES 4518
DATE Sept. 23,2004
DRAWN JSW

5ID-5500-S-01434 | 0

FILE NAME: res4518/5idsl434.dgn

FOPS.DGN 5/30/03

5194

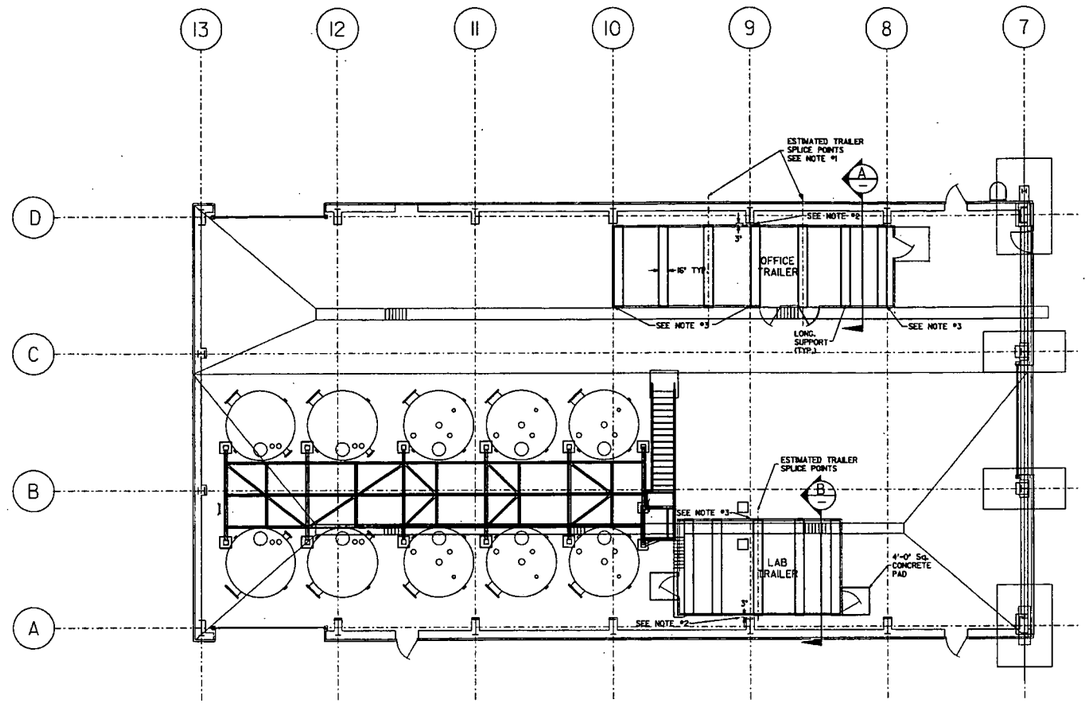

PLAN

NOTES:

1. SPLICE POINTS FOR TRAILERS APPROXIMATE. FIELD VERIFY LOCATION OF SPLICE POINTS PRIOR TO CURB DESIGN AND CONSTRUCTIOIN.
2. MAINTAIN 3" GAP BETWEEN FOUNDATION AND CURB.
3. ALL CURBS SHALL BE CONSTRUCTED WITH 1" SPACE AWAY FROM CONTROL JOINTS.

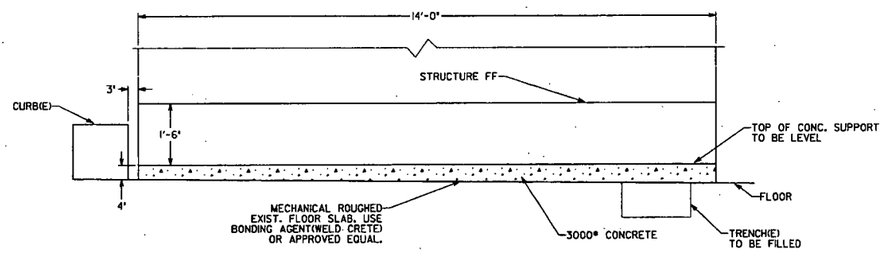

TYP. LAB STRUCTURE FOUNDATION
SECTION B -

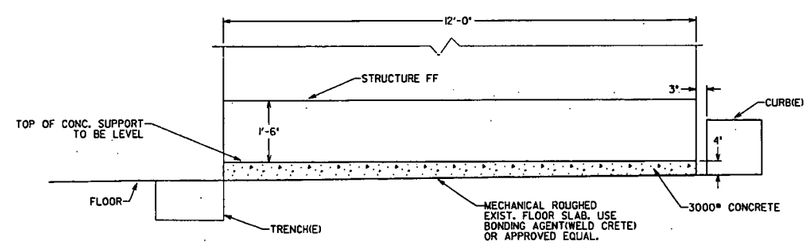

TYP. PERSONAL STRUCTURE FOUNDATION
SECTION A -

NO.	REVISIONS	DATE	DWN. BY	APPD.	NO.	REVISIONS	DATE	DWN. BY	APPD.	REF. DWG. NO.
										51D-4445-S-00466
										51D-4445-S-00448
										51D-4445-A-00456
										51X-1910-S-00033
										51X-1910-S-00031
					0	ISSUED FOR CAWWT 'STAGE 2' CONSTRUCTION	0/6/04	JSW	PAB	51X-1910-S-00026
					B	ISSUED FOR 90% REVIEW	0/25/04	JSW	"	51X-1910-S-00025

NOTE:
FLUOR FERNALD CADD DRAWING. DO NOT REVISE MANUALLY.

CONFIGURATION MANAGEMENT DRAWING
YES / NO
SYSTEMS, STRUCTURES OR COMPONENTS CONTROLLED IN THE CONFIGURATION MANAGEMENT PROGRAM. SEE NOTES.
COGNIZANT ENGINEER DATE

APPROVALS

CIVIL & STR.	[signature]	12-8-04	SAFETY ENG.
ELECTRICAL			MAINTENANCE
ENGINEER			FIRE PROTECT.
INSTRUMENT			WASTE MANAGE
MECHANICAL			SECURITY
			PROJECTS [signature] 12/6/04
CHECKED	PAB		
APPROVED	[signature]	12/6/04	

Fernald Closure Project
FLUOR FERNALD, INC.
U.S. DEPARTMENT OF ENERGY

PROJECT 59600 STAGE 2
BLDG. 51A ADVANCED WASTEWATER TREATMENT (AWWT)
CONVERTED AWWT (CAWWT)
FOUNDATION FOR LAB & PERSONAL STRUCTURES
PLAN & SECTIONS

RES 4518
DATE Dec. 16,2004
DRAWN JWR

51D-5500-S-01435 0

FILE NAME: res4518/51dsl435.dgn

FDPSLOGH 5/30/03

5794

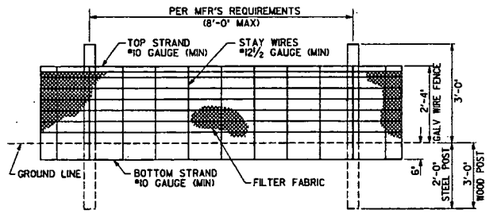

ELEVATION

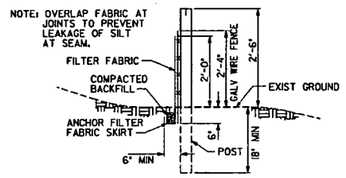

SECTION

NOTES FOR SILT FENCE

1. FENCE CAN BE FIELD CONSTRUCTED AND INSTALLED, OR A PREMANUFACTURED FENCE MAY BE USED.
2. PREMANUFACTURED FENCE SHALL BE MIRAFI, INC. ENVIROFENCE OR EQUAL.
3. FOR FIELD CONSTRUCTED FENCE:
   WIRE SHALL BE A MINIMUM OF 32 INCHES IN WIDTH AND SHALL HAVE A MINIMUM OF 6 LINE WIRES WITH 12 INCH STAY SPACING.
   FILTER FABRIC SHALL BE EITHER MIRAFI 100X, AMOCO CONSTRUCTION FABRIC SILT STOPPER, OR EQUAL.
   FILTER FABRIC SHALL BE A MINIMUM OF 36 INCHES WIDE AND SHALL BE FASTENED ADEQUATELY TO THE WIRE AT 8' ON CENTER.
   STEEL POSTS SHALL BE 5'-0" IN HEIGHT AND BE OF THE SELF-FASTENER ANGLE STEEL TYPE.
   WOOD POSTS SHALL BE A MINIMUM OF 6'-0" IN HEIGHT AND 3" OR MORE IN DIAMETER. WIRE FABRIC SHALL BE FASTENED TO POST WITH NOT LESS THAN #9 WIRE STAPLES, 1½" LONG.

SILT FENCE DETAIL

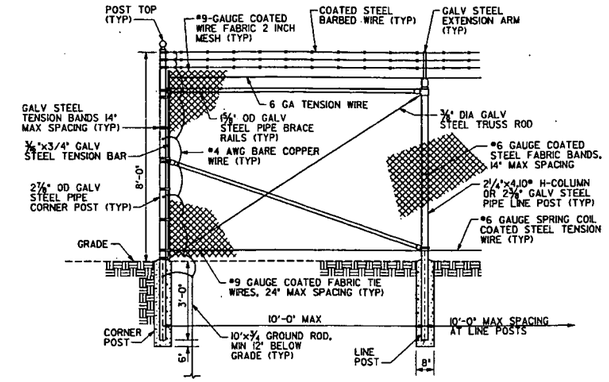

SECURITY FENCE DETAIL

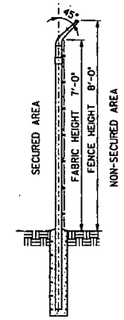

LINE POST DETAIL

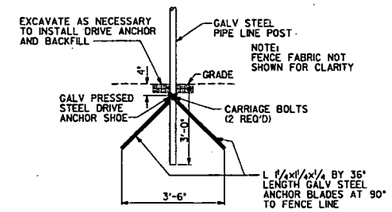

LINE POST DRIVE ANCHOR DETAIL

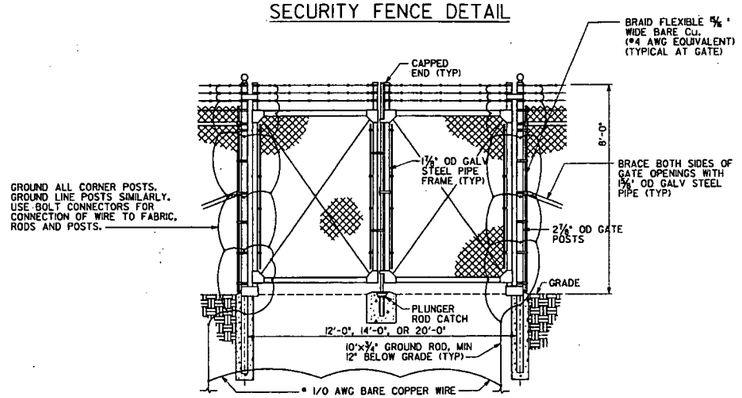

SECURITY FENCE DOUBLE GATE DETAIL

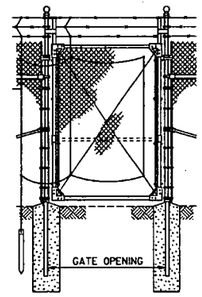

SECURITY FENCE SINGLE GATE DETAIL

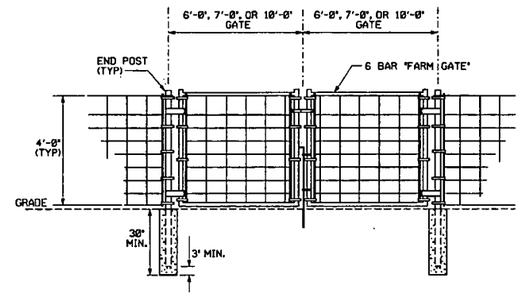

PROPERTY FENCE WITH DOUBLE GATE DETAIL

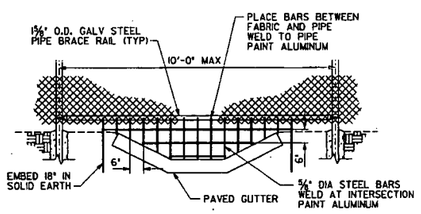

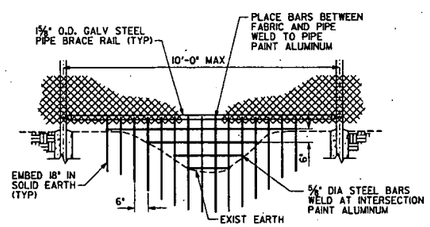

FENCING ACROSS DITCH

GROUNDING NOTES

1. THE GROUNDING OF FENCES WHERE IT HAS BEEN DETERMINED THE RESISTANCE BETWEEN THE FENCE AND EARTH IS MORE THAN 25 OHMS OR AN ELECTRICAL SERVICE IS TO BE INSTALLED IN A FENCE ENCLOSURE, SHALL BE GROUNDED AS SHOWN ON THIS SHEET.
2. ALL GROUND RODS SHALL BE DRIVEN ON THE INSIDE OF AND AS CLOSE AS PRACTICAL TO THE FENCES. THE TOPS OF THE RODS SHALL BE DRIVEN 12" BELOW GRADE.
3. ALL GROUND ELECTRODE CONDUCTORS SHALL BE CONNECTED TO GROUND RODS BY THE THERMIC METHOD SUCH AS CADWELD OR APPROVED TYPE COMPRESSION METHOD.

LEGEND

- METALLIC FENCE WITH HORIZONTAL GROUND BUS ATTACHED AT 10' INTERVALS
- TRANSMISSION OR DISTRIBUTION LINE
- FENCE WITH HORIZONTAL GROUND BUS, RISER AND GROUND ROD

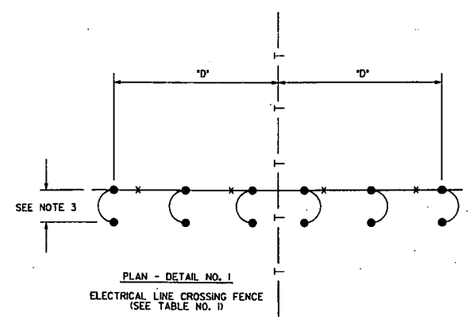

PLAN - DETAIL NO. 1

ELECTRICAL LINE CROSSING FENCE (SEE TABLE NO. 1)

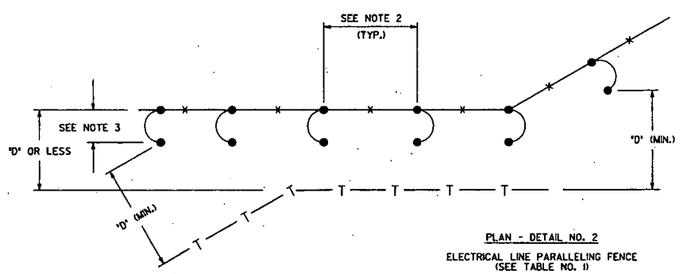

PLAN - DETAIL NO. 2

ELECTRICAL LINE PARALLELING FENCE (SEE TABLE NO. 1)

TRANSMISSION LINE CROSSING & PARALLEL TO FENCE - TYPICAL PLANS

POWER CORRIDORS (KILOVOLTS)	DIMENSION "D". SHORTEST HORIZONTAL DISTANCE FROM FENCE TO CENTER OF POWER CORRIDOR
2.3 TO 44	25 FEET
69 TO 115	50 FEET
138 TO 161	75 FEET
230 TO 289	100 FEET
330 & ABOVE	150 FEET

TABLE #1

NO.	REVISIONS	DATE	DWN. BY	APPD.	NO.	REVISIONS	DATE	DWN. BY	APPD.	REF. DWG. NO.
					0	ISSUED AS ENGINEERING STANDARD	5/20/03	GEP	GEP	

NOTE: FLUOR FERNALD CADD DRAWING. DO NOT REVISE MANUALLY.

CONFIGURATION MANAGEMENT DRAWING — CHECK ONE: REF / REV. EXISTING STRUCTURES OR COMPONENTS AFFECTED BY THIS DRAWING ARE UNDER CONFIGURATION MANAGEMENT CONTROL. SEE NOTES.

COGNIZANT ENGINEER DATE

APPROVALS

CIVIL & STR.			SAFETY ENG.	
ELECTRICAL	J.E. BER.	5/20/03	MAINTENANCE	
ENGINEER			FIRE PROTECT.	
INSTRUMENT			WASTE MANAGE.	
MECHANICAL			SECURITY	
			PROJECTS	
CHECKED	GEP			
APPROVED	G.E. PAUL	5/20/03		

Fernald Environmental Management Project

FLUOR FERNALD, INC.

U.S. DEPARTMENT OF ENERGY

SITEWIDE

STANDARD INSTALLATION DETAILS
FEMP FENCES AND GATES
NO SCALE

DATE: JULY 15, 2003
DRAWN: R.M. LINDGREN

00X-5500-G-02655 | 0

FILE NAME: /base/standards/00xg2655.dgn

F-5794

FFS_DGN 5/22/00

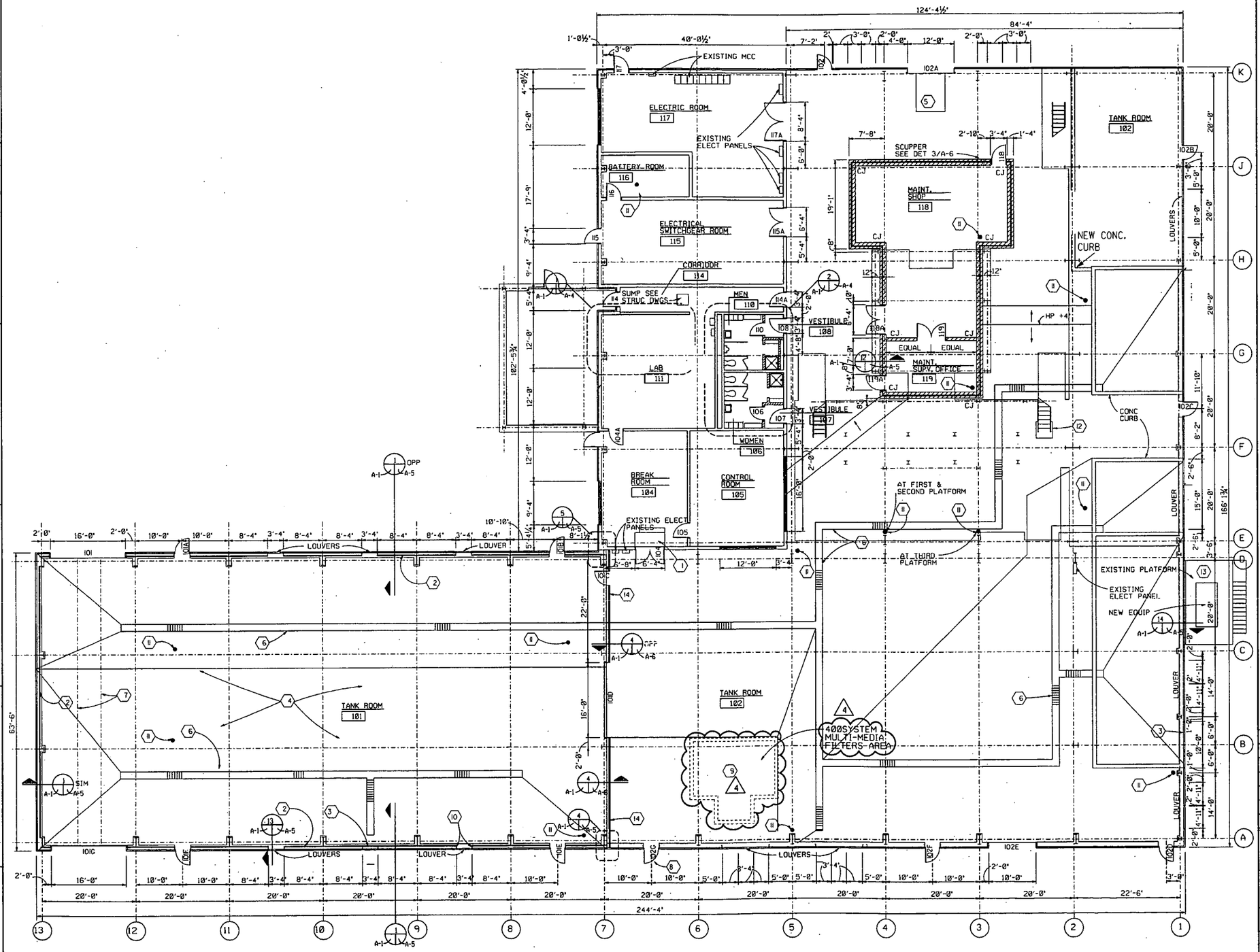

GROUND FLOOR PLAN

1/8"=1'-0"

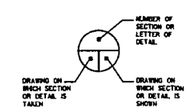

SECTION & DETAIL KEY

NOTES

1. PROVIDE ACCESS FLOOR AT DOOR FLUSH WITH NEW CONC TOPPING. REVISE EXIST STEPS TO PROVIDE 2 EQUAL RISERS UP TO ROOM 104 ACCESS FLOOR LEVEL.
2. NEW INTERIOR METAL LINER PANELS TO MATCH EXISTING INTERIOR METAL LINER PANELS
3. REMOVE EXISTING LOUVERS, REPLACE WITH INSULATED METAL PANELS TO MATCH EXISTING SIDING & LINER
4. NEW ROOF INSULATION AND METAL LINER CEILING PANELS BETWEEN COL LINES A-D AND 7-13
5. PROVIDE NEW SCISSOR LIFT & PIT IN EXISTING CONCRETE SLAB. SEE STRUC DWGS.
6. NEW TRENCH DRAIN. SEE STRUC DWGS.
7. REPAIR CONCRETE SLAB AFTER REMOVAL OF RAILROAD TRACKS
8. REVISE/REPLACE DOOR AND FRAME TO REVERSE SWING.
9. SCALE REMOVED. PIT FILLED WITH CONCRETE TO MEET EXISTING FLOOR SLAB
10. PROVIDE LINER PANEL CLOSURE TRIM AT PERIMETER OF DOOR, LOUVER, & TRANSLUCENT PANEL OPENINGS IN ROOM 101. SEE DETAILS ON SHT A-5.
11. NEW SAFETY SHOWER. NOTE: COORDINATE LOCATION OF ROOM 101 SHOWERS WITH LAYOUT OF EQUIPMENT PROVIDED UNDER RFP SPEC 02902-3501.
12. MODIFY EXIST STAIR. NEW CONC PAD TO MATCH HEIGHT OF FIRST RISER. SEE SHT S-1 FOR CONC PAD. PROVIDE ABRASIVE GRIT IN SPECIAL FLOOR COATING ON PAD.
13. BEFORE INSTALLATION OF NEW EQUIPMENT RENOVATE EXIST PLATFORM AS REQUIRED.
14. PROVIDE METAL TRIM FOR SINGLE PIPES AND RECTANGULAR OPENING TRIM & FRAME FOR MULTIPLE PIPE PENETRATIONS THROUGH EXISTING METAL PARTITION (18 PIPES- SEE MODEL). MINIMUM CLEARANCE AROUND PIPES & INSULATION=1", EXCEPT 2" FOR PIPES 6" OR LARGER.

GENERAL NOTES:

A. SEE APPENDIX C OF SPECIFICATIONS FOR ROOM FINISH SCHEDULE.

B. SEE APPENDIX H OF SPECIFICATIONS FOR DOOR FINISH SCHEDULE.

	A-CFC submittals only - Conforms w/reqmts
	B-Minor Comment - Resubmit as-CFC/INF/EEC
	C-Revise and Resubmit
x	D-Accepted for INF/EEC - Conforms w/Reqmts.
	SIGN/DATE T. Eaves/ 8-28-97

4

TO CORRELATE REFERENCED " AMK SHEET No's " TO FEMP DRAWING NUMBERS, SEE FEMP DRAWING No.: 51D-4445-X-00425 & 51D-4445-X-00426.

REV. NO.	ISSUE OR REVISION PURPOSE - DESCRIPTION	A-E	OPERATOR	DOE
		INITIALS AND DATE		
4	AS-BUILT PER MULTI-MEDIA FILTERS PROJECT PER RES 3245	GEP/TEE 7-17-97	MET 7-15-97	
3	AS-BUILT DCN 1685-005, RES 2709 AND 3081 PER RES 3245	GEP/TEE 5-8-97	DEP 4-11-97	
2	EXISTING SCALE AND CURB TO BE REMOVED PER RES #2709	GEP/TEE 9-22-95	JMP 8-17-95	
1	MODIFIED AFTER RECEIPT OF BIDS	EHZ 10-12-92	TEE 10-26-92	
0	CFC	EHZ 7-7-92		

UNITED STATES DEPARTMENT OF ENERGY
FERNALD ENVIRONMENTAL MANAGEMENT PROJECT

THIS DRAWING PREPARED BY
A. M. KINNEY, INC.
CONSULTING ENGINEERS
CINCINNATI, OHIO

A-E PROJECT NO. 07902

PROJECT NAME
ENVIRONMENTAL, HEALTH & SAFETY IMPROVEMENTS

DRAWING TITLE
WASTEWATER TREATMENT IMPROVEMENTS-PLANTWIDE
GROUND FLOOR PLAN - BUILDING 51

DRAWN BY	DATE	DESIGNED, CHECKED BY	DATE	CHECKED BY	DATE
JCC	1/92	AWS	1/92	EHZ	7/92

PLANT/BLDG. NO.	FLOOR	SCALE	CLASS
FEMP/BLDG 51	GROUND	1/8" = 1'-0"	

SUBMITTED FOR APPROVAL | APPROVAL RECOMMENDED | DRAWING APPROVED

A-E DATE | OPERATING CONTRACTOR DATE | DOE DATE

DOE PROJECT NO.	OPER. CONTR. PROJ. NO.	DRAWING NO.	SHT. NO.	REV. NO.
87-D-159	0087502 WBS U.2.4.0L02	51D-4445-A-00451	A-1	4

FILE NAME: /AWWT/AWWT0A201.001

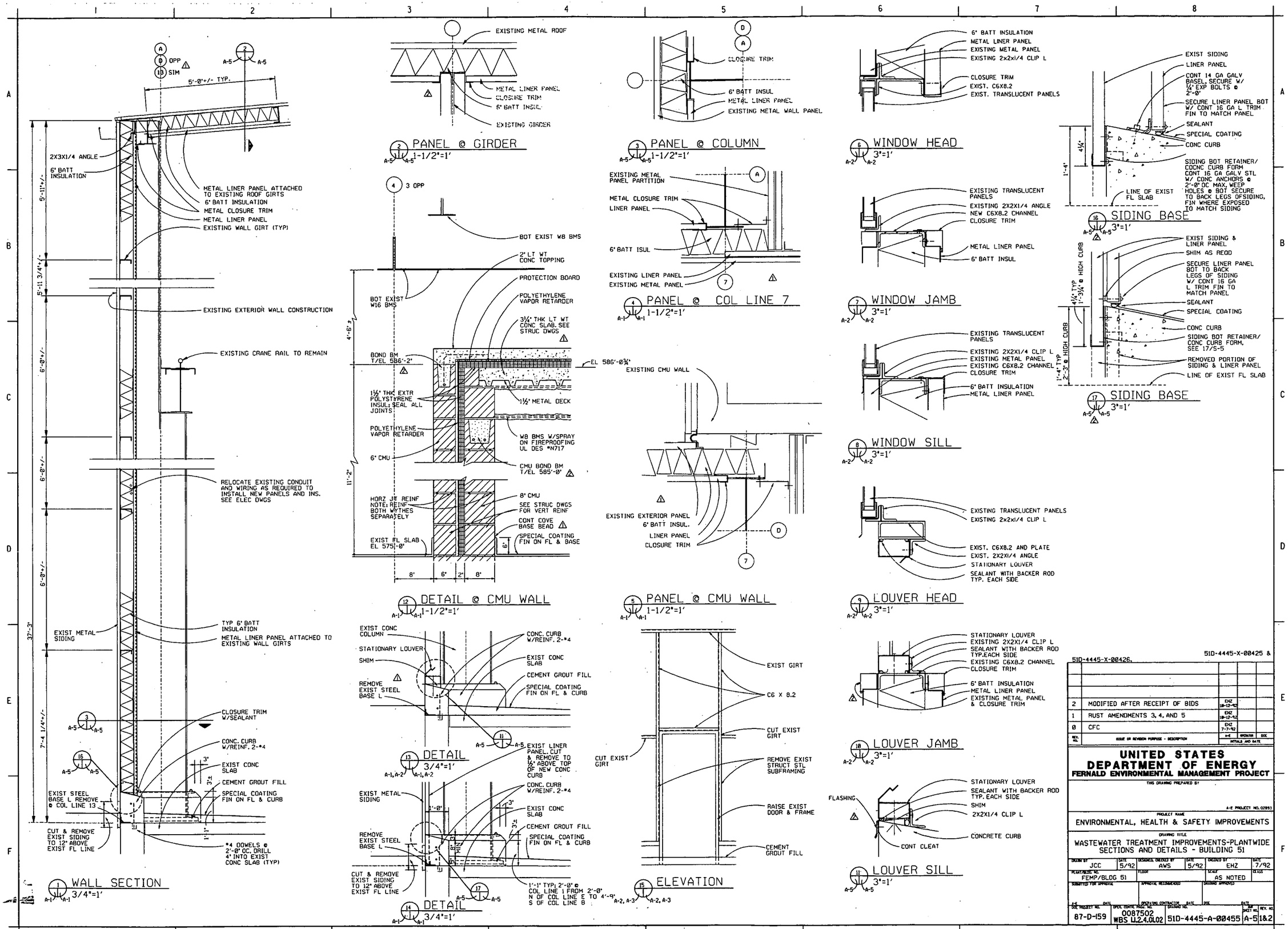

51D-4445-X-00426. 51D-4445-X-00425 &

REV. NO.	ISSUE OR REVISION PURPOSE - DESCRIPTION	A-E INITIALS AND DATE	OPERATOR	DOE
2	MODIFIED AFTER RECEIPT OF BIDS	EHZ 10-12-92		
1	RUST AMENDMENTS 3, 4, AND 5	EHZ 10-12-92		
0	CFC	EHZ 7-7-92		

UNITED STATES DEPARTMENT OF ENERGY
FERNALD ENVIRONMENTAL MANAGEMENT PROJECT

THIS DRAWING PREPARED BY

A-E PROJECT NO. 02893

PROJECT NAME: ENVIRONMENTAL, HEALTH & SAFETY IMPROVEMENTS

DRAWING TITLE: WASTEWATER TREATMENT IMPROVEMENTS-PLANTWIDE SECTIONS AND DETAILS - BUILDING 51

DRAWN BY	DATE	DESIGNED, CHECKED BY	DATE	CHECKED BY	DATE
JCC	5/92	AWS	5/92	EHZ	7/92

PLANT/BLDG. NO.: FEMP/BLDG 51 | FLOOR | SCALE: AS NOTED | CLASS

SUBMITTED FOR APPROVAL | APPROVAL RECOMMENDED | CONTRACT APPROVED

A-E DATE | OPERATING CONTRACTOR DATE | DOE DATE

DOE PROJECT NO.	SPCL CONTR PROJ. NO.	DRAWING NO.	SHT SHEET NO.	REV. NO.
87-D-159	0087502 WBS U.2.4.01.02	51D-4445-A-00455	A-5	1&2

38

5794

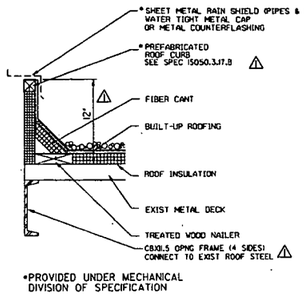

TYPICAL PREFABRICATED METAL ROOF CURB

NOT TO SCALE

REMOVE EXIST BUILT-UP ROOFING & INSULATION AS REQUIRED FOR NEW WORK. REPLACE W/ MATCHING MATERIAL. STRIP INTO EXIST ROOFING.
ROOF CURB SHOWN ON SHT A-3 ARE SIMILAR EXCEPT AS SPECIFIED IN SPEC SECTION 07410.

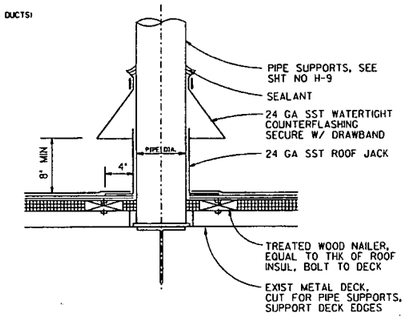

TYPICAL PIPE SUPPORT AT ROOF

NOT TO SCALE

REMOVE EXIST BUILT-UP ROOFING & INSULATION AS REQUIRED FOR NEW WORK. REPLACE W/ MATCHING MATERIAL. STRIP INTO EXIST ROOFING.

TRUCK SHELTER GENERAL NOTES:

DESIGN BUILDING LOADS

MAX COLUMN LOADS TO FOUNDATION

DL + WIND	UPLIFT	=	5K		
DL + LL.	HORIZ	=	6K		
			DOWN	=	14K
			HORIZ	=	4K

ROOF LL = 30 PSF PLUS SNOW DRIFT
WIND LL = 20 PSF (30 PSF CLADDING)

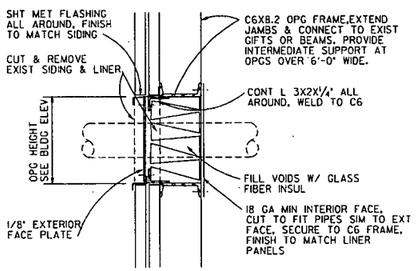

SECTION

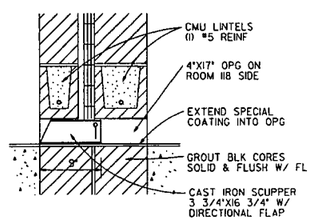

3 SCUPPER DETAIL

A-1 A-6 3/4" = 1'-0"

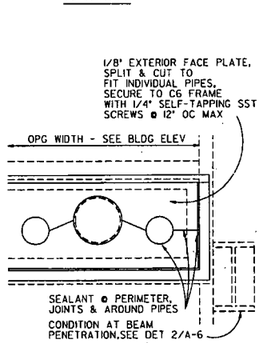

ELEVATION

1 WALL OPENING DETAIL

A-2 A-3 A-6 3/4" = 1'-0"

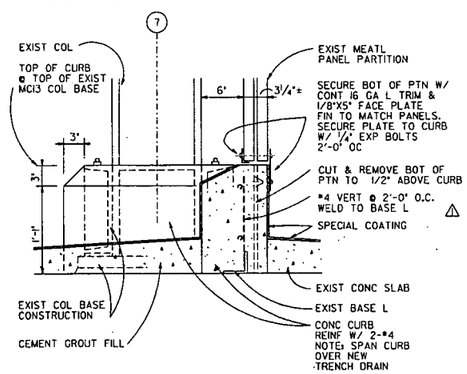

4 PARTITION BASE DETAIL

A-1 A-6 3/4" = 1'-0"

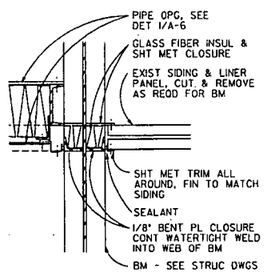

2 BEAM PENETRATION DETAIL

A-2 A-3 A-6 3/4" = 1'-0"

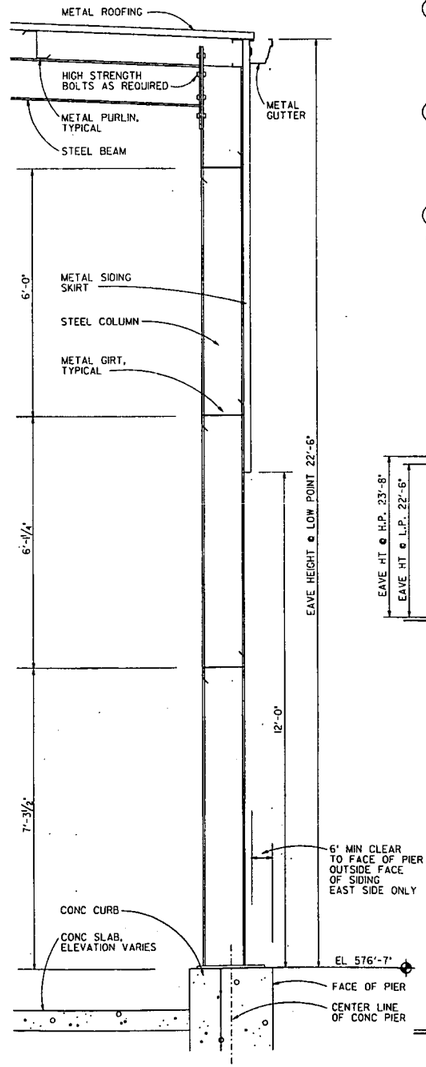

2 WALL SECTION

A-6 A-6 3/4" = 1'-0"

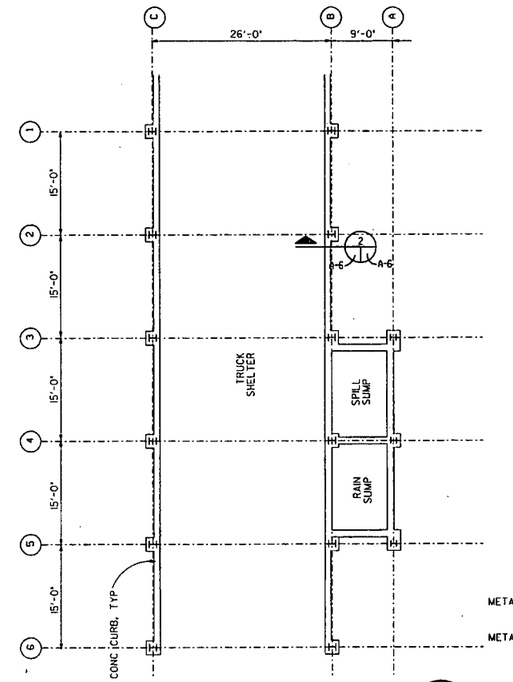

TRUCK SHELTER PLAN

1/8" = 1'-0"

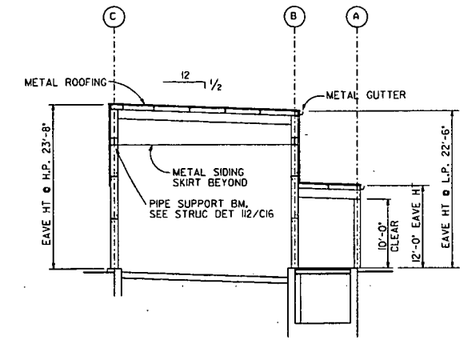

1 SECTION

A-6 A-6 1/8" = 1'-0"

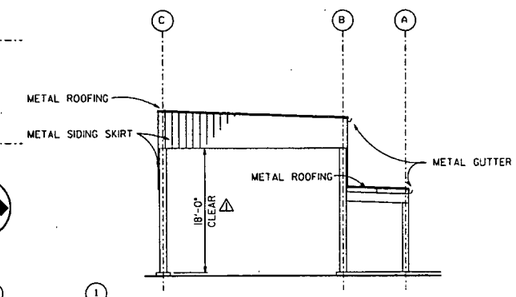

SOUTH ELEVATION

1/8" = 1'-0"

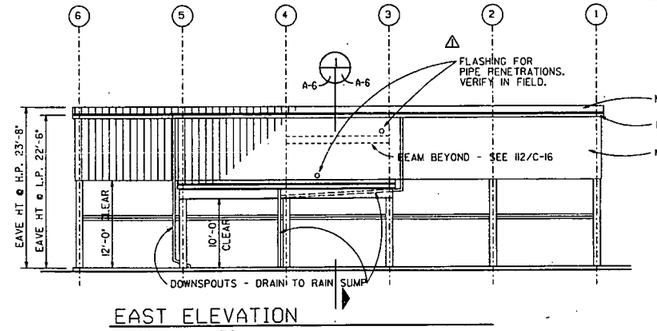

EAST ELEVATION

1/8" = 1'-0"

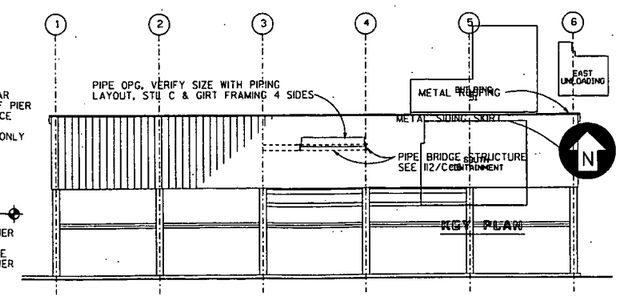

WEST ELEVATION

1/8" = 1'-0"

5ID-4445-X-00426. 5ID-4445-X-00425 &

REV. NO.	ISSUE OR REVISION PURPOSE - DESCRIPTION	A-E	OPERATOR	DOE
1	MODIFIED AFTER RECEIPT OF BIDS	EHZ 10-12-92		
0	CFC	EHZ 7-7-92		

DETAILS AND DATE

UNITED STATES DEPARTMENT OF ENERGY
FERNALD ENVIRONMENTAL MANAGEMENT PROJECT

THIS DRAWING PREPARED BY
A. M. KINNEY, INC.
CONSULTING ENGINEERS
CINCINNATI, OHIO
A-E PROJECT NO. 02902

PROJECT NAME: ENVIRONMENTAL, HEALTH & SAFETY IMPROVEMENTS

DRAWING TITLE: WASTEWATER TREATMENT IMPROVEMENTS-PLANTWIDE TRUCK SHELTER & MISCELLANEOUS DETAILS

DRAWN BY	DATE	DESIGNED, CHECKED BY	DATE	CHECKED BY	DATE
LKI	5/92	EBW	5/92	EHZ	7/92

PLANT/BLDG. NO.: FEMP | FLOOR: | SCALE: AS NOTED | CLASS:

SUBMITTED FOR APPROVAL | APPROVAL RECOMMENDED | DRAWING APPROVED

A-E DATE | OPERATING CONTRACTOR DATE | DOE DATE

DOE PROJECT NO.	SPEC. CONTR. PROJ. NO.	DRAWING NO.	SHEET NO.	REV. NO.
87-D-159	0087502 WBS 1.1.2.4.01.02	5ID-4445-A-00456	A-6	1

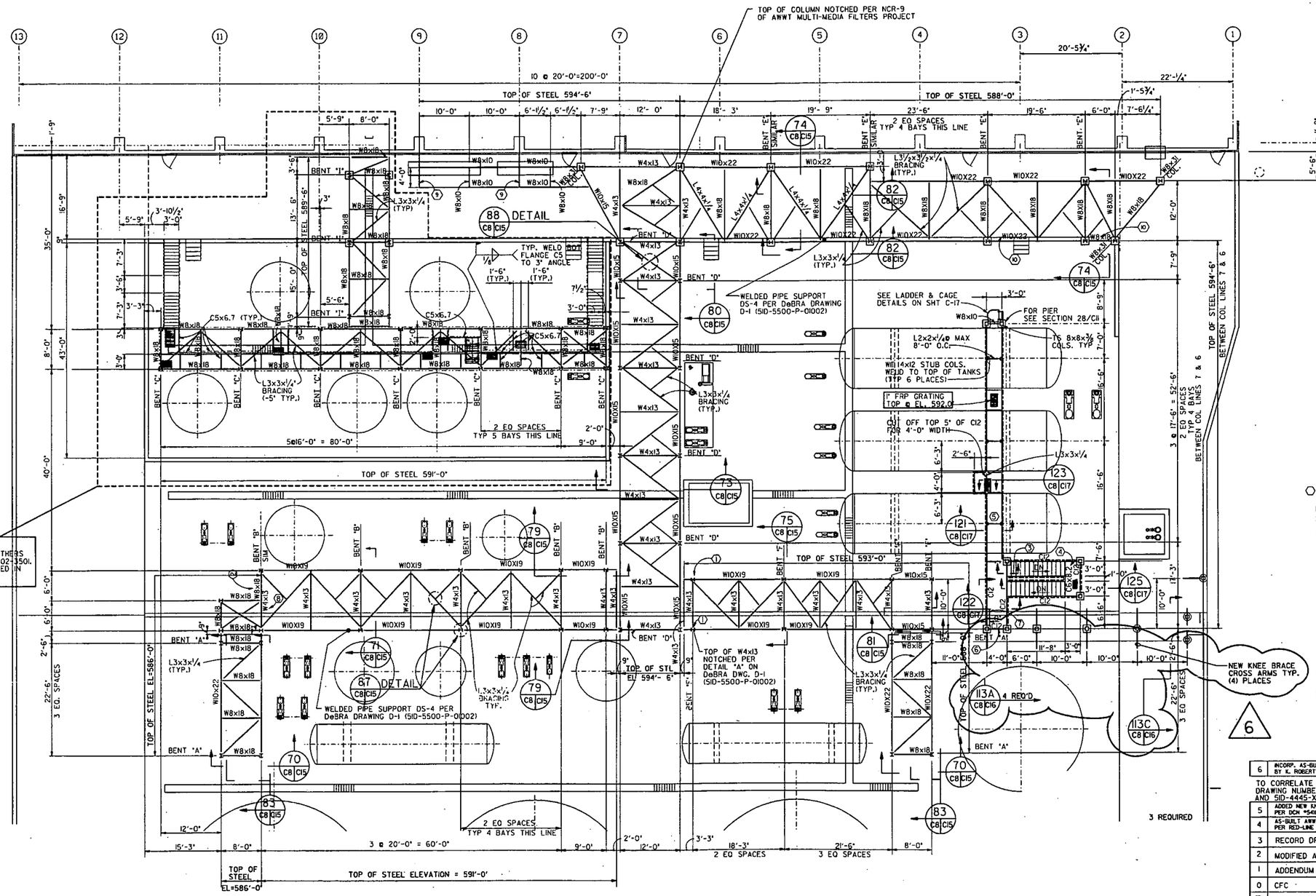

UPPER LEVEL PIPE RACK FRAMING PLAN

NORTH

SCALE: 1/8"=1'-0"

SECTION & DETAIL KEY

NOTES

DRAWING NOTES

1. SEE DET. 84/CI5.
2. TB EL 586'-0".
3. CUT OFF TOP 5" OF CI2 FOR 3'-0" WIDTH L3x3x1/4 SEE SECT.123/CI7.
4. TOP/GRATING EL. 582'-3".
5. ALL STAIR & CATWALK STRINGERS-CI2x20.7.
6. PROVIDE X BRACING SIMILAR TO BENT "A" SECT. 70/CI5.
7. PROVIDE BRACKET SIMILAR TO & AT SAME ELEVATION AS SEC 113A/CI6.
8. TB EL 591'-0".
9. SUPPORT BRACKET SEE DET 72/CI5.
10. T.B. EL. 588'-0" & 593'-0".

REV. NO.	ISSUE OR REVISION PURPOSE - DESCRIPTION	A-E	OPERATOR	DOE
		INITIALS AND DATE		
6	INCORP. AS-BUILT REDLINE DWG SUBMITTED BY K. ROBERTS AND DCN 5400-002	LRD 5-17-00		
	TO CORRELATE REFERENCED * AMK SHEET No's * TO FEMP DRAWING NUMBERS, SEE FEMP DRAWING No. 5ID-4445-X-00425 AND 5ID-4445-X-00426			
5	ADDED NEW KNEE BRACED CROSS ARMS PER DCN #5400-001 (RES3365)	LRD 8-4-99	KR/GEP 8/31/99	
4	AS-BUILT AWWT MULTI-MEDIA FILTERS PROJECT PER RED-LINE SUBMITTAL RES 3245	TEE/GEP 6/30/97	GEP 6/30/97	
3	RECORD DRAWING	JVE 02-24-93		
2	MODIFIED AFTER RECEIPT OF BIDS	EBW 10-12-92		
1	ADDENDUM NO. 1	EBW 7-22-92		
0	CFC	EBW 7-7-92		

UNITED STATES DEPARTMENT OF ENERGY
FERNALD ENVIRONMENTAL MANAGEMENT PROJECT

THIS DRAWING PREPARED BY
A. M. KINNEY, INC.
CONSULTING ENGINEERS
CINCINNATI, OHIO

A-E PROJECT NO. 02902

PROJECT NAME: ENVIRONMENTAL, HEALTH & SAFETY IMPROVEMENTS

DRAWING TITLE: WASTEWATER TREATMENT IMPROVEMENTS-PLANTWIDE SOUTH CONTAINMENT PIPE RACKS - UPPER LEVEL

DRAWN BY	DATE	DESIGNED, CHECKED BY	DATE	CHECKED BY	DATE
EVR	4/92	DJW	5/92	EBW	6/92

PLANT/BLDG. NO.	FLOOR	SCALE	CLASS
FEMP	GROUND	1/8"=1'-0"	

SUBMITTED FOR APPROVAL — A-E — DATE
APPROVAL RECOMMENDED — OPERATING CONTRACTOR — DATE
DRAWING APPROVED — DOE — DATE

DOE PROJECT NO.	OPER. CONTR. PROJ. NO.	DRAWING NO.	SHEET NO.	REV. NO.
87-D-159	0087502 WBS 1.1.2.4.01.02	5ID-4445-S-00435	C-8	6

/AWWT/AWWTQC010.002

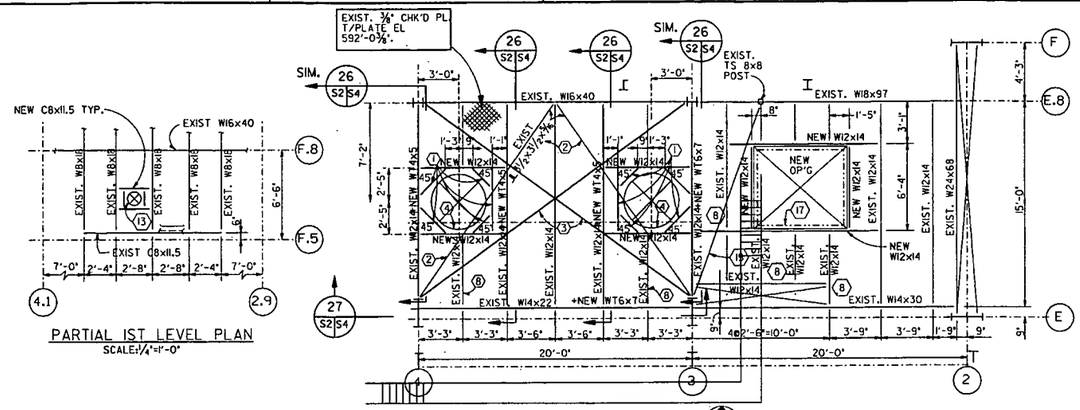

PARTIAL 1ST LEVEL PLAN
SCALE: 1/4"=1'-0"

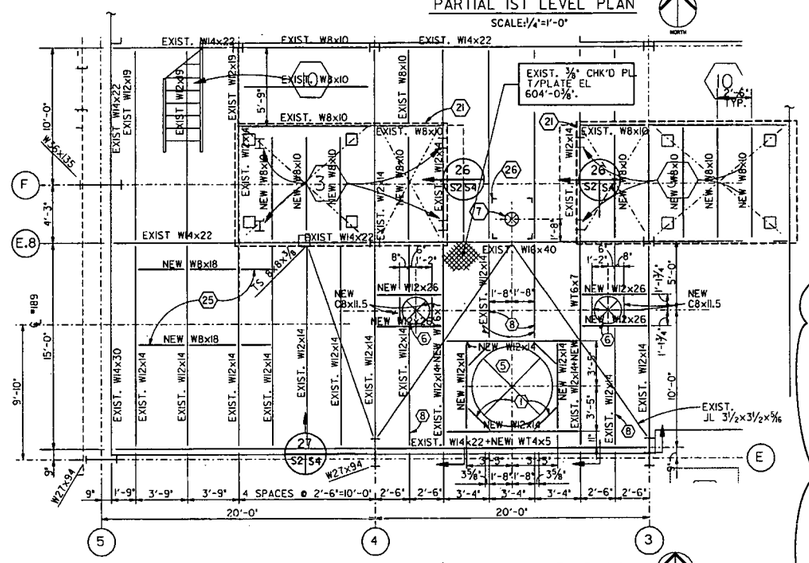

PARTIAL 2ND LEVEL PLAN
SCALE: 1/4"=1'-0"

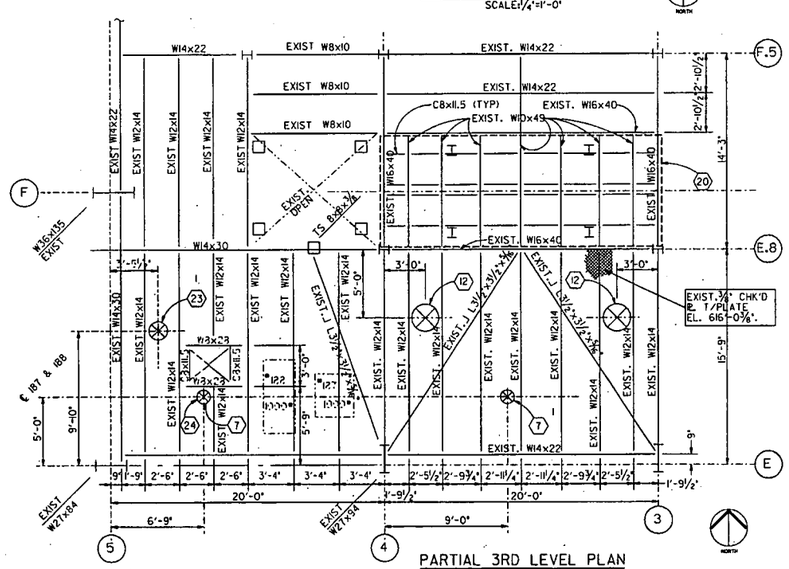

PARTIAL 3RD LEVEL PLAN
SCALE: 1/4"=1'-0"

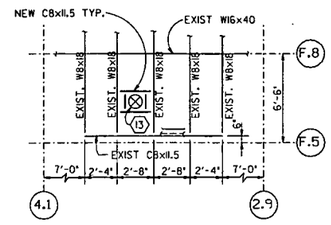

PARTIAL 2ND LEVEL PLAN
SCALE: 1/4"=1'-0"

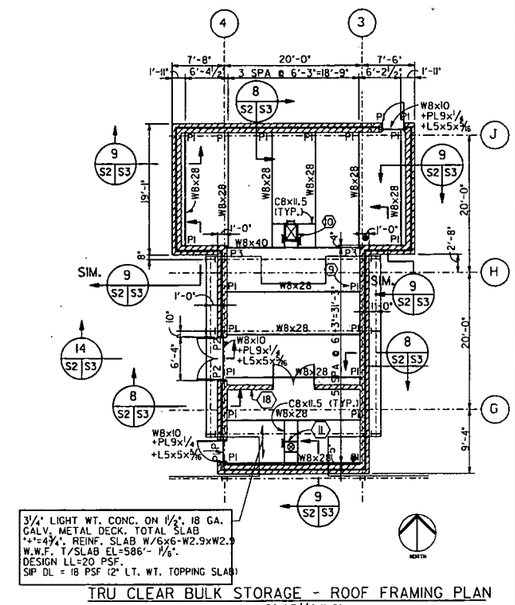

TRU CLEAR BULK STORAGE - ROOF FRAMING PLAN
SCALE: 1/8"=1'-0"

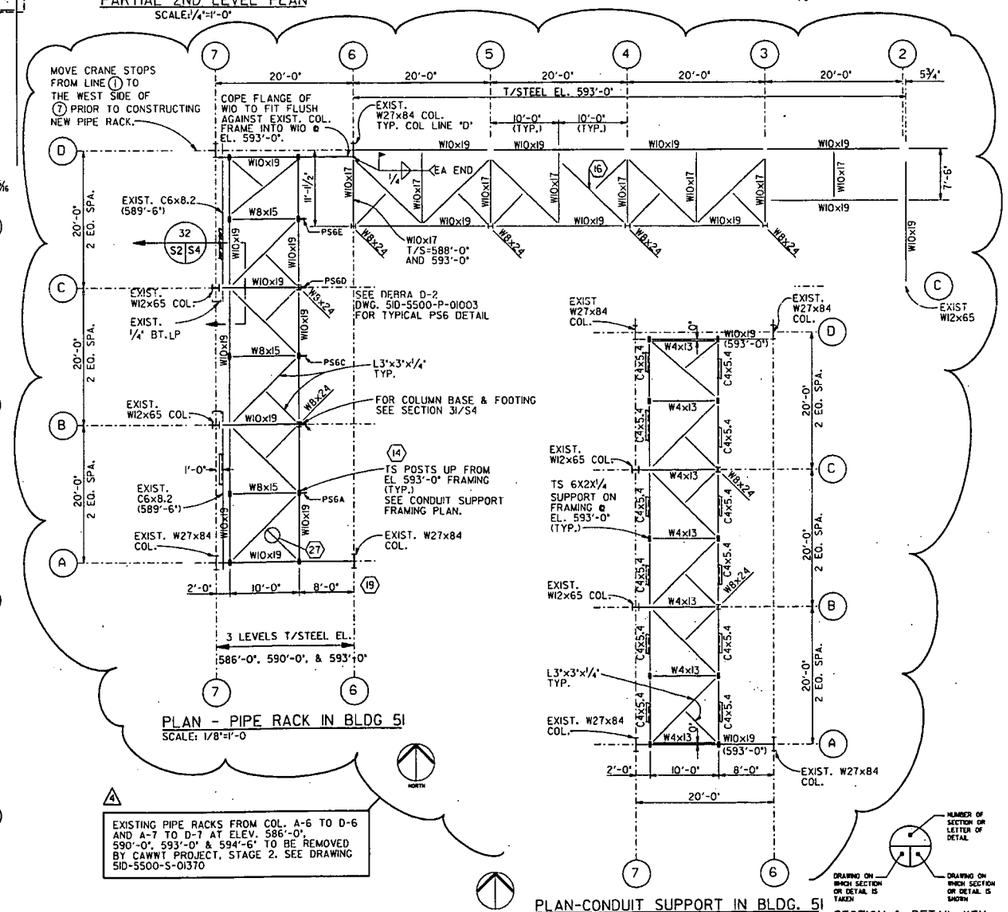

PLAN - PIPE RACK IN BLDG 51
SCALE: 1/8"=1'-0

EXISTING PIPE RACKS FROM COL. A-6 TO D-6 AND A-7 TO D-7 AT ELEV. 586'-0", 590'-0", 593'-0" & 594'-6" TO BE REMOVED BY CAWNT PROJECT, STAGE 2. SEE DRAWING 5ID-5500-S-01370

PLAN-CONDUIT SUPPORT IN BLDG. 51
SCALE 1/4"=1'-0"
T/STEEL EL. 594'-6" U.N.O.

SECTION & DETAIL KEY

NOTES

DRAWING NOTES:

1. NEW W8x10.
2. REMOVE.
3. NEW 1/2" DIA. ROD. HOLD TIGHT TO BOTTOM OF DEEPEST BEAM.
4. 4'-6" DIA. OPENING IN FLOOR FOR TANKS 116 & 117. TANK DIA=4'-0", WT=11#. ADD TOE ℄ AROUND OP'G SEE DET. 24/S4.
5. 6'-6" DIA. OPENING IN FLOOR FOR TANK 181. TANK DIA=6'-0", WT=15#. ADD TOE ℄ AROUND OP'G SEE DET. 24/S4.
6. 1'-9" DIA. OPENING IN FLOOR FOR TANKS 109 & 110. TANK WT=2.5 ADD TOE PL AROUND OP'G SEE DET 24/S4. REMOVE CHK'D PL FOR LOAD CELL MOUNTING, SEE DET 25/S4.
7. 1'-2" DIA. OP'G. IN FLOOR. ADD TOE PL AROUND OP'G., SEE DET 24/S4.
8. SHORE AND CUT EXIST. BEAM FRAME INTO NEW BEAMS.
9. PI, ETC. DESIGNATE BEARING LP SIZE. SEE DET. ON DWG. S-3.
10. COORDINATE OPENING SIZE & LOCATION W/ HVAC DRAWINGS.
11. 1'-2" DIA. OP'G. SEE PHOTO DWGS FOR LOCATION.
12. 2'-0" DIA. OP'G. IN FLOOR. ADD TOE PL AROUND OP'G., SEE DET 24/S4.
13. 1'-2" DIA. OP'G FOR HOOD VENT. COORDINATE LOCATION W/PHOTO DWGS. PROVIDE TOE PL PER DET 24/S4.
14. FOR POST CONNECTION SEE DETAIL 30/S4.
15. EXISTING ANGLE BRACE AT BOTTOM OF LOWER BEAM FLANGE
16. FOR HORIZ. BRACING CONNECTIONS, SEE DETAILS 87 & 88/C15
17. 1 1/2" DIA SCH 40 PIPE HANDRAIL. SEE DET 33/S4.
18. WALL CONNECTIONS TO METAL DECK, SEE SEC 11/53.
19. MOVE BOTTOM X BRACING ALONG COLUMN LINE (A) FROM COLUMN LINES (7) TO (6) TO COLUMN LINES (4) TO (3) ELEV. 575 TO 591'.
20. ADD 3/8" CHK'D PL THIS AREA. REMOVE EXIST HANDRAIL NORTH AND SOUTH SIDES. ADD HANDRAIL TO MATCH EXIST EAST AND WEST SIDES THIS AREA. WELD PL TO BEAM FLANGES AT UNDERSIDE.
21. ADD CHK'D PL THIS AREA. REMOVE EXISTING HANDRAIL
22. NOT USED
23. 1'-6" DIA. OP'G. IN FLOOR. ADD TOE PL AROUND OP'G., SEE DET 24/S4.
24. COPE FLANGE OF EXIST W8x28 AS REQUIRED TO FIT NEW OPENING AND TOE PLATE.
25. BLOWER #189 DESIGN FOR 6 POINT LOADS 1250# EACH. ADD 6 NEW W8x18'S AS SHOWN.
26. TANK SUPPORT FRAME. SEE DETAIL 34/S4
27. NOTCHED UNDER L3"x3"x1/4" WIND BRACE FOR C.O. REF.: JOB NO. 406398

0 4' 8' 12' 16'
SCALE: 1/4"=1'-0"

0 8' 16' 24' 32'
SCALE: 1/8"=1'-0"

5ID-4445-X-00425
AND 5ID-4445-X-00426

REV. NO.	ISSUE OR REVISION PURPOSE - DESCRIPTION	A-E	OPERATOR	DOE
4	REV. TO SHOW PROJ. 59600, RES 4518 STAGE 2 DEMO.		GEP 12-16-04	
3	AS-BUILT PER MULTIMEDIA FILTERS PROJECT RES 3245	SEP/TEC 7-17-97	MET 7-14-97	
2	MODIFIED AFTER RECEIPT OF BIDS	EBW 10-12-92		
1	ADDENDUM NO. 1	EBW 7-22-92		
0	CFC	EBW 7-7-92		

INITIALS AND DATE

UNITED STATES DEPARTMENT OF ENERGY
FERNALD ENVIRONMENTAL MANAGEMENT PROJECT

THIS DRAWING PREPARED BY
A. M. KINNEY, INC.
CONSULTING ENGINEERS
CINCINNATI, OHIO
A-E PROJECT NO. 02902

PROJECT NAME: ENVIRONMENTAL, HEALTH & SAFETY IMPROVEMENTS

DRAWING TITLE: WASTEWATER TREATMENT IMPROVEMENTS-PLANTWIDE BUILDING 51 PARTIAL PLANS

DRAWN BY	DATE	DESIGN. CHECKED BY	DATE	CHECKED BY	DATE
SMC	4/92	DJW	4/92	EBW	6/92

PLANT/BLDG. NO.: FEMP BLDG 51 | FLOOR | SCALE: AS NOTED | CLASS

SUBMITTED FOR APPROVAL | APPROVAL RECOMMENDED | DRAWING APPROVED

A-E PROJECT NO.: 87-D-159 | OPER. CONTR. PROJ. NO.: 0087502 WBS U.2.4.0L02 | DRAWING NO.: 5ID-4445-S-00446 | SHEET NO.: S-2 | REV. NO.: 4

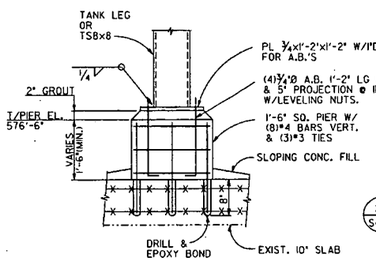

SECTION 20 (SI|S4)
SCALE: 1"=1'-0"

AT TANK FOUNDATIONS
BASE PLATES ARE PROVIDED WITH TANKS. SEE TANK SHOP DWNGS FOR EXPANSION BOLT SIZE AND LOCATION.

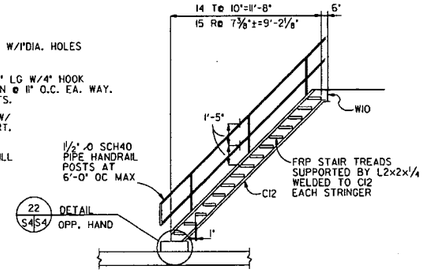

SECTION 21 (SI|S4)
SCALE: 1/4"=1'-0"

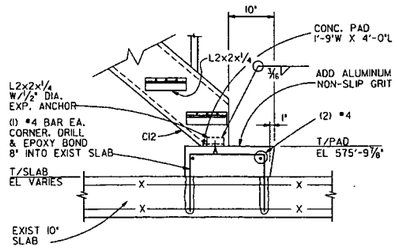

DETAIL 22 (S4|S4)
SCALE: 1"=1'-0"

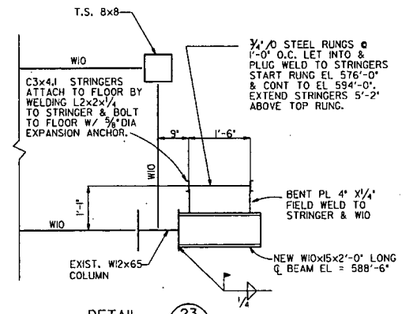

DETAIL 23 (SI|S4)
SCALE: 3/4"=1'-0"

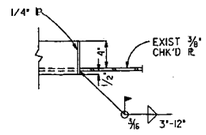

DETAIL 24 (S2|S4)
SCALE: 1/2"=1'-0"

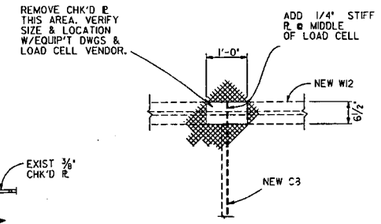

LOAD CELL BEARINGS

DETAIL 25 (S2|S4)
TYP. 8 PLACES
SCALE: 3/4"=1'-0"

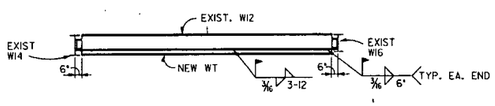

SECTION 26 (S2|S4)
SCALE: 1/4"=1'-0"

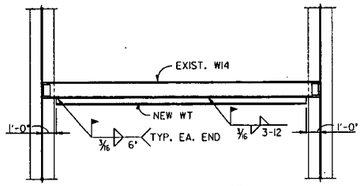

SECTION 27 (S2|S4)
SCALE: 1/4"=1'-0"

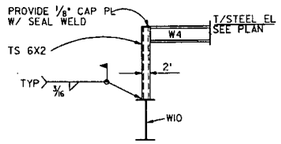

SECTION 30 (S2|S4)
SCALE: 1"=1'-0"

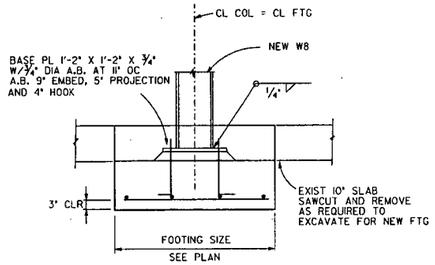

SECTION 31 (SI|S4)
SCALE: NONE

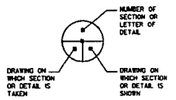

SECTION & DETAIL KEY

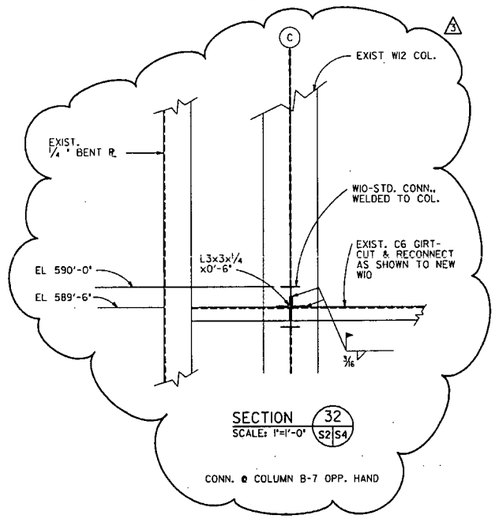

SECTION 32 (S2|S4)
SCALE: 1"=1'-0"

CONN. @ COLUMN B-7 OPP. HAND

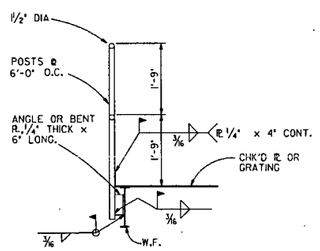

TYPICAL HANDRAIL

DETAIL 33 (S2|S4)
SCALE: 3/4"=1'-0"

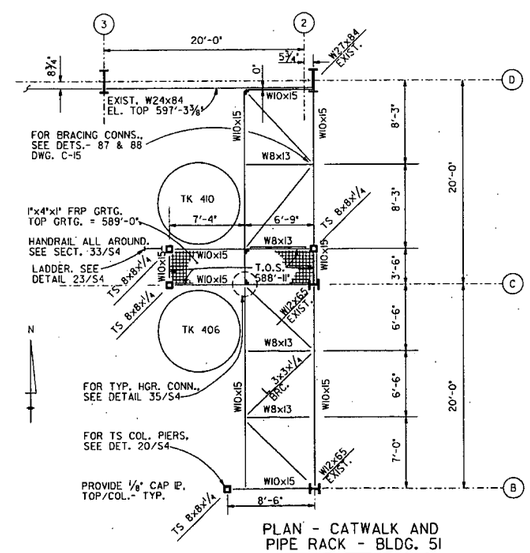

PLAN - CATWALK AND PIPE RACK - BLDG. 51

T.O.S. = 586'-0" U.N.O.
SCALE: 3/16"=1'-0"

(ANGLE BRACE MAY BE LOWERED TO MISS BEAM FLANGE.)

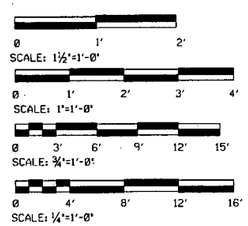

TO CORRELATE REFERENCED ' AMK SHEET No's ' TO FEMP DRAWING NUMBERS, SEE FEMP DRAWING No.:51D-4445-X-00425 AND 51D-4445-X-00426

REV. NO.	ISSUE OR REVISION PURPOSE - DESCRIPTION	A-E	OPERATOR	DOE
		DETAILS AND DATE		
3	REVISED TO SHOW DETAIL NEEDED FOR PROJECT 59600, RES 4518 STAGE 2 DEMOLITION	EBW 12-16-04	GEP 12-16-04	
2	MODIFIED AFTER RECEIPT OF BIDS	EBW 10-12-92		
1	ADDENDUM NO. 1	EBW 7-22-92		
0	CFC	EBW 7-7-92		

UNITED STATES DEPARTMENT OF ENERGY
FERNALD ENVIRONMENTAL MANAGEMENT PROJECT

THIS DRAWING PREPARED BY
A. M. KINNEY, INC.
CONSULTING ENGINEERS
CINCINNATI, OHIO

A-E PROJECT NO.

PROJECT NAME
ENVIRONMENTAL, HEALTH & SAFETY IMPROVEMENTS

DRAWING TITLE
WASTEWATER TREATMENT IMPROVEMENTS-PLANTWIDE
BUILDING 51 - SECTIONS AND DETAILS

DRAWN BY	DATE	DESIGNED, CHECKED BY	DATE	CHECKED BY	DATE
SMC	5/92	DJW	6/92	EBW	6/92

PLANT/BLDG. NO.	FLOOR	SCALE	CLASS
FEMP		AS NOTED	

SUBMITTED FOR APPROVAL | APPROVAL RECOMMENDED | DRAWING APPROVED
A-E DATE | OPERATING CONTRACTOR DATE | DOE DATE

DOE PROJECT NO.	OPER. CONTR. PROJ. NO.	DRAWING NO.	SHEET NO.	REV. NO.
87-D-159	0087502 WBS 1.1.2.4.01.02	51D-4445-S-00448	S-4	3

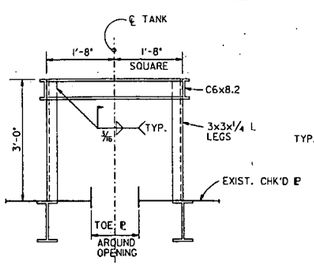

DETAIL 34 (S2|S4)
SCALE: 3/4"=1'-0"

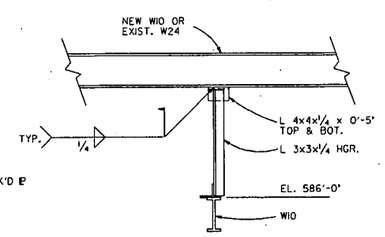

HANGER CONNECTION

DETAIL 35 (S4|S4)
SCALE: 3/4"=1'-0"

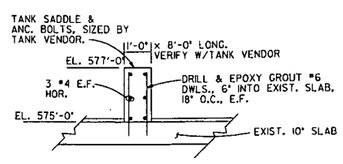

PIERS FOR TANK 193

DETAIL 36 (SI|S4)
SCALE: 1/2"=1'-0"

-5794

DATE	SYM	REVISION RECORD	AUTH	DR	CK
8/19/04	A	FOR APPROVAL	CUST	PW	JK
9/14/04	0	FOR CONSTRUCTION	CUST	PW	JK

FERNALD CLOSURE PROJECT

CAWWT CONTROL SYSTEM

DTSI Drawing #	FCP Drawing #	Description
DTSI-04177-01	51D-5500-N-01374	Cover Sheet & Drawing Index
DTSI-04177-02	51D-5500-N-01375	Symbols
DTSI-04177-03	51D-5500-N-01376	Spare
DTSI-04177-04	51D-5500-N-01377	Spare
DTSI-04177-05	51D-5500-N-01378	System Architecture Drawing
DTSI-04177-06	51D-5500-N-01379	Radio System Information
DTSI-04177-07	51D-5500-N-01380	Well Field Fiber Optic System Diagram
DTSI-04177-08	51D-5500-N-01381	Spare
DTSI-04177-09	51D-5500-N-01382	RTU-9 Panel Layout and Bill of Material
DTSI-04177-10	51D-5500-N-01383	RTU-9 Terminal Layout and Bill of Material Sheet 1 of 2
DTSI-04177-11	51D-5500-N-01384	RTU-9 Terminal Layout Sheet 2 of 2
DTSI-04177-12	51D-5500-N-01385	RTU-9 Panel Wiring Schematic 1 of 2
DTSI-04177-13	51D-5500-N-01386	RTU-9 Panel Wiring Schematic 2 of 2
DTSI-04177-14	51D-5500-N-01387	RTU-9 Analog input Module, Rack 1, Slots 4 & 5
DTSI-04177-15	51D-5500-N-01388	RTU-9 Analog Input Module, Rack 1, Slots 6 & 7
DTSI-04177-16	51D-5500-N-01389	RTU-9 Analog Output Module, Rack 1, Slots 8 & 9
DTSI-04177-17	51D-5500-N-01390	RTU-9 Discrete Input Module, Rack 2, Slot 4
DTSI-04177-18	51D-5500-N-01391	RTU-9 Discrete Input Module, Rack 2, Slot 5
DTSI-04177-19	51D-5500-N-01392	RTU-9 Discrete Input Module, Rack 2, Slot 6
DTSI-04177-20	51D-5500-N-01393	RTU-9 Discrete Input Module, Rack 2, Slot 7
DTSI-04177-21	51D-5500-N-01394	RTU-9 Discrete Input Module, Rack 2, Slot 8
DTSI-04177-22	51D-5500-N-01395	RTU-9 Discrete Output Module, Rack 2, Slot 9
DTSI-04177-23	51D-5500-N-01396	RTU-9 Discrete Output Module, Rack 2, Slot 10
DTSI-04177-24	51D-5500-N-01397	RTU-9 Discrete Output Module, Rack 2, Slot 11

DTSI Drawing #	FCP Drawing #	Description
DTSI-04177-25	51D-5500-N-01398	RTU-10 Panel Layout and Bill of Material
DTSI-04177-26	51D-5500-N-01399	RTU-10 Terminal Layout and Bill of Material
DTSI-04177-27	51D-5500-N-01400	RTU-10 Panel Wiring Schematic
DTSI-04177-28	51D-5500-N-01401	RTU-10 Analog Input Module, Slots 4 & 5
DTSI-04177-29	51D-5500-N-01402	RTU-10 Analog Output Module, Slots 6 & 7
DTSI-04177-30	51D-5500-N-01403	RTU-10 Discrete Input Module, Slot 8
DTSI-04177-31	51D-5500-N-01404	RTU-10 Discrete Input Module, Slot 9
DTSI-04177-32	51D-5500-N-01405	RTU-10 Discrete Output Module, Slot 10
DTSI-04177-33	51D-5500-N-01406	Spare
DTSI-04177-34	51D-5500-N-01407	Spare
DTSI-04177-35	51D-5500-N-01408	RTU-7 Panel Layout and Bill of Material
DTSI-04177-36	51D-5500-N-01409	RTU-7 Terminal Layout and Bill of Material
DTSI-04177-37	51D-5500-N-01410	RTU-7 Panel Wiring Schematic
DTSI-04177-38	51D-5500-N-01411	RTU-7 Analog Inputs
DTSI-04177-39	51D-5500-N-01412	RTU-7 Analog Outputs
DTSI-04177-40	51D-5500-N-01413	RTU-7 Discrete Inputs
DTSI-04177-41	51D-5500-N-01414	RTU-7 Discrete Outputs
DTSI-04177-42	51D-5500-N-01415	Spare
DTSI-04177-43	51D-5500-N-01416	Spare
DTSI-04177-44	51D-5500-N-01417	Spare
DTSI-04177-45	51D-5500-N-01418	RTU-11 Panel Layout and Bill of Material
DTSI-04177-46	51D-5500-N-01419	RTU-11 Terminal Layout and Bill of Material
DTSI-04177-47	51D-5500-N-01420	RTU-11 Panel Wiring Schematic
DTSI-04177-48	51D-5500-N-01421	RTU-11 Analog Inputs
DTSI-04177-49	51D-5500-N-01422	RTU-11 Discrete Inputs
DTSI-04177-50	51D-5500-N-01423	RTU-11 Discrete Outputs

(X)A-CONFORMS TO THE SUBCONTRACT REQUIREMENTS
( )B-MINOR COMMENT-INCORPORATE & RESUBMIT
( )C-REVISE & RESUBMIT
BY: S. BOZICH DATE: 9/21/04

RES 4518 PROJECT NO. 59600

INDEX CODE			
PL. & AR.	ORIG.	CL.	SER. NO.	REV.
51D	5500	N	01374	

WIRE LUGS - NO ☒ YES ☐ RING ☐ LOCKING SPADE ☐
INSULATION: NYLON ☐ PVC ☒ POLYETHYLENE ☐

WIRE SPECIFICATIONS:

USAGE	COLOR
480 VAC POWER (A, B, C, NEUTRAL)	BROWN, VIOLET, ORANGE, GRAY
120 AC POWER (HOT, NEUTRAL, GND)	BLK, WHT, GRN
120 AC CONTROL (CONTROL, NEUTRAL, GND)	RED, WHT, GRN
DC POWER	BLUE
DC SIGNAL (+, -, GND)	RED , BLK, GRN/YLW STRIPE
FOREIGN	YELLOW
SIGNAL / INSTRUMENTS	2 CONDUCTOR SHL'D

STATE OF OHIO
ROBERT A. LANDTHORN
E-37992
REGISTERED PROFESSIONAL ENGINEER

United States Dept. of Energy
Fernald Closure Project
P.O. #040400290

DUBLIN TECHNICAL SYSTEMS INC.
CONTRACT # 04177

TOLERANCES: ± ; DECIMAL ± .03 ; FRACTIONAL ± 1/64" ; ANGULAR ± 1°

DUBLIN TECHNICAL SYSTEMS, INC.

Fluor Fernald CAWWT Control System

SCALE: NONE

DRAWN BY: PW
APPROVED BY: JK

TITLE: COVER SHEET AND DRAWING INDEX

DATE: 8/30/04

DRAWING NUMBER: DTSI-04177-001

5194

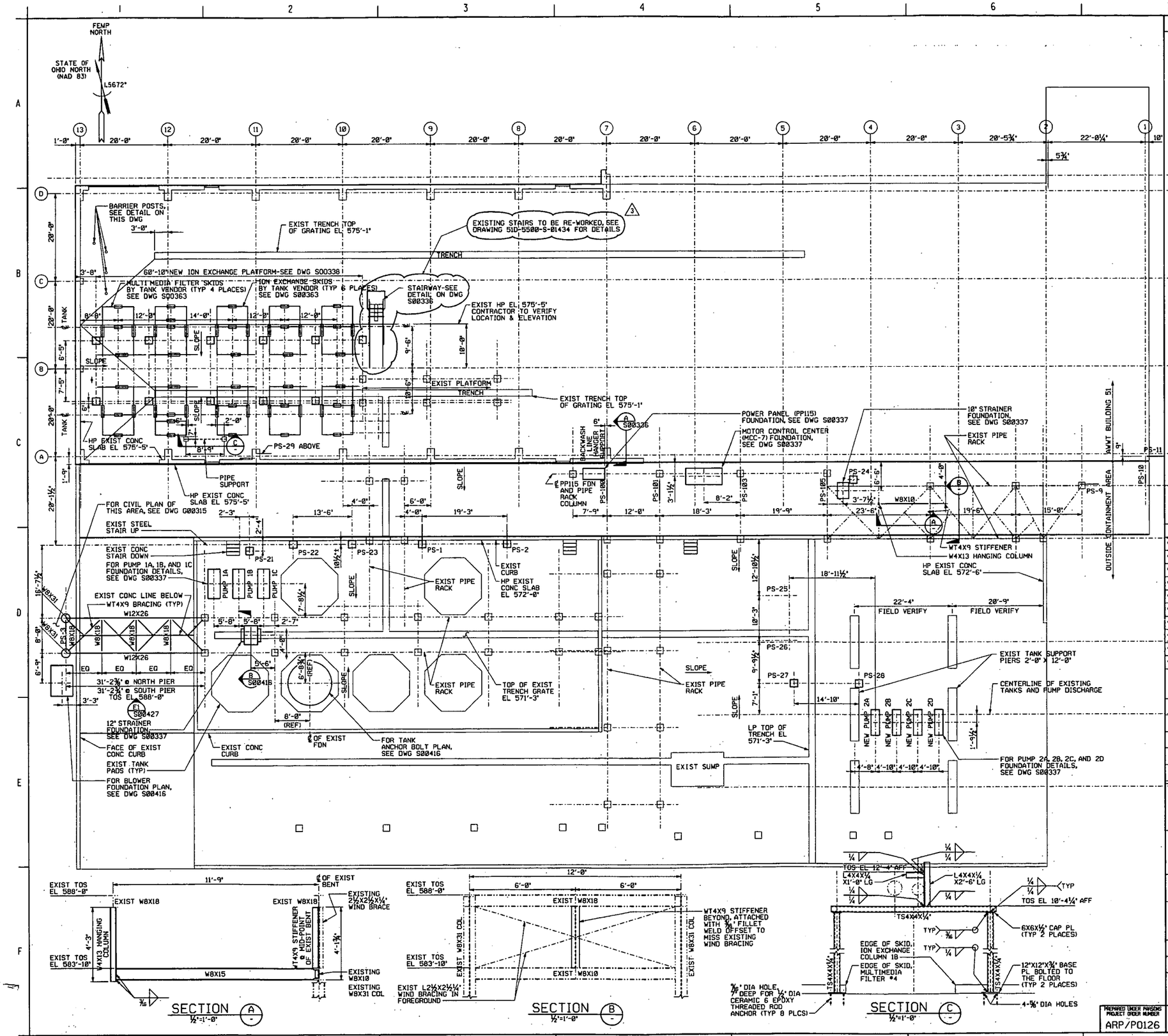

NOTES

1. FOR STRUCTURAL PIPE SUPPORT DETAILS, SEE DRAWING 95X-5900-S-00336, 95X-5900-S-00426, AND 95X-5900-S-00427.
2. FOR EQUIPMENT FOUNDATIONS, SEE DRAWING 95X-5900-S-00337.
3. FOR DRILLED IN PIER DETAIL, SEE DRAWING 95X-5900-S-00426.
4. EXISTING FLOOR SLAB SLOPES TO THE TRENCH GRATING AS SHOWN. PROVIDE SHIMS AND GROUT TO LEVEL SKIDS. SKIDS SHALL BE ANCHORED TO THE FLOOR SLAB AS SHOWN ON DRAWING 95X-5900-S-00363.
5. NEW STRUCTURAL PIPE SUPPORTS DESIGNATED BY PS-NUMBER SHALL BE CONSTRUCTED UNDER THIS PROJECT.

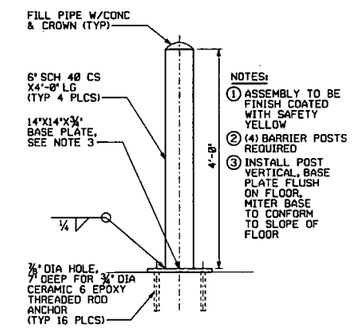

ELEVATION - BARRIER POST

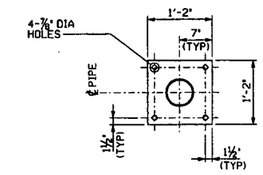

PLAN - BASE PLATE

BARRIER POST DETAIL

1"=1'-0"

REF DWG NO.	DRAWING TITLE
95X-5900-X-00318	DRAWING INDEX - SHEET 1 OF 6
95X-5900-X-00319	LEGEND AND SYMBOLS
95X-5900-G-00315	SITE/UTILITY PLAN
95X-5900-S-00336	ELEVATIONS AND DETAILS OUTSIDE PIPE SUPPORTS
95X-5900-S-00337	ELEVATIONS AND DETAILS ACCESS LADDERS AND EQUIPMENT FOUNDATIONS
95X-5900-S-00338	PLANS, SECTIONS, AND DETAILS ION EXCHANGE PLATFORM
95X-5900-S-00363	PLAN AND DETAILS SKIDS
95X-5900-S-00416	PLANS, SECTIONS, AND DETAILS EXISTING TANK PAD AND PLATFORM MODIFICATIONS
95X-5900-S-00426	SECTIONS AND DETAILS OUTSIDE PIPE SUPPORTS AND CONCRETE PIERS
95X-5900-S-00427	ELEVATIONS, SECTIONS, AND DETAILS OUTSIDE PIPE SUPPORTS

REV. NO.	ISSUE OR REVISION PURPOSE - DESCRIPTION	A-E	FERMCO	DATE
3	REV. TO INDICATED STAIRS TO BE RE-WORKED PER PROJ. 59600, RES 4516 STAGE 2 CONSTR.	[illegible]	GEP	12/16/04
2	"AS-BUILT" PER FDF, INCORPORATES DCN #1710-087, 110, AND 115	TH	N/A	9/30/98
1	INCORPORATED FDF DCN #1710-010, 016, 017, 026, 031, 033, 034, 040, 041, 042, AND 061	TH	N/A	10/3/97
0	CERTIFIED FOR CONSTRUCTION	MHB	NA	9/30/96

INITIALS AND DATE

UNITED STATES DEPARTMENT OF ENERGY
FERNALD ENVIRONMENTAL MANAGEMENT PROJECT

THIS DRAWING PREPARED BY
PARSONS
THE RALPH M. PARSONS CO. - PARSONS MAIN, INC. - ENGINEERING-SCIENCE, INC.
CINCINNATI, OHIO

PROJECT NAME
ADVANCED WASTEWATER TREATMENT EXPANSION PROJECT

DRAWING TITLE
STRUCTURAL PLAN
ION EXCHANGE PLATFORM & OUTSIDE PIPE SUPPORTS

DRAWN BY	DATE	LEAD ENGINEER	DATE	CHECKED BY	DATE
J LONEY	1-4-96	R.B. JADHAV	9/30/96	C V CHAR	1-5-96

PLANT/BLDG. NO.	FLOOR	SCALE	CLASS
BLDG 51		½"=1'-0"	

SUBMITTED FOR APPROVAL	FERMCO CRU APPROVAL	FERMCO PROJECT NO.
M.H. BOWERS 9/30/96	NA	54500

A-E DOE PROJECT NO.	DATE	FEMP PROJECT NO.	DATE	DRAWING INDEX CODE NO.	SHEET NO.	REV. NO.
		WBS 1.1.1.1.5.3.1 00-9070I		95X-5900-S-00335	S0001	3

PREPARED UNDER PARSONS PROJECT ORDER NUMBER ARP/P0126

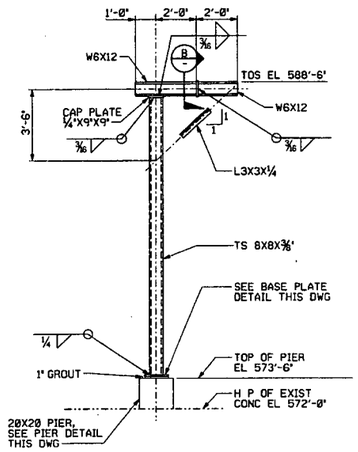

ELEVATION LOOKING NORTH

PS-21

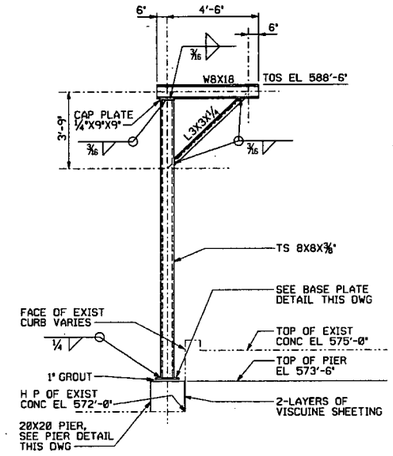

ELEVATION LOOKING WEST

PS-22 AND PS-23

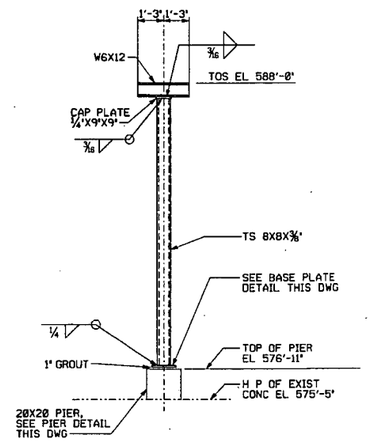

ELEVATION LOOKING WEST

PS-24

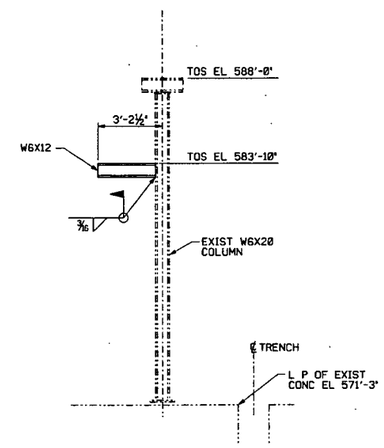

ELEVATION LOOKING NORTH

PS-25 AND PS-26

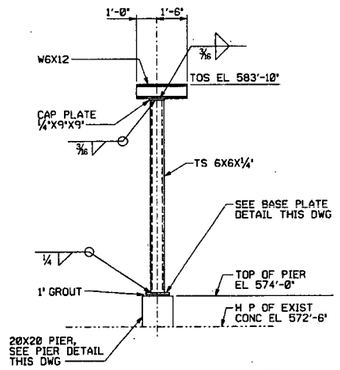

ELEVATION LOOKING WEST

PS-27 AND PS-28

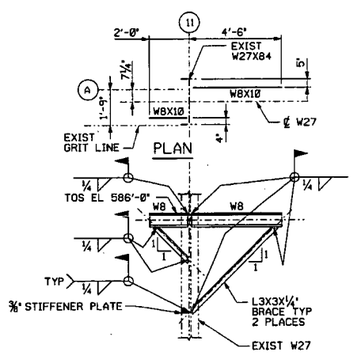

ELEVATION LOOKING NORTH

PS-29

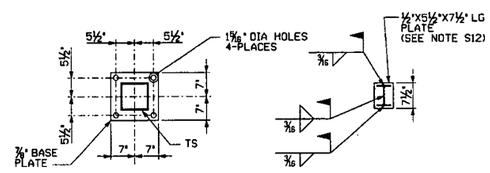

BASE PLATE DETAIL

SECTION B

3/4"=1'-0"

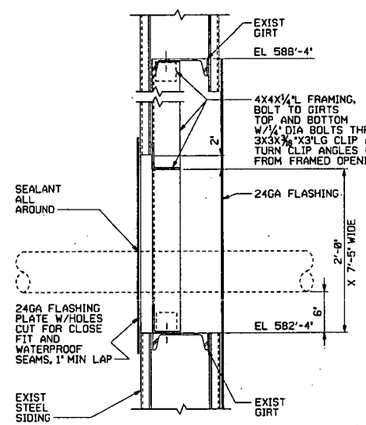

TYP PENETRATION DETAIL

FOR PIPE AND CONDUIT

NTS

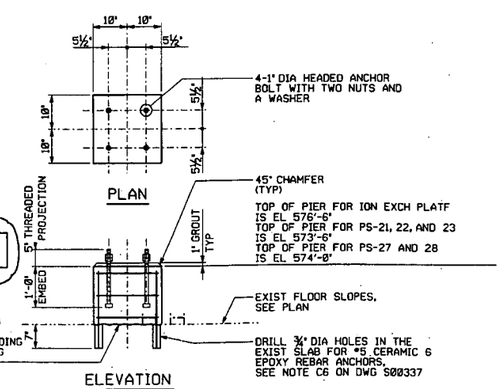

PIER DETAIL

3/4"=1'-0"

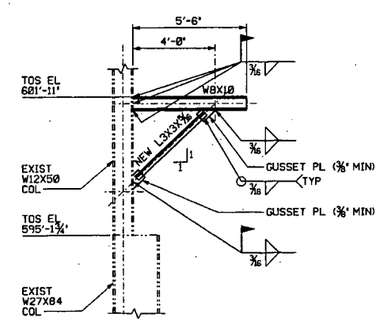

SECTION A

3/8"=1'-0"

REF S00336 S00335

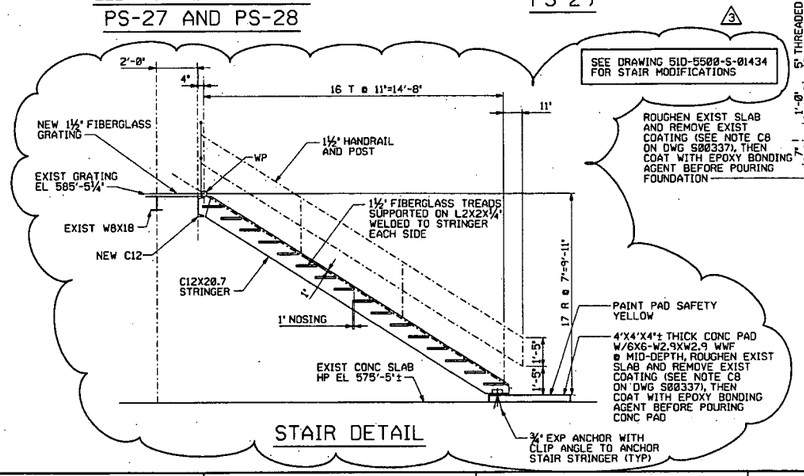

STAIR DETAIL

NOTES

GENERAL STEEL NOTES

S1. DESIGN, FABRICATION AND ERECTION OF STRUCTURAL STEEL SHALL BE IN ACCORDANCE WITH AISC MANUAL OF STEEL CONSTRUCTION, NINTH EDITION, AND SPECIFICATIONS, SECTIONS 05120 AND 05500.

S2. MATERIAL SHALL MEET THE REQUIREMENTS OF THE FOLLOWING SPECIFICATIONS:
STRUCTURAL STEEL - ASTM A36 FOR W, C, L, & PLATES
- ASTM A500 GR B FOR TUBE STEEL
GRATING - CHEMGRATE FIBERGLASS GRATING OR EQUAL
HIGH STRENGTH BOLTS - ASTM A325N, 3/4" DIAMETER
ANCHOR BOLTS - ASTM A36 WITH HEAVY HEX NUTS AND WASHERS
WELDING - AWS D1.1 CLASS E70XX (ELECTRODES)

S3. DESIGN LOADS ARE AS FOLLOWS:
A) GOVERNING CODE: UNIFORM BUILDING CODE 1994 EDITION/OHIO BASIC BUILDING CODE, 1995 (O-BOCA)
ASCE STANDARD, 7-93 MINIMUM DESIGN LOADS FOR BUILDINGS AND OTHER STRUCTURES
B) BASIC WIND: 80 MPH, EXPOSURE C
C) SEISMIC ZONE: 1
D) LIVE LOAD: PLATFORMS = 60PSF

S4. MINIMUM METAL THICKNESS FOR ALL CONNECTIONS, STIFFENER PLATES, ETC., IS 3/8".

S5. STANDARD FRAMED CONNECTIONS SHALL BE USED UNLESS INDICATED OTHERWISE. THESE CONNECTIONS SHALL HAVE THE MAXIMUM NUMBER OF BOLTS (OR EQUIVALENT WELDS) AS SHOWN IN APPROPRIATE TABLE PART 4 OF AISC MANUAL OF STEEL CONSTRUCTION.

S6. BRACING CONNECTIONS SHALL BE DESIGNED TO DEVELOP 75% OF THE TENSILE CAPACITY OF THE MEMBERS CONNECTED UNLESS A SMALLER TENSILE DESIGN LOAD IS INDICATED ON THE DRAWINGS.

S7. HANDRAIL TO BE 1 1/2" (NOMINAL) DIAMETER CARBON STEEL WITH 1/4"x4" TOE PLATE. PROVIDE TWO LINES OF RAILS WITH 1 1/2" DIAMETER POST AT 8'-0" OC (MAXIMUM). REMOVE ALL SHARP EDGES.

S8. SHOP AND FIELD PAINTING AS PER SPECIFICATION SECTION 09900.

S9. FIBERGLASS GRATING SHALL BE 1 1/2" HIGH X 1 1/2" X 1 1/2". BEARING BARS SHALL BE 1/4" WIDE ON 1 1/2" CENTERS. CROSS BARS SHALL BE 1/4" WIDE ON 1 1/2" CENTERS. GRATING SHALL BE ATTACHED TO SUPPORT STEEL USING TYPE 316 STAINLESS STEEL HOLD DOWN CLIPS. USE MINIMUM OF FOUR CLIPS PER PANEL. MAXIMUM SPACING BETWEEN CLIPS NOT TO EXCEED FOUR FEET.

S10. FIBERGLASS TREADS FOR STAIR TREADS SHALL BE 1 1/2" HIGH, HAVING GRID PATTERN WITH BEARING BARS 1 1/2" ON CENTER AND CROSS BARS 6" ON CENTER.

S11. FIBERGLASS GRATING, STAIR TREADS, AND CUTOUTS FOR PIPE PENETRATIONS SHALL BE INSTALLED IN STRICT ACCORDANCE WITH MANUFACTURER'S INSTRUCTIONS

S12. IF NEW W6X12 IS WELDED TO EXISTING W6X12 USING FULL PENETRATION WELD, 1/2" PLATE SHOWN IN SECTION 'B' IS NOT REQUIRED.

REF DWG NO.	DRAWING TITLE
95X-5900-X-00318	DRAWING INDEX - SHEET 1 OF 6
95X-5900-X-00319	LEGEND AND SYMBOLS
95X-5900-S-00337	ELEVATIONS AND DETAILS ACCESS LADDERS AND EQUIPMENT FOUNDATIONS

REV. NO.	ISSUE OR REVISION PURPOSE - DESCRIPTION	A-E	FERMCO	DATE
		INITIALS AND DATE		
3	REVISED TO SHOW STAIR MOD. NOTE PER CAWWT STAGE 2 CONSTRUCTION, PROJ. 59600 RES451	[illegible]	GEP 12/16/04	
2	"AS-BUILT" PER FDF, INCORPORATES P0150 DCN #1707-033 AND P0126 DCN #1710-010,032,AND 033	TH	N/A	9/30/98
1	INCORPORATED FDF DCN #1710-010, 026, 033, 034, 035, 042, AND 045	TH	N/A	10/3/97
0	CERTIFIED FOR CONSTRUCTION	MHB	NA	9/30/96

UNITED STATES DEPARTMENT OF ENERGY
FERNALD ENVIRONMENTAL MANAGEMENT PROJECT

THIS DRAWING PREPARED BY
PARSONS
THE RALPH M. PARSONS CO. - PARSONS MAIN, INC. - ENGINEERING-SCIENCE, INC.
CINCINNATI, OHIO

PROJECT NAME
ADVANCED WASTEWATER TREATMENT
EXPANSION PROJECT

DRAWING TITLE
STRUCTURAL
ELEVATIONS AND DETAILS
OUTSIDE PIPE SUPPORTS

DRAWN BY	DATE	LEAD ENGINEER	DATE	CHECKED BY	DATE
J LONEY	12-5-95	R.B. JADHAV	9/30/96	A CHALA / N. MOHANRAN	12-5-95 / 12-21-95

PLANT/BLDG NO.	FLOOR	SCALE	CLASS
BLDG 51		3/8"=1'-0"	

SUBMITTED FOR APPROVAL	FERMCO CRU APPROVAL	FERMCO PROJECT NO.
M.H. BOWERS 9/30/96	NA	54500

A-E DOE PROJECT NO.	FEMP PROJECT NO.	DRAWING INDEX CODE NO.	SHEET NO.	REV. NO.
	WBS 1.1.1.1.5.3.1 00-90701	95X-5900-S-00336	S0002	3

PREPARED UNDER PARSONS PROJECT ORDER NUMBER: ARP/P0126

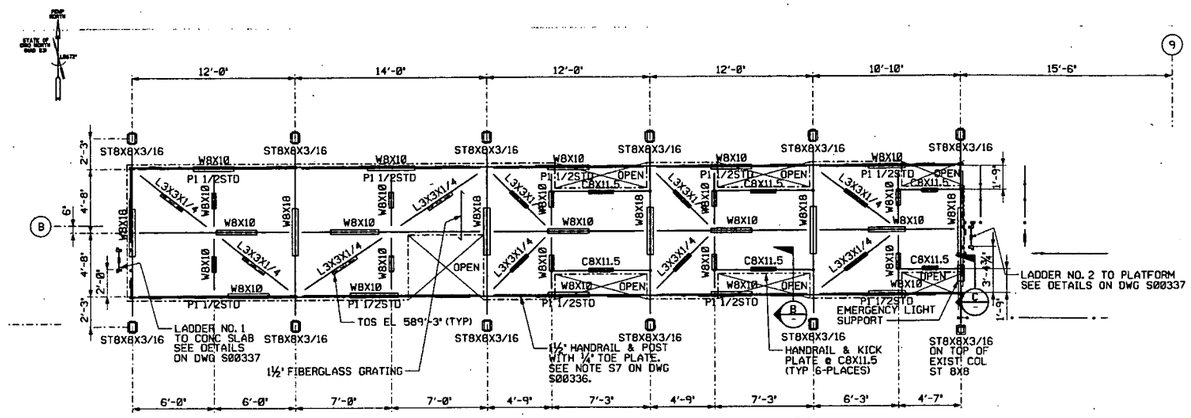

PLAN TOP OF PLATFORM EL 589'-6½"

TOS EL 589'-5"

"ST" IN ABOVE PLAN REFERS TO TUBE SECTION FOR COLUMN.

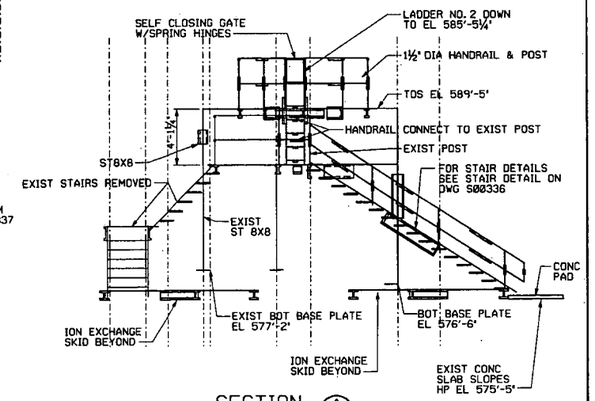

SECTION A
NTS

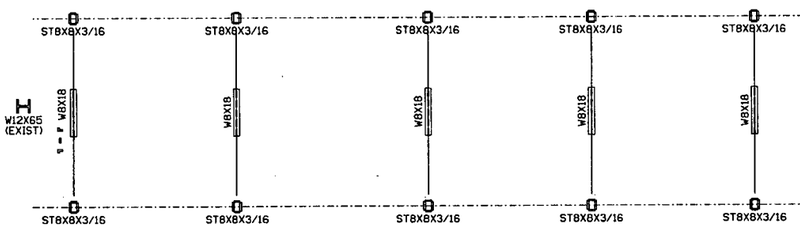

PLAN TOP OF STEEL EL 586'-0"

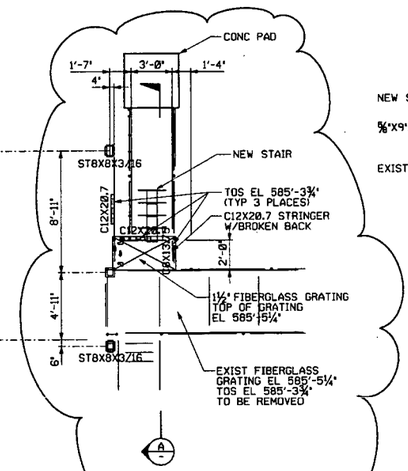

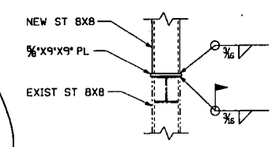

DETAIL 1
NTS

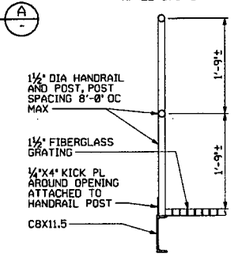

SECTION B
1"=1'-0"

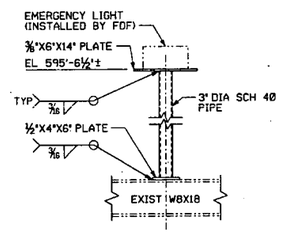

SECTION C
1"=1'-0"

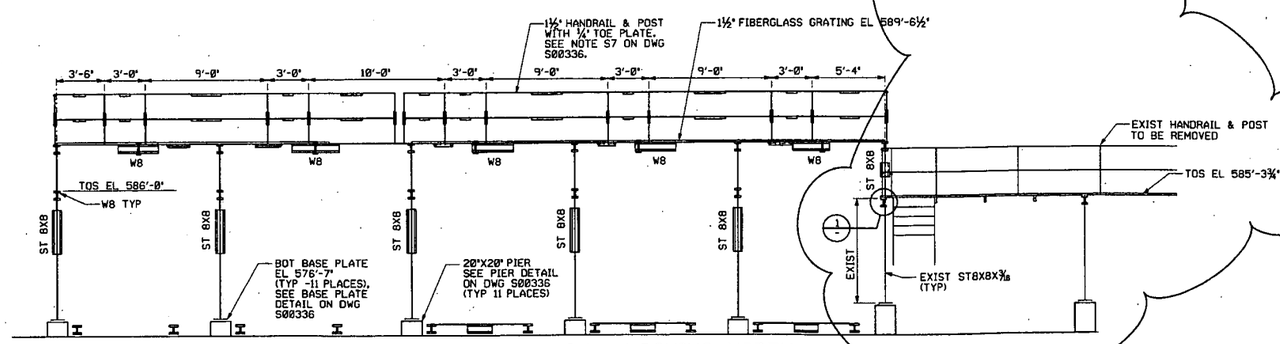

SOUTH ELEVATION - LOOKING NORTH
NORTH ELEVATION - SIMILAR

3

EXISTING HANDRAIL AND WALKWAY TO STAIRS TO BE REMOVED. EXISTING STAIRS TO BE RE-WORKED SEE DRAWINGS. 51D-5500-X-01358 & 51D-5500-S-01434

NOTES

1. FOR OVERALL PLAN, SEE DRAWING 95X-5900-S-00335.
2. FOR GENERAL STEEL NOTES, SEE DRAWING 95X-5900-S-00336.
3. FOR GENERAL CONCRETE NOTES, SEE DRAWING 95X-5900-S-00337.

REF DWG NO.	DRAWING TITLE
95X-5900-X-00318	DRAWING INDEX - SHEET 1 OF 6
95X-5900-X-00319	LEGEND AND SYMBOLS
95X-5900-S-00335	PLAN ION EXCHANGE PLATFORM & OUTSIDE PIPE SUPPORTS
95X-5900-S-00336	ELEVATIONS AND DETAILS OUTSIDE PIPE SUPPORTS
95X-5900-S-00337	ELEVATIONS AND DETAILS ACCESS LADDERS AND EQUIPMENT FOUNDATIONS

REV. NO.	ISSUE OR REVISION PURPOSE - DESCRIPTION	A-E	FERMCO	DATE
3	ADDED STAIR AND PLATFORM MOD. NOTE PER PROJ. 59600, RES 4518 STAGE 2 CONSTRUCTION	[illegible]	GEP	12/16/04
2	"AS-BUILT" PER FDF, INCORPORATES DCN #1710-073, 105, 109, 121, 129, AND 132		N/A	
1	INCORPORATED FDF DCN #1710-010 AND 014	TH	N/A	10/3/97
0	CERTIFIED FOR CONSTRUCTION	MHB	NA	9/30/96

INITIALS AND DATE

UNITED STATES DEPARTMENT OF ENERGY
FERNALD ENVIRONMENTAL MANAGEMENT PROJECT

THIS DRAWING PREPARED BY
PARSONS
THE RALPH M. PARSONS CO. - PARSONS MAIN, INC. - ENGINEERING-SCIENCE, INC.
CINCINNATI, OHIO

PROJECT NAME
ADVANCED WASTEWATER TREATMENT EXPANSION PROJECT

DRAWING TITLE
STRUCTURAL
PLANS, SECTIONS, AND DETAILS
ION EXCHANGE PLATFORM

DRAWN BY	DATE	LEAD ENGINEER	DATE	CHECKED BY	DATE
J LONEY	1-5-96	R.B. JADHAV	9/30/96	C V CHAR	1-5-96

PLANT/BLDG. NO.	FLOOR	SCALE	CLASS
BLDG 51		¼"=1'-0"	

SUBMITTED FOR APPROVAL	FERMCO CRU APPROVAL	FERMCO PROJECT NO.
M.H. BOWERS 9/30/96	NA	54500

A-E DATE

PREPARED UNDER PARSONS PROJECT ORDER NUMBER	DOE PROJECT NO.	FEMP PROJECT NO.	DRAWING INDEX CODE NO.	SHEET NO.	REV. NO.
ARP/P0126		WBS 1.1.1.1.5.3.1 00-30701	95X-5900-S-00338	S0006	3