5982

Department of Energy

Ohio Field Office
Fernald Closure Project
175 Tri-County Parkway
Springdale, Ohio 45246
(513) 648-3155

JUN 21 2005

Mr. James A. Saric, Remedial Project Manager
United States Environmental Protection Agency
Region V-SRF-5J
77 West Jackson Boulevard
Chicago, Illinois 60604-3590

DOE-0266-05

Mr. Thomas Schneider, Project Manager
Ohio Environmental Protection Agency
Southwest District Office
401 East Fifth Street
Dayton, Ohio 45402-2911

Dear Mr. Saric and Mr. Schneider:

TRANSMITTAL OF THE DRAFT EXCAVATION PLAN FOR AREA 7 SILOS AND GENERAL AREA

Enclosed for your review comments on the draft Excavation Plan for Area 7 Silos and General Area and associated drawings. This plan includes remediation of debris and impacted soil in the K-65 Silos, Storm Water Retention Basins, the Western Access Road, TACO Office Trailer Complex Area, Security Trailer Park, Building 82A, several paved and graveled parking lots, the former Lime Sludge Ponds footprint, and the Cement Pond.

If you have any questions or require additional information, please contact Johnny Reising at (513) 648-3139.

Sincerely,

William J. Taylor
Director

FCP:Reising

Enclosures: As Stated

cc w/enclosures:
D. Pfister, OH/FCP
J. Reising, OH/FCP
T. Schneider, OEPA-Dayton (three copies of enclosure)
G. Jablonowski, USEPA-V, SR-6J
F. Bell, ATSDR
M. Cullerton, Tetra Tech
M. Shupe, HSI GeoTrans
R. Vandegrift, ODH
AR Coordinator, Fluor Fernald, Inc./MS78

cc w/o enclosures:
K. Alkema, Fluor Fernald, Inc./MS01
J. Chiou, Fluor Fernald, Inc./MS88
F. Johnston, Fluor Fernald, Inc./MS99
C. Murphy, Fluor Fernald, Inc./MS77
ECDC, Fluor Fernald, Inc./MS52-7

5982

EXCAVATION PLAN FOR AREA 7 SILOS AND GENERAL AREA

FERNALD CLOSURE PROJECT
FERNALD, OHIO

JUNE 2005

U.S. DEPARTMENT OF ENERGY
FERNALD AREA OFFICE

20500-PL-0002
REVISION A
DRAFT

5982

EXCAVATION PLAN FOR AREA 7 SILOS AND GENERAL AREA

FERNALD CLOSURE PROJECT
FERNALD, OHIO

JUNE 2005

U.S. DEPARTMENT OF ENERGY
FERNALD AREA OFFICE

20500-PL-0002
REVISION A
DRAFT

TABLE OF CONTENTS

Page

List of Acronyms and Abbreviations iv
List of Figures iii
List of Tables iii

1.0 Introduction 1-1
1.1 Exclusions 1-3
1.2 Remediation Area Background and Description 1-3
1.2.1 K-65 Silos/Drum Handling Building 1-3
1.2.2 Storm Water Retention Basins 1-7
1.3 Scope and General Approach of the Excavation Plan 1-8
1.4 Programmatic Strategy 1-9
1.4.1 Predesign Investigation 1-9
1.4.2 Remedial Design 1-9
1.4.3 Remedial Action 1-9
1.4.4 Precertification 1-10
1.4.5 Certification 1-10
1.4.6 Post-Remedial Action 1-10
1.5 Summary of the Regulatory Drivers 1-10
1.5.1 Permits 1-10
1.5.2 Natural Resource Trusteeship and Related Natural and Cultural Resource Regulations 1-11
1.5.2.1 Threatened and Endangered Species 1-11
1.5.2.2 Wetlands/Floodplains 1-11
1.5.2.3 Resolution of DOE's Liability for Injuries to Natural Resources 1-12
1.5.2.4 Cultural Resource Management 1-12

2.0 Predesign Investigations and Characterization Data 2-1
2.1 Summary of the RI/FS Investigation 2-1
2.1.1 Preliminary Constituents of Concern 2-1
2.1.2 On-Site Disposal Facility Waste Acceptance Criteria 2-1
2.1.3 Final Remediation Levels for Soil 2-1
2.1.4 Hazardous Waste Management Units 2-2
2.1.5 Underground Storage Tanks 2-2
2.1.6 Identification of Potentially Characteristic Areas 2-2
2.2 Summary of Surface and Subsurface Physical Conditions 2-2
2.2.1 High-Leachability Zones 2-3
2.3 Summary of Predesign Investigations 2-3
2.3.1 Above-WAC Areas and Boundaries 2-5
2.3.2 Above-FRL Areas and Boundaries 2-5
2.3.3 Real-Time Scanning Within Area 7 Silos and General Area 2-8
2.4 Identification of Area-Specific Constituents of Concern 2-8

TABLE OF CONTENTS
(Continued)

Page

3.0 Remedial Approach 3-1
3.1 Introduction 3-1
3.2 Site Preparation 3-1
3.2.1 Utility Isolation/Protection/Installation 3-1
3.2.2 Remaining Utilities 3-2
3.2.3 Surveying 3-2
3.2.4 Construction Fencing 3-2
3.2.5 Erosion and Sediment Control 3-2
3.2.6 Haul Routes 3-3
3.3 Storm Water Management 3-3
3.3.1 Silos Embankment 3-3
3.3.2 K-65 Silos Area 3-3
3.3.3 Cement Pond 3-4
3.3.4 Silos Parking Lot Area 3-4
3.3.5 Storm Water Retention Basin Area 3-4
3.3.6 General Excavation Areas 3-5
3.4 Site Storm Water Treatment Capacity 3-5
3.5 Remedial Excavation 3-6
3.5.1 Above-WAC Excavations 3-6
3.5.2 HWMUs and USTs 3-8
3.5.3 General Excavation 3-8
3.5.4 Utilities Removal 3-8
3.5.5 Excavation Sequencing 3-9
3.6 At- and Below-Grade Structures 3-10
3.7 Prohibited Materials 3-11
3.8 Interim Restoration 3-12
3.9 Precertification 3-12

References R-1

LIST OF APPENDICES

Appendix A Predesign Characterization Data for Area 7 Silos and General Area
Appendix B Real-Time Map of Area 7 Silos and General Area
Appendix C Buried Laboratory Ventilation System Removal Plan
Appendix D List of Drawings and Technical Specifications

LIST OF TABLES

Table 2-1 Preliminary Area-Specific Constituents of Concern Per the Sitewide Excavation Plan
Table 2-2 Area 7 Silos and General Area Revised List of Area-Specific Constituents of Concern
Table 3-1 Area 7 Silos and General Area Quantities

LIST OF FIGURES

Figure 1-1 Generalized Sitewide Remediation Areas
Figure 1-2 Area 7 Silos and General Area
Figure 2-1 Area 7 Silos and General Area
Figure 2-2 RI/FS Borings
Figure 2-3 RI/FS Borings
Figure 2-4 RI/FS Borings
Figure 2-5 RI/FS Borings
Figure 2-6 RI/FS Borings
Figure 2-7 Predesign Borings
Figure 2-8 Predesign Borings
Figure 2-9 Predesign Borings
Figure 2-10 Predesign Borings
Figure 2-11 Predesign Borings

LIST OF ACRONYMS AND ABBREVIATIONS

ALARA	As Low As Reasonably Achievable
ASCOC	area-specific constituent of concern
AWWT	Advanced Waste Water Treatment (Facility)
BSL	Biodenitrification Surge Lagoon
CAWWT	Converted Advanced Waste Water Treatment (Facility)
CDL	Certification Design Letter
CERCLA	Comprehensive Environmental Response, Compensation and Liability Act
CFC	Certified for Construction
CFR	Code of Federal Regulations
COC	constituent of concern
CT	Construction Traveler
DOE	U.S. Department of Energy
EPA	U.S. Environmental Protection Agency
FCP	Fernald Closure Project
FRL	final remediation level
gpm	gallons per minutes
HDPE	high density polyethylene
HPGe	high-purity germanium (detector)
HWMU	hazardous waste management unit
IRDP	Integrated Remedial Design Package
LOOW	Lake Ontario Ordinance Works
MCW	Mallickrodt Chemical Works
µg/kg	micrograms per kilogram
mg/kg	milligrams per kilogram
NPDES	National Pollution Discharge Elimination System
NRRP	Natural Resource Restoration Plan
NRTs	Natural Resource Trustees
OEPA	Ohio Environmental Protection Agency
OSDF	On-Site Disposal Facility
OU	operable unit
pCi/g	picoCuries per gram
PSP	Project Specific Plan
RA	Remedial Action
RCRA	Resource Conservation and Recovery Act
RD	Remedial Design
RI/FS	Remedial Investigation/Feasibility Study
RIMIA	Receiving and Incoming Materials Inspection Area
ROD	Record of Decision
SEP	Sitewide Excavation Plan
SMTA	Special Materials Transfer Area
SP	Soil Stockpile
SPIT	South Plume Interim Treatment
SWM	Storm Water Management (Pond)

LIST OF ACRONYMS AND ABBREVIATIONS
(Continued)

SWRB	Storm Water Retention Basin
TACO	Transitional Additional Contractor Office Space
TCLP	Toxicity Characteristic Leachate Procedure
UST	underground storage tank
WAC	waste acceptance criteria
WAO	Waste Acceptance Organization
yd^3	cubic yards

1.0 INTRODUCTION

This Excavation Plan addresses the U.S. Department of Energy's (DOE's) remediation of debris and impacted soil within portions of Area 7 at the Fernald Closure Project (FCP) in southwestern Ohio (Figure 1-1).

To facilitate site cleanup, the FCP was re-organized into nine remediation areas (Figure 1-1) based on the operable unit (OU) concept and including off-site locations adjacent to the FCP property. Area 7 is located generally around the southern and western perimeters of the southern portions of the Former Production Area (Areas 4B and 5), and includes the K-65 Silos, OU4 operation and remediation areas and many of the site's support areas and facilities. These support areas and facilities include the Converted Advanced Waste Water Treatment Facility (CAWWT), Storm Water Retention Basins (SWRBs), primary access roads (including the Main Access Road and Western Access Road), Silos office trailer complex areas, Transitional Additional Contractor Office Space (TACO) office trailer complex area, security trailer park, Building 82A, several paved and graveled parking lots, the former Lime Sludge Ponds footprint, and the Cement Pond (18N).

This document addresses a majority of Area 7 including the remediation of debris and impacted soil in the vicinity of the four K-65 Silos, Cement Pond (18N), former Lime Sludge Ponds, Building 30/45 Parking Lot, Building 93A (Southwest Boiler House), Building 25K (Sewage Treatment Plant Complex), Construction Parking Lot (Southwest), 400,000 Gallon Water Storage Tank (26E), TACO office trailer complex area, SWRB, the northern portion of Building 18Q (Valve House for South Plume), Building 18Y (AWWT Ozone Generation Building), 18Z (Sludge Mix Tank), portions of the West Access Road, security trailer park, and Building 82A. The areas within Area 7 not addressed by this plan include the Main Access Road and other primary access roads, OU4 operation and remediation areas, and CAWWT (see Figure 1-2). These areas will be addressed in the Area 7 OU4 Operational Area and CAWWT Excavation Plan scheduled to be submitted to the agencies for review in July 2005.

The remediation of Area 7 Silos and General Area will be performed using a similar approach depicted in the Excavation Plan for Area 6 Waste Pits and General Area submitted to the agencies for review in April 2005 (DOE 2005a).

Removal of above-waste acceptance criteria (WAC) soil and debris within the areas governed by this plan is governed by the OU5 and/or OU3 RODs (DOE 1996a and 1996b) and is therefore addressed in this plan. Above-WAC areas are bounded both vertically and laterally by either physical sampling or real time scanning. There are only two known above-WAC areas within the Area 7 Silos and General Area jurisdiction (see Section 2 for details): the sediment in the SWRB and the K-65 Trench. Above-WAC

areas may be discovered during remedial excavation and will be bounded in accordance with the Project Specific Plan (PSP) for Excavation Control of Area 7 Silos and General Area (DOE 2005b).

For above-final remediation level (FRL) soil areas, bounding of contaminants is governed by the OU5 ROD and is therefore addressed in this plan. Impacted soil excavations have been bound by discrete sampling. Two locations lateral bounding could not be completed. In one location at the southwestern portion of the silo embankment excavation radium-226 is not laterally bound at the surface. Additional bounding samples will be taken; however due to the long-lead time to perform radium-226 analysis, the results will not be available for approximately 30 days. The design will be modified at that time, if needed. In the second location, lateral bounding could not be completed near Extraction Wellhouse EW-27 (northwest of CAWWT) due to utilities. Due to the nature of this highly disturbed area (by both construction of various facilities and excavation already conducted by other projects), three-dimensional modeling of the extent of contamination has not been performed for this Integrated Remedial Design Package (IRDP) as in some previously submitted IRDPs. Both locations are discussed in detail in Section 2. Remedial activities in the Area 7 Silos and General Area will take place in accordance with the OU5 ROD, which addresses remediation of soil, sediment and environmental media.

This Excavation Plan and the Sitewide Excavation Plan (SEP, DOE 1998a) satisfy the Amended Consent Agreement [U.S. Environmental Protection Agency (EPA) 1991] requirement for a remedial action (RA) work plan. In addition, this Excavation Plan and the associated remedial design (RD) construction drawings and technical specifications constitute the IRDP, as outlined in the Remedial Design Work Plan for Remedial Actions at OU5 (DOE 1996c). As the integrating document for the IRDP, this Excavation Plan is issued for regulatory agency review of the RD and summarizes the RA scope of work. RAs described in this plan are being conducted in accordance with the Comprehensive Environmental Response, Compensation and Liability Act (CERCLA) and corrective action requirements of the Resource Conservation and Recovery Act (RCRA). The Excavation Plan conforms to the general model outline for IRDPs provided in Section 7.0 of the SEP.

The remediation of Area 7 Silos and General Area is scheduled for execution from June 2005 through September 2005.

Section 1.0 of this Excavation Plan describes the scope of work for the Area 7 Silos and General Area, including the remedial background and description, scope and general approach of the Excavation Plan, and programmatic strategy.

1.1 EXCLUSIONS

This document is being submitted to govern a specific area within Remedial Area 7 and does not address the remediation of Area 7 as a whole. As such, the Area 7 components for the primary access roads (except the Western Access Road), OU4 operation and remediation areas, and CAWWT (see Figure 1-2) are excluded from this document. The remediation of the above-grade structures associated with Building 82A [old Receiving and Incoming Materials Inspection Area (RIMIA)] is not addressed in this Excavation Plan [see Plant 6/East Warehouse Complex Decontamination and Dismantlement Implementation Plan (DOE 1999) for above-grade remediation scope]. The above-grade remediation of a portion of Building 18Q (Valve House for South Plume), Building 18Y (AWWT OZONE Generation Building), Building 23B (Telecommunications Building), Building 25K (Sewage Treatment Plant Complex), 26 D, E, and F, and Building 93A (Southwest Boiler House) is not addressed in this Excavation Plan [see Miscellaneous Small Structures (Phase II) Implementation Plan for Above-Grade Decontamination and Dismantlement (DOE 2003a)].

1.2 REMEDIATION AREA BACKGROUND AND DESCRIPTION

The Area 7 Silos and General Excavation Area is approximately 56 acres and includes the K-65 Silos, SWRBs, the Western Access Road, TACO office trailer complex area, security trailer park, Building 82A, several paved and graveled parking lots, the former Lime Sludge Ponds footprint, and the Cement Pond (18N) (see Figure 1-1).

The following is a brief description of each major facility or structure within Area 7 Silos and General Area.

1.2.1 K-65 Silos/Drum Handling Building

The K-65 Silos were constructed by Catalytic Construction Company during 1951 and 1952 for the transfer and storage of two basic forms of waste known as "hot" raffinates and "cold" raffinates. The silos had an approximate 80-foot inside diameter, 27-foot height at the top of the wall, and 36-foot height to the top of the dome at the center of the silo. The walls were 8-inch thick concrete that were cast in-place. An under drain system was installed beneath the floor of Silos 1 and 2. The under drain system consisted of slotted pipe in a gravel layer. The gravel layer was constructed on top of a 2-inch thick layer of asphaltic concrete and a 17-inch thick layer of compacted clay. The under drain system was connected to a decant sump tank to collect any potential leakage through the base of the silos. Silos 3 and 4 were constructed to receive dry materials only and did not have under drain systems installed.

The site's refinery processed two basic classes of materials: (1) pitchblende ores as they were mined and shipped to the site and (2) other uranium concentrates that had already undergone a preliminary milling process and residues recovered at various stages of site operations. Uranium bearing ores, as they are

mined, contain not only uranium, but also equilibrium concentrations of uranium progeny (i.e., the isotopes of other elements formed through the sequential radioactive decay chains that begin with uranium-235 and uranium-238). These progeny products, which include uranium, are removed in either a preliminary milling process or, if the ores are not pre-processed through a mill, in the refining process. Thus when the site refinery processed pitchblende ores, the refinery wastes contained a high concentration of the radioactive uranium progeny products. These refinery wastes were known as "hot" raffinates. The term "hot" was used to indicate that the materials contain a high concentration of gamma-emitting radium-226 and progeny that result in a significant direct penetrating radiation exposure rate. When the site processed uranium concentrates that had been pre-processed through a uranium mill, a significant portion of the radium-226 and the gamma-emitting progeny had already been removed. The thorium progeny of uranium (i.e., thorium-230, etc.) remained within the uranium concentrates due to the inefficiency of the mill in removing this metal. Thus, the resulting waste, known as "cold" raffinates, contained only very low concentrations of the gamma-emitting uranium progeny but contained significant concentrations of thorium-230.

The hot raffinates first stored in the K-65 silos were generated at the Mallickrodt Chemical Works (MCW) in St. Louis, Missouri. MCW operated a uranium refinery for production of uranium prior to construction of the site's refinery.

The pitchblende ore processed at MCW and the great majority of pitchblende ore processed at the site came from one mine, the Shickolobwe Mine in the Belgian Congo. Ores from this mine contained relatively high concentrations of uranium oxide in the range of 40 to 50 percent. The Shickolobwe Mine, owned by African Metals Corporation, began operations in 1921 for the purpose of obtaining radium. The mine was reopened in 1943 for its uranium. Based on the high value of radium at the time, the agreement reached between the Atomic Energy Commission and the African Metals Corporation stipulated that African Metals Corporation would retain ownership of the radium. That is, after the United States had processed the pitchblende to extract uranium, the residue would be returned to African Metals Corporation. In 1984, ownership of the K-65 residues was transferred to DOE.

Initially, the residues from the MCW refining operations were sent back to African Metals Corporation. Beginning in April 1949, the residues were no longer returned to African Metals Corporation following processing, but were stored at MCW for future shipment. As production continued, storage became a problem. As a result, the drummed residues were sent from MCW to Lake Ontario Ordinance Works (LOOW) near Niagara Falls, New York, for storage. Some of the drums were shipped from the LOOW to the site for storage. Beginning in 1951, continuing production at the MCW resulted in approximately 25,000 drums being sent directly from St. Louis to the site.

From 1953 through 1958, the site's refinery processed pitchblende ore from the Belgian Congo concurrently with uranium concentrates that had already undergone a preliminary milling process.

The K-65 Drum Waste Handling Facility was built near Silos 2 and 3 to transfer the contents of the drums of off-site origin into the silos. Hot raffinate from MCW was slurred into Silo 1 until the silo was filled to approximately 4 feet below the top of the vertical walls. The volume of material from LOOW and from the MCW filled Silo 1. Although Silo 1 was filled completely from the off-site drums, Silo 2 material was a mixture of MCW, K-65 material, and Fernald Environmental Management Project generated K-65 material. The rest of the material subsequently added to Silo 2 was residue generated by the site from the processing of Belgian Congo ore.

Beginning in 1958, the processing of pitchblende ores was terminated and the use of the Silos 1 and 2 was discontinued. Only cold raffinate was produced after that time and stored in Silo 3. The refinery feedstock consisted of uranium concentrates (yellowcake) from Canada and the United States. Canadian concentrates were not processed after 1960. In the production of these concentrates, most of the uranium progeny had been removed. However, radium-226 remained in the yellowcake in amounts that varied with the process. Slurries from refinery operations were dewatered in an evaporator and spray calcined to produce a dry waste form for storage in Silo 3. The waste was blown under pressure into Silo 3. Silo 4 was also constructed in mid-1952; however this silo was never used.

Material was transferred to Silos 1 and 2 by pumping it in slurry form. The residue eventually settled and formed two layers, consisting of settled solids (raffinate) covered by decant liquid. To remove the decant liquid, Silos 1 and 2 were equipped with a series of decant ports. These ports were arranged in two vertical lines located on diametrically opposing sides of each silo. There were 25 ports in each vertical line, making a total of 50 ports per silo. The bottom port on each silo was 1 foot from the silo bottom. The remaining 49 ports were located at 6-inch intervals.

The decant ports of the silos were, at the time of filling, each directed into a pipe that drained to the decant sump. The decant sump was located between the silos below the base of the silos to allow for gravity drainage. At the base of the silos, at the original ground elevation, skirt drains used to collect any seepage through the walls of the silos or leakage from the decant ports. These skirt drains directed flows to the decant sump.

As early as 1954, leaks appeared in the concrete walls of the silos. Many attempts to stop the leakage and repair damage to the concrete wall were not entirely successful. In 1958, a determination had been made that the only successful way to prevent the silos from leaking was to repair them from the inside, which due to the contamination was not possible. In 1964, large areas of spalling occurred on the exterior

coating of Silos 1 and 2. The exterior surfaces of Silos 1 and 2 were patched, a waterproofing was applied to the outside, and an earthen berm was constructed around Silos 1 and 2 at a 1.5 to 1 side slope. A 30-inch diameter corrugated metal pipe was installed vertically on top of the decant sump to maintain access to the decant sump through the earthen berm. Due to the steepness of the side slopes and the way the soil was placed around the silos, the silos berm suffered from erosion. In the early 1980's, the western portion of the berm slumped downward partially collapsing the vertical access pipe to the decant sump. In 1983, soil was brought in to reduce the steepness of the side slopes from 1.5 to 1 to 3 to 1. This effectively eliminated the erosion problem.

In 1984, a structural analysis of Silos 1 and 2 was performed by Camargo Engineering. Based on the analysis, it was recommended that a cover be placed over the center portion of each dome to redistribute live load (the weight of snow, personnel, equipment, and other non-permanently attached items) off the center of the dome. The covers were to be installed to contain silo residue in the event of a collapse of the center of the silo domes. In January 1986, two load-spreading dome covers, 30-foot in diameter, were installed to span a deteriorated portion of the concrete domes of both Silos 1 and 2. The covers were self-supporting, and sat on a rolled plate-steel skirt. In November 1987, insulation was sprayed onto the top surface of the dome to reduce the temperature differential across the thickness of the dome concrete (from the outside top surface to the bottom inside surface) to attempt to extend the life of the dome by reducing stresses from differential expansion and contraction of the concrete dome.

On December 7, 1994, the OU4 ROD (DOE 1994) was signed and identified vitrification as the selected remedy for the material in Silos 1, 2, and 3. Based on difficulties with the vitrification process, the OU4 ROD was modified through the CERCLA Explanation of Significant Differences process in January 1998.

Under OU4 remediation, the material in Silos 1 and 2 was transferred to newly constructed containment vessels, known as the Transfer Tank Area, the berm surrounding Silos 1 and 2 was excavated, and the bridge crane superstructure was razed. Prior to demolishing Silos 1 and 2, a sealant was applied to the inside surfaces of both silos to affix contamination to the concrete. The two silos where demolished in May 2005.

Also under Operable Unit 4 remediation, the material in Silos 3 is being processed for off-site disposal by vacuuming the dry silo material, treating the material with waste conditioning additives (ferrous sulfate and sodium lignosulfonate), and packaged in shipping containers. Silo 3 is scheduled for demotion in late Summer 2005.

1.2.2 Storm Water Retention Basins

In the early 1950s, the Storm Sewer Lift Station (22B) was constructed between the Laboratory (15A) and the Service Building (11) and collected water from various discharge streams including the storm sewer system, clearwell, water treatment blow down from the Boiler Plant, and General Sump supernatant. Water collected in the Storm Sewer Lift Station was pumped to Manhole 175 located on the eastern edge of the site and discharged through an outfall line to the Great Miami River. A 60-inch diameter overflow line was installed from the Storm Sewer Lift Station to what is now known as the Storm Sewer Outfall Ditch (see Figure 1-2). During storm events when the pumps in the Storm Sewer Lift Station could not keep up with the inflow, the overflow would discharge to Paddys Run via the 60-inch storm sewer line. Near the discharge end of the 60-inch storm sewer line, a Storm Water Diversion Box and a settling basin where installed. The 60-inch storm sewer line discharged into the Storm Water Diversion Box. The Storm Water Diversion Box had two pathways for discharge: down a concrete spillway into the settling basin or into another 60-inch storm sewer line located on the opposite side of the Storm Water Diversion Box that discharged into the Storm Sewer Outfall Ditch. Arched plates on the floor of the Storm Water Diversion Box directed flow from the bottom of the 60-inch storm sewer line (the portion most likely to contain suspended solids) into the settling basin. A drain line was to be installed from the settling basin to the Storm Sewer Outfall Ditch; however, this drain line was never installed. Without a discharge pathway for water from the settling basin, the basin was ineffective. By late 1952, the spillway to the settling basin was blocked by the construction of a wooden wall that effectively took the settling basin out of the flow route for overflow discharge from the Storm Sewer Lift Station.

In 1986, a new basin (now known as the West Chamber of the SWRB was constructed to hold the excess storm water from the production areas of the site that was not intercepted by the Storm Sewer Lift Station. Water that was collected in the SWRB was pumped to Manhole 175 for discharge to the Great Miami River through the outfall line. As part of this construction, the 60-inch diameter storm sewer line that discharged from the Storm Water Diversion Box to the Storm Sewer Outfall Ditch was plugged on both ends to force discharge water into the retention basin. Both the new basin and the existing settling basin were lined with a 1.5-foot thick compacted clay liner and covered with geotextile fabric and synthetic liner. An under drain system was constructed in the top of the clay liner for each basin and a gas venting under drain system was placed around the perimeter of the basins. The wooden wall preventing flow into the settling basin was removed as part of this construction.

In 1991, another basin was installed east of the existing Storm Water Diversion Box to increase the storm water holding capacity with the basins. This new basin became known as the East Chamber of the SWRB and was constructed similarly to the West Chamber with a synthetic liner over a compacted clay liner with an under drain system and gas venting under drain system. During construction, the Storm Water Diversion Box was modified and enlarged to allow water to flow into both the West and East Chambers.

In 1993, construction of the Advanced Waste Water Treatment (AWWT) Facility was completed. Storm water was no longer pumped to Manhole 175 from the Storm Sewer Lift Station for release to the Great Miami River; instead, storm water was discharged from the Storm Sewer Lift Station into the SWRB where it was pumped to the AWWT for subsequent treatment prior to being released into the Great Miami River.

1.3 SCOPE AND GENERAL APPROACH OF THE EXCAVATION PLAN

The Area 7 Silos and General Area Excavation Plan consists of the following sections:

- Section 1.0 - Introduction, which summarizes the purpose and scope of this Excavation Plan and describes programmatic strategies and requirements for this remedial action project.
- Section 2.0 - Predesign Investigations and Characterization Data for the Area 7 Silos and General Area, which describes the constituents of concern (COCs) for the Area 7 Silos and General Area, the subsurface conditions, the nature and extent of contamination, and the anticipated excavation boundaries based on Remedial Investigation/Feasibility Study (RI/FS) data and other data collected to fill data gaps.
- Section 3.0 - Remedial Action Approach, which presents the work associated with site preparation, and presents the strategy for above-WAC and general excavation to remove contaminated soil, real-time monitoring of the excavation surface, management of waste streams in accordance with final disposition requirements, management of surface and perched water in the excavation, and documentation that the soil in the area meets the FRLs for all COCs.
- Appendix A - Characterization Data for the Area 7 Silos Waste Pits and General Areas, which tabulates predesign characterization data used to develop the remedial strategy.
- Appendix B - Real-Time Map for Area 7 Silos and General Areas
- Appendix C - Buried Laboratory Ventilation System Removal Plan
- Appendix D - List of Drawings and Specifications issued with this Excavation Plan.

The area-specific RD/RA process at the FCP is illustrated on Figure 1-1 of the SEP and involves the following steps:

- Predesign investigations
- Remedial design
- Remedial action
- Precertification of excavated areas
- Certification of excavated areas
- Post-remedial action.

1.4 PROGRAMMATIC STRATEGY

This Excavation Plan includes the first of four steps of the programmatic strategy.

Specific performance requirements to accomplish the scope of work presented in this plan are provided in the technical specifications, and the Construction Traveler (CT). The CT will be reviewed and approved by the DOE and Fluor Fernald.

1.4.1 Predesign Investigation

Predesign activities began in the Area 7 Silos and General Area in December 2004. These predesign investigations were conducted to supplement RI/FS information on the nature and extent of contamination in Area 7. These predesign investigations were performed, in general, to identify the extent of soil exceeding the various action levels (i.e., RCRA, WAC, FRL). The specific goals of these predesign sampling investigations included filling data gaps, confirming questionable analytical results, bounding above-WAC or above-FRL areas, and investigating potentially characteristic areas. Section 2.3 addresses the PSPs used to predesign the area addressed in this IRDP.

1.4.2 Remedial Design

The RD began in May 2005 with Title I/II design and will continue through completion of the certified-for-construction (CFC) package. The drawings submitted with this Excavation Plan build upon the Area 3B/4B/5 and Area 6 Former Production Area construction designs. The specifications noted also build upon the same construction design, but have not been submitted with this plan as they have already been previously approved.

The design-grade for excavation is depicted on the construction drawings and is based on:

- RI/FS data on the nature of COC concentrations in soil and perched groundwater
- Data collected during predesign investigations to delineate the extent of contamination for above-WAC, RCRA, and below-WAC zones
- Excavation required to control surface water.

1.4.3 Remedial Action

The RA for the Area 7 Silos and General Area will be performed in accordance with Section 3.0 and is scheduled to begin in June 2005.

The extent of excavation will be based on actual field conditions (e.g., previously unidentified debris), radiological field survey measurements (i.e., real-time surveys), and physical sampling results. In particular, real-time surveys will be used to minimize the excavation volume of above-WAC uranium

contamination (Section 3.3) and to evaluate potential reduction of the below-FRL soil volume that is hauled to the On-Site Disposal Facility (OSDF).

Impacted material is defined as soil with above-FRL contamination or man-made materials. Impacted material will be hauled to the OSDF for disposal if OSDF WAC are met. Impacted material that meets the chemical/radiological WAC, but not the physical WAC, will be size-reduced to achieve the WAC and delivered to the OSDF. Items that are prohibited from disposal in the OSDF will be containerized and shipped off site to a permitted disposal facility.

Interim grading of the Area 7 Silos and General Area will be performed as necessary to maintain safe stable slopes.

1.4.4 Precertification

The precertification of the Area 7 Silos and General Area will be performed in accordance with Sections 3.9.

1.4.5 Certification

As stated in the SEP, a Certification Design Letter (CDL) will be prepared and submitted to the regulatory agencies following completion of the precertification process that summarizes the area-specific remediation completed, results of the precertification activities, and design of the certification sampling and analysis program. Certification of Area 7 Silos and General Area will not be governed by this plan.

1.4.6 Post-Remedial Action

Final restoration of the Area 7 Silos and General Area will follow interim grading and be guided on a sitewide basis by the latest/final version of the Natural Resource Restoration Plan (NRRP, DOE 2002a). Area 7 Silos and General Area post-remedial actions are not addressed by this plan.

1.5 SUMMARY OF THE REGULATORY DRIVERS

The regulatory requirements, criteria and legal obligations that constitute the drivers for FCP remediation activities are presented in Section 1.3.1 of the SEP. Those regulatory drivers applicable to the Area 7 Silos and General Area remediation are summarized in this section.

1.5.1 Permits

The National Pollutant Discharge Elimination System (NPDES) permit (Permit No. 1IO0000*GD), for storm water and wastewater discharges to Paddys Run and the Great Miami River, is the permit that is applicable to Area 7 Silos and General Area remediation. Activities involved in the remediation of the Area 7 Silos and General Area are anticipated under the existing NPDES permit; therefore, no

modification to the permit is required. Water collected within the excavation area will be pumped from the individual pits to the Cement Pond or the concrete trench that drains to the Cement Pond. Water within the Cement Pond will be pumped for discharge into existing site storm sewer system and drain into the SWRB for subsequent CAWWT. Compliance with the existing permit will be demonstrated through the effective implementation of the FCP Storm Water Pollution Prevention Plan.

1.5.2 Natural Resource Trusteeship and Related Natural and Cultural Resource Regulations

Two mechanisms drive protection of natural resources during remediation: the Natural Resource Trusteeship process and compliance with pertinent federal and state regulations. Both of these mechanisms have been incorporated into Area 7 Silos and General Area remedial strategy.

Conceptual restoration designs for the Area 7 Silos and General Area have been presented to the Trustee Council as part of the NRRP. The proposed restoration, which consists of expanded prairie and wetland habitat, will be implemented after approval of the area specific Natural Resource Restoration Design Plan has been reviewed and approved by the Natural Resource Trustees (NRTs). Implementation of restoration activities will occur as close to the completion of required remediation activities as possible. Regulatory drivers for the management of natural and cultural resources and associated surveys are grouped into three areas: threatened and endangered species protection, wetlands/floodplain protection, and the resolution of DOE's liability for injuries to natural resources.

1.5.2.1 Threatened and Endangered Species

Based on updated FCP property surveys conducted in 1993 through 1994, DOE does not expect to encounter any federal- or state-listed threatened or endangered species or critical habitat in the areas to be addressed by the remediation of Area 7 Silos and General Area. Therefore, no additional threatened or endangered species surveys are planned for the area.

1.5.2.2 Wetlands/Floodplains

The 1993 sitewide wetland delineation identified approximately 36 acres of jurisdictional wetlands and 8.9 acres of waters of the United States within the 1,050-acre property. The 1993 Wetland Delineation was approved by the U.S. Army Corps of Engineers, Louisville District Office, in August 1993. Since the 1993 delineation, DOE has identified an additional 2.27 acres of wetlands that have been formed as the result of construction activities at the FCP. Although DOE plans to avoid or minimize impacts to these areas to the maximum extent practicable during remediation, approximately 11.87 acres of wetlands have been impacted or are planned to be impacted requiring mitigation. These planned impacts will occur as a result of CERCLA remediation activities and have been identified in the appropriate OU RODs. Because dredge and/or fill activities will be carried out under CERCLA, notification to the U.S. Army Corps of Engineers is not required and EPA is the lead agency regarding wetland mitigation. On

June 20, 1995, DOE met with representatives from EPA, Ohio Environmental Protection Agency (OEPA), U.S. Fish and Wildlife Service and the Ohio Department of Natural Resources and determined that mitigation would occur on-property to the extent possible and a mitigation ratio of 1:1.5 would apply to wetlands impacted at the FCP.

The NRRP includes DOE plans for conducting wetland mitigation activities at the FCP. The NRRP currently includes plans to conduct two wetland mitigation projects to create the required 17.8 acres of new wetlands. Any additional wetland mitigation required from unanticipated impacts to wetland will be addressed through implementing the NRRP. Dredge and/or fill activities will be subject to the substantive requirements of Sections 404 and 401 of the Clean Water Act. A permit information summary will be prepared for any impact to wetlands at the FCP and will be submitted to the appropriate regulatory agencies.

1.5.2.3 Resolution of DOE's Liability for Injuries to Natural Resources

The NRTs are working to resolve liability that DOE faces for injuries to natural resources under CERCLA. In 1986, the State of Ohio filed a claim against DOE for injuries to natural resources. The claim has been in stay while negotiations are proceeding toward resolution. The State of Ohio has designated OEPA as their trustee representative in matters involving natural resource injuries. The Fernald NRTs have jointly developed the NRRP and have tentatively agreed that DOE, through implementation of the plan, will resolve natural resource liability at the FCP, including the 1986 State of Ohio claim. The NRTs signed a Memorandum of Understanding in July 2001 formally agreeing to implementation of the NRRP. The NRTs are currently working on a final settlement agreement.

1.5.2.4 Cultural Resource Management

The DOE, the Ohio Historic Preservation Office, and the Advisory Council on Historic Preservation have entered into a "Programmatic Agreement Regarding Archaeological Investigations at the Fernald Environmental Management Project" dated March 6, 1997 (DOE 1997a), pursuant to 36 Code of Federal Regulations (CFR) Part 800.13. Area 7 Silos and General Area was excluded from survey due to past disturbances during site construction and operation. However, any unexpected discoveries of cultural resources during project activities will be managed per the Programmatic Agreement and applicable regulations.

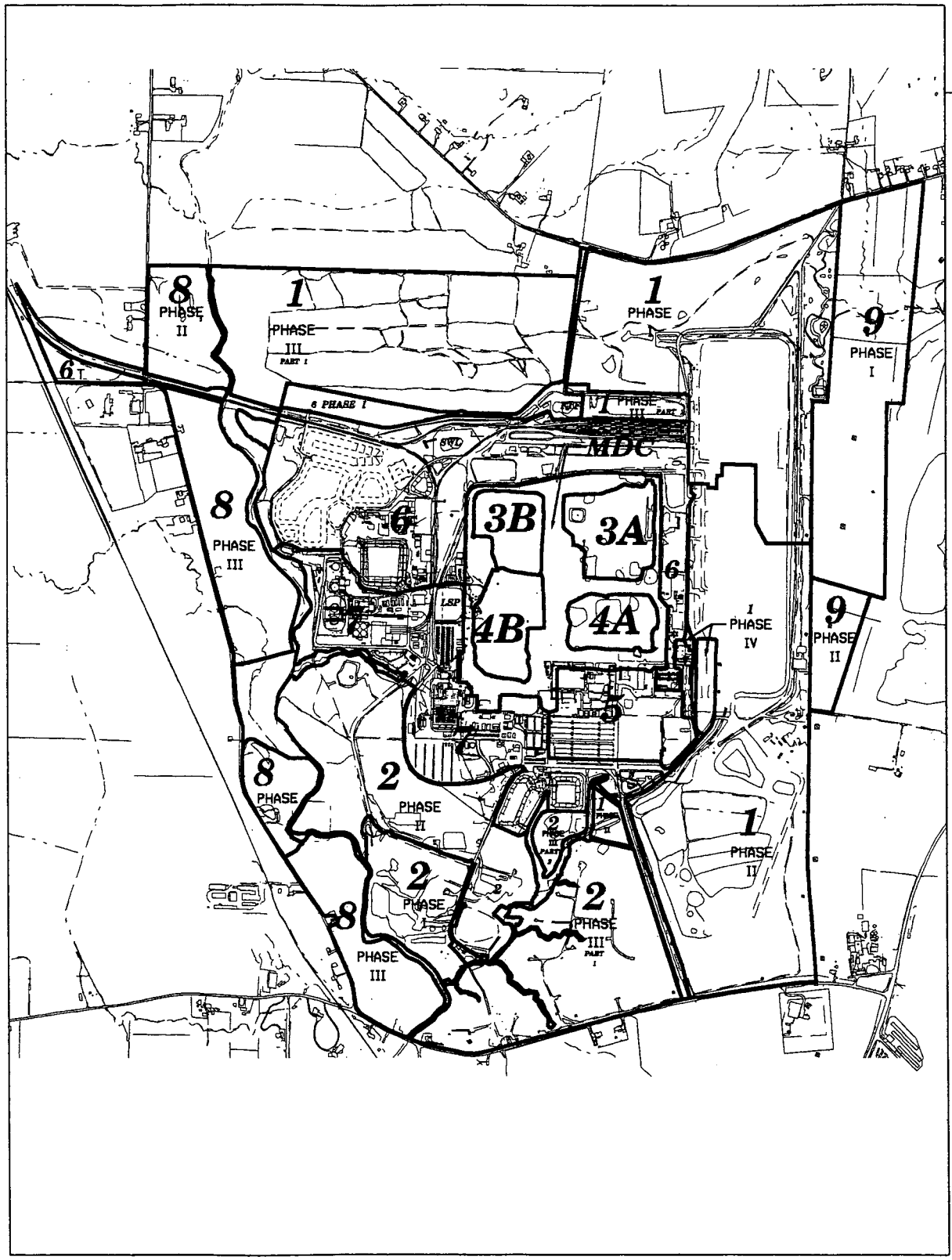

LEGEND:

DRAFT

SCALE

1500 750 0 1500 FEET

FIGURE 1-1. GENERALIZED SITEWIDE REMEDIATION AREAS

v:\02fm12\dgn\07_fig_1_1.dgn
STATE PLANAR COORDINATE SYSTEM 1983
14-JUN-2005

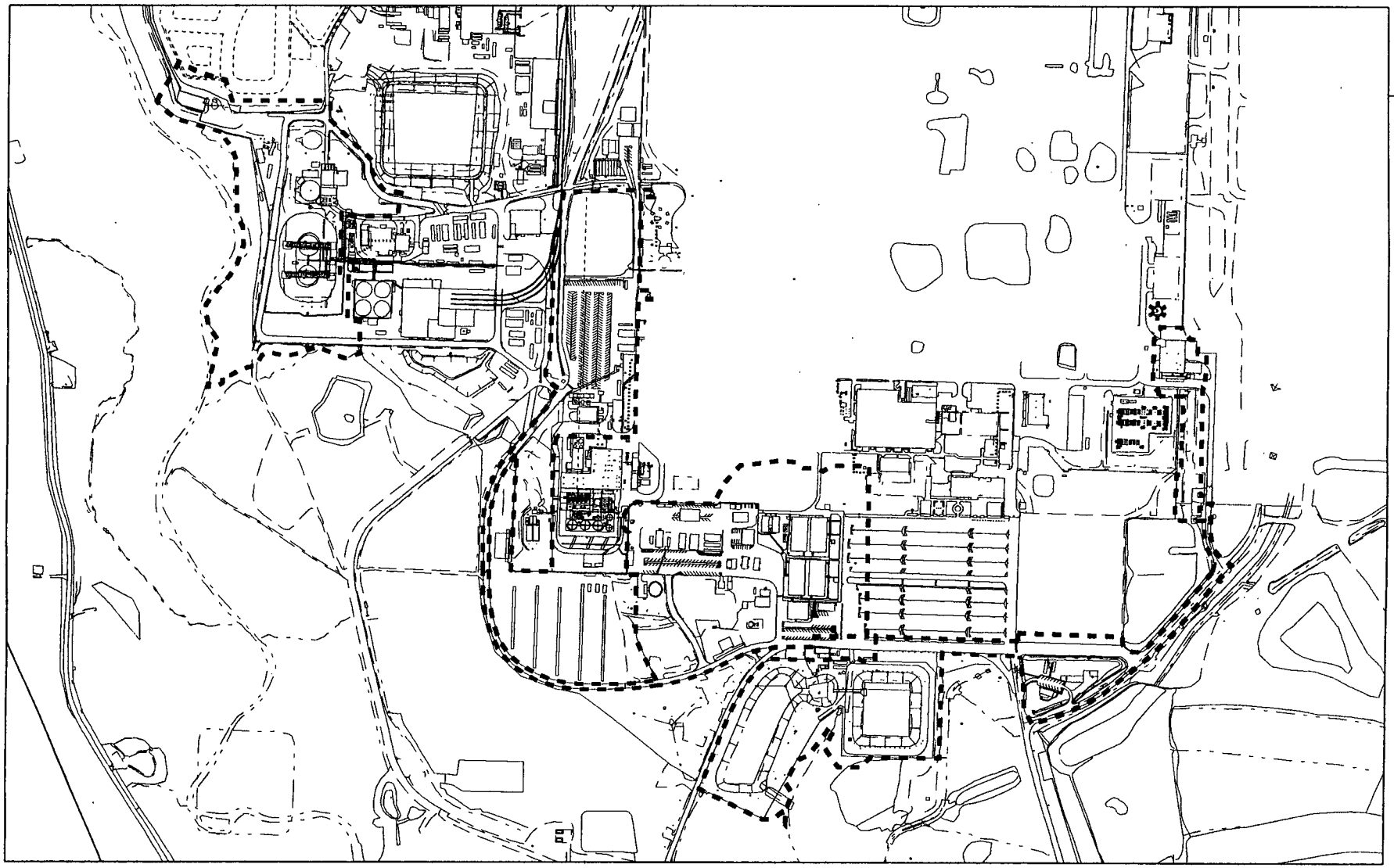

LEGEND:

------ AREA 7 SILOS AND GENERAL AREA

SCALE

600 300 0 600 FEET

DRAFT

v:\#2fm12\dgn\a7_fig_1_2.dgn
STATE PLANAR COORDINATE SYSTEM 1983

FIGURE 1-2. AREA 7 SILOS AND GENERAL AREA

14-JUN-2005

2.0 PREDESIGN INVESTIGATIONS AND CHARACTERIZATION DATA

2.1 SUMMARY OF THE RI/FS INVESTIGATION

Extensive soil sampling was performed at the FCP in the late 1980s and early 1990s as part of the OU5 RI/FS (DOE 1995a and 1995b) to characterize the nature and extent of contamination resulting from decades of uranium-metal production. Figure 2-1 shows the overall breakdown of the figures in Section 2. Figures 2-2 through 2-6 present locations for RI/FS soil borings in the area defined in this document. Most locations shown on the figures represent multiple samples collected at various depths (i.e., multiple samples may have been collected at each boring location).

2.1.1 Preliminary Constituents of Concern

Based on results of the RI/FS investigation, the SEP presented a preliminary list of area-specific constituents of concern (ASCOCs) for Remediation Area 7 (Table 2-1) and stated that a more thorough screening of ASCOCs would be performed for each remediation area during the predesign phase. The additional COC screening for Area 7 is discussed in Section 2.4.

2.1.2 On-Site Disposal Facility Waste Acceptance Criteria

The concentration-based OSDF WAC was established in the OU5 ROD (Table 2-1). Soil excavated from Area 7 must meet these WAC to be eligible for disposal in the OSDF. If soil exceeds the OSDF radiological WAC, it will have to be segregated for off-site disposal. For the special case of soil with above-WAC organic or metal COCs, disposal at the OSDF is permitted if the soil treatment results in the COC levels falling below the established WAC. The Area 7 predesign and RI/FS data were compared to the OSDF WAC to identify areas that exceed the OSDF WAC. The results of this comparison were studied to determine the areas that require additional data to delineate the extent of the above-WAC contamination. Sampling performed to further delineate the above-WAC contamination is discussed in Section 2.3.1.

2.1.3 Final Remediation Levels for Soil

Like the OSDF WAC, the OU5 ROD established the FRLs for soil remediation (Table 2-1). FRLs are the cleanup goals for the FCP site and are defined as the average concentration of a contaminant that can remain in the soil and be considered protective of human health and the environment. Remediation in Area 7 will remove contaminated soil until the residual concentration of contaminants is at or below the respective FRL. There are two FRLs for total uranium - 82 milligrams per kilogram (mg/kg) outside the high leachability areas and 20 mg/kg within the high leachability areas. These areas are delineated in the applicable figures depicting both RI/FS and predesign boring locations (see Figure 2-2 through 2-11). In addition, there is a goal of meeting 50 mg/kg for total uranium outside the high leachability area that is driven by the as low as reasonably achievable (ALARA) philosophy. The ALARA goal of 50 mg/kg will

be reached if soil exceeding 50 mg/kg is within one lift thickness (i.e., 3 feet ±1 foot) of soil exceeding the uranium FRL of 82 mg/kg.

2.1.4 Hazardous Waste Management Units

There are no known hazardous waste management units (HWMUs) within Area 7.

2.1.5 Underground Storage Tanks

There are no known underground storage tanks (USTs) within Area 7.

2.1.6 Identification of Potentially Characteristic Area

Based on historical process knowledge and soil contaminant concentration levels identified through the OU5 RI/FS investigation, six geographic areas of the FCP have a reasonable potential for containing RCRA characteristic waste that provides an opportunity for treatment. One area, which is the Paddys Run streambank fill materials west of the Silos, is located within the boundaries of Area 7 Silos and General Area. Physical sampling conducted during the predesign investigation of this area, which is referenced in Section 2.3, concluded that this area is not a characteristic area and therefore requires no special excavation design.

2.2 SUMMARY OF SURFACE AND SUBSURFACE PHYSICAL CONDITIONS

Remediation Area 7 Silos and General Area includes the K-65 Silos, the Cement Pond, the SWRBs, the West Access Road, TACO office trailer complex, security trailer park, Building 82A, Lime Sludge Pond, Construction Overflow Parking Lot, and Building 30/45 Parking Lot. Various utilities, slabs, footers, and foundations are also in the area.

Subsurface conditions at the FCP have been described in detail in the OU5 RI/FS documents and in the Geotechnical Engineering Report for Project Order 177 (DOE 1998b). Briefly, the stratigraphic column under Area 7 Silos and General Area is generally fill, glacial deposits, sand and gravel deposits of the Great Miami Aquifer, and carbonate bedrock. The discussion here is on the fill and glacial deposits, as these are the impacted materials being addressed by the soil remediation activities. Fill is a mixture of gravel and the native deposits of clay, silt and sand that have been moved or mechanically placed to level areas for building pads and roadbeds. A large amount of gravel was imported into the Area 7 for construction of building pads and roadbeds.

Glacial deposits are comprised primarily of a carbonate clay matrix enclosing muddy stream deposits. The stream deposits are primarily silt and sand with minor gravel and are continuous along the channel traces (primarily northeast to southwest) but discontinuous over broad lateral areas. When present, most of the channel deposits lie between the gray clay and overlying brown clay layers. Over half of Area 7

Silos and General Area is underlain by silty stream and lacustrine deposits. Most of these deposits are 5 to 7 feet thick and lie approximately 6 to 12 feet beneath the surface.

To establish preliminary remedial excavation boundaries in Area 7 Silos and General Area, all historical RI/FS uranium concentration data were pulled from the Sitewide Environmental Database. Figures 2-2 through 2-6 identify the locations of all RI/FS borings. All FRL exceedences were then plotted on a map to determine a preliminary excavation plan. This information was used to establish the areas where predesign investigation data were needed to verify and delineate additional remedial excavations that are necessary to capture contamination. Predesign investigation sampling that was performed to further delineate the above-FRL contamination is discussed in Section 2.3.2.

2.2.1 High-Leachability Zones

High leachability zones in Area 7 Silos and General Area are delineated in the applicable figures depicting both RI/FS and predesign boring locations, shown on Figures 2-2 through 2-11. As committed in the SEP, soil within this high-leachability zone will be excavated to the uranium FRL of 20 mg/kg.

2.3 SUMMARY OF PREDESIGN INVESTIGATIONS

Several predesign investigations were conducted to supplement RI/FS information on the nature and extent of contamination in Area 7. These predesign investigations were performed, in general, to identify the extent of soil exceeding the various action levels (i.e., WAC and FRL). The specific goals of these predesign sampling investigations included filling data gaps, confirming questionable analytical results, bounding above-WAC or above-FRL areas. Figures 2-7 through 2-11 identify the locations of all predesign borings. The following predesign investigations were completed to meet these goals:

- Project Specific Plan for Predesign Investigation in Area 7 (Supplement to 20300-PSP-0011) (DOE 2005c)

  This PSP (referred to in this Excavation Plan as the Area 7 Predesign PSP) describes the investigation of the Area 7, which is located to the west and south of the Former Production Area, as well as south of the main parking lot and just east of Area 5. Area 7 is bordered by Paddys Run to the west and Area 1 to the east. Areas 1 and 2 serve as a southern border while the Waste Pits, Area 4B and 5 are to the north.

- Project Specific Plan for Predesign Investigation in Area 5 (DOE 2002b)

  Area 7 includes some areas that were previously considered to be a part of Remediation Area 5. This PSP included investigation of the Security Complex Trailers and adjacent area just west of the South Access Road, and the area south of Building 82 and east of the electrical substation

- Project Specific Plan for WAC Attainment Sampling of Area 7 Soils (DOE 1998c)

  This PSP was developed to evaluate soils in Area 7 that were scheduled for excavation as part of various Silos Project construction activities. The purpose of the PSP was to obtain WAC characterization data to identify soil that may exceed the OSDF WAC in order to properly segregate these soil and to preclude: 1) the reuse of above-WAC soil for roads or other fill purposes and, 2) the spread of above-WAC soil during construction activities.

- Project Specific Plan for Investigating Subsurface Material from Area 6 Waste Pits 1 through 3, the Clearwell, and the Biodenitrification Surge Lagoon Berm (DOE 2004a)

  This PSP (referred to in this Excavation Plan as the Waste Pits 1-3 PSP) describes the investigation of the berms and the clay liner and soil that remains following the removal of the waste pit material in Waste Pits 1 through 3 and the Clearwell. This PSP also investigated the soil south of the Waste Pits, in an area that now is considered part of Area 7.

- Project Specific Plan for Predesign Investigation in Area 7, Phase III (DOE 2002c)

  This PSP was developed to fill data gaps in the area surrounding the TACO trailer complex, including interspersed sidewalks, roadways, and small grassy areas, prior to the placement of new trailers within the vicinity.

- Project Specific Plan for Area 7, Phase I Precertification Physical Sampling and Real-Time Scan (DOE 2002d)

  This PSP was developed to evaluate any patterns of residual surface soil contamination in A7PI and ensure that all accessible impacted material was removed prior to preparation of a remediated footprint for construction of the Silos Project Remediation Facility and support structures.

- Project Specific Plan for WAC Attainment of Collapsed Soil in Paddys Run (DOE 1997b)

  This PSP was developed following the collapse of a portion of the eastern stream bank in Paddys Run, west of Silos 1 and 2. The purpose of the PSP was to obtain WAC characterization data on the soil that collapsed to determine proper disposition. In addition to WAC attainment sampling, the soil was also evaluated for Toxicity Characteristic Leaching Procedure (TCLP) analysis to determine if the soil was RCRA characteristic, as this area was identified as one of six potential RCRA areas in the OU5 ROD.

- Project Specific Plan for Sampling of Miscellaneous Areas for OSDF WAC Attainment (DOE 2001)

  This PSP was developed to investigate miscellaneous areas such as the Fire Training Facility and the Solid Waste Landfill for WAC attainment. The sediment from SWRB was sampled under this PSP.

The predesign sampling locations in the portions of Area 7 are shown in Figures 2-7 through 2-11. Appendix A includes all available analytical results from the predesign investigations.

In addition to the physical sampling conducted under the above PSPs, real-time scanning was performed in unpaved and accessible areas. This was accomplished using both mobile and stationary sodium iodide gamma detectors. However, the ability to perform these scans in the Area 7 Silos and General Area was severely limited due to the presence of pavement, rail lines, and structures covering a large majority of this surface. More information on the real-time scanning and a discussion of the results is provided in Section 2.3.3.

Excavation boundaries for Area 7 Silos and General Area are established based on the following information:

- Above-WAC and above-FRL areas which are manually established based on bounding physical sampling results
- Location of building foundations, support structures, and utilities
- Constructability and safe-slope configurations necessary to effectively excavate the material.

2.3.1 Above-WAC Areas and Boundaries

Above-WAC areas within the Area 7 Silos and General Area include sediment from the K-65 Trench and sediment from the SWRBs, which is above-WAC for technetium-99.

2.3.2 Above-FRL Areas and Boundaries

Below is a discussion of the above-FRL areas and boundaries within Area 7 Silos and General Area.

FRL #1 (Silos 1 and 2 Footprint)

Within the area of the Silos 1 and 2 Footprint and west to Paddys Run, multiple above-FRL borings were identified during the RI/FS. Above-FRL constituents identified include radium-226, thorium-232, uranium, lead-210, arsenic and beryllium. Boring 11138 also contained elevated lead and chromium, indicating a potentially characteristic area. Following the collapse of the eastern stream bank into Paddys Run in 1997, physical samples were collected to determine if the soil met OSDF WAC prior to disposal. In addition to analyzing the soil for total uranium and technetium-99, the TCLP analysis for lead and chromium was performed. Results from TCLP analysis were below the RCRA limits, thus eliminating this area as being characteristic. This entire area is bound with boring A7-SA1-40 to the northwest, boring A7-SA1-13 to the northeast, A7-SA1-14 to the southeast, A7-SA1-3 and A7-SA12 to the southwest. Boring A7-SA1-35, which was planned as the western most bounding boring, is above-FRL for radium-226 at the 0 to 0.5-foot interval. An additional bounding boring will be placed southwest of boring A7-SA1-35 and samples will be collected for radium-226 analysis prior to excavation in this area. See Figures 2-2 and 2-7.

FRL #2 (North of Silo 4)

North of the Silo 4 footprint, one above-FRL boring, CIS_SYSGEN_387, was identified during the RI/FS. Another above-FRL boring, A6WP-B-49, was identified during sampling under the Waste Pits 1 through 3 PSP. Both are above-FRL for total uranium. Boring A6WP-B-49 is vertically bound. Both borings are laterally bound with A7-B38, A7-B39, A7-B40, A7-B41, A7-B42, and A7-SA1-51. This area will be excavated to a depth of 571 feet. See Figures 2-2 and 2-7.

FRL #3 (Building 30/45 Parking Lot)

Within the footprint of the Building 30/45 Parking Lot, multiple above-FRL borings were identified during the RI/FS. Constituents identified as above-FRL include uranium, radium-226, radium-228, thorium-228, and thorium-232. Beryllium was also identified in one RI/FS boring, PA-SS-14. During the predesign investigation under the Area 7 Predesign PSP, boring A7-SA2-10 was identified as above-FRL for radium-228, thorium-228, and thorium-232; boring A7-SA2-6, which falls in the high leachability area, was also above-FRL for total uranium. Both borings were vertically bound. Boring A7-SA2-11 was sampled to confirm the presence of beryllium in RI/FS boring PS-SS-14 and beryllium was not detected. This area is bound by boring A7-SA2-8 to the northeast, A7-SA2-9 to the northwest, and A7-SA2-13 to the southeast. Attempts to bound to the southwest (with borings A7-SA2-6 and A7-SA2-49) have resulted in above-FRL total uranium in the high leachability area. Underground utilities in the area, which run to Extraction Wellhouses 27 and 28, are scheduled to remain and prevented the permitting of additional borings to sample. This area will be excavated to a depth of 572 feet. See Figures 2-3 and 2-8.

FRL #4 (Northwest of CAWWT)

Located northwest of the Converted Advanced Wastewater Treatment Facility, boring A2P2-PP-16 was identified as above-FRL for total uranium. The boring is vertically bound within itself. The boring is laterally bound to the southeast with boring A7P3-AWWT8 and southwest with boring A7P3-AWWT9. Lateral boring A7P3-AWWT7 to the northeast and lateral boring A7P3-AWWT10 to the northwest were both above-FRL for total uranium. During Area 7 predesign, borings A7-SA2-18 and A7-SA2-48 were sampled and laterally bound boring A2P2-PP-16 to the northeast and northwest, respectively. This area will be excavated to a depth of 561 feet. See Figures 2-3 and 2-8.

FRL #5 (Central Construction Overflow Parking Lot)

During the RI/FS, boring ZONE 2-38, located in the high leachability area, was identified as above-FRL for total uranium. During Area 7 Predesign, a confirmation boring, A7-SA3-13, was placed near RI/FS boring ZONE 2-38. Boring A7-SA3-13 was also above-FRL for total uranium. The boring is bound vertically by itself. The above-FRL borings are bound by borings A7-SA3-14, A7-SA3-15, A7-SA3-24, and A7-SA3-25. This area will be excavated to a depth of 573 feet. See Figures 2-4 and 2-9.

FRL #6 (South of Construction Overflow Parking Lot)

During the predesign of Area 7, boring A7-SA3-9 was identified above-FRL for total uranium in the high leachability area. The boring was vertically bound by itself. Initial efforts to laterally bound in the four cardinal directions were also shown to be above-FRL for total uranium. Four additional borings, A7-SA3-27 through A7-SA3-30, laterally bound all of the above-FRL borings. This area will be excavated to a depth of 573 feet. See Figure 2-9.

FRL #7 (Northeast of Construction Overflow Parking Lot)

Borings 1269 and 1270, both sampled during the RI/FS, are located in the high leachability area and are above-FRL for total uranium. Borings A7-SA3-8 and A7-SA3-19, both sampled during Area 7 predesign, were to be used as lateral bounding borings, but were also identified above-FRL for total uranium. All above-FRL borings were vertically bound. The borings were laterally bound with RI/FS boring 11200 and Area 7 Predesign borings A7-SA3-6, A7-SA3-18, and A7-SA3-26. This area will be excavated to a depth of 561 feet. See Figures 2-4 and 2-9.

FRL #8 (Underneath Boiler Plant)

Boring PA-SS-15, sampled in 1993 prior to the construction of the Boiler Plant, is located in the high leachability area and is above-FRL for total uranium in the 0 to 0.5-foot interval. The boring is bound at the 1 to 1.5-foot interval. Construction documents show that during construction of the Boiler Plant in 1995, this area was excavated to a depth of 572 feet to build the footers, therefore it is likely that the above-FRL uranium has been removed. Planned excavation in this area is for removal of the Boiler Plant slab, and its below grade structures. A real-time scan will be performed in this area following excavation. See Figure 2-3.

Equipment Burial Area

Historical photographs showed that perchloric acid fume hoods from the laboratory building were dismantled and buried in five trenches just to the southwest of the Former Production Area, what is now the northwest corner of the Construction Overflow Parking Lot and just east of the CAWWT. A magnetometer scan, completed in April 2004, confirmed the exact location of the five trenches. During Area 7 predesign, borings A7-SA3-2 through A7-SA3-5, were placed around the area of the trenches, and all borings are below FRL. This area is to be excavated to a depth of 564 feet, and is shown on Figure 2-9.

Storm Water Retention Basins

There is no above-FRL material in the soil around these basins. Excavation boundaries of this area are designed based on the removal of structures and piping of the SWRBs. The SWRBs are shown Figures 2-5 and 2-10.

2.3.3 Real-Time Scanning Within Area 7 Silos and General Area

The real-time map for Area 7 Silos and General Area is located in Appendix B. This map(s) depicts the current coverage obtained by the Real-Time Measurement Group.

2.4 IDENTIFICATION OF AREA-SPECIFIC CONSTITUENTS OF CONCERN

Section 2.1.1 identified the preliminary list of COCs for Area 7 Silos and General Area, which was based on the results of sampling and analysis performed during the RI/FS investigation. These COCs were evaluated against the design and where the design was extended due to a non-uranium constituent, that constituent was retained as an ASCOC.

Table 2-2 presents the revised list of COCs for Area 7 Silos and General Area that drives the excavations. This modified list will be used to verify that the planned remedial excavation limits are sufficient to capture above-FRL contamination. The list in Table 2-2 in no way represents the constituents that will be carried through certification. Note that the ASCOC Lists will again be reevaluated during the certification design process to determine which of the area-wide COCs identified in the SEP will be carried into certification.

TABLE 2-1
PRELIMINARY AREA-SPECIFIC CONSTITUENTS OF CONCERN PER THE SITE EXCAVATION PLAN

Primary COCs (Area 7)	FRL	WAC
Radium-226	1.7 pCi/g	NA
Radium-228	1.8 pCi/g	NA
Thorium-228	1.7 pCi/g	NA
Thorium-232	1.5 pCi/g	NA
Uranium, Total (outside a high-leachability area)	82 mg/kg	1030 mg/kg
Uranium, Total (inside a high-leachability area)	20 mg/kg	1030 mg/kg

Secondary COCs (Area 7)	FRL	WAC
Aroclor-1254	0.13 mg/kg	NA
Aroclor-1260	0.13 mg/kg	NA
Arsenic	12 mg/kg	NA
Beryllium	1.5 mg/kg	NA
Cesium-137	1.4 pCi/g	NA
Dieldrin	0.015 mg/kg	NA
Lead	400 mg/kg	NA
Lead-210	38 mg/kg	NA
Manganese	4600 mg/kg	NA
Technetium-99	30 pCi/g	29.1 pCi/g
Thorium-230	280 pCi/g	NA

pCi/g - picoCuries per gram

TABLE 2-2
AREA 7 SILOS AND GENERAL AREA REVISED LIST OF AREA-SPECIFIC CONSTITUENTS OF CONCERN

Area 7	
Primary COCs	*Secondary COCs*
Radium-226	Technetium-99
Radium-228	
Thorium-228	
Thorium-232	
Total Uranium	

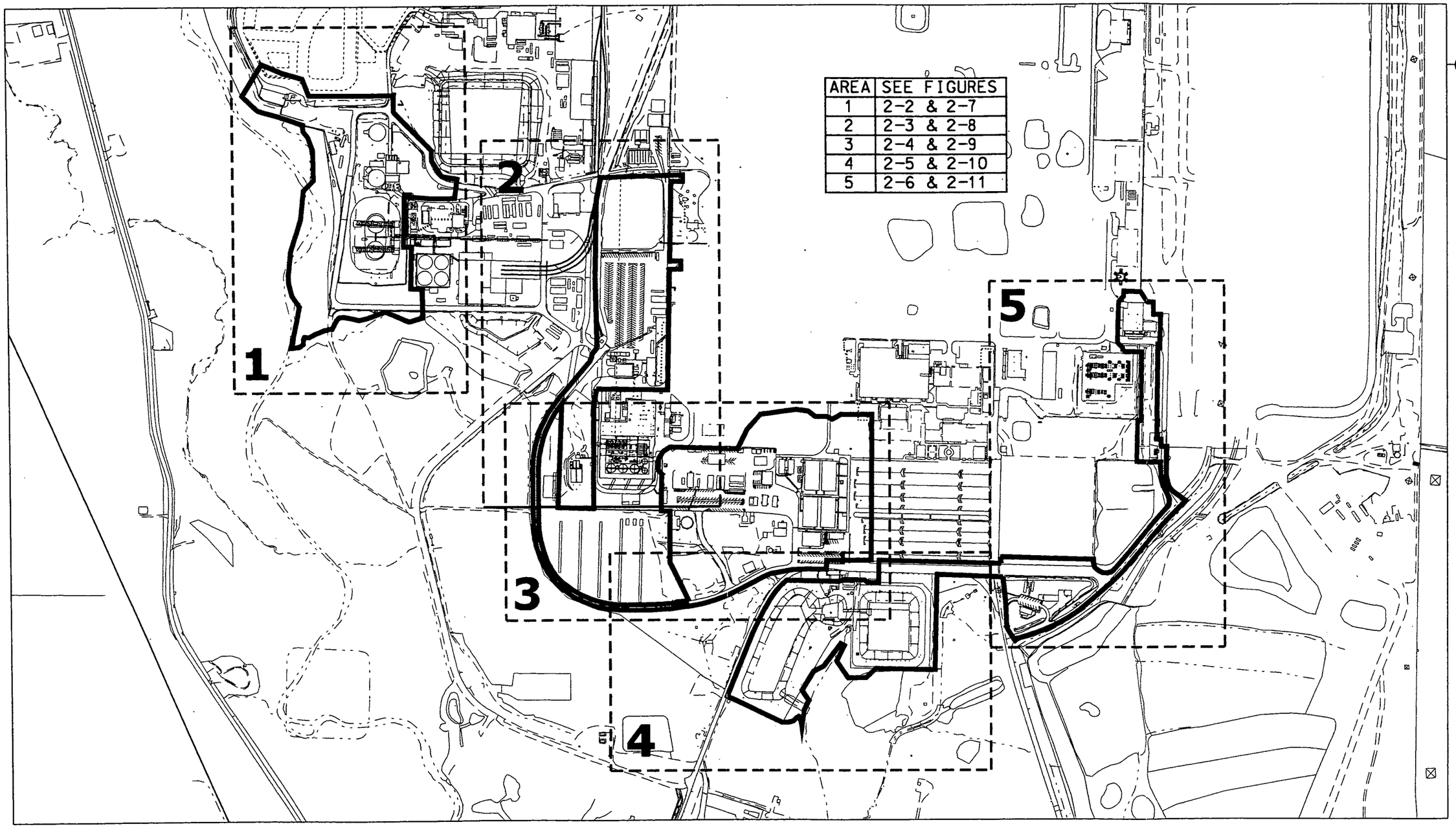

AREA	SEE FIGURES
1	2-2 & 2-7
2	2-3 & 2-8
3	2-4 & 2-9
4	2-5 & 2-10
5	2-6 & 2-11

LEGEND:

SCALE

450 225 0 450 FEET

DRAFT

v:\2fm12\dgn\a7_sga_001.dgn STATE PLANAR COORDINATE SYSTEM 1983 15-JUN-2005

FIGURE 2-1. AREA 7 SILOS AND GENERAL AREA

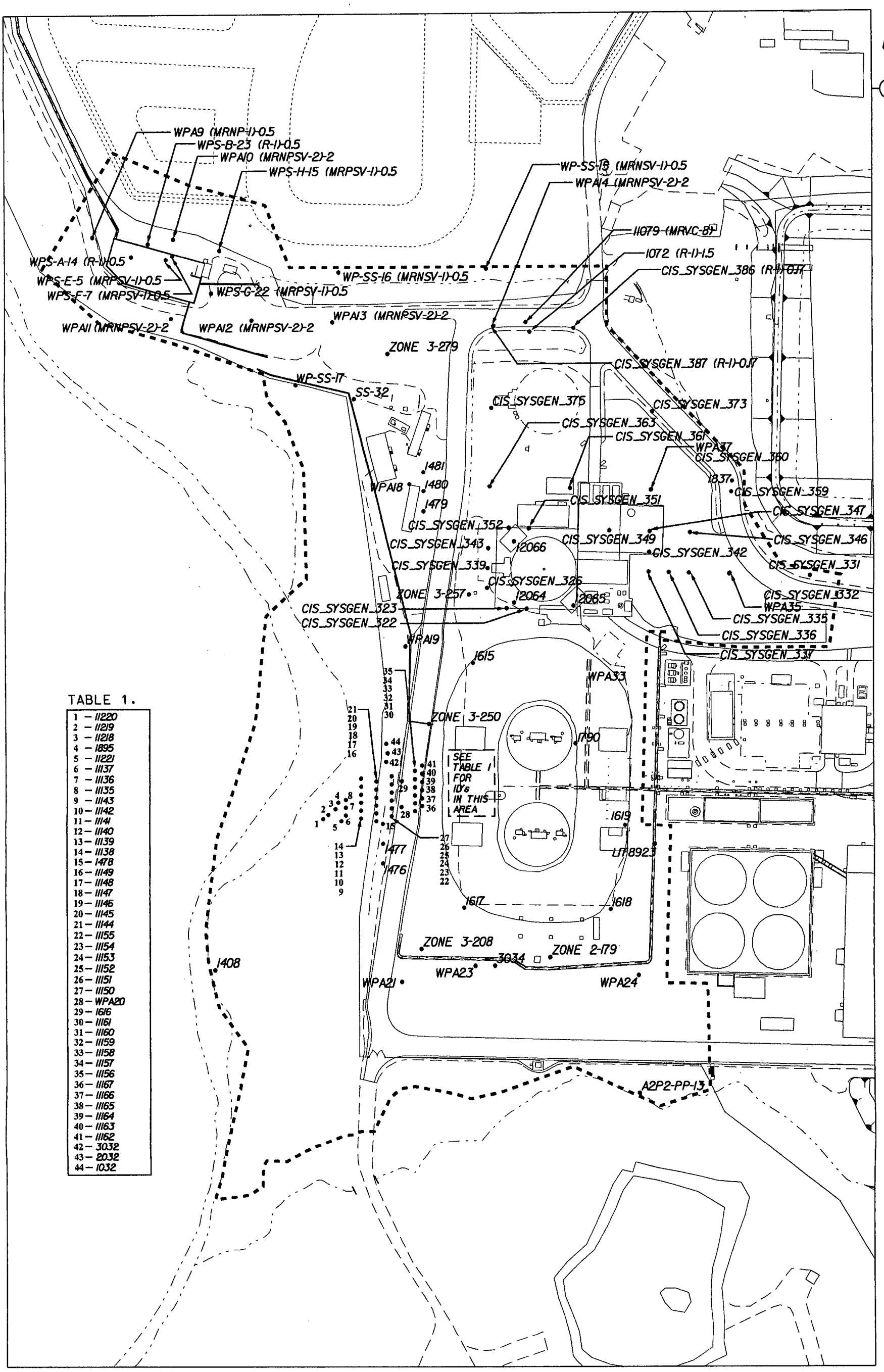

FIGURE 2-2. RI/FS BORINGS

v:\82fm12\dgn\ao7_sgo_r1fe1.dgn
STATE PLANAR COORDINATE SYSTEM 1983
15-JUN-2005

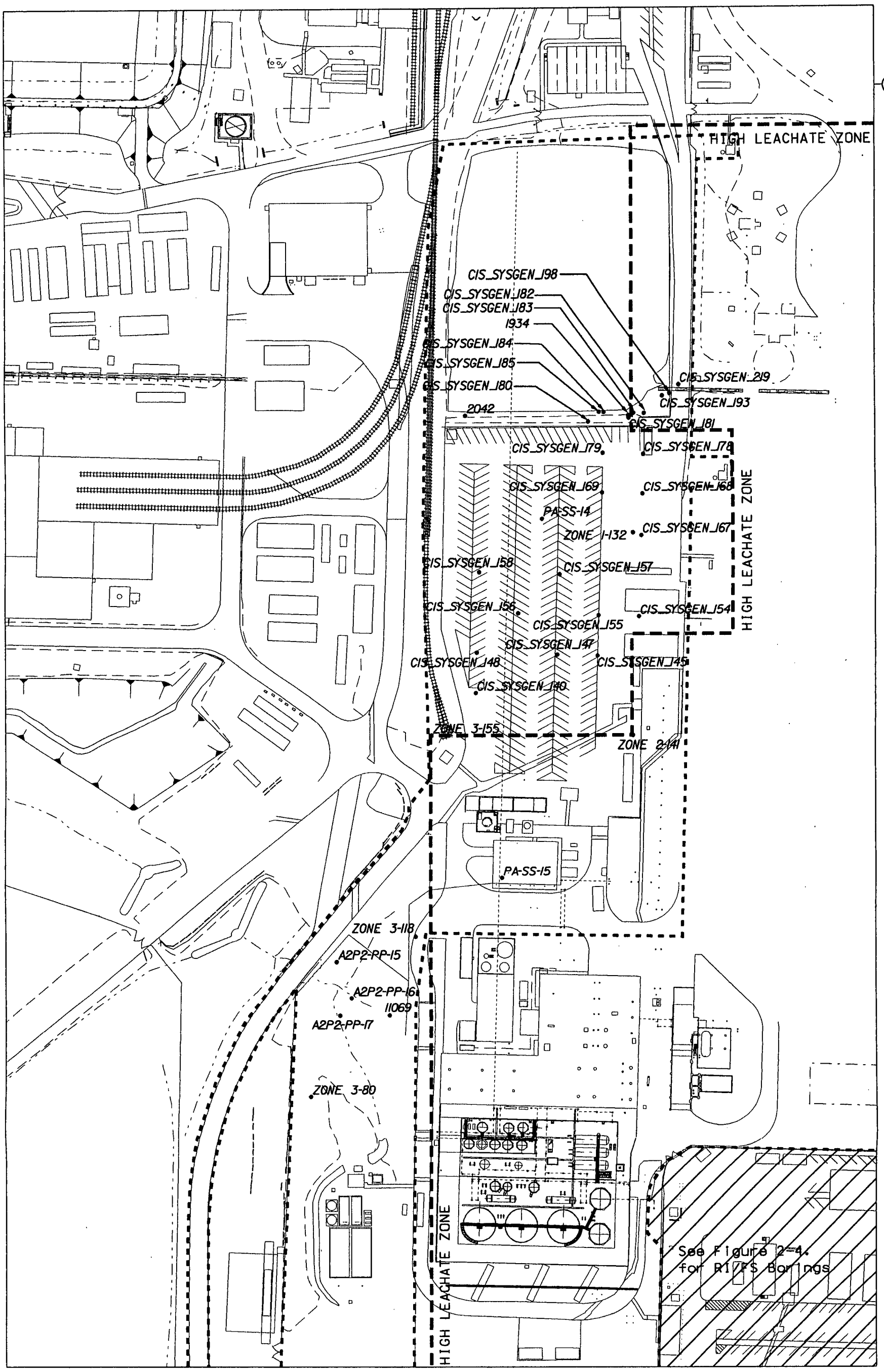

LEGEND:

• RI/FS BORING LOCATION

SCALE

120 60 0 120 FEET

DRAFT

FIGURE 2-3. RI/FS BORINGS

STATE PLANAR COORDINATE SYSTEM 1983

15-JUN-2005

v:\2fm12\dgn\07_sgo_rifs3.dgn

5 6 8 2 3

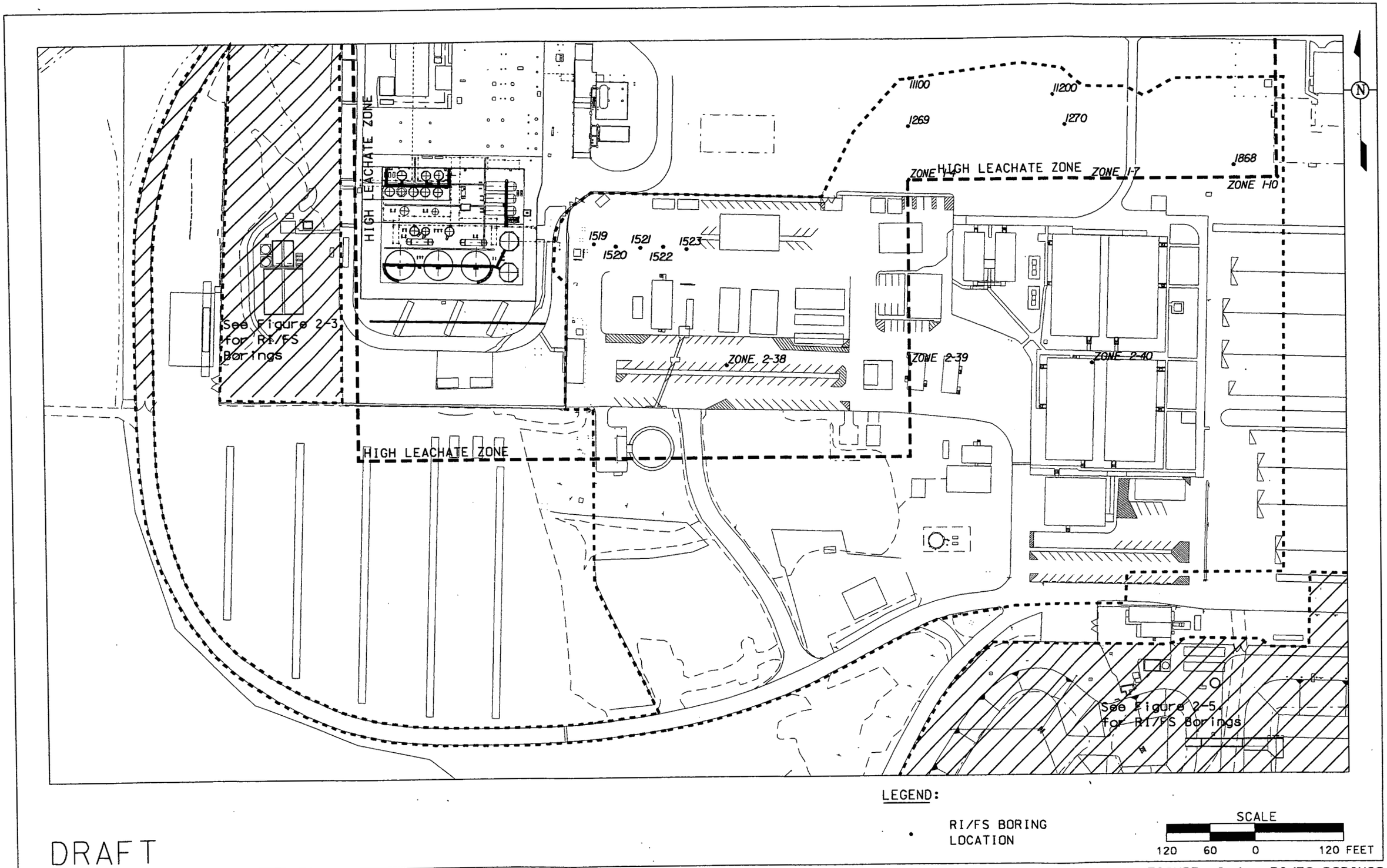

v:\2fm12\dgn\a7_sga_rifs5.dgn STATE PLANAR COORDINATE SYSTEM 1983 14-JUN-2005

FIGURE 2-4. RI/FS BORINGS

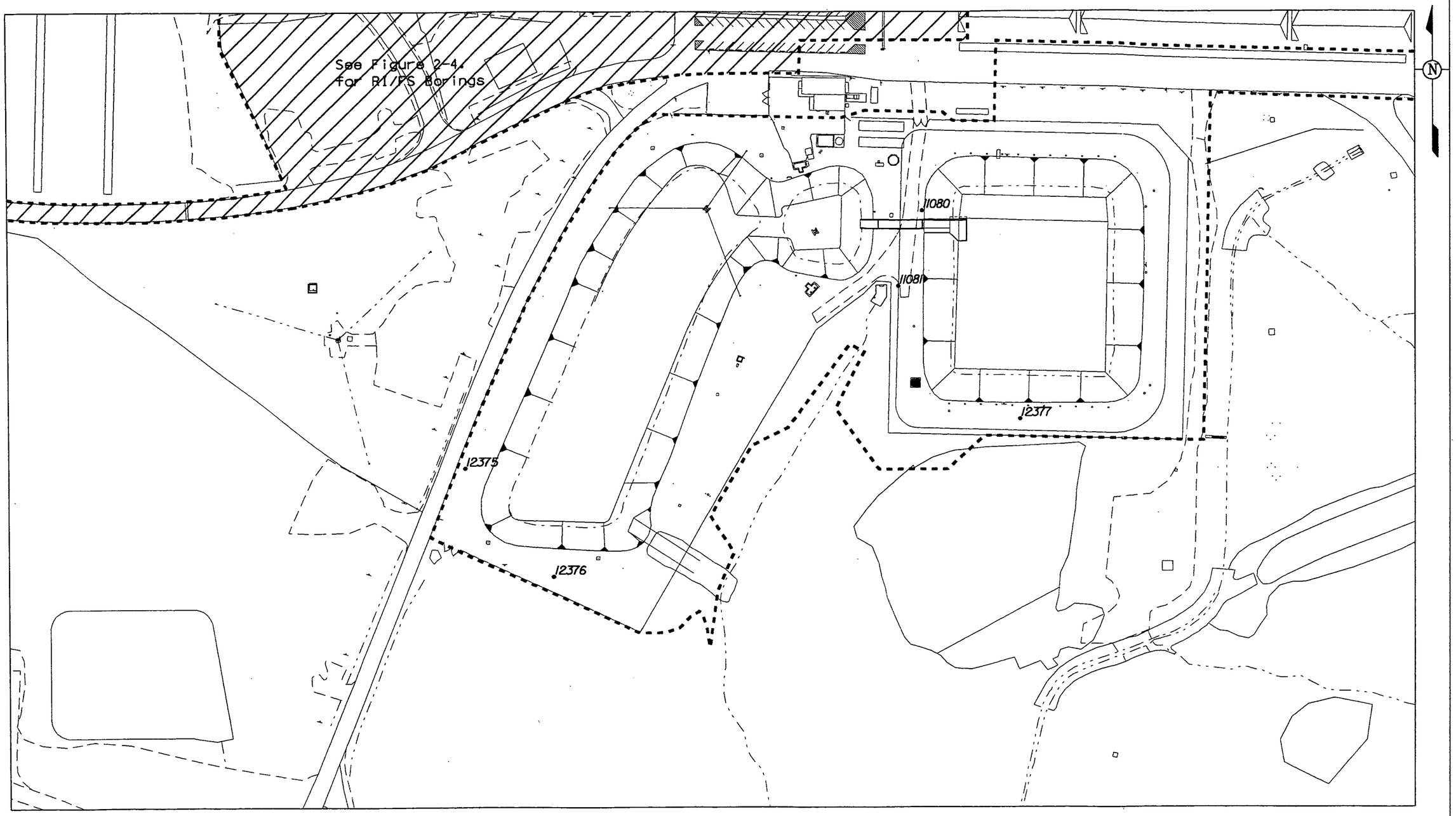

LEGEND:

• RI/FS BORING LOCATION

SCALE

120 60 0 120 FEET

DRAFT

v:\2fm12\dgn\a7_sga_rifs6.dgn STATE PLANAR COORDINATE SYSTEM 1983 14-JUN-2005

FIGURE 2-5. RI/FS BORINGS

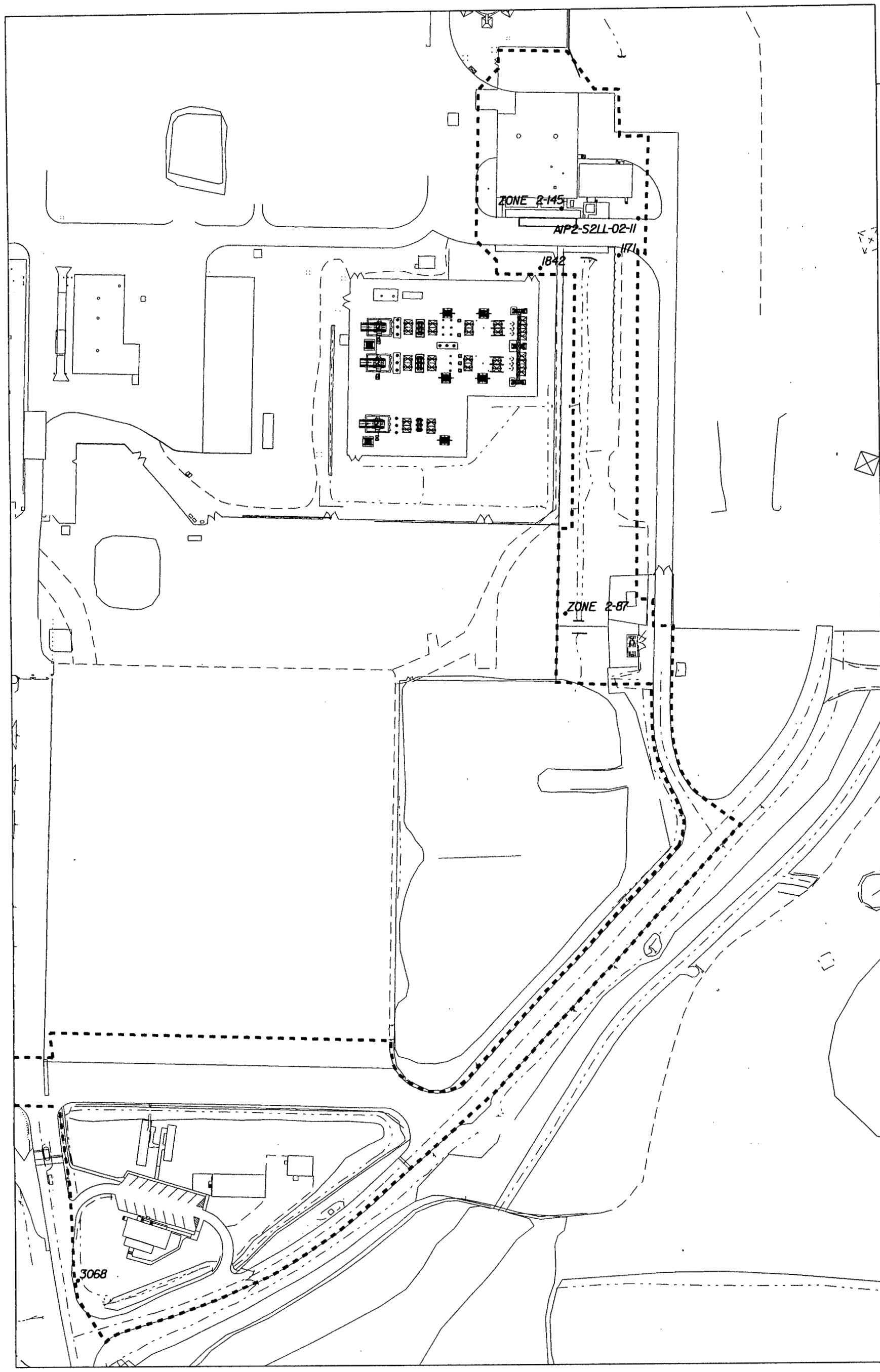

LEGEND:

• RI/FS BORING LOCATION

SCALE

120 60 0 120 FEET

DRAFT

FIGURE 2-6. RI/FS BORINGS

STATE PLANAR COORDINATE SYSTEM 1983

14-JUN-2005

v:\82fim12\dgn\07_ggo_r1fs8.dgn

5982

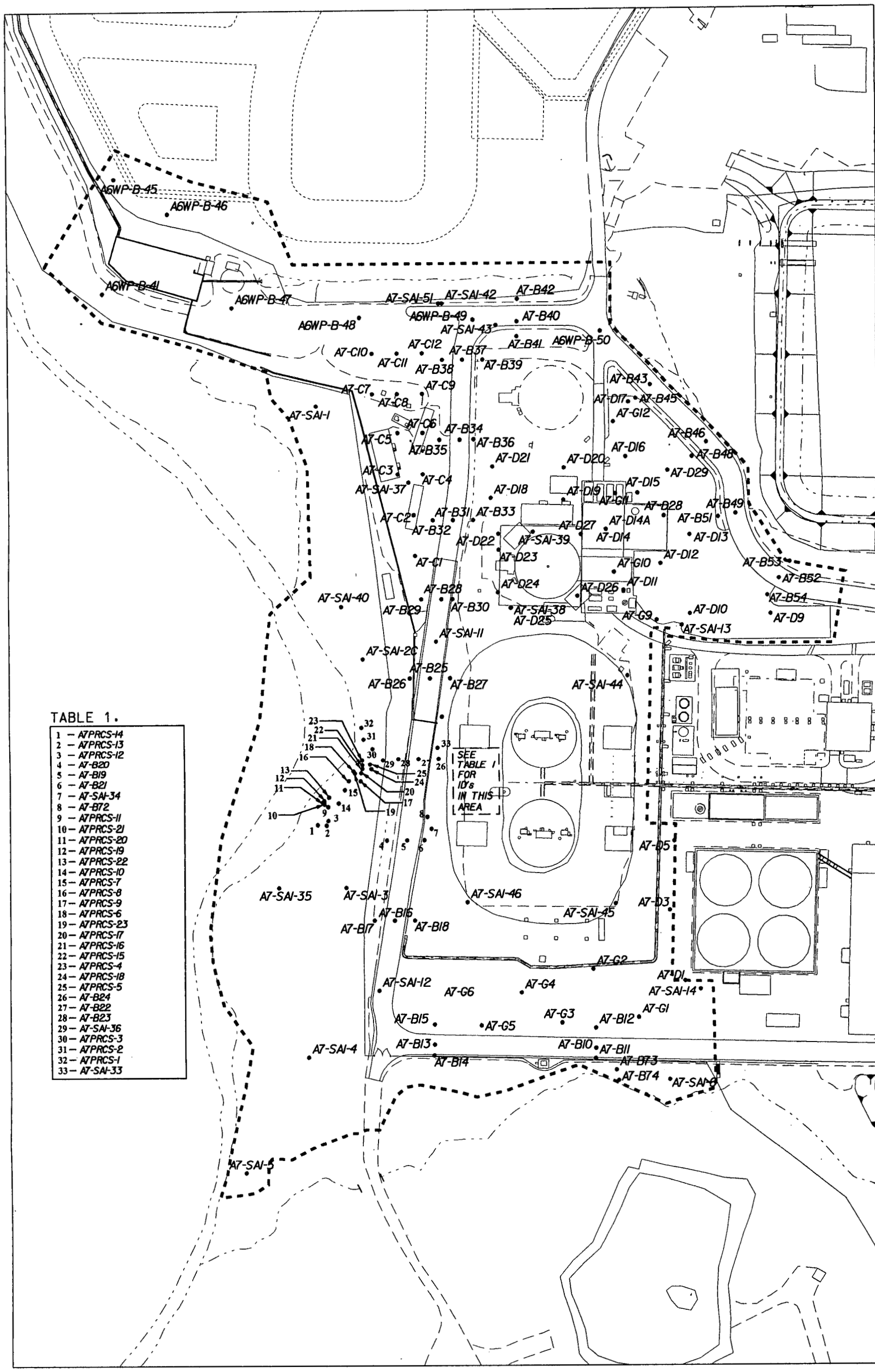

TABLE 1.

1	A7PRCS-14
2	A7PRCS-13
3	A7PRCS-12
4	A7-B20
5	A7-B19
6	A7-B21
7	A7-SAI-34
8	A7-B72
9	A7PRCS-11
10	A7PRCS-21
11	A7PRCS-20
12	A7PRCS-19
13	A7PRCS-22
14	A7PRCS-10
15	A7PRCS-7
16	A7PRCS-8
17	A7PRCS-9
18	A7PRCS-6
19	A7PRCS-23
20	A7PRCS-17
21	A7PRCS-16
22	A7PRCS-15
23	A7PRCS-4
24	A7PRCS-18
25	A7PRCS-5
26	A7-B24
27	A7-B22
28	A7-B23
29	A7-SAI-36
30	A7PRCS-3
31	A7PRCS-2
32	A7PRCS-1
33	A7-SAI-33

LEGEND:

• PREDESIGN BORING LOCATION

SCALE

120 60 0 120 FEET

DRAFT

FIGURE 2-7. PREDESIGN BORINGS

v:\02fm12\dgn\ea07_sga_pred1.dgn

STATE PLANAR COORDINATE SYSTEM 1983

16-JUN-2005

5682

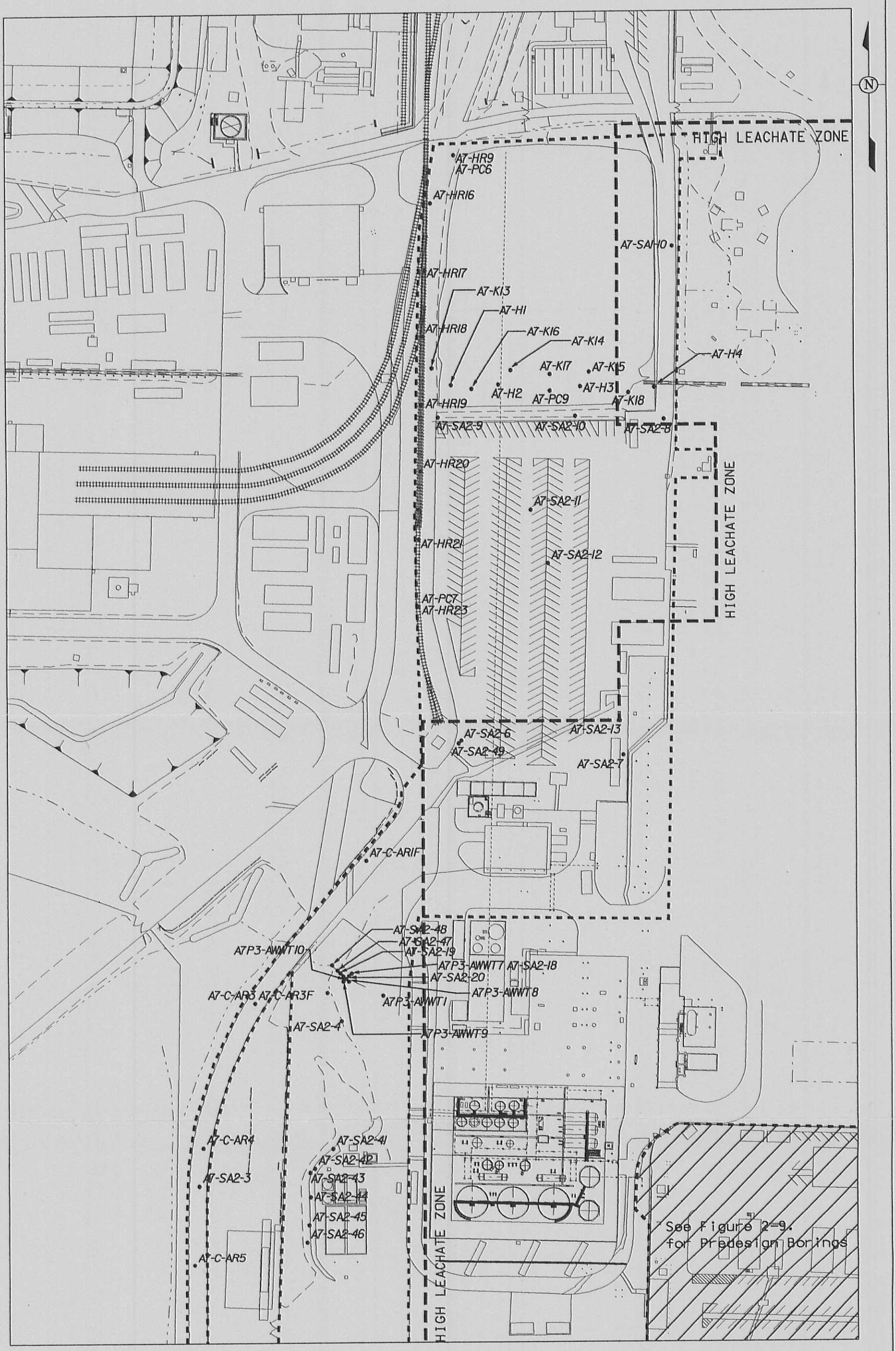

LEGEND:

• PREDESIGN BORING LOCATION

SCALE

120 60 0 120 FEET

DRAFT

FIGURE 2-8. PREDESIGN BORINGS

STATE PLANAR COORDINATE SYSTEM 1983

15-JUN-2005

5982

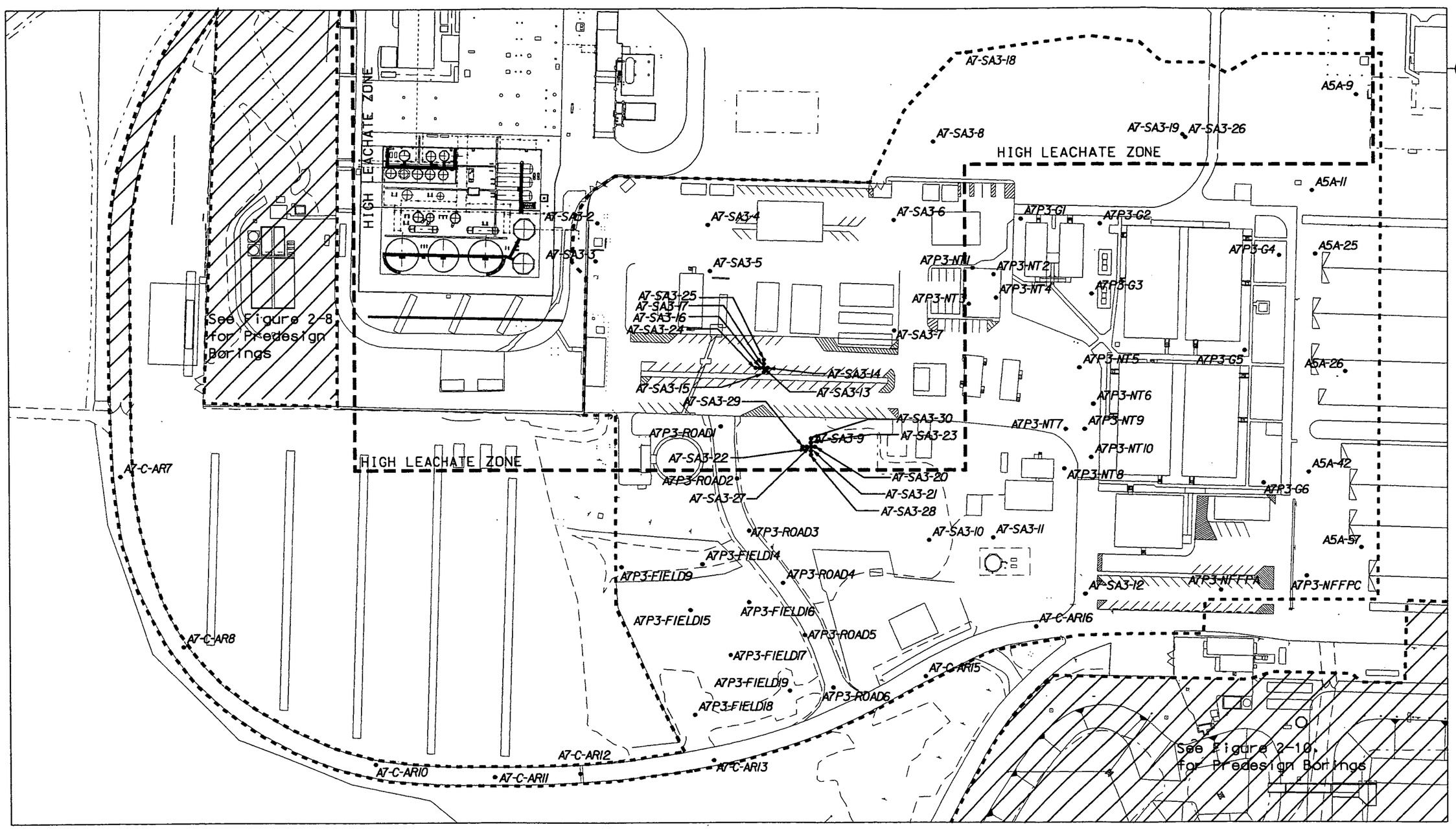

LEGEND:

• PREDESIGN BORING LOCATION

SCALE

120 60 0 120 FEET

DRAFT

v:\2fm12\dgn\a7_sga_pred5.dgn STATE PLANAR COORDINATE SYSTEM 1983 14-JUN-2005

FIGURE 2-9. PREDESIGN BORINGS

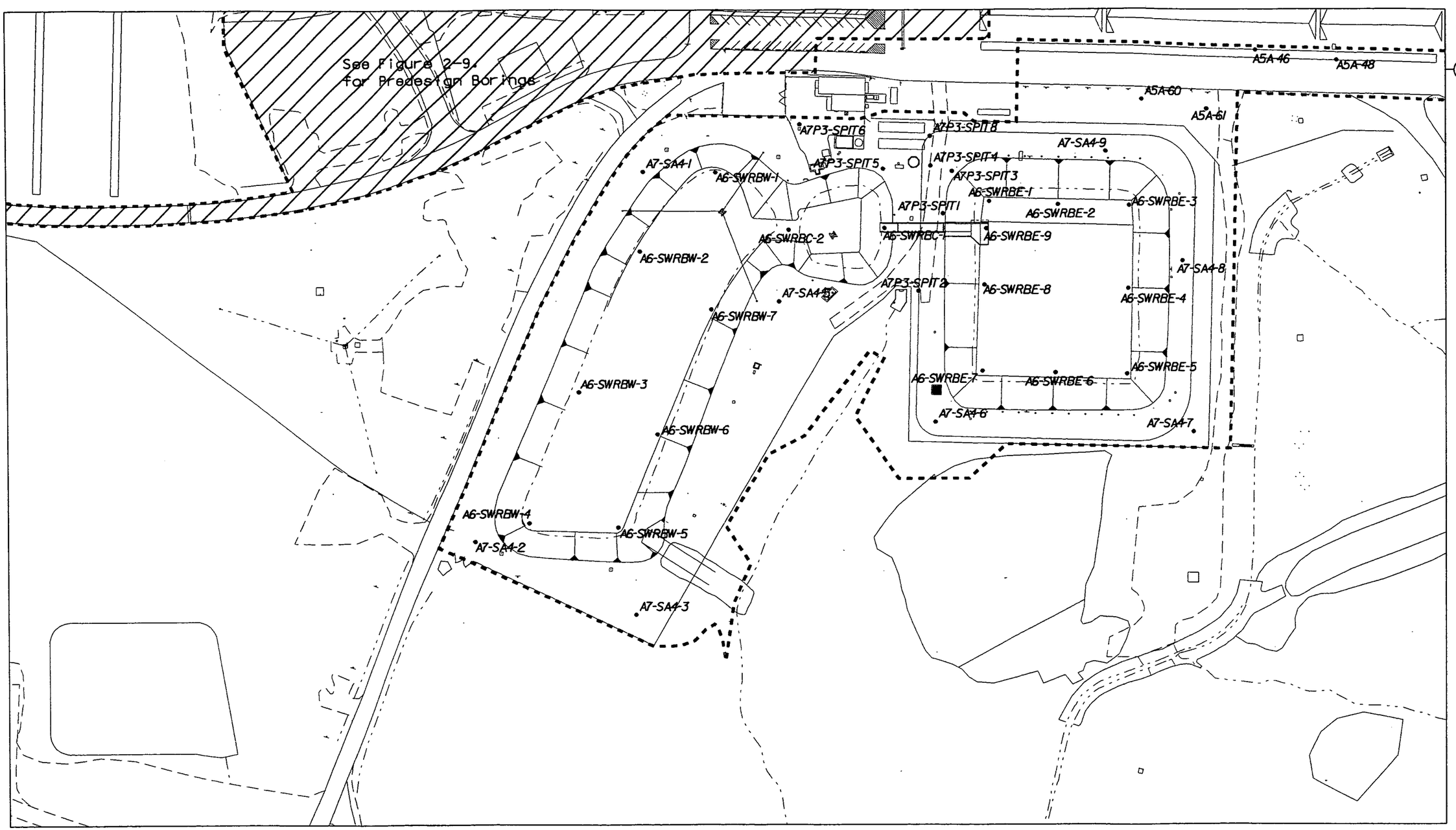

LEGEND:

• PREDESIGN BORING LOCATION

SCALE

120 60 0 120 FEET

DRAFT

v:\2fm12\dgn\a7_sga_pred6.dgn STATE PLANAR COORDINATE SYSTEM 1983 14-JUN-2005

FIGURE 2-10. PREDESIGN BORINGS

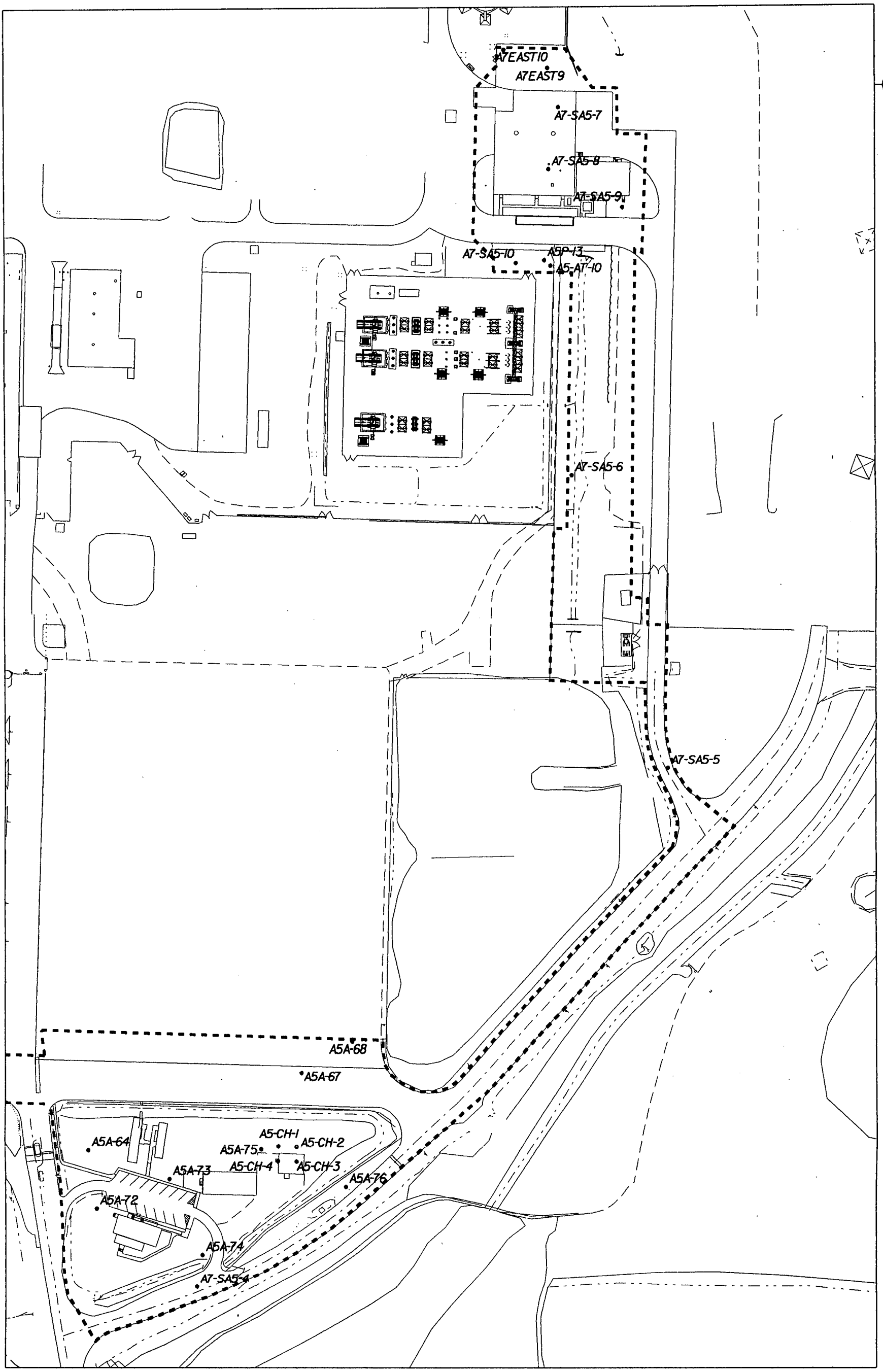

LEGEND:

• PREDESIGN BORING LOCATION

SCALE

120 60 0 120 FEET

DRAFT

FIGURE 2-11. PREDESIGN BORINGS

v:\2fm12\dgn\ad7_sga_pred7.dgn

STATE PLANAR COORDINATE SYSTEM 1983

14-JUN-2005

5982

3.0 REMEDIAL APPROACH

3.1 INTRODUCTION

This section describes the technical approach to remediation of Remediation Area 7 Silos and General Area. The remedial action approach discussed in this Excavation Plan follows the general guidance provided in Sections 3.0 and 4.0 and Appendix F of the SEP. Construction drawings and technical specifications comprise part of the documentation governing remedial construction activities. Construction activities will be further governed by Construction Traveler (CT) Packages that detail general construction practices, as well as health and safety requirements, for soil excavation and remediation projects at the FCP.

Remedial actions in Area 7 Silos and General Area will begin with site preparation activities, progress into above-WAC soil excavation and at-grade debris removal, and finish with mass excavation of debris and soil exceeding the established FRLs.

3.2 SITE PREPARATION

Site preparation activities associated with this work include isolation, protection, or installation of utilities, surveying, installation of construction fence, establishment of erosion and sediment controls, and designation of haul routes. Real-time scanning may be required if site preparation activities involve soil disturbance below a depth of 6 inches. Additional details are provided in the following text and in referenced construction drawings and technical specifications.

3.2.1 Utility Isolation/Protection/Installation

Isolation trenching at the limits of Area 7 Silos and General Area excavations is not required because the vast majority of utility feeds into the areas were previously isolated during Area 3A, 4A, 3B, and 4B isolation trenching. Individual utilities will require isolation at the limit of excavation as identified during design and required for penetration permitting. Research into potential energized utilities entering the excavation areas will be performed during design and during the penetration permitting process. If active/energized utilities are discovered when searching historical information or during field activities, utility engineers will be consulted on utility removal, isolation, and/or protection. Documentation of utility removal, isolation, and protection will be made available to the Construction Manager and will be as-built on the master FCP underground utility grid drawings for reference during excavation. Penetration permitting will focus primarily on ensuring isolation from the Main Electrical Substation, as well as, isolation from pressurized water lines.

Site preparation activities will not involve utility installation, unless culvert installation is necessary at the intersection of personnel or equipment traffic routes and drainage ditches.

3.2.2 Remaining Utilities

To support the OU5 remediation of groundwater under the site, various extraction wells throughout the site are to remain operational after remediation (post-closure) of the nine remediation areas. As such, some existing utilities will remain in place to support this long-term remediation. Specifically, there are various overhead electrical lines, underground natural gas lines, underground groundwater extraction lines, OSDF leachate conveyance system line, force main (post-treatment water), and outfall line. Portions of this line and some of the existing utility poles will be refitted to supply electrical power to the well pumps. In addition, there is an underground 12-inch high-density polyethylene (HDPE) line

3.2.3 Surveying

Surveys will be performed to establish excavation boundaries for above-WAC, and FRL areas and to determine soil volumes hauled to the OSDF. There are no known HWMU or USTs in the Area 7 Silos and General Area Excavation area. The individual Area 7 Silos and General Area Grading Plans (see Drawing 99X-5500-X-00887 for listing) illustrates locations of above-WAC, and general FRL excavation areas. The Construction Manager or his designated representative will field locate support facilities, such as laydown areas, cool-down trailers, soil dewatering areas, secondary haul routes, fuel transfer points, and Special Materials Transfer Areas (SMTAs), as needed.

3.2.4 Construction Fencing

Existing radiological control barriers and fencing will remain in place until project boundary fence is established during site preparation activities. Construction safety fence will be installed at the approximate limit of excavation, where existing fence cannot be used, in order to control access into the active work area. Personnel entering and leaving contamination areas will pass through a radiological checkpoint located in the change-out facilities. Vehicles exiting contamination areas will use contaminated haul routes to reach the decontamination and free-release station located near the southern limit of the OSDF.

3.2.5 Erosion and Sediment Control

Prior to soil disturbance, silt fence will be installed down gradient of the proposed excavation area where necessary to provide sediment control during storm events in addition to surrounding vegetation. Excavation water, the combination of surface water and perched groundwater, will be collected in various locations within the excavation throughout Area 7 Silos and General Area. To help minimize surface water entering the excavation, the topographic surface outside excavations will be sloped away from the excavation area, where appropriate. However, runoff from excavation areas will be allowed to enter certified areas. Excavation water will be managed as discussed in Section 3.3 Storm Water Management.

3.2.6 Haul Routes

Haul routes to the OSDF and Soil Stockpile (SP) 7 will be as shown on the Area 7 Silos and General Area Layout Plan drawing. Haul routes to the OSDF will be from approved access points at the perimeter of the excavation. SP-7 will also be accessible directly from the westernmost limit of the excavation.

3.3 STORM WATER MANAGEMENT

During the removal of debris and impacted soil from the Area 7 Silos and General Area, surface water will be managed primarily from four subareas:

- Silos Embankment (see Drawings 99X-5500-G-00889 and 99X-5500-G-00890)
- K-65 Silos Area (see Drawings 99X-5500-G-00889 and 99X-5500-G-00890)
- Cement Pond (see Drawing 99X-5500-G-00889)
- Silos Parking Lot Area (see Drawing 99X-5500-G-00891)
- Storm Water Retention Basin Area (see Drawing 99X-5500-G-00895)
- General Excavation Areas (see Drawings 99X-5500-G-00892, 99X-5500-G-00893, 99X-5500-G-00894, 99X-5500-G-00896, and 99X-5500-G-00897)

The following subsections serve as the Area 7 Silos and General Area Surface Water Management Plan.

3.3.1 Silos Embankment

In order to support the excavation of the berm west of Silos 1 and 2 (hereafter referred to as the Silos Embankment), Paddys Run will be temporarily diverted by excavating the western bank of Paddys Run opposite the Silos Embankment and constructing an earthen dike around the base of the excavation. In the vicinity of the Silos Embankment, this will reposition the Paddys Run channel approximately 25 feet to the west. This will effectively isolate Paddys Run from the excavation area and create a containment area to capture soil eroded from the silos embankment. An excavation ramp will be cut along the embankment slope to facilitate access for construction vehicles so that heavy equipment will not have to drive over the earthen dike. The earthen dike will be used to backfill the temporary diversion channel once the embankment excavation is completed, precertification samples have been taken, and interim seeding has been establish on the silos embankment.

3.3.2 K-65 Silos Area

Water collected within the K-65 Silos Area excavation (Silos 1, 2, 3, and 4), will be pumped to the Cement Pond, located southwest of the Clearwell (see Drawing 99X-5500-G-00889). From the Cement Pond water will be pumped through an existing pipeline to a trench drop inlet located northeast of the former Lime Sludge Ponds that drains into the site's storm sewer system. This water will then drain through the storm sewer system to the SWRB for subsequent CAWWT treatment (see Section 3.4 for description of CAWWT treatment). Although, the removal of the Cement Pond is addressed in this

Excavation Plan, the Cement Pond, SWRB, and pumping/drainage structures from the Cement Pond to the SWRB will not be removed form service until after the excavation in the K-65 Silos area has been completed.

Initially, runoff from the Silos 1 and 2 excavation will flow into an existing silos perimeter drain trench to be discharged into the Cement Pond. The existing silos perimeter drain trench will be removed under this remedial scope; however it will not be removed until the excavation in the Silos 1 and 2 Area has progress downward so that there is effectively no runoff from the Silos 1 and 2 Area.

3.3.3 Cement Pond

Once the Cement Pond permanent pumps area taken out of service, temporary pump will be configured to pump into the same force main used by the permanent pumps to dewater the Cement Pond. During remediation, storm water collected within the Cement Pond excavation will be pumped using these temporary pumps to the SWRB for subsequent CAWWT treatment. The force main and storm sewer line used to dewater the Cement Pond will be removed after the Cement Pond excavation has been completed and precertification samples have been taken.

The Cement Pond will remain in service until after impacted soil underneath the waste pits, in the area west of the Biodenitrification Surge Lagoon (BSL) and in the K-65 Silo Area has been remediated.

3.3.4 Silos Parking Lot Area

The excavation of the Silos Parking Lot Area will be performed to drain the runoff northward into the former Lime Sludge Ponds. Silt fence will be installed around the southern and eastern edges of the former Lime Sludge Ponds to reduce sediment into the ponds. Water collected within the former Lime Sludge Ponds will be pumped into the site storm sewer system to drain to the SWRB for subsequent CAWWT treatment.

3.3.5 Storm Water Retention Basin Area

Prior to beginning the SWRB excavation, the site's storm sewer system will be removed from service, the 60-inch storm sewer line will be plug north of Building 18Q [South Plume Interim Treatment (SPIT) Building), and a check dam will be installed across the Storm Sewer Outfall Ditch just downstream of where the 60-inch storm sewer outlet discharges into the ditch. The plugged storm sewer line will prevent additional water to enter the excavation during storm events. The check dam just downstream of where the 60-inch storm sewer outlet discharges into the Storm Sewer Outfall Ditch will be used to control sediment in the runoff from the SWRB excavation. In addition prior to starting excavation, three storm water inlet lines (ST-16-inch, ST-16-inch, and ST-10-inch) that discharge into the Storm Transfer and

Under Drain Pump Station located southwest of the SPIT Building will be plugged inside the Storm Transfer and Under Drain Pump Station.

During remediation, storm water collected within the SWRB excavation will be pumped to the Storm Transfer and Under Drain Pump Station where it will then be pumped to CAWWT for subsequent treatment. As the SWRB excavation progresses, the elevation of the bottom of the excavation will become lower than the elevation of the Storm Sewer Outfall Ditch unintentionally creating a sediment basin.

3.3.6 General Excavation Areas

Generally, storm water will be held in the various excavations throughout Area 7 Silos and General Areas not previously discussed and pumped to an inlet to the site's storm sewer system. This requires that general excavation within the Area 7 Silos and General Areas are to be completed prior to the SWRB excavation beginning. Where runoff from an excavation area may flow into a ditch that is not controlled via the site's storm water sewer system, silt fence will be installed adjacent to the ditch to reduce sediment from entering the ditch.

3.4 Site Storm Water Treatment Capacity

The CAWWT project has recently modified the AWWT Expansion System to provide a stormwater/and remediation wastewater treatment system capable of being operated at a maximum of 600 gallons per minute (gpm). The CAWWT stormwater/remediation wastewater treatment system consists of two multimedia filters and one ion exchange. The SWRB will continue to be used as the headworks, providing surge capacity for the modified 600-gpm treatment system until the SWRB is taken out of service for remediation.

Treatment of storm water from the remediation of Area 7 Silos and General Area will be performed by CAWWT treatment.

Since storm water/remediation wastewater treated by CAWWT will go through the same treatment process, there will be no more need to segregate water for treatment purposes. However, process water cannot be discharged to the SWRB; therefore, processed wastewater will undergo CAWWT treatment routed so that it bypasses the SWRB. Water that goes to the SWRB will go through the same treatment as water that is pumped directly to CAWWT. When discharges to SWRB are not possible due to an excessive water inventory, water will be held within the excavation until sufficient holding capacity is reestablished within the SWRB. To the extent possible, no discharges to the storm sewer system will be made during periods when the SWRB is bypassing, overflowing, or nearing capacity. These actions will be taken consistent with the bypassing provisions included in the NPDES permit.

3.5 REMEDIAL EXCAVATION

Excavation to remove impacted material will follow the general guidance of Excavation Approach D, as discussed in the SEP. Soil and debris associated with an above-WAC area will be targeted for early removal to minimize cross contamination.

The generic approach to massive soil excavation is presented in the SEP. Massive soil excavation is in contrast to discrete soil excavation that will be carried out to remove utilities that lie below FRL contamination. In general, above-WAC soil will be excavated in nominal 3-foot lifts not exceeding 4 feet in thickness prior to initiating FRL excavation. The FRL excavation will proceed in nominal 3-foot lifts that will not exceed 4 feet in thickness. Excavation driven by contamination, as shown on Excavation and Grading Plan drawings, will be performed in lifts to allow for visual inspection of excavated soil and the cut surface. Soil surfaces under the gravel, asphalt, and concrete will be scanned with *in situ* gamma spectroscopy techniques to determine if excavation is required outside the established limits of known contamination. Time will be scheduled to allow real-time monitoring of newly exposed soil lying below gravel, asphalt, and concrete surfaces, and between excavation lifts. Real-time monitoring is required to identify potential above-WAC zones prior to general excavation operations.

Unless otherwise noted on the Construction Drawings, slope stability requirements shall be as stated in technical specification Section 02205.

3.5.1 Above-WAC Excavations

There are two known above-WAC areas identified in Area 7 Silos and General Area, accounting for an estimated 520 cubic yards (yd^3) of above-WAC soil and debris. The first above-WAC area is the K-65 trench. The concrete trench and associated sediment within the trench will be excavated and disposed of as above-WAC material (see Drawing 99X-5500-G-00890 and 99X-5500-G-00891). The second above-WAC area is the sediment in the SWRB. This sediment will be removed and disposed of as above-WAC material as part of ongoing SWRB operations and technically is not covered by this document. Both of these areas are above-WAC due to concentrations of technetium-99. Since real-time monitoring cannot detect the presence of technetium-99, physical sampling and analysis must be used to determine technetium-99 contaminant concentrations.

In the SWRB, it will be assumed that the bottom portions of the synthetic liner that had direct contact with the above-WAC sediment and the geotextile fabric immediately underneath the synthetic liner will be removed as above-WAC material. A visual inspection will be made by the Waste Acceptance Organization (WAO) at the time of removal to determine the WAC status of the synthetic liner above the emergency spillway elevation. A WAC determination of the underlying clay liner will be made via sampling and analysis once the synthetic liner as been removed. The sampling protocol for the SWRB

clay liner will be detailed in the Area 7 Silos and General Area Excavation Control PSP to be submitted for agency review in June 2005.

In the remediation of the K-65 trench, a WAC determination of the underlying and adjacent soil will be made via sampling and analysis once the trench concrete and associated sediment have been removed. The sampling protocol for the soil around the K-65 trench will be detailed in the Area 7 Silos and General Area Excavation Control PSP.

The bounding above-WAC areas has been completed to the extent possible, based on area accessibility. Where bounding borings were not possible, landmarks (i.e., edge of building, etc.) were used to conservatively bound the areas.

Characterization will be ongoing to bound and quantify known above-WAC areas, as well as, identify and bound additional above-WAC excavations. If above-WAC material is found during excavation, real-time monitoring and/or physical sampling will be used, depending on COC, to establish the limits of above-WAC areas. Once identified, an above-WAC area will be staked and a buffer area will be established adjacent to the excavation in accordance with technical specification Section 02205 to control the spread of contamination.

Above-WAC areas will be excavated in nominal 3 feet ± 1 foot lifts. Lifts may be reduced if the opportunity exists to reduce above-WAC soil volumes through more frequent scanning or sampling. Excavated material containing only above-WAC levels of radiological constituents (uranium and/or technetium-99) will be hauled directly to SP-7. If SP-7 is no longer in service, then above-WAC material will be loaded directly into shipping containers at the excavation site and transported by truck to the off-site disposal facility. Side slopes will be excavated to 2:1 and monitored to determine material disposition and lateral excavation as necessary to verify that above-WAC contamination has been removed. The Construction Manager will direct the use of working stockpiles for materials removed from above-WAC excavation side slopes. Disposition of these materials requires the results of: 1) real-time scans performed on the slope formed by the removal of the soil or 2) analytical analyses performed on soil samples collected from the slope. This sampling and monitoring will determine if the contamination zone has been captured laterally. Upon completion of sampling or real-time scanning, this material will be transported to the above-WAC stockpile (SP-7), loaded directly into shipping containers for off-site shipment and disposal, or taken to the OSDF for disposal if determined to meet WAC.

When the design grade has been reached, real-time scans and/or physical sampling will be conducted to determine if above-WAC materials is present, depending on COCs. The Construction Manager may direct further excavation based on results. Equipment used to excavate, load, haul and place above-WAC

material will be decontaminated prior to use elsewhere by rinsing until no visible material is present on exterior surfaces.

3.5.2 HWMUs and USTs

Area 7 Silos and General Area contains no HWMUs.

There are no known USTs or former UST footprints in Area 7 Silos and General Area requiring excavation and/or demonstration of FRL attainment.

3.5.3 General Excavation

General excavation involves mass removal of above-FRL, but below-WAC soil and debris and below-FRL soil following completion of above-WAC excavation. Above-FRL but below-WAC soil and debris will be excavated and disposed of in the OSDF for achievement of final remediation limits. Removal of below-FRL soil is occasionally necessary for excavation of safe slopes, removal of building footers and foundations, and to promote positive drainage within the excavation area. Excavation of Area 7 Silos and General Area entails removal of approximately 110,000 yd^3 of above-FRL but below-WAC soil and 24,400 yd^3 of debris. Approximately 19,000 yd^3 of below-FRL soil will be excavated from the SWRB area to gain safe access to structures and utilities and stockpiled within a precertification area. This soil will not be disposed in the OSDF, but will be used as fill material during restoration grading (not addressed in this plan). Designed excavation contours are shown on the Grading Plan drawings. Table 3-1 provides soil and debris volume estimates for these excavation activities.

General excavation will include excavation of existing isolation trenches adjacent to excavation areas, cut during Area 4B site preparation activities. These isolation trenches will be excavated as suspect-contaminated due to the likelihood that impacted material located in the path of the trencher was spread throughout the isolation trench corridor during trenching. These isolation trenches will be excavated to a width of 2 feet and a depth of 12 feet, as measure from the grade elevation at the time the trenches were cut.

3.5.4 Utilities Removal

Utility lines that remain after general excavation has reached the design grade, are not required to remain in service for post-closure operations, and are more than 4 feet away from utility lines remaining in service will be removed using a backhoe and trench excavation techniques as detailed on the Civil Detail drawing. A combination of *in situ* gamma measurements and laboratory analyses will be used to demonstrate the soil and bedding material removed from the trench meet OSDF WAC and site FRLs.

Utility overburden soil will be removed and placed in the OSDF as select and/or contouring material. The Construction Manager and WAO will observe the excavation and stop the excavation of overburden soil when the pipe or bedding material is encountered. Once removed, the pipes interior will be inspected by WAO to determine its disposition. Pipe that is free of visible process residue it will be size reduced to meet OSDF WAC and placed in the OSDF. Pipe that is deformed, closed or otherwise not amenable to visual inspection of the interior walls will be hauled to SP-7 or loaded directly into shipping containers in accordance with technical specification Section 02205.

If pipe bedding shows no visible signs of pipe leakage, real-time monitoring will be performed on the pipe bedding within the trench using Excavation Monitoring System or adjacent to the trench using the high-purity germanium (HPGe) detector tripod. Material will be hauled to SP-7 (exceeds WAC) or to the OSDF based on the results of real-time scanning. If the material is below the OSDF WAC, it will be placed in the OSDF as select impacted material. As necessary, when removing the stockpiled material or pads, underlying areas will be over-excavated to a depth of 6 inches to ensure that contaminated material is removed.

If pipe bedding shows visible signs of pipe leakage, physical sampling will be performed on the pipe bedding within the trench. Material will be hauled to SP-7 or loaded directly into shipping containers (exceeds WAC) or hauled to the OSDF based on the results of physical sampling. If the material is below OSDF WAC, it will be placed in the OSDF as select impacted material.

Utility trenches will be excavated to 2:1 side slopes to stabilize the trenches and to provide a modified design grade. Excavated material will be disposed of in accordance with technical specification Section 02205.

3.5.5 Excavation Sequencing

Since much of the remedial excavation associated with the Area 6 Silos and General Area deal with infrastructure installed to handle impacted storm, surface water, and groundwater, special attention must be given to assure that the excavation sequence does not remove critical storm water control components that could jeopardize the sites ability to handle and treat storm water. In addition, certain areas and infrastructure are required to support Silos operations that are included within the remedial scope of this plan but need to remain in service until Silos operations are complete. The following is a list of prerequisites that need to be observed during remedial excavation to assure uninterrupted operations to the OU4 remediation effort and site's wastewater handling and treatment.

- The Cement Pond will remain in service until after impacted soil underneath the waste pits, in the area west of the BSL and in the K-65 Silo footprint have been remediated.

- Prior to beginning the SWRB excavation:
  - Site's storm sewer system will be removed from service.
  - 60-inch storm sewer line will be plugged north of Building 18Q (SPIT Building)
  - A check dam will be installed across the Storm Sewer Outfall Ditch
  - Three storm water inlet lines will be plugged inside Storm Transfer and Under Drain Pump Station.
- OU4 remediation of Silo 3 must be complete prior to excavating in the Silo 3 Area.
- Removal of buried lab ventilation system will not be performed until after an energy isolation has been completed on the 6-inch potable water line located immediately east of the Dosimetry Source Storage Building, utility poles SW94, SW96, SW97, SW98, and SW100 have been removed, and Monitoring Well 1823 has been extracted and the subsequent boring plugged.
- The 10-inch storm sewer line east of the former Lime Sludge Ponds and Building 30/45 Parking Lot is to remain in service until the Cement Pond and Storm Water Management (SWM) Pond are taken out of service.
- The 6-inch Contaminated Effluent Line located west of the CAWWT Building and running north is to remain in service until the OU4 remediation effort is completed.

3.6 AT- AND BELOW-GRADE STRUCTURES

Removal of at-grade concrete and asphalt pads/roads will be initiated early to prepare the area for general soil excavation activities. The soil surface below at-grade concrete and asphalt pads/roads will be scanned with *in situ* gamma spectroscopy techniques to determine if excavation is required beyond the limits of known contamination. At- and below-grade structures to be removed from the Area 7 Silos and General Area include slabs and foundations of Building 93A (Southwest Boiler House), Building 25K (Sewage Treatment Plant Complex), Building 18Y (AWWT Ozone Generation Building), and Building 82A; foundations to various structures around the four K-65 Silos, former Lime Sludge Ponds, Cement Pond (18N), Building 30/45 Parking Lot, Construction Parking Lot (Southwest), 400K Gallon Water Storage Tank (26E), TACO office trailer complex area, SWRBs, 18Z (Sludge Mix Tank), portions of the West Access Road, and security trailer park. Most foundations within Area 7 Silos and General Area are located within 6 feet of existing grade.

Generally, the soil excavated to gain access to below-grade structures will be disposed in the OSDF as impacted soil, unless determined otherwise to be above-WAC. However, in two locations within the Area 7 General Area, overburden soil will be certified as clean, then excavated as below-FRL soil and stockpiled in the area: one location is the overburden soil over the 60-inch storm sewer line along the west edge of the Main Parking Lot, the other location is the soil adjacent to two inspection sumps and one under drain sump servicing the SWRB. In both cases, there is a large quantity of soil that must be excavated to gain safe access to the structures. In the case of the 60-inch storm sewer, overburden soil

will be removed from over the structure and stockpiled as below-FRL soil. In the case of the two inspection sumps and one under drain sump servicing the SWRB, overburden soil will be removed from above elevation 551 and stockpiled as below-FRL soil (the excavation for these three structures goes down to elevation 545 or 546). Upon removal of these structures, real-time monitoring and/or physical sampling will be performed at the bottom of the excavation. Based on the results of real-time scanning and/or physical sampling, stockpiled material removed from around the structure will be hauled to the OSDF or used as fill material within the excavation. If OSDF disposal is required, stockpiled material will be over-excavated to a depth of 6 inches to ensure that contaminated material is removed.

In general, excavated structures that are free of visible process residue will be size reduced to meet OSDF WAC and placed in the OSDF. If a structure is deformed, closed or otherwise not amenable to visual inspection of the interior walls, it will be hauled to SP-7 in accordance with technical specification Section 02205 or loaded directly into shipping containers for off-site disposal of OSDF above-WAC material.

Structures that remain after general excavation has reached the design grade will be excavated using a combination of *in situ* gamma measurements and laboratory analyses to demonstrate the soil and bedding material removed from around the structure meet OSDF WAC and site FRLs. Additionally, the surface area above the structure will be precertified with *in situ* gamma spectroscopy measurements prior to excavating the structure.

3.7 PROHIBITED MATERIALS

Section 3.3.2.2 of the SEP identifies special materials that, when encountered, require WAO input before the contractor can determine their disposition. Materials from this list may be encountered in Area 7 Silos and General Area include:

- Asbestos
- Drums and tanks
- Piping and pumps
- Process residues
- Uranium metal
- Miscellaneous debris
- Acid brick

If not specifically prohibited from OSDF disposition, these materials can be placed in the OSDF if they meet the physical and chemical WAC, and if a visual inspection of pipe interiors is passed. Materials prohibited from OSDF disposition and materials that do not meet the OSDF WAC will be placed at SP-7 or packaged into containers and placed at the SMTA. In general, special materials that exceed the OSDF WAC, except process residues and uranium metal, will be hauled to SP-7. Process residues and uranium

metal will be containerized and placed at the SMTA for disposal at an off-site disposal facility. Information on the identification, management, and tracking of these materials is provided in the SEP (Section 3.6 and Appendix F).

3.8 INTERIM RESTORATION

Interim grading, defined as grading that occurs for slope maintenance and to prevent unsafe working conditions, is dependent on actual field conditions and may occur prior to or after precertification in accordance with technical specification Section 02206, Item 3.5. The frequency of interim grading in a given excavation will be a function of the slope materials and their ability to maintain the design grade during precipitation events that occur prior to completion of certification and the restoration grading.

3.9 PRECERTIFICATION

Precertification will be performed in accordance with the PSP Guidelines for General Characterization for Sitewide Soil Remediation (DOE 2004b). Precertification activities will commence after the design grade has been reached, the perimeter ditches have been established, and other construction in the area is complete.

The precertification area will be delineated and controlled to prevent cross-contamination of environmental media. Real-time monitoring of the design grade will be performed to precertify the area as attaining the uranium, thorium, and radium FRL goals.

A CDL/PSP for certification of Area 7 will be submitted to the regulatory agencies for review and approval.

TABLE 3-1
AREA 7 SILOS AND GENERAL AREA QUANTITIES

AREA	SUBAREA	TOTAL	CAT 1	CAT 2	ABOVE-WAC
7 Silos	Silos 1 & 2 Decant Sump/Berm Removal	9,045	9,045	0	0
	Silos 1 & 2	31,413	30,260	733	420
	Silo 3	5,055	3,303	1,752	0
	Silo 4	4,786	4,383	403	0
Subtotal		**50,299**	**46,991**	**2,888**	**420**
7 General Area	Cement Pond	8,559	8,177	382	0
	Silo Embankment	8,088	7,076	1,012	0
	Bldg 30/45 Parking Lot Area	17,051	3,327	13,724	0
	Bldg 93A, 93B	1,033	908	125	0
	Bldg 25K	176	100	76	0
	West Access Road	488	488	0	0
	60-inch Storm Sewer	1,470	1,020	450	0
	Overflow Parking Lot & 26D, 26E	25,797	21,620	4,177	0
	West SWRB and Spillway	11,383	10,943	360	80
	East SWRB	8,106	8,066	20	20
	Security Trailer Park and Roads	1,000	300	700	0
	Bldg 82	1,450	1,000	450	0
Subtotal		**84,601**	**63,025**	**21,476**	**100**
Totals		**134,900**	**110,016**	**24,364**	**520**

Notes:
1 - All quantities are represented in bank cubic yards.
2 - Quantities are based primarily on forecasts derived from take-offs, past projects, and methodology assumptions rather than design calculations.
3 - Foundations for Silos 1 and 2 not include due to previous removal.

REFERENCES

U.S. Department of Energy, 1994, "Record of Decision for Remedial Actions at Operable Unit 4," Final, Fernald Environmental Management Project, DOE, Fernald Area Office, Cincinnati, Ohio.

U.S. Department of Energy, 1995a, "Remedial Investigation for Operable Unit 5," Final, Fernald Environmental Management Project, DOE, Fernald Area Office, Cincinnati, Ohio.

U.S. Department of Energy, 1995b, "Feasibility Study for Operable Unit 5," Final, Fernald Environmental Management Project, DOE, Fernald Area Office, Cincinnati, Ohio.

U.S. Department of Energy, 1996a, "Record of Decision for Remedial Actions at Operable Unit 5," Final, Fernald Environmental Management Project, DOE, Fernald Area Office, Cincinnati, Ohio.

U.S. Department of Energy, 1996b, "Record of Decision for Remedial Actions at Operable Unit 3," Final, Fernald Environmental Management Project, DOE, Fernald Area Office, Cincinnati, Ohio.

U.S. Department of Energy, 1996c, "Remedial Design Work Plan for Remedial Actions at Operable Unit 5," Final, Fernald Environmental Management Project, DOE, Fernald Area Office, Cincinnati, Ohio.

U.S. Department of Energy, 1997a, "Programmatic Agreement Among the U.S. Department of Energy, Fernald Office, the Advisory Council on Historic Preservation, and the Ohio Historic Preservation Office Regarding Archeological Investigations at the Fernald Environmental Management Project," March 6, 1997, DOE, Fernald Area Office, Cincinnati, Ohio.

U.S. Department of Energy, 1997b, "Project Specific Plan for WAC Attainment of Collapsed Soil in Paddys Run," Revision 0, Fernald Environmental Management Project, DOE, Fernald Area Office, Cincinnati, Ohio.

U.S. Department of Energy, 1998a, "Sitewide Excavation Plan," Final, Fernald Environmental Management Project, DOE, Fernald Area Office, Cincinnati, Ohio.

U.S. Department of Energy, 1998b, "Geotechnical Engineering Report for Project Order 177," Final, Fernald Environmental Management Project, DOE, Fernald Area Office, Cincinnati, Ohio.

U.S. Department of Energy, 1998c, "Project Specific Plan for WAC Attainment of Area 7 Soils," Revision 0, Fernald Environmental Management Project, DOE, Fernald Area Office, Cincinnati, Ohio.

U.S. Department of Energy, 1998d, "Waste Acceptance Criteria Attainment for the On-Site Disposal Facility," Revision 1B, Fernald Environmental Management Project, DOE, Fernald Area Office, Cincinnati, Ohio.

U.S. Department of Energy, 1999, "Operable Unit 3 Implementation Plan for Above-Grade Decontamination and Dismantlement Plant 6 East Warehouse Complex," Revision 0, Fernald Environmental Management Project, DOE, Fernald Area Office, Cincinnati, Ohio.

U.S. Department of Energy, 2001, "Project Specific Plan for Sampling of Miscellaneous Areas for WAC Attainment," Revision 0, Fernald Environmental Management Project, DOE, Fernald Area Office, Cincinnati, Ohio.

U.S. Department of Energy, 2002a, "Natural Resource Restoration Plan," Final, Fernald Environmental Management Project, DOE, Fernald Area Office, Cincinnati, Ohio.

U.S. Department of Energy, 2002b, "Project Specific Plan for Predesign Investigation in Area 5," Revision 0, Fernald Environmental Management Project, DOE, Fernald Area Office, Cincinnati, Ohio.

U.S. Department of Energy, 2002c, "Project Specific Plan for Predesign Investigation in Area 7, Phase III," Revision 0, Fernald Environmental Management Project, DOE, Fernald Area Office, Cincinnati, Ohio.

U.S. Department of Energy, 2002d, "Project Specific Plan for Area 7, Phase I Precertification Physical Sampling and Real-Time Scan," Revision 0, Fernald Environmental Management Project, DOE, Fernald Area Office, Cincinnati, Ohio.

U.S. Department of Energy, 2003a, "Operable Unit 3 Miscellaneous Small Structures Phase II Implementation Plan for Above-Grade Decontamination and Dismantlement," Revision 0, PCN 1, Fernald Closure Project, DOE, Fernald Area Office, Cincinnati, Ohio.

U.S. Department of Energy, 2004a, "Project Specific Plan for Investigating Subsurface Material from Area 6 Waste Pits 1 through 3, the Clearwell, and the Biodenitrification Surge Lagoon Berm," Revision 0, Fernald Closure Project, DOE, Fernald Area Office, Cincinnati, Ohio.

U.S. Department of Energy, 2004b, "Project Specific Plan Guidelines for General Characterization for Sitewide Soil Remediation," Revision 2, Fernald Closure Project, DOE, Fernald Area Office, Cincinnati, Ohio.

U.S. Department of Energy, 2005a, "Excavation Plan for Area 6 Waste Pits and General Area," Draft, Fernald Closure Project, DOE, Fernald Area Office, Cincinnati, Ohio.

U.S. Department of Energy, 2005b, "Project Specific Plan for Excavation Control and Precertification of the Area 7 Soils (Supplement to 20300-PSP-0011)," Draft, Fernald Closure Project, DOE, Fernald Area Office, Cincinnati, Ohio.

U.S. Department of Energy, 2005c, "Project Specific Plan for Predesign Investigation in Area 7 (Supplement to 20300-PSP-0011)," Revision 1, Fernald Closure Project, DOE, Fernald Area Office, Cincinnati, Ohio.

U.S. Environmental Protection Agency, 1991, Consent Agreement as Amended under CERCLA Sections 120 and 106(a), in the matter of U.S. Department of Energy, Feed Materials Production Center, Fernald, Ohio, U.S. EPA Region V.

APPENDIX A

PREDESIGN CHARACTERIZATION DATA FOR AREA 7 SILOS AND GENERAL AREA

APPENDIX A
PREDESIGN CHARACTERIZATION DATA FOR AREA 7 SILOS AND GENERAL AREA

Boring	Sample ID	Sample Date	Sample Depth (feet)		Parameter	Result	Units	Qualifier	Northing	Easting
			Top	Bottom						
A5A-11	A5A-11-1-R	11-Jul-02	0.0	0.5	Radium-226	1.11	pCi/g	NV	479496.79	1349205.46
A5A-11	A5A-11-1-R	11-Jul-02	0.0	0.5	Radium-228	0.895	pCi/g	NV	479496.79	1349205.46
A5A-11	A5A-11-1-R	11-Jul-02	0.0	0.5	Thorium-228	0.899	pCi/g	NV	479496.79	1349205.46
A5A-11	A5A-11-1-R	11-Jul-02	0.0	0.5	Thorium-232	0.895	pCi/g	NV	479496.79	1349205.46
A5A-11	A5A-11-1-R	11-Jul-02	0.0	0.5	Uranium, Total	26.5	mg/kg	NV	479496.79	1349205.46
A5A-25	A5A-25-4-RMP	13-Jul-02	1.5	2.0	Arsenic	4.87	mg/kg	NV	479418.86	1349209.28
A5A-25	A5A-25-4-RMP	13-Jul-02	1.5	2.0	Beryllium	0.545	mg/kg	NV	479418.86	1349209.28
A5A-25	A5A-25-4-RMP	13-Jul-02	1.5	2.0	Aroclor-1254	14.6	ug/kg	UNV	479418.86	1349209.28
A5A-25	A5A-25-4-RMP	13-Jul-02	1.5	2.0	Aroclor-1260	14.6	ug/kg	UNV	479418.86	1349209.28
A5A-25	A5A-25-4-RMP	13-Jul-02	1.5	2.0	Radium-226	0.714	pCi/g	NV	479418.86	1349209.28
A5A-25	A5A-25-4-RMP	13-Jul-02	1.5	2.0	Radium-228	0.632	pCi/g	NV	479418.86	1349209.28
A5A-25	A5A-25-4-RMP	13-Jul-02	1.5	2.0	Thorium-228	0.639	pCi/g	NV	479418.86	1349209.28
A5A-25	A5A-25-4-RMP	13-Jul-02	1.5	2.0	Thorium-232	0.632	pCi/g	NV	479418.86	1349209.28
A5A-25	A5A-25-4-RMP	13-Jul-02	1.5	2.0	Uranium, Total	10.8	mg/kg	NV	479418.86	1349209.28
A5A-25	A5A-25-6-RMP	13-Jul-02	2.5	3.0	Arsenic	7.85	mg/kg	NV	479418.86	1349209.28
A5A-25	A5A-25-6-RMP	13-Jul-02	2.5	3.0	Beryllium	0.553	mg/kg	NV	479418.86	1349209.28
A5A-25	A5A-25-6-RMP	13-Jul-02	2.5	3.0	Aroclor-1254	16	ug/kg	UNV	479418.86	1349209.28
A5A-25	A5A-25-6-RMP	13-Jul-02	2.5	3.0	Aroclor-1260	16	ug/kg	UNV	479418.86	1349209.28
A5A-25	A5A-25-6-RMP	13-Jul-02	2.5	3.0	Radium-226	1.25	pCi/g	NV	479418.86	1349209.28
A5A-25	A5A-25-6-RMP	13-Jul-02	2.5	3.0	Radium-228	1.23	pCi/g	NV	479418.86	1349209.28
A5A-25	A5A-25-6-RMP	13-Jul-02	2.5	3.0	Thorium-228	1.24	pCi/g	NV	479418.86	1349209.28
A5A-25	A5A-25-6-RMP	13-Jul-02	2.5	3.0	Thorium-232	1.23	pCi/g	NV	479418.86	1349209.28
A5A-25	A5A-25-6-RMP	13-Jul-02	2.5	3.0	Uranium, Total	4.33	mg/kg	NV	479418.86	1349209.28
A5A-26	A5A-26-4-R	13-Jul-02	1.5	2.0	Radium-226	0.943	pCi/g	NV	479274.82	1349245.22
A5A-26	A5A-26-4-R	13-Jul-02	1.5	2.0	Radium-228	0.886	pCi/g	NV	479274.82	1349245.22
A5A-26	A5A-26-4-R	13-Jul-02	1.5	2.0	Thorium-228	0.874	pCi/g	NV	479274.82	1349245.22
A5A-26	A5A-26-4-R	13-Jul-02	1.5	2.0	Thorium-232	0.886	pCi/g	NV	479274.82	1349245.22
A5A-26	A5A-26-4-R	13-Jul-02	1.5	2.0	Uranium, Total	6.76	mg/kg	NV	479274.82	1349245.22
A5A-26	A5A-26-6-R	13-Jul-02	2.5	3.0	Radium-226	0.824	pCi/g	NV	479274.82	1349245.22
A5A-26	A5A-26-6-R	13-Jul-02	2.5	3.0	Radium-228	0.936	pCi/g	NV	479274.82	1349245.22
A5A-26	A5A-26-6-R	13-Jul-02	2.5	3.0	Thorium-228	0.915	pCi/g	NV	479274.82	1349245.22
A5A-26	A5A-26-6-R	13-Jul-02	2.5	3.0	Thorium-232	0.936	pCi/g	NV	479274.82	1349245.22
A5A-26	A5A-26-6-R	13-Jul-02	2.5	3.0	Uranium, Total	4.09	mg/kg	NV	479274.82	1349245.22
A5A-26	A5A-26-8-R	13-Jul-02	3.5	4.0	Technetium-99	1.08	pCi/g	UNV	479274.82	1349245.22
A5A-26	A5A-26-8-R	13-Jul-02	3.5	4.0	Uranium, Total	2.22	mg/kg	NV	479274.82	1349245.22

5982

APPENDIX A
PREDESIGN CHARACTERIZATION DATA FOR AREA 7 SILOS AND GENERAL AREA

Boring	Sample ID	Sample Date	Sample Depth (feet)		Parameter	Result	Units	Qualifier	Northing	Easting
			Top	Bottom						
A5A-42	A5A-42-4-R	13-Jul-02	1.5	2.0	Radium-226	0.91	pCi/g	NV	479151.12	1349201.02
A5A-42	A5A-42-4-R	13-Jul-02	1.5	2.0	Radium-228	0.99	pCi/g	NV	479151.12	1349201.02
A5A-42	A5A-42-4-R	13-Jul-02	1.5	2.0	Thorium-228	0.989	pCi/g	NV	479151.12	1349201.02
A5A-42	A5A-42-4-R	13-Jul-02	1.5	2.0	Thorium-232	0.99	pCi/g	NV	479151.12	1349201.02
A5A-42	A5A-42-4-R	13-Jul-02	1.5	2.0	Uranium, Total	4.89	mg/kg	NV	479151.12	1349201.02
A5A-42	A5A-42-6-R	13-Jul-02	2.5	3.0	Radium-226	0.977	pCi/g	NV	479151.12	1349201.02
A5A-42	A5A-42-6-R	13-Jul-02	2.5	3.0	Radium-228	0.905	pCi/g	NV	479151.12	1349201.02
A5A-42	A5A-42-6-R	13-Jul-02	2.5	3.0	Thorium-228	0.906	pCi/g	NV	479151.12	1349201.02
A5A-42	A5A-42-6-R	13-Jul-02	2.5	3.0	Thorium-232	0.905	pCi/g	NV	479151.12	1349201.02
A5A-42	A5A-42-6-R	13-Jul-02	2.5	3.0	Uranium, Total	4.33	mg/kg	NV	479151.12	1349201.02
A5A-46	A5A-46-4-R	12-Jul-02	1.5	2.0	Radium-226	1.07	pCi/g	NV	478980.62	1349612.25
A5A-46	A5A-46-4-R	12-Jul-02	1.5	2.0	Radium-228	1.13	pCi/g	NV	478980.62	1349612.25
A5A-46	A5A-46-4-R	12-Jul-02	1.5	2.0	Thorium-228	1.13	pCi/g	NV	478980.62	1349612.25
A5A-46	A5A-46-4-R	12-Jul-02	1.5	2.0	Thorium-232	1.13	pCi/g	NV	478980.62	1349612.25
A5A-46	A5A-46-4-R	12-Jul-02	1.5	2.0	Uranium, Total	4.27	mg/kg	NV	478980.62	1349612.25
A5A-46	A5A-46-6-R	12-Jul-02	2.5	3.0	Radium-226	1.02	pCi/g	NV	478980.62	1349612.25
A5A-46	A5A-46-6-R	12-Jul-02	2.5	3.0	Radium-228	1.28	pCi/g	NV	478980.62	1349612.25
A5A-46	A5A-46-6-R	12-Jul-02	2.5	3.0	Thorium-228	1.28	pCi/g	NV	478980.62	1349612.25
A5A-46	A5A-46-6-R	12-Jul-02	2.5	3.0	Thorium-232	1.28	pCi/g	NV	478980.62	1349612.25
A5A-46	A5A-46-6-R	12-Jul-02	2.5	3.0	Uranium, Total	4.63	mg/kg	NV	478980.62	1349612.25
A5A-48	A5A-48-3-R	16-Jul-02	1.0	1.5	Radium-226	1.27	pCi/g	NV	478968.33	1349714.52
A5A-48	A5A-48-3-R	16-Jul-02	1.0	1.5	Radium-228	1.06	pCi/g	NV	478968.33	1349714.52
A5A-48	A5A-48-3-R	16-Jul-02	1.0	1.5	Thorium-228	1.07	pCi/g	NV	478968.33	1349714.52
A5A-48	A5A-48-3-R	16-Jul-02	1.0	1.5	Thorium-232	1.06	pCi/g	NV	478968.33	1349714.52
A5A-48	A5A-48-3-R	16-Jul-02	1.0	1.5	Uranium, Total	4.9	mg/kg	NV	478968.33	1349714.52
A5A-48	A5A-48-5-R	16-Jul-02	2.0	2.5	Radium-226	1.34	pCi/g	NV	478968.33	1349714.52
A5A-48	A5A-48-5-R	16-Jul-02	2.0	2.5	Radium-228	1.19	pCi/g	NV	478968.33	1349714.52
A5A-48	A5A-48-5-R	16-Jul-02	2.0	2.5	Thorium-228	1.21	pCi/g	NV	478968.33	1349714.52
A5A-48	A5A-48-5-R	16-Jul-02	2.0	2.5	Thorium-232	1.19	pCi/g	NV	478968.33	1349714.52
A5A-48	A5A-48-5-R	16-Jul-02	2.0	2.5	Uranium, Total	3.93	mg/kg	NV	478968.33	1349714.52
A5A-57	A5A-57-4-RMP	13-Jul-02	1.5	2.0	Arsenic	10.2	mg/kg	NV	479058.69	1349264.97
A5A-57	A5A-57-4-RMP	13-Jul-02	1.5	2.0	Beryllium	0.832	mg/kg	NV	479058.69	1349264.97
A5A-57	A5A-57-4-RMP	13-Jul-02	1.5	2.0	Aroclor-1254	15.4	ug/kg	UNV	479058.69	1349264.97
A5A-57	A5A-57-4-RMP	13-Jul-02	1.5	2.0	Aroclor-1260	15.4	ug/kg	UNV	479058.69	1349264.97
A5A-57	A5A-57-4-RMP	13-Jul-02	1.5	2.0	Radium-226	1.14	pCi/g	NV	479058.69	1349264.97

APPENDIX A
PREDESIGN CHARACTERIZATION DATA FOR AREA 7 SILOS AND GENERAL AREA

Boring	Sample ID	Sample Date	Sample Depth (feet)		Parameter	Result	Units	Qualifier	Northing	Easting
			Top	Bottom						
A5A-57	A5A-57-4-RMP	13-Jul-02	1.5	2.0	Radium-228	0.9	pCi/g	NV	479058.69	1349264.97
A5A-57	A5A-57-4-RMP	13-Jul-02	1.5	2.0	Thorium-228	0.89	pCi/g	NV	479058.69	1349264.97
A5A-57	A5A-57-4-RMP	13-Jul-02	1.5	2.0	Thorium-232	0.9	pCi/g	NV	479058.69	1349264.97
A5A-57	A5A-57-4-RMP	13-Jul-02	1.5	2.0	Uranium, Total	3.77	mg/kg	NV	479058.69	1349264.97
A5A-57	A5A-57-6-RMP	13-Jul-02	2.5	3.0	Arsenic	10	mg/kg	NV	479058.69	1349264.97
A5A-57	A5A-57-6-RMP	13-Jul-02	2.5	3.0	Beryllium	0.96	mg/kg	NV	479058.69	1349264.97
A5A-57	A5A-57-6-RMP	13-Jul-02	2.5	3.0	Aroclor-1254	15.5	ug/kg	UNV	479058.69	1349264.97
A5A-57	A5A-57-6-RMP	13-Jul-02	2.5	3.0	Aroclor-1260	15.5	ug/kg	UNV	479058.69	1349264.97
A5A-57	A5A-57-6-RMP	13-Jul-02	2.5	3.0	Radium-226	1.18	pCi/g	NV	479058.69	1349264.97
A5A-57	A5A-57-6-RMP	13-Jul-02	2.5	3.0	Radium-228	0.922	pCi/g	NV	479058.69	1349264.97
A5A-57	A5A-57-6-RMP	13-Jul-02	2.5	3.0	Thorium-228	0.919	pCi/g	NV	479058.69	1349264.97
A5A-57	A5A-57-6-RMP	13-Jul-02	2.5	3.0	Thorium-232	0.922	pCi/g	NV	479058.69	1349264.97
A5A-57	A5A-57-6-RMP	13-Jul-02	2.5	3.0	Uranium, Total	4.13	mg/kg	NV	479058.69	1349264.97
A5A-57	A5A-57-9-R	13-Jul-02	4.0	4.5	Technetium-99	1.04	pCi/g	UNV	479058.69	1349264.97
A5A-57	A5A-57-9-R	13-Jul-02	4.0	4.5	Uranium, Total	2.6	mg/kg	NV	479058.69	1349264.97
A5A-60	A5A-60-5-R	20-Jul-02	2.0	2.5	Radium-226	0.835	pCi/g	NV	478919.91	1349470.46
A5A-60	A5A-60-5-R	20-Jul-02	2.0	2.5	Radium-228	0.833	pCi/g	NV	478919.91	1349470.46
A5A-60	A5A-60-5-R	20-Jul-02	2.0	2.5	Thorium-228	0.861	pCi/g	NV	478919.91	1349470.46
A5A-60	A5A-60-5-R	20-Jul-02	2.0	2.5	Thorium-232	0.833	pCi/g	NV	478919.91	1349470.46
A5A-60	A5A-60-5-R	20-Jul-02	2.0	2.5	Uranium, Total	3.87	mg/kg	NV	478919.91	1349470.46
A5A-61	A5A-61-4-RMP	12-Jul-02	1.5	2.0	Arsenic	7.06	mg/kg	NV	478908.77	1349552.21
A5A-61	A5A-61-4-RMP	12-Jul-02	1.5	2.0	Beryllium	0.733	mg/kg	NV	478908.77	1349552.21
A5A-61	A5A-61-4-RMP	12-Jul-02	1.5	2.0	Aroclor-1254	3	ug/kg	NV	478908.77	1349552.21
A5A-61	A5A-61-4-RMP	12-Jul-02	1.5	2.0	Aroclor-1260	14.2	ug/kg	UNV	478908.77	1349552.21
A5A-61	A5A-61-4-RMP	12-Jul-02	1.5	2.0	Radium-226	0.781	pCi/g	NV	478908.77	1349552.21
A5A-61	A5A-61-4-RMP	12-Jul-02	1.5	2.0	Radium-228	0.723	pCi/g	NV	478908.77	1349552.21
A5A-61	A5A-61-4-RMP	12-Jul-02	1.5	2.0	Thorium-228	0.729	pCi/g	NV	478908.77	1349552.21
A5A-61	A5A-61-4-RMP	12-Jul-02	1.5	2.0	Thorium-232	0.723	pCi/g	NV	478908.77	1349552.21
A5A-61	A5A-61-4-RMP	12-Jul-02	1.5	2.0	Uranium, Total	8.23	mg/kg	NV	478908.77	1349552.21
A5A-64	A5A-64-1-R	15-Jul-02	0.0	0.5	Radium-226	0.702	pCi/g	NV	478858.41	1349948.03
A5A-64	A5A-64-1-R	15-Jul-02	0.0	0.5	Radium-228	0.72	pCi/g	NV	478858.41	1349948.03
A5A-64	A5A-64-1-R	15-Jul-02	0.0	0.5	Thorium-228	0.779	pCi/g	NV	478858.41	1349948.03
A5A-64	A5A-64-1-R	15-Jul-02	0.0	0.5	Thorium-232	0.72	pCi/g	NV	478858.41	1349948.03
A5A-64	A5A-64-1-R	15-Jul-02	0.0	0.5	Uranium, Total	5.47	mg/kg	NV	478858.41	1349948.03
A5A-67A	A5A-67A-4-R	16-Jul-02	1.5	2.0	Radium-226	0.746	pCi/g	NV	478956.69	1350210.73

5982

APPENDIX A
PREDESIGN CHARACTERIZATION DATA FOR AREA 7 SILOS AND GENERAL AREA

Boring	Sample ID	Sample Date	Sample Depth (feet)		Parameter	Result	Units	Qualifier	Northing	Easting
			Top	Bottom						
A5A-67A	A5A-67A-4-R	16-Jul-02	1.5	2.0	Radium-228	0.66	pCi/g	NV	478956.69	1350210.73
A5A-67A	A5A-67A-4-R	16-Jul-02	1.5	2.0	Thorium-228	0.661	pCi/g	NV	478956.69	1350210.73
A5A-67A	A5A-67A-4-R	16-Jul-02	1.5	2.0	Thorium-232	0.66	pCi/g	NV	478956.69	1350210.73
A5A-67A	A5A-67A-4-R	16-Jul-02	1.5	2.0	Uranium, Total	1.67	mg/kg	NV	478956.69	1350210.73
A5A-67A	A5A-67A-6-R	16-Jul-02	2.5	3.0	Radium-226	0.971	pCi/g	NV	478956.69	1350210.73
A5A-67A	A5A-67A-6-R	16-Jul-02	2.5	3.0	Radium-228	0.85	pCi/g	NV	478956.69	1350210.73
A5A-67A	A5A-67A-6-R	16-Jul-02	2.5	3.0	Thorium-228	0.833	pCi/g	NV	478956.69	1350210.73
A5A-67A	A5A-67A-6-R	16-Jul-02	2.5	3.0	Thorium-232	0.85	pCi/g	NV	478956.69	1350210.73
A5A-67A	A5A-67A-6-R	16-Jul-02	2.5	3.0	Uranium, Total	4.32	mg/kg	NV	478956.69	1350210.73
A5A-68	A5A-68-4-R	16-Jul-02	1.5	2.0	Radium-226	0.698	pCi/g	NV	478994.44	1350273.59
A5A-68	A5A-68-4-R	16-Jul-02	1.5	2.0	Radium-228	0.578	pCi/g	NV	478994.44	1350273.59
A5A-68	A5A-68-4-R	16-Jul-02	1.5	2.0	Thorium-228	0.582	pCi/g	NV	478994.44	1350273.59
A5A-68	A5A-68-4-R	16-Jul-02	1.5	2.0	Thorium-232	0.578	pCi/g	NV	478994.44	1350273.59
A5A-68	A5A-68-4-R	16-Jul-02	1.5	2.0	Uranium, Total	4.63	mg/kg	NV	478994.44	1350273.59
A5A-68	A5A-68-6-R	16-Jul-02	2.5	3.0	Radium-226	0.877	pCi/g	NV	478994.44	1350273.59
A5A-68	A5A-68-6-R	16-Jul-02	2.5	3.0	Radium-228	0.693	pCi/g	NV	478994.44	1350273.59
A5A-68	A5A-68-6-R	16-Jul-02	2.5	3.0	Thorium-228	0.695	pCi/g	NV	478994.44	1350273.59
A5A-68	A5A-68-6-R	16-Jul-02	2.5	3.0	Thorium-232	0.693	pCi/g	NV	478994.44	1350273.59
A5A-68	A5A-68-6-R	16-Jul-02	2.5	3.0	Uranium, Total	2.67	mg/kg	NV	478994.44	1350273.59
A5A-68A	A5A-68A-4-S	22-Aug-02	1.5	2.0	Benzo(a)anthracene	73.1	ug/kg	U	478994.44	1350273.59
A5A-68A	A5A-68A-4-S	22-Aug-02	1.5	2.0	Benzo(a)pyrene	73.1	ug/kg	U	478994.44	1350273.59
A5A-68A	A5A-68A-4-S	22-Aug-02	1.5	2.0	Benzo(b)fluoranthene	73.1	ug/kg	U	478994.44	1350273.59
A5A-68A	A5A-68A-4-S	22-Aug-02	1.5	2.0	Dibenzo(a,h)anthracene	73.1	ug/kg	U	478994.44	1350273.59
A5A-68A	A5A-68A-4-S	22-Aug-02	1.5	2.0	Indeno(1,2,3-cd)pyrene	73.1	ug/kg	U	478994.44	1350273.59
A5A-68A	A5A-68A-6-S	22-Aug-02	2.5	3.0	Benzo(a)anthracene	79.3	ug/kg	U	478994.44	1350273.59
A5A-68A	A5A-68A-6-S	22-Aug-02	2.5	3.0	Benzo(a)pyrene	79.3	ug/kg	U	478994.44	1350273.59
A5A-68A	A5A-68A-6-S	22-Aug-02	2.5	3.0	Benzo(b)fluoranthene	79.3	ug/kg	U	478994.44	1350273.59
A5A-68A	A5A-68A-6-S	22-Aug-02	2.5	3.0	Dibenzo(a,h)anthracene	79.3	ug/kg	U	478994.44	1350273.59
A5A-68A	A5A-68A-6-S	22-Aug-02	2.5	3.0	Indeno(1,2,3-cd)pyrene	79.3	ug/kg	U	478994.44	1350273.59
A5A-72	A5A-72-1-R	15-Jul-02	0.0	0.5	Radium-226	1.19	pCi/g	NV	478787.32	1349958.03
A5A-72	A5A-72-1-R	15-Jul-02	0.0	0.5	Radium-228	1.04	pCi/g	NV	478787.32	1349958.03
A5A-72	A5A-72-1-R	15-Jul-02	0.0	0.5	Thorium-228	1.07	pCi/g	NV	478787.32	1349958.03
A5A-72	A5A-72-1-R	15-Jul-02	0.0	0.5	Thorium-232	1.04	pCi/g	NV	478787.32	1349958.03
A5A-72	A5A-72-1-R	15-Jul-02	0.0	0.5	Uranium, Total	12.2	mg/kg	NV	478787.32	1349958.03
A5A-73	A5A-73-1-RMP	15-Jul-02	0.0	0.5	Arsenic	8.74	mg/kg	NV	478823.03	1350047.74

APPENDIX A
PREDESIGN CHARACTERIZATION DATA FOR AREA 7 SILOS AND GENERAL AREA

Boring	Sample ID	Sample Date	Sample Depth (feet)		Parameter	Result	Units	Qualifier	Northing	Easting
			Top	Bottom						
A5A-73	A5A-73-1-RMP	15-Jul-02	0.0	0.5	Beryllium	0.565	mg/kg	NV	478823.03	1350047.74
A5A-73	A5A-73-1-RMP	15-Jul-02	0.0	0.5	Aroclor-1254	15.3	ug/kg	UNV	478823.03	1350047.74
A5A-73	A5A-73-1-RMP	15-Jul-02	0.0	0.5	Aroclor-1260	15.3	ug/kg	UNV	478823.03	1350047.74
A5A-73	A5A-73-1-RMP	15-Jul-02	0.0	0.5	Radium-226	1.06	pCi/g	NV	478823.03	1350047.74
A5A-73	A5A-73-1-RMP	15-Jul-02	0.0	0.5	Radium-228	0.99	pCi/g	NV	478823.03	1350047.74
A5A-73	A5A-73-1-RMP	15-Jul-02	0.0	0.5	Thorium-228	0.994	pCi/g	NV	478823.03	1350047.74
A5A-73	A5A-73-1-RMP	15-Jul-02	0.0	0.5	Thorium-232	0.99	pCi/g	NV	478823.03	1350047.74
A5A-73	A5A-73-1-RMP	15-Jul-02	0.0	0.5	Uranium, Total	8.08	mg/kg	NV	478823.03	1350047.74
A5A-74	A5A-74-1-R	15-Jul-02	0.0	0.5	Radium-226	0.998	pCi/g	NV	478729.78	1350088.39
A5A-74	A5A-74-1-R	15-Jul-02	0.0	0.5	Radium-228	1.14	pCi/g	NV	478729.78	1350088.39
A5A-74	A5A-74-1-R	15-Jul-02	0.0	0.5	Thorium-228	1.17	pCi/g	NV	478729.78	1350088.39
A5A-74	A5A-74-1-R	15-Jul-02	0.0	0.5	Thorium-232	1.14	pCi/g	NV	478729.78	1350088.39
A5A-74	A5A-74-1-R	15-Jul-02	0.0	0.5	Uranium, Total	12.4	mg/kg	NV	478729.78	1350088.39
A5A-75	A5A-75-1-R	15-Jul-02	0.0	0.5	Radium-226	0.977	pCi/g	NV	478859.48	1350161.16
A5A-75	A5A-75-1-R	15-Jul-02	0.0	0.5	Radium-228	1.21	pCi/g	NV	478859.48	1350161.16
A5A-75	A5A-75-1-R	15-Jul-02	0.0	0.5	Thorium-228	1.23	pCi/g	NV	478859.48	1350161.16
A5A-75	A5A-75-1-R	15-Jul-02	0.0	0.5	Thorium-232	1.21	pCi/g	NV	478859.48	1350161.16
A5A-75	A5A-75-1-R	15-Jul-02	0.0	0.5	Uranium, Total	4.98	mg/kg	NV	478859.48	1350161.16
A5A-76	A5A-76-4-R	19-Jul-02	1.5	2.0	Radium-226	1.16	pCi/g	NV	478813.6	1350265.63
A5A-76	A5A-76-4-R	19-Jul-02	1.5	2.0	Radium-228	1.14	pCi/g	NV	478813.6	1350265.63
A5A-76	A5A-76-4-R	19-Jul-02	1.5	2.0	Thorium-228	1.15	pCi/g	NV	478813.6	1350265.63
A5A-76	A5A-76-4-R	19-Jul-02	1.5	2.0	Thorium-232	1.14	pCi/g	NV	478813.6	1350265.63
A5A-76	A5A-76-4-R	19-Jul-02	1.5	2.0	Uranium, Total	5.59	mg/kg	NV	478813.6	1350265.63
A5A-76	A5A-76-6-R	19-Jul-02	2.5	3.0	Radium-226	1.34	pCi/g	NV	478813.6	1350265.63
A5A-76	A5A-76-6-R	19-Jul-02	2.5	3.0	Radium-228	1.22	pCi/g	NV	478813.6	1350265.63
A5A-76	A5A-76-6-R	19-Jul-02	2.5	3.0	Thorium-228	1.21	pCi/g	NV	478813.6	1350265.63
A5A-76	A5A-76-6-R	19-Jul-02	2.5	3.0	Thorium-232	1.22	pCi/g	NV	478813.6	1350265.63
A5A-76	A5A-76-6-R	19-Jul-02	2.5	3.0	Uranium, Total	6.4	mg/kg	NV	478813.6	1350265.63
A5A-9	A5A-9-1-RMP	11-Jul-02	0.0	0.5	Arsenic	5.47	mg/kg	NV	479614.46	1349259.12
A5A-9	A5A-9-1-RMP	11-Jul-02	0.0	0.5	Beryllium	0.611	mg/kg	NV	479614.46	1349259.12
A5A-9	A5A-9-1-RMP	11-Jul-02	0.0	0.5	Aroclor-1254	14.5	ug/kg	UNV	479614.46	1349259.12
A5A-9	A5A-9-1-RMP	11-Jul-02	0.0	0.5	Aroclor-1260	14.5	ug/kg	UNV	479614.46	1349259.12
A5A-9	A5A-9-1-RMP	11-Jul-02	0.0	0.5	Radium-226	1.29	pCi/g	NV	479614.46	1349259.12
A5A-9	A5A-9-1-RMP	11-Jul-02	0.0	0.5	Radium-228	0.939	pCi/g	NV	479614.46	1349259.12
A5A-9	A5A-9-1-RMP	11-Jul-02	0.0	0.5	Thorium-228	0.919	pCi/g	NV	479614.46	1349259.12

Boring	Sample ID	Sample Date	Sample Depth (feet)		Parameter	Result	Units	Qualifier	Northing	Easting
			Top	Bottom						
A5A-9	A5A-9-1-RMP	11-Jul-02	0.0	0.5	Thorium-232	0.939	pCi/g	NV	479614.46	1349259.12
A5A-9	A5A-9-1-RMP	11-Jul-02	0.0	0.5	Uranium, Total	30.5	mg/kg	NV	479614.46	1349259.12
A5-AT-10	A5-AT-10-1-OR	10-Jul-02	0.0	0.5	Technetium-99	1.97	pCi/g	U	479957	1350520.5
A5-AT-10	A5-AT-10-14-OR	10-Jul-02	6.5	7.0	Technetium-99	2.15	pCi/g	U	479957	1350520.5
A5-CH-1	A5-CH-1-1-P	26-Sep-01	0.0	0.5	Aroclor-1254	39	ug/kg	U	478863.05	1350182.24
A5-CH-1	A5-CH-1-1-P	26-Sep-01	0.0	0.5	Aroclor-1260	39	ug/kg	U	478863.05	1350182.24
A5-CH-1	A5-CH-1-1-RM	6-Sep-01	0.0	0.5	Arsenic	5.39	mg/kg	-	478863.05	1350182.24
A5-CH-1	A5-CH-1-1-RM	6-Sep-01	0.0	0.5	Beryllium	0.57	mg/kg	-	478863.05	1350182.24
A5-CH-1	A5-CH-1-1-RM	6-Sep-01	0.0	0.5	Radium-226	1.164	pCi/g	J	478863.05	1350182.24
A5-CH-1	A5-CH-1-1-RM	6-Sep-01	0.0	0.5	Radium-228	0.946	pCi/g	J	478863.05	1350182.24
A5-CH-1	A5-CH-1-1-RM	6-Sep-01	0.0	0.5	Thorium-228	0.928	pCi/g	J	478863.05	1350182.24
A5-CH-1	A5-CH-1-1-RM	6-Sep-01	0.0	0.5	Thorium-232	0.946	pCi/g	J	478863.05	1350182.24
A5-CH-1	A5-CH-1-1-RM	6-Sep-01	0.0	0.5	Uranium, Total	5.438	mg/kg	J	478863.05	1350182.24
A5-CH-1	A5-CH-1-5-P	26-Sep-01	2.0	2.5	Aroclor-1254	42	ug/kg	U	478863.05	1350182.24
A5-CH-1	A5-CH-1-5-P	26-Sep-01	2.0	2.5	Aroclor-1260	42	ug/kg	U	478863.05	1350182.24
A5-CH-1	A5-CH-1-5-RM	6-Sep-01	2.0	2.5	Arsenic	6.13	mg/kg	-	478863.05	1350182.24
A5-CH-1	A5-CH-1-5-RM	6-Sep-01	2.0	2.5	Beryllium	0.88	mg/kg	-	478863.05	1350182.24
A5-CH-1	A5-CH-1-5-RM	6-Sep-01	2.0	2.5	Radium-226	1.388	pCi/g	J	478863.05	1350182.24
A5-CH-1	A5-CH-1-5-RM	6-Sep-01	2.0	2.5	Radium-228	1.181	pCi/g	J	478863.05	1350182.24
A5-CH-1	A5-CH-1-5-RM	6-Sep-01	2.0	2.5	Thorium-228	1.165	pCi/g	J	478863.05	1350182.24
A5-CH-1	A5-CH-1-5-RM	6-Sep-01	2.0	2.5	Thorium-232	1.181	pCi/g	J	478863.05	1350182.24
A5-CH-1	A5-CH-1-5-RM	6-Sep-01	2.0	2.5	Uranium, Total	4.819	mg/kg	J	478863.05	1350182.24
A5-CH-1	A5-CH-1-9-P	26-Sep-01	4.0	4.5	Aroclor-1254	41	ug/kg	U	478863.05	1350182.24
A5-CH-1	A5-CH-1-9-P	26-Sep-01	4.0	4.5	Aroclor-1260	41	ug/kg	U	478863.05	1350182.24
A5-CH-1	A5-CH-1-9-RM	6-Sep-01	4.0	4.5	Arsenic	9.34	mg/kg	J	478863.05	1350182.24
A5-CH-1	A5-CH-1-9-RM	6-Sep-01	4.0	4.5	Beryllium	0.2	mg/kg	-	478863.05	1350182.24
A5-CH-1	A5-CH-1-9-RM	6-Sep-01	4.0	4.5	Radium-226	1.071	pCi/g	J	478863.05	1350182.24
A5-CH-1	A5-CH-1-9-RM	6-Sep-01	4.0	4.5	Radium-228	0.785	pCi/g	J	478863.05	1350182.24
A5-CH-1	A5-CH-1-9-RM	6-Sep-01	4.0	4.5	Thorium-228	0.785	pCi/g	J	478863.05	1350182.24
A5-CH-1	A5-CH-1-9-RM	6-Sep-01	4.0	4.5	Thorium-232	0.785	pCi/g	J	478863.05	1350182.24
A5-CH-1	A5-CH-1-9-RM	6-Sep-01	4.0	4.5	Uranium, Total	3.177	mg/kg	J	478863.05	1350182.24
A5-CH-2	A5-CH-2-1-P	26-Sep-01	0.0	0.5	Aroclor-1254	41	ug/kg	U	478862.33	1350204.62
A5-CH-2	A5-CH-2-1-P	26-Sep-01	0.0	0.5	Aroclor-1260	41	ug/kg	U	478862.33	1350204.62
A5-CH-2	A5-CH-2-1-RM	6-Sep-01	0.0	0.5	Arsenic	6.19	mg/kg	-	478862.33	1350204.62
A5-CH-2	A5-CH-2-1-RM	6-Sep-01	0.0	0.5	Beryllium	0.46	mg/kg	-	478862.33	1350204.62

APPENDIX A
PREDESIGN CHARACTERIZATION DATA FOR AREA 7 SILOS AND GENERAL AREA

Boring	Sample ID	Sample Date	Sample Depth (feet)		Parameter	Result	Units	Qualifier	Northing	Easting
			Top	Bottom						
A5-CH-2	A5-CH-2-1-RM	6-Sep-01	0.0	0.5	Radium-226	1.137	pCi/g	J	478862.33	1350204.62
A5-CH-2	A5-CH-2-1-RM	6-Sep-01	0.0	0.5	Radium-228	0.901	pCi/g	J	478862.33	1350204.62
A5-CH-2	A5-CH-2-1-RM	6-Sep-01	0.0	0.5	Thorium-228	0.891	pCi/g	J	478862.33	1350204.62
A5-CH-2	A5-CH-2-1-RM	6-Sep-01	0.0	0.5	Thorium-232	0.901	pCi/g	J	478862.33	1350204.62
A5-CH-2	A5-CH-2-1-RM	6-Sep-01	0.0	0.5	Uranium, Total	5.206	mg/kg	J	478862.33	1350204.62
A5-CH-2	A5-CH-2-5-P	26-Sep-01	2.0	2.5	Aroclor-1254	39	ug/kg	U	478862.33	1350204.62
A5-CH-2	A5-CH-2-5-P	26-Sep-01	2.0	2.5	Aroclor-1260	39	ug/kg	U	478862.33	1350204.62
A5-CH-2	A5-CH-2-5-RM	6-Sep-01	2.0	2.5	Arsenic	5.19	mg/kg	-	478862.33	1350204.62
A5-CH-2	A5-CH-2-5-RM	6-Sep-01	2.0	2.5	Beryllium	0.57	mg/kg	-	478862.33	1350204.62
A5-CH-2	A5-CH-2-5-RM	6-Sep-01	2.0	2.5	Radium-226	1.277	pCi/g	J	478862.33	1350204.62
A5-CH-2	A5-CH-2-5-RM	6-Sep-01	2.0	2.5	Radium-228	1.067	pCi/g	J	478862.33	1350204.62
A5-CH-2	A5-CH-2-5-RM	6-Sep-01	2.0	2.5	Thorium-228	1.023	pCi/g	J	478862.33	1350204.62
A5-CH-2	A5-CH-2-5-RM	6-Sep-01	2.0	2.5	Thorium-232	1.067	pCi/g	J	478862.33	1350204.62
A5-CH-2	A5-CH-2-5-RM	6-Sep-01	2.0	2.5	Uranium, Total	3.085	mg/kg	J	478862.33	1350204.62
A5-CH-2	A5-CH-2-9-P	26-Sep-01	4.0	4.5	Aroclor-1254	41	ug/kg	U	478862.33	1350204.62
A5-CH-2	A5-CH-2-9-P	26-Sep-01	4.0	4.5	Aroclor-1260	41	ug/kg	U	478862.33	1350204.62
A5-CH-2	A5-CH-2-9-RM	6-Sep-01	4.0	4.5	Arsenic	9.73	mg/kg	J	478862.33	1350204.62
A5-CH-2	A5-CH-2-9-RM	6-Sep-01	4.0	4.5	Beryllium	0.55	mg/kg	-	478862.33	1350204.62
A5-CH-2	A5-CH-2-9-RM	6-Sep-01	4.0	4.5	Radium-226	0.845	pCi/g	J	478862.33	1350204.62
A5-CH-2	A5-CH-2-9-RM	6-Sep-01	4.0	4.5	Radium-228	0.622	pCi/g	J	478862.33	1350204.62
A5-CH-2	A5-CH-2-9-RM	6-Sep-01	4.0	4.5	Thorium-228	0.599	pCi/g	J	478862.33	1350204.62
A5-CH-2	A5-CH-2-9-RM	6-Sep-01	4.0	4.5	Thorium-232	0.622	pCi/g	J	478862.33	1350204.62
A5-CH-2	A5-CH-2-9-RM	6-Sep-01	4.0	4.5	Uranium, Total	2.82	mg/kg	UJ	478862.33	1350204.62
A5-CH-3	A5-CH-3-1-P	26-Sep-01	0.0	0.5	Aroclor-1254	39	ug/kg	U	478844.46	1350204.5
A5-CH-3	A5-CH-3-1-P	26-Sep-01	0.0	0.5	Aroclor-1260	39	ug/kg	U	478844.46	1350204.5
A5-CH-3	A5-CH-3-1-RM	6-Sep-01	0.0	0.5	Arsenic	5.69	mg/kg	-	478844.46	1350204.5
A5-CH-3	A5-CH-3-1-RM	6-Sep-01	0.0	0.5	Beryllium	0.4	mg/kg	-	478844.46	1350204.5
A5-CH-3	A5-CH-3-1-RM	6-Sep-01	0.0	0.5	Radium-226	1.103	pCi/g	J	478844.46	1350204.5
A5-CH-3	A5-CH-3-1-RM	6-Sep-01	0.0	0.5	Radium-228	0.903	pCi/g	J	478844.46	1350204.5
A5-CH-3	A5-CH-3-1-RM	6-Sep-01	0.0	0.5	Thorium-228	0.869	pCi/g	J	478844.46	1350204.5
A5-CH-3	A5-CH-3-1-RM	6-Sep-01	0.0	0.5	Thorium-232	0.903	pCi/g	J	478844.46	1350204.5
A5-CH-3	A5-CH-3-1-RM	6-Sep-01	0.0	0.5	Uranium, Total	9.772	mg/kg	J	478844.46	1350204.5
A5-CH-3	A5-CH-3-5-P	26-Sep-01	2.0	2.5	Aroclor-1254	41	ug/kg	U	478844.46	1350204.5
A5-CH-3	A5-CH-3-5-P	26-Sep-01	2.0	2.5	Aroclor-1260	41	ug/kg	U	478844.46	1350204.5
A5-CH-3	A5-CH-3-5-RM	6-Sep-01	2.0	2.5	Arsenic	8.65	mg/kg	J	478844.46	1350204.5

5982

APPENDIX A
PREDESIGN CHARACTERIZATION DATA FOR AREA 7 SILOS AND GENERAL AREA

Boring	Sample ID	Sample Date	Sample Depth (feet)		Parameter	Result	Units	Qualifier	Northing	Easting
			Top	Bottom						
A5-CH-3	A5-CH-3-5-RM	6-Sep-01	2.0	2.5	Beryllium	0.9	mg/kg	-	478844.46	1350204.5
A5-CH-3	A5-CH-3-5-RM	6-Sep-01	2.0	2.5	Radium-226	1.42	pCi/g	J	478844.46	1350204.5
A5-CH-3	A5-CH-3-5-RM	6-Sep-01	2.0	2.5	Radium-228	1.124	pCi/g	J	478844.46	1350204.5
A5-CH-3	A5-CH-3-5-RM	6-Sep-01	2.0	2.5	Thorium-228	1.111	pCi/g	J	478844.46	1350204.5
A5-CH-3	A5-CH-3-5-RM	6-Sep-01	2.0	2.5	Thorium-232	1.124	pCi/g	J	478844.46	1350204.5
A5-CH-3	A5-CH-3-5-RM	6-Sep-01	2.0	2.5	Uranium, Total	2.974	mg/kg	J	478844.46	1350204.5
A5-CH-3	A5-CH-3-9-P	26-Sep-01	4.0	4.5	Aroclor-1254	42	ug/kg	U	478844.46	1350204.5
A5-CH-3	A5-CH-3-9-P	26-Sep-01	4.0	4.5	Aroclor-1260	42	ug/kg	U	478844.46	1350204.5
A5-CH-3	A5-CH-3-9-RM	6-Sep-01	4.0	4.5	Arsenic	12.3	mg/kg	-	478844.46	1350204.5
A5-CH-3	A5-CH-3-9-RM	6-Sep-01	4.0	4.5	Beryllium	0.49	mg/kg	-	478844.46	1350204.5
A5-CH-3	A5-CH-3-9-RM	6-Sep-01	4.0	4.5	Radium-226	1.35	pCi/g	J	478844.46	1350204.5
A5-CH-3	A5-CH-3-9-RM	6-Sep-01	4.0	4.5	Radium-228	1.034	pCi/g	J	478844.46	1350204.5
A5-CH-3	A5-CH-3-9-RM	6-Sep-01	4.0	4.5	Thorium-228	1.002	pCi/g	J	478844.46	1350204.5
A5-CH-3	A5-CH-3-9-RM	6-Sep-01	4.0	4.5	Thorium-232	1.034	pCi/g	J	478844.46	1350204.5
A5-CH-3	A5-CH-3-9-RM	6-Sep-01	4.0	4.5	Uranium, Total	3.289	mg/kg	UJ	478844.46	1350204.5
A5-CH-4	A5-CH-4-1-P	26-Sep-01	0.0	0.5	Aroclor-1254	40	ug/kg	U	478845.11	1350181.52
A5-CH-4	A5-CH-4-1-P	26-Sep-01	0.0	0.5	Aroclor-1260	40	ug/kg	U	478845.11	1350181.52
A5-CH-4	A5-CH-4-1-RM	6-Sep-01	0.0	0.5	Arsenic	6.05	mg/kg	J	478845.11	1350181.52
A5-CH-4	A5-CH-4-1-RM	6-Sep-01	0.0	0.5	Beryllium	0.58	mg/kg	-	478845.11	1350181.52
A5-CH-4	A5-CH-4-1-RM	6-Sep-01	0.0	0.5	Radium-226	1.133	pCi/g	J	478845.11	1350181.52
A5-CH-4	A5-CH-4-1-RM	6-Sep-01	0.0	0.5	Radium-228	1.054	pCi/g	J	478845.11	1350181.52
A5-CH-4	A5-CH-4-1-RM	6-Sep-01	0.0	0.5	Thorium-228	1.045	pCi/g	J	478845.11	1350181.52
A5-CH-4	A5-CH-4-1-RM	6-Sep-01	0.0	0.5	Thorium-232	1.054	pCi/g	J	478845.11	1350181.52
A5-CH-4	A5-CH-4-1-RM	6-Sep-01	0.0	0.5	Uranium, Total	13.512	mg/kg	J	478845.11	1350181.52
A5-CH-4	A5-CH-4-5-P	26-Sep-01	2.0	2.5	Aroclor-1254	41	ug/kg	U	478845.11	1350181.52
A5-CH-4	A5-CH-4-5-P	26-Sep-01	2.0	2.5	Aroclor-1260	41	ug/kg	U	478845.11	1350181.52
A5-CH-4	A5-CH-4-5-RM	6-Sep-01	2.0	2.5	Arsenic	10.1	mg/kg	J	478845.11	1350181.52
A5-CH-4	A5-CH-4-5-RM	6-Sep-01	2.0	2.5	Beryllium	0.91	mg/kg	-	478845.11	1350181.52
A5-CH-4	A5-CH-4-5-RM	6-Sep-01	2.0	2.5	Radium-226	1.436	pCi/g	J	478845.11	1350181.52
A5-CH-4	A5-CH-4-5-RM	6-Sep-01	2.0	2.5	Radium-228	1.288	pCi/g	J	478845.11	1350181.52
A5-CH-4	A5-CH-4-5-RM	6-Sep-01	2.0	2.5	Thorium-228	1.275	pCi/g	J	478845.11	1350181.52
A5-CH-4	A5-CH-4-5-RM	6-Sep-01	2.0	2.5	Thorium-232	1.288	pCi/g	J	478845.11	1350181.52
A5-CH-4	A5-CH-4-5-RM	6-Sep-01	2.0	2.5	Uranium, Total	2.499	mg/kg	UJ	478845.11	1350181.52
A5-CH-4	A5-CH-4-9-P	26-Sep-01	4.0	4.5	Aroclor-1254	42	ug/kg	U	478845.11	1350181.52
A5-CH-4	A5-CH-4-9-P	26-Sep-01	4.0	4.5	Aroclor-1260	42	ug/kg	U	478845.11	1350181.52

APPENDIX A
PREDESIGN CHARACTERIZATION DATA FOR AREA 7 SILOS AND GENERAL AREA

Boring	Sample ID	Sample Date	Sample Depth (feet)		Parameter	Result	Units	Qualifier	Northing	Easting
			Top	Bottom						
A5-CH-4	A5-CH-4-9-RM	6-Sep-01	4.0	4.5	Arsenic	10.7	mg/kg	J	478845.11	1350181.52
A5-CH-4	A5-CH-4-9-RM	6-Sep-01	4.0	4.5	Beryllium	0.57	mg/kg	-	478845.11	1350181.52
A5-CH-4	A5-CH-4-9-RM	6-Sep-01	4.0	4.5	Radium-226	1.121	pCi/g	J	478845.11	1350181.52
A5-CH-4	A5-CH-4-9-RM	6-Sep-01	4.0	4.5	Radium-228	0.897	pCi/g	J	478845.11	1350181.52
A5-CH-4	A5-CH-4-9-RM	6-Sep-01	4.0	4.5	Thorium-228	0.862	pCi/g	J	478845.11	1350181.52
A5-CH-4	A5-CH-4-9-RM	6-Sep-01	4.0	4.5	Thorium-232	0.897	pCi/g	J	478845.11	1350181.52
A5-CH-4	A5-CH-4-9-RM	6-Sep-01	4.0	4.5	Uranium, Total	3.26	mg/kg	UJ	478845.11	1350181.52
A5P-13	A5P-13-1-P	16-Oct-02	0.0	0.5	Aroclor-1254	9.1	ug/kg	U	479963.889	1350512.647
A5P-13	A5P-13-1-P	16-Oct-02	0.0	0.5	Aroclor-1260	9.1	ug/kg	U	479963.889	1350512.647
A5P-13	A5P-13-1-R	16-Oct-02	0.0	0.5	Uranium, Total	7.56	mg/kg	NV	479963.889	1350512.647
A5P-13	A5P-13-1-S	16-Oct-02	0.0	0.5	Benzo(a)anthracene	32.1	ug/kg	J	479963.889	1350512.647
A5P-13	A5P-13-1-S	16-Oct-02	0.0	0.5	Benzo(a)pyrene	35.3	ug/kg	J	479963.889	1350512.647
A5P-13	A5P-13-1-S	16-Oct-02	0.0	0.5	Benzo(b)fluoranthene	43.7	ug/kg	J	479963.889	1350512.647
A5P-13	A5P-13-1-S	16-Oct-02	0.0	0.5	Dibenzo(a,h)anthracene	72.8	ug/kg	U	479963.889	1350512.647
A5P-13	A5P-13-1-S	16-Oct-02	0.0	0.5	Indeno(1,2,3-cd)pyrene	72.8	ug/kg	U	479963.889	1350512.647
A5P-15	A5P-15-1-P	16-Oct-02	0.0	0.5	Aroclor-1254	101	ug/kg	-	479700.644	1350520.612
A5P-15	A5P-15-1-P	16-Oct-02	0.0	0.5	Aroclor-1260	43	ug/kg	-	479700.644	1350520.612
A5P-15	A5P-15-1-R	16-Oct-02	0.0	0.5	Uranium, Total	15.3	mg/kg	NV	479700.644	1350520.612
A5P-15	A5P-15-1-S	16-Oct-02	0.0	0.5	Benzo(a)anthracene	61.9	ug/kg	J	479700.644	1350520.612
A5P-15	A5P-15-1-S	16-Oct-02	0.0	0.5	Benzo(a)pyrene	73.2	ug/kg	J	479700.644	1350520.612
A5P-15	A5P-15-1-S	16-Oct-02	0.0	0.5	Benzo(b)fluoranthene	112	ug/kg	J	479700.644	1350520.612
A5P-15	A5P-15-1-S	16-Oct-02	0.0	0.5	Dibenzo(a,h)anthracene	77.4	ug/kg	U	479700.644	1350520.612
A5P-15	A5P-15-1-S	16-Oct-02	0.0	0.5	Indeno(1,2,3-cd)pyrene	35.6	ug/kg	J	479700.644	1350520.612
A6-SWRBC-1	A6-SWRBC-1^R	2-Mar-04	surface	grab	Technetium-99	422	pCi/g dry	NV	NA	NA
A6-SWRBC-1	A6-SWRBC-1^R	2-Mar-04	surface	grab	Uranium, Total	455	mg/kg	NV	NA	NA
A6-SWRBC-2	A6-SWRBC-2^R	2-Mar-04	surface	grab	Technetium-99	34	pCi/g dry	NV	NA	NA
A6-SWRBC-2	A6-SWRBC-2^R	2-Mar-04	surface	grab	Uranium, Total	542	mg/kg	NV	NA	NA
A6-SWRBE-1	A6-SWRBE-1^R	2-Mar-04	surface	grab	Technetium-99	4.09	pCi/g dry	NV	NA	NA
A6-SWRBE-1	A6-SWRBE-1^R	2-Mar-04	surface	grab	Uranium, Total	14.5	mg/kg	NV	NA	NA
A6-SWRBE-2	A6-SWRBE-2^R	2-Mar-04	surface	grab	Technetium-99	33.6	pCi/g dry	NV	NA	NA
A6-SWRBE-2	A6-SWRBE-2^R	2-Mar-04	surface	grab	Uranium, Total	422	mg/kg	NV	NA	NA
A6-SWRBE-3	A6-SWRBE-3^R	2-Mar-04	surface	grab	Technetium-99	27.3	pCi/g dry	NV	NA	NA
A6-SWRBE-3	A6-SWRBE-3^R	2-Mar-04	surface	grab	Uranium, Total	119	mg/kg	NV	NA	NA
A6-SWRBE-4	A6-SWRBE-4^R	2-Mar-04	surface	grab	Technetium-99	21.4	pCi/g dry	NV	NA	NA
A6-SWRBE-4	A6-SWRBE-4^R	2-Mar-04	surface	grab	Uranium, Total	98.3	mg/kg	NV	NA	NA

5982

Boring	Sample ID	Sample Date	Sample Depth (feet)		Parameter	Result	Units	Qualifier	Northing	Easting
			Top	Bottom						
A6-SWRBE-5	A6-SWRBE-5^R	2-Mar-04	surface	grab	Technetium-99	29	pCi/g dry	NV	NA	NA
A6-SWRBE-5	A6-SWRBE-5^R	2-Mar-04	surface	grab	Uranium, Total	160	mg/kg	NV	NA	NA
A6-SWRBE-6	A6-SWRBE-6^R	2-Mar-04	surface	grab	Technetium-99	23.7	pCi/g dry	NV	NA	NA
A6-SWRBE-6	A6-SWRBE-6^R	2-Mar-04	surface	grab	Uranium, Total	88.4	mg/kg	NV	NA	NA
A6-SWRBE-7	A6-SWRBE-7^R	2-Mar-04	surface	grab	Technetium-99	26	pCi/g dry	NV	NA	NA
A6-SWRBE-7	A6-SWRBE-7^R	2-Mar-04	surface	grab	Uranium, Total	123	mg/kg	NV	NA	NA
A6-SWRBE-8	A6-SWRBE-8^R	2-Mar-04	surface	grab	Technetium-99	23.5	pCi/g dry	NV	NA	NA
A6-SWRBE-8	A6-SWRBE-8^R	2-Mar-04	surface	grab	Uranium, Total	89.4	mg/kg	NV	NA	NA
A6-SWRBE-9	A6-SWRBE-9^R	2-Mar-04	surface	grab	Technetium-99	31	pCi/g dry	NV	NA	NA
A6-SWRBE-9	A6-SWRBE-9^R	2-Mar-04	surface	grab	Uranium, Total	377	mg/kg	NV	NA	NA
A6-SWRBW-1	A6-SWRBW-1^R	2-Mar-04	surface	grab	Technetium-99	18	pCi/g dry	NV	NA	NA
A6-SWRBW-1	A6-SWRBW-1^R	2-Mar-04	surface	grab	Uranium, Total	98.7	mg/kg	NV	NA	NA
A6-SWRBW-2	A6-SWRBW-2^R	2-Mar-04	surface	grab	Technetium-99	19	pCi/g dry	NV	NA	NA
A6-SWRBW-2	A6-SWRBW-2^R	2-Mar-04	surface	grab	Uranium, Total	99.9	mg/kg	NV	NA	NA
A6-SWRBW-3	A6-SWRBW-3^R	2-Mar-04	surface	grab	Technetium-99	15	pCi/g dry	NV	NA	NA
A6-SWRBW-3	A6-SWRBW-3^R	2-Mar-04	surface	grab	Uranium, Total	104	mg/kg	NV	NA	NA
A6-SWRBW-4	A6-SWRBW-4^R	2-Mar-04	surface	grab	Technetium-99	13	pCi/g dry	NV	NA	NA
A6-SWRBW-4	A6-SWRBW-4^R	2-Mar-04	surface	grab	Uranium, Total	120	mg/kg	NV	NA	NA
A6-SWRBW-5	A6-SWRBW-5^R	2-Mar-04	surface	grab	Technetium-99	15	pCi/g dry	NV	NA	NA
A6-SWRBW-5	A6-SWRBW-5^R	2-Mar-04	surface	grab	Uranium, Total	93.1	mg/kg	NV	NA	NA
A6-SWRBW-6	A6-SWRBW-6^R	2-Mar-04	surface	grab	Technetium-99	27	pCi/g dry	NV	NA	NA
A6-SWRBW-6	A6-SWRBW-6^R	2-Mar-04	surface	grab	Uranium, Total	129	mg/kg	NV	NA	NA
A6-SWRBW-7	A6-SWRBW-7^R	2-Mar-04	surface	grab	Technetium-99	19	pCi/g dry	NV	NA	NA
A6-SWRBW-7	A6-SWRBW-7^R	2-Mar-04	surface	grab	Uranium, Total	113	mg/kg	NV	NA	NA
A6WP-B-41	A6WP-B-41^2-R	25-Feb-05	0.5	1.0	Cesium-137	0.0339	pCi/g	UNV	481103.611	1346474.444
A6WP-B-41	A6WP-B-41^2-R	25-Feb-05	0.5	1.0	Radium-228	0.452	pCi/g	NV	481103.611	1346474.444
A6WP-B-41	A6WP-B-41^2-R	25-Feb-05	0.5	1.0	Technetium-99	0.761	pCi/g	UNV	481103.611	1346474.444
A6WP-B-41	A6WP-B-41^2-R	25-Feb-05	0.5	1.0	Thorium-228	0.536	pCi/g	NV	481103.611	1346474.444
A6WP-B-41	A6WP-B-41^2-R	25-Feb-05	0.5	1.0	Thorium-230	0.869	pCi/g	NV	481103.611	1346474.444
A6WP-B-41	A6WP-B-41^2-R	25-Feb-05	0.5	1.0	Thorium-232	0.452	pCi/g	NV	481103.611	1346474.444
A6WP-B-41	A6WP-B-41^2-R	25-Feb-05	0.5	1.0	Uranium, Total	5.05	mg/kg	NV	481103.611	1346474.444
A6WP-B-41	A6WP-B-41^8-R	25-Feb-05	3.5	4.0	Cesium-137	0.0325	pCi/g	UNV	481103.611	1346474.444
A6WP-B-41	A6WP-B-41^8-R	25-Feb-05	3.5	4.0	Radium-228	0.397	pCi/g	NV	481103.611	1346474.444
A6WP-B-41	A6WP-B-41^8-R	25-Feb-05	3.5	4.0	Technetium-99	0.765	pCi/g	UNV	481103.611	1346474.444
A6WP-B-41	A6WP-B-41^8-R	25-Feb-05	3.5	4.0	Thorium-228	0.368	pCi/g	NV	481103.611	1346474.444

APPENDIX A
PREDESIGN CHARACTERIZATION DATA FOR AREA 7 SILOS AND GENERAL AREA

Boring	Sample ID	Sample Date	Sample Depth (feet)		Parameter	Result	Units	Qualifier	Northing	Easting
			Top	Bottom						
A6WP-B-41	A6WP-B-41^8-R	25-Feb-05	3.5	4.0	Thorium-230	0.5	pCi/g	NV	481103.611	1346474.444
A6WP-B-41	A6WP-B-41^8-R	25-Feb-05	3.5	4.0	Thorium-232	0.397	pCi/g	NV	481103.611	1346474.444
A6WP-B-41	A6WP-B-41^8-R	25-Feb-05	3.5	4.0	Uranium, Total	7.23	mg/kg	NV	481103.611	1346474.444
A6WP-B-45	A6WP-B-45^2-R	18-Mar-05	0.5	1.0	Cesium-137	0.0773	pCi/g	NV	481245.155	1346489.676
A6WP-B-45	A6WP-B-45^2-R	18-Mar-05	0.5	1.0	Radium-228	0.781	pCi/g	NV	481245.155	1346489.676
A6WP-B-45	A6WP-B-45^2-R	18-Mar-05	0.5	1.0	Technetium-99	4.84	pCi/g	NV	481245.155	1346489.676
A6WP-B-45	A6WP-B-45^2-R	18-Mar-05	0.5	1.0	Thorium-228	0.801	pCi/g	NV	481245.155	1346489.676
A6WP-B-45	A6WP-B-45^2-R	18-Mar-05	0.5	1.0	Thorium-230	1.2	pCi/g	NV	481245.155	1346489.676
A6WP-B-45	A6WP-B-45^2-R	18-Mar-05	0.5	1.0	Thorium-232	0.781	pCi/g	NV	481245.155	1346489.676
A6WP-B-45	A6WP-B-45^2-R	18-Mar-05	0.5	1.0	Uranium, Total	5.04	mg/kg	NV	481245.155	1346489.676
A6WP-B-45	A6WP-B-45^8-R	18-Mar-05	3.5	4.0	Cesium-137	0.0476	pCi/g	UNV	481245.155	1346489.676
A6WP-B-45	A6WP-B-45^8-R	18-Mar-05	3.5	4.0	Radium-228	0.83	pCi/g	NV	481245.155	1346489.676
A6WP-B-45	A6WP-B-45^8-R	18-Mar-05	3.5	4.0	Technetium-99	4.87	pCi/g	NV	481245.155	1346489.676
A6WP-B-45	A6WP-B-45^8-R	18-Mar-05	3.5	4.0	Thorium-228	0.835	pCi/g	NV	481245.155	1346489.676
A6WP-B-45	A6WP-B-45^8-R	18-Mar-05	3.5	4.0	Thorium-230	0.944	pCi/g	NV	481245.155	1346489.676
A6WP-B-45	A6WP-B-45^8-R	18-Mar-05	3.5	4.0	Thorium-232	0.83	pCi/g	NV	481245.155	1346489.676
A6WP-B-45	A6WP-B-45^8-R	18-Mar-05	3.5	4.0	Uranium, Total	6.16	mg/kg	NV	481245.155	1346489.676
A6WP-B-46	A6WP-B-46^2-R	18-Mar-05	0.5	1.0	Cesium-137	0.118	pCi/g	NV	481201.808	1346555.498
A6WP-B-46	A6WP-B-46^2-R	18-Mar-05	0.5	1.0	Radium-228	0.772	pCi/g	NV	481201.808	1346555.498
A6WP-B-46	A6WP-B-46^2-R	18-Mar-05	0.5	1.0	Technetium-99	5.43	pCi/g	NV	481201.808	1346555.498
A6WP-B-46	A6WP-B-46^2-R	18-Mar-05	0.5	1.0	Thorium-228	0.87	pCi/g	NV	481201.808	1346555.498
A6WP-B-46	A6WP-B-46^2-R	18-Mar-05	0.5	1.0	Thorium-230	1.39	pCi/g	NV	481201.808	1346555.498
A6WP-B-46	A6WP-B-46^2-R	18-Mar-05	0.5	1.0	Thorium-232	0.772	pCi/g	NV	481201.808	1346555.498
A6WP-B-46	A6WP-B-46^2-R	18-Mar-05	0.5	1.0	Uranium, Total	6.26	mg/kg	NV	481201.808	1346555.498
A6WP-B-46	A6WP-B-46^8-R	18-Mar-05	3.5	4.0	Cesium-137	0.0474	pCi/g	UNV	481201.808	1346555.498
A6WP-B-46	A6WP-B-46^8-R	18-Mar-05	3.5	4.0	Radium-228	0.788	pCi/g	NV	481201.808	1346555.498
A6WP-B-46	A6WP-B-46^8-R	18-Mar-05	3.5	4.0	Technetium-99	6.06	pCi/g	NV	481201.808	1346555.498
A6WP-B-46	A6WP-B-46^8-R	18-Mar-05	3.5	4.0	Thorium-228	1.02	pCi/g	NV	481201.808	1346555.498
A6WP-B-46	A6WP-B-46^8-R	18-Mar-05	3.5	4.0	Thorium-230	1.74	pCi/g	NV	481201.808	1346555.498
A6WP-B-46	A6WP-B-46^8-R	18-Mar-05	3.5	4.0	Thorium-232	0.788	pCi/g	NV	481201.808	1346555.498
A6WP-B-46	A6WP-B-46^8-R	18-Mar-05	3.5	4.0	Uranium, Total	11.6	mg/kg	NV	481201.808	1346555.498
A6WP-B-47	A6WP-B-47^2-R	6-Jan-05	0.5	1.0	Cesium-137	0.0465	pCi/g	U	481085.492	1346634.531
A6WP-B-47	A6WP-B-47^2-R	6-Jan-05	0.5	1.0	Radium-228	0.411	pCi/g	-	481085.492	1346634.531
A6WP-B-47	A6WP-B-47^2-R	6-Jan-05	0.5	1.0	Technetium-99	0.779	pCi/g	U	481085.492	1346634.531
A6WP-B-47	A6WP-B-47^2-R	6-Jan-05	0.5	1.0	Thorium-228	0.685	pCi/g	-	481085.492	1346634.531

Boring	Sample ID	Sample Date	Sample Depth (feet)		Parameter	Result	Units	Qualifier	Northing	Easting
			Top	Bottom						
A6WP-B-47	A6WP-B-47^2-R	6-Jan-05	0.5	1.0	Thorium-230	2.78	pCi/g	J	481085.492	1346634.531
A6WP-B-47	A6WP-B-47^2-R	6-Jan-05	0.5	1.0	Thorium-232	0.411	pCi/g	-	481085.492	1346634.531
A6WP-B-47	A6WP-B-47^2-R	6-Jan-05	0.5	1.0	Uranium, Total	7.77	mg/kg	-	481085.492	1346634.531
A6WP-B-47	A6WP-B-47^8-R	6-Jan-05	3.5	4.0	Cesium-137	0.0625	pCi/g	U	481085.492	1346634.531
A6WP-B-47	A6WP-B-47^8-R	6-Jan-05	3.5	4.0	Radium-228	0.74	pCi/g	-	481085.492	1346634.531
A6WP-B-47	A6WP-B-47^8-R	6-Jan-05	3.5	4.0	Technetium-99	0.792	pCi/g	U	481085.492	1346634.531
A6WP-B-47	A6WP-B-47^8-R	6-Jan-05	3.5	4.0	Thorium-228	0.703	pCi/g	-	481085.492	1346634.531
A6WP-B-47	A6WP-B-47^8-R	6-Jan-05	3.5	4.0	Thorium-230	3.69	pCi/g	J	481085.492	1346634.531
A6WP-B-47	A6WP-B-47^8-R	6-Jan-05	3.5	4.0	Thorium-232	0.74	pCi/g	-	481085.492	1346634.531
A6WP-B-47	A6WP-B-47^8-R	6-Jan-05	3.5	4.0	Uranium, Total	13.9	mg/kg	-	481085.492	1346634.531
A6WP-B-48	A6WP-B-48^2-R	6-Jan-05	0.5	1.0	Cesium-137	0.0578	pCi/g	U	481072.651	1346792.323
A6WP-B-48	A6WP-B-48^2-R	6-Jan-05	0.5	1.0	Radium-228	0.71	pCi/g	-	481072.651	1346792.323
A6WP-B-48	A6WP-B-48^2-R	6-Jan-05	0.5	1.0	Technetium-99	0.776	pCi/g	U	481072.651	1346792.323
A6WP-B-48	A6WP-B-48^2-R	6-Jan-05	0.5	1.0	Thorium-228	0.733	pCi/g	-	481072.651	1346792.323
A6WP-B-48	A6WP-B-48^2-R	6-Jan-05	0.5	1.0	Thorium-230	2.97	pCi/g	J	481072.651	1346792.323
A6WP-B-48	A6WP-B-48^2-R	6-Jan-05	0.5	1.0	Thorium-232	0.71	pCi/g	-	481072.651	1346792.323
A6WP-B-48	A6WP-B-48^2-R	6-Jan-05	0.5	1.0	Uranium, Total	7.6	mg/kg	-	481072.651	1346792.323
A6WP-B-48	A6WP-B-48^8-R	6-Jan-05	3.5	4.0	Cesium-137	0.0525	pCi/g	U	481072.651	1346792.323
A6WP-B-48	A6WP-B-48^8-R	6-Jan-05	3.5	4.0	Radium-228	0.93	pCi/g	-	481072.651	1346792.323
A6WP-B-48	A6WP-B-48^8-R	6-Jan-05	3.5	4.0	Technetium-99	0.808	pCi/g	U	481072.651	1346792.323
A6WP-B-48	A6WP-B-48^8-R	6-Jan-05	3.5	4.0	Thorium-228	1.16	pCi/g	-	481072.651	1346792.323
A6WP-B-48	A6WP-B-48^8-R	6-Jan-05	3.5	4.0	Thorium-230	2.45	pCi/g	J	481072.651	1346792.323
A6WP-B-48	A6WP-B-48^8-R	6-Jan-05	3.5	4.0	Thorium-232	0.93	pCi/g	-	481072.651	1346792.323
A6WP-B-48	A6WP-B-48^8-R	6-Jan-05	3.5	4.0	Uranium, Total	8.11	mg/kg	-	481072.651	1346792.323
A6WP-B-49	A6WP-B-49^2-R	5-Jan-05	0.5	1.0	Cesium-137	0.072	pCi/g	J	481069.54	1346933.055
A6WP-B-49	A6WP-B-49^2-R	5-Jan-05	0.5	1.0	Radium-228	1.2	pCi/g	-	481069.54	1346933.055
A6WP-B-49	A6WP-B-49^2-R	5-Jan-05	0.5	1.0	Technetium-99	0.804	pCi/g	U	481069.54	1346933.055
A6WP-B-49	A6WP-B-49^2-R	5-Jan-05	0.5	1.0	Thorium-228	1.42	pCi/g	-	481069.54	1346933.055
A6WP-B-49	A6WP-B-49^2-R	5-Jan-05	0.5	1.0	Thorium-230	64.9	pCi/g	J	481069.54	1346933.055
A6WP-B-49	A6WP-B-49^2-R	5-Jan-05	0.5	1.0	Thorium-232	1.2	pCi/g	-	481069.54	1346933.055
A6WP-B-49	A6WP-B-49^2-R	5-Jan-05	0.5	1.0	Uranium, Total	103	mg/kg	-	481069.54	1346933.055
A6WP-B-49	A6WP-B-49^3-U	26-Apr-05	1.0	1.5	Uranium, Total	23.4	mg/kg	NV	481069.54	1346933.055
A6WP-B-49	A6WP-B-49^4-U	26-Apr-05	1.5	2.0	Uranium, Total	7.59	mg/kg	NV	481069.54	1346933.055
A6WP-B-49	A6WP-B-49^5-U	26-Apr-05	2.0	2.5	Uranium, Total	2.27	mg/kg	UNV	481069.54	1346933.055
A6WP-B-49	A6WP-B-49^6-U	26-Apr-05	2.5	3.0	Uranium, Total	4.01	mg/kg	NV	481069.54	1346933.055

APPENDIX A
PREDESIGN CHARACTERIZATION DATA FOR AREA 7 SILOS AND GENERAL AREA

Boring	Sample ID	Sample Date	Sample Depth (feet)		Parameter	Result	Units	Qualifier	Northing	Easting
			Top	Bottom						
A6WP-B-49	A6WP-B-49^7-U	26-Apr-05	3.0	3.5	Uranium, Total	4.74	mg/kg	NV	481069.54	1346933.055
A6WP-B-49	A6WP-B-49^8-R	5-Jan-05	3.5	4.0	Cesium-137	0.0511	pCi/g	U	481069.54	1346933.055
A6WP-B-49	A6WP-B-49^8-R	5-Jan-05	3.5	4.0	Radium-228	1.18	pCi/g	-	481069.54	1346933.055
A6WP-B-49	A6WP-B-49^8-R	5-Jan-05	3.5	4.0	Technetium-99	0.904	pCi/g	U	481069.54	1346933.055
A6WP-B-49	A6WP-B-49^8-R	5-Jan-05	3.5	4.0	Thorium-228	1.24	pCi/g	-	481069.54	1346933.055
A6WP-B-49	A6WP-B-49^8-R	5-Jan-05	3.5	4.0	Thorium-230	2.59	pCi/g	J	481069.54	1346933.055
A6WP-B-49	A6WP-B-49^8-R	5-Jan-05	3.5	4.0	Thorium-232	1.18	pCi/g	-	481069.54	1346933.055
A6WP-B-49	A6WP-B-49^8-R	5-Jan-05	3.5	4.0	Uranium, Total	4.4	mg/kg	J	481069.54	1346933.055
A6WP-B-50	A6WP-B-50^2-R	5-Jan-05	0.5	1.0	Cesium-137	0.0511	pCi/g	U	481054.475	1347090.924
A6WP-B-50	A6WP-B-50^2-R	5-Jan-05	0.5	1.0	Radium-228	0.913	pCi/g	-	481054.475	1347090.924
A6WP-B-50	A6WP-B-50^2-R	5-Jan-05	0.5	1.0	Technetium-99	0.813	pCi/g	U	481054.475	1347090.924
A6WP-B-50	A6WP-B-50^2-R	5-Jan-05	0.5	1.0	Thorium-228	0.973	pCi/g	-	481054.475	1347090.924
A6WP-B-50	A6WP-B-50^2-R	5-Jan-05	0.5	1.0	Thorium-230	2.36	pCi/g	J	481054.475	1347090.924
A6WP-B-50	A6WP-B-50^2-R	5-Jan-05	0.5	1.0	Thorium-232	0.913	pCi/g	-	481054.475	1347090.924
A6WP-B-50	A6WP-B-50^2-R	5-Jan-05	0.5	1.0	Uranium, Total	4.45	mg/kg	J	481054.475	1347090.924
A6WP-B-50	A6WP-B-50^8-R	5-Jan-05	3.5	4.0	Cesium-137	0.0511	pCi/g	U	481054.475	1347090.924
A6WP-B-50	A6WP-B-50^8-R	5-Jan-05	3.5	4.0	Radium-228	1.2	pCi/g	-	481054.475	1347090.924
A6WP-B-50	A6WP-B-50^8-R	5-Jan-05	3.5	4.0	Technetium-99	0.888	pCi/g	U	481054.475	1347090.924
A6WP-B-50	A6WP-B-50^8-R	5-Jan-05	3.5	4.0	Thorium-228	1.33	pCi/g	-	481054.475	1347090.924
A6WP-B-50	A6WP-B-50^8-R	5-Jan-05	3.5	4.0	Thorium-230	2.95	pCi/g	J	481054.475	1347090.924
A6WP-B-50	A6WP-B-50^8-R	5-Jan-05	3.5	4.0	Thorium-232	1.2	pCi/g	-	481054.475	1347090.924
A6WP-B-50	A6WP-B-50^8-R	5-Jan-05	3.5	4.0	Uranium, Total	5.66	mg/kg	-	481054.475	1347090.924
A7-B10	A7-B10-1-R	12-Oct-98	0.0	0.5	Technetium-99	1	pCi/g dry	U	480165.57	1347080.78
A7-B11	A7-B11-1-R	12-Oct-98	0.0	0.5	Technetium-99	1.3	pCi/g dry	U	480153.11	1347080.37
A7-B12	A7-B12-1-R	12-Oct-98	0.0	0.5	Technetium-99	1.2	pCi/g dry	U	480190.57	1347080.78
A7-B12	A7-B12-5-R	12-Oct-98	2.0	2.5	Technetium-99	1.1	pCi/g dry	U	480190.57	1347080.78
A7-B12	A7-B12-5-R	12-Oct-98	2.0	2.5	Uranium, Total	12.4	mg/kg	J	480190.57	1347080.78
A7-B13	A7-B13-1-R	12-Oct-98	0.0	0.5	Technetium-99	1	pCi/g dry	U	480170.5	1346880.84
A7-B14	A7-B14-1-R	12-Oct-98	0.0	0.5	Technetium-99	1	pCi/g dry	U	480157.33	1346880.15
A7-B15	A7-B15-1-R	12-Oct-98	0.0	0.5	Technetium-99	1.1	pCi/g dry	U	480195.5	1346880.84
A7-B16	A7-B16-1-R	14-Oct-98	0.0	0.5	Technetium-99	1.2	pCi/g dry	U	480325.34	1346832.08
A7-B16	A7-B16-1-R	14-Oct-98	0.0	0.5	Uranium, Total	94.2	mg/kg	J	480325.34	1346832.08
A7-B17	A7-B17-1-R	14-Oct-98	0.0	0.5	Technetium-99	1.1	pCi/g dry	U	480325.34	1346807.08
A7-B17	A7-B17-4-R	14-Oct-98	1.5	2.0	Technetium-99	1	pCi/g dry	U	480325.34	1346807.08
A7-B17	A7-B17-4-R	14-Oct-98	1.5	2.0	Uranium, Total	5.09	mg/kg	-	480325.34	1346807.08

5982

Boring	Sample ID	Sample Date	Sample Depth (feet)		Parameter	Result	Units	Qualifier	Northing	Easting
			Top	Bottom						
A7-B18	A7-B18-1-R	14-Oct-98	0.0	0.5	Technetium-99	1.2	pCi/g dry	U	480325.34	1346857.08
A7-B19	A7-B19-1-M	14-Oct-98	0.0	0.5	Chromium	9.9	mg/kg	J	480424.1	1346847.76
A7-B19	A7-B19-1-M	14-Oct-98	0.0	0.5	Lead	13.5	mg/kg	-	480424.1	1346847.76
A7-B19	A7-B19-1-R	14-Oct-98	0.0	0.5	Technetium-99	1	pCi/g dry	U	480424.1	1346847.76
A7-B19	A7-B19-1-R	14-Oct-98	0.0	0.5	Uranium, Total	19.7	mg/kg	-	480424.1	1346847.76
A7-B20	A7-B20-1-M	14-Oct-98	0.0	0.5	Chromium	6.7	mg/kg	J	480424.1	1346822.76
A7-B20	A7-B20-1-M	14-Oct-98	0.0	0.5	Lead	10.2	mg/kg	-	480424.1	1346822.76
A7-B20	A7-B20-1-R	14-Oct-98	0.0	0.5	Technetium-99	1.1	pCi/g dry	U	480424.1	1346822.76
A7-B21	A7-B21-1-M	14-Oct-98	0.0	0.5	Chromium	6.4	mg/kg	J	480424.28	1346869.23
A7-B21	A7-B21-1-M	14-Oct-98	0.0	0.5	Lead	10.7	mg/kg	-	480424.28	1346869.23
A7-B21	A7-B21-1-R	14-Oct-98	0.0	0.5	Technetium-99	1.1	pCi/g dry	U	480424.28	1346869.23
A7-B22	A7-B22-1-M	14-Oct-98	0.0	0.5	Chromium	9.5	mg/kg	J	480523.01	1346862.48
A7-B22	A7-B22-1-M	14-Oct-98	0.0	0.5	Lead	14	mg/kg	-	480523.01	1346862.48
A7-B22	A7-B22-1-R	14-Oct-98	0.0	0.5	Technetium-99	1.1	pCi/g dry	U	480523.01	1346862.48
A7-B22	A7-B22-1-R	14-Oct-98	0.0	0.5	Uranium, Total	15.2	mg/kg	-	480523.01	1346862.48
A7-B23	A7-B23-1-M	14-Oct-98	0.0	0.5	Chromium	11.2	mg/kg	J	480523.01	1346837.48
A7-B23	A7-B23-1-M	14-Oct-98	0.0	0.5	Lead	16.2	mg/kg	-	480523.01	1346837.48
A7-B23	A7-B23-1-R	14-Oct-98	0.0	0.5	Technetium-99	1.1	pCi/g dry	U	480523.01	1346837.48
A7-B24	A7-B24-1-M	13-Oct-98	0.0	0.5	Chromium	13.1	mg/kg	J	480523.01	1346887.48
A7-B24	A7-B24-1-M	13-Oct-98	0.0	0.5	Lead	15.9	mg/kg	-	480523.01	1346887.48
A7-B24	A7-B24-1-R	13-Oct-98	0.0	0.5	Technetium-99	1.1	pCi/g dry	U	480523.01	1346887.48
A7-B25	A7-B25-1-R	14-Oct-98	0.0	0.5	Technetium-99	1.1	pCi/g dry	U	480621.92	1346877.2
A7-B25	A7-B25-1-R	14-Oct-98	0.0	0.5	Uranium, Total	16.7	mg/kg	-	480621.92	1346877.2
A7-B26	A7-B26-1-R	14-Oct-98	0.0	0.5	Technetium-99	1.1	pCi/g dry	U	480621.92	1346852.2
A7-B26	A7-B26-1-R	14-Oct-98	0.0	0.5	Uranium, Total	8.57	mg/kg	-	480621.92	1346852.2
A7-B27	A7-B27-1-R	13-Oct-98	0.0	0.5	Technetium-99	1.1	pCi/g dry	U	480621.92	1346902.2
A7-B28	A7-B28-1-R	14-Oct-98	0.0	0.5	Technetium-99	1	pCi/g dry	U	480720.83	1346891.91
A7-B28	A7-B28-1-R	14-Oct-98	0.0	0.5	Uranium, Total	47	mg/kg	-	480720.83	1346891.91
A7-B29	A7-B29-1-R	14-Oct-98	0.0	0.5	Technetium-99	1.1	pCi/g dry	U	480720.83	1346866.91
A7-B29	A7-B29-1-R	14-Oct-98	0.0	0.5	Uranium, Total	9	mg/kg	J	480720.83	1346866.91
A7-B29	A7-B29-3-R	14-Oct-98	1.0	1.5	Technetium-99	1.2	pCi/g dry	U	480720.83	1346866.91
A7-B29	A7-B29-3-R	14-Oct-98	1.0	1.5	Uranium, Total	2.09	mg/kg	J	480720.83	1346866.91
A7-B30	A7-B30-1-R	14-Oct-98	0.0	0.5	Technetium-99	0.99	pCi/g dry	U	480720.83	1346905.8
A7-B30	A7-B30-1-R	14-Oct-98	0.0	0.5	Uranium, Total	34	mg/kg	J	480720.83	1346905.8
A7-B30	A7-B30-4-R	14-Oct-98	1.5	2.0	Technetium-99	1.2	pCi/g dry	U	480720.83	1346905.8

APPENDIX A
PREDESIGN CHARACTERIZATION DATA FOR AREA 7 SILOS AND GENERAL AREA

Boring	Sample ID	Sample Date	Sample Depth (feet)		Parameter	Result	Units	Qualifier	Northing	Easting
			Top	Bottom						
A7-B30	A7-B30-4-R	14-Oct-98	1.5	2.0	Uranium, Total	2.25	mg/kg	J	480720.83	1346905.8
A7-B31	A7-B31-1-R	14-Oct-98	0.0	0.5	Technetium-99	1.3	pCi/g dry	-	480819.74	1346906.63
A7-B31	A7-B31-1-R	14-Oct-98	0.0	0.5	Uranium, Total	73.5	mg/kg	J	480819.74	1346906.63
A7-B32	A7-B32-1-R	14-Oct-98	0.0	0.5	Technetium-99	1.1	pCi/g dry	U	480819.74	1346881.63
A7-B32	A7-B32-1-R	14-Oct-98	0.0	0.5	Uranium, Total	14.3	mg/kg	J	480819.74	1346881.63
A7-B32	A7-B32-3-R	14-Oct-98	1.0	1.5	Technetium-99	0.99	pCi/g dry	U	480819.74	1346881.63
A7-B32	A7-B32-3-R	14-Oct-98	1.0	1.5	Uranium, Total	4.28	mg/kg	J	480819.74	1346881.63
A7-B33	A7-B33-1-R	14-Oct-98	0.0	0.5	Technetium-99	1.1	pCi/g dry	U	480819.74	1346931.63
A7-B33	A7-B33-3-R	14-Oct-98	1.0	1.5	Technetium-99	0.97	pCi/g dry	U	480819.74	1346931.63
A7-B33	A7-B33-3-R	14-Oct-98	1.0	1.5	Uranium, Total	2.08	mg/kg	J	480819.74	1346931.63
A7-B34	A7-B34-1-R	14-Oct-98	0.0	0.5	Technetium-99	1.1	pCi/g dry	U	480919.2	1346915.58
A7-B34	A7-B34-1-R	14-Oct-98	0.0	0.5	Uranium, Total	5.63	mg/kg	J	480919.2	1346915.58
A7-B35	A7-B35-1-R	14-Oct-98	0.0	0.5	Technetium-99	1.2	pCi/g dry	U	480919.2	1346890.58
A7-B35	A7-B35-1-R	14-Oct-98	0.0	0.5	Uranium, Total	5.14	mg/kg	J	480919.2	1346890.58
A7-B35	A7-B35-4-R	14-Oct-98	1.5	2.0	Technetium-99	1.1	pCi/g dry	U	480919.2	1346890.58
A7-B35	A7-B35-4-R	14-Oct-98	1.5	2.0	Uranium, Total	22.2	mg/kg	J	480919.2	1346890.58
A7-B36	A7-B36-1-R	14-Oct-98	0.0	0.5	Technetium-99	1.1	pCi/g dry	U	480919.66	1346932.83
A7-B36	A7-B36-4-R	14-Oct-98	1.5	2.0	Technetium-99	1.1	pCi/g dry	U	480919.66	1346932.83
A7-B36	A7-B36-4-R	14-Oct-98	1.5	2.0	Uranium, Total	1.44	mg/kg	J	480919.66	1346932.83
A7-B37	A7-B37-1-R	6-Oct-98	0.0	0.5	Technetium-99	1.8	pCi/g dry	U	481019.12	1346919.71
A7-B37	A7-B37-1-R	6-Oct-98	0.0	0.5	Uranium, Total	58.8	mg/kg	-	481019.12	1346919.71
A7-B38	A7-B38-1-R	6-Oct-98	0.0	0.5	Technetium-99	1.4	pCi/g dry	U	481019.12	1346894.71
A7-B38	A7-B38-1-R	6-Oct-98	0.0	0.5	Uranium, Total	26.9	mg/kg	J	481019.12	1346894.71
A7-B39	A7-B39-1-R	6-Oct-98	0.0	0.5	Technetium-99	1.2	pCi/g dry	U	481019.12	1346944.71
A7-B39	A7-B39-1-R	6-Oct-98	0.0	0.5	Uranium, Total	7.34	mg/kg	-	481019.12	1346944.71
A7-B39	A7-B39-4-R	6-Oct-98	1.5	2.0	Technetium-99	1.4	pCi/g dry	U	481019.12	1346944.71
A7-B39	A7-B39-4-R	6-Oct-98	1.5	2.0	Uranium, Total	2	mg/kg	-	481019.12	1346944.71
A7-B40	A7-B40-1-R	6-Oct-98	0.0	0.5	Technetium-99	1.2	pCi/g dry	U	481066.86	1346987.49
A7-B40	A7-B40-1-R	6-Oct-98	0.0	0.5	Uranium, Total	18.3	mg/kg	-	481066.86	1346987.49
A7-B41	A7-B41-1-R	6-Oct-98	0.0	0.5	Technetium-99	1.2	pCi/g dry	U	481048.28	1346987.22
A7-B41	A7-B41-1-R	6-Oct-98	0.0	0.5	Uranium, Total	7.59	mg/kg	-	481048.28	1346987.22
A7-B42	A7-B42-1-R	6-Oct-98	0.0	0.5	Technetium-99	1.4	pCi/g dry	U	481094.22	1346988
A7-B42	A7-B42-5-R	6-Oct-98	2.0	2.5	Technetium-99	1.3	pCi/g dry	U	481094.22	1346988
A7-B42	A7-B42-5-R	6-Oct-98	2.0	2.5	Uranium, Total	80.5	mg/kg	-	481094.22	1346988
A7-B43	A7-B43-1-R	6-Oct-98	0.0	0.5	Technetium-99	1.3	pCi/g dry	U	480987.37	1347152.71

5982

APPENDIX A
PREDESIGN CHARACTERIZATION DATA FOR AREA 7 SILOS AND GENERAL AREA

Boring	Sample ID	Sample Date	Sample Depth (feet)		Parameter	Result	Units	Qualifier	Northing	Easting
			Top	Bottom						
A7-B45	A7-B45-1-R	6-Oct-98	0.0	0.5	Technetium-99	1.2	pCi/g dry	U	480970.15	1347134.58
A7-B45	A7-B45-4-R	6-Oct-98	1.5	2.0	Technetium-99	1.2	pCi/g dry	U	480970.15	1347134.58
A7-B45	A7-B45-4-R	6-Oct-98	1.5	2.0	Uranium, Total	10.7	mg/kg	-	480970.15	1347134.58
A7-B46	A7-B46-1-R	6-Oct-98	0.0	0.5	Technetium-99	1.2	pCi/g dry	U	480914.86	1347221.57
A7-B48	A7-B48-1-R	6-Oct-98	0.0	0.5	Technetium-99	1.1	pCi/g dry	U	480897.64	1347203.44
A7-B49	A7-B49-1-R	6-Oct-98	0.0	0.5	Technetium-99	0.99	pCi/g dry	U	480826.36	1347256.68
A7-B51	A7-B51-1-R	8-Oct-98	0.0	0.5	Technetium-99	1.2	pCi/g dry	U	480822.31	1347235.08
A7-B51	A7-B51-3-R	8-Oct-98	1.0	1.5	Technetium-99	1.2	pCi/g dry	U	480822.31	1347235.08
A7-B51	A7-B51-3-R	8-Oct-98	1.0	1.5	Uranium, Total	2.54	mg/kg	J	480822.31	1347235.08
A7-B52	A7-B52-1-R	6-Oct-98	0.0	0.5	Technetium-99	0.97	pCi/g dry	U	480745.42	1347310.28
A7-B54	A7-B54-1-R	6-Oct-98	0.0	0.5	Technetium-99	0.98	pCi/g dry	U	480723.7	1347296.09
A7-B72	A7-B72-1-M	14-Oct-98	0.0	0.5	Chromium	7.1	mg/kg	J	480451.76	1346873.07
A7-B72	A7-B72-1-M	14-Oct-98	0.0	0.5	Lead	9.8	mg/kg	-	480451.76	1346873.07
A7-B72	A7-B72-1-R	14-Oct-98	0.0	0.5	Technetium-99	1.2	pCi/g dry	U	480451.76	1346873.07
A7-B72	A7-B72-2-M	14-Oct-98	0.5	1.0	Chromium	3.6	mg/kg	J	480451.76	1346873.07
A7-B72	A7-B72-2-M	14-Oct-98	0.5	1.0	Lead	34.7	mg/kg	-	480451.76	1346873.07
A7-B72	A7-B72-2-R	14-Oct-98	0.5	1.0	Technetium-99	1.4	pCi/g dry	U	480451.76	1346873.07
A7-B72	A7-B72-2-R	14-Oct-98	0.5	1.0	Uranium, Total	2.39	mg/kg	-	480451.76	1346873.07
A7-B73	A7-B73-1-R	17-Dec-98	0.0	0.5	Technetium-99	1.22	pCi/g dry	U	480138.93	1347106.03
A7-B73	A7-B73-1-R	17-Dec-98	0.0	0.5	Uranium, Total	15.3	mg/kg	-	480138.93	1347106.03
A7-B74	A7-B74-1-R	17-Dec-98	0.0	0.5	Technetium-99	1.28	pCi/g dry	U	480126.05	1347108.79
A7-B74	A7-B74-1-R	17-Dec-98	0.0	0.5	Uranium, Total	10.8	mg/kg	-	480126.05	1347108.79
A7-C1	A7-C1-1-M	20-Oct-98	0.0	0.5	Chromium	9.2	mg/kg	J	480775.62	1346859.22
A7-C1	A7-C1-1-M	20-Oct-98	0.0	0.5	Lead	15.1	mg/kg	-	480775.62	1346859.22
A7-C1	A7-C1-1-R	20-Oct-98	0.0	0.5	Technetium-99	1.2	pCi/g dry	U	480775.62	1346859.22
A7-C10	A7-C10-1-M	28-Oct-98	0.0	0.5	Chromium	12.5	mg/kg	J	481027.58	1346807.55
A7-C10	A7-C10-1-M	28-Oct-98	0.0	0.5	Lead	19.2	mg/kg	UJ	481027.58	1346807.55
A7-C10	A7-C10-1-R	28-Oct-98	0.0	0.5	Technetium-99	1.5	pCi/g dry	U	481027.58	1346807.55
A7-C11	A7-C11-1-M	28-Oct-98	0.0	0.5	Chromium	11.9	mg/kg	J	481027.58	1346838.59
A7-C11	A7-C11-1-M	28-Oct-98	0.0	0.5	Lead	21.6	mg/kg	UJ	481027.58	1346838.59
A7-C11	A7-C11-1-R	28-Oct-98	0.0	0.5	Technetium-99	1.3	pCi/g dry	U	481027.58	1346838.59
A7-C12	A7-C12-1-M	28-Oct-98	0.5	1.0	Chromium	9.7	mg/kg	J	481027.58	1346869.7
A7-C12	A7-C12-1-M	28-Oct-98	0.5	1.0	Lead	14.3	mg/kg	UJ	481027.58	1346869.7
A7-C12	A7-C12-1-R	28-Oct-98	0.5	1.0	Technetium-99	1.4	pCi/g dry	U	481027.58	1346869.7
A7-C12	A7-C12-1-R	28-Oct-98	0.5	1.0	Uranium, Total	18	mg/kg	-	481027.58	1346869.7

APPENDIX A
PREDESIGN CHARACTERIZATION DATA FOR AREA 7 SILOS AND GENERAL AREA

Boring	Sample ID	Sample Date	Sample Depth (feet)		Parameter	Result	Units	Qualifier	Northing	Easting
			Top	Bottom						
A7-C2	A7-C2-1-M	28-Oct-98	0.0	0.5	Chromium	13.7	mg/kg	J	480826.27	1346857.91
A7-C2	A7-C2-1-M	28-Oct-98	0.0	0.5	Lead	21.1	mg/kg	UJ	480826.27	1346857.91
A7-C2	A7-C2-1-R	28-Oct-98	0.0	0.5	Technetium-99	1.6	pCi/g dry	U	480826.27	1346857.91
A7-C3	A7-C3-1-M	20-Oct-98	0.0	0.5	Chromium	11	mg/kg	J	480877.58	1346838.59
A7-C3	A7-C3-1-M	20-Oct-98	0.0	0.5	Lead	12.7	mg/kg	-	480877.58	1346838.59
A7-C3	A7-C3-1-R	20-Oct-98	0.0	0.5	Technetium-99	1.1	pCi/g dry	U	480877.58	1346838.59
A7-C4	A7-C4-1-M	28-Oct-98	0.0	0.5	Chromium	9.3	mg/kg	J	480877.58	1346869.7
A7-C4	A7-C4-1-M	28-Oct-98	0.0	0.5	Lead	15.6	mg/kg	UJ	480877.58	1346869.7
A7-C4	A7-C4-1-R	28-Oct-98	0.0	0.5	Technetium-99	2.4	pCi/g dry	-	480877.58	1346869.7
A7-C5	A7-C5-1-M	20-Oct-98	0.0	0.5	Chromium	8.9	mg/kg	J	480927.58	1346838.59
A7-C5	A7-C5-1-M	20-Oct-98	0.0	0.5	Lead	11.1	mg/kg	-	480927.58	1346838.59
A7-C5	A7-C5-1-R	20-Oct-98	0.0	0.5	Technetium-99	1.1	pCi/g dry	U	480927.58	1346838.59
A7-C6	A7-C6-1-M	28-Oct-98	0.0	0.5	Chromium	14.6	mg/kg	J	480927.58	1346869.7
A7-C6	A7-C6-1-M	28-Oct-98	0.0	0.5	Lead	14.6	mg/kg	UJ	480927.58	1346869.7
A7-C6	A7-C6-1-R	28-Oct-98	0.0	0.5	Technetium-99	1.3	pCi/g dry	U	480927.58	1346869.7
A7-C6	A7-C6-1-R	28-Oct-98	0.0	0.5	Uranium, Total	31.7	mg/kg	-	480927.58	1346869.7
A7-C7	A7-C7-1-M	20-Oct-98	0.0	0.5	Chromium	7.7	mg/kg	J	480977.58	1346807.55
A7-C7	A7-C7-1-M	20-Oct-98	0.0	0.5	Lead	10.3	mg/kg	-	480977.58	1346807.55
A7-C7	A7-C7-1-R	20-Oct-98	0.0	0.5	Technetium-99	1.1	pCi/g dry	U	480977.58	1346807.55
A7-C8	A7-C8-1-M	28-Oct-98	0.0	0.5	Chromium	9.6	mg/kg	J	480977.58	1346838.59
A7-C8	A7-C8-1-M	28-Oct-98	0.0	0.5	Lead	27.4	mg/kg	J	480977.58	1346838.59
A7-C8	A7-C8-1-R	28-Oct-98	0.0	0.5	Technetium-99	1.6	pCi/g dry	U	480977.58	1346838.59
A7-C9	A7-C9-1-M	28-Oct-98	0.5	1.0	Chromium	7.6	mg/kg	J	480977.58	1346869.7
A7-C9	A7-C9-1-M	28-Oct-98	0.5	1.0	Lead	12.1	mg/kg	UJ	480977.58	1346869.7
A7-C9	A7-C9-1-R	28-Oct-98	0.5	1.0	Technetium-99	1.3	pCi/g dry	U	480977.58	1346869.7
A7-C9	A7-C9-1-R	28-Oct-98	0.5	1.0	Uranium, Total	5.64	mg/kg	-	480977.58	1346869.7
A7-C-AR1	A7-C-AR1^6-RMP	17-Apr-05	2.5	3.0	Arsenic	15.8	mg/kg	J	479853.958	1347957.861
A7-C-AR1	A7-C-AR1^6-RMP	17-Apr-05	2.5	3.0	Beryllium	0.838	mg/kg	-	479853.958	1347957.861
A7-C-AR1	A7-C-AR1^6-RMP	17-Apr-05	2.5	3.0	Lead	15.6	mg/kg	J	479853.958	1347957.861
A7-C-AR1	A7-C-AR1^6-RMP	17-Apr-05	2.5	3.0	Manganese	248	mg/kg	J	479853.958	1347957.861
A7-C-AR1	A7-C-AR1^6-RMP	17-Apr-05	2.5	3.0	Aroclor-1254	0.0038	ug/kg	U	479853.958	1347957.861
A7-C-AR1	A7-C-AR1^6-RMP	17-Apr-05	2.5	3.0	Aroclor-1260	0.0038	ug/kg	U	479853.958	1347957.861
A7-C-AR1	A7-C-AR1^6-RMP	17-Apr-05	2.5	3.0	Dieldrin	0.00153	ug/kg	U	479853.958	1347957.861
A7-C-AR1	A7-C-AR1^6-RMP	17-Apr-05	2.5	3.0	Cesium-137	0.0478	pCi/g	U	479853.958	1347957.861
A7-C-AR1	A7-C-AR1^6-RMP	17-Apr-05	2.5	3.0	Lead-210	1.3	pCi/g	J	479853.958	1347957.861

5982

Boring	Sample ID	Sample Date	Sample Depth (feet)		Parameter	Result	Units	Qualifier	Northing	Easting
			Top	Bottom						
A7-C-AR1	A7-C-AR1^6-RMP	17-Apr-05	2.5	3.0	Radium-226	1.27	pCi/g	-	479853.958	1347957.861
A7-C-AR1	A7-C-AR1^6-RMP	17-Apr-05	2.5	3.0	Radium-228	1.19	pCi/g	-	479853.958	1347957.861
A7-C-AR1	A7-C-AR1^6-RMP	17-Apr-05	2.5	3.0	Technetium-99	0.814	pCi/g	U	479853.958	1347957.861
A7-C-AR1	A7-C-AR1^6-RMP	17-Apr-05	2.5	3.0	Thorium-228	1.23	pCi/g	-	479853.958	1347957.861
A7-C-AR1	A7-C-AR1^6-RMP	17-Apr-05	2.5	3.0	Thorium-230	1.36	pCi/g	J	479853.958	1347957.861
A7-C-AR1	A7-C-AR1^6-RMP	17-Apr-05	2.5	3.0	Thorium-232	1.19	pCi/g	-	479853.958	1347957.861
A7-C-AR1	A7-C-AR1^6-RMP	17-Apr-05	2.5	3.0	Uranium, Total	2.9	mg/kg	J	479853.958	1347957.861
A7-C-AR10	A7-C-AR10^1-RMP	17-Apr-05	0.0	0.5	Arsenic	6.13	mg/kg	J	478794.501	1348053.789
A7-C-AR10	A7-C-AR10^1-RMP	17-Apr-05	0.0	0.5	Beryllium	0.7	mg/kg	-	478794.501	1348053.789
A7-C-AR10	A7-C-AR10^1-RMP	17-Apr-05	0.0	0.5	Lead	10.8	mg/kg	J	478794.501	1348053.789
A7-C-AR10	A7-C-AR10^1-RMP	17-Apr-05	0.0	0.5	Manganese	449	mg/kg	J	478794.501	1348053.789
A7-C-AR10	A7-C-AR10^1-RMP	17-Apr-05	0.0	0.5	Aroclor-1254	0.0047	ug/kg	-	478794.501	1348053.789
A7-C-AR10	A7-C-AR10^1-RMP	17-Apr-05	0.0	0.5	Aroclor-1260	0.0031	ug/kg	J	478794.501	1348053.789
A7-C-AR10	A7-C-AR10^1-RMP	17-Apr-05	0.0	0.5	Dieldrin	0.00157	ug/kg	U	478794.501	1348053.789
A7-C-AR10	A7-C-AR10^1-RMP	17-Apr-05	0.0	0.5	Cesium-137	0.0539	pCi/g	U	478794.501	1348053.789
A7-C-AR10	A7-C-AR10^1-RMP	17-Apr-05	0.0	0.5	Lead-210	0.828	pCi/g	J	478794.501	1348053.789
A7-C-AR10	A7-C-AR10^1-RMP	17-Apr-05	0.0	0.5	Radium-226	0.894	pCi/g	-	478794.501	1348053.789
A7-C-AR10	A7-C-AR10^1-RMP	17-Apr-05	0.0	0.5	Radium-228	0.848	pCi/g	-	478794.501	1348053.789
A7-C-AR10	A7-C-AR10^1-RMP	17-Apr-05	0.0	0.5	Technetium-99	0.809	pCi/g	U	478794.501	1348053.789
A7-C-AR10	A7-C-AR10^1-RMP	17-Apr-05	0.0	0.5	Thorium-228	0.907	pCi/g	-	478794.501	1348053.789
A7-C-AR10	A7-C-AR10^1-RMP	17-Apr-05	0.0	0.5	Thorium-230	0.922	pCi/g	J	478794.501	1348053.789
A7-C-AR10	A7-C-AR10^1-RMP	17-Apr-05	0.0	0.5	Thorium-232	0.848	pCi/g	-	478794.501	1348053.789
A7-C-AR10	A7-C-AR10^1-RMP	17-Apr-05	0.0	0.5	Uranium, Total	2.75	mg/kg	J	478794.501	1348053.789
A7-C-AR11	A7-C-AR11^1-RMP	17-Apr-05	0.0	0.5	Arsenic	7.02	mg/kg	J	478778.578	1348201.733
A7-C-AR11	A7-C-AR11^1-RMP	17-Apr-05	0.0	0.5	Beryllium	0.491	mg/kg	-	478778.578	1348201.733
A7-C-AR11	A7-C-AR11^1-RMP	17-Apr-05	0.0	0.5	Lead	9.91	mg/kg	J	478778.578	1348201.733
A7-C-AR11	A7-C-AR11^1-RMP	17-Apr-05	0.0	0.5	Manganese	503	mg/kg	-	478778.578	1348201.733
A7-C-AR11	A7-C-AR11^1-RMP	17-Apr-05	0.0	0.5	Aroclor-1254	0.0028	ug/kg	J	478778.578	1348201.733
A7-C-AR11	A7-C-AR11^1-RMP	17-Apr-05	0.0	0.5	Aroclor-1260	0.0037	ug/kg	U	478778.578	1348201.733
A7-C-AR11	A7-C-AR11^1-RMP	17-Apr-05	0.0	0.5	Dieldrin	0.00147	ug/kg	U	478778.578	1348201.733
A7-C-AR11	A7-C-AR11^1-RMP	17-Apr-05	0.0	0.5	Cesium-137	0.0552	pCi/g	U	478778.578	1348201.733
A7-C-AR11	A7-C-AR11^1-RMP	17-Apr-05	0.0	0.5	Lead-210	0.86	pCi/g	U	478778.578	1348201.733
A7-C-AR11	A7-C-AR11^1-RMP	17-Apr-05	0.0	0.5	Radium-226	0.922	pCi/g	-	478778.578	1348201.733
A7-C-AR11	A7-C-AR11^1-RMP	17-Apr-05	0.0	0.5	Radium-228	0.823	pCi/g	-	478778.578	1348201.733
A7-C-AR11	A7-C-AR11^1-RMP	17-Apr-05	0.0	0.5	Technetium-99	0.758	pCi/g	U	478778.578	1348201.733

APPENDIX A
PREDESIGN CHARACTERIZATION DATA FOR AREA 7 SILOS AND GENERAL AREA

Boring	Sample ID	Sample Date	Sample Depth (feet)		Parameter	Result	Units	Qualifier	Northing	Easting
			Top	Bottom						
A7-C-AR11	A7-C-AR11^1-RMP	17-Apr-05	0.0	0.5	Thorium-228	0.856	pCi/g	-	478778.578	1348201.733
A7-C-AR11	A7-C-AR11^1-RMP	17-Apr-05	0.0	0.5	Thorium-230	0.957	pCi/g	J	478778.578	1348201.733
A7-C-AR11	A7-C-AR11^1-RMP	17-Apr-05	0.0	0.5	Thorium-232	0.823	pCi/g	-	478778.578	1348201.733
A7-C-AR11	A7-C-AR11^1-RMP	17-Apr-05	0.0	0.5	Uranium, Total	5.05	mg/kg	J	478778.578	1348201.733
A7-C-AR12	A7-C-AR12^1-RMP	17-Apr-05	0.0	0.5	Arsenic	6.42	mg/kg	J	478782.994	1348305.463
A7-C-AR12	A7-C-AR12^1-RMP	17-Apr-05	0.0	0.5	Beryllium	0.615	mg/kg	-	478782.994	1348305.463
A7-C-AR12	A7-C-AR12^1-RMP	17-Apr-05	0.0	0.5	Lead	11.6	mg/kg	J	478782.994	1348305.463
A7-C-AR12	A7-C-AR12^1-RMP	17-Apr-05	0.0	0.5	Manganese	389	mg/kg	J	478782.994	1348305.463
A7-C-AR12	A7-C-AR12^1-RMP	17-Apr-05	0.0	0.5	Aroclor-1254	0.00061	ug/kg	J	478782.994	1348305.463
A7-C-AR12	A7-C-AR12^1-RMP	17-Apr-05	0.0	0.5	Aroclor-1260	0.0036	ug/kg	U	478782.994	1348305.463
A7-C-AR12	A7-C-AR12^1-RMP	17-Apr-05	0.0	0.5	Dieldrin	0.00145	ug/kg	U	478782.994	1348305.463
A7-C-AR12	A7-C-AR12^1-RMP	17-Apr-05	0.0	0.5	Cesium-137	0.0522	pCi/g	U	478782.994	1348305.463
A7-C-AR12	A7-C-AR12^1-RMP	17-Apr-05	0.0	0.5	Lead-210	0.762	pCi/g	U	478782.994	1348305.463
A7-C-AR12	A7-C-AR12^1-RMP	17-Apr-05	0.0	0.5	Radium-226	0.846	pCi/g	-	478782.994	1348305.463
A7-C-AR12	A7-C-AR12^1-RMP	17-Apr-05	0.0	0.5	Radium-228	0.92	pCi/g	-	478782.994	1348305.463
A7-C-AR12	A7-C-AR12^1-RMP	17-Apr-05	0.0	0.5	Technetium-99	0.769	pCi/g	U	478782.994	1348305.463
A7-C-AR12	A7-C-AR12^1-RMP	17-Apr-05	0.0	0.5	Thorium-228	0.921	pCi/g	-	478782.994	1348305.463
A7-C-AR12	A7-C-AR12^1-RMP	17-Apr-05	0.0	0.5	Thorium-230	0.974	pCi/g	J	478782.994	1348305.463
A7-C-AR12	A7-C-AR12^1-RMP	17-Apr-05	0.0	0.5	Thorium-232	0.92	pCi/g	-	478782.994	1348305.463
A7-C-AR12	A7-C-AR12^1-RMP	17-Apr-05	0.0	0.5	Uranium, Total	3.72	mg/kg	J	478782.994	1348305.463
A7-C-AR13	A7-C-AR13^1-RMP	17-Apr-05	0.0	0.5	Arsenic	4.6	mg/kg	J	478799.038	1348467.764
A7-C-AR13	A7-C-AR13^1-RMP	17-Apr-05	0.0	0.5	Beryllium	0.6	mg/kg	-	478799.038	1348467.764
A7-C-AR13	A7-C-AR13^1-RMP	17-Apr-05	0.0	0.5	Lead	10.4	mg/kg	J	478799.038	1348467.764
A7-C-AR13	A7-C-AR13^1-RMP	17-Apr-05	0.0	0.5	Manganese	511	mg/kg	-	478799.038	1348467.764
A7-C-AR13	A7-C-AR13^1-RMP	17-Apr-05	0.0	0.5	Aroclor-1254	0.0037	ug/kg	U	478799.038	1348467.764
A7-C-AR13	A7-C-AR13^1-RMP	17-Apr-05	0.0	0.5	Aroclor-1260	0.0037	ug/kg	U	478799.038	1348467.764
A7-C-AR13	A7-C-AR13^1-RMP	17-Apr-05	0.0	0.5	Dieldrin	0.00148	ug/kg	U	478799.038	1348467.764
A7-C-AR13	A7-C-AR13^1-RMP	17-Apr-05	0.0	0.5	Cesium-137	0.0477	pCi/g	U	478799.038	1348467.764
A7-C-AR13	A7-C-AR13^1-RMP	17-Apr-05	0.0	0.5	Lead-210	1.36	pCi/g	J	478799.038	1348467.764
A7-C-AR13	A7-C-AR13^1-RMP	17-Apr-05	0.0	0.5	Radium-226	0.846	pCi/g	-	478799.038	1348467.764
A7-C-AR13	A7-C-AR13^1-RMP	17-Apr-05	0.0	0.5	Radium-228	0.754	pCi/g	-	478799.038	1348467.764
A7-C-AR13	A7-C-AR13^1-RMP	17-Apr-05	0.0	0.5	Technetium-99	0.831	pCi/g	U	478799.038	1348467.764
A7-C-AR13	A7-C-AR13^1-RMP	17-Apr-05	0.0	0.5	Thorium-228	0.795	pCi/g	-	478799.038	1348467.764
A7-C-AR13	A7-C-AR13^1-RMP	17-Apr-05	0.0	0.5	Thorium-230	1.16	pCi/g	J	478799.038	1348467.764
A7-C-AR13	A7-C-AR13^1-RMP	17-Apr-05	0.0	0.5	Thorium-232	0.754	pCi/g	-	478799.038	1348467.764

5982

Boring	Sample ID	Sample Date	Sample Depth (feet)		Parameter	Result	Units	Qualifier	Northing	Easting
			Top	Bottom						
A7-C-AR13	A7-C-AR13^1-RMP	17-Apr-05	0.0	0.5	Uranium, Total	5.51	mg/kg	J	478799.038	1348467.764
A7-C-AR15	A7-C-AR15^1-RMP	17-Apr-05	0.0	0.5	Arsenic	12.3	mg/kg	J	478901.622	1348730.242
A7-C-AR15	A7-C-AR15^1-RMP	17-Apr-05	0.0	0.5	Beryllium	0.568	mg/kg	-	478901.622	1348730.242
A7-C-AR15	A7-C-AR15^1-RMP	17-Apr-05	0.0	0.5	Lead	9.19	mg/kg	J	478901.622	1348730.242
A7-C-AR15	A7-C-AR15^1-RMP	17-Apr-05	0.0	0.5	Manganese	458	mg/kg	J	478901.622	1348730.242
A7-C-AR15	A7-C-AR15^1-RMP	17-Apr-05	0.0	0.5	Aroclor-1254	0.0037	ug/kg	U	478901.622	1348730.242
A7-C-AR15	A7-C-AR15^1-RMP	17-Apr-05	0.0	0.5	Aroclor-1260	0.0037	ug/kg	U	478901.622	1348730.242
A7-C-AR15	A7-C-AR15^1-RMP	17-Apr-05	0.0	0.5	Dieldrin	0.00147	ug/kg	U	478901.622	1348730.242
A7-C-AR15	A7-C-AR15^1-RMP	17-Apr-05	0.0	0.5	Cesium-137	0.0537	pCi/g	U	478901.622	1348730.242
A7-C-AR15	A7-C-AR15^1-RMP	17-Apr-05	0.0	0.5	Lead-210	0.877	pCi/g	U	478901.622	1348730.242
A7-C-AR15	A7-C-AR15^1-RMP	17-Apr-05	0.0	0.5	Radium-226	0.952	pCi/g	-	478901.622	1348730.242
A7-C-AR15	A7-C-AR15^1-RMP	17-Apr-05	0.0	0.5	Radium-228	0.731	pCi/g	-	478901.622	1348730.242
A7-C-AR15	A7-C-AR15^1-RMP	17-Apr-05	0.0	0.5	Technetium-99	0.844	pCi/g	U	478901.622	1348730.242
A7-C-AR15	A7-C-AR15^1-RMP	17-Apr-05	0.0	0.5	Thorium-228	0.746	pCi/g	-	478901.622	1348730.242
A7-C-AR15	A7-C-AR15^1-RMP	17-Apr-05	0.0	0.5	Thorium-230	0.867	pCi/g	J	478901.622	1348730.242
A7-C-AR15	A7-C-AR15^1-RMP	17-Apr-05	0.0	0.5	Thorium-232	0.731	pCi/g	-	478901.622	1348730.242
A7-C-AR15	A7-C-AR15^1-RMP	17-Apr-05	0.0	0.5	Uranium, Total	2.92	mg/kg	J	478901.622	1348730.242
A7-C-AR16	A7-C-AR16^1-RMP	17-Apr-05	0.0	0.5	Arsenic	5.49	mg/kg	J	478962.193	1348869.507
A7-C-AR16	A7-C-AR16^1-RMP	17-Apr-05	0.0	0.5	Beryllium	0.578	mg/kg	-	478962.193	1348869.507
A7-C-AR16	A7-C-AR16^1-RMP	17-Apr-05	0.0	0.5	Lead	20.7	mg/kg	J	478962.193	1348869.507
A7-C-AR16	A7-C-AR16^1-RMP	17-Apr-05	0.0	0.5	Manganese	410	mg/kg	J	478962.193	1348869.507
A7-C-AR16	A7-C-AR16^1-RMP	17-Apr-05	0.0	0.5	Aroclor-1254	0.0012	ug/kg	J	478962.193	1348869.507
A7-C-AR16	A7-C-AR16^1-RMP	17-Apr-05	0.0	0.5	Aroclor-1260	0.0038	ug/kg	U	478962.193	1348869.507
A7-C-AR16	A7-C-AR16^1-RMP	17-Apr-05	0.0	0.5	Dieldrin	0.00154	ug/kg	U	478962.193	1348869.507
A7-C-AR16	A7-C-AR16^1-RMP	17-Apr-05	0.0	0.5	Cesium-137	0.0605	pCi/g	U	478962.193	1348869.507
A7-C-AR16	A7-C-AR16^1-RMP	17-Apr-05	0.0	0.5	Lead-210	0.976	pCi/g	U	478962.193	1348869.507
A7-C-AR16	A7-C-AR16^1-RMP	17-Apr-05	0.0	0.5	Radium-226	1.23	pCi/g	-	478962.193	1348869.507
A7-C-AR16	A7-C-AR16^1-RMP	17-Apr-05	0.0	0.5	Radium-228	1.23	pCi/g	-	478962.193	1348869.507
A7-C-AR16	A7-C-AR16^1-RMP	17-Apr-05	0.0	0.5	Technetium-99	0.784	pCi/g	U	478962.193	1348869.507
A7-C-AR16	A7-C-AR16^1-RMP	17-Apr-05	0.0	0.5	Thorium-228	1.37	pCi/g	-	478962.193	1348869.507
A7-C-AR16	A7-C-AR16^1-RMP	17-Apr-05	0.0	0.5	Thorium-230	1.13	pCi/g	J	478962.193	1348869.507
A7-C-AR16	A7-C-AR16^1-RMP	17-Apr-05	0.0	0.5	Thorium-232	1.23	pCi/g	-	478962.193	1348869.507
A7-C-AR16	A7-C-AR16^1-RMP	17-Apr-05	0.0	0.5	Uranium, Total	12.1	mg/kg	-	478962.193	1348869.507
A7-C-AR1F	A7-C-AR1F^1-RMP	17-Apr-05	0.0	0.5	Arsenic	6.36	mg/kg	J	479853.958	1347957.861
A7-C-AR1F	A7-C-AR1F^1-RMP	17-Apr-05	0.0	0.5	Beryllium	0.771	mg/kg	-	479853.958	1347957.861

APPENDIX A
PREDESIGN CHARACTERIZATION DATA FOR AREA 7 SILOS AND GENERAL AREA

Boring	Sample ID	Sample Date	Sample Depth (feet)		Parameter	Result	Units	Qualifier	Northing	Easting
			Top	Bottom						
A7-C-AR1F	A7-C-AR1F^1-RMP	17-Apr-05	0.0	0.5	Lead	15.6	mg/kg	J	479853.958	1347957.861
A7-C-AR1F	A7-C-AR1F^1-RMP	17-Apr-05	0.0	0.5	Manganese	562	mg/kg	-	479853.958	1347957.861
A7-C-AR1F	A7-C-AR1F^1-RMP	17-Apr-05	0.0	0.5	Aroclor-1254	0.0039	ug/kg	U	479853.958	1347957.861
A7-C-AR1F	A7-C-AR1F^1-RMP	17-Apr-05	0.0	0.5	Aroclor-1260	0.0039	ug/kg	U	479853.958	1347957.861
A7-C-AR1F	A7-C-AR1F^1-RMP	17-Apr-05	0.0	0.5	Dieldrin	0.00155	ug/kg	U	479853.958	1347957.861
A7-C-AR1F	A7-C-AR1F^1-RMP	17-Apr-05	0.0	0.5	Cesium-137	0.0574	pCi/g	U	479853.958	1347957.861
A7-C-AR1F	A7-C-AR1F^1-RMP	17-Apr-05	0.0	0.5	Lead-210	0.816	pCi/g	U	479853.958	1347957.861
A7-C-AR1F	A7-C-AR1F^1-RMP	17-Apr-05	0.0	0.5	Radium-226	1.35	pCi/g	-	479853.958	1347957.861
A7-C-AR1F	A7-C-AR1F^1-RMP	17-Apr-05	0.0	0.5	Radium-228	1.04	pCi/g	-	479853.958	1347957.861
A7-C-AR1F	A7-C-AR1F^1-RMP	17-Apr-05	0.0	0.5	Technetium-99	0.765	pCi/g	U	479853.958	1347957.861
A7-C-AR1F	A7-C-AR1F^1-RMP	17-Apr-05	0.0	0.5	Thorium-228	1.03	pCi/g	-	479853.958	1347957.861
A7-C-AR1F	A7-C-AR1F^1-RMP	17-Apr-05	0.0	0.5	Thorium-230	1.42	pCi/g	J	479853.958	1347957.861
A7-C-AR1F	A7-C-AR1F^1-RMP	17-Apr-05	0.0	0.5	Thorium-232	1.04	pCi/g	-	479853.958	1347957.861
A7-C-AR1F	A7-C-AR1F^1-RMP	17-Apr-05	0.0	0.5	Uranium, Total	3.81	mg/kg	J	479853.958	1347957.861
A7-C-AR3	A7-C-AR3^4-RMP	17-Apr-05	1.5	2.0	Arsenic	8.46	mg/kg	J	479672.749	1347815.916
A7-C-AR3	A7-C-AR3^4-RMP	17-Apr-05	1.5	2.0	Beryllium	1.07	mg/kg	-	479672.749	1347815.916
A7-C-AR3	A7-C-AR3^4-RMP	17-Apr-05	1.5	2.0	Lead	18.3	mg/kg	J	479672.749	1347815.916
A7-C-AR3	A7-C-AR3^4-RMP	17-Apr-05	1.5	2.0	Manganese	856	mg/kg	-	479672.749	1347815.916
A7-C-AR3	A7-C-AR3^4-RMP	17-Apr-05	1.5	2.0	Aroclor-1254	0.0039	ug/kg	U	479672.749	1347815.916
A7-C-AR3	A7-C-AR3^4-RMP	17-Apr-05	1.5	2.0	Aroclor-1260	0.0039	ug/kg	U	479672.749	1347815.916
A7-C-AR3	A7-C-AR3^4-RMP	17-Apr-05	1.5	2.0	Dieldrin	0.00156	ug/kg	U	479672.749	1347815.916
A7-C-AR3	A7-C-AR3^4-RMP	17-Apr-05	1.5	2.0	Cesium-137	0.0515	pCi/g	U	479672.749	1347815.916
A7-C-AR3	A7-C-AR3^4-RMP	17-Apr-05	1.5	2.0	Lead-210	0.836	pCi/g	U	479672.749	1347815.916
A7-C-AR3	A7-C-AR3^4-RMP	17-Apr-05	1.5	2.0	Radium-226	1.38	pCi/g	-	479672.749	1347815.916
A7-C-AR3	A7-C-AR3^4-RMP	17-Apr-05	1.5	2.0	Radium-228	1.31	pCi/g	-	479672.749	1347815.916
A7-C-AR3	A7-C-AR3^4-RMP	17-Apr-05	1.5	2.0	Technetium-99	0.809	pCi/g	U	479672.749	1347815.916
A7-C-AR3	A7-C-AR3^4-RMP	17-Apr-05	1.5	2.0	Thorium-228	1.36	pCi/g	-	479672.749	1347815.916
A7-C-AR3	A7-C-AR3^4-RMP	17-Apr-05	1.5	2.0	Thorium-230	1.24	pCi/g	J	479672.749	1347815.916
A7-C-AR3	A7-C-AR3^4-RMP	17-Apr-05	1.5	2.0	Thorium-232	1.31	pCi/g	-	479672.749	1347815.916
A7-C-AR3	A7-C-AR3^4-RMP	17-Apr-05	1.5	2.0	Uranium, Total	4.51	mg/kg	J	479672.749	1347815.916
A7-C-AR3F	A7-C-AR3F^1-RMP	17-Apr-05	0.0	0.5	Arsenic	5.7	mg/kg	J	479672.749	1347815.916
A7-C-AR3F	A7-C-AR3F^1-RMP	17-Apr-05	0.0	0.5	Beryllium	0.625	mg/kg	-	479672.749	1347815.916
A7-C-AR3F	A7-C-AR3F^1-RMP	17-Apr-05	0.0	0.5	Lead	11.1	mg/kg	J	479672.749	1347815.916
A7-C-AR3F	A7-C-AR3F^1-RMP	17-Apr-05	0.0	0.5	Manganese	418	mg/kg	J	479672.749	1347815.916
A7-C-AR3F	A7-C-AR3F^1-RMP	17-Apr-05	0.0	0.5	Aroclor-1254	0.0011	ug/kg	J	479672.749	1347815.916

5982

Boring	Sample ID	Sample Date	Sample Depth (feet)		Parameter	Result	Units	Qualifier	Northing	Easting
			Top	Bottom						
A7-C-AR3F	A7-C-AR3F^1-RMP	17-Apr-05	0.0	0.5	Aroclor-1260	0.0037	ug/kg	U	479672.749	1347815.916
A7-C-AR3F	A7-C-AR3F^1-RMP	17-Apr-05	0.0	0.5	Dieldrin	0.00147	ug/kg	U	479672.749	1347815.916
A7-C-AR3F	A7-C-AR3F^1-RMP	17-Apr-05	0.0	0.5	Cesium-137	0.0476	pCi/g	U	479672.749	1347815.916
A7-C-AR3F	A7-C-AR3F^1-RMP	17-Apr-05	0.0	0.5	Lead-210	0.741	pCi/g	U	479672.749	1347815.916
A7-C-AR3F	A7-C-AR3F^1-RMP	17-Apr-05	0.0	0.5	Radium-226	1.04	pCi/g	-	479672.749	1347815.916
A7-C-AR3F	A7-C-AR3F^1-RMP	17-Apr-05	0.0	0.5	Radium-228	0.898	pCi/g	-	479672.749	1347815.916
A7-C-AR3F	A7-C-AR3F^1-RMP	17-Apr-05	0.0	0.5	Technetium-99	0.762	pCi/g	U	479672.749	1347815.916
A7-C-AR3F	A7-C-AR3F^1-RMP	17-Apr-05	0.0	0.5	Thorium-228	0.97	pCi/g	-	479672.749	1347815.916
A7-C-AR3F	A7-C-AR3F^1-RMP	17-Apr-05	0.0	0.5	Thorium-230	1.48	pCi/g	J	479672.749	1347815.916
A7-C-AR3F	A7-C-AR3F^1-RMP	17-Apr-05	0.0	0.5	Thorium-232	0.898	pCi/g	-	479672.749	1347815.916
A7-C-AR3F	A7-C-AR3F^1-RMP	17-Apr-05	0.0	0.5	Uranium, Total	5.89	mg/kg	J	479672.749	1347815.916
A7-C-AR4	A7-C-AR4^1-RMP	17-Apr-05	0.0	0.5	Arsenic	5.34	mg/kg	J	479488.358	1347749.777
A7-C-AR4	A7-C-AR4^1-RMP	17-Apr-05	0.0	0.5	Beryllium	0.601	mg/kg	-	479488.358	1347749.777
A7-C-AR4	A7-C-AR4^1-RMP	17-Apr-05	0.0	0.5	Lead	18.3	mg/kg	J	479488.358	1347749.777
A7-C-AR4	A7-C-AR4^1-RMP	17-Apr-05	0.0	0.5	Manganese	306	mg/kg	J	479488.358	1347749.777
A7-C-AR4	A7-C-AR4^1-RMP	17-Apr-05	0.0	0.5	Aroclor-1254	0.0026	ug/kg	J	479488.358	1347749.777
A7-C-AR4	A7-C-AR4^1-RMP	17-Apr-05	0.0	0.5	Aroclor-1260	0.0037	ug/kg	U	479488.358	1347749.777
A7-C-AR4	A7-C-AR4^1-RMP	17-Apr-05	0.0	0.5	Dieldrin	0.0015	ug/kg	U	479488.358	1347749.777
A7-C-AR4	A7-C-AR4^1-RMP	17-Apr-05	0.0	0.5	Cesium-137	0.056	pCi/g	U	479488.358	1347749.777
A7-C-AR4	A7-C-AR4^1-RMP	17-Apr-05	0.0	0.5	Lead-210	0.967	pCi/g	J	479488.358	1347749.777
A7-C-AR4	A7-C-AR4^1-RMP	17-Apr-05	0.0	0.5	Radium-226	1.32	pCi/g	-	479488.358	1347749.777
A7-C-AR4	A7-C-AR4^1-RMP	17-Apr-05	0.0	0.5	Radium-228	1.27	pCi/g	-	479488.358	1347749.777
A7-C-AR4	A7-C-AR4^1-RMP	17-Apr-05	0.0	0.5	Technetium-99	0.795	pCi/g	U	479488.358	1347749.777
A7-C-AR4	A7-C-AR4^1-RMP	17-Apr-05	0.0	0.5	Thorium-228	1.36	pCi/g	-	479488.358	1347749.777
A7-C-AR4	A7-C-AR4^1-RMP	17-Apr-05	0.0	0.5	Thorium-230	1.09	pCi/g	J	479488.358	1347749.777
A7-C-AR4	A7-C-AR4^1-RMP	17-Apr-05	0.0	0.5	Thorium-232	1.27	pCi/g	-	479488.358	1347749.777
A7-C-AR4	A7-C-AR4^1-RMP	17-Apr-05	0.0	0.5	Uranium, Total	9.15	mg/kg	J	479488.358	1347749.777
A7-C-AR5	A7-C-AR5^1-RMP	17-Apr-05	0.0	0.5	Arsenic	6.04	mg/kg	J	479339.831	1347738.419
A7-C-AR5	A7-C-AR5^1-RMP	17-Apr-05	0.0	0.5	Beryllium	0.66	mg/kg	-	479339.831	1347738.419
A7-C-AR5	A7-C-AR5^1-RMP	17-Apr-05	0.0	0.5	Lead	10.6	mg/kg	J	479339.831	1347738.419
A7-C-AR5	A7-C-AR5^1-RMP	17-Apr-05	0.0	0.5	Manganese	558	mg/kg	-	479339.831	1347738.419
A7-C-AR5	A7-C-AR5^1-RMP	17-Apr-05	0.0	0.5	Aroclor-1254	0.0015	ug/kg	J	479339.831	1347738.419
A7-C-AR5	A7-C-AR5^1-RMP	17-Apr-05	0.0	0.5	Aroclor-1260	0.004	ug/kg	U	479339.831	1347738.419
A7-C-AR5	A7-C-AR5^1-RMP	17-Apr-05	0.0	0.5	Dieldrin	0.00158	ug/kg	U	479339.831	1347738.419
A7-C-AR5	A7-C-AR5^1-RMP	17-Apr-05	0.0	0.5	Cesium-137	0.0523	pCi/g	U	479339.831	1347738.419

APPENDIX A
PREDESIGN CHARACTERIZATION DATA FOR AREA 7 SILOS AND GENERAL AREA

Boring	Sample ID	Sample Date	Sample Depth (feet)		Parameter	Result	Units	Qualifier	Northing	Easting
			Top	Bottom						
A7-C-AR5	A7-C-AR5^1-RMP	17-Apr-05	0.0	0.5	Lead-210	1.13	pCi/g	J	479339.831	1347738.419
A7-C-AR5	A7-C-AR5^1-RMP	17-Apr-05	0.0	0.5	Radium-226	1.29	pCi/g	-	479339.831	1347738.419
A7-C-AR5	A7-C-AR5^1-RMP	17-Apr-05	0.0	0.5	Radium-228	1.18	pCi/g	-	479339.831	1347738.419
A7-C-AR5	A7-C-AR5^1-RMP	17-Apr-05	0.0	0.5	Technetium-99	0.792	pCi/g	U	479339.831	1347738.419
A7-C-AR5	A7-C-AR5^1-RMP	17-Apr-05	0.0	0.5	Thorium-228	1.26	pCi/g	-	479339.831	1347738.419
A7-C-AR5	A7-C-AR5^1-RMP	17-Apr-05	0.0	0.5	Thorium-230	1.73	pCi/g	J	479339.831	1347738.419
A7-C-AR5	A7-C-AR5^1-RMP	17-Apr-05	0.0	0.5	Thorium-232	1.18	pCi/g	-	479339.831	1347738.419
A7-C-AR5	A7-C-AR5^1-RMP	17-Apr-05	0.0	0.5	Uranium, Total	5.22	mg/kg	J	479339.831	1347738.419
A7-C-AR7	A7-C-AR7^1-RMP	17-Apr-05	0.0	0.5	Arsenic	4.27	mg/kg	J	479147.812	1347741.257
A7-C-AR7	A7-C-AR7^1-RMP	17-Apr-05	0.0	0.5	Beryllium	0.553	mg/kg	-	479147.812	1347741.257
A7-C-AR7	A7-C-AR7^1-RMP	17-Apr-05	0.0	0.5	Lead	8.14	mg/kg	J	479147.812	1347741.257
A7-C-AR7	A7-C-AR7^1-RMP	17-Apr-05	0.0	0.5	Manganese	494	mg/kg	-	479147.812	1347741.257
A7-C-AR7	A7-C-AR7^1-RMP	17-Apr-05	0.0	0.5	Aroclor-1254	0.0036	ug/kg	U	479147.812	1347741.257
A7-C-AR7	A7-C-AR7^1-RMP	17-Apr-05	0.0	0.5	Aroclor-1260	0.0036	ug/kg	U	479147.812	1347741.257
A7-C-AR7	A7-C-AR7^1-RMP	17-Apr-05	0.0	0.5	Dieldrin	0.00145	ug/kg	U	479147.812	1347741.257
A7-C-AR7	A7-C-AR7^1-RMP	17-Apr-05	0.0	0.5	Cesium-137	0.0482	pCi/g	U	479147.812	1347741.257
A7-C-AR7	A7-C-AR7^1-RMP	17-Apr-05	0.0	0.5	Lead-210	0.762	pCi/g	U	479147.812	1347741.257
A7-C-AR7	A7-C-AR7^1-RMP	17-Apr-05	0.0	0.5	Radium-226	0.851	pCi/g	-	479147.812	1347741.257
A7-C-AR7	A7-C-AR7^1-RMP	17-Apr-05	0.0	0.5	Radium-228	0.812	pCi/g	-	479147.812	1347741.257
A7-C-AR7	A7-C-AR7^1-RMP	17-Apr-05	0.0	0.5	Technetium-99	0.784	pCi/g	U	479147.812	1347741.257
A7-C-AR7	A7-C-AR7^1-RMP	17-Apr-05	0.0	0.5	Thorium-228	0.892	pCi/g	-	479147.812	1347741.257
A7-C-AR7	A7-C-AR7^1-RMP	17-Apr-05	0.0	0.5	Thorium-230	0.65	pCi/g	J	479147.812	1347741.257
A7-C-AR7	A7-C-AR7^1-RMP	17-Apr-05	0.0	0.5	Thorium-232	0.812	pCi/g	-	479147.812	1347741.257
A7-C-AR7	A7-C-AR7^1-RMP	17-Apr-05	0.0	0.5	Uranium, Total	3.29	mg/kg	J	479147.812	1347741.257
A7-C-AR7	A7-C-AR7^1-RMP-D	17-Apr-05	0.0	0.5	Arsenic	6.09	mg/kg	J	479147.812	1347741.257
A7-C-AR7	A7-C-AR7^1-RMP-D	17-Apr-05	0.0	0.5	Beryllium	0.583	mg/kg	-	479147.812	1347741.257
A7-C-AR7	A7-C-AR7^1-RMP-D	17-Apr-05	0.0	0.5	Lead	10.3	mg/kg	J	479147.812	1347741.257
A7-C-AR7	A7-C-AR7^1-RMP-D	17-Apr-05	0.0	0.5	Manganese	440	mg/kg	J	479147.812	1347741.257
A7-C-AR7	A7-C-AR7^1-RMP-D	17-Apr-05	0.0	0.5	Aroclor-1254	0.00057	ug/kg	J	479147.812	1347741.257
A7-C-AR7	A7-C-AR7^1-RMP-D	17-Apr-05	0.0	0.5	Aroclor-1260	0.0036	ug/kg	U	479147.812	1347741.257
A7-C-AR7	A7-C-AR7^1-RMP-D	17-Apr-05	0.0	0.5	Dieldrin	0.00144	ug/kg	U	479147.812	1347741.257
A7-C-AR7	A7-C-AR7^1-RMP-D	17-Apr-05	0.0	0.5	Cesium-137	0.0497	pCi/g	U	479147.812	1347741.257
A7-C-AR7	A7-C-AR7^1-RMP-D	17-Apr-05	0.0	0.5	Lead-210	1.03	pCi/g	-	479147.812	1347741.257
A7-C-AR7	A7-C-AR7^1-RMP-D	17-Apr-05	0.0	0.5	Radium-226	0.8	pCi/g	-	479147.812	1347741.257
A7-C-AR7	A7-C-AR7^1-RMP-D	17-Apr-05	0.0	0.5	Radium-228	0.76	pCi/g	-	479147.812	1347741.257

Boring	Sample ID	Sample Date	Sample Depth (feet)		Parameter	Result	Units	Qualifier	Northing	Easting
			Top	Bottom						
A7-C-AR7	A7-C-AR7^1-RMP-D	17-Apr-05	0.0	0.5	Technetium-99	0.797	pCi/g	U	479147.812	1347741.257
A7-C-AR7	A7-C-AR7^1-RMP-D	17-Apr-05	0.0	0.5	Thorium-228	0.813	pCi/g	-	479147.812	1347741.257
A7-C-AR7	A7-C-AR7^1-RMP-D	17-Apr-05	0.0	0.5	Thorium-230	1.11	pCi/g	J	479147.812	1347741.257
A7-C-AR7	A7-C-AR7^1-RMP-D	17-Apr-05	0.0	0.5	Thorium-232	0.76	pCi/g	-	479147.812	1347741.257
A7-C-AR7	A7-C-AR7^1-RMP-D	17-Apr-05	0.0	0.5	Uranium, Total	6.04	mg/kg	J	479147.812	1347741.257
A7-C-AR8	A7-C-AR8^1-RMP	17-Apr-05	0.0	0.5	Arsenic	3.43	mg/kg	J	478938.84	1347816.981
A7-C-AR8	A7-C-AR8^1-RMP	17-Apr-05	0.0	0.5	Beryllium	0.407	mg/kg	-	478938.84	1347816.981
A7-C-AR8	A7-C-AR8^1-RMP	17-Apr-05	0.0	0.5	Lead	7.18	mg/kg	J	478938.84	1347816.981
A7-C-AR8	A7-C-AR8^1-RMP	17-Apr-05	0.0	0.5	Manganese	424	mg/kg	J	478938.84	1347816.981
A7-C-AR8	A7-C-AR8^1-RMP	17-Apr-05	0.0	0.5	Aroclor-1254	0.0013	ug/kg	J	478938.84	1347816.981
A7-C-AR8	A7-C-AR8^1-RMP	17-Apr-05	0.0	0.5	Aroclor-1260	0.0034	ug/kg	U	478938.84	1347816.981
A7-C-AR8	A7-C-AR8^1-RMP	17-Apr-05	0.0	0.5	Dieldrin	0.00137	ug/kg	U	478938.84	1347816.981
A7-C-AR8	A7-C-AR8^1-RMP	17-Apr-05	0.0	0.5	Cesium-137	0.0475	pCi/g	U	478938.84	1347816.981
A7-C-AR8	A7-C-AR8^1-RMP	17-Apr-05	0.0	0.5	Lead-210	1.49	pCi/g	-	478938.84	1347816.981
A7-C-AR8	A7-C-AR8^1-RMP	17-Apr-05	0.0	0.5	Radium-226	0.899	pCi/g	-	478938.84	1347816.981
A7-C-AR8	A7-C-AR8^1-RMP	17-Apr-05	0.0	0.5	Radium-228	0.817	pCi/g	-	478938.84	1347816.981
A7-C-AR8	A7-C-AR8^1-RMP	17-Apr-05	0.0	0.5	Technetium-99	0.766	pCi/g	U	478938.84	1347816.981
A7-C-AR8	A7-C-AR8^1-RMP	17-Apr-05	0.0	0.5	Thorium-228	0.854	pCi/g	-	478938.84	1347816.981
A7-C-AR8	A7-C-AR8^1-RMP	17-Apr-05	0.0	0.5	Thorium-230	1.05	pCi/g	J	478938.84	1347816.981
A7-C-AR8	A7-C-AR8^1-RMP	17-Apr-05	0.0	0.5	Thorium-232	0.817	pCi/g	-	478938.84	1347816.981
A7-C-AR8	A7-C-AR8^1-RMP	17-Apr-05	0.0	0.5	Uranium, Total	2.96	mg/kg	J	478938.84	1347816.981
A7-D10	A7-D10-1-R	26-Oct-98	0.0	0.5	Technetium-99	4.3	pCi/g dry	-	480700.95	1347200.18
A7-D10	A7-D10-1-R	26-Oct-98	0.0	0.5	Uranium, Total	48.3	mg/kg	J	480700.95	1347200.18
A7-D10	A7-D10-2B-R	26-Oct-98	0.5	1.0	Technetium-99	1.6	pCi/g dry	J	480700.95	1347200.18
A7-D10	A7-D10-2B-R	26-Oct-98	0.5	1.0	Uranium, Total	59.3	mg/kg	J	480700.95	1347200.18
A7-D10	A7-D10-3B-R	26-Oct-98	1.0	1.5	Technetium-99	1.2	pCi/g dry	U	480700.95	1347200.18
A7-D10	A7-D10-3B-R	26-Oct-98	1.0	1.5	Uranium, Total	49.9	mg/kg	J	480700.95	1347200.18
A7-D11	A7-D11-1-R	26-Oct-98	0.0	0.5	Technetium-99	1.8	pCi/g dry	-	480731.12	1347117.98
A7-D11	A7-D11-1-R	26-Oct-98	0.0	0.5	Uranium, Total	66.8	mg/kg	J	480731.12	1347117.98
A7-D11	A7-D11-4-R	8-Oct-02	1.5	2.0	Technetium-99	1.3	pCi/g	UNV	480731.12	1347117.98
A7-D11	A7-D11-4-R	8-Oct-02	1.5	2.0	Uranium, Total	14.2	mg/kg	UNV	480731.12	1347117.98
A7-D11	A7-D11-8-R	8-Oct-02	3.5	4.0	Technetium-99	0.915	pCi/g	UNV	480731.12	1347117.98
A7-D11	A7-D11-8-R	8-Oct-02	3.5	4.0	Uranium, Total	7.18	mg/kg	UNV	480731.12	1347117.98
A7-D11	A7-D11-12-R	8-Oct-02	5.5	6.0	Technetium-99	0.831	pCi/g	UNV	480731.12	1347117.98
A7-D11	A7-D11-12-R	8-Oct-02	5.5	6.0	Uranium, Total	3.4	mg/kg	UNV	480731.12	1347117.98

APPENDIX A
PREDESIGN CHARACTERIZATION DATA FOR AREA 7 SILOS AND GENERAL AREA

Boring	Sample ID	Sample Date	Sample Depth (feet)		Parameter	Result	Units	Qualifier	Northing	Easting
			Top	Bottom						
A7-D11	A7-D11-16-R	8-Oct-02	7.5	8.0	Technetium-99	1.03	pCi/g	UNV	480731.12	1347117.98
A7-D11	A7-D11-16-R	8-Oct-02	7.5	8.0	Uranium, Total	3.07	mg/kg	UNV	480731.12	1347117.98
A7-D11	A7-D11-20-R	8-Oct-02	9.5	10.0	Technetium-99	0.906	pCi/g	UNV	480731.12	1347117.98
A7-D11	A7-D11-20-R	8-Oct-02	9.5	10.0	Uranium, Total	6.46	mg/kg	UNV	480731.12	1347117.98
A7-D11	A7-D11-24-R	8-Oct-02	11.5	12.0	Technetium-99	0.914	pCi/g	UNV	480731.12	1347117.98
A7-D11	A7-D11-24-R	8-Oct-02	11.5	12.0	Uranium, Total	3.77	mg/kg	NV	480731.12	1347117.98
A7-D11	A7-D11-28-R	8-Oct-02	13.5	14.0	Technetium-99	0.929	pCi/g	UNV	480731.12	1347117.98
A7-D11	A7-D11-28-R	8-Oct-02	13.5	14.0	Uranium, Total	7.67	mg/kg	UNV	480731.12	1347117.98
A7-D11	A7-D11-32-R	8-Oct-02	15.5	16.0	Technetium-99	0.875	pCi/g	UNV	480731.12	1347117.98
A7-D11	A7-D11-32-R	8-Oct-02	15.5	16.0	Uranium, Total	3.08	mg/kg	UNV	480731.12	1347117.98
A7-D11	A7-D11-36-R	8-Oct-02	17.5	18.0	Technetium-99	0.949	pCi/g	UNV	480731.12	1347117.98
A7-D11	A7-D11-36-R	8-Oct-02	17.5	18.0	Uranium, Total	3.02	mg/kg	UNV	480731.12	1347117.98
A7-D11	A7-D11-40-R	8-Oct-02	19.5	20.0	Technetium-99	0.891	pCi/g	UNV	480731.12	1347117.98
A7-D11	A7-D11-40-R	8-Oct-02	19.5	20.0	Uranium, Total	3.93	mg/kg	NV	480731.12	1347117.98
A7-D12	A7-D12-1-R	19-Oct-98	0.0	0.5	Technetium-99	1.3	pCi/g dry	U	480764.4	1347163.74
A7-D13	A7-D13-1-R	19-Oct-98	0.0	0.5	Technetium-99	1.2	pCi/g dry	U	480800.17	1347199.78
A7-D13	A7-D13-4-R	7-Oct-02	1.5	2.0	Technetium-99	1.06	pCi/g	U	480800.17	1347199.78
A7-D13	A7-D13-4-R	7-Oct-02	1.5	2.0	Uranium, Total	4.83	mg/kg	UJ	480800.17	1347199.78
A7-D13	A7-D13-8-R	7-Oct-02	3.5	4.0	Technetium-99	0.847	pCi/g	U	480800.17	1347199.78
A7-D13	A7-D13-8-R	7-Oct-02	3.5	4.0	Uranium, Total	4.5	mg/kg	UJ	480800.17	1347199.78
A7-D13	A7-D13-12-R	7-Oct-02	5.5	6.0	Technetium-99	0.749	pCi/g	U	480800.17	1347199.78
A7-D13	A7-D13-12-R	7-Oct-02	5.5	6.0	Uranium, Total	5.7	mg/kg	J	480800.17	1347199.78
A7-D13	A7-D13-16-R	7-Oct-02	7.5	8.0	Technetium-99	0.981	pCi/g	U	480800.17	1347199.78
A7-D13	A7-D13-16-R	7-Oct-02	7.5	8.0	Uranium, Total	2.8	mg/kg	UJ	480800.17	1347199.78
A7-D13	A7-D13-20-R	7-Oct-02	9.5	10.0	Technetium-99	0.936	pCi/g	U	480800.17	1347199.78
A7-D13	A7-D13-20-R	7-Oct-02	9.5	10.0	Uranium, Total	3.18	mg/kg	J	480800.17	1347199.78
A7-D13	A7-D13-24-R	7-Oct-02	11.5	12.0	Technetium-99	1.1	pCi/g	U	480800.17	1347199.78
A7-D13	A7-D13-24-R	7-Oct-02	11.5	12.0	Uranium, Total	4.9	mg/kg	J	480800.17	1347199.78
A7-D13	A7-D13-28-R	7-Oct-02	13.5	14.0	Technetium-99	0.863	pCi/g	U	480800.17	1347199.78
A7-D13	A7-D13-28-R	7-Oct-02	13.5	14.0	Uranium, Total	2.58	mg/kg	UJ	480800.17	1347199.78
A7-D13	A7-D13-32-R	7-Oct-02	15.5	16.0	Technetium-99	0.925	pCi/g	U	480800.17	1347199.78
A7-D13	A7-D13-32-R	7-Oct-02	15.5	16.0	Uranium, Total	3.88	mg/kg	UJ	480800.17	1347199.78
A7-D13	A7-D13-36-R	7-Oct-02	17.5	18.0	Technetium-99	0.914	pCi/g	U	480800.17	1347199.78
A7-D13	A7-D13-36-R	7-Oct-02	17.5	18.0	Uranium, Total	3.45	mg/kg	J	480800.17	1347199.78
A7-D13	A7-D13-40-R	7-Oct-02	19.5	20.0	Technetium-99	0.925	pCi/g	U	480800.17	1347199.78

5982

Boring	Sample ID	Sample Date	Sample Depth (feet)		Parameter	Result	Units	Qualifier	Northing	Easting
			Top	Bottom						
A7-D13	A7-D13-40-R	7-Oct-02	19.5	20.0	Uranium, Total	4.53	mg/kg	UJ	480800.17	1347199.78
A7-D14	A7-D14-1-R	19-Oct-98	0.0	0.5	Technetium-99	1.2	pCi/g dry	U	480807.34	1347096.37
A7-D14A	A7-D14A-4-R	7-Oct-02	1.5	2.0	Technetium-99	0.913	pCi/g	U	480807.31	1347096.28
A7-D14A	A7-D14A-4-R	7-Oct-02	1.5	2.0	Uranium, Total	6.71	mg/kg	U	480807.31	1347096.28
A7-D14A	A7-D14A-8-R	7-Oct-02	3.5	4.0	Technetium-99	1	pCi/g	U	480807.31	1347096.28
A7-D14A	A7-D14A-8-R	7-Oct-02	3.5	4.0	Uranium, Total	5.2	mg/kg	J	480807.31	1347096.28
A7-D14A	A7-D14A-12-R	7-Oct-02	5.5	6.0	Technetium-99	0.953	pCi/g	U	480807.31	1347096.28
A7-D14A	A7-D14A-12-R	7-Oct-02	5.5	6.0	Uranium, Total	4.38	mg/kg	J	480807.31	1347096.28
A7-D14A	A7-D14A-16-R	7-Oct-02	7.5	8.0	Technetium-99	0.937	pCi/g	U	480807.31	1347096.28
A7-D14A	A7-D14A-16-R	7-Oct-02	7.5	8.0	Uranium, Total	6.95	mg/kg	U	480807.31	1347096.28
A7-D14A	A7-D14A-20-R	7-Oct-02	9.5	10.0	Technetium-99	0.822	pCi/g	U	480807.31	1347096.28
A7-D14A	A7-D14A-20-R	7-Oct-02	9.5	10.0	Uranium, Total	5.73	mg/kg	U	480807.31	1347096.28
A7-D14A	A7-D14A-24-R	7-Oct-02	11.5	12.0	Technetium-99	0.966	pCi/g	U	480807.31	1347096.28
A7-D14A	A7-D14A-24-R	7-Oct-02	11.5	12.0	Uranium, Total	3.47	mg/kg	J	480807.31	1347096.28
A7-D14A	A7-D14A-28-R	7-Oct-02	13.5	14.0	Technetium-99	1.18	pCi/g	U	480807.31	1347096.28
A7-D14A	A7-D14A-28-R	7-Oct-02	13.5	14.0	Uranium, Total	5.15	mg/kg	U	480807.31	1347096.28
A7-D14A	A7-D14A-32-R	7-Oct-02	15.5	16.0	Technetium-99	0.925	pCi/g	U	480807.31	1347096.28
A7-D14A	A7-D14A-32-R	7-Oct-02	15.5	16.0	Uranium, Total	4.93	mg/kg	J	480807.31	1347096.28
A7-D14A	A7-D14A-36-R	7-Oct-02	17.5	18.0	Technetium-99	0.824	pCi/g	U	480807.31	1347096.28
A7-D14A	A7-D14A-36-R	7-Oct-02	17.5	18.0	Uranium, Total	4.26	mg/kg	J	480807.31	1347096.28
A7-D14A	A7-D14A-40-R	7-Oct-02	19.5	20.0	Technetium-99	0.847	pCi/g	U	480807.31	1347096.28
A7-D14A	A7-D14A-40-R	7-Oct-02	19.5	20.0	Uranium, Total	5.19	mg/kg	U	480807.31	1347096.28
A7-D15	A7-D15-1-R	19-Oct-98	0.0	0.5	Technetium-99	1.1	pCi/g dry	U	480852.64	1347135.6
A7-D16	A7-D16-1-R	19-Oct-98	0.0	0.5	Technetium-99	1.1	pCi/g dry	U	480897.97	1347121.2
A7-D17	A7-D17-1-R	19-Oct-98	0.0	0.5	Technetium-99	1	pCi/g dry	U	480965.51	1347125.41
A7-D18	A7-D18-1-R	4-Nov-98	0.0	0.5	Technetium-99	1.54	pCi/g dry	U	480847.43	1346953.41
A7-D18	A7-D18-3-R	4-Nov-98	1.0	1.5	Technetium-99	1.28	pCi/g dry	U	480847.43	1346953.41
A7-D18	A7-D18-3-R	4-Nov-98	1.0	1.5	Uranium, Total	4.42	mg/kg	-	480847.43	1346953.41
A7-D18	A7-D18-6-R	4-Nov-98	2.5	3.0	Technetium-99	2	pCi/g dry	U	480847.43	1346953.41
A7-D18	A7-D18-6-R	4-Nov-98	2.5	3.0	Uranium, Total	1.52	mg/kg	-	480847.43	1346953.41
A7-D18	A7-D18-10-R	4-Nov-98	4.5	5.0	Technetium-99	1.36	pCi/g dry	U	480847.43	1346953.41
A7-D18	A7-D18-10-R	4-Nov-98	4.5	5.0	Uranium, Total	1.11	mg/kg	-	480847.43	1346953.41
A7-D19	A7-D19-1-R	3-Nov-98	0.0	0.5	Technetium-99	2.12	pCi/g dry	U	480844.64	1347043.64
A7-D19	A7-D19-1-R	3-Nov-98	0.0	0.5	Uranium, Total	1.7	mg/kg	-	480844.64	1347043.64
A7-D19	A7-D19-3-R	3-Nov-98	1.0	1.5	Technetium-99	1.3	pCi/g dry	U	480844.64	1347043.64

APPENDIX A
PREDESIGN CHARACTERIZATION DATA FOR AREA 7 SILOS AND GENERAL AREA

Boring	Sample ID	Sample Date	Sample Depth (feet)		Parameter	Result	Units	Qualifier	Northing	Easting
			Top	Bottom						
A7-D19	A7-D19-3-R	3-Nov-98	1.0	1.5	Uranium, Total	1.32	mg/kg	-	480844.64	1347043.64
A7-D19	A7-D19-6-R	3-Nov-98	2.5	3.0	Technetium-99	1.15	pCi/g dry	U	480844.64	1347043.64
A7-D19	A7-D19-6-R	3-Nov-98	2.5	3.0	Uranium, Total	1.2	mg/kg	J	480844.64	1347043.64
A7-D19	A7-D19-10-R	3-Nov-98	4.5	5.0	Technetium-99	1.3	pCi/g dry	U	480844.64	1347043.64
A7-D19	A7-D19-10-R	3-Nov-98	4.5	5.0	Uranium, Total	1.52	mg/kg	J	480844.64	1347043.64
A7-D20	A7-D20-1-R	26-Oct-98	0.0	0.5	Technetium-99	1.4	pCi/g dry	U	480884.96	1347044.49
A7-D20	A7-D20-3-R	26-Oct-98	1.0	1.5	Technetium-99	1.2	pCi/g dry	U	480884.96	1347044.49
A7-D20	A7-D20-3-R	26-Oct-98	1.0	1.5	Uranium, Total	2.51	mg/kg	-	480884.96	1347044.49
A7-D20	A7-D20-6-R	26-Oct-98	2.5	3.0	Technetium-99	1.2	pCi/g dry	U	480884.96	1347044.49
A7-D20	A7-D20-6-R	26-Oct-98	2.5	3.0	Uranium, Total	1.56	mg/kg	-	480884.96	1347044.49
A7-D20	A7-D20-10-R	26-Oct-98	4.5	5.0	Technetium-99	1.2	pCi/g dry	U	480884.96	1347044.49
A7-D20	A7-D20-10-R	26-Oct-98	4.5	5.0	Uranium, Total	1.15	mg/kg	-	480884.96	1347044.49
A7-D21	A7-D21-1-R	26-Oct-98	0.0	0.5	Technetium-99	1.3	pCi/g dry	U	480886.74	1346955.84
A7-D21	A7-D21-3-R	26-Oct-98	1.0	1.5	Technetium-99	1.3	pCi/g dry	U	480886.74	1346955.84
A7-D21	A7-D21-3-R	26-Oct-98	1.0	1.5	Uranium, Total	4.42	mg/kg	-	480886.74	1346955.84
A7-D21	A7-D21-6-R	26-Oct-98	2.5	3.0	Technetium-99	1.4	pCi/g dry	U	480886.74	1346955.84
A7-D21	A7-D21-6-R	26-Oct-98	2.5	3.0	Uranium, Total	1.61	mg/kg	-	480886.74	1346955.84
A7-D21	A7-D21-10-R	26-Oct-98	4.5	5.0	Technetium-99	1.4	pCi/g dry	U	480886.74	1346955.84
A7-D21	A7-D21-10-R	26-Oct-98	4.5	5.0	Uranium, Total	1.38	mg/kg	-	480886.74	1346955.84
A7-D22	A7-D22-1-R	4-Nov-98	0.0	0.5	Technetium-99	1.4	pCi/g dry	J	480802.25	1346962.83
A7-D22	A7-D22-1-R	4-Nov-98	0.0	0.5	Uranium, Total	13	mg/kg	-	480802.25	1346962.83
A7-D22	A7-D22-3-R	4-Nov-98	1.0	1.5	Technetium-99	1.12	pCi/g dry	U	480802.25	1346962.83
A7-D22	A7-D22-3-R	4-Nov-98	1.0	1.5	Uranium, Total	8.61	mg/kg	-	480802.25	1346962.83
A7-D22	A7-D22-6-R	4-Nov-98	2.5	3.0	Technetium-99	1.11	pCi/g dry	U	480802.25	1346962.83
A7-D22	A7-D22-6-R	4-Nov-98	2.5	3.0	Uranium, Total	1.92	mg/kg	-	480802.25	1346962.83
A7-D22	A7-D22-10-R	4-Nov-98	4.5	5.0	Technetium-99	3.61	pCi/g dry	-	480802.25	1346962.83
A7-D22	A7-D22-10-R	4-Nov-98	4.5	5.0	Uranium, Total	1.42	mg/kg	-	480802.25	1346962.83
A7-D23	A7-D23-1-R	4-Nov-98	0.0	0.5	Technetium-99	1.14	pCi/g dry	U	480782.44	1346962.87
A7-D23	A7-D23-1-R	4-Nov-98	0.0	0.5	Uranium, Total	20.7	mg/kg	-	480782.44	1346962.87
A7-D23	A7-D23-3-R	4-Nov-98	1.0	1.5	Technetium-99	1.08	pCi/g dry	U	480782.44	1346962.87
A7-D23	A7-D23-3-R	4-Nov-98	1.0	1.5	Uranium, Total	3.76	mg/kg	-	480782.44	1346962.87
A7-D23	A7-D23-6-R	4-Nov-98	2.5	3.0	Technetium-99	1.25	pCi/g dry	U	480782.44	1346962.87
A7-D23	A7-D23-6-R	4-Nov-98	2.5	3.0	Uranium, Total	1.38	mg/kg	J	480782.44	1346962.87
A7-D23	A7-D23-10-R	4-Nov-98	4.5	5.0	Technetium-99	1.43	pCi/g dry	U	480782.44	1346962.87
A7-D23	A7-D23-10-R	4-Nov-98	4.5	5.0	Uranium, Total	1.37	mg/kg	J	480782.44	1346962.87

5982

Boring	Sample ID	Sample Date	Sample Depth (feet)		Parameter	Result	Units	Qualifier	Northing	Easting
			Top	Bottom						
A7-D24	A7-D24-1-R	4-Nov-98	0.0	0.5	Technetium-99	1.31	pCi/g dry	U	480729.2	1346962.02
A7-D24	A7-D24-1-R	4-Nov-98	0.0	0.5	Uranium, Total	14	mg/kg	J	480729.2	1346962.02
A7-D24	A7-D24-3-R	4-Nov-98	1.0	1.5	Technetium-99	1.52	pCi/g dry	U	480729.2	1346962.02
A7-D24	A7-D24-3-R	4-Nov-98	1.0	1.5	Uranium, Total	4.92	mg/kg	J	480729.2	1346962.02
A7-D24	A7-D24-6-R	4-Nov-98	2.5	3.0	Technetium-99	1.88	pCi/g dry	U	480729.2	1346962.02
A7-D24	A7-D24-6-R	4-Nov-98	2.5	3.0	Uranium, Total	1.97	mg/kg	J	480729.2	1346962.02
A7-D24	A7-D24-10-R	4-Nov-98	4.5	5.0	Technetium-99	1.2	pCi/g dry	U	480729.2	1346962.02
A7-D24	A7-D24-10-R	4-Nov-98	4.5	5.0	Uranium, Total	1.57	mg/kg	J	480729.2	1346962.02
A7-D25	A7-D25-1-R	4-Nov-98	0.0	0.5	Technetium-99	1.59	pCi/g dry	U	480709.7	1346978.3
A7-D25	A7-D25-1-R	4-Nov-98	0.0	0.5	Uranium, Total	18.7	mg/kg	-	480709.7	1346978.3
A7-D25	A7-D25-3-R	4-Nov-98	1.0	1.5	Technetium-99	1.28	pCi/g dry	U	480709.7	1346978.3
A7-D25	A7-D25-3-R	4-Nov-98	1.0	1.5	Uranium, Total	4.93	mg/kg	-	480709.7	1346978.3
A7-D25	A7-D25-6-R	4-Nov-98	2.5	3.0	Technetium-99	1.27	pCi/g dry	U	480709.7	1346978.3
A7-D25	A7-D25-6-R	4-Nov-98	2.5	3.0	Uranium, Total	3.21	mg/kg	-	480709.7	1346978.3
A7-D25	A7-D25-10-R	4-Nov-98	4.5	5.0	Technetium-99	2.31	pCi/g dry	UJ	480709.7	1346978.3
A7-D25	A7-D25-10-R	4-Nov-98	4.5	5.0	Uranium, Total	1.62	mg/kg	J	480709.7	1346978.3
A7-D26	A7-D26-1-R	4-Nov-98	0.0	0.5	Technetium-99	1.25	pCi/g dry	U	480724	1347060.7
A7-D26	A7-D26-1-R	4-Nov-98	0.0	0.5	Uranium, Total	30.8	mg/kg	J	480724	1347060.7
A7-D26	A7-D26-3-R	4-Nov-98	1.0	1.5	Technetium-99	1.17	pCi/g dry	U	480724	1347060.7
A7-D26	A7-D26-3-R	4-Nov-98	1.0	1.5	Uranium, Total	4.17	mg/kg	J	480724	1347060.7
A7-D26	A7-D26-6-R	4-Nov-98	2.5	3.0	Technetium-99	1.33	pCi/g dry	U	480724	1347060.7
A7-D26	A7-D26-6-R	4-Nov-98	2.5	3.0	Uranium, Total	1.4	mg/kg	J	480724	1347060.7
A7-D26	A7-D26-10-R	4-Nov-98	4.5	5.0	Technetium-99	1.04	pCi/g dry	U	480724	1347060.7
A7-D26	A7-D26-10-R	4-Nov-98	4.5	5.0	Uranium, Total	4.23	mg/kg	J	480724	1347060.7
A7-D27	A7-D27-1-R	4-Nov-98	0.0	0.5	Technetium-99	1.08	pCi/g dry	U	480801.2	1347065.2
A7-D27	A7-D27-1-R	4-Nov-98	0.0	0.5	Uranium, Total	1.58	mg/kg	-	480801.2	1347065.2
A7-D27	A7-D27-3-R	4-Nov-98	1.0	1.5	Technetium-99	1.18	pCi/g dry	U	480801.2	1347065.2
A7-D27	A7-D27-3-R	4-Nov-98	1.0	1.5	Uranium, Total	2.31	mg/kg	J	480801.2	1347065.2
A7-D27	A7-D27-6-R	4-Nov-98	2.5	3.0	Technetium-99	1.12	pCi/g dry	U	480801.2	1347065.2
A7-D27	A7-D27-6-R	4-Nov-98	2.5	3.0	Uranium, Total	1.75	mg/kg	J	480801.2	1347065.2
A7-D27	A7-D27-10-R	4-Nov-98	4.5	5.0	Technetium-99	1.18	pCi/g dry	U	480801.2	1347065.2
A7-D27	A7-D27-10-R	4-Nov-98	4.5	5.0	Uranium, Total	1.75	mg/kg	J	480801.2	1347065.2
A7-D28	A7-D28-1-R	19-Apr-00	0.0	0.5	Technetium-99	1.4	pCi/g dry	UNV	480823.9	1347168
A7-D28	A7-D28-1-R	19-Apr-00	0.0	0.5	Uranium, Total	2.6	mg/kg	NV	480823.9	1347168
A7-D28	A7-D28-3-R	19-Apr-00	1.0	1.5	Technetium-99	1.5	pCi/g dry	UNV	480823.9	1347168

APPENDIX A
PREDESIGN CHARACTERIZATION DATA FOR AREA 7 SILOS AND GENERAL AREA

Boring	Sample ID	Sample Date	Sample Depth (feet)		Parameter	Result	Units	Qualifier	Northing	Easting
			Top	Bottom						
A7-D28	A7-D28-3-R	19-Apr-00	1.0	1.5	Uranium, Total	2.02	mg/kg	NV	480823.9	1347168
A7-D28	A7-D28-6-R	19-Apr-00	2.5	3.0	Technetium-99	2.2	pCi/g dry	UNV	480823.9	1347168
A7-D28	A7-D28-6-R	19-Apr-00	2.5	3.0	Uranium, Total	2.29	mg/kg	NV	480823.9	1347168
A7-D28	A7-D28-10-R	19-Apr-00	4.5	5.0	Technetium-99	1.2	pCi/g dry	UNV	480823.9	1347168
A7-D28	A7-D28-10-R	19-Apr-00	4.5	5.0	Uranium, Total	2.15	mg/kg	NV	480823.9	1347168
A7-D29	A7-D29-1-R	19-Apr-00	0.0	0.5	Technetium-99	1.4	pCi/g dry	UNV	480880.9	1347173.1
A7-D29	A7-D29-1-R	19-Apr-00	0.0	0.5	Uranium, Total	4.68	mg/kg	NV	480880.9	1347173.1
A7-D29	A7-D29-3-R	19-Apr-00	1.0	1.5	Technetium-99	1.2	pCi/g dry	UNV	480880.9	1347173.1
A7-D29	A7-D29-3-R	19-Apr-00	1.0	1.5	Uranium, Total	1.95	mg/kg	NV	480880.9	1347173.1
A7-D29	A7-D29-6-R	19-Apr-00	2.5	3.0	Technetium-99	1.2	pCi/g dry	UNV	480880.9	1347173.1
A7-D29	A7-D29-6-R	19-Apr-00	2.5	3.0	Uranium, Total	2.23	mg/kg	NV	480880.9	1347173.1
A7-D29	A7-D29-10-R	19-Apr-00	4.5	5.0	Technetium-99	1.3	pCi/g dry	UNV	480880.9	1347173.1
A7-D29	A7-D29-10-R	19-Apr-00	4.5	5.0	Uranium, Total	1.73	mg/kg	NV	480880.9	1347173.1
A7-D3	A7-D3-1-R	27-Oct-98	0.0	0.5	Technetium-99	1.2	pCi/g dry	U	480336.76	1347173.41
A7-D3	A7-D3-1-R	27-Oct-98	0.0	0.5	Uranium, Total	5.32	mg/kg	-	480336.76	1347173.41
A7-D3	A7-D3-3-R	27-Oct-98	1.0	1.5	Technetium-99	1.2	pCi/g dry	U	480336.76	1347173.41
A7-D3	A7-D3-3-R	27-Oct-98	1.0	1.5	Uranium, Total	4.72	mg/kg	-	480336.76	1347173.41
A7-D3	A7-D3-6-R	27-Oct-98	2.5	3.0	Technetium-99	1.2	pCi/g dry	U	480336.76	1347173.41
A7-D3	A7-D3-6-R	27-Oct-98	2.5	3.0	Uranium, Total	3.22	mg/kg	-	480336.76	1347173.41
A7-D3	A7-D3-10-R	27-Oct-98	4.5	5.0	Technetium-99	1.2	pCi/g dry	U	480336.76	1347173.41
A7-D3	A7-D3-10-R	27-Oct-98	4.5	5.0	Uranium, Total	1.58	mg/kg	-	480336.76	1347173.41
A7-D5	A7-D5-1-R	27-Oct-98	0.0	0.5	Technetium-99	1.1	pCi/g dry	U	480421.94	1347179.25
A7-D5	A7-D5-1-R	27-Oct-98	0.0	0.5	Uranium, Total	10.7	mg/kg	-	480421.94	1347179.25
A7-D5	A7-D5-3-R	27-Oct-98	1.0	1.5	Technetium-99	1.1	pCi/g dry	U	480421.94	1347179.25
A7-D5	A7-D5-3-R	27-Oct-98	1.0	1.5	Uranium, Total	2.16	mg/kg	-	480421.94	1347179.25
A7-D5	A7-D5-6-R	27-Oct-98	2.5	3.0	Technetium-99	1.2	pCi/g dry	U	480421.94	1347179.25
A7-D5	A7-D5-6-R	27-Oct-98	2.5	3.0	Uranium, Total	1.84	mg/kg	-	480421.94	1347179.25
A7-D5	A7-D5-10-R	27-Oct-98	4.5	5.0	Technetium-99	1.2	pCi/g dry	U	480421.94	1347179.25
A7-D5	A7-D5-10-R	27-Oct-98	4.5	5.0	Uranium, Total	1.69	mg/kg	-	480421.94	1347179.25
A7-D9	A7-D9-1-R	19-Oct-98	0.0	0.5	Technetium-99	1.1	pCi/g dry	U	480700.23	1347300.11
A7EAST10	A7EAST10^1-RMP	24-Feb-04	0.0	0.5	Arsenic	5.36	mg/kg	NV	480223.9	1350463.8
A7EAST10	A7EAST10^1-RMP	24-Feb-04	0.0	0.5	Beryllium	0.599	mg/kg	NV	480223.9	1350463.8
A7EAST10	A7EAST10^1-RMP	24-Feb-04	0.0	0.5	Lead	75.4	mg/kg	NV	480223.9	1350463.8
A7EAST10	A7EAST10^1-RMP	24-Feb-04	0.0	0.5	Manganese	458	mg/kg	NV	480223.9	1350463.8
A7EAST10	A7EAST10^1-RMP	24-Feb-04	0.0	0.5	Aroclor-1254	718	ug/kg	NV	480223.9	1350463.8

5982

Boring	Sample ID	Sample Date	Sample Depth (feet)		Parameter	Result	Units	Qualifier	Northing	Easting
			Top	Bottom						
A7EAST10	A7EAST10^1-RMP	24-Feb-04	0.0	0.5	Aroclor-1260	882	ug/kg	NV	480223.9	1350463.8
A7EAST10	A7EAST10^1-RMP	24-Feb-04	0.0	0.5	Dieldrin	0.0363	ug/kg	NV	480223.9	1350463.8
A7EAST10	A7EAST10^1-RMP	24-Feb-04	0.0	0.5	Radium-228	0.815	pCi/g	NV	480223.9	1350463.8
A7EAST10	A7EAST10^1-RMP	24-Feb-04	0.0	0.5	Technetium-99	0.658	pCi/g	UNV	480223.9	1350463.8
A7EAST10	A7EAST10^1-RMP	24-Feb-04	0.0	0.5	Thorium-228	0.78	pCi/g	NV	480223.9	1350463.8
A7EAST10	A7EAST10^1-RMP	24-Feb-04	0.0	0.5	Thorium-230	19.2	pCi/g	UNV	480223.9	1350463.8
A7EAST10	A7EAST10^1-RMP	24-Feb-04	0.0	0.5	Thorium-232	0.815	pCi/g	NV	480223.9	1350463.8
A7EAST10	A7EAST10^1-RMP	24-Feb-04	0.0	0.5	Uranium, Total	41.8	mg/kg	NV	480223.9	1350463.8
A7EAST10	A7EAST10^2-RMP	24-Feb-04	0.5	1.0	Arsenic	5.19	mg/kg	NV	480223.9	1350463.8
A7EAST10	A7EAST10^2-RMP	24-Feb-04	0.5	1.0	Beryllium	0.628	mg/kg	NV	480223.9	1350463.8
A7EAST10	A7EAST10^2-RMP	24-Feb-04	0.5	1.0	Lead	9.78	mg/kg	NV	480223.9	1350463.8
A7EAST10	A7EAST10^2-RMP	24-Feb-04	0.5	1.0	Manganese	431	mg/kg	NV	480223.9	1350463.8
A7EAST10	A7EAST10^2-RMP	24-Feb-04	0.5	1.0	Aroclor-1254	2.7	ug/kg	NV	480223.9	1350463.8
A7EAST10	A7EAST10^2-RMP	24-Feb-04	0.5	1.0	Aroclor-1260	3.3	ug/kg	NV	480223.9	1350463.8
A7EAST10	A7EAST10^2-RMP	24-Feb-04	0.5	1.0	Dieldrin	0.000767	ug/kg	UNV	480223.9	1350463.8
A7EAST10	A7EAST10^2-RMP	24-Feb-04	0.5	1.0	Radium-228	0.88	pCi/g	NV	480223.9	1350463.8
A7EAST10	A7EAST10^2-RMP	24-Feb-04	0.5	1.0	Technetium-99	0.795	pCi/g	UNV	480223.9	1350463.8
A7EAST10	A7EAST10^2-RMP	24-Feb-04	0.5	1.0	Thorium-228	0.883	pCi/g	NV	480223.9	1350463.8
A7EAST10	A7EAST10^2-RMP	24-Feb-04	0.5	1.0	Thorium-230	19.4	pCi/g	UNV	480223.9	1350463.8
A7EAST10	A7EAST10^2-RMP	24-Feb-04	0.5	1.0	Thorium-232	0.88	pCi/g	NV	480223.9	1350463.8
A7EAST10	A7EAST10^2-RMP	24-Feb-04	0.5	1.0	Uranium, Total	36.5	mg/kg	NV	480223.9	1350463.8
A7EAST10	A7EAST10^7-RMP	24-Feb-04	3.0	3.5	Arsenic	5.07	mg/kg	NV	480223.9	1350463.8
A7EAST10	A7EAST10^7-RMP	24-Feb-04	3.0	3.5	Beryllium	0.752	mg/kg	NV	480223.9	1350463.8
A7EAST10	A7EAST10^7-RMP	24-Feb-04	3.0	3.5	Lead	11.7	mg/kg	NV	480223.9	1350463.8
A7EAST10	A7EAST10^7-RMP	24-Feb-04	3.0	3.5	Manganese	476	mg/kg	NV	480223.9	1350463.8
A7EAST10	A7EAST10^7-RMP	24-Feb-04	3.0	3.5	Aroclor-1254	10	ug/kg	UNV	480223.9	1350463.8
A7EAST10	A7EAST10^7-RMP	24-Feb-04	3.0	3.5	Aroclor-1260	10	ug/kg	UNV	480223.9	1350463.8
A7EAST10	A7EAST10^7-RMP	24-Feb-04	3.0	3.5	Dieldrin	0.000803	ug/kg	UNV	480223.9	1350463.8
A7EAST10	A7EAST10^7-RMP	24-Feb-04	3.0	3.5	Radium-228	1.3	pCi/g	NV	480223.9	1350463.8
A7EAST10	A7EAST10^7-RMP	24-Feb-04	3.0	3.5	Technetium-99	0.726	pCi/g	UNV	480223.9	1350463.8
A7EAST10	A7EAST10^7-RMP	24-Feb-04	3.0	3.5	Thorium-228	1.26	pCi/g	NV	480223.9	1350463.8
A7EAST10	A7EAST10^7-RMP	24-Feb-04	3.0	3.5	Thorium-230	21.3	pCi/g	UNV	480223.9	1350463.8
A7EAST10	A7EAST10^7-RMP	24-Feb-04	3.0	3.5	Thorium-232	1.3	pCi/g	NV	480223.9	1350463.8
A7EAST10	A7EAST10^7-RMP	24-Feb-04	3.0	3.5	Uranium, Total	9.98	mg/kg	NV	480223.9	1350463.8
A7EAST9	A7EAST9^1-RMP	24-Feb-04	0.0	0.5	Arsenic	4.65	mg/kg	NV	480201.35	1350518.04

APPENDIX A
PREDESIGN CHARACTERIZATION DATA FOR AREA 7 SILOS AND GENERAL AREA

Boring	Sample ID	Sample Date	Sample Depth (feet)		Parameter	Result	Units	Qualifier	Northing	Easting
			Top	Bottom						
A7EAST9	A7EAST9^1-RMP	24-Feb-04	0.0	0.5	Beryllium	0.486	mg/kg	NV	480201.35	1350518.04
A7EAST9	A7EAST9^1-RMP	24-Feb-04	0.0	0.5	Lead	17.1	mg/kg	NV	480201.35	1350518.04
A7EAST9	A7EAST9^1-RMP	24-Feb-04	0.0	0.5	Manganese	436	mg/kg	NV	480201.35	1350518.04
A7EAST9	A7EAST9^1-RMP	24-Feb-04	0.0	0.5	Aroclor-1254	330	ug/kg	NV	480201.35	1350518.04
A7EAST9	A7EAST9^1-RMP	24-Feb-04	0.0	0.5	Aroclor-1260	201	ug/kg	NV	480201.35	1350518.04
A7EAST9	A7EAST9^1-RMP	24-Feb-04	0.0	0.5	Dieldrin	0.0133	ug/kg	NV	480201.35	1350518.04
A7EAST9	A7EAST9^1-RMP	24-Feb-04	0.0	0.5	Radium-228	0.91	pCi/g	NV	480201.35	1350518.04
A7EAST9	A7EAST9^1-RMP	24-Feb-04	0.0	0.5	Technetium-99	0.693	pCi/g	UNV	480201.35	1350518.04
A7EAST9	A7EAST9^1-RMP	24-Feb-04	0.0	0.5	Thorium-228	0.947	pCi/g	NV	480201.35	1350518.04
A7EAST9	A7EAST9^1-RMP	24-Feb-04	0.0	0.5	Thorium-230	19.7	pCi/g	UNV	480201.35	1350518.04
A7EAST9	A7EAST9^1-RMP	24-Feb-04	0.0	0.5	Thorium-232	0.91	pCi/g	NV	480201.35	1350518.04
A7EAST9	A7EAST9^1-RMP	24-Feb-04	0.0	0.5	Uranium, Total	32.9	mg/kg	NV	480201.35	1350518.04
A7EAST9	A7EAST9^2-RMP	24-Feb-04	0.5	1.0	Arsenic	5.17	mg/kg	NV	480201.35	1350518.04
A7EAST9	A7EAST9^2-RMP	24-Feb-04	0.5	1.0	Beryllium	0.687	mg/kg	NV	480201.35	1350518.04
A7EAST9	A7EAST9^2-RMP	24-Feb-04	0.5	1.0	Lead	11.2	mg/kg	NV	480201.35	1350518.04
A7EAST9	A7EAST9^2-RMP	24-Feb-04	0.5	1.0	Manganese	415	mg/kg	NV	480201.35	1350518.04
A7EAST9	A7EAST9^2-RMP	24-Feb-04	0.5	1.0	Aroclor-1254	11	ug/kg	NV	480201.35	1350518.04
A7EAST9	A7EAST9^2-RMP	24-Feb-04	0.5	1.0	Aroclor-1260	1.6	ug/kg	NV	480201.35	1350518.04
A7EAST9	A7EAST9^2-RMP	24-Feb-04	0.5	1.0	Dieldrin	0.0008	ug/kg	NV	480201.35	1350518.04
A7EAST9	A7EAST9^2-RMP	24-Feb-04	0.5	1.0	Radium-228	1.09	pCi/g	NV	480201.35	1350518.04
A7EAST9	A7EAST9^2-RMP	24-Feb-04	0.5	1.0	Technetium-99	0.686	pCi/g	UNV	480201.35	1350518.04
A7EAST9	A7EAST9^2-RMP	24-Feb-04	0.5	1.0	Thorium-228	1.14	pCi/g	NV	480201.35	1350518.04
A7EAST9	A7EAST9^2-RMP	24-Feb-04	0.5	1.0	Thorium-230	19.3	pCi/g	UNV	480201.35	1350518.04
A7EAST9	A7EAST9^2-RMP	24-Feb-04	0.5	1.0	Thorium-232	1.09	pCi/g	NV	480201.35	1350518.04
A7EAST9	A7EAST9^2-RMP	24-Feb-04	0.5	1.0	Uranium, Total	24.4	mg/kg	NV	480201.35	1350518.04
A7EAST9	A7EAST9^7-RMP	24-Feb-04	3.0	3.5	Arsenic	5.54	mg/kg	NV	480201.35	1350518.04
A7EAST9	A7EAST9^7-RMP	24-Feb-04	3.0	3.5	Beryllium	0.761	mg/kg	NV	480201.35	1350518.04
A7EAST9	A7EAST9^7-RMP	24-Feb-04	3.0	3.5	Lead	11.7	mg/kg	NV	480201.35	1350518.04
A7EAST9	A7EAST9^7-RMP	24-Feb-04	3.0	3.5	Manganese	934	mg/kg	NV	480201.35	1350518.04
A7EAST9	A7EAST9^7-RMP	24-Feb-04	3.0	3.5	Aroclor-1254	10.3	ug/kg	UNV	480201.35	1350518.04
A7EAST9	A7EAST9^7-RMP	24-Feb-04	3.0	3.5	Aroclor-1260	10.3	ug/kg	UNV	480201.35	1350518.04
A7EAST9	A7EAST9^7-RMP	24-Feb-04	3.0	3.5	Dieldrin	0.000821	ug/kg	UNV	480201.35	1350518.04
A7EAST9	A7EAST9^7-RMP	24-Feb-04	3.0	3.5	Radium-228	1.27	pCi/g	NV	480201.35	1350518.04
A7EAST9	A7EAST9^7-RMP	24-Feb-04	3.0	3.5	Technetium-99	0.753	pCi/g	UNV	480201.35	1350518.04
A7EAST9	A7EAST9^7-RMP	24-Feb-04	3.0	3.5	Thorium-228	1.3	pCi/g	NV	480201.35	1350518.04

5982

APPENDIX A
PREDESIGN CHARACTERIZATION DATA FOR AREA 7 SILOS AND GENERAL AREA

Boring	Sample ID	Sample Date	Sample Depth (feet)		Parameter	Result	Units	Qualifier	Northing	Easting
			Top	Bottom						
A7EAST9	A7EAST9^7-RMP	24-Feb-04	3.0	3.5	Thorium-230	23.1	pCi/g	UNV	480201.35	1350518.04
A7EAST9	A7EAST9^7-RMP	24-Feb-04	3.0	3.5	Thorium-232	1.27	pCi/g	NV	480201.35	1350518.04
A7EAST9	A7EAST9^7-RMP	24-Feb-04	3.0	3.5	Uranium, Total	16.6	mg/kg	NV	480201.35	1350518.04
A7-G1	A7-G1-1-R	19-Apr-00	0.0	0.5	Technetium-99	1.4	pCi/g dry	U	480203.1	1347134.1
A7-G1	A7-G1-1-R	19-Apr-00	0.0	0.5	Uranium, Total	10.2	mg/kg	J	480203.1	1347134.1
A7-G10	A7-G10-1-R	19-Apr-00	0.0	0.5	Technetium-99	1.3	pCi/g dry	UNV	480754.1	1347106
A7-G10	A7-G10-1-R	19-Apr-00	0.0	0.5	Uranium, Total	43.6	mg/kg	NV	480754.1	1347106
A7-G10	A7-G10-3-R	19-Apr-00	1.0	1.5	Technetium-99	1.3	pCi/g dry	UNV	480754.1	1347106
A7-G10	A7-G10-3-R	19-Apr-00	1.0	1.5	Uranium, Total	7.53	mg/kg	NV	480754.1	1347106
A7-G10	A7-G10-6-R	19-Apr-00	2.5	3.0	Technetium-99	1.3	pCi/g dry	UNV	480754.1	1347106
A7-G10	A7-G10-6-R	19-Apr-00	2.5	3.0	Uranium, Total	2.22	mg/kg	NV	480754.1	1347106
A7-G10	A7-G10-10-R	19-Apr-00	4.5	5.0	Technetium-99	1.3	pCi/g dry	UNV	480754.1	1347106
A7-G10	A7-G10-10-R	19-Apr-00	4.5	5.0	Uranium, Total	2.78	mg/kg	NV	480754.1	1347106
A7-G11	A7-G11-1-R	19-Apr-00	0.0	0.5	Technetium-99	1.3	pCi/g dry	UNV	480852	1347108.1
A7-G11	A7-G11-1-R	19-Apr-00	0.0	0.5	Uranium, Total	25	mg/kg	NV	480852	1347108.1
A7-G11	A7-G11-3-R	19-Apr-00	1.0	1.5	Technetium-99	1.3	pCi/g dry	UNV	480852	1347108.1
A7-G11	A7-G11-3-R	19-Apr-00	1.0	1.5	Uranium, Total	4.35	mg/kg	NV	480852	1347108.1
A7-G11	A7-G11-6-R	19-Apr-00	2.5	3.0	Technetium-99	1.4	pCi/g dry	UNV	480852	1347108.1
A7-G11	A7-G11-6-R	19-Apr-00	2.5	3.0	Uranium, Total	4.29	mg/kg	NV	480852	1347108.1
A7-G11	A7-G11-10-R	19-Apr-00	4.5	5.0	Technetium-99	1.2	pCi/g dry	UNV	480852	1347108.1
A7-G11	A7-G11-10-R	19-Apr-00	4.5	5.0	Uranium, Total	2.93	mg/kg	NV	480852	1347108.1
A7-G12	A7-G12-1-R	19-Apr-00	0.0	0.5	Technetium-99	1.3	pCi/g dry	UNV	480939.9	1347106.2
A7-G12	A7-G12-1-R	19-Apr-00	0.0	0.5	Uranium, Total	4.45	mg/kg	NV	480939.9	1347106.2
A7-G12	A7-G12-3-R	19-Apr-00	1.0	1.5	Technetium-99	1.2	pCi/g dry	UNV	480939.9	1347106.2
A7-G12	A7-G12-3-R	19-Apr-00	1.0	1.5	Uranium, Total	1.32	mg/kg	NV	480939.9	1347106.2
A7-G12	A7-G12-6-R	19-Apr-00	2.5	3.0	Technetium-99	1.2	pCi/g dry	UNV	480939.9	1347106.2
A7-G12	A7-G12-6-R	19-Apr-00	2.5	3.0	Uranium, Total	1.37	mg/kg	NV	480939.9	1347106.2
A7-G12	A7-G12-10-R	19-Apr-00	4.5	5.0	Technetium-99	1.2	pCi/g dry	UNV	480939.9	1347106.2
A7-G12	A7-G12-10-R	19-Apr-00	4.5	5.0	Uranium, Total	1.81	mg/kg	NV	480939.9	1347106.2
A7-G2	A7-G2-1-R	19-Apr-00	0.0	0.5	Technetium-99	1.49	pCi/g dry	U	480264	1347078
A7-G2	A7-G2-1-R	19-Apr-00	0.0	0.5	Uranium, Total	1.48	mg/kg	J	480264	1347078
A7-G3	A7-G3-1-R	19-Apr-00	0.0	0.5	Technetium-99	1.27	pCi/g dry	U	480197	1347039.1
A7-G3	A7-G3-1-R	19-Apr-00	0.0	0.5	Uranium, Total	10.6	mg/kg	J	480197	1347039.1
A7-G4	A7-G4-1-R	19-Apr-00	0.0	0.5	Technetium-99	1.4	pCi/g dry	U	480234.8	1346988.9
A7-G4	A7-G4-1-R	19-Apr-00	0.0	0.5	Uranium, Total	10.3	mg/kg	J	480234.8	1346988.9

APPENDIX A
PREDESIGN CHARACTERIZATION DATA FOR AREA 7 SILOS AND GENERAL AREA

Boring	Sample ID	Sample Date	Sample Depth (feet)		Parameter	Result	Units	Qualifier	Northing	Easting
			Top	Bottom						
A7-G5	A7-G5-1-R	19-Apr-00	0.0	0.5	Technetium-99	0.137	pCi/g dry	U	480194	1346938.9
A7-G5	A7-G5-1-R	19-Apr-00	0.0	0.5	Uranium, Total	10.2	mg/kg	J	480194	1346938.9
A7-G6	A7-G6-1-R	19-Apr-00	0.0	0.5	Technetium-99	1.34	pCi/g dry	U	480239	1346889
A7-G6	A7-G6-1-R	19-Apr-00	0.0	0.5	Uranium, Total	10	mg/kg	J	480239	1346889
A7-G9	A7-G9-1-R	19-Apr-00	0.0	0.5	Technetium-99	1.3	pCi/g dry	UNV	480693.2	1347159.2
A7-G9	A7-G9-1-R	19-Apr-00	0.0	0.5	Uranium, Total	2.16	mg/kg	NV	480693.2	1347159.2
A7-G9	A7-G9-3-R	19-Apr-00	1.0	1.5	Technetium-99	1.3	pCi/g dry	UNV	480693.2	1347159.2
A7-G9	A7-G9-3-R	19-Apr-00	1.0	1.5	Uranium, Total	1.93	mg/kg	NV	480693.2	1347159.2
A7-G9	A7-G9-6-R	19-Apr-00	2.5	3.0	Technetium-99	1.3	pCi/g dry	UNV	480693.2	1347159.2
A7-G9	A7-G9-6-R	19-Apr-00	2.5	3.0	Uranium, Total	4.66	mg/kg	NV	480693.2	1347159.2
A7-G9	A7-G9-10-R	19-Apr-00	4.5	5.0	Technetium-99	1.3	pCi/g dry	UNV	480693.2	1347159.2
A7-G9	A7-G9-10-R	19-Apr-00	4.5	5.0	Uranium, Total	1.71	mg/kg	NV	480693.2	1347159.2
A7-H1	A7-H1-1-R	18-Oct-99	0.0	0.5	Technetium-99	1.12	pCi/g dry	U	480454.2	1348068.1
A7-H1	A7-H1-1-R	18-Oct-99	0.0	0.5	Uranium, Total	18.7	mg/kg	-	480454.2	1348068.1
A7-H1	A7-H1-3-R	18-Oct-99	1.0	1.5	Technetium-99	1	pCi/g dry	U	480454.2	1348068.1
A7-H1	A7-H1-3-R	18-Oct-99	1.0	1.5	Uranium, Total	6.42	mg/kg	-	480454.2	1348068.1
A7-H1	A7-H1-5-R	18-Oct-99	2.0	2.5	Technetium-99	1.06	pCi/g dry	U	480454.2	1348068.1
A7-H1	A7-H1-5-R	18-Oct-99	2.0	2.5	Uranium, Total	3.74	mg/kg	-	480454.2	1348068.1
A7-H1	A7-H1-7-R	18-Oct-99	3.0	3.5	Technetium-99	1.12	pCi/g dry	U	480454.2	1348068.1
A7-H1	A7-H1-7-R	18-Oct-99	3.0	3.5	Uranium, Total	1.39	mg/kg	-	480454.2	1348068.1
A7-H1	A7-H1-9-R	18-Oct-99	4.0	4.5	Technetium-99	1.05	pCi/g dry	U	480454.2	1348068.1
A7-H1	A7-H1-9-R	18-Oct-99	4.0	4.5	Uranium, Total	1.42	mg/kg	-	480454.2	1348068.1
A7-H1A	A7-H1A-1-R	28-Oct-99	0.0	0.5	Technetium-99	1.14	pCi/g dry	U	480454.8	1348063.1
A7-H1A	A7-H1A-1-R	28-Oct-99	0.0	0.5	Uranium, Total	14.9	mg/kg	J	480454.8	1348063.1
A7-H1B	A7-H1B-1-R	28-Oct-99	0.0	0.5	Technetium-99	1.1	pCi/g dry	U	480454.9	1348073.1
A7-H1B	A7-H1B-1-R	28-Oct-99	0.0	0.5	Uranium, Total	12.2	mg/kg	J	480454.9	1348073.1
A7-H1C	A7-H1C-1-R	18-Oct-99	0.0	0.5	Technetium-99	1.28	pCi/g dry	J	480449.9	1348068.1
A7-H1C	A7-H1C-1-R	18-Oct-99	0.0	0.5	Uranium, Total	16.2	mg/kg	-	480449.9	1348068.1
A7-H2	A7-H2-1-R	27-Oct-99	0.0	0.5	Technetium-99	1.28	pCi/g dry	J	480454.5	1348128.2
A7-H2	A7-H2-1-R	27-Oct-99	0.0	0.5	Uranium, Total	12	mg/kg	J	480454.5	1348128.2
A7-H2	A7-H2-3-R	27-Oct-99	1.0	1.5	Technetium-99	1.12	pCi/g dry	U	480454.5	1348128.2
A7-H2	A7-H2-3-R	27-Oct-99	1.0	1.5	Uranium, Total	11.6	mg/kg	J	480454.5	1348128.2
A7-H2	A7-H2-5-R	27-Oct-99	2.0	2.5	Technetium-99	1.11	pCi/g dry	U	480454.5	1348128.2
A7-H2	A7-H2-5-R	27-Oct-99	2.0	2.5	Uranium, Total	2.19	mg/kg	J	480454.5	1348128.2
A7-H2	A7-H2-7-R	27-Oct-99	3.0	3.5	Technetium-99	1.13	pCi/g dry	J	480454.5	1348128.2

5982

APPENDIX A
PREDESIGN CHARACTERIZATION DATA FOR AREA 7 SILOS AND GENERAL AREA

Boring	Sample ID	Sample Date	Sample Depth (feet)		Parameter	Result	Units	Qualifier	Northing	Easting
			Top	Bottom						
A7-H2	A7-H2-7-R	27-Oct-99	3.0	3.5	Uranium, Total	3.68	mg/kg	-	480454.5	1348128.2
A7-H2	A7-H2-9-R	27-Oct-99	4.0	4.5	Technetium-99	1.3	pCi/g dry	J	480454.5	1348128.2
A7-H2	A7-H2-9-R	27-Oct-99	4.0	4.5	Uranium, Total	1.65	mg/kg	J	480454.5	1348128.2
A7-H3	A7-H3-1-R	19-Oct-99	0.0	0.5	Technetium-99	1.84	pCi/g dry	-	480451.5	1348232.7
A7-H3	A7-H3-1-R	19-Oct-99	0.0	0.5	Uranium, Total	15.5	mg/kg	-	480451.5	1348232.7
A7-H3	A7-H3-3-R	19-Oct-99	1.0	1.5	Technetium-99	3.4	pCi/g dry	-	480451.5	1348232.7
A7-H3	A7-H3-3-R	19-Oct-99	1.0	1.5	Uranium, Total	19	mg/kg	-	480451.5	1348232.7
A7-H3	A7-H3-5-R	19-Oct-99	2.0	2.5	Technetium-99	1.24	pCi/g dry	J	480451.5	1348232.7
A7-H3	A7-H3-5-R	19-Oct-99	2.0	2.5	Uranium, Total	3.11	mg/kg	J	480451.5	1348232.7
A7-H3	A7-H3-7-R	19-Oct-99	3.0	3.5	Technetium-99	1.15	pCi/g dry	U	480451.5	1348232.7
A7-H3	A7-H3-7-R	19-Oct-99	3.0	3.5	Uranium, Total	4.7	mg/kg	J	480451.5	1348232.7
A7-H3	A7-H3-9-R	19-Oct-99	4.0	4.5	Technetium-99	1.05	pCi/g dry	U	480451.5	1348232.7
A7-H3	A7-H3-9-R	19-Oct-99	4.0	4.5	Uranium, Total	5.51	mg/kg	J	480451.5	1348232.7
A7-H3	A7-H3-11-R	19-Oct-99	5.0	5.5	Technetium-99	1.04	pCi/g dry	U	480451.5	1348232.7
A7-H3	A7-H3-11-R	19-Oct-99	5.0	5.5	Uranium, Total	4.36	mg/kg	J	480451.5	1348232.7
A7-H3	A7-H3-13-R	19-Oct-99	6.0	6.5	Technetium-99	1.1	pCi/g dry	U	480451.5	1348232.7
A7-H3	A7-H3-13-R	19-Oct-99	6.0	6.5	Uranium, Total	4.58	mg/kg	J	480451.5	1348232.7
A7-H3	A7-H3-15-R	19-Oct-99	7.0	7.5	Technetium-99	1.14	pCi/g dry	U	480451.5	1348232.7
A7-H3	A7-H3-15-R	19-Oct-99	7.0	7.5	Uranium, Total	2.51	mg/kg	J	480451.5	1348232.7
A7-H4	A7-H4-1-R	27-Oct-99	0.0	0.5	Technetium-99	1.28	pCi/g dry	U	480450.1	1348327.1
A7-H4	A7-H4-1-R	27-Oct-99	0.0	0.5	Uranium, Total	13.5	mg/kg	J	480450.1	1348327.1
A7-H4	A7-H4-3-R	27-Oct-99	1.0	1.5	Technetium-99	1.83	pCi/g dry	-	480450.1	1348327.1
A7-H4	A7-H4-3-R	27-Oct-99	1.0	1.5	Uranium, Total	15.9	mg/kg	J	480450.1	1348327.1
A7-H4	A7-H4-5-R	27-Oct-99	2.0	2.5	Technetium-99	0.999	pCi/g dry	U	480450.1	1348327.1
A7-H4	A7-H4-5-R	27-Oct-99	2.0	2.5	Uranium, Total	2.48	mg/kg	J	480450.1	1348327.1
A7-H4	A7-H4-7-R	27-Oct-99	3.0	3.5	Technetium-99	1.17	pCi/g dry	U	480450.1	1348327.1
A7-H4	A7-H4-7-R	27-Oct-99	3.0	3.5	Uranium, Total	9.25	mg/kg	J	480450.1	1348327.1
A7-H4	A7-H4-9-R	27-Oct-99	4.0	4.5	Technetium-99	1.11	pCi/g dry	U	480450.1	1348327.1
A7-H4	A7-H4-9-R	27-Oct-99	4.0	4.5	Uranium, Total	11.9	mg/kg	J	480450.1	1348327.1
A7-H4A	A7-H4A-1-R	27-Oct-99	0.0	0.5	Technetium-99	1.08	pCi/g dry	U	480450.7	1348322.1
A7-H4A	A7-H4A-1-R	27-Oct-99	0.0	0.5	Uranium, Total	31.7	mg/kg	J	480450.7	1348322.1
A7-H4C	A7-H4C-1-R	27-Oct-99	0.0	0.5	Technetium-99	1.18	pCi/g dry	U	480445.8	1348327.1
A7-H4C	A7-H4C-1-R	27-Oct-99	0.0	0.5	Uranium, Total	9.09	mg/kg	-	480445.8	1348327.1
A7-HR15	A7-HR15-11-M	23-May-02	5.0	5.5	Arsenic	6.4	mg/kg	NV	480175.363	1347981.203
A7-HR15	A7-HR15-11-M	23-May-02	5.0	5.5	Beryllium	0.41	mg/kg	NV	480175.363	1347981.203

APPENDIX A
PREDESIGN CHARACTERIZATION DATA FOR AREA 7 SILOS AND GENERAL AREA

Boring	Sample ID	Sample Date	Sample Depth (feet)		Parameter	Result	Units	Qualifier	Northing	Easting
			Top	Bottom						
A7-HR15	A7-HR15-11-M	23-May-02	5.0	5.5	Boron	6.2	mg/kg	NV	480175.363	1347981.203
A7-HR15	A7-HR15-11-M	23-May-02	5.0	5.5	Lead	7.1	mg/kg	NV	480175.363	1347981.203
A7-HR15	A7-HR15-11-M	23-May-02	5.0	5.5	Manganese	412	mg/kg	NV	480175.363	1347981.203
A7-HR15	A7-HR15-11-M	23-May-02	5.0	5.5	Mercury	0.02	mg/kg	NV	480175.363	1347981.203
A7-HR15	A7-HR15-11-P	23-May-02	5.0	5.5	Aroclor-1254	38	ug/kg	UNV	480175.363	1347981.203
A7-HR15	A7-HR15-11-P	23-May-02	5.0	5.5	Aroclor-1254	38	ug/kg	UNV	480175.363	1347981.203
A7-HR15	A7-HR15-11-P	23-May-02	5.0	5.5	Aroclor-1260	38	ug/kg	UNV	480175.363	1347981.203
A7-HR15	A7-HR15-11-P	23-May-02	5.0	5.5	Aroclor-1260	38	ug/kg	UNV	480175.363	1347981.203
A7-HR15	A7-HR15-11-R	23-May-02	5.0	5.5	Cesium-137	0.051	pCi/g	UNV	480175.363	1347981.203
A7-HR15	A7-HR15-11-R	23-May-02	5.0	5.5	Radium-226	1.22	pCi/g	NV	480175.363	1347981.203
A7-HR15	A7-HR15-11-R	23-May-02	5.0	5.5	Radium-228	0.698	pCi/g	NV	480175.363	1347981.203
A7-HR15	A7-HR15-11-R	23-May-02	5.0	5.5	Technetium-99	2	pCi/g	UNV	480175.363	1347981.203
A7-HR15	A7-HR15-11-R	23-May-02	5.0	5.5	Thorium-228	0.69	pCi/g	NV	480175.363	1347981.203
A7-HR15	A7-HR15-11-R	23-May-02	5.0	5.5	Thorium-230	19.5	pCi/g	UNV	480175.363	1347981.203
A7-HR15	A7-HR15-11-R	23-May-02	5.0	5.5	Thorium-232	0.698	pCi/g	NV	480175.363	1347981.203
A7-HR15	A7-HR15-11-R	23-May-02	5.0	5.5	Uranium, Total	2.73	mg/kg	UNV	480175.363	1347981.203
A7-HR15	A7-HR15-12-M	23-May-02	5.5	6.0	Arsenic	9.7	mg/kg	NV	480175.363	1347981.203
A7-HR15	A7-HR15-12-M	23-May-02	5.5	6.0	Beryllium	0.92	mg/kg	NV	480175.363	1347981.203
A7-HR15	A7-HR15-12-M	23-May-02	5.5	6.0	Boron	1.7	mg/kg	NV	480175.363	1347981.203
A7-HR15	A7-HR15-12-M	23-May-02	5.5	6.0	Lead	16.5	mg/kg	NV	480175.363	1347981.203
A7-HR15	A7-HR15-12-M	23-May-02	5.5	6.0	Manganese	529	mg/kg	NV	480175.363	1347981.203
A7-HR15	A7-HR15-12-M	23-May-02	5.5	6.0	Mercury	0.04	mg/kg	NV	480175.363	1347981.203
A7-HR15	A7-HR15-12-P	23-May-02	5.5	6.0	Aroclor-1254	42	ug/kg	UNV	480175.363	1347981.203
A7-HR15	A7-HR15-12-P	23-May-02	5.5	6.0	Aroclor-1254	42	ug/kg	UNV	480175.363	1347981.203
A7-HR15	A7-HR15-12-P	23-May-02	5.5	6.0	Aroclor-1260	42	ug/kg	UNV	480175.363	1347981.203
A7-HR15	A7-HR15-12-P	23-May-02	5.5	6.0	Aroclor-1260	42	ug/kg	UNV	480175.363	1347981.203
A7-HR15	A7-HR15-12-R	23-May-02	5.5	6.0	Cesium-137	0.055	pCi/g	UNV	480175.363	1347981.203
A7-HR15	A7-HR15-12-R	23-May-02	5.5	6.0	Radium-226	0.968	pCi/g	NV	480175.363	1347981.203
A7-HR15	A7-HR15-12-R	23-May-02	5.5	6.0	Radium-228	0.779	pCi/g	NV	480175.363	1347981.203
A7-HR15	A7-HR15-12-R	23-May-02	5.5	6.0	Technetium-99	1.8	pCi/g	UNV	480175.363	1347981.203
A7-HR15	A7-HR15-12-R	23-May-02	5.5	6.0	Thorium-228	0.75	pCi/g	NV	480175.363	1347981.203
A7-HR15	A7-HR15-12-R	23-May-02	5.5	6.0	Thorium-230	20	pCi/g	UNV	480175.363	1347981.203
A7-HR15	A7-HR15-12-R	23-May-02	5.5	6.0	Thorium-232	0.779	pCi/g	NV	480175.363	1347981.203
A7-HR15	A7-HR15-12-R	23-May-02	5.5	6.0	Uranium, Total	2.39	mg/kg	NV	480175.363	1347981.203
A7-HR16	A7-HR16-1-M	22-May-02	0.0	0.5	Arsenic	10.9	mg/kg	NV	480685.148	1348042.73

5982

Boring	Sample ID	Sample Date	Sample Depth (feet)		Parameter	Result	Units	Qualifier	Northing	Easting
			Top	Bottom						
A7-HR16	A7-HR16-1-M	22-May-02	0.0	0.5	Beryllium	0.87	mg/kg	NV	480685.148	1348042.73
A7-HR16	A7-HR16-1-M	22-May-02	0.0	0.5	Boron	6.7	mg/kg	NV	480685.148	1348042.73
A7-HR16	A7-HR16-1-M	22-May-02	0.0	0.5	Lead	14.3	mg/kg	NV	480685.148	1348042.73
A7-HR16	A7-HR16-1-M	22-May-02	0.0	0.5	Manganese	600	mg/kg	NV	480685.148	1348042.73
A7-HR16	A7-HR16-1-M	22-May-02	0.0	0.5	Mercury	0.04	mg/kg	NV	480685.148	1348042.73
A7-HR16	A7-HR16-1-P	22-May-02	0.0	0.5	Aroclor-1254	40	ug/kg	UNV	480685.148	1348042.73
A7-HR16	A7-HR16-1-P	22-May-02	0.0	0.5	Aroclor-1260	40	ug/kg	UNV	480685.148	1348042.73
A7-HR16	A7-HR16-1-R	22-May-02	0.0	0.5	Cesium-137	0.057	pCi/g	UNV	480685.148	1348042.73
A7-HR16	A7-HR16-1-R	22-May-02	0.0	0.5	Radium-226	1.44	pCi/g	NV	480685.148	1348042.73
A7-HR16	A7-HR16-1-R	22-May-02	0.0	0.5	Radium-228	1.15	pCi/g	NV	480685.148	1348042.73
A7-HR16	A7-HR16-1-R	22-May-02	0.0	0.5	Technetium-99	1.8	pCi/g	UNV	480685.148	1348042.73
A7-HR16	A7-HR16-1-R	22-May-02	0.0	0.5	Thorium-228	1.14	pCi/g	NV	480685.148	1348042.73
A7-HR16	A7-HR16-1-R	22-May-02	0.0	0.5	Thorium-230	23.9	pCi/g	UNV	480685.148	1348042.73
A7-HR16	A7-HR16-1-R	22-May-02	0.0	0.5	Thorium-232	1.15	pCi/g	NV	480685.148	1348042.73
A7-HR16	A7-HR16-1-R	22-May-02	0.0	0.5	Uranium, Total	2.85	mg/kg	UNV	480685.148	1348042.73
A7-HR17	A7-HR17-3-M	22-May-02	1.0	1.5	Arsenic	6.7	mg/kg	NV	480600.004	1348035.245
A7-HR17	A7-HR17-3-M	22-May-02	1.0	1.5	Beryllium	1.2	mg/kg	NV	480600.004	1348035.245
A7-HR17	A7-HR17-3-M	22-May-02	1.0	1.5	Boron	27.3	mg/kg	NV	480600.004	1348035.245
A7-HR17	A7-HR17-3-M	22-May-02	1.0	1.5	Lead	13.9	mg/kg	NV	480600.004	1348035.245
A7-HR17	A7-HR17-3-M	22-May-02	1.0	1.5	Manganese	643	mg/kg	NV	480600.004	1348035.245
A7-HR17	A7-HR17-3-M	22-May-02	1.0	1.5	Mercury	0.02	mg/kg	UNV	480600.004	1348035.245
A7-HR17	A7-HR17-3-P	22-May-02	1.0	1.5	Aroclor-1254	41	ug/kg	UNV	480600.004	1348035.245
A7-HR17	A7-HR17-3-P	22-May-02	1.0	1.5	Aroclor-1260	41	ug/kg	UNV	480600.004	1348035.245
A7-HR17	A7-HR17-3-R	22-May-02	1.0	1.5	Cesium-137	0.052	pCi/g	UNV	480600.004	1348035.245
A7-HR17	A7-HR17-3-R	22-May-02	1.0	1.5	Radium-226	1.28	pCi/g	NV	480600.004	1348035.245
A7-HR17	A7-HR17-3-R	22-May-02	1.0	1.5	Radium-228	1.32	pCi/g	NV	480600.004	1348035.245
A7-HR17	A7-HR17-3-R	22-May-02	1.0	1.5	Technetium-99	1.7	pCi/g	UNV	480600.004	1348035.245
A7-HR17	A7-HR17-3-R	22-May-02	1.0	1.5	Thorium-228	1.3	pCi/g	NV	480600.004	1348035.245
A7-HR17	A7-HR17-3-R	22-May-02	1.0	1.5	Thorium-230	22.7	pCi/g	UNV	480600.004	1348035.245
A7-HR17	A7-HR17-3-R	22-May-02	1.0	1.5	Thorium-232	1.32	pCi/g	NV	480600.004	1348035.245
A7-HR17	A7-HR17-3-R	22-May-02	1.0	1.5	Uranium, Total	5.11	mg/kg	NV	480600.004	1348035.245
A7-HR17	A7-HR17-4-M	22-May-02	1.5	2.0	Arsenic	6.2	mg/kg	NV	480600.004	1348035.245
A7-HR17	A7-HR17-4-M	22-May-02	1.5	2.0	Beryllium	0.7	mg/kg	NV	480600.004	1348035.245
A7-HR17	A7-HR17-4-M	22-May-02	1.5	2.0	Boron	5.7	mg/kg	NV	480600.004	1348035.245
A7-HR17	A7-HR17-4-M	22-May-02	1.5	2.0	Lead	17.2	mg/kg	NV	480600.004	1348035.245

APPENDIX A
PREDESIGN CHARACTERIZATION DATA FOR AREA 7 SILOS AND GENERAL AREA

Boring	Sample ID	Sample Date	Sample Depth (feet)		Parameter	Result	Units	Qualifier	Northing	Easting
			Top	Bottom						
A7-HR17	A7-HR17-4-M	22-May-02	1.5	2.0	Manganese	207	mg/kg	NV	480600.004	1348035.245
A7-HR17	A7-HR17-4-M	22-May-02	1.5	2.0	Mercury	0.03	mg/kg	NV	480600.004	1348035.245
A7-HR17	A7-HR17-4-P	22-May-02	1.5	2.0	Aroclor-1254	40	ug/kg	UNV	480600.004	1348035.245
A7-HR17	A7-HR17-4-P	22-May-02	1.5	2.0	Aroclor-1260	40	ug/kg	UNV	480600.004	1348035.245
A7-HR17	A7-HR17-4-R	22-May-02	1.5	2.0	Cesium-137	0.094	pCi/g	NV	480600.004	1348035.245
A7-HR17	A7-HR17-4-R	22-May-02	1.5	2.0	Radium-226	1.33	pCi/g	NV	480600.004	1348035.245
A7-HR17	A7-HR17-4-R	22-May-02	1.5	2.0	Radium-228	1.12	pCi/g	NV	480600.004	1348035.245
A7-HR17	A7-HR17-4-R	22-May-02	1.5	2.0	Technetium-99	1.8	pCi/g	UNV	480600.004	1348035.245
A7-HR17	A7-HR17-4-R	22-May-02	1.5	2.0	Thorium-228	1.12	pCi/g	NV	480600.004	1348035.245
A7-HR17	A7-HR17-4-R	22-May-02	1.5	2.0	Thorium-230	22.1	pCi/g	UNV	480600.004	1348035.245
A7-HR17	A7-HR17-4-R	22-May-02	1.5	2.0	Thorium-232	1.12	pCi/g	NV	480600.004	1348035.245
A7-HR17	A7-HR17-4-R	22-May-02	1.5	2.0	Uranium, Total	5.87	mg/kg	NV	480600.004	1348035.245
A7-HR18	A7-HR18-5-M	22-May-02	2.0	2.5	Arsenic	4.7	mg/kg	NV	480515.126	1348032.452
A7-HR18	A7-HR18-5-M	22-May-02	2.0	2.5	Beryllium	0.86	mg/kg	NV	480515.126	1348032.452
A7-HR18	A7-HR18-5-M	22-May-02	2.0	2.5	Boron	16.1	mg/kg	NV	480515.126	1348032.452
A7-HR18	A7-HR18-5-M	22-May-02	2.0	2.5	Lead	10.6	mg/kg	NV	480515.126	1348032.452
A7-HR18	A7-HR18-5-M	22-May-02	2.0	2.5	Manganese	670	mg/kg	NV	480515.126	1348032.452
A7-HR18	A7-HR18-5-M	22-May-02	2.0	2.5	Mercury	0.02	mg/kg	UNV	480515.126	1348032.452
A7-HR18	A7-HR18-5-P	22-May-02	2.0	2.5	Aroclor-1254	41	ug/kg	UNV	480515.126	1348032.452
A7-HR18	A7-HR18-5-P	22-May-02	2.0	2.5	Aroclor-1260	41	ug/kg	UNV	480515.126	1348032.452
A7-HR18	A7-HR18-5-R	22-May-02	2.0	2.5	Cesium-137	0.07	pCi/g	UNV	480515.126	1348032.452
A7-HR18	A7-HR18-5-R	22-May-02	2.0	2.5	Radium-226	1.29	pCi/g	NV	480515.126	1348032.452
A7-HR18	A7-HR18-5-R	22-May-02	2.0	2.5	Radium-228	1.35	pCi/g	NV	480515.126	1348032.452
A7-HR18	A7-HR18-5-R	22-May-02	2.0	2.5	Technetium-99	1.7	pCi/g	UNV	480515.126	1348032.452
A7-HR18	A7-HR18-5-R	22-May-02	2.0	2.5	Thorium-228	1.35	pCi/g	NV	480515.126	1348032.452
A7-HR18	A7-HR18-5-R	22-May-02	2.0	2.5	Thorium-230	28.2	pCi/g	UNV	480515.126	1348032.452
A7-HR18	A7-HR18-5-R	22-May-02	2.0	2.5	Thorium-232	1.35	pCi/g	NV	480515.126	1348032.452
A7-HR18	A7-HR18-5-R	22-May-02	2.0	2.5	Uranium, Total	3.54	mg/kg	UNV	480515.126	1348032.452
A7-HR18	A7-HR18-6-M	22-May-02	2.5	3.0	Arsenic	12	mg/kg	NV	480515.126	1348032.452
A7-HR18	A7-HR18-6-M	22-May-02	2.5	3.0	Beryllium	0.71	mg/kg	NV	480515.126	1348032.452
A7-HR18	A7-HR18-6-M	22-May-02	2.5	3.0	Boron	5.3	mg/kg	NV	480515.126	1348032.452
A7-HR18	A7-HR18-6-M	22-May-02	2.5	3.0	Lead	16.6	mg/kg	NV	480515.126	1348032.452
A7-HR18	A7-HR18-6-M	22-May-02	2.5	3.0	Manganese	506	mg/kg	NV	480515.126	1348032.452
A7-HR18	A7-HR18-6-M	22-May-02	2.5	3.0	Mercury	0.03	mg/kg	NV	480515.126	1348032.452
A7-HR18	A7-HR18-6-P	22-May-02	2.5	3.0	Aroclor-1254	40	ug/kg	UNV	480515.126	1348032.452

Boring	Sample ID	Sample Date	Sample Depth (feet)		Parameter	Result	Units	Qualifier	Northing	Easting
			Top	Bottom						
A7-HR18	A7-HR18-6-P	22-May-02	2.5	3.0	Aroclor-1254	40	ug/kg	UNV	480515.126	1348032.452
A7-HR18	A7-HR18-6-P	22-May-02	2.5	3.0	Aroclor-1260	40	ug/kg	UNV	480515.126	1348032.452
A7-HR18	A7-HR18-6-P	22-May-02	2.5	3.0	Aroclor-1260	40	ug/kg	UNV	480515.126	1348032.452
A7-HR18	A7-HR18-6-R	22-May-02	2.5	3.0	Cesium-137	0.053	pCi/g	UNV	480515.126	1348032.452
A7-HR18	A7-HR18-6-R	22-May-02	2.5	3.0	Radium-226	1.28	pCi/g	NV	480515.126	1348032.452
A7-HR18	A7-HR18-6-R	22-May-02	2.5	3.0	Radium-228	1.07	pCi/g	NV	480515.126	1348032.452
A7-HR18	A7-HR18-6-R	22-May-02	2.5	3.0	Technetium-99	1.7	pCi/g	UNV	480515.126	1348032.452
A7-HR18	A7-HR18-6-R	22-May-02	2.5	3.0	Thorium-228	1.07	pCi/g	NV	480515.126	1348032.452
A7-HR18	A7-HR18-6-R	22-May-02	2.5	3.0	Thorium-230	23.3	pCi/g	UNV	480515.126	1348032.452
A7-HR18	A7-HR18-6-R	22-May-02	2.5	3.0	Thorium-232	1.07	pCi/g	NV	480515.126	1348032.452
A7-HR18	A7-HR18-6-R	22-May-02	2.5	3.0	Uranium, Total	3.35	mg/kg	NV	480515.126	1348032.452
A7-HR19	A7-HR19-8-M	22-May-02	3.5	4.0	Arsenic	8.1	mg/kg	NV	480430.314	1348030.341
A7-HR19	A7-HR19-8-M	22-May-02	3.5	4.0	Beryllium	0.71	mg/kg	NV	480430.314	1348030.341
A7-HR19	A7-HR19-8-M	22-May-02	3.5	4.0	Boron	6.2	mg/kg	NV	480430.314	1348030.341
A7-HR19	A7-HR19-8-M	22-May-02	3.5	4.0	Lead	13.4	mg/kg	NV	480430.314	1348030.341
A7-HR19	A7-HR19-8-M	22-May-02	3.5	4.0	Manganese	616	mg/kg	NV	480430.314	1348030.341
A7-HR19	A7-HR19-8-M	22-May-02	3.5	4.0	Mercury	0.03	mg/kg	NV	480430.314	1348030.341
A7-HR19	A7-HR19-8-P	22-May-02	3.5	4.0	Aroclor-1254	39	ug/kg	UNV	480430.314	1348030.341
A7-HR19	A7-HR19-8-P	22-May-02	3.5	4.0	Aroclor-1260	39	ug/kg	UNV	480430.314	1348030.341
A7-HR19	A7-HR19-8-R	22-May-02	3.5	4.0	Cesium-137	0.068	pCi/g	UNV	480430.314	1348030.341
A7-HR19	A7-HR19-8-R	22-May-02	3.5	4.0	Radium-226	1.3	pCi/g	NV	480430.314	1348030.341
A7-HR19	A7-HR19-8-R	22-May-02	3.5	4.0	Radium-228	1.06	pCi/g	NV	480430.314	1348030.341
A7-HR19	A7-HR19-8-R	22-May-02	3.5	4.0	Technetium-99	1.9	pCi/g	UNV	480430.314	1348030.341
A7-HR19	A7-HR19-8-R	22-May-02	3.5	4.0	Thorium-228	1.05	pCi/g	NV	480430.314	1348030.341
A7-HR19	A7-HR19-8-R	22-May-02	3.5	4.0	Thorium-230	24.6	pCi/g	UNV	480430.314	1348030.341
A7-HR19	A7-HR19-8-R	22-May-02	3.5	4.0	Thorium-232	1.06	pCi/g	NV	480430.314	1348030.341
A7-HR19	A7-HR19-8-R	22-May-02	3.5	4.0	Uranium, Total	3.43	mg/kg	NV	480430.314	1348030.341
A7-HR19	A7-HR19-9-M	22-May-02	4.0	4.5	Arsenic	3.9	mg/kg	NV	480430.314	1348030.341
A7-HR19	A7-HR19-9-M	22-May-02	4.0	4.5	Beryllium	0.63	mg/kg	NV	480430.314	1348030.341
A7-HR19	A7-HR19-9-M	22-May-02	4.0	4.5	Boron	4.4	mg/kg	NV	480430.314	1348030.341
A7-HR19	A7-HR19-9-M	22-May-02	4.0	4.5	Lead	16.4	mg/kg	NV	480430.314	1348030.341
A7-HR19	A7-HR19-9-M	22-May-02	4.0	4.5	Manganese	190	mg/kg	NV	480430.314	1348030.341
A7-HR19	A7-HR19-9-M	22-May-02	4.0	4.5	Mercury	0.02	mg/kg	NV	480430.314	1348030.341
A7-HR19	A7-HR19-9-P	22-May-02	4.0	4.5	Aroclor-1254	40	ug/kg	UNV	480430.314	1348030.341
A7-HR19	A7-HR19-9-P	22-May-02	4.0	4.5	Aroclor-1260	40	ug/kg	UNV	480430.314	1348030.341

APPENDIX A
PREDESIGN CHARACTERIZATION DATA FOR AREA 7 SILOS AND GENERAL AREA

Boring	Sample ID	Sample Date	Sample Depth (feet)		Parameter	Result	Units	Qualifier	Northing	Easting
			Top	Bottom						
A7-HR19	A7-HR19-9-R	22-May-02	4.0	4.5	Cesium-137	0.038	pCi/g	UNV	480430.314	1348030.341
A7-HR19	A7-HR19-9-R	22-May-02	4.0	4.5	Radium-226	1.21	pCi/g	NV	480430.314	1348030.341
A7-HR19	A7-HR19-9-R	22-May-02	4.0	4.5	Radium-228	0.958	pCi/g	NV	480430.314	1348030.341
A7-HR19	A7-HR19-9-R	22-May-02	4.0	4.5	Technetium-99	1.8	pCi/g	UNV	480430.314	1348030.341
A7-HR19	A7-HR19-9-R	22-May-02	4.0	4.5	Thorium-228	0.918	pCi/g	NV	480430.314	1348030.341
A7-HR19	A7-HR19-9-R	22-May-02	4.0	4.5	Thorium-230	20.9	pCi/g	UNV	480430.314	1348030.341
A7-HR19	A7-HR19-9-R	22-May-02	4.0	4.5	Thorium-232	0.958	pCi/g	NV	480430.314	1348030.341
A7-HR19	A7-HR19-9-R	22-May-02	4.0	4.5	Uranium, Total	3.72	mg/kg	NV	480430.314	1348030.341
A7-HR20	A7-HR20-5-M	23-May-02	2.0	2.5	Arsenic	4.9	mg/kg	NV	480344.957	1348028.465
A7-HR20	A7-HR20-5-M	23-May-02	2.0	2.5	Beryllium	0.47	mg/kg	NV	480344.957	1348028.465
A7-HR20	A7-HR20-5-M	23-May-02	2.0	2.5	Boron	3.8	mg/kg	NV	480344.957	1348028.465
A7-HR20	A7-HR20-5-M	23-May-02	2.0	2.5	Lead	15.8	mg/kg	NV	480344.957	1348028.465
A7-HR20	A7-HR20-5-M	23-May-02	2.0	2.5	Manganese	458	mg/kg	NV	480344.957	1348028.465
A7-HR20	A7-HR20-5-M	23-May-02	2.0	2.5	Mercury	0.02	mg/kg	UNV	480344.957	1348028.465
A7-HR20	A7-HR20-5-P	23-May-02	2.0	2.5	Aroclor-1254	39	ug/kg	UNV	480344.957	1348028.465
A7-HR20	A7-HR20-5-P	23-May-02	2.0	2.5	Aroclor-1254	39	ug/kg	UNV	480344.957	1348028.465
A7-HR20	A7-HR20-5-P	23-May-02	2.0	2.5	Aroclor-1260	39	ug/kg	UNV	480344.957	1348028.465
A7-HR20	A7-HR20-5-P	23-May-02	2.0	2.5	Aroclor-1260	39	ug/kg	UNV	480344.957	1348028.465
A7-HR20	A7-HR20-5-R	23-May-02	2.0	2.5	Cesium-137	0.106	pCi/g	NV	480344.957	1348028.465
A7-HR20	A7-HR20-5-R	23-May-02	2.0	2.5	Radium-226	1.73	pCi/g	NV	480344.957	1348028.465
A7-HR20	A7-HR20-5-R	23-May-02	2.0	2.5	Radium-228	1.26	pCi/g	NV	480344.957	1348028.465
A7-HR20	A7-HR20-5-R	23-May-02	2.0	2.5	Technetium-99	1.6	pCi/g	UNV	480344.957	1348028.465
A7-HR20	A7-HR20-5-R	23-May-02	2.0	2.5	Thorium-228	1.23	pCi/g	NV	480344.957	1348028.465
A7-HR20	A7-HR20-5-R	23-May-02	2.0	2.5	Thorium-230	25.4	pCi/g	UNV	480344.957	1348028.465
A7-HR20	A7-HR20-5-R	23-May-02	2.0	2.5	Thorium-232	1.26	pCi/g	NV	480344.957	1348028.465
A7-HR20	A7-HR20-5-R	23-May-02	2.0	2.5	Uranium, Total	25.7	mg/kg	NV	480344.957	1348028.465
A7-HR20	A7-HR20-6-M	23-May-02	2.5	3.0	Arsenic	4.5	mg/kg	NV	480344.957	1348028.465
A7-HR20	A7-HR20-6-M	23-May-02	2.5	3.0	Beryllium	0.59	mg/kg	NV	480344.957	1348028.465
A7-HR20	A7-HR20-6-M	23-May-02	2.5	3.0	Boron	9.5	mg/kg	NV	480344.957	1348028.465
A7-HR20	A7-HR20-6-M	23-May-02	2.5	3.0	Lead	6.9	mg/kg	NV	480344.957	1348028.465
A7-HR20	A7-HR20-6-M	23-May-02	2.5	3.0	Manganese	643	mg/kg	NV	480344.957	1348028.465
A7-HR20	A7-HR20-6-M	23-May-02	2.5	3.0	Mercury	0.01	mg/kg	UNV	480344.957	1348028.465
A7-HR20	A7-HR20-6-P	23-May-02	2.5	3.0	Aroclor-1254	39	ug/kg	UNV	480344.957	1348028.465
A7-HR20	A7-HR20-6-P	23-May-02	2.5	3.0	Aroclor-1254	39	ug/kg	UNV	480344.957	1348028.465
A7-HR20	A7-HR20-6-P	23-May-02	2.5	3.0	Aroclor-1260	39	ug/kg	UNV	480344.957	1348028.465

5982

Boring	Sample ID	Sample Date	Sample Depth (feet)		Parameter	Result	Units	Qualifier	Northing	Easting
			Top	Bottom						
A7-HR20	A7-HR20-6-P	23-May-02	2.5	3.0	Aroclor-1260	39	ug/kg	UNV	480344.957	1348028.465
A7-HR20	A7-HR20-6-R	23-May-02	2.5	3.0	Cesium-137	0.065	pCi/g	UNV	480344.957	1348028.465
A7-HR20	A7-HR20-6-R	23-May-02	2.5	3.0	Radium-226	1.25	pCi/g	NV	480344.957	1348028.465
A7-HR20	A7-HR20-6-R	23-May-02	2.5	3.0	Radium-228	0.991	pCi/g	NV	480344.957	1348028.465
A7-HR20	A7-HR20-6-R	23-May-02	2.5	3.0	Technetium-99	2	pCi/g	UNV	480344.957	1348028.465
A7-HR20	A7-HR20-6-R	23-May-02	2.5	3.0	Thorium-228	0.987	pCi/g	NV	480344.957	1348028.465
A7-HR20	A7-HR20-6-R	23-May-02	2.5	3.0	Thorium-230	21.4	pCi/g	UNV	480344.957	1348028.465
A7-HR20	A7-HR20-6-R	23-May-02	2.5	3.0	Thorium-232	0.991	pCi/g	NV	480344.957	1348028.465
A7-HR20	A7-HR20-6-R	23-May-02	2.5	3.0	Uranium, Total	3.48	mg/kg	NV	480344.957	1348028.465
A7-HR21	A7-HR21-3-M	23-May-02	1.0	1.5	Arsenic	7.7	mg/kg	NV	480260.013	1348025.65
A7-HR21	A7-HR21-3-M	23-May-02	1.0	1.5	Beryllium	0.58	mg/kg	NV	480260.013	1348025.65
A7-HR21	A7-HR21-3-M	23-May-02	1.0	1.5	Boron	4.9	mg/kg	NV	480260.013	1348025.65
A7-HR21	A7-HR21-3-M	23-May-02	1.0	1.5	Lead	12.3	mg/kg	NV	480260.013	1348025.65
A7-HR21	A7-HR21-3-M	23-May-02	1.0	1.5	Manganese	556	mg/kg	NV	480260.013	1348025.65
A7-HR21	A7-HR21-3-M	23-May-02	1.0	1.5	Mercury	0.02	mg/kg	NV	480260.013	1348025.65
A7-HR21	A7-HR21-3-P	23-May-02	1.0	1.5	Aroclor-1254	37	ug/kg	UNV	480260.013	1348025.65
A7-HR21	A7-HR21-3-P	23-May-02	1.0	1.5	Aroclor-1254	37	ug/kg	UNV	480260.013	1348025.65
A7-HR21	A7-HR21-3-P	23-May-02	1.0	1.5	Aroclor-1260	37	ug/kg	UNV	480260.013	1348025.65
A7-HR21	A7-HR21-3-P	23-May-02	1.0	1.5	Aroclor-1260	37	ug/kg	UNV	480260.013	1348025.65
A7-HR21	A7-HR21-3-R	23-May-02	1.0	1.5	Cesium-137	0.058	pCi/g	UNV	480260.013	1348025.65
A7-HR21	A7-HR21-3-R	23-May-02	1.0	1.5	Radium-226	1.39	pCi/g	NV	480260.013	1348025.65
A7-HR21	A7-HR21-3-R	23-May-02	1.0	1.5	Radium-228	0.917	pCi/g	NV	480260.013	1348025.65
A7-HR21	A7-HR21-3-R	23-May-02	1.0	1.5	Technetium-99	1.8	pCi/g	UNV	480260.013	1348025.65
A7-HR21	A7-HR21-3-R	23-May-02	1.0	1.5	Thorium-228	0.916	pCi/g	NV	480260.013	1348025.65
A7-HR21	A7-HR21-3-R	23-May-02	1.0	1.5	Thorium-230	21.1	pCi/g	UNV	480260.013	1348025.65
A7-HR21	A7-HR21-3-R	23-May-02	1.0	1.5	Thorium-232	0.917	pCi/g	NV	480260.013	1348025.65
A7-HR21	A7-HR21-3-R	23-May-02	1.0	1.5	Uranium, Total	7.05	mg/kg	NV	480260.013	1348025.65
A7-HR21	A7-HR21-4-M	23-May-02	1.5	2.0	Arsenic	8.8	mg/kg	NV	480260.013	1348025.65
A7-HR21	A7-HR21-4-M	23-May-02	1.5	2.0	Beryllium	0.56	mg/kg	NV	480260.013	1348025.65
A7-HR21	A7-HR21-4-M	23-May-02	1.5	2.0	Boron	4.3	mg/kg	NV	480260.013	1348025.65
A7-HR21	A7-HR21-4-M	23-May-02	1.5	2.0	Lead	11.5	mg/kg	NV	480260.013	1348025.65
A7-HR21	A7-HR21-4-M	23-May-02	1.5	2.0	Manganese	431	mg/kg	NV	480260.013	1348025.65
A7-HR21	A7-HR21-4-M	23-May-02	1.5	2.0	Mercury	0.02	mg/kg	NV	480260.013	1348025.65
A7-HR21	A7-HR21-4-P	23-May-02	1.5	2.0	Aroclor-1254	38	ug/kg	UNV	480260.013	1348025.65
A7-HR21	A7-HR21-4-P	23-May-02	1.5	2.0	Aroclor-1260	38	ug/kg	UNV	480260.013	1348025.65

APPENDIX A
PREDESIGN CHARACTERIZATION DATA FOR AREA 7 SILOS AND GENERAL AREA

Boring	Sample ID	Sample Date	Sample Depth (feet)		Parameter	Result	Units	Qualifier	Northing	Easting
			Top	Bottom						
A7-HR21	A7-HR21-4-R	23-May-02	1.5	2.0	Cesium-137	0.061	pCi/g	NV	480260.013	1348025.65
A7-HR21	A7-HR21-4-R	23-May-02	1.5	2.0	Radium-226	1.34	pCi/g	NV	480260.013	1348025.65
A7-HR21	A7-HR21-4-R	23-May-02	1.5	2.0	Radium-228	0.945	pCi/g	NV	480260.013	1348025.65
A7-HR21	A7-HR21-4-R	23-May-02	1.5	2.0	Technetium-99	1.8	pCi/g	UNV	480260.013	1348025.65
A7-HR21	A7-HR21-4-R	23-May-02	1.5	2.0	Thorium-228	0.95	pCi/g	NV	480260.013	1348025.65
A7-HR21	A7-HR21-4-R	23-May-02	1.5	2.0	Thorium-230	23.2	pCi/g	UNV	480260.013	1348025.65
A7-HR21	A7-HR21-4-R	23-May-02	1.5	2.0	Thorium-232	0.945	pCi/g	NV	480260.013	1348025.65
A7-HR21	A7-HR21-4-R	23-May-02	1.5	2.0	Uranium, Total	20.9	mg/kg	NV	480260.013	1348025.65
A7-HR23	A7-HR23-1-M	23-May-02	0.0	0.5	Arsenic	15.4	mg/kg	NV	480175.147	1348025.364
A7-HR23	A7-HR23-1-M	23-May-02	0.0	0.5	Beryllium	0.53	mg/kg	NV	480175.147	1348025.364
A7-HR23	A7-HR23-1-M	23-May-02	0.0	0.5	Boron	1.7	mg/kg	NV	480175.147	1348025.364
A7-HR23	A7-HR23-1-M	23-May-02	0.0	0.5	Lead	17.6	mg/kg	NV	480175.147	1348025.364
A7-HR23	A7-HR23-1-M	23-May-02	0.0	0.5	Manganese	311	mg/kg	NV	480175.147	1348025.364
A7-HR23	A7-HR23-1-M	23-May-02	0.0	0.5	Mercury	0.04	mg/kg	NV	480175.147	1348025.364
A7-HR23	A7-HR23-1-P	23-May-02	0.0	0.5	Aroclor-1254	38	ug/kg	UNV	480175.147	1348025.364
A7-HR23	A7-HR23-1-P	23-May-02	0.0	0.5	Aroclor-1254	38	ug/kg	UNV	480175.147	1348025.364
A7-HR23	A7-HR23-1-P	23-May-02	0.0	0.5	Aroclor-1260	38	ug/kg	UNV	480175.147	1348025.364
A7-HR23	A7-HR23-1-P	23-May-02	0.0	0.5	Aroclor-1260	38	ug/kg	UNV	480175.147	1348025.364
A7-HR23	A7-HR23-1-R	23-May-02	0.0	0.5	Cesium-137	0.053	pCi/g	UNV	480175.147	1348025.364
A7-HR23	A7-HR23-1-R	23-May-02	0.0	0.5	Radium-226	1.52	pCi/g	NV	480175.147	1348025.364
A7-HR23	A7-HR23-1-R	23-May-02	0.0	0.5	Radium-228	1.13	pCi/g	NV	480175.147	1348025.364
A7-HR23	A7-HR23-1-R	23-May-02	0.0	0.5	Technetium-99	1.7	pCi/g	UNV	480175.147	1348025.364
A7-HR23	A7-HR23-1-R	23-May-02	0.0	0.5	Thorium-228	1.12	pCi/g	NV	480175.147	1348025.364
A7-HR23	A7-HR23-1-R	23-May-02	0.0	0.5	Thorium-230	23.2	pCi/g	UNV	480175.147	1348025.364
A7-HR23	A7-HR23-1-R	23-May-02	0.0	0.5	Thorium-232	1.13	pCi/g	NV	480175.147	1348025.364
A7-HR23	A7-HR23-1-R	23-May-02	0.0	0.5	Uranium, Total	4.21	mg/kg	NV	480175.147	1348025.364
A7-HR9	A7-HR9-2-M	22-May-02	0.5	1.0	Arsenic	8.6	mg/kg	NV	480744.31	1348072.41
A7-HR9	A7-HR9-2-M	22-May-02	0.5	1.0	Beryllium	0.68	mg/kg	NV	480744.31	1348072.41
A7-HR9	A7-HR9-2-M	22-May-02	0.5	1.0	Boron	8.5	mg/kg	NV	480744.31	1348072.41
A7-HR9	A7-HR9-2-M	22-May-02	0.5	1.0	Lead	20.1	mg/kg	NV	480744.31	1348072.41
A7-HR9	A7-HR9-2-M	22-May-02	0.5	1.0	Manganese	645	mg/kg	NV	480744.31	1348072.41
A7-HR9	A7-HR9-2-M	22-May-02	0.5	1.0	Mercury	0.02	mg/kg	NV	480744.31	1348072.41
A7-HR9	A7-HR9-2-P	22-May-02	0.5	1.0	Aroclor-1254	39	ug/kg	UNV	480744.31	1348072.41
A7-HR9	A7-HR9-2-P	22-May-02	0.5	1.0	Aroclor-1260	39	ug/kg	UNV	480744.31	1348072.41
A7-HR9	A7-HR9-2-R	22-May-02	0.5	1.0	Cesium-137	0.055	pCi/g	UNV	480744.31	1348072.41

5982

Boring	Sample ID	Sample Date	Sample Depth (feet)		Parameter	Result	Units	Qualifier	Northing	Easting
			Top	Bottom						
A7-HR9	A7-HR9-2-R	22-May-02	0.5	1.0	Radium-226	1.29	pCi/g	NV	480744.31	1348072.41
A7-HR9	A7-HR9-2-R	22-May-02	0.5	1.0	Radium-228	0.92	pCi/g	NV	480744.31	1348072.41
A7-HR9	A7-HR9-2-R	22-May-02	0.5	1.0	Technetium-99	1.8	pCi/g	UNV	480744.31	1348072.41
A7-HR9	A7-HR9-2-R	22-May-02	0.5	1.0	Thorium-228	0.892	pCi/g	NV	480744.31	1348072.41
A7-HR9	A7-HR9-2-R	22-May-02	0.5	1.0	Thorium-230	24.7	pCi/g	UNV	480744.31	1348072.41
A7-HR9	A7-HR9-2-R	22-May-02	0.5	1.0	Thorium-232	0.92	pCi/g	NV	480744.31	1348072.41
A7-HR9	A7-HR9-2-R	22-May-02	0.5	1.0	Uranium, Total	11.3	mg/kg	NV	480744.31	1348072.41
A7-HR9	A7-HR9-3-M	22-May-02	1.0	1.5	Arsenic	13.3	mg/kg	NV	480744.31	1348072.41
A7-HR9	A7-HR9-3-M	22-May-02	1.0	1.5	Beryllium	1	mg/kg	NV	480744.31	1348072.41
A7-HR9	A7-HR9-3-M	22-May-02	1.0	1.5	Boron	6.9	mg/kg	NV	480744.31	1348072.41
A7-HR9	A7-HR9-3-M	22-May-02	1.0	1.5	Lead	17.8	mg/kg	NV	480744.31	1348072.41
A7-HR9	A7-HR9-3-M	22-May-02	1.0	1.5	Manganese	1500	mg/kg	NV	480744.31	1348072.41
A7-HR9	A7-HR9-3-M	22-May-02	1.0	1.5	Mercury	0.04	mg/kg	NV	480744.31	1348072.41
A7-HR9	A7-HR9-3-P	22-May-02	1.0	1.5	Aroclor-1254	40	ug/kg	UNV	480744.31	1348072.41
A7-HR9	A7-HR9-3-P	22-May-02	1.0	1.5	Aroclor-1260	40	ug/kg	UNV	480744.31	1348072.41
A7-HR9	A7-HR9-3-R	22-May-02	1.0	1.5	Cesium-137	0.069	pCi/g	UNV	480744.31	1348072.41
A7-HR9	A7-HR9-3-R	22-May-02	1.0	1.5	Radium-226	1.64	pCi/g	NV	480744.31	1348072.41
A7-HR9	A7-HR9-3-R	22-May-02	1.0	1.5	Radium-228	1.34	pCi/g	NV	480744.31	1348072.41
A7-HR9	A7-HR9-3-R	22-May-02	1.0	1.5	Technetium-99	1.7	pCi/g	UNV	480744.31	1348072.41
A7-HR9	A7-HR9-3-R	22-May-02	1.0	1.5	Thorium-228	1.34	pCi/g	NV	480744.31	1348072.41
A7-HR9	A7-HR9-3-R	22-May-02	1.0	1.5	Thorium-230	25.3	pCi/g	UNV	480744.31	1348072.41
A7-HR9	A7-HR9-3-R	22-May-02	1.0	1.5	Thorium-232	1.34	pCi/g	NV	480744.31	1348072.41
A7-HR9	A7-HR9-3-R	22-May-02	1.0	1.5	Uranium, Total	4.18	mg/kg	NV	480744.31	1348072.41
A7-K13	A7-K13-10-M	29-Apr-02	4.5	5.0	Arsenic	8.9	mg/kg	NV	480474.62	1348044.1
A7-K13	A7-K13-10-M	29-Apr-02	4.5	5.0	Beryllium	0.9	mg/kg	NV	480474.62	1348044.1
A7-K13	A7-K13-10-M	29-Apr-02	4.5	5.0	Boron	2.8	mg/kg	NV	480474.62	1348044.1
A7-K13	A7-K13-10-M	29-Apr-02	4.5	5.0	Lead	16.9	mg/kg	NV	480474.62	1348044.1
A7-K13	A7-K13-10-M	29-Apr-02	4.5	5.0	Manganese	203	mg/kg	NV	480474.62	1348044.1
A7-K13	A7-K13-10-M	29-Apr-02	4.5	5.0	Mercury	0.04	mg/kg	NV	480474.62	1348044.1
A7-K13	A7-K13-10-P	29-Apr-02	4.5	5.0	Aroclor-1254	41	ug/kg	UNV	480474.62	1348044.1
A7-K13	A7-K13-10-P	29-Apr-02	4.5	5.0	Aroclor-1260	41	ug/kg	UNV	480474.62	1348044.1
A7-K13	A7-K13-10-R	29-Apr-02	4.5	5.0	Cesium-137	0.059	pCi/g	UNV	480474.62	1348044.1
A7-K13	A7-K13-10-R	29-Apr-02	4.5	5.0	Radium-226	1.38	pCi/g	NV	480474.62	1348044.1
A7-K13	A7-K13-10-R	29-Apr-02	4.5	5.0	Radium-228	1.14	pCi/g	NV	480474.62	1348044.1
A7-K13	A7-K13-10-R	29-Apr-02	4.5	5.0	Technetium-99	1.9	pCi/g	UNV	480474.62	1348044.1

APPENDIX A
PREDESIGN CHARACTERIZATION DATA FOR AREA 7 SILOS AND GENERAL AREA

Boring	Sample ID	Sample Date	Sample Depth (feet)		Parameter	Result	Units	Qualifier	Northing	Easting
			Top	Bottom						
A7-K13	A7-K13-10-R	29-Apr-02	4.5	5.0	Thorium-228	1.13	pCi/g	NV	480474.62	1348044.1
A7-K13	A7-K13-10-R	29-Apr-02	4.5	5.0	Thorium-230	21.5	pCi/g	UNV	480474.62	1348044.1
A7-K13	A7-K13-10-R	29-Apr-02	4.5	5.0	Thorium-232	1.14	pCi/g	NV	480474.62	1348044.1
A7-K13	A7-K13-10-R	29-Apr-02	4.5	5.0	Uranium, Total	4.39	mg/kg	NV	480474.62	1348044.1
A7-K13	A7-K13-20-M	29-Apr-02	9.5	10.0	Arsenic	10.4	mg/kg	NV	480474.62	1348044.1
A7-K13	A7-K13-20-M	29-Apr-02	9.5	10.0	Beryllium	0.5	mg/kg	NV	480474.62	1348044.1
A7-K13	A7-K13-20-M	29-Apr-02	9.5	10.0	Boron	7.2	mg/kg	NV	480474.62	1348044.1
A7-K13	A7-K13-20-M	29-Apr-02	9.5	10.0	Lead	9.5	mg/kg	NV	480474.62	1348044.1
A7-K13	A7-K13-20-M	29-Apr-02	9.5	10.0	Manganese	272	mg/kg	NV	480474.62	1348044.1
A7-K13	A7-K13-20-M	29-Apr-02	9.5	10.0	Mercury	0.03	mg/kg	NV	480474.62	1348044.1
A7-K13	A7-K13-20-P	29-Apr-02	9.5	10.0	Aroclor-1254	41	ug/kg	UNV	480474.62	1348044.1
A7-K13	A7-K13-20-P	29-Apr-02	9.5	10.0	Aroclor-1260	41	ug/kg	UNV	480474.62	1348044.1
A7-K13	A7-K13-20-R	29-Apr-02	9.5	10.0	Cesium-137	0.06	pCi/g	UNV	480474.62	1348044.1
A7-K13	A7-K13-20-R	29-Apr-02	9.5	10.0	Radium-226	1.12	pCi/g	NV	480474.62	1348044.1
A7-K13	A7-K13-20-R	29-Apr-02	9.5	10.0	Radium-228	0.948	pCi/g	NV	480474.62	1348044.1
A7-K13	A7-K13-20-R	29-Apr-02	9.5	10.0	Technetium-99	1.8	pCi/g	UNV	480474.62	1348044.1
A7-K13	A7-K13-20-R	29-Apr-02	9.5	10.0	Thorium-228	0.94	pCi/g	NV	480474.62	1348044.1
A7-K13	A7-K13-20-R	29-Apr-02	9.5	10.0	Thorium-230	23.2	pCi/g	UNV	480474.62	1348044.1
A7-K13	A7-K13-20-R	29-Apr-02	9.5	10.0	Thorium-232	0.948	pCi/g	NV	480474.62	1348044.1
A7-K13	A7-K13-20-R	29-Apr-02	9.5	10.0	Uranium, Total	5.44	mg/kg	NV	480474.62	1348044.1
A7-K14	A7-K14-10-M	25-Apr-02	4.5	5.0	Arsenic	13.2	mg/kg	NV	480471.88	1348144.06
A7-K14	A7-K14-10-M	25-Apr-02	4.5	5.0	Beryllium	0.47	mg/kg	NV	480471.88	1348144.06
A7-K14	A7-K14-10-M	25-Apr-02	4.5	5.0	Boron	1.2	mg/kg	NV	480471.88	1348144.06
A7-K14	A7-K14-10-M	25-Apr-02	4.5	5.0	Lead	13.4	mg/kg	NV	480471.88	1348144.06
A7-K14	A7-K14-10-M	25-Apr-02	4.5	5.0	Manganese	334	mg/kg	NV	480471.88	1348144.06
A7-K14	A7-K14-10-M	25-Apr-02	4.5	5.0	Mercury	0.03	mg/kg	NV	480471.88	1348144.06
A7-K14	A7-K14-10-P	25-Apr-02	4.5	5.0	Aroclor-1254	41	ug/kg	UNV	480471.88	1348144.06
A7-K14	A7-K14-10-P	25-Apr-02	4.5	5.0	Aroclor-1260	41	ug/kg	UNV	480471.88	1348144.06
A7-K14	A7-K14-10-R	25-Apr-02	4.5	5.0	Cesium-137	0.044	pCi/g	UNV	480471.88	1348144.06
A7-K14	A7-K14-10-R	25-Apr-02	4.5	5.0	Radium-226	1.51	pCi/g	NV	480471.88	1348144.06
A7-K14	A7-K14-10-R	25-Apr-02	4.5	5.0	Radium-228	1.27	pCi/g	NV	480471.88	1348144.06
A7-K14	A7-K14-10-R	25-Apr-02	4.5	5.0	Technetium-99	1.6	pCi/g	UNV	480471.88	1348144.06
A7-K14	A7-K14-10-R	25-Apr-02	4.5	5.0	Thorium-228	1.25	pCi/g	NV	480471.88	1348144.06
A7-K14	A7-K14-10-R	25-Apr-02	4.5	5.0	Thorium-230	23.9	pCi/g	UNV	480471.88	1348144.06
A7-K14	A7-K14-10-R	25-Apr-02	4.5	5.0	Thorium-232	1.27	pCi/g	NV	480471.88	1348144.06

5982

Boring	Sample ID	Sample Date	Sample Depth (feet)		Parameter	Result	Units	Qualifier	Northing	Easting
			Top	Bottom						
A7-K14	A7-K14-10-R	25-Apr-02	4.5	5.0	Uranium, Total	4.73	mg/kg	NV	480471.88	1348144.06
A7-K14	A7-K14-20-M	25-Apr-02	9.5	10.0	Arsenic	5.5	mg/kg	NV	480471.88	1348144.06
A7-K14	A7-K14-20-M	25-Apr-02	9.5	10.0	Beryllium	0.41	mg/kg	NV	480471.88	1348144.06
A7-K14	A7-K14-20-M	25-Apr-02	9.5	10.0	Boron	5.6	mg/kg	NV	480471.88	1348144.06
A7-K14	A7-K14-20-M	25-Apr-02	9.5	10.0	Lead	7.2	mg/kg	NV	480471.88	1348144.06
A7-K14	A7-K14-20-M	25-Apr-02	9.5	10.0	Manganese	271	mg/kg	NV	480471.88	1348144.06
A7-K14	A7-K14-20-M	25-Apr-02	9.5	10.0	Mercury	0.02	mg/kg	NV	480471.88	1348144.06
A7-K14	A7-K14-20-P	25-Apr-02	9.5	10.0	Aroclor-1254	40	ug/kg	UNV	480471.88	1348144.06
A7-K14	A7-K14-20-P	25-Apr-02	9.5	10.0	Aroclor-1260	40	ug/kg	UNV	480471.88	1348144.06
A7-K14	A7-K14-20-R	25-Apr-02	9.5	10.0	Cesium-137	0.044	pCi/g	UNV	480471.88	1348144.06
A7-K14	A7-K14-20-R	25-Apr-02	9.5	10.0	Radium-226	1.05	pCi/g	NV	480471.88	1348144.06
A7-K14	A7-K14-20-R	25-Apr-02	9.5	10.0	Radium-228	0.839	pCi/g	NV	480471.88	1348144.06
A7-K14	A7-K14-20-R	25-Apr-02	9.5	10.0	Technetium-99	1.8	pCi/g	UNV	480471.88	1348144.06
A7-K14	A7-K14-20-R	25-Apr-02	9.5	10.0	Thorium-228	0.824	pCi/g	NV	480471.88	1348144.06
A7-K14	A7-K14-20-R	25-Apr-02	9.5	10.0	Thorium-230	24.3	pCi/g	UNV	480471.88	1348144.06
A7-K14	A7-K14-20-R	25-Apr-02	9.5	10.0	Thorium-232	0.839	pCi/g	NV	480471.88	1348144.06
A7-K14	A7-K14-20-R	25-Apr-02	9.5	10.0	Uranium, Total	2.93	mg/kg	UNV	480471.88	1348144.06
A7-K15	A7-K15-10-M	25-Apr-02	4.5	5.0	Arsenic	13.4	mg/kg	NV	480469.14	1348244.02
A7-K15	A7-K15-10-M	25-Apr-02	4.5	5.0	Beryllium	1.6	mg/kg	NV	480469.14	1348244.02
A7-K15	A7-K15-10-M	25-Apr-02	4.5	5.0	Boron	1.3	mg/kg	NV	480469.14	1348244.02
A7-K15	A7-K15-10-M	25-Apr-02	4.5	5.0	Lead	23	mg/kg	NV	480469.14	1348244.02
A7-K15	A7-K15-10-M	25-Apr-02	4.5	5.0	Manganese	2780	mg/kg	NV	480469.14	1348244.02
A7-K15	A7-K15-10-M	25-Apr-02	4.5	5.0	Mercury	0.05	mg/kg	NV	480469.14	1348244.02
A7-K15	A7-K15-10-P	25-Apr-02	4.5	5.0	Aroclor-1254	42	ug/kg	UNV	480469.14	1348244.02
A7-K15	A7-K15-10-P	25-Apr-02	4.5	5.0	Aroclor-1260	42	ug/kg	UNV	480469.14	1348244.02
A7-K15	A7-K15-10-R	25-Apr-02	4.5	5.0	Cesium-137	0.066	pCi/g	UNV	480469.14	1348244.02
A7-K15	A7-K15-10-R	25-Apr-02	4.5	5.0	Radium-226	1.67	pCi/g	NV	480469.14	1348244.02
A7-K15	A7-K15-10-R	25-Apr-02	4.5	5.0	Radium-228	1.27	pCi/g	NV	480469.14	1348244.02
A7-K15	A7-K15-10-R	25-Apr-02	4.5	5.0	Technetium-99	1.9	pCi/g	UNV	480469.14	1348244.02
A7-K15	A7-K15-10-R	25-Apr-02	4.5	5.0	Thorium-228	1.25	pCi/g	NV	480469.14	1348244.02
A7-K15	A7-K15-10-R	25-Apr-02	4.5	5.0	Thorium-230	24.9	pCi/g	UNV	480469.14	1348244.02
A7-K15	A7-K15-10-R	25-Apr-02	4.5	5.0	Thorium-232	1.27	pCi/g	NV	480469.14	1348244.02
A7-K15	A7-K15-10-R	25-Apr-02	4.5	5.0	Uranium, Total	6.47	mg/kg	NV	480469.14	1348244.02
A7-K15	A7-K15-20-M	25-Apr-02	9.5	10.0	Arsenic	8.4	mg/kg	NV	480469.14	1348244.02
A7-K15	A7-K15-20-M	25-Apr-02	9.5	10.0	Beryllium	0.54	mg/kg	NV	480469.14	1348244.02

APPENDIX A
PREDESIGN CHARACTERIZATION DATA FOR AREA 7 SILOS AND GENERAL AREA

Boring	Sample ID	Sample Date	Sample Depth (feet)		Parameter	Result	Units	Qualifier	Northing	Easting
			Top	Bottom						
A7-K15	A7-K15-20-M	25-Apr-02	9.5	10.0	Boron	6.3	mg/kg	NV	480469.14	1348244.02
A7-K15	A7-K15-20-M	25-Apr-02	9.5	10.0	Lead	11.1	mg/kg	NV	480469.14	1348244.02
A7-K15	A7-K15-20-M	25-Apr-02	9.5	10.0	Manganese	634	mg/kg	NV	480469.14	1348244.02
A7-K15	A7-K15-20-M	25-Apr-02	9.5	10.0	Mercury	0.02	mg/kg	NV	480469.14	1348244.02
A7-K15	A7-K15-20-P	25-Apr-02	9.5	10.0	Aroclor-1254	40	ug/kg	UNV	480469.14	1348244.02
A7-K15	A7-K15-20-P	25-Apr-02	9.5	10.0	Aroclor-1260	40	ug/kg	UNV	480469.14	1348244.02
A7-K15	A7-K15-20-R	25-Apr-02	9.5	10.0	Cesium-137	0.041	pCi/g	UNV	480469.14	1348244.02
A7-K15	A7-K15-20-R	25-Apr-02	9.5	10.0	Radium-226	1.04	pCi/g	NV	480469.14	1348244.02
A7-K15	A7-K15-20-R	25-Apr-02	9.5	10.0	Radium-228	0.884	pCi/g	NV	480469.14	1348244.02
A7-K15	A7-K15-20-R	25-Apr-02	9.5	10.0	Technetium-99	1.8	pCi/g	UNV	480469.14	1348244.02
A7-K15	A7-K15-20-R	25-Apr-02	9.5	10.0	Thorium-228	0.851	pCi/g	NV	480469.14	1348244.02
A7-K15	A7-K15-20-R	25-Apr-02	9.5	10.0	Thorium-230	21.2	pCi/g	UNV	480469.14	1348244.02
A7-K15	A7-K15-20-R	25-Apr-02	9.5	10.0	Thorium-232	0.884	pCi/g	NV	480469.14	1348244.02
A7-K15	A7-K15-20-R	25-Apr-02	9.5	10.0	Uranium, Total	3.12	mg/kg	NV	480469.14	1348244.02
A7-K16	A7-K16-10-M	29-Apr-02	4.5	5.0	Arsenic	53.6	mg/kg	NV	480449.42	1348094.1
A7-K16	A7-K16-10-M	29-Apr-02	4.5	5.0	Beryllium	0.94	mg/kg	NV	480449.42	1348094.1
A7-K16	A7-K16-10-M	29-Apr-02	4.5	5.0	Boron	3.3	mg/kg	NV	480449.42	1348094.1
A7-K16	A7-K16-10-M	29-Apr-02	4.5	5.0	Lead	16.9	mg/kg	NV	480449.42	1348094.1
A7-K16	A7-K16-10-M	29-Apr-02	4.5	5.0	Manganese	481	mg/kg	NV	480449.42	1348094.1
A7-K16	A7-K16-10-M	29-Apr-02	4.5	5.0	Mercury	0.04	mg/kg	NV	480449.42	1348094.1
A7-K16	A7-K16-10-P	29-Apr-02	4.5	5.0	Aroclor-1254	41	ug/kg	UNV	480449.42	1348094.1
A7-K16	A7-K16-10-P	29-Apr-02	4.5	5.0	Aroclor-1260	41	ug/kg	UNV	480449.42	1348094.1
A7-K16	A7-K16-10-R	29-Apr-02	4.5	5.0	Cesium-137	0.04	pCi/g	UNV	480449.42	1348094.1
A7-K16	A7-K16-10-R	29-Apr-02	4.5	5.0	Radium-226	1.6	pCi/g	NV	480449.42	1348094.1
A7-K16	A7-K16-10-R	29-Apr-02	4.5	5.0	Radium-228	1.26	pCi/g	NV	480449.42	1348094.1
A7-K16	A7-K16-10-R	29-Apr-02	4.5	5.0	Technetium-99	1.8	pCi/g	UNV	480449.42	1348094.1
A7-K16	A7-K16-10-R	29-Apr-02	4.5	5.0	Thorium-228	1.22	pCi/g	NV	480449.42	1348094.1
A7-K16	A7-K16-10-R	29-Apr-02	4.5	5.0	Thorium-230	24.3	pCi/g	UNV	480449.42	1348094.1
A7-K16	A7-K16-10-R	29-Apr-02	4.5	5.0	Thorium-232	1.26	pCi/g	NV	480449.42	1348094.1
A7-K16	A7-K16-10-R	29-Apr-02	4.5	5.0	Uranium, Total	5.66	mg/kg	NV	480449.42	1348094.1
A7-K16	A7-K16-20-M	29-Apr-02	9.5	10.0	Arsenic	4.4	mg/kg	NV	480449.42	1348094.1
A7-K16	A7-K16-20-M	29-Apr-02	9.5	10.0	Beryllium	0.56	mg/kg	NV	480449.42	1348094.1
A7-K16	A7-K16-20-M	29-Apr-02	9.5	10.0	Boron	6.9	mg/kg	NV	480449.42	1348094.1
A7-K16	A7-K16-20-M	29-Apr-02	9.5	10.0	Lead	9.9	mg/kg	NV	480449.42	1348094.1
A7-K16	A7-K16-20-M	29-Apr-02	9.5	10.0	Manganese	449	mg/kg	NV	480449.42	1348094.1

Boring	Sample ID	Sample Date	Sample Depth (feet)		Parameter	Result	Units	Qualifier	Northing	Easting
			Top	Bottom						
A7-K16	A7-K16-20-M	29-Apr-02	9.5	10.0	Mercury	0.02	mg/kg	NV	480449.42	1348094.1
A7-K16	A7-K16-20-P	29-Apr-02	9.5	10.0	Aroclor-1254	42	ug/kg	UNV	480449.42	1348094.1
A7-K16	A7-K16-20-P	29-Apr-02	9.5	10.0	Aroclor-1260	42	ug/kg	UNV	480449.42	1348094.1
A7-K16	A7-K16-20-R	29-Apr-02	9.5	10.0	Cesium-137	0.05	pCi/g	UNV	480449.42	1348094.1
A7-K16	A7-K16-20-R	29-Apr-02	9.5	10.0	Radium-226	1.36	pCi/g	NV	480449.42	1348094.1
A7-K16	A7-K16-20-R	29-Apr-02	9.5	10.0	Radium-228	1.03	pCi/g	NV	480449.42	1348094.1
A7-K16	A7-K16-20-R	29-Apr-02	9.5	10.0	Technetium-99	1.9	pCi/g	UNV	480449.42	1348094.1
A7-K16	A7-K16-20-R	29-Apr-02	9.5	10.0	Thorium-228	1.04	pCi/g	NV	480449.42	1348094.1
A7-K16	A7-K16-20-R	29-Apr-02	9.5	10.0	Thorium-230	27	pCi/g	UNV	480449.42	1348094.1
A7-K16	A7-K16-20-R	29-Apr-02	9.5	10.0	Thorium-232	1.03	pCi/g	NV	480449.42	1348094.1
A7-K16	A7-K16-20-R	29-Apr-02	9.5	10.0	Uranium, Total	2.8	mg/kg	NV	480449.42	1348094.1
A7-K17	A7-K17-10-M	29-Apr-02	4.5	5.0	Arsenic	6	mg/kg	NV	480466.68	1348194.06
A7-K17	A7-K17-10-M	29-Apr-02	4.5	5.0	Beryllium	0.79	mg/kg	NV	480466.68	1348194.06
A7-K17	A7-K17-10-M	29-Apr-02	4.5	5.0	Boron	2.5	mg/kg	NV	480466.68	1348194.06
A7-K17	A7-K17-10-M	29-Apr-02	4.5	5.0	Lead	13.7	mg/kg	NV	480466.68	1348194.06
A7-K17	A7-K17-10-M	29-Apr-02	4.5	5.0	Manganese	280	mg/kg	NV	480466.68	1348194.06
A7-K17	A7-K17-10-M	29-Apr-02	4.5	5.0	Mercury	0.03	mg/kg	NV	480466.68	1348194.06
A7-K17	A7-K17-10-P	29-Apr-02	4.5	5.0	Aroclor-1254	42	ug/kg	UNV	480466.68	1348194.06
A7-K17	A7-K17-10-P	29-Apr-02	4.5	5.0	Aroclor-1260	42	ug/kg	UNV	480466.68	1348194.06
A7-K17	A7-K17-10-R	29-Apr-02	4.5	5.0	Cesium-137	0.059	pCi/g	UNV	480466.68	1348194.06
A7-K17	A7-K17-10-R	29-Apr-02	4.5	5.0	Radium-226	1.27	pCi/g	NV	480466.68	1348194.06
A7-K17	A7-K17-10-R	29-Apr-02	4.5	5.0	Radium-228	0.974	pCi/g	NV	480466.68	1348194.06
A7-K17	A7-K17-10-R	29-Apr-02	4.5	5.0	Technetium-99	1.8	pCi/g	UNV	480466.68	1348194.06
A7-K17	A7-K17-10-R	29-Apr-02	4.5	5.0	Thorium-228	0.946	pCi/g	NV	480466.68	1348194.06
A7-K17	A7-K17-10-R	29-Apr-02	4.5	5.0	Thorium-230	21	pCi/g	UNV	480466.68	1348194.06
A7-K17	A7-K17-10-R	29-Apr-02	4.5	5.0	Thorium-232	0.974	pCi/g	NV	480466.68	1348194.06
A7-K17	A7-K17-10-R	29-Apr-02	4.5	5.0	Uranium, Total	3.02	mg/kg	UNV	480466.68	1348194.06
A7-K17	A7-K17-20-M	29-Apr-02	9.5	10.0	Arsenic	14.1	mg/kg	NV	480466.68	1348194.06
A7-K17	A7-K17-20-M	29-Apr-02	9.5	10.0	Beryllium	0.26	mg/kg	NV	480466.68	1348194.06
A7-K17	A7-K17-20-M	29-Apr-02	9.5	10.0	Boron	5.6	mg/kg	NV	480466.68	1348194.06
A7-K17	A7-K17-20-M	29-Apr-02	9.5	10.0	Lead	8.8	mg/kg	NV	480466.68	1348194.06
A7-K17	A7-K17-20-M	29-Apr-02	9.5	10.0	Manganese	656	mg/kg	NV	480466.68	1348194.06
A7-K17	A7-K17-20-M	29-Apr-02	9.5	10.0	Mercury	0.02	mg/kg	UNV	480466.68	1348194.06
A7-K17	A7-K17-20-P	29-Apr-02	9.5	10.0	Aroclor-1254	40	ug/kg	UNV	480466.68	1348194.06
A7-K17	A7-K17-20-P	29-Apr-02	9.5	10.0	Aroclor-1260	40	ug/kg	UNV	480466.68	1348194.06

APPENDIX A
PREDESIGN CHARACTERIZATION DATA FOR AREA 7 SILOS AND GENERAL AREA

Boring	Sample ID	Sample Date	Sample Depth (feet)		Parameter	Result	Units	Qualifier	Northing	Easting
			Top	Bottom						
A7-K17	A7-K17-20-R	29-Apr-02	9.5	10.0	Cesium-137	0.037	pCi/g	UNV	480466.68	1348194.06
A7-K17	A7-K17-20-R	29-Apr-02	9.5	10.0	Radium-226	1.05	pCi/g	NV	480466.68	1348194.06
A7-K17	A7-K17-20-R	29-Apr-02	9.5	10.0	Radium-228	0.837	pCi/g	NV	480466.68	1348194.06
A7-K17	A7-K17-20-R	29-Apr-02	9.5	10.0	Technetium-99	1.9	pCi/g	UNV	480466.68	1348194.06
A7-K17	A7-K17-20-R	29-Apr-02	9.5	10.0	Thorium-228	0.821	pCi/g	NV	480466.68	1348194.06
A7-K17	A7-K17-20-R	29-Apr-02	9.5	10.0	Thorium-230	21	pCi/g	UNV	480466.68	1348194.06
A7-K17	A7-K17-20-R	29-Apr-02	9.5	10.0	Thorium-232	0.837	pCi/g	NV	480466.68	1348194.06
A7-K17	A7-K17-20-R	29-Apr-02	9.5	10.0	Uranium, Total	3.77	mg/kg	NV	480466.68	1348194.06
A7-K18	A7-K18-10-M	29-Apr-02	4.5	5.0	Arsenic	9.3	mg/kg	NV	480443.94	1348294.02
A7-K18	A7-K18-10-M	29-Apr-02	4.5	5.0	Beryllium	0.57	mg/kg	NV	480443.94	1348294.02
A7-K18	A7-K18-10-M	29-Apr-02	4.5	5.0	Boron	5.6	mg/kg	NV	480443.94	1348294.02
A7-K18	A7-K18-10-M	29-Apr-02	4.5	5.0	Lead	12.3	mg/kg	NV	480443.94	1348294.02
A7-K18	A7-K18-10-M	29-Apr-02	4.5	5.0	Manganese	242	mg/kg	NV	480443.94	1348294.02
A7-K18	A7-K18-10-M	29-Apr-02	4.5	5.0	Mercury	0.03	mg/kg	NV	480443.94	1348294.02
A7-K18	A7-K18-10-P	29-Apr-02	4.5	5.0	Aroclor-1254	40	ug/kg	UNV	480443.94	1348294.02
A7-K18	A7-K18-10-P	29-Apr-02	4.5	5.0	Aroclor-1260	40	ug/kg	UNV	480443.94	1348294.02
A7-K18	A7-K18-10-R	29-Apr-02	4.5	5.0	Cesium-137	0.051	pCi/g	UNV	480443.94	1348294.02
A7-K18	A7-K18-10-R	29-Apr-02	4.5	5.0	Radium-226	1.45	pCi/g	NV	480443.94	1348294.02
A7-K18	A7-K18-10-R	29-Apr-02	4.5	5.0	Radium-228	1.13	pCi/g	NV	480443.94	1348294.02
A7-K18	A7-K18-10-R	29-Apr-02	4.5	5.0	Technetium-99	1.8	pCi/g	UNV	480443.94	1348294.02
A7-K18	A7-K18-10-R	29-Apr-02	4.5	5.0	Thorium-228	1.1	pCi/g	NV	480443.94	1348294.02
A7-K18	A7-K18-10-R	29-Apr-02	4.5	5.0	Thorium-230	26.8	pCi/g	UNV	480443.94	1348294.02
A7-K18	A7-K18-10-R	29-Apr-02	4.5	5.0	Thorium-232	1.13	pCi/g	NV	480443.94	1348294.02
A7-K18	A7-K18-10-R	29-Apr-02	4.5	5.0	Uranium, Total	4.58	mg/kg	NV	480443.94	1348294.02
A7-K18	A7-K18-20-M	29-Apr-02	9.5	10.0	Arsenic	5.2	mg/kg	NV	480443.94	1348294.02
A7-K18	A7-K18-20-M	29-Apr-02	9.5	10.0	Beryllium	0.36	mg/kg	NV	480443.94	1348294.02
A7-K18	A7-K18-20-M	29-Apr-02	9.5	10.0	Boron	6.8	mg/kg	NV	480443.94	1348294.02
A7-K18	A7-K18-20-M	29-Apr-02	9.5	10.0	Lead	8.9	mg/kg	NV	480443.94	1348294.02
A7-K18	A7-K18-20-M	29-Apr-02	9.5	10.0	Manganese	403	mg/kg	NV	480443.94	1348294.02
A7-K18	A7-K18-20-M	29-Apr-02	9.5	10.0	Mercury	0.02	mg/kg	NV	480443.94	1348294.02
A7-K18	A7-K18-20-P	29-Apr-02	9.5	10.0	Aroclor-1254	40	ug/kg	UNV	480443.94	1348294.02
A7-K18	A7-K18-20-P	29-Apr-02	9.5	10.0	Aroclor-1260	40	ug/kg	UNV	480443.94	1348294.02
A7-K18	A7-K18-20-R	29-Apr-02	9.5	10.0	Cesium-137	0.064	pCi/g	UNV	480443.94	1348294.02
A7-K18	A7-K18-20-R	29-Apr-02	9.5	10.0	Radium-226	1.16	pCi/g	NV	480443.94	1348294.02
A7-K18	A7-K18-20-R	29-Apr-02	9.5	10.0	Radium-228	0.906	pCi/g	NV	480443.94	1348294.02

Boring	Sample ID	Sample Date	Sample Depth (feet)		Parameter	Result	Units	Qualifier	Northing	Easting
			Top	Bottom						
A7-K18	A7-K18-20-R	29-Apr-02	9.5	10.0	Technetium-99	2	pCi/g	UNV	480443.94	1348294.02
A7-K18	A7-K18-20-R	29-Apr-02	9.5	10.0	Thorium-228	0.903	pCi/g	NV	480443.94	1348294.02
A7-K18	A7-K18-20-R	29-Apr-02	9.5	10.0	Thorium-230	22.4	pCi/g	UNV	480443.94	1348294.02
A7-K18	A7-K18-20-R	29-Apr-02	9.5	10.0	Thorium-232	0.906	pCi/g	NV	480443.94	1348294.02
A7-K18	A7-K18-20-R	29-Apr-02	9.5	10.0	Uranium, Total	2.65	mg/kg	UNV	480443.94	1348294.02
A7P3-AWWT1	A7P3-AWWT1^1-R	7-Jan-04	0.0	0.5	Thorium-232	0.899	pCi/g	NV	479681.9	1347978.35
A7P3-AWWT1	A7P3-AWWT1^1-R	7-Jan-04	0.0	0.5	Uranium, Total	16.9	mg/kg	NV	479681.9	1347978.35
A7P3-AWWT1	A7P3-AWWT1^5-R	7-Jan-04	2.0	2.5	Thorium-232	1.25	pCi/g	NV	479681.9	1347978.35
A7P3-AWWT1	A7P3-AWWT1^5-R	7-Jan-04	2.0	2.5	Uranium, Total	8.23	mg/kg	NV	479681.9	1347978.35
A7P3-AWWT1	A7P3-AWWT1^11-R	7-Jan-04	5.0	5.5	Thorium-232	0.917	pCi/g	NV	479681.9	1347978.35
A7P3-AWWT1	A7P3-AWWT1^11-R	7-Jan-04	5.0	5.5	Uranium, Total	4.75	mg/kg	NV	479681.9	1347978.35
A7P3-AWWT1	A7P3-AWWT1^22-R	7-Jan-04	10.5	11.0	Thorium-232	0.916	pCi/g	NV	479681.9	1347978.35
A7P3-AWWT1	A7P3-AWWT1^22-R	7-Jan-04	10.5	11.0	Uranium, Total	4.52	mg/kg	NV	479681.9	1347978.35
A7P3-AWWT1	A7P3-AWWT1^23-R	7-Jan-04	11.0	11.5	Thorium-232	0.777	pCi/g	NV	479681.9	1347978.35
A7P3-AWWT1	A7P3-AWWT1^23-R	7-Jan-04	11.0	11.5	Uranium, Total	4.62	mg/kg	NV	479681.9	1347978.35
A7P3-AWWT10	A7P3-AWWT10^4-R	13-Jan-04	1.5	2.0	Uranium, Total	33.9	mg/kg	NV	479707.57	1347927.93
A7P3-AWWT10	A7P3-AWWT10^8-R	13-Jan-04	3.5	4.0	Uranium, Total	152	mg/kg	NV	479707.57	1347927.93
A7P3-AWWT7	A7P3-AWWT7^4-R	13-Jan-04	1.5	2.0	Uranium, Total	46.1	mg/kg	NV	479707.57	1347935.01
A7P3-AWWT7	A7P3-AWWT7^8-R	13-Jan-04	3.5	4.0	Uranium, Total	87.9	mg/kg	NV	479707.57	1347935.01
A7P3-AWWT8	A7P3-AWWT8^4-R	13-Jan-04	1.5	2.0	Uranium, Total	24.9	mg/kg	NV	479700.49	1347935.01
A7P3-AWWT8	A7P3-AWWT8^8-R	13-Jan-04	3.5	4.0	Uranium, Total	12.4	mg/kg	NV	479700.49	1347935.01
A7P3-AWWT9	A7P3-AWWT9^4-R	13-Jan-04	1.5	2.0	Uranium, Total	73.2	mg/kg	NV	479700.49	1347927.93
A7P3-AWWT9	A7P3-AWWT9^8-R	13-Jan-04	3.5	4.0	Uranium, Total	36.2	mg/kg	NV	479700.49	1347927.93
A7P3-FIELD14	A7P3-FIELD14^1-RMP	4-Feb-04	0.0	0.5	Arsenic	4.11	mg/kg	NV	479038.98	1348454.58
A7P3-FIELD14	A7P3-FIELD14^1-RMP	4-Feb-04	0.0	0.5	Beryllium	0.215	mg/kg	NV	479038.98	1348454.58
A7P3-FIELD14	A7P3-FIELD14^1-RMP	4-Feb-04	0.0	0.5	Aroclor-1254	7.76	ug/kg	UNV	479038.98	1348454.58
A7P3-FIELD14	A7P3-FIELD14^1-RMP	4-Feb-04	0.0	0.5	Aroclor-1260	7.76	ug/kg	UNV	479038.98	1348454.58
A7P3-FIELD14	A7P3-FIELD14^1-RMP	4-Feb-04	0.0	0.5	Radium-228	0.464	pCi/g	NV	479038.98	1348454.58
A7P3-FIELD14	A7P3-FIELD14^1-RMP	4-Feb-04	0.0	0.5	Thorium-228	0.469	pCi/g	NV	479038.98	1348454.58
A7P3-FIELD14	A7P3-FIELD14^1-RMP	4-Feb-04	0.0	0.5	Thorium-232	0.464	pCi/g	NV	479038.98	1348454.58
A7P3-FIELD14	A7P3-FIELD14^1-RMP	4-Feb-04	0.0	0.5	Uranium, Total	2.88	mg/kg	NV	479038.98	1348454.58
A7P3-FIELD15	A7P3-FIELD15^1-RMP	11-May-04	0.0	0.5	Arsenic	9.88	mg/kg	NV	478982.82	1348440.56
A7P3-FIELD15	A7P3-FIELD15^1-RMP	11-May-04	0.0	0.5	Beryllium	0.939	mg/kg	NV	478982.82	1348440.56
A7P3-FIELD15	A7P3-FIELD15^1-RMP	11-May-04	0.0	0.5	Aroclor-1254	4.17	ug/kg	UNV	478982.82	1348440.56
A7P3-FIELD15	A7P3-FIELD15^1-RMP	11-May-04	0.0	0.5	Aroclor-1260	4.17	ug/kg	UNV	478982.82	1348440.56

APPENDIX A
PREDESIGN CHARACTERIZATION DATA FOR AREA 7 SILOS AND GENERAL AREA

Boring	Sample ID	Sample Date	Sample Depth (feet)		Parameter	Result	Units	Qualifier	Northing	Easting
			Top	Bottom						
A7P3-FIELD15	A7P3-FIELD15^1-RMP	11-May-04	0.0	0.5	Radium-228	0.98	pCi/g	NV	478982.82	1348440.56
A7P3-FIELD15	A7P3-FIELD15^1-RMP	11-May-04	0.0	0.5	Thorium-228	0.986	pCi/g	NV	478982.82	1348440.56
A7P3-FIELD15	A7P3-FIELD15^1-RMP	11-May-04	0.0	0.5	Thorium-232	0.98	pCi/g	NV	478982.82	1348440.56
A7P3-FIELD15	A7P3-FIELD15^1-RMP	11-May-04	0.0	0.5	Uranium, Total	6.64	mg/kg	NV	478982.82	1348440.56
A7P3-FIELD15	A7P3-FIELD15^6-RMP	11-May-04	2.5	3.0	Arsenic	7.12	mg/kg	NV	478982.82	1348440.56
A7P3-FIELD15	A7P3-FIELD15^6-RMP	11-May-04	2.5	3.0	Beryllium	0.928	mg/kg	NV	478982.82	1348440.56
A7P3-FIELD15	A7P3-FIELD15^6-RMP	11-May-04	2.5	3.0	Aroclor-1254	4.05	ug/kg	UNV	478982.82	1348440.56
A7P3-FIELD15	A7P3-FIELD15^6-RMP	11-May-04	2.5	3.0	Aroclor-1260	4.05	ug/kg	UNV	478982.82	1348440.56
A7P3-FIELD15	A7P3-FIELD15^6-RMP	11-May-04	2.5	3.0	Radium-228	0.864	pCi/g	NV	478982.82	1348440.56
A7P3-FIELD15	A7P3-FIELD15^6-RMP	11-May-04	2.5	3.0	Thorium-228	0.894	pCi/g	NV	478982.82	1348440.56
A7P3-FIELD15	A7P3-FIELD15^6-RMP	11-May-04	2.5	3.0	Thorium-232	0.864	pCi/g	NV	478982.82	1348440.56
A7P3-FIELD15	A7P3-FIELD15^6-RMP	11-May-04	2.5	3.0	Uranium, Total	4.82	mg/kg	NV	478982.82	1348440.56
A7P3-FIELD16	A7P3-FIELD16^1-RMP	11-May-04	0.0	0.5	Arsenic	8.45	mg/kg	NV	478992.55	1348511.89
A7P3-FIELD16	A7P3-FIELD16^1-RMP	11-May-04	0.0	0.5	Beryllium	0.794	mg/kg	NV	478992.55	1348511.89
A7P3-FIELD16	A7P3-FIELD16^1-RMP	11-May-04	0.0	0.5	Aroclor-1254	1.7	ug/kg	NV	478992.55	1348511.89
A7P3-FIELD16	A7P3-FIELD16^1-RMP	11-May-04	0.0	0.5	Aroclor-1260	4.29	ug/kg	UNV	478992.55	1348511.89
A7P3-FIELD16	A7P3-FIELD16^1-RMP	11-May-04	0.0	0.5	Radium-228	0.958	pCi/g	NV	478992.55	1348511.89
A7P3-FIELD16	A7P3-FIELD16^1-RMP	11-May-04	0.0	0.5	Thorium-228	0.97	pCi/g	NV	478992.55	1348511.89
A7P3-FIELD16	A7P3-FIELD16^1-RMP	11-May-04	0.0	0.5	Thorium-232	0.958	pCi/g	NV	478992.55	1348511.89
A7P3-FIELD16	A7P3-FIELD16^1-RMP	11-May-04	0.0	0.5	Uranium, Total	12.5	mg/kg	NV	478992.55	1348511.89
A7P3-FIELD16	A7P3-FIELD16^6-RMP	11-May-04	2.5	3.0	Arsenic	16.3	mg/kg	NV	478992.55	1348511.89
A7P3-FIELD16	A7P3-FIELD16^6-RMP	11-May-04	2.5	3.0	Beryllium	1.49	mg/kg	NV	478992.55	1348511.89
A7P3-FIELD16	A7P3-FIELD16^6-RMP	11-May-04	2.5	3.0	Aroclor-1254	4.23	ug/kg	UNV	478992.55	1348511.89
A7P3-FIELD16	A7P3-FIELD16^6-RMP	11-May-04	2.5	3.0	Aroclor-1260	4.23	ug/kg	UNV	478992.55	1348511.89
A7P3-FIELD16	A7P3-FIELD16^6-RMP	11-May-04	2.5	3.0	Radium-228	1.43	pCi/g	NV	478992.55	1348511.89
A7P3-FIELD16	A7P3-FIELD16^6-RMP	11-May-04	2.5	3.0	Thorium-228	1.44	pCi/g	NV	478992.55	1348511.89
A7P3-FIELD16	A7P3-FIELD16^6-RMP	11-May-04	2.5	3.0	Thorium-232	1.43	pCi/g	NV	478992.55	1348511.89
A7P3-FIELD16	A7P3-FIELD16^6-RMP	11-May-04	2.5	3.0	Uranium, Total	5.04	mg/kg	NV	478992.55	1348511.89
A7P3-FIELD17	A7P3-FIELD17^1-RMP	11-May-04	0.0	0.5	Arsenic	7.06	mg/kg	NV	478927.68	1348488.38
A7P3-FIELD17	A7P3-FIELD17^1-RMP	11-May-04	0.0	0.5	Beryllium	0.58	mg/kg	NV	478927.68	1348488.38
A7P3-FIELD17	A7P3-FIELD17^1-RMP	11-May-04	0.0	0.5	Aroclor-1254	1.5	ug/kg	NV	478927.68	1348488.38
A7P3-FIELD17	A7P3-FIELD17^1-RMP	11-May-04	0.0	0.5	Aroclor-1260	3.98	ug/kg	UNV	478927.68	1348488.38
A7P3-FIELD17	A7P3-FIELD17^1-RMP	11-May-04	0.0	0.5	Radium-228	0.788	pCi/g	NV	478927.68	1348488.38
A7P3-FIELD17	A7P3-FIELD17^1-RMP	11-May-04	0.0	0.5	Thorium-228	0.799	pCi/g	NV	478927.68	1348488.38
A7P3-FIELD17	A7P3-FIELD17^1-RMP	11-May-04	0.0	0.5	Thorium-232	0.788	pCi/g	NV	478927.68	1348488.38

5982

Boring	Sample ID	Sample Date	Sample Depth (feet)		Parameter	Result	Units	Qualifier	Northing	Easting
			Top	Bottom						
A7P3-FIELD17	A7P3-FIELD17^1-RMP	11-May-04	0.0	0.5	Uranium, Total	8.99	mg/kg	NV	478927.68	1348488.38
A7P3-FIELD17	A7P3-FIELD17^6-RMP	11-May-04	2.5	3.0	Arsenic	7.11	mg/kg	NV	478927.68	1348488.38
A7P3-FIELD17	A7P3-FIELD17^6-RMP	11-May-04	2.5	3.0	Beryllium	0.729	mg/kg	NV	478927.68	1348488.38
A7P3-FIELD17	A7P3-FIELD17^6-RMP	11-May-04	2.5	3.0	Aroclor-1254	4.12	ug/kg	UNV	478927.68	1348488.38
A7P3-FIELD17	A7P3-FIELD17^6-RMP	11-May-04	2.5	3.0	Aroclor-1260	4.12	ug/kg	UNV	478927.68	1348488.38
A7P3-FIELD17	A7P3-FIELD17^6-RMP	11-May-04	2.5	3.0	Radium-228	1.05	pCi/g	NV	478927.68	1348488.38
A7P3-FIELD17	A7P3-FIELD17^6-RMP	11-May-04	2.5	3.0	Thorium-228	1.04	pCi/g	NV	478927.68	1348488.38
A7P3-FIELD17	A7P3-FIELD17^6-RMP	11-May-04	2.5	3.0	Thorium-232	1.05	pCi/g	NV	478927.68	1348488.38
A7P3-FIELD17	A7P3-FIELD17^6-RMP	11-May-04	2.5	3.0	Uranium, Total	5.88	mg/kg	NV	478927.68	1348488.38
A7P3-FIELD18	A7P3-FIELD18^1-RMP	27-Apr-04	0.0	0.5	Arsenic	7.87	mg/kg	NV	478854.7	1348445.42
A7P3-FIELD18	A7P3-FIELD18^1-RMP	27-Apr-04	0.0	0.5	Beryllium	0.845	mg/kg	NV	478854.7	1348445.42
A7P3-FIELD18	A7P3-FIELD18^1-RMP	27-Apr-04	0.0	0.5	Aroclor-1254	2.4	ug/kg	NV	478854.7	1348445.42
A7P3-FIELD18	A7P3-FIELD18^1-RMP	27-Apr-04	0.0	0.5	Aroclor-1260	3.91	ug/kg	UNV	478854.7	1348445.42
A7P3-FIELD18	A7P3-FIELD18^1-RMP	27-Apr-04	0.0	0.5	Radium-228	0.958	pCi/g	NV	478854.7	1348445.42
A7P3-FIELD18	A7P3-FIELD18^1-RMP	27-Apr-04	0.0	0.5	Thorium-228	0.965	pCi/g	NV	478854.7	1348445.42
A7P3-FIELD18	A7P3-FIELD18^1-RMP	27-Apr-04	0.0	0.5	Thorium-232	0.958	pCi/g	NV	478854.7	1348445.42
A7P3-FIELD18	A7P3-FIELD18^1-RMP	27-Apr-04	0.0	0.5	Uranium, Total	16.1	mg/kg	NV	478854.7	1348445.42
A7P3-FIELD18	A7P3-FIELD18^6-RMP	27-Apr-04	2.5	3.0	Arsenic	16.8	mg/kg	NV	478854.7	1348445.42
A7P3-FIELD18	A7P3-FIELD18^6-RMP	27-Apr-04	2.5	3.0	Beryllium	1.23	mg/kg	NV	478854.7	1348445.42
A7P3-FIELD18	A7P3-FIELD18^6-RMP	27-Apr-04	2.5	3.0	Aroclor-1254	4.13	ug/kg	UNV	478854.7	1348445.42
A7P3-FIELD18	A7P3-FIELD18^6-RMP	27-Apr-04	2.5	3.0	Aroclor-1260	4.13	ug/kg	UNV	478854.7	1348445.42
A7P3-FIELD18	A7P3-FIELD18^6-RMP	27-Apr-04	2.5	3.0	Radium-228	1.17	pCi/g	NV	478854.7	1348445.42
A7P3-FIELD18	A7P3-FIELD18^6-RMP	27-Apr-04	2.5	3.0	Thorium-228	1.35	pCi/g	NV	478854.7	1348445.42
A7P3-FIELD18	A7P3-FIELD18^6-RMP	27-Apr-04	2.5	3.0	Thorium-232	1.17	pCi/g	NV	478854.7	1348445.42
A7P3-FIELD18	A7P3-FIELD18^6-RMP	27-Apr-04	2.5	3.0	Uranium, Total	6.04	mg/kg	NV	478854.7	1348445.42
A7P3-FIELD19	A7P3-FIELD19^1-RMP	27-Apr-04	0.0	0.5	Arsenic	5.53	mg/kg	NV	478883.89	1348562.14
A7P3-FIELD19	A7P3-FIELD19^1-RMP	27-Apr-04	0.0	0.5	Beryllium	0.699	mg/kg	NV	478883.89	1348562.14
A7P3-FIELD19	A7P3-FIELD19^1-RMP	27-Apr-04	0.0	0.5	Aroclor-1254	1.2	ug/kg	NV	478883.89	1348562.14
A7P3-FIELD19	A7P3-FIELD19^1-RMP	27-Apr-04	0.0	0.5	Aroclor-1260	4.15	ug/kg	UNV	478883.89	1348562.14
A7P3-FIELD19	A7P3-FIELD19^1-RMP	27-Apr-04	0.0	0.5	Radium-228	0.811	pCi/g	NV	478883.89	1348562.14
A7P3-FIELD19	A7P3-FIELD19^1-RMP	27-Apr-04	0.0	0.5	Thorium-228	0.837	pCi/g	NV	478883.89	1348562.14
A7P3-FIELD19	A7P3-FIELD19^1-RMP	27-Apr-04	0.0	0.5	Thorium-232	0.811	pCi/g	NV	478883.89	1348562.14
A7P3-FIELD19	A7P3-FIELD19^1-RMP	27-Apr-04	0.0	0.5	Uranium, Total	5.07	mg/kg	NV	478883.89	1348562.14
A7P3-FIELD19	A7P3-FIELD19^6-RMP	27-Apr-04	2.5	3.0	Arsenic	16.2	mg/kg	NV	478883.89	1348562.14
A7P3-FIELD19	A7P3-FIELD19^6-RMP	27-Apr-04	2.5	3.0	Beryllium	1.33	mg/kg	NV	478883.89	1348562.14

APPENDIX A
PREDESIGN CHARACTERIZATION DATA FOR AREA 7 SILOS AND GENERAL AREA

Boring	Sample ID	Sample Date	Sample Depth (feet)		Parameter	Result	Units	Qualifier	Northing	Easting
			Top	Bottom						
A7P3-FIELD19	A7P3-FIELD19^6-RMP	27-Apr-04	2.5	3.0	Aroclor-1254	4.35	ug/kg	UNV	478883.89	1348562.14
A7P3-FIELD19	A7P3-FIELD19^6-RMP	27-Apr-04	2.5	3.0	Aroclor-1260	4.35	ug/kg	UNV	478883.89	1348562.14
A7P3-FIELD19	A7P3-FIELD19^6-RMP	27-Apr-04	2.5	3.0	Radium-228	1.3	pCi/g	NV	478883.89	1348562.14
A7P3-FIELD19	A7P3-FIELD19^6-RMP	27-Apr-04	2.5	3.0	Thorium-228	1.31	pCi/g	NV	478883.89	1348562.14
A7P3-FIELD19	A7P3-FIELD19^6-RMP	27-Apr-04	2.5	3.0	Thorium-232	1.3	pCi/g	NV	478883.89	1348562.14
A7P3-FIELD19	A7P3-FIELD19^6-RMP	27-Apr-04	2.5	3.0	Uranium, Total	5.06	mg/kg	NV	478883.89	1348562.14
A7P3-FIELD9	A7P3-FIELD9-1-RMP	6-Jan-03	0.0	0.5	Arsenic	6.49	mg/kg	NV	479035.485	1348356.872
A7P3-FIELD9	A7P3-FIELD9-1-RMP	6-Jan-03	0.0	0.5	Beryllium	0.634	mg/kg	NV	479035.485	1348356.872
A7P3-FIELD9	A7P3-FIELD9-1-RMP	6-Jan-03	0.0	0.5	Aroclor-1254	3.8	ug/kg	UNV	479035.485	1348356.872
A7P3-FIELD9	A7P3-FIELD9-1-RMP	6-Jan-03	0.0	0.5	Aroclor-1260	3.8	ug/kg	UNV	479035.485	1348356.872
A7P3-FIELD9	A7P3-FIELD9-1-RMP	6-Jan-03	0.0	0.5	Radium-226	0.832	pCi/g	NV	479035.485	1348356.872
A7P3-FIELD9	A7P3-FIELD9-1-RMP	6-Jan-03	0.0	0.5	Radium-228	0.823	pCi/g	NV	479035.485	1348356.872
A7P3-FIELD9	A7P3-FIELD9-1-RMP	6-Jan-03	0.0	0.5	Thorium-228	0.781	pCi/g	NV	479035.485	1348356.872
A7P3-FIELD9	A7P3-FIELD9-1-RMP	6-Jan-03	0.0	0.5	Thorium-232	0.823	pCi/g	NV	479035.485	1348356.872
A7P3-FIELD9	A7P3-FIELD9-1-RMP	6-Jan-03	0.0	0.5	Uranium, Total	10.3	mg/kg	NV	479035.485	1348356.872
A7P3-FIELD9	A7P3-FIELD9-6-RMP	6-Jan-03	2.5	3.0	Arsenic	4.61	mg/kg	NV	479035.485	1348356.872
A7P3-FIELD9	A7P3-FIELD9-6-RMP	6-Jan-03	2.5	3.0	Beryllium	0.799	mg/kg	NV	479035.485	1348356.872
A7P3-FIELD9	A7P3-FIELD9-6-RMP	6-Jan-03	2.5	3.0	Aroclor-1254	10.1	ug/kg	NV	479035.485	1348356.872
A7P3-FIELD9	A7P3-FIELD9-6-RMP	6-Jan-03	2.5	3.0	Aroclor-1260	2.8	ug/kg	NV	479035.485	1348356.872
A7P3-FIELD9	A7P3-FIELD9-6-RMP	6-Jan-03	2.5	3.0	Radium-226	1.19	pCi/g	NV	479035.485	1348356.872
A7P3-FIELD9	A7P3-FIELD9-6-RMP	6-Jan-03	2.5	3.0	Radium-228	1.01	pCi/g	NV	479035.485	1348356.872
A7P3-FIELD9	A7P3-FIELD9-6-RMP	6-Jan-03	2.5	3.0	Thorium-228	1.03	pCi/g	NV	479035.485	1348356.872
A7P3-FIELD9	A7P3-FIELD9-6-RMP	6-Jan-03	2.5	3.0	Thorium-232	1.01	pCi/g	NV	479035.485	1348356.872
A7P3-FIELD9	A7P3-FIELD9-6-RMP	6-Jan-03	2.5	3.0	Uranium, Total	11.6	mg/kg	NV	479035.485	1348356.872
A7P3-G1	A7P3-G1-1-RMP	23-Oct-02	0.0	0.5	Arsenic	5.96	mg/kg	NV	479462.26	1348851.63
A7P3-G1	A7P3-G1-1-RMP	23-Oct-02	0.0	0.5	Beryllium	0.515	mg/kg	NV	479462.26	1348851.63
A7P3-G1	A7P3-G1-1-RMP	23-Oct-02	0.0	0.5	Aroclor-1254	3.6	ug/kg	UNV	479462.26	1348851.63
A7P3-G1	A7P3-G1-1-RMP	23-Oct-02	0.0	0.5	Aroclor-1260	3.6	ug/kg	UNV	479462.26	1348851.63
A7P3-G1	A7P3-G1-1-RMP	23-Oct-02	0.0	0.5	Radium-226	0.887	pCi/g	NV	479462.26	1348851.63
A7P3-G1	A7P3-G1-1-RMP	23-Oct-02	0.0	0.5	Radium-228	0.787	pCi/g	NV	479462.26	1348851.63
A7P3-G1	A7P3-G1-1-RMP	23-Oct-02	0.0	0.5	Thorium-228	0.789	pCi/g	NV	479462.26	1348851.63
A7P3-G1	A7P3-G1-1-RMP	23-Oct-02	0.0	0.5	Thorium-232	0.787	pCi/g	NV	479462.26	1348851.63
A7P3-G1	A7P3-G1-1-RMP	23-Oct-02	0.0	0.5	Uranium, Total	6.62	mg/kg	NV	479462.26	1348851.63
A7P3-G1	A7P3-G1-3-RMP	23-Oct-02	1.0	1.5	Arsenic	6.68	mg/kg	NV	479462.26	1348851.63
A7P3-G1	A7P3-G1-3-RMP	23-Oct-02	1.0	1.5	Beryllium	0.564	mg/kg	NV	479462.26	1348851.63

5982

Boring	Sample ID	Sample Date	Sample Depth (feet)		Parameter	Result	Units	Qualifier	Northing	Easting
			Top	Bottom						
A7P3-G1	A7P3-G1-3-RMP	23-Oct-02	1.0	1.5	Aroclor-1254	3.6	ug/kg	UNV	479462.26	1348851.63
A7P3-G1	A7P3-G1-3-RMP	23-Oct-02	1.0	1.5	Aroclor-1260	3.6	ug/kg	UNV	479462.26	1348851.63
A7P3-G1	A7P3-G1-3-RMP	23-Oct-02	1.0	1.5	Radium-226	0.996	pCi/g	NV	479462.26	1348851.63
A7P3-G1	A7P3-G1-3-RMP	23-Oct-02	1.0	1.5	Radium-228	0.81	pCi/g	NV	479462.26	1348851.63
A7P3-G1	A7P3-G1-3-RMP	23-Oct-02	1.0	1.5	Thorium-228	0.815	pCi/g	NV	479462.26	1348851.63
A7P3-G1	A7P3-G1-3-RMP	23-Oct-02	1.0	1.5	Thorium-232	0.81	pCi/g	NV	479462.26	1348851.63
A7P3-G1	A7P3-G1-3-RMP	23-Oct-02	1.0	1.5	Uranium, Total	9.54	mg/kg	NV	479462.26	1348851.63
A7P3-G2	A7P3-G2-1-RMP	23-Oct-02	0.0	0.5	Arsenic	5.31	mg/kg	NV	479456.06	1348946.32
A7P3-G2	A7P3-G2-1-RMP	23-Oct-02	0.0	0.5	Beryllium	0.606	mg/kg	NV	479456.06	1348946.32
A7P3-G2	A7P3-G2-1-RMP	23-Oct-02	0.0	0.5	Aroclor-1254	3.6	ug/kg	UNV	479456.06	1348946.32
A7P3-G2	A7P3-G2-1-RMP	23-Oct-02	0.0	0.5	Aroclor-1260	3.6	ug/kg	UNV	479456.06	1348946.32
A7P3-G2	A7P3-G2-1-RMP	23-Oct-02	0.0	0.5	Radium-226	0.974	pCi/g	NV	479456.06	1348946.32
A7P3-G2	A7P3-G2-1-RMP	23-Oct-02	0.0	0.5	Radium-228	0.766	pCi/g	NV	479456.06	1348946.32
A7P3-G2	A7P3-G2-1-RMP	23-Oct-02	0.0	0.5	Thorium-228	0.757	pCi/g	NV	479456.06	1348946.32
A7P3-G2	A7P3-G2-1-RMP	23-Oct-02	0.0	0.5	Thorium-232	0.766	pCi/g	NV	479456.06	1348946.32
A7P3-G2	A7P3-G2-1-RMP	23-Oct-02	0.0	0.5	Uranium, Total	7.86	mg/kg	NV	479456.06	1348946.32
A7P3-G2	A7P3-G2-3-RMP	23-Oct-02	1.0	1.5	Arsenic	8.04	mg/kg	NV	479456.06	1348946.32
A7P3-G2	A7P3-G2-3-RMP	23-Oct-02	1.0	1.5	Beryllium	0.802	mg/kg	NV	479456.06	1348946.32
A7P3-G2	A7P3-G2-3-RMP	23-Oct-02	1.0	1.5	Aroclor-1254	3.7	ug/kg	UNV	479456.06	1348946.32
A7P3-G2	A7P3-G2-3-RMP	23-Oct-02	1.0	1.5	Aroclor-1260	3.7	ug/kg	UNV	479456.06	1348946.32
A7P3-G2	A7P3-G2-3-RMP	23-Oct-02	1.0	1.5	Radium-226	1.17	pCi/g	NV	479456.06	1348946.32
A7P3-G2	A7P3-G2-3-RMP	23-Oct-02	1.0	1.5	Radium-228	0.923	pCi/g	NV	479456.06	1348946.32
A7P3-G2	A7P3-G2-3-RMP	23-Oct-02	1.0	1.5	Thorium-228	0.912	pCi/g	NV	479456.06	1348946.32
A7P3-G2	A7P3-G2-3-RMP	23-Oct-02	1.0	1.5	Thorium-232	0.923	pCi/g	NV	479456.06	1348946.32
A7P3-G2	A7P3-G2-3-RMP	23-Oct-02	1.0	1.5	Uranium, Total	8.92	mg/kg	NV	479456.06	1348946.32
A7P3-G3	A7P3-G3-1-RMP	23-Oct-02	0.0	0.5	Arsenic	6.05	mg/kg	NV	479369.97	1348936.52
A7P3-G3	A7P3-G3-1-RMP	23-Oct-02	0.0	0.5	Beryllium	0.688	mg/kg	NV	479369.97	1348936.52
A7P3-G3	A7P3-G3-1-RMP	23-Oct-02	0.0	0.5	Aroclor-1254	5.9	ug/kg	NV	479369.97	1348936.52
A7P3-G3	A7P3-G3-1-RMP	23-Oct-02	0.0	0.5	Aroclor-1260	2.8	ug/kg	NV	479369.97	1348936.52
A7P3-G3	A7P3-G3-1-RMP	23-Oct-02	0.0	0.5	Radium-226	0.994	pCi/g	NV	479369.97	1348936.52
A7P3-G3	A7P3-G3-1-RMP	23-Oct-02	0.0	0.5	Radium-228	0.833	pCi/g	NV	479369.97	1348936.52
A7P3-G3	A7P3-G3-1-RMP	23-Oct-02	0.0	0.5	Thorium-228	0.87	pCi/g	NV	479369.97	1348936.52
A7P3-G3	A7P3-G3-1-RMP	23-Oct-02	0.0	0.5	Thorium-232	0.833	pCi/g	NV	479369.97	1348936.52
A7P3-G3	A7P3-G3-1-RMP	23-Oct-02	0.0	0.5	Uranium, Total	9.82	mg/kg	NV	479369.97	1348936.52
A7P3-G3	A7P3-G3-3-RMP	23-Oct-02	1.0	1.5	Arsenic	5.59	mg/kg	NV	479369.97	1348936.52

APPENDIX A
PREDESIGN CHARACTERIZATION DATA FOR AREA 7 SILOS AND GENERAL AREA

Boring	Sample ID	Sample Date	Sample Depth (feet)		Parameter	Result	Units	Qualifier	Northing	Easting
			Top	Bottom						
A7P3-G3	A7P3-G3-3-RMP	23-Oct-02	1.0	1.5	Beryllium	0.829	mg/kg	NV	479369.97	1348936.52
A7P3-G3	A7P3-G3-3-RMP	23-Oct-02	1.0	1.5	Aroclor-1254	3.6	ug/kg	UNV	479369.97	1348936.52
A7P3-G3	A7P3-G3-3-RMP	23-Oct-02	1.0	1.5	Aroclor-1260	3.6	ug/kg	UNV	479369.97	1348936.52
A7P3-G3	A7P3-G3-3-RMP	23-Oct-02	1.0	1.5	Radium-226	1.03	pCi/g	NV	479369.97	1348936.52
A7P3-G3	A7P3-G3-3-RMP	23-Oct-02	1.0	1.5	Radium-228	0.984	pCi/g	NV	479369.97	1348936.52
A7P3-G3	A7P3-G3-3-RMP	23-Oct-02	1.0	1.5	Thorium-228	1	pCi/g	NV	479369.97	1348936.52
A7P3-G3	A7P3-G3-3-RMP	23-Oct-02	1.0	1.5	Thorium-232	0.984	pCi/g	NV	479369.97	1348936.52
A7P3-G3	A7P3-G3-3-RMP	23-Oct-02	1.0	1.5	Uranium, Total	10.4	mg/kg	NV	479369.97	1348936.52
A7P3-G4	A7P3-G4-1-RMP	24-Oct-02	0.0	0.5	Arsenic	6.51	mg/kg	NV	479417.52	1349164.92
A7P3-G4	A7P3-G4-1-RMP	24-Oct-02	0.0	0.5	Beryllium	0.583	mg/kg	NV	479417.52	1349164.92
A7P3-G4	A7P3-G4-1-RMP	24-Oct-02	0.0	0.5	Aroclor-1254	3.6	ug/kg	UNV	479417.52	1349164.92
A7P3-G4	A7P3-G4-1-RMP	24-Oct-02	0.0	0.5	Aroclor-1260	3.6	ug/kg	UNV	479417.52	1349164.92
A7P3-G4	A7P3-G4-1-RMP	24-Oct-02	0.0	0.5	Radium-226	0.986	pCi/g	NV	479417.52	1349164.92
A7P3-G4	A7P3-G4-1-RMP	24-Oct-02	0.0	0.5	Radium-228	0.837	pCi/g	NV	479417.52	1349164.92
A7P3-G4	A7P3-G4-1-RMP	24-Oct-02	0.0	0.5	Thorium-228	0.825	pCi/g	NV	479417.52	1349164.92
A7P3-G4	A7P3-G4-1-RMP	24-Oct-02	0.0	0.5	Thorium-232	0.837	pCi/g	NV	479417.52	1349164.92
A7P3-G4	A7P3-G4-1-RMP	24-Oct-02	0.0	0.5	Uranium, Total	9.95	mg/kg	NV	479417.52	1349164.92
A7P3-G4	A7P3-G4-3-RMP	24-Oct-02	1.0	1.5	Arsenic	5.21	mg/kg	NV	479417.52	1349164.92
A7P3-G4	A7P3-G4-3-RMP	24-Oct-02	1.0	1.5	Beryllium	0.523	mg/kg	NV	479417.52	1349164.92
A7P3-G4	A7P3-G4-3-RMP	24-Oct-02	1.0	1.5	Aroclor-1254	3.6	ug/kg	UNV	479417.52	1349164.92
A7P3-G4	A7P3-G4-3-RMP	24-Oct-02	1.0	1.5	Aroclor-1260	3.6	ug/kg	UNV	479417.52	1349164.92
A7P3-G4	A7P3-G4-3-RMP	24-Oct-02	1.0	1.5	Radium-226	0.727	pCi/g	NV	479417.52	1349164.92
A7P3-G4	A7P3-G4-3-RMP	24-Oct-02	1.0	1.5	Radium-228	0.721	pCi/g	NV	479417.52	1349164.92
A7P3-G4	A7P3-G4-3-RMP	24-Oct-02	1.0	1.5	Thorium-228	0.706	pCi/g	NV	479417.52	1349164.92
A7P3-G4	A7P3-G4-3-RMP	24-Oct-02	1.0	1.5	Thorium-232	0.721	pCi/g	NV	479417.52	1349164.92
A7P3-G4	A7P3-G4-3-RMP	24-Oct-02	1.0	1.5	Uranium, Total	16.8	mg/kg	NV	479417.52	1349164.92
A7P3-G5	A7P3-G5-1-RMP	28-Oct-02	0.0	0.5	Arsenic	6.08	mg/kg	NV	479300.78	1349122.15
A7P3-G5	A7P3-G5-1-RMP	28-Oct-02	0.0	0.5	Beryllium	0.572	mg/kg	NV	479300.78	1349122.15
A7P3-G5	A7P3-G5-1-RMP	28-Oct-02	0.0	0.5	Aroclor-1254	3.3	ug/kg	NV	479300.78	1349122.15
A7P3-G5	A7P3-G5-1-RMP	28-Oct-02	0.0	0.5	Aroclor-1260	3.9	ug/kg	UNV	479300.78	1349122.15
A7P3-G5	A7P3-G5-1-RMP	28-Oct-02	0.0	0.5	Radium-226	0.97	pCi/g	NV	479300.78	1349122.15
A7P3-G5	A7P3-G5-1-RMP	28-Oct-02	0.0	0.5	Radium-228	0.943	pCi/g	NV	479300.78	1349122.15
A7P3-G5	A7P3-G5-1-RMP	28-Oct-02	0.0	0.5	Thorium-228	0.952	pCi/g	NV	479300.78	1349122.15
A7P3-G5	A7P3-G5-1-RMP	28-Oct-02	0.0	0.5	Thorium-232	0.943	pCi/g	NV	479300.78	1349122.15
A7P3-G5	A7P3-G5-1-RMP	28-Oct-02	0.0	0.5	Uranium, Total	8.48	mg/kg	NV	479300.78	1349122.15

Boring	Sample ID	Sample Date	Sample Depth (feet)		Parameter	Result	Units	Qualifier	Northing	Easting
			Top	Bottom						
A7P3-G5	A7P3-G5-3-RMP	28-Oct-02	1.0	1.5	Arsenic	7.06	mg/kg	NV	479300.78	1349122.15
A7P3-G5	A7P3-G5-3-RMP	28-Oct-02	1.0	1.5	Beryllium	0.688	mg/kg	NV	479300.78	1349122.15
A7P3-G5	A7P3-G5-3-RMP	28-Oct-02	1.0	1.5	Aroclor-1254	3.1	ug/kg	NV	479300.78	1349122.15
A7P3-G5	A7P3-G5-3-RMP	28-Oct-02	1.0	1.5	Aroclor-1260	3.8	ug/kg	UNV	479300.78	1349122.15
A7P3-G5	A7P3-G5-3-RMP	28-Oct-02	1.0	1.5	Radium-226	1.11	pCi/g	NV	479300.78	1349122.15
A7P3-G5	A7P3-G5-3-RMP	28-Oct-02	1.0	1.5	Radium-228	1.02	pCi/g	NV	479300.78	1349122.15
A7P3-G5	A7P3-G5-3-RMP	28-Oct-02	1.0	1.5	Thorium-228	1.04	pCi/g	NV	479300.78	1349122.15
A7P3-G5	A7P3-G5-3-RMP	28-Oct-02	1.0	1.5	Thorium-232	1.02	pCi/g	NV	479300.78	1349122.15
A7P3-G5	A7P3-G5-3-RMP	28-Oct-02	1.0	1.5	Uranium, Total	11.7	mg/kg	NV	479300.78	1349122.15
A7P3-G6	A7P3-G6-1-RMP	24-Oct-02	0.0	0.5	Arsenic	4.87	mg/kg	NV	479138.09	1349145.09
A7P3-G6	A7P3-G6-1-RMP	24-Oct-02	0.0	0.5	Beryllium	0.685	mg/kg	NV	479138.09	1349145.09
A7P3-G6	A7P3-G6-1-RMP	24-Oct-02	0.0	0.5	Aroclor-1254	31.8	ug/kg	NV	479138.09	1349145.09
A7P3-G6	A7P3-G6-1-RMP	24-Oct-02	0.0	0.5	Aroclor-1260	10.7	ug/kg	NV	479138.09	1349145.09
A7P3-G6	A7P3-G6-1-RMP	24-Oct-02	0.0	0.5	Radium-226	0.913	pCi/g	NV	479138.09	1349145.09
A7P3-G6	A7P3-G6-1-RMP	24-Oct-02	0.0	0.5	Radium-228	0.712	pCi/g	NV	479138.09	1349145.09
A7P3-G6	A7P3-G6-1-RMP	24-Oct-02	0.0	0.5	Thorium-228	0.704	pCi/g	NV	479138.09	1349145.09
A7P3-G6	A7P3-G6-1-RMP	24-Oct-02	0.0	0.5	Thorium-232	0.712	pCi/g	NV	479138.09	1349145.09
A7P3-G6	A7P3-G6-1-RMP	24-Oct-02	0.0	0.5	Uranium, Total	5.22	mg/kg	NV	479138.09	1349145.09
A7P3-G6	A7P3-G6-3-RMP	24-Oct-02	1.0	1.5	Arsenic	2.57	mg/kg	NV	479138.09	1349145.09
A7P3-G6	A7P3-G6-3-RMP	24-Oct-02	1.0	1.5	Beryllium	0.424	mg/kg	NV	479138.09	1349145.09
A7P3-G6	A7P3-G6-3-RMP	24-Oct-02	1.0	1.5	Aroclor-1254	27.7	ug/kg	NV	479138.09	1349145.09
A7P3-G6	A7P3-G6-3-RMP	24-Oct-02	1.0	1.5	Aroclor-1260	15.9	ug/kg	NV	479138.09	1349145.09
A7P3-G6	A7P3-G6-3-RMP	24-Oct-02	1.0	1.5	Radium-226	0.869	pCi/g	NV	479138.09	1349145.09
A7P3-G6	A7P3-G6-3-RMP	24-Oct-02	1.0	1.5	Radium-228	0.591	pCi/g	NV	479138.09	1349145.09
A7P3-G6	A7P3-G6-3-RMP	24-Oct-02	1.0	1.5	Thorium-228	0.61	pCi/g	NV	479138.09	1349145.09
A7P3-G6	A7P3-G6-3-RMP	24-Oct-02	1.0	1.5	Thorium-232	0.591	pCi/g	NV	479138.09	1349145.09
A7P3-G6	A7P3-G6-3-RMP	24-Oct-02	1.0	1.5	Uranium, Total	6.2	mg/kg	NV	479138.09	1349145.09
A7P3-NFFPA	A7P3-NFFPA^1-RMP	5-Mar-04	0.0	0.5	Arsenic	7.79	mg/kg	NV	479006.89	1349093.57
A7P3-NFFPA	A7P3-NFFPA^1-RMP	5-Mar-04	0.0	0.5	Beryllium	0.42	mg/kg	NV	479006.89	1349093.57
A7P3-NFFPA	A7P3-NFFPA^1-RMP	5-Mar-04	0.0	0.5	Lead	17.4	mg/kg	NV	479006.89	1349093.57
A7P3-NFFPA	A7P3-NFFPA^1-RMP	5-Mar-04	0.0	0.5	Manganese	534	mg/kg	NV	479006.89	1349093.57
A7P3-NFFPA	A7P3-NFFPA^1-RMP	5-Mar-04	0.0	0.5	Aroclor-1254	9.99	ug/kg	UNV	479006.89	1349093.57
A7P3-NFFPA	A7P3-NFFPA^1-RMP	5-Mar-04	0.0	0.5	Aroclor-1260	9.99	ug/kg	UNV	479006.89	1349093.57
A7P3-NFFPA	A7P3-NFFPA^1-RMP	5-Mar-04	0.0	0.5	Dieldrin	0.000799	ug/kg	UNV	479006.89	1349093.57
A7P3-NFFPA	A7P3-NFFPA^1-RMP	5-Mar-04	0.0	0.5	Radium-228	1.13	pCi/g	NV	479006.89	1349093.57

APPENDIX A
PREDESIGN CHARACTERIZATION DATA FOR AREA 7 SILOS AND GENERAL AREA

Boring	Sample ID	Sample Date	Sample Depth (feet)		Parameter	Result	Units	Qualifier	Northing	Easting
			Top	Bottom						
A7P3-NFFPA	A7P3-NFFPA^1-RMP	5-Mar-04	0.0	0.5	Technetium-99	0.641	pCi/g	UNV	479006.89	1349093.57
A7P3-NFFPA	A7P3-NFFPA^1-RMP	5-Mar-04	0.0	0.5	Thorium-228	1.12	pCi/g	NV	479006.89	1349093.57
A7P3-NFFPA	A7P3-NFFPA^1-RMP	5-Mar-04	0.0	0.5	Thorium-230	19.7	pCi/g	UNV	479006.89	1349093.57
A7P3-NFFPA	A7P3-NFFPA^1-RMP	5-Mar-04	0.0	0.5	Thorium-232	1.13	pCi/g	NV	479006.89	1349093.57
A7P3-NFFPA	A7P3-NFFPA^1-RMP	5-Mar-04	0.0	0.5	Uranium, Total	17.5	mg/kg	NV	479006.89	1349093.57
A7P3-NFFPA	A7P3-NFFPA^6-RMP	5-Mar-04	2.5	3.0	Arsenic	8.13	mg/kg	NV	479006.89	1349093.57
A7P3-NFFPA	A7P3-NFFPA^6-RMP	5-Mar-04	2.5	3.0	Beryllium	0.559	mg/kg	NV	479006.89	1349093.57
A7P3-NFFPA	A7P3-NFFPA^6-RMP	5-Mar-04	2.5	3.0	Lead	11.9	mg/kg	NV	479006.89	1349093.57
A7P3-NFFPA	A7P3-NFFPA^6-RMP	5-Mar-04	2.5	3.0	Manganese	359	mg/kg	NV	479006.89	1349093.57
A7P3-NFFPA	A7P3-NFFPA^6-RMP	5-Mar-04	2.5	3.0	Aroclor-1254	9.89	ug/kg	UNV	479006.89	1349093.57
A7P3-NFFPA	A7P3-NFFPA^6-RMP	5-Mar-04	2.5	3.0	Aroclor-1260	9.89	ug/kg	UNV	479006.89	1349093.57
A7P3-NFFPA	A7P3-NFFPA^6-RMP	5-Mar-04	2.5	3.0	Dieldrin	0.00028	ug/kg	NV	479006.89	1349093.57
A7P3-NFFPA	A7P3-NFFPA^6-RMP	5-Mar-04	2.5	3.0	Radium-228	0.694	pCi/g	NV	479006.89	1349093.57
A7P3-NFFPA	A7P3-NFFPA^6-RMP	5-Mar-04	2.5	3.0	Technetium-99	0.596	pCi/g	UNV	479006.89	1349093.57
A7P3-NFFPA	A7P3-NFFPA^6-RMP	5-Mar-04	2.5	3.0	Thorium-228	0.726	pCi/g	NV	479006.89	1349093.57
A7P3-NFFPA	A7P3-NFFPA^6-RMP	5-Mar-04	2.5	3.0	Thorium-230	15.9	pCi/g	UNV	479006.89	1349093.57
A7P3-NFFPA	A7P3-NFFPA^6-RMP	5-Mar-04	2.5	3.0	Thorium-232	0.694	pCi/g	NV	479006.89	1349093.57
A7P3-NFFPA	A7P3-NFFPA^6-RMP	5-Mar-04	2.5	3.0	Uranium, Total	2.62	mg/kg	UNV	479006.89	1349093.57
A7P3-NFFPC	A7P3-NFFPC^1-RMP	4-Mar-04	0.0	0.5	Arsenic	2.1	mg/kg	NV	479023.86	1349198.6
A7P3-NFFPC	A7P3-NFFPC^1-RMP	4-Mar-04	0.0	0.5	Beryllium	0.436	mg/kg	NV	479023.86	1349198.6
A7P3-NFFPC	A7P3-NFFPC^1-RMP	4-Mar-04	0.0	0.5	Lead	10.2	mg/kg	NV	479023.86	1349198.6
A7P3-NFFPC	A7P3-NFFPC^1-RMP	4-Mar-04	0.0	0.5	Manganese	502	mg/kg	NV	479023.86	1349198.6
A7P3-NFFPC	A7P3-NFFPC^1-RMP	4-Mar-04	0.0	0.5	Aroclor-1254	9.62	ug/kg	UNV	479023.86	1349198.6
A7P3-NFFPC	A7P3-NFFPC^1-RMP	4-Mar-04	0.0	0.5	Aroclor-1260	9.62	ug/kg	UNV	479023.86	1349198.6
A7P3-NFFPC	A7P3-NFFPC^1-RMP	4-Mar-04	0.0	0.5	Dieldrin	0.000769	ug/kg	UNV	479023.86	1349198.6
A7P3-NFFPC	A7P3-NFFPC^1-RMP	4-Mar-04	0.0	0.5	Radium-228	0.843	pCi/g	NV	479023.86	1349198.6
A7P3-NFFPC	A7P3-NFFPC^1-RMP	4-Mar-04	0.0	0.5	Technetium-99	0.659	pCi/g	UNV	479023.86	1349198.6
A7P3-NFFPC	A7P3-NFFPC^1-RMP	4-Mar-04	0.0	0.5	Thorium-228	0.862	pCi/g	NV	479023.86	1349198.6
A7P3-NFFPC	A7P3-NFFPC^1-RMP	4-Mar-04	0.0	0.5	Thorium-230	17.4	pCi/g	UNV	479023.86	1349198.6
A7P3-NFFPC	A7P3-NFFPC^1-RMP	4-Mar-04	0.0	0.5	Thorium-232	0.843	pCi/g	NV	479023.86	1349198.6
A7P3-NFFPC	A7P3-NFFPC^1-RMP	4-Mar-04	0.0	0.5	Uranium, Total	6.11	mg/kg	NV	479023.86	1349198.6
A7P3-NFFPC	A7P3-NFFPC^6-RMP	4-Mar-04	2.5	3.0	Arsenic	1.08	mg/kg	UNV	479023.86	1349198.6
A7P3-NFFPC	A7P3-NFFPC^6-RMP	4-Mar-04	2.5	3.0	Beryllium	0.689	mg/kg	NV	479023.86	1349198.6
A7P3-NFFPC	A7P3-NFFPC^6-RMP	4-Mar-04	2.5	3.0	Lead	8.05	mg/kg	NV	479023.86	1349198.6
A7P3-NFFPC	A7P3-NFFPC^6-RMP	4-Mar-04	2.5	3.0	Manganese	290	mg/kg	NV	479023.86	1349198.6

5982

Boring	Sample ID	Sample Date	Sample Depth (feet)		Parameter	Result	Units	Qualifier	Northing	Easting
			Top	Bottom						
A7P3-NFFPC	A7P3-NFFPC^6-RMP	4-Mar-04	2.5	3.0	Aroclor-1254	10	ug/kg	UNV	479023.86	1349198.6
A7P3-NFFPC	A7P3-NFFPC^6-RMP	4-Mar-04	2.5	3.0	Aroclor-1260	10	ug/kg	UNV	479023.86	1349198.6
A7P3-NFFPC	A7P3-NFFPC^6-RMP	4-Mar-04	2.5	3.0	Dieldrin	0.000801	ug/kg	UNV	479023.86	1349198.6
A7P3-NFFPC	A7P3-NFFPC^6-RMP	4-Mar-04	2.5	3.0	Radium-228	0.966	pCi/g	NV	479023.86	1349198.6
A7P3-NFFPC	A7P3-NFFPC^6-RMP	4-Mar-04	2.5	3.0	Technetium-99	0.666	pCi/g	UNV	479023.86	1349198.6
A7P3-NFFPC	A7P3-NFFPC^6-RMP	4-Mar-04	2.5	3.0	Thorium-228	1.02	pCi/g	NV	479023.86	1349198.6
A7P3-NFFPC	A7P3-NFFPC^6-RMP	4-Mar-04	2.5	3.0	Thorium-230	20.5	pCi/g	UNV	479023.86	1349198.6
A7P3-NFFPC	A7P3-NFFPC^6-RMP	4-Mar-04	2.5	3.0	Thorium-232	0.966	pCi/g	NV	479023.86	1349198.6
A7P3-NFFPC	A7P3-NFFPC^6-RMP	4-Mar-04	2.5	3.0	Uranium, Total	3.45	mg/kg	UNV	479023.86	1349198.6
A7P3-NT1	A7P3-NT1-4-RMP	26-Oct-02	1.5	2.0	Arsenic	6.36	mg/kg	NV	479402.4	1348789.59
A7P3-NT1	A7P3-NT1-4-RMP	26-Oct-02	1.5	2.0	Beryllium	0.508	mg/kg	NV	479402.4	1348789.59
A7P3-NT1	A7P3-NT1-4-RMP	26-Oct-02	1.5	2.0	Aroclor-1254	4	ug/kg	UNV	479402.4	1348789.59
A7P3-NT1	A7P3-NT1-4-RMP	26-Oct-02	1.5	2.0	Aroclor-1260	4	ug/kg	UNV	479402.4	1348789.59
A7P3-NT1	A7P3-NT1-4-RMP	26-Oct-02	1.5	2.0	Radium-226	1.17	pCi/g	NV	479402.4	1348789.59
A7P3-NT1	A7P3-NT1-4-RMP	26-Oct-02	1.5	2.0	Radium-228	0.994	pCi/g	NV	479402.4	1348789.59
A7P3-NT1	A7P3-NT1-4-RMP	26-Oct-02	1.5	2.0	Thorium-228	1.01	pCi/g	NV	479402.4	1348789.59
A7P3-NT1	A7P3-NT1-4-RMP	26-Oct-02	1.5	2.0	Thorium-232	0.994	pCi/g	NV	479402.4	1348789.59
A7P3-NT1	A7P3-NT1-4-RMP	26-Oct-02	1.5	2.0	Uranium, Total	24.2	mg/kg	NV	479402.4	1348789.59
A7P3-NT1	A7P3-NT1-6-RMP	26-Oct-02	2.5	3.0	Arsenic	5.04	mg/kg	NV	479402.4	1348789.59
A7P3-NT1	A7P3-NT1-6-RMP	26-Oct-02	2.5	3.0	Beryllium	0.375	mg/kg	NV	479402.4	1348789.59
A7P3-NT1	A7P3-NT1-6-RMP	26-Oct-02	2.5	3.0	Aroclor-1254	4	ug/kg	UNV	479402.4	1348789.59
A7P3-NT1	A7P3-NT1-6-RMP	26-Oct-02	2.5	3.0	Aroclor-1260	4	ug/kg	UNV	479402.4	1348789.59
A7P3-NT1	A7P3-NT1-6-RMP	26-Oct-02	2.5	3.0	Radium-226	1.24	pCi/g	NV	479402.4	1348789.59
A7P3-NT1	A7P3-NT1-6-RMP	26-Oct-02	2.5	3.0	Radium-228	1.12	pCi/g	NV	479402.4	1348789.59
A7P3-NT1	A7P3-NT1-6-RMP	26-Oct-02	2.5	3.0	Thorium-228	1.12	pCi/g	NV	479402.4	1348789.59
A7P3-NT1	A7P3-NT1-6-RMP	26-Oct-02	2.5	3.0	Thorium-232	1.12	pCi/g	NV	479402.4	1348789.59
A7P3-NT1	A7P3-NT1-6-RMP	26-Oct-02	2.5	3.0	Uranium, Total	10.4	mg/kg	NV	479402.4	1348789.59
A7P3-NT10	A7P3-NT10-4-RMP	26-Oct-02	1.5	2.0	Arsenic	9.75	mg/kg	NV	479169.52	1348935.79
A7P3-NT10	A7P3-NT10-4-RMP	26-Oct-02	1.5	2.0	Beryllium	0.425	mg/kg	NV	479169.52	1348935.79
A7P3-NT10	A7P3-NT10-4-RMP	26-Oct-02	1.5	2.0	Aroclor-1254	3.8	ug/kg	UNV	479169.52	1348935.79
A7P3-NT10	A7P3-NT10-4-RMP	26-Oct-02	1.5	2.0	Aroclor-1260	3.8	ug/kg	UNV	479169.52	1348935.79
A7P3-NT10	A7P3-NT10-4-RMP	26-Oct-02	1.5	2.0	Radium-226	1.09	pCi/g	NV	479169.52	1348935.79
A7P3-NT10	A7P3-NT10-4-RMP	26-Oct-02	1.5	2.0	Radium-228	0.893	pCi/g	NV	479169.52	1348935.79
A7P3-NT10	A7P3-NT10-4-RMP	26-Oct-02	1.5	2.0	Thorium-228	0.885	pCi/g	NV	479169.52	1348935.79
A7P3-NT10	A7P3-NT10-4-RMP	26-Oct-02	1.5	2.0	Thorium-232	0.893	pCi/g	NV	479169.52	1348935.79

APPENDIX A
PREDESIGN CHARACTERIZATION DATA FOR AREA 7 SILOS AND GENERAL AREA

Boring	Sample ID	Sample Date	Sample Depth (feet)		Parameter	Result	Units	Qualifier	Northing	Easting
			Top	Bottom						
A7P3-NT10	A7P3-NT10-4-RMP	26-Oct-02	1.5	2.0	Uranium, Total	14.6	mg/kg	NV	479169.52	1348935.79
A7P3-NT10	A7P3-NT10-6-RMP	26-Oct-02	2.5	3.0	Arsenic	10.4	mg/kg	NV	479169.52	1348935.79
A7P3-NT10	A7P3-NT10-6-RMP	26-Oct-02	2.5	3.0	Beryllium	0.694	mg/kg	NV	479169.52	1348935.79
A7P3-NT10	A7P3-NT10-6-RMP	26-Oct-02	2.5	3.0	Aroclor-1254	4	ug/kg	UNV	479169.52	1348935.79
A7P3-NT10	A7P3-NT10-6-RMP	26-Oct-02	2.5	3.0	Aroclor-1260	4	ug/kg	UNV	479169.52	1348935.79
A7P3-NT10	A7P3-NT10-6-RMP	26-Oct-02	2.5	3.0	Radium-226	1.2	pCi/g	NV	479169.52	1348935.79
A7P3-NT10	A7P3-NT10-6-RMP	26-Oct-02	2.5	3.0	Radium-228	1.3	pCi/g	NV	479169.52	1348935.79
A7P3-NT10	A7P3-NT10-6-RMP	26-Oct-02	2.5	3.0	Thorium-228	1.29	pCi/g	NV	479169.52	1348935.79
A7P3-NT10	A7P3-NT10-6-RMP	26-Oct-02	2.5	3.0	Thorium-232	1.3	pCi/g	NV	479169.52	1348935.79
A7P3-NT10	A7P3-NT10-6-RMP	26-Oct-02	2.5	3.0	Uranium, Total	11.5	mg/kg	NV	479169.52	1348935.79
A7P3-NT2	A7P3-NT2-4-RMP	26-Oct-02	1.5	2.0	Arsenic	4.88	mg/kg	NV	479394.23	1348817.11
A7P3-NT2	A7P3-NT2-4-RMP	26-Oct-02	1.5	2.0	Beryllium	0.484	mg/kg	NV	479394.23	1348817.11
A7P3-NT2	A7P3-NT2-4-RMP	26-Oct-02	1.5	2.0	Aroclor-1254	20	ug/kg	UNV	479394.23	1348817.11
A7P3-NT2	A7P3-NT2-4-RMP	26-Oct-02	1.5	2.0	Aroclor-1260	20	ug/kg	UNV	479394.23	1348817.11
A7P3-NT2	A7P3-NT2-4-RMP	26-Oct-02	1.5	2.0	Radium-226	1.11	pCi/g	NV	479394.23	1348817.11
A7P3-NT2	A7P3-NT2-4-RMP	26-Oct-02	1.5	2.0	Radium-228	0.939	pCi/g	NV	479394.23	1348817.11
A7P3-NT2	A7P3-NT2-4-RMP	26-Oct-02	1.5	2.0	Thorium-228	0.946	pCi/g	NV	479394.23	1348817.11
A7P3-NT2	A7P3-NT2-4-RMP	26-Oct-02	1.5	2.0	Thorium-232	0.939	pCi/g	NV	479394.23	1348817.11
A7P3-NT2	A7P3-NT2-4-RMP	26-Oct-02	1.5	2.0	Uranium, Total	25.5	mg/kg	NV	479394.23	1348817.11
A7P3-NT2	A7P3-NT2-6-RMP	26-Oct-02	2.5	3.0	Arsenic	4.63	mg/kg	NV	479394.23	1348817.11
A7P3-NT2	A7P3-NT2-6-RMP	26-Oct-02	2.5	3.0	Beryllium	0.442	mg/kg	NV	479394.23	1348817.11
A7P3-NT2	A7P3-NT2-6-RMP	26-Oct-02	2.5	3.0	Aroclor-1254	4	ug/kg	UNV	479394.23	1348817.11
A7P3-NT2	A7P3-NT2-6-RMP	26-Oct-02	2.5	3.0	Aroclor-1260	4	ug/kg	UNV	479394.23	1348817.11
A7P3-NT2	A7P3-NT2-6-RMP	26-Oct-02	2.5	3.0	Radium-226	0.969	pCi/g	NV	479394.23	1348817.11
A7P3-NT2	A7P3-NT2-6-RMP	26-Oct-02	2.5	3.0	Radium-228	0.973	pCi/g	NV	479394.23	1348817.11
A7P3-NT2	A7P3-NT2-6-RMP	26-Oct-02	2.5	3.0	Thorium-228	0.978	pCi/g	NV	479394.23	1348817.11
A7P3-NT2	A7P3-NT2-6-RMP	26-Oct-02	2.5	3.0	Thorium-232	0.973	pCi/g	NV	479394.23	1348817.11
A7P3-NT2	A7P3-NT2-6-RMP	26-Oct-02	2.5	3.0	Uranium, Total	13.9	mg/kg	NV	479394.23	1348817.11
A7P3-NT3	A7P3-NT3-4-RMP	26-Oct-02	1.5	2.0	Arsenic	6.41	mg/kg	NV	479358.07	1348784.69
A7P3-NT3	A7P3-NT3-4-RMP	26-Oct-02	1.5	2.0	Beryllium	0.624	mg/kg	NV	479358.07	1348784.69
A7P3-NT3	A7P3-NT3-4-RMP	26-Oct-02	1.5	2.0	Aroclor-1254	19.6	ug/kg	UNV	479358.07	1348784.69
A7P3-NT3	A7P3-NT3-4-RMP	26-Oct-02	1.5	2.0	Aroclor-1260	19.6	ug/kg	UNV	479358.07	1348784.69
A7P3-NT3	A7P3-NT3-4-RMP	26-Oct-02	1.5	2.0	Radium-226	1.14	pCi/g	NV	479358.07	1348784.69
A7P3-NT3	A7P3-NT3-4-RMP	26-Oct-02	1.5	2.0	Radium-228	1	pCi/g	NV	479358.07	1348784.69
A7P3-NT3	A7P3-NT3-4-RMP	26-Oct-02	1.5	2.0	Thorium-228	1.02	pCi/g	NV	479358.07	1348784.69

5982

Boring	Sample ID	Sample Date	Sample Depth (feet)		Parameter	Result	Units	Qualifier	Northing	Easting
			Top	Bottom						
A7P3-NT3	A7P3-NT3-4-RMP	26-Oct-02	1.5	2.0	Thorium-232	1	pCi/g	NV	479358.07	1348784.69
A7P3-NT3	A7P3-NT3-4-RMP	26-Oct-02	1.5	2.0	Uranium, Total	23	mg/kg	NV	479358.07	1348784.69
A7P3-NT3	A7P3-NT3-6-RMP	26-Oct-02	2.5	3.0	Arsenic	5.39	mg/kg	NV	479358.07	1348784.69
A7P3-NT3	A7P3-NT3-6-RMP	26-Oct-02	2.5	3.0	Beryllium	0.522	mg/kg	NV	479358.07	1348784.69
A7P3-NT3	A7P3-NT3-6-RMP	26-Oct-02	2.5	3.0	Aroclor-1254	19.6	ug/kg	UNV	479358.07	1348784.69
A7P3-NT3	A7P3-NT3-6-RMP	26-Oct-02	2.5	3.0	Aroclor-1260	19.6	ug/kg	UNV	479358.07	1348784.69
A7P3-NT3	A7P3-NT3-6-RMP	26-Oct-02	2.5	3.0	Radium-226	1.24	pCi/g	NV	479358.07	1348784.69
A7P3-NT3	A7P3-NT3-6-RMP	26-Oct-02	2.5	3.0	Radium-228	1.04	pCi/g	NV	479358.07	1348784.69
A7P3-NT3	A7P3-NT3-6-RMP	26-Oct-02	2.5	3.0	Thorium-228	1.05	pCi/g	NV	479358.07	1348784.69
A7P3-NT3	A7P3-NT3-6-RMP	26-Oct-02	2.5	3.0	Thorium-232	1.04	pCi/g	NV	479358.07	1348784.69
A7P3-NT3	A7P3-NT3-6-RMP	26-Oct-02	2.5	3.0	Uranium, Total	7.17	mg/kg	NV	479358.07	1348784.69
A7P3-NT4	A7P3-NT4-4-RMP	26-Oct-02	1.5	2.0	Arsenic	5.93	mg/kg	NV	479365.54	1348820.14
A7P3-NT4	A7P3-NT4-4-RMP	26-Oct-02	1.5	2.0	Beryllium	0.58	mg/kg	NV	479365.54	1348820.14
A7P3-NT4	A7P3-NT4-4-RMP	26-Oct-02	1.5	2.0	Aroclor-1254	4.1	ug/kg	UNV	479365.54	1348820.14
A7P3-NT4	A7P3-NT4-4-RMP	26-Oct-02	1.5	2.0	Aroclor-1260	4.1	ug/kg	UNV	479365.54	1348820.14
A7P3-NT4	A7P3-NT4-4-RMP	26-Oct-02	1.5	2.0	Radium-226	1.03	pCi/g	NV	479365.54	1348820.14
A7P3-NT4	A7P3-NT4-4-RMP	26-Oct-02	1.5	2.0	Radium-228	1.16	pCi/g	NV	479365.54	1348820.14
A7P3-NT4	A7P3-NT4-4-RMP	26-Oct-02	1.5	2.0	Thorium-228	1.18	pCi/g	NV	479365.54	1348820.14
A7P3-NT4	A7P3-NT4-4-RMP	26-Oct-02	1.5	2.0	Thorium-232	1.16	pCi/g	NV	479365.54	1348820.14
A7P3-NT4	A7P3-NT4-4-RMP	26-Oct-02	1.5	2.0	Uranium, Total	6.01	mg/kg	NV	479365.54	1348820.14
A7P3-NT4	A7P3-NT4-6-RMP	26-Oct-02	2.5	3.0	Arsenic	9.32	mg/kg	NV	479365.54	1348820.14
A7P3-NT4	A7P3-NT4-6-RMP	26-Oct-02	2.5	3.0	Beryllium	0.587	mg/kg	NV	479365.54	1348820.14
A7P3-NT4	A7P3-NT4-6-RMP	26-Oct-02	2.5	3.0	Aroclor-1254	4	ug/kg	UNV	479365.54	1348820.14
A7P3-NT4	A7P3-NT4-6-RMP	26-Oct-02	2.5	3.0	Aroclor-1260	4	ug/kg	UNV	479365.54	1348820.14
A7P3-NT4	A7P3-NT4-6-RMP	26-Oct-02	2.5	3.0	Radium-226	1.04	pCi/g	NV	479365.54	1348820.14
A7P3-NT4	A7P3-NT4-6-RMP	26-Oct-02	2.5	3.0	Radium-228	1.03	pCi/g	NV	479365.54	1348820.14
A7P3-NT4	A7P3-NT4-6-RMP	26-Oct-02	2.5	3.0	Thorium-228	1.03	pCi/g	NV	479365.54	1348820.14
A7P3-NT4	A7P3-NT4-6-RMP	26-Oct-02	2.5	3.0	Thorium-232	1.03	pCi/g	NV	479365.54	1348820.14
A7P3-NT4	A7P3-NT4-6-RMP	26-Oct-02	2.5	3.0	Uranium, Total	21.1	mg/kg	NV	479365.54	1348820.14
A7P3-NT5	A7P3-NT5-4-RMP	26-Oct-02	1.5	2.0	Arsenic	4.65	mg/kg	NV	479279.43	1348922.5
A7P3-NT5	A7P3-NT5-4-RMP	26-Oct-02	1.5	2.0	Beryllium	0.528	mg/kg	NV	479279.43	1348922.5
A7P3-NT5	A7P3-NT5-4-RMP	26-Oct-02	1.5	2.0	Aroclor-1254	7.5	ug/kg	UNV	479279.43	1348922.5
A7P3-NT5	A7P3-NT5-4-RMP	26-Oct-02	1.5	2.0	Aroclor-1260	7.5	ug/kg	UNV	479279.43	1348922.5
A7P3-NT5	A7P3-NT5-4-RMP	26-Oct-02	1.5	2.0	Radium-226	0.792	pCi/g	NV	479279.43	1348922.5
A7P3-NT5	A7P3-NT5-4-RMP	26-Oct-02	1.5	2.0	Radium-228	0.761	pCi/g	NV	479279.43	1348922.5

APPENDIX A
PREDESIGN CHARACTERIZATION DATA FOR AREA 7 SILOS AND GENERAL AREA

Boring	Sample ID	Sample Date	Sample Depth (feet)		Parameter	Result	Units	Qualifier	Northing	Easting
			Top	Bottom						
A7P3-NT5	A7P3-NT5-4-RMP	26-Oct-02	1.5	2.0	Thorium-228	0.763	pCi/g	NV	479279.43	1348922.5
A7P3-NT5	A7P3-NT5-4-RMP	26-Oct-02	1.5	2.0	Thorium-232	0.761	pCi/g	NV	479279.43	1348922.5
A7P3-NT5	A7P3-NT5-4-RMP	26-Oct-02	1.5	2.0	Uranium, Total	9.65	mg/kg	NV	479279.43	1348922.5
A7P3-NT5	A7P3-NT5-6-RMP	26-Oct-02	2.5	3.0	Arsenic	10.4	mg/kg	NV	479279.43	1348922.5
A7P3-NT5	A7P3-NT5-6-RMP	26-Oct-02	2.5	3.0	Beryllium	0.655	mg/kg	NV	479279.43	1348922.5
A7P3-NT5	A7P3-NT5-6-RMP	26-Oct-02	2.5	3.0	Aroclor-1254	3.8	ug/kg	UNV	479279.43	1348922.5
A7P3-NT5	A7P3-NT5-6-RMP	26-Oct-02	2.5	3.0	Aroclor-1260	3.8	ug/kg	UNV	479279.43	1348922.5
A7P3-NT5	A7P3-NT5-6-RMP	26-Oct-02	2.5	3.0	Radium-226	0.79	pCi/g	NV	479279.43	1348922.5
A7P3-NT5	A7P3-NT5-6-RMP	26-Oct-02	2.5	3.0	Radium-228	0.87	pCi/g	NV	479279.43	1348922.5
A7P3-NT5	A7P3-NT5-6-RMP	26-Oct-02	2.5	3.0	Thorium-228	0.877	pCi/g	NV	479279.43	1348922.5
A7P3-NT5	A7P3-NT5-6-RMP	26-Oct-02	2.5	3.0	Thorium-232	0.87	pCi/g	NV	479279.43	1348922.5
A7P3-NT5	A7P3-NT5-6-RMP	26-Oct-02	2.5	3.0	Uranium, Total	6.95	mg/kg	NV	479279.43	1348922.5
A7P3-NT6	A7P3-NT6-4-RMP	26-Oct-02	1.5	2.0	Arsenic	7.36	mg/kg	NV	479234.86	1348938.36
A7P3-NT6	A7P3-NT6-4-RMP	26-Oct-02	1.5	2.0	Beryllium	0.475	mg/kg	NV	479234.86	1348938.36
A7P3-NT6	A7P3-NT6-4-RMP	26-Oct-02	1.5	2.0	Aroclor-1254	7.8	ug/kg	UNV	479234.86	1348938.36
A7P3-NT6	A7P3-NT6-4-RMP	26-Oct-02	1.5	2.0	Aroclor-1260	7.8	ug/kg	UNV	479234.86	1348938.36
A7P3-NT6	A7P3-NT6-4-RMP	26-Oct-02	1.5	2.0	Radium-226	1.02	pCi/g	NV	479234.86	1348938.36
A7P3-NT6	A7P3-NT6-4-RMP	26-Oct-02	1.5	2.0	Radium-228	0.991	pCi/g	NV	479234.86	1348938.36
A7P3-NT6	A7P3-NT6-4-RMP	26-Oct-02	1.5	2.0	Thorium-228	1	pCi/g	NV	479234.86	1348938.36
A7P3-NT6	A7P3-NT6-4-RMP	26-Oct-02	1.5	2.0	Thorium-232	0.991	pCi/g	NV	479234.86	1348938.36
A7P3-NT6	A7P3-NT6-4-RMP	26-Oct-02	1.5	2.0	Uranium, Total	17.5	mg/kg	NV	479234.86	1348938.36
A7P3-NT6	A7P3-NT6-6-RMP	26-Oct-02	2.5	3.0	Arsenic	8.06	mg/kg	NV	479234.86	1348938.36
A7P3-NT6	A7P3-NT6-6-RMP	26-Oct-02	2.5	3.0	Beryllium	0.58	mg/kg	NV	479234.86	1348938.36
A7P3-NT6	A7P3-NT6-6-RMP	26-Oct-02	2.5	3.0	Aroclor-1254	4	ug/kg	UNV	479234.86	1348938.36
A7P3-NT6	A7P3-NT6-6-RMP	26-Oct-02	2.5	3.0	Aroclor-1260	4	ug/kg	UNV	479234.86	1348938.36
A7P3-NT6	A7P3-NT6-6-RMP	26-Oct-02	2.5	3.0	Radium-226	1.4	pCi/g	NV	479234.86	1348938.36
A7P3-NT6	A7P3-NT6-6-RMP	26-Oct-02	2.5	3.0	Radium-228	1.26	pCi/g	NV	479234.86	1348938.36
A7P3-NT6	A7P3-NT6-6-RMP	26-Oct-02	2.5	3.0	Thorium-228	1.25	pCi/g	NV	479234.86	1348938.36
A7P3-NT6	A7P3-NT6-6-RMP	26-Oct-02	2.5	3.0	Thorium-232	1.26	pCi/g	NV	479234.86	1348938.36
A7P3-NT6	A7P3-NT6-6-RMP	26-Oct-02	2.5	3.0	Uranium, Total	6.49	mg/kg	NV	479234.86	1348938.36
A7P3-NT7	A7P3-NT7-4-RMP	26-Oct-02	1.5	2.0	Arsenic	5.45	mg/kg	NV	479204.05	1348906.64
A7P3-NT7	A7P3-NT7-4-RMP	26-Oct-02	1.5	2.0	Beryllium	0.462	mg/kg	NV	479204.05	1348906.64
A7P3-NT7	A7P3-NT7-4-RMP	26-Oct-02	1.5	2.0	Aroclor-1254	9	ug/kg	NV	479204.05	1348906.64
A7P3-NT7	A7P3-NT7-4-RMP	26-Oct-02	1.5	2.0	Aroclor-1260	8.7	ug/kg	NV	479204.05	1348906.64
A7P3-NT7	A7P3-NT7-4-RMP	26-Oct-02	1.5	2.0	Radium-226	0.778	pCi/g	NV	479204.05	1348906.64

5982

Boring	Sample ID	Sample Date	Sample Depth (feet)		Parameter	Result	Units	Qualifier	Northing	Easting
			Top	Bottom						
A7P3-NT7	A7P3-NT7-4-RMP	26-Oct-02	1.5	2.0	Radium-228	0.793	pCi/g	NV	479204.05	1348906.64
A7P3-NT7	A7P3-NT7-4-RMP	26-Oct-02	1.5	2.0	Thorium-228	0.788	pCi/g	NV	479204.05	1348906.64
A7P3-NT7	A7P3-NT7-4-RMP	26-Oct-02	1.5	2.0	Thorium-232	0.793	pCi/g	NV	479204.05	1348906.64
A7P3-NT7	A7P3-NT7-4-RMP	26-Oct-02	1.5	2.0	Uranium, Total	17.9	mg/kg	NV	479204.05	1348906.64
A7P3-NT7	A7P3-NT7-6-RMP	26-Oct-02	2.5	3.0	Arsenic	5.83	mg/kg	NV	479204.05	1348906.64
A7P3-NT7	A7P3-NT7-6-RMP	26-Oct-02	2.5	3.0	Beryllium	0.516	mg/kg	NV	479204.05	1348906.64
A7P3-NT7	A7P3-NT7-6-RMP	26-Oct-02	2.5	3.0	Aroclor-1254	3.8	ug/kg	UNV	479204.05	1348906.64
A7P3-NT7	A7P3-NT7-6-RMP	26-Oct-02	2.5	3.0	Aroclor-1260	3.8	ug/kg	UNV	479204.05	1348906.64
A7P3-NT7	A7P3-NT7-6-RMP	26-Oct-02	2.5	3.0	Radium-226	1.14	pCi/g	NV	479204.05	1348906.64
A7P3-NT7	A7P3-NT7-6-RMP	26-Oct-02	2.5	3.0	Radium-228	1.09	pCi/g	NV	479204.05	1348906.64
A7P3-NT7	A7P3-NT7-6-RMP	26-Oct-02	2.5	3.0	Thorium-228	1.1	pCi/g	NV	479204.05	1348906.64
A7P3-NT7	A7P3-NT7-6-RMP	26-Oct-02	2.5	3.0	Thorium-232	1.09	pCi/g	NV	479204.05	1348906.64
A7P3-NT7	A7P3-NT7-6-RMP	26-Oct-02	2.5	3.0	Uranium, Total	10.4	mg/kg	NV	479204.05	1348906.64
A7P3-NT8	A7P3-NT8-4-RMP	26-Oct-02	1.5	2.0	Arsenic	7.16	mg/kg	NV	479155.52	1348904.77
A7P3-NT8	A7P3-NT8-4-RMP	26-Oct-02	1.5	2.0	Beryllium	0.408	mg/kg	NV	479155.52	1348904.77
A7P3-NT8	A7P3-NT8-4-RMP	26-Oct-02	1.5	2.0	Aroclor-1254	3.7	ug/kg	UNV	479155.52	1348904.77
A7P3-NT8	A7P3-NT8-4-RMP	26-Oct-02	1.5	2.0	Aroclor-1260	3.7	ug/kg	UNV	479155.52	1348904.77
A7P3-NT8	A7P3-NT8-4-RMP	26-Oct-02	1.5	2.0	Radium-226	0.909	pCi/g	NV	479155.52	1348904.77
A7P3-NT8	A7P3-NT8-4-RMP	26-Oct-02	1.5	2.0	Radium-228	0.887	pCi/g	NV	479155.52	1348904.77
A7P3-NT8	A7P3-NT8-4-RMP	26-Oct-02	1.5	2.0	Thorium-228	0.897	pCi/g	NV	479155.52	1348904.77
A7P3-NT8	A7P3-NT8-4-RMP	26-Oct-02	1.5	2.0	Thorium-232	0.887	pCi/g	NV	479155.52	1348904.77
A7P3-NT8	A7P3-NT8-4-RMP	26-Oct-02	1.5	2.0	Uranium, Total	12.2	mg/kg	NV	479155.52	1348904.77
A7P3-NT8	A7P3-NT8-6-RMP	26-Oct-02	2.5	3.0	Arsenic	15	mg/kg	NV	479155.52	1348904.77
A7P3-NT8	A7P3-NT8-6-RMP	26-Oct-02	2.5	3.0	Beryllium	1.1	mg/kg	NV	479155.52	1348904.77
A7P3-NT8	A7P3-NT8-6-RMP	26-Oct-02	2.5	3.0	Aroclor-1254	4	ug/kg	UNV	479155.52	1348904.77
A7P3-NT8	A7P3-NT8-6-RMP	26-Oct-02	2.5	3.0	Aroclor-1260	4	ug/kg	UNV	479155.52	1348904.77
A7P3-NT8	A7P3-NT8-6-RMP	26-Oct-02	2.5	3.0	Radium-226	1.69	pCi/g	NV	479155.52	1348904.77
A7P3-NT8	A7P3-NT8-6-RMP	26-Oct-02	2.5	3.0	Radium-228	1.21	pCi/g	NV	479155.52	1348904.77
A7P3-NT8	A7P3-NT8-6-RMP	26-Oct-02	2.5	3.0	Thorium-228	1.21	pCi/g	NV	479155.52	1348904.77
A7P3-NT8	A7P3-NT8-6-RMP	26-Oct-02	2.5	3.0	Thorium-232	1.21	pCi/g	NV	479155.52	1348904.77
A7P3-NT8	A7P3-NT8-6-RMP	26-Oct-02	2.5	3.0	Uranium, Total	6.28	mg/kg	NV	479155.52	1348904.77
A7P3-NT9	A7P3-NT9-4-RMP	26-Oct-02	1.5	2.0	Arsenic	5.28	mg/kg	NV	479204.05	1348928.33
A7P3-NT9	A7P3-NT9-4-RMP	26-Oct-02	1.5	2.0	Beryllium	0.427	mg/kg	NV	479204.05	1348928.33
A7P3-NT9	A7P3-NT9-4-RMP	26-Oct-02	1.5	2.0	Aroclor-1254	3.9	ug/kg	UNV	479204.05	1348928.33
A7P3-NT9	A7P3-NT9-4-RMP	26-Oct-02	1.5	2.0	Aroclor-1260	3.9	ug/kg	UNV	479204.05	1348928.33

APPENDIX A
PREDESIGN CHARACTERIZATION DATA FOR AREA 7 SILOS AND GENERAL AREA

Boring	Sample ID	Sample Date	Sample Depth (feet)		Parameter	Result	Units	Qualifier	Northing	Easting
			Top	Bottom						
A7P3-NT9	A7P3-NT9-4-RMP	26-Oct-02	1.5	2.0	Radium-226	1.24	pCi/g	NV	479204.05	1348928.33
A7P3-NT9	A7P3-NT9-4-RMP	26-Oct-02	1.5	2.0	Radium-228	1.05	pCi/g	NV	479204.05	1348928.33
A7P3-NT9	A7P3-NT9-4-RMP	26-Oct-02	1.5	2.0	Thorium-228	1.06	pCi/g	NV	479204.05	1348928.33
A7P3-NT9	A7P3-NT9-4-RMP	26-Oct-02	1.5	2.0	Thorium-232	1.05	pCi/g	NV	479204.05	1348928.33
A7P3-NT9	A7P3-NT9-4-RMP	26-Oct-02	1.5	2.0	Uranium, Total	12	mg/kg	NV	479204.05	1348928.33
A7P3-NT9	A7P3-NT9-6-RMP	26-Oct-02	2.5	3.0	Arsenic	11.1	mg/kg	NV	479204.05	1348928.33
A7P3-NT9	A7P3-NT9-6-RMP	26-Oct-02	2.5	3.0	Beryllium	0.522	mg/kg	NV	479204.05	1348928.33
A7P3-NT9	A7P3-NT9-6-RMP	26-Oct-02	2.5	3.0	Aroclor-1254	4	ug/kg	UNV	479204.05	1348928.33
A7P3-NT9	A7P3-NT9-6-RMP	26-Oct-02	2.5	3.0	Aroclor-1260	4	ug/kg	UNV	479204.05	1348928.33
A7P3-NT9	A7P3-NT9-6-RMP	26-Oct-02	2.5	3.0	Radium-226	1.17	pCi/g	NV	479204.05	1348928.33
A7P3-NT9	A7P3-NT9-6-RMP	26-Oct-02	2.5	3.0	Radium-228	1.26	pCi/g	NV	479204.05	1348928.33
A7P3-NT9	A7P3-NT9-6-RMP	26-Oct-02	2.5	3.0	Thorium-228	1.27	pCi/g	NV	479204.05	1348928.33
A7P3-NT9	A7P3-NT9-6-RMP	26-Oct-02	2.5	3.0	Thorium-232	1.26	pCi/g	NV	479204.05	1348928.33
A7P3-NT9	A7P3-NT9-6-RMP	26-Oct-02	2.5	3.0	Uranium, Total	6.06	mg/kg	NV	479204.05	1348928.33
A7P3-ROAD1	A7P3-ROAD1-1-RMP	17-Oct-02	0.0	0.5	Arsenic	5.74	mg/kg	-	479207.8	1348476.7
A7P3-ROAD1	A7P3-ROAD1-1-RMP	17-Oct-02	0.0	0.5	Beryllium	0.529	mg/kg	-	479207.8	1348476.7
A7P3-ROAD1	A7P3-ROAD1-1-RMP	17-Oct-02	0.0	0.5	Aroclor-1254	3.8	ug/kg	U	479207.8	1348476.7
A7P3-ROAD1	A7P3-ROAD1-1-RMP	17-Oct-02	0.0	0.5	Aroclor-1260	3.8	ug/kg	U	479207.8	1348476.7
A7P3-ROAD1	A7P3-ROAD1-1-RMP	17-Oct-02	0.0	0.5	Radium-226	0.969	pCi/g	-	479207.8	1348476.7
A7P3-ROAD1	A7P3-ROAD1-1-RMP	17-Oct-02	0.0	0.5	Radium-228	0.676	pCi/g	-	479207.8	1348476.7
A7P3-ROAD1	A7P3-ROAD1-1-RMP	17-Oct-02	0.0	0.5	Thorium-228	0.673	pCi/g	-	479207.8	1348476.7
A7P3-ROAD1	A7P3-ROAD1-1-RMP	17-Oct-02	0.0	0.5	Thorium-232	0.676	pCi/g	-	479207.8	1348476.7
A7P3-ROAD1	A7P3-ROAD1-1-RMP	17-Oct-02	0.0	0.5	Uranium, Total	6.02	mg/kg	-	479207.8	1348476.7
A7P3-ROAD1	A7P3-ROAD1-3-RMP	17-Oct-02	1.0	1.5	Arsenic	3.05	mg/kg	-	479207.8	1348476.7
A7P3-ROAD1	A7P3-ROAD1-3-RMP	17-Oct-02	1.0	1.5	Beryllium	0.24	mg/kg	-	479207.8	1348476.7
A7P3-ROAD1	A7P3-ROAD1-3-RMP	17-Oct-02	1.0	1.5	Aroclor-1254	3.6	ug/kg	U	479207.8	1348476.7
A7P3-ROAD1	A7P3-ROAD1-3-RMP	17-Oct-02	1.0	1.5	Aroclor-1260	3.6	ug/kg	U	479207.8	1348476.7
A7P3-ROAD1	A7P3-ROAD1-3-RMP	17-Oct-02	1.0	1.5	Radium-226	0.581	pCi/g	-	479207.8	1348476.7
A7P3-ROAD1	A7P3-ROAD1-3-RMP	17-Oct-02	1.0	1.5	Radium-228	0.426	pCi/g	-	479207.8	1348476.7
A7P3-ROAD1	A7P3-ROAD1-3-RMP	17-Oct-02	1.0	1.5	Thorium-228	0.434	pCi/g	-	479207.8	1348476.7
A7P3-ROAD1	A7P3-ROAD1-3-RMP	17-Oct-02	1.0	1.5	Thorium-232	0.426	pCi/g	-	479207.8	1348476.7
A7P3-ROAD1	A7P3-ROAD1-3-RMP	17-Oct-02	1.0	1.5	Uranium, Total	3.5	mg/kg	-	479207.8	1348476.7
A7P3-ROAD2	A7P3-ROAD2-1-RMP	17-Oct-02	0.0	0.5	Arsenic	6.88	mg/kg	-	479143.8	1348496.9
A7P3-ROAD2	A7P3-ROAD2-1-RMP	17-Oct-02	0.0	0.5	Beryllium	0.695	mg/kg	-	479143.8	1348496.9
A7P3-ROAD2	A7P3-ROAD2-1-RMP	17-Oct-02	0.0	0.5	Aroclor-1254	3.8	ug/kg	U	479143.8	1348496.9

5982

APPENDIX A
PREDESIGN CHARACTERIZATION DATA FOR AREA 7 SILOS AND GENERAL AREA

Boring	Sample ID	Sample Date	Sample Depth (feet)		Parameter	Result	Units	Qualifier	Northing	Easting
			Top	Bottom						
A7P3-ROAD2	A7P3-ROAD2-1-RMP	17-Oct-02	0.0	0.5	Aroclor-1260	3.8	ug/kg	U	479143.8	1348496.9
A7P3-ROAD2	A7P3-ROAD2-1-RMP	17-Oct-02	0.0	0.5	Radium-226	0.863	pCi/g	-	479143.8	1348496.9
A7P3-ROAD2	A7P3-ROAD2-1-RMP	17-Oct-02	0.0	0.5	Radium-228	0.945	pCi/g	-	479143.8	1348496.9
A7P3-ROAD2	A7P3-ROAD2-1-RMP	17-Oct-02	0.0	0.5	Thorium-228	1	pCi/g	-	479143.8	1348496.9
A7P3-ROAD2	A7P3-ROAD2-1-RMP	17-Oct-02	0.0	0.5	Thorium-232	0.945	pCi/g	-	479143.8	1348496.9
A7P3-ROAD2	A7P3-ROAD2-1-RMP	17-Oct-02	0.0	0.5	Uranium, Total	9.69	mg/kg	-	479143.8	1348496.9
A7P3-ROAD2	A7P3-ROAD2-3-RMP	17-Oct-02	1.0	1.5	Arsenic	5.85	mg/kg	-	479143.8	1348496.9
A7P3-ROAD2	A7P3-ROAD2-3-RMP	17-Oct-02	1.0	1.5	Beryllium	0.591	mg/kg	-	479143.8	1348496.9
A7P3-ROAD2	A7P3-ROAD2-3-RMP	17-Oct-02	1.0	1.5	Aroclor-1254	3.6	ug/kg	U	479143.8	1348496.9
A7P3-ROAD2	A7P3-ROAD2-3-RMP	17-Oct-02	1.0	1.5	Aroclor-1260	3.6	ug/kg	U	479143.8	1348496.9
A7P3-ROAD2	A7P3-ROAD2-3-RMP	17-Oct-02	1.0	1.5	Radium-226	0.869	pCi/g	-	479143.8	1348496.9
A7P3-ROAD2	A7P3-ROAD2-3-RMP	17-Oct-02	1.0	1.5	Radium-228	0.722	pCi/g	-	479143.8	1348496.9
A7P3-ROAD2	A7P3-ROAD2-3-RMP	17-Oct-02	1.0	1.5	Thorium-228	0.713	pCi/g	-	479143.8	1348496.9
A7P3-ROAD2	A7P3-ROAD2-3-RMP	17-Oct-02	1.0	1.5	Thorium-232	0.722	pCi/g	-	479143.8	1348496.9
A7P3-ROAD2	A7P3-ROAD2-3-RMP	17-Oct-02	1.0	1.5	Uranium, Total	7.2	mg/kg	-	479143.8	1348496.9
A7P3-ROAD3	A7P3-ROAD3-1-RMP	17-Oct-02	0.0	0.5	Arsenic	5.46	mg/kg	-	479079.8	1348512.1
A7P3-ROAD3	A7P3-ROAD3-1-RMP	17-Oct-02	0.0	0.5	Beryllium	0.45	mg/kg	-	479079.8	1348512.1
A7P3-ROAD3	A7P3-ROAD3-1-RMP	17-Oct-02	0.0	0.5	Aroclor-1254	5.1	ug/kg	-	479079.8	1348512.1
A7P3-ROAD3	A7P3-ROAD3-1-RMP	17-Oct-02	0.0	0.5	Aroclor-1260	3.2	ug/kg	J	479079.8	1348512.1
A7P3-ROAD3	A7P3-ROAD3-1-RMP	17-Oct-02	0.0	0.5	Radium-226	0.864	pCi/g	-	479079.8	1348512.1
A7P3-ROAD3	A7P3-ROAD3-1-RMP	17-Oct-02	0.0	0.5	Radium-228	0.754	pCi/g	-	479079.8	1348512.1
A7P3-ROAD3	A7P3-ROAD3-1-RMP	17-Oct-02	0.0	0.5	Thorium-228	0.744	pCi/g	-	479079.8	1348512.1
A7P3-ROAD3	A7P3-ROAD3-1-RMP	17-Oct-02	0.0	0.5	Thorium-232	0.754	pCi/g	-	479079.8	1348512.1
A7P3-ROAD3	A7P3-ROAD3-1-RMP	17-Oct-02	0.0	0.5	Uranium, Total	13.8	mg/kg	-	479079.8	1348512.1
A7P3-ROAD4	A7P3-ROAD4-1-RMP	17-Oct-02	0.0	0.5	Arsenic	7.66	mg/kg	-	479015.8	1348554.1
A7P3-ROAD4	A7P3-ROAD4-1-RMP	17-Oct-02	0.0	0.5	Beryllium	0.706	mg/kg	-	479015.8	1348554.1
A7P3-ROAD4	A7P3-ROAD4-1-RMP	17-Oct-02	0.0	0.5	Aroclor-1254	6.9	ug/kg	-	479015.8	1348554.1
A7P3-ROAD4	A7P3-ROAD4-1-RMP	17-Oct-02	0.0	0.5	Aroclor-1260	2.5	ug/kg	J	479015.8	1348554.1
A7P3-ROAD4	A7P3-ROAD4-1-RMP	17-Oct-02	0.0	0.5	Radium-226	1.39	pCi/g	-	479015.8	1348554.1
A7P3-ROAD4	A7P3-ROAD4-1-RMP	17-Oct-02	0.0	0.5	Radium-228	1.02	pCi/g	-	479015.8	1348554.1
A7P3-ROAD4	A7P3-ROAD4-1-RMP	17-Oct-02	0.0	0.5	Thorium-228	1.03	pCi/g	-	479015.8	1348554.1
A7P3-ROAD4	A7P3-ROAD4-1-RMP	17-Oct-02	0.0	0.5	Thorium-232	1.02	pCi/g	-	479015.8	1348554.1
A7P3-ROAD4	A7P3-ROAD4-1-RMP	17-Oct-02	0.0	0.5	Uranium, Total	10.5	mg/kg	-	479015.8	1348554.1
A7P3-ROAD4	A7P3-ROAD4-3-RMP	17-Oct-02	1.0	1.5	Arsenic	6.57	mg/kg	-	479015.8	1348554.1
A7P3-ROAD4	A7P3-ROAD4-3-RMP	17-Oct-02	1.0	1.5	Beryllium	0.499	mg/kg	-	479015.8	1348554.1

APPENDIX A
PREDESIGN CHARACTERIZATION DATA FOR AREA 7 SILOS AND GENERAL AREA

Boring	Sample ID	Sample Date	Sample Depth (feet)		Parameter	Result	Units	Qualifier	Northing	Easting
			Top	Bottom						
A7P3-ROAD4	A7P3-ROAD4-3-RMP	17-Oct-02	1.0	1.5	Aroclor-1254	3.7	ug/kg	U	479015.8	1348554.1
A7P3-ROAD4	A7P3-ROAD4-3-RMP	17-Oct-02	1.0	1.5	Aroclor-1260	3.7	ug/kg	U	479015.8	1348554.1
A7P3-ROAD4	A7P3-ROAD4-3-RMP	17-Oct-02	1.0	1.5	Radium-226	1.01	pCi/g	-	479015.8	1348554.1
A7P3-ROAD4	A7P3-ROAD4-3-RMP	17-Oct-02	1.0	1.5	Radium-228	0.932	pCi/g	-	479015.8	1348554.1
A7P3-ROAD4	A7P3-ROAD4-3-RMP	17-Oct-02	1.0	1.5	Thorium-228	0.938	pCi/g	-	479015.8	1348554.1
A7P3-ROAD4	A7P3-ROAD4-3-RMP	17-Oct-02	1.0	1.5	Thorium-232	0.932	pCi/g	-	479015.8	1348554.1
A7P3-ROAD4	A7P3-ROAD4-3-RMP	17-Oct-02	1.0	1.5	Uranium, Total	11.7	mg/kg	-	479015.8	1348554.1
A7P3-ROAD5	A7P3-ROAD5-1-RMP	17-Oct-02	0.0	0.5	Arsenic	6.3	mg/kg	-	478951.8	1348580.5
A7P3-ROAD5	A7P3-ROAD5-1-RMP	17-Oct-02	0.0	0.5	Beryllium	0.588	mg/kg	-	478951.8	1348580.5
A7P3-ROAD5	A7P3-ROAD5-1-RMP	17-Oct-02	0.0	0.5	Aroclor-1254	3.9	ug/kg	U	478951.8	1348580.5
A7P3-ROAD5	A7P3-ROAD5-1-RMP	17-Oct-02	0.0	0.5	Aroclor-1260	3.9	ug/kg	U	478951.8	1348580.5
A7P3-ROAD5	A7P3-ROAD5-1-RMP	17-Oct-02	0.0	0.5	Radium-226	1.16	pCi/g	-	478951.8	1348580.5
A7P3-ROAD5	A7P3-ROAD5-1-RMP	17-Oct-02	0.0	0.5	Radium-228	0.919	pCi/g	-	478951.8	1348580.5
A7P3-ROAD5	A7P3-ROAD5-1-RMP	17-Oct-02	0.0	0.5	Thorium-228	0.919	pCi/g	-	478951.8	1348580.5
A7P3-ROAD5	A7P3-ROAD5-1-RMP	17-Oct-02	0.0	0.5	Thorium-232	0.919	pCi/g	-	478951.8	1348580.5
A7P3-ROAD5	A7P3-ROAD5-1-RMP	17-Oct-02	0.0	0.5	Uranium, Total	7.72	mg/kg	-	478951.8	1348580.5
A7P3-ROAD5	A7P3-ROAD5-3-RMP	17-Oct-02	1.0	1.5	Arsenic	6.92	mg/kg	-	478951.8	1348580.5
A7P3-ROAD5	A7P3-ROAD5-3-RMP	17-Oct-02	1.0	1.5	Beryllium	0.752	mg/kg	-	478951.8	1348580.5
A7P3-ROAD5	A7P3-ROAD5-3-RMP	17-Oct-02	1.0	1.5	Aroclor-1254	3	ug/kg	J	478951.8	1348580.5
A7P3-ROAD5	A7P3-ROAD5-3-RMP	17-Oct-02	1.0	1.5	Aroclor-1260	4	ug/kg	U	478951.8	1348580.5
A7P3-ROAD5	A7P3-ROAD5-3-RMP	17-Oct-02	1.0	1.5	Radium-226	1.17	pCi/g	-	478951.8	1348580.5
A7P3-ROAD5	A7P3-ROAD5-3-RMP	17-Oct-02	1.0	1.5	Radium-228	0.983	pCi/g	-	478951.8	1348580.5
A7P3-ROAD5	A7P3-ROAD5-3-RMP	17-Oct-02	1.0	1.5	Thorium-228	0.974	pCi/g	-	478951.8	1348580.5
A7P3-ROAD5	A7P3-ROAD5-3-RMP	17-Oct-02	1.0	1.5	Thorium-232	0.983	pCi/g	-	478951.8	1348580.5
A7P3-ROAD5	A7P3-ROAD5-3-RMP	17-Oct-02	1.0	1.5	Uranium, Total	7.59	mg/kg	-	478951.8	1348580.5
A7P3-ROAD6	A7P3-ROAD6-1-RMP	17-Oct-02	0.0	0.5	Arsenic	6.5	mg/kg	-	478887.8	1348615.5
A7P3-ROAD6	A7P3-ROAD6-1-RMP	17-Oct-02	0.0	0.5	Beryllium	0.649	mg/kg	-	478887.8	1348615.5
A7P3-ROAD6	A7P3-ROAD6-1-RMP	17-Oct-02	0.0	0.5	Aroclor-1254	6.3	ug/kg	-	478887.8	1348615.5
A7P3-ROAD6	A7P3-ROAD6-1-RMP	17-Oct-02	0.0	0.5	Aroclor-1260	2.4	ug/kg	J	478887.8	1348615.5
A7P3-ROAD6	A7P3-ROAD6-1-RMP	17-Oct-02	0.0	0.5	Radium-226	0.922	pCi/g	-	478887.8	1348615.5
A7P3-ROAD6	A7P3-ROAD6-1-RMP	17-Oct-02	0.0	0.5	Radium-228	0.94	pCi/g	-	478887.8	1348615.5
A7P3-ROAD6	A7P3-ROAD6-1-RMP	17-Oct-02	0.0	0.5	Thorium-228	0.937	pCi/g	-	478887.8	1348615.5
A7P3-ROAD6	A7P3-ROAD6-1-RMP	17-Oct-02	0.0	0.5	Thorium-232	0.94	pCi/g	-	478887.8	1348615.5
A7P3-ROAD6	A7P3-ROAD6-1-RMP	17-Oct-02	0.0	0.5	Uranium, Total	10.3	mg/kg	-	478887.8	1348615.5
A7P3-ROAD6	A7P3-ROAD6-3-RMP	17-Oct-02	1.0	1.5	Arsenic	5.61	mg/kg	-	478887.8	1348615.5

5982

Boring	Sample ID	Sample Date	Sample Depth (feet)		Parameter	Result	Units	Qualifier	Northing	Easting
			Top	Bottom						
A7P3-ROAD6	A7P3-ROAD6-3-RMP	17-Oct-02	1.0	1.5	Beryllium	0.512	mg/kg	-	478887.8	1348615.5
A7P3-ROAD6	A7P3-ROAD6-3-RMP	17-Oct-02	1.0	1.5	Aroclor-1254	3.7	ug/kg	U	478887.8	1348615.5
A7P3-ROAD6	A7P3-ROAD6-3-RMP	17-Oct-02	1.0	1.5	Aroclor-1260	3.7	ug/kg	U	478887.8	1348615.5
A7P3-ROAD6	A7P3-ROAD6-3-RMP	17-Oct-02	1.0	1.5	Radium-226	0.881	pCi/g	-	478887.8	1348615.5
A7P3-ROAD6	A7P3-ROAD6-3-RMP	17-Oct-02	1.0	1.5	Radium-228	0.921	pCi/g	-	478887.8	1348615.5
A7P3-ROAD6	A7P3-ROAD6-3-RMP	17-Oct-02	1.0	1.5	Thorium-228	0.936	pCi/g	-	478887.8	1348615.5
A7P3-ROAD6	A7P3-ROAD6-3-RMP	17-Oct-02	1.0	1.5	Thorium-232	0.921	pCi/g	-	478887.8	1348615.5
A7P3-ROAD6	A7P3-ROAD6-3-RMP	17-Oct-02	1.0	1.5	Uranium, Total	5.54	mg/kg	-	478887.8	1348615.5
A7P3-SPIT1	A7P3-SPIT1^1-RMP	5-Mar-04	0.0	0.5	Arsenic	2	mg/kg	UNV	478780.9	1349226.77
A7P3-SPIT1	A7P3-SPIT1^1-RMP	5-Mar-04	0.0	0.5	Beryllium	0.316	mg/kg	NV	478780.9	1349226.77
A7P3-SPIT1	A7P3-SPIT1^1-RMP	5-Mar-04	0.0	0.5	Lead	7.44	mg/kg	NV	478780.9	1349226.77
A7P3-SPIT1	A7P3-SPIT1^1-RMP	5-Mar-04	0.0	0.5	Manganese	373	mg/kg	NV	478780.9	1349226.77
A7P3-SPIT1	A7P3-SPIT1^1-RMP	5-Mar-04	0.0	0.5	Aroclor-1254	4.8	ug/kg	NV	478780.9	1349226.77
A7P3-SPIT1	A7P3-SPIT1^1-RMP	5-Mar-04	0.0	0.5	Aroclor-1260	9.16	ug/kg	UNV	478780.9	1349226.77
A7P3-SPIT1	A7P3-SPIT1^1-RMP	5-Mar-04	0.0	0.5	Dieldrin	0.002	ug/kg	NV	478780.9	1349226.77
A7P3-SPIT1	A7P3-SPIT1^1-RMP	5-Mar-04	0.0	0.5	Radium-228	0.455	pCi/g	NV	478780.9	1349226.77
A7P3-SPIT1	A7P3-SPIT1^1-RMP	5-Mar-04	0.0	0.5	Technetium-99	5.91	pCi/g	NV	478780.9	1349226.77
A7P3-SPIT1	A7P3-SPIT1^1-RMP	5-Mar-04	0.0	0.5	Thorium-228	0.513	pCi/g	NV	478780.9	1349226.77
A7P3-SPIT1	A7P3-SPIT1^1-RMP	5-Mar-04	0.0	0.5	Thorium-230	18.6	pCi/g	UNV	478780.9	1349226.77
A7P3-SPIT1	A7P3-SPIT1^1-RMP	5-Mar-04	0.0	0.5	Thorium-232	0.455	pCi/g	NV	478780.9	1349226.77
A7P3-SPIT1	A7P3-SPIT1^1-RMP	5-Mar-04	0.0	0.5	Uranium, Total	55.6	mg/kg	NV	478780.9	1349226.77
A7P3-SPIT1	A7P3-SPIT1^5-RMP	5-Mar-04	2.0	2.5	Arsenic	6.13	mg/kg	NV	478780.9	1349226.77
A7P3-SPIT1	A7P3-SPIT1^5-RMP	5-Mar-04	2.0	2.5	Beryllium	0.515	mg/kg	NV	478780.9	1349226.77
A7P3-SPIT1	A7P3-SPIT1^5-RMP	5-Mar-04	2.0	2.5	Lead	11.5	mg/kg	NV	478780.9	1349226.77
A7P3-SPIT1	A7P3-SPIT1^5-RMP	5-Mar-04	2.0	2.5	Manganese	490	mg/kg	NV	478780.9	1349226.77
A7P3-SPIT1	A7P3-SPIT1^5-RMP	5-Mar-04	2.0	2.5	Aroclor-1254	22.8	ug/kg	NV	478780.9	1349226.77
A7P3-SPIT1	A7P3-SPIT1^5-RMP	5-Mar-04	2.0	2.5	Aroclor-1260	9.58	ug/kg	UNV	478780.9	1349226.77
A7P3-SPIT1	A7P3-SPIT1^5-RMP	5-Mar-04	2.0	2.5	Dieldrin	0.0016	ug/kg	NV	478780.9	1349226.77
A7P3-SPIT1	A7P3-SPIT1^5-RMP	5-Mar-04	2.0	2.5	Radium-228	0.798	pCi/g	NV	478780.9	1349226.77
A7P3-SPIT1	A7P3-SPIT1^5-RMP	5-Mar-04	2.0	2.5	Technetium-99	0.632	pCi/g	UNV	478780.9	1349226.77
A7P3-SPIT1	A7P3-SPIT1^5-RMP	5-Mar-04	2.0	2.5	Thorium-228	0.801	pCi/g	NV	478780.9	1349226.77
A7P3-SPIT1	A7P3-SPIT1^5-RMP	5-Mar-04	2.0	2.5	Thorium-230	17.6	pCi/g	UNV	478780.9	1349226.77
A7P3-SPIT1	A7P3-SPIT1^5-RMP	5-Mar-04	2.0	2.5	Thorium-232	0.798	pCi/g	NV	478780.9	1349226.77
A7P3-SPIT1	A7P3-SPIT1^5-RMP	5-Mar-04	2.0	2.5	Uranium, Total	4.94	mg/kg	NV	478780.9	1349226.77
A7P3-SPIT1	A7P3-SPIT1^11-R	5-Mar-04	5.0	5.5	Thorium-232	0.734	pCi/g	NV	478780.9	1349226.77

APPENDIX A
PREDESIGN CHARACTERIZATION DATA FOR AREA 7 SILOS AND GENERAL AREA

Boring	Sample ID	Sample Date	Sample Depth (feet)		Parameter	Result	Units	Qualifier	Northing	Easting
			Top	Bottom						
A7P3-SPIT1	A7P3-SPIT1^22-R	5-Mar-04	10.5	11.0	Thorium-232	0.773	pCi/g	NV	478780.9	1349226.77
A7P3-SPIT1	A7P3-SPIT1^23-R	5-Mar-04	11.0	11.5	Thorium-232	0.738	pCi/g	NV	478780.9	1349226.77
A7P3-SPIT2	A7P3-SPIT2^1-RMP	8-Mar-04	0.0	0.5	Arsenic	4.47	mg/kg	NV	478686.12	1349197.03
A7P3-SPIT2	A7P3-SPIT2^1-RMP	8-Mar-04	0.0	0.5	Beryllium	0.52	mg/kg	NV	478686.12	1349197.03
A7P3-SPIT2	A7P3-SPIT2^1-RMP	8-Mar-04	0.0	0.5	Lead	9.61	mg/kg	NV	478686.12	1349197.03
A7P3-SPIT2	A7P3-SPIT2^1-RMP	8-Mar-04	0.0	0.5	Manganese	474	mg/kg	NV	478686.12	1349197.03
A7P3-SPIT2	A7P3-SPIT2^1-RMP	8-Mar-04	0.0	0.5	Aroclor-1254	63.2	ug/kg	NV	478686.12	1349197.03
A7P3-SPIT2	A7P3-SPIT2^1-RMP	8-Mar-04	0.0	0.5	Aroclor-1260	9.37	ug/kg	UNV	478686.12	1349197.03
A7P3-SPIT2	A7P3-SPIT2^1-RMP	8-Mar-04	0.0	0.5	Dieldrin	0.0032	ug/kg	NV	478686.12	1349197.03
A7P3-SPIT2	A7P3-SPIT2^1-RMP	8-Mar-04	0.0	0.5	Radium-228	0.737	pCi/g	NV	478686.12	1349197.03
A7P3-SPIT2	A7P3-SPIT2^1-RMP	8-Mar-04	0.0	0.5	Technetium-99	0.593	pCi/g	UNV	478686.12	1349197.03
A7P3-SPIT2	A7P3-SPIT2^1-RMP	8-Mar-04	0.0	0.5	Thorium-228	0.763	pCi/g	NV	478686.12	1349197.03
A7P3-SPIT2	A7P3-SPIT2^1-RMP	8-Mar-04	0.0	0.5	Thorium-230	10.6	pCi/g	NV	478686.12	1349197.03
A7P3-SPIT2	A7P3-SPIT2^1-RMP	8-Mar-04	0.0	0.5	Thorium-232	0.737	pCi/g	NV	478686.12	1349197.03
A7P3-SPIT2	A7P3-SPIT2^1-RMP	8-Mar-04	0.0	0.5	Uranium, Total	5.21	mg/kg	NV	478686.12	1349197.03
A7P3-SPIT2	A7P3-SPIT2^7-RMP	8-Mar-04	3.0	3.5	Arsenic	3.59	mg/kg	NV	478686.12	1349197.03
A7P3-SPIT2	A7P3-SPIT2^7-RMP	8-Mar-04	3.0	3.5	Beryllium	0.118	mg/kg	NV	478686.12	1349197.03
A7P3-SPIT2	A7P3-SPIT2^7-RMP	8-Mar-04	3.0	3.5	Lead	4.32	mg/kg	UNV	478686.12	1349197.03
A7P3-SPIT2	A7P3-SPIT2^7-RMP	8-Mar-04	3.0	3.5	Manganese	293	mg/kg	NV	478686.12	1349197.03
A7P3-SPIT2	A7P3-SPIT2^7-RMP	8-Mar-04	3.0	3.5	Aroclor-1254	9.21	ug/kg	UNV	478686.12	1349197.03
A7P3-SPIT2	A7P3-SPIT2^7-RMP	8-Mar-04	3.0	3.5	Aroclor-1260	9.21	ug/kg	UNV	478686.12	1349197.03
A7P3-SPIT2	A7P3-SPIT2^7-RMP	8-Mar-04	3.0	3.5	Dieldrin	0.000737	ug/kg	UNV	478686.12	1349197.03
A7P3-SPIT2	A7P3-SPIT2^7-RMP	8-Mar-04	3.0	3.5	Radium-228	0.266	pCi/g	NV	478686.12	1349197.03
A7P3-SPIT2	A7P3-SPIT2^7-RMP	8-Mar-04	3.0	3.5	Technetium-99	0.58	pCi/g	UNV	478686.12	1349197.03
A7P3-SPIT2	A7P3-SPIT2^7-RMP	8-Mar-04	3.0	3.5	Thorium-228	0.268	pCi/g	NV	478686.12	1349197.03
A7P3-SPIT2	A7P3-SPIT2^7-RMP	8-Mar-04	3.0	3.5	Thorium-230	8.89	pCi/g	UNV	478686.12	1349197.03
A7P3-SPIT2	A7P3-SPIT2^7-RMP	8-Mar-04	3.0	3.5	Thorium-232	0.266	pCi/g	NV	478686.12	1349197.03
A7P3-SPIT2	A7P3-SPIT2^7-RMP	8-Mar-04	3.0	3.5	Uranium, Total	2.61	mg/kg	NV	478686.12	1349197.03
A7P3-SPIT2	A7P3-SPIT2^11-R	8-Mar-04	5.0	5.5	Thorium-232	0.874	pCi/g	NV	478686.12	1349197.03
A7P3-SPIT2	A7P3-SPIT2^21-R	8-Mar-04	10.0	10.5	Thorium-232	0.603	pCi/g	NV	478686.12	1349197.03
A7P3-SPIT2	A7P3-SPIT2^22-R	8-Mar-04	10.5	11.0	Thorium-232	0.864	pCi/g	NV	478686.12	1349197.03
A7P3-SPIT3	A7P3-SPIT3^1-RMP	4-Mar-04	0.0	0.5	Arsenic	3.27	mg/kg	NV	478832.78	1349238.09
A7P3-SPIT3	A7P3-SPIT3^1-RMP	4-Mar-04	0.0	0.5	Beryllium	0.493	mg/kg	NV	478832.78	1349238.09
A7P3-SPIT3	A7P3-SPIT3^1-RMP	4-Mar-04	0.0	0.5	Lead	10.5	mg/kg	NV	478832.78	1349238.09
A7P3-SPIT3	A7P3-SPIT3^1-RMP	4-Mar-04	0.0	0.5	Manganese	493	mg/kg	NV	478832.78	1349238.09

5982

Boring	Sample ID	Sample Date	Sample Depth (feet)		Parameter	Result	Units	Qualifier	Northing	Easting
			Top	Bottom						
A7P3-SPIT3	A7P3-SPIT3^1-RMP	4-Mar-04	0.0	0.5	Aroclor-1254	1.8	ug/kg	NV	478832.78	1349238.09
A7P3-SPIT3	A7P3-SPIT3^1-RMP	4-Mar-04	0.0	0.5	Aroclor-1260	9.99	ug/kg	UNV	478832.78	1349238.09
A7P3-SPIT3	A7P3-SPIT3^1-RMP	4-Mar-04	0.0	0.5	Dieldrin	0.000799	ug/kg	UNV	478832.78	1349238.09
A7P3-SPIT3	A7P3-SPIT3^1-RMP	4-Mar-04	0.0	0.5	Radium-228	0.788	pCi/g	NV	478832.78	1349238.09
A7P3-SPIT3	A7P3-SPIT3^1-RMP	4-Mar-04	0.0	0.5	Technetium-99	0.636	pCi/g	UNV	478832.78	1349238.09
A7P3-SPIT3	A7P3-SPIT3^1-RMP	4-Mar-04	0.0	0.5	Thorium-228	0.806	pCi/g	NV	478832.78	1349238.09
A7P3-SPIT3	A7P3-SPIT3^1-RMP	4-Mar-04	0.0	0.5	Thorium-230	8.85	pCi/g	UNV	478832.78	1349238.09
A7P3-SPIT3	A7P3-SPIT3^1-RMP	4-Mar-04	0.0	0.5	Thorium-232	0.788	pCi/g	NV	478832.78	1349238.09
A7P3-SPIT3	A7P3-SPIT3^1-RMP	4-Mar-04	0.0	0.5	Uranium, Total	5	mg/kg	NV	478832.78	1349238.09
A7P3-SPIT3	A7P3-SPIT3^6-RMP	4-Mar-04	2.5	3.0	Arsenic	0.912	mg/kg	UNV	478832.78	1349238.09
A7P3-SPIT3	A7P3-SPIT3^6-RMP	4-Mar-04	2.5	3.0	Beryllium	0.331	mg/kg	NV	478832.78	1349238.09
A7P3-SPIT3	A7P3-SPIT3^6-RMP	4-Mar-04	2.5	3.0	Lead	4.16	mg/kg	NV	478832.78	1349238.09
A7P3-SPIT3	A7P3-SPIT3^6-RMP	4-Mar-04	2.5	3.0	Manganese	150	mg/kg	NV	478832.78	1349238.09
A7P3-SPIT3	A7P3-SPIT3^6-RMP	4-Mar-04	2.5	3.0	Aroclor-1254	9.31	ug/kg	UNV	478832.78	1349238.09
A7P3-SPIT3	A7P3-SPIT3^6-RMP	4-Mar-04	2.5	3.0	Aroclor-1260	9.31	ug/kg	UNV	478832.78	1349238.09
A7P3-SPIT3	A7P3-SPIT3^6-RMP	4-Mar-04	2.5	3.0	Dieldrin	0.000745	ug/kg	UNV	478832.78	1349238.09
A7P3-SPIT3	A7P3-SPIT3^6-RMP	4-Mar-04	2.5	3.0	Radium-228	0.487	pCi/g	NV	478832.78	1349238.09
A7P3-SPIT3	A7P3-SPIT3^6-RMP	4-Mar-04	2.5	3.0	Technetium-99	0.628	pCi/g	UNV	478832.78	1349238.09
A7P3-SPIT3	A7P3-SPIT3^6-RMP	4-Mar-04	2.5	3.0	Thorium-228	0.493	pCi/g	NV	478832.78	1349238.09
A7P3-SPIT3	A7P3-SPIT3^6-RMP	4-Mar-04	2.5	3.0	Thorium-230	10.3	pCi/g	UNV	478832.78	1349238.09
A7P3-SPIT3	A7P3-SPIT3^6-RMP	4-Mar-04	2.5	3.0	Thorium-232	0.487	pCi/g	NV	478832.78	1349238.09
A7P3-SPIT3	A7P3-SPIT3^6-RMP	4-Mar-04	2.5	3.0	Uranium, Total	4.05	mg/kg	NV	478832.78	1349238.09
A7P3-SPIT4	A7P3-SPIT4^1-RMP	4-Mar-04	0.0	0.5	Arsenic	4.54	mg/kg	NV	478839.46	1349211.69
A7P3-SPIT4	A7P3-SPIT4^1-RMP	4-Mar-04	0.0	0.5	Beryllium	0.608	mg/kg	NV	478839.46	1349211.69
A7P3-SPIT4	A7P3-SPIT4^1-RMP	4-Mar-04	0.0	0.5	Lead	10.5	mg/kg	NV	478839.46	1349211.69
A7P3-SPIT4	A7P3-SPIT4^1-RMP	4-Mar-04	0.0	0.5	Manganese	431	mg/kg	NV	478839.46	1349211.69
A7P3-SPIT4	A7P3-SPIT4^1-RMP	4-Mar-04	0.0	0.5	Aroclor-1254	9.49	ug/kg	UNV	478839.46	1349211.69
A7P3-SPIT4	A7P3-SPIT4^1-RMP	4-Mar-04	0.0	0.5	Aroclor-1260	9.49	ug/kg	UNV	478839.46	1349211.69
A7P3-SPIT4	A7P3-SPIT4^1-RMP	4-Mar-04	0.0	0.5	Dieldrin	0.000759	ug/kg	UNV	478839.46	1349211.69
A7P3-SPIT4	A7P3-SPIT4^1-RMP	4-Mar-04	0.0	0.5	Radium-228	0.79	pCi/g	NV	478839.46	1349211.69
A7P3-SPIT4	A7P3-SPIT4^1-RMP	4-Mar-04	0.0	0.5	Technetium-99	0.639	pCi/g	UNV	478839.46	1349211.69
A7P3-SPIT4	A7P3-SPIT4^1-RMP	4-Mar-04	0.0	0.5	Thorium-228	0.8	pCi/g	NV	478839.46	1349211.69
A7P3-SPIT4	A7P3-SPIT4^1-RMP	4-Mar-04	0.0	0.5	Thorium-230	7.43	pCi/g	UNV	478839.46	1349211.69
A7P3-SPIT4	A7P3-SPIT4^1-RMP	4-Mar-04	0.0	0.5	Thorium-232	0.79	pCi/g	NV	478839.46	1349211.69
A7P3-SPIT4	A7P3-SPIT4^1-RMP	4-Mar-04	0.0	0.5	Uranium, Total	3.93	mg/kg	NV	478839.46	1349211.69

APPENDIX A
PREDESIGN CHARACTERIZATION DATA FOR AREA 7 SILOS AND GENERAL AREA

Boring	Sample ID	Sample Date	Sample Depth (feet)		Parameter	Result	Units	Qualifier	Northing	Easting
			Top	Bottom						
A7P3-SPIT4	A7P3-SPIT4^6-RMP	4-Mar-04	2.5	3.0	Arsenic	5.2	mg/kg	NV	478839.46	1349211.69
A7P3-SPIT4	A7P3-SPIT4^6-RMP	4-Mar-04	2.5	3.0	Beryllium	0.644	mg/kg	NV	478839.46	1349211.69
A7P3-SPIT4	A7P3-SPIT4^6-RMP	4-Mar-04	2.5	3.0	Lead	10	mg/kg	NV	478839.46	1349211.69
A7P3-SPIT4	A7P3-SPIT4^6-RMP	4-Mar-04	2.5	3.0	Manganese	736	mg/kg	NV	478839.46	1349211.69
A7P3-SPIT4	A7P3-SPIT4^6-RMP	4-Mar-04	2.5	3.0	Aroclor-1254	9.96	ug/kg	UNV	478839.46	1349211.69
A7P3-SPIT4	A7P3-SPIT4^6-RMP	4-Mar-04	2.5	3.0	Aroclor-1260	9.96	ug/kg	UNV	478839.46	1349211.69
A7P3-SPIT4	A7P3-SPIT4^6-RMP	4-Mar-04	2.5	3.0	Dieldrin	0.000797	ug/kg	UNV	478839.46	1349211.69
A7P3-SPIT4	A7P3-SPIT4^6-RMP	4-Mar-04	2.5	3.0	Radium-228	0.971	pCi/g	NV	478839.46	1349211.69
A7P3-SPIT4	A7P3-SPIT4^6-RMP	4-Mar-04	2.5	3.0	Technetium-99	0.648	pCi/g	UNV	478839.46	1349211.69
A7P3-SPIT4	A7P3-SPIT4^6-RMP	4-Mar-04	2.5	3.0	Thorium-228	0.963	pCi/g	NV	478839.46	1349211.69
A7P3-SPIT4	A7P3-SPIT4^6-RMP	4-Mar-04	2.5	3.0	Thorium-230	13.8	pCi/g	UNV	478839.46	1349211.69
A7P3-SPIT4	A7P3-SPIT4^6-RMP	4-Mar-04	2.5	3.0	Thorium-232	0.971	pCi/g	NV	478839.46	1349211.69
A7P3-SPIT4	A7P3-SPIT4^6-RMP	4-Mar-04	2.5	3.0	Uranium, Total	5.01	mg/kg	NV	478839.46	1349211.69
A7P3-SPIT5	A7P3-SPIT5^1-RMP	4-Mar-04	0.0	0.5	Arsenic	8.68	mg/kg	NV	478835.95	1349154.27
A7P3-SPIT5	A7P3-SPIT5^1-RMP	4-Mar-04	0.0	0.5	Beryllium	0.833	mg/kg	NV	478835.95	1349154.27
A7P3-SPIT5	A7P3-SPIT5^1-RMP	4-Mar-04	0.0	0.5	Lead	13.4	mg/kg	NV	478835.95	1349154.27
A7P3-SPIT5	A7P3-SPIT5^1-RMP	4-Mar-04	0.0	0.5	Manganese	576	mg/kg	NV	478835.95	1349154.27
A7P3-SPIT5	A7P3-SPIT5^1-RMP	4-Mar-04	0.0	0.5	Aroclor-1254	10.8	ug/kg	UNV	478835.95	1349154.27
A7P3-SPIT5	A7P3-SPIT5^1-RMP	4-Mar-04	0.0	0.5	Aroclor-1260	10.8	ug/kg	UNV	478835.95	1349154.27
A7P3-SPIT5	A7P3-SPIT5^1-RMP	4-Mar-04	0.0	0.5	Dieldrin	0.00068	ug/kg	NV	478835.95	1349154.27
A7P3-SPIT5	A7P3-SPIT5^1-RMP	4-Mar-04	0.0	0.5	Radium-228	1.04	pCi/g	NV	478835.95	1349154.27
A7P3-SPIT5	A7P3-SPIT5^1-RMP	4-Mar-04	0.0	0.5	Technetium-99	0.677	pCi/g	UNV	478835.95	1349154.27
A7P3-SPIT5	A7P3-SPIT5^1-RMP	4-Mar-04	0.0	0.5	Thorium-228	1.14	pCi/g	NV	478835.95	1349154.27
A7P3-SPIT5	A7P3-SPIT5^1-RMP	4-Mar-04	0.0	0.5	Thorium-230	9.21	pCi/g	UNV	478835.95	1349154.27
A7P3-SPIT5	A7P3-SPIT5^1-RMP	4-Mar-04	0.0	0.5	Thorium-232	1.04	pCi/g	NV	478835.95	1349154.27
A7P3-SPIT5	A7P3-SPIT5^1-RMP	4-Mar-04	0.0	0.5	Uranium, Total	4.53	mg/kg	NV	478835.95	1349154.27
A7P3-SPIT5	A7P3-SPIT5^6-RMP	4-Mar-04	2.5	3.0	Arsenic	7.66	mg/kg	NV	478835.95	1349154.27
A7P3-SPIT5	A7P3-SPIT5^6-RMP	4-Mar-04	2.5	3.0	Beryllium	0.69	mg/kg	NV	478835.95	1349154.27
A7P3-SPIT5	A7P3-SPIT5^6-RMP	4-Mar-04	2.5	3.0	Lead	15.3	mg/kg	NV	478835.95	1349154.27
A7P3-SPIT5	A7P3-SPIT5^6-RMP	4-Mar-04	2.5	3.0	Manganese	739	mg/kg	NV	478835.95	1349154.27
A7P3-SPIT5	A7P3-SPIT5^6-RMP	4-Mar-04	2.5	3.0	Aroclor-1254	10.1	ug/kg	UNV	478835.95	1349154.27
A7P3-SPIT5	A7P3-SPIT5^6-RMP	4-Mar-04	2.5	3.0	Aroclor-1260	10.1	ug/kg	UNV	478835.95	1349154.27
A7P3-SPIT5	A7P3-SPIT5^6-RMP	4-Mar-04	2.5	3.0	Dieldrin	0.000811	ug/kg	UNV	478835.95	1349154.27
A7P3-SPIT5	A7P3-SPIT5^6-RMP	4-Mar-04	2.5	3.0	Radium-228	1.07	pCi/g	NV	478835.95	1349154.27
A7P3-SPIT5	A7P3-SPIT5^6-RMP	4-Mar-04	2.5	3.0	Technetium-99	0.673	pCi/g	UNV	478835.95	1349154.27

Boring	Sample ID	Sample Date	Sample Depth (feet)		Parameter	Result	Units	Qualifier	Northing	Easting
			Top	Bottom						
A7P3-SPIT5	A7P3-SPIT5^6-RMP	4-Mar-04	2.5	3.0	Thorium-228	1.05	pCi/g	NV	478835.95	1349154.27
A7P3-SPIT5	A7P3-SPIT5^6-RMP	4-Mar-04	2.5	3.0	Thorium-230	15	pCi/g	UNV	478835.95	1349154.27
A7P3-SPIT5	A7P3-SPIT5^6-RMP	4-Mar-04	2.5	3.0	Thorium-232	1.07	pCi/g	NV	478835.95	1349154.27
A7P3-SPIT5	A7P3-SPIT5^6-RMP	4-Mar-04	2.5	3.0	Uranium, Total	5.79	mg/kg	NV	478835.95	1349154.27
A7P3-SPIT6	A7P3-SPIT6^1-RMP	5-Mar-04	0.0	0.5	Arsenic	8.26	mg/kg	NV	478889.99	1349052.7
A7P3-SPIT6	A7P3-SPIT6^1-RMP	5-Mar-04	0.0	0.5	Beryllium	0.574	mg/kg	NV	478889.99	1349052.7
A7P3-SPIT6	A7P3-SPIT6^1-RMP	5-Mar-04	0.0	0.5	Lead	17	mg/kg	NV	478889.99	1349052.7
A7P3-SPIT6	A7P3-SPIT6^1-RMP	5-Mar-04	0.0	0.5	Manganese	717	mg/kg	NV	478889.99	1349052.7
A7P3-SPIT6	A7P3-SPIT6^1-RMP	5-Mar-04	0.0	0.5	Aroclor-1254	10.2	ug/kg	UNV	478889.99	1349052.7
A7P3-SPIT6	A7P3-SPIT6^1-RMP	5-Mar-04	0.0	0.5	Aroclor-1260	10.2	ug/kg	UNV	478889.99	1349052.7
A7P3-SPIT6	A7P3-SPIT6^1-RMP	5-Mar-04	0.0	0.5	Dieldrin	0.000813	ug/kg	UNV	478889.99	1349052.7
A7P3-SPIT6	A7P3-SPIT6^1-RMP	5-Mar-04	0.0	0.5	Radium-228	1.18	pCi/g	NV	478889.99	1349052.7
A7P3-SPIT6	A7P3-SPIT6^1-RMP	5-Mar-04	0.0	0.5	Technetium-99	0.743	pCi/g	UNV	478889.99	1349052.7
A7P3-SPIT6	A7P3-SPIT6^1-RMP	5-Mar-04	0.0	0.5	Thorium-228	1.2	pCi/g	NV	478889.99	1349052.7
A7P3-SPIT6	A7P3-SPIT6^1-RMP	5-Mar-04	0.0	0.5	Thorium-230	21.4	pCi/g	UNV	478889.99	1349052.7
A7P3-SPIT6	A7P3-SPIT6^1-RMP	5-Mar-04	0.0	0.5	Thorium-232	1.18	pCi/g	NV	478889.99	1349052.7
A7P3-SPIT6	A7P3-SPIT6^1-RMP	5-Mar-04	0.0	0.5	Uranium, Total	8.86	mg/kg	NV	478889.99	1349052.7
A7P3-SPIT6	A7P3-SPIT6^6-RMP	5-Mar-04	2.5	3.0	Arsenic	6.04	mg/kg	NV	478889.99	1349052.7
A7P3-SPIT6	A7P3-SPIT6^6-RMP	5-Mar-04	2.5	3.0	Beryllium	0.593	mg/kg	NV	478889.99	1349052.7
A7P3-SPIT6	A7P3-SPIT6^6-RMP	5-Mar-04	2.5	3.0	Lead	11.7	mg/kg	NV	478889.99	1349052.7
A7P3-SPIT6	A7P3-SPIT6^6-RMP	5-Mar-04	2.5	3.0	Manganese	595	mg/kg	NV	478889.99	1349052.7
A7P3-SPIT6	A7P3-SPIT6^6-RMP	5-Mar-04	2.5	3.0	Aroclor-1254	10.1	ug/kg	UNV	478889.99	1349052.7
A7P3-SPIT6	A7P3-SPIT6^6-RMP	5-Mar-04	2.5	3.0	Aroclor-1260	10.1	ug/kg	UNV	478889.99	1349052.7
A7P3-SPIT6	A7P3-SPIT6^6-RMP	5-Mar-04	2.5	3.0	Dieldrin	0.000806	ug/kg	UNV	478889.99	1349052.7
A7P3-SPIT6	A7P3-SPIT6^6-RMP	5-Mar-04	2.5	3.0	Radium-228	0.959	pCi/g	NV	478889.99	1349052.7
A7P3-SPIT6	A7P3-SPIT6^6-RMP	5-Mar-04	2.5	3.0	Technetium-99	0.693	pCi/g	UNV	478889.99	1349052.7
A7P3-SPIT6	A7P3-SPIT6^6-RMP	5-Mar-04	2.5	3.0	Thorium-228	1.03	pCi/g	NV	478889.99	1349052.7
A7P3-SPIT6	A7P3-SPIT6^6-RMP	5-Mar-04	2.5	3.0	Thorium-230	18.4	pCi/g	UNV	478889.99	1349052.7
A7P3-SPIT6	A7P3-SPIT6^6-RMP	5-Mar-04	2.5	3.0	Thorium-232	0.959	pCi/g	NV	478889.99	1349052.7
A7P3-SPIT6	A7P3-SPIT6^6-RMP	5-Mar-04	2.5	3.0	Uranium, Total	3.22	mg/kg	UNV	478889.99	1349052.7
A7P3-SPIT8	A7P3-SPIT8^-6-RMP	4-Mar-04	0.0	0.5	Arsenic	6.19	mg/kg	NV	478875.71	1349211.26
A7P3-SPIT8	A7P3-SPIT8^-6-RMP	4-Mar-04	0.0	0.5	Beryllium	0.6	mg/kg	NV	478875.71	1349211.26
A7P3-SPIT8	A7P3-SPIT8^-6-RMP	4-Mar-04	0.0	0.5	Lead	15.8	mg/kg	NV	478875.71	1349211.26
A7P3-SPIT8	A7P3-SPIT8^-6-RMP	4-Mar-04	0.0	0.5	Manganese	436	mg/kg	NV	478875.71	1349211.26
A7P3-SPIT8	A7P3-SPIT8^-6-RMP	4-Mar-04	0.0	0.5	Aroclor-1254	10.2	ug/kg	UNV	478875.71	1349211.26

APPENDIX A
PREDESIGN CHARACTERIZATION DATA FOR AREA 7 SILOS AND GENERAL AREA

Boring	Sample ID	Sample Date	Sample Depth (feet)		Parameter	Result	Units	Qualifier	Northing	Easting
			Top	Bottom						
A7P3-SPIT8	A7P3-SPIT8^-6-RMP	4-Mar-04	0.0	0.5	Aroclor-1260	10.2	ug/kg	UNV	478875.71	1349211.26
A7P3-SPIT8	A7P3-SPIT8^-6-RMP	4-Mar-04	0.0	0.5	Dieldrin	0.000819	ug/kg	UNV	478875.71	1349211.26
A7P3-SPIT8	A7P3-SPIT8^-6-RMP	4-Mar-04	0.0	0.5	Radium-228	1.18	pCi/g	NV	478875.71	1349211.26
A7P3-SPIT8	A7P3-SPIT8^-6-RMP	4-Mar-04	0.0	0.5	Technetium-99	0.736	pCi/g	UNV	478875.71	1349211.26
A7P3-SPIT8	A7P3-SPIT8^-6-RMP	4-Mar-04	0.0	0.5	Thorium-228	1.25	pCi/g	NV	478875.71	1349211.26
A7P3-SPIT8	A7P3-SPIT8^-6-RMP	4-Mar-04	0.0	0.5	Thorium-230	22.4	pCi/g	UNV	478875.71	1349211.26
A7P3-SPIT8	A7P3-SPIT8^-6-RMP	4-Mar-04	0.0	0.5	Thorium-232	1.18	pCi/g	NV	478875.71	1349211.26
A7P3-SPIT8	A7P3-SPIT8^-6-RMP	4-Mar-04	0.0	0.5	Uranium, Total	3.63	mg/kg	UNV	478875.71	1349211.26
A7P3-SPIT8	A7P3-SPIT8^1-RMP	4-Mar-04	2.5	3.0	Arsenic	3.52	mg/kg	NV	478875.71	1349211.26
A7P3-SPIT8	A7P3-SPIT8^1-RMP	4-Mar-04	2.5	3.0	Beryllium	0.523	mg/kg	NV	478875.71	1349211.26
A7P3-SPIT8	A7P3-SPIT8^1-RMP	4-Mar-04	2.5	3.0	Lead	11	mg/kg	NV	478875.71	1349211.26
A7P3-SPIT8	A7P3-SPIT8^1-RMP	4-Mar-04	2.5	3.0	Manganese	292	mg/kg	NV	478875.71	1349211.26
A7P3-SPIT8	A7P3-SPIT8^1-RMP	4-Mar-04	2.5	3.0	Aroclor-1254	7.6	ug/kg	NV	478875.71	1349211.26
A7P3-SPIT8	A7P3-SPIT8^1-RMP	4-Mar-04	2.5	3.0	Aroclor-1260	9.51	ug/kg	UNV	478875.71	1349211.26
A7P3-SPIT8	A7P3-SPIT8^1-RMP	4-Mar-04	2.5	3.0	Dieldrin	0.000761	ug/kg	UNV	478875.71	1349211.26
A7P3-SPIT8	A7P3-SPIT8^1-RMP	4-Mar-04	2.5	3.0	Radium-228	0.78	pCi/g	NV	478875.71	1349211.26
A7P3-SPIT8	A7P3-SPIT8^1-RMP	4-Mar-04	2.5	3.0	Technetium-99	0.652	pCi/g	UNV	478875.71	1349211.26
A7P3-SPIT8	A7P3-SPIT8^1-RMP	4-Mar-04	2.5	3.0	Thorium-228	0.824	pCi/g	NV	478875.71	1349211.26
A7P3-SPIT8	A7P3-SPIT8^1-RMP	4-Mar-04	2.5	3.0	Thorium-230	17.2	pCi/g	UNV	478875.71	1349211.26
A7P3-SPIT8	A7P3-SPIT8^1-RMP	4-Mar-04	2.5	3.0	Thorium-232	0.78	pCi/g	NV	478875.71	1349211.26
A7P3-SPIT8	A7P3-SPIT8^1-RMP	4-Mar-04	2.5	3.0	Uranium, Total	7.1	mg/kg	NV	478875.71	1349211.26
A7-PC6	A7-PC6-1-M	14-Oct-02	0.0	0.5	Arsenic	9	mg/kg	NV	480744.31	1348072.41
A7-PC6	A7-PC6-1-M-D	14-Oct-02	0.0	0.5	Arsenic	8.4	mg/kg	NV	480744.31	1348072.41
A7-PC7	A7-PC7-1-M	14-Oct-02	0.0	0.5	Arsenic	8	mg/kg	NV	480175.147	1348025.364
A7-PC9	A7-PC9-1-M	14-Oct-02	0.0	0.5	Arsenic	6.3	mg/kg	NV	480446.55	1348193.96
A7PRCS-1	A7PRCS-1-2-M	22-Oct-97	0.5	1.0	Chromium	3.9	mg/L	NV	480563.102	1346791.731
A7PRCS-1	A7PRCS-1-2-M	22-Oct-97	0.5	1.0	Lead	1.7	mg/L	UNV	480563.102	1346791.731
A7PRCS-1	A7PRCS-1-2-R	22-Oct-97	0.5	1.0	Technetium-99	0.78	pCi/g dry	UNV	480563.102	1346791.731
A7PRCS-1	A7PRCS-1-2-R	22-Oct-97	0.5	1.0	Uranium, Total	1.92	mg/kg	NV	480563.102	1346791.731
A7PRCS-10	A7PRCS-10-2-R	22-Oct-97	0.5	1.0	Radium-226	1.2	pCi/g dry	NV	480468.433	1346763.204
A7PRCS-11	A7PRCS-11-2-R	22-Oct-97	0.5	1.0	Radium-226	0.62	pCi/g dry	NV	480464.143	1346750.164
A7PRCS-12	A7PRCS-12-2-R	22-Oct-97	0.5	1.0	Radium-226	21	pCi/g dry	NV	480447.643	1346750.38
A7PRCS-13	A7PRCS-13-2-R	22-Oct-97	0.5	1.0	Radium-226	4.7	pCi/g dry	NV	480442.034	1346748.266
A7PRCS-14	A7PRCS-14-2-R	22-Oct-97	0.5	1.0	Radium-226	1.2	pCi/g dry	NV	480442.71	1346737.245
A7PRCS-15	A7PRCS-15-1-M	22-Oct-97	0.0	0.5	Chromium	3.5	mg/L	NV	480515.244	1346792.715

5982

Boring	Sample ID	Sample Date	Sample Depth (feet)		Parameter	Result	Units	Qualifier	Northing	Easting
			Top	Bottom						
A7PRCS-15	A7PRCS-15-1-M	22-Oct-97	0.0	0.5	Lead	1.7	mg/L	UNV	480515.244	1346792.715
A7PRCS-15	A7PRCS-15-1-R	22-Oct-97	0.0	0.5	Technetium-99	0.78	pCi/g dry	UNV	480515.244	1346792.715
A7PRCS-15	A7PRCS-15-1-R	22-Oct-97	0.0	0.5	Uranium, Total	6.7	mg/kg	NV	480515.244	1346792.715
A7PRCS-16	A7PRCS-16-1-M	22-Oct-97	0.0	0.5	Chromium	2.9	mg/L	UNV	480510.365	1346792.775
A7PRCS-16	A7PRCS-16-1-M	22-Oct-97	0.0	0.5	Lead	1.7	mg/L	UNV	480510.365	1346792.775
A7PRCS-16	A7PRCS-16-1-R	22-Oct-97	0.0	0.5	Technetium-99	0.81	pCi/g dry	UNV	480510.365	1346792.775
A7PRCS-16	A7PRCS-16-1-R	22-Oct-97	0.0	0.5	Uranium, Total	1.87	mg/kg	NV	480510.365	1346792.775
A7PRCS-17	A7PRCS-17-1-M	22-Oct-97	0.0	0.5	Chromium	2.9	mg/L	NV	480504.851	1346791.229
A7PRCS-17	A7PRCS-17-1-M	22-Oct-97	0.0	0.5	Lead	1.7	mg/L	UNV	480504.851	1346791.229
A7PRCS-17	A7PRCS-17-1-R	22-Oct-97	0.0	0.5	Technetium-99	0.82	pCi/g dry	UNV	480504.851	1346791.229
A7PRCS-17	A7PRCS-17-1-R	22-Oct-97	0.0	0.5	Uranium, Total	4.46	mg/kg	NV	480504.851	1346791.229
A7PRCS-18	A7PRCS-18-1-M	22-Oct-97	0.0	0.5	Chromium	2.9	mg/L	UNV	480510.031	1346803.928
A7PRCS-18	A7PRCS-18-1-M	22-Oct-97	0.0	0.5	Lead	1.7	mg/L	UNV	480510.031	1346803.928
A7PRCS-18	A7PRCS-18-1-R	22-Oct-97	0.0	0.5	Technetium-99	0.73	pCi/g dry	UNV	480510.031	1346803.928
A7PRCS-18	A7PRCS-18-1-R	22-Oct-97	0.0	0.5	Uranium, Total	7.24	mg/kg	NV	480510.031	1346803.928
A7PRCS-19	A7PRCS-19-1-R	8-Oct-97	0.0	0.5	Cesium-137	0.29	pCi/g dry	NV	480470.83	1346745.34
A7PRCS-19	A7PRCS-19-1-R	8-Oct-97	0.0	0.5	Radium-226	87	pCi/g dry	NV	480470.83	1346745.34
A7PRCS-19	A7PRCS-19-1-R	8-Oct-97	0.0	0.5	Radium-226	87	pCi/g dry	NV	480470.83	1346745.34
A7PRCS-19	A7PRCS-19-1-R	8-Oct-97	0.0	0.5	Radium-228	0.85	pCi/g dry	NV	480470.83	1346745.34
A7PRCS-19	A7PRCS-19-1-R	8-Oct-97	0.0	0.5	Technetium-99	0.76	pCi/g	UNV	480470.83	1346745.34
A7PRCS-19	A7PRCS-19-1-R	8-Oct-97	0.0	0.5	Thorium-232	0.85	pCi/g dry	NV	480470.83	1346745.34
A7PRCS-19	A7PRCS-19-1-R	8-Oct-97	0.0	0.5	Uranium, Total	16	mg/kg	NV	480470.83	1346745.34
A7PRCS-19	A7PRCS-19-1-R	8-Oct-97	0.0	0.5	Uranium-235	3.6	pCi/g dry	NV	480470.83	1346745.34
A7PRCS-19	A7PRCS-19-1-R	8-Oct-97	0.0	0.5	Uranium-238	5.3	pCi/g dry	NV	480470.83	1346745.34
A7PRCS-2	A7PRCS-2-2-M	22-Oct-97	0.5	1.0	Chromium	2.9	mg/L	UNV	480548.181	1346794.543
A7PRCS-2	A7PRCS-2-2-M	22-Oct-97	0.5	1.0	Lead	1.7	mg/L	UNV	480548.181	1346794.543
A7PRCS-2	A7PRCS-2-2-R	22-Oct-97	0.5	1.0	Technetium-99	0.71	pCi/g dry	UNV	480548.181	1346794.543
A7PRCS-2	A7PRCS-2-2-R	22-Oct-97	0.5	1.0	Uranium, Total	3.27	mg/kg	NV	480548.181	1346794.543
A7PRCS-20	A7PRCS-20-1-R	8-Oct-97	0.0	0.5	Cesium-137	0.26	pCi/g dry	NV	480469.31	1346743.7
A7PRCS-20	A7PRCS-20-1-R	8-Oct-97	0.0	0.5	Radium-226	80	pCi/g dry	NV	480469.31	1346743.7
A7PRCS-20	A7PRCS-20-1-R	8-Oct-97	0.0	0.5	Radium-226	80	pCi/g dry	NV	480469.31	1346743.7
A7PRCS-20	A7PRCS-20-1-R	8-Oct-97	0.0	0.5	Radium-228	1.1	pCi/g dry	NV	480469.31	1346743.7
A7PRCS-20	A7PRCS-20-1-R	8-Oct-97	0.0	0.5	Technetium-99	0.77	pCi/g	UNV	480469.31	1346743.7
A7PRCS-20	A7PRCS-20-1-R	8-Oct-97	0.0	0.5	Thorium-232	1.1	pCi/g dry	NV	480469.31	1346743.7
A7PRCS-20	A7PRCS-20-1-R	8-Oct-97	0.0	0.5	Uranium, Total	20	mg/kg	NV	480469.31	1346743.7

APPENDIX A
PREDESIGN CHARACTERIZATION DATA FOR AREA 7 SILOS AND GENERAL AREA

Boring	Sample ID	Sample Date	Sample Depth (feet)		Parameter	Result	Units	Qualifier	Northing	Easting
			Top	Bottom						
A7PRCS-20	A7PRCS-20-1-R	8-Oct-97	0.0	0.5	Uranium-235	3.7	pCi/g dry	NV	480469.31	1346743.7
A7PRCS-20	A7PRCS-20-1-R	8-Oct-97	0.0	0.5	Uranium-238	6.7	pCi/g dry	NV	480469.31	1346743.7
A7PRCS-21	A7PRCS-21-1-R	8-Oct-97	0.0	0.5	Radium-226	93	pCi/g dry	NV	480467.41	1346745.6
A7PRCS-21	A7PRCS-21-1-R	8-Oct-97	0.0	0.5	Radium-226	93	pCi/g dry	NV	480467.41	1346745.6
A7PRCS-21	A7PRCS-21-1-R	8-Oct-97	0.0	0.5	Radium-228	0.67	pCi/g dry	NV	480467.41	1346745.6
A7PRCS-21	A7PRCS-21-1-R	8-Oct-97	0.0	0.5	Technetium-99	0.77	pCi/g	UNV	480467.41	1346745.6
A7PRCS-21	A7PRCS-21-1-R	8-Oct-97	0.0	0.5	Thorium-232	0.67	pCi/g dry	NV	480467.41	1346745.6
A7PRCS-21	A7PRCS-21-1-R	8-Oct-97	0.0	0.5	Uranium, Total	12	mg/kg	NV	480467.41	1346745.6
A7PRCS-21	A7PRCS-21-1-R	8-Oct-97	0.0	0.5	Uranium-235	4.3	pCi/g dry	NV	480467.41	1346745.6
A7PRCS-21	A7PRCS-21-1-R	8-Oct-97	0.0	0.5	Uranium-238	4	pCi/g dry	NV	480467.41	1346745.6
A7PRCS-22	A7PRCS-22-1-R	8-Oct-97	0.0	0.5	Radium-226	170	pCi/g dry	NV	480475.34	1346751.12
A7PRCS-22	A7PRCS-22-1-R	8-Oct-97	0.0	0.5	Radium-226	170	pCi/g dry	NV	480475.34	1346751.12
A7PRCS-22	A7PRCS-22-1-R	8-Oct-97	0.0	0.5	Radium-228	0.85	pCi/g dry	NV	480475.34	1346751.12
A7PRCS-22	A7PRCS-22-1-R	8-Oct-97	0.0	0.5	Technetium-99	0.74	pCi/g	UNV	480475.34	1346751.12
A7PRCS-22	A7PRCS-22-1-R	8-Oct-97	0.0	0.5	Thorium-232	0.85	pCi/g dry	NV	480475.34	1346751.12
A7PRCS-22	A7PRCS-22-1-R	8-Oct-97	0.0	0.5	Uranium, Total	13	mg/kg	NV	480475.34	1346751.12
A7PRCS-22	A7PRCS-22-1-R	8-Oct-97	0.0	0.5	Uranium-235	6.6	pCi/g dry	NV	480475.34	1346751.12
A7PRCS-22	A7PRCS-22-1-R	8-Oct-97	0.0	0.5	Uranium-238	4.4	pCi/g dry	NV	480475.34	1346751.12
A7PRCS-23	A7PRCS-23-1-M	22-Oct-97	0.0	0.5	Chromium	11.6	mg/L	NV	480504.51	1346783.41
A7PRCS-23	A7PRCS-23-1-M	22-Oct-97	0.0	0.5	Lead	1.7	mg/L	UNV	480504.51	1346783.41
A7PRCS-23	A7PRCS-23-1-R	22-Oct-97	0.0	0.5	Technetium-99	0.76	pCi/g dry	UNV	480504.51	1346783.41
A7PRCS-23	A7PRCS-23-1-R	22-Oct-97	0.0	0.5	Uranium, Total	19.3	mg/kg	NV	480504.51	1346783.41
A7PRCS-3	A7PRCS-3-1-M	22-Oct-97	0.0	0.5	Chromium	2.9	mg/L	UNV	480536.113	1346805.622
A7PRCS-3	A7PRCS-3-1-M	22-Oct-97	0.0	0.5	Lead	1.7	mg/L	UNV	480536.113	1346805.622
A7PRCS-3	A7PRCS-3-1-R	22-Oct-97	0.0	0.5	Technetium-99	0.85	pCi/g dry	UNV	480536.113	1346805.622
A7PRCS-3	A7PRCS-3-1-R	22-Oct-97	0.0	0.5	Uranium, Total	2.54	mg/kg	NV	480536.113	1346805.622
A7PRCS-4	A7PRCS-4-1-M	22-Oct-97	0.0	0.5	Chromium	3	mg/L	NV	480521.419	1346792.647
A7PRCS-4	A7PRCS-4-1-M	22-Oct-97	0.0	0.5	Lead	1.7	mg/L	UNV	480521.419	1346792.647
A7PRCS-4	A7PRCS-4-1-R	22-Oct-97	0.0	0.5	Technetium-99	0.87	pCi/g dry	UNV	480521.419	1346792.647
A7PRCS-4	A7PRCS-4-1-R	22-Oct-97	0.0	0.5	Uranium, Total	5.32	mg/kg	NV	480521.419	1346792.647
A7PRCS-5	A7PRCS-5-1-M	22-Oct-97	0.0	0.5	Chromium	2.9	mg/L	UNV	480516.049	1346802.352
A7PRCS-5	A7PRCS-5-1-M	22-Oct-97	0.0	0.5	Lead	2	mg/L	NV	480516.049	1346802.352
A7PRCS-5	A7PRCS-5-1-R	22-Oct-97	0.0	0.5	Technetium-99	0.7	pCi/g dry	UNV	480516.049	1346802.352
A7PRCS-5	A7PRCS-5-1-R	22-Oct-97	0.0	0.5	Uranium, Total	4.64	mg/kg	NV	480516.049	1346802.352
A7PRCS-6	A7PRCS-6-3-M	23-Oct-97	1.2	1.7	Chromium	4.6	mg/L	NV	480507.07	1346781.81

5982

Boring	Sample ID	Sample Date	Sample Depth (feet)		Parameter	Result	Units	Qualifier	Northing	Easting
			Top	Bottom						
A7PRCS-6	A7PRCS-6-3-M	23-Oct-97	1.2	1.7	Lead	1.7	mg/L	UNV	480507.07	1346781.81
A7PRCS-6	A7PRCS-6-3-R	23-Oct-97	1.2	1.7	Technetium-99	0.87	pCi/g dry	UNV	480507.07	1346781.81
A7PRCS-6	A7PRCS-6-3-R	23-Oct-97	1.2	1.7	Uranium, Total	2.91	mg/kg	NV	480507.07	1346781.81
A7PRCS-7	A7PRCS-7-2-M	22-Oct-97	0.5	1.0	Chromium	2.9	mg/L	NV	480483.799	1346770.772
A7PRCS-7	A7PRCS-7-2-M	22-Oct-97	0.5	1.0	Lead	1.7	mg/L	UNV	480483.799	1346770.772
A7PRCS-7	A7PRCS-7-2-M-D	22-Oct-97	0.5	1.0	Chromium	3	mg/L	NV	480483.799	1346770.772
A7PRCS-7	A7PRCS-7-2-M-D	22-Oct-97	0.5	1.0	Lead	1.7	mg/L	UNV	480483.799	1346770.772
A7PRCS-7	A7PRCS-7-2-R	22-Oct-97	0.5	1.0	Technetium-99	0.71	pCi/g dry	UNV	480483.799	1346770.772
A7PRCS-7	A7PRCS-7-2-R	22-Oct-97	0.5	1.0	Uranium, Total	4.92	mg/kg	NV	480483.799	1346770.772
A7PRCS-7	A7PRCS-7-2-R-D	22-Oct-97	0.5	1.0	Technetium-99	1.1	pCi/g dry	UNV	480483.799	1346770.772
A7PRCS-7	A7PRCS-7-2-R-D	22-Oct-97	0.5	1.0	Uranium, Total	4.34	mg/kg	NV	480483.799	1346770.772
A7PRCS-8	A7PRCS-8-2-M	22-Oct-97	0.5	1.0	Chromium	3.1	mg/L	NV	480494.917	1346775.654
A7PRCS-8	A7PRCS-8-2-M	22-Oct-97	0.5	1.0	Lead	1.7	mg/L	UNV	480494.917	1346775.654
A7PRCS-8	A7PRCS-8-2-R	22-Oct-97	0.5	1.0	Technetium-99	0.83	pCi/g dry	UNV	480494.917	1346775.654
A7PRCS-8	A7PRCS-8-2-R	22-Oct-97	0.5	1.0	Uranium, Total	12.4	mg/kg	NV	480494.917	1346775.654
A7PRCS-9	A7PRCS-9-1-M	22-Oct-97	0.0	0.5	Chromium	3.8	mg/L	NV	480494.55	1346790.404
A7PRCS-9	A7PRCS-9-1-M	22-Oct-97	0.0	0.5	Lead	1.7	mg/L	UNV	480494.55	1346790.404
A7PRCS-9	A7PRCS-9-1-R	22-Oct-97	0.0	0.5	Technetium-99	0.96	pCi/g dry	UNV	480494.55	1346790.404
A7PRCS-9	A7PRCS-9-1-R	22-Oct-97	0.0	0.5	Uranium, Total	12.3	mg/kg	NV	480494.55	1346790.404
A7-SA1-1	A7-SA1-1^1-RMP	16-Dec-04	0.0	0.5	Arsenic	2.28	mg/kg	NV	480962.091	1346737.961
A7-SA1-1	A7-SA1-1^1-RMP	16-Dec-04	0.0	0.5	Beryllium	0.335	mg/kg	NV	480962.091	1346737.961
A7-SA1-1	A7-SA1-1^1-RMP	16-Dec-04	0.0	0.5	Lead	7.35	mg/kg	NV	480962.091	1346737.961
A7-SA1-1	A7-SA1-1^1-RMP	16-Dec-04	0.0	0.5	Manganese	338	mg/kg	NV	480962.091	1346737.961
A7-SA1-1	A7-SA1-1^1-RMP	16-Dec-04	0.0	0.5	Aroclor-1254	0.0039	ug/kg	UNV	480962.091	1346737.961
A7-SA1-1	A7-SA1-1^1-RMP	16-Dec-04	0.0	0.5	Aroclor-1260	0.0039	ug/kg	UNV	480962.091	1346737.961
A7-SA1-1	A7-SA1-1^1-RMP	16-Dec-04	0.0	0.5	Cesium-137	0.049	pCi/g	UNV	480962.091	1346737.961
A7-SA1-1	A7-SA1-1^1-RMP	16-Dec-04	0.0	0.5	Lead-210	0.73	pCi/g	UNV	480962.091	1346737.961
A7-SA1-1	A7-SA1-1^1-RMP	16-Dec-04	0.0	0.5	Radium-226	0.906	pCi/g	NV	480962.091	1346737.961
A7-SA1-1	A7-SA1-1^1-RMP	16-Dec-04	0.0	0.5	Radium-228	0.684	pCi/g	NV	480962.091	1346737.961
A7-SA1-1	A7-SA1-1^1-RMP	16-Dec-04	0.0	0.5	Technetium-99	0.804	pCi/g	UNV	480962.091	1346737.961
A7-SA1-1	A7-SA1-1^1-RMP	16-Dec-04	0.0	0.5	Thorium-228	0.739	pCi/g	NV	480962.091	1346737.961
A7-SA1-1	A7-SA1-1^1-RMP	16-Dec-04	0.0	0.5	Thorium-230	4.68	pCi/g	NV	480962.091	1346737.961
A7-SA1-1	A7-SA1-1^1-RMP	16-Dec-04	0.0	0.5	Thorium-232	0.684	pCi/g	NV	480962.091	1346737.961
A7-SA1-1	A7-SA1-1^1-RMP	16-Dec-04	0.0	0.5	Uranium, Total	3.88	mg/kg	NV	480962.091	1346737.961
A7-SA1-1	A7-SA1-1^3-RMP	16-Dec-04	1.0	1.5	Arsenic	11.1	mg/kg	NV	480962.091	1346737.961

APPENDIX A
PREDESIGN CHARACTERIZATION DATA FOR AREA 7 SILOS AND GENERAL AREA

Boring	Sample ID	Sample Date	Sample Depth (feet)		Parameter	Result	Units	Qualifier	Northing	Easting
			Top	Bottom						
A7-SA1-1	A7-SA1-1^3-RMP	16-Dec-04	1.0	1.5	Beryllium	0.947	mg/kg	NV	480962.091	1346737.961
A7-SA1-1	A7-SA1-1^3-RMP	16-Dec-04	1.0	1.5	Lead	17.6	mg/kg	NV	480962.091	1346737.961
A7-SA1-1	A7-SA1-1^3-RMP	16-Dec-04	1.0	1.5	Manganese	687	mg/kg	NV	480962.091	1346737.961
A7-SA1-1	A7-SA1-1^3-RMP	16-Dec-04	1.0	1.5	Aroclor-1254	0.0041	ug/kg	UNV	480962.091	1346737.961
A7-SA1-1	A7-SA1-1^3-RMP	16-Dec-04	1.0	1.5	Aroclor-1260	0.0041	ug/kg	UNV	480962.091	1346737.961
A7-SA1-1	A7-SA1-1^3-RMP	16-Dec-04	1.0	1.5	Cesium-137	0.0571	pCi/g	UNV	480962.091	1346737.961
A7-SA1-1	A7-SA1-1^3-RMP	16-Dec-04	1.0	1.5	Lead-210	0.738	pCi/g	UNV	480962.091	1346737.961
A7-SA1-1	A7-SA1-1^3-RMP	16-Dec-04	1.0	1.5	Radium-226	1.47	pCi/g	NV	480962.091	1346737.961
A7-SA1-1	A7-SA1-1^3-RMP	16-Dec-04	1.0	1.5	Radium-228	1.27	pCi/g	NV	480962.091	1346737.961
A7-SA1-1	A7-SA1-1^3-RMP	16-Dec-04	1.0	1.5	Technetium-99	0.845	pCi/g	UNV	480962.091	1346737.961
A7-SA1-1	A7-SA1-1^3-RMP	16-Dec-04	1.0	1.5	Thorium-228	1.41	pCi/g	NV	480962.091	1346737.961
A7-SA1-1	A7-SA1-1^3-RMP	16-Dec-04	1.0	1.5	Thorium-230	5.67	pCi/g	NV	480962.091	1346737.961
A7-SA1-1	A7-SA1-1^3-RMP	16-Dec-04	1.0	1.5	Thorium-232	1.27	pCi/g	NV	480962.091	1346737.961
A7-SA1-1	A7-SA1-1^3-RMP	16-Dec-04	1.0	1.5	Uranium, Total	6.05	mg/kg	NV	480962.091	1346737.961
A7-SA1-1	A7-SA1-1^6-RMP	16-Dec-04	2.5	3.0	Arsenic	10.6	mg/kg	NV	480962.091	1346737.961
A7-SA1-1	A7-SA1-1^6-RMP	16-Dec-04	2.5	3.0	Beryllium	0.741	mg/kg	NV	480962.091	1346737.961
A7-SA1-1	A7-SA1-1^6-RMP	16-Dec-04	2.5	3.0	Lead	20.3	mg/kg	NV	480962.091	1346737.961
A7-SA1-1	A7-SA1-1^6-RMP	16-Dec-04	2.5	3.0	Manganese	789	mg/kg	NV	480962.091	1346737.961
A7-SA1-1	A7-SA1-1^6-RMP	16-Dec-04	2.5	3.0	Aroclor-1254	0.0043	ug/kg	UNV	480962.091	1346737.961
A7-SA1-1	A7-SA1-1^6-RMP	16-Dec-04	2.5	3.0	Aroclor-1260	0.0043	ug/kg	UNV	480962.091	1346737.961
A7-SA1-1	A7-SA1-1^6-RMP	16-Dec-04	2.5	3.0	Cesium-137	0.0906	pCi/g	NV	480962.091	1346737.961
A7-SA1-1	A7-SA1-1^6-RMP	16-Dec-04	2.5	3.0	Lead-210	1.02	pCi/g	NV	480962.091	1346737.961
A7-SA1-1	A7-SA1-1^6-RMP	16-Dec-04	2.5	3.0	Radium-226	1.3	pCi/g	NV	480962.091	1346737.961
A7-SA1-1	A7-SA1-1^6-RMP	16-Dec-04	2.5	3.0	Radium-228	0.752	pCi/g	NV	480962.091	1346737.961
A7-SA1-1	A7-SA1-1^6-RMP	16-Dec-04	2.5	3.0	Technetium-99	0.778	pCi/g	UNV	480962.091	1346737.961
A7-SA1-1	A7-SA1-1^6-RMP	16-Dec-04	2.5	3.0	Thorium-228	0.736	pCi/g	NV	480962.091	1346737.961
A7-SA1-1	A7-SA1-1^6-RMP	16-Dec-04	2.5	3.0	Thorium-230	3.88	pCi/g	NV	480962.091	1346737.961
A7-SA1-1	A7-SA1-1^6-RMP	16-Dec-04	2.5	3.0	Thorium-232	0.752	pCi/g	NV	480962.091	1346737.961
A7-SA1-1	A7-SA1-1^6-RMP	16-Dec-04	2.5	3.0	Uranium, Total	8.58	mg/kg	NV	480962.091	1346737.961
A7-SA1-10	A7-SA1-10^1-RMP	23-Feb-05	0.0	0.5	Arsenic	12.7	mg/kg	NV	480629.213	1348350.194
A7-SA1-10	A7-SA1-10^1-RMP	23-Feb-05	0.0	0.5	Beryllium	0.835	mg/kg	NV	480629.213	1348350.194
A7-SA1-10	A7-SA1-10^1-RMP	23-Feb-05	0.0	0.5	Aroclor-1254	0.0026	ug/kg	NV	480629.213	1348350.194
A7-SA1-10	A7-SA1-10^1-RMP	23-Feb-05	0.0	0.5	Aroclor-1260	0.0041	ug/kg	UNV	480629.213	1348350.194
A7-SA1-10	A7-SA1-10^1-RMP	23-Feb-05	0.0	0.5	Radium-226	2.69	pCi/g	NV	480629.213	1348350.194
A7-SA1-10	A7-SA1-10^1-RMP	23-Feb-05	0.0	0.5	Radium-228	1.09	pCi/g	NV	480629.213	1348350.194

5982

Boring	Sample ID	Sample Date	Sample Depth (feet)		Parameter	Result	Units	Qualifier	Northing	Easting
			Top	Bottom						
A7-SA1-10	A7-SA1-10^1-RMP	23-Feb-05	0.0	0.5	Thorium-228	1.05	pCi/g	NV	480629.213	1348350.194
A7-SA1-10	A7-SA1-10^1-RMP	23-Feb-05	0.0	0.5	Thorium-232	1.09	pCi/g	NV	480629.213	1348350.194
A7-SA1-10	A7-SA1-10^1-RMP	23-Feb-05	0.0	0.5	Uranium, Total	22.2	mg/kg	NV	480629.213	1348350.194
A7-SA1-10	A7-SA1-10^3-RMP	23-Feb-05	1.0	1.5	Arsenic	11.2	mg/kg	NV	480629.213	1348350.194
A7-SA1-10	A7-SA1-10^3-RMP	23-Feb-05	1.0	1.5	Beryllium	0.787	mg/kg	NV	480629.213	1348350.194
A7-SA1-10	A7-SA1-10^3-RMP	23-Feb-05	1.0	1.5	Aroclor-1254	0.004	ug/kg	UNV	480629.213	1348350.194
A7-SA1-10	A7-SA1-10^3-RMP	23-Feb-05	1.0	1.5	Aroclor-1260	0.004	ug/kg	UNV	480629.213	1348350.194
A7-SA1-10	A7-SA1-10^3-RMP	23-Feb-05	1.0	1.5	Radium-226	1.3	pCi/g	NV	480629.213	1348350.194
A7-SA1-10	A7-SA1-10^3-RMP	23-Feb-05	1.0	1.5	Radium-228	1.19	pCi/g	NV	480629.213	1348350.194
A7-SA1-10	A7-SA1-10^3-RMP	23-Feb-05	1.0	1.5	Thorium-228	1.18	pCi/g	NV	480629.213	1348350.194
A7-SA1-10	A7-SA1-10^3-RMP	23-Feb-05	1.0	1.5	Thorium-232	1.19	pCi/g	NV	480629.213	1348350.194
A7-SA1-10	A7-SA1-10^3-RMP	23-Feb-05	1.0	1.5	Uranium, Total	10.2	mg/kg	NV	480629.213	1348350.194
A7-SA1-10	A7-SA1-10^6-RMP	23-Feb-05	2.5	3.0	Arsenic	4.55	mg/kg	NV	480629.213	1348350.194
A7-SA1-10	A7-SA1-10^6-RMP	23-Feb-05	2.5	3.0	Beryllium	0.796	mg/kg	NV	480629.213	1348350.194
A7-SA1-10	A7-SA1-10^6-RMP	23-Feb-05	2.5	3.0	Aroclor-1254	0.004	ug/kg	UNV	480629.213	1348350.194
A7-SA1-10	A7-SA1-10^6-RMP	23-Feb-05	2.5	3.0	Aroclor-1260	0.004	ug/kg	UNV	480629.213	1348350.194
A7-SA1-10	A7-SA1-10^6-RMP	23-Feb-05	2.5	3.0	Radium-226	1.26	pCi/g	NV	480629.213	1348350.194
A7-SA1-10	A7-SA1-10^6-RMP	23-Feb-05	2.5	3.0	Radium-228	1.1	pCi/g	NV	480629.213	1348350.194
A7-SA1-10	A7-SA1-10^6-RMP	23-Feb-05	2.5	3.0	Thorium-228	1.07	pCi/g	NV	480629.213	1348350.194
A7-SA1-10	A7-SA1-10^6-RMP	23-Feb-05	2.5	3.0	Thorium-232	1.1	pCi/g	NV	480629.213	1348350.194
A7-SA1-10	A7-SA1-10^6-RMP	23-Feb-05	2.5	3.0	Uranium, Total	7.41	mg/kg	NV	480629.213	1348350.194
A7-SA1-11	A7-SA1-11^1-RMP	14-Dec-04	0.0	0.5	Arsenic	5.25	mg/kg	J	480667.508	1346884.969
A7-SA1-11	A7-SA1-11^1-RMP	14-Dec-04	0.0	0.5	Beryllium	0.419	mg/kg	-	480667.508	1346884.969
A7-SA1-11	A7-SA1-11^1-RMP	14-Dec-04	0.0	0.5	Lead	13.7	mg/kg	J	480667.508	1346884.969
A7-SA1-11	A7-SA1-11^1-RMP	14-Dec-04	0.0	0.5	Manganese	485	mg/kg	-	480667.508	1346884.969
A7-SA1-11	A7-SA1-11^1-RMP	14-Dec-04	0.0	0.5	Aroclor-1254	0.0026	ug/kg	J	480667.508	1346884.969
A7-SA1-11	A7-SA1-11^1-RMP	14-Dec-04	0.0	0.5	Aroclor-1260	0.0034	ug/kg	U	480667.508	1346884.969
A7-SA1-11	A7-SA1-11^1-RMP	14-Dec-04	0.0	0.5	Cesium-137	0.04	pCi/g	U	480667.508	1346884.969
A7-SA1-11	A7-SA1-11^1-RMP	14-Dec-04	0.0	0.5	Lead-210	0.729	pCi/g	J	480667.508	1346884.969
A7-SA1-11	A7-SA1-11^1-RMP	14-Dec-04	0.0	0.5	Radium-226	1.23	pCi/g	-	480667.508	1346884.969
A7-SA1-11	A7-SA1-11^1-RMP	14-Dec-04	0.0	0.5	Radium-228	0.609	pCi/g	-	480667.508	1346884.969
A7-SA1-11	A7-SA1-11^1-RMP	14-Dec-04	0.0	0.5	Technetium-99	0.768	pCi/g	U	480667.508	1346884.969
A7-SA1-11	A7-SA1-11^1-RMP	14-Dec-04	0.0	0.5	Thorium-228	0.643	pCi/g	-	480667.508	1346884.969
A7-SA1-11	A7-SA1-11^1-RMP	14-Dec-04	0.0	0.5	Thorium-230	4.59	pCi/g	J	480667.508	1346884.969
A7-SA1-11	A7-SA1-11^1-RMP	14-Dec-04	0.0	0.5	Thorium-232	0.609	pCi/g	-	480667.508	1346884.969

APPENDIX A
PREDESIGN CHARACTERIZATION DATA FOR AREA 7 SILOS AND GENERAL AREA

Boring	Sample ID	Sample Date	Sample Depth (feet)		Parameter	Result	Units	Qualifier	Northing	Easting
			Top	Bottom						
A7-SA1-11	A7-SA1-11^1-RMP	14-Dec-04	0.0	0.5	Uranium, Total	11	mg/kg	-	480667.508	1346884.969
A7-SA1-11	A7-SA1-11^4-RMP	14-Dec-04	1.5	2.0	Arsenic	10	mg/kg	-	480667.508	1346884.969
A7-SA1-11	A7-SA1-11^4-RMP	14-Dec-04	1.5	2.0	Beryllium	0.857	mg/kg	-	480667.508	1346884.969
A7-SA1-11	A7-SA1-11^4-RMP	14-Dec-04	1.5	2.0	Lead	28.9	mg/kg	J	480667.508	1346884.969
A7-SA1-11	A7-SA1-11^4-RMP	14-Dec-04	1.5	2.0	Manganese	542	mg/kg	-	480667.508	1346884.969
A7-SA1-11	A7-SA1-11^4-RMP	14-Dec-04	1.5	2.0	Aroclor-1254	0.0028	ug/kg	J	480667.508	1346884.969
A7-SA1-11	A7-SA1-11^4-RMP	14-Dec-04	1.5	2.0	Aroclor-1260	0.0014	ug/kg	J	480667.508	1346884.969
A7-SA1-11	A7-SA1-11^4-RMP	14-Dec-04	1.5	2.0	Cesium-137	0.0545	pCi/g	J	480667.508	1346884.969
A7-SA1-11	A7-SA1-11^4-RMP	14-Dec-04	1.5	2.0	Lead-210	5.07	pCi/g	-	480667.508	1346884.969
A7-SA1-11	A7-SA1-11^4-RMP	14-Dec-04	1.5	2.0	Radium-226	8.27	pCi/g	-	480667.508	1346884.969
A7-SA1-11	A7-SA1-11^4-RMP	14-Dec-04	1.5	2.0	Radium-228	0.787	pCi/g	-	480667.508	1346884.969
A7-SA1-11	A7-SA1-11^4-RMP	14-Dec-04	1.5	2.0	Technetium-99	0.794	pCi/g	U	480667.508	1346884.969
A7-SA1-11	A7-SA1-11^4-RMP	14-Dec-04	1.5	2.0	Thorium-228	0.778	pCi/g	-	480667.508	1346884.969
A7-SA1-11	A7-SA1-11^4-RMP	14-Dec-04	1.5	2.0	Thorium-230	9.57	pCi/g	J	480667.508	1346884.969
A7-SA1-11	A7-SA1-11^4-RMP	14-Dec-04	1.5	2.0	Thorium-232	0.787	pCi/g	-	480667.508	1346884.969
A7-SA1-11	A7-SA1-11^4-RMP	14-Dec-04	1.5	2.0	Uranium, Total	19.8	mg/kg	-	480667.508	1346884.969
A7-SA1-11	A7-SA1-11^6-RMP	14-Dec-04	2.5	3.0	Arsenic	10.8	mg/kg	-	480667.508	1346884.969
A7-SA1-11	A7-SA1-11^6-RMP	14-Dec-04	2.5	3.0	Beryllium	0.71	mg/kg	-	480667.508	1346884.969
A7-SA1-11	A7-SA1-11^6-RMP	14-Dec-04	2.5	3.0	Lead	14.4	mg/kg	J	480667.508	1346884.969
A7-SA1-11	A7-SA1-11^6-RMP	14-Dec-04	2.5	3.0	Manganese	516	mg/kg	-	480667.508	1346884.969
A7-SA1-11	A7-SA1-11^6-RMP	14-Dec-04	2.5	3.0	Aroclor-1254	0.0007	ug/kg	J	480667.508	1346884.969
A7-SA1-11	A7-SA1-11^6-RMP	14-Dec-04	2.5	3.0	Aroclor-1260	0.0038	ug/kg	U	480667.508	1346884.969
A7-SA1-11	A7-SA1-11^6-RMP	14-Dec-04	2.5	3.0	Cesium-137	0.0354	pCi/g	U	480667.508	1346884.969
A7-SA1-11	A7-SA1-11^6-RMP	14-Dec-04	2.5	3.0	Lead-210	0.822	pCi/g	J	480667.508	1346884.969
A7-SA1-11	A7-SA1-11^6-RMP	14-Dec-04	2.5	3.0	Radium-226	1.96	pCi/g	-	480667.508	1346884.969
A7-SA1-11	A7-SA1-11^6-RMP	14-Dec-04	2.5	3.0	Radium-228	0.978	pCi/g	-	480667.508	1346884.969
A7-SA1-11	A7-SA1-11^6-RMP	14-Dec-04	2.5	3.0	Technetium-99	0.81	pCi/g	U	480667.508	1346884.969
A7-SA1-11	A7-SA1-11^6-RMP	14-Dec-04	2.5	3.0	Thorium-228	0.942	pCi/g	-	480667.508	1346884.969
A7-SA1-11	A7-SA1-11^6-RMP	14-Dec-04	2.5	3.0	Thorium-230	5.63	pCi/g	J	480667.508	1346884.969
A7-SA1-11	A7-SA1-11^6-RMP	14-Dec-04	2.5	3.0	Thorium-232	0.978	pCi/g	-	480667.508	1346884.969
A7-SA1-11	A7-SA1-11^6-RMP	14-Dec-04	2.5	3.0	Uranium, Total	11.9	mg/kg	-	480667.508	1346884.969
A7-SA1-11	A7-SA1-11^8-RMP	14-Dec-04	3.5	4.0	Arsenic	9.98	mg/kg	-	480667.508	1346884.969
A7-SA1-11	A7-SA1-11^8-RMP	14-Dec-04	3.5	4.0	Beryllium	0.604	mg/kg	-	480667.508	1346884.969
A7-SA1-11	A7-SA1-11^8-RMP	14-Dec-04	3.5	4.0	Lead	14.1	mg/kg	J	480667.508	1346884.969
A7-SA1-11	A7-SA1-11^8-RMP	14-Dec-04	3.5	4.0	Manganese	299	mg/kg	J	480667.508	1346884.969

5982

Boring	Sample ID	Sample Date	Sample Depth (feet)		Parameter	Result	Units	Qualifier	Northing	Easting
			Top	Bottom						
A7-SA1-11	A7-SA1-11^8-RMP	14-Dec-04	3.5	4.0	Aroclor-1254	0.00092	ug/kg	J	480667.508	1346884.969
A7-SA1-11	A7-SA1-11^8-RMP	14-Dec-04	3.5	4.0	Aroclor-1260	0.004	ug/kg	U	480667.508	1346884.969
A7-SA1-11	A7-SA1-11^8-RMP	14-Dec-04	3.5	4.0	Cesium-137	0.0513	pCi/g	U	480667.508	1346884.969
A7-SA1-11	A7-SA1-11^8-RMP	14-Dec-04	3.5	4.0	Lead-210	1.15	pCi/g	J	480667.508	1346884.969
A7-SA1-11	A7-SA1-11^8-RMP	14-Dec-04	3.5	4.0	Radium-226	1.42	pCi/g	-	480667.508	1346884.969
A7-SA1-11	A7-SA1-11^8-RMP	14-Dec-04	3.5	4.0	Radium-228	0.853	pCi/g	-	480667.508	1346884.969
A7-SA1-11	A7-SA1-11^8-RMP	14-Dec-04	3.5	4.0	Technetium-99	0.801	pCi/g	U	480667.508	1346884.969
A7-SA1-11	A7-SA1-11^8-RMP	14-Dec-04	3.5	4.0	Thorium-228	0.918	pCi/g	-	480667.508	1346884.969
A7-SA1-11	A7-SA1-11^8-RMP	14-Dec-04	3.5	4.0	Thorium-230	5.5	pCi/g	J	480667.508	1346884.969
A7-SA1-11	A7-SA1-11^8-RMP	14-Dec-04	3.5	4.0	Thorium-232	0.853	pCi/g	-	480667.508	1346884.969
A7-SA1-11	A7-SA1-11^8-RMP	14-Dec-04	3.5	4.0	Uranium, Total	8.89	mg/kg	-	480667.508	1346884.969
A7-SA1-11	A7-SA1-11^10-RMP	14-Dec-04	4.5	5.0	Arsenic	14.8	mg/kg	-	480667.508	1346884.969
A7-SA1-11	A7-SA1-11^10-RMP	14-Dec-04	4.5	5.0	Beryllium	0.657	mg/kg	-	480667.508	1346884.969
A7-SA1-11	A7-SA1-11^10-RMP	14-Dec-04	4.5	5.0	Lead	20.2	mg/kg	J	480667.508	1346884.969
A7-SA1-11	A7-SA1-11^10-RMP	14-Dec-04	4.5	5.0	Manganese	671	mg/kg	-	480667.508	1346884.969
A7-SA1-11	A7-SA1-11^10-RMP	14-Dec-04	4.5	5.0	Aroclor-1254	0.0041	ug/kg	U	480667.508	1346884.969
A7-SA1-11	A7-SA1-11^10-RMP	14-Dec-04	4.5	5.0	Aroclor-1260	0.0041	ug/kg	U	480667.508	1346884.969
A7-SA1-11	A7-SA1-11^10-RMP	14-Dec-04	4.5	5.0	Cesium-137	0.0303	pCi/g	U	480667.508	1346884.969
A7-SA1-11	A7-SA1-11^10-RMP	14-Dec-04	4.5	5.0	Lead-210	0.748	pCi/g	J	480667.508	1346884.969
A7-SA1-11	A7-SA1-11^10-RMP	14-Dec-04	4.5	5.0	Radium-226	1.63	pCi/g	-	480667.508	1346884.969
A7-SA1-11	A7-SA1-11^10-RMP	14-Dec-04	4.5	5.0	Radium-228	0.949	pCi/g	-	480667.508	1346884.969
A7-SA1-11	A7-SA1-11^10-RMP	14-Dec-04	4.5	5.0	Technetium-99	0.798	pCi/g	U	480667.508	1346884.969
A7-SA1-11	A7-SA1-11^10-RMP	14-Dec-04	4.5	5.0	Thorium-228	0.958	pCi/g	-	480667.508	1346884.969
A7-SA1-11	A7-SA1-11^10-RMP	14-Dec-04	4.5	5.0	Thorium-230	5.16	pCi/g	J	480667.508	1346884.969
A7-SA1-11	A7-SA1-11^10-RMP	14-Dec-04	4.5	5.0	Thorium-232	0.949	pCi/g	-	480667.508	1346884.969
A7-SA1-11	A7-SA1-11^10-RMP	14-Dec-04	4.5	5.0	Uranium, Total	10.5	mg/kg	-	480667.508	1346884.969
A7-SA1-11	A7-SA1-11^12-RMP	14-Dec-04	5.5	6.0	Arsenic	9.84	mg/kg	-	480667.508	1346884.969
A7-SA1-11	A7-SA1-11^12-RMP	14-Dec-04	5.5	6.0	Beryllium	0.649	mg/kg	-	480667.508	1346884.969
A7-SA1-11	A7-SA1-11^12-RMP	14-Dec-04	5.5	6.0	Lead	12.8	mg/kg	J	480667.508	1346884.969
A7-SA1-11	A7-SA1-11^12-RMP	14-Dec-04	5.5	6.0	Manganese	483	mg/kg	-	480667.508	1346884.969
A7-SA1-11	A7-SA1-11^12-RMP	14-Dec-04	5.5	6.0	Aroclor-1254	0.0041	ug/kg	U	480667.508	1346884.969
A7-SA1-11	A7-SA1-11^12-RMP	14-Dec-04	5.5	6.0	Aroclor-1260	0.0041	ug/kg	U	480667.508	1346884.969
A7-SA1-11	A7-SA1-11^12-RMP	14-Dec-04	5.5	6.0	Cesium-137	0.0323	pCi/g	U	480667.508	1346884.969
A7-SA1-11	A7-SA1-11^12-RMP	14-Dec-04	5.5	6.0	Lead-210	0.891	pCi/g	J	480667.508	1346884.969
A7-SA1-11	A7-SA1-11^12-RMP	14-Dec-04	5.5	6.0	Radium-226	1.63	pCi/g	-	480667.508	1346884.969

APPENDIX A
PREDESIGN CHARACTERIZATION DATA FOR AREA 7 SILOS AND GENERAL AREA

Boring	Sample ID	Sample Date	Sample Depth (feet)		Parameter	Result	Units	Qualifier	Northing	Easting
			Top	Bottom						
A7-SA1-11	A7-SA1-11^12-RMP	14-Dec-04	5.5	6.0	Radium-228	0.761	pCi/g	-	480667.508	1346884.969
A7-SA1-11	A7-SA1-11^12-RMP	14-Dec-04	5.5	6.0	Technetium-99	0.798	pCi/g	U	480667.508	1346884.969
A7-SA1-11	A7-SA1-11^12-RMP	14-Dec-04	5.5	6.0	Thorium-228	0.756	pCi/g	-	480667.508	1346884.969
A7-SA1-11	A7-SA1-11^12-RMP	14-Dec-04	5.5	6.0	Thorium-230	6.96	pCi/g	J	480667.508	1346884.969
A7-SA1-11	A7-SA1-11^12-RMP	14-Dec-04	5.5	6.0	Thorium-232	0.761	pCi/g	-	480667.508	1346884.969
A7-SA1-11	A7-SA1-11^12-RMP	14-Dec-04	5.5	6.0	Uranium, Total	9.69	mg/kg	-	480667.508	1346884.969
A7-SA1-11	A7-SA1-11^14-RMP	14-Dec-04	6.5	7.0	Arsenic	6.3	mg/kg	J	480667.508	1346884.969
A7-SA1-11	A7-SA1-11^14-RMP	14-Dec-04	6.5	7.0	Beryllium	0.409	mg/kg	-	480667.508	1346884.969
A7-SA1-11	A7-SA1-11^14-RMP	14-Dec-04	6.5	7.0	Lead	15	mg/kg	J	480667.508	1346884.969
A7-SA1-11	A7-SA1-11^14-RMP	14-Dec-04	6.5	7.0	Manganese	368	mg/kg	J	480667.508	1346884.969
A7-SA1-11	A7-SA1-11^14-RMP	14-Dec-04	6.5	7.0	Aroclor-1254	0.0037	ug/kg	U	480667.508	1346884.969
A7-SA1-11	A7-SA1-11^14-RMP	14-Dec-04	6.5	7.0	Aroclor-1260	0.0037	ug/kg	U	480667.508	1346884.969
A7-SA1-11	A7-SA1-11^14-RMP	14-Dec-04	6.5	7.0	Cesium-137	0.0445	pCi/g	U	480667.508	1346884.969
A7-SA1-11	A7-SA1-11^14-RMP	14-Dec-04	6.5	7.0	Lead-210	0.622	pCi/g	U	480667.508	1346884.969
A7-SA1-11	A7-SA1-11^14-RMP	14-Dec-04	6.5	7.0	Radium-226	0.915	pCi/g	-	480667.508	1346884.969
A7-SA1-11	A7-SA1-11^14-RMP	14-Dec-04	6.5	7.0	Radium-228	0.69	pCi/g	-	480667.508	1346884.969
A7-SA1-11	A7-SA1-11^14-RMP	14-Dec-04	6.5	7.0	Technetium-99	0.766	pCi/g	U	480667.508	1346884.969
A7-SA1-11	A7-SA1-11^14-RMP	14-Dec-04	6.5	7.0	Thorium-228	0.823	pCi/g	-	480667.508	1346884.969
A7-SA1-11	A7-SA1-11^14-RMP	14-Dec-04	6.5	7.0	Thorium-230	3.41	pCi/g	J	480667.508	1346884.969
A7-SA1-11	A7-SA1-11^14-RMP	14-Dec-04	6.5	7.0	Thorium-232	0.69	pCi/g	-	480667.508	1346884.969
A7-SA1-11	A7-SA1-11^14-RMP	14-Dec-04	6.5	7.0	Uranium, Total	2.49	mg/kg	J	480667.508	1346884.969
A7-SA1-11	A7-SA1-11^16-RMP	14-Dec-04	7.5	8.0	Arsenic	6.84	mg/kg	J	480667.508	1346884.969
A7-SA1-11	A7-SA1-11^16-RMP	14-Dec-04	7.5	8.0	Beryllium	0.403	mg/kg	-	480667.508	1346884.969
A7-SA1-11	A7-SA1-11^16-RMP	14-Dec-04	7.5	8.0	Lead	11.4	mg/kg	J	480667.508	1346884.969
A7-SA1-11	A7-SA1-11^16-RMP	14-Dec-04	7.5	8.0	Manganese	648	mg/kg	-	480667.508	1346884.969
A7-SA1-11	A7-SA1-11^16-RMP	14-Dec-04	7.5	8.0	Aroclor-1254	0.0037	ug/kg	U	480667.508	1346884.969
A7-SA1-11	A7-SA1-11^16-RMP	14-Dec-04	7.5	8.0	Aroclor-1260	0.0037	ug/kg	U	480667.508	1346884.969
A7-SA1-11	A7-SA1-11^16-RMP	14-Dec-04	7.5	8.0	Cesium-137	0.0271	pCi/g	U	480667.508	1346884.969
A7-SA1-11	A7-SA1-11^16-RMP	14-Dec-04	7.5	8.0	Lead-210	0.656	pCi/g	U	480667.508	1346884.969
A7-SA1-11	A7-SA1-11^16-RMP	14-Dec-04	7.5	8.0	Radium-226	0.98	pCi/g	-	480667.508	1346884.969
A7-SA1-11	A7-SA1-11^16-RMP	14-Dec-04	7.5	8.0	Radium-228	0.629	pCi/g	-	480667.508	1346884.969
A7-SA1-11	A7-SA1-11^16-RMP	14-Dec-04	7.5	8.0	Technetium-99	0.774	pCi/g	U	480667.508	1346884.969
A7-SA1-11	A7-SA1-11^16-RMP	14-Dec-04	7.5	8.0	Thorium-228	0.619	pCi/g	-	480667.508	1346884.969
A7-SA1-11	A7-SA1-11^16-RMP	14-Dec-04	7.5	8.0	Thorium-230	3.75	pCi/g	J	480667.508	1346884.969
A7-SA1-11	A7-SA1-11^16-RMP	14-Dec-04	7.5	8.0	Thorium-232	0.629	pCi/g	-	480667.508	1346884.969

5982

Boring	Sample ID	Sample Date	Sample Depth (feet)		Parameter	Result	Units	Qualifier	Northing	Easting
			Top	Bottom						
A7-SA1-11	A7-SA1-11^16-RMP	14-Dec-04	7.5	8.0	Uranium, Total	3.45	mg/kg	-	480667.508	1346884.969
A7-SA1-12	A7-SA1-12^1-RMP	14-Dec-04	0.0	0.5	Arsenic	7.48	mg/kg	-	480238.074	1346812.284
A7-SA1-12	A7-SA1-12^1-RMP	14-Dec-04	0.0	0.5	Beryllium	0.416	mg/kg	-	480238.074	1346812.284
A7-SA1-12	A7-SA1-12^1-RMP	14-Dec-04	0.0	0.5	Lead	10.8	mg/kg	J	480238.074	1346812.284
A7-SA1-12	A7-SA1-12^1-RMP	14-Dec-04	0.0	0.5	Manganese	505	mg/kg	-	480238.074	1346812.284
A7-SA1-12	A7-SA1-12^1-RMP	14-Dec-04	0.0	0.5	Aroclor-1254	0.0038	ug/kg	U	480238.074	1346812.284
A7-SA1-12	A7-SA1-12^1-RMP	14-Dec-04	0.0	0.5	Aroclor-1260	0.0038	ug/kg	U	480238.074	1346812.284
A7-SA1-12	A7-SA1-12^1-RMP	14-Dec-04	0.0	0.5	Cesium-137	0.0305	pCi/g	U	480238.074	1346812.284
A7-SA1-12	A7-SA1-12^1-RMP	14-Dec-04	0.0	0.5	Lead-210	0.669	pCi/g	U	480238.074	1346812.284
A7-SA1-12	A7-SA1-12^1-RMP	14-Dec-04	0.0	0.5	Radium-226	1.13	pCi/g	-	480238.074	1346812.284
A7-SA1-12	A7-SA1-12^1-RMP	14-Dec-04	0.0	0.5	Radium-228	0.714	pCi/g	-	480238.074	1346812.284
A7-SA1-12	A7-SA1-12^1-RMP	14-Dec-04	0.0	0.5	Technetium-99	0.803	pCi/g	U	480238.074	1346812.284
A7-SA1-12	A7-SA1-12^1-RMP	14-Dec-04	0.0	0.5	Thorium-228	0.722	pCi/g	-	480238.074	1346812.284
A7-SA1-12	A7-SA1-12^1-RMP	14-Dec-04	0.0	0.5	Thorium-230	4.36	pCi/g	J	480238.074	1346812.284
A7-SA1-12	A7-SA1-12^1-RMP	14-Dec-04	0.0	0.5	Thorium-232	0.714	pCi/g	-	480238.074	1346812.284
A7-SA1-12	A7-SA1-12^1-RMP	14-Dec-04	0.0	0.5	Uranium, Total	5.56	mg/kg	-	480238.074	1346812.284
A7-SA1-12	A7-SA1-12^4-RMP	14-Dec-04	1.5	2.0	Arsenic	5.95	mg/kg	-	480238.074	1346812.284
A7-SA1-12	A7-SA1-12^4-RMP	14-Dec-04	1.5	2.0	Beryllium	0.443	mg/kg	-	480238.074	1346812.284
A7-SA1-12	A7-SA1-12^4-RMP	14-Dec-04	1.5	2.0	Lead	11.4	mg/kg	J	480238.074	1346812.284
A7-SA1-12	A7-SA1-12^4-RMP	14-Dec-04	1.5	2.0	Manganese	364	mg/kg	J	480238.074	1346812.284
A7-SA1-12	A7-SA1-12^4-RMP	14-Dec-04	1.5	2.0	Aroclor-1254	0.0014	ug/kg	J	480238.074	1346812.284
A7-SA1-12	A7-SA1-12^4-RMP	14-Dec-04	1.5	2.0	Aroclor-1260	0.0037	ug/kg	U	480238.074	1346812.284
A7-SA1-12	A7-SA1-12^4-RMP	14-Dec-04	1.5	2.0	Cesium-137	0.0491	pCi/g	U	480238.074	1346812.284
A7-SA1-12	A7-SA1-12^4-RMP	14-Dec-04	1.5	2.0	Lead-210	1.02	pCi/g	J	480238.074	1346812.284
A7-SA1-12	A7-SA1-12^4-RMP	14-Dec-04	1.5	2.0	Radium-226	1.25	pCi/g	-	480238.074	1346812.284
A7-SA1-12	A7-SA1-12^4-RMP	14-Dec-04	1.5	2.0	Radium-228	0.95	pCi/g	-	480238.074	1346812.284
A7-SA1-12	A7-SA1-12^4-RMP	14-Dec-04	1.5	2.0	Technetium-99	0.791	pCi/g	U	480238.074	1346812.284
A7-SA1-12	A7-SA1-12^4-RMP	14-Dec-04	1.5	2.0	Thorium-228	1.04	pCi/g	-	480238.074	1346812.284
A7-SA1-12	A7-SA1-12^4-RMP	14-Dec-04	1.5	2.0	Thorium-230	4.77	pCi/g	J	480238.074	1346812.284
A7-SA1-12	A7-SA1-12^4-RMP	14-Dec-04	1.5	2.0	Thorium-232	0.95	pCi/g	-	480238.074	1346812.284
A7-SA1-12	A7-SA1-12^4-RMP	14-Dec-04	1.5	2.0	Uranium, Total	6.22	mg/kg	-	480238.074	1346812.284
A7-SA1-12	A7-SA1-12^6-RMP	14-Dec-04	2.5	3.0	Arsenic	12.4	mg/kg	-	480238.074	1346812.284
A7-SA1-12	A7-SA1-12^6-RMP	14-Dec-04	2.5	3.0	Beryllium	0.633	mg/kg	-	480238.074	1346812.284
A7-SA1-12	A7-SA1-12^6-RMP	14-Dec-04	2.5	3.0	Lead	18.1	mg/kg	J	480238.074	1346812.284
A7-SA1-12	A7-SA1-12^6-RMP	14-Dec-04	2.5	3.0	Manganese	670	mg/kg	-	480238.074	1346812.284

APPENDIX A
PREDESIGN CHARACTERIZATION DATA FOR AREA 7 SILOS AND GENERAL AREA

Boring	Sample ID	Sample Date	Sample Depth (feet)		Parameter	Result	Units	Qualifier	Northing	Easting
			Top	Bottom						
A7-SA1-12	A7-SA1-12^6-RMP	14-Dec-04	2.5	3.0	Aroclor-1254	0.0039	ug/kg	U	480238.074	1346812.284
A7-SA1-12	A7-SA1-12^6-RMP	14-Dec-04	2.5	3.0	Aroclor-1260	0.0039	ug/kg	U	480238.074	1346812.284
A7-SA1-12	A7-SA1-12^6-RMP	14-Dec-04	2.5	3.0	Cesium-137	0.027	pCi/g	U	480238.074	1346812.284
A7-SA1-12	A7-SA1-12^6-RMP	14-Dec-04	2.5	3.0	Lead-210	1.22	pCi/g	J	480238.074	1346812.284
A7-SA1-12	A7-SA1-12^6-RMP	14-Dec-04	2.5	3.0	Radium-226	1.4	pCi/g	-	480238.074	1346812.284
A7-SA1-12	A7-SA1-12^6-RMP	14-Dec-04	2.5	3.0	Radium-228	0.826	pCi/g	-	480238.074	1346812.284
A7-SA1-12	A7-SA1-12^6-RMP	14-Dec-04	2.5	3.0	Technetium-99	0.829	pCi/g	U	480238.074	1346812.284
A7-SA1-12	A7-SA1-12^6-RMP	14-Dec-04	2.5	3.0	Thorium-228	0.811	pCi/g	-	480238.074	1346812.284
A7-SA1-12	A7-SA1-12^6-RMP	14-Dec-04	2.5	3.0	Thorium-230	4.2	pCi/g	J	480238.074	1346812.284
A7-SA1-12	A7-SA1-12^6-RMP	14-Dec-04	2.5	3.0	Thorium-232	0.826	pCi/g	-	480238.074	1346812.284
A7-SA1-12	A7-SA1-12^6-RMP	14-Dec-04	2.5	3.0	Uranium, Total	8.41	mg/kg	-	480238.074	1346812.284
A7-SA1-12	A7-SA1-12^8-RMP	14-Dec-04	3.5	4.0	Arsenic	5.17	mg/kg	J	480238.074	1346812.284
A7-SA1-12	A7-SA1-12^8-RMP	14-Dec-04	3.5	4.0	Beryllium	0.24	mg/kg	-	480238.074	1346812.284
A7-SA1-12	A7-SA1-12^8-RMP	14-Dec-04	3.5	4.0	Lead	6.28	mg/kg	J	480238.074	1346812.284
A7-SA1-12	A7-SA1-12^8-RMP	14-Dec-04	3.5	4.0	Manganese	318	mg/kg	J	480238.074	1346812.284
A7-SA1-12	A7-SA1-12^8-RMP	14-Dec-04	3.5	4.0	Aroclor-1254	0.004	ug/kg	U	480238.074	1346812.284
A7-SA1-12	A7-SA1-12^8-RMP	14-Dec-04	3.5	4.0	Aroclor-1260	0.004	ug/kg	U	480238.074	1346812.284
A7-SA1-12	A7-SA1-12^8-RMP	14-Dec-04	3.5	4.0	Cesium-137	0.0255	pCi/g	U	480238.074	1346812.284
A7-SA1-12	A7-SA1-12^8-RMP	14-Dec-04	3.5	4.0	Lead-210	0.737	pCi/g	U	480238.074	1346812.284
A7-SA1-12	A7-SA1-12^8-RMP	14-Dec-04	3.5	4.0	Radium-226	0.766	pCi/g	-	480238.074	1346812.284
A7-SA1-12	A7-SA1-12^8-RMP	14-Dec-04	3.5	4.0	Radium-228	0.492	pCi/g	-	480238.074	1346812.284
A7-SA1-12	A7-SA1-12^8-RMP	14-Dec-04	3.5	4.0	Technetium-99	0.74	pCi/g	U	480238.074	1346812.284
A7-SA1-12	A7-SA1-12^8-RMP	14-Dec-04	3.5	4.0	Thorium-228	0.495	pCi/g	-	480238.074	1346812.284
A7-SA1-12	A7-SA1-12^8-RMP	14-Dec-04	3.5	4.0	Thorium-230	4.3	pCi/g	J	480238.074	1346812.284
A7-SA1-12	A7-SA1-12^8-RMP	14-Dec-04	3.5	4.0	Thorium-232	0.492	pCi/g	-	480238.074	1346812.284
A7-SA1-12	A7-SA1-12^8-RMP	14-Dec-04	3.5	4.0	Uranium, Total	3.02	mg/kg	-	480238.074	1346812.284
A7-SA1-12	A7-SA1-12^10-RMP	14-Dec-04	4.5	5.0	Arsenic	5.87	mg/kg	J	480238.074	1346812.284
A7-SA1-12	A7-SA1-12^10-RMP	14-Dec-04	4.5	5.0	Beryllium	0.205	mg/kg	-	480238.074	1346812.284
A7-SA1-12	A7-SA1-12^10-RMP	14-Dec-04	4.5	5.0	Lead	6.62	mg/kg	J	480238.074	1346812.284
A7-SA1-12	A7-SA1-12^10-RMP	14-Dec-04	4.5	5.0	Manganese	302	mg/kg	J	480238.074	1346812.284
A7-SA1-12	A7-SA1-12^10-RMP	14-Dec-04	4.5	5.0	Aroclor-1254	0.0038	ug/kg	U	480238.074	1346812.284
A7-SA1-12	A7-SA1-12^10-RMP	14-Dec-04	4.5	5.0	Aroclor-1260	0.0038	ug/kg	U	480238.074	1346812.284
A7-SA1-12	A7-SA1-12^10-RMP	14-Dec-04	4.5	5.0	Cesium-137	0.0415	pCi/g	U	480238.074	1346812.284
A7-SA1-12	A7-SA1-12^10-RMP	14-Dec-04	4.5	5.0	Lead-210	0.643	pCi/g	U	480238.074	1346812.284
A7-SA1-12	A7-SA1-12^10-RMP	14-Dec-04	4.5	5.0	Radium-226	0.847	pCi/g	-	480238.074	1346812.284

Boring	Sample ID	Sample Date	Sample Depth (feet)		Parameter	Result	Units	Qualifier	Northing	Easting
			Top	Bottom						
A7-SA1-12	A7-SA1-12^10-RMP	14-Dec-04	4.5	5.0	Radium-228	0.493	pCi/g	-	480238.074	1346812.284
A7-SA1-12	A7-SA1-12^10-RMP	14-Dec-04	4.5	5.0	Technetium-99	0.732	pCi/g	U	480238.074	1346812.284
A7-SA1-12	A7-SA1-12^10-RMP	14-Dec-04	4.5	5.0	Thorium-228	0.506	pCi/g	-	480238.074	1346812.284
A7-SA1-12	A7-SA1-12^10-RMP	14-Dec-04	4.5	5.0	Thorium-230	3.98	pCi/g	J	480238.074	1346812.284
A7-SA1-12	A7-SA1-12^10-RMP	14-Dec-04	4.5	5.0	Thorium-232	0.493	pCi/g	-	480238.074	1346812.284
A7-SA1-12	A7-SA1-12^10-RMP	14-Dec-04	4.5	5.0	Uranium, Total	2.92	mg/kg	-	480238.074	1346812.284
A7-SA1-12	A7-SA1-12^12-RMP	14-Dec-04	5.5	6.0	Arsenic	7.32	mg/kg	J	480238.074	1346812.284
A7-SA1-12	A7-SA1-12^12-RMP	14-Dec-04	5.5	6.0	Beryllium	0.251	mg/kg	-	480238.074	1346812.284
A7-SA1-12	A7-SA1-12^12-RMP	14-Dec-04	5.5	6.0	Lead	8.82	mg/kg	J	480238.074	1346812.284
A7-SA1-12	A7-SA1-12^12-RMP	14-Dec-04	5.5	6.0	Manganese	362	mg/kg	J	480238.074	1346812.284
A7-SA1-12	A7-SA1-12^12-RMP	14-Dec-04	5.5	6.0	Aroclor-1254	0.0037	ug/kg	U	480238.074	1346812.284
A7-SA1-12	A7-SA1-12^12-RMP	14-Dec-04	5.5	6.0	Aroclor-1260	0.0037	ug/kg	U	480238.074	1346812.284
A7-SA1-12	A7-SA1-12^12-RMP	14-Dec-04	5.5	6.0	Cesium-137	0.0225	pCi/g	U	480238.074	1346812.284
A7-SA1-12	A7-SA1-12^12-RMP	14-Dec-04	5.5	6.0	Lead-210	0.751	pCi/g	J	480238.074	1346812.284
A7-SA1-12	A7-SA1-12^12-RMP	14-Dec-04	5.5	6.0	Radium-226	0.817	pCi/g	-	480238.074	1346812.284
A7-SA1-12	A7-SA1-12^12-RMP	14-Dec-04	5.5	6.0	Radium-228	0.49	pCi/g	-	480238.074	1346812.284
A7-SA1-12	A7-SA1-12^12-RMP	14-Dec-04	5.5	6.0	Technetium-99	0.779	pCi/g	U	480238.074	1346812.284
A7-SA1-12	A7-SA1-12^12-RMP	14-Dec-04	5.5	6.0	Thorium-228	0.482	pCi/g	-	480238.074	1346812.284
A7-SA1-12	A7-SA1-12^12-RMP	14-Dec-04	5.5	6.0	Thorium-230	1.69	pCi/g	J	480238.074	1346812.284
A7-SA1-12	A7-SA1-12^12-RMP	14-Dec-04	5.5	6.0	Thorium-232	0.49	pCi/g	-	480238.074	1346812.284
A7-SA1-12	A7-SA1-12^12-RMP	14-Dec-04	5.5	6.0	Uranium, Total	3.99	mg/kg	-	480238.074	1346812.284
A7-SA1-12	A7-SA1-12^14-RMP	14-Dec-04	6.5	7.0	Arsenic	6.08	mg/kg	-	480238.074	1346812.284
A7-SA1-12	A7-SA1-12^14-RMP	14-Dec-04	6.5	7.0	Beryllium	0.408	mg/kg	-	480238.074	1346812.284
A7-SA1-12	A7-SA1-12^14-RMP	14-Dec-04	6.5	7.0	Lead	10.1	mg/kg	J	480238.074	1346812.284
A7-SA1-12	A7-SA1-12^14-RMP	14-Dec-04	6.5	7.0	Manganese	402	mg/kg	J	480238.074	1346812.284
A7-SA1-12	A7-SA1-12^14-RMP	14-Dec-04	6.5	7.0	Aroclor-1254	0.0038	ug/kg	U	480238.074	1346812.284
A7-SA1-12	A7-SA1-12^14-RMP	14-Dec-04	6.5	7.0	Aroclor-1260	0.0038	ug/kg	U	480238.074	1346812.284
A7-SA1-12	A7-SA1-12^14-RMP	14-Dec-04	6.5	7.0	Cesium-137	0.0293	pCi/g	U	480238.074	1346812.284
A7-SA1-12	A7-SA1-12^14-RMP	14-Dec-04	6.5	7.0	Lead-210	0.668	pCi/g	U	480238.074	1346812.284
A7-SA1-12	A7-SA1-12^14-RMP	14-Dec-04	6.5	7.0	Radium-226	0.862	pCi/g	-	480238.074	1346812.284
A7-SA1-12	A7-SA1-12^14-RMP	14-Dec-04	6.5	7.0	Radium-228	0.568	pCi/g	-	480238.074	1346812.284
A7-SA1-12	A7-SA1-12^14-RMP	14-Dec-04	6.5	7.0	Technetium-99	0.806	pCi/g	U	480238.074	1346812.284
A7-SA1-12	A7-SA1-12^14-RMP	14-Dec-04	6.5	7.0	Thorium-228	0.564	pCi/g	-	480238.074	1346812.284
A7-SA1-12	A7-SA1-12^14-RMP	14-Dec-04	6.5	7.0	Thorium-230	3.97	pCi/g	J	480238.074	1346812.284
A7-SA1-12	A7-SA1-12^14-RMP	14-Dec-04	6.5	7.0	Thorium-232	0.568	pCi/g	-	480238.074	1346812.284

APPENDIX A
PREDESIGN CHARACTERIZATION DATA FOR AREA 7 SILOS AND GENERAL AREA

Boring	Sample ID	Sample Date	Sample Depth (feet)		Parameter	Result	Units	Qualifier	Northing	Easting
			Top	Bottom						
A7-SA1-12	A7-SA1-12^14-RMP	14-Dec-04	6.5	7.0	Uranium, Total	1.83	mg/kg	U	480238.074	1346812.284
A7-SA1-12	A7-SA1-12^16-RMP	14-Dec-04	7.5	8.0	Arsenic	6.41	mg/kg	J	480238.074	1346812.284
A7-SA1-12	A7-SA1-12^16-RMP	14-Dec-04	7.5	8.0	Beryllium	0.319	mg/kg	-	480238.074	1346812.284
A7-SA1-12	A7-SA1-12^16-RMP	14-Dec-04	7.5	8.0	Lead	10.3	mg/kg	J	480238.074	1346812.284
A7-SA1-12	A7-SA1-12^16-RMP	14-Dec-04	7.5	8.0	Manganese	354	mg/kg	J	480238.074	1346812.284
A7-SA1-12	A7-SA1-12^16-RMP	14-Dec-04	7.5	8.0	Aroclor-1254	0.0036	ug/kg	U	480238.074	1346812.284
A7-SA1-12	A7-SA1-12^16-RMP	14-Dec-04	7.5	8.0	Aroclor-1260	0.0036	ug/kg	U	480238.074	1346812.284
A7-SA1-12	A7-SA1-12^16-RMP	14-Dec-04	7.5	8.0	Cesium-137	0.0389	pCi/g	U	480238.074	1346812.284
A7-SA1-12	A7-SA1-12^16-RMP	14-Dec-04	7.5	8.0	Lead-210	0.654	pCi/g	U	480238.074	1346812.284
A7-SA1-12	A7-SA1-12^16-RMP	14-Dec-04	7.5	8.0	Radium-226	0.781	pCi/g	-	480238.074	1346812.284
A7-SA1-12	A7-SA1-12^16-RMP	14-Dec-04	7.5	8.0	Radium-228	0.625	pCi/g	-	480238.074	1346812.284
A7-SA1-12	A7-SA1-12^16-RMP	14-Dec-04	7.5	8.0	Technetium-99	0.76	pCi/g	U	480238.074	1346812.284
A7-SA1-12	A7-SA1-12^16-RMP	14-Dec-04	7.5	8.0	Thorium-228	0.712	pCi/g	-	480238.074	1346812.284
A7-SA1-12	A7-SA1-12^16-RMP	14-Dec-04	7.5	8.0	Thorium-230	3.11	pCi/g	J	480238.074	1346812.284
A7-SA1-12	A7-SA1-12^16-RMP	14-Dec-04	7.5	8.0	Thorium-232	0.625	pCi/g	-	480238.074	1346812.284
A7-SA1-12	A7-SA1-12^16-RMP	14-Dec-04	7.5	8.0	Uranium, Total	4.51	mg/kg	-	480238.074	1346812.284
A7-SA1-13	A7-SA1-13^1-RMP	13-Dec-04	0.0	0.5	Arsenic	15.2	mg/kg	-	480686.647	1347189.9
A7-SA1-13	A7-SA1-13^1-RMP	13-Dec-04	0.0	0.5	Beryllium	1.06	mg/kg	J	480686.647	1347189.9
A7-SA1-13	A7-SA1-13^1-RMP	13-Dec-04	0.0	0.5	Lead	16.9	mg/kg	J	480686.647	1347189.9
A7-SA1-13	A7-SA1-13^1-RMP	13-Dec-04	0.0	0.5	Manganese	572	mg/kg	-	480686.647	1347189.9
A7-SA1-13	A7-SA1-13^1-RMP	13-Dec-04	0.0	0.5	Aroclor-1254	0.0042	ug/kg	U	480686.647	1347189.9
A7-SA1-13	A7-SA1-13^1-RMP	13-Dec-04	0.0	0.5	Aroclor-1260	0.0042	ug/kg	U	480686.647	1347189.9
A7-SA1-13	A7-SA1-13^1-RMP	13-Dec-04	0.0	0.5	Cesium-137	0.097	pCi/g	U	480686.647	1347189.9
A7-SA1-13	A7-SA1-13^1-RMP	13-Dec-04	0.0	0.5	Lead-210	1.01	pCi/g	J	480686.647	1347189.9
A7-SA1-13	A7-SA1-13^1-RMP	13-Dec-04	0.0	0.5	Radium-226	1.66	pCi/g	-	480686.647	1347189.9
A7-SA1-13	A7-SA1-13^1-RMP	13-Dec-04	0.0	0.5	Radium-228	1.29	pCi/g	-	480686.647	1347189.9
A7-SA1-13	A7-SA1-13^1-RMP	13-Dec-04	0.0	0.5	Technetium-99	0.855	pCi/g	U	480686.647	1347189.9
A7-SA1-13	A7-SA1-13^1-RMP	13-Dec-04	0.0	0.5	Thorium-228	1.32	pCi/g	-	480686.647	1347189.9
A7-SA1-13	A7-SA1-13^1-RMP	13-Dec-04	0.0	0.5	Thorium-230	4.06	pCi/g	J	480686.647	1347189.9
A7-SA1-13	A7-SA1-13^1-RMP	13-Dec-04	0.0	0.5	Thorium-232	1.29	pCi/g	-	480686.647	1347189.9
A7-SA1-13	A7-SA1-13^1-RMP	13-Dec-04	0.0	0.5	Uranium, Total	4.8	mg/kg	U	480686.647	1347189.9
A7-SA1-13	A7-SA1-13^4-RMP	13-Dec-04	1.5	2.0	Arsenic	13.3	mg/kg	-	480686.647	1347189.9
A7-SA1-13	A7-SA1-13^4-RMP	13-Dec-04	1.5	2.0	Beryllium	0.807	mg/kg	J	480686.647	1347189.9
A7-SA1-13	A7-SA1-13^4-RMP	13-Dec-04	1.5	2.0	Lead	19	mg/kg	J	480686.647	1347189.9
A7-SA1-13	A7-SA1-13^4-RMP	13-Dec-04	1.5	2.0	Manganese	852	mg/kg	-	480686.647	1347189.9

5982

Boring	Sample ID	Sample Date	Sample Depth (feet)		Parameter	Result	Units	Qualifier	Northing	Easting
			Top	Bottom						
A7-SA1-13	A7-SA1-13^4-RMP	13-Dec-04	1.5	2.0	Aroclor-1254	0.0042	ug/kg	U	480686.647	1347189.9
A7-SA1-13	A7-SA1-13^4-RMP	13-Dec-04	1.5	2.0	Aroclor-1260	0.0042	ug/kg	U	480686.647	1347189.9
A7-SA1-13	A7-SA1-13^4-RMP	13-Dec-04	1.5	2.0	Cesium-137	0.103	pCi/g	U	480686.647	1347189.9
A7-SA1-13	A7-SA1-13^4-RMP	13-Dec-04	1.5	2.0	Lead-210	1.01	pCi/g	J	480686.647	1347189.9
A7-SA1-13	A7-SA1-13^4-RMP	13-Dec-04	1.5	2.0	Radium-226	1.51	pCi/g	-	480686.647	1347189.9
A7-SA1-13	A7-SA1-13^4-RMP	13-Dec-04	1.5	2.0	Radium-228	1.21	pCi/g	-	480686.647	1347189.9
A7-SA1-13	A7-SA1-13^4-RMP	13-Dec-04	1.5	2.0	Technetium-99	0.869	pCi/g	U	480686.647	1347189.9
A7-SA1-13	A7-SA1-13^4-RMP	13-Dec-04	1.5	2.0	Thorium-228	1.19	pCi/g	-	480686.647	1347189.9
A7-SA1-13	A7-SA1-13^4-RMP	13-Dec-04	1.5	2.0	Thorium-230	4.65	pCi/g	J	480686.647	1347189.9
A7-SA1-13	A7-SA1-13^4-RMP	13-Dec-04	1.5	2.0	Thorium-232	1.21	pCi/g	-	480686.647	1347189.9
A7-SA1-13	A7-SA1-13^4-RMP	13-Dec-04	1.5	2.0	Uranium, Total	11.2	mg/kg	-	480686.647	1347189.9
A7-SA1-13	A7-SA1-13^6-RMP	13-Dec-04	2.5	3.0	Arsenic	20	mg/kg	-	480686.647	1347189.9
A7-SA1-13	A7-SA1-13^6-RMP	13-Dec-04	2.5	3.0	Beryllium	0.645	mg/kg	J	480686.647	1347189.9
A7-SA1-13	A7-SA1-13^6-RMP	13-Dec-04	2.5	3.0	Lead	11.3	mg/kg	J	480686.647	1347189.9
A7-SA1-13	A7-SA1-13^6-RMP	13-Dec-04	2.5	3.0	Manganese	370	mg/kg	J	480686.647	1347189.9
A7-SA1-13	A7-SA1-13^6-RMP	13-Dec-04	2.5	3.0	Aroclor-1254	0.004	ug/kg	U	480686.647	1347189.9
A7-SA1-13	A7-SA1-13^6-RMP	13-Dec-04	2.5	3.0	Aroclor-1260	0.004	ug/kg	U	480686.647	1347189.9
A7-SA1-13	A7-SA1-13^6-RMP	13-Dec-04	2.5	3.0	Cesium-137	0.113	pCi/g	U	480686.647	1347189.9
A7-SA1-13	A7-SA1-13^6-RMP	13-Dec-04	2.5	3.0	Lead-210	1.13	pCi/g	J	480686.647	1347189.9
A7-SA1-13	A7-SA1-13^6-RMP	13-Dec-04	2.5	3.0	Radium-226	1	pCi/g	-	480686.647	1347189.9
A7-SA1-13	A7-SA1-13^6-RMP	13-Dec-04	2.5	3.0	Radium-228	0.692	pCi/g	-	480686.647	1347189.9
A7-SA1-13	A7-SA1-13^6-RMP	13-Dec-04	2.5	3.0	Technetium-99	0.773	pCi/g	U	480686.647	1347189.9
A7-SA1-13	A7-SA1-13^6-RMP	13-Dec-04	2.5	3.0	Thorium-228	0.72	pCi/g	-	480686.647	1347189.9
A7-SA1-13	A7-SA1-13^6-RMP	13-Dec-04	2.5	3.0	Thorium-230	2.64	pCi/g	J	480686.647	1347189.9
A7-SA1-13	A7-SA1-13^6-RMP	13-Dec-04	2.5	3.0	Thorium-232	0.692	pCi/g	-	480686.647	1347189.9
A7-SA1-13	A7-SA1-13^6-RMP	13-Dec-04	2.5	3.0	Uranium, Total	4.95	mg/kg	U	480686.647	1347189.9
A7-SA1-13	A7-SA1-13^8-RMP	13-Dec-04	3.5	4.0	Arsenic	4.23	mg/kg	J	480686.647	1347189.9
A7-SA1-13	A7-SA1-13^8-RMP	13-Dec-04	3.5	4.0	Beryllium	0.438	mg/kg	J	480686.647	1347189.9
A7-SA1-13	A7-SA1-13^8-RMP	13-Dec-04	3.5	4.0	Lead	8.74	mg/kg	J	480686.647	1347189.9
A7-SA1-13	A7-SA1-13^8-RMP	13-Dec-04	3.5	4.0	Manganese	406	mg/kg	J	480686.647	1347189.9
A7-SA1-13	A7-SA1-13^8-RMP	13-Dec-04	3.5	4.0	Aroclor-1254	0.004	ug/kg	U	480686.647	1347189.9
A7-SA1-13	A7-SA1-13^8-RMP	13-Dec-04	3.5	4.0	Aroclor-1260	0.004	ug/kg	U	480686.647	1347189.9
A7-SA1-13	A7-SA1-13^8-RMP	13-Dec-04	3.5	4.0	Cesium-137	0.102	pCi/g	U	480686.647	1347189.9
A7-SA1-13	A7-SA1-13^8-RMP	13-Dec-04	3.5	4.0	Lead-210	0.716	pCi/g	U	480686.647	1347189.9
A7-SA1-13	A7-SA1-13^8-RMP	13-Dec-04	3.5	4.0	Radium-226	0.836	pCi/g	-	480686.647	1347189.9

APPENDIX A
PREDESIGN CHARACTERIZATION DATA FOR AREA 7 SILOS AND GENERAL AREA

Boring	Sample ID	Sample Date	Sample Depth (feet)		Parameter	Result	Units	Qualifier	Northing	Easting
			Top	Bottom						
A7-SA1-13	A7-SA1-13^8-RMP	13-Dec-04	3.5	4.0	Radium-228	0.542	pCi/g	-	480686.647	1347189.9
A7-SA1-13	A7-SA1-13^8-RMP	13-Dec-04	3.5	4.0	Technetium-99	0.782	pCi/g	U	480686.647	1347189.9
A7-SA1-13	A7-SA1-13^8-RMP	13-Dec-04	3.5	4.0	Thorium-228	0.451	pCi/g	-	480686.647	1347189.9
A7-SA1-13	A7-SA1-13^8-RMP	13-Dec-04	3.5	4.0	Thorium-230	4.05	pCi/g	J	480686.647	1347189.9
A7-SA1-13	A7-SA1-13^8-RMP	13-Dec-04	3.5	4.0	Thorium-232	0.542	pCi/g	-	480686.647	1347189.9
A7-SA1-13	A7-SA1-13^8-RMP	13-Dec-04	3.5	4.0	Uranium, Total	4.72	mg/kg	U	480686.647	1347189.9
A7-SA1-13	A7-SA1-13^10-RMP	13-Dec-04	4.5	5.0	Arsenic	4.97	mg/kg	J	480686.647	1347189.9
A7-SA1-13	A7-SA1-13^10-RMP	13-Dec-04	4.5	5.0	Beryllium	0.56	mg/kg	J	480686.647	1347189.9
A7-SA1-13	A7-SA1-13^10-RMP	13-Dec-04	4.5	5.0	Lead	8.73	mg/kg	J	480686.647	1347189.9
A7-SA1-13	A7-SA1-13^10-RMP	13-Dec-04	4.5	5.0	Manganese	656	mg/kg	-	480686.647	1347189.9
A7-SA1-13	A7-SA1-13^10-RMP	13-Dec-04	4.5	5.0	Aroclor-1254	0.004	ug/kg	U	480686.647	1347189.9
A7-SA1-13	A7-SA1-13^10-RMP	13-Dec-04	4.5	5.0	Aroclor-1260	0.004	ug/kg	U	480686.647	1347189.9
A7-SA1-13	A7-SA1-13^10-RMP	13-Dec-04	4.5	5.0	Cesium-137	0.0305	pCi/g	U	480686.647	1347189.9
A7-SA1-13	A7-SA1-13^10-RMP	13-Dec-04	4.5	5.0	Lead-210	0.726	pCi/g	U	480686.647	1347189.9
A7-SA1-13	A7-SA1-13^10-RMP	13-Dec-04	4.5	5.0	Radium-226	0.852	pCi/g	-	480686.647	1347189.9
A7-SA1-13	A7-SA1-13^10-RMP	13-Dec-04	4.5	5.0	Radium-228	0.639	pCi/g	-	480686.647	1347189.9
A7-SA1-13	A7-SA1-13^10-RMP	13-Dec-04	4.5	5.0	Technetium-99	0.768	pCi/g	U	480686.647	1347189.9
A7-SA1-13	A7-SA1-13^10-RMP	13-Dec-04	4.5	5.0	Thorium-228	0.637	pCi/g	-	480686.647	1347189.9
A7-SA1-13	A7-SA1-13^10-RMP	13-Dec-04	4.5	5.0	Thorium-230	4.38	pCi/g	J	480686.647	1347189.9
A7-SA1-13	A7-SA1-13^10-RMP	13-Dec-04	4.5	5.0	Thorium-232	0.639	pCi/g	-	480686.647	1347189.9
A7-SA1-13	A7-SA1-13^10-RMP	13-Dec-04	4.5	5.0	Uranium, Total	1.92	mg/kg	U	480686.647	1347189.9
A7-SA1-13	A7-SA1-13^12-RMP	13-Dec-04	5.5	6.0	Arsenic	7.05	mg/kg	-	480686.647	1347189.9
A7-SA1-13	A7-SA1-13^12-RMP	13-Dec-04	5.5	6.0	Beryllium	0.566	mg/kg	J	480686.647	1347189.9
A7-SA1-13	A7-SA1-13^12-RMP	13-Dec-04	5.5	6.0	Lead	13.2	mg/kg	J	480686.647	1347189.9
A7-SA1-13	A7-SA1-13^12-RMP	13-Dec-04	5.5	6.0	Manganese	263	mg/kg	J	480686.647	1347189.9
A7-SA1-13	A7-SA1-13^12-RMP	13-Dec-04	5.5	6.0	Aroclor-1254	0.0041	ug/kg	U	480686.647	1347189.9
A7-SA1-13	A7-SA1-13^12-RMP	13-Dec-04	5.5	6.0	Aroclor-1260	0.0041	ug/kg	U	480686.647	1347189.9
A7-SA1-13	A7-SA1-13^12-RMP	13-Dec-04	5.5	6.0	Cesium-137	0.0895	pCi/g	U	480686.647	1347189.9
A7-SA1-13	A7-SA1-13^12-RMP	13-Dec-04	5.5	6.0	Lead-210	0.981	pCi/g	J	480686.647	1347189.9
A7-SA1-13	A7-SA1-13^12-RMP	13-Dec-04	5.5	6.0	Radium-226	1.03	pCi/g	-	480686.647	1347189.9
A7-SA1-13	A7-SA1-13^12-RMP	13-Dec-04	5.5	6.0	Radium-228	0.83	pCi/g	-	480686.647	1347189.9
A7-SA1-13	A7-SA1-13^12-RMP	13-Dec-04	5.5	6.0	Technetium-99	0.8	pCi/g	U	480686.647	1347189.9
A7-SA1-13	A7-SA1-13^12-RMP	13-Dec-04	5.5	6.0	Thorium-228	0.757	pCi/g	-	480686.647	1347189.9
A7-SA1-13	A7-SA1-13^12-RMP	13-Dec-04	5.5	6.0	Thorium-230	4.64	pCi/g	J	480686.647	1347189.9
A7-SA1-13	A7-SA1-13^12-RMP	13-Dec-04	5.5	6.0	Thorium-232	0.83	pCi/g	-	480686.647	1347189.9

Boring	Sample ID	Sample Date	Sample Depth (feet)		Parameter	Result	Units	Qualifier	Northing	Easting
			Top	Bottom						
A7-SA1-13	A7-SA1-13^12-RMP	13-Dec-04	5.5	6.0	Uranium, Total	4.44	mg/kg	U	480686.647	1347189.9
A7-SA1-13	A7-SA1-13^14-RMP	13-Dec-04	6.5	7.0	Arsenic	3.45	mg/kg	J	480686.647	1347189.9
A7-SA1-13	A7-SA1-13^14-RMP	13-Dec-04	6.5	7.0	Beryllium	0.729	mg/kg	J	480686.647	1347189.9
A7-SA1-13	A7-SA1-13^14-RMP	13-Dec-04	6.5	7.0	Lead	13.1	mg/kg	J	480686.647	1347189.9
A7-SA1-13	A7-SA1-13^14-RMP	13-Dec-04	6.5	7.0	Manganese	281	mg/kg	J	480686.647	1347189.9
A7-SA1-13	A7-SA1-13^14-RMP	13-Dec-04	6.5	7.0	Aroclor-1254	0.004	ug/kg	U	480686.647	1347189.9
A7-SA1-13	A7-SA1-13^14-RMP	13-Dec-04	6.5	7.0	Aroclor-1260	0.004	ug/kg	U	480686.647	1347189.9
A7-SA1-13	A7-SA1-13^14-RMP	13-Dec-04	6.5	7.0	Cesium-137	0.108	pCi/g	U	480686.647	1347189.9
A7-SA1-13	A7-SA1-13^14-RMP	13-Dec-04	6.5	7.0	Lead-210	1.08	pCi/g	J	480686.647	1347189.9
A7-SA1-13	A7-SA1-13^14-RMP	13-Dec-04	6.5	7.0	Radium-226	1.21	pCi/g	-	480686.647	1347189.9
A7-SA1-13	A7-SA1-13^14-RMP	13-Dec-04	6.5	7.0	Radium-228	1.13	pCi/g	-	480686.647	1347189.9
A7-SA1-13	A7-SA1-13^14-RMP	13-Dec-04	6.5	7.0	Technetium-99	0.83	pCi/g	U	480686.647	1347189.9
A7-SA1-13	A7-SA1-13^14-RMP	13-Dec-04	6.5	7.0	Thorium-228	1.1	pCi/g	-	480686.647	1347189.9
A7-SA1-13	A7-SA1-13^14-RMP	13-Dec-04	6.5	7.0	Thorium-230	3.94	pCi/g	J	480686.647	1347189.9
A7-SA1-13	A7-SA1-13^14-RMP	13-Dec-04	6.5	7.0	Thorium-232	1.13	pCi/g	-	480686.647	1347189.9
A7-SA1-13	A7-SA1-13^14-RMP	13-Dec-04	6.5	7.0	Uranium, Total	5.11	mg/kg	U	480686.647	1347189.9
A7-SA1-13	A7-SA1-13^16-RMP	13-Dec-04	7.5	8.0	Arsenic	6.36	mg/kg	-	480686.647	1347189.9
A7-SA1-13	A7-SA1-13^16-RMP	13-Dec-04	7.5	8.0	Beryllium	0.688	mg/kg	J	480686.647	1347189.9
A7-SA1-13	A7-SA1-13^16-RMP	13-Dec-04	7.5	8.0	Lead	12.7	mg/kg	J	480686.647	1347189.9
A7-SA1-13	A7-SA1-13^16-RMP	13-Dec-04	7.5	8.0	Manganese	745	mg/kg	-	480686.647	1347189.9
A7-SA1-13	A7-SA1-13^16-RMP	13-Dec-04	7.5	8.0	Aroclor-1254	0.004	ug/kg	U	480686.647	1347189.9
A7-SA1-13	A7-SA1-13^16-RMP	13-Dec-04	7.5	8.0	Aroclor-1260	0.004	ug/kg	U	480686.647	1347189.9
A7-SA1-13	A7-SA1-13^16-RMP	13-Dec-04	7.5	8.0	Cesium-137	0.0933	pCi/g	U	480686.647	1347189.9
A7-SA1-13	A7-SA1-13^16-RMP	13-Dec-04	7.5	8.0	Lead-210	0.712	pCi/g	U	480686.647	1347189.9
A7-SA1-13	A7-SA1-13^16-RMP	13-Dec-04	7.5	8.0	Radium-226	0.935	pCi/g	-	480686.647	1347189.9
A7-SA1-13	A7-SA1-13^16-RMP	13-Dec-04	7.5	8.0	Radium-228	0.82	pCi/g	-	480686.647	1347189.9
A7-SA1-13	A7-SA1-13^16-RMP	13-Dec-04	7.5	8.0	Technetium-99	0.83	pCi/g	U	480686.647	1347189.9
A7-SA1-13	A7-SA1-13^16-RMP	13-Dec-04	7.5	8.0	Thorium-228	0.83	pCi/g	-	480686.647	1347189.9
A7-SA1-13	A7-SA1-13^16-RMP	13-Dec-04	7.5	8.0	Thorium-230	4.4	pCi/g	J	480686.647	1347189.9
A7-SA1-13	A7-SA1-13^16-RMP	13-Dec-04	7.5	8.0	Thorium-232	0.82	pCi/g	-	480686.647	1347189.9
A7-SA1-13	A7-SA1-13^16-RMP	13-Dec-04	7.5	8.0	Uranium, Total	4.56	mg/kg	U	480686.647	1347189.9
A7-SA1-14	A7-SA1-14^1-RMP	14-Dec-04	0.0	0.5	Arsenic	5.86	mg/kg	-	480238.537	1347211.068
A7-SA1-14	A7-SA1-14^1-RMP	14-Dec-04	0.0	0.5	Beryllium	0.45	mg/kg	J	480238.537	1347211.068
A7-SA1-14	A7-SA1-14^1-RMP	14-Dec-04	0.0	0.5	Lead	9.54	mg/kg	J	480238.537	1347211.068
A7-SA1-14	A7-SA1-14^1-RMP	14-Dec-04	0.0	0.5	Manganese	536	mg/kg	-	480238.537	1347211.068

APPENDIX A
PREDESIGN CHARACTERIZATION DATA FOR AREA 7 SILOS AND GENERAL AREA

Boring	Sample ID	Sample Date	Sample Depth (feet)		Parameter	Result	Units	Qualifier	Northing	Easting
			Top	Bottom						
A7-SA1-14	A7-SA1-14^1-RMP	14-Dec-04	0.0	0.5	Aroclor-1254	0.0038	ug/kg	U	480238.537	1347211.068
A7-SA1-14	A7-SA1-14^1-RMP	14-Dec-04	0.0	0.5	Aroclor-1260	0.0038	ug/kg	U	480238.537	1347211.068
A7-SA1-14	A7-SA1-14^1-RMP	14-Dec-04	0.0	0.5	Cesium-137	0.0886	pCi/g	U	480238.537	1347211.068
A7-SA1-14	A7-SA1-14^1-RMP	14-Dec-04	0.0	0.5	Lead-210	0.691	pCi/g	U	480238.537	1347211.068
A7-SA1-14	A7-SA1-14^1-RMP	14-Dec-04	0.0	0.5	Radium-226	1.39	pCi/g	-	480238.537	1347211.068
A7-SA1-14	A7-SA1-14^1-RMP	14-Dec-04	0.0	0.5	Radium-228	1.03	pCi/g	-	480238.537	1347211.068
A7-SA1-14	A7-SA1-14^1-RMP	14-Dec-04	0.0	0.5	Technetium-99	0.815	pCi/g	U	480238.537	1347211.068
A7-SA1-14	A7-SA1-14^1-RMP	14-Dec-04	0.0	0.5	Thorium-228	1.09	pCi/g	-	480238.537	1347211.068
A7-SA1-14	A7-SA1-14^1-RMP	14-Dec-04	0.0	0.5	Thorium-230	4.61	pCi/g	J	480238.537	1347211.068
A7-SA1-14	A7-SA1-14^1-RMP	14-Dec-04	0.0	0.5	Thorium-232	1.03	pCi/g	-	480238.537	1347211.068
A7-SA1-14	A7-SA1-14^1-RMP	14-Dec-04	0.0	0.5	Uranium, Total	12.2	mg/kg	-	480238.537	1347211.068
A7-SA1-14	A7-SA1-14^4-RMP	14-Dec-04	1.5	2.0	Arsenic	11.9	mg/kg	-	480238.537	1347211.068
A7-SA1-14	A7-SA1-14^4-RMP	14-Dec-04	1.5	2.0	Beryllium	0.66	mg/kg	J	480238.537	1347211.068
A7-SA1-14	A7-SA1-14^4-RMP	14-Dec-04	1.5	2.0	Lead	16.4	mg/kg	J	480238.537	1347211.068
A7-SA1-14	A7-SA1-14^4-RMP	14-Dec-04	1.5	2.0	Manganese	455	mg/kg	J	480238.537	1347211.068
A7-SA1-14	A7-SA1-14^4-RMP	14-Dec-04	1.5	2.0	Aroclor-1254	0.004	ug/kg	U	480238.537	1347211.068
A7-SA1-14	A7-SA1-14^4-RMP	14-Dec-04	1.5	2.0	Aroclor-1260	0.004	ug/kg	U	480238.537	1347211.068
A7-SA1-14	A7-SA1-14^4-RMP	14-Dec-04	1.5	2.0	Cesium-137	0.109	pCi/g	U	480238.537	1347211.068
A7-SA1-14	A7-SA1-14^4-RMP	14-Dec-04	1.5	2.0	Lead-210	0.69	pCi/g	J	480238.537	1347211.068
A7-SA1-14	A7-SA1-14^4-RMP	14-Dec-04	1.5	2.0	Radium-226	1.42	pCi/g	-	480238.537	1347211.068
A7-SA1-14	A7-SA1-14^4-RMP	14-Dec-04	1.5	2.0	Radium-228	1.1	pCi/g	-	480238.537	1347211.068
A7-SA1-14	A7-SA1-14^4-RMP	14-Dec-04	1.5	2.0	Technetium-99	0.844	pCi/g	U	480238.537	1347211.068
A7-SA1-14	A7-SA1-14^4-RMP	14-Dec-04	1.5	2.0	Thorium-228	1.19	pCi/g	-	480238.537	1347211.068
A7-SA1-14	A7-SA1-14^4-RMP	14-Dec-04	1.5	2.0	Thorium-230	4.73	pCi/g	J	480238.537	1347211.068
A7-SA1-14	A7-SA1-14^4-RMP	14-Dec-04	1.5	2.0	Thorium-232	1.1	pCi/g	-	480238.537	1347211.068
A7-SA1-14	A7-SA1-14^4-RMP	14-Dec-04	1.5	2.0	Uranium, Total	4.36	mg/kg	U	480238.537	1347211.068
A7-SA1-14	A7-SA1-14^6-RMP	14-Dec-04	2.5	3.0	Arsenic	4.87	mg/kg	J	480238.537	1347211.068
A7-SA1-14	A7-SA1-14^6-RMP	14-Dec-04	2.5	3.0	Beryllium	0.431	mg/kg	J	480238.537	1347211.068
A7-SA1-14	A7-SA1-14^6-RMP	14-Dec-04	2.5	3.0	Lead	12.7	mg/kg	J	480238.537	1347211.068
A7-SA1-14	A7-SA1-14^6-RMP	14-Dec-04	2.5	3.0	Manganese	427	mg/kg	J	480238.537	1347211.068
A7-SA1-14	A7-SA1-14^6-RMP	14-Dec-04	2.5	3.0	Aroclor-1254	0.004	ug/kg	U	480238.537	1347211.068
A7-SA1-14	A7-SA1-14^6-RMP	14-Dec-04	2.5	3.0	Aroclor-1260	0.004	ug/kg	U	480238.537	1347211.068
A7-SA1-14	A7-SA1-14^6-RMP	14-Dec-04	2.5	3.0	Cesium-137	0.0885	pCi/g	U	480238.537	1347211.068
A7-SA1-14	A7-SA1-14^6-RMP	14-Dec-04	2.5	3.0	Lead-210	1.08	pCi/g	J	480238.537	1347211.068
A7-SA1-14	A7-SA1-14^6-RMP	14-Dec-04	2.5	3.0	Radium-226	1.48	pCi/g	-	480238.537	1347211.068

Boring	Sample ID	Sample Date	Sample Depth (feet)		Parameter	Result	Units	Qualifier	Northing	Easting
			Top	Bottom						
A7-SA1-14	A7-SA1-14^6-RMP	14-Dec-04	2.5	3.0	Radium-228	0.809	pCi/g	-	480238.537	1347211.068
A7-SA1-14	A7-SA1-14^6-RMP	14-Dec-04	2.5	3.0	Technetium-99	0.807	pCi/g	U	480238.537	1347211.068
A7-SA1-14	A7-SA1-14^6-RMP	14-Dec-04	2.5	3.0	Thorium-228	0.77	pCi/g	-	480238.537	1347211.068
A7-SA1-14	A7-SA1-14^6-RMP	14-Dec-04	2.5	3.0	Thorium-230	4.59	pCi/g	J	480238.537	1347211.068
A7-SA1-14	A7-SA1-14^6-RMP	14-Dec-04	2.5	3.0	Thorium-232	0.809	pCi/g	-	480238.537	1347211.068
A7-SA1-14	A7-SA1-14^6-RMP	14-Dec-04	2.5	3.0	Uranium, Total	11.4	mg/kg	-	480238.537	1347211.068
A7-SA1-14	A7-SA1-14^8-RMP	14-Dec-04	3.5	4.0	Arsenic	3.53	mg/kg	J	480238.537	1347211.068
A7-SA1-14	A7-SA1-14^8-RMP	14-Dec-04	3.5	4.0	Beryllium	0.278	mg/kg	J	480238.537	1347211.068
A7-SA1-14	A7-SA1-14^8-RMP	14-Dec-04	3.5	4.0	Lead	11.2	mg/kg	J	480238.537	1347211.068
A7-SA1-14	A7-SA1-14^8-RMP	14-Dec-04	3.5	4.0	Manganese	396	mg/kg	J	480238.537	1347211.068
A7-SA1-14	A7-SA1-14^8-RMP	14-Dec-04	3.5	4.0	Aroclor-1254	0.0035	ug/kg	-	480238.537	1347211.068
A7-SA1-14	A7-SA1-14^8-RMP	14-Dec-04	3.5	4.0	Aroclor-1260	0.0011	ug/kg	J	480238.537	1347211.068
A7-SA1-14	A7-SA1-14^8-RMP	14-Dec-04	3.5	4.0	Cesium-137	0.0967	pCi/g	U	480238.537	1347211.068
A7-SA1-14	A7-SA1-14^8-RMP	14-Dec-04	3.5	4.0	Lead-210	0.954	pCi/g	J	480238.537	1347211.068
A7-SA1-14	A7-SA1-14^8-RMP	14-Dec-04	3.5	4.0	Radium-226	1.24	pCi/g	-	480238.537	1347211.068
A7-SA1-14	A7-SA1-14^8-RMP	14-Dec-04	3.5	4.0	Radium-228	0.656	pCi/g	-	480238.537	1347211.068
A7-SA1-14	A7-SA1-14^8-RMP	14-Dec-04	3.5	4.0	Technetium-99	0.783	pCi/g	U	480238.537	1347211.068
A7-SA1-14	A7-SA1-14^8-RMP	14-Dec-04	3.5	4.0	Thorium-228	0.634	pCi/g	-	480238.537	1347211.068
A7-SA1-14	A7-SA1-14^8-RMP	14-Dec-04	3.5	4.0	Thorium-230	5.37	pCi/g	J	480238.537	1347211.068
A7-SA1-14	A7-SA1-14^8-RMP	14-Dec-04	3.5	4.0	Thorium-232	0.656	pCi/g	-	480238.537	1347211.068
A7-SA1-14	A7-SA1-14^8-RMP	14-Dec-04	3.5	4.0	Uranium, Total	7.95	mg/kg	J	480238.537	1347211.068
A7-SA1-14	A7-SA1-14^10-RMP	14-Dec-04	4.5	5.0	Arsenic	8.24	mg/kg	-	480238.537	1347211.068
A7-SA1-14	A7-SA1-14^10-RMP	14-Dec-04	4.5	5.0	Beryllium	0.397	mg/kg	J	480238.537	1347211.068
A7-SA1-14	A7-SA1-14^10-RMP	14-Dec-04	4.5	5.0	Lead	10.9	mg/kg	J	480238.537	1347211.068
A7-SA1-14	A7-SA1-14^10-RMP	14-Dec-04	4.5	5.0	Manganese	415	mg/kg	J	480238.537	1347211.068
A7-SA1-14	A7-SA1-14^10-RMP	14-Dec-04	4.5	5.0	Aroclor-1254	0.0015	ug/kg	J	480238.537	1347211.068
A7-SA1-14	A7-SA1-14^10-RMP	14-Dec-04	4.5	5.0	Aroclor-1260	0.0038	ug/kg	U	480238.537	1347211.068
A7-SA1-14	A7-SA1-14^10-RMP	14-Dec-04	4.5	5.0	Cesium-137	0.12	pCi/g	U	480238.537	1347211.068
A7-SA1-14	A7-SA1-14^10-RMP	14-Dec-04	4.5	5.0	Lead-210	1.49	pCi/g	-	480238.537	1347211.068
A7-SA1-14	A7-SA1-14^10-RMP	14-Dec-04	4.5	5.0	Radium-226	1.45	pCi/g	-	480238.537	1347211.068
A7-SA1-14	A7-SA1-14^10-RMP	14-Dec-04	4.5	5.0	Radium-228	0.997	pCi/g	-	480238.537	1347211.068
A7-SA1-14	A7-SA1-14^10-RMP	14-Dec-04	4.5	5.0	Technetium-99	0.81	pCi/g	U	480238.537	1347211.068
A7-SA1-14	A7-SA1-14^10-RMP	14-Dec-04	4.5	5.0	Thorium-228	0.899	pCi/g	-	480238.537	1347211.068
A7-SA1-14	A7-SA1-14^10-RMP	14-Dec-04	4.5	5.0	Thorium-230	4.71	pCi/g	J	480238.537	1347211.068
A7-SA1-14	A7-SA1-14^10-RMP	14-Dec-04	4.5	5.0	Thorium-232	0.997	pCi/g	-	480238.537	1347211.068

APPENDIX A
PREDESIGN CHARACTERIZATION DATA FOR AREA 7 SILOS AND GENERAL AREA

Boring	Sample ID	Sample Date	Sample Depth (feet)		Parameter	Result	Units	Qualifier	Northing	Easting
			Top	Bottom						
A7-SA1-14	A7-SA1-14^10-RMP	14-Dec-04	4.5	5.0	Uranium, Total	10.3	mg/kg	-	480238.537	1347211.068
A7-SA1-14	A7-SA1-14^12-RMP	14-Dec-04	5.5	6.0	Arsenic	7.16	mg/kg	J	480238.537	1347211.068
A7-SA1-14	A7-SA1-14^12-RMP	14-Dec-04	5.5	6.0	Beryllium	0.236	mg/kg	J	480238.537	1347211.068
A7-SA1-14	A7-SA1-14^12-RMP	14-Dec-04	5.5	6.0	Lead	6.98	mg/kg	J	480238.537	1347211.068
A7-SA1-14	A7-SA1-14^12-RMP	14-Dec-04	5.5	6.0	Manganese	785	mg/kg	-	480238.537	1347211.068
A7-SA1-14	A7-SA1-14^12-RMP	14-Dec-04	5.5	6.0	Aroclor-1254	0.00075	ug/kg	J	480238.537	1347211.068
A7-SA1-14	A7-SA1-14^12-RMP	14-Dec-04	5.5	6.0	Aroclor-1260	0.0038	ug/kg	U	480238.537	1347211.068
A7-SA1-14	A7-SA1-14^12-RMP	14-Dec-04	5.5	6.0	Cesium-137	0.092	pCi/g	U	480238.537	1347211.068
A7-SA1-14	A7-SA1-14^12-RMP	14-Dec-04	5.5	6.0	Lead-210	0.709	pCi/g	U	480238.537	1347211.068
A7-SA1-14	A7-SA1-14^12-RMP	14-Dec-04	5.5	6.0	Radium-226	0.967	pCi/g	-	480238.537	1347211.068
A7-SA1-14	A7-SA1-14^12-RMP	14-Dec-04	5.5	6.0	Radium-228	0.545	pCi/g	-	480238.537	1347211.068
A7-SA1-14	A7-SA1-14^12-RMP	14-Dec-04	5.5	6.0	Technetium-99	0.771	pCi/g	U	480238.537	1347211.068
A7-SA1-14	A7-SA1-14^12-RMP	14-Dec-04	5.5	6.0	Thorium-228	0.514	pCi/g	-	480238.537	1347211.068
A7-SA1-14	A7-SA1-14^12-RMP	14-Dec-04	5.5	6.0	Thorium-230	4.65	pCi/g	J	480238.537	1347211.068
A7-SA1-14	A7-SA1-14^12-RMP	14-Dec-04	5.5	6.0	Thorium-232	0.545	pCi/g	-	480238.537	1347211.068
A7-SA1-14	A7-SA1-14^12-RMP	14-Dec-04	5.5	6.0	Uranium, Total	6.28	mg/kg	J	480238.537	1347211.068
A7-SA1-14	A7-SA1-14^14-RMP	14-Dec-04	6.5	7.0	Arsenic	6.7	mg/kg	-	480238.537	1347211.068
A7-SA1-14	A7-SA1-14^14-RMP	14-Dec-04	6.5	7.0	Beryllium	0.265	mg/kg	J	480238.537	1347211.068
A7-SA1-14	A7-SA1-14^14-RMP	14-Dec-04	6.5	7.0	Lead	7.65	mg/kg	J	480238.537	1347211.068
A7-SA1-14	A7-SA1-14^14-RMP	14-Dec-04	6.5	7.0	Manganese	341	mg/kg	J	480238.537	1347211.068
A7-SA1-14	A7-SA1-14^14-RMP	14-Dec-04	6.5	7.0	Aroclor-1254	0.0039	ug/kg	U	480238.537	1347211.068
A7-SA1-14	A7-SA1-14^14-RMP	14-Dec-04	6.5	7.0	Aroclor-1260	0.0039	ug/kg	U	480238.537	1347211.068
A7-SA1-14	A7-SA1-14^14-RMP	14-Dec-04	6.5	7.0	Cesium-137	0.0932	pCi/g	U	480238.537	1347211.068
A7-SA1-14	A7-SA1-14^14-RMP	14-Dec-04	6.5	7.0	Lead-210	0.712	pCi/g	U	480238.537	1347211.068
A7-SA1-14	A7-SA1-14^14-RMP	14-Dec-04	6.5	7.0	Radium-226	1.18	pCi/g	-	480238.537	1347211.068
A7-SA1-14	A7-SA1-14^14-RMP	14-Dec-04	6.5	7.0	Radium-228	0.789	pCi/g	-	480238.537	1347211.068
A7-SA1-14	A7-SA1-14^14-RMP	14-Dec-04	6.5	7.0	Technetium-99	0.776	pCi/g	U	480238.537	1347211.068
A7-SA1-14	A7-SA1-14^14-RMP	14-Dec-04	6.5	7.0	Thorium-228	0.837	pCi/g	-	480238.537	1347211.068
A7-SA1-14	A7-SA1-14^14-RMP	14-Dec-04	6.5	7.0	Thorium-230	4.31	pCi/g	J	480238.537	1347211.068
A7-SA1-14	A7-SA1-14^14-RMP	14-Dec-04	6.5	7.0	Thorium-232	0.789	pCi/g	-	480238.537	1347211.068
A7-SA1-14	A7-SA1-14^14-RMP	14-Dec-04	6.5	7.0	Uranium, Total	4.11	mg/kg	U	480238.537	1347211.068
A7-SA1-14	A7-SA1-14^16-RMP	14-Dec-04	7.5	8.0	Arsenic	3.39	mg/kg	J	480238.537	1347211.068
A7-SA1-14	A7-SA1-14^16-RMP	14-Dec-04	7.5	8.0	Beryllium	0.224	mg/kg	J	480238.537	1347211.068
A7-SA1-14	A7-SA1-14^16-RMP	14-Dec-04	7.5	8.0	Lead	8.07	mg/kg	J	480238.537	1347211.068
A7-SA1-14	A7-SA1-14^16-RMP	14-Dec-04	7.5	8.0	Manganese	294	mg/kg	J	480238.537	1347211.068

Boring	Sample ID	Sample Date	Sample Depth (feet)		Parameter	Result	Units	Qualifier	Northing	Easting
			Top	Bottom						
A7-SA1-14	A7-SA1-14^16-RMP	14-Dec-04	7.5	8.0	Aroclor-1254	0.0042	ug/kg	U	480238.537	1347211.068
A7-SA1-14	A7-SA1-14^16-RMP	14-Dec-04	7.5	8.0	Aroclor-1260	0.0042	ug/kg	U	480238.537	1347211.068
A7-SA1-14	A7-SA1-14^16-RMP	14-Dec-04	7.5	8.0	Cesium-137	0.0845	pCi/g	U	480238.537	1347211.068
A7-SA1-14	A7-SA1-14^16-RMP	14-Dec-04	7.5	8.0	Lead-210	0.714	pCi/g	U	480238.537	1347211.068
A7-SA1-14	A7-SA1-14^16-RMP	14-Dec-04	7.5	8.0	Radium-226	0.849	pCi/g	-	480238.537	1347211.068
A7-SA1-14	A7-SA1-14^16-RMP	14-Dec-04	7.5	8.0	Radium-228	0.563	pCi/g	-	480238.537	1347211.068
A7-SA1-14	A7-SA1-14^16-RMP	14-Dec-04	7.5	8.0	Technetium-99	0.773	pCi/g	U	480238.537	1347211.068
A7-SA1-14	A7-SA1-14^16-RMP	14-Dec-04	7.5	8.0	Thorium-228	0.623	pCi/g	-	480238.537	1347211.068
A7-SA1-14	A7-SA1-14^16-RMP	14-Dec-04	7.5	8.0	Thorium-230	3.24	pCi/g	J	480238.537	1347211.068
A7-SA1-14	A7-SA1-14^16-RMP	14-Dec-04	7.5	8.0	Thorium-232	0.563	pCi/g	-	480238.537	1347211.068
A7-SA1-14	A7-SA1-14^16-RMP	14-Dec-04	7.5	8.0	Uranium, Total	4.24	mg/kg	U	480238.537	1347211.068
A7-SA1-2	A7-SA1-2^1-RMP	16-Dec-04	0.0	0.5	Arsenic	4.11	mg/kg	NV	480645.653	1346794.022
A7-SA1-2	A7-SA1-2^1-RMP	16-Dec-04	0.0	0.5	Beryllium	0.356	mg/kg	NV	480645.653	1346794.022
A7-SA1-2	A7-SA1-2^1-RMP	16-Dec-04	0.0	0.5	Lead	9.91	mg/kg	NV	480645.653	1346794.022
A7-SA1-2	A7-SA1-2^1-RMP	16-Dec-04	0.0	0.5	Manganese	397	mg/kg	NV	480645.653	1346794.022
A7-SA1-2	A7-SA1-2^1-RMP	16-Dec-04	0.0	0.5	Aroclor-1254	0.0083	ug/kg	NV	480645.653	1346794.022
A7-SA1-2	A7-SA1-2^1-RMP	16-Dec-04	0.0	0.5	Aroclor-1260	0.0036	ug/kg	NV	480645.653	1346794.022
A7-SA1-2	A7-SA1-2^1-RMP	16-Dec-04	0.0	0.5	Cesium-137	0.111	pCi/g	NV	480645.653	1346794.022
A7-SA1-2	A7-SA1-2^1-RMP	16-Dec-04	0.0	0.5	Lead-210	3.12	pCi/g	NV	480645.653	1346794.022
A7-SA1-2	A7-SA1-2^1-RMP	16-Dec-04	0.0	0.5	Radium-226	3.35	pCi/g	NV	480645.653	1346794.022
A7-SA1-2	A7-SA1-2^1-RMP	16-Dec-04	0.0	0.5	Radium-228	2.34	pCi/g	NV	480645.653	1346794.022
A7-SA1-2	A7-SA1-2^1-RMP	16-Dec-04	0.0	0.5	Technetium-99	0.779	pCi/g	UNV	480645.653	1346794.022
A7-SA1-2	A7-SA1-2^1-RMP	16-Dec-04	0.0	0.5	Thorium-228	2.25	pCi/g	NV	480645.653	1346794.022
A7-SA1-2	A7-SA1-2^1-RMP	16-Dec-04	0.0	0.5	Thorium-230	7.43	pCi/g	NV	480645.653	1346794.022
A7-SA1-2	A7-SA1-2^1-RMP	16-Dec-04	0.0	0.5	Thorium-232	2.34	pCi/g	NV	480645.653	1346794.022
A7-SA1-2	A7-SA1-2^1-RMP	16-Dec-04	0.0	0.5	Uranium, Total	23.7	mg/kg	NV	480645.653	1346794.022
A7-SA1-2	A7-SA1-2^3-RMP	16-Dec-04	1.0	1.5	Arsenic	5.67	mg/kg	NV	480645.653	1346794.022
A7-SA1-2	A7-SA1-2^3-RMP	16-Dec-04	1.0	1.5	Beryllium	0.45	mg/kg	NV	480645.653	1346794.022
A7-SA1-2	A7-SA1-2^3-RMP	16-Dec-04	1.0	1.5	Lead	15	mg/kg	NV	480645.653	1346794.022
A7-SA1-2	A7-SA1-2^3-RMP	16-Dec-04	1.0	1.5	Manganese	528	mg/kg	NV	480645.653	1346794.022
A7-SA1-2	A7-SA1-2^3-RMP	16-Dec-04	1.0	1.5	Aroclor-1254	0.0077	ug/kg	NV	480645.653	1346794.022
A7-SA1-2	A7-SA1-2^3-RMP	16-Dec-04	1.0	1.5	Aroclor-1260	0.0029	ug/kg	NV	480645.653	1346794.022
A7-SA1-2	A7-SA1-2^3-RMP	16-Dec-04	1.0	1.5	Cesium-137	0.148	pCi/g	NV	480645.653	1346794.022
A7-SA1-2	A7-SA1-2^3-RMP	16-Dec-04	1.0	1.5	Lead-210	13.9	pCi/g	NV	480645.653	1346794.022
A7-SA1-2	A7-SA1-2^3-RMP	16-Dec-04	1.0	1.5	Radium-226	27.9	pCi/g	NV	480645.653	1346794.022

APPENDIX A
PREDESIGN CHARACTERIZATION DATA FOR AREA 7 SILOS AND GENERAL AREA

Boring	Sample ID	Sample Date	Sample Depth (feet)		Parameter	Result	Units	Qualifier	Northing	Easting
			Top	Bottom						
A7-SA1-2	A7-SA1-2^3-RMP	16-Dec-04	1.0	1.5	Radium-228	1.44	pCi/g	NV	480645.653	1346794.022
A7-SA1-2	A7-SA1-2^3-RMP	16-Dec-04	1.0	1.5	Technetium-99	0.784	pCi/g	UNV	480645.653	1346794.022
A7-SA1-2	A7-SA1-2^3-RMP	16-Dec-04	1.0	1.5	Thorium-228	1.39	pCi/g	NV	480645.653	1346794.022
A7-SA1-2	A7-SA1-2^3-RMP	16-Dec-04	1.0	1.5	Thorium-230	9.03	pCi/g	NV	480645.653	1346794.022
A7-SA1-2	A7-SA1-2^3-RMP	16-Dec-04	1.0	1.5	Thorium-232	1.44	pCi/g	NV	480645.653	1346794.022
A7-SA1-2	A7-SA1-2^3-RMP	16-Dec-04	1.0	1.5	Uranium, Total	27.9	mg/kg	NV	480645.653	1346794.022
A7-SA1-2	A7-SA1-2^6-RMP	16-Dec-04	2.5	3.0	Arsenic	11.8	mg/kg	NV	480645.653	1346794.022
A7-SA1-2	A7-SA1-2^6-RMP	16-Dec-04	2.5	3.0	Beryllium	0.61	mg/kg	NV	480645.653	1346794.022
A7-SA1-2	A7-SA1-2^6-RMP	16-Dec-04	2.5	3.0	Lead	31.6	mg/kg	NV	480645.653	1346794.022
A7-SA1-2	A7-SA1-2^6-RMP	16-Dec-04	2.5	3.0	Manganese	461	mg/kg	NV	480645.653	1346794.022
A7-SA1-2	A7-SA1-2^6-RMP	16-Dec-04	2.5	3.0	Aroclor-1254	0.0022	ug/kg	NV	480645.653	1346794.022
A7-SA1-2	A7-SA1-2^6-RMP	16-Dec-04	2.5	3.0	Aroclor-1260	0.0041	ug/kg	UNV	480645.653	1346794.022
A7-SA1-2	A7-SA1-2^6-RMP	16-Dec-04	2.5	3.0	Cesium-137	0.248	pCi/g	NV	480645.653	1346794.022
A7-SA1-2	A7-SA1-2^6-RMP	16-Dec-04	2.5	3.0	Lead-210	46.3	pCi/g	NV	480645.653	1346794.022
A7-SA1-2	A7-SA1-2^6-RMP	16-Dec-04	2.5	3.0	Radium-226	71.5	pCi/g	NV	480645.653	1346794.022
A7-SA1-2	A7-SA1-2^6-RMP	16-Dec-04	2.5	3.0	Radium-228	1.13	pCi/g	NV	480645.653	1346794.022
A7-SA1-2	A7-SA1-2^6-RMP	16-Dec-04	2.5	3.0	Technetium-99	0.813	pCi/g	UNV	480645.653	1346794.022
A7-SA1-2	A7-SA1-2^6-RMP	16-Dec-04	2.5	3.0	Thorium-228	1.14	pCi/g	NV	480645.653	1346794.022
A7-SA1-2	A7-SA1-2^6-RMP	16-Dec-04	2.5	3.0	Thorium-230	16.6	pCi/g	NV	480645.653	1346794.022
A7-SA1-2	A7-SA1-2^6-RMP	16-Dec-04	2.5	3.0	Thorium-232	1.13	pCi/g	NV	480645.653	1346794.022
A7-SA1-2	A7-SA1-2^6-RMP	16-Dec-04	2.5	3.0	Uranium, Total	27	mg/kg	NV	480645.653	1346794.022
A7-SA1-2	A7-SA1-2^8-RM	18-Apr-05	3.5	4.0	Lead-210	186	pCi/g	-	480645.653	1346794.022
A7-SA1-2	A7-SA1-2^8-RM	18-Apr-05	3.5	4.0	Radium-226	334	pCi/g	-	480645.653	1346794.022
A7-SA1-2	A7-SA1-2^10-RM	18-Apr-05	4.5	5.0	Lead-210	34.2	pCi/g	-	480645.653	1346794.022
A7-SA1-2	A7-SA1-2^10-RM	18-Apr-05	4.5	5.0	Radium-226	27.4	pCi/g	-	480645.653	1346794.022
A7-SA1-2	A7-SA1-2^12-RM	18-Apr-05	5.5	6.0	Lead-210	12.8	pCi/g	-	480645.653	1346794.022
A7-SA1-2	A7-SA1-2^12-RM	18-Apr-05	5.5	6.0	Radium-226	3.81	pCi/g	-	480645.653	1346794.022
A7-SA1-2	A7-SA1-2^14-RM	18-Apr-05	6.5	7.0	Lead-210	9.99	pCi/g	-	480645.653	1346794.022
A7-SA1-2	A7-SA1-2^14-RM	18-Apr-05	6.5	7.0	Radium-226	3.58	pCi/g	-	480645.653	1346794.022
A7-SA1-2	A7-SA1-2^16-RM	18-Apr-05	7.5	8.0	Lead-210	7.19	pCi/g	-	480645.653	1346794.022
A7-SA1-2	A7-SA1-2^16-RM	18-Apr-05	7.5	8.0	Radium-226	3.31	pCi/g	-	480645.653	1346794.022
A7-SA1-3	A7-SA1-3^1-RMP	15-Dec-04	0.0	0.5	Arsenic	2.42	mg/kg	J	480366.267	1346772.256
A7-SA1-3	A7-SA1-3^1-RMP	15-Dec-04	0.0	0.5	Beryllium	0.308	mg/kg	U	480366.267	1346772.256
A7-SA1-3	A7-SA1-3^1-RMP	15-Dec-04	0.0	0.5	Lead	9.7	mg/kg	J	480366.267	1346772.256
A7-SA1-3	A7-SA1-3^1-RMP	15-Dec-04	0.0	0.5	Manganese	354	mg/kg	J	480366.267	1346772.256

5982

Boring	Sample ID	Sample Date	Sample Depth (feet)		Parameter	Result	Units	Qualifier	Northing	Easting
			Top	Bottom						
A7-SA1-3	A7-SA1-3^1-RMP	15-Dec-04	0.0	0.5	Aroclor-1254	0.00075	ug/kg	J	480366.267	1346772.256
A7-SA1-3	A7-SA1-3^1-RMP	15-Dec-04	0.0	0.5	Aroclor-1260	0.004	ug/kg	U	480366.267	1346772.256
A7-SA1-3	A7-SA1-3^1-RMP	15-Dec-04	0.0	0.5	Cesium-137	0.0481	pCi/g	U	480366.267	1346772.256
A7-SA1-3	A7-SA1-3^1-RMP	15-Dec-04	0.0	0.5	Lead-210	0.761	pCi/g	U	480366.267	1346772.256
A7-SA1-3	A7-SA1-3^1-RMP	15-Dec-04	0.0	0.5	Radium-226	1.07	pCi/g	-	480366.267	1346772.256
A7-SA1-3	A7-SA1-3^1-RMP	15-Dec-04	0.0	0.5	Radium-228	0.856	pCi/g	-	480366.267	1346772.256
A7-SA1-3	A7-SA1-3^1-RMP	15-Dec-04	0.0	0.5	Technetium-99	0.803	pCi/g	U	480366.267	1346772.256
A7-SA1-3	A7-SA1-3^1-RMP	15-Dec-04	0.0	0.5	Thorium-228	0.877	pCi/g	-	480366.267	1346772.256
A7-SA1-3	A7-SA1-3^1-RMP	15-Dec-04	0.0	0.5	Thorium-230	4.98	pCi/g	J	480366.267	1346772.256
A7-SA1-3	A7-SA1-3^1-RMP	15-Dec-04	0.0	0.5	Thorium-232	0.856	pCi/g	-	480366.267	1346772.256
A7-SA1-3	A7-SA1-3^1-RMP	15-Dec-04	0.0	0.5	Uranium, Total	6.07	mg/kg	-	480366.267	1346772.256
A7-SA1-3	A7-SA1-3^3-RMP	15-Dec-04	1.0	1.5	Arsenic	2.78	mg/kg	J	480366.267	1346772.256
A7-SA1-3	A7-SA1-3^3-RMP	15-Dec-04	1.0	1.5	Beryllium	0.157	mg/kg	U	480366.267	1346772.256
A7-SA1-3	A7-SA1-3^3-RMP	15-Dec-04	1.0	1.5	Lead	5.75	mg/kg	J	480366.267	1346772.256
A7-SA1-3	A7-SA1-3^3-RMP	15-Dec-04	1.0	1.5	Manganese	281	mg/kg	J	480366.267	1346772.256
A7-SA1-3	A7-SA1-3^3-RMP	15-Dec-04	1.0	1.5	Aroclor-1254	0.0039	ug/kg	U	480366.267	1346772.256
A7-SA1-3	A7-SA1-3^3-RMP	15-Dec-04	1.0	1.5	Aroclor-1260	0.0039	ug/kg	U	480366.267	1346772.256
A7-SA1-3	A7-SA1-3^3-RMP	15-Dec-04	1.0	1.5	Cesium-137	0.0243	pCi/g	U	480366.267	1346772.256
A7-SA1-3	A7-SA1-3^3-RMP	15-Dec-04	1.0	1.5	Lead-210	0.758	pCi/g	U	480366.267	1346772.256
A7-SA1-3	A7-SA1-3^3-RMP	15-Dec-04	1.0	1.5	Radium-226	0.668	pCi/g	-	480366.267	1346772.256
A7-SA1-3	A7-SA1-3^3-RMP	15-Dec-04	1.0	1.5	Radium-228	0.461	pCi/g	-	480366.267	1346772.256
A7-SA1-3	A7-SA1-3^3-RMP	15-Dec-04	1.0	1.5	Technetium-99	0.736	pCi/g	U	480366.267	1346772.256
A7-SA1-3	A7-SA1-3^3-RMP	15-Dec-04	1.0	1.5	Thorium-228	0.444	pCi/g	-	480366.267	1346772.256
A7-SA1-3	A7-SA1-3^3-RMP	15-Dec-04	1.0	1.5	Thorium-230	4.23	pCi/g	J	480366.267	1346772.256
A7-SA1-3	A7-SA1-3^3-RMP	15-Dec-04	1.0	1.5	Thorium-232	0.461	pCi/g	-	480366.267	1346772.256
A7-SA1-3	A7-SA1-3^3-RMP	15-Dec-04	1.0	1.5	Uranium, Total	3.63	mg/kg	-	480366.267	1346772.256
A7-SA1-3	A7-SA1-3^6-RMP	15-Dec-04	2.5	3.0	Arsenic	4.12	mg/kg	J	480366.267	1346772.256
A7-SA1-3	A7-SA1-3^6-RMP	15-Dec-04	2.5	3.0	Beryllium	0.274	mg/kg	U	480366.267	1346772.256
A7-SA1-3	A7-SA1-3^6-RMP	15-Dec-04	2.5	3.0	Lead	6.11	mg/kg	J	480366.267	1346772.256
A7-SA1-3	A7-SA1-3^6-RMP	15-Dec-04	2.5	3.0	Manganese	359	mg/kg	J	480366.267	1346772.256
A7-SA1-3	A7-SA1-3^6-RMP	15-Dec-04	2.5	3.0	Aroclor-1254	0.0037	ug/kg	U	480366.267	1346772.256
A7-SA1-3	A7-SA1-3^6-RMP	15-Dec-04	2.5	3.0	Aroclor-1260	0.0037	ug/kg	U	480366.267	1346772.256
A7-SA1-3	A7-SA1-3^6-RMP	15-Dec-04	2.5	3.0	Cesium-137	0.0273	pCi/g	U	480366.267	1346772.256
A7-SA1-3	A7-SA1-3^6-RMP	15-Dec-04	2.5	3.0	Lead-210	0.764	pCi/g	U	480366.267	1346772.256
A7-SA1-3	A7-SA1-3^6-RMP	15-Dec-04	2.5	3.0	Radium-226	0.689	pCi/g	-	480366.267	1346772.256

APPENDIX A
PREDESIGN CHARACTERIZATION DATA FOR AREA 7 SILOS AND GENERAL AREA

Boring	Sample ID	Sample Date	Sample Depth (feet)		Parameter	Result	Units	Qualifier	Northing	Easting
			Top	Bottom						
A7-SA1-3	A7-SA1-3^6-RMP	15-Dec-04	2.5	3.0	Radium-228	0.546	pCi/g	-	480366.267	1346772.256
A7-SA1-3	A7-SA1-3^6-RMP	15-Dec-04	2.5	3.0	Technetium-99	0.754	pCi/g	U	480366.267	1346772.256
A7-SA1-3	A7-SA1-3^6-RMP	15-Dec-04	2.5	3.0	Thorium-228	0.553	pCi/g	-	480366.267	1346772.256
A7-SA1-3	A7-SA1-3^6-RMP	15-Dec-04	2.5	3.0	Thorium-230	2.62	pCi/g	J	480366.267	1346772.256
A7-SA1-3	A7-SA1-3^6-RMP	15-Dec-04	2.5	3.0	Thorium-232	0.546	pCi/g	-	480366.267	1346772.256
A7-SA1-3	A7-SA1-3^6-RMP	15-Dec-04	2.5	3.0	Uranium, Total	3.01	mg/kg	-	480366.267	1346772.256
A7-SA1-33	A7-SA1-33^1-RM	3-Jan-05	0.0	0.5	Arsenic	5.5	mg/kg	NV	480537.299	1346886.135
A7-SA1-33	A7-SA1-33^1-RM	3-Jan-05	0.0	0.5	Beryllium	0.546	mg/kg	NV	480537.299	1346886.135
A7-SA1-33	A7-SA1-33^1-RM	3-Jan-05	0.0	0.5	Lead	17.2	mg/kg	NV	480537.299	1346886.135
A7-SA1-33	A7-SA1-33^1-RM	3-Jan-05	0.0	0.5	Manganese	359	mg/kg	NV	480537.299	1346886.135
A7-SA1-33	A7-SA1-33^1-RM	3-Jan-05	0.0	0.5	Cesium-137	0.118	pCi/g	NV	480537.299	1346886.135
A7-SA1-33	A7-SA1-33^1-RM	3-Jan-05	0.0	0.5	Lead-210	1.2	pCi/g	NV	480537.299	1346886.135
A7-SA1-33	A7-SA1-33^1-RM	3-Jan-05	0.0	0.5	Radium-226	2.08	pCi/g	NV	480537.299	1346886.135
A7-SA1-33	A7-SA1-33^1-RM	3-Jan-05	0.0	0.5	Radium-228	0.919	pCi/g	NV	480537.299	1346886.135
A7-SA1-33	A7-SA1-33^1-RM	3-Jan-05	0.0	0.5	Technetium-99	0.87	pCi/g	UNV	480537.299	1346886.135
A7-SA1-33	A7-SA1-33^1-RM	3-Jan-05	0.0	0.5	Thorium-228	0.905	pCi/g	NV	480537.299	1346886.135
A7-SA1-33	A7-SA1-33^1-RM	3-Jan-05	0.0	0.5	Thorium-230	6.35	pCi/g	NV	480537.299	1346886.135
A7-SA1-33	A7-SA1-33^1-RM	3-Jan-05	0.0	0.5	Thorium-232	0.919	pCi/g	NV	480537.299	1346886.135
A7-SA1-33	A7-SA1-33^1-RM	3-Jan-05	0.0	0.5	Uranium, Total	17.5	mg/kg	NV	480537.299	1346886.135
A7-SA1-33	A7-SA1-33^3-RM	3-Jan-05	1.0	1.5	Arsenic	8.63	mg/kg	NV	480537.299	1346886.135
A7-SA1-33	A7-SA1-33^3-RM	3-Jan-05	1.0	1.5	Beryllium	0.483	mg/kg	NV	480537.299	1346886.135
A7-SA1-33	A7-SA1-33^3-RM	3-Jan-05	1.0	1.5	Lead	16.3	mg/kg	NV	480537.299	1346886.135
A7-SA1-33	A7-SA1-33^3-RM	3-Jan-05	1.0	1.5	Manganese	254	mg/kg	NV	480537.299	1346886.135
A7-SA1-33	A7-SA1-33^3-RM	3-Jan-05	1.0	1.5	Cesium-137	0.0552	pCi/g	UNV	480537.299	1346886.135
A7-SA1-33	A7-SA1-33^3-RM	3-Jan-05	1.0	1.5	Lead-210	1.44	pCi/g	NV	480537.299	1346886.135
A7-SA1-33	A7-SA1-33^3-RM	3-Jan-05	1.0	1.5	Radium-226	2.15	pCi/g	NV	480537.299	1346886.135
A7-SA1-33	A7-SA1-33^3-RM	3-Jan-05	1.0	1.5	Radium-228	1.34	pCi/g	NV	480537.299	1346886.135
A7-SA1-33	A7-SA1-33^3-RM	3-Jan-05	1.0	1.5	Technetium-99	0.91	pCi/g	UNV	480537.299	1346886.135
A7-SA1-33	A7-SA1-33^3-RM	3-Jan-05	1.0	1.5	Thorium-228	1.35	pCi/g	NV	480537.299	1346886.135
A7-SA1-33	A7-SA1-33^3-RM	3-Jan-05	1.0	1.5	Thorium-230	5.91	pCi/g	NV	480537.299	1346886.135
A7-SA1-33	A7-SA1-33^3-RM	3-Jan-05	1.0	1.5	Thorium-232	1.34	pCi/g	NV	480537.299	1346886.135
A7-SA1-33	A7-SA1-33^3-RM	3-Jan-05	1.0	1.5	Uranium, Total	30.4	mg/kg	NV	480537.299	1346886.135
A7-SA1-33	A7-SA1-33^5-RM	3-Jan-05	2.0	2.5	Arsenic	9.97	mg/kg	NV	480537.299	1346886.135
A7-SA1-33	A7-SA1-33^5-RM	3-Jan-05	2.0	2.5	Beryllium	0.714	mg/kg	NV	480537.299	1346886.135
A7-SA1-33	A7-SA1-33^5-RM	3-Jan-05	2.0	2.5	Lead	18.2	mg/kg	NV	480537.299	1346886.135

5982

Boring	Sample ID	Sample Date	Sample Depth (feet)		Parameter	Result	Units	Qualifier	Northing	Easting
			Top	Bottom						
A7-SA1-33	A7-SA1-33^5-RM	3-Jan-05	2.0	2.5	Manganese	275	mg/kg	NV	480537.299	1346886.135
A7-SA1-33	A7-SA1-33^5-RM	3-Jan-05	2.0	2.5	Cesium-137	0.0563	pCi/g	UNV	480537.299	1346886.135
A7-SA1-33	A7-SA1-33^5-RM	3-Jan-05	2.0	2.5	Lead-210	0.788	pCi/g	UNV	480537.299	1346886.135
A7-SA1-33	A7-SA1-33^5-RM	3-Jan-05	2.0	2.5	Radium-226	1.62	pCi/g	NV	480537.299	1346886.135
A7-SA1-33	A7-SA1-33^5-RM	3-Jan-05	2.0	2.5	Radium-228	1.31	pCi/g	NV	480537.299	1346886.135
A7-SA1-33	A7-SA1-33^5-RM	3-Jan-05	2.0	2.5	Technetium-99	0.973	pCi/g	UNV	480537.299	1346886.135
A7-SA1-33	A7-SA1-33^5-RM	3-Jan-05	2.0	2.5	Thorium-228	1.3	pCi/g	NV	480537.299	1346886.135
A7-SA1-33	A7-SA1-33^5-RM	3-Jan-05	2.0	2.5	Thorium-230	3.86	pCi/g	NV	480537.299	1346886.135
A7-SA1-33	A7-SA1-33^5-RM	3-Jan-05	2.0	2.5	Thorium-232	1.31	pCi/g	NV	480537.299	1346886.135
A7-SA1-33	A7-SA1-33^5-RM	3-Jan-05	2.0	2.5	Uranium, Total	3.23	mg/kg	UNV	480537.299	1346886.135
A7-SA1-33	A7-SA1-33^7-RM	3-Jan-05	3.0	3.5	Arsenic	13.1	mg/kg	NV	480537.299	1346886.135
A7-SA1-33	A7-SA1-33^7-RM	3-Jan-05	3.0	3.5	Beryllium	1.07	mg/kg	NV	480537.299	1346886.135
A7-SA1-33	A7-SA1-33^7-RM	3-Jan-05	3.0	3.5	Lead	26.4	mg/kg	NV	480537.299	1346886.135
A7-SA1-33	A7-SA1-33^7-RM	3-Jan-05	3.0	3.5	Manganese	470	mg/kg	NV	480537.299	1346886.135
A7-SA1-33	A7-SA1-33^7-RM	3-Jan-05	3.0	3.5	Cesium-137	0.0555	pCi/g	UNV	480537.299	1346886.135
A7-SA1-33	A7-SA1-33^7-RM	3-Jan-05	3.0	3.5	Lead-210	0.796	pCi/g	NV	480537.299	1346886.135
A7-SA1-33	A7-SA1-33^7-RM	3-Jan-05	3.0	3.5	Radium-226	1.59	pCi/g	NV	480537.299	1346886.135
A7-SA1-33	A7-SA1-33^7-RM	3-Jan-05	3.0	3.5	Radium-228	1.32	pCi/g	NV	480537.299	1346886.135
A7-SA1-33	A7-SA1-33^7-RM	3-Jan-05	3.0	3.5	Technetium-99	0.95	pCi/g	UNV	480537.299	1346886.135
A7-SA1-33	A7-SA1-33^7-RM	3-Jan-05	3.0	3.5	Thorium-228	1.25	pCi/g	NV	480537.299	1346886.135
A7-SA1-33	A7-SA1-33^7-RM	3-Jan-05	3.0	3.5	Thorium-230	4.14	pCi/g	NV	480537.299	1346886.135
A7-SA1-33	A7-SA1-33^7-RM	3-Jan-05	3.0	3.5	Thorium-232	1.32	pCi/g	NV	480537.299	1346886.135
A7-SA1-33	A7-SA1-33^7-RM	3-Jan-05	3.0	3.5	Uranium, Total	3.26	mg/kg	UNV	480537.299	1346886.135
A7-SA1-33	A7-SA1-33^9-RM	3-Jan-05	4.0	4.5	Arsenic	11.6	mg/kg	NV	480537.299	1346886.135
A7-SA1-33	A7-SA1-33^9-RM	3-Jan-05	4.0	4.5	Beryllium	0.961	mg/kg	NV	480537.299	1346886.135
A7-SA1-33	A7-SA1-33^9-RM	3-Jan-05	4.0	4.5	Lead	19.4	mg/kg	NV	480537.299	1346886.135
A7-SA1-33	A7-SA1-33^9-RM	3-Jan-05	4.0	4.5	Manganese	553	mg/kg	NV	480537.299	1346886.135
A7-SA1-33	A7-SA1-33^9-RM	3-Jan-05	4.0	4.5	Cesium-137	0.0566	pCi/g	UNV	480537.299	1346886.135
A7-SA1-33	A7-SA1-33^9-RM	3-Jan-05	4.0	4.5	Lead-210	0.823	pCi/g	UNV	480537.299	1346886.135
A7-SA1-33	A7-SA1-33^9-RM	3-Jan-05	4.0	4.5	Radium-226	1.67	pCi/g	NV	480537.299	1346886.135
A7-SA1-33	A7-SA1-33^9-RM	3-Jan-05	4.0	4.5	Radium-228	1.27	pCi/g	NV	480537.299	1346886.135
A7-SA1-33	A7-SA1-33^9-RM	3-Jan-05	4.0	4.5	Technetium-99	0.92	pCi/g	UNV	480537.299	1346886.135
A7-SA1-33	A7-SA1-33^9-RM	3-Jan-05	4.0	4.5	Thorium-228	1.25	pCi/g	NV	480537.299	1346886.135
A7-SA1-33	A7-SA1-33^9-RM	3-Jan-05	4.0	4.5	Thorium-230	3.84	pCi/g	NV	480537.299	1346886.135
A7-SA1-33	A7-SA1-33^9-RM	3-Jan-05	4.0	4.5	Thorium-232	1.27	pCi/g	NV	480537.299	1346886.135

APPENDIX A
PREDESIGN CHARACTERIZATION DATA FOR AREA 7 SILOS AND GENERAL AREA

Boring	Sample ID	Sample Date	Sample Depth (feet)		Parameter	Result	Units	Qualifier	Northing	Easting
			Top	Bottom						
A7-SA1-33	A7-SA1-33^9-RM	3-Jan-05	4.0	4.5	Uranium, Total	6.75	mg/kg	NV	480537.299	1346886.135
A7-SA1-33	A7-SA1-33^11-RM	3-Jan-05	5.0	5.5	Arsenic	10.2	mg/kg	NV	480537.299	1346886.135
A7-SA1-33	A7-SA1-33^11-RM	3-Jan-05	5.0	5.5	Beryllium	0.875	mg/kg	NV	480537.299	1346886.135
A7-SA1-33	A7-SA1-33^11-RM	3-Jan-05	5.0	5.5	Lead	18.3	mg/kg	NV	480537.299	1346886.135
A7-SA1-33	A7-SA1-33^11-RM	3-Jan-05	5.0	5.5	Manganese	1160	mg/kg	NV	480537.299	1346886.135
A7-SA1-33	A7-SA1-33^11-RM	3-Jan-05	5.0	5.5	Cesium-137	0.0594	pCi/g	UNV	480537.299	1346886.135
A7-SA1-33	A7-SA1-33^11-RM	3-Jan-05	5.0	5.5	Lead-210	0.822	pCi/g	UNV	480537.299	1346886.135
A7-SA1-33	A7-SA1-33^11-RM	3-Jan-05	5.0	5.5	Radium-226	1.51	pCi/g	NV	480537.299	1346886.135
A7-SA1-33	A7-SA1-33^11-RM	3-Jan-05	5.0	5.5	Radium-228	1.07	pCi/g	NV	480537.299	1346886.135
A7-SA1-33	A7-SA1-33^11-RM	3-Jan-05	5.0	5.5	Technetium-99	0.938	pCi/g	UNV	480537.299	1346886.135
A7-SA1-33	A7-SA1-33^11-RM	3-Jan-05	5.0	5.5	Thorium-228	1.07	pCi/g	NV	480537.299	1346886.135
A7-SA1-33	A7-SA1-33^11-RM	3-Jan-05	5.0	5.5	Thorium-230	3.59	pCi/g	NV	480537.299	1346886.135
A7-SA1-33	A7-SA1-33^11-RM	3-Jan-05	5.0	5.5	Thorium-232	1.07	pCi/g	NV	480537.299	1346886.135
A7-SA1-33	A7-SA1-33^11-RM	3-Jan-05	5.0	5.5	Uranium, Total	3.33	mg/kg	UNV	480537.299	1346886.135
A7-SA1-33	A7-SA1-33^13-RM	3-Jan-05	6.0	6.5	Arsenic	12	mg/kg	NV	480537.299	1346886.135
A7-SA1-33	A7-SA1-33^13-RM	3-Jan-05	6.0	6.5	Beryllium	0.861	mg/kg	NV	480537.299	1346886.135
A7-SA1-33	A7-SA1-33^13-RM	3-Jan-05	6.0	6.5	Lead	19.3	mg/kg	NV	480537.299	1346886.135
A7-SA1-33	A7-SA1-33^13-RM	3-Jan-05	6.0	6.5	Manganese	596	mg/kg	NV	480537.299	1346886.135
A7-SA1-33	A7-SA1-33^13-RM	3-Jan-05	6.0	6.5	Cesium-137	0.0535	pCi/g	UNV	480537.299	1346886.135
A7-SA1-33	A7-SA1-33^13-RM	3-Jan-05	6.0	6.5	Lead-210	0.855	pCi/g	NV	480537.299	1346886.135
A7-SA1-33	A7-SA1-33^13-RM	3-Jan-05	6.0	6.5	Radium-226	1.78	pCi/g	NV	480537.299	1346886.135
A7-SA1-33	A7-SA1-33^13-RM	3-Jan-05	6.0	6.5	Radium-228	1.14	pCi/g	NV	480537.299	1346886.135
A7-SA1-33	A7-SA1-33^13-RM	3-Jan-05	6.0	6.5	Technetium-99	0.934	pCi/g	UNV	480537.299	1346886.135
A7-SA1-33	A7-SA1-33^13-RM	3-Jan-05	6.0	6.5	Thorium-228	1.15	pCi/g	NV	480537.299	1346886.135
A7-SA1-33	A7-SA1-33^13-RM	3-Jan-05	6.0	6.5	Thorium-230	5.72	pCi/g	NV	480537.299	1346886.135
A7-SA1-33	A7-SA1-33^13-RM	3-Jan-05	6.0	6.5	Thorium-232	1.14	pCi/g	NV	480537.299	1346886.135
A7-SA1-33	A7-SA1-33^13-RM	3-Jan-05	6.0	6.5	Uranium, Total	3.06	mg/kg	UNV	480537.299	1346886.135
A7-SA1-33	A7-SA1-33^15-RM	3-Jan-05	7.0	7.5	Arsenic	11.4	mg/kg	NV	480537.299	1346886.135
A7-SA1-33	A7-SA1-33^15-RM	3-Jan-05	7.0	7.5	Beryllium	0.794	mg/kg	NV	480537.299	1346886.135
A7-SA1-33	A7-SA1-33^15-RM	3-Jan-05	7.0	7.5	Lead	18.4	mg/kg	NV	480537.299	1346886.135
A7-SA1-33	A7-SA1-33^15-RM	3-Jan-05	7.0	7.5	Manganese	706	mg/kg	NV	480537.299	1346886.135
A7-SA1-33	A7-SA1-33^15-RM	3-Jan-05	7.0	7.5	Cesium-137	0.0501	pCi/g	UNV	480537.299	1346886.135
A7-SA1-33	A7-SA1-33^15-RM	3-Jan-05	7.0	7.5	Lead-210	1.18	pCi/g	NV	480537.299	1346886.135
A7-SA1-33	A7-SA1-33^15-RM	3-Jan-05	7.0	7.5	Radium-226	1.8	pCi/g	NV	480537.299	1346886.135
A7-SA1-33	A7-SA1-33^15-RM	3-Jan-05	7.0	7.5	Radium-228	1.14	pCi/g	NV	480537.299	1346886.135

5982

Boring	Sample ID	Sample Date	Sample Depth (feet)		Parameter	Result	Units	Qualifier	Northing	Easting
			Top	Bottom						
A7-SA1-33	A7-SA1-33^15-RM	3-Jan-05	7.0	7.5	Technetium-99	0.923	pCi/g	UNV	480537.299	1346886.135
A7-SA1-33	A7-SA1-33^15-RM	3-Jan-05	7.0	7.5	Thorium-228	1.18	pCi/g	NV	480537.299	1346886.135
A7-SA1-33	A7-SA1-33^15-RM	3-Jan-05	7.0	7.5	Thorium-230	4.24	pCi/g	NV	480537.299	1346886.135
A7-SA1-33	A7-SA1-33^15-RM	3-Jan-05	7.0	7.5	Thorium-232	1.14	pCi/g	NV	480537.299	1346886.135
A7-SA1-33	A7-SA1-33^15-RM	3-Jan-05	7.0	7.5	Uranium, Total	6.66	mg/kg	NV	480537.299	1346886.135
A7-SA1-33	A7-SA1-33^17-RM	3-Jan-05	8.0	8.5	Arsenic	9.99	mg/kg	NV	480537.299	1346886.135
A7-SA1-33	A7-SA1-33^17-RM	3-Jan-05	8.0	8.5	Beryllium	0.478	mg/kg	NV	480537.299	1346886.135
A7-SA1-33	A7-SA1-33^17-RM	3-Jan-05	8.0	8.5	Lead	11.2	mg/kg	NV	480537.299	1346886.135
A7-SA1-33	A7-SA1-33^17-RM	3-Jan-05	8.0	8.5	Manganese	453	mg/kg	NV	480537.299	1346886.135
A7-SA1-33	A7-SA1-33^17-RM	3-Jan-05	8.0	8.5	Cesium-137	0.0416	pCi/g	UNV	480537.299	1346886.135
A7-SA1-33	A7-SA1-33^17-RM	3-Jan-05	8.0	8.5	Lead-210	0.827	pCi/g	UNV	480537.299	1346886.135
A7-SA1-33	A7-SA1-33^17-RM	3-Jan-05	8.0	8.5	Radium-226	1.04	pCi/g	NV	480537.299	1346886.135
A7-SA1-33	A7-SA1-33^17-RM	3-Jan-05	8.0	8.5	Radium-228	0.561	pCi/g	NV	480537.299	1346886.135
A7-SA1-33	A7-SA1-33^17-RM	3-Jan-05	8.0	8.5	Technetium-99	0.821	pCi/g	UNV	480537.299	1346886.135
A7-SA1-33	A7-SA1-33^17-RM	3-Jan-05	8.0	8.5	Thorium-228	0.527	pCi/g	NV	480537.299	1346886.135
A7-SA1-33	A7-SA1-33^17-RM	3-Jan-05	8.0	8.5	Thorium-230	2.9	pCi/g	NV	480537.299	1346886.135
A7-SA1-33	A7-SA1-33^17-RM	3-Jan-05	8.0	8.5	Thorium-232	0.561	pCi/g	NV	480537.299	1346886.135
A7-SA1-33	A7-SA1-33^17-RM	3-Jan-05	8.0	8.5	Uranium, Total	7.91	mg/kg	NV	480537.299	1346886.135
A7-SA1-33	A7-SA1-33^19-RM	3-Jan-05	9.0	9.5	Arsenic	4.41	mg/kg	NV	480537.299	1346886.135
A7-SA1-33	A7-SA1-33^19-RM	3-Jan-05	9.0	9.5	Beryllium	0.22	mg/kg	NV	480537.299	1346886.135
A7-SA1-33	A7-SA1-33^19-RM	3-Jan-05	9.0	9.5	Lead	5.8	mg/kg	NV	480537.299	1346886.135
A7-SA1-33	A7-SA1-33^19-RM	3-Jan-05	9.0	9.5	Manganese	195	mg/kg	NV	480537.299	1346886.135
A7-SA1-33	A7-SA1-33^19-RM	3-Jan-05	9.0	9.5	Cesium-137	0.0469	pCi/g	UNV	480537.299	1346886.135
A7-SA1-33	A7-SA1-33^19-RM	3-Jan-05	9.0	9.5	Lead-210	0.833	pCi/g	UNV	480537.299	1346886.135
A7-SA1-33	A7-SA1-33^19-RM	3-Jan-05	9.0	9.5	Radium-226	0.978	pCi/g	NV	480537.299	1346886.135
A7-SA1-33	A7-SA1-33^19-RM	3-Jan-05	9.0	9.5	Radium-228	0.629	pCi/g	NV	480537.299	1346886.135
A7-SA1-33	A7-SA1-33^19-RM	3-Jan-05	9.0	9.5	Technetium-99	0.762	pCi/g	UNV	480537.299	1346886.135
A7-SA1-33	A7-SA1-33^19-RM	3-Jan-05	9.0	9.5	Thorium-228	0.615	pCi/g	NV	480537.299	1346886.135
A7-SA1-33	A7-SA1-33^19-RM	3-Jan-05	9.0	9.5	Thorium-230	3.75	pCi/g	NV	480537.299	1346886.135
A7-SA1-33	A7-SA1-33^19-RM	3-Jan-05	9.0	9.5	Thorium-232	0.629	pCi/g	NV	480537.299	1346886.135
A7-SA1-33	A7-SA1-33^19-RM	3-Jan-05	9.0	9.5	Uranium, Total	5.23	mg/kg	NV	480537.299	1346886.135
A7-SA1-33	A7-SA1-33^21-RM	3-Jan-05	10.0	10.5	Arsenic	3.21	mg/kg	NV	480537.299	1346886.135
A7-SA1-33	A7-SA1-33^21-RM	3-Jan-05	10.0	10.5	Beryllium	0.175	mg/kg	NV	480537.299	1346886.135
A7-SA1-33	A7-SA1-33^21-RM	3-Jan-05	10.0	10.5	Lead	6.13	mg/kg	NV	480537.299	1346886.135
A7-SA1-33	A7-SA1-33^21-RM	3-Jan-05	10.0	10.5	Manganese	216	mg/kg	NV	480537.299	1346886.135

APPENDIX A
PREDESIGN CHARACTERIZATION DATA FOR AREA 7 SILOS AND GENERAL AREA

Boring	Sample ID	Sample Date	Sample Depth (feet)		Parameter	Result	Units	Qualifier	Northing	Easting
			Top	Bottom						
A7-SA1-33	A7-SA1-33^21-RM	3-Jan-05	10.0	10.5	Cesium-137	0.0387	pCi/g	UNV	480537.299	1346886.135
A7-SA1-33	A7-SA1-33^21-RM	3-Jan-05	10.0	10.5	Lead-210	0.858	pCi/g	UNV	480537.299	1346886.135
A7-SA1-33	A7-SA1-33^21-RM	3-Jan-05	10.0	10.5	Radium-226	0.83	pCi/g	NV	480537.299	1346886.135
A7-SA1-33	A7-SA1-33^21-RM	3-Jan-05	10.0	10.5	Radium-228	0.477	pCi/g	NV	480537.299	1346886.135
A7-SA1-33	A7-SA1-33^21-RM	3-Jan-05	10.0	10.5	Technetium-99	0.758	pCi/g	UNV	480537.299	1346886.135
A7-SA1-33	A7-SA1-33^21-RM	3-Jan-05	10.0	10.5	Thorium-228	0.461	pCi/g	NV	480537.299	1346886.135
A7-SA1-33	A7-SA1-33^21-RM	3-Jan-05	10.0	10.5	Thorium-230	3.57	pCi/g	NV	480537.299	1346886.135
A7-SA1-33	A7-SA1-33^21-RM	3-Jan-05	10.0	10.5	Thorium-232	0.477	pCi/g	NV	480537.299	1346886.135
A7-SA1-33	A7-SA1-33^21-RM	3-Jan-05	10.0	10.5	Uranium, Total	5.08	mg/kg	NV	480537.299	1346886.135
A7-SA1-33	A7-SA1-33^23-RM	3-Jan-05	11.0	11.5	Arsenic	3.18	mg/kg	NV	480537.299	1346886.135
A7-SA1-33	A7-SA1-33^23-RM	3-Jan-05	11.0	11.5	Beryllium	0.193	mg/kg	NV	480537.299	1346886.135
A7-SA1-33	A7-SA1-33^23-RM	3-Jan-05	11.0	11.5	Lead	5.78	mg/kg	NV	480537.299	1346886.135
A7-SA1-33	A7-SA1-33^23-RM	3-Jan-05	11.0	11.5	Manganese	225	mg/kg	NV	480537.299	1346886.135
A7-SA1-33	A7-SA1-33^23-RM	3-Jan-05	11.0	11.5	Cesium-137	0.0436	pCi/g	UNV	480537.299	1346886.135
A7-SA1-33	A7-SA1-33^23-RM	3-Jan-05	11.0	11.5	Lead-210	0.803	pCi/g	UNV	480537.299	1346886.135
A7-SA1-33	A7-SA1-33^23-RM	3-Jan-05	11.0	11.5	Radium-226	0.752	pCi/g	NV	480537.299	1346886.135
A7-SA1-33	A7-SA1-33^23-RM	3-Jan-05	11.0	11.5	Radium-228	0.445	pCi/g	NV	480537.299	1346886.135
A7-SA1-33	A7-SA1-33^23-RM	3-Jan-05	11.0	11.5	Technetium-99	0.773	pCi/g	UNV	480537.299	1346886.135
A7-SA1-33	A7-SA1-33^23-RM	3-Jan-05	11.0	11.5	Thorium-228	0.468	pCi/g	NV	480537.299	1346886.135
A7-SA1-33	A7-SA1-33^23-RM	3-Jan-05	11.0	11.5	Thorium-230	3.64	pCi/g	NV	480537.299	1346886.135
A7-SA1-33	A7-SA1-33^23-RM	3-Jan-05	11.0	11.5	Thorium-232	0.445	pCi/g	NV	480537.299	1346886.135
A7-SA1-33	A7-SA1-33^23-RM	3-Jan-05	11.0	11.5	Uranium, Total	4.03	mg/kg	NV	480537.299	1346886.135
A7-SA1-33	A7-SA1-33^24-RM	3-Jan-05	11.5	12.0	Arsenic	3.37	mg/kg	NV	480537.299	1346886.135
A7-SA1-33	A7-SA1-33^24-RM	3-Jan-05	11.5	12.0	Beryllium	0.225	mg/kg	NV	480537.299	1346886.135
A7-SA1-33	A7-SA1-33^24-RM	3-Jan-05	11.5	12.0	Lead	6.4	mg/kg	NV	480537.299	1346886.135
A7-SA1-33	A7-SA1-33^24-RM	3-Jan-05	11.5	12.0	Manganese	251	mg/kg	NV	480537.299	1346886.135
A7-SA1-33	A7-SA1-33^24-RM	3-Jan-05	11.5	12.0	Cesium-137	0.0424	pCi/g	UNV	480537.299	1346886.135
A7-SA1-33	A7-SA1-33^24-RM	3-Jan-05	11.5	12.0	Lead-210	0.813	pCi/g	UNV	480537.299	1346886.135
A7-SA1-33	A7-SA1-33^24-RM	3-Jan-05	11.5	12.0	Radium-226	0.839	pCi/g	NV	480537.299	1346886.135
A7-SA1-33	A7-SA1-33^24-RM	3-Jan-05	11.5	12.0	Radium-228	0.518	pCi/g	NV	480537.299	1346886.135
A7-SA1-33	A7-SA1-33^24-RM	3-Jan-05	11.5	12.0	Technetium-99	0.779	pCi/g	UNV	480537.299	1346886.135
A7-SA1-33	A7-SA1-33^24-RM	3-Jan-05	11.5	12.0	Thorium-228	0.517	pCi/g	NV	480537.299	1346886.135
A7-SA1-33	A7-SA1-33^24-RM	3-Jan-05	11.5	12.0	Thorium-230	3.66	pCi/g	NV	480537.299	1346886.135
A7-SA1-33	A7-SA1-33^24-RM	3-Jan-05	11.5	12.0	Thorium-232	0.518	pCi/g	NV	480537.299	1346886.135
A7-SA1-33	A7-SA1-33^24-RM	3-Jan-05	11.5	12.0	Uranium, Total	8.27	mg/kg	NV	480537.299	1346886.135

5982

Boring	Sample ID	Sample Date	Sample Depth (feet)		Parameter	Result	Units	Qualifier	Northing	Easting
			Top	Bottom						
A7-SA1-34	A7-SA1-34^1-RM	4-Jan-05	0.0	0.5	Arsenic	11	mg/kg	NV	480437.655	1346877.928
A7-SA1-34	A7-SA1-34^1-RM	4-Jan-05	0.0	0.5	Beryllium	0.988	mg/kg	NV	480437.655	1346877.928
A7-SA1-34	A7-SA1-34^1-RM	4-Jan-05	0.0	0.5	Lead	17.8	mg/kg	NV	480437.655	1346877.928
A7-SA1-34	A7-SA1-34^1-RM	4-Jan-05	0.0	0.5	Manganese	371	mg/kg	NV	480437.655	1346877.928
A7-SA1-34	A7-SA1-34^1-RM	4-Jan-05	0.0	0.5	Cesium-137	0.104	pCi/g	UNV	480437.655	1346877.928
A7-SA1-34	A7-SA1-34^1-RM	4-Jan-05	0.0	0.5	Lead-210	1.15	pCi/g	NV	480437.655	1346877.928
A7-SA1-34	A7-SA1-34^1-RM	4-Jan-05	0.0	0.5	Radium-226	2.73	pCi/g	NV	480437.655	1346877.928
A7-SA1-34	A7-SA1-34^1-RM	4-Jan-05	0.0	0.5	Radium-228	1.15	pCi/g	NV	480437.655	1346877.928
A7-SA1-34	A7-SA1-34^1-RM	4-Jan-05	0.0	0.5	Technetium-99	0.923	pCi/g	UNV	480437.655	1346877.928
A7-SA1-34	A7-SA1-34^1-RM	4-Jan-05	0.0	0.5	Thorium-228	1.22	pCi/g	NV	480437.655	1346877.928
A7-SA1-34	A7-SA1-34^1-RM	4-Jan-05	0.0	0.5	Thorium-230	4.11	pCi/g	NV	480437.655	1346877.928
A7-SA1-34	A7-SA1-34^1-RM	4-Jan-05	0.0	0.5	Thorium-232	1.15	pCi/g	NV	480437.655	1346877.928
A7-SA1-34	A7-SA1-34^1-RM	4-Jan-05	0.0	0.5	Uranium, Total	18.5	mg/kg	NV	480437.655	1346877.928
A7-SA1-34	A7-SA1-34^3-RM	4-Jan-05	1.0	1.5	Arsenic	8.75	mg/kg	NV	480437.655	1346877.928
A7-SA1-34	A7-SA1-34^3-RM	4-Jan-05	1.0	1.5	Beryllium	0.881	mg/kg	NV	480437.655	1346877.928
A7-SA1-34	A7-SA1-34^3-RM	4-Jan-05	1.0	1.5	Lead	13.7	mg/kg	NV	480437.655	1346877.928
A7-SA1-34	A7-SA1-34^3-RM	4-Jan-05	1.0	1.5	Manganese	275	mg/kg	NV	480437.655	1346877.928
A7-SA1-34	A7-SA1-34^3-RM	4-Jan-05	1.0	1.5	Cesium-137	0.107	pCi/g	UNV	480437.655	1346877.928
A7-SA1-34	A7-SA1-34^3-RM	4-Jan-05	1.0	1.5	Lead-210	0.857	pCi/g	NV	480437.655	1346877.928
A7-SA1-34	A7-SA1-34^3-RM	4-Jan-05	1.0	1.5	Radium-226	1.66	pCi/g	NV	480437.655	1346877.928
A7-SA1-34	A7-SA1-34^3-RM	4-Jan-05	1.0	1.5	Radium-228	1.33	pCi/g	NV	480437.655	1346877.928
A7-SA1-34	A7-SA1-34^3-RM	4-Jan-05	1.0	1.5	Technetium-99	0.94	pCi/g	UNV	480437.655	1346877.928
A7-SA1-34	A7-SA1-34^3-RM	4-Jan-05	1.0	1.5	Thorium-228	1.33	pCi/g	NV	480437.655	1346877.928
A7-SA1-34	A7-SA1-34^3-RM	4-Jan-05	1.0	1.5	Thorium-230	3.01	pCi/g	NV	480437.655	1346877.928
A7-SA1-34	A7-SA1-34^3-RM	4-Jan-05	1.0	1.5	Thorium-232	1.33	pCi/g	NV	480437.655	1346877.928
A7-SA1-34	A7-SA1-34^3-RM	4-Jan-05	1.0	1.5	Uranium, Total	5.31	mg/kg	UNV	480437.655	1346877.928
A7-SA1-34	A7-SA1-34^5-RM	4-Jan-05	2.0	2.5	Arsenic	11.6	mg/kg	NV	480437.655	1346877.928
A7-SA1-34	A7-SA1-34^5-RM	4-Jan-05	2.0	2.5	Beryllium	0.9	mg/kg	NV	480437.655	1346877.928
A7-SA1-34	A7-SA1-34^5-RM	4-Jan-05	2.0	2.5	Lead	16.4	mg/kg	NV	480437.655	1346877.928
A7-SA1-34	A7-SA1-34^5-RM	4-Jan-05	2.0	2.5	Manganese	866	mg/kg	NV	480437.655	1346877.928
A7-SA1-34	A7-SA1-34^5-RM	4-Jan-05	2.0	2.5	Cesium-137	0.0921	pCi/g	UNV	480437.655	1346877.928
A7-SA1-34	A7-SA1-34^5-RM	4-Jan-05	2.0	2.5	Lead-210	0.756	pCi/g	NV	480437.655	1346877.928
A7-SA1-34	A7-SA1-34^5-RM	4-Jan-05	2.0	2.5	Radium-226	1.87	pCi/g	NV	480437.655	1346877.928
A7-SA1-34	A7-SA1-34^5-RM	4-Jan-05	2.0	2.5	Radium-228	1.06	pCi/g	NV	480437.655	1346877.928
A7-SA1-34	A7-SA1-34^5-RM	4-Jan-05	2.0	2.5	Technetium-99	0.968	pCi/g	UNV	480437.655	1346877.928

APPENDIX A
PREDESIGN CHARACTERIZATION DATA FOR AREA 7 SILOS AND GENERAL AREA

Boring	Sample ID	Sample Date	Sample Depth (feet)		Parameter	Result	Units	Qualifier	Northing	Easting
			Top	Bottom						
A7-SA1-34	A7-SA1-34^5-RM	4-Jan-05	2.0	2.5	Thorium-228	1.08	pCi/g	NV	480437.655	1346877.928
A7-SA1-34	A7-SA1-34^5-RM	4-Jan-05	2.0	2.5	Thorium-230	4.05	pCi/g	NV	480437.655	1346877.928
A7-SA1-34	A7-SA1-34^5-RM	4-Jan-05	2.0	2.5	Thorium-232	1.06	pCi/g	NV	480437.655	1346877.928
A7-SA1-34	A7-SA1-34^5-RM	4-Jan-05	2.0	2.5	Uranium, Total	4.29	mg/kg	UNV	480437.655	1346877.928
A7-SA1-34	A7-SA1-34^7-RM	4-Jan-05	3.0	3.5	Arsenic	15.1	mg/kg	NV	480437.655	1346877.928
A7-SA1-34	A7-SA1-34^7-RM	4-Jan-05	3.0	3.5	Beryllium	0.976	mg/kg	NV	480437.655	1346877.928
A7-SA1-34	A7-SA1-34^7-RM	4-Jan-05	3.0	3.5	Lead	18.7	mg/kg	NV	480437.655	1346877.928
A7-SA1-34	A7-SA1-34^7-RM	4-Jan-05	3.0	3.5	Manganese	661	mg/kg	NV	480437.655	1346877.928
A7-SA1-34	A7-SA1-34^7-RM	4-Jan-05	3.0	3.5	Cesium-137	0.0813	pCi/g	UNV	480437.655	1346877.928
A7-SA1-34	A7-SA1-34^7-RM	4-Jan-05	3.0	3.5	Lead-210	0.719	pCi/g	UNV	480437.655	1346877.928
A7-SA1-34	A7-SA1-34^7-RM	4-Jan-05	3.0	3.5	Radium-226	1.84	pCi/g	NV	480437.655	1346877.928
A7-SA1-34	A7-SA1-34^7-RM	4-Jan-05	3.0	3.5	Radium-228	1.22	pCi/g	NV	480437.655	1346877.928
A7-SA1-34	A7-SA1-34^7-RM	4-Jan-05	3.0	3.5	Technetium-99	0.921	pCi/g	UNV	480437.655	1346877.928
A7-SA1-34	A7-SA1-34^7-RM	4-Jan-05	3.0	3.5	Thorium-228	1.19	pCi/g	NV	480437.655	1346877.928
A7-SA1-34	A7-SA1-34^7-RM	4-Jan-05	3.0	3.5	Thorium-230	3.94	pCi/g	NV	480437.655	1346877.928
A7-SA1-34	A7-SA1-34^7-RM	4-Jan-05	3.0	3.5	Thorium-232	1.22	pCi/g	NV	480437.655	1346877.928
A7-SA1-34	A7-SA1-34^7-RM	4-Jan-05	3.0	3.5	Uranium, Total	4.05	mg/kg	UNV	480437.655	1346877.928
A7-SA1-34	A7-SA1-34^9-RM	4-Jan-05	4.0	4.5	Arsenic	7.49	mg/kg	NV	480437.655	1346877.928
A7-SA1-34	A7-SA1-34^9-RM	4-Jan-05	4.0	4.5	Beryllium	0.426	mg/kg	NV	480437.655	1346877.928
A7-SA1-34	A7-SA1-34^9-RM	4-Jan-05	4.0	4.5	Lead	11.5	mg/kg	NV	480437.655	1346877.928
A7-SA1-34	A7-SA1-34^9-RM	4-Jan-05	4.0	4.5	Manganese	597	mg/kg	NV	480437.655	1346877.928
A7-SA1-34	A7-SA1-34^9-RM	4-Jan-05	4.0	4.5	Cesium-137	0.0777	pCi/g	UNV	480437.655	1346877.928
A7-SA1-34	A7-SA1-34^9-RM	4-Jan-05	4.0	4.5	Lead-210	0.716	pCi/g	NV	480437.655	1346877.928
A7-SA1-34	A7-SA1-34^9-RM	4-Jan-05	4.0	4.5	Radium-226	1.01	pCi/g	NV	480437.655	1346877.928
A7-SA1-34	A7-SA1-34^9-RM	4-Jan-05	4.0	4.5	Radium-228	0.614	pCi/g	NV	480437.655	1346877.928
A7-SA1-34	A7-SA1-34^9-RM	4-Jan-05	4.0	4.5	Technetium-99	0.83	pCi/g	UNV	480437.655	1346877.928
A7-SA1-34	A7-SA1-34^9-RM	4-Jan-05	4.0	4.5	Thorium-228	0.622	pCi/g	NV	480437.655	1346877.928
A7-SA1-34	A7-SA1-34^9-RM	4-Jan-05	4.0	4.5	Thorium-230	1.17	pCi/g	NV	480437.655	1346877.928
A7-SA1-34	A7-SA1-34^9-RM	4-Jan-05	4.0	4.5	Thorium-232	0.614	pCi/g	NV	480437.655	1346877.928
A7-SA1-34	A7-SA1-34^9-RM	4-Jan-05	4.0	4.5	Uranium, Total	3.86	mg/kg	UNV	480437.655	1346877.928
A7-SA1-34	A7-SA1-34^11-RM	4-Jan-05	5.0	5.5	Arsenic	7.49	mg/kg	NV	480437.655	1346877.928
A7-SA1-34	A7-SA1-34^11-RM	4-Jan-05	5.0	5.5	Beryllium	0.329	mg/kg	NV	480437.655	1346877.928
A7-SA1-34	A7-SA1-34^11-RM	4-Jan-05	5.0	5.5	Lead	13.2	mg/kg	NV	480437.655	1346877.928
A7-SA1-34	A7-SA1-34^11-RM	4-Jan-05	5.0	5.5	Manganese	439	mg/kg	NV	480437.655	1346877.928
A7-SA1-34	A7-SA1-34^11-RM	4-Jan-05	5.0	5.5	Cesium-137	0.0777	pCi/g	UNV	480437.655	1346877.928

5982

Boring	Sample ID	Sample Date	Sample Depth (feet)		Parameter	Result	Units	Qualifier	Northing	Easting
			Top	Bottom						
A7-SA1-34	A7-SA1-34^11-RM	4-Jan-05	5.0	5.5	Lead-210	0.778	pCi/g	NV	480437.655	1346877.928
A7-SA1-34	A7-SA1-34^11-RM	4-Jan-05	5.0	5.5	Radium-226	1.08	pCi/g	NV	480437.655	1346877.928
A7-SA1-34	A7-SA1-34^11-RM	4-Jan-05	5.0	5.5	Radium-228	0.5	pCi/g	NV	480437.655	1346877.928
A7-SA1-34	A7-SA1-34^11-RM	4-Jan-05	5.0	5.5	Technetium-99	0.812	pCi/g	UNV	480437.655	1346877.928
A7-SA1-34	A7-SA1-34^11-RM	4-Jan-05	5.0	5.5	Thorium-228	0.412	pCi/g	NV	480437.655	1346877.928
A7-SA1-34	A7-SA1-34^11-RM	4-Jan-05	5.0	5.5	Thorium-230	1.59	pCi/g	NV	480437.655	1346877.928
A7-SA1-34	A7-SA1-34^11-RM	4-Jan-05	5.0	5.5	Thorium-232	0.5	pCi/g	NV	480437.655	1346877.928
A7-SA1-34	A7-SA1-34^11-RM	4-Jan-05	5.0	5.5	Uranium, Total	3.69	mg/kg	UNV	480437.655	1346877.928
A7-SA1-34	A7-SA1-34^13-RM	4-Jan-05	6.0	6.5	Arsenic	4.18	mg/kg	NV	480437.655	1346877.928
A7-SA1-34	A7-SA1-34^13-RM	4-Jan-05	6.0	6.5	Beryllium	0.227	mg/kg	NV	480437.655	1346877.928
A7-SA1-34	A7-SA1-34^13-RM	4-Jan-05	6.0	6.5	Lead	6.49	mg/kg	NV	480437.655	1346877.928
A7-SA1-34	A7-SA1-34^13-RM	4-Jan-05	6.0	6.5	Manganese	309	mg/kg	NV	480437.655	1346877.928
A7-SA1-34	A7-SA1-34^13-RM	4-Jan-05	6.0	6.5	Cesium-137	0.0844	pCi/g	UNV	480437.655	1346877.928
A7-SA1-34	A7-SA1-34^13-RM	4-Jan-05	6.0	6.5	Lead-210	0.752	pCi/g	UNV	480437.655	1346877.928
A7-SA1-34	A7-SA1-34^13-RM	4-Jan-05	6.0	6.5	Radium-226	0.752	pCi/g	NV	480437.655	1346877.928
A7-SA1-34	A7-SA1-34^13-RM	4-Jan-05	6.0	6.5	Radium-228	0.383	pCi/g	NV	480437.655	1346877.928
A7-SA1-34	A7-SA1-34^13-RM	4-Jan-05	6.0	6.5	Technetium-99	0.793	pCi/g	UNV	480437.655	1346877.928
A7-SA1-34	A7-SA1-34^13-RM	4-Jan-05	6.0	6.5	Thorium-228	0.345	pCi/g	NV	480437.655	1346877.928
A7-SA1-34	A7-SA1-34^13-RM	4-Jan-05	6.0	6.5	Thorium-230	2.16	pCi/g	NV	480437.655	1346877.928
A7-SA1-34	A7-SA1-34^13-RM	4-Jan-05	6.0	6.5	Thorium-232	0.383	pCi/g	NV	480437.655	1346877.928
A7-SA1-34	A7-SA1-34^13-RM	4-Jan-05	6.0	6.5	Uranium, Total	3.47	mg/kg	UNV	480437.655	1346877.928
A7-SA1-34	A7-SA1-34^15-RM	4-Jan-05	7.0	7.5	Arsenic	4.24	mg/kg	NV	480437.655	1346877.928
A7-SA1-34	A7-SA1-34^15-RM	4-Jan-05	7.0	7.5	Beryllium	0.24	mg/kg	NV	480437.655	1346877.928
A7-SA1-34	A7-SA1-34^15-RM	4-Jan-05	7.0	7.5	Lead	6.41	mg/kg	NV	480437.655	1346877.928
A7-SA1-34	A7-SA1-34^15-RM	4-Jan-05	7.0	7.5	Manganese	443	mg/kg	NV	480437.655	1346877.928
A7-SA1-34	A7-SA1-34^15-RM	4-Jan-05	7.0	7.5	Cesium-137	0.0644	pCi/g	UNV	480437.655	1346877.928
A7-SA1-34	A7-SA1-34^15-RM	4-Jan-05	7.0	7.5	Lead-210	0.859	pCi/g	NV	480437.655	1346877.928
A7-SA1-34	A7-SA1-34^15-RM	4-Jan-05	7.0	7.5	Radium-226	0.712	pCi/g	NV	480437.655	1346877.928
A7-SA1-34	A7-SA1-34^15-RM	4-Jan-05	7.0	7.5	Radium-228	0.146	pCi/g	UNV	480437.655	1346877.928
A7-SA1-34	A7-SA1-34^15-RM	4-Jan-05	7.0	7.5	Technetium-99	0.798	pCi/g	UNV	480437.655	1346877.928
A7-SA1-34	A7-SA1-34^15-RM	4-Jan-05	7.0	7.5	Thorium-228	0.146	pCi/g	UNV	480437.655	1346877.928
A7-SA1-34	A7-SA1-34^15-RM	4-Jan-05	7.0	7.5	Thorium-230	1.86	pCi/g	NV	480437.655	1346877.928
A7-SA1-34	A7-SA1-34^15-RM	4-Jan-05	7.0	7.5	Thorium-232	0.146	pCi/g	UNV	480437.655	1346877.928
A7-SA1-34	A7-SA1-34^15-RM	4-Jan-05	7.0	7.5	Uranium, Total	3.35	mg/kg	UNV	480437.655	1346877.928
A7-SA1-34	A7-SA1-34^17-RM	4-Jan-05	8.0	8.5	Arsenic	5.37	mg/kg	NV	480437.655	1346877.928

APPENDIX A
PREDESIGN CHARACTERIZATION DATA FOR AREA 7 SILOS AND GENERAL AREA

Boring	Sample ID	Sample Date	Sample Depth (feet)		Parameter	Result	Units	Qualifier	Northing	Easting
			Top	Bottom						
A7-SA1-34	A7-SA1-34^17-RM	4-Jan-05	8.0	8.5	Beryllium	0.201	mg/kg	NV	480437.655	1346877.928
A7-SA1-34	A7-SA1-34^17-RM	4-Jan-05	8.0	8.5	Lead	6.61	mg/kg	NV	480437.655	1346877.928
A7-SA1-34	A7-SA1-34^17-RM	4-Jan-05	8.0	8.5	Manganese	325	mg/kg	NV	480437.655	1346877.928
A7-SA1-34	A7-SA1-34^17-RM	4-Jan-05	8.0	8.5	Cesium-137	0.0563	pCi/g	UNV	480437.655	1346877.928
A7-SA1-34	A7-SA1-34^17-RM	4-Jan-05	8.0	8.5	Lead-210	0.722	pCi/g	UNV	480437.655	1346877.928
A7-SA1-34	A7-SA1-34^17-RM	4-Jan-05	8.0	8.5	Radium-226	0.675	pCi/g	NV	480437.655	1346877.928
A7-SA1-34	A7-SA1-34^17-RM	4-Jan-05	8.0	8.5	Radium-228	0.327	pCi/g	NV	480437.655	1346877.928
A7-SA1-34	A7-SA1-34^17-RM	4-Jan-05	8.0	8.5	Technetium-99	0.79	pCi/g	UNV	480437.655	1346877.928
A7-SA1-34	A7-SA1-34^17-RM	4-Jan-05	8.0	8.5	Thorium-228	0.297	pCi/g	NV	480437.655	1346877.928
A7-SA1-34	A7-SA1-34^17-RM	4-Jan-05	8.0	8.5	Thorium-230	1.49	pCi/g	NV	480437.655	1346877.928
A7-SA1-34	A7-SA1-34^17-RM	4-Jan-05	8.0	8.5	Thorium-232	0.327	pCi/g	NV	480437.655	1346877.928
A7-SA1-34	A7-SA1-34^17-RM	4-Jan-05	8.0	8.5	Uranium, Total	15	mg/kg	NV	480437.655	1346877.928
A7-SA1-34	A7-SA1-34^19-RM	4-Jan-05	9.0	9.5	Arsenic	4.5	mg/kg	NV	480437.655	1346877.928
A7-SA1-34	A7-SA1-34^19-RM	4-Jan-05	9.0	9.5	Beryllium	0.23	mg/kg	NV	480437.655	1346877.928
A7-SA1-34	A7-SA1-34^19-RM	4-Jan-05	9.0	9.5	Lead	6.59	mg/kg	NV	480437.655	1346877.928
A7-SA1-34	A7-SA1-34^19-RM	4-Jan-05	9.0	9.5	Manganese	409	mg/kg	NV	480437.655	1346877.928
A7-SA1-34	A7-SA1-34^19-RM	4-Jan-05	9.0	9.5	Cesium-137	0.0657	pCi/g	UNV	480437.655	1346877.928
A7-SA1-34	A7-SA1-34^19-RM	4-Jan-05	9.0	9.5	Lead-210	1.03	pCi/g	NV	480437.655	1346877.928
A7-SA1-34	A7-SA1-34^19-RM	4-Jan-05	9.0	9.5	Radium-226	0.672	pCi/g	NV	480437.655	1346877.928
A7-SA1-34	A7-SA1-34^19-RM	4-Jan-05	9.0	9.5	Radium-228	0.148	pCi/g	UNV	480437.655	1346877.928
A7-SA1-34	A7-SA1-34^19-RM	4-Jan-05	9.0	9.5	Technetium-99	0.802	pCi/g	UNV	480437.655	1346877.928
A7-SA1-34	A7-SA1-34^19-RM	4-Jan-05	9.0	9.5	Thorium-228	0.148	pCi/g	UNV	480437.655	1346877.928
A7-SA1-34	A7-SA1-34^19-RM	4-Jan-05	9.0	9.5	Thorium-230	2.21	pCi/g	NV	480437.655	1346877.928
A7-SA1-34	A7-SA1-34^19-RM	4-Jan-05	9.0	9.5	Thorium-232	0.148	pCi/g	UNV	480437.655	1346877.928
A7-SA1-34	A7-SA1-34^19-RM	4-Jan-05	9.0	9.5	Uranium, Total	16.6	mg/kg	NV	480437.655	1346877.928
A7-SA1-34	A7-SA1-34^21-RM	4-Jan-05	10.0	10.5	Arsenic	3.11	mg/kg	NV	480437.655	1346877.928
A7-SA1-34	A7-SA1-34^21-RM	4-Jan-05	10.0	10.5	Beryllium	0.141	mg/kg	NV	480437.655	1346877.928
A7-SA1-34	A7-SA1-34^21-RM	4-Jan-05	10.0	10.5	Lead	4.62	mg/kg	NV	480437.655	1346877.928
A7-SA1-34	A7-SA1-34^21-RM	4-Jan-05	10.0	10.5	Manganese	236	mg/kg	NV	480437.655	1346877.928
A7-SA1-34	A7-SA1-34^21-RM	4-Jan-05	10.0	10.5	Cesium-137	0.0636	pCi/g	UNV	480437.655	1346877.928
A7-SA1-34	A7-SA1-34^21-RM	4-Jan-05	10.0	10.5	Lead-210	1.12	pCi/g	NV	480437.655	1346877.928
A7-SA1-34	A7-SA1-34^21-RM	4-Jan-05	10.0	10.5	Radium-226	0.52	pCi/g	NV	480437.655	1346877.928
A7-SA1-34	A7-SA1-34^21-RM	4-Jan-05	10.0	10.5	Radium-228	0.295	pCi/g	NV	480437.655	1346877.928
A7-SA1-34	A7-SA1-34^21-RM	4-Jan-05	10.0	10.5	Technetium-99	0.776	pCi/g	UNV	480437.655	1346877.928
A7-SA1-34	A7-SA1-34^21-RM	4-Jan-05	10.0	10.5	Thorium-228	0.312	pCi/g	NV	480437.655	1346877.928

5982

Boring	Sample ID	Sample Date	Sample Depth (feet)		Parameter	Result	Units	Qualifier	Northing	Easting
			Top	Bottom						
A7-SA1-34	A7-SA1-34^21-RM	4-Jan-05	10.0	10.5	Thorium-230	2.47	pCi/g	NV	480437.655	1346877.928
A7-SA1-34	A7-SA1-34^21-RM	4-Jan-05	10.0	10.5	Thorium-232	0.295	pCi/g	NV	480437.655	1346877.928
A7-SA1-34	A7-SA1-34^21-RM	4-Jan-05	10.0	10.5	Uranium, Total	15.5	mg/kg	NV	480437.655	1346877.928
A7-SA1-34	A7-SA1-34^23-RM	4-Jan-05	11.0	11.5	Arsenic	4.38	mg/kg	NV	480437.655	1346877.928
A7-SA1-34	A7-SA1-34^23-RM	4-Jan-05	11.0	11.5	Beryllium	0.179	mg/kg	NV	480437.655	1346877.928
A7-SA1-34	A7-SA1-34^23-RM	4-Jan-05	11.0	11.5	Lead	6.07	mg/kg	NV	480437.655	1346877.928
A7-SA1-34	A7-SA1-34^23-RM	4-Jan-05	11.0	11.5	Manganese	391	mg/kg	NV	480437.655	1346877.928
A7-SA1-34	A7-SA1-34^23-RM	4-Jan-05	11.0	11.5	Cesium-137	0.0635	pCi/g	UNV	480437.655	1346877.928
A7-SA1-34	A7-SA1-34^23-RM	4-Jan-05	11.0	11.5	Lead-210	0.729	pCi/g	UNV	480437.655	1346877.928
A7-SA1-34	A7-SA1-34^23-RM	4-Jan-05	11.0	11.5	Radium-226	0.649	pCi/g	NV	480437.655	1346877.928
A7-SA1-34	A7-SA1-34^23-RM	4-Jan-05	11.0	11.5	Radium-228	0.326	pCi/g	NV	480437.655	1346877.928
A7-SA1-34	A7-SA1-34^23-RM	4-Jan-05	11.0	11.5	Technetium-99	0.793	pCi/g	UNV	480437.655	1346877.928
A7-SA1-34	A7-SA1-34^23-RM	4-Jan-05	11.0	11.5	Thorium-228	0.311	pCi/g	NV	480437.655	1346877.928
A7-SA1-34	A7-SA1-34^23-RM	4-Jan-05	11.0	11.5	Thorium-230	1.79	pCi/g	NV	480437.655	1346877.928
A7-SA1-34	A7-SA1-34^23-RM	4-Jan-05	11.0	11.5	Thorium-232	0.326	pCi/g	NV	480437.655	1346877.928
A7-SA1-34	A7-SA1-34^23-RM	4-Jan-05	11.0	11.5	Uranium, Total	19.6	mg/kg	NV	480437.655	1346877.928
A7-SA1-34	A7-SA1-34^24-RM	4-Jan-05	11.5	12.0	Arsenic	5.27	mg/kg	NV	480437.655	1346877.928
A7-SA1-34	A7-SA1-34^24-RM	4-Jan-05	11.5	12.0	Beryllium	0.167	mg/kg	NV	480437.655	1346877.928
A7-SA1-34	A7-SA1-34^24-RM	4-Jan-05	11.5	12.0	Lead	4.72	mg/kg	NV	480437.655	1346877.928
A7-SA1-34	A7-SA1-34^24-RM	4-Jan-05	11.5	12.0	Manganese	396	mg/kg	NV	480437.655	1346877.928
A7-SA1-34	A7-SA1-34^24-RM	4-Jan-05	11.5	12.0	Cesium-137	0.0662	pCi/g	UNV	480437.655	1346877.928
A7-SA1-34	A7-SA1-34^24-RM	4-Jan-05	11.5	12.0	Lead-210	0.95	pCi/g	NV	480437.655	1346877.928
A7-SA1-34	A7-SA1-34^24-RM	4-Jan-05	11.5	12.0	Radium-226	0.596	pCi/g	NV	480437.655	1346877.928
A7-SA1-34	A7-SA1-34^24-RM	4-Jan-05	11.5	12.0	Radium-228	0.359	pCi/g	NV	480437.655	1346877.928
A7-SA1-34	A7-SA1-34^24-RM	4-Jan-05	11.5	12.0	Technetium-99	0.81	pCi/g	UNV	480437.655	1346877.928
A7-SA1-34	A7-SA1-34^24-RM	4-Jan-05	11.5	12.0	Thorium-228	0.365	pCi/g	NV	480437.655	1346877.928
A7-SA1-34	A7-SA1-34^24-RM	4-Jan-05	11.5	12.0	Thorium-230	1.86	pCi/g	NV	480437.655	1346877.928
A7-SA1-34	A7-SA1-34^24-RM	4-Jan-05	11.5	12.0	Thorium-232	0.359	pCi/g	NV	480437.655	1346877.928
A7-SA1-34	A7-SA1-34^24-RM	4-Jan-05	11.5	12.0	Uranium, Total	22.1	mg/kg	NV	480437.655	1346877.928
A7-SA1-35	A7-SA1-35^1-RM	27-Apr-05	0.0	0.5	Arsenic	5.48	mg/kg	NV	480366.233	1346689.18
A7-SA1-35	A7-SA1-35^1-RM	27-Apr-05	0.0	0.5	Beryllium	0.481	mg/kg	NV	480366.233	1346689.18
A7-SA1-35	A7-SA1-35^1-RM	27-Apr-05	0.0	0.5	Lead	22.2	mg/kg	NV	480366.233	1346689.18
A7-SA1-35	A7-SA1-35^1-RM	27-Apr-05	0.0	0.5	Manganese	652	mg/kg	NV	480366.233	1346689.18
A7-SA1-35	A7-SA1-35^1-RM	27-Apr-05	0.0	0.5	Cesium-137	0.45	pCi/g	NV	480366.233	1346689.18
A7-SA1-35	A7-SA1-35^1-RM	27-Apr-05	0.0	0.5	Lead-210	3.5	pCi/g	NV	480366.233	1346689.18

APPENDIX A
PREDESIGN CHARACTERIZATION DATA FOR AREA 7 SILOS AND GENERAL AREA

Boring	Sample ID	Sample Date	Sample Depth (feet)		Parameter	Result	Units	Qualifier	Northing	Easting
			Top	Bottom						
A7-SA1-35	A7-SA1-35^1-RM	27-Apr-05	0.0	0.5	Radium-226	6.14	pCi/g	NV	480366.233	1346689.18
A7-SA1-35	A7-SA1-35^1-RM	27-Apr-05	0.0	0.5	Radium-228	1.05	pCi/g	NV	480366.233	1346689.18
A7-SA1-35	A7-SA1-35^1-RM	27-Apr-05	0.0	0.5	Technetium-99	0.801	pCi/g	UNV	480366.233	1346689.18
A7-SA1-35	A7-SA1-35^1-RM	27-Apr-05	0.0	0.5	Thorium-228	1.09	pCi/g	NV	480366.233	1346689.18
A7-SA1-35	A7-SA1-35^1-RM	27-Apr-05	0.0	0.5	Thorium-230	2.87	pCi/g	NV	480366.233	1346689.18
A7-SA1-35	A7-SA1-35^1-RM	27-Apr-05	0.0	0.5	Thorium-232	1.05	pCi/g	NV	480366.233	1346689.18
A7-SA1-35	A7-SA1-35^1-RM	27-Apr-05	0.0	0.5	Uranium, Total	27.1	mg/kg	NV	480366.233	1346689.18
A7-SA1-35	A7-SA1-35^3-RM	27-Apr-05	1.0	1.5	Arsenic	4.83	mg/kg	NV	480366.233	1346689.18
A7-SA1-35	A7-SA1-35^3-RM	27-Apr-05	1.0	1.5	Beryllium	0.65	mg/kg	NV	480366.233	1346689.18
A7-SA1-35	A7-SA1-35^3-RM	27-Apr-05	1.0	1.5	Lead	14.3	mg/kg	NV	480366.233	1346689.18
A7-SA1-35	A7-SA1-35^3-RM	27-Apr-05	1.0	1.5	Manganese	792	mg/kg	NV	480366.233	1346689.18
A7-SA1-35	A7-SA1-35^3-RM	27-Apr-05	1.0	1.5	Cesium-137	0.0545	pCi/g	UNV	480366.233	1346689.18
A7-SA1-35	A7-SA1-35^3-RM	27-Apr-05	1.0	1.5	Lead-210	1.42	pCi/g	NV	480366.233	1346689.18
A7-SA1-35	A7-SA1-35^3-RM	27-Apr-05	1.0	1.5	Radium-226	1.31	pCi/g	NV	480366.233	1346689.18
A7-SA1-35	A7-SA1-35^3-RM	27-Apr-05	1.0	1.5	Radium-228	1.01	pCi/g	NV	480366.233	1346689.18
A7-SA1-35	A7-SA1-35^3-RM	27-Apr-05	1.0	1.5	Technetium-99	0.817	pCi/g	UNV	480366.233	1346689.18
A7-SA1-35	A7-SA1-35^3-RM	27-Apr-05	1.0	1.5	Thorium-228	1.06	pCi/g	NV	480366.233	1346689.18
A7-SA1-35	A7-SA1-35^3-RM	27-Apr-05	1.0	1.5	Thorium-230	1.36	pCi/g	NV	480366.233	1346689.18
A7-SA1-35	A7-SA1-35^3-RM	27-Apr-05	1.0	1.5	Thorium-232	1.01	pCi/g	NV	480366.233	1346689.18
A7-SA1-35	A7-SA1-35^3-RM	27-Apr-05	1.0	1.5	Uranium, Total	9.51	mg/kg	NV	480366.233	1346689.18
A7-SA1-35	A7-SA1-35^5-RM	27-Apr-05	2.0	2.5	Arsenic	5.18	mg/kg	NV	480366.233	1346689.18
A7-SA1-35	A7-SA1-35^5-RM	27-Apr-05	2.0	2.5	Beryllium	0.63	mg/kg	NV	480366.233	1346689.18
A7-SA1-35	A7-SA1-35^5-RM	27-Apr-05	2.0	2.5	Lead	15	mg/kg	NV	480366.233	1346689.18
A7-SA1-35	A7-SA1-35^5-RM	27-Apr-05	2.0	2.5	Manganese	870	mg/kg	NV	480366.233	1346689.18
A7-SA1-35	A7-SA1-35^5-RM	27-Apr-05	2.0	2.5	Cesium-137	0.0506	pCi/g	UNV	480366.233	1346689.18
A7-SA1-35	A7-SA1-35^5-RM	27-Apr-05	2.0	2.5	Lead-210	0.815	pCi/g	UNV	480366.233	1346689.18
A7-SA1-35	A7-SA1-35^5-RM	27-Apr-05	2.0	2.5	Radium-226	1.3	pCi/g	NV	480366.233	1346689.18
A7-SA1-35	A7-SA1-35^5-RM	27-Apr-05	2.0	2.5	Radium-228	1.11	pCi/g	NV	480366.233	1346689.18
A7-SA1-35	A7-SA1-35^5-RM	27-Apr-05	2.0	2.5	Technetium-99	0.831	pCi/g	UNV	480366.233	1346689.18
A7-SA1-35	A7-SA1-35^5-RM	27-Apr-05	2.0	2.5	Thorium-228	1.19	pCi/g	NV	480366.233	1346689.18
A7-SA1-35	A7-SA1-35^5-RM	27-Apr-05	2.0	2.5	Thorium-230	1.46	pCi/g	NV	480366.233	1346689.18
A7-SA1-35	A7-SA1-35^5-RM	27-Apr-05	2.0	2.5	Thorium-232	1.11	pCi/g	NV	480366.233	1346689.18
A7-SA1-35	A7-SA1-35^5-RM	27-Apr-05	2.0	2.5	Uranium, Total	6.71	mg/kg	NV	480366.233	1346689.18
A7-SA1-35	A7-SA1-35^7-RM	27-Apr-05	3.0	3.5	Arsenic	7.31	mg/kg	NV	480366.233	1346689.18
A7-SA1-35	A7-SA1-35^7-RM	27-Apr-05	3.0	3.5	Beryllium	0.826	mg/kg	NV	480366.233	1346689.18

5982

Boring	Sample ID	Sample Date	Sample Depth (feet)		Parameter	Result	Units	Qualifier	Northing	Easting
			Top	Bottom						
A7-SA1-35	A7-SA1-35^7-RM	27-Apr-05	3.0	3.5	Lead	15.1	mg/kg	NV	480366.233	1346689.18
A7-SA1-35	A7-SA1-35^7-RM	27-Apr-05	3.0	3.5	Manganese	700	mg/kg	NV	480366.233	1346689.18
A7-SA1-35	A7-SA1-35^7-RM	27-Apr-05	3.0	3.5	Cesium-137	0.0513	pCi/g	UNV	480366.233	1346689.18
A7-SA1-35	A7-SA1-35^7-RM	27-Apr-05	3.0	3.5	Lead-210	1.3	pCi/g	NV	480366.233	1346689.18
A7-SA1-35	A7-SA1-35^7-RM	27-Apr-05	3.0	3.5	Radium-226	1.42	pCi/g	NV	480366.233	1346689.18
A7-SA1-35	A7-SA1-35^7-RM	27-Apr-05	3.0	3.5	Radium-228	1.05	pCi/g	NV	480366.233	1346689.18
A7-SA1-35	A7-SA1-35^7-RM	27-Apr-05	3.0	3.5	Technetium-99	0.85	pCi/g	UNV	480366.233	1346689.18
A7-SA1-35	A7-SA1-35^7-RM	27-Apr-05	3.0	3.5	Thorium-228	1.17	pCi/g	NV	480366.233	1346689.18
A7-SA1-35	A7-SA1-35^7-RM	27-Apr-05	3.0	3.5	Thorium-230	1.85	pCi/g	NV	480366.233	1346689.18
A7-SA1-35	A7-SA1-35^7-RM	27-Apr-05	3.0	3.5	Thorium-232	1.05	pCi/g	NV	480366.233	1346689.18
A7-SA1-35	A7-SA1-35^7-RM	27-Apr-05	3.0	3.5	Uranium, Total	7.09	mg/kg	NV	480366.233	1346689.18
A7-SA1-35	A7-SA1-35^9-RM	27-Apr-05	4.0	4.5	Arsenic	4.6	mg/kg	NV	480366.233	1346689.18
A7-SA1-35	A7-SA1-35^9-RM	27-Apr-05	4.0	4.5	Beryllium	0.323	mg/kg	NV	480366.233	1346689.18
A7-SA1-35	A7-SA1-35^9-RM	27-Apr-05	4.0	4.5	Lead	7.44	mg/kg	NV	480366.233	1346689.18
A7-SA1-35	A7-SA1-35^9-RM	27-Apr-05	4.0	4.5	Manganese	707	mg/kg	NV	480366.233	1346689.18
A7-SA1-35	A7-SA1-35^9-RM	27-Apr-05	4.0	4.5	Cesium-137	0.0362	pCi/g	UNV	480366.233	1346689.18
A7-SA1-35	A7-SA1-35^9-RM	27-Apr-05	4.0	4.5	Lead-210	0.587	pCi/g	UNV	480366.233	1346689.18
A7-SA1-35	A7-SA1-35^9-RM	27-Apr-05	4.0	4.5	Radium-226	0.804	pCi/g	NV	480366.233	1346689.18
A7-SA1-35	A7-SA1-35^9-RM	27-Apr-05	4.0	4.5	Radium-228	0.52	pCi/g	NV	480366.233	1346689.18
A7-SA1-35	A7-SA1-35^9-RM	27-Apr-05	4.0	4.5	Technetium-99	0.781	pCi/g	UNV	480366.233	1346689.18
A7-SA1-35	A7-SA1-35^9-RM	27-Apr-05	4.0	4.5	Thorium-228	0.542	pCi/g	NV	480366.233	1346689.18
A7-SA1-35	A7-SA1-35^9-RM	27-Apr-05	4.0	4.5	Thorium-230	1.18	pCi/g	NV	480366.233	1346689.18
A7-SA1-35	A7-SA1-35^9-RM	27-Apr-05	4.0	4.5	Thorium-232	0.52	pCi/g	NV	480366.233	1346689.18
A7-SA1-35	A7-SA1-35^9-RM	27-Apr-05	4.0	4.5	Uranium, Total	2.65	mg/kg	NV	480366.233	1346689.18
A7-SA1-35	A7-SA1-35^11-RM	27-Apr-05	5.0	5.5	Arsenic	6.66	mg/kg	NV	480366.233	1346689.18
A7-SA1-35	A7-SA1-35^11-RM	27-Apr-05	5.0	5.5	Beryllium	0.32	mg/kg	NV	480366.233	1346689.18
A7-SA1-35	A7-SA1-35^11-RM	27-Apr-05	5.0	5.5	Lead	11.2	mg/kg	NV	480366.233	1346689.18
A7-SA1-35	A7-SA1-35^11-RM	27-Apr-05	5.0	5.5	Manganese	884	mg/kg	NV	480366.233	1346689.18
A7-SA1-35	A7-SA1-35^11-RM	27-Apr-05	5.0	5.5	Cesium-137	0.0365	pCi/g	UNV	480366.233	1346689.18
A7-SA1-35	A7-SA1-35^11-RM	27-Apr-05	5.0	5.5	Lead-210	0.83	pCi/g	UNV	480366.233	1346689.18
A7-SA1-35	A7-SA1-35^11-RM	27-Apr-05	5.0	5.5	Radium-226	1.01	pCi/g	NV	480366.233	1346689.18
A7-SA1-35	A7-SA1-35^11-RM	27-Apr-05	5.0	5.5	Radium-228	0.469	pCi/g	NV	480366.233	1346689.18
A7-SA1-35	A7-SA1-35^11-RM	27-Apr-05	5.0	5.5	Technetium-99	0.747	pCi/g	UNV	480366.233	1346689.18
A7-SA1-35	A7-SA1-35^11-RM	27-Apr-05	5.0	5.5	Thorium-228	0.483	pCi/g	NV	480366.233	1346689.18
A7-SA1-35	A7-SA1-35^11-RM	27-Apr-05	5.0	5.5	Thorium-230	1.05	pCi/g	NV	480366.233	1346689.18

APPENDIX A
PREDESIGN CHARACTERIZATION DATA FOR AREA 7 SILOS AND GENERAL AREA

Boring	Sample ID	Sample Date	Sample Depth (feet)		Parameter	Result	Units	Qualifier	Northing	Easting
			Top	Bottom						
A7-SA1-35	A7-SA1-35^11-RM	27-Apr-05	5.0	5.5	Thorium-232	0.469	pCi/g	NV	480366.233	1346689.18
A7-SA1-35	A7-SA1-35^11-RM	27-Apr-05	5.0	5.5	Uranium, Total	5.65	mg/kg	NV	480366.233	1346689.18
A7-SA1-35	A7-SA1-35^13-RM	27-Apr-05	6.0	6.5	Arsenic	6.4	mg/kg	NV	480366.233	1346689.18
A7-SA1-35	A7-SA1-35^13-RM	27-Apr-05	6.0	6.5	Beryllium	0.379	mg/kg	NV	480366.233	1346689.18
A7-SA1-35	A7-SA1-35^13-RM	27-Apr-05	6.0	6.5	Lead	9.01	mg/kg	NV	480366.233	1346689.18
A7-SA1-35	A7-SA1-35^13-RM	27-Apr-05	6.0	6.5	Manganese	873	mg/kg	NV	480366.233	1346689.18
A7-SA1-35	A7-SA1-35^13-RM	27-Apr-05	6.0	6.5	Cesium-137	0.032	pCi/g	UNV	480366.233	1346689.18
A7-SA1-35	A7-SA1-35^13-RM	27-Apr-05	6.0	6.5	Lead-210	0.528	pCi/g	UNV	480366.233	1346689.18
A7-SA1-35	A7-SA1-35^13-RM	27-Apr-05	6.0	6.5	Radium-226	0.647	pCi/g	NV	480366.233	1346689.18
A7-SA1-35	A7-SA1-35^13-RM	27-Apr-05	6.0	6.5	Radium-228	0.423	pCi/g	NV	480366.233	1346689.18
A7-SA1-35	A7-SA1-35^13-RM	27-Apr-05	6.0	6.5	Technetium-99	0.756	pCi/g	UNV	480366.233	1346689.18
A7-SA1-35	A7-SA1-35^13-RM	27-Apr-05	6.0	6.5	Thorium-228	0.424	pCi/g	NV	480366.233	1346689.18
A7-SA1-35	A7-SA1-35^13-RM	27-Apr-05	6.0	6.5	Thorium-230	1.38	pCi/g	NV	480366.233	1346689.18
A7-SA1-35	A7-SA1-35^13-RM	27-Apr-05	6.0	6.5	Thorium-232	0.423	pCi/g	NV	480366.233	1346689.18
A7-SA1-35	A7-SA1-35^13-RM	27-Apr-05	6.0	6.5	Uranium, Total	3.38	mg/kg	NV	480366.233	1346689.18
A7-SA1-35	A7-SA1-35^15-RM	27-Apr-05	7.0	7.5	Arsenic	3.48	mg/kg	NV	480366.233	1346689.18
A7-SA1-35	A7-SA1-35^15-RM	27-Apr-05	7.0	7.5	Beryllium	0.173	mg/kg	NV	480366.233	1346689.18
A7-SA1-35	A7-SA1-35^15-RM	27-Apr-05	7.0	7.5	Lead	4.81	mg/kg	NV	480366.233	1346689.18
A7-SA1-35	A7-SA1-35^15-RM	27-Apr-05	7.0	7.5	Manganese	722	mg/kg	NV	480366.233	1346689.18
A7-SA1-35	A7-SA1-35^15-RM	27-Apr-05	7.0	7.5	Cesium-137	0.0329	pCi/g	UNV	480366.233	1346689.18
A7-SA1-35	A7-SA1-35^15-RM	27-Apr-05	7.0	7.5	Lead-210	0.886	pCi/g	NV	480366.233	1346689.18
A7-SA1-35	A7-SA1-35^15-RM	27-Apr-05	7.0	7.5	Radium-226	0.627	pCi/g	NV	480366.233	1346689.18
A7-SA1-35	A7-SA1-35^15-RM	27-Apr-05	7.0	7.5	Radium-228	0.469	pCi/g	NV	480366.233	1346689.18
A7-SA1-35	A7-SA1-35^15-RM	27-Apr-05	7.0	7.5	Technetium-99	0.74	pCi/g	UNV	480366.233	1346689.18
A7-SA1-35	A7-SA1-35^15-RM	27-Apr-05	7.0	7.5	Thorium-228	0.488	pCi/g	NV	480366.233	1346689.18
A7-SA1-35	A7-SA1-35^15-RM	27-Apr-05	7.0	7.5	Thorium-230	0.764	pCi/g	NV	480366.233	1346689.18
A7-SA1-35	A7-SA1-35^15-RM	27-Apr-05	7.0	7.5	Thorium-232	0.469	pCi/g	NV	480366.233	1346689.18
A7-SA1-35	A7-SA1-35^15-RM	27-Apr-05	7.0	7.5	Uranium, Total	2.55	mg/kg	NV	480366.233	1346689.18
A7-SA1-35	A7-SA1-35^17-RM	27-Apr-05	8.0	8.5	Arsenic	8.03	mg/kg	NV	480366.233	1346689.18
A7-SA1-35	A7-SA1-35^17-RM	27-Apr-05	8.0	8.5	Beryllium	0.258	mg/kg	NV	480366.233	1346689.18
A7-SA1-35	A7-SA1-35^17-RM	27-Apr-05	8.0	8.5	Lead	8.36	mg/kg	NV	480366.233	1346689.18
A7-SA1-35	A7-SA1-35^17-RM	27-Apr-05	8.0	8.5	Manganese	580	mg/kg	NV	480366.233	1346689.18
A7-SA1-35	A7-SA1-35^17-RM	27-Apr-05	8.0	8.5	Cesium-137	0.0395	pCi/g	UNV	480366.233	1346689.18
A7-SA1-35	A7-SA1-35^17-RM	27-Apr-05	8.0	8.5	Lead-210	0.981	pCi/g	NV	480366.233	1346689.18
A7-SA1-35	A7-SA1-35^17-RM	27-Apr-05	8.0	8.5	Radium-226	0.697	pCi/g	NV	480366.233	1346689.18

5982

Boring	Sample ID	Sample Date	Sample Depth (feet)		Parameter	Result	Units	Qualifier	Northing	Easting
			Top	Bottom						
A7-SA1-35	A7-SA1-35^17-RM	27-Apr-05	8.0	8.5	Radium-228	0.603	pCi/g	NV	480366.233	1346689.18
A7-SA1-35	A7-SA1-35^17-RM	27-Apr-05	8.0	8.5	Technetium-99	0.803	pCi/g	UNV	480366.233	1346689.18
A7-SA1-35	A7-SA1-35^17-RM	27-Apr-05	8.0	8.5	Thorium-228	0.643	pCi/g	NV	480366.233	1346689.18
A7-SA1-35	A7-SA1-35^17-RM	27-Apr-05	8.0	8.5	Thorium-230	1.22	pCi/g	NV	480366.233	1346689.18
A7-SA1-35	A7-SA1-35^17-RM	27-Apr-05	8.0	8.5	Thorium-232	0.603	pCi/g	NV	480366.233	1346689.18
A7-SA1-35	A7-SA1-35^17-RM	27-Apr-05	8.0	8.5	Uranium, Total	4.31	mg/kg	NV	480366.233	1346689.18
A7-SA1-35	A7-SA1-35^19-RM	27-Apr-05	9.0	9.5	Arsenic	3.78	mg/kg	NV	480366.233	1346689.18
A7-SA1-35	A7-SA1-35^19-RM	27-Apr-05	9.0	9.5	Beryllium	0.171	mg/kg	NV	480366.233	1346689.18
A7-SA1-35	A7-SA1-35^19-RM	27-Apr-05	9.0	9.5	Lead	7.4	mg/kg	NV	480366.233	1346689.18
A7-SA1-35	A7-SA1-35^19-RM	27-Apr-05	9.0	9.5	Manganese	409	mg/kg	NV	480366.233	1346689.18
A7-SA1-35	A7-SA1-35^19-RM	27-Apr-05	9.0	9.5	Cesium-137	0.0374	pCi/g	UNV	480366.233	1346689.18
A7-SA1-35	A7-SA1-35^19-RM	27-Apr-05	9.0	9.5	Lead-210	0.551	pCi/g	UNV	480366.233	1346689.18
A7-SA1-35	A7-SA1-35^19-RM	27-Apr-05	9.0	9.5	Radium-226	0.529	pCi/g	NV	480366.233	1346689.18
A7-SA1-35	A7-SA1-35^19-RM	27-Apr-05	9.0	9.5	Radium-228	0.404	pCi/g	NV	480366.233	1346689.18
A7-SA1-35	A7-SA1-35^19-RM	27-Apr-05	9.0	9.5	Technetium-99	0.746	pCi/g	UNV	480366.233	1346689.18
A7-SA1-35	A7-SA1-35^19-RM	27-Apr-05	9.0	9.5	Thorium-228	0.418	pCi/g	NV	480366.233	1346689.18
A7-SA1-35	A7-SA1-35^19-RM	27-Apr-05	9.0	9.5	Thorium-230	0.746	pCi/g	NV	480366.233	1346689.18
A7-SA1-35	A7-SA1-35^19-RM	27-Apr-05	9.0	9.5	Thorium-232	0.404	pCi/g	NV	480366.233	1346689.18
A7-SA1-35	A7-SA1-35^19-RM	27-Apr-05	9.0	9.5	Uranium, Total	2.01	mg/kg	NV	480366.233	1346689.18
A7-SA1-35	A7-SA1-35^21-RM	27-Apr-05	10.0	10.5	Arsenic	4.36	mg/kg	NV	480366.233	1346689.18
A7-SA1-35	A7-SA1-35^21-RM	27-Apr-05	10.0	10.5	Beryllium	0.168	mg/kg	NV	480366.233	1346689.18
A7-SA1-35	A7-SA1-35^21-RM	27-Apr-05	10.0	10.5	Lead	5.81	mg/kg	NV	480366.233	1346689.18
A7-SA1-35	A7-SA1-35^21-RM	27-Apr-05	10.0	10.5	Manganese	331	mg/kg	NV	480366.233	1346689.18
A7-SA1-35	A7-SA1-35^21-RM	27-Apr-05	10.0	10.5	Cesium-137	0.0343	pCi/g	UNV	480366.233	1346689.18
A7-SA1-35	A7-SA1-35^21-RM	27-Apr-05	10.0	10.5	Lead-210	0.91	pCi/g	NV	480366.233	1346689.18
A7-SA1-35	A7-SA1-35^21-RM	27-Apr-05	10.0	10.5	Radium-226	0.702	pCi/g	NV	480366.233	1346689.18
A7-SA1-35	A7-SA1-35^21-RM	27-Apr-05	10.0	10.5	Radium-228	0.468	pCi/g	NV	480366.233	1346689.18
A7-SA1-35	A7-SA1-35^21-RM	27-Apr-05	10.0	10.5	Technetium-99	0.759	pCi/g	UNV	480366.233	1346689.18
A7-SA1-35	A7-SA1-35^21-RM	27-Apr-05	10.0	10.5	Thorium-228	0.543	pCi/g	NV	480366.233	1346689.18
A7-SA1-35	A7-SA1-35^21-RM	27-Apr-05	10.0	10.5	Thorium-230	0.87	pCi/g	NV	480366.233	1346689.18
A7-SA1-35	A7-SA1-35^21-RM	27-Apr-05	10.0	10.5	Thorium-232	0.468	pCi/g	NV	480366.233	1346689.18
A7-SA1-35	A7-SA1-35^21-RM	27-Apr-05	10.0	10.5	Uranium, Total	3.9	mg/kg	NV	480366.233	1346689.18
A7-SA1-35	A7-SA1-35^23-RM	27-Apr-05	11.0	11.5	Arsenic	4.09	mg/kg	NV	480366.233	1346689.18
A7-SA1-35	A7-SA1-35^23-RM	27-Apr-05	11.0	11.5	Beryllium	0.171	mg/kg	NV	480366.233	1346689.18
A7-SA1-35	A7-SA1-35^23-RM	27-Apr-05	11.0	11.5	Lead	5.31	mg/kg	NV	480366.233	1346689.18

APPENDIX A
PREDESIGN CHARACTERIZATION DATA FOR AREA 7 SILOS AND GENERAL AREA

Boring	Sample ID	Sample Date	Sample Depth (feet)		Parameter	Result	Units	Qualifier	Northing	Easting
			Top	Bottom						
A7-SA1-35	A7-SA1-35^23-RM	27-Apr-05	11.0	11.5	Manganese	326	mg/kg	NV	480366.233	1346689.18
A7-SA1-35	A7-SA1-35^23-RM	27-Apr-05	11.0	11.5	Cesium-137	0.0376	pCi/g	UNV	480366.233	1346689.18
A7-SA1-35	A7-SA1-35^23-RM	27-Apr-05	11.0	11.5	Lead-210	0.901	pCi/g	NV	480366.233	1346689.18
A7-SA1-35	A7-SA1-35^23-RM	27-Apr-05	11.0	11.5	Radium-226	0.642	pCi/g	NV	480366.233	1346689.18
A7-SA1-35	A7-SA1-35^23-RM	27-Apr-05	11.0	11.5	Radium-228	0.427	pCi/g	NV	480366.233	1346689.18
A7-SA1-35	A7-SA1-35^23-RM	27-Apr-05	11.0	11.5	Technetium-99	0.724	pCi/g	UNV	480366.233	1346689.18
A7-SA1-35	A7-SA1-35^23-RM	27-Apr-05	11.0	11.5	Thorium-228	0.439	pCi/g	NV	480366.233	1346689.18
A7-SA1-35	A7-SA1-35^23-RM	27-Apr-05	11.0	11.5	Thorium-230	0.787	pCi/g	NV	480366.233	1346689.18
A7-SA1-35	A7-SA1-35^23-RM	27-Apr-05	11.0	11.5	Thorium-232	0.427	pCi/g	NV	480366.233	1346689.18
A7-SA1-35	A7-SA1-35^23-RM	27-Apr-05	11.0	11.5	Uranium, Total	3.3	mg/kg	NV	480366.233	1346689.18
A7-SA1-35	A7-SA1-35^24-RM	27-Apr-05	11.5	12.0	Arsenic	3.46	mg/kg	NV	480366.233	1346689.18
A7-SA1-35	A7-SA1-35^24-RM	27-Apr-05	11.5	12.0	Beryllium	0.131	mg/kg	NV	480366.233	1346689.18
A7-SA1-35	A7-SA1-35^24-RM	27-Apr-05	11.5	12.0	Lead	5	mg/kg	NV	480366.233	1346689.18
A7-SA1-35	A7-SA1-35^24-RM	27-Apr-05	11.5	12.0	Manganese	364	mg/kg	NV	480366.233	1346689.18
A7-SA1-35	A7-SA1-35^24-RM	27-Apr-05	11.5	12.0	Cesium-137	0.0349	pCi/g	UNV	480366.233	1346689.18
A7-SA1-35	A7-SA1-35^24-RM	27-Apr-05	11.5	12.0	Lead-210	1.32	pCi/g	NV	480366.233	1346689.18
A7-SA1-35	A7-SA1-35^24-RM	27-Apr-05	11.5	12.0	Radium-226	0.595	pCi/g	NV	480366.233	1346689.18
A7-SA1-35	A7-SA1-35^24-RM	27-Apr-05	11.5	12.0	Radium-228	0.372	pCi/g	NV	480366.233	1346689.18
A7-SA1-35	A7-SA1-35^24-RM	27-Apr-05	11.5	12.0	Technetium-99	0.756	pCi/g	UNV	480366.233	1346689.18
A7-SA1-35	A7-SA1-35^24-RM	27-Apr-05	11.5	12.0	Thorium-228	0.372	pCi/g	NV	480366.233	1346689.18
A7-SA1-35	A7-SA1-35^24-RM	27-Apr-05	11.5	12.0	Thorium-230	0.761	pCi/g	NV	480366.233	1346689.18
A7-SA1-35	A7-SA1-35^24-RM	27-Apr-05	11.5	12.0	Thorium-232	0.372	pCi/g	NV	480366.233	1346689.18
A7-SA1-35	A7-SA1-35^24-RM	27-Apr-05	11.5	12.0	Uranium, Total	2.91	mg/kg	NV	480366.233	1346689.18
A7-SA1-36	A7-SA1-36^1-RM	27-Apr-05	0.0	0.5	Arsenic	3.96	mg/kg	NV	480521.536	1346818.438
A7-SA1-36	A7-SA1-36^1-RM	27-Apr-05	0.0	0.5	Beryllium	0.271	mg/kg	NV	480521.536	1346818.438
A7-SA1-36	A7-SA1-36^1-RM	27-Apr-05	0.0	0.5	Lead	8.06	mg/kg	NV	480521.536	1346818.438
A7-SA1-36	A7-SA1-36^1-RM	27-Apr-05	0.0	0.5	Manganese	245	mg/kg	NV	480521.536	1346818.438
A7-SA1-36	A7-SA1-36^1-RM	27-Apr-05	0.0	0.5	Cesium-137	0.0481	pCi/g	UNV	480521.536	1346818.438
A7-SA1-36	A7-SA1-36^1-RM	27-Apr-05	0.0	0.5	Lead-210	2.28	pCi/g	NV	480521.536	1346818.438
A7-SA1-36	A7-SA1-36^1-RM	27-Apr-05	0.0	0.5	Radium-226	0.925	pCi/g	NV	480521.536	1346818.438
A7-SA1-36	A7-SA1-36^1-RM	27-Apr-05	0.0	0.5	Radium-228	0.856	pCi/g	NV	480521.536	1346818.438
A7-SA1-36	A7-SA1-36^1-RM	27-Apr-05	0.0	0.5	Technetium-99	0.79	pCi/g	UNV	480521.536	1346818.438
A7-SA1-36	A7-SA1-36^1-RM	27-Apr-05	0.0	0.5	Thorium-228	0.937	pCi/g	NV	480521.536	1346818.438
A7-SA1-36	A7-SA1-36^1-RM	27-Apr-05	0.0	0.5	Thorium-230	0.979	pCi/g	NV	480521.536	1346818.438
A7-SA1-36	A7-SA1-36^1-RM	27-Apr-05	0.0	0.5	Thorium-232	0.856	pCi/g	NV	480521.536	1346818.438

5982

Boring	Sample ID	Sample Date	Sample Depth (feet)		Parameter	Result	Units	Qualifier	Northing	Easting
			Top	Bottom						
A7-SA1-36	A7-SA1-36^1-RM	27-Apr-05	0.0	0.5	Uranium, Total	4.85	mg/kg	NV	480521.536	1346818.438
A7-SA1-36	A7-SA1-36^3-RM	27-Apr-05	1.0	1.5	Arsenic	4.61	mg/kg	NV	480521.536	1346818.438
A7-SA1-36	A7-SA1-36^3-RM	27-Apr-05	1.0	1.5	Beryllium	0.46	mg/kg	NV	480521.536	1346818.438
A7-SA1-36	A7-SA1-36^3-RM	27-Apr-05	1.0	1.5	Lead	9.23	mg/kg	NV	480521.536	1346818.438
A7-SA1-36	A7-SA1-36^3-RM	27-Apr-05	1.0	1.5	Manganese	605	mg/kg	NV	480521.536	1346818.438
A7-SA1-36	A7-SA1-36^3-RM	27-Apr-05	1.0	1.5	Cesium-137	0.048	pCi/g	UNV	480521.536	1346818.438
A7-SA1-36	A7-SA1-36^3-RM	27-Apr-05	1.0	1.5	Lead-210	1.13	pCi/g	NV	480521.536	1346818.438
A7-SA1-36	A7-SA1-36^3-RM	27-Apr-05	1.0	1.5	Radium-226	0.954	pCi/g	NV	480521.536	1346818.438
A7-SA1-36	A7-SA1-36^3-RM	27-Apr-05	1.0	1.5	Radium-228	0.813	pCi/g	NV	480521.536	1346818.438
A7-SA1-36	A7-SA1-36^3-RM	27-Apr-05	1.0	1.5	Technetium-99	0.791	pCi/g	UNV	480521.536	1346818.438
A7-SA1-36	A7-SA1-36^3-RM	27-Apr-05	1.0	1.5	Thorium-228	0.915	pCi/g	NV	480521.536	1346818.438
A7-SA1-36	A7-SA1-36^3-RM	27-Apr-05	1.0	1.5	Thorium-230	1.6	pCi/g	NV	480521.536	1346818.438
A7-SA1-36	A7-SA1-36^3-RM	27-Apr-05	1.0	1.5	Thorium-232	0.813	pCi/g	NV	480521.536	1346818.438
A7-SA1-36	A7-SA1-36^3-RM	27-Apr-05	1.0	1.5	Uranium, Total	2.75	mg/kg	NV	480521.536	1346818.438
A7-SA1-36	A7-SA1-36^5-RM	27-Apr-05	2.0	2.5	Arsenic	3.76	mg/kg	NV	480521.536	1346818.438
A7-SA1-36	A7-SA1-36^5-RM	27-Apr-05	2.0	2.5	Beryllium	0.455	mg/kg	NV	480521.536	1346818.438
A7-SA1-36	A7-SA1-36^5-RM	27-Apr-05	2.0	2.5	Lead	8.88	mg/kg	NV	480521.536	1346818.438
A7-SA1-36	A7-SA1-36^5-RM	27-Apr-05	2.0	2.5	Manganese	499	mg/kg	NV	480521.536	1346818.438
A7-SA1-36	A7-SA1-36^5-RM	27-Apr-05	2.0	2.5	Cesium-137	0.0382	pCi/g	UNV	480521.536	1346818.438
A7-SA1-36	A7-SA1-36^5-RM	27-Apr-05	2.0	2.5	Lead-210	1.31	pCi/g	NV	480521.536	1346818.438
A7-SA1-36	A7-SA1-36^5-RM	27-Apr-05	2.0	2.5	Radium-226	0.849	pCi/g	NV	480521.536	1346818.438
A7-SA1-36	A7-SA1-36^5-RM	27-Apr-05	2.0	2.5	Radium-228	0.699	pCi/g	NV	480521.536	1346818.438
A7-SA1-36	A7-SA1-36^5-RM	27-Apr-05	2.0	2.5	Technetium-99	0.764	pCi/g	UNV	480521.536	1346818.438
A7-SA1-36	A7-SA1-36^5-RM	27-Apr-05	2.0	2.5	Thorium-228	0.697	pCi/g	NV	480521.536	1346818.438
A7-SA1-36	A7-SA1-36^5-RM	27-Apr-05	2.0	2.5	Thorium-230	1.1	pCi/g	NV	480521.536	1346818.438
A7-SA1-36	A7-SA1-36^5-RM	27-Apr-05	2.0	2.5	Thorium-232	0.699	pCi/g	NV	480521.536	1346818.438
A7-SA1-36	A7-SA1-36^5-RM	27-Apr-05	2.0	2.5	Uranium, Total	4	mg/kg	NV	480521.536	1346818.438
A7-SA1-36	A7-SA1-36^7-RM	27-Apr-05	3.0	3.5	Arsenic	4.3	mg/kg	NV	480521.536	1346818.438
A7-SA1-36	A7-SA1-36^7-RM	27-Apr-05	3.0	3.5	Beryllium	0.432	mg/kg	NV	480521.536	1346818.438
A7-SA1-36	A7-SA1-36^7-RM	27-Apr-05	3.0	3.5	Lead	10.5	mg/kg	NV	480521.536	1346818.438
A7-SA1-36	A7-SA1-36^7-RM	27-Apr-05	3.0	3.5	Manganese	453	mg/kg	NV	480521.536	1346818.438
A7-SA1-36	A7-SA1-36^7-RM	27-Apr-05	3.0	3.5	Cesium-137	0.048	pCi/g	UNV	480521.536	1346818.438
A7-SA1-36	A7-SA1-36^7-RM	27-Apr-05	3.0	3.5	Lead-210	1.57	pCi/g	NV	480521.536	1346818.438
A7-SA1-36	A7-SA1-36^7-RM	27-Apr-05	3.0	3.5	Radium-226	1.66	pCi/g	NV	480521.536	1346818.438
A7-SA1-36	A7-SA1-36^7-RM	27-Apr-05	3.0	3.5	Radium-228	0.671	pCi/g	NV	480521.536	1346818.438

APPENDIX A
PREDESIGN CHARACTERIZATION DATA FOR AREA 7 SILOS AND GENERAL AREA

Boring	Sample ID	Sample Date	Sample Depth (feet)		Parameter	Result	Units	Qualifier	Northing	Easting
			Top	Bottom						
A7-SA1-36	A7-SA1-36^7-RM	27-Apr-05	3.0	3.5	Technetium-99	0.757	pCi/g	UNV	480521.536	1346818.438
A7-SA1-36	A7-SA1-36^7-RM	27-Apr-05	3.0	3.5	Thorium-228	0.691	pCi/g	NV	480521.536	1346818.438
A7-SA1-36	A7-SA1-36^7-RM	27-Apr-05	3.0	3.5	Thorium-230	1.79	pCi/g	NV	480521.536	1346818.438
A7-SA1-36	A7-SA1-36^7-RM	27-Apr-05	3.0	3.5	Thorium-232	0.671	pCi/g	NV	480521.536	1346818.438
A7-SA1-36	A7-SA1-36^7-RM	27-Apr-05	3.0	3.5	Uranium, Total	6.83	mg/kg	NV	480521.536	1346818.438
A7-SA1-36	A7-SA1-36^9-RM	27-Apr-05	4.0	4.5	Arsenic	5.1	mg/kg	NV	480521.536	1346818.438
A7-SA1-36	A7-SA1-36^9-RM	27-Apr-05	4.0	4.5	Beryllium	0.176	mg/kg	NV	480521.536	1346818.438
A7-SA1-36	A7-SA1-36^9-RM	27-Apr-05	4.0	4.5	Lead	10.8	mg/kg	NV	480521.536	1346818.438
A7-SA1-36	A7-SA1-36^9-RM	27-Apr-05	4.0	4.5	Manganese	413	mg/kg	NV	480521.536	1346818.438
A7-SA1-36	A7-SA1-36^9-RM	27-Apr-05	4.0	4.5	Cesium-137	0.135	pCi/g	NV	480521.536	1346818.438
A7-SA1-36	A7-SA1-36^9-RM	27-Apr-05	4.0	4.5	Lead-210	2.5	pCi/g	NV	480521.536	1346818.438
A7-SA1-36	A7-SA1-36^9-RM	27-Apr-05	4.0	4.5	Radium-226	2.22	pCi/g	NV	480521.536	1346818.438
A7-SA1-36	A7-SA1-36^9-RM	27-Apr-05	4.0	4.5	Radium-228	0.753	pCi/g	NV	480521.536	1346818.438
A7-SA1-36	A7-SA1-36^9-RM	27-Apr-05	4.0	4.5	Technetium-99	0.763	pCi/g	UNV	480521.536	1346818.438
A7-SA1-36	A7-SA1-36^9-RM	27-Apr-05	4.0	4.5	Thorium-228	0.752	pCi/g	NV	480521.536	1346818.438
A7-SA1-36	A7-SA1-36^9-RM	27-Apr-05	4.0	4.5	Thorium-230	1.97	pCi/g	NV	480521.536	1346818.438
A7-SA1-36	A7-SA1-36^9-RM	27-Apr-05	4.0	4.5	Thorium-232	0.753	pCi/g	NV	480521.536	1346818.438
A7-SA1-36	A7-SA1-36^9-RM	27-Apr-05	4.0	4.5	Uranium, Total	8.98	mg/kg	NV	480521.536	1346818.438
A7-SA1-36	A7-SA1-36^11-RM	27-Apr-05	5.0	5.5	Arsenic	5.09	mg/kg	NV	480521.536	1346818.438
A7-SA1-36	A7-SA1-36^11-RM	27-Apr-05	5.0	5.5	Beryllium	0.434	mg/kg	NV	480521.536	1346818.438
A7-SA1-36	A7-SA1-36^11-RM	27-Apr-05	5.0	5.5	Lead	11.3	mg/kg	NV	480521.536	1346818.438
A7-SA1-36	A7-SA1-36^11-RM	27-Apr-05	5.0	5.5	Manganese	455	mg/kg	NV	480521.536	1346818.438
A7-SA1-36	A7-SA1-36^11-RM	27-Apr-05	5.0	5.5	Cesium-137	0.0492	pCi/g	UNV	480521.536	1346818.438
A7-SA1-36	A7-SA1-36^11-RM	27-Apr-05	5.0	5.5	Lead-210	1.18	pCi/g	NV	480521.536	1346818.438
A7-SA1-36	A7-SA1-36^11-RM	27-Apr-05	5.0	5.5	Radium-226	1.05	pCi/g	NV	480521.536	1346818.438
A7-SA1-36	A7-SA1-36^11-RM	27-Apr-05	5.0	5.5	Radium-228	0.797	pCi/g	NV	480521.536	1346818.438
A7-SA1-36	A7-SA1-36^11-RM	27-Apr-05	5.0	5.5	Technetium-99	0.771	pCi/g	UNV	480521.536	1346818.438
A7-SA1-36	A7-SA1-36^11-RM	27-Apr-05	5.0	5.5	Thorium-228	0.781	pCi/g	NV	480521.536	1346818.438
A7-SA1-36	A7-SA1-36^11-RM	27-Apr-05	5.0	5.5	Thorium-230	1.73	pCi/g	NV	480521.536	1346818.438
A7-SA1-36	A7-SA1-36^11-RM	27-Apr-05	5.0	5.5	Thorium-232	0.797	pCi/g	NV	480521.536	1346818.438
A7-SA1-36	A7-SA1-36^11-RM	27-Apr-05	5.0	5.5	Uranium, Total	6.35	mg/kg	NV	480521.536	1346818.438
A7-SA1-36	A7-SA1-36^13-RM	27-Apr-05	6.0	6.5	Arsenic	6.88	mg/kg	NV	480521.536	1346818.438
A7-SA1-36	A7-SA1-36^13-RM	27-Apr-05	6.0	6.5	Beryllium	0.482	mg/kg	NV	480521.536	1346818.438
A7-SA1-36	A7-SA1-36^13-RM	27-Apr-05	6.0	6.5	Lead	15.6	mg/kg	NV	480521.536	1346818.438
A7-SA1-36	A7-SA1-36^13-RM	27-Apr-05	6.0	6.5	Manganese	657	mg/kg	NV	480521.536	1346818.438

5982

Boring	Sample ID	Sample Date	Sample Depth (feet)		Parameter	Result	Units	Qualifier	Northing	Easting
			Top	Bottom						
A7-SA1-36	A7-SA1-36^13-RM	27-Apr-05	6.0	6.5	Cesium-137	0.0556	pCi/g	UNV	480521.536	1346818.438
A7-SA1-36	A7-SA1-36^13-RM	27-Apr-05	6.0	6.5	Lead-210	1.75	pCi/g	NV	480521.536	1346818.438
A7-SA1-36	A7-SA1-36^13-RM	27-Apr-05	6.0	6.5	Radium-226	2.47	pCi/g	NV	480521.536	1346818.438
A7-SA1-36	A7-SA1-36^13-RM	27-Apr-05	6.0	6.5	Radium-228	0.883	pCi/g	NV	480521.536	1346818.438
A7-SA1-36	A7-SA1-36^13-RM	27-Apr-05	6.0	6.5	Technetium-99	0.787	pCi/g	UNV	480521.536	1346818.438
A7-SA1-36	A7-SA1-36^13-RM	27-Apr-05	6.0	6.5	Thorium-228	0.859	pCi/g	NV	480521.536	1346818.438
A7-SA1-36	A7-SA1-36^13-RM	27-Apr-05	6.0	6.5	Thorium-230	2.96	pCi/g	NV	480521.536	1346818.438
A7-SA1-36	A7-SA1-36^13-RM	27-Apr-05	6.0	6.5	Thorium-232	0.883	pCi/g	NV	480521.536	1346818.438
A7-SA1-36	A7-SA1-36^13-RM	27-Apr-05	6.0	6.5	Uranium, Total	8.39	mg/kg	NV	480521.536	1346818.438
A7-SA1-36	A7-SA1-36^15-RM	27-Apr-05	7.0	7.5	Arsenic	9.65	mg/kg	NV	480521.536	1346818.438
A7-SA1-36	A7-SA1-36^15-RM	27-Apr-05	7.0	7.5	Beryllium	0.764	mg/kg	NV	480521.536	1346818.438
A7-SA1-36	A7-SA1-36^15-RM	27-Apr-05	7.0	7.5	Lead	17.8	mg/kg	NV	480521.536	1346818.438
A7-SA1-36	A7-SA1-36^15-RM	27-Apr-05	7.0	7.5	Manganese	746	mg/kg	NV	480521.536	1346818.438
A7-SA1-36	A7-SA1-36^15-RM	27-Apr-05	7.0	7.5	Cesium-137	0.0546	pCi/g	UNV	480521.536	1346818.438
A7-SA1-36	A7-SA1-36^15-RM	27-Apr-05	7.0	7.5	Lead-210	1.93	pCi/g	NV	480521.536	1346818.438
A7-SA1-36	A7-SA1-36^15-RM	27-Apr-05	7.0	7.5	Radium-226	2.56	pCi/g	NV	480521.536	1346818.438
A7-SA1-36	A7-SA1-36^15-RM	27-Apr-05	7.0	7.5	Radium-228	1.1	pCi/g	NV	480521.536	1346818.438
A7-SA1-36	A7-SA1-36^15-RM	27-Apr-05	7.0	7.5	Technetium-99	0.805	pCi/g	UNV	480521.536	1346818.438
A7-SA1-36	A7-SA1-36^15-RM	27-Apr-05	7.0	7.5	Thorium-228	1.12	pCi/g	NV	480521.536	1346818.438
A7-SA1-36	A7-SA1-36^15-RM	27-Apr-05	7.0	7.5	Thorium-230	1.87	pCi/g	NV	480521.536	1346818.438
A7-SA1-36	A7-SA1-36^15-RM	27-Apr-05	7.0	7.5	Thorium-232	1.1	pCi/g	NV	480521.536	1346818.438
A7-SA1-36	A7-SA1-36^15-RM	27-Apr-05	7.0	7.5	Uranium, Total	11.9	mg/kg	NV	480521.536	1346818.438
A7-SA1-36	A7-SA1-36^17-RM	27-Apr-05	8.0	8.5	Arsenic	6.49	mg/kg	NV	480521.536	1346818.438
A7-SA1-36	A7-SA1-36^17-RM	27-Apr-05	8.0	8.5	Beryllium	0.265	mg/kg	NV	480521.536	1346818.438
A7-SA1-36	A7-SA1-36^17-RM	27-Apr-05	8.0	8.5	Lead	8.7	mg/kg	NV	480521.536	1346818.438
A7-SA1-36	A7-SA1-36^17-RM	27-Apr-05	8.0	8.5	Manganese	593	mg/kg	NV	480521.536	1346818.438
A7-SA1-36	A7-SA1-36^17-RM	27-Apr-05	8.0	8.5	Cesium-137	0.0395	pCi/g	UNV	480521.536	1346818.438
A7-SA1-36	A7-SA1-36^17-RM	27-Apr-05	8.0	8.5	Lead-210	0.706	pCi/g	NV	480521.536	1346818.438
A7-SA1-36	A7-SA1-36^17-RM	27-Apr-05	8.0	8.5	Radium-226	1.23	pCi/g	NV	480521.536	1346818.438
A7-SA1-36	A7-SA1-36^17-RM	27-Apr-05	8.0	8.5	Radium-228	0.609	pCi/g	NV	480521.536	1346818.438
A7-SA1-36	A7-SA1-36^17-RM	27-Apr-05	8.0	8.5	Technetium-99	0.742	pCi/g	UNV	480521.536	1346818.438
A7-SA1-36	A7-SA1-36^17-RM	27-Apr-05	8.0	8.5	Thorium-228	0.68	pCi/g	NV	480521.536	1346818.438
A7-SA1-36	A7-SA1-36^17-RM	27-Apr-05	8.0	8.5	Thorium-230	2.25	pCi/g	NV	480521.536	1346818.438
A7-SA1-36	A7-SA1-36^17-RM	27-Apr-05	8.0	8.5	Thorium-232	0.609	pCi/g	NV	480521.536	1346818.438
A7-SA1-36	A7-SA1-36^17-RM	27-Apr-05	8.0	8.5	Uranium, Total	15.6	mg/kg	NV	480521.536	1346818.438

APPENDIX A
PREDESIGN CHARACTERIZATION DATA FOR AREA 7 SILOS AND GENERAL AREA

Boring	Sample ID	Sample Date	Sample Depth (feet)		Parameter	Result	Units	Qualifier	Northing	Easting
			Top	Bottom						
A7-SA1-36	A7-SA1-36^19-RM	27-Apr-05	9.0	9.5	Arsenic	4.61	mg/kg	NV	480521.536	1346818.438
A7-SA1-36	A7-SA1-36^19-RM	27-Apr-05	9.0	9.5	Beryllium	0.472	mg/kg	NV	480521.536	1346818.438
A7-SA1-36	A7-SA1-36^19-RM	27-Apr-05	9.0	9.5	Lead	7.71	mg/kg	NV	480521.536	1346818.438
A7-SA1-36	A7-SA1-36^19-RM	27-Apr-05	9.0	9.5	Manganese	554	mg/kg	NV	480521.536	1346818.438
A7-SA1-36	A7-SA1-36^19-RM	27-Apr-05	9.0	9.5	Cesium-137	0.0321	pCi/g	UNV	480521.536	1346818.438
A7-SA1-36	A7-SA1-36^19-RM	27-Apr-05	9.0	9.5	Lead-210	0.848	pCi/g	NV	480521.536	1346818.438
A7-SA1-36	A7-SA1-36^19-RM	27-Apr-05	9.0	9.5	Radium-226	0.706	pCi/g	NV	480521.536	1346818.438
A7-SA1-36	A7-SA1-36^19-RM	27-Apr-05	9.0	9.5	Radium-228	0.381	pCi/g	NV	480521.536	1346818.438
A7-SA1-36	A7-SA1-36^19-RM	27-Apr-05	9.0	9.5	Technetium-99	0.752	pCi/g	UNV	480521.536	1346818.438
A7-SA1-36	A7-SA1-36^19-RM	27-Apr-05	9.0	9.5	Thorium-228	0.382	pCi/g	NV	480521.536	1346818.438
A7-SA1-36	A7-SA1-36^19-RM	27-Apr-05	9.0	9.5	Thorium-230	1.56	pCi/g	NV	480521.536	1346818.438
A7-SA1-36	A7-SA1-36^19-RM	27-Apr-05	9.0	9.5	Thorium-232	0.381	pCi/g	NV	480521.536	1346818.438
A7-SA1-36	A7-SA1-36^19-RM	27-Apr-05	9.0	9.5	Uranium, Total	5.56	mg/kg	NV	480521.536	1346818.438
A7-SA1-36	A7-SA1-36^21-RM	27-Apr-05	10.0	10.5	Arsenic	2.16	mg/kg	NV	480521.536	1346818.438
A7-SA1-36	A7-SA1-36^21-RM	27-Apr-05	10.0	10.5	Beryllium	0.531	mg/kg	NV	480521.536	1346818.438
A7-SA1-36	A7-SA1-36^21-RM	27-Apr-05	10.0	10.5	Lead	5.29	mg/kg	NV	480521.536	1346818.438
A7-SA1-36	A7-SA1-36^21-RM	27-Apr-05	10.0	10.5	Manganese	576	mg/kg	NV	480521.536	1346818.438
A7-SA1-36	A7-SA1-36^21-RM	27-Apr-05	10.0	10.5	Cesium-137	0.0329	pCi/g	UNV	480521.536	1346818.438
A7-SA1-36	A7-SA1-36^21-RM	27-Apr-05	10.0	10.5	Lead-210	1.49	pCi/g	NV	480521.536	1346818.438
A7-SA1-36	A7-SA1-36^21-RM	27-Apr-05	10.0	10.5	Radium-226	0.723	pCi/g	NV	480521.536	1346818.438
A7-SA1-36	A7-SA1-36^21-RM	27-Apr-05	10.0	10.5	Radium-228	0.41	pCi/g	NV	480521.536	1346818.438
A7-SA1-36	A7-SA1-36^21-RM	27-Apr-05	10.0	10.5	Technetium-99	0.755	pCi/g	UNV	480521.536	1346818.438
A7-SA1-36	A7-SA1-36^21-RM	27-Apr-05	10.0	10.5	Thorium-228	0.412	pCi/g	NV	480521.536	1346818.438
A7-SA1-36	A7-SA1-36^21-RM	27-Apr-05	10.0	10.5	Thorium-230	1.2	pCi/g	NV	480521.536	1346818.438
A7-SA1-36	A7-SA1-36^21-RM	27-Apr-05	10.0	10.5	Thorium-232	0.41	pCi/g	NV	480521.536	1346818.438
A7-SA1-36	A7-SA1-36^21-RM	27-Apr-05	10.0	10.5	Uranium, Total	4.58	mg/kg	NV	480521.536	1346818.438
A7-SA1-36	A7-SA1-36^23-RM	27-Apr-05	11.0	11.5	Arsenic	2.92	mg/kg	NV	480521.536	1346818.438
A7-SA1-36	A7-SA1-36^23-RM	27-Apr-05	11.0	11.5	Beryllium	0.408	mg/kg	NV	480521.536	1346818.438
A7-SA1-36	A7-SA1-36^23-RM	27-Apr-05	11.0	11.5	Lead	4.39	mg/kg	NV	480521.536	1346818.438
A7-SA1-36	A7-SA1-36^23-RM	27-Apr-05	11.0	11.5	Manganese	193	mg/kg	NV	480521.536	1346818.438
A7-SA1-36	A7-SA1-36^23-RM	27-Apr-05	11.0	11.5	Cesium-137	0.0413	pCi/g	UNV	480521.536	1346818.438
A7-SA1-36	A7-SA1-36^23-RM	27-Apr-05	11.0	11.5	Lead-210	0.707	pCi/g	UNV	480521.536	1346818.438
A7-SA1-36	A7-SA1-36^23-RM	27-Apr-05	11.0	11.5	Radium-226	0.898	pCi/g	NV	480521.536	1346818.438
A7-SA1-36	A7-SA1-36^23-RM	27-Apr-05	11.0	11.5	Radium-228	0.755	pCi/g	NV	480521.536	1346818.438
A7-SA1-36	A7-SA1-36^23-RM	27-Apr-05	11.0	11.5	Technetium-99	0.741	pCi/g	UNV	480521.536	1346818.438

Boring	Sample ID	Sample Date	Sample Depth (feet)		Parameter	Result	Units	Qualifier	Northing	Easting
			Top	Bottom						
A7-SA1-36	A7-SA1-36^23-RM	27-Apr-05	11.0	11.5	Thorium-228	0.805	pCi/g	NV	480521.536	1346818.438
A7-SA1-36	A7-SA1-36^23-RM	27-Apr-05	11.0	11.5	Thorium-230	1.12	pCi/g	NV	480521.536	1346818.438
A7-SA1-36	A7-SA1-36^23-RM	27-Apr-05	11.0	11.5	Thorium-232	0.755	pCi/g	NV	480521.536	1346818.438
A7-SA1-36	A7-SA1-36^23-RM	27-Apr-05	11.0	11.5	Uranium, Total	7.56	mg/kg	NV	480521.536	1346818.438
A7-SA1-36	A7-SA1-36^24-RM	27-Apr-05	11.5	12.0	Arsenic	10.2	mg/kg	NV	480521.536	1346818.438
A7-SA1-36	A7-SA1-36^24-RM	27-Apr-05	11.5	12.0	Beryllium	0.484	mg/kg	NV	480521.536	1346818.438
A7-SA1-36	A7-SA1-36^24-RM	27-Apr-05	11.5	12.0	Lead	7.4	mg/kg	NV	480521.536	1346818.438
A7-SA1-36	A7-SA1-36^24-RM	27-Apr-05	11.5	12.0	Manganese	393	mg/kg	NV	480521.536	1346818.438
A7-SA1-36	A7-SA1-36^24-RM	27-Apr-05	11.5	12.0	Cesium-137	0.0412	pCi/g	UNV	480521.536	1346818.438
A7-SA1-36	A7-SA1-36^24-RM	27-Apr-05	11.5	12.0	Lead-210	0.733	pCi/g	UNV	480521.536	1346818.438
A7-SA1-36	A7-SA1-36^24-RM	27-Apr-05	11.5	12.0	Radium-226	0.827	pCi/g	NV	480521.536	1346818.438
A7-SA1-36	A7-SA1-36^24-RM	27-Apr-05	11.5	12.0	Radium-228	0.737	pCi/g	NV	480521.536	1346818.438
A7-SA1-36	A7-SA1-36^24-RM	27-Apr-05	11.5	12.0	Technetium-99	0.767	pCi/g	UNV	480521.536	1346818.438
A7-SA1-36	A7-SA1-36^24-RM	27-Apr-05	11.5	12.0	Thorium-228	0.749	pCi/g	NV	480521.536	1346818.438
A7-SA1-36	A7-SA1-36^24-RM	27-Apr-05	11.5	12.0	Thorium-230	1.44	pCi/g	NV	480521.536	1346818.438
A7-SA1-36	A7-SA1-36^24-RM	27-Apr-05	11.5	12.0	Thorium-232	0.737	pCi/g	NV	480521.536	1346818.438
A7-SA1-36	A7-SA1-36^24-RM	27-Apr-05	11.5	12.0	Uranium, Total	7.87	mg/kg	NV	480521.536	1346818.438
A7-SA1-37	A7-SA1-37^1-S	15-Dec-04	0.0	0.5	Benzo(a)anthracene	0.5	ug/kg	-	480867.298	1346851.56
A7-SA1-37	A7-SA1-37^1-S	15-Dec-04	0.0	0.5	Benzo(a)pyrene	0.67	ug/kg	-	480867.298	1346851.56
A7-SA1-37	A7-SA1-37^1-S	15-Dec-04	0.0	0.5	Benzo(b)fluoranthene	1.2	ug/kg	-	480867.298	1346851.56
A7-SA1-37	A7-SA1-37^3-S	15-Dec-04	1.0	1.5	Benzo(a)anthracene	6	ug/kg	-	480867.298	1346851.56
A7-SA1-37	A7-SA1-37^3-S	15-Dec-04	1.0	1.5	Benzo(a)anthracene	6.2	ug/kg	Z	480867.298	1346851.56
A7-SA1-37	A7-SA1-37^3-S	15-Dec-04	1.0	1.5	Benzo(a)pyrene	7.1	ug/kg	Z	480867.298	1346851.56
A7-SA1-37	A7-SA1-37^3-S	15-Dec-04	1.0	1.5	Benzo(a)pyrene	7.3	ug/kg	-	480867.298	1346851.56
A7-SA1-37	A7-SA1-37^3-S	15-Dec-04	1.0	1.5	Benzo(b)fluoranthene	10.7	ug/kg	Z	480867.298	1346851.56
A7-SA1-37	A7-SA1-37^3-S	15-Dec-04	1.0	1.5	Benzo(b)fluoranthene	11.2	ug/kg	-	480867.298	1346851.56
A7-SA1-37	A7-SA1-37^6-S	15-Dec-04	2.5	3.0	Benzo(a)anthracene	0.032	ug/kg	J	480867.298	1346851.56
A7-SA1-37	A7-SA1-37^6-S	15-Dec-04	2.5	3.0	Benzo(a)pyrene	0.036	ug/kg	J	480867.298	1346851.56
A7-SA1-37	A7-SA1-37^6-S	15-Dec-04	2.5	3.0	Benzo(b)fluoranthene	0.023	ug/kg	J	480867.298	1346851.56
A7-SA1-38	A7-SA1-38^1-RMP	14-Jan-05	0.0	0.5	Arsenic	4.19	mg/kg	NV	480709.14	1346977.762
A7-SA1-38	A7-SA1-38^1-RMP	14-Jan-05	0.0	0.5	Beryllium	0.478	mg/kg	NV	480709.14	1346977.762
A7-SA1-38	A7-SA1-38^1-RMP	14-Jan-05	0.0	0.5	Lead	8.17	mg/kg	NV	480709.14	1346977.762
A7-SA1-38	A7-SA1-38^1-RMP	14-Jan-05	0.0	0.5	Manganese	335	mg/kg	NV	480709.14	1346977.762
A7-SA1-38	A7-SA1-38^1-RMP	14-Jan-05	0.0	0.5	Aroclor-1254	0.0036	ug/kg	UNV	480709.14	1346977.762
A7-SA1-38	A7-SA1-38^1-RMP	14-Jan-05	0.0	0.5	Aroclor-1260	0.0036	ug/kg	UNV	480709.14	1346977.762

APPENDIX A
PREDESIGN CHARACTERIZATION DATA FOR AREA 7 SILOS AND GENERAL AREA

Boring	Sample ID	Sample Date	Sample Depth (feet)		Parameter	Result	Units	Qualifier	Northing	Easting
			Top	Bottom						
A7-SA1-38	A7-SA1-38^1-RMP	14-Jan-05	0.0	0.5	Cesium-137	0.0662	pCi/g	UNV	480709.14	1346977.762
A7-SA1-38	A7-SA1-38^1-RMP	14-Jan-05	0.0	0.5	Lead-210	0.72	pCi/g	UNV	480709.14	1346977.762
A7-SA1-38	A7-SA1-38^1-RMP	14-Jan-05	0.0	0.5	Radium-226	0.763	pCi/g	NV	480709.14	1346977.762
A7-SA1-38	A7-SA1-38^1-RMP	14-Jan-05	0.0	0.5	Radium-228	0.437	pCi/g	NV	480709.14	1346977.762
A7-SA1-38	A7-SA1-38^1-RMP	14-Jan-05	0.0	0.5	Technetium-99	0.866	pCi/g	UNV	480709.14	1346977.762
A7-SA1-38	A7-SA1-38^1-RMP	14-Jan-05	0.0	0.5	Thorium-228	0.455	pCi/g	NV	480709.14	1346977.762
A7-SA1-38	A7-SA1-38^1-RMP	14-Jan-05	0.0	0.5	Thorium-230	1.78	pCi/g	NV	480709.14	1346977.762
A7-SA1-38	A7-SA1-38^1-RMP	14-Jan-05	0.0	0.5	Thorium-232	0.437	pCi/g	NV	480709.14	1346977.762
A7-SA1-38	A7-SA1-38^1-RMP	14-Jan-05	0.0	0.5	Uranium, Total	7.02	mg/kg	NV	480709.14	1346977.762
A7-SA1-38	A7-SA1-38^9-RMP	14-Jan-05	4.0	4.5	Arsenic	3.88	mg/kg	NV	480709.14	1346977.762
A7-SA1-38	A7-SA1-38^9-RMP	14-Jan-05	4.0	4.5	Beryllium	0.32	mg/kg	NV	480709.14	1346977.762
A7-SA1-38	A7-SA1-38^9-RMP	14-Jan-05	4.0	4.5	Lead	6.64	mg/kg	NV	480709.14	1346977.762
A7-SA1-38	A7-SA1-38^9-RMP	14-Jan-05	4.0	4.5	Manganese	308	mg/kg	NV	480709.14	1346977.762
A7-SA1-38	A7-SA1-38^9-RMP	14-Jan-05	4.0	4.5	Aroclor-1254	0.0039	ug/kg	UNV	480709.14	1346977.762
A7-SA1-38	A7-SA1-38^9-RMP	14-Jan-05	4.0	4.5	Aroclor-1260	0.0039	ug/kg	UNV	480709.14	1346977.762
A7-SA1-38	A7-SA1-38^9-RMP	14-Jan-05	4.0	4.5	Cesium-137	0.0943	pCi/g	UNV	480709.14	1346977.762
A7-SA1-38	A7-SA1-38^9-RMP	14-Jan-05	4.0	4.5	Lead-210	0.725	pCi/g	UNV	480709.14	1346977.762
A7-SA1-38	A7-SA1-38^9-RMP	14-Jan-05	4.0	4.5	Radium-226	1.04	pCi/g	NV	480709.14	1346977.762
A7-SA1-38	A7-SA1-38^9-RMP	14-Jan-05	4.0	4.5	Radium-228	0.755	pCi/g	NV	480709.14	1346977.762
A7-SA1-38	A7-SA1-38^9-RMP	14-Jan-05	4.0	4.5	Technetium-99	0.749	pCi/g	UNV	480709.14	1346977.762
A7-SA1-38	A7-SA1-38^9-RMP	14-Jan-05	4.0	4.5	Thorium-228	0.73	pCi/g	NV	480709.14	1346977.762
A7-SA1-38	A7-SA1-38^9-RMP	14-Jan-05	4.0	4.5	Thorium-230	2.62	pCi/g	NV	480709.14	1346977.762
A7-SA1-38	A7-SA1-38^9-RMP	14-Jan-05	4.0	4.5	Thorium-232	0.755	pCi/g	NV	480709.14	1346977.762
A7-SA1-38	A7-SA1-38^9-RMP	14-Jan-05	4.0	4.5	Uranium, Total	7.96	mg/kg	NV	480709.14	1346977.762
A7-SA1-39	A7-SA1-39^1-RMP	14-Jan-05	0.0	0.5	Arsenic	1.63	mg/kg	NV	480804.4802	1347005.56
A7-SA1-39	A7-SA1-39^1-RMP	14-Jan-05	0.0	0.5	Beryllium	0.209	mg/kg	NV	480804.4802	1347005.56
A7-SA1-39	A7-SA1-39^1-RMP	14-Jan-05	0.0	0.5	Lead	4.23	mg/kg	NV	480804.4802	1347005.56
A7-SA1-39	A7-SA1-39^1-RMP	14-Jan-05	0.0	0.5	Manganese	199	mg/kg	NV	480804.4802	1347005.56
A7-SA1-39	A7-SA1-39^1-RMP	14-Jan-05	0.0	0.5	Aroclor-1254	0.0036	ug/kg	UNV	480804.4802	1347005.56
A7-SA1-39	A7-SA1-39^1-RMP	14-Jan-05	0.0	0.5	Aroclor-1260	0.0036	ug/kg	UNV	480804.4802	1347005.56
A7-SA1-39	A7-SA1-39^1-RMP	14-Jan-05	0.0	0.5	Cesium-137	0.0723	pCi/g	UNV	480804.4802	1347005.56
A7-SA1-39	A7-SA1-39^1-RMP	14-Jan-05	0.0	0.5	Lead-210	0.694	pCi/g	UNV	480804.4802	1347005.56
A7-SA1-39	A7-SA1-39^1-RMP	14-Jan-05	0.0	0.5	Radium-226	0.632	pCi/g	NV	480804.4802	1347005.56
A7-SA1-39	A7-SA1-39^1-RMP	14-Jan-05	0.0	0.5	Radium-228	0.391	pCi/g	NV	480804.4802	1347005.56
A7-SA1-39	A7-SA1-39^1-RMP	14-Jan-05	0.0	0.5	Technetium-99	0.821	pCi/g	UNV	480804.4802	1347005.56

5982

Boring	Sample ID	Sample Date	Sample Depth (feet)		Parameter	Result	Units	Qualifier	Northing	Easting
			Top	Bottom						
A7-SA1-39	A7-SA1-39^1-RMP	14-Jan-05	0.0	0.5	Thorium-228	0.414	pCi/g	NV	480804.4802	1347005.56
A7-SA1-39	A7-SA1-39^1-RMP	14-Jan-05	0.0	0.5	Thorium-230	1.73	pCi/g	NV	480804.4802	1347005.56
A7-SA1-39	A7-SA1-39^1-RMP	14-Jan-05	0.0	0.5	Thorium-232	0.391	pCi/g	NV	480804.4802	1347005.56
A7-SA1-39	A7-SA1-39^1-RMP	14-Jan-05	0.0	0.5	Uranium, Total	3.17	mg/kg	UNV	480804.4802	1347005.56
A7-SA1-39	A7-SA1-39^9-RMP	14-Jan-05	4.0	4.5	Arsenic	6.79	mg/kg	NV	480804.4802	1347005.56
A7-SA1-39	A7-SA1-39^9-RMP	14-Jan-05	4.0	4.5	Beryllium	0.73	mg/kg	NV	480804.4802	1347005.56
A7-SA1-39	A7-SA1-39^9-RMP	14-Jan-05	4.0	4.5	Lead	11.5	mg/kg	NV	480804.4802	1347005.56
A7-SA1-39	A7-SA1-39^9-RMP	14-Jan-05	4.0	4.5	Manganese	538	mg/kg	NV	480804.4802	1347005.56
A7-SA1-39	A7-SA1-39^9-RMP	14-Jan-05	4.0	4.5	Aroclor-1254	0.004	ug/kg	UNV	480804.4802	1347005.56
A7-SA1-39	A7-SA1-39^9-RMP	14-Jan-05	4.0	4.5	Aroclor-1260	0.004	ug/kg	UNV	480804.4802	1347005.56
A7-SA1-39	A7-SA1-39^9-RMP	14-Jan-05	4.0	4.5	Cesium-137	0.0576	pCi/g	UNV	480804.4802	1347005.56
A7-SA1-39	A7-SA1-39^9-RMP	14-Jan-05	4.0	4.5	Lead-210	0.879	pCi/g	NV	480804.4802	1347005.56
A7-SA1-39	A7-SA1-39^9-RMP	14-Jan-05	4.0	4.5	Radium-226	1.14	pCi/g	NV	480804.4802	1347005.56
A7-SA1-39	A7-SA1-39^9-RMP	14-Jan-05	4.0	4.5	Radium-228	0.952	pCi/g	NV	480804.4802	1347005.56
A7-SA1-39	A7-SA1-39^9-RMP	14-Jan-05	4.0	4.5	Technetium-99	0.792	pCi/g	UNV	480804.4802	1347005.56
A7-SA1-39	A7-SA1-39^9-RMP	14-Jan-05	4.0	4.5	Thorium-228	0.949	pCi/g	NV	480804.4802	1347005.56
A7-SA1-39	A7-SA1-39^9-RMP	14-Jan-05	4.0	4.5	Thorium-230	4.45	pCi/g	NV	480804.4802	1347005.56
A7-SA1-39	A7-SA1-39^9-RMP	14-Jan-05	4.0	4.5	Thorium-232	0.952	pCi/g	NV	480804.4802	1347005.56
A7-SA1-39	A7-SA1-39^9-RMP	14-Jan-05	4.0	4.5	Uranium, Total	3.02	mg/kg	NV	480804.4802	1347005.56
A7-SA1-4	A7-SA1-4^1-RMP	15-Dec-04	0.0	0.5	Arsenic	4.08	mg/kg	J	480155.399	1346724.86
A7-SA1-4	A7-SA1-4^1-RMP	15-Dec-04	0.0	0.5	Beryllium	0.487	mg/kg	U	480155.399	1346724.86
A7-SA1-4	A7-SA1-4^1-RMP	15-Dec-04	0.0	0.5	Lead	17.1	mg/kg	J	480155.399	1346724.86
A7-SA1-4	A7-SA1-4^1-RMP	15-Dec-04	0.0	0.5	Manganese	583	mg/kg	-	480155.399	1346724.86
A7-SA1-4	A7-SA1-4^1-RMP	15-Dec-04	0.0	0.5	Aroclor-1254	0.0022	ug/kg	J	480155.399	1346724.86
A7-SA1-4	A7-SA1-4^1-RMP	15-Dec-04	0.0	0.5	Aroclor-1260	0.0043	ug/kg	U	480155.399	1346724.86
A7-SA1-4	A7-SA1-4^1-RMP	15-Dec-04	0.0	0.5	Cesium-137	0.285	pCi/g	-	480155.399	1346724.86
A7-SA1-4	A7-SA1-4^1-RMP	15-Dec-04	0.0	0.5	Lead-210	1.95	pCi/g	-	480155.399	1346724.86
A7-SA1-4	A7-SA1-4^1-RMP	15-Dec-04	0.0	0.5	Radium-226	1.17	pCi/g	-	480155.399	1346724.86
A7-SA1-4	A7-SA1-4^1-RMP	15-Dec-04	0.0	0.5	Radium-228	0.956	pCi/g	-	480155.399	1346724.86
A7-SA1-4	A7-SA1-4^1-RMP	15-Dec-04	0.0	0.5	Technetium-99	0.806	pCi/g	U	480155.399	1346724.86
A7-SA1-4	A7-SA1-4^1-RMP	15-Dec-04	0.0	0.5	Thorium-228	1.04	pCi/g	-	480155.399	1346724.86
A7-SA1-4	A7-SA1-4^1-RMP	15-Dec-04	0.0	0.5	Thorium-230	0.61	pCi/g	J	480155.399	1346724.86
A7-SA1-4	A7-SA1-4^1-RMP	15-Dec-04	0.0	0.5	Thorium-232	0.956	pCi/g	-	480155.399	1346724.86
A7-SA1-4	A7-SA1-4^1-RMP	15-Dec-04	0.0	0.5	Uranium, Total	9.52	mg/kg	-	480155.399	1346724.86
A7-SA1-4	A7-SA1-4^3-RMP	15-Dec-04	1.0	1.5	Arsenic	5.81	mg/kg	-	480155.399	1346724.86

APPENDIX A
PREDESIGN CHARACTERIZATION DATA FOR AREA 7 SILOS AND GENERAL AREA

Boring	Sample ID	Sample Date	Sample Depth (feet)		Parameter	Result	Units	Qualifier	Northing	Easting
			Top	Bottom						
A7-SA1-4	A7-SA1-4^3-RMP	15-Dec-04	1.0	1.5	Beryllium	0.478	mg/kg	U	480155.399	1346724.86
A7-SA1-4	A7-SA1-4^3-RMP	15-Dec-04	1.0	1.5	Lead	11.1	mg/kg	J	480155.399	1346724.86
A7-SA1-4	A7-SA1-4^3-RMP	15-Dec-04	1.0	1.5	Manganese	639	mg/kg	-	480155.399	1346724.86
A7-SA1-4	A7-SA1-4^3-RMP	15-Dec-04	1.0	1.5	Aroclor-1254	0.0011	ug/kg	J	480155.399	1346724.86
A7-SA1-4	A7-SA1-4^3-RMP	15-Dec-04	1.0	1.5	Aroclor-1260	0.004	ug/kg	U	480155.399	1346724.86
A7-SA1-4	A7-SA1-4^3-RMP	15-Dec-04	1.0	1.5	Cesium-137	0.029	pCi/g	U	480155.399	1346724.86
A7-SA1-4	A7-SA1-4^3-RMP	15-Dec-04	1.0	1.5	Lead-210	0.72	pCi/g	U	480155.399	1346724.86
A7-SA1-4	A7-SA1-4^3-RMP	15-Dec-04	1.0	1.5	Radium-226	0.93	pCi/g	-	480155.399	1346724.86
A7-SA1-4	A7-SA1-4^3-RMP	15-Dec-04	1.0	1.5	Radium-228	0.772	pCi/g	-	480155.399	1346724.86
A7-SA1-4	A7-SA1-4^3-RMP	15-Dec-04	1.0	1.5	Technetium-99	0.8	pCi/g	U	480155.399	1346724.86
A7-SA1-4	A7-SA1-4^3-RMP	15-Dec-04	1.0	1.5	Thorium-228	0.785	pCi/g	-	480155.399	1346724.86
A7-SA1-4	A7-SA1-4^3-RMP	15-Dec-04	1.0	1.5	Thorium-230	4.25	pCi/g	J	480155.399	1346724.86
A7-SA1-4	A7-SA1-4^3-RMP	15-Dec-04	1.0	1.5	Thorium-232	0.772	pCi/g	-	480155.399	1346724.86
A7-SA1-4	A7-SA1-4^3-RMP	15-Dec-04	1.0	1.5	Uranium, Total	3.15	mg/kg	-	480155.399	1346724.86
A7-SA1-4	A7-SA1-4^6-RMP	15-Dec-04	2.5	3.0	Arsenic	6.16	mg/kg	-	480155.399	1346724.86
A7-SA1-4	A7-SA1-4^6-RMP	15-Dec-04	2.5	3.0	Beryllium	0.493	mg/kg	U	480155.399	1346724.86
A7-SA1-4	A7-SA1-4^6-RMP	15-Dec-04	2.5	3.0	Lead	10.1	mg/kg	J	480155.399	1346724.86
A7-SA1-4	A7-SA1-4^6-RMP	15-Dec-04	2.5	3.0	Manganese	629	mg/kg	-	480155.399	1346724.86
A7-SA1-4	A7-SA1-4^6-RMP	15-Dec-04	2.5	3.0	Aroclor-1254	0.004	ug/kg	U	480155.399	1346724.86
A7-SA1-4	A7-SA1-4^6-RMP	15-Dec-04	2.5	3.0	Aroclor-1260	0.004	ug/kg	U	480155.399	1346724.86
A7-SA1-4	A7-SA1-4^6-RMP	15-Dec-04	2.5	3.0	Cesium-137	0.0504	pCi/g	U	480155.399	1346724.86
A7-SA1-4	A7-SA1-4^6-RMP	15-Dec-04	2.5	3.0	Lead-210	0.908	pCi/g	J	480155.399	1346724.86
A7-SA1-4	A7-SA1-4^6-RMP	15-Dec-04	2.5	3.0	Radium-226	1.1	pCi/g	-	480155.399	1346724.86
A7-SA1-4	A7-SA1-4^6-RMP	15-Dec-04	2.5	3.0	Radium-228	1.08	pCi/g	-	480155.399	1346724.86
A7-SA1-4	A7-SA1-4^6-RMP	15-Dec-04	2.5	3.0	Technetium-99	0.817	pCi/g	U	480155.399	1346724.86
A7-SA1-4	A7-SA1-4^6-RMP	15-Dec-04	2.5	3.0	Thorium-228	1.09	pCi/g	-	480155.399	1346724.86
A7-SA1-4	A7-SA1-4^6-RMP	15-Dec-04	2.5	3.0	Thorium-230	4.39	pCi/g	J	480155.399	1346724.86
A7-SA1-4	A7-SA1-4^6-RMP	15-Dec-04	2.5	3.0	Thorium-232	1.08	pCi/g	-	480155.399	1346724.86
A7-SA1-4	A7-SA1-4^6-RMP	15-Dec-04	2.5	3.0	Uranium, Total	5.93	mg/kg	-	480155.399	1346724.86
A7-SA1-40	A7-SA1-40^1-RM	18-Apr-05	0.0	0.5	Arsenic	5.81	mg/kg	J	480711.656	1346767.599
A7-SA1-40	A7-SA1-40^1-RM	18-Apr-05	0.0	0.5	Lead-210	1.74	pCi/g	-	480711.656	1346767.599
A7-SA1-40	A7-SA1-40^1-RM	18-Apr-05	0.0	0.5	Radium-226	1.34	pCi/g	-	480711.656	1346767.599
A7-SA1-40	A7-SA1-40^1-RM	18-Apr-05	0.0	0.5	Radium-228	1.18	pCi/g	-	480711.656	1346767.599
A7-SA1-40	A7-SA1-40^1-RM	18-Apr-05	0.0	0.5	Thorium-228	1.23	pCi/g	-	480711.656	1346767.599
A7-SA1-40	A7-SA1-40^1-RM	18-Apr-05	0.0	0.5	Thorium-232	1.18	pCi/g	-	480711.656	1346767.599

5982

Boring	Sample ID	Sample Date	Sample Depth (feet)		Parameter	Result	Units	Qualifier	Northing	Easting
			Top	Bottom						
A7-SA1-40	A7-SA1-40^4-RM	18-Apr-05	1.5	2.0	Arsenic	7.79	mg/kg	J	480711.656	1346767.599
A7-SA1-40	A7-SA1-40^4-RM	18-Apr-05	1.5	2.0	Lead-210	0.73	pCi/g	U	480711.656	1346767.599
A7-SA1-40	A7-SA1-40^4-RM	18-Apr-05	1.5	2.0	Radium-226	0.929	pCi/g	-	480711.656	1346767.599
A7-SA1-40	A7-SA1-40^4-RM	18-Apr-05	1.5	2.0	Radium-228	0.86	pCi/g	-	480711.656	1346767.599
A7-SA1-40	A7-SA1-40^4-RM	18-Apr-05	1.5	2.0	Thorium-228	0.934	pCi/g	-	480711.656	1346767.599
A7-SA1-40	A7-SA1-40^4-RM	18-Apr-05	1.5	2.0	Thorium-232	0.86	pCi/g	-	480711.656	1346767.599
A7-SA1-40	A7-SA1-40^6-RM	18-Apr-05	2.5	3.0	Arsenic	5.96	mg/kg	J	480711.656	1346767.599
A7-SA1-40	A7-SA1-40^6-RM	18-Apr-05	2.5	3.0	Lead-210	0.864	pCi/g	J	480711.656	1346767.599
A7-SA1-40	A7-SA1-40^6-RM	18-Apr-05	2.5	3.0	Radium-226	0.906	pCi/g	-	480711.656	1346767.599
A7-SA1-40	A7-SA1-40^6-RM	18-Apr-05	2.5	3.0	Radium-228	0.889	pCi/g	-	480711.656	1346767.599
A7-SA1-40	A7-SA1-40^6-RM	18-Apr-05	2.5	3.0	Thorium-228	0.947	pCi/g	-	480711.656	1346767.599
A7-SA1-40	A7-SA1-40^6-RM	18-Apr-05	2.5	3.0	Thorium-232	0.889	pCi/g	-	480711.656	1346767.599
A7-SA1-40	A7-SA1-40^8-RM	18-Apr-05	3.5	4.0	Arsenic	6.63	mg/kg	J	480711.656	1346767.599
A7-SA1-40	A7-SA1-40^8-RM	18-Apr-05	3.5	4.0	Lead-210	1.01	pCi/g	J	480711.656	1346767.599
A7-SA1-40	A7-SA1-40^8-RM	18-Apr-05	3.5	4.0	Radium-226	1.46	pCi/g	-	480711.656	1346767.599
A7-SA1-40	A7-SA1-40^8-RM	18-Apr-05	3.5	4.0	Radium-228	1.25	pCi/g	-	480711.656	1346767.599
A7-SA1-40	A7-SA1-40^8-RM	18-Apr-05	3.5	4.0	Thorium-228	1.36	pCi/g	-	480711.656	1346767.599
A7-SA1-40	A7-SA1-40^8-RM	18-Apr-05	3.5	4.0	Thorium-232	1.25	pCi/g	-	480711.656	1346767.599
A7-SA1-40	A7-SA1-40^10-RM	18-Apr-05	4.5	5.0	Arsenic	6.19	mg/kg	J	480711.656	1346767.599
A7-SA1-40	A7-SA1-40^10-RM	18-Apr-05	4.5	5.0	Lead-210	1.45	pCi/g	J	480711.656	1346767.599
A7-SA1-40	A7-SA1-40^10-RM	18-Apr-05	4.5	5.0	Radium-226	1.26	pCi/g	-	480711.656	1346767.599
A7-SA1-40	A7-SA1-40^10-RM	18-Apr-05	4.5	5.0	Radium-228	1.15	pCi/g	-	480711.656	1346767.599
A7-SA1-40	A7-SA1-40^10-RM	18-Apr-05	4.5	5.0	Thorium-228	1.25	pCi/g	-	480711.656	1346767.599
A7-SA1-40	A7-SA1-40^10-RM	18-Apr-05	4.5	5.0	Thorium-232	1.15	pCi/g	-	480711.656	1346767.599
A7-SA1-40	A7-SA1-40^12-RM	18-Apr-05	5.5	6.0	Arsenic	5.16	mg/kg	J	480711.656	1346767.599
A7-SA1-40	A7-SA1-40^12-RM	18-Apr-05	5.5	6.0	Lead-210	0.927	pCi/g	U	480711.656	1346767.599
A7-SA1-40	A7-SA1-40^12-RM	18-Apr-05	5.5	6.0	Radium-226	1.23	pCi/g	-	480711.656	1346767.599
A7-SA1-40	A7-SA1-40^12-RM	18-Apr-05	5.5	6.0	Radium-228	1.28	pCi/g	-	480711.656	1346767.599
A7-SA1-40	A7-SA1-40^12-RM	18-Apr-05	5.5	6.0	Thorium-228	1.28	pCi/g	-	480711.656	1346767.599
A7-SA1-40	A7-SA1-40^12-RM	18-Apr-05	5.5	6.0	Thorium-232	1.28	pCi/g	-	480711.656	1346767.599
A7-SA1-40	A7-SA1-40^14-RM	18-Apr-05	6.5	7.0	Arsenic	6.86	mg/kg	J	480711.656	1346767.599
A7-SA1-40	A7-SA1-40^14-RM	18-Apr-05	6.5	7.0	Lead-210	1.09	pCi/g	J	480711.656	1346767.599
A7-SA1-40	A7-SA1-40^14-RM	18-Apr-05	6.5	7.0	Radium-226	1.57	pCi/g	-	480711.656	1346767.599
A7-SA1-40	A7-SA1-40^14-RM	18-Apr-05	6.5	7.0	Radium-228	1.2	pCi/g	-	480711.656	1346767.599
A7-SA1-40	A7-SA1-40^14-RM	18-Apr-05	6.5	7.0	Thorium-228	1.28	pCi/g	-	480711.656	1346767.599

APPENDIX A
PREDESIGN CHARACTERIZATION DATA FOR AREA 7 SILOS AND GENERAL AREA

Boring	Sample ID	Sample Date	Sample Depth (feet)		Parameter	Result	Units	Qualifier	Northing	Easting
			Top	Bottom						
A7-SA1-40	A7-SA1-40^14-RM	18-Apr-05	6.5	7.0	Thorium-232	1.2	pCi/g	-	480711.656	1346767.599
A7-SA1-40	A7-SA1-40^16-RM	18-Apr-05	7.5	8.0	Arsenic	7.38	mg/kg	J	480711.656	1346767.599
A7-SA1-40	A7-SA1-40^16-RM	18-Apr-05	7.5	8.0	Lead-210	1.02	pCi/g	J	480711.656	1346767.599
A7-SA1-40	A7-SA1-40^16-RM	18-Apr-05	7.5	8.0	Radium-226	1.33	pCi/g	-	480711.656	1346767.599
A7-SA1-40	A7-SA1-40^16-RM	18-Apr-05	7.5	8.0	Radium-228	1.27	pCi/g	-	480711.656	1346767.599
A7-SA1-40	A7-SA1-40^16-RM	18-Apr-05	7.5	8.0	Thorium-228	1.33	pCi/g	-	480711.656	1346767.599
A7-SA1-40	A7-SA1-40^16-RM	18-Apr-05	7.5	8.0	Thorium-232	1.27	pCi/g	-	480711.656	1346767.599
A7-SA1-42	A7-SA1-42^2-R	3-Jun-05	0.5	1.0	Uranium, Total	82.2	mg/kg	NV	481089.244	1346894.665
A7-SA1-43	A7-SA1-43^1-R	25-May-05	0.0	0.5	Uranium, Total	15.2	mg/kg	NV	481062.679	1346961.416
A7-SA1-5	A7-SA1-5^1-RMP	15-Dec-04	0.0	0.5	Arsenic	4.05	mg/kg	J	480010.443	1346646.611
A7-SA1-5	A7-SA1-5^1-RMP	15-Dec-04	0.0	0.5	Beryllium	0.347	mg/kg	U	480010.443	1346646.611
A7-SA1-5	A7-SA1-5^1-RMP	15-Dec-04	0.0	0.5	Lead	17.3	mg/kg	J	480010.443	1346646.611
A7-SA1-5	A7-SA1-5^1-RMP	15-Dec-04	0.0	0.5	Manganese	489	mg/kg	-	480010.443	1346646.611
A7-SA1-5	A7-SA1-5^1-RMP	15-Dec-04	0.0	0.5	Aroclor-1254	0.0075	ug/kg	-	480010.443	1346646.611
A7-SA1-5	A7-SA1-5^1-RMP	15-Dec-04	0.0	0.5	Aroclor-1260	0.0027	ug/kg	J	480010.443	1346646.611
A7-SA1-5	A7-SA1-5^1-RMP	15-Dec-04	0.0	0.5	Cesium-137	0.397	pCi/g	-	480010.443	1346646.611
A7-SA1-5	A7-SA1-5^1-RMP	15-Dec-04	0.0	0.5	Lead-210	0.944	pCi/g	J	480010.443	1346646.611
A7-SA1-5	A7-SA1-5^1-RMP	15-Dec-04	0.0	0.5	Radium-226	1.02	pCi/g	-	480010.443	1346646.611
A7-SA1-5	A7-SA1-5^1-RMP	15-Dec-04	0.0	0.5	Radium-228	0.658	pCi/g	-	480010.443	1346646.611
A7-SA1-5	A7-SA1-5^1-RMP	15-Dec-04	0.0	0.5	Technetium-99	0.791	pCi/g	U	480010.443	1346646.611
A7-SA1-5	A7-SA1-5^1-RMP	15-Dec-04	0.0	0.5	Thorium-228	0.645	pCi/g	-	480010.443	1346646.611
A7-SA1-5	A7-SA1-5^1-RMP	15-Dec-04	0.0	0.5	Thorium-230	5.59	pCi/g	J	480010.443	1346646.611
A7-SA1-5	A7-SA1-5^1-RMP	15-Dec-04	0.0	0.5	Thorium-232	0.658	pCi/g	-	480010.443	1346646.611
A7-SA1-5	A7-SA1-5^1-RMP	15-Dec-04	0.0	0.5	Uranium, Total	10.7	mg/kg	-	480010.443	1346646.611
A7-SA1-5	A7-SA1-5^3-RMP	15-Dec-04	1.0	1.5	Arsenic	4.03	mg/kg	J	480010.443	1346646.611
A7-SA1-5	A7-SA1-5^3-RMP	15-Dec-04	1.0	1.5	Beryllium	0.372	mg/kg	U	480010.443	1346646.611
A7-SA1-5	A7-SA1-5^3-RMP	15-Dec-04	1.0	1.5	Lead	16.2	mg/kg	J	480010.443	1346646.611
A7-SA1-5	A7-SA1-5^3-RMP	15-Dec-04	1.0	1.5	Manganese	542	mg/kg	-	480010.443	1346646.611
A7-SA1-5	A7-SA1-5^3-RMP	15-Dec-04	1.0	1.5	Aroclor-1254	0.0033	ug/kg	J	480010.443	1346646.611
A7-SA1-5	A7-SA1-5^3-RMP	15-Dec-04	1.0	1.5	Aroclor-1260	0.0039	ug/kg	U	480010.443	1346646.611
A7-SA1-5	A7-SA1-5^3-RMP	15-Dec-04	1.0	1.5	Cesium-137	0.262	pCi/g	-	480010.443	1346646.611
A7-SA1-5	A7-SA1-5^3-RMP	15-Dec-04	1.0	1.5	Lead-210	1.43	pCi/g	-	480010.443	1346646.611
A7-SA1-5	A7-SA1-5^3-RMP	15-Dec-04	1.0	1.5	Radium-226	0.825	pCi/g	-	480010.443	1346646.611
A7-SA1-5	A7-SA1-5^3-RMP	15-Dec-04	1.0	1.5	Radium-228	0.659	pCi/g	-	480010.443	1346646.611
A7-SA1-5	A7-SA1-5^3-RMP	15-Dec-04	1.0	1.5	Technetium-99	0.794	pCi/g	U	480010.443	1346646.611

5982

Boring	Sample ID	Sample Date	Sample Depth (feet)		Parameter	Result	Units	Qualifier	Northing	Easting
			Top	Bottom						
A7-SA1-5	A7-SA1-5^3-RMP	15-Dec-04	1.0	1.5	Thorium-228	0.674	pCi/g	-	480010.443	1346646.611
A7-SA1-5	A7-SA1-5^3-RMP	15-Dec-04	1.0	1.5	Thorium-230	5.48	pCi/g	J	480010.443	1346646.611
A7-SA1-5	A7-SA1-5^3-RMP	15-Dec-04	1.0	1.5	Thorium-232	0.659	pCi/g	-	480010.443	1346646.611
A7-SA1-5	A7-SA1-5^3-RMP	15-Dec-04	1.0	1.5	Uranium, Total	9.6	mg/kg	-	480010.443	1346646.611
A7-SA1-5	A7-SA1-5^6-RMP	15-Dec-04	2.5	3.0	Arsenic	4.6	mg/kg	J	480010.443	1346646.611
A7-SA1-5	A7-SA1-5^6-RMP	15-Dec-04	2.5	3.0	Beryllium	0.387	mg/kg	U	480010.443	1346646.611
A7-SA1-5	A7-SA1-5^6-RMP	15-Dec-04	2.5	3.0	Lead	10.8	mg/kg	J	480010.443	1346646.611
A7-SA1-5	A7-SA1-5^6-RMP	15-Dec-04	2.5	3.0	Manganese	564	mg/kg	-	480010.443	1346646.611
A7-SA1-5	A7-SA1-5^6-RMP	15-Dec-04	2.5	3.0	Aroclor-1254	0.0039	ug/kg	U	480010.443	1346646.611
A7-SA1-5	A7-SA1-5^6-RMP	15-Dec-04	2.5	3.0	Aroclor-1260	0.0039	ug/kg	U	480010.443	1346646.611
A7-SA1-5	A7-SA1-5^6-RMP	15-Dec-04	2.5	3.0	Cesium-137	0.0268	pCi/g	U	480010.443	1346646.611
A7-SA1-5	A7-SA1-5^6-RMP	15-Dec-04	2.5	3.0	Lead-210	0.786	pCi/g	U	480010.443	1346646.611
A7-SA1-5	A7-SA1-5^6-RMP	15-Dec-04	2.5	3.0	Radium-226	0.872	pCi/g	-	480010.443	1346646.611
A7-SA1-5	A7-SA1-5^6-RMP	15-Dec-04	2.5	3.0	Radium-228	0.714	pCi/g	-	480010.443	1346646.611
A7-SA1-5	A7-SA1-5^6-RMP	15-Dec-04	2.5	3.0	Technetium-99	0.803	pCi/g	U	480010.443	1346646.611
A7-SA1-5	A7-SA1-5^6-RMP	15-Dec-04	2.5	3.0	Thorium-228	0.717	pCi/g	-	480010.443	1346646.611
A7-SA1-5	A7-SA1-5^6-RMP	15-Dec-04	2.5	3.0	Thorium-230	4.21	pCi/g	J	480010.443	1346646.611
A7-SA1-5	A7-SA1-5^6-RMP	15-Dec-04	2.5	3.0	Thorium-232	0.714	pCi/g	-	480010.443	1346646.611
A7-SA1-5	A7-SA1-5^6-RMP	15-Dec-04	2.5	3.0	Uranium, Total	4.94	mg/kg	-	480010.443	1346646.611
A7-SA1-6	A7-SA1-6^1-RMP	21-Dec-04	0.0	0.5	Arsenic	4.35	mg/kg	NV	480126.895	1347171.956
A7-SA1-6	A7-SA1-6^1-RMP	21-Dec-04	0.0	0.5	Beryllium	0.388	mg/kg	NV	480126.895	1347171.956
A7-SA1-6	A7-SA1-6^1-RMP	21-Dec-04	0.0	0.5	Aroclor-1254	0.0015	ug/kg	NV	480126.895	1347171.956
A7-SA1-6	A7-SA1-6^1-RMP	21-Dec-04	0.0	0.5	Aroclor-1260	0.004	ug/kg	UNV	480126.895	1347171.956
A7-SA1-6	A7-SA1-6^1-RMP	21-Dec-04	0.0	0.5	Radium-226	1.3	pCi/g	NV	480126.895	1347171.956
A7-SA1-6	A7-SA1-6^1-RMP	21-Dec-04	0.0	0.5	Radium-228	1.03	pCi/g	NV	480126.895	1347171.956
A7-SA1-6	A7-SA1-6^1-RMP	21-Dec-04	0.0	0.5	Thorium-228	1.07	pCi/g	NV	480126.895	1347171.956
A7-SA1-6	A7-SA1-6^1-RMP	21-Dec-04	0.0	0.5	Thorium-232	1.03	pCi/g	NV	480126.895	1347171.956
A7-SA1-6	A7-SA1-6^1-RMP	21-Dec-04	0.0	0.5	Uranium, Total	8.3	mg/kg	NV	480126.895	1347171.956
A7-SA1-6	A7-SA1-6^3-RMP	21-Dec-04	1.0	1.5	Arsenic	4.32	mg/kg	NV	480126.895	1347171.956
A7-SA1-6	A7-SA1-6^3-RMP	21-Dec-04	1.0	1.5	Beryllium	0.514	mg/kg	NV	480126.895	1347171.956
A7-SA1-6	A7-SA1-6^3-RMP	21-Dec-04	1.0	1.5	Aroclor-1254	0.0041	ug/kg	UNV	480126.895	1347171.956
A7-SA1-6	A7-SA1-6^3-RMP	21-Dec-04	1.0	1.5	Aroclor-1260	0.0041	ug/kg	UNV	480126.895	1347171.956
A7-SA1-6	A7-SA1-6^3-RMP	21-Dec-04	1.0	1.5	Radium-226	1.3	pCi/g	NV	480126.895	1347171.956
A7-SA1-6	A7-SA1-6^3-RMP	21-Dec-04	1.0	1.5	Radium-228	1.02	pCi/g	NV	480126.895	1347171.956
A7-SA1-6	A7-SA1-6^3-RMP	21-Dec-04	1.0	1.5	Thorium-228	1.03	pCi/g	NV	480126.895	1347171.956

APPENDIX A
PREDESIGN CHARACTERIZATION DATA FOR AREA 7 SILOS AND GENERAL AREA

Boring	Sample ID	Sample Date	Sample Depth (feet)		Parameter	Result	Units	Qualifier	Northing	Easting
			Top	Bottom						
A7-SA1-6	A7-SA1-6^3-RMP	21-Dec-04	1.0	1.5	Thorium-232	1.02	pCi/g	NV	480126.895	1347171.956
A7-SA1-6	A7-SA1-6^3-RMP	21-Dec-04	1.0	1.5	Uranium, Total	6.38	mg/kg	NV	480126.895	1347171.956
A7-SA1-6	A7-SA1-6^6-RMP	21-Dec-04	2.5	3.0	Arsenic	7.17	mg/kg	NV	480126.895	1347171.956
A7-SA1-6	A7-SA1-6^6-RMP	21-Dec-04	2.5	3.0	Beryllium	0.451	mg/kg	NV	480126.895	1347171.956
A7-SA1-6	A7-SA1-6^6-RMP	21-Dec-04	2.5	3.0	Aroclor-1254	0.0042	ug/kg	UNV	480126.895	1347171.956
A7-SA1-6	A7-SA1-6^6-RMP	21-Dec-04	2.5	3.0	Aroclor-1260	0.0042	ug/kg	UNV	480126.895	1347171.956
A7-SA1-6	A7-SA1-6^6-RMP	21-Dec-04	2.5	3.0	Radium-226	1.59	pCi/g	NV	480126.895	1347171.956
A7-SA1-6	A7-SA1-6^6-RMP	21-Dec-04	2.5	3.0	Radium-228	0.804	pCi/g	NV	480126.895	1347171.956
A7-SA1-6	A7-SA1-6^6-RMP	21-Dec-04	2.5	3.0	Thorium-228	0.807	pCi/g	NV	480126.895	1347171.956
A7-SA1-6	A7-SA1-6^6-RMP	21-Dec-04	2.5	3.0	Thorium-232	0.804	pCi/g	NV	480126.895	1347171.956
A7-SA1-6	A7-SA1-6^6-RMP	21-Dec-04	2.5	3.0	Uranium, Total	7.76	mg/kg	NV	480126.895	1347171.956
A7-SA2-10	A7-SA2-10^1-RM	26-Jan-05	0.0	0.5	Beryllium	0.677	mg/kg	NV	480415.813	1348225.94
A7-SA2-10	A7-SA2-10^1-RM	26-Jan-05	0.0	0.5	Radium-226	1.46	pCi/g	NV	480415.813	1348225.94
A7-SA2-10	A7-SA2-10^1-RM	26-Jan-05	0.0	0.5	Radium-228	1.94	pCi/g	NV	480415.813	1348225.94
A7-SA2-10	A7-SA2-10^1-RM	26-Jan-05	0.0	0.5	Thorium-228	1.83	pCi/g	NV	480415.813	1348225.94
A7-SA2-10	A7-SA2-10^1-RM	26-Jan-05	0.0	0.5	Thorium-232	1.94	pCi/g	NV	480415.813	1348225.94
A7-SA2-10	A7-SA2-10^1-RM	26-Jan-05	0.0	0.5	Uranium, Total	8.29	mg/kg	NV	480415.813	1348225.94
A7-SA2-10	A7-SA2-10^3-RM	26-Jan-05	1.0	1.5	Beryllium	0.447	mg/kg	NV	480415.813	1348225.94
A7-SA2-10	A7-SA2-10^3-RM	26-Jan-05	1.0	1.5	Radium-226	0.84	pCi/g	NV	480415.813	1348225.94
A7-SA2-10	A7-SA2-10^3-RM	26-Jan-05	1.0	1.5	Radium-228	0.706	pCi/g	NV	480415.813	1348225.94
A7-SA2-10	A7-SA2-10^3-RM	26-Jan-05	1.0	1.5	Thorium-228	0.685	pCi/g	NV	480415.813	1348225.94
A7-SA2-10	A7-SA2-10^3-RM	26-Jan-05	1.0	1.5	Thorium-232	0.706	pCi/g	NV	480415.813	1348225.94
A7-SA2-10	A7-SA2-10^3-RM	26-Jan-05	1.0	1.5	Uranium, Total	13.1	mg/kg	NV	480415.813	1348225.94
A7-SA2-10	A7-SA2-10^6-RM	26-Jan-05	2.5	3.0	Beryllium	0.953	mg/kg	NV	480415.813	1348225.94
A7-SA2-10	A7-SA2-10^6-RM	26-Jan-05	2.5	3.0	Radium-226	1.51	pCi/g	NV	480415.813	1348225.94
A7-SA2-10	A7-SA2-10^6-RM	26-Jan-05	2.5	3.0	Radium-228	1.37	pCi/g	NV	480415.813	1348225.94
A7-SA2-10	A7-SA2-10^6-RM	26-Jan-05	2.5	3.0	Thorium-228	1.46	pCi/g	NV	480415.813	1348225.94
A7-SA2-10	A7-SA2-10^6-RM	26-Jan-05	2.5	3.0	Thorium-232	1.37	pCi/g	NV	480415.813	1348225.94
A7-SA2-10	A7-SA2-10^6-RM	26-Jan-05	2.5	3.0	Uranium, Total	10	mg/kg	NV	480415.813	1348225.94
A7-SA2-10	A7-SA2-10^9-RM	26-Jan-05	4.0	4.5	Beryllium	0.789	mg/kg	NV	480415.813	1348225.94
A7-SA2-10	A7-SA2-10^9-RM	26-Jan-05	4.0	4.5	Radium-226	1.27	pCi/g	NV	480415.813	1348225.94
A7-SA2-10	A7-SA2-10^9-RM	26-Jan-05	4.0	4.5	Radium-228	0.975	pCi/g	NV	480415.813	1348225.94
A7-SA2-10	A7-SA2-10^9-RM	26-Jan-05	4.0	4.5	Thorium-228	1	pCi/g	NV	480415.813	1348225.94
A7-SA2-10	A7-SA2-10^9-RM	26-Jan-05	4.0	4.5	Thorium-232	0.975	pCi/g	NV	480415.813	1348225.94
A7-SA2-10	A7-SA2-10^9-RM	26-Jan-05	4.0	4.5	Uranium, Total	5.51	mg/kg	UNV	480415.813	1348225.94

5982

Boring	Sample ID	Sample Date	Sample Depth (feet)		Parameter	Result	Units	Qualifier	Northing	Easting
			Top	Bottom						
A7-SA2-11	A7-SA2-11^1-RM	25-Jan-05	0.0	0.5	Beryllium	0.478	mg/kg	-	480296.204	1348168.051
A7-SA2-11	A7-SA2-11^1-RM	25-Jan-05	0.0	0.5	Radium-226	0.971	pCi/g	-	480296.204	1348168.051
A7-SA2-11	A7-SA2-11^1-RM	25-Jan-05	0.0	0.5	Radium-228	0.736	pCi/g	-	480296.204	1348168.051
A7-SA2-11	A7-SA2-11^1-RM	25-Jan-05	0.0	0.5	Thorium-228	0.731	pCi/g	-	480296.204	1348168.051
A7-SA2-11	A7-SA2-11^1-RM	25-Jan-05	0.0	0.5	Thorium-232	0.736	pCi/g	-	480296.204	1348168.051
A7-SA2-11	A7-SA2-11^1-RM	25-Jan-05	0.0	0.5	Uranium, Total	8.82	mg/kg	-	480296.204	1348168.051
A7-SA2-11	A7-SA2-11^3-RM	25-Jan-05	1.0	1.5	Beryllium	0.672	mg/kg	-	480296.204	1348168.051
A7-SA2-11	A7-SA2-11^3-RM	25-Jan-05	1.0	1.5	Radium-226	1.17	pCi/g	-	480296.204	1348168.051
A7-SA2-11	A7-SA2-11^3-RM	25-Jan-05	1.0	1.5	Radium-228	0.814	pCi/g	-	480296.204	1348168.051
A7-SA2-11	A7-SA2-11^3-RM	25-Jan-05	1.0	1.5	Thorium-228	0.805	pCi/g	-	480296.204	1348168.051
A7-SA2-11	A7-SA2-11^3-RM	25-Jan-05	1.0	1.5	Thorium-232	0.814	pCi/g	-	480296.204	1348168.051
A7-SA2-11	A7-SA2-11^3-RM	25-Jan-05	1.0	1.5	Uranium, Total	2.56	mg/kg	J	480296.204	1348168.051
A7-SA2-11	A7-SA2-11^6-RM	25-Jan-05	2.5	3.0	Beryllium	0.582	mg/kg	-	480296.204	1348168.051
A7-SA2-11	A7-SA2-11^6-RM	25-Jan-05	2.5	3.0	Radium-226	0.863	pCi/g	-	480296.204	1348168.051
A7-SA2-11	A7-SA2-11^6-RM	25-Jan-05	2.5	3.0	Radium-228	0.693	pCi/g	-	480296.204	1348168.051
A7-SA2-11	A7-SA2-11^6-RM	25-Jan-05	2.5	3.0	Thorium-228	0.655	pCi/g	-	480296.204	1348168.051
A7-SA2-11	A7-SA2-11^6-RM	25-Jan-05	2.5	3.0	Thorium-232	0.693	pCi/g	-	480296.204	1348168.051
A7-SA2-11	A7-SA2-11^6-RM	25-Jan-05	2.5	3.0	Uranium, Total	2.73	mg/kg	U	480296.204	1348168.051
A7-SA2-11	A7-SA2-11^9-RM	25-Jan-05	4.0	4.5	Beryllium	0.572	mg/kg	-	480296.204	1348168.051
A7-SA2-11	A7-SA2-11^9-RM	25-Jan-05	4.0	4.5	Radium-226	1.18	pCi/g	-	480296.204	1348168.051
A7-SA2-11	A7-SA2-11^9-RM	25-Jan-05	4.0	4.5	Radium-228	1.1	pCi/g	-	480296.204	1348168.051
A7-SA2-11	A7-SA2-11^9-RM	25-Jan-05	4.0	4.5	Thorium-228	1.09	pCi/g	-	480296.204	1348168.051
A7-SA2-11	A7-SA2-11^9-RM	25-Jan-05	4.0	4.5	Thorium-232	1.1	pCi/g	-	480296.204	1348168.051
A7-SA2-11	A7-SA2-11^9-RM	25-Jan-05	4.0	4.5	Uranium, Total	3.35	mg/kg	J	480296.204	1348168.051
A7-SA2-12	A7-SA2-12^1-RM	26-Jan-05	0.0	0.5	Beryllium	0.643	mg/kg	NV	480228.786	1348189.733
A7-SA2-12	A7-SA2-12^1-RM	26-Jan-05	0.0	0.5	Radium-226	1.23	pCi/g	NV	480228.786	1348189.733
A7-SA2-12	A7-SA2-12^1-RM	26-Jan-05	0.0	0.5	Radium-228	1.28	pCi/g	NV	480228.786	1348189.733
A7-SA2-12	A7-SA2-12^1-RM	26-Jan-05	0.0	0.5	Thorium-228	1.29	pCi/g	NV	480228.786	1348189.733
A7-SA2-12	A7-SA2-12^1-RM	26-Jan-05	0.0	0.5	Thorium-232	1.28	pCi/g	NV	480228.786	1348189.733
A7-SA2-12	A7-SA2-12^1-RM	26-Jan-05	0.0	0.5	Uranium, Total	40.7	mg/kg	NV	480228.786	1348189.733
A7-SA2-12	A7-SA2-12^3-RM	26-Jan-05	1.0	1.5	Beryllium	0.74	mg/kg	NV	480228.786	1348189.733
A7-SA2-12	A7-SA2-12^3-RM	26-Jan-05	1.0	1.5	Radium-226	1.11	pCi/g	NV	480228.786	1348189.733
A7-SA2-12	A7-SA2-12^3-RM	26-Jan-05	1.0	1.5	Radium-228	1.15	pCi/g	NV	480228.786	1348189.733
A7-SA2-12	A7-SA2-12^3-RM	26-Jan-05	1.0	1.5	Thorium-228	1.31	pCi/g	NV	480228.786	1348189.733
A7-SA2-12	A7-SA2-12^3-RM	26-Jan-05	1.0	1.5	Thorium-232	1.15	pCi/g	NV	480228.786	1348189.733

APPENDIX A
PREDESIGN CHARACTERIZATION DATA FOR AREA 7 SILOS AND GENERAL AREA

Boring	Sample ID	Sample Date	Sample Depth (feet)		Parameter	Result	Units	Qualifier	Northing	Easting
			Top	Bottom						
A7-SA2-12	A7-SA2-12^3-RM	26-Jan-05	1.0	1.5	Uranium, Total	10.3	mg/kg	NV	480228.786	1348189.733
A7-SA2-12	A7-SA2-12^6-RM	26-Jan-05	2.5	3.0	Beryllium	1.07	mg/kg	NV	480228.786	1348189.733
A7-SA2-12	A7-SA2-12^6-RM	26-Jan-05	2.5	3.0	Radium-226	0.84	pCi/g	NV	480228.786	1348189.733
A7-SA2-12	A7-SA2-12^6-RM	26-Jan-05	2.5	3.0	Radium-228	0.755	pCi/g	NV	480228.786	1348189.733
A7-SA2-12	A7-SA2-12^6-RM	26-Jan-05	2.5	3.0	Thorium-228	0.748	pCi/g	NV	480228.786	1348189.733
A7-SA2-12	A7-SA2-12^6-RM	26-Jan-05	2.5	3.0	Thorium-232	0.755	pCi/g	NV	480228.786	1348189.733
A7-SA2-12	A7-SA2-12^6-RM	26-Jan-05	2.5	3.0	Uranium, Total	7.12	mg/kg	NV	480228.786	1348189.733
A7-SA2-12	A7-SA2-12^9-RM	26-Jan-05	4.0	4.5	Beryllium	0.852	mg/kg	NV	480228.786	1348189.733
A7-SA2-12	A7-SA2-12^9-RM	26-Jan-05	4.0	4.5	Radium-226	1.33	pCi/g	NV	480228.786	1348189.733
A7-SA2-12	A7-SA2-12^9-RM	26-Jan-05	4.0	4.5	Radium-228	1.05	pCi/g	NV	480228.786	1348189.733
A7-SA2-12	A7-SA2-12^9-RM	26-Jan-05	4.0	4.5	Thorium-228	1.02	pCi/g	NV	480228.786	1348189.733
A7-SA2-12	A7-SA2-12^9-RM	26-Jan-05	4.0	4.5	Thorium-232	1.05	pCi/g	NV	480228.786	1348189.733
A7-SA2-12	A7-SA2-12^9-RM	26-Jan-05	4.0	4.5	Uranium, Total	11.1	mg/kg	NV	480228.786	1348189.733
A7-SA2-13	A7-SA2-13^1-RM	25-Jan-05	0.0	0.5	Beryllium	0.591	mg/kg	-	480029.34	1348280.871
A7-SA2-13	A7-SA2-13^1-RM	25-Jan-05	0.0	0.5	Radium-226	1.14	pCi/g	-	480029.34	1348280.871
A7-SA2-13	A7-SA2-13^1-RM	25-Jan-05	0.0	0.5	Radium-228	0.87	pCi/g	-	480029.34	1348280.871
A7-SA2-13	A7-SA2-13^1-RM	25-Jan-05	0.0	0.5	Thorium-228	0.868	pCi/g	-	480029.34	1348280.871
A7-SA2-13	A7-SA2-13^1-RM	25-Jan-05	0.0	0.5	Thorium-232	0.87	pCi/g	-	480029.34	1348280.871
A7-SA2-13	A7-SA2-13^1-RM	25-Jan-05	0.0	0.5	Uranium, Total	27.2	mg/kg	-	480029.34	1348280.871
A7-SA2-13	A7-SA2-13^3-RM	25-Jan-05	1.0	1.5	Beryllium	0.513	mg/kg	-	480029.34	1348280.871
A7-SA2-13	A7-SA2-13^3-RM	25-Jan-05	1.0	1.5	Radium-226	0.914	pCi/g	-	480029.34	1348280.871
A7-SA2-13	A7-SA2-13^3-RM	25-Jan-05	1.0	1.5	Radium-228	0.672	pCi/g	-	480029.34	1348280.871
A7-SA2-13	A7-SA2-13^3-RM	25-Jan-05	1.0	1.5	Thorium-228	0.711	pCi/g	-	480029.34	1348280.871
A7-SA2-13	A7-SA2-13^3-RM	25-Jan-05	1.0	1.5	Thorium-232	0.672	pCi/g	-	480029.34	1348280.871
A7-SA2-13	A7-SA2-13^3-RM	25-Jan-05	1.0	1.5	Uranium, Total	13.9	mg/kg	-	480029.34	1348280.871
A7-SA2-13	A7-SA2-13^6-RM	25-Jan-05	2.5	3.0	Beryllium	1.27	mg/kg	-	480029.34	1348280.871
A7-SA2-13	A7-SA2-13^6-RM	25-Jan-05	2.5	3.0	Radium-226	1.33	pCi/g	-	480029.34	1348280.871
A7-SA2-13	A7-SA2-13^6-RM	25-Jan-05	2.5	3.0	Radium-228	0.973	pCi/g	-	480029.34	1348280.871
A7-SA2-13	A7-SA2-13^6-RM	25-Jan-05	2.5	3.0	Thorium-228	0.942	pCi/g	-	480029.34	1348280.871
A7-SA2-13	A7-SA2-13^6-RM	25-Jan-05	2.5	3.0	Thorium-232	0.973	pCi/g	-	480029.34	1348280.871
A7-SA2-13	A7-SA2-13^6-RM	25-Jan-05	2.5	3.0	Uranium, Total	7.83	mg/kg	-	480029.34	1348280.871
A7-SA2-13	A7-SA2-13^9-RM	25-Jan-05	4.0	4.5	Beryllium	0.671	mg/kg	-	480029.34	1348280.871
A7-SA2-13	A7-SA2-13^9-RM	25-Jan-05	4.0	4.5	Radium-226	1.21	pCi/g	-	480029.34	1348280.871
A7-SA2-13	A7-SA2-13^9-RM	25-Jan-05	4.0	4.5	Radium-228	0.992	pCi/g	-	480029.34	1348280.871
A7-SA2-13	A7-SA2-13^9-RM	25-Jan-05	4.0	4.5	Thorium-228	1.04	pCi/g	-	480029.34	1348280.871

Boring	Sample ID	Sample Date	Sample Depth (feet)		Parameter	Result	Units	Qualifier	Northing	Easting
			Top	Bottom						
A7-SA2-13	A7-SA2-13^9-RM	25-Jan-05	4.0	4.5	Thorium-232	0.992	pCi/g	-	480029.34	1348280.871
A7-SA2-13	A7-SA2-13^9-RM	25-Jan-05	4.0	4.5	Uranium, Total	2.85	mg/kg	U	480029.34	1348280.871
A7-SA2-18	A7-SA2-18^4-R	22-Feb-05	1.5	2.0	Uranium, Total	19.9	mg/kg	NV	479710.981	1347938.682
A7-SA2-18	A7-SA2-18^8-R	22-Feb-05	3.5	4.0	Uranium, Total	7.74	mg/kg	NV	479710.981	1347938.682
A7-SA2-19	A7-SA2-19^4-R	22-Feb-05	1.5	2.0	Uranium, Total	33.5	mg/kg	NV	479711.417	1347924.205
A7-SA2-19	A7-SA2-19^8-R	22-Feb-05	3.5	4.0	Uranium, Total	195	mg/kg	NV	479711.417	1347924.205
A7-SA2-19	A7-SA2-19^9-R	13-Apr-05	4.0	4.5	Uranium, Total	51.9	mg/kg	NV	479711.417	1347924.205
A7-SA2-19	A7-SA2-19^12-R	13-Apr-05	5.5	6.0	Uranium, Total	3.39	mg/kg	NV	479711.417	1347924.205
A7-SA2-19	A7-SA2-19^14-R	13-Apr-05	6.5	7.0	Uranium, Total	2.77	mg/kg	UNV	479711.417	1347924.205
A7-SA2-20	A7-SA2-20^9-R	22-Feb-05	4.0	4.5	Uranium, Total	14.8	mg/kg	NV	479704.027	1347931.321
A7-SA2-20	A7-SA2-20^12-R	22-Feb-05	5.5	6.0	Uranium, Total	8.04	mg/kg	NV	479704.027	1347931.321
A7-SA2-20	A7-SA2-20^14-R	22-Feb-05	6.5	7.0	Uranium, Total	7.71	mg/kg	UNV	479704.027	1347931.321
A7-SA2-3	A7-SA2-3^1-RMP	24-Mar-05	0.0	0.5	Arsenic	4.75	mg/kg	NV	479441.562	1347744.552
A7-SA2-3	A7-SA2-3^1-RMP	24-Mar-05	0.0	0.5	Beryllium	0.573	mg/kg	NV	479441.562	1347744.552
A7-SA2-3	A7-SA2-3^1-RMP	24-Mar-05	0.0	0.5	Aroclor-1254	0.00408	ug/kg	UNV	479441.562	1347744.552
A7-SA2-3	A7-SA2-3^1-RMP	24-Mar-05	0.0	0.5	Aroclor-1260	0.00408	ug/kg	UNV	479441.562	1347744.552
A7-SA2-3	A7-SA2-3^1-RMP	24-Mar-05	0.0	0.5	Radium-228	1	pCi/g	NV	479441.562	1347744.552
A7-SA2-3	A7-SA2-3^1-RMP	24-Mar-05	0.0	0.5	Thorium-228	1.05	pCi/g	NV	479441.562	1347744.552
A7-SA2-3	A7-SA2-3^1-RMP	24-Mar-05	0.0	0.5	Thorium-232	1	pCi/g	NV	479441.562	1347744.552
A7-SA2-3	A7-SA2-3^1-RMP	24-Mar-05	0.0	0.5	Uranium, Total	8.65	mg/kg	NV	479441.562	1347744.552
A7-SA2-3	A7-SA2-3^3-RMP	24-Mar-05	1.0	1.5	Arsenic	4.29	mg/kg	NV	479441.562	1347744.552
A7-SA2-3	A7-SA2-3^3-RMP	24-Mar-05	1.0	1.5	Beryllium	0.0358	mg/kg	UNV	479441.562	1347744.552
A7-SA2-3	A7-SA2-3^3-RMP	24-Mar-05	1.0	1.5	Aroclor-1254	0.00398	ug/kg	UNV	479441.562	1347744.552
A7-SA2-3	A7-SA2-3^3-RMP	24-Mar-05	1.0	1.5	Aroclor-1260	0.00398	ug/kg	UNV	479441.562	1347744.552
A7-SA2-3	A7-SA2-3^3-RMP	24-Mar-05	1.0	1.5	Radium-228	1.09	pCi/g	NV	479441.562	1347744.552
A7-SA2-3	A7-SA2-3^3-RMP	24-Mar-05	1.0	1.5	Thorium-228	1.06	pCi/g	NV	479441.562	1347744.552
A7-SA2-3	A7-SA2-3^3-RMP	24-Mar-05	1.0	1.5	Thorium-232	1.09	pCi/g	NV	479441.562	1347744.552
A7-SA2-3	A7-SA2-3^3-RMP	24-Mar-05	1.0	1.5	Uranium, Total	5.73	mg/kg	NV	479441.562	1347744.552
A7-SA2-3	A7-SA2-3^6-RMP	24-Mar-05	2.5	3.0	Arsenic	10.1	mg/kg	NV	479441.562	1347744.552
A7-SA2-3	A7-SA2-3^6-RMP	24-Mar-05	2.5	3.0	Beryllium	1.03	mg/kg	NV	479441.562	1347744.552
A7-SA2-3	A7-SA2-3^6-RMP	24-Mar-05	2.5	3.0	Aroclor-1254	0.0042	ug/kg	NV	479441.562	1347744.552
A7-SA2-3	A7-SA2-3^6-RMP	24-Mar-05	2.5	3.0	Aroclor-1260	0.00412	ug/kg	UNV	479441.562	1347744.552
A7-SA2-3	A7-SA2-3^6-RMP	24-Mar-05	2.5	3.0	Radium-228	1.19	pCi/g	NV	479441.562	1347744.552
A7-SA2-3	A7-SA2-3^6-RMP	24-Mar-05	2.5	3.0	Thorium-228	1.13	pCi/g	NV	479441.562	1347744.552
A7-SA2-3	A7-SA2-3^6-RMP	24-Mar-05	2.5	3.0	Thorium-232	1.19	pCi/g	NV	479441.562	1347744.552

APPENDIX A
PREDESIGN CHARACTERIZATION DATA FOR AREA 7 SILOS AND GENERAL AREA

Boring	Sample ID	Sample Date	Sample Depth (feet)		Parameter	Result	Units	Qualifier	Northing	Easting
			Top	Bottom						
A7-SA2-3	A7-SA2-3^6-RMP	24-Mar-05	2.5	3.0	Uranium, Total	5.13	mg/kg	NV	479441.562	1347744.552
A7-SA2-4	A7-SA2-4^1-RMP	6-Apr-05	0.0	0.5	Arsenic	0.301	mg/kg	UNV	479649.678	1347925.667
A7-SA2-4	A7-SA2-4^1-RMP	6-Apr-05	0.0	0.5	Beryllium	0.292	mg/kg	NV	479649.678	1347925.667
A7-SA2-4	A7-SA2-4^1-RMP	6-Apr-05	0.0	0.5	Aroclor-1254	0.0421	ug/kg	UNV	479649.678	1347925.667
A7-SA2-4	A7-SA2-4^1-RMP	6-Apr-05	0.0	0.5	Aroclor-1260	0.0421	ug/kg	UNV	479649.678	1347925.667
A7-SA2-4	A7-SA2-4^1-RMP	6-Apr-05	0.0	0.5	Radium-228	0.45	pCi/g	NV	479649.678	1347925.667
A7-SA2-4	A7-SA2-4^1-RMP	6-Apr-05	0.0	0.5	Thorium-228	0.443	pCi/g	NV	479649.678	1347925.667
A7-SA2-4	A7-SA2-4^1-RMP	6-Apr-05	0.0	0.5	Thorium-232	0.45	pCi/g	NV	479649.678	1347925.667
A7-SA2-4	A7-SA2-4^1-RMP	6-Apr-05	0.0	0.5	Uranium, Total	5.66	mg/kg	NV	479649.678	1347925.667
A7-SA2-4	A7-SA2-4^3-RMP	6-Apr-05	1.0	1.5	Arsenic	0.339	mg/kg	UNV	479649.678	1347925.667
A7-SA2-4	A7-SA2-4^3-RMP	6-Apr-05	1.0	1.5	Beryllium	0.32	mg/kg	NV	479649.678	1347925.667
A7-SA2-4	A7-SA2-4^3-RMP	6-Apr-05	1.0	1.5	Aroclor-1254	0.0411	ug/kg	UNV	479649.678	1347925.667
A7-SA2-4	A7-SA2-4^3-RMP	6-Apr-05	1.0	1.5	Aroclor-1260	0.0411	ug/kg	UNV	479649.678	1347925.667
A7-SA2-4	A7-SA2-4^3-RMP	6-Apr-05	1.0	1.5	Radium-228	0.681	pCi/g	NV	479649.678	1347925.667
A7-SA2-4	A7-SA2-4^3-RMP	6-Apr-05	1.0	1.5	Thorium-228	0.679	pCi/g	NV	479649.678	1347925.667
A7-SA2-4	A7-SA2-4^3-RMP	6-Apr-05	1.0	1.5	Thorium-232	0.681	pCi/g	NV	479649.678	1347925.667
A7-SA2-4	A7-SA2-4^3-RMP	6-Apr-05	1.0	1.5	Uranium, Total	7.01	mg/kg	NV	479649.678	1347925.667
A7-SA2-4	A7-SA2-4^6-RMP	6-Apr-05	2.5	3.0	Arsenic	12.9	mg/kg	NV	479649.678	1347925.667
A7-SA2-4	A7-SA2-4^6-RMP	6-Apr-05	2.5	3.0	Beryllium	0.698	mg/kg	NV	479649.678	1347925.667
A7-SA2-4	A7-SA2-4^6-RMP	6-Apr-05	2.5	3.0	Aroclor-1254	0.0018	ug/kg	NV	479649.678	1347925.667
A7-SA2-4	A7-SA2-4^6-RMP	6-Apr-05	2.5	3.0	Aroclor-1260	0.00415	ug/kg	UNV	479649.678	1347925.667
A7-SA2-4	A7-SA2-4^6-RMP	6-Apr-05	2.5	3.0	Radium-228	0.895	pCi/g	NV	479649.678	1347925.667
A7-SA2-4	A7-SA2-4^6-RMP	6-Apr-05	2.5	3.0	Thorium-228	0.846	pCi/g	NV	479649.678	1347925.667
A7-SA2-4	A7-SA2-4^6-RMP	6-Apr-05	2.5	3.0	Thorium-232	0.895	pCi/g	NV	479649.678	1347925.667
A7-SA2-4	A7-SA2-4^6-RMP	6-Apr-05	2.5	3.0	Uranium, Total	5.35	mg/kg	NV	479649.678	1347925.667
A7-SA2-41	A7-SA2-41^1-R	10-Feb-05	0.0	0.5	Radium-228	0.493	pCi/g	NV	479486.635	1347913.942
A7-SA2-41	A7-SA2-41^1-R	10-Feb-05	0.0	0.5	Technetium-99	0.848	pCi/g	UNV	479486.635	1347913.942
A7-SA2-41	A7-SA2-41^1-R	10-Feb-05	0.0	0.5	Thorium-228	0.467	pCi/g	NV	479486.635	1347913.942
A7-SA2-41	A7-SA2-41^1-R	10-Feb-05	0.0	0.5	Thorium-232	0.493	pCi/g	NV	479486.635	1347913.942
A7-SA2-41	A7-SA2-41^1-R	10-Feb-05	0.0	0.5	Uranium, Total	2.58	mg/kg	UNV	479486.635	1347913.942
A7-SA2-42	A7-SA2-42^1-R	10-Feb-05	0.0	0.5	Radium-228	0.611	pCi/g	NV	479462.243	1347890.886
A7-SA2-42	A7-SA2-42^1-R	10-Feb-05	0.0	0.5	Technetium-99	0.793	pCi/g	UNV	479462.243	1347890.886
A7-SA2-42	A7-SA2-42^1-R	10-Feb-05	0.0	0.5	Thorium-228	0.633	pCi/g	NV	479462.243	1347890.886
A7-SA2-42	A7-SA2-42^1-R	10-Feb-05	0.0	0.5	Thorium-232	0.611	pCi/g	NV	479462.243	1347890.886
A7-SA2-42	A7-SA2-42^1-R	10-Feb-05	0.0	0.5	Uranium, Total	12.9	mg/kg	NV	479462.243	1347890.886

5982

Boring	Sample ID	Sample Date	Sample Depth (feet)		Parameter	Result	Units	Qualifier	Northing	Easting
			Top	Bottom						
A7-SA2-43	A7-SA2-43^1-R	10-Feb-05	0.0	0.5	Radium-228	1.1	pCi/g	NV	479457.251	1347884.827
A7-SA2-43	A7-SA2-43^1-R	10-Feb-05	0.0	0.5	Technetium-99	0.838	pCi/g	UNV	479457.251	1347884.827
A7-SA2-43	A7-SA2-43^1-R	10-Feb-05	0.0	0.5	Thorium-228	1.08	pCi/g	NV	479457.251	1347884.827
A7-SA2-43	A7-SA2-43^1-R	10-Feb-05	0.0	0.5	Thorium-232	1.1	pCi/g	NV	479457.251	1347884.827
A7-SA2-43	A7-SA2-43^1-R	10-Feb-05	0.0	0.5	Uranium, Total	6.78	mg/kg	NV	479457.251	1347884.827
A7-SA2-44	A7-SA2-44^1-R	10-Feb-05	0.0	0.5	Radium-228	0.461	pCi/g	NV	479427.439	1347885.185
A7-SA2-44	A7-SA2-44^1-R	10-Feb-05	0.0	0.5	Technetium-99	0.832	pCi/g	UNV	479427.439	1347885.185
A7-SA2-44	A7-SA2-44^1-R	10-Feb-05	0.0	0.5	Thorium-228	0.476	pCi/g	NV	479427.439	1347885.185
A7-SA2-44	A7-SA2-44^1-R	10-Feb-05	0.0	0.5	Thorium-232	0.461	pCi/g	NV	479427.439	1347885.185
A7-SA2-44	A7-SA2-44^1-R	10-Feb-05	0.0	0.5	Uranium, Total	4.19	mg/kg	NV	479427.439	1347885.185
A7-SA2-45	A7-SA2-45^1-R	10-Feb-05	0.0	0.5	Radium-228	0.427	pCi/g	NV	479391.867	1347883.323
A7-SA2-45	A7-SA2-45^1-R	10-Feb-05	0.0	0.5	Technetium-99	0.783	pCi/g	UNV	479391.867	1347883.323
A7-SA2-45	A7-SA2-45^1-R	10-Feb-05	0.0	0.5	Thorium-228	0.397	pCi/g	NV	479391.867	1347883.323
A7-SA2-45	A7-SA2-45^1-R	10-Feb-05	0.0	0.5	Thorium-232	0.427	pCi/g	NV	479391.867	1347883.323
A7-SA2-45	A7-SA2-45^1-R	10-Feb-05	0.0	0.5	Uranium, Total	3.34	mg/kg	NV	479391.867	1347883.323
A7-SA2-46	A7-SA2-46^1-R	10-Feb-05	0.0	0.5	Radium-228	0.596	pCi/g	NV	479370.174	1347880.88
A7-SA2-46	A7-SA2-46^1-R	10-Feb-05	0.0	0.5	Technetium-99	0.796	pCi/g	UNV	479370.174	1347880.88
A7-SA2-46	A7-SA2-46^1-R	10-Feb-05	0.0	0.5	Thorium-228	0.591	pCi/g	NV	479370.174	1347880.88
A7-SA2-46	A7-SA2-46^1-R	10-Feb-05	0.0	0.5	Thorium-232	0.596	pCi/g	NV	479370.174	1347880.88
A7-SA2-46	A7-SA2-46^1-R	10-Feb-05	0.0	0.5	Uranium, Total	3.31	mg/kg	NV	479370.174	1347880.88
A7-SA2-47	A7-SA2-47^1-R	13-Apr-05	0.0	0.5	Uranium, Total	7.03	mg/kg	NV	479715.168	1347920.568
A7-SA2-47	A7-SA2-47^4-R	13-Apr-05	1.5	2.0	Uranium, Total	165	mg/kg	NV	479715.168	1347920.568
A7-SA2-47	A7-SA2-47^8-R	13-Apr-05	3.5	4.0	Uranium, Total	72.8	mg/kg	NV	479715.168	1347920.568
A7-SA2-48	A7-SA2-48^1-R	17-May-05	0.0	0.5	Uranium, Total	56.9	mg/kg	NV	479722.066	1347913.767
A7-SA2-48	A7-SA2-48^4-R	17-May-05	1.5	2.0	Uranium, Total	28.2	mg/kg	NV	479722.066	1347913.767
A7-SA2-48	A7-SA2-48^8-R	17-May-05	3.5	4.0	Uranium, Total	58.9	mg/kg	NV	479722.066	1347913.767
A7-SA2-49	A7-SA2-49^1-R	17-May-05	0.0	0.5	Uranium, Total	42.8	mg/kg	NV	480001.805	1348075.125
A7-SA2-49	A7-SA2-49^3-R	17-May-05	1.0	1.5	Uranium, Total	23	mg/kg	NV	480001.805	1348075.125
A7-SA2-49	A7-SA2-49^6-R	17-May-05	2.5	3.0	Uranium, Total	7.07	mg/kg	NV	480001.805	1348075.125
A7-SA2-6	A7-SA2-6^1-RM	25-Jan-05	0.0	0.5	Beryllium	0.515	mg/kg	-	480005.304	1348078.628
A7-SA2-6	A7-SA2-6^1-RM	25-Jan-05	0.0	0.5	Radium-226	1.18	pCi/g	-	480005.304	1348078.628
A7-SA2-6	A7-SA2-6^1-RM	25-Jan-05	0.0	0.5	Radium-228	1.02	pCi/g	-	480005.304	1348078.628
A7-SA2-6	A7-SA2-6^1-RM	25-Jan-05	0.0	0.5	Thorium-228	1.02	pCi/g	-	480005.304	1348078.628
A7-SA2-6	A7-SA2-6^1-RM	25-Jan-05	0.0	0.5	Thorium-232	1.02	pCi/g	-	480005.304	1348078.628
A7-SA2-6	A7-SA2-6^1-RM	25-Jan-05	0.0	0.5	Uranium, Total	34.8	mg/kg	-	480005.304	1348078.628

APPENDIX A
PREDESIGN CHARACTERIZATION DATA FOR AREA 7 SILOS AND GENERAL AREA

Boring	Sample ID	Sample Date	Sample Depth (feet)		Parameter	Result	Units	Qualifier	Northing	Easting
			Top	Bottom						
A7-SA2-6	A7-SA2-6^3-RM	25-Jan-05	1.0	1.5	Beryllium	0.783	mg/kg	-	480005.304	1348078.628
A7-SA2-6	A7-SA2-6^3-RM	25-Jan-05	1.0	1.5	Radium-226	1.43	pCi/g	-	480005.304	1348078.628
A7-SA2-6	A7-SA2-6^3-RM	25-Jan-05	1.0	1.5	Radium-228	1.12	pCi/g	-	480005.304	1348078.628
A7-SA2-6	A7-SA2-6^3-RM	25-Jan-05	1.0	1.5	Thorium-228	1.11	pCi/g	-	480005.304	1348078.628
A7-SA2-6	A7-SA2-6^3-RM	25-Jan-05	1.0	1.5	Thorium-232	1.12	pCi/g	-	480005.304	1348078.628
A7-SA2-6	A7-SA2-6^3-RM	25-Jan-05	1.0	1.5	Uranium, Total	26.2	mg/kg	-	480005.304	1348078.628
A7-SA2-6	A7-SA2-6^6-RM	25-Jan-05	2.5	3.0	Beryllium	0.793	mg/kg	-	480005.304	1348078.628
A7-SA2-6	A7-SA2-6^6-RM	25-Jan-05	2.5	3.0	Radium-226	1.39	pCi/g	-	480005.304	1348078.628
A7-SA2-6	A7-SA2-6^6-RM	25-Jan-05	2.5	3.0	Radium-228	0.942	pCi/g	-	480005.304	1348078.628
A7-SA2-6	A7-SA2-6^6-RM	25-Jan-05	2.5	3.0	Thorium-228	0.931	pCi/g	-	480005.304	1348078.628
A7-SA2-6	A7-SA2-6^6-RM	25-Jan-05	2.5	3.0	Thorium-232	0.942	pCi/g	-	480005.304	1348078.628
A7-SA2-6	A7-SA2-6^6-RM	25-Jan-05	2.5	3.0	Uranium, Total	8.41	mg/kg	-	480005.304	1348078.628
A7-SA2-7	A7-SA2-7^1-RM	25-Jan-05	0.0	0.5	Beryllium	0.564	mg/kg	-	479986.385	1348285.08
A7-SA2-7	A7-SA2-7^1-RM	25-Jan-05	0.0	0.5	Radium-226	1.19	pCi/g	-	479986.385	1348285.08
A7-SA2-7	A7-SA2-7^1-RM	25-Jan-05	0.0	0.5	Radium-228	0.858	pCi/g	-	479986.385	1348285.08
A7-SA2-7	A7-SA2-7^1-RM	25-Jan-05	0.0	0.5	Thorium-228	0.856	pCi/g	-	479986.385	1348285.08
A7-SA2-7	A7-SA2-7^1-RM	25-Jan-05	0.0	0.5	Thorium-232	0.858	pCi/g	-	479986.385	1348285.08
A7-SA2-7	A7-SA2-7^1-RM	25-Jan-05	0.0	0.5	Uranium, Total	10.9	mg/kg	-	479986.385	1348285.08
A7-SA2-7	A7-SA2-7^3-RM	25-Jan-05	1.0	1.5	Beryllium	0.598	mg/kg	-	479986.385	1348285.08
A7-SA2-7	A7-SA2-7^3-RM	25-Jan-05	1.0	1.5	Radium-226	1.2	pCi/g	-	479986.385	1348285.08
A7-SA2-7	A7-SA2-7^3-RM	25-Jan-05	1.0	1.5	Radium-228	0.833	pCi/g	-	479986.385	1348285.08
A7-SA2-7	A7-SA2-7^3-RM	25-Jan-05	1.0	1.5	Thorium-228	0.779	pCi/g	-	479986.385	1348285.08
A7-SA2-7	A7-SA2-7^3-RM	25-Jan-05	1.0	1.5	Thorium-232	0.833	pCi/g	-	479986.385	1348285.08
A7-SA2-7	A7-SA2-7^3-RM	25-Jan-05	1.0	1.5	Uranium, Total	28.9	mg/kg	-	479986.385	1348285.08
A7-SA2-7	A7-SA2-7^6-RM	25-Jan-05	2.5	3.0	Beryllium	0.557	mg/kg	-	479986.385	1348285.08
A7-SA2-7	A7-SA2-7^6-RM	25-Jan-05	2.5	3.0	Radium-226	1.03	pCi/g	-	479986.385	1348285.08
A7-SA2-7	A7-SA2-7^6-RM	25-Jan-05	2.5	3.0	Radium-228	0.719	pCi/g	-	479986.385	1348285.08
A7-SA2-7	A7-SA2-7^6-RM	25-Jan-05	2.5	3.0	Thorium-228	0.722	pCi/g	-	479986.385	1348285.08
A7-SA2-7	A7-SA2-7^6-RM	25-Jan-05	2.5	3.0	Thorium-232	0.719	pCi/g	-	479986.385	1348285.08
A7-SA2-7	A7-SA2-7^6-RM	25-Jan-05	2.5	3.0	Uranium, Total	12.8	mg/kg	-	479986.385	1348285.08
A7-SA2-8	A7-SA2-8^1-RM	26-Jan-05	0.0	0.5	Beryllium	0.488	mg/kg	NV	480411.603	1348338.875
A7-SA2-8	A7-SA2-8^1-RM	26-Jan-05	0.0	0.5	Radium-226	1.01	pCi/g	NV	480411.603	1348338.875
A7-SA2-8	A7-SA2-8^1-RM	26-Jan-05	0.0	0.5	Radium-228	0.608	pCi/g	NV	480411.603	1348338.875
A7-SA2-8	A7-SA2-8^1-RM	26-Jan-05	0.0	0.5	Thorium-228	0.602	pCi/g	NV	480411.603	1348338.875
A7-SA2-8	A7-SA2-8^1-RM	26-Jan-05	0.0	0.5	Thorium-232	0.608	pCi/g	NV	480411.603	1348338.875

Boring	Sample ID	Sample Date	Sample Depth (feet)		Parameter	Result	Units	Qualifier	Northing	Easting
			Top	Bottom						
A7-SA2-8	A7-SA2-8^1-RM	26-Jan-05	0.0	0.5	Uranium, Total	16.1	mg/kg	NV	480411.603	1348338.875
A7-SA2-8	A7-SA2-8^3-RM	26-Jan-05	1.0	1.5	Beryllium	0.694	mg/kg	NV	480411.603	1348338.875
A7-SA2-8	A7-SA2-8^3-RM	26-Jan-05	1.0	1.5	Radium-226	0.802	pCi/g	NV	480411.603	1348338.875
A7-SA2-8	A7-SA2-8^3-RM	26-Jan-05	1.0	1.5	Radium-228	0.654	pCi/g	NV	480411.603	1348338.875
A7-SA2-8	A7-SA2-8^3-RM	26-Jan-05	1.0	1.5	Thorium-228	0.719	pCi/g	NV	480411.603	1348338.875
A7-SA2-8	A7-SA2-8^3-RM	26-Jan-05	1.0	1.5	Thorium-232	0.654	pCi/g	NV	480411.603	1348338.875
A7-SA2-8	A7-SA2-8^3-RM	26-Jan-05	1.0	1.5	Uranium, Total	8.49	mg/kg	NV	480411.603	1348338.875
A7-SA2-8	A7-SA2-8^6-RM	26-Jan-05	2.5	3.0	Beryllium	0.5	mg/kg	NV	480411.603	1348338.875
A7-SA2-8	A7-SA2-8^6-RM	26-Jan-05	2.5	3.0	Radium-226	1.3	pCi/g	NV	480411.603	1348338.875
A7-SA2-8	A7-SA2-8^6-RM	26-Jan-05	2.5	3.0	Radium-228	1.27	pCi/g	NV	480411.603	1348338.875
A7-SA2-8	A7-SA2-8^6-RM	26-Jan-05	2.5	3.0	Thorium-228	1.23	pCi/g	NV	480411.603	1348338.875
A7-SA2-8	A7-SA2-8^6-RM	26-Jan-05	2.5	3.0	Thorium-232	1.27	pCi/g	NV	480411.603	1348338.875
A7-SA2-8	A7-SA2-8^6-RM	26-Jan-05	2.5	3.0	Uranium, Total	6.1	mg/kg	NV	480411.603	1348338.875
A7-SA2-9	A7-SA2-9^1-RM	24-Jan-05	0.0	0.5	Beryllium	0.654	mg/kg	NV	480414.787	1348051.278
A7-SA2-9	A7-SA2-9^1-RM	24-Jan-05	0.0	0.5	Radium-226	1.01	pCi/g	NV	480414.787	1348051.278
A7-SA2-9	A7-SA2-9^1-RM	24-Jan-05	0.0	0.5	Radium-228	1.03	pCi/g	NV	480414.787	1348051.278
A7-SA2-9	A7-SA2-9^1-RM	24-Jan-05	0.0	0.5	Thorium-228	0.999	pCi/g	NV	480414.787	1348051.278
A7-SA2-9	A7-SA2-9^1-RM	24-Jan-05	0.0	0.5	Thorium-232	1.03	pCi/g	NV	480414.787	1348051.278
A7-SA2-9	A7-SA2-9^1-RM	24-Jan-05	0.0	0.5	Uranium, Total	5.07	mg/kg	NV	480414.787	1348051.278
A7-SA2-9	A7-SA2-9^3-RM	24-Jan-05	1.0	1.5	Beryllium	0.471	mg/kg	NV	480414.787	1348051.278
A7-SA2-9	A7-SA2-9^3-RM	24-Jan-05	1.0	1.5	Radium-226	1.02	pCi/g	NV	480414.787	1348051.278
A7-SA2-9	A7-SA2-9^3-RM	24-Jan-05	1.0	1.5	Radium-228	1.02	pCi/g	NV	480414.787	1348051.278
A7-SA2-9	A7-SA2-9^3-RM	24-Jan-05	1.0	1.5	Thorium-228	1.03	pCi/g	NV	480414.787	1348051.278
A7-SA2-9	A7-SA2-9^3-RM	24-Jan-05	1.0	1.5	Thorium-232	1.02	pCi/g	NV	480414.787	1348051.278
A7-SA2-9	A7-SA2-9^3-RM	24-Jan-05	1.0	1.5	Uranium, Total	7.18	mg/kg	NV	480414.787	1348051.278
A7-SA2-9	A7-SA2-9^6-RM	24-Jan-05	2.5	3.0	Beryllium	0.654	mg/kg	NV	480414.787	1348051.278
A7-SA2-9	A7-SA2-9^6-RM	24-Jan-05	2.5	3.0	Radium-226	1.23	pCi/g	NV	480414.787	1348051.278
A7-SA2-9	A7-SA2-9^6-RM	24-Jan-05	2.5	3.0	Radium-228	1.08	pCi/g	NV	480414.787	1348051.278
A7-SA2-9	A7-SA2-9^6-RM	24-Jan-05	2.5	3.0	Thorium-228	1.06	pCi/g	NV	480414.787	1348051.278
A7-SA2-9	A7-SA2-9^6-RM	24-Jan-05	2.5	3.0	Thorium-232	1.08	pCi/g	NV	480414.787	1348051.278
A7-SA2-9	A7-SA2-9^6-RM	24-Jan-05	2.5	3.0	Uranium, Total	12.9	mg/kg	NV	480414.787	1348051.278
A7-SA3-1	A7-SA3-1^1-RMP	24-Jan-05	0.0	0.5	Arsenic	6.78	mg/kg	NV	478814.846	1348006.707
A7-SA3-1	A7-SA3-1^1-RMP	24-Jan-05	0.0	0.5	Beryllium	0.876	mg/kg	NV	478814.846	1348006.707
A7-SA3-1	A7-SA3-1^1-RMP	24-Jan-05	0.0	0.5	Aroclor-1254	0.0037	ug/kg	UNV	478814.846	1348006.707
A7-SA3-1	A7-SA3-1^1-RMP	24-Jan-05	0.0	0.5	Aroclor-1260	0.0037	ug/kg	UNV	478814.846	1348006.707

APPENDIX A
PREDESIGN CHARACTERIZATION DATA FOR AREA 7 SILOS AND GENERAL AREA

Boring	Sample ID	Sample Date	Sample Depth (feet)		Parameter	Result	Units	Qualifier	Northing	Easting
			Top	Bottom						
A7-SA3-1	A7-SA3-1^1-RMP	24-Jan-05	0.0	0.5	Radium-228	0.95	pCi/g	NV	478814.846	1348006.707
A7-SA3-1	A7-SA3-1^1-RMP	24-Jan-05	0.0	0.5	Thorium-228	1.08	pCi/g	NV	478814.846	1348006.707
A7-SA3-1	A7-SA3-1^1-RMP	24-Jan-05	0.0	0.5	Thorium-232	0.95	pCi/g	NV	478814.846	1348006.707
A7-SA3-1	A7-SA3-1^1-RMP	24-Jan-05	0.0	0.5	Uranium, Total	4.53	mg/kg	NV	478814.846	1348006.707
A7-SA3-1	A7-SA3-1^3-RMP	24-Jan-05	1.0	1.5	Arsenic	7.69	mg/kg	NV	478814.846	1348006.707
A7-SA3-1	A7-SA3-1^3-RMP	24-Jan-05	1.0	1.5	Beryllium	1.19	mg/kg	NV	478814.846	1348006.707
A7-SA3-1	A7-SA3-1^3-RMP	24-Jan-05	1.0	1.5	Aroclor-1254	0.0042	ug/kg	UNV	478814.846	1348006.707
A7-SA3-1	A7-SA3-1^3-RMP	24-Jan-05	1.0	1.5	Aroclor-1260	0.0042	ug/kg	UNV	478814.846	1348006.707
A7-SA3-1	A7-SA3-1^3-RMP	24-Jan-05	1.0	1.5	Radium-228	1.39	pCi/g	NV	478814.846	1348006.707
A7-SA3-1	A7-SA3-1^3-RMP	24-Jan-05	1.0	1.5	Thorium-228	1.41	pCi/g	NV	478814.846	1348006.707
A7-SA3-1	A7-SA3-1^3-RMP	24-Jan-05	1.0	1.5	Thorium-232	1.39	pCi/g	NV	478814.846	1348006.707
A7-SA3-1	A7-SA3-1^3-RMP	24-Jan-05	1.0	1.5	Uranium, Total	5.14	mg/kg	NV	478814.846	1348006.707
A7-SA3-1	A7-SA3-1^6-RMP	24-Jan-05	2.5	3.0	Arsenic	26.1	mg/kg	NV	478814.846	1348006.707
A7-SA3-1	A7-SA3-1^6-RMP	24-Jan-05	2.5	3.0	Beryllium	1.06	mg/kg	NV	478814.846	1348006.707
A7-SA3-1	A7-SA3-1^6-RMP	24-Jan-05	2.5	3.0	Aroclor-1254	0.0041	ug/kg	UNV	478814.846	1348006.707
A7-SA3-1	A7-SA3-1^6-RMP	24-Jan-05	2.5	3.0	Aroclor-1260	0.0041	ug/kg	UNV	478814.846	1348006.707
A7-SA3-1	A7-SA3-1^6-RMP	24-Jan-05	2.5	3.0	Radium-228	1.27	pCi/g	NV	478814.846	1348006.707
A7-SA3-1	A7-SA3-1^6-RMP	24-Jan-05	2.5	3.0	Thorium-228	1.25	pCi/g	NV	478814.846	1348006.707
A7-SA3-1	A7-SA3-1^6-RMP	24-Jan-05	2.5	3.0	Thorium-232	1.27	pCi/g	NV	478814.846	1348006.707
A7-SA3-1	A7-SA3-1^6-RMP	24-Jan-05	2.5	3.0	Uranium, Total	4.71	mg/kg	NV	478814.846	1348006.707
A7-SA3-10	A7-SA3-10^1-RMP	29-Apr-05	0.0	0.5	Arsenic	5.51	mg/kg	NV	479068.276	1348734.795
A7-SA3-10	A7-SA3-10^1-RMP	29-Apr-05	0.0	0.5	Beryllium	0.393	mg/kg	NV	479068.276	1348734.795
A7-SA3-10	A7-SA3-10^1-RMP	29-Apr-05	0.0	0.5	Aroclor-1254	0.0036	ug/kg	NV	479068.276	1348734.795
A7-SA3-10	A7-SA3-10^1-RMP	29-Apr-05	0.0	0.5	Aroclor-1260	0.00379	ug/kg	UNV	479068.276	1348734.795
A7-SA3-10	A7-SA3-10^1-RMP	29-Apr-05	0.0	0.5	Radium-228	0.565	pCi/g	NV	479068.276	1348734.795
A7-SA3-10	A7-SA3-10^1-RMP	29-Apr-05	0.0	0.5	Thorium-228	0.553	pCi/g	NV	479068.276	1348734.795
A7-SA3-10	A7-SA3-10^1-RMP	29-Apr-05	0.0	0.5	Thorium-232	0.565	pCi/g	NV	479068.276	1348734.795
A7-SA3-10	A7-SA3-10^1-RMP	29-Apr-05	0.0	0.5	Uranium, Total	11	mg/kg	NV	479068.276	1348734.795
A7-SA3-10	A7-SA3-10^3-RMP	29-Apr-05	1.0	1.5	Arsenic	5.56	mg/kg	NV	479068.276	1348734.795
A7-SA3-10	A7-SA3-10^3-RMP	29-Apr-05	1.0	1.5	Beryllium	0.464	mg/kg	NV	479068.276	1348734.795
A7-SA3-10	A7-SA3-10^3-RMP	29-Apr-05	1.0	1.5	Aroclor-1254	0.003	ug/kg	NV	479068.276	1348734.795
A7-SA3-10	A7-SA3-10^3-RMP	29-Apr-05	1.0	1.5	Aroclor-1260	0.0013	ug/kg	NV	479068.276	1348734.795
A7-SA3-10	A7-SA3-10^3-RMP	29-Apr-05	1.0	1.5	Radium-228	0.643	pCi/g	NV	479068.276	1348734.795
A7-SA3-10	A7-SA3-10^3-RMP	29-Apr-05	1.0	1.5	Thorium-228	0.616	pCi/g	NV	479068.276	1348734.795
A7-SA3-10	A7-SA3-10^3-RMP	29-Apr-05	1.0	1.5	Thorium-232	0.643	pCi/g	NV	479068.276	1348734.795

5982

Boring	Sample ID	Sample Date	Sample Depth (feet)		Parameter	Result	Units	Qualifier	Northing	Easting
			Top	Bottom						
A7-SA3-10	A7-SA3-10^3-RMP	29-Apr-05	1.0	1.5	Uranium, Total	6.41	mg/kg	NV	479068.276	1348734.795
A7-SA3-10	A7-SA3-10^6-RMP	29-Apr-05	2.5	3.0	Arsenic	4.73	mg/kg	NV	479068.276	1348734.795
A7-SA3-10	A7-SA3-10^6-RMP	29-Apr-05	2.5	3.0	Beryllium	0.506	mg/kg	NV	479068.276	1348734.795
A7-SA3-10	A7-SA3-10^6-RMP	29-Apr-05	2.5	3.0	Aroclor-1254	0.00376	ug/kg	UNV	479068.276	1348734.795
A7-SA3-10	A7-SA3-10^6-RMP	29-Apr-05	2.5	3.0	Aroclor-1260	0.00376	ug/kg	UNV	479068.276	1348734.795
A7-SA3-10	A7-SA3-10^6-RMP	29-Apr-05	2.5	3.0	Radium-228	0.815	pCi/g	NV	479068.276	1348734.795
A7-SA3-10	A7-SA3-10^6-RMP	29-Apr-05	2.5	3.0	Thorium-228	0.792	pCi/g	NV	479068.276	1348734.795
A7-SA3-10	A7-SA3-10^6-RMP	29-Apr-05	2.5	3.0	Thorium-232	0.815	pCi/g	NV	479068.276	1348734.795
A7-SA3-10	A7-SA3-10^6-RMP	29-Apr-05	2.5	3.0	Uranium, Total	12.3	mg/kg	NV	479068.276	1348734.795
A7-SA3-11	A7-SA3-11^1-RMP	18-Jan-05	0.0	0.5	Arsenic	4.58	mg/kg	NV	479071.11	1348815.842
A7-SA3-11	A7-SA3-11^1-RMP	18-Jan-05	0.0	0.5	Beryllium	0.414	mg/kg	NV	479071.11	1348815.842
A7-SA3-11	A7-SA3-11^1-RMP	18-Jan-05	0.0	0.5	Aroclor-1254	0.006	ug/kg	NV	479071.11	1348815.842
A7-SA3-11	A7-SA3-11^1-RMP	18-Jan-05	0.0	0.5	Aroclor-1260	0.004	ug/kg	UNV	479071.11	1348815.842
A7-SA3-11	A7-SA3-11^1-RMP	18-Jan-05	0.0	0.5	Radium-228	0.519	pCi/g	NV	479071.11	1348815.842
A7-SA3-11	A7-SA3-11^1-RMP	18-Jan-05	0.0	0.5	Thorium-228	0.53	pCi/g	NV	479071.11	1348815.842
A7-SA3-11	A7-SA3-11^1-RMP	18-Jan-05	0.0	0.5	Thorium-232	0.519	pCi/g	NV	479071.11	1348815.842
A7-SA3-11	A7-SA3-11^1-RMP	18-Jan-05	0.0	0.5	Uranium, Total	3.25	mg/kg	NV	479071.11	1348815.842
A7-SA3-11	A7-SA3-11^3-RMP	18-Jan-05	1.0	1.5	Arsenic	6.82	mg/kg	NV	479071.11	1348815.842
A7-SA3-11	A7-SA3-11^3-RMP	18-Jan-05	1.0	1.5	Beryllium	0.562	mg/kg	NV	479071.11	1348815.842
A7-SA3-11	A7-SA3-11^3-RMP	18-Jan-05	1.0	1.5	Aroclor-1254	0.0033	ug/kg	NV	479071.11	1348815.842
A7-SA3-11	A7-SA3-11^3-RMP	18-Jan-05	1.0	1.5	Aroclor-1260	0.0018	ug/kg	NV	479071.11	1348815.842
A7-SA3-11	A7-SA3-11^3-RMP	18-Jan-05	1.0	1.5	Radium-228	0.575	pCi/g	NV	479071.11	1348815.842
A7-SA3-11	A7-SA3-11^3-RMP	18-Jan-05	1.0	1.5	Thorium-228	0.543	pCi/g	NV	479071.11	1348815.842
A7-SA3-11	A7-SA3-11^3-RMP	18-Jan-05	1.0	1.5	Thorium-232	0.575	pCi/g	NV	479071.11	1348815.842
A7-SA3-11	A7-SA3-11^3-RMP	18-Jan-05	1.0	1.5	Uranium, Total	7.99	mg/kg	NV	479071.11	1348815.842
A7-SA3-11	A7-SA3-11^6-RMP	18-Jan-05	2.5	3.0	Arsenic	5.84	mg/kg	NV	479071.11	1348815.842
A7-SA3-11	A7-SA3-11^6-RMP	18-Jan-05	2.5	3.0	Beryllium	0.535	mg/kg	NV	479071.11	1348815.842
A7-SA3-11	A7-SA3-11^6-RMP	18-Jan-05	2.5	3.0	Aroclor-1254	0.0037	ug/kg	UNV	479071.11	1348815.842
A7-SA3-11	A7-SA3-11^6-RMP	18-Jan-05	2.5	3.0	Aroclor-1260	0.0037	ug/kg	UNV	479071.11	1348815.842
A7-SA3-11	A7-SA3-11^6-RMP	18-Jan-05	2.5	3.0	Radium-228	0.788	pCi/g	NV	479071.11	1348815.842
A7-SA3-11	A7-SA3-11^6-RMP	18-Jan-05	2.5	3.0	Thorium-228	0.804	pCi/g	NV	479071.11	1348815.842
A7-SA3-11	A7-SA3-11^6-RMP	18-Jan-05	2.5	3.0	Thorium-232	0.788	pCi/g	NV	479071.11	1348815.842
A7-SA3-11	A7-SA3-11^6-RMP	18-Jan-05	2.5	3.0	Uranium, Total	5.31	mg/kg	NV	479071.11	1348815.842
A7-SA3-12	A7-SA3-12^1-RMP	20-Jan-05	0.0	0.5	Arsenic	7.21	mg/kg	NV	479002.068	1348928.627
A7-SA3-12	A7-SA3-12^1-RMP	20-Jan-05	0.0	0.5	Beryllium	0.654	mg/kg	NV	479002.068	1348928.627

APPENDIX A
PREDESIGN CHARACTERIZATION DATA FOR AREA 7 SILOS AND GENERAL AREA

Boring	Sample ID	Sample Date	Sample Depth (feet)		Parameter	Result	Units	Qualifier	Northing	Easting
			Top	Bottom						
A7-SA3-12	A7-SA3-12^1-RMP	20-Jan-05	0.0	0.5	Aroclor-1254	0.0021	ug/kg	NV	479002.068	1348928.627
A7-SA3-12	A7-SA3-12^1-RMP	20-Jan-05	0.0	0.5	Aroclor-1260	0.0038	ug/kg	UNV	479002.068	1348928.627
A7-SA3-12	A7-SA3-12^1-RMP	20-Jan-05	0.0	0.5	Radium-228	1.11	pCi/g	NV	479002.068	1348928.627
A7-SA3-12	A7-SA3-12^1-RMP	20-Jan-05	0.0	0.5	Thorium-228	1.11	pCi/g	NV	479002.068	1348928.627
A7-SA3-12	A7-SA3-12^1-RMP	20-Jan-05	0.0	0.5	Thorium-232	1.11	pCi/g	NV	479002.068	1348928.627
A7-SA3-12	A7-SA3-12^1-RMP	20-Jan-05	0.0	0.5	Uranium, Total	13.1	mg/kg	NV	479002.068	1348928.627
A7-SA3-12	A7-SA3-12^3-RMP	20-Jan-05	1.0	1.5	Arsenic	6	mg/kg	NV	479002.068	1348928.627
A7-SA3-12	A7-SA3-12^3-RMP	20-Jan-05	1.0	1.5	Beryllium	0.609	mg/kg	NV	479002.068	1348928.627
A7-SA3-12	A7-SA3-12^3-RMP	20-Jan-05	1.0	1.5	Aroclor-1254	0.0039	ug/kg	UNV	479002.068	1348928.627
A7-SA3-12	A7-SA3-12^3-RMP	20-Jan-05	1.0	1.5	Aroclor-1260	0.0039	ug/kg	UNV	479002.068	1348928.627
A7-SA3-12	A7-SA3-12^3-RMP	20-Jan-05	1.0	1.5	Radium-228	0.803	pCi/g	NV	479002.068	1348928.627
A7-SA3-12	A7-SA3-12^3-RMP	20-Jan-05	1.0	1.5	Thorium-228	0.803	pCi/g	NV	479002.068	1348928.627
A7-SA3-12	A7-SA3-12^3-RMP	20-Jan-05	1.0	1.5	Thorium-232	0.803	pCi/g	NV	479002.068	1348928.627
A7-SA3-12	A7-SA3-12^3-RMP	20-Jan-05	1.0	1.5	Uranium, Total	5.47	mg/kg	NV	479002.068	1348928.627
A7-SA3-12	A7-SA3-12^6-RMP	20-Jan-05	2.5	3.0	Arsenic	5.06	mg/kg	NV	479002.068	1348928.627
A7-SA3-12	A7-SA3-12^6-RMP	20-Jan-05	2.5	3.0	Beryllium	0.384	mg/kg	NV	479002.068	1348928.627
A7-SA3-12	A7-SA3-12^6-RMP	20-Jan-05	2.5	3.0	Aroclor-1254	0.02	ug/kg	UNV	479002.068	1348928.627
A7-SA3-12	A7-SA3-12^6-RMP	20-Jan-05	2.5	3.0	Aroclor-1260	0.02	ug/kg	UNV	479002.068	1348928.627
A7-SA3-12	A7-SA3-12^6-RMP	20-Jan-05	2.5	3.0	Radium-228	0.526	pCi/g	NV	479002.068	1348928.627
A7-SA3-12	A7-SA3-12^6-RMP	20-Jan-05	2.5	3.0	Thorium-228	0.54	pCi/g	NV	479002.068	1348928.627
A7-SA3-12	A7-SA3-12^6-RMP	20-Jan-05	2.5	3.0	Thorium-232	0.526	pCi/g	NV	479002.068	1348928.627
A7-SA3-12	A7-SA3-12^6-RMP	20-Jan-05	2.5	3.0	Uranium, Total	1.37	mg/kg	UNV	479002.068	1348928.627
A7-SA3-13	A7-SA3-13^1-R	7-Jan-05	0.0	0.5	Uranium, Total	21	mg/kg	-	479279.397	1348530.882
A7-SA3-13	A7-SA3-13^3-R	7-Jan-05	1.0	1.5	Uranium, Total	3.85	mg/kg	-	479279.397	1348530.882
A7-SA3-13	A7-SA3-13^7-R	7-Jan-05	3.0	3.5	Uranium, Total	4.04	mg/kg	-	479279.397	1348530.882
A7-SA3-14	A7-SA3-14^1-R	7-Jan-05	0.0	0.5	Uranium, Total	17.3	mg/kg	-	479279.459	1348535.929
A7-SA3-14	A7-SA3-14^3-R	7-Jan-05	1.0	1.5	Uranium, Total	6.34	mg/kg	-	479279.459	1348535.929
A7-SA3-14	A7-SA3-14^7-R	7-Jan-05	3.0	3.5	Uranium, Total	7.82	mg/kg	-	479279.459	1348535.929
A7-SA3-15	A7-SA3-15^1-R	6-Jan-05	0.0	0.5	Uranium, Total	6.64	mg/kg	-	479274.311	1348530.948
A7-SA3-15	A7-SA3-15^3-R	6-Jan-05	1.0	1.5	Uranium, Total	5.38	mg/kg	-	479274.311	1348530.948
A7-SA3-15	A7-SA3-15^7-R	6-Jan-05	3.0	3.5	Uranium, Total	6.82	mg/kg	-	479274.311	1348530.948
A7-SA3-16	A7-SA3-16^1-R	7-Jan-05	0.0	0.5	Uranium, Total	22.1	mg/kg	-	479279.401	1348525.936
A7-SA3-16	A7-SA3-16^3-R	7-Jan-05	1.0	1.5	Uranium, Total	5.97	mg/kg	-	479279.401	1348525.936
A7-SA3-16	A7-SA3-16^7-R	7-Jan-05	3.0	3.5	Uranium, Total	6.67	mg/kg	-	479279.401	1348525.936
A7-SA3-17	A7-SA3-17^1-R	7-Jan-05	0.0	0.5	Uranium, Total	28.5	mg/kg	-	479284.397	1348530.933

5982

Boring	Sample ID	Sample Date	Sample Depth (feet)		Parameter	Result	Units	Qualifier	Northing	Easting
			Top	Bottom						
A7-SA3-17	A7-SA3-17^3-R	7-Jan-05	1.0	1.5	Uranium, Total	3.77	mg/kg	-	479284.397	1348530.933
A7-SA3-17	A7-SA3-17^7-R	7-Jan-05	3.0	3.5	Uranium, Total	4.71	mg/kg	-	479284.397	1348530.933
A7-SA3-18	A7-SA3-18^1-RM	2-Mar-05	0.0	0.5	Beryllium	0.245	mg/kg	NV	479666.385	1348782.778
A7-SA3-18	A7-SA3-18^1-RM	2-Mar-05	0.0	0.5	Technetium-99	0.794	pCi/g	UNV	479666.385	1348782.778
A7-SA3-18	A7-SA3-18^1-RM	2-Mar-05	0.0	0.5	Uranium, Total	3.12	mg/kg	NV	479666.385	1348782.778
A7-SA3-18	A7-SA3-18^3-RM	2-Mar-05	1.0	1.5	Beryllium	0.273	mg/kg	NV	479666.385	1348782.778
A7-SA3-18	A7-SA3-18^3-RM	2-Mar-05	1.0	1.5	Technetium-99	0.761	pCi/g	UNV	479666.385	1348782.778
A7-SA3-18	A7-SA3-18^3-RM	2-Mar-05	1.0	1.5	Uranium, Total	2.86	mg/kg	NV	479666.385	1348782.778
A7-SA3-18	A7-SA3-18^6-RM	2-Mar-05	2.5	3.0	Beryllium	0.51	mg/kg	NV	479666.385	1348782.778
A7-SA3-18	A7-SA3-18^6-RM	2-Mar-05	2.5	3.0	Technetium-99	0.833	pCi/g	UNV	479666.385	1348782.778
A7-SA3-18	A7-SA3-18^6-RM	2-Mar-05	2.5	3.0	Uranium, Total	2.32	mg/kg	UNV	479666.385	1348782.778
A7-SA3-19	A7-SA3-19^1-R	20-Jan-05	0.0	0.5	Uranium, Total	33.1	mg/kg	NV	479565.981	1349047.576
A7-SA3-19	A7-SA3-19^3-R	20-Jan-05	1.0	1.5	Uranium, Total	19.3	mg/kg	NV	479565.981	1349047.576
A7-SA3-19	A7-SA3-19^6-R	20-Jan-05	2.5	3.0	Uranium, Total	2.39	mg/kg	NV	479565.981	1349047.576
A7-SA3-2	A7-SA3-2^1-RMP	7-Jan-05	0.0	0.5	Arsenic	6.96	mg/kg	-	479457.344	1348329.019
A7-SA3-2	A7-SA3-2^1-RMP	7-Jan-05	0.0	0.5	Beryllium	0.72	mg/kg	-	479457.344	1348329.019
A7-SA3-2	A7-SA3-2^1-RMP	7-Jan-05	0.0	0.5	Aroclor-1254	0.0039	ug/kg	U	479457.344	1348329.019
A7-SA3-2	A7-SA3-2^1-RMP	7-Jan-05	0.0	0.5	Aroclor-1260	0.0039	ug/kg	U	479457.344	1348329.019
A7-SA3-2	A7-SA3-2^1-RMP	7-Jan-05	0.0	0.5	Radium-228	0.792	pCi/g	-	479457.344	1348329.019
A7-SA3-2	A7-SA3-2^1-RMP	7-Jan-05	0.0	0.5	Thorium-228	0.78	pCi/g	-	479457.344	1348329.019
A7-SA3-2	A7-SA3-2^1-RMP	7-Jan-05	0.0	0.5	Thorium-232	0.792	pCi/g	-	479457.344	1348329.019
A7-SA3-2	A7-SA3-2^1-RMP	7-Jan-05	0.0	0.5	Uranium, Total	6.85	mg/kg	-	479457.344	1348329.019
A7-SA3-2	A7-SA3-2^3-RMP	7-Jan-05	1.0	1.5	Arsenic	4.32	mg/kg	-	479457.344	1348329.019
A7-SA3-2	A7-SA3-2^3-RMP	7-Jan-05	1.0	1.5	Beryllium	0.843	mg/kg	-	479457.344	1348329.019
A7-SA3-2	A7-SA3-2^3-RMP	7-Jan-05	1.0	1.5	Aroclor-1254	0.0041	ug/kg	U	479457.344	1348329.019
A7-SA3-2	A7-SA3-2^3-RMP	7-Jan-05	1.0	1.5	Aroclor-1260	0.0041	ug/kg	U	479457.344	1348329.019
A7-SA3-2	A7-SA3-2^3-RMP	7-Jan-05	1.0	1.5	Radium-228	1.06	pCi/g	-	479457.344	1348329.019
A7-SA3-2	A7-SA3-2^3-RMP	7-Jan-05	1.0	1.5	Thorium-228	1.02	pCi/g	-	479457.344	1348329.019
A7-SA3-2	A7-SA3-2^3-RMP	7-Jan-05	1.0	1.5	Thorium-232	1.06	pCi/g	-	479457.344	1348329.019
A7-SA3-2	A7-SA3-2^3-RMP	7-Jan-05	1.0	1.5	Uranium, Total	4.7	mg/kg	U	479457.344	1348329.019
A7-SA3-2	A7-SA3-2^6-RMP	7-Jan-05	2.5	3.0	Arsenic	3.79	mg/kg	-	479457.344	1348329.019
A7-SA3-2	A7-SA3-2^6-RMP	7-Jan-05	2.5	3.0	Beryllium	0.739	mg/kg	-	479457.344	1348329.019
A7-SA3-2	A7-SA3-2^6-RMP	7-Jan-05	2.5	3.0	Aroclor-1254	0.0042	ug/kg	U	479457.344	1348329.019
A7-SA3-2	A7-SA3-2^6-RMP	7-Jan-05	2.5	3.0	Aroclor-1260	0.0042	ug/kg	U	479457.344	1348329.019
A7-SA3-2	A7-SA3-2^6-RMP	7-Jan-05	2.5	3.0	Radium-228	1.02	pCi/g	-	479457.344	1348329.019

APPENDIX A
PREDESIGN CHARACTERIZATION DATA FOR AREA 7 SILOS AND GENERAL AREA

Boring	Sample ID	Sample Date	Sample Depth (feet)		Parameter	Result	Units	Qualifier	Northing	Easting
			Top	Bottom						
A7-SA3-2	A7-SA3-2^6-RMP	7-Jan-05	2.5	3.0	Thorium-228	0.981	pCi/g	-	479457.344	1348329.019
A7-SA3-2	A7-SA3-2^6-RMP	7-Jan-05	2.5	3.0	Thorium-232	1.02	pCi/g	-	479457.344	1348329.019
A7-SA3-2	A7-SA3-2^6-RMP	7-Jan-05	2.5	3.0	Uranium, Total	8	mg/kg	-	479457.344	1348329.019
A7-SA3-2	A7-SA3-2^8-RMP	23-May-05	3.5	4.0	Arsenic	5.18	mg/kg	NV	479457.344	1348329.019
A7-SA3-2	A7-SA3-2^8-RMP	23-May-05	3.5	4.0	Beryllium	0.824	mg/kg	NV	479457.344	1348329.019
A7-SA3-2	A7-SA3-2^8-RMP	23-May-05	3.5	4.0	Aroclor-1254	0.00412	ug/kg	UNV	479457.344	1348329.019
A7-SA3-2	A7-SA3-2^8-RMP	23-May-05	3.5	4.0	Aroclor-1260	0.00412	ug/kg	UNV	479457.344	1348329.019
A7-SA3-2	A7-SA3-2^8-RMP	23-May-05	3.5	4.0	Radium-228	1.15	pCi/g	NV	479457.344	1348329.019
A7-SA3-2	A7-SA3-2^8-RMP	23-May-05	3.5	4.0	Thorium-228	1.13	pCi/g	NV	479457.344	1348329.019
A7-SA3-2	A7-SA3-2^8-RMP	23-May-05	3.5	4.0	Thorium-232	1.15	pCi/g	NV	479457.344	1348329.019
A7-SA3-2	A7-SA3-2^8-RMP	23-May-05	3.5	4.0	Uranium, Total	3.87	mg/kg	NV	479457.344	1348329.019
A7-SA3-2	A7-SA3-2^10-RMP	23-May-05	4.5	5.0	Arsenic	8.54	mg/kg	NV	479457.344	1348329.019
A7-SA3-2	A7-SA3-2^10-RMP	23-May-05	4.5	5.0	Beryllium	0.614	mg/kg	NV	479457.344	1348329.019
A7-SA3-2	A7-SA3-2^10-RMP	23-May-05	4.5	5.0	Aroclor-1254	0.00412	ug/kg	UNV	479457.344	1348329.019
A7-SA3-2	A7-SA3-2^10-RMP	23-May-05	4.5	5.0	Aroclor-1260	0.00412	ug/kg	UNV	479457.344	1348329.019
A7-SA3-2	A7-SA3-2^10-RMP	23-May-05	4.5	5.0	Radium-228	1.1	pCi/g	NV	479457.344	1348329.019
A7-SA3-2	A7-SA3-2^10-RMP	23-May-05	4.5	5.0	Thorium-228	1.12	pCi/g	NV	479457.344	1348329.019
A7-SA3-2	A7-SA3-2^10-RMP	23-May-05	4.5	5.0	Thorium-232	1.1	pCi/g	NV	479457.344	1348329.019
A7-SA3-2	A7-SA3-2^10-RMP	23-May-05	4.5	5.0	Uranium, Total	5.94	mg/kg	NV	479457.344	1348329.019
A7-SA3-2	A7-SA3-2^12-RMP	23-May-05	5.5	6.0	Arsenic	7.72	mg/kg	NV	479457.344	1348329.019
A7-SA3-2	A7-SA3-2^12-RMP	23-May-05	5.5	6.0	Beryllium	0.557	mg/kg	NV	479457.344	1348329.019
A7-SA3-2	A7-SA3-2^12-RMP	23-May-05	5.5	6.0	Aroclor-1254	0.0012	ug/kg	NV	479457.344	1348329.019
A7-SA3-2	A7-SA3-2^12-RMP	23-May-05	5.5	6.0	Aroclor-1260	0.00407	ug/kg	UNV	479457.344	1348329.019
A7-SA3-2	A7-SA3-2^12-RMP	23-May-05	5.5	6.0	Radium-228	0.956	pCi/g	NV	479457.344	1348329.019
A7-SA3-2	A7-SA3-2^12-RMP	23-May-05	5.5	6.0	Thorium-228	0.961	pCi/g	NV	479457.344	1348329.019
A7-SA3-2	A7-SA3-2^12-RMP	23-May-05	5.5	6.0	Thorium-232	0.956	pCi/g	NV	479457.344	1348329.019
A7-SA3-2	A7-SA3-2^12-RMP	23-May-05	5.5	6.0	Uranium, Total	2.46	mg/kg	UNV	479457.344	1348329.019
A7-SA3-2	A7-SA3-2^14-RMP	23-May-05	6.5	7.0	Arsenic	8.85	mg/kg	NV	479457.344	1348329.019
A7-SA3-2	A7-SA3-2^14-RMP	23-May-05	6.5	7.0	Beryllium	0.569	mg/kg	NV	479457.344	1348329.019
A7-SA3-2	A7-SA3-2^14-RMP	23-May-05	6.5	7.0	Aroclor-1254	0.00408	ug/kg	UNV	479457.344	1348329.019
A7-SA3-2	A7-SA3-2^14-RMP	23-May-05	6.5	7.0	Aroclor-1260	0.00408	ug/kg	UNV	479457.344	1348329.019
A7-SA3-2	A7-SA3-2^14-RMP	23-May-05	6.5	7.0	Radium-228	0.743	pCi/g	NV	479457.344	1348329.019
A7-SA3-2	A7-SA3-2^14-RMP	23-May-05	6.5	7.0	Thorium-228	0.719	pCi/g	NV	479457.344	1348329.019
A7-SA3-2	A7-SA3-2^14-RMP	23-May-05	6.5	7.0	Thorium-232	0.743	pCi/g	NV	479457.344	1348329.019
A7-SA3-2	A7-SA3-2^14-RMP	23-May-05	6.5	7.0	Uranium, Total	2.58	mg/kg	NV	479457.344	1348329.019

Boring	Sample ID	Sample Date	Sample Depth (feet)		Parameter	Result	Units	Qualifier	Northing	Easting
			Top	Bottom						
A7-SA3-2	A7-SA3-2^16-RMP	23-May-05	7.5	8.0	Arsenic	4	mg/kg	NV	479457.344	1348329.019
A7-SA3-2	A7-SA3-2^16-RMP	23-May-05	7.5	8.0	Beryllium	0.39	mg/kg	NV	479457.344	1348329.019
A7-SA3-2	A7-SA3-2^16-RMP	23-May-05	7.5	8.0	Aroclor-1254	0.00414	ug/kg	UNV	479457.344	1348329.019
A7-SA3-2	A7-SA3-2^16-RMP	23-May-05	7.5	8.0	Aroclor-1260	0.00414	ug/kg	UNV	479457.344	1348329.019
A7-SA3-2	A7-SA3-2^16-RMP	23-May-05	7.5	8.0	Radium-228	0.744	pCi/g	NV	479457.344	1348329.019
A7-SA3-2	A7-SA3-2^16-RMP	23-May-05	7.5	8.0	Thorium-228	0.748	pCi/g	NV	479457.344	1348329.019
A7-SA3-2	A7-SA3-2^16-RMP	23-May-05	7.5	8.0	Thorium-232	0.744	pCi/g	NV	479457.344	1348329.019
A7-SA3-2	A7-SA3-2^16-RMP	23-May-05	7.5	8.0	Uranium, Total	2.32	mg/kg	UNV	479457.344	1348329.019
A7-SA3-20	A7-SA3-20^1-R	21-Apr-05	0.0	0.5	Uranium, Total	29.1	mg/kg	NV	479182.475	1348593.389
A7-SA3-21	A7-SA3-21^1-R	21-Apr-05	0.0	0.5	Uranium, Total	24.1	mg/kg	NV	479177.51	1348588.332
A7-SA3-22	A7-SA3-22^1-R	21-Apr-05	0.0	0.5	Uranium, Total	24.6	mg/kg	NV	479182.566	1348583.307
A7-SA3-23	A7-SA3-23^1-R	21-Apr-05	0.0	0.5	Uranium, Total	26.4	mg/kg	NV	479187.417	1348588.21
A7-SA3-24	A7-SA3-24^1-R	21-Apr-05	0.0	0.5	Uranium, Total	19.9	mg/kg	NV	479279.472	1348520.919
A7-SA3-25	A7-SA3-25^1-R	21-Apr-05	0.0	0.5	Uranium, Total	14.5	mg/kg	NV	479289.422	1348530.981
A7-SA3-26	A7-SA3-26^1-R	25-Apr-05	0.0	0.5	Uranium, Total	10.1	mg/kg	NV	479562.38	1349051.115
A7-SA3-27	A7-SA3-27^1-R	13-May-05	0.0	0.5	Uranium, Total	15.7	mg/kg	NV	479182.539	1348588.328
A7-SA3-27	A7-SA3-27^2-R	13-May-05	0.5	1.0	Uranium, Total	10.6	mg/kg	NV	479182.539	1348588.328
A7-SA3-28	A7-SA3-28^1-R	13-May-05	0.0	0.5	Uranium, Total	12.6	mg/kg	NV	479172.533	1348588.376
A7-SA3-28	A7-SA3-28^2-R	13-May-05	0.5	1.0	Uranium, Total	5.48	mg/kg	NV	479172.533	1348588.376
A7-SA3-29	A7-SA3-29^1-R	13-May-05	0.0	0.5	Uranium, Total	10.9	mg/kg	NV	479182.512	1348578.354
A7-SA3-29	A7-SA3-29^2-R	13-May-05	0.5	1.0	Uranium, Total	6.85	mg/kg	NV	479182.512	1348578.354
A7-SA3-3	A7-SA3-3^1-RMP	7-Jan-05	0.0	0.5	Arsenic	4.27	mg/kg	-	479410.815	1348326.62
A7-SA3-3	A7-SA3-3^1-RMP	7-Jan-05	0.0	0.5	Beryllium	0.436	mg/kg	-	479410.815	1348326.62
A7-SA3-3	A7-SA3-3^1-RMP	7-Jan-05	0.0	0.5	Aroclor-1254	0.0038	ug/kg	U	479410.815	1348326.62
A7-SA3-3	A7-SA3-3^1-RMP	7-Jan-05	0.0	0.5	Aroclor-1260	0.0038	ug/kg	U	479410.815	1348326.62
A7-SA3-3	A7-SA3-3^1-RMP	7-Jan-05	0.0	0.5	Radium-228	1.23	pCi/g	-	479410.815	1348326.62
A7-SA3-3	A7-SA3-3^1-RMP	7-Jan-05	0.0	0.5	Thorium-228	1.21	pCi/g	-	479410.815	1348326.62
A7-SA3-3	A7-SA3-3^1-RMP	7-Jan-05	0.0	0.5	Thorium-232	1.23	pCi/g	-	479410.815	1348326.62
A7-SA3-3	A7-SA3-3^1-RMP	7-Jan-05	0.0	0.5	Uranium, Total	5.75	mg/kg	-	479410.815	1348326.62
A7-SA3-3	A7-SA3-3^3-RMP	7-Jan-05	1.0	1.5	Arsenic	6.06	mg/kg	-	479410.815	1348326.62
A7-SA3-3	A7-SA3-3^3-RMP	7-Jan-05	1.0	1.5	Beryllium	0.773	mg/kg	-	479410.815	1348326.62
A7-SA3-3	A7-SA3-3^3-RMP	7-Jan-05	1.0	1.5	Aroclor-1254	0.0041	ug/kg	U	479410.815	1348326.62
A7-SA3-3	A7-SA3-3^3-RMP	7-Jan-05	1.0	1.5	Aroclor-1260	0.0041	ug/kg	U	479410.815	1348326.62
A7-SA3-3	A7-SA3-3^3-RMP	7-Jan-05	1.0	1.5	Radium-228	0.951	pCi/g	-	479410.815	1348326.62
A7-SA3-3	A7-SA3-3^3-RMP	7-Jan-05	1.0	1.5	Thorium-228	0.944	pCi/g	-	479410.815	1348326.62

APPENDIX A
PREDESIGN CHARACTERIZATION DATA FOR AREA 7 SILOS AND GENERAL AREA

Boring	Sample ID	Sample Date	Sample Depth (feet)		Parameter	Result	Units	Qualifier	Northing	Easting
			Top	Bottom						
A7-SA3-3	A7-SA3-3^3-RMP	7-Jan-05	1.0	1.5	Thorium-232	0.951	pCi/g	-	479410.815	1348326.62
A7-SA3-3	A7-SA3-3^3-RMP	7-Jan-05	1.0	1.5	Uranium, Total	4.43	mg/kg	-	479410.815	1348326.62
A7-SA3-3	A7-SA3-3^6-RMP	7-Jan-05	2.5	3.0	Arsenic	7.42	mg/kg	-	479410.815	1348326.62
A7-SA3-3	A7-SA3-3^6-RMP	7-Jan-05	2.5	3.0	Beryllium	0.805	mg/kg	-	479410.815	1348326.62
A7-SA3-3	A7-SA3-3^6-RMP	7-Jan-05	2.5	3.0	Aroclor-1254	0.0042	ug/kg	U	479410.815	1348326.62
A7-SA3-3	A7-SA3-3^6-RMP	7-Jan-05	2.5	3.0	Aroclor-1260	0.0042	ug/kg	U	479410.815	1348326.62
A7-SA3-3	A7-SA3-3^6-RMP	7-Jan-05	2.5	3.0	Radium-228	1.11	pCi/g	-	479410.815	1348326.62
A7-SA3-3	A7-SA3-3^6-RMP	7-Jan-05	2.5	3.0	Thorium-228	1.17	pCi/g	-	479410.815	1348326.62
A7-SA3-3	A7-SA3-3^6-RMP	7-Jan-05	2.5	3.0	Thorium-232	1.11	pCi/g	-	479410.815	1348326.62
A7-SA3-3	A7-SA3-3^6-RMP	7-Jan-05	2.5	3.0	Uranium, Total	4.24	mg/kg	-	479410.815	1348326.62
A7-SA3-3	A7-SA3-3^8-RMP	23-May-05	3.5	4.0	Arsenic	4.92	mg/kg	NV	479410.815	1348326.62
A7-SA3-3	A7-SA3-3^8-RMP	23-May-05	3.5	4.0	Beryllium	0.495	mg/kg	NV	479410.815	1348326.62
A7-SA3-3	A7-SA3-3^8-RMP	23-May-05	3.5	4.0	Aroclor-1254	0.00417	ug/kg	UNV	479410.815	1348326.62
A7-SA3-3	A7-SA3-3^8-RMP	23-May-05	3.5	4.0	Aroclor-1260	0.00417	ug/kg	UNV	479410.815	1348326.62
A7-SA3-3	A7-SA3-3^8-RMP	23-May-05	3.5	4.0	Radium-228	0.94	pCi/g	NV	479410.815	1348326.62
A7-SA3-3	A7-SA3-3^8-RMP	23-May-05	3.5	4.0	Thorium-228	0.882	pCi/g	NV	479410.815	1348326.62
A7-SA3-3	A7-SA3-3^8-RMP	23-May-05	3.5	4.0	Thorium-232	0.94	pCi/g	NV	479410.815	1348326.62
A7-SA3-3	A7-SA3-3^8-RMP	23-May-05	3.5	4.0	Uranium, Total	5.35	mg/kg	NV	479410.815	1348326.62
A7-SA3-3	A7-SA3-3^10-RMP	23-May-05	4.5	5.0	Arsenic	5.54	mg/kg	NV	479410.815	1348326.62
A7-SA3-3	A7-SA3-3^10-RMP	23-May-05	4.5	5.0	Beryllium	0.527	mg/kg	NV	479410.815	1348326.62
A7-SA3-3	A7-SA3-3^10-RMP	23-May-05	4.5	5.0	Aroclor-1254	0.00402	ug/kg	UNV	479410.815	1348326.62
A7-SA3-3	A7-SA3-3^10-RMP	23-May-05	4.5	5.0	Aroclor-1260	0.00402	ug/kg	UNV	479410.815	1348326.62
A7-SA3-3	A7-SA3-3^10-RMP	23-May-05	4.5	5.0	Radium-228	0.795	pCi/g	NV	479410.815	1348326.62
A7-SA3-3	A7-SA3-3^10-RMP	23-May-05	4.5	5.0	Thorium-228	0.787	pCi/g	NV	479410.815	1348326.62
A7-SA3-3	A7-SA3-3^10-RMP	23-May-05	4.5	5.0	Thorium-232	0.795	pCi/g	NV	479410.815	1348326.62
A7-SA3-3	A7-SA3-3^10-RMP	23-May-05	4.5	5.0	Uranium, Total	2.9	mg/kg	NV	479410.815	1348326.62
A7-SA3-3	A7-SA3-3^12-RMP	23-May-05	5.5	6.0	Arsenic	3.24	mg/kg	NV	479410.815	1348326.62
A7-SA3-3	A7-SA3-3^12-RMP	23-May-05	5.5	6.0	Beryllium	0.56	mg/kg	NV	479410.815	1348326.62
A7-SA3-3	A7-SA3-3^12-RMP	23-May-05	5.5	6.0	Aroclor-1254	0.0023	ug/kg	NV	479410.815	1348326.62
A7-SA3-3	A7-SA3-3^12-RMP	23-May-05	5.5	6.0	Aroclor-1260	0.00431	ug/kg	UNV	479410.815	1348326.62
A7-SA3-3	A7-SA3-3^12-RMP	23-May-05	5.5	6.0	Radium-228	0.765	pCi/g	NV	479410.815	1348326.62
A7-SA3-3	A7-SA3-3^12-RMP	23-May-05	5.5	6.0	Thorium-228	0.757	pCi/g	NV	479410.815	1348326.62
A7-SA3-3	A7-SA3-3^12-RMP	23-May-05	5.5	6.0	Thorium-232	0.765	pCi/g	NV	479410.815	1348326.62
A7-SA3-3	A7-SA3-3^12-RMP	23-May-05	5.5	6.0	Uranium, Total	6.83	mg/kg	NV	479410.815	1348326.62
A7-SA3-3	A7-SA3-3^14-RMP	23-May-05	6.5	7.0	Arsenic	19.9	mg/kg	NV	479410.815	1348326.62

6369

Boring	Sample ID	Sample Date	Sample Depth (feet)		Parameter	Result	Units	Qualifier	Northing	Easting
			Top	Bottom						
A7-SA3-3	A7-SA3-3^14-RMP	23-May-05	6.5	7.0	Beryllium	0.749	mg/kg	NV	479410.815	1348326.62
A7-SA3-3	A7-SA3-3^14-RMP	23-May-05	6.5	7.0	Aroclor-1254	0.00428	ug/kg	UNV	479410.815	1348326.62
A7-SA3-3	A7-SA3-3^14-RMP	23-May-05	6.5	7.0	Aroclor-1260	0.00428	ug/kg	UNV	479410.815	1348326.62
A7-SA3-3	A7-SA3-3^14-RMP	23-May-05	6.5	7.0	Radium-228	0.771	pCi/g	NV	479410.815	1348326.62
A7-SA3-3	A7-SA3-3^14-RMP	23-May-05	6.5	7.0	Thorium-228	0.776	pCi/g	NV	479410.815	1348326.62
A7-SA3-3	A7-SA3-3^14-RMP	23-May-05	6.5	7.0	Thorium-232	0.771	pCi/g	NV	479410.815	1348326.62
A7-SA3-3	A7-SA3-3^14-RMP	23-May-05	6.5	7.0	Uranium, Total	5.69	mg/kg	NV	479410.815	1348326.62
A7-SA3-3	A7-SA3-3^16-RMP	23-May-05	7.5	8.0	Arsenic	6.59	mg/kg	NV	479410.815	1348326.62
A7-SA3-3	A7-SA3-3^16-RMP	23-May-05	7.5	8.0	Beryllium	0.458	mg/kg	NV	479410.815	1348326.62
A7-SA3-3	A7-SA3-3^16-RMP	23-May-05	7.5	8.0	Aroclor-1254	0.00412	ug/kg	UNV	479410.815	1348326.62
A7-SA3-3	A7-SA3-3^16-RMP	23-May-05	7.5	8.0	Aroclor-1260	0.00412	ug/kg	UNV	479410.815	1348326.62
A7-SA3-3	A7-SA3-3^16-RMP	23-May-05	7.5	8.0	Radium-228	0.885	pCi/g	NV	479410.815	1348326.62
A7-SA3-3	A7-SA3-3^16-RMP	23-May-05	7.5	8.0	Thorium-228	0.828	pCi/g	NV	479410.815	1348326.62
A7-SA3-3	A7-SA3-3^16-RMP	23-May-05	7.5	8.0	Thorium-232	0.885	pCi/g	NV	479410.815	1348326.62
A7-SA3-3	A7-SA3-3^16-RMP	23-May-05	7.5	8.0	Uranium, Total	4.2	mg/kg	UNV	479410.815	1348326.62
A7-SA3-30	A7-SA3-30^1-R	13-May-05	0.0	0.5	Uranium, Total	16	mg/kg	NV	479192.53	1348588.373
A7-SA3-30	A7-SA3-30^2-R	13-May-05	0.5	1.0	Uranium, Total	12	mg/kg	NV	479192.53	1348588.373
A7-SA3-4	A7-SA3-4^1-RMP	10-Jan-05	0.0	0.5	Arsenic	2.95	mg/kg	-	479455.211	1348462.377
A7-SA3-4	A7-SA3-4^1-RMP	10-Jan-05	0.0	0.5	Beryllium	0.344	mg/kg	-	479455.211	1348462.377
A7-SA3-4	A7-SA3-4^1-RMP	10-Jan-05	0.0	0.5	Aroclor-1254	0.0037	ug/kg	U	479455.211	1348462.377
A7-SA3-4	A7-SA3-4^1-RMP	10-Jan-05	0.0	0.5	Aroclor-1260	0.0037	ug/kg	U	479455.211	1348462.377
A7-SA3-4	A7-SA3-4^1-RMP	10-Jan-05	0.0	0.5	Radium-228	0.74	pCi/g	-	479455.211	1348462.377
A7-SA3-4	A7-SA3-4^1-RMP	10-Jan-05	0.0	0.5	Thorium-228	0.716	pCi/g	-	479455.211	1348462.377
A7-SA3-4	A7-SA3-4^1-RMP	10-Jan-05	0.0	0.5	Thorium-232	0.74	pCi/g	-	479455.211	1348462.377
A7-SA3-4	A7-SA3-4^1-RMP	10-Jan-05	0.0	0.5	Uranium, Total	10.1	mg/kg	-	479455.211	1348462.377
A7-SA3-4	A7-SA3-4^3-RMP	10-Jan-05	1.0	1.5	Arsenic	10.2	mg/kg	-	479455.211	1348462.377
A7-SA3-4	A7-SA3-4^3-RMP	10-Jan-05	1.0	1.5	Beryllium	1.09	mg/kg	-	479455.211	1348462.377
A7-SA3-4	A7-SA3-4^3-RMP	10-Jan-05	1.0	1.5	Aroclor-1254	0.004	ug/kg	U	479455.211	1348462.377
A7-SA3-4	A7-SA3-4^3-RMP	10-Jan-05	1.0	1.5	Aroclor-1260	0.004	ug/kg	U	479455.211	1348462.377
A7-SA3-4	A7-SA3-4^3-RMP	10-Jan-05	1.0	1.5	Radium-228	0.805	pCi/g	-	479455.211	1348462.377
A7-SA3-4	A7-SA3-4^3-RMP	10-Jan-05	1.0	1.5	Thorium-228	0.768	pCi/g	-	479455.211	1348462.377
A7-SA3-4	A7-SA3-4^3-RMP	10-Jan-05	1.0	1.5	Thorium-232	0.805	pCi/g	-	479455.211	1348462.377
A7-SA3-4	A7-SA3-4^3-RMP	10-Jan-05	1.0	1.5	Uranium, Total	5.83	mg/kg	-	479455.211	1348462.377
A7-SA3-4	A7-SA3-4^6-RMP	10-Jan-05	2.5	3.0	Arsenic	4.2	mg/kg	-	479455.211	1348462.377
A7-SA3-4	A7-SA3-4^6-RMP	10-Jan-05	2.5	3.0	Beryllium	0.72	mg/kg	-	479455.211	1348462.377

APPENDIX A
PREDESIGN CHARACTERIZATION DATA FOR AREA 7 SILOS AND GENERAL AREA

Boring	Sample ID	Sample Date	Sample Depth (feet)		Parameter	Result	Units	Qualifier	Northing	Easting
			Top	Bottom						
A7-SA3-4	A7-SA3-4^6-RMP	10-Jan-05	2.5	3.0	Aroclor-1254	0.0039	ug/kg	U	479455.211	1348462.377
A7-SA3-4	A7-SA3-4^6-RMP	10-Jan-05	2.5	3.0	Aroclor-1260	0.0039	ug/kg	U	479455.211	1348462.377
A7-SA3-4	A7-SA3-4^6-RMP	10-Jan-05	2.5	3.0	Radium-228	0.83	pCi/g	-	479455.211	1348462.377
A7-SA3-4	A7-SA3-4^6-RMP	10-Jan-05	2.5	3.0	Thorium-228	0.811	pCi/g	-	479455.211	1348462.377
A7-SA3-4	A7-SA3-4^6-RMP	10-Jan-05	2.5	3.0	Thorium-232	0.83	pCi/g	-	479455.211	1348462.377
A7-SA3-4	A7-SA3-4^6-RMP	10-Jan-05	2.5	3.0	Uranium, Total	7.13	mg/kg	-	479455.211	1348462.377
A7-SA3-4	A7-SA3-4^8-RMP	20-May-05	3.5	4.0	Arsenic	7.86	mg/kg	NV	479455.211	1348462.377
A7-SA3-4	A7-SA3-4^8-RMP	20-May-05	3.5	4.0	Beryllium	1.15	mg/kg	NV	479455.211	1348462.377
A7-SA3-4	A7-SA3-4^8-RMP	20-May-05	3.5	4.0	Aroclor-1254	0.00402	ug/kg	UNV	479455.211	1348462.377
A7-SA3-4	A7-SA3-4^8-RMP	20-May-05	3.5	4.0	Aroclor-1260	0.00402	ug/kg	UNV	479455.211	1348462.377
A7-SA3-4	A7-SA3-4^8-RMP	20-May-05	3.5	4.0	Radium-228	0.923	pCi/g	NV	479455.211	1348462.377
A7-SA3-4	A7-SA3-4^8-RMP	20-May-05	3.5	4.0	Thorium-228	0.83	pCi/g	NV	479455.211	1348462.377
A7-SA3-4	A7-SA3-4^8-RMP	20-May-05	3.5	4.0	Thorium-232	0.923	pCi/g	NV	479455.211	1348462.377
A7-SA3-4	A7-SA3-4^8-RMP	20-May-05	3.5	4.0	Uranium, Total	3.48	mg/kg	NV	479455.211	1348462.377
A7-SA3-4	A7-SA3-4^10-RMP	20-May-05	4.5	5.0	Arsenic	6.03	mg/kg	NV	479455.211	1348462.377
A7-SA3-4	A7-SA3-4^10-RMP	20-May-05	4.5	5.0	Beryllium	0.673	mg/kg	NV	479455.211	1348462.377
A7-SA3-4	A7-SA3-4^10-RMP	20-May-05	4.5	5.0	Aroclor-1254	0.00414	ug/kg	UNV	479455.211	1348462.377
A7-SA3-4	A7-SA3-4^10-RMP	20-May-05	4.5	5.0	Aroclor-1260	0.00414	ug/kg	UNV	479455.211	1348462.377
A7-SA3-4	A7-SA3-4^10-RMP	20-May-05	4.5	5.0	Radium-228	1.21	pCi/g	NV	479455.211	1348462.377
A7-SA3-4	A7-SA3-4^10-RMP	20-May-05	4.5	5.0	Thorium-228	1.19	pCi/g	NV	479455.211	1348462.377
A7-SA3-4	A7-SA3-4^10-RMP	20-May-05	4.5	5.0	Thorium-232	1.21	pCi/g	NV	479455.211	1348462.377
A7-SA3-4	A7-SA3-4^10-RMP	20-May-05	4.5	5.0	Uranium, Total	2.83	mg/kg	UNV	479455.211	1348462.377
A7-SA3-4	A7-SA3-4^12-RMP	20-May-05	5.5	6.0	Arsenic	2.53	mg/kg	NV	479455.211	1348462.377
A7-SA3-4	A7-SA3-4^12-RMP	20-May-05	5.5	6.0	Beryllium	0.504	mg/kg	NV	479455.211	1348462.377
A7-SA3-4	A7-SA3-4^12-RMP	20-May-05	5.5	6.0	Aroclor-1254	0.00408	ug/kg	UNV	479455.211	1348462.377
A7-SA3-4	A7-SA3-4^12-RMP	20-May-05	5.5	6.0	Aroclor-1260	0.00408	ug/kg	UNV	479455.211	1348462.377
A7-SA3-4	A7-SA3-4^12-RMP	20-May-05	5.5	6.0	Radium-228	0.984	pCi/g	NV	479455.211	1348462.377
A7-SA3-4	A7-SA3-4^12-RMP	20-May-05	5.5	6.0	Thorium-228	0.978	pCi/g	NV	479455.211	1348462.377
A7-SA3-4	A7-SA3-4^12-RMP	20-May-05	5.5	6.0	Thorium-232	0.984	pCi/g	NV	479455.211	1348462.377
A7-SA3-4	A7-SA3-4^12-RMP	20-May-05	5.5	6.0	Uranium, Total	5.2	mg/kg	NV	479455.211	1348462.377
A7-SA3-4	A7-SA3-4^14-RMP	20-May-05	6.5	7.0	Arsenic	7.31	mg/kg	NV	479455.211	1348462.377
A7-SA3-4	A7-SA3-4^14-RMP	20-May-05	6.5	7.0	Beryllium	0.477	mg/kg	NV	479455.211	1348462.377
A7-SA3-4	A7-SA3-4^14-RMP	20-May-05	6.5	7.0	Aroclor-1254	0.0012	ug/kg	NV	479455.211	1348462.377
A7-SA3-4	A7-SA3-4^14-RMP	20-May-05	6.5	7.0	Aroclor-1260	0.00386	ug/kg	UNV	479455.211	1348462.377
A7-SA3-4	A7-SA3-4^14-RMP	20-May-05	6.5	7.0	Radium-228	0.511	pCi/g	NV	479455.211	1348462.377

Boring	Sample ID	Sample Date	Sample Depth (feet)		Parameter	Result	Units	Qualifier	Northing	Easting
			Top	Bottom						
A7-SA3-4	A7-SA3-4^14-RMP	20-May-05	6.5	7.0	Thorium-228	0.475	pCi/g	NV	479455.211	1348462.377
A7-SA3-4	A7-SA3-4^14-RMP	20-May-05	6.5	7.0	Thorium-232	0.511	pCi/g	NV	479455.211	1348462.377
A7-SA3-4	A7-SA3-4^14-RMP	20-May-05	6.5	7.0	Uranium, Total	5.72	mg/kg	NV	479455.211	1348462.377
A7-SA3-4	A7-SA3-4^16-RMP	20-May-05	7.5	8.0	Arsenic	9.68	mg/kg	NV	479455.211	1348462.377
A7-SA3-4	A7-SA3-4^16-RMP	20-May-05	7.5	8.0	Beryllium	0.713	mg/kg	NV	479455.211	1348462.377
A7-SA3-4	A7-SA3-4^16-RMP	20-May-05	7.5	8.0	Aroclor-1254	0.00428	ug/kg	UNV	479455.211	1348462.377
A7-SA3-4	A7-SA3-4^16-RMP	20-May-05	7.5	8.0	Aroclor-1260	0.00428	ug/kg	UNV	479455.211	1348462.377
A7-SA3-4	A7-SA3-4^16-RMP	20-May-05	7.5	8.0	Radium-228	0.869	pCi/g	NV	479455.211	1348462.377
A7-SA3-4	A7-SA3-4^16-RMP	20-May-05	7.5	8.0	Thorium-228	0.865	pCi/g	NV	479455.211	1348462.377
A7-SA3-4	A7-SA3-4^16-RMP	20-May-05	7.5	8.0	Thorium-232	0.869	pCi/g	NV	479455.211	1348462.377
A7-SA3-4	A7-SA3-4^16-RMP	20-May-05	7.5	8.0	Uranium, Total	7.73	mg/kg	NV	479455.211	1348462.377
A7-SA3-5	A7-SA3-5^1-RMP	10-Jan-05	0.0	0.5	Arsenic	5.28	mg/kg	-	479398.545	1348464.613
A7-SA3-5	A7-SA3-5^1-RMP	10-Jan-05	0.0	0.5	Beryllium	0.496	mg/kg	-	479398.545	1348464.613
A7-SA3-5	A7-SA3-5^1-RMP	10-Jan-05	0.0	0.5	Aroclor-1254	0.0014	ug/kg	J	479398.545	1348464.613
A7-SA3-5	A7-SA3-5^1-RMP	10-Jan-05	0.0	0.5	Aroclor-1260	0.0037	ug/kg	U	479398.545	1348464.613
A7-SA3-5	A7-SA3-5^1-RMP	10-Jan-05	0.0	0.5	Radium-228	0.822	pCi/g	-	479398.545	1348464.613
A7-SA3-5	A7-SA3-5^1-RMP	10-Jan-05	0.0	0.5	Thorium-228	0.89	pCi/g	-	479398.545	1348464.613
A7-SA3-5	A7-SA3-5^1-RMP	10-Jan-05	0.0	0.5	Thorium-232	0.822	pCi/g	-	479398.545	1348464.613
A7-SA3-5	A7-SA3-5^1-RMP	10-Jan-05	0.0	0.5	Uranium, Total	10	mg/kg	-	479398.545	1348464.613
A7-SA3-5	A7-SA3-5^3-RMP	10-Jan-05	1.0	1.5	Arsenic	5.77	mg/kg	-	479398.545	1348464.613
A7-SA3-5	A7-SA3-5^3-RMP	10-Jan-05	1.0	1.5	Beryllium	0.678	mg/kg	-	479398.545	1348464.613
A7-SA3-5	A7-SA3-5^3-RMP	10-Jan-05	1.0	1.5	Aroclor-1254	0.0038	ug/kg	U	479398.545	1348464.613
A7-SA3-5	A7-SA3-5^3-RMP	10-Jan-05	1.0	1.5	Aroclor-1260	0.0038	ug/kg	U	479398.545	1348464.613
A7-SA3-5	A7-SA3-5^3-RMP	10-Jan-05	1.0	1.5	Radium-228	0.732	pCi/g	-	479398.545	1348464.613
A7-SA3-5	A7-SA3-5^3-RMP	10-Jan-05	1.0	1.5	Thorium-228	0.731	pCi/g	-	479398.545	1348464.613
A7-SA3-5	A7-SA3-5^3-RMP	10-Jan-05	1.0	1.5	Thorium-232	0.732	pCi/g	-	479398.545	1348464.613
A7-SA3-5	A7-SA3-5^3-RMP	10-Jan-05	1.0	1.5	Uranium, Total	4.42	mg/kg	-	479398.545	1348464.613
A7-SA3-5	A7-SA3-5^6-RMP	10-Jan-05	2.5	3.0	Arsenic	4.59	mg/kg	-	479398.545	1348464.613
A7-SA3-5	A7-SA3-5^6-RMP	10-Jan-05	2.5	3.0	Beryllium	0.605	mg/kg	-	479398.545	1348464.613
A7-SA3-5	A7-SA3-5^6-RMP	10-Jan-05	2.5	3.0	Aroclor-1254	0.004	ug/kg	U	479398.545	1348464.613
A7-SA3-5	A7-SA3-5^6-RMP	10-Jan-05	2.5	3.0	Aroclor-1260	0.004	ug/kg	U	479398.545	1348464.613
A7-SA3-5	A7-SA3-5^6-RMP	10-Jan-05	2.5	3.0	Radium-228	0.9	pCi/g	-	479398.545	1348464.613
A7-SA3-5	A7-SA3-5^6-RMP	10-Jan-05	2.5	3.0	Thorium-228	0.872	pCi/g	-	479398.545	1348464.613
A7-SA3-5	A7-SA3-5^6-RMP	10-Jan-05	2.5	3.0	Thorium-232	0.9	pCi/g	-	479398.545	1348464.613
A7-SA3-5	A7-SA3-5^6-RMP	10-Jan-05	2.5	3.0	Uranium, Total	8.31	mg/kg	-	479398.545	1348464.613

APPENDIX A
PREDESIGN CHARACTERIZATION DATA FOR AREA 7 SILOS AND GENERAL AREA

Boring	Sample ID	Sample Date	Sample Depth (feet)		Parameter	Result	Units	Qualifier	Northing	Easting
			Top	Bottom						
A7-SA3-5	A7-SA3-5^8-RMP	20-May-05	3.5	4.0	Arsenic	2.71	mg/kg	NV	479398.545	1348464.613
A7-SA3-5	A7-SA3-5^8-RMP	20-May-05	3.5	4.0	Beryllium	0.645	mg/kg	NV	479398.545	1348464.613
A7-SA3-5	A7-SA3-5^8-RMP	20-May-05	3.5	4.0	Aroclor-1254	0.00416	ug/kg	UNV	479398.545	1348464.613
A7-SA3-5	A7-SA3-5^8-RMP	20-May-05	3.5	4.0	Aroclor-1260	0.00416	ug/kg	UNV	479398.545	1348464.613
A7-SA3-5	A7-SA3-5^8-RMP	20-May-05	3.5	4.0	Radium-228	1.03	pCi/g	NV	479398.545	1348464.613
A7-SA3-5	A7-SA3-5^8-RMP	20-May-05	3.5	4.0	Thorium-228	1.06	pCi/g	NV	479398.545	1348464.613
A7-SA3-5	A7-SA3-5^8-RMP	20-May-05	3.5	4.0	Thorium-232	1.03	pCi/g	NV	479398.545	1348464.613
A7-SA3-5	A7-SA3-5^8-RMP	20-May-05	3.5	4.0	Uranium, Total	2.88	mg/kg	UNV	479398.545	1348464.613
A7-SA3-5	A7-SA3-5^10-RMP	20-May-05	4.5	5.0	Arsenic	4.94	mg/kg	NV	479398.545	1348464.613
A7-SA3-5	A7-SA3-5^10-RMP	20-May-05	4.5	5.0	Beryllium	0.869	mg/kg	NV	479398.545	1348464.613
A7-SA3-5	A7-SA3-5^10-RMP	20-May-05	4.5	5.0	Aroclor-1254	0.0042	ug/kg	UNV	479398.545	1348464.613
A7-SA3-5	A7-SA3-5^10-RMP	20-May-05	4.5	5.0	Aroclor-1260	0.0042	ug/kg	UNV	479398.545	1348464.613
A7-SA3-5	A7-SA3-5^10-RMP	20-May-05	4.5	5.0	Radium-228	1.15	pCi/g	NV	479398.545	1348464.613
A7-SA3-5	A7-SA3-5^10-RMP	20-May-05	4.5	5.0	Thorium-228	1.13	pCi/g	NV	479398.545	1348464.613
A7-SA3-5	A7-SA3-5^10-RMP	20-May-05	4.5	5.0	Thorium-232	1.15	pCi/g	NV	479398.545	1348464.613
A7-SA3-5	A7-SA3-5^10-RMP	20-May-05	4.5	5.0	Uranium, Total	2.72	mg/kg	UNV	479398.545	1348464.613
A7-SA3-5	A7-SA3-5^12-RMP	20-May-05	5.5	6.0	Arsenic	4.74	mg/kg	NV	479398.545	1348464.613
A7-SA3-5	A7-SA3-5^12-RMP	20-May-05	5.5	6.0	Beryllium	0.627	mg/kg	NV	479398.545	1348464.613
A7-SA3-5	A7-SA3-5^12-RMP	20-May-05	5.5	6.0	Aroclor-1254	0.00414	ug/kg	UNV	479398.545	1348464.613
A7-SA3-5	A7-SA3-5^12-RMP	20-May-05	5.5	6.0	Aroclor-1260	0.00414	ug/kg	UNV	479398.545	1348464.613
A7-SA3-5	A7-SA3-5^12-RMP	20-May-05	5.5	6.0	Radium-228	1.09	pCi/g	NV	479398.545	1348464.613
A7-SA3-5	A7-SA3-5^12-RMP	20-May-05	5.5	6.0	Thorium-228	1.12	pCi/g	NV	479398.545	1348464.613
A7-SA3-5	A7-SA3-5^12-RMP	20-May-05	5.5	6.0	Thorium-232	1.09	pCi/g	NV	479398.545	1348464.613
A7-SA3-5	A7-SA3-5^12-RMP	20-May-05	5.5	6.0	Uranium, Total	2.76	mg/kg	UNV	479398.545	1348464.613
A7-SA3-5	A7-SA3-5^14-RMP	20-May-05	6.5	7.0	Arsenic	11	mg/kg	NV	479398.545	1348464.613
A7-SA3-5	A7-SA3-5^14-RMP	20-May-05	6.5	7.0	Beryllium	0.43	mg/kg	NV	479398.545	1348464.613
A7-SA3-5	A7-SA3-5^14-RMP	20-May-05	6.5	7.0	Aroclor-1254	0.00414	ug/kg	UNV	479398.545	1348464.613
A7-SA3-5	A7-SA3-5^14-RMP	20-May-05	6.5	7.0	Aroclor-1260	0.00414	ug/kg	UNV	479398.545	1348464.613
A7-SA3-5	A7-SA3-5^14-RMP	20-May-05	6.5	7.0	Radium-228	0.689	pCi/g	NV	479398.545	1348464.613
A7-SA3-5	A7-SA3-5^14-RMP	20-May-05	6.5	7.0	Thorium-228	0.666	pCi/g	NV	479398.545	1348464.613
A7-SA3-5	A7-SA3-5^14-RMP	20-May-05	6.5	7.0	Thorium-232	0.689	pCi/g	NV	479398.545	1348464.613
A7-SA3-5	A7-SA3-5^14-RMP	20-May-05	6.5	7.0	Uranium, Total	2.46	mg/kg	UNV	479398.545	1348464.613
A7-SA3-5	A7-SA3-5^16-RMP	20-May-05	7.5	8.0	Arsenic	6.94	mg/kg	NV	479398.545	1348464.613
A7-SA3-5	A7-SA3-5^16-RMP	20-May-05	7.5	8.0	Beryllium	0.503	mg/kg	NV	479398.545	1348464.613
A7-SA3-5	A7-SA3-5^16-RMP	20-May-05	7.5	8.0	Aroclor-1254	0.00418	ug/kg	UNV	479398.545	1348464.613

Boring	Sample ID	Sample Date	Sample Depth (feet)		Parameter	Result	Units	Qualifier	Northing	Easting
			Top	Bottom						
A7-SA3-5	A7-SA3-5^16-RMP	20-May-05	7.5	8.0	Aroclor-1260	0.00418	ug/kg	UNV	479398.545	1348464.613
A7-SA3-5	A7-SA3-5^16-RMP	20-May-05	7.5	8.0	Radium-228	0.502	pCi/g	NV	479398.545	1348464.613
A7-SA3-5	A7-SA3-5^16-RMP	20-May-05	7.5	8.0	Thorium-228	0.498	pCi/g	NV	479398.545	1348464.613
A7-SA3-5	A7-SA3-5^16-RMP	20-May-05	7.5	8.0	Thorium-232	0.502	pCi/g	NV	479398.545	1348464.613
A7-SA3-5	A7-SA3-5^16-RMP	20-May-05	7.5	8.0	Uranium, Total	2.16	mg/kg	NV	479398.545	1348464.613
A7-SA3-6	A7-SA3-6^1-RMP	16-May-05	0.0	0.5	Arsenic	7.99	mg/kg	NV	479461.004	1348691.31
A7-SA3-6	A7-SA3-6^1-RMP	16-May-05	0.0	0.5	Beryllium	0.591	mg/kg	NV	479461.004	1348691.31
A7-SA3-6	A7-SA3-6^1-RMP	16-May-05	0.0	0.5	Aroclor-1254	0.0028	ug/kg	NV	479461.004	1348691.31
A7-SA3-6	A7-SA3-6^1-RMP	16-May-05	0.0	0.5	Aroclor-1260	0.00371	ug/kg	UNV	479461.004	1348691.31
A7-SA3-6	A7-SA3-6^1-RMP	16-May-05	0.0	0.5	Radium-228	0.605	pCi/g	NV	479461.004	1348691.31
A7-SA3-6	A7-SA3-6^1-RMP	16-May-05	0.0	0.5	Thorium-228	0.64	pCi/g	NV	479461.004	1348691.31
A7-SA3-6	A7-SA3-6^1-RMP	16-May-05	0.0	0.5	Thorium-232	0.605	pCi/g	NV	479461.004	1348691.31
A7-SA3-6	A7-SA3-6^1-RMP	16-May-05	0.0	0.5	Uranium, Total	13	mg/kg	NV	479461.004	1348691.31
A7-SA3-6	A7-SA3-6^3-RMP	16-May-05	1.0	1.5	Arsenic	14.8	mg/kg	NV	479461.004	1348691.31
A7-SA3-6	A7-SA3-6^3-RMP	16-May-05	1.0	1.5	Beryllium	0.64	mg/kg	NV	479461.004	1348691.31
A7-SA3-6	A7-SA3-6^3-RMP	16-May-05	1.0	1.5	Aroclor-1254	0.00397	ug/kg	UNV	479461.004	1348691.31
A7-SA3-6	A7-SA3-6^3-RMP	16-May-05	1.0	1.5	Aroclor-1260	0.00397	ug/kg	UNV	479461.004	1348691.31
A7-SA3-6	A7-SA3-6^3-RMP	16-May-05	1.0	1.5	Radium-228	0.876	pCi/g	NV	479461.004	1348691.31
A7-SA3-6	A7-SA3-6^3-RMP	16-May-05	1.0	1.5	Thorium-228	0.848	pCi/g	NV	479461.004	1348691.31
A7-SA3-6	A7-SA3-6^3-RMP	16-May-05	1.0	1.5	Thorium-232	0.876	pCi/g	NV	479461.004	1348691.31
A7-SA3-6	A7-SA3-6^3-RMP	16-May-05	1.0	1.5	Uranium, Total	9.98	mg/kg	NV	479461.004	1348691.31
A7-SA3-6	A7-SA3-6^6-RMP	16-May-05	2.5	3.0	Arsenic	7.03	mg/kg	NV	479461.004	1348691.31
A7-SA3-6	A7-SA3-6^6-RMP	16-May-05	2.5	3.0	Beryllium	0.468	mg/kg	NV	479461.004	1348691.31
A7-SA3-6	A7-SA3-6^6-RMP	16-May-05	2.5	3.0	Aroclor-1254	0.00424	ug/kg	UNV	479461.004	1348691.31
A7-SA3-6	A7-SA3-6^6-RMP	16-May-05	2.5	3.0	Aroclor-1260	0.00424	ug/kg	UNV	479461.004	1348691.31
A7-SA3-6	A7-SA3-6^6-RMP	16-May-05	2.5	3.0	Radium-228	1.02	pCi/g	NV	479461.004	1348691.31
A7-SA3-6	A7-SA3-6^6-RMP	16-May-05	2.5	3.0	Thorium-228	1	pCi/g	NV	479461.004	1348691.31
A7-SA3-6	A7-SA3-6^6-RMP	16-May-05	2.5	3.0	Thorium-232	1.02	pCi/g	NV	479461.004	1348691.31
A7-SA3-6	A7-SA3-6^6-RMP	16-May-05	2.5	3.0	Uranium, Total	5.98	mg/kg	NV	479461.004	1348691.31
A7-SA3-6	A7-SA3-6^8-RMP	20-May-05	3.5	4.0	Arsenic	42.3	mg/kg	NV	479461.004	1348691.31
A7-SA3-6	A7-SA3-6^8-RMP	20-May-05	3.5	4.0	Beryllium	1.02	mg/kg	NV	479461.004	1348691.31
A7-SA3-6	A7-SA3-6^8-RMP	20-May-05	3.5	4.0	Aroclor-1254	0.00422	ug/kg	UNV	479461.004	1348691.31
A7-SA3-6	A7-SA3-6^8-RMP	20-May-05	3.5	4.0	Aroclor-1260	0.00422	ug/kg	UNV	479461.004	1348691.31
A7-SA3-6	A7-SA3-6^8-RMP	20-May-05	3.5	4.0	Radium-228	1.22	pCi/g	NV	479461.004	1348691.31
A7-SA3-6	A7-SA3-6^8-RMP	20-May-05	3.5	4.0	Thorium-228	1.2	pCi/g	NV	479461.004	1348691.31

APPENDIX A
PREDESIGN CHARACTERIZATION DATA FOR AREA 7 SILOS AND GENERAL AREA

Boring	Sample ID	Sample Date	Sample Depth (feet)		Parameter	Result	Units	Qualifier	Northing	Easting
			Top	Bottom						
A7-SA3-6	A7-SA3-6^8-RMP	20-May-05	3.5	4.0	Thorium-232	1.22	pCi/g	NV	479461.004	1348691.31
A7-SA3-6	A7-SA3-6^8-RMP	20-May-05	3.5	4.0	Uranium, Total	5.58	mg/kg	NV	479461.004	1348691.31
A7-SA3-6	A7-SA3-6^10-RMP	20-May-05	4.5	5.0	Arsenic	17.9	mg/kg	NV	479461.004	1348691.31
A7-SA3-6	A7-SA3-6^10-RMP	20-May-05	4.5	5.0	Beryllium	0.674	mg/kg	NV	479461.004	1348691.31
A7-SA3-6	A7-SA3-6^10-RMP	20-May-05	4.5	5.0	Aroclor-1254	0.00396	ug/kg	UNV	479461.004	1348691.31
A7-SA3-6	A7-SA3-6^10-RMP	20-May-05	4.5	5.0	Aroclor-1260	0.00396	ug/kg	UNV	479461.004	1348691.31
A7-SA3-6	A7-SA3-6^10-RMP	20-May-05	4.5	5.0	Radium-228	0.84	pCi/g	NV	479461.004	1348691.31
A7-SA3-6	A7-SA3-6^10-RMP	20-May-05	4.5	5.0	Thorium-228	0.848	pCi/g	NV	479461.004	1348691.31
A7-SA3-6	A7-SA3-6^10-RMP	20-May-05	4.5	5.0	Thorium-232	0.84	pCi/g	NV	479461.004	1348691.31
A7-SA3-6	A7-SA3-6^10-RMP	20-May-05	4.5	5.0	Uranium, Total	3.48	mg/kg	NV	479461.004	1348691.31
A7-SA3-6	A7-SA3-6^12-RMP	20-May-05	5.5	6.0	Arsenic	12.8	mg/kg	NV	479461.004	1348691.31
A7-SA3-6	A7-SA3-6^12-RMP	20-May-05	5.5	6.0	Beryllium	0.679	mg/kg	NV	479461.004	1348691.31
A7-SA3-6	A7-SA3-6^12-RMP	20-May-05	5.5	6.0	Aroclor-1254	0.00394	ug/kg	UNV	479461.004	1348691.31
A7-SA3-6	A7-SA3-6^12-RMP	20-May-05	5.5	6.0	Aroclor-1260	0.00394	ug/kg	UNV	479461.004	1348691.31
A7-SA3-6	A7-SA3-6^12-RMP	20-May-05	5.5	6.0	Radium-228	0.815	pCi/g	NV	479461.004	1348691.31
A7-SA3-6	A7-SA3-6^12-RMP	20-May-05	5.5	6.0	Thorium-228	0.771	pCi/g	NV	479461.004	1348691.31
A7-SA3-6	A7-SA3-6^12-RMP	20-May-05	5.5	6.0	Thorium-232	0.815	pCi/g	NV	479461.004	1348691.31
A7-SA3-6	A7-SA3-6^12-RMP	20-May-05	5.5	6.0	Uranium, Total	4.09	mg/kg	NV	479461.004	1348691.31
A7-SA3-6	A7-SA3-6^14-RMP	20-May-05	6.5	7.0	Arsenic	7.86	mg/kg	NV	479461.004	1348691.31
A7-SA3-6	A7-SA3-6^14-RMP	20-May-05	6.5	7.0	Beryllium	0.643	mg/kg	NV	479461.004	1348691.31
A7-SA3-6	A7-SA3-6^14-RMP	20-May-05	6.5	7.0	Aroclor-1254	0.00393	ug/kg	UNV	479461.004	1348691.31
A7-SA3-6	A7-SA3-6^14-RMP	20-May-05	6.5	7.0	Aroclor-1260	0.00393	ug/kg	UNV	479461.004	1348691.31
A7-SA3-6	A7-SA3-6^14-RMP	20-May-05	6.5	7.0	Radium-228	0.758	pCi/g	NV	479461.004	1348691.31
A7-SA3-6	A7-SA3-6^14-RMP	20-May-05	6.5	7.0	Thorium-228	0.761	pCi/g	NV	479461.004	1348691.31
A7-SA3-6	A7-SA3-6^14-RMP	20-May-05	6.5	7.0	Thorium-232	0.758	pCi/g	NV	479461.004	1348691.31
A7-SA3-6	A7-SA3-6^14-RMP	20-May-05	6.5	7.0	Uranium, Total	5.62	mg/kg	NV	479461.004	1348691.31
A7-SA3-6	A7-SA3-6^16-RMP	20-May-05	7.5	8.0	Arsenic	8.28	mg/kg	NV	479461.004	1348691.31
A7-SA3-6	A7-SA3-6^16-RMP	20-May-05	7.5	8.0	Beryllium	0.698	mg/kg	NV	479461.004	1348691.31
A7-SA3-6	A7-SA3-6^16-RMP	20-May-05	7.5	8.0	Aroclor-1254	0.00401	ug/kg	UNV	479461.004	1348691.31
A7-SA3-6	A7-SA3-6^16-RMP	20-May-05	7.5	8.0	Aroclor-1260	0.00401	ug/kg	UNV	479461.004	1348691.31
A7-SA3-6	A7-SA3-6^16-RMP	20-May-05	7.5	8.0	Radium-228	0.904	pCi/g	NV	479461.004	1348691.31
A7-SA3-6	A7-SA3-6^16-RMP	20-May-05	7.5	8.0	Thorium-228	0.87	pCi/g	NV	479461.004	1348691.31
A7-SA3-6	A7-SA3-6^16-RMP	20-May-05	7.5	8.0	Thorium-232	0.904	pCi/g	NV	479461.004	1348691.31
A7-SA3-6	A7-SA3-6^16-RMP	20-May-05	7.5	8.0	Uranium, Total	4.79	mg/kg	NV	479461.004	1348691.31
A7-SA3-7	A7-SA3-7^1-RMP	7-Jan-05	0.0	0.5	Arsenic	5.04	mg/kg	-	479325.368	1348691.249

5982

Boring	Sample ID	Sample Date	Sample Depth (feet)		Parameter	Result	Units	Qualifier	Northing	Easting
			Top	Bottom						
A7-SA3-7	A7-SA3-7^1-RMP	7-Jan-05	0.0	0.5	Beryllium	0.44	mg/kg	-	479325.368	1348691.249
A7-SA3-7	A7-SA3-7^1-RMP	7-Jan-05	0.0	0.5	Aroclor-1254	0.0038	ug/kg	U	479325.368	1348691.249
A7-SA3-7	A7-SA3-7^1-RMP	7-Jan-05	0.0	0.5	Aroclor-1260	0.0038	ug/kg	U	479325.368	1348691.249
A7-SA3-7	A7-SA3-7^1-RMP	7-Jan-05	0.0	0.5	Radium-228	1.02	pCi/g	-	479325.368	1348691.249
A7-SA3-7	A7-SA3-7^1-RMP	7-Jan-05	0.0	0.5	Thorium-228	1.05	pCi/g	-	479325.368	1348691.249
A7-SA3-7	A7-SA3-7^1-RMP	7-Jan-05	0.0	0.5	Thorium-232	1.02	pCi/g	-	479325.368	1348691.249
A7-SA3-7	A7-SA3-7^1-RMP	7-Jan-05	0.0	0.5	Uranium, Total	7.18	mg/kg	-	479325.368	1348691.249
A7-SA3-7	A7-SA3-7^3-RMP	7-Jan-05	1.0	1.5	Arsenic	11.6	mg/kg	-	479325.368	1348691.249
A7-SA3-7	A7-SA3-7^3-RMP	7-Jan-05	1.0	1.5	Beryllium	0.81	mg/kg	-	479325.368	1348691.249
A7-SA3-7	A7-SA3-7^3-RMP	7-Jan-05	1.0	1.5	Aroclor-1254	0.0041	ug/kg	U	479325.368	1348691.249
A7-SA3-7	A7-SA3-7^3-RMP	7-Jan-05	1.0	1.5	Aroclor-1260	0.0041	ug/kg	U	479325.368	1348691.249
A7-SA3-7	A7-SA3-7^3-RMP	7-Jan-05	1.0	1.5	Radium-228	1.22	pCi/g	-	479325.368	1348691.249
A7-SA3-7	A7-SA3-7^3-RMP	7-Jan-05	1.0	1.5	Thorium-228	1.19	pCi/g	-	479325.368	1348691.249
A7-SA3-7	A7-SA3-7^3-RMP	7-Jan-05	1.0	1.5	Thorium-232	1.22	pCi/g	-	479325.368	1348691.249
A7-SA3-7	A7-SA3-7^3-RMP	7-Jan-05	1.0	1.5	Uranium, Total	4.74	mg/kg	-	479325.368	1348691.249
A7-SA3-7	A7-SA3-7^6-RMP	7-Jan-05	2.5	3.0	Arsenic	12.6	mg/kg	-	479325.368	1348691.249
A7-SA3-7	A7-SA3-7^6-RMP	7-Jan-05	2.5	3.0	Beryllium	0.886	mg/kg	-	479325.368	1348691.249
A7-SA3-7	A7-SA3-7^6-RMP	7-Jan-05	2.5	3.0	Aroclor-1254	0.0041	ug/kg	U	479325.368	1348691.249
A7-SA3-7	A7-SA3-7^6-RMP	7-Jan-05	2.5	3.0	Aroclor-1260	0.0041	ug/kg	U	479325.368	1348691.249
A7-SA3-7	A7-SA3-7^6-RMP	7-Jan-05	2.5	3.0	Radium-228	1.37	pCi/g	-	479325.368	1348691.249
A7-SA3-7	A7-SA3-7^6-RMP	7-Jan-05	2.5	3.0	Thorium-228	1.41	pCi/g	-	479325.368	1348691.249
A7-SA3-7	A7-SA3-7^6-RMP	7-Jan-05	2.5	3.0	Thorium-232	1.37	pCi/g	-	479325.368	1348691.249
A7-SA3-7	A7-SA3-7^6-RMP	7-Jan-05	2.5	3.0	Uranium, Total	4.87	mg/kg	-	479325.368	1348691.249
A7-SA3-7	A7-SA3-7^8-RMP	23-May-05	3.5	4.0	Arsenic	5.22	mg/kg	NV	479325.368	1348691.249
A7-SA3-7	A7-SA3-7^8-RMP	23-May-05	3.5	4.0	Beryllium	0.468	mg/kg	NV	479325.368	1348691.249
A7-SA3-7	A7-SA3-7^8-RMP	23-May-05	3.5	4.0	Aroclor-1254	0.00421	ug/kg	UNV	479325.368	1348691.249
A7-SA3-7	A7-SA3-7^8-RMP	23-May-05	3.5	4.0	Aroclor-1260	0.00421	ug/kg	UNV	479325.368	1348691.249
A7-SA3-7	A7-SA3-7^8-RMP	23-May-05	3.5	4.0	Radium-228	0.913	pCi/g	NV	479325.368	1348691.249
A7-SA3-7	A7-SA3-7^8-RMP	23-May-05	3.5	4.0	Thorium-228	0.92	pCi/g	NV	479325.368	1348691.249
A7-SA3-7	A7-SA3-7^8-RMP	23-May-05	3.5	4.0	Thorium-232	0.913	pCi/g	NV	479325.368	1348691.249
A7-SA3-7	A7-SA3-7^8-RMP	23-May-05	3.5	4.0	Uranium, Total	7.15	mg/kg	NV	479325.368	1348691.249
A7-SA3-7	A7-SA3-7^10-RMP	23-May-05	4.5	5.0	Arsenic	6.36	mg/kg	NV	479325.368	1348691.249
A7-SA3-7	A7-SA3-7^10-RMP	23-May-05	4.5	5.0	Beryllium	0.584	mg/kg	NV	479325.368	1348691.249
A7-SA3-7	A7-SA3-7^10-RMP	23-May-05	4.5	5.0	Aroclor-1254	0.00395	ug/kg	UNV	479325.368	1348691.249
A7-SA3-7	A7-SA3-7^10-RMP	23-May-05	4.5	5.0	Aroclor-1260	0.00395	ug/kg	UNV	479325.368	1348691.249

APPENDIX A
PREDESIGN CHARACTERIZATION DATA FOR AREA 7 SILOS AND GENERAL AREA

Boring	Sample ID	Sample Date	Sample Depth (feet)		Parameter	Result	Units	Qualifier	Northing	Easting
			Top	Bottom						
A7-SA3-7	A7-SA3-7^10-RMP	23-May-05	4.5	5.0	Radium-228	0.945	pCi/g	NV	479325.368	1348691.249
A7-SA3-7	A7-SA3-7^10-RMP	23-May-05	4.5	5.0	Thorium-228	0.987	pCi/g	NV	479325.368	1348691.249
A7-SA3-7	A7-SA3-7^10-RMP	23-May-05	4.5	5.0	Thorium-232	0.945	pCi/g	NV	479325.368	1348691.249
A7-SA3-7	A7-SA3-7^10-RMP	23-May-05	4.5	5.0	Uranium, Total	3.8	mg/kg	NV	479325.368	1348691.249
A7-SA3-7	A7-SA3-7^12-RMP	23-May-05	5.5	6.0	Arsenic	8.31	mg/kg	NV	479325.368	1348691.249
A7-SA3-7	A7-SA3-7^12-RMP	23-May-05	5.5	6.0	Beryllium	0.715	mg/kg	NV	479325.368	1348691.249
A7-SA3-7	A7-SA3-7^12-RMP	23-May-05	5.5	6.0	Aroclor-1254	0.00407	ug/kg	UNV	479325.368	1348691.249
A7-SA3-7	A7-SA3-7^12-RMP	23-May-05	5.5	6.0	Aroclor-1260	0.00407	ug/kg	UNV	479325.368	1348691.249
A7-SA3-7	A7-SA3-7^12-RMP	23-May-05	5.5	6.0	Radium-228	0.978	pCi/g	NV	479325.368	1348691.249
A7-SA3-7	A7-SA3-7^12-RMP	23-May-05	5.5	6.0	Thorium-228	0.96	pCi/g	NV	479325.368	1348691.249
A7-SA3-7	A7-SA3-7^12-RMP	23-May-05	5.5	6.0	Thorium-232	0.978	pCi/g	NV	479325.368	1348691.249
A7-SA3-7	A7-SA3-7^12-RMP	23-May-05	5.5	6.0	Uranium, Total	3.93	mg/kg	UNV	479325.368	1348691.249
A7-SA3-7	A7-SA3-7^14-RMP	23-May-05	6.5	7.0	Arsenic	6.71	mg/kg	NV	479325.368	1348691.249
A7-SA3-7	A7-SA3-7^14-RMP	23-May-05	6.5	7.0	Beryllium	0.762	mg/kg	NV	479325.368	1348691.249
A7-SA3-7	A7-SA3-7^14-RMP	23-May-05	6.5	7.0	Aroclor-1254	0.00402	ug/kg	UNV	479325.368	1348691.249
A7-SA3-7	A7-SA3-7^14-RMP	23-May-05	6.5	7.0	Aroclor-1260	0.00402	ug/kg	UNV	479325.368	1348691.249
A7-SA3-7	A7-SA3-7^14-RMP	23-May-05	6.5	7.0	Radium-228	0.996	pCi/g	NV	479325.368	1348691.249
A7-SA3-7	A7-SA3-7^14-RMP	23-May-05	6.5	7.0	Thorium-228	0.922	pCi/g	NV	479325.368	1348691.249
A7-SA3-7	A7-SA3-7^14-RMP	23-May-05	6.5	7.0	Thorium-232	0.996	pCi/g	NV	479325.368	1348691.249
A7-SA3-7	A7-SA3-7^14-RMP	23-May-05	6.5	7.0	Uranium, Total	6.85	mg/kg	NV	479325.368	1348691.249
A7-SA3-7	A7-SA3-7^16-RMP	23-May-05	7.5	8.0	Arsenic	6.36	mg/kg	NV	479325.368	1348691.249
A7-SA3-7	A7-SA3-7^16-RMP	23-May-05	7.5	8.0	Beryllium	0.634	mg/kg	NV	479325.368	1348691.249
A7-SA3-7	A7-SA3-7^16-RMP	23-May-05	7.5	8.0	Aroclor-1254	0.00394	ug/kg	UNV	479325.368	1348691.249
A7-SA3-7	A7-SA3-7^16-RMP	23-May-05	7.5	8.0	Aroclor-1260	0.00394	ug/kg	UNV	479325.368	1348691.249
A7-SA3-7	A7-SA3-7^16-RMP	23-May-05	7.5	8.0	Radium-228	0.913	pCi/g	NV	479325.368	1348691.249
A7-SA3-7	A7-SA3-7^16-RMP	23-May-05	7.5	8.0	Thorium-228	0.884	pCi/g	NV	479325.368	1348691.249
A7-SA3-7	A7-SA3-7^16-RMP	23-May-05	7.5	8.0	Thorium-232	0.913	pCi/g	NV	479325.368	1348691.249
A7-SA3-7	A7-SA3-7^16-RMP	23-May-05	7.5	8.0	Uranium, Total	2.82	mg/kg	UNV	479325.368	1348691.249
A7-SA3-8	A7-SA3-8^1-RMP	1-Mar-05	0.0	0.5	Arsenic	4.47	mg/kg	NV	479557.076	1348741.051
A7-SA3-8	A7-SA3-8^1-RMP	1-Mar-05	0.0	0.5	Beryllium	0.652	mg/kg	NV	479557.076	1348741.051
A7-SA3-8	A7-SA3-8^1-RMP	1-Mar-05	0.0	0.5	Aroclor-1254	0.019	ug/kg	NV	479557.076	1348741.051
A7-SA3-8	A7-SA3-8^1-RMP	1-Mar-05	0.0	0.5	Aroclor-1260	0.037	ug/kg	UNV	479557.076	1348741.051
A7-SA3-8	A7-SA3-8^1-RMP	1-Mar-05	0.0	0.5	Radium-228	0.607	pCi/g	NV	479557.076	1348741.051
A7-SA3-8	A7-SA3-8^1-RMP	1-Mar-05	0.0	0.5	Thorium-228	0.64	pCi/g	NV	479557.076	1348741.051
A7-SA3-8	A7-SA3-8^1-RMP	1-Mar-05	0.0	0.5	Thorium-232	0.607	pCi/g	NV	479557.076	1348741.051

55982

Boring	Sample ID	Sample Date	Sample Depth (feet)		Parameter	Result	Units	Qualifier	Northing	Easting
			Top	Bottom						
A7-SA3-8	A7-SA3-8^1-RMP	1-Mar-05	0.0	0.5	Uranium, Total	6.02	mg/kg	NV	479557.076	1348741.051
A7-SA3-8	A7-SA3-8^3-RMP	1-Mar-05	1.0	1.5	Arsenic	6.23	mg/kg	NV	479557.076	1348741.051
A7-SA3-8	A7-SA3-8^3-RMP	1-Mar-05	1.0	1.5	Beryllium	0.638	mg/kg	NV	479557.076	1348741.051
A7-SA3-8	A7-SA3-8^3-RMP	1-Mar-05	1.0	1.5	Aroclor-1254	0.0028	ug/kg	NV	479557.076	1348741.051
A7-SA3-8	A7-SA3-8^3-RMP	1-Mar-05	1.0	1.5	Aroclor-1260	0.0036	ug/kg	UNV	479557.076	1348741.051
A7-SA3-8	A7-SA3-8^3-RMP	1-Mar-05	1.0	1.5	Radium-228	1.01	pCi/g	NV	479557.076	1348741.051
A7-SA3-8	A7-SA3-8^3-RMP	1-Mar-05	1.0	1.5	Thorium-228	1.01	pCi/g	NV	479557.076	1348741.051
A7-SA3-8	A7-SA3-8^3-RMP	1-Mar-05	1.0	1.5	Thorium-232	1.01	pCi/g	NV	479557.076	1348741.051
A7-SA3-8	A7-SA3-8^3-RMP	1-Mar-05	1.0	1.5	Uranium, Total	22.2	mg/kg	NV	479557.076	1348741.051
A7-SA3-8	A7-SA3-8^6-RMP	1-Mar-05	2.5	3.0	Arsenic	2.37	mg/kg	NV	479557.076	1348741.051
A7-SA3-8	A7-SA3-8^6-RMP	1-Mar-05	2.5	3.0	Beryllium	0.804	mg/kg	NV	479557.076	1348741.051
A7-SA3-8	A7-SA3-8^6-RMP	1-Mar-05	2.5	3.0	Aroclor-1254	0.0039	ug/kg	UNV	479557.076	1348741.051
A7-SA3-8	A7-SA3-8^6-RMP	1-Mar-05	2.5	3.0	Aroclor-1260	0.0039	ug/kg	UNV	479557.076	1348741.051
A7-SA3-8	A7-SA3-8^6-RMP	1-Mar-05	2.5	3.0	Radium-228	0.938	pCi/g	NV	479557.076	1348741.051
A7-SA3-8	A7-SA3-8^6-RMP	1-Mar-05	2.5	3.0	Thorium-228	0.978	pCi/g	NV	479557.076	1348741.051
A7-SA3-8	A7-SA3-8^6-RMP	1-Mar-05	2.5	3.0	Thorium-232	0.938	pCi/g	NV	479557.076	1348741.051
A7-SA3-8	A7-SA3-8^6-RMP	1-Mar-05	2.5	3.0	Uranium, Total	4.94	mg/kg	UNV	479557.076	1348741.051
A7-SA3-9	A7-SA3-9^1-RMP	10-Jan-05	0.0	0.5	Arsenic	6.65	mg/kg	-	479182.481	1348588.538
A7-SA3-9	A7-SA3-9^1-RMP	10-Jan-05	0.0	0.5	Beryllium	0.581	mg/kg	-	479182.481	1348588.538
A7-SA3-9	A7-SA3-9^1-RMP	10-Jan-05	0.0	0.5	Aroclor-1254	0.0046	ug/kg	U	479182.481	1348588.538
A7-SA3-9	A7-SA3-9^1-RMP	10-Jan-05	0.0	0.5	Aroclor-1260	0.0046	ug/kg	U	479182.481	1348588.538
A7-SA3-9	A7-SA3-9^1-RMP	10-Jan-05	0.0	0.5	Radium-228	1.1	pCi/g	-	479182.481	1348588.538
A7-SA3-9	A7-SA3-9^1-RMP	10-Jan-05	0.0	0.5	Thorium-228	1.12	pCi/g	-	479182.481	1348588.538
A7-SA3-9	A7-SA3-9^1-RMP	10-Jan-05	0.0	0.5	Thorium-232	1.1	pCi/g	-	479182.481	1348588.538
A7-SA3-9	A7-SA3-9^1-RMP	10-Jan-05	0.0	0.5	Uranium, Total	24.8	mg/kg	-	479182.481	1348588.538
A7-SA3-9	A7-SA3-9^3-RMP	10-Jan-05	1.0	1.5	Arsenic	9.06	mg/kg	-	479182.481	1348588.538
A7-SA3-9	A7-SA3-9^3-RMP	10-Jan-05	1.0	1.5	Beryllium	0.918	mg/kg	-	479182.481	1348588.538
A7-SA3-9	A7-SA3-9^3-RMP	10-Jan-05	1.0	1.5	Aroclor-1254	0.0042	ug/kg	U	479182.481	1348588.538
A7-SA3-9	A7-SA3-9^3-RMP	10-Jan-05	1.0	1.5	Aroclor-1260	0.0042	ug/kg	U	479182.481	1348588.538
A7-SA3-9	A7-SA3-9^3-RMP	10-Jan-05	1.0	1.5	Radium-228	1.28	pCi/g	-	479182.481	1348588.538
A7-SA3-9	A7-SA3-9^3-RMP	10-Jan-05	1.0	1.5	Thorium-228	1.26	pCi/g	-	479182.481	1348588.538
A7-SA3-9	A7-SA3-9^3-RMP	10-Jan-05	1.0	1.5	Thorium-232	1.28	pCi/g	-	479182.481	1348588.538
A7-SA3-9	A7-SA3-9^3-RMP	10-Jan-05	1.0	1.5	Uranium, Total	5.27	mg/kg	U	479182.481	1348588.538
A7-SA3-9	A7-SA3-9^6-RMP	10-Jan-05	2.5	3.0	Arsenic	8.32	mg/kg	-	479182.481	1348588.538
A7-SA3-9	A7-SA3-9^6-RMP	10-Jan-05	2.5	3.0	Beryllium	1.38	mg/kg	-	479182.481	1348588.538

APPENDIX A
PREDESIGN CHARACTERIZATION DATA FOR AREA 7 SILOS AND GENERAL AREA

Boring	Sample ID	Sample Date	Sample Depth (feet)		Parameter	Result	Units	Qualifier	Northing	Easting
			Top	Bottom						
A7-SA3-9	A7-SA3-9^6-RMP	10-Jan-05	2.5	3.0	Aroclor-1254	0.004	ug/kg	U	479182.481	1348588.538
A7-SA3-9	A7-SA3-9^6-RMP	10-Jan-05	2.5	3.0	Aroclor-1260	0.004	ug/kg	U	479182.481	1348588.538
A7-SA3-9	A7-SA3-9^6-RMP	10-Jan-05	2.5	3.0	Radium-228	1.28	pCi/g	-	479182.481	1348588.538
A7-SA3-9	A7-SA3-9^6-RMP	10-Jan-05	2.5	3.0	Thorium-228	1.33	pCi/g	-	479182.481	1348588.538
A7-SA3-9	A7-SA3-9^6-RMP	10-Jan-05	2.5	3.0	Thorium-232	1.28	pCi/g	-	479182.481	1348588.538
A7-SA3-9	A7-SA3-9^6-RMP	10-Jan-05	2.5	3.0	Uranium, Total	5.08	mg/kg	U	479182.481	1348588.538
A7-SA4-1	A7-SA4-1^1-RMP	9-Feb-05	0.0	0.5	Arsenic	7.21	mg/kg	NV	478832.309	1348859.324
A7-SA4-1	A7-SA4-1^1-RMP	9-Feb-05	0.0	0.5	Beryllium	0.775	mg/kg	NV	478832.309	1348859.324
A7-SA4-1	A7-SA4-1^1-RMP	9-Feb-05	0.0	0.5	Aroclor-1254	0.0041	ug/kg	UNV	478832.309	1348859.324
A7-SA4-1	A7-SA4-1^1-RMP	9-Feb-05	0.0	0.5	Aroclor-1260	0.0041	ug/kg	UNV	478832.309	1348859.324
A7-SA4-1	A7-SA4-1^1-RMP	9-Feb-05	0.0	0.5	Radium-228	1.09	pCi/g	NV	478832.309	1348859.324
A7-SA4-1	A7-SA4-1^1-RMP	9-Feb-05	0.0	0.5	Thorium-228	1.13	pCi/g	NV	478832.309	1348859.324
A7-SA4-1	A7-SA4-1^1-RMP	9-Feb-05	0.0	0.5	Thorium-232	1.09	pCi/g	NV	478832.309	1348859.324
A7-SA4-1	A7-SA4-1^1-RMP	9-Feb-05	0.0	0.5	Uranium, Total	4.12	mg/kg	NV	478832.309	1348859.324
A7-SA4-1	A7-SA4-1^3-RMP	9-Feb-05	1.0	1.5	Arsenic	6.95	mg/kg	NV	478832.309	1348859.324
A7-SA4-1	A7-SA4-1^3-RMP	9-Feb-05	1.0	1.5	Beryllium	0.714	mg/kg	NV	478832.309	1348859.324
A7-SA4-1	A7-SA4-1^3-RMP	9-Feb-05	1.0	1.5	Aroclor-1254	0.004	ug/kg	UNV	478832.309	1348859.324
A7-SA4-1	A7-SA4-1^3-RMP	9-Feb-05	1.0	1.5	Aroclor-1260	0.004	ug/kg	UNV	478832.309	1348859.324
A7-SA4-1	A7-SA4-1^3-RMP	9-Feb-05	1.0	1.5	Radium-228	0.857	pCi/g	NV	478832.309	1348859.324
A7-SA4-1	A7-SA4-1^3-RMP	9-Feb-05	1.0	1.5	Thorium-228	0.87	pCi/g	NV	478832.309	1348859.324
A7-SA4-1	A7-SA4-1^3-RMP	9-Feb-05	1.0	1.5	Thorium-232	0.857	pCi/g	NV	478832.309	1348859.324
A7-SA4-1	A7-SA4-1^3-RMP	9-Feb-05	1.0	1.5	Uranium, Total	3.23	mg/kg	NV	478832.309	1348859.324
A7-SA4-1	A7-SA4-1^6-RMP	9-Feb-05	2.5	3.0	Arsenic	7.26	mg/kg	NV	478832.309	1348859.324
A7-SA4-1	A7-SA4-1^6-RMP	9-Feb-05	2.5	3.0	Beryllium	0.736	mg/kg	NV	478832.309	1348859.324
A7-SA4-1	A7-SA4-1^6-RMP	9-Feb-05	2.5	3.0	Aroclor-1254	0.0064	ug/kg	NV	478832.309	1348859.324
A7-SA4-1	A7-SA4-1^6-RMP	9-Feb-05	2.5	3.0	Aroclor-1260	0.0043	ug/kg	UNV	478832.309	1348859.324
A7-SA4-1	A7-SA4-1^6-RMP	9-Feb-05	2.5	3.0	Radium-228	0.881	pCi/g	NV	478832.309	1348859.324
A7-SA4-1	A7-SA4-1^6-RMP	9-Feb-05	2.5	3.0	Thorium-228	0.855	pCi/g	NV	478832.309	1348859.324
A7-SA4-1	A7-SA4-1^6-RMP	9-Feb-05	2.5	3.0	Thorium-232	0.881	pCi/g	NV	478832.309	1348859.324
A7-SA4-1	A7-SA4-1^6-RMP	9-Feb-05	2.5	3.0	Uranium, Total	4.38	mg/kg	NV	478832.309	1348859.324
A7-SA4-2	A7-SA4-2^1-RMP	11-Feb-05	0.0	0.5	Arsenic	8.18	mg/kg	NV	478379.134	1348652.638
A7-SA4-2	A7-SA4-2^1-RMP	11-Feb-05	0.0	0.5	Beryllium	0.944	mg/kg	NV	478379.134	1348652.638
A7-SA4-2	A7-SA4-2^1-RMP	11-Feb-05	0.0	0.5	Aroclor-1254	0.0019	ug/kg	NV	478379.134	1348652.638
A7-SA4-2	A7-SA4-2^1-RMP	11-Feb-05	0.0	0.5	Aroclor-1260	0.0042	ug/kg	UNV	478379.134	1348652.638
A7-SA4-2	A7-SA4-2^1-RMP	11-Feb-05	0.0	0.5	Radium-228	1.16	pCi/g	NV	478379.134	1348652.638

5982

Boring	Sample ID	Sample Date	Sample Depth (feet)		Parameter	Result	Units	Qualifier	Northing	Easting
			Top	Bottom						
A7-SA4-2	A7-SA4-2^1-RMP	11-Feb-05	0.0	0.5	Thorium-228	1.17	pCi/g	NV	478379.134	1348652.638
A7-SA4-2	A7-SA4-2^1-RMP	11-Feb-05	0.0	0.5	Thorium-232	1.16	pCi/g	NV	478379.134	1348652.638
A7-SA4-2	A7-SA4-2^1-RMP	11-Feb-05	0.0	0.5	Uranium, Total	8.65	mg/kg	NV	478379.134	1348652.638
A7-SA4-2	A7-SA4-2^3-RMP	11-Feb-05	1.0	1.5	Arsenic	4.27	mg/kg	NV	478379.134	1348652.638
A7-SA4-2	A7-SA4-2^3-RMP	11-Feb-05	1.0	1.5	Beryllium	0.356	mg/kg	NV	478379.134	1348652.638
A7-SA4-2	A7-SA4-2^3-RMP	11-Feb-05	1.0	1.5	Aroclor-1254	0.004	ug/kg	UNV	478379.134	1348652.638
A7-SA4-2	A7-SA4-2^3-RMP	11-Feb-05	1.0	1.5	Aroclor-1260	0.004	ug/kg	UNV	478379.134	1348652.638
A7-SA4-2	A7-SA4-2^3-RMP	11-Feb-05	1.0	1.5	Radium-228	1.1	pCi/g	NV	478379.134	1348652.638
A7-SA4-2	A7-SA4-2^3-RMP	11-Feb-05	1.0	1.5	Thorium-228	1.09	pCi/g	NV	478379.134	1348652.638
A7-SA4-2	A7-SA4-2^3-RMP	11-Feb-05	1.0	1.5	Thorium-232	1.1	pCi/g	NV	478379.134	1348652.638
A7-SA4-2	A7-SA4-2^3-RMP	11-Feb-05	1.0	1.5	Uranium, Total	8.39	mg/kg	NV	478379.134	1348652.638
A7-SA4-2	A7-SA4-2^6-RMP	11-Feb-05	2.5	3.0	Arsenic	9.43	mg/kg	NV	478379.134	1348652.638
A7-SA4-2	A7-SA4-2^6-RMP	11-Feb-05	2.5	3.0	Beryllium	0.949	mg/kg	NV	478379.134	1348652.638
A7-SA4-2	A7-SA4-2^6-RMP	11-Feb-05	2.5	3.0	Aroclor-1254	0.0041	ug/kg	UNV	478379.134	1348652.638
A7-SA4-2	A7-SA4-2^6-RMP	11-Feb-05	2.5	3.0	Aroclor-1260	0.0041	ug/kg	UNV	478379.134	1348652.638
A7-SA4-2	A7-SA4-2^6-RMP	11-Feb-05	2.5	3.0	Radium-228	1.3	pCi/g	NV	478379.134	1348652.638
A7-SA4-2	A7-SA4-2^6-RMP	11-Feb-05	2.5	3.0	Thorium-228	1.27	pCi/g	NV	478379.134	1348652.638
A7-SA4-2	A7-SA4-2^6-RMP	11-Feb-05	2.5	3.0	Thorium-232	1.3	pCi/g	NV	478379.134	1348652.638
A7-SA4-2	A7-SA4-2^6-RMP	11-Feb-05	2.5	3.0	Uranium, Total	5.11	mg/kg	NV	478379.134	1348652.638
A7-SA4-3	A7-SA4-3^1-RMP	11-Feb-05	0.0	0.5	Arsenic	4.77	mg/kg	NV	478289.621	1348849.131
A7-SA4-3	A7-SA4-3^1-RMP	11-Feb-05	0.0	0.5	Beryllium	0.447	mg/kg	NV	478289.621	1348849.131
A7-SA4-3	A7-SA4-3^1-RMP	11-Feb-05	0.0	0.5	Aroclor-1254	0.0053	ug/kg	NV	478289.621	1348849.131
A7-SA4-3	A7-SA4-3^1-RMP	11-Feb-05	0.0	0.5	Aroclor-1260	0.0041	ug/kg	UNV	478289.621	1348849.131
A7-SA4-3	A7-SA4-3^1-RMP	11-Feb-05	0.0	0.5	Radium-228	0.974	pCi/g	NV	478289.621	1348849.131
A7-SA4-3	A7-SA4-3^1-RMP	11-Feb-05	0.0	0.5	Thorium-228	0.989	pCi/g	NV	478289.621	1348849.131
A7-SA4-3	A7-SA4-3^1-RMP	11-Feb-05	0.0	0.5	Thorium-232	0.974	pCi/g	NV	478289.621	1348849.131
A7-SA4-3	A7-SA4-3^1-RMP	11-Feb-05	0.0	0.5	Uranium, Total	9.97	mg/kg	NV	478289.621	1348849.131
A7-SA4-3	A7-SA4-3^3-RMP	11-Feb-05	1.0	1.5	Arsenic	10.9	mg/kg	NV	478289.621	1348849.131
A7-SA4-3	A7-SA4-3^3-RMP	11-Feb-05	1.0	1.5	Beryllium	0.651	mg/kg	NV	478289.621	1348849.131
A7-SA4-3	A7-SA4-3^3-RMP	11-Feb-05	1.0	1.5	Aroclor-1254	0.0041	ug/kg	UNV	478289.621	1348849.131
A7-SA4-3	A7-SA4-3^3-RMP	11-Feb-05	1.0	1.5	Aroclor-1260	0.0041	ug/kg	UNV	478289.621	1348849.131
A7-SA4-3	A7-SA4-3^3-RMP	11-Feb-05	1.0	1.5	Radium-228	1.28	pCi/g	NV	478289.621	1348849.131
A7-SA4-3	A7-SA4-3^3-RMP	11-Feb-05	1.0	1.5	Thorium-228	1.3	pCi/g	NV	478289.621	1348849.131
A7-SA4-3	A7-SA4-3^3-RMP	11-Feb-05	1.0	1.5	Thorium-232	1.28	pCi/g	NV	478289.621	1348849.131
A7-SA4-3	A7-SA4-3^3-RMP	11-Feb-05	1.0	1.5	Uranium, Total	9.18	mg/kg	NV	478289.621	1348849.131

APPENDIX A
PREDESIGN CHARACTERIZATION DATA FOR AREA 7 SILOS AND GENERAL AREA

Boring	Sample ID	Sample Date	Sample Depth (feet)		Parameter	Result	Units	Qualifier	Northing	Easting
			Top	Bottom						
A7-SA4-3	A7-SA4-3^6-RMP	11-Feb-05	2.5	3.0	Arsenic	5.85	mg/kg	NV	478289.621	1348849.131
A7-SA4-3	A7-SA4-3^6-RMP	11-Feb-05	2.5	3.0	Beryllium	0.761	mg/kg	NV	478289.621	1348849.131
A7-SA4-3	A7-SA4-3^6-RMP	11-Feb-05	2.5	3.0	Aroclor-1254	0.00098	ug/kg	NV	478289.621	1348849.131
A7-SA4-3	A7-SA4-3^6-RMP	11-Feb-05	2.5	3.0	Aroclor-1260	0.0042	ug/kg	UNV	478289.621	1348849.131
A7-SA4-3	A7-SA4-3^6-RMP	11-Feb-05	2.5	3.0	Radium-228	1.3	pCi/g	NV	478289.621	1348849.131
A7-SA4-3	A7-SA4-3^6-RMP	11-Feb-05	2.5	3.0	Thorium-228	1.3	pCi/g	NV	478289.621	1348849.131
A7-SA4-3	A7-SA4-3^6-RMP	11-Feb-05	2.5	3.0	Thorium-232	1.3	pCi/g	NV	478289.621	1348849.131
A7-SA4-3	A7-SA4-3^6-RMP	11-Feb-05	2.5	3.0	Uranium, Total	3.29	mg/kg	UNV	478289.621	1348849.131
A7-SA4-5	A7-SA4-5^1-RMP	11-Feb-05	0.0	0.5	Arsenic	5.89	mg/kg	NV	478673.292	1349026.165
A7-SA4-5	A7-SA4-5^1-RMP	11-Feb-05	0.0	0.5	Beryllium	0.581	mg/kg	NV	478673.292	1349026.165
A7-SA4-5	A7-SA4-5^1-RMP	11-Feb-05	0.0	0.5	Aroclor-1254	0.0085	ug/kg	NV	478673.292	1349026.165
A7-SA4-5	A7-SA4-5^1-RMP	11-Feb-05	0.0	0.5	Aroclor-1260	0.0021	ug/kg	NV	478673.292	1349026.165
A7-SA4-5	A7-SA4-5^1-RMP	11-Feb-05	0.0	0.5	Radium-228	1.01	pCi/g	NV	478673.292	1349026.165
A7-SA4-5	A7-SA4-5^1-RMP	11-Feb-05	0.0	0.5	Thorium-228	1	pCi/g	NV	478673.292	1349026.165
A7-SA4-5	A7-SA4-5^1-RMP	11-Feb-05	0.0	0.5	Thorium-232	1.01	pCi/g	NV	478673.292	1349026.165
A7-SA4-5	A7-SA4-5^1-RMP	11-Feb-05	0.0	0.5	Uranium, Total	8.56	mg/kg	NV	478673.292	1349026.165
A7-SA4-5	A7-SA4-5^3-RMP	11-Feb-05	1.0	1.5	Arsenic	6.5	mg/kg	NV	478673.292	1349026.165
A7-SA4-5	A7-SA4-5^3-RMP	11-Feb-05	1.0	1.5	Beryllium	0.576	mg/kg	NV	478673.292	1349026.165
A7-SA4-5	A7-SA4-5^3-RMP	11-Feb-05	1.0	1.5	Aroclor-1254	0.0025	ug/kg	NV	478673.292	1349026.165
A7-SA4-5	A7-SA4-5^3-RMP	11-Feb-05	1.0	1.5	Aroclor-1260	0.0039	ug/kg	UNV	478673.292	1349026.165
A7-SA4-5	A7-SA4-5^3-RMP	11-Feb-05	1.0	1.5	Radium-228	0.971	pCi/g	NV	478673.292	1349026.165
A7-SA4-5	A7-SA4-5^3-RMP	11-Feb-05	1.0	1.5	Thorium-228	0.977	pCi/g	NV	478673.292	1349026.165
A7-SA4-5	A7-SA4-5^3-RMP	11-Feb-05	1.0	1.5	Thorium-232	0.971	pCi/g	NV	478673.292	1349026.165
A7-SA4-5	A7-SA4-5^3-RMP	11-Feb-05	1.0	1.5	Uranium, Total	6.7	mg/kg	NV	478673.292	1349026.165
A7-SA4-5	A7-SA4-5^6-RMP	11-Feb-05	2.5	3.0	Arsenic	5.7	mg/kg	NV	478673.292	1349026.165
A7-SA4-5	A7-SA4-5^6-RMP	11-Feb-05	2.5	3.0	Beryllium	0.304	mg/kg	NV	478673.292	1349026.165
A7-SA4-5	A7-SA4-5^6-RMP	11-Feb-05	2.5	3.0	Aroclor-1254	0.00089	ug/kg	NV	478673.292	1349026.165
A7-SA4-5	A7-SA4-5^6-RMP	11-Feb-05	2.5	3.0	Aroclor-1260	0.0037	ug/kg	UNV	478673.292	1349026.165
A7-SA4-5	A7-SA4-5^6-RMP	11-Feb-05	2.5	3.0	Radium-228	0.547	pCi/g	NV	478673.292	1349026.165
A7-SA4-5	A7-SA4-5^6-RMP	11-Feb-05	2.5	3.0	Thorium-228	0.56	pCi/g	NV	478673.292	1349026.165
A7-SA4-5	A7-SA4-5^6-RMP	11-Feb-05	2.5	3.0	Thorium-232	0.547	pCi/g	NV	478673.292	1349026.165
A7-SA4-5	A7-SA4-5^6-RMP	11-Feb-05	2.5	3.0	Uranium, Total	2.26	mg/kg	UNV	478673.292	1349026.165
A7-SA4-6	A7-SA4-6^1-RMP	8-Feb-05	0.0	0.5	Arsenic	6.42	mg/kg	NV	478525.399	1349216.897
A7-SA4-6	A7-SA4-6^1-RMP	8-Feb-05	0.0	0.5	Beryllium	0.471	mg/kg	NV	478525.399	1349216.897
A7-SA4-6	A7-SA4-6^1-RMP	8-Feb-05	0.0	0.5	Aroclor-1254	0.0017	ug/kg	NV	478525.399	1349216.897

5982

Boring	Sample ID	Sample Date	Sample Depth (feet)		Parameter	Result	Units	Qualifier	Northing	Easting
			Top	Bottom						
A7-SA4-6	A7-SA4-6^1-RMP	8-Feb-05	0.0	0.5	Aroclor-1260	0.0043	ug/kg	UNV	478525.399	1349216.897
A7-SA4-6	A7-SA4-6^1-RMP	8-Feb-05	0.0	0.5	Radium-228	0.953	pCi/g	NV	478525.399	1349216.897
A7-SA4-6	A7-SA4-6^1-RMP	8-Feb-05	0.0	0.5	Thorium-228	0.89	pCi/g	NV	478525.399	1349216.897
A7-SA4-6	A7-SA4-6^1-RMP	8-Feb-05	0.0	0.5	Thorium-232	0.953	pCi/g	NV	478525.399	1349216.897
A7-SA4-6	A7-SA4-6^1-RMP	8-Feb-05	0.0	0.5	Uranium, Total	4.88	mg/kg	UNV	478525.399	1349216.897
A7-SA4-6	A7-SA4-6^3-RMP	8-Feb-05	1.0	1.5	Arsenic	6.77	mg/kg	NV	478525.399	1349216.897
A7-SA4-6	A7-SA4-6^3-RMP	8-Feb-05	1.0	1.5	Beryllium	0.481	mg/kg	NV	478525.399	1349216.897
A7-SA4-6	A7-SA4-6^3-RMP	8-Feb-05	1.0	1.5	Aroclor-1254	0.004	ug/kg	UNV	478525.399	1349216.897
A7-SA4-6	A7-SA4-6^3-RMP	8-Feb-05	1.0	1.5	Aroclor-1260	0.004	ug/kg	UNV	478525.399	1349216.897
A7-SA4-6	A7-SA4-6^3-RMP	8-Feb-05	1.0	1.5	Radium-228	0.921	pCi/g	NV	478525.399	1349216.897
A7-SA4-6	A7-SA4-6^3-RMP	8-Feb-05	1.0	1.5	Thorium-228	0.897	pCi/g	NV	478525.399	1349216.897
A7-SA4-6	A7-SA4-6^3-RMP	8-Feb-05	1.0	1.5	Thorium-232	0.921	pCi/g	NV	478525.399	1349216.897
A7-SA4-6	A7-SA4-6^3-RMP	8-Feb-05	1.0	1.5	Uranium, Total	6.07	mg/kg	NV	478525.399	1349216.897
A7-SA4-6	A7-SA4-6^6-RMP	8-Feb-05	2.5	3.0	Arsenic	6.92	mg/kg	NV	478525.399	1349216.897
A7-SA4-6	A7-SA4-6^6-RMP	8-Feb-05	2.5	3.0	Beryllium	0.585	mg/kg	NV	478525.399	1349216.897
A7-SA4-6	A7-SA4-6^6-RMP	8-Feb-05	2.5	3.0	Aroclor-1254	0.0041	ug/kg	UNV	478525.399	1349216.897
A7-SA4-6	A7-SA4-6^6-RMP	8-Feb-05	2.5	3.0	Aroclor-1260	0.0041	ug/kg	UNV	478525.399	1349216.897
A7-SA4-6	A7-SA4-6^6-RMP	8-Feb-05	2.5	3.0	Radium-228	0.878	pCi/g	NV	478525.399	1349216.897
A7-SA4-6	A7-SA4-6^6-RMP	8-Feb-05	2.5	3.0	Thorium-228	0.828	pCi/g	NV	478525.399	1349216.897
A7-SA4-6	A7-SA4-6^6-RMP	8-Feb-05	2.5	3.0	Thorium-232	0.878	pCi/g	NV	478525.399	1349216.897
A7-SA4-6	A7-SA4-6^6-RMP	8-Feb-05	2.5	3.0	Uranium, Total	4.31	mg/kg	UNV	478525.399	1349216.897
A7-SA4-7	A7-SA4-7^1-RMP	8-Feb-05	0.0	0.5	Arsenic	7.54	mg/kg	NV	478513.039	1349535.298
A7-SA4-7	A7-SA4-7^1-RMP	8-Feb-05	0.0	0.5	Beryllium	0.664	mg/kg	NV	478513.039	1349535.298
A7-SA4-7	A7-SA4-7^1-RMP	8-Feb-05	0.0	0.5	Aroclor-1254	0.0042	ug/kg	NV	478513.039	1349535.298
A7-SA4-7	A7-SA4-7^1-RMP	8-Feb-05	0.0	0.5	Aroclor-1260	0.0042	ug/kg	UNV	478513.039	1349535.298
A7-SA4-7	A7-SA4-7^1-RMP	8-Feb-05	0.0	0.5	Radium-228	1.2	pCi/g	NV	478513.039	1349535.298
A7-SA4-7	A7-SA4-7^1-RMP	8-Feb-05	0.0	0.5	Thorium-228	1.2	pCi/g	NV	478513.039	1349535.298
A7-SA4-7	A7-SA4-7^1-RMP	8-Feb-05	0.0	0.5	Thorium-232	1.2	pCi/g	NV	478513.039	1349535.298
A7-SA4-7	A7-SA4-7^1-RMP	8-Feb-05	0.0	0.5	Uranium, Total	7.86	mg/kg	NV	478513.039	1349535.298
A7-SA4-7	A7-SA4-7^3-RMP	8-Feb-05	1.0	1.5	Arsenic	5.4	mg/kg	NV	478513.039	1349535.298
A7-SA4-7	A7-SA4-7^3-RMP	8-Feb-05	1.0	1.5	Beryllium	0.422	mg/kg	NV	478513.039	1349535.298
A7-SA4-7	A7-SA4-7^3-RMP	8-Feb-05	1.0	1.5	Aroclor-1254	0.0039	ug/kg	UNV	478513.039	1349535.298
A7-SA4-7	A7-SA4-7^3-RMP	8-Feb-05	1.0	1.5	Aroclor-1260	0.0039	ug/kg	UNV	478513.039	1349535.298
A7-SA4-7	A7-SA4-7^3-RMP	8-Feb-05	1.0	1.5	Radium-228	1.4	pCi/g	NV	478513.039	1349535.298
A7-SA4-7	A7-SA4-7^3-RMP	8-Feb-05	1.0	1.5	Thorium-228	1.46	pCi/g	NV	478513.039	1349535.298

APPENDIX A
PREDESIGN CHARACTERIZATION DATA FOR AREA 7 SILOS AND GENERAL AREA

Boring	Sample ID	Sample Date	Sample Depth (feet)		Parameter	Result	Units	Qualifier	Northing	Easting
			Top	Bottom						
A7-SA4-7	A7-SA4-7^3-RMP	8-Feb-05	1.0	1.5	Thorium-232	1.4	pCi/g	NV	478513.039	1349535.298
A7-SA4-7	A7-SA4-7^3-RMP	8-Feb-05	1.0	1.5	Uranium, Total	11.2	mg/kg	NV	478513.039	1349535.298
A7-SA4-7	A7-SA4-7^6-RMP	8-Feb-05	2.5	3.0	Arsenic	15.2	mg/kg	NV	478513.039	1349535.298
A7-SA4-7	A7-SA4-7^6-RMP	8-Feb-05	2.5	3.0	Beryllium	0.972	mg/kg	NV	478513.039	1349535.298
A7-SA4-7	A7-SA4-7^6-RMP	8-Feb-05	2.5	3.0	Aroclor-1254	0.0041	ug/kg	UNV	478513.039	1349535.298
A7-SA4-7	A7-SA4-7^6-RMP	8-Feb-05	2.5	3.0	Aroclor-1260	0.0041	ug/kg	UNV	478513.039	1349535.298
A7-SA4-7	A7-SA4-7^6-RMP	8-Feb-05	2.5	3.0	Radium-228	1.15	pCi/g	NV	478513.039	1349535.298
A7-SA4-7	A7-SA4-7^6-RMP	8-Feb-05	2.5	3.0	Thorium-228	1.14	pCi/g	NV	478513.039	1349535.298
A7-SA4-7	A7-SA4-7^6-RMP	8-Feb-05	2.5	3.0	Thorium-232	1.15	pCi/g	NV	478513.039	1349535.298
A7-SA4-7	A7-SA4-7^6-RMP	8-Feb-05	2.5	3.0	Uranium, Total	6.03	mg/kg	UNV	478513.039	1349535.298
A7-SA4-8	A7-SA4-8^1-RMP	8-Feb-05	0.0	0.5	Arsenic	7.4	mg/kg	NV	478722.822	1349521.912
A7-SA4-8	A7-SA4-8^1-RMP	8-Feb-05	0.0	0.5	Beryllium	0.822	mg/kg	NV	478722.822	1349521.912
A7-SA4-8	A7-SA4-8^1-RMP	8-Feb-05	0.0	0.5	Aroclor-1254	0.0041	ug/kg	UNV	478722.822	1349521.912
A7-SA4-8	A7-SA4-8^1-RMP	8-Feb-05	0.0	0.5	Aroclor-1260	0.0041	ug/kg	UNV	478722.822	1349521.912
A7-SA4-8	A7-SA4-8^1-RMP	8-Feb-05	0.0	0.5	Radium-228	0.904	pCi/g	NV	478722.822	1349521.912
A7-SA4-8	A7-SA4-8^1-RMP	8-Feb-05	0.0	0.5	Thorium-228	0.833	pCi/g	NV	478722.822	1349521.912
A7-SA4-8	A7-SA4-8^1-RMP	8-Feb-05	0.0	0.5	Thorium-232	0.904	pCi/g	NV	478722.822	1349521.912
A7-SA4-8	A7-SA4-8^1-RMP	8-Feb-05	0.0	0.5	Uranium, Total	7.55	mg/kg	NV	478722.822	1349521.912
A7-SA4-8	A7-SA4-8^3-RMP	8-Feb-05	1.0	1.5	Arsenic	5.36	mg/kg	NV	478722.822	1349521.912
A7-SA4-8	A7-SA4-8^3-RMP	8-Feb-05	1.0	1.5	Beryllium	0.453	mg/kg	NV	478722.822	1349521.912
A7-SA4-8	A7-SA4-8^3-RMP	8-Feb-05	1.0	1.5	Aroclor-1254	0.0038	ug/kg	UNV	478722.822	1349521.912
A7-SA4-8	A7-SA4-8^3-RMP	8-Feb-05	1.0	1.5	Aroclor-1260	0.0038	ug/kg	UNV	478722.822	1349521.912
A7-SA4-8	A7-SA4-8^3-RMP	8-Feb-05	1.0	1.5	Radium-228	0.916	pCi/g	NV	478722.822	1349521.912
A7-SA4-8	A7-SA4-8^3-RMP	8-Feb-05	1.0	1.5	Thorium-228	0.916	pCi/g	NV	478722.822	1349521.912
A7-SA4-8	A7-SA4-8^3-RMP	8-Feb-05	1.0	1.5	Thorium-232	0.916	pCi/g	NV	478722.822	1349521.912
A7-SA4-8	A7-SA4-8^3-RMP	8-Feb-05	1.0	1.5	Uranium, Total	4.15	mg/kg	UNV	478722.822	1349521.912
A7-SA4-8	A7-SA4-8^6-RMP	8-Feb-05	2.5	3.0	Arsenic	9.92	mg/kg	NV	478722.822	1349521.912
A7-SA4-8	A7-SA4-8^6-RMP	8-Feb-05	2.5	3.0	Beryllium	0.746	mg/kg	NV	478722.822	1349521.912
A7-SA4-8	A7-SA4-8^6-RMP	8-Feb-05	2.5	3.0	Aroclor-1254	0.0041	ug/kg	UNV	478722.822	1349521.912
A7-SA4-8	A7-SA4-8^6-RMP	8-Feb-05	2.5	3.0	Aroclor-1260	0.0041	ug/kg	UNV	478722.822	1349521.912
A7-SA4-8	A7-SA4-8^6-RMP	8-Feb-05	2.5	3.0	Radium-228	0.983	pCi/g	NV	478722.822	1349521.912
A7-SA4-8	A7-SA4-8^6-RMP	8-Feb-05	2.5	3.0	Thorium-228	0.958	pCi/g	NV	478722.822	1349521.912
A7-SA4-8	A7-SA4-8^6-RMP	8-Feb-05	2.5	3.0	Thorium-232	0.983	pCi/g	NV	478722.822	1349521.912
A7-SA4-8	A7-SA4-8^6-RMP	8-Feb-05	2.5	3.0	Uranium, Total	5.43	mg/kg	UNV	478722.822	1349521.912
A7-SA4-9	A7-SA4-9^1-RMP	8-Feb-05	0.0	0.5	Arsenic	5.85	mg/kg	NV	478856.648	1349425.451

5982

Boring	Sample ID	Sample Date	Sample Depth (feet)		Parameter	Result	Units	Qualifier	Northing	Easting
			Top	Bottom						
A7-SA4-9	A7-SA4-9^1-RMP	8-Feb-05	0.0	0.5	Beryllium	0.567	mg/kg	NV	478856.648	1349425.451
A7-SA4-9	A7-SA4-9^1-RMP	8-Feb-05	0.0	0.5	Aroclor-1254	0.0015	ug/kg	NV	478856.648	1349425.451
A7-SA4-9	A7-SA4-9^1-RMP	8-Feb-05	0.0	0.5	Aroclor-1260	0.0043	ug/kg	UNV	478856.648	1349425.451
A7-SA4-9	A7-SA4-9^1-RMP	8-Feb-05	0.0	0.5	Radium-228	0.932	pCi/g	NV	478856.648	1349425.451
A7-SA4-9	A7-SA4-9^1-RMP	8-Feb-05	0.0	0.5	Thorium-228	0.996	pCi/g	NV	478856.648	1349425.451
A7-SA4-9	A7-SA4-9^1-RMP	8-Feb-05	0.0	0.5	Thorium-232	0.932	pCi/g	NV	478856.648	1349425.451
A7-SA4-9	A7-SA4-9^1-RMP	8-Feb-05	0.0	0.5	Uranium, Total	4.98	mg/kg	UNV	478856.648	1349425.451
A7-SA4-9	A7-SA4-9^3-RMP	8-Feb-05	1.0	1.5	Arsenic	7.65	mg/kg	NV	478856.648	1349425.451
A7-SA4-9	A7-SA4-9^3-RMP	8-Feb-05	1.0	1.5	Beryllium	0.562	mg/kg	NV	478856.648	1349425.451
A7-SA4-9	A7-SA4-9^3-RMP	8-Feb-05	1.0	1.5	Aroclor-1254	0.0016	ug/kg	NV	478856.648	1349425.451
A7-SA4-9	A7-SA4-9^3-RMP	8-Feb-05	1.0	1.5	Aroclor-1260	0.0039	ug/kg	UNV	478856.648	1349425.451
A7-SA4-9	A7-SA4-9^3-RMP	8-Feb-05	1.0	1.5	Radium-228	1.19	pCi/g	NV	478856.648	1349425.451
A7-SA4-9	A7-SA4-9^3-RMP	8-Feb-05	1.0	1.5	Thorium-228	1.34	pCi/g	NV	478856.648	1349425.451
A7-SA4-9	A7-SA4-9^3-RMP	8-Feb-05	1.0	1.5	Thorium-232	1.19	pCi/g	NV	478856.648	1349425.451
A7-SA4-9	A7-SA4-9^3-RMP	8-Feb-05	1.0	1.5	Uranium, Total	11.5	mg/kg	NV	478856.648	1349425.451
A7-SA4-9	A7-SA4-9^6-RMP	8-Feb-05	2.5	3.0	Arsenic	6.59	mg/kg	NV	478856.648	1349425.451
A7-SA4-9	A7-SA4-9^6-RMP	8-Feb-05	2.5	3.0	Beryllium	0.697	mg/kg	NV	478856.648	1349425.451
A7-SA4-9	A7-SA4-9^6-RMP	8-Feb-05	2.5	3.0	Aroclor-1254	0.0017	ug/kg	NV	478856.648	1349425.451
A7-SA4-9	A7-SA4-9^6-RMP	8-Feb-05	2.5	3.0	Aroclor-1260	0.0039	ug/kg	UNV	478856.648	1349425.451
A7-SA4-9	A7-SA4-9^6-RMP	8-Feb-05	2.5	3.0	Radium-228	0.925	pCi/g	NV	478856.648	1349425.451
A7-SA4-9	A7-SA4-9^6-RMP	8-Feb-05	2.5	3.0	Thorium-228	0.947	pCi/g	NV	478856.648	1349425.451
A7-SA4-9	A7-SA4-9^6-RMP	8-Feb-05	2.5	3.0	Thorium-232	0.925	pCi/g	NV	478856.648	1349425.451
A7-SA4-9	A7-SA4-9^6-RMP	8-Feb-05	2.5	3.0	Uranium, Total	6.74	mg/kg	NV	478856.648	1349425.451
A7-SA4-9C	A7-SA4-9C^17-RMP	8-Feb-05	8.0	8.5	Arsenic	3.6	mg/kg	NV	478856.648	1349425.451
A7-SA4-9C	A7-SA4-9C^17-RMP	8-Feb-05	8.0	8.5	Beryllium	0.497	mg/kg	NV	478856.648	1349425.451
A7-SA4-9C	A7-SA4-9C^17-RMP	8-Feb-05	8.0	8.5	Aroclor-1254	0.0038	ug/kg	UNV	478856.648	1349425.451
A7-SA4-9C	A7-SA4-9C^17-RMP	8-Feb-05	8.0	8.5	Aroclor-1260	0.0038	ug/kg	UNV	478856.648	1349425.451
A7-SA4-9C	A7-SA4-9C^17-RMP	8-Feb-05	8.0	8.5	Radium-228	0.935	pCi/g	NV	478856.648	1349425.451
A7-SA4-9C	A7-SA4-9C^17-RMP	8-Feb-05	8.0	8.5	Thorium-228	0.951	pCi/g	NV	478856.648	1349425.451
A7-SA4-9C	A7-SA4-9C^17-RMP	8-Feb-05	8.0	8.5	Thorium-232	0.935	pCi/g	NV	478856.648	1349425.451
A7-SA4-9C	A7-SA4-9C^17-RMP	8-Feb-05	8.0	8.5	Uranium, Total	6.82	mg/kg	NV	478856.648	1349425.451
A7-SA4-9C	A7-SA4-9C^19-RMP	8-Feb-05	9.0	9.5	Arsenic	3.56	mg/kg	NV	478856.648	1349425.451
A7-SA4-9C	A7-SA4-9C^19-RMP	8-Feb-05	9.0	9.5	Beryllium	0.468	mg/kg	NV	478856.648	1349425.451
A7-SA4-9C	A7-SA4-9C^19-RMP	8-Feb-05	9.0	9.5	Aroclor-1254	0.0038	ug/kg	UNV	478856.648	1349425.451
A7-SA4-9C	A7-SA4-9C^19-RMP	8-Feb-05	9.0	9.5	Aroclor-1260	0.0038	ug/kg	UNV	478856.648	1349425.451

APPENDIX A
PREDESIGN CHARACTERIZATION DATA FOR AREA 7 SILOS AND GENERAL AREA

Boring	Sample ID	Sample Date	Sample Depth (feet)		Parameter	Result	Units	Qualifier	Northing	Easting
			Top	Bottom						
A7-SA4-9C	A7-SA4-9C^19-RMP	8-Feb-05	9.0	9.5	Radium-228	1.06	pCi/g	NV	478856.648	1349425.451
A7-SA4-9C	A7-SA4-9C^19-RMP	8-Feb-05	9.0	9.5	Thorium-228	1.09	pCi/g	NV	478856.648	1349425.451
A7-SA4-9C	A7-SA4-9C^19-RMP	8-Feb-05	9.0	9.5	Thorium-232	1.06	pCi/g	NV	478856.648	1349425.451
A7-SA4-9C	A7-SA4-9C^19-RMP	8-Feb-05	9.0	9.5	Uranium, Total	4.85	mg/kg	UNV	478856.648	1349425.451
A7-SA4-9C	A7-SA4-9C^22-RMP	8-Feb-05	10.5	11.0	Arsenic	4.18	mg/kg	NV	478856.648	1349425.451
A7-SA4-9C	A7-SA4-9C^22-RMP	8-Feb-05	10.5	11.0	Beryllium	0.556	mg/kg	NV	478856.648	1349425.451
A7-SA4-9C	A7-SA4-9C^22-RMP	8-Feb-05	10.5	11.0	Aroclor-1254	0.0038	ug/kg	UNV	478856.648	1349425.451
A7-SA4-9C	A7-SA4-9C^22-RMP	8-Feb-05	10.5	11.0	Aroclor-1260	0.0038	ug/kg	UNV	478856.648	1349425.451
A7-SA4-9C	A7-SA4-9C^22-RMP	8-Feb-05	10.5	11.0	Radium-228	0.814	pCi/g	NV	478856.648	1349425.451
A7-SA4-9C	A7-SA4-9C^22-RMP	8-Feb-05	10.5	11.0	Thorium-228	0.806	pCi/g	NV	478856.648	1349425.451
A7-SA4-9C	A7-SA4-9C^22-RMP	8-Feb-05	10.5	11.0	Thorium-232	0.814	pCi/g	NV	478856.648	1349425.451
A7-SA4-9C	A7-SA4-9C^22-RMP	8-Feb-05	10.5	11.0	Uranium, Total	5.52	mg/kg	UNV	478856.648	1349425.451
A7-SA5-10	A7-SA5-10^1-RMP	21-Jan-05	0.0	0.5	Arsenic	6.69	mg/kg	NV	479960.478	1350477.502
A7-SA5-10	A7-SA5-10^1-RMP	21-Jan-05	0.0	0.5	Beryllium	0.46	mg/kg	NV	479960.478	1350477.502
A7-SA5-10	A7-SA5-10^1-RMP	21-Jan-05	0.0	0.5	Aroclor-1254	0.0073	ug/kg	NV	479960.478	1350477.502
A7-SA5-10	A7-SA5-10^1-RMP	21-Jan-05	0.0	0.5	Aroclor-1260	0.0026	ug/kg	NV	479960.478	1350477.502
A7-SA5-10	A7-SA5-10^1-RMP	21-Jan-05	0.0	0.5	Dieldrin	0.000514	ug/kg	NV	479960.478	1350477.502
A7-SA5-10	A7-SA5-10^1-RMP	21-Jan-05	0.0	0.5	Radium-228	0.623	pCi/g	NV	479960.478	1350477.502
A7-SA5-10	A7-SA5-10^1-RMP	21-Jan-05	0.0	0.5	Thorium-228	0.609	pCi/g	NV	479960.478	1350477.502
A7-SA5-10	A7-SA5-10^1-RMP	21-Jan-05	0.0	0.5	Thorium-232	0.623	pCi/g	NV	479960.478	1350477.502
A7-SA5-10	A7-SA5-10^1-RMP	21-Jan-05	0.0	0.5	Uranium, Total	15.8	mg/kg	NV	479960.478	1350477.502
A7-SA5-10	A7-SA5-10^3-RMP	21-Jan-05	1.0	1.5	Arsenic	5.06	mg/kg	NV	479960.478	1350477.502
A7-SA5-10	A7-SA5-10^3-RMP	21-Jan-05	1.0	1.5	Beryllium	0.485	mg/kg	NV	479960.478	1350477.502
A7-SA5-10	A7-SA5-10^3-RMP	21-Jan-05	1.0	1.5	Aroclor-1254	0.0012	ug/kg	NV	479960.478	1350477.502
A7-SA5-10	A7-SA5-10^3-RMP	21-Jan-05	1.0	1.5	Aroclor-1260	0.0037	ug/kg	UNV	479960.478	1350477.502
A7-SA5-10	A7-SA5-10^3-RMP	21-Jan-05	1.0	1.5	Dieldrin	0.00148	ug/kg	UNV	479960.478	1350477.502
A7-SA5-10	A7-SA5-10^3-RMP	21-Jan-05	1.0	1.5	Radium-228	0.714	pCi/g	NV	479960.478	1350477.502
A7-SA5-10	A7-SA5-10^3-RMP	21-Jan-05	1.0	1.5	Thorium-228	0.701	pCi/g	NV	479960.478	1350477.502
A7-SA5-10	A7-SA5-10^3-RMP	21-Jan-05	1.0	1.5	Thorium-232	0.714	pCi/g	NV	479960.478	1350477.502
A7-SA5-10	A7-SA5-10^3-RMP	21-Jan-05	1.0	1.5	Uranium, Total	2.58	mg/kg	UNV	479960.478	1350477.502
A7-SA5-10	A7-SA5-10^6-RMP	21-Jan-05	2.5	3.0	Arsenic	4.64	mg/kg	NV	479960.478	1350477.502
A7-SA5-10	A7-SA5-10^6-RMP	21-Jan-05	2.5	3.0	Beryllium	0.622	mg/kg	NV	479960.478	1350477.502
A7-SA5-10	A7-SA5-10^6-RMP	21-Jan-05	2.5	3.0	Aroclor-1254	0.00062	ug/kg	NV	479960.478	1350477.502
A7-SA5-10	A7-SA5-10^6-RMP	21-Jan-05	2.5	3.0	Aroclor-1260	0.0038	ug/kg	UNV	479960.478	1350477.502
A7-SA5-10	A7-SA5-10^6-RMP	21-Jan-05	2.5	3.0	Dieldrin	0.00151	ug/kg	UNV	479960.478	1350477.502

5982

Boring	Sample ID	Sample Date	Sample Depth (feet)		Parameter	Result	Units	Qualifier	Northing	Easting
			Top	Bottom						
A7-SA5-10	A7-SA5-10^6-RMP	21-Jan-05	2.5	3.0	Radium-228	0.741	pCi/g	NV	479960.478	1350477.502
A7-SA5-10	A7-SA5-10^6-RMP	21-Jan-05	2.5	3.0	Thorium-228	0.712	pCi/g	NV	479960.478	1350477.502
A7-SA5-10	A7-SA5-10^6-RMP	21-Jan-05	2.5	3.0	Thorium-232	0.741	pCi/g	NV	479960.478	1350477.502
A7-SA5-10	A7-SA5-10^6-RMP	21-Jan-05	2.5	3.0	Uranium, Total	2.94	mg/kg	UNV	479960.478	1350477.502
A7-SA5-4	A7-SA5-4^1-RMP	25-Jan-05	0.0	0.5	Arsenic	8.56	mg/kg	J	478688.928	1350081.67
A7-SA5-4	A7-SA5-4^1-RMP	25-Jan-05	0.0	0.5	Beryllium	0.874	mg/kg	-	478688.928	1350081.67
A7-SA5-4	A7-SA5-4^1-RMP	25-Jan-05	0.0	0.5	Aroclor-1254	0.0038	ug/kg	U	478688.928	1350081.67
A7-SA5-4	A7-SA5-4^1-RMP	25-Jan-05	0.0	0.5	Aroclor-1260	0.0038	ug/kg	U	478688.928	1350081.67
A7-SA5-4	A7-SA5-4^1-RMP	25-Jan-05	0.0	0.5	Radium-228	0.869	pCi/g	-	478688.928	1350081.67
A7-SA5-4	A7-SA5-4^1-RMP	25-Jan-05	0.0	0.5	Thorium-228	0.965	pCi/g	-	478688.928	1350081.67
A7-SA5-4	A7-SA5-4^1-RMP	25-Jan-05	0.0	0.5	Thorium-232	0.869	pCi/g	-	478688.928	1350081.67
A7-SA5-4	A7-SA5-4^1-RMP	25-Jan-05	0.0	0.5	Uranium, Total	4.19	mg/kg	U	478688.928	1350081.67
A7-SA5-4	A7-SA5-4^3-RMP	25-Jan-05	1.0	1.5	Arsenic	9.6	mg/kg	J	478688.928	1350081.67
A7-SA5-4	A7-SA5-4^3-RMP	25-Jan-05	1.0	1.5	Beryllium	0.915	mg/kg	-	478688.928	1350081.67
A7-SA5-4	A7-SA5-4^3-RMP	25-Jan-05	1.0	1.5	Aroclor-1254	0.0038	ug/kg	U	478688.928	1350081.67
A7-SA5-4	A7-SA5-4^3-RMP	25-Jan-05	1.0	1.5	Aroclor-1260	0.0038	ug/kg	U	478688.928	1350081.67
A7-SA5-4	A7-SA5-4^3-RMP	25-Jan-05	1.0	1.5	Dieldrin	0.00152	ug/kg	U	478688.928	1350081.67
A7-SA5-4	A7-SA5-4^3-RMP	25-Jan-05	1.0	1.5	Radium-228	0.905	pCi/g	-	478688.928	1350081.67
A7-SA5-4	A7-SA5-4^3-RMP	25-Jan-05	1.0	1.5	Thorium-228	1.15	pCi/g	-	478688.928	1350081.67
A7-SA5-4	A7-SA5-4^3-RMP	25-Jan-05	1.0	1.5	Thorium-232	0.905	pCi/g	-	478688.928	1350081.67
A7-SA5-4	A7-SA5-4^3-RMP	25-Jan-05	1.0	1.5	Uranium, Total	4.58	mg/kg	U	478688.928	1350081.67
A7-SA5-4	A7-SA5-4^6-RMP	25-Jan-05	2.5	3.0	Arsenic	8.38	mg/kg	J	478688.928	1350081.67
A7-SA5-4	A7-SA5-4^6-RMP	25-Jan-05	2.5	3.0	Beryllium	0.602	mg/kg	-	478688.928	1350081.67
A7-SA5-4	A7-SA5-4^6-RMP	25-Jan-05	2.5	3.0	Aroclor-1254	0.0013	ug/kg	J	478688.928	1350081.67
A7-SA5-4	A7-SA5-4^6-RMP	25-Jan-05	2.5	3.0	Aroclor-1260	0.0043	ug/kg	U	478688.928	1350081.67
A7-SA5-4	A7-SA5-4^6-RMP	25-Jan-05	2.5	3.0	Dieldrin	0.00174	ug/kg	U	478688.928	1350081.67
A7-SA5-4	A7-SA5-4^6-RMP	25-Jan-05	2.5	3.0	Radium-228	0.786	pCi/g	-	478688.928	1350081.67
A7-SA5-4	A7-SA5-4^6-RMP	25-Jan-05	2.5	3.0	Thorium-228	0.805	pCi/g	-	478688.928	1350081.67
A7-SA5-4	A7-SA5-4^6-RMP	25-Jan-05	2.5	3.0	Thorium-232	0.786	pCi/g	-	478688.928	1350081.67
A7-SA5-4	A7-SA5-4^6-RMP	25-Jan-05	2.5	3.0	Uranium, Total	4.44	mg/kg	U	478688.928	1350081.67
A7-SA5-5	A7-SA5-5^1-RMP	21-Jan-05	0.0	0.5	Arsenic	8.39	mg/kg	NV	479333.033	1350664.702
A7-SA5-5	A7-SA5-5^1-RMP	21-Jan-05	0.0	0.5	Beryllium	0.801	mg/kg	NV	479333.033	1350664.702
A7-SA5-5	A7-SA5-5^1-RMP	21-Jan-05	0.0	0.5	Aroclor-1254	0.0011	ug/kg	NV	479333.033	1350664.702
A7-SA5-5	A7-SA5-5^1-RMP	21-Jan-05	0.0	0.5	Aroclor-1260	0.0041	ug/kg	UNV	479333.033	1350664.702
A7-SA5-5	A7-SA5-5^1-RMP	21-Jan-05	0.0	0.5	Dieldrin	0.00165	ug/kg	UNV	479333.033	1350664.702

APPENDIX A
PREDESIGN CHARACTERIZATION DATA FOR AREA 7 SILOS AND GENERAL AREA

Boring	Sample ID	Sample Date	Sample Depth (feet)		Parameter	Result	Units	Qualifier	Northing	Easting
			Top	Bottom						
A7-SA5-5	A7-SA5-5^1-RMP	21-Jan-05	0.0	0.5	Radium-228	1.16	pCi/g	NV	479333.033	1350664.702
A7-SA5-5	A7-SA5-5^1-RMP	21-Jan-05	0.0	0.5	Thorium-228	1.19	pCi/g	NV	479333.033	1350664.702
A7-SA5-5	A7-SA5-5^1-RMP	21-Jan-05	0.0	0.5	Thorium-232	1.16	pCi/g	NV	479333.033	1350664.702
A7-SA5-5	A7-SA5-5^1-RMP	21-Jan-05	0.0	0.5	Uranium, Total	3.34	mg/kg	UNV	479333.033	1350664.702
A7-SA5-5	A7-SA5-5^3-RMP	21-Jan-05	1.0	1.5	Arsenic	11	mg/kg	NV	479333.033	1350664.702
A7-SA5-5	A7-SA5-5^3-RMP	21-Jan-05	1.0	1.5	Beryllium	0.964	mg/kg	NV	479333.033	1350664.702
A7-SA5-5	A7-SA5-5^3-RMP	21-Jan-05	1.0	1.5	Aroclor-1254	0.0038	ug/kg	NV	479333.033	1350664.702
A7-SA5-5	A7-SA5-5^3-RMP	21-Jan-05	1.0	1.5	Aroclor-1260	0.0042	ug/kg	UNV	479333.033	1350664.702
A7-SA5-5	A7-SA5-5^3-RMP	21-Jan-05	1.0	1.5	Dieldrin	0.00168	ug/kg	UNV	479333.033	1350664.702
A7-SA5-5	A7-SA5-5^3-RMP	21-Jan-05	1.0	1.5	Radium-228	1.35	pCi/g	NV	479333.033	1350664.702
A7-SA5-5	A7-SA5-5^3-RMP	21-Jan-05	1.0	1.5	Thorium-228	1.34	pCi/g	NV	479333.033	1350664.702
A7-SA5-5	A7-SA5-5^3-RMP	21-Jan-05	1.0	1.5	Thorium-232	1.35	pCi/g	NV	479333.033	1350664.702
A7-SA5-5	A7-SA5-5^3-RMP	21-Jan-05	1.0	1.5	Uranium, Total	3.17	mg/kg	UNV	479333.033	1350664.702
A7-SA5-5	A7-SA5-5^6-RMP	21-Jan-05	2.5	3.0	Arsenic	10.1	mg/kg	NV	479333.033	1350664.702
A7-SA5-5	A7-SA5-5^6-RMP	21-Jan-05	2.5	3.0	Beryllium	0.667	mg/kg	NV	479333.033	1350664.702
A7-SA5-5	A7-SA5-5^6-RMP	21-Jan-05	2.5	3.0	Aroclor-1254	0.0012	ug/kg	NV	479333.033	1350664.702
A7-SA5-5	A7-SA5-5^6-RMP	21-Jan-05	2.5	3.0	Aroclor-1260	0.0042	ug/kg	UNV	479333.033	1350664.702
A7-SA5-5	A7-SA5-5^6-RMP	21-Jan-05	2.5	3.0	Dieldrin	0.00169	ug/kg	UNV	479333.033	1350664.702
A7-SA5-5	A7-SA5-5^6-RMP	21-Jan-05	2.5	3.0	Radium-228	1.25	pCi/g	NV	479333.033	1350664.702
A7-SA5-5	A7-SA5-5^6-RMP	21-Jan-05	2.5	3.0	Thorium-228	1.25	pCi/g	NV	479333.033	1350664.702
A7-SA5-5	A7-SA5-5^6-RMP	21-Jan-05	2.5	3.0	Thorium-232	1.25	pCi/g	NV	479333.033	1350664.702
A7-SA5-5	A7-SA5-5^6-RMP	21-Jan-05	2.5	3.0	Uranium, Total	3.42	mg/kg	UNV	479333.033	1350664.702
A7-SA5-6	A7-SA5-6^1-RMP	19-Jan-05	0.0	0.5	Arsenic	7.65	mg/kg	NV	479699.433	1350546.185
A7-SA5-6	A7-SA5-6^1-RMP	19-Jan-05	0.0	0.5	Beryllium	0.693	mg/kg	NV	479699.433	1350546.185
A7-SA5-6	A7-SA5-6^1-RMP	19-Jan-05	0.0	0.5	Aroclor-1254	0.0044	ug/kg	UNV	479699.433	1350546.185
A7-SA5-6	A7-SA5-6^1-RMP	19-Jan-05	0.0	0.5	Aroclor-1260	0.0044	ug/kg	UNV	479699.433	1350546.185
A7-SA5-6	A7-SA5-6^1-RMP	19-Jan-05	0.0	0.5	Dieldrin	0.00175	ug/kg	UNV	479699.433	1350546.185
A7-SA5-6	A7-SA5-6^1-RMP	19-Jan-05	0.0	0.5	Radium-228	1.06	pCi/g	NV	479699.433	1350546.185
A7-SA5-6	A7-SA5-6^1-RMP	19-Jan-05	0.0	0.5	Thorium-228	1	pCi/g	NV	479699.433	1350546.185
A7-SA5-6	A7-SA5-6^1-RMP	19-Jan-05	0.0	0.5	Thorium-232	1.06	pCi/g	NV	479699.433	1350546.185
A7-SA5-6	A7-SA5-6^1-RMP	19-Jan-05	0.0	0.5	Uranium, Total	16.3	mg/kg	NV	479699.433	1350546.185
A7-SA5-6	A7-SA5-6^3-RMP	19-Jan-05	1.0	1.5	Arsenic	9.34	mg/kg	NV	479699.433	1350546.185
A7-SA5-6	A7-SA5-6^3-RMP	19-Jan-05	1.0	1.5	Beryllium	0.849	mg/kg	NV	479699.433	1350546.185
A7-SA5-6	A7-SA5-6^3-RMP	19-Jan-05	1.0	1.5	Aroclor-1254	0.0042	ug/kg	UNV	479699.433	1350546.185
A7-SA5-6	A7-SA5-6^3-RMP	19-Jan-05	1.0	1.5	Aroclor-1260	0.0042	ug/kg	UNV	479699.433	1350546.185

Boring	Sample ID	Sample Date	Sample Depth (feet)		Parameter	Result	Units	Qualifier	Northing	Easting
			Top	Bottom						
A7-SA5-6	A7-SA5-6^3-RMP	19-Jan-05	1.0	1.5	Dieldrin	0.00166	ug/kg	UNV	479699.433	1350546.185
A7-SA5-6	A7-SA5-6^3-RMP	19-Jan-05	1.0	1.5	Radium-228	1.25	pCi/g	NV	479699.433	1350546.185
A7-SA5-6	A7-SA5-6^3-RMP	19-Jan-05	1.0	1.5	Thorium-228	1.25	pCi/g	NV	479699.433	1350546.185
A7-SA5-6	A7-SA5-6^3-RMP	19-Jan-05	1.0	1.5	Thorium-232	1.25	pCi/g	NV	479699.433	1350546.185
A7-SA5-6	A7-SA5-6^3-RMP	19-Jan-05	1.0	1.5	Uranium, Total	7.39	mg/kg	NV	479699.433	1350546.185
A7-SA5-6	A7-SA5-6^6-RMP	19-Jan-05	2.5	3.0	Arsenic	13.5	mg/kg	NV	479699.433	1350546.185
A7-SA5-6	A7-SA5-6^6-RMP	19-Jan-05	2.5	3.0	Beryllium	0.889	mg/kg	NV	479699.433	1350546.185
A7-SA5-6	A7-SA5-6^6-RMP	19-Jan-05	2.5	3.0	Aroclor-1254	0.0043	ug/kg	UNV	479699.433	1350546.185
A7-SA5-6	A7-SA5-6^6-RMP	19-Jan-05	2.5	3.0	Aroclor-1260	0.0043	ug/kg	UNV	479699.433	1350546.185
A7-SA5-6	A7-SA5-6^6-RMP	19-Jan-05	2.5	3.0	Dieldrin	0.00171	ug/kg	UNV	479699.433	1350546.185
A7-SA5-6	A7-SA5-6^6-RMP	19-Jan-05	2.5	3.0	Radium-228	1.21	pCi/g	NV	479699.433	1350546.185
A7-SA5-6	A7-SA5-6^6-RMP	19-Jan-05	2.5	3.0	Thorium-228	1.2	pCi/g	NV	479699.433	1350546.185
A7-SA5-6	A7-SA5-6^6-RMP	19-Jan-05	2.5	3.0	Thorium-232	1.21	pCi/g	NV	479699.433	1350546.185
A7-SA5-6	A7-SA5-6^6-RMP	19-Jan-05	2.5	3.0	Uranium, Total	8.48	mg/kg	NV	479699.433	1350546.185
A7-SA5-7	A7-SA5-7^1-RMP	3-May-05	0.0	0.5	Arsenic	8.6	mg/kg	NV	480152.23	1350530.91
A7-SA5-7	A7-SA5-7^1-RMP	3-May-05	0.0	0.5	Beryllium	0.82	mg/kg	NV	480152.23	1350530.91
A7-SA5-7	A7-SA5-7^1-RMP	3-May-05	0.0	0.5	Aroclor-1254	0.0045	ug/kg	NV	480152.23	1350530.91
A7-SA5-7	A7-SA5-7^1-RMP	3-May-05	0.0	0.5	Aroclor-1260	0.0027	ug/kg	NV	480152.23	1350530.91
A7-SA5-7	A7-SA5-7^1-RMP	3-May-05	0.0	0.5	Dieldrin	0.00154	ug/kg	UNV	480152.23	1350530.91
A7-SA5-7	A7-SA5-7^1-RMP	3-May-05	0.0	0.5	Radium-228	1.03	pCi/g	NV	480152.23	1350530.91
A7-SA5-7	A7-SA5-7^1-RMP	3-May-05	0.0	0.5	Thorium-228	1.03	pCi/g	NV	480152.23	1350530.91
A7-SA5-7	A7-SA5-7^1-RMP	3-May-05	0.0	0.5	Thorium-232	1.03	pCi/g	NV	480152.23	1350530.91
A7-SA5-7	A7-SA5-7^1-RMP	3-May-05	0.0	0.5	Uranium, Total	9.36	mg/kg	NV	480152.23	1350530.91
A7-SA5-7	A7-SA5-7^3-RMP	3-May-05	1.0	1.5	Arsenic	8.01	mg/kg	NV	480152.23	1350530.91
A7-SA5-7	A7-SA5-7^3-RMP	3-May-05	1.0	1.5	Beryllium	0.791	mg/kg	NV	480152.23	1350530.91
A7-SA5-7	A7-SA5-7^3-RMP	3-May-05	1.0	1.5	Aroclor-1254	0.0024	ug/kg	NV	480152.23	1350530.91
A7-SA5-7	A7-SA5-7^3-RMP	3-May-05	1.0	1.5	Aroclor-1260	0.0015	ug/kg	NV	480152.23	1350530.91
A7-SA5-7	A7-SA5-7^3-RMP	3-May-05	1.0	1.5	Dieldrin	0.00155	ug/kg	UNV	480152.23	1350530.91
A7-SA5-7	A7-SA5-7^3-RMP	3-May-05	1.0	1.5	Radium-228	0.857	pCi/g	NV	480152.23	1350530.91
A7-SA5-7	A7-SA5-7^3-RMP	3-May-05	1.0	1.5	Thorium-228	0.834	pCi/g	NV	480152.23	1350530.91
A7-SA5-7	A7-SA5-7^3-RMP	3-May-05	1.0	1.5	Thorium-232	0.857	pCi/g	NV	480152.23	1350530.91
A7-SA5-7	A7-SA5-7^3-RMP	3-May-05	1.0	1.5	Uranium, Total	21	mg/kg	NV	480152.23	1350530.91
A7-SA5-7	A7-SA5-7^6-RMP	3-May-05	2.5	3.0	Arsenic	5.58	mg/kg	NV	480152.23	1350530.91
A7-SA5-7	A7-SA5-7^6-RMP	3-May-05	2.5	3.0	Beryllium	0.593	mg/kg	NV	480152.23	1350530.91
A7-SA5-7	A7-SA5-7^6-RMP	3-May-05	2.5	3.0	Aroclor-1254	0.00397	ug/kg	UNV	480152.23	1350530.91

APPENDIX A
PREDESIGN CHARACTERIZATION DATA FOR AREA 7 SILOS AND GENERAL AREA

Boring	Sample ID	Sample Date	Sample Depth (feet)		Parameter	Result	Units	Qualifier	Northing	Easting
			Top	Bottom						
A7-SA5-7	A7-SA5-7^6-RMP	3-May-05	2.5	3.0	Aroclor-1260	0.00397	ug/kg	UNV	480152.23	1350530.91
A7-SA5-7	A7-SA5-7^6-RMP	3-May-05	2.5	3.0	Dieldrin	0.00159	ug/kg	UNV	480152.23	1350530.91
A7-SA5-7	A7-SA5-7^6-RMP	3-May-05	2.5	3.0	Radium-228	1.29	pCi/g	NV	480152.23	1350530.91
A7-SA5-7	A7-SA5-7^6-RMP	3-May-05	2.5	3.0	Thorium-228	1.33	pCi/g	NV	480152.23	1350530.91
A7-SA5-7	A7-SA5-7^6-RMP	3-May-05	2.5	3.0	Thorium-232	1.29	pCi/g	NV	480152.23	1350530.91
A7-SA5-7	A7-SA5-7^6-RMP	3-May-05	2.5	3.0	Uranium, Total	13.8	mg/kg	NV	480152.23	1350530.91
A7-SA5-8	A7-SA5-8^1-RMP	3-May-05	0.0	0.5	Arsenic	5.72	mg/kg	NV	480076.02	1350518.49
A7-SA5-8	A7-SA5-8^1-RMP	3-May-05	0.0	0.5	Beryllium	0.578	mg/kg	NV	480076.02	1350518.49
A7-SA5-8	A7-SA5-8^1-RMP	3-May-05	0.0	0.5	Aroclor-1254	0.0093	ug/kg	NV	480076.02	1350518.49
A7-SA5-8	A7-SA5-8^1-RMP	3-May-05	0.0	0.5	Aroclor-1260	0.0071	ug/kg	NV	480076.02	1350518.49
A7-SA5-8	A7-SA5-8^1-RMP	3-May-05	0.0	0.5	Dieldrin	0.00149	ug/kg	UNV	480076.02	1350518.49
A7-SA5-8	A7-SA5-8^1-RMP	3-May-05	0.0	0.5	Radium-228	0.692	pCi/g	NV	480076.02	1350518.49
A7-SA5-8	A7-SA5-8^1-RMP	3-May-05	0.0	0.5	Thorium-228	0.728	pCi/g	NV	480076.02	1350518.49
A7-SA5-8	A7-SA5-8^1-RMP	3-May-05	0.0	0.5	Thorium-232	0.692	pCi/g	NV	480076.02	1350518.49
A7-SA5-8	A7-SA5-8^1-RMP	3-May-05	0.0	0.5	Uranium, Total	5.95	mg/kg	NV	480076.02	1350518.49
A7-SA5-8	A7-SA5-8^3-RMP	3-May-05	1.0	1.5	Arsenic	6.25	mg/kg	NV	480076.02	1350518.49
A7-SA5-8	A7-SA5-8^3-RMP	3-May-05	1.0	1.5	Beryllium	0.547	mg/kg	NV	480076.02	1350518.49
A7-SA5-8	A7-SA5-8^3-RMP	3-May-05	1.0	1.5	Aroclor-1254	0.0038	ug/kg	UNV	480076.02	1350518.49
A7-SA5-8	A7-SA5-8^3-RMP	3-May-05	1.0	1.5	Aroclor-1260	0.0038	ug/kg	UNV	480076.02	1350518.49
A7-SA5-8	A7-SA5-8^3-RMP	3-May-05	1.0	1.5	Dieldrin	0.00152	ug/kg	UNV	480076.02	1350518.49
A7-SA5-8	A7-SA5-8^3-RMP	3-May-05	1.0	1.5	Radium-228	0.894	pCi/g	NV	480076.02	1350518.49
A7-SA5-8	A7-SA5-8^3-RMP	3-May-05	1.0	1.5	Thorium-228	0.889	pCi/g	NV	480076.02	1350518.49
A7-SA5-8	A7-SA5-8^3-RMP	3-May-05	1.0	1.5	Thorium-232	0.894	pCi/g	NV	480076.02	1350518.49
A7-SA5-8	A7-SA5-8^3-RMP	3-May-05	1.0	1.5	Uranium, Total	6.05	mg/kg	NV	480076.02	1350518.49
A7-SA5-8	A7-SA5-8^6-RMP	3-May-05	2.5	3.0	Arsenic	3.56	mg/kg	NV	480076.02	1350518.49
A7-SA5-8	A7-SA5-8^6-RMP	3-May-05	2.5	3.0	Beryllium	0.862	mg/kg	NV	480076.02	1350518.49
A7-SA5-8	A7-SA5-8^6-RMP	3-May-05	2.5	3.0	Aroclor-1254	0.0016	ug/kg	NV	480076.02	1350518.49
A7-SA5-8	A7-SA5-8^6-RMP	3-May-05	2.5	3.0	Aroclor-1260	0.004	ug/kg	UNV	480076.02	1350518.49
A7-SA5-8	A7-SA5-8^6-RMP	3-May-05	2.5	3.0	Dieldrin	0.0016	ug/kg	UNV	480076.02	1350518.49
A7-SA5-8	A7-SA5-8^6-RMP	3-May-05	2.5	3.0	Radium-228	1.09	pCi/g	NV	480076.02	1350518.49
A7-SA5-8	A7-SA5-8^6-RMP	3-May-05	2.5	3.0	Thorium-228	1.14	pCi/g	NV	480076.02	1350518.49
A7-SA5-8	A7-SA5-8^6-RMP	3-May-05	2.5	3.0	Thorium-232	1.09	pCi/g	NV	480076.02	1350518.49
A7-SA5-8	A7-SA5-8^6-RMP	3-May-05	2.5	3.0	Uranium, Total	19.6	mg/kg	NV	480076.02	1350518.49
A7-SA5-9	A7-SA5-9^1-RMP	21-Jan-05	0.0	0.5	Arsenic	6.12	mg/kg	NV	480028.638	1350609.601
A7-SA5-9	A7-SA5-9^1-RMP	21-Jan-05	0.0	0.5	Beryllium	0.723	mg/kg	NV	480028.638	1350609.601

5982

APPENDIX A
PREDESIGN CHARACTERIZATION DATA FOR AREA 7 SILOS AND GENERAL AREA

Boring	Sample ID	Sample Date	Sample Depth (feet)		Parameter	Result	Units	Qualifier	Northing	Easting
			Top	Bottom						
A7-SA5-9	A7-SA5-9^1-RMP	21-Jan-05	0.0	0.5	Aroclor-1254	0.0034	ug/kg	NV	480028.638	1350609.601
A7-SA5-9	A7-SA5-9^1-RMP	21-Jan-05	0.0	0.5	Aroclor-1260	0.0014	ug/kg	NV	480028.638	1350609.601
A7-SA5-9	A7-SA5-9^1-RMP	21-Jan-05	0.0	0.5	Dieldrin	0.00157	ug/kg	UNV	480028.638	1350609.601
A7-SA5-9	A7-SA5-9^1-RMP	21-Jan-05	0.0	0.5	Radium-228	1.05	pCi/g	NV	480028.638	1350609.601
A7-SA5-9	A7-SA5-9^1-RMP	21-Jan-05	0.0	0.5	Thorium-228	1.06	pCi/g	NV	480028.638	1350609.601
A7-SA5-9	A7-SA5-9^1-RMP	21-Jan-05	0.0	0.5	Thorium-232	1.05	pCi/g	NV	480028.638	1350609.601
A7-SA5-9	A7-SA5-9^1-RMP	21-Jan-05	0.0	0.5	Uranium, Total	14.3	mg/kg	NV	480028.638	1350609.601
A7-SA5-9	A7-SA5-9^3-RMP	21-Jan-05	1.0	1.5	Arsenic	4.36	mg/kg	NV	480028.638	1350609.601
A7-SA5-9	A7-SA5-9^3-RMP	21-Jan-05	1.0	1.5	Beryllium	0.79	mg/kg	NV	480028.638	1350609.601
A7-SA5-9	A7-SA5-9^3-RMP	21-Jan-05	1.0	1.5	Aroclor-1254	0.004	ug/kg	UNV	480028.638	1350609.601
A7-SA5-9	A7-SA5-9^3-RMP	21-Jan-05	1.0	1.5	Aroclor-1260	0.004	ug/kg	UNV	480028.638	1350609.601
A7-SA5-9	A7-SA5-9^3-RMP	21-Jan-05	1.0	1.5	Dieldrin	0.00162	ug/kg	UNV	480028.638	1350609.601
A7-SA5-9	A7-SA5-9^3-RMP	21-Jan-05	1.0	1.5	Radium-228	1.25	pCi/g	NV	480028.638	1350609.601
A7-SA5-9	A7-SA5-9^3-RMP	21-Jan-05	1.0	1.5	Thorium-228	1.2	pCi/g	NV	480028.638	1350609.601
A7-SA5-9	A7-SA5-9^3-RMP	21-Jan-05	1.0	1.5	Thorium-232	1.25	pCi/g	NV	480028.638	1350609.601
A7-SA5-9	A7-SA5-9^3-RMP	21-Jan-05	1.0	1.5	Uranium, Total	10.3	mg/kg	NV	480028.638	1350609.601
A7-SA5-9	A7-SA5-9^6-RMP	21-Jan-05	2.5	3.0	Arsenic	3.21	mg/kg	NV	480028.638	1350609.601
A7-SA5-9	A7-SA5-9^6-RMP	21-Jan-05	2.5	3.0	Beryllium	0.9	mg/kg	NV	480028.638	1350609.601
A7-SA5-9	A7-SA5-9^6-RMP	21-Jan-05	2.5	3.0	Aroclor-1254	0.004	ug/kg	UNV	480028.638	1350609.601
A7-SA5-9	A7-SA5-9^6-RMP	21-Jan-05	2.5	3.0	Aroclor-1260	0.004	ug/kg	UNV	480028.638	1350609.601
A7-SA5-9	A7-SA5-9^6-RMP	21-Jan-05	2.5	3.0	Dieldrin	0.00159	ug/kg	UNV	480028.638	1350609.601
A7-SA5-9	A7-SA5-9^6-RMP	21-Jan-05	2.5	3.0	Radium-228	1.24	pCi/g	NV	480028.638	1350609.601
A7-SA5-9	A7-SA5-9^6-RMP	21-Jan-05	2.5	3.0	Thorium-228	1.23	pCi/g	NV	480028.638	1350609.601
A7-SA5-9	A7-SA5-9^6-RMP	21-Jan-05	2.5	3.0	Thorium-232	1.24	pCi/g	NV	480028.638	1350609.601
A7-SA5-9	A7-SA5-9^6-RMP	21-Jan-05	2.5	3.0	Uranium, Total	2.91	mg/kg	UNV	480028.638	1350609.601

APPENDIX B

REAL-TIME MAP OF AREA 7 SILOS AND GENERAL AREA

Area 7 Silos & General Area Surface Scan

Total Uranium
NaI Batch #s: 202-213, 491, 665, 918, 919, 937, 1169, 1174, 1246, 1445
HPGe Det. #s: 30687, 30699, 31144, 31204, 31265, 40227, 40293, 40743
Measurement Dates: Oct. 1998 - April 2005

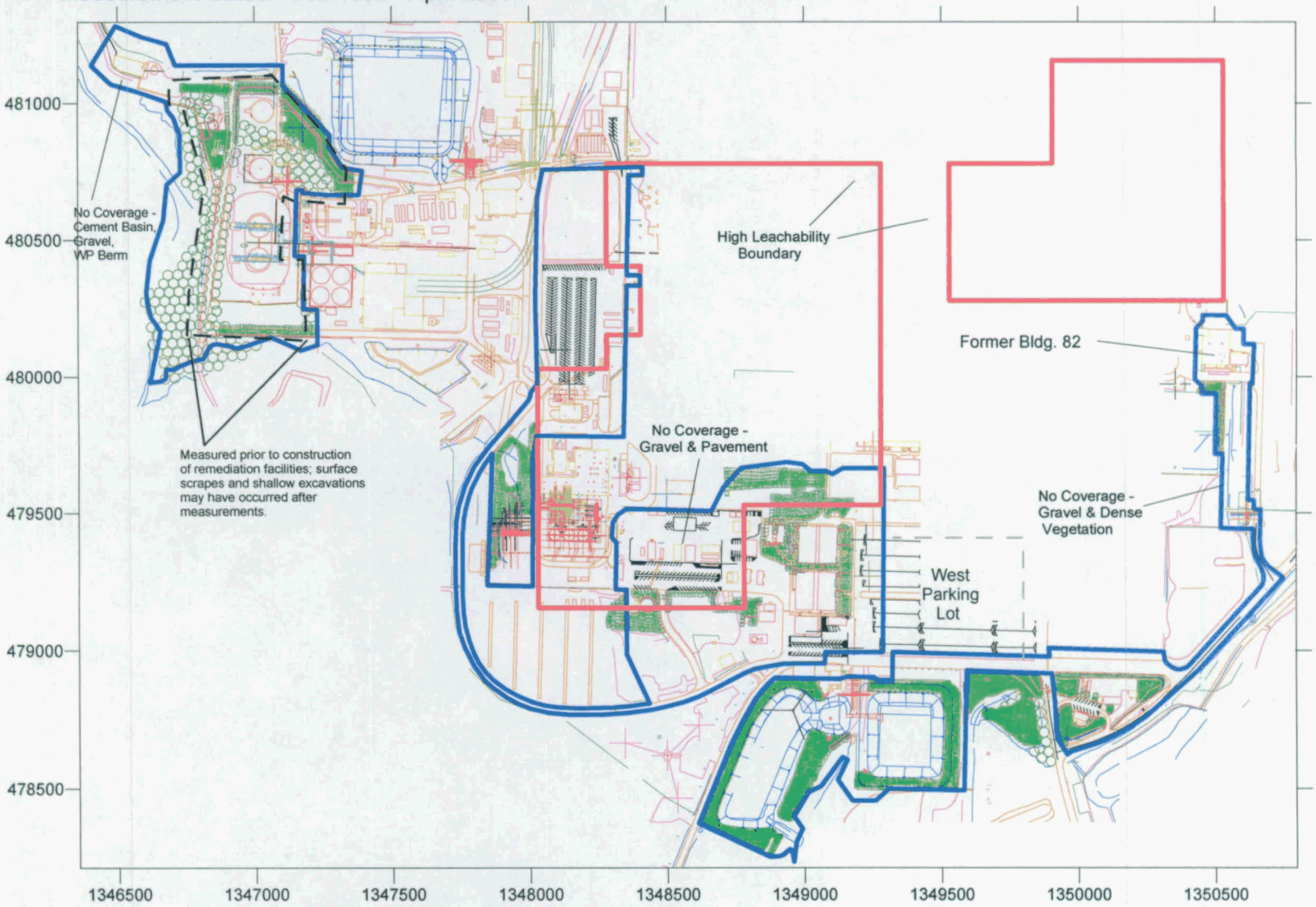

Planned Excavation Boundary

NaI (V1&2) Total U (ppm)
-9999 to 246
246 to 721
721 to 9999

NaI (V3) Total U (ppm)
-9999 to 246
246 to 875
875 to 9999

HPGe @ 100 cm Total U (ppm)
0 to 246
246 to 400
400 to 9999

RTIMP DWG Title: A7_SF_P1_TU.srf
Project Name: Gen. Char. for Site. Soil Rem.
Project #: 20300-PSP-0011
Prepared By: Mike Frank/8591
Date Verified: 06/10/05
Support Data: (multiple files stored on Real-Time directory groups1-Active Maps-A7-Surface)

APPENDIX C

BURIED LABORATORY VENTILATION SYSTEM REMOVAL PLAN

APPENDIX C
WORK PLAN FOR REMOVAL OF BURIED PERCHLORIC ACID LAB FUME HOODS AND ASSOCIATED DEBRIS

C.1 PURPOSE

This work plan includes proposed method and plan for removal (excavation) of the buried perchloric acid fume hoods and associated debris underneath the existing Construction Overflow Parking Lot south east of CAWWT. For location of the existing burial pits and excavation plan, refer to Drawing 99X-5500-G-00894, Sheet G-7.

C.2 ASSUMPTION

Since it cannot be confirmed that perchloric acid crystals do not exist amongst the buried perchloric acid lab fume hoods and associated debris, it will be assumed for removal and worker safety that perchloric acid crystals do exist amongst the fume hoods and associated debris.

C.3 CHEMICAL BACKGROUND

Physically, perchlorate crystals are explosive to impact. Chemically, perchlorate crystals are explosive to organics at high temperatures. Perchlorate crystals are flammable when reacted with certain chemicals (sulfuric acid). Perchlorate crystals are very soluble in cold and hot water and are also dissolved by organic material. When in solution (non-crystalline form), perchlorates are not explosive.

C.4 HISTORICAL BACKGROUND

In the early to mid-1960s, fume hoods, duct work, fans and other components related to the ventilation systems to several perchloric acid fume hoods were removed from the site laboratory and buried in a field southwest of the laboratory. A total of five pits were excavated and readied for disposal of this debris. The pits are shallow enough that some debris may have less than 1-foot soil cover under the existing asphalt pavement. It is assumed that the asphalt pavement is 6-inch thick. Based on photographs took during the removal and burial process, water was used extensively to wet the equipment as it was being removed, transported, and buried. Photographic evidence suggests that the fans and flue stacks once placed in the open excavations may have been set afire to further assure destruction of any remaining perchloric acid crystals. There is no photographic evidence to determine if the ductwork and fume hoods were set afire. An electro-magnetic scan was performed in year 2004 that shows the location of the pits.

Decades later, few workers at the site knew of the existence of the buried fume hoods. In the mid-1990s, a parking lot was constructed over the fume hood burial location. This lot was used to park both government and privately owned vehicles until early 2005.

C.5 REMOVAL (EXCAVATION) PLAN

In general, removal (excavation) of the buried perchloric acid lab fume hoods and associated debris will be removed in accordance with the approved Safe Work Plan (or traveler) and the technical specifications included with the Excavation Plan for Area 7 unless otherwise stated in this work plan or approved by the Construction Manager. The Safe Work Plan will also be reviewed and accepted by an outside Expert. This Expert will have experience in removal of perchloric acid debris and knowledgeable in explosives and will be subcontracted for reviewing the Safe Work Plan and to observe the lab fume hoods and associated debris removal from the pits before loading and hauling to the OSDF. Additionally, this Expert or designee will direct the sampling of the fume hood material for residual perchlorates prior to final disposition.

The location of the existing burial pits for buried lab fume hoods and associated debris will be marked on the existing surface of the asphalt pavement. A controlled exclusion zone (recommended at least 50 to 75 feet for non-project personnel) will be established around the burial pit area and construction fence will be installed around the excavation area. Approximately 6-inch thick asphalt pavement over 25-foot by 100-foot area at the burial pits will be excavated. After removal of the asphalt pavement, based on the type of base course underneath the asphalt pavement, base course will be scarified with the construction equipment or additional 4-inch ± will be excavated to pond water. Excavated asphalt pavement and soil will be considered impacted material and will be hauled to the OSDF.

Above described shallow excavation over the pits will be filled with water to saturate the underlying soil and debris. Over several days (minimum seven days), water will be added to the shallow excavation as needed to maintain a hydraulic head over the burial pits and surrounding soil and to attempt to saturate the ground and buried hoods and debris as much as is practical before continuing excavation.

Before continuation of excavation, a narrow trench (approximately the width of the excavator bucket) will be excavated around the five pits. Trench will be located approximately 6 to 8 feet from the edge of the pits and will be approximately 3 feet deep. This trench will then be filled with water in an attempt to further saturate the pit debris. Over several days (minimum two days), water will be kept in the trench and held to an elevation so that the soil surface over the pits is covered.

This process will be repeated to make the trench deeper (approximately 6 feet deep around the pits). Water will be maintained in the trench and over the pits for several more days (minimum two days). A channel will be excavated from the pit excavation area locations to the existing Manhole 77 located approximately 200 feet eastward of the burial location (refer to Drawing 99X-5500-G-00894, Sheet G-7) so that excess water will discharged to the site storm water collection system and drain into the SWRB for subsequent treatment at CAWWT.

The excavator will remove the next soil layer over the burial pits in 6 to 8 inch lifts until excavation reaches approximately 6-inch over the fume hoods and associated debris. A water cannon will then be used to spray water over the remaining soil around the debris in an attempt to erode the soil and expose the hood and debris surfaces. Once the spray from the water cannon has removed the remaining soil as can be practically eroded, the excavator will begin to hammer at the fume hoods and associated debris while in a saturated/flooded condition in an attempt to further loosen the debris from the soil cover and to agitate the debris to remove air pockets that may have prevented surfaces from becoming wet.

Once debris can effectively be seen, an excavator with a shear assembly will be brought in to shear the debris underwater. The intention is to "over shear" the material while underwater to a state of rubble that is thoroughly and completely saturated and thereby dissolve any perchloric acid crystals into a non-explosive solution. This will effectively size-reduce the debris to meet the OSDF WAC Attainment Plan for placement (DOE 1998d).

The removal methods are selected and planned to render any residual perchloric acid granules harmless by dissolving them in water. At any time during the operations if "popping sounds" or detonations are observed, the operations will stop and be evaluated by the Director of Safety, Health and Quality or his designee.

The excavator will be staged near the excavation to assist the shear with exposing debris and removing soil as necessary. From time to time the water level within the pits may need to be dropped to facilitate visibility of the debris for the shear operator.

Once lab fume hoods and associated debris are size reduced sufficiently, an Expert subcontractor will collect samples from the debris and analyze them for perchlorates. This will be done to verify the material has been sufficiently cleaned. Once acceptable data has been returned, the excavator will load the debris into a haul truck. The debris will be hauled to the OSDF for placement as Category 2 material. At this point, the material will be regarded as typical Category 2 material with no special placement requirements.

Remaining water within the excavation will be pumped or drained into the site's storm water system for subsequent CAWWT treatment. After verifying that the excavations are free of debris, the remaining soil excavation will be performed to design excavation grade and placed in the OSDF as Category 1 material.

C.6 TRAINING

Workers will be briefed on this hazards associated with perchloric acid crystals, their reaction to pressure, organics and water. An understanding of how the Safe Work Plan, especially the addition of water, is

critical in rendering perchloric acid harmless, and the importance of keeping the material saturated. If necessary, a person knowledgeable in explosives will be available to answer questions and concerns regarding the Safe Work Plan.

APPENDIX D

LIST OF DRAWINGS AND TECHNICAL SPECIFICATIONS

APPENDIX D
LIST OF DRAWINGS AND TECHNICAL SPECIFICATIONS

The following drawings have been submitted along with this Excavation Plan to constitute the IRDP for Area 7 Silos and General Area. The technical specifications have not been submitted with this plan as they have been previously approved.

IRDP DRAWINGS

Drawing Number	Sheet	Title
99X-5500-G-00887	G-1	Master Layout Plan
99X-5500-G-00889	G-2	North Silos Area Grading Plan
99X-5500-G-00890	G-3	South Silos Area Grading Plan
99X-5500-G-00891	G-4	Silos Parking Lot Grading Plan
99X-5500-G-00892	G-5	OU1 Access Road Area (North) Grading Plan
99X-5500-G-00893	G-6	OU1 Access Road Area (South) Grading Plan
99X-5500-G-00894	G-7	Overflow Parking Lot Area Grading Plan
99X-5500-G-00895	G-8	Storm Water Retention Basin Impacted Grading Plan
99X-5500-G-00XX1	G-9	Storm Water Retention Basin Non-Impacted Grading Plan
99X-5500-G-00896	G-10	Security Trailer Park Grading Plan
99X-5500-G-00897	G-11	Building 82A Grading Plan
99X-5500-G-00898	G-12	Civil Details

For a list of utility grid and technical reference drawings included in this package, see Drawing 99X-5500-X-00887.

IRDP TECHNICAL SPECIFICATIONS

The following technical specifications make up the Area 6 Waste Pits and General Area technical specification package:

Technical Specifications for Soil and Disposal Facility Project Excavation for Remediation, Document 20300-TS-0001

Section	Title
02150	Traffic Control
02205	Impacted Material Excavation
02206	Earthwork for Remediation
02207	Area Isolation Trenching
02275	Surface Water Management and Erosion Control for Remediation

SPECIFICATIONS REFERENCED FROM OSDF DESIGN

The following specifications are referenced in this design from the OSDF technical specifications and will be applicable to this remediation effort:

Specifications Referenced from OSDF Design:
OSDF Phase V Technical Specifications, Part of Document 20105-TS-0001

Section	Title
02100	Surveying
02200	Earthwork
02215	Trenching and Backfilling
02230	Road Construction
02270	Surface Water Management and Erosion Control
02714	Geotextiles
02930	Vegetation

5982

AREA 7 SILOS AND GENERAL AREA EXCAVATION PLAN DRAWING PACKAGE FOR 20500

99xg0887 CADD11 rabb7064 06/16/2005 01:53:54 PM

UTILITY GRID REFERENCE DRAWING INDEX

DWG NO.	DRAWING TITLE
22X-5500-P-00659	MASTER GRID OF UNDERGROUND UTILITY PLANS
22F-5500-P-00663	GRID 4 UNDERGROUND UTILITIES
22A-5500-P-00664	GRID 5 UNDERGROUND UTILITIES
22H-5500-P-00667	GRID 8 UNDERGROUND UTILITIES
22H-5500-P-00674	GRID 15 UNDERGROUND UTILITIES
22G-5500-P-00685	GRID 26 UNDERGROUND UTILITIES
22A-5500-P-00687	GRID 28 UNDERGROUND UTILITIES
22A-5500-P-00688	GRID 29 UNDERGROUND UTILITIES
22A-5500-P-00689	GRID 30 UNDERGROUND UTILITIES
22A-5500-P-00785	GRID 30A UNDERGROUND UTILITIES
22A-5500-P-00804	GRID 31A UNDERGROUND UTILITIES
22A-5500-P-00805	GRID 31B UNDERGROUND UTILITIES
93X-5900-G-00325	GRID 52 EXISTING SITE AND UTILITY PLAN

TECHNICAL REFERENCE DRAWING INDEX

GRID NO.	DWG NO.	DRAWING TITLE
4	82X-4445-S-00021	RECEIVING & INCOMING MATERIALS INSPECTION AREA - FOUNDATION PLAN & DETAILS
4	82X-4445-S-00022	RECEIVING & INCOMING MATERIALS INSPECTION AREA - MISCELLANEOUS DETAILS
4	82X-4445-S-00005	RECEIVING & INCOMING MATERIALS INSPECTION AREA - TRUCK WEIGH SCALE FOUNDATION
22	40A-4445-S-00060	WASTE PIT AREA STORMWATER CONTROL
25	26A-5500-S-00265	WASTE STORAGE TANK PROJECT - FOUNDATION AND PAVING PLANS
25	26A-5500-S-00266	WASTE STORAGE TANK PROJECT - TANK FOUNDATION
26	93X-5900-G-00703	UTILITY PROFILES AND SECTIONS
26	93X-5900-S-00697	SLAB AND FOUNDATION PLAN
26	93X-5900-S-00698	SECTIONS AND DETAILS
26	93X-5900-S-00709	PLANS, SECTIONS, AND DETAILS - PERIMETER CONCRETE PADS
28	25A-5500-G-00190	SEWAGE TREATMENT RELOCATION - FOUNDATION PLAN & DETAILS
30	18X-1900-S-00873	INSPECTION SUMP - DETAILS
30	18A-1920-S-00353	STORM TRANSFER AND UNDERDRAIN PUMP STATIONS - PLANS & SECTIONS
30	18A-1920-S-00354	INSPECTION SUMP - PLAN AND SECTIONS
30/30A	99X-5500-S-00XX2	STORM WATER RETENTION BASIN AREA STRUCTURES - FOUNDATION AND SLAB PLAN
31B	99X-5500-S-00XX3	SILO 3 ENCLOSURE 94M AND PROCESS BUILDINGS - FOUNDATION AND SLAB PLAN

TECHNICAL REFERENCE ISOMETRIC DRAWING INDEX

GRID NO.	SKETCH NO.	DRAWING TITLE
30/30A	SK-SWRB AREA	STORM WATER RETENTION BASIN AREA STRUCTURES - ISOMETRIC VIEW
31B	SK-SILO 3 & 94M	SILO 3 ENCLOSURE 94M AND PROCESS BUILDINGS - ISOMETRIC VIEW

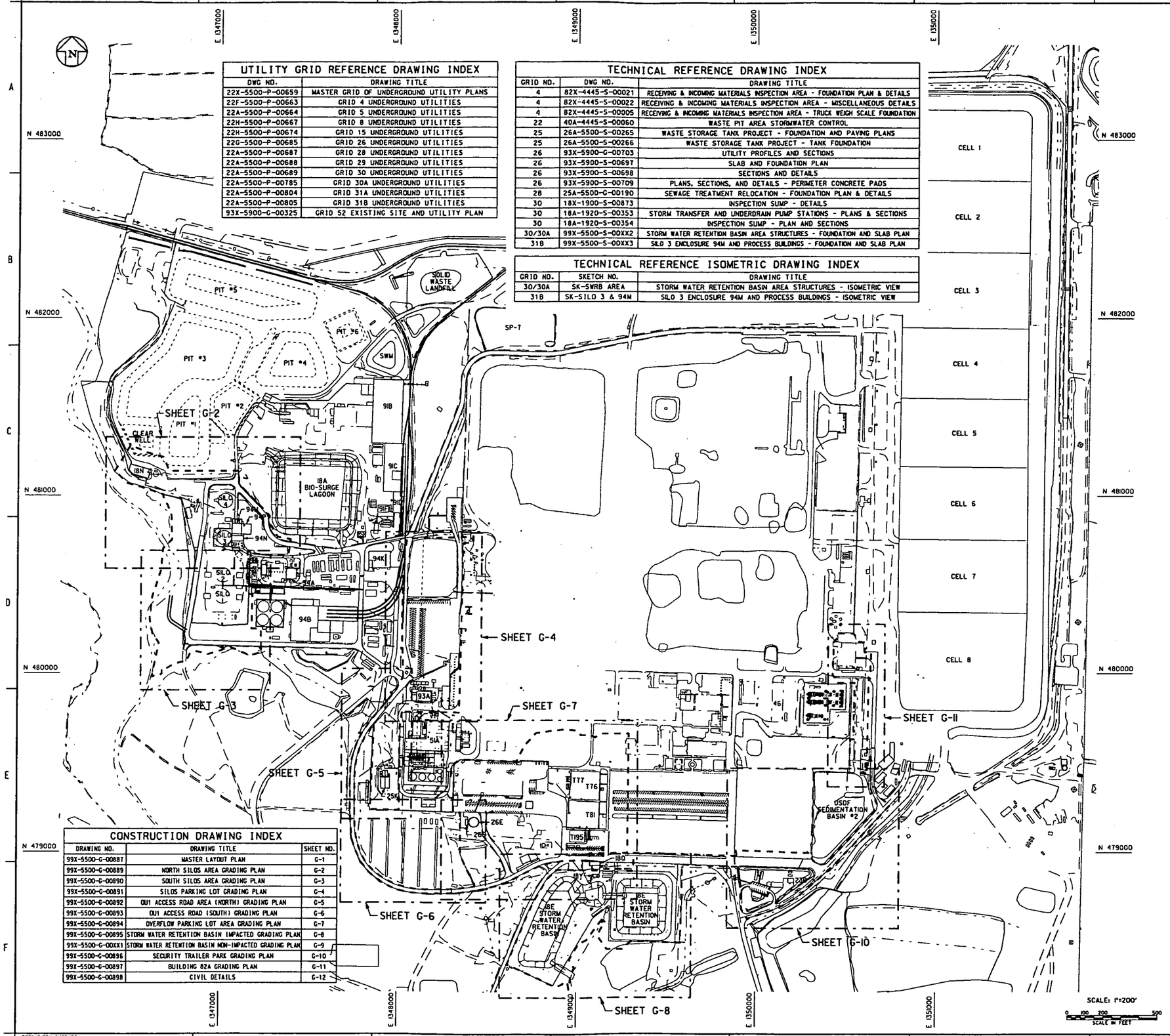

CONSTRUCTION DRAWING INDEX

DRAWING NO.	DRAWING TITLE	SHEET NO.
99X-5500-G-00887	MASTER LAYOUT PLAN	G-1
99X-5500-G-00889	NORTH SILOS AREA GRADING PLAN	G-2
99X-5500-G-00890	SOUTH SILOS AREA GRADING PLAN	G-3
99X-5500-G-00891	SILOS PARKING LOT GRADING PLAN	G-4
99X-5500-G-00892	OU1 ACCESS ROAD AREA (NORTH) GRADING PLAN	G-5
99X-5500-G-00893	OU1 ACCESS ROAD (SOUTH) GRADING PLAN	G-6
99X-5500-G-00894	OVERFLOW PARKING LOT AREA GRADING PLAN	G-7
99X-5500-G-00895	STORM WATER RETENTION BASIN IMPACTED GRADING PLAN	G-8
99X-5500-G-00XX1	STORM WATER RETENTION BASIN NON-IMPACTED GRADING PLAN	G-9
99X-5500-G-00896	SECURITY TRAILER PARK GRADING PLAN	G-10
99X-5500-G-00897	BUILDING 82A GRADING PLAN	G-11
99X-5500-G-00898	CIVIL DETAILS	G-12

GENERAL NOTES

1. HORIZONTAL CONTROL SHOWN ON THE DRAWINGS IS BASED UPON NORTH AMERICAN DATUM 1983 (NAD 83).
2. VERTICAL CONTROL SHOWN ON THE DRAWINGS IS BASED UPON NATIONAL GEODETIC VERTICAL DATUM 1929 (NGVD 29).
3. DIMENSIONS SHOWN ON THE CONSTRUCTION DRAWINGS TAKE PRECEDENCE OVER SCALED DIMENSIONS.
4. FIGURED DIMENSIONS AND/OR ELEVATIONS MARKED THUS (+/-) SHALL BE VERIFIED IN THE FIELD BEFORE START OF REMEDIATION.
5. MAINTAIN AND PROTECT UTILITIES OUTSIDE THE LIMIT OF EXCAVATION AND/OR LIMIT OF WORK.
6. PROVIDE TEMPORARY SHORING, BRACING, OR OTHER METHODS AS NECESSARY TO SAFELY SUPPORT EXCAVATION. PROTECTION SHALL BE IN ACCORDANCE WITH OSHA 29 CFR 1926, SUBPART P-EXCAVATIONS, LATEST EDITION.
7. TECHNICAL SPECIFICATIONS GOVERNING THIS PROJECT ARE THE LATEST REVISIONS OF EXCAVATION FOR REMEDIATION TECHNICAL SPECIFICATIONS (DOCUMENT NO. 20000-TS-0001 AND ON-SITE DISPOSAL FACILITY (OSDF) PHASE V TECHNICAL SPECIFICATIONS (DOCUMENT NO. 20105-TS-0000. TECHNICAL SPECIFICATION SECTION 02205, ITEM 3.2 AND SECTION 02206, ITEM 3.2.B, C, AND D DO NOT APPLY TO WORK PERFORMED UNDER THESE DRAWINGS.
8. UNDERGROUND UTILITY GRIDS AND UTILITY DESIGNATION ABBREVIATIONS ARE IN ACCORDANCE WITH THE FEMP MASTER GRID OF UNDERGROUND UTILITY PLANS DRAWING 22X-5500-P-00659.
9. TRAFFIC CONTROL SHALL BE IN ACCORDANCE WITH SPECIFICATION 02150.
10. FIELD LOCATE SUPPORT FACILITIES AND SMTA AS DIRECTED BY THE CONSTRUCTION MANAGER.
11. REQUIREMENTS CONTAINED IN REFERENCED TECHNICAL SPECIFICATIONS ARE APPLICABLE WHERE PERTINENT TO REMEDIAL ACTIVITY SCOPE ILLUSTRATED ON CONSTRUCTION DRAWINGS.

KEYED NOTES

5982

PRELIMINARY
NOT FOR CONSTRUCTION

REV. NO.	ISSUE OR REVISION PURPOSE - DESCRIPTION	DATE	REV. BY	APPR.
A	ISSUED FOR AGENCY REVIEW	6/16/05		

INITIALS AND DATE

UNITED STATES DEPARTMENT OF ENERGY
FERNALD CLOSURE PROJECT

THIS DRAWING PREPARED BY
FLUOR FERNALD, INC.

PROJECT NAME
SOIL REMEDIATION

DRAWING TITLE
AREA 7 SILOS AND GENERAL AREA
MASTER LAYOUT PLAN

APPROVALS

COGNIZANT ENG.		SAFETY ENG.	
CIVIL & STR.		MAINTENANCE	
ELECTRICAL		FIRE PROTECT.	
ENGINEER		WAO	
INSTRUMENT		SECURITY	
MECHANICAL		OA	
		CONSTRUCTION	
CHECKED		CHARACTERIZATION	
APPROVED			

DRAWN BY	PROJECT NO.	DRAWING INDEX CODE NO.	SHEET NO.	REV. NO.
R.M. LINDCREH	20500	99X-5500-G-00887	G-1	A
RES PROJECT NO.	FILENAME 99xg0887.dgn			

FCPSAE.DGN 5/30/03

99xg0889 CADD11 rabb7064 06/16/2005 01:55:54 PM

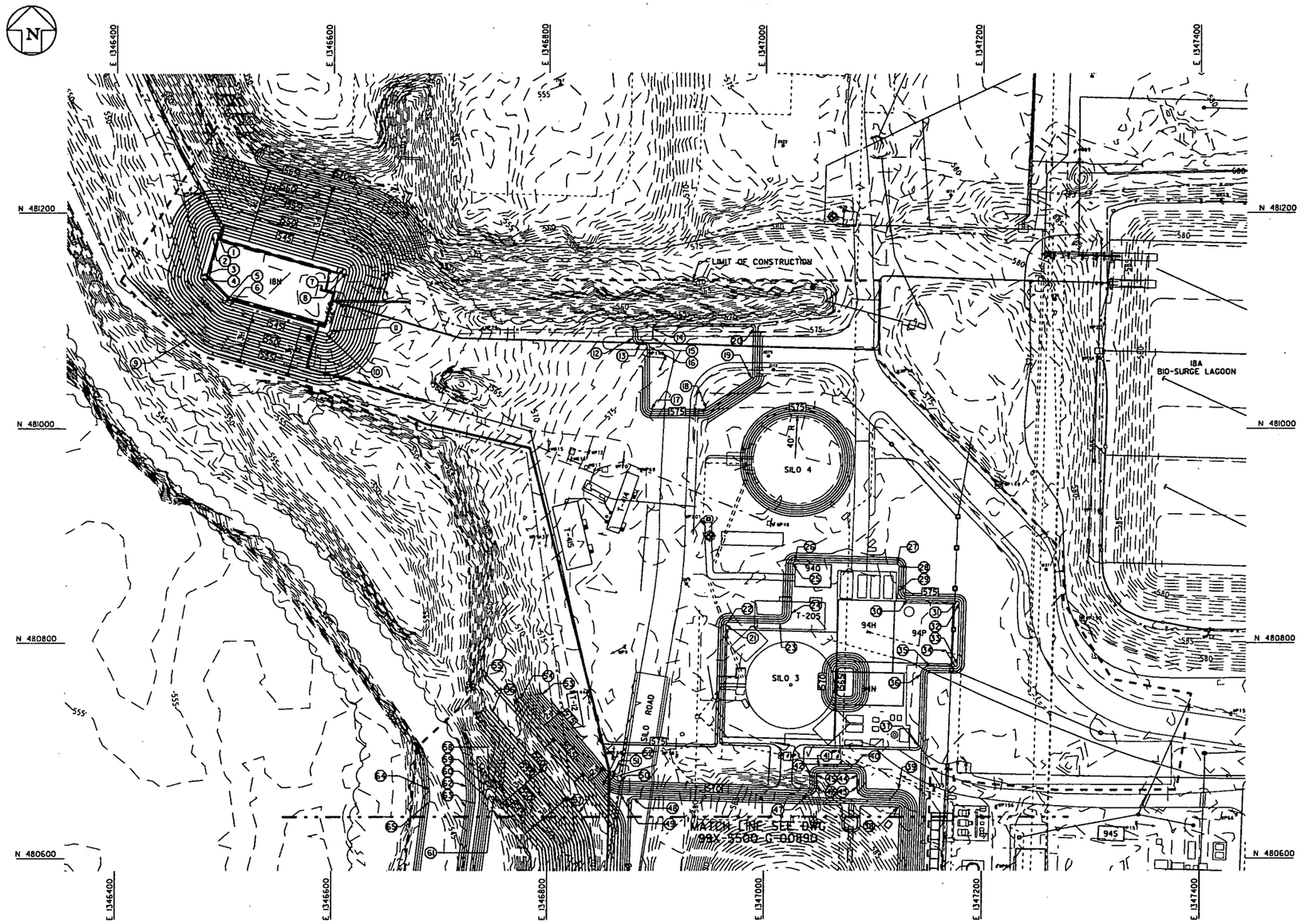

GENERAL NOTES

1. EXISTING TOPOGRAPHY SHOWN ON DRAWINGS PROVIDED BY FLUOR FERNALD. THESE SOURCES INCLUDE EXISTING SITE DATA SOURCE (IN-PLANT FILES) FCP CADD GRID/UTILITY DRAWINGS.
2. LOCATION AND DEPTH OF EXISTING UTILITIES AND FOUNDATION STRUCTURES ARE APPROXIMATE. IF UNIDENTIFIED UTILITIES ARE DISCOVERED, PROCEED AS DIRECTED BY THE CONSTRUCTION MANAGER.
3. CEMENT POND TO REMAIN IN SERVICE UNTIL REMEDIATION UNDERNEATH WASTE PITS, IN AREA WEST OF THE BSL, AND IN K-65 SILOS AREA (SILOS 1, 2, 3, AND 4) HAVE BEEN COMPLETED.
4. REMEDIATION OF SILO 3 TO BE COMPLETED (BY OTHERS) PRIOR TO EXCAVATING IN SILO 3 AREA.
5. REMOVE SURFACE PADS AND PAVEMENTS WITHIN LIMIT OF CONSTRUCTION SHOWN ON DRAWINGS, UNLESS STATED OTHERWISE.
6. REMOVE UNDERGROUND UTILITIES, PER UNDERGROUND UTILITY GRID DRAWINGS, UNLESS STATED OTHERWISE.

5982

CONTROL POINTS

PT NO.	NORTHING	EASTING	ELEV.	PT NO.	NORTHING	EASTING	ELEV.	PT NO.	NORTHING	EASTING	ELEV.	PT NO.	NORTHING	EASTING	ELEV.	PT NO.	NORTHING	EASTING	ELEV.	PT NO.	NORTHING	EASTING	ELEV.
1	481182.36	1346492.11	542.0	14	481093.07	1346896.67	571.0	27	480873.62	1347121.74	573.0	40	480687.15	1347083.63	574.0	53	480752.38	1346795.38	574.0	66			
2	481180.29	1346488.41	542.0	15	481084.24	1346896.67	571.0	28	480871.57	1347123.68	573.0	41	480685.15	1347050.38	573.0	54	480748.46	1346775.05	565.0	67			
3	481141.82	1346477.49	542.0	16	481076.24	1346893.71	572.0	29	480848.70	1347123.06	573.0	42	480677.15	1347042.38	573.0	55	480767.49	1346742.99	561.0	68			
4	481138.91	1346478.22	542.0	17	481018.12	1346895.71	572.0	30	480840.48	1347130.83	573.0	43	480666.46	1347085.63	570.0	56	480736.25	1346749.97	560.0	69			
5	481116.80	1346499.68	542.0	18	481019.00	1346946.30	572.0	31	480839.22	1347176.98	573.0	44	480677.15	1347085.63	570.0	57	480642.56	1346830.10	560.0	70			
6	481114.15	1346504.13	542.0	19	481047.16	1346987.36	572.0	32	480837.17	1347178.93	573.0	45	480677.15	1347048.38	570.0	58	480670.61	1346746.90	545.0				
7	481148.97	1346609.80	542.0	20	481093.19	1346988.98	572.0	33	480779.85	1347177.36	573.0	46	480666.23	1347048.38	570.0	59	480668.40	1346741.63	545.0				
8	481145.26	1346611.87	542.0	21	480817.48	1346964.60	573.0	34	480777.91	1347175.31	573.0	47	480658.24	1347040.12	570.0	60	480654.49	1346745.95	543.0				
9	481083.37	1346465.24	558.0	22	480819.43	1346966.66	573.0	35	480778.55	1347154.98	573.0	48	480655.34	1346880.85	566.0	61	480656.32	1346751.22	543.0				
10	481089.00	1346592.79	542.0	23	480818.13	1347014.14	573.0	36	480770.77	1347143.77	573.0	49	480659.74	1346868.26	568.0	62	480666.68	1346725.72	543.0				
11	481091.06	1346596.50	542.0	24	480827.85	1347024.41	573.0	37	480704.26	1347141.95	573.0	50	480671.74	1346868.65	574.0	63	480647.54	1346725.30	543.0				
12	481084.24	1346878.67	573.0	25	480874.25	1347025.68	573.0	38	480647.58	1347123.11	566.0	51	480675.23	1346861.37	574.0	64	480663.79	1346691.84	543.0				
13	481078.24	1346884.67	573.0	26	480876.19	1347027.73	573.0	39	480663.57	1347123.63	574.0	52	480667.43	1346852.25	568.0	65	480651.88	1346691.58	543.0				

SCALE: 1"=40'

0 20 40 100 200

SCALE IN FEET

PRELIMINARY

NOT FOR CONSTRUCTION

REV. NO.	ISSUE OR REVISION PURPOSE - DESCRIPTION	DATE	REV. BY	APPR.
A	ISSUED FOR AGENCY REVIEW	6/16/05		

INITIALS AND DATE

UNITED STATES DEPARTMENT OF ENERGY
FERNALD CLOSURE PROJECT

THIS DRAWING PREPARED BY

FLUOR FERNALD, INC.

PROJECT NAME

SOIL REMEDIATION

DRAWING TITLE

AREA 7 SILOS AND GENERAL AREA
NORTH SILOS AREA GRADING PLAN

APPROVALS

COGNIZANT ENG.		SAFETY ENG.	
CIVIL & STR.		MAINTENANCE	
ELECTRICAL		FIRE PROTECT.	
ENGINEER		WAO	
INSTRUMENT		SECURITY	
MECHANICAL		QA	
		CONSTRUCTION	
CHECKED		CHARACTERIZATION	
APPROVED			

DRAWN BY	PROJECT NO.	DRAWING INDEX CODE NO.	SHEET NO.	REV. NO.
R.M. LINDGREN	20500	99X-5500-G-00889	G-2	A
RCS PROJECT NO.	FILENAME 99x00889.dgn			

FCPSAE.DGN 5/30/03

99xg0890 CADD11 rabb7064 06/16/2005 01:57:30 PM

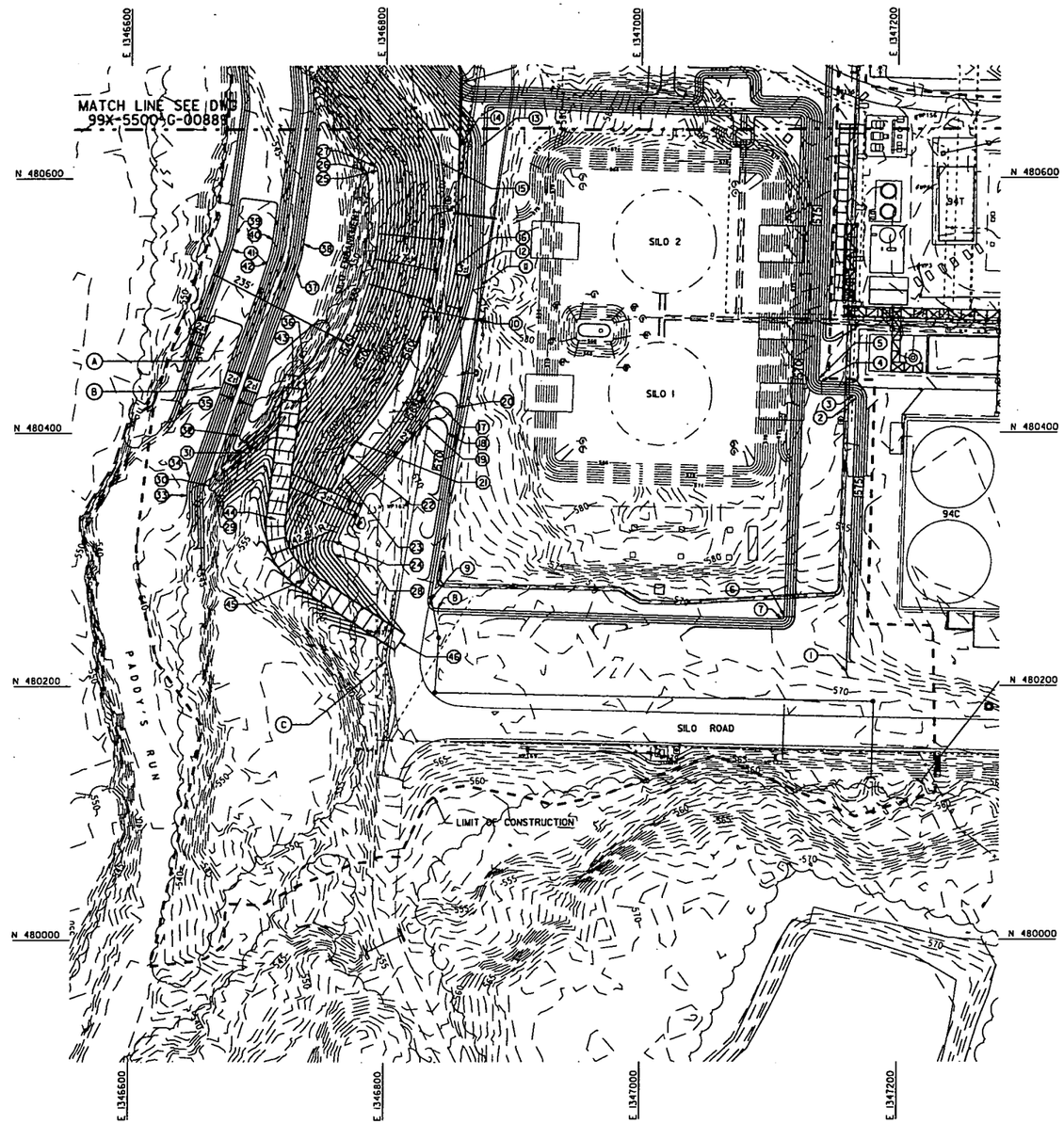

CONTROL POINTS																			
PT NO.	NORTHING	EASTING	ELEV.	PT NO.	NORTHING	EASTING	ELEV.	PT NO.	NORTHING	EASTING	ELEV.	PT NO.	NORTHING	EASTING	ELEV.	PT NO.	NORTHING	EASTING	ELEV.
1	480210.99	1347160.52	571.0	11	480516.50	1346874.40	566.0	21	480393.39	1346776.56	560.0	31	480394.94	1346690.07	542.0	41	480545.20	1346678.69	542.0
2	480427.46	1347167.45	571.0	12	480529.02	1346870.80	567.0	22	480383.92	1346770.53	560.0	32	480398.23	1346685.31	542.0	42	480535.46	1346707.06	542.0
3	480429.52	1347165.51	571.0	13	480624.61	1346873.87	567.0	23	480364.84	1346768.16	561.0	33	480351.00	1346644.22	541.0	43	480435.81	1346726.94	542.0
4	480440.21	1347140.49	576.0	14	480625.12	1346857.87	561.0	24	480315.00	1346758.96	566.0	34	480364.55	1346646.26	541.0	44	480332.34	1346714.25	542.4
5	480442.28	1347138.55	576.0	15	480612.05	1346843.40	560.0	25	480606.20	1346792.74	543.0	35	480414.21	1346635.82	541.0	45	480284.37	1346736.57	558.0
6	480254.79	1347112.53	566.0	16	480531.47	1346854.87	561.0	26	480606.09	1346783.66	542.0	36	480427.06	1346738.25	543.0	46	480235.04	1346811.85	567.0
7	480252.85	1347110.47	566.0	17	480426.77	1346837.78	568.0	27	480609.41	1346791.34	543.0	37	480527.66	1346729.76	542.0	47			
8	480261.47	1346841.48	566.0	18	480400.04	1346849.06	570.0	28	480304.53	1346760.33	566.0	38	480549.32	1346734.82	542.0	48			
9	480268.43	1346835.75	566.0	19	480407.01	1346830.75	570.0	29	480355.45	1346665.93	547.0	39	480556.23	1346681.27	542.0	49			
10	480490.53	1346871.89	566.0	20	480420.35	1346856.42	568.0	30	480358.73	1346661.18	547.0	40	480552.39	1346711.02	542.0	50			

SCALE: 1"=40'

0 20 40 100 200

SCALE IN FEET

PRELIMINARY

NOT FOR CONSTRUCTION

GENERAL NOTES

1. SEE DRAWING 99X-5500-G-00889 FOR GRADING PLAN GENERAL NOTES.
2. CLEAR AREA AS NECESSARY TO CONSTRUCT ACCESS RAMP AND PERFORM EXCAVATION.
3. TO REDUCE HEIGHT OF THE EXCAVATION, PERFORM THE PORTION OF THE EXCAVATION EAST OF THE SILO ROAD PRIOR TO EXCAVATING THE SILO EMBANKMENT.
4. REMOVE AND STOCKPILE "CLEAN" (VISIBLY FREE OF SOIL) STONE FROM SILO EMBANKMENT FOR REUSE.

5982

KEYED NOTES

(A) EXCAVATE TEMPORARY DIVERSION CHANNEL FROM WEST BANK OF PADDY'S RUN AND CONSTRUCT TEMPORARY DIKE WITH EXCAVATED SOIL.

(B) ARMOR WESTERN SLOPE OF TEMPORARY DIKE TO APPROXIMATELY ELEVATION 546' WITH "CLEAN" STONE REMOVED FROM SILO EMBANKMENT.

(C) REMOVE ONLY PORTION OF GUARD RAIL NECESSARY TO PERFORM EXCAVATION. UNTIL SILO EMBANKMENT IS COMPLETE.

REV. NO.	ISSUE OR REVISION PURPOSE - DESCRIPTION	DATE	REV. BY	APPR.
A	ISSUED FOR AGENCY REVIEW	6/16/05		

INITIALS AND DATE

UNITED STATES DEPARTMENT OF ENERGY
FERNALD CLOSURE PROJECT

THIS DRAWING PREPARED BY

FLUOR FERNALD, INC.

PROJECT NAME

SOIL REMEDIATION

DRAWING TITLE

AREA 7 SILOS AND GENERAL AREA
SOUTH SILOS AREA GRADING PLAN

APPROVALS

COGNIZANT ENG.		SAFETY ENG.	
CIVIL & STR.		MAINTENANCE	
ELECTRICAL		FIRE PROTECT.	
ENGINEER		WAO	
INSTRUMENT		SECURITY	
MECHANICAL		QA	
		CONSTRUCTION	
CHECKED		CHARACTERIZATION	
APPROVED			

DRAWN BY	PROJECT NO.	DRAWING INDEX CODE NO.	SHEET NO.	REV. NO.
R.M. LINDCREN	20500	99X-5500-G-00890	G-3	A
RES PROJECT NO.	FILENAME 99xg0890.dgn			

FCP5AE.DGN 5/30/03

99xg0891 CADD11 rabb7064 06/16/2005 01:59:18 PM

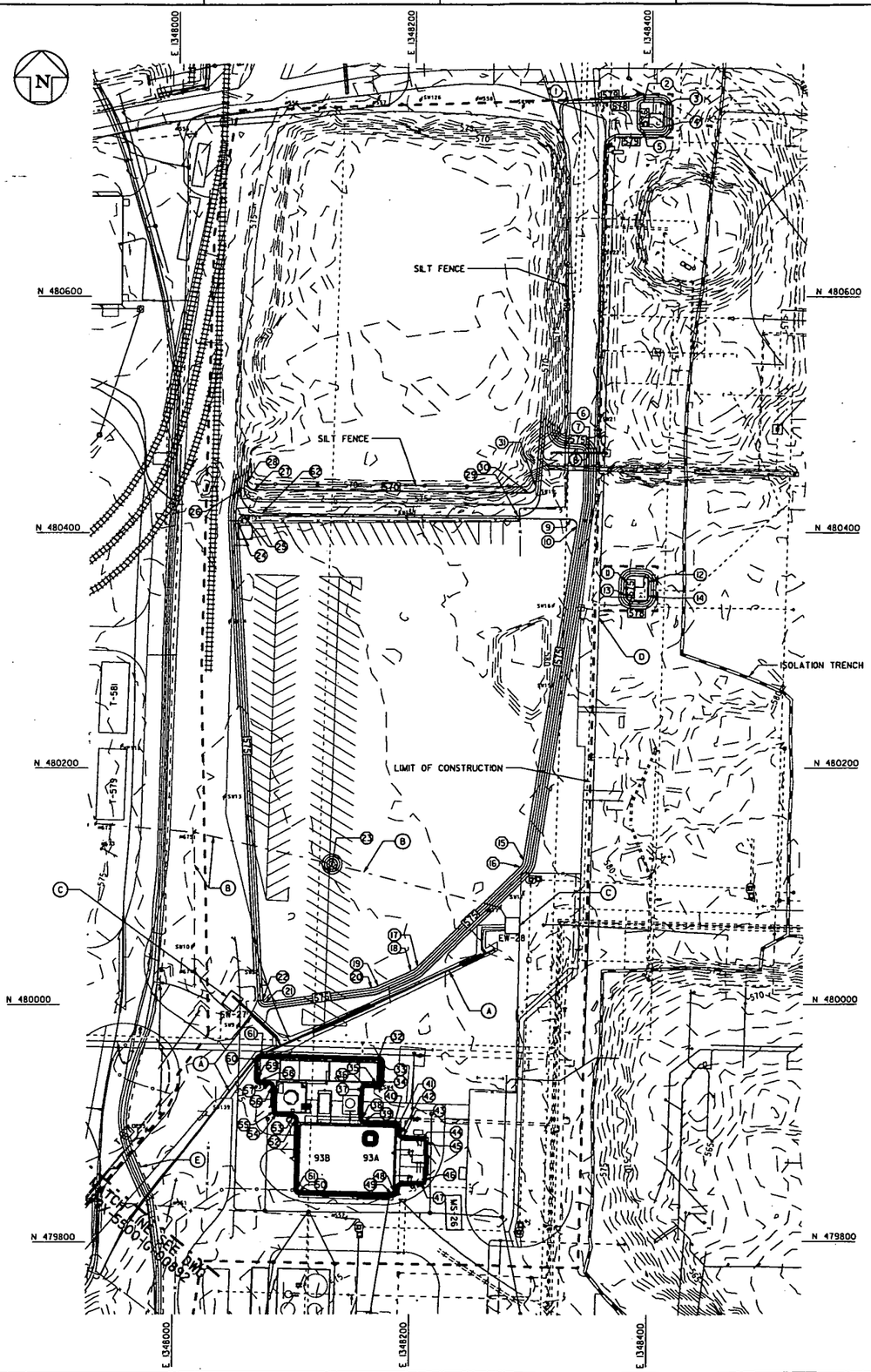

CONTROL POINTS							
PT NO.	NORTHING	EASTING	ELEV.	PT NO.	NORTHING	EASTING	ELEV.
1	480762.62	1348328.32	578.0	32	479952.85	1348172.84	572.0
2	480763.65	1348392.54	576.0	33	479950.80	1348174.78	572.0
3	480760.65	1348410.83	576.0	34	479935.01	1348174.35	572.0
4	480743.14	1348410.83	576.0	35	479933.06	1348172.29	572.0
5	480740.14	1348392.54	576.0	36	479930.31	1348163.15	575.0
6	480472.23	1348327.86	573.0	37	479928.37	1348161.09	575.0
7	480470.92	1348347.70	573.0	38	479904.28	1348160.43	575.0
8	480468.62	1348349.55	573.0	39	479902.22	1348162.37	575.0
9	480411.67	1348333.12	572.0	40	479897.55	1348186.94	571.0
10	480405.92	1348338.01	572.0	41	479895.49	1348188.88	571.0
11	480358.94	1348380.37	575.0	42	479891.42	1348192.77	575.0
12	480358.41	1348399.56	575.0	43	479889.37	1348194.72	575.0
13	480346.93	1348380.05	575.0	44	479885.91	1348211.45	572.0
14	480346.41	1348399.24	575.0	45	479883.86	1348213.40	572.0
15	480121.85	1348294.91	572.0	46	479851.88	1348212.64	572.0
16	480116.20	1348292.02	572.0	47	479849.93	1348210.59	572.0
17	480032.18	1348206.19	572.0	48	479842.51	1348187.44	571.0
18	480028.27	1348200.49	572.0	49	479840.57	1348185.38	571.0
19	480015.78	1348173.04	572.0	50	479842.70	1348107.40	571.0
20	480014.16	1348167.41	572.0	51	479844.76	1348105.46	571.0
21	480002.09	1348077.26	572.0	52	479902.68	1348103.05	575.0
22	480003.96	1348075.00	572.0	53	479904.74	1348101.10	575.0
23	480118.80	1348133.40	576.0	54	479908.11	1348087.29	572.0
24	480409.44	1348051.59	572.0	55	479910.17	1348085.35	572.0
25	480414.73	1348056.63	572.0	56	479930.50	1348082.90	575.0
26	480437.05	1348053.95	572.0	57	479932.56	1348080.96	575.0
27	480436.64	1348064.76	570.0	58	479935.76	1348073.33	572.0
28	480443.47	1348058.89	570.0	59	479937.82	1348071.39	572.0
29	480414.16	1348288.48	572.0	60	479953.62	1348071.82	572.0
30	480434.07	1348297.22	570.0	61	479955.56	1348073.88	572.0
31	480439.62	1348303.27	570.0	62	480416.56	1348071.58	572.0

GENERAL NOTES

1. SEE DRAWING 99X-5500-G-00889 FOR GRADING PLAN GENERAL NOTES.

5982

KEYED NOTES

- (A) PROTECT UNDERGROUND GROUNDWATER LINES SERVING EXTRACTION WELLHOUSES EW-27 AND EW-28.
- (B) PROTECT OVERHEAD ELECTRIC LINES AND ASSOCIATED UTILITY POLES SUPPLYING POWER TO EXTRACTION WELLHOUSES EW-27 AND EW-28.
- (C) PROTECT EXTRACTION WELLHOUSE EW-27 AND EW-28 AND UNDERGROUND ELECTRICAL UTILITIES SERVING THE WELLHOUSES FROM UTILITY POLES #G74 AND #G77.
- (D) PROTECT 57-10-INCH LINE UNTIL AFTER CEMENT POND AND SWM POND ARE TAKEN OUT OF SERVICE.
- (E) PROTECT CE-6-INCH LINE UNTIL OU4 REMEDIATION EFFORT IS COMPLETED.

SCALE: 1"=40'

0 20 40 100 200

SCALE IN FEET

PRELIMINARY

NOT FOR CONSTRUCTION

REV. NO.	ISSUE OR REVISION PURPOSE - DESCRIPTION	DATE	REV. BY	APPR.
A	ISSUED FOR AGENCY REVIEW	6/16/05		

INITIALS AND DATE

UNITED STATES
DEPARTMENT OF ENERGY
FERNALD CLOSURE PROJECT

THIS DRAWING PREPARED BY

FLUOR FERNALD, INC.

PROJECT NAME

SOIL REMEDIATION

DRAWING TITLE

AREA 7 SILOS AND GENERAL AREA
SILOS PARKING LOT GRADING PLAN

APPROVALS

COGNIZANT ENG.		SAFETY ENG.	
CIVIL & STR.		MAINTENANCE	
ELECTRICAL		FIRE PROTECT.	
ENGINEER		WAO	
INSTRUMENT		SECURITY	
MECHANICAL		IOA	
		CONSTRUCTION	
CHECKED		CHARACTERIZATION	
APPROVED			

DRAWN BY	PROJECT NO.	DRAWING INDEX CODE NO.	SHEET NO.	REV. NO.
RAL LINDCREN	20500	99X-5500-G-00891	G-4	A
RES PROJECT NO.	FILENAME 99xg0891.dgn			

FCPSAE.DGN 5/30/03

99xg0892 CADD11 rabb7064 06/16/2005 02:18:25 PM

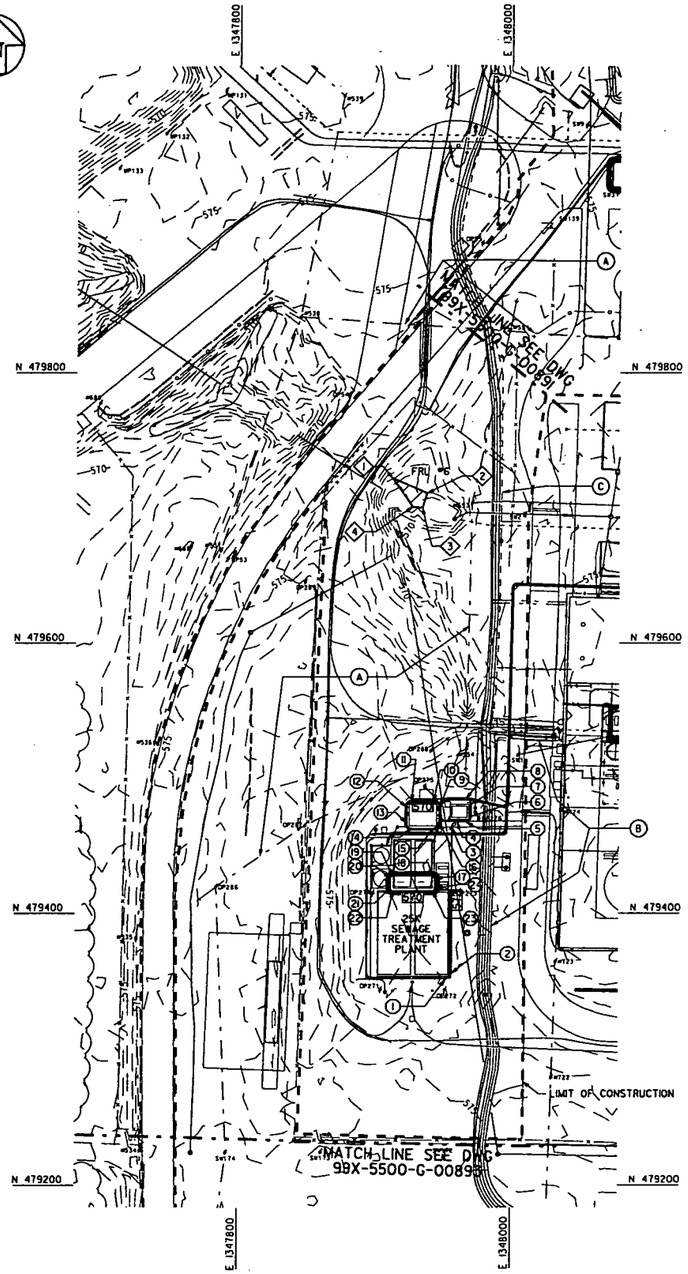

CONTROL POINTS			
PT NO.	NORTHING	EASTING	ELEV.
1	479351.98	1347953.39	572.0
2	479355.98	1347957.39	572.0
3	479463.81	1347957.39	572.0
4	479467.81	1347961.39	572.0
5	479467.81	1347967.40	572.0
6	479471.81	1347971.40	572.0
7	479480.81	1347971.40	572.0
8	479484.81	1347967.40	572.0
9	479478.81	1347948.40	570.0
10	479482.81	1347944.40	570.0
11	479482.81	1347928.41	570.0
12	479478.81	1347924.41	570.0
13	479466.81	1347924.40	570.0
14	479462.81	1347928.40	570.0
15	479462.81	1347944.39	570.0
16	479466.81	1347948.39	570.0
17	479425.87	1347945.65	569.0
18	479427.87	1347943.65	569.0
19	479427.87	1347915.16	569.0
20	479425.87	1347913.16	569.0
21	479418.87	1347913.16	569.0
22	479416.87	1347915.16	569.0
23	479416.87	1347943.65	569.0
24	479418.87	1347945.65	569.0

ABOVE FRL CONTROL POINTS			
PT NO.	NORTHING	EASTING	ELEV.
1	479722.07	1347913.77	561.0
2	479710.98	1347938.68	561.0
3	479700.34	1347935.22	561.0
4	479700.86	1347928.15	561.0

SCALE: 1"=40'

0 20 40 100 200

SCALE IN FEET

PRELIMINARY

NOT FOR CONSTRUCTION

GENERAL NOTES

1. SEE DRAWING 99X-5500-G-00889 FOR GRADING PLAN GENERAL NOTES.

5982

KEYED NOTES

(A) PROTECT OVERHEAD ELECTRIC LINES AND ASSOCIATED UTILITY POLES.

(B) PROTECT LEACHATE CONVEYANCE SYSTEMS (LCS) [CE-4-INCH/8-INCH HDPE] AND GW-12-INCH LINE

(C) PROTECT CE-6-INCH LINE UNTIL OU4 REMEDIATION EFFORT IS COMPLETED.

REV. NO.	ISSUE OR REVISION PURPOSE - DESCRIPTION	DATE	REV. BY	APPR.
A	ISSUED FOR AGENCY REVIEW	6/16/05		

INITIALS AND DATE

UNITED STATES DEPARTMENT OF ENERGY
FERNALD CLOSURE PROJECT

THIS DRAWING PREPARED BY

FLUOR FERNALD, INC.

PROJECT NAME

SOIL REMEDIATION

DRAWING TITLE

AREA 7 SILOS AND GENERAL AREA
OU1 ACCESS ROAD AREA (NORTH) GRADING PLAN

APPROVALS

COGNIZANT ENG.			SAFETY ENG.		
CIVIL & STR.			MAINTENANCE		
ELECTRICAL			FIRE PROTECT.		
ENGINEER			WAO		
INSTRUMENT			SECURITY		
MECHANICAL			QA		
			CONSTRUCTION		
CHECKED			CHARACTERIZATION		
APPROVED					

DRAWN BY	PROJECT NO.	DRAWING INDEX CODE NO.	SHEET NO.	REV. NO.
R.M. LINDCREK	20500	99X-5500-G-00892	G-5	A
RES PROJECT NO.	FILENAME 99xg0892.dgn			

FCPSAE.DGN 5/30/03

99xg0893 CADD11 rabb7064 06/16/2005 02:20:13 PM

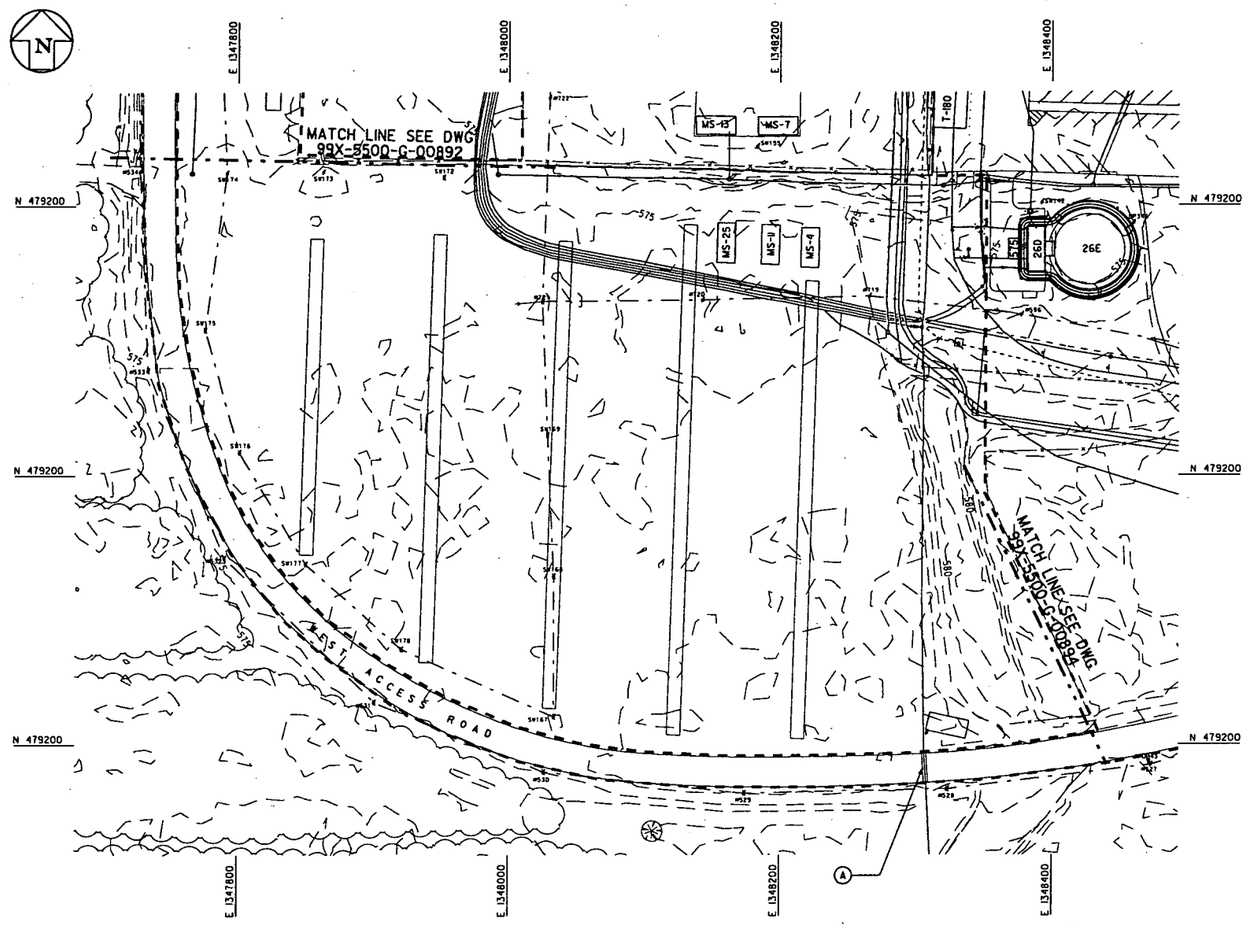

SCALE: 1"=40'

0 20 40 100 200

SCALE IN FEET

PRELIMINARY

NOT FOR CONSTRUCTION

GENERAL NOTES

1. SEE DRAWING 99X-5500-G-00889 FOR GRADING PLAN GENERAL NOTES.
2. REMOVE ASPHALT PAVEMENT FROM WEST ACCESS ROAD.

L 5982

KEYED NOTES

(A) PROTECT FG-6-INCH LINE

REV. NO.	ISSUE OR REVISION PURPOSE - DESCRIPTION	DATE	REV. BY	APPR.
A	ISSUED FOR AGENCY REVIEW	6/16/05		

INITIALS AND DATE

UNITED STATES DEPARTMENT OF ENERGY

FERNALD CLOSURE PROJECT

THIS DRAWING PREPARED BY

FLUOR FERNALD, INC.

PROJECT NAME

SOIL REMEDIATION

DRAWING TITLE

AREA 7 SILOS AND GENERAL AREA
OUI ACCESS ROAD (SOUTH) GRADING PLAN

APPROVALS

COGNIZANT ENG.		SAFETY ENG.	
CIVIL & STR.		MAINTENANCE	
ELECTRICAL		FIRE PROTECT.	
ENGINEER		WAO	
INSTRUMENT		SECURITY	
MECHANICAL		QA	
		CONSTRUCTION	
CHECKED		CHARACTERIZATION	
APPROVED			

DRAWN BY	PROJECT NO.	DRAWING INDEX CODE NO.	SHEET NO.	REV. NO.
R.J.L. LINDGREN	20500	99X-5500-G-00893	G-6	A
RES PROJECT NO.	FILENAME 99xg0893.dgn			

FCP5AE.DGN 5/30/03

99xg0894 CADD11 rabb7064 06/16/2005 02:25:39 PM

5982

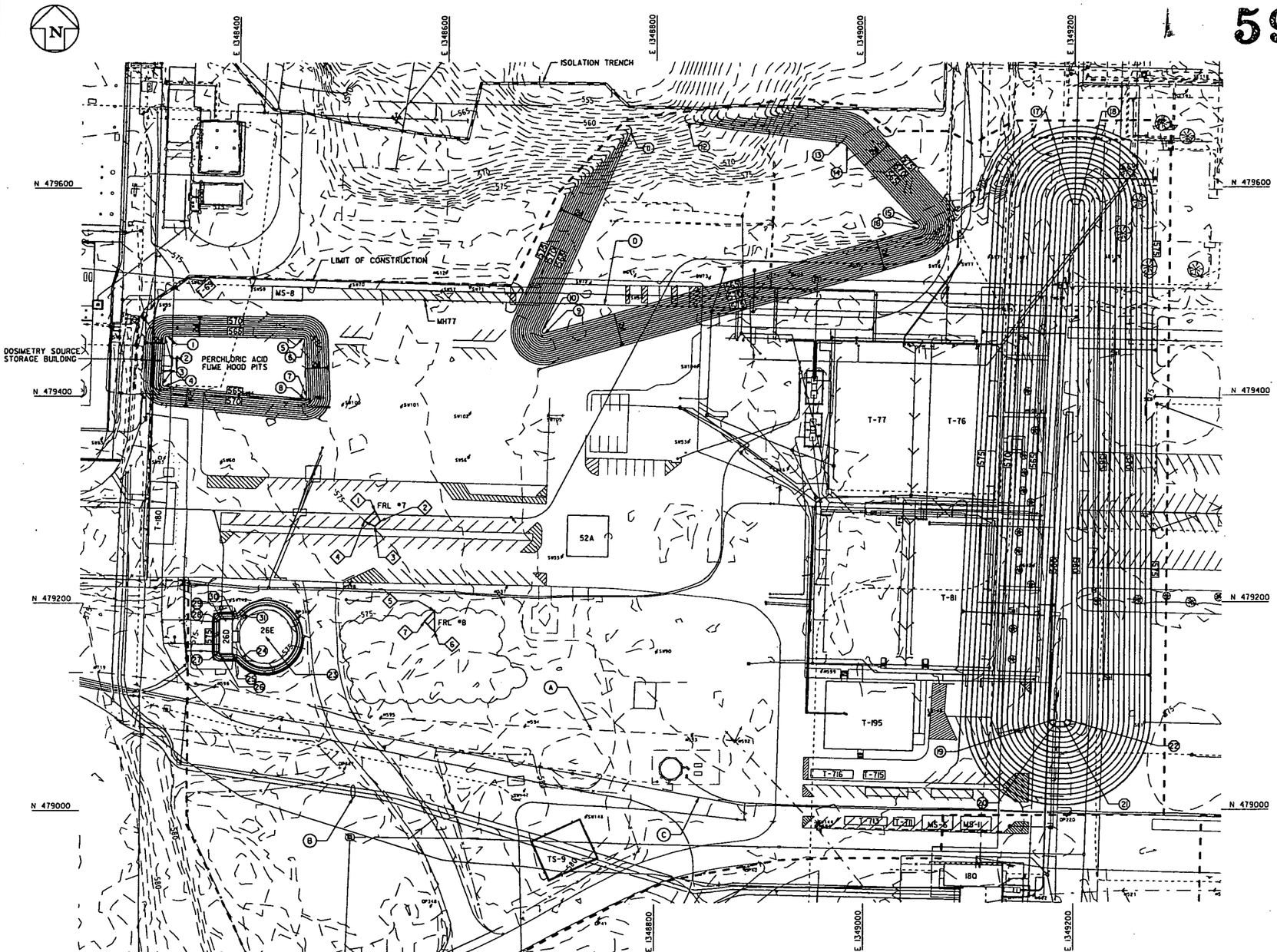

CONTROL POINTS			
PT NO.	NORTHING	EASTING	ELEV.
23	479167.59	1348426.92	572.0
24	479146.90	1348403.84	572.0
25	479150.23	1348396.37	572.0
26	479150.20	1348383.10	572.0
27	479152.20	1348381.09	572.0
28	479183.31	1348381.03	572.0
29	479185.32	1348383.03	572.0
30	479185.34	1348396.76	572.0
31	479188.57	1348404.10	572.0
32			

ABOVE FRL CONTROL POINTS			
PT NO.	NORTHING	EASTING	ELEV.
1	479289.42	1348530.98	573.0
2	479279.46	1348535.93	573.0
3	479274.31	1348530.95	573.0
4	479279.47	1348520.92	573.0
5	479192.53	1348588.37	573.0
6	479172.53	1348588.38	573.0
7	479182.51	1348578.35	573.0

SCALE: 1"=40'

0 20 40 100 200

SCALE IN FEET

PRELIMINARY

NOT FOR CONSTRUCTION

GENERAL NOTES

1. SEE DRAWING 99X-5500-G-00889 FOR GRADING PLAN GENERAL NOTES.
2. PERFORM ENERGY ISOLATION OF DW-6-INCH LINE EAST OF DOSIMETRY SOURCE STORAGE BUILDING. REMOVE UTILITY POLES SW94, SW96, SW97, SW98, AND SW100, AND EXTRACT MONITORING WELL 1823 AND PLUG SUBSEQUENT BORING PRIOR TO REMOVING PERCHLORIC ACID FUME HOODS.
3. EXCAVATE OVERBURDEN SOIL OVER 60-INCH STORM SEWER LINE AS NON-IMPACTED SOIL. STOCKPILE NON-IMPACTED SOIL FOR REUSE AS FILL MATERIAL. EXCAVATE SOIL ADJACENT TO AND UNDERNEATH THE 60-INCH STORM SEWER PIPE AS IMPACTED SOIL.

CONTROL POINTS			
PT NO.	NORTHING	EASTING	ELEV.
1	479458.33	1348330.00	564.0
2	479456.43	1348327.97	564.0
3	479418.83	1348325.67	564.0
4	479409.73	1348327.49	564.0
5	479456.02	1348461.45	564.0
6	479454.10	1348463.41	564.0
7	479399.72	1348465.57	564.0
8	479397.65	1348463.39	564.0
9	479460.62	1348693.63	561.0
10	479463.36	1348691.26	561.0
11	479652.76	1348830.17	561.0
12	479661.65	1348830.17	561.0
13	479643.89	1348976.72	561.0
14	479640.60	1348983.00	561.0
15	479564.24	1349050.80	561.0
16	479560.98	1349049.85	561.0
17	479583.77	1349200.90	561.0
18	479583.69	1349203.90	561.0
19	479086.93	1349181.98	561.0
20	479084.83	1349183.91	559.0
21	479084.63	1349190.77	559.0
22	479086.62	1349192.83	559.0

KEYED NOTES

A. PROTECT OVERHEAD ELECTRIC LINES AND ASSOCIATED UTILITY POLES

B. PROTECT CE1-10-INCH, TWX1- 24-INCH, AND GW1-20-INCH UNDERGROUND UTILITY LINES

C. PROTECT LEACHATE CONVEYANCE SYSTEM (LCS) [CE-4-INCH/8-INCH HDPE LINE]

D. PROTECT ST-30-INCH LINE UNTIL AFTER CEMENT POND AND SWM POND ARE TAKEN OUT OF SERVICE AND THE EXCAVATION OF THE PERCHLORIC ACID FUME HOOD PITS IS COMPLETE.

REV. NO.	ISSUE OR REVISION PURPOSE - DESCRIPTION	DATE	REV. BY	APPR.
A	ISSUED FOR AGENCY REVIEW	6/16/05		

INITIALS AND DATE

UNITED STATES DEPARTMENT OF ENERGY

FERNALD CLOSURE PROJECT

THIS DRAWING PREPARED BY

FLUOR FERNALD, INC.

PROJECT NAME

SOIL REMEDIATION

DRAWING TITLE

AREA 7 SILOS AND GENERAL AREA
OVERFLOW PARKING LOT AREA GRADING PLAN

APPROVALS

COGNIZANT ENG.		SAFETY ENG.	
CIVIL & STR.		MAINTENANCE	
ELECTRICAL		FIRE PROTECT.	
ENGINEER		WAO	
INSTRUMENT		SECURITY	
MECHANICAL		OA	
		CONSTRUCTION	
CHECKED		CHARACTERIZATION	
APPROVED			

DRAWN BY	PROJECT NO.	DRAWING INDEX CODE NO.	SHEET NO.	REV. NO.
R.M. LINDGREN	20500	99X-5500-G-00894	G-7	A
RES PROJECT NO.	FILENAME 99xg0894.dgn			

FCPSAE.DGN 5/30/03

99xg0895 CADD11 rabb7064 06/16/2005 02:27:52 PM

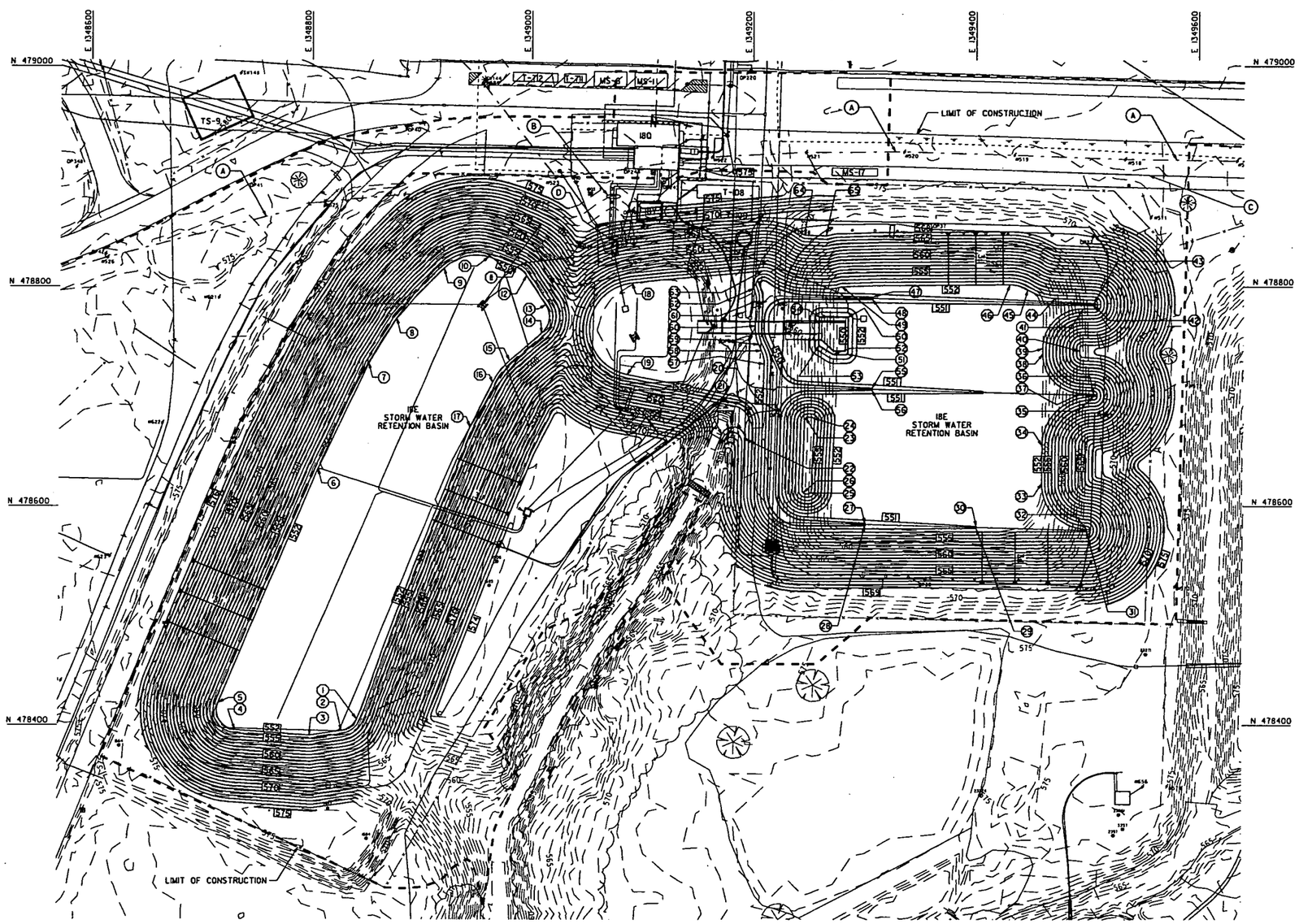

CONTROL POINTS

PT NO.	NORTHING	EASTING	ELEV.	PT NO.	NORTHING	EASTING	ELEV.	PT NO.	NORTHING	EASTING	ELEV.	PT NO.	NORTHING	EASTING	ELEV.	PT NO.	NORTHING	EASTING	ELEV.
1	478405.65	1348843.19	552.0	16	478713.08	1348965.57	552.0	31	478577.41	1349501.07	552.0	46	478802.14	1349431.02	552.0	61	478787.68	1349203.19	552.0
2	478395.15	1348829.36	552.0	17	478672.57	1348945.51	552.0	32	478579.40	1349501.12	552.0	47	478790.82	1349306.84	550.0	62	478799.11	1349200.81	552.0
3	478390.91	1348800.47	552.0	18	478803.30	1349090.87	553.0	33	478621.67	1349460.49	552.0	48	478788.82	1349306.78	550.0	63	478815.15	1349209.14	553.0
4	478395.78	1348733.84	552.0	19	478720.31	1349086.90	553.0	34	478655.95	1349460.71	552.0	49	478800.61	1349279.60	552.0	64	478847.57	1349246.37	568.0
5	478420.57	1348718.50	552.0	20	478700.48	1349187.02	553.0	35	478700.66	1349506.78	552.0	50	478772.63	1349284.85	550.0	65	478846.64	1349265.70	568.0
6	478634.57	1348807.02	552.0	21	478665.93	1349172.75	557.0	36	478703.34	1349495.06	552.0	51	478739.31	1349284.47	550.0	66			
7	478730.86	1348852.42	552.0	22	478661.72	1349194.01	557.0	37	478702.66	1349506.84	552.0	52	478739.10	1349272.31	550.0	67			
8	478771.55	1348878.31	552.0	23	478681.13	1349247.89	558.0	38	478739.38	1349461.12	552.0	53	478747.28	1349259.69	550.0	68			
9	478816.95	1348921.41	552.0	24	478681.06	1349255.16	558.0	39	478744.56	1349461.14	552.0	54	478772.92	1349260.32	550.0	69			
10	478826.89	1348961.31	552.0	25	478612.63	1349252.38	558.0	40	478741.88	1349494.13	563.0	55	478708.13	1349306.91	550.0	70			
11	478817.69	1348986.39	552.0	26	478612.93	1349246.03	558.0	41	478780.46	1349497.58	552.0	56	478706.13	1349306.86	550.0				
12	478810.12	1348995.79	552.0	27	478584.87	1349301.20	550.0	42	478783.35	1349506.71	551.0	57	478730.30	1349210.61	552.0				
13	478783.86	1349013.23	552.0	28	478582.88	1349301.14	550.0	43	478785.35	1349506.76	551.0	58	478742.49	1349208.12	552.0				
14	478757.66	1349009.64	552.0	29	478580.14	1349401.11	551.0	44	478789.82	1349472.08	552.0	59	478748.00	1349205.63	552.0				
15	478732.80	1348980.85	552.0	30	478582.14	1349401.16	551.0	45	478797.56	1349447.15	552.0	60	478765.21	1349202.28	552.0				

SCALE: 1"=40'

0 20 40 100 200

SCALE IN FEET

PRELIMINARY

NOT FOR CONSTRUCTION

GENERAL NOTES

1. SEE DRAWING 99X-5500-G-00889 FOR GRADING PLAN GENERAL NOTES.
2. PRIOR TO SWRB EXCAVATION:
   - REMOVED SITE STORM SEWER SYSTEM FROM SERVICE
   - PLUG 60-INCH STORM SEWER NORTH OF BUILDING 180
   - INSTALL CHECK DAM ACROSS SSOD SOUTH OF 60-INCH STORM SEWER OUTLET STRUCTURE
   - PLUG STORM WATER INLET LINES (ST-16-INCH, ST-16-INCH, AND ST-10-INCH) INSIDE STORM TRANSFER AND UNDER DRAIN PUMP STATION FOR WEST SWRB CHAMBER.

5982

KEYED NOTES

- (A) PROTECT OVERHEAD ELECTRIC LINES AND ASSOCIATED UTILITY POLES
- (B) PROTECT CE1-10-INCH AND GW1-8-INCH UNDERGROUND UTILITY LINES
- (C) PROTECT GW1-24-INCH HDPE UNDERGROUND FORCEMAIN
- (D) PROTECT STORM TRANSFER AND UNDERDRAIN PUMP STATION.

REV. NO.	ISSUE OR REVISION PURPOSE - DESCRIPTION	DATE	REV. BY	APPR.
A	ISSUED FOR AGENCY REVIEW	6/16/05		

INITIALS AND DATE

UNITED STATES
DEPARTMENT OF ENERGY
FERNALD CLOSURE PROJECT

THIS DRAWING PREPARED BY

FLUOR FERNALD, INC.

PROJECT NAME

SOIL REMEDIATION

DRAWING TITLE

AREA 7 SILOS AND GENERAL AREA
STORM WATER RETENTION BASIN
IMPACTED GRADING PLAN

APPROVALS

COGNIZANT ENG.		SAFETY ENG.	
CIVIL & STR.		MAINTENANCE	
ELECTRICAL		FIRE PROTECT.	
ENGINEER		WAO	
INSTRUMENT		SECURITY	
MECHANICAL		QA	
		CONSTRUCTION	
CHECKED		CHARACTERIZATION	
APPROVED			

DRAWN BY	PROJECT NO.	DRAWING INDEX CODE NO.	SHEET NO.	REV. NO.
R.M. LINDGREN	20500	99X-5500-G-00895	G-8	A
RES PROJECT NO.	FILENAME 99xg0895.dgn			

FEPSAE.DGN 5/30/03

99xg0XX1 CADD11 rabb7064 06/16/2005 02:51:02 PM

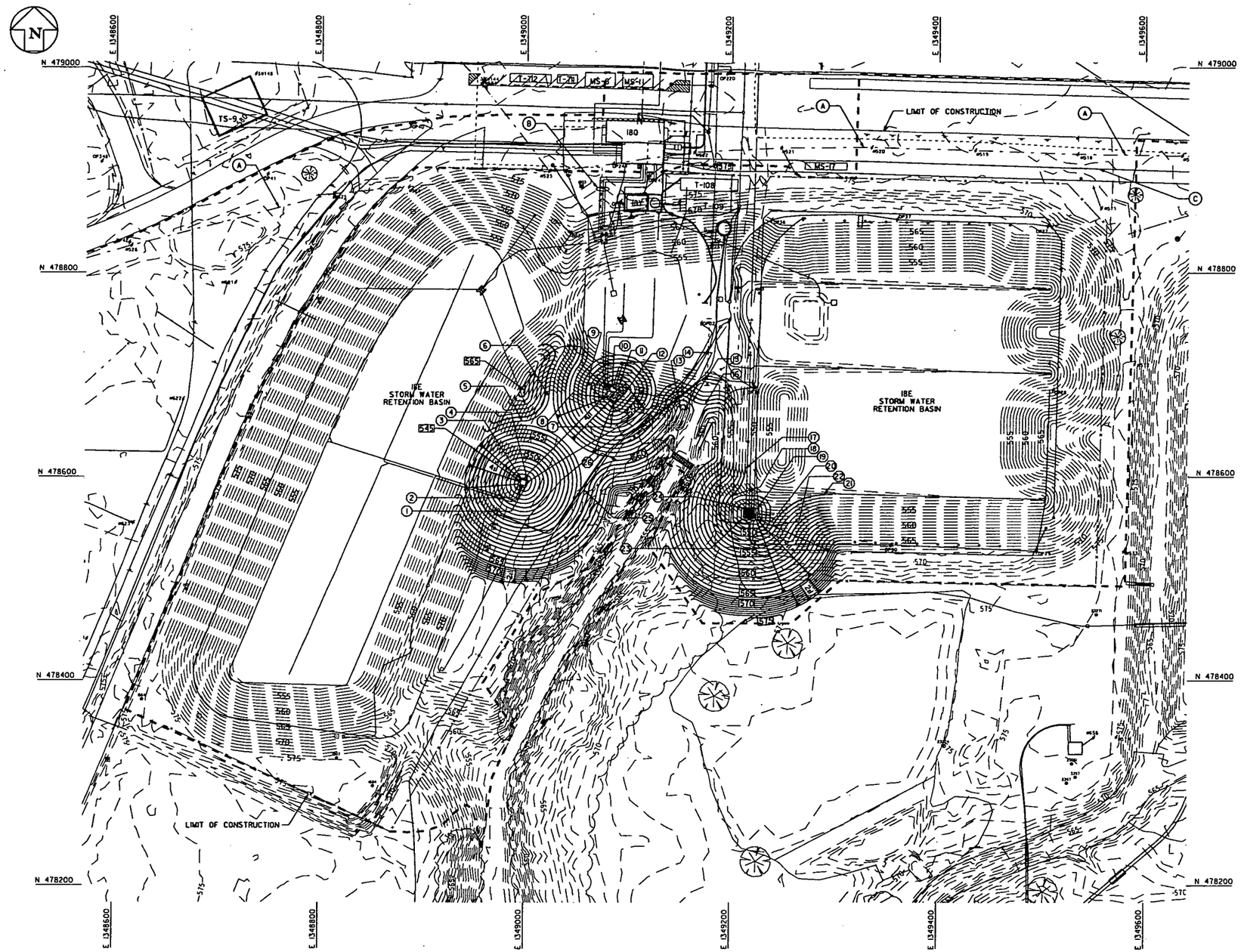

CONTROL POINTS											
PT NO.	NORTHING	EASTING	ELEV.	PT NO.	NORTHING	EASTING	ELEV.	PT NO.	NORTHING	EASTING	ELEV.
1	478589.95	1349000.22	545.0	10	478690.95	1349084.12	545.0	19	478569.31	1349225.97	546.0
2	478592.09	1348993.73	545.0	11	478691.79	1349091.75	545.0	20	478558.48	1349225.68	546.0
3	478598.58	1348995.87	545.0	12	478685.10	1349098.26	545.0	21	478582.85	1349290.34	550.0
4	478596.44	1349002.35	545.0	13	478665.55	1349150.89	559.0	22	478551.89	1349240.40	550.0
5	478654.79	1348996.78	559.0	14	478675.28	1349162.65	556.0	23	478558.89	1349210.85	546.0
6	478679.18	1349022.73	559.0	15	478675.28	1349162.65	556.0	24	478569.71	1349281.15	546.0
7	478672.14	1349086.02	545.0	16	478671.66	1349174.43	556.0	25	478587.20	1349057.96	559.0
8	478678.25	1349078.97	545.0	17	478608.32	1349213.77	550.0	26	478616.25	1349089.52	559.0
9	478685.92	1349079.38	545.0	18	478582.14	1349201.06	550.0	27			

SCALE: 1"=40'

0 20 40 100 200

SCALE IN FEET

PRELIMINARY

NOT FOR CONSTRUCTION

GENERAL NOTES

1. SEE DRAWING 99X-5500-G-00889 FOR GRADING PLAN GENERAL NOTES.
2. EXCAVATE OVERBURDEN SOIL AROUND TWO INSPECTION SUMPS AND ONE UNDERDRAIN SUMP FROM SURFACE TO ELEVATION 551 AS NON-IMPACTED SOIL. STOCKPILE NON-IMPACTED SOIL FOR REUSE AS FILL MATERIAL. EXCAVATE SOIL BELOW ELEVATION 551 AS IMPACTED SOIL.

5982

KEYED NOTES

(A) PROTECT OVERHEAD ELECTRIC LINES AND ASSOCIATED UTILITY POLES

(B) PROTECT CE1-10-INCH AND GW1-8-INCH UNDERGROUND UTILITY LINES

(C) PROTECT GW1-24-INCH HDPE UNDERGROUND FORCEMAIN

REV. NO.	ISSUE OR REVISION PURPOSE - DESCRIPTION	DATE	REV. BY	APPR.
A	ISSUED FOR AGENCY REVIEW	5/16/05		

INITIALS AND DATE

UNITED STATES DEPARTMENT OF ENERGY

FERNALD CLOSURE PROJECT

THIS DRAWING PREPARED BY

FLUOR FERNALD, INC.

PROJECT NAME

SOIL REMEDIATION

DRAWING TITLE

AREA 7 SILOS AND GENERAL AREA
STORM WATER RETENTION BASIN
NON-IMPACTED GRADING PLAN

APPROVALS

COGNIZANT ENG.		SAFETY ENG.	
CIVIL & STR.		MAINTENANCE	
ELECTRICAL		FIRE PROTECT.	
ENGINEER		WAO	
INSTRUMENT		SECURITY	
MECHANICAL		QA	
		CONSTRUCTION	
CHECKED		CHARACTERIZATION	
APPROVED			

DRAWN BY	PROJECT NO.	DRAWING INDEX CODE NO.	SHEET NO.	REV. NO.
R.M. LINDGREN	20500	99X-5500-G-00XXI	G-9	A
RES. PROJECT NO.	FILENAME 99xg0XX1.dgn			

FCPSAE.DGN 5/30/03

99xg0896 CADD11 rabb7064 06/16/2005 02:46:18 PM

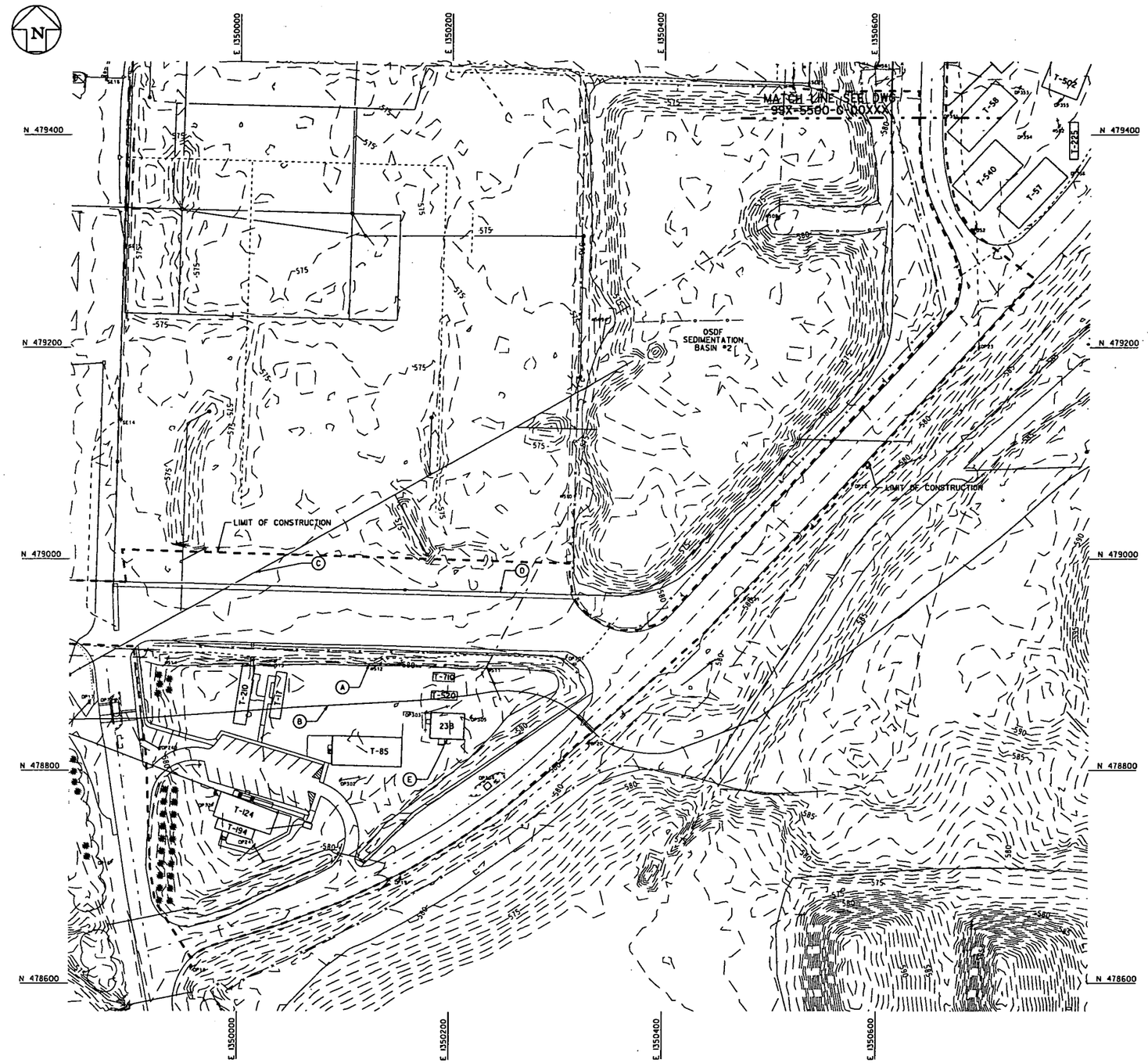

SCALE: 1"=40'

0 20 40 100 200

SCALE IN FEET

PRELIMINARY

NOT FOR CONSTRUCTION

GENERAL NOTES

1. SEE DRAWING 99X-5500-G-00889 FOR GRADING PLAN GENERAL NOTES.

5982

KEYED NOTES

(A) PROTECT OVERHEAD ELECTRIC LINES AND ASSOCIATED UTILITY POLES

(B) PROTECT GW1-24-INCH UNDERGROUND FORCED MAIN

(C) PROTECT ST-72-INCH X 44-INCH UNDERGROUND ARCH PIPE

(D) PROTECT LEACHATE CONVEYANCE SYSTEM (LCS) WW-4-INCH/8-INCH HDPE

(E) PROTECT BUILDING 23B TELECOMMUNICATION BUILDING

REV. NO.	ISSUE OR REVISION PURPOSE - DESCRIPTION	DATE	REV. BY	APPR.
A	ISSUED FOR AGENCY REVIEW	6/16/05		

INITIALS AND DATE

UNITED STATES DEPARTMENT OF ENERGY
FERNALD CLOSURE PROJECT

THIS DRAWING PREPARED BY

FLUOR FERNALD, INC.

PROJECT NAME

SOIL REMEDIATION

DRAWING TITLE

AREA 7 SILOS AND GENERAL AREA
SECURITY TRAILER PARK GRADING PLAN

APPROVALS

COGNIZANT ENG.		SAFETY ENG.	
CIVIL & STR.		MAINTENANCE	
ELECTRICAL		FIRE PROTECT.	
ENGINEER		WAO	
INSTRUMENT		SECURITY	
MECHANICAL		QA	
		CONSTRUCTION	
CHECKED		CHARACTERIZATION	
APPROVED			

DRAWN BY	PROJECT NO.	DRAWING INDEX CODE NO.	SHEET NO.	REV. NO.
R.M. LINDCREK	20500	99X-5500-G-00896	G-10	A
RES PROJECT NO.	FILENAME 99xg0896.dgn			

FCPSAE.DGN 5/30/03

99xg0897 CADD11 rabb7064 06/16/2005 02:34:25 PM

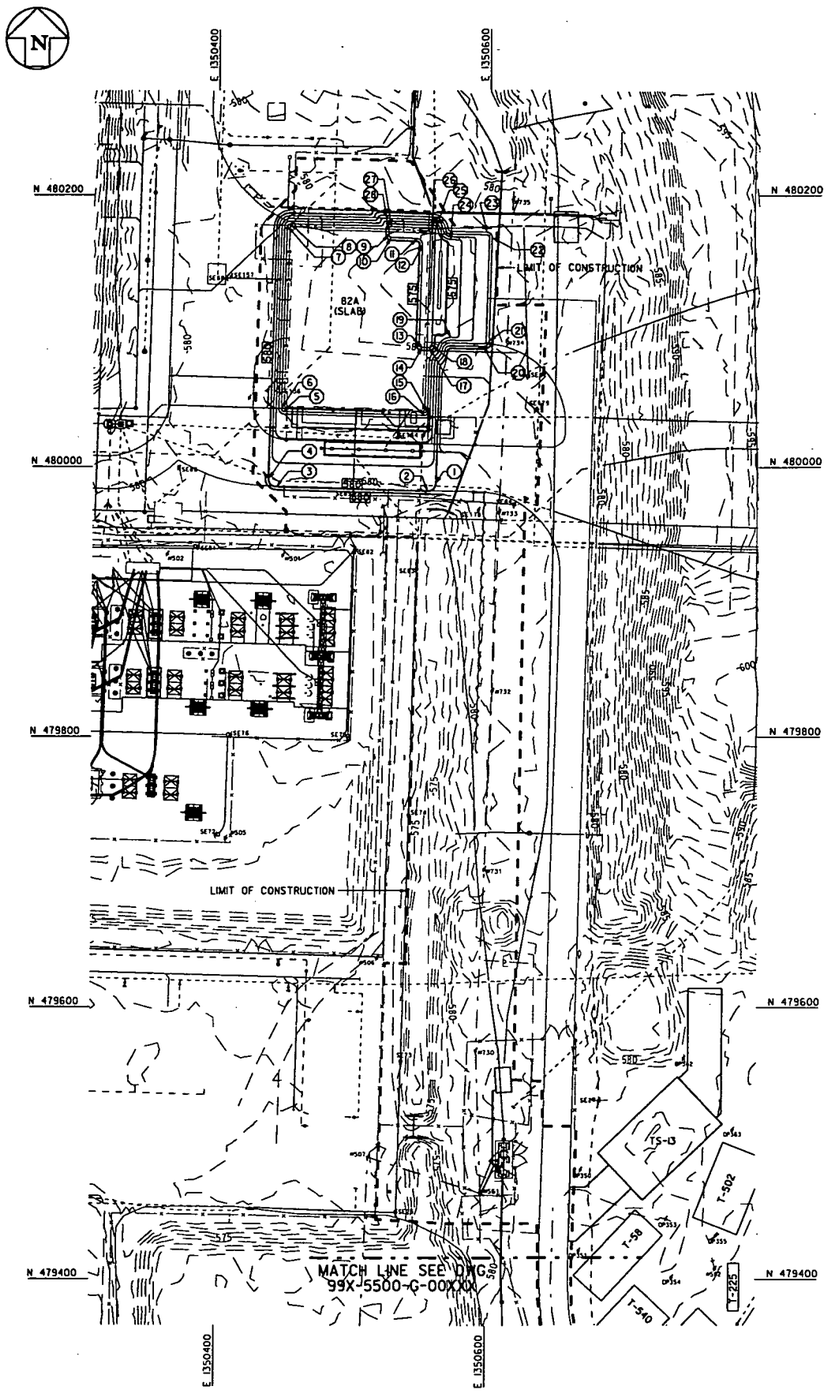

CONTROL POINTS			
PT NO.	NORTHING	EASTING	ELEV.
1	479987.82	1350560.79	580.0
2	479981.99	1350554.63	580.0
3	479985.06	1350442.66	580.0
4	479991.22	1350436.83	580.0
5	480040.93	1350448.19	576.0
6	480042.98	1350446.25	576.0
7	480176.93	1350449.92	576.0
8	480178.87	1350451.97	576.0
9	480170.72	1350524.83	574.0
10	480168.72	1350526.78	574.0
11	480168.20	1350545.82	574.0
12	480164.09	1350549.71	574.0
13	480090.18	1350547.69	574.0
14	480088.12	1350549.69	574.0
15	480040.02	1350554.21	576.0
16	480038.08	1350552.16	576.0
17	480088.12	1350555.22	574.0
18	480090.07	1350557.22	574.0
19	480095.61	1350571.38	576.0
20	480088.99	1350595.20	579.0
21	480092.90	1350599.30	579.0
22	480168.85	1350601.12	579.0
23	480172.95	1350597.23	579.0
24	480167.64	1350570.94	576.0
25	480174.05	1350559.23	574.0
26	480176.10	1350557.28	574.0
27	480176.73	1350526.87	574.0
28	480174.73	1350524.83	574.0

SCALE: 1"=40'

0 20 40 100 200

SCALE IN FEET

PRELIMINARY

NOT FOR CONSTRUCTION

GENERAL NOTES

1. SEE DRAWING 99X-5500-G-00889 FOR GRADING PLAN GENERAL NOTES.

5982

REV. NO.	ISSUE OR REVISION PURPOSE - DESCRIPTION	DATE	REV. BY	APPR.
A	ISSUED FOR AGENCY REVIEW	6/16/05		

INITIALS AND DATE

UNITED STATES DEPARTMENT OF ENERGY

FERNALD CLOSURE PROJECT

THIS DRAWING PREPARED BY

FLUOR FERNALD, INC.

PROJECT NAME

SOIL REMEDIATION

DRAWING TITLE

AREA 7 SILOS AND GENERAL AREA
BUILDING 82A GRADING PLAN

APPROVALS

COGNIZANT ENG.		SAFETY ENG.	
CIVIL & STR.		MAINTENANCE	
ELECTRICAL		FIRE PROTECT.	
ENGINEER		WAO	
INSTRUMENT		SECURITY	
MECHANICAL		QA	
		CONSTRUCTION	
CHECKED		CHARACTERIZATION	
APPROVED			

DRAWN BY	PROJECT NO.	DRAWING INDEX CODE NO.	SHEET NO.	REV. NO.
R.M. LINDGREN	20500	99X-5500-G-00897	G-11	A
RES PROJECT NO.	FILENAME 99xg0897.dgn			

FCPSAE.DGN 5/30/03

99xg0898 CADD11 rabb7064 06/16/2005 02:36:52 PM

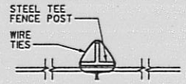

PLAN

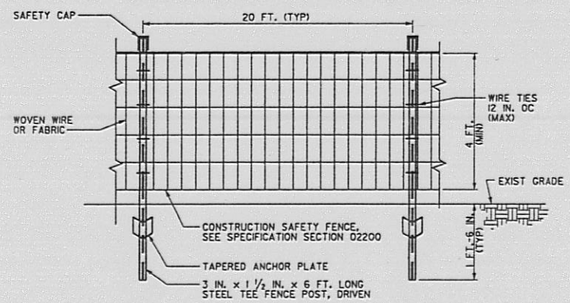

ELEVATION

NOTE:

INSTALL SAFETY CAPS ON T-POSTS THAT ARE LESS THAN 4 FEET IN HEIGHT ABOVE-GRADE.

CONSTRUCTION SAFETY FENCE DETAIL

NTS

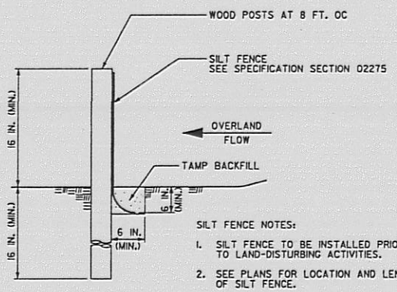

SILT FENCE NOTES:

1. SILT FENCE TO BE INSTALLED PRIOR TO LAND-DISTURBING ACTIVITIES.
2. SEE PLANS FOR LOCATION AND LENGTH OF SILT FENCE.
3. WOOD POSTS SHALL BE 2 IN. X 2 IN. (MIN.) OF OAK OR SIMILAR HARDWOOD.
4. BACKFILL MATERIAL IN ACCORDANCE WITH SPECIFICATION SECTION 02200.

SILT FENCE DETAIL

NTS

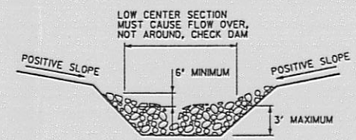

CROSS SECTION

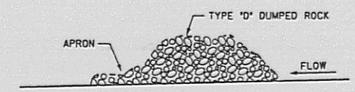

PROFILE

GENERAL NOTES:

1. THE CHECK DAM SHALL BE CONSTRUCTED OF TYPE "D" DUMPED ROCK FILL, PLACED SO THAT IT COMPLETELY COVERS THE WIDTH OF THE CHANNEL.
2. THE TOP OF THE CHECK DAM SHALL BE CONSTRUCTED SO THAT THE CENTER IS APPROXIMATELY 6 INCHES LOWER THAN THE OUTER EDGES, SO WATER WILL FLOW ACROSS THE CENTER AND NOT AROUND THE ENDS.
3. THE MAXIMUM HEIGHT OF THE CHECK DAM AT THE CENTER OF THE WEIR SHALL NOT EXCEED 3 FEET.
4. PLACE CHECK DAMS AS SHOWN ON THE PLANS.

CHECK DAM DETAIL

NTS

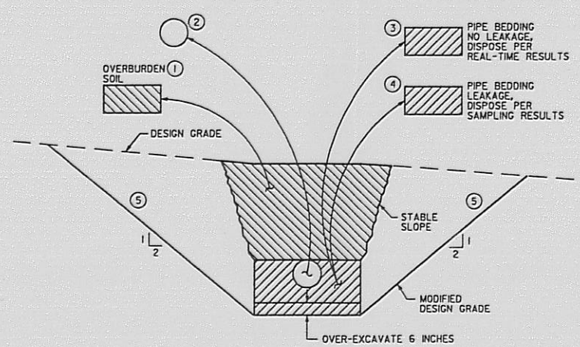

1. EXCAVATE OVERBURDEN SOIL FROM ABOVE THE PIPE (SEE NOTE 1) AND DISPOSE OF IN ACCORDANCE WITH TECHNICAL SPECIFICATION SECTION 02205. SEE LATEST REVISION OF UNDERGROUND UTILITY GRID DRAWINGS FOR LOCATIONS AND ELEVATIONS OF UTILITIES.
2. EXCAVATE THE PIPE AND PERFORM A VISUAL INSPECTION OF THE PIPE. PIPE FREE OF VISIBLE PROCESS RESIDUE SHALL BE DISPOSED OF IN ACCORDANCE WITH SPECIFICATION SECTION 02205. DISPOSE OF PROCESS PIPE THAT IS DEFORMED, CLOSED OR OTHERWISE HINDERS VISUAL INSPECTION, OR CANNOT BE CLEANED OF VISIBLE PROCESS RESIDUE, AS ABOVE-WAC DEBRIS IN ACCORDANCE WITH SPECIFICATION SECTION 02205.
3. IF PIPE BEDDING SHOWS NO VISIBLE SIGNS OF PIPE LEAKAGE:
   1. PERFORM REAL-TIME MONITORING OF THE PIPE BEDDING IN THE TRENCH USING EMS OR ADJACENT TO THE TRENCH USING THE HPGE TRI-POD ON CIRCULAR SOIL PADS.
   2. EXCAVATE PIPE BEDDING, AND OVER-EXCAVATE 6 INCHES BELOW THE PIPE BEDDING.
   3. MANAGE MATERIAL BASED ON THE RESULTS OF REAL-TIME MONITORING, IN ACCORDANCE WITH SPECIFICATION SECTION 02205.
4. IF PIPE BEDDING SHOWS VISIBLE SIGNS OF PIPE LEAKAGE:
   1. PERFORM PHYSICAL SAMPLING OF THE PIPE BEDDING.
   2. EXCAVATE PIPE BEDDING, AND OVER-EXCAVATE 6 INCHES BELOW THE PIPE BEDDING, OR AS NECESSARY TO REMOVE VISIBLE SIGNS OF PIPE LEAKAGE.
   3. MANAGE MATERIAL BASED ON SAMPLING RESULTS, IN ACCORDANCE WITH TECHNICAL SPECIFICATION SECTION 02205.
5. EXCAVATE SIDE SLOPES NO STEEPER THAN 2H:1V TO STABILIZE EXCAVATED UTILITY TRENCHES AND TO PROVIDE A MODIFIED DESIGN GRADE. DISPOSE OF EXCAVATED MATERIAL IN ACCORDANCE WITH SPECIFICATION SECTION 02205.

NOTES:

1. THE TERM 'PIPE' IS USED AS A GENERIC REFERENCE TO UNDERGROUND UTILITIES.

EXCAVATION OF UTILITIES BELOW DESIGN GRADE

NTS

PRELIMINARY
NOT FOR CONSTRUCTION

GENERAL NOTES

5982

REV. NO.	ISSUE OR REVISION PURPOSE - DESCRIPTION	DATE	REV. BY	APPR.
A	ISSUED FOR AGENCY REVIEW	6/16/05		

INITIALS AND DATE

UNITED STATES
DEPARTMENT OF ENERGY
FERNALD CLOSURE PROJECT

THIS DRAWING PREPARED BY
FLUOR FERNALD, INC.

PROJECT NAME
SOIL REMEDIATION

DRAWING TITLE
AREA 7 SILOS AND GENERAL AREA
CIVIL DETAILS

APPROVALS

COGNIZANT ENG.			SAFETY ENG.		
CIVIL & STR.			MAINTENANCE		
ELECTRICAL			FIRE PROTECT.		
ENGINEER			WAO		
INSTRUMENT			SECURITY		
MECHANICAL			QA		
			CONSTRUCTION		
CHECKED			CHARACTERIZATION		
APPROVED					

DRAWN BY	PROJECT NO.	DRAWING INDEX CODE NO.	SHEET NO.	REV. NO.
R.M. LINDGREN	20590	99X-5500-G-00898	G-12	A
RES. PROJECT NO.	FILENAME 99xg0898.dgn			

FCPSAE.DGN 5/30/03

5982

AREA 7 SILOS AND GENERAL AREA

UTILITY GRID AND TECHNICAL REFERENCE DRAWING PACKAGE

FOR 20500

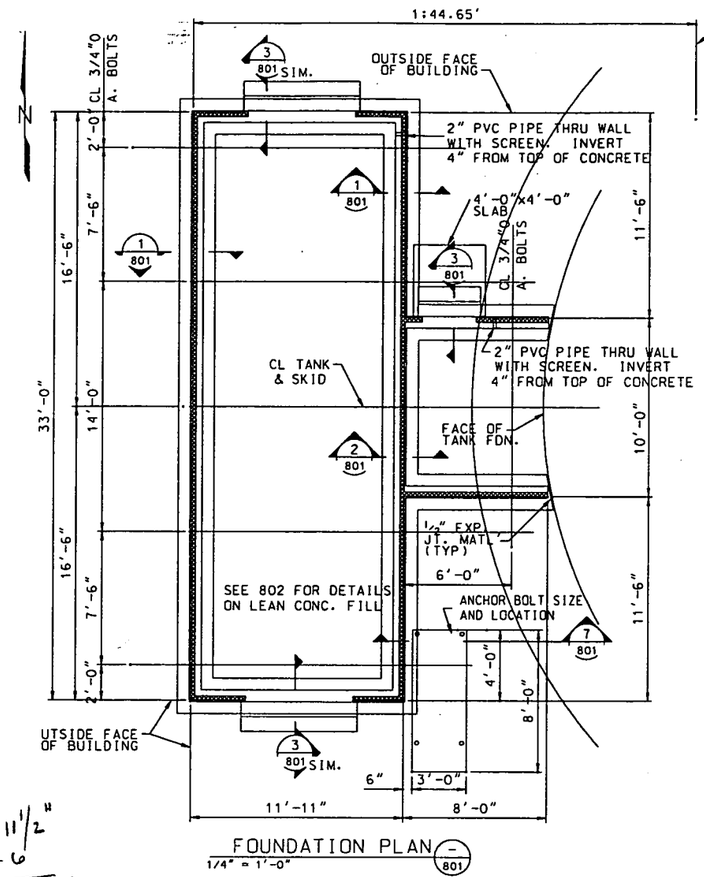

FOUNDATION PLAN (-/801)
1/4" = 1'-0"

575'-11 1/2"
- 3'-6
572'-5 1/2"

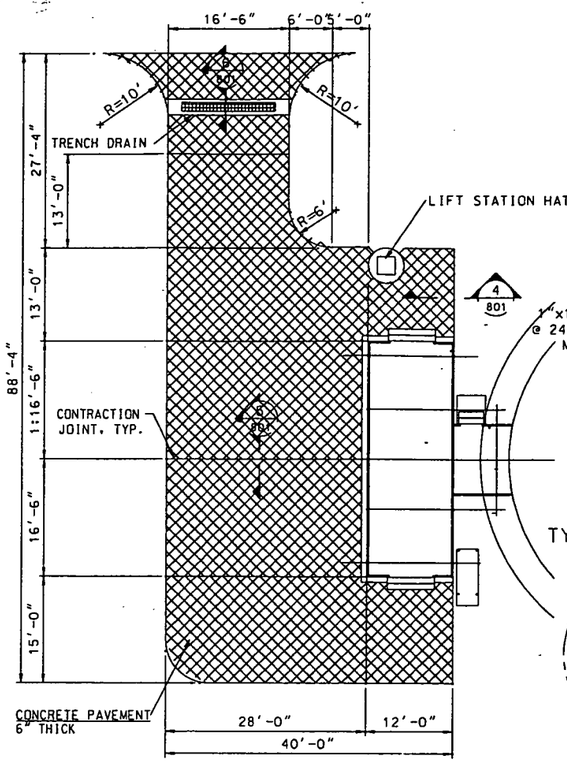

PAVEMENT PLAN (-/801)
1"=10'-0"

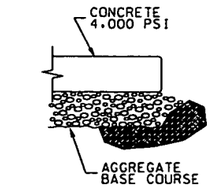

PAVEMENT SECTION (4/801)
1"=1'-0"

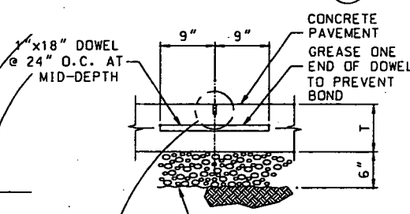

TYPICAL CONTRACTION JT. (5/801)
1"=1'-0"

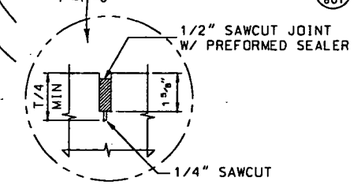

GENERAL STRUCTURAL NOTES

GENERAL:

1. ALL EMBEDDED PIPE, CONDUITS AND OTHER EMBEDDED ITEMS REQUIRED FOR THE WORK OF THE VARIOUS TRADES ARE NOT SHOWN ON THE STRUCTURAL DRAWINGS. THE CONTRACTOR SHALL REFER TO DRAWINGS OF THE VARIOUS TRADES FOR ALL INSERTS, ANCHOR BOLTS, CONDUITS, PIPES AND ANY OTHER NON-STRUCTURAL ITEMS EMBEDDED IN CONCRETE.
2. THE CONTRACTOR SHALL BE SOLELY RESPONSIBLE FOR THE COORDINATION OF THE WORK OF THE VARIOUS TRADES TO AVOID CONFLICT OR INTERFERENCE WITH REINFORCING STEEL OR OTHER STRUCTURAL MEMBERS.
3. THE LOCATION OF ALL UNDERGROUND UTILITIES SHALL BE IDENTIFIED IN THE FIELD BY THE CONTRACTOR BEFORE CONSTRUCTION COMMENCES.
4. THE CONTRACTOR SHALL VERIFY ALL DIMENSIONS IN THE FIELD PRIOR TO FABRICATION OR CONSTRUCTION.
5. SEE DRAWING 102 FOR GUARD POST LOCATIONS.

CONCRETE CONSTRUCTION:

1. UNLESS NOTED OTHERWISE, ALL CAST-IN-PLACE CONCRETE SHALL BE NORMAL WEIGHT, AIR-ENTRAINED CONCRETE WITH A MINIMUM COMPRESSIVE STRENGTH OF 3000 POUNDS PER SQUARE INCH AT 28 DAYS. TYPE I PORTLAND CEMENT WILL BE USED WITH A MAXIMUM AGGREGATE SIZE OF 1" AND 6% ±1% AIR ENTRAINMENT. ALL CONCRETE WILL HAVE A MAXIMUM WATER/CEMENT (W/C) RATIO OF 0.48.
2. ALL CONCRETE FLATWORK SHALL HAVE A SLOPE OF 1/8" PER FOOT MINIMUM UNLESS NOTED OTHERWISE.
3. REINFORCING BARS SHALL BE NEW BILLET STEEL CONFORMING TO A.S.T.M. A615, GRADE 60, DEFORMED.
4. DETAIL, FABRICATE AND ERECT REINFORCEMENT BARS, INCLUDING BAR SUPPORTS, SPACERS, ETC. IN ACCORDANCE WITH "DETAILING OF CONCRETE REINFORCEMENT" (A.C.I. 315-80, REV. 1986).
5. UNLESS OTHERWISE NOTED, ALL LAP SPLICES SHALL BE CLASS B CONFORMING TO ACI 318-89.
6. CHAMFER EXPOSED CONCRETE EDGES 3/4" x 3/4" UNLESS OTHERWISE NOTED.
7. CONCRETE WORK SHALL BE COORDINATED WITH THE MECHANICAL, EQUIPMENT, AND ELECTRICAL WORK TO ASSURE THAT ALL AFFECTED PIPES, CONDUITS INSERTS, ETC. ARE IN PLACE AND VERIFIED BEFORE PLACING CONCRETE.
8. CONCRETE COVER FOR REINFORCING BARS SHALL CONFORM TO THE FOLLOWING UNLESS INDICATED OTHERWISE ON THE DRAWINGS:
   - -CONCRETE EXPOSED TO WEATHER OR IN CONTACT WITH GROUND - 2 INCHES
   - -CONCRETE CAST AGAINST EARTH- 3 INCHES
   - -CONCRETE NOT EXPOSED TO WEATHER OR IN CONTACT WITH THE GROUND: SLABS AND WALLS- 1 1/2 INCHES
   - -CONCRETE NOT EXPOSED TO WEATHER OR IN CONTACT WITH THE GROUND: BEAMS AND COLUMNS- 1 1/2 INCHES
9. COORDINATE LOCATION OF STEEL ANCHOR BOLTS WITH STEEL FABRICATOR PRIOR TO INSTALLATION IN FIELD. ANCHOR BOLTS WILL BE INSTALLED AFTER SKID IS SET.
10. ALL ANCHOR BOLT HOLE DIAMETERS TO BE 1/4" GREATER THAN THE ANCHOR BOLTS.
11. CONTRACTOR SHALL PROVIDE SLEEVES FOR ALL WALL PENETRATIONS (PIPING, CONDUIT, ETC.)

SUBGRADE AND BASE PREPARATION:

1. SEE EXCAVATION AND DEWATERING SAFE WORK PLAN FOR INFORMATION ON SUBGRADE AND BASE PREPARATION.
2. AGGREGRATE BASE COURSE SHALL BE ODOT304.

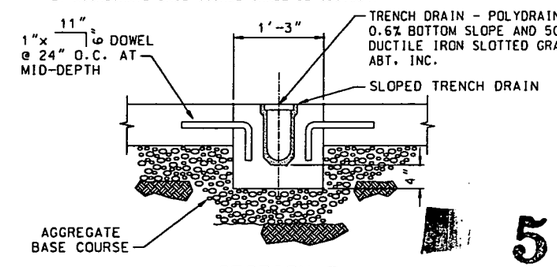

SECTION (6/801)
1" = 1'-0"

598

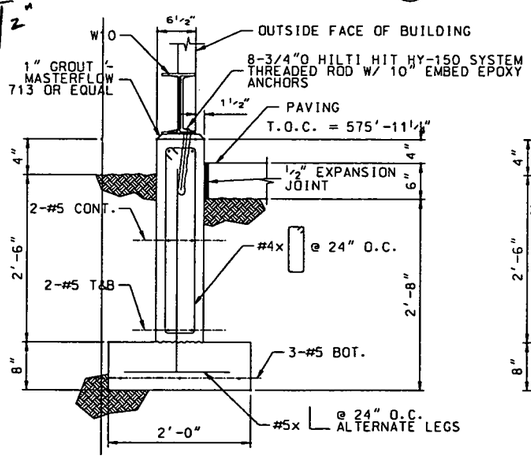

SECTION (1/801)
1" = 1'-0"

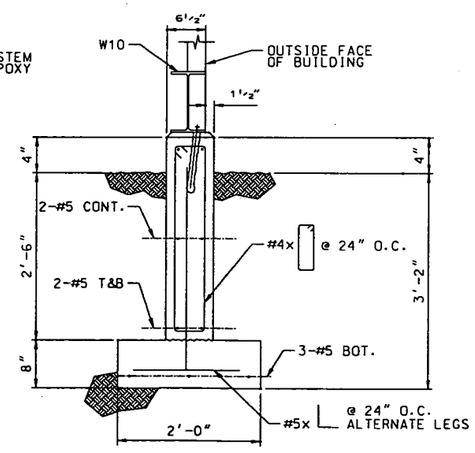

SECTION (2/801)
1" = 1'-0"

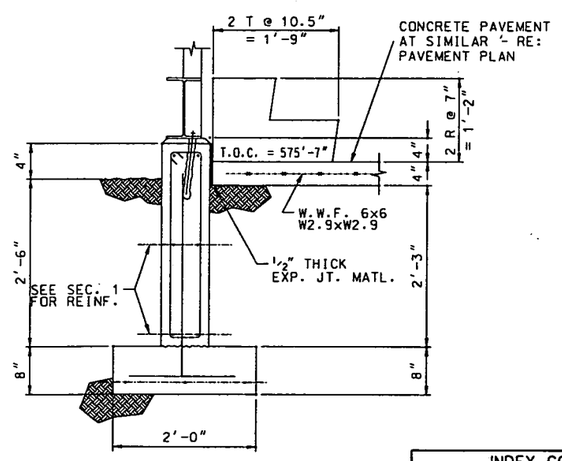

SECTION (3/801)
1" = 1'-0"

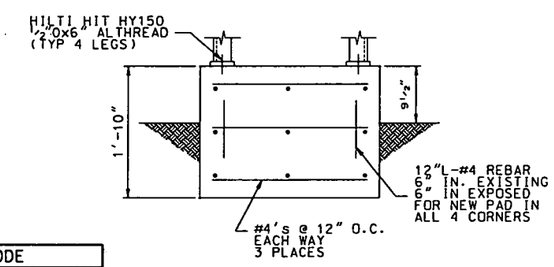

SECTION (7/801)
1" = 1'-0"

INDEX CODE				
PL. & AR.	ORIG.	CL.	SER. NO.	REV.
26A	5500	S	00265	6

NSC-620-ENG-055X-REV 0

#1747-DWG 801 -REV 5

REVISIONS							
6	ENTERED INTO FEMP SYSTEM. AS-BUILT PER DCN NO. 3221-042	SJS	1/24/00			GEP	1/25/00
5	CHG: PER. AS-BUILT DRAWING	J.B.	11/12/99	J.B.	11/12/99	JWN	11/12/99
4	MISC. CHANGES	JWN	4-9-99				
3	Incorporated DCN 3221-027 (Move tank and building south 15'), raised grade 1', changd notes	JWN	3-29-99				
2	MISC. CHANGES TO ADDRESS SUBMITTAL COMMENTS	AHA	2-4-99				
1	ADMINISTRATIVE REVISION TO CHANGE REVISION NUMBER	AHA	2-4-99				
NO.	DESCRIPTION	BY	DATE	CHK.	DATE	APPR.	DATE

P.E. STAMP LOCATED HERE ON VENDOR'S COPY

DRAWING STATUS	BY		DATE
PRELIMINARY			
FOR COMMENT/APPROVAL			
APPROVED	K. W. Conroy		12/07/98
REVISED and APPROVED			

DRAWING IS NOT APPROVED FOR CONSTRUCTION UNLESS SIGNED AND DATED. ALL PRINTS ARE TO BE DESTROYED HAVING AN EARLIER DATE AND / OR REVISION NUMBER.

DRAWING INFORMATION	BY		DATE
DESIGN BY:	JWN		12/07/98
DRAWN BY:	AET		12/07/98
CHECKED BY:	JWN		12/07/98
REVIEWED BY:	J.R.Briggs		12/07/98
SCALE: AS SHOWN	PLOT SCALE: 1=1		
PLOT DATE:			

FILE NAME: /RTG/WATER_STORAGE/801.S01

WATER STORAGE TANK PROJECT

FOUNDATION AND PAVING PLANS

PROJECT LOCATION: FERNALD, OHIO — PROJECT NO. 980314

RESOURCE TECHNOLOGIES GROUP, INC.
LAKEWOOD, COLORADO 80235 (303) 969-8511

CLIENT: FLUOR DANIEL FERNALD, FERNALD, OHIO

REVISION NO. 6 — DRAWING NO. 801

REV. 6 - DCN 3221-042 IN REV. BLK

801 CADD9 paul7461 05/13/2005 10:07:39 AM

5982

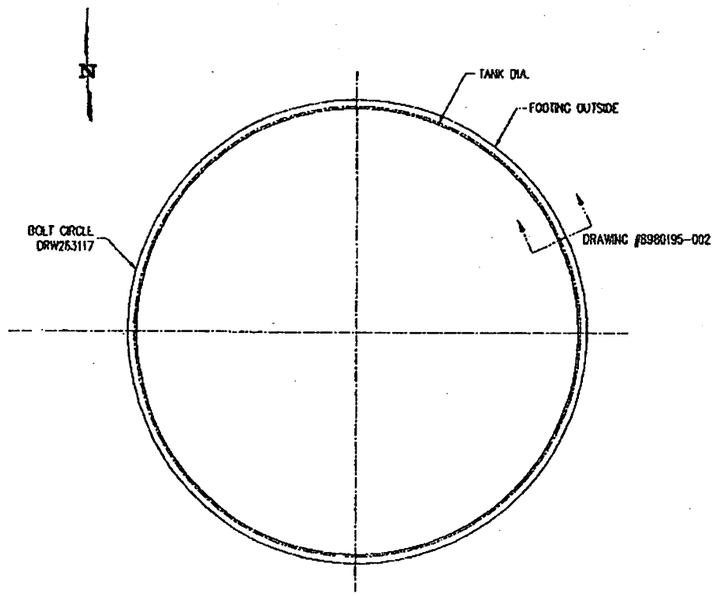

TANK FOUNDATION PLAN
SCALE: NONE

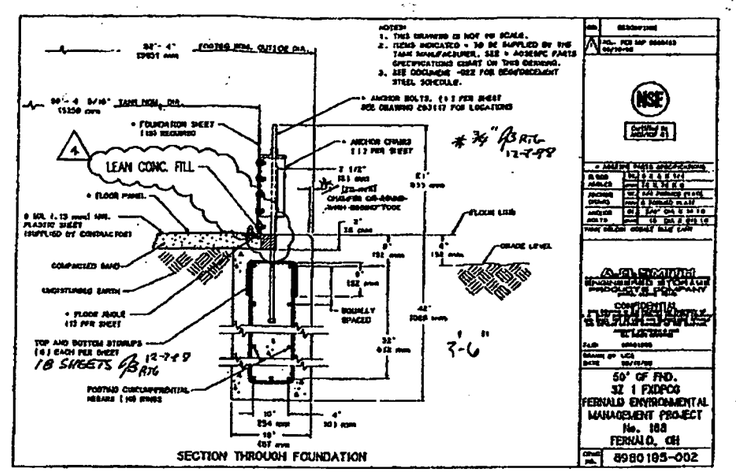

575'-6"
3'-6"
572'-0"

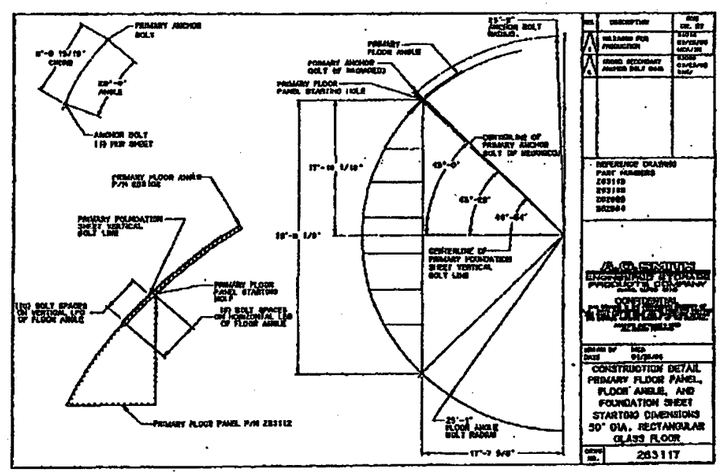

DOCUMENT NUMBER: 8980195 -022 REL.: 1 TITLE: FND. CONST. MATERIAL SCHED.

THESE MATERIALS ARE TO BE FURNISHED BY THE BUILDER. ~~QUANTITIES ARE ESTIMATED.~~

THE TOTAL REBAR REQUIREMENTS MUST BE CALCULATED AND WILL DEPEND UPON THE NUMBER OF SPLICES.

[redacted]NGES THE FLOOR OR FOOTING DESIGN, FROM WHAT IS CALLED OUT IN THIS SUBMITTAL, AFFECT THE REBAR AND SPLICE REQUIREMENTS.

FOOTING MATERIAL REQUIREMENTS

CIRCUMFERENTIAL FOOTING REBAR-
1. QTY. REBAR: 18
2. SIZE OF REBAR: # 5 (1.502 lbs/ft)
3. GRADE OF STEEL: 60
~~4. TOTAL REBAR QTY. WITHOUT SPLICE: 1337 ft. 405756 mm~~
5. SPLICE LENGTH: 42 in. 1067 mm

SUPPORT REBARS-
1. QTY. OF REBARS (PER SHEET): 6
2. SIZE OF REBAR: # 4 (.668 lbs/ft)
~~3. TOTAL REBAR QTY. WITHOUT SPLICE: 963 ft. 293028 mm~~

CONCRETE IN FOOTING-
~~1. PER 1' DEPTH(Ft.) cu.~~

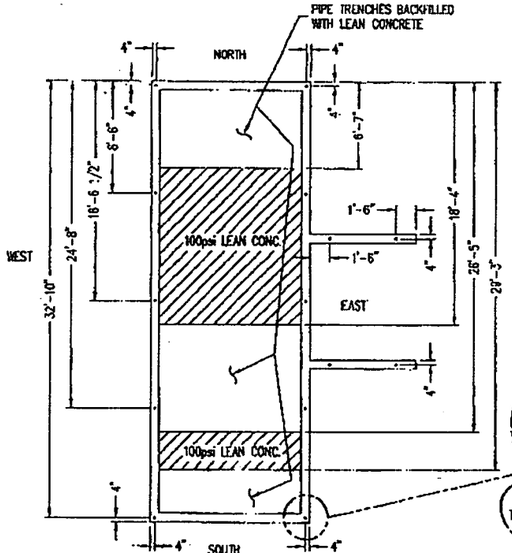

AS-BUILT CONC. FOUNDATION 4

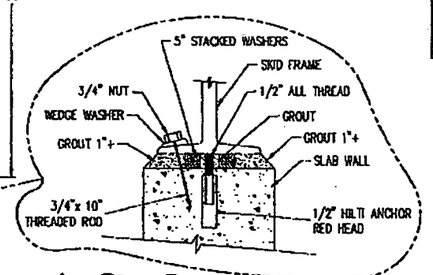

4 **SECTION LEVELING SHIMS**
SCALE: NONE

INDEX CODE				
PL.&AL.	ORIG.	CL.	BLD. NO.	RTV.
2CA	5500	S	00266	5

NOTES:

1) TOP OF CONCRETE IS AT ELEVATION 575'-6" FROM TANK RING WALL FOUNDATION.

2) INSTALL 18 ANCHOR BOLTS EQUALLY SPACED ON BOLT RADIUS SHOWN ON DRAWING 263117. PRIMARY ANCHOR BOLT IS LOCATED 1'-0" NORTH OF BUILDING / TANK EAST-WEST CENTERLINE.

3) SEE REBAR SHOP DRAWING SUBMITTAL 023 FOR ADDITIONAL INFORMATION.

4) SEE DRAWING 801 FOR ALL OTHER NOTES.

Conforms to the Subcontract Requirements
[ ] B - Minor Comments - Incorporate and Resubmit
[ ] C - Rejected and Resubmit
Date 12/1/97
J. Crock

NSC-620-ENG-055Y-REV 0
#1747-DWG 802 -REV 4

REVISIONS						
2	CHANGE NOTES, ADD: TANK FOUNDATION PLAN	DGT	2/10/99			
3	ADD: NOTE #4 DEL: CONCRETE WORK NOTE.	DGT	1/8/99			
4	CHG: PER AS-BUILT DRAWING	DGT	11/12/99	J.B.	11/12/99	K.M.C 11/12/99
5	ENTERED INTO PEMP SYSTEM		7/26/00			7/26/00
NO.	DESCRIPTION	BY	DATE	CHK.	DATE	APPR. DATE

STATE OF OHIO JAMES M. NOLAN E-61991 10/12/99 REGISTERED PROFESSIONAL ENGINEER

DRAWING STATUS	BY		DATE
PRELIMINARY			
FOR COMMENT/APPROVAL	K.W. CONROY	K.W. CONROY	10/19/98
APPROVED	K.W. CONROY	K.W. CONROY	12/7/99
REVISED and APPROVED	K.W. CONROY		

DRAWING IS NOT APPROVED FOR CONSTRUCTION UNLESS SIGNED AND DATED. ALL PRINTS ARE TO BE DESTROYED HAVING AN EARLIER DATE AND / OR REVISION NUMBER.

DRAWING INFORMATION	BY		DATE
DESIGN BY:	A.O. SMITH CO.	A.O. SMITH CO.	
DRAWN BY:	A.O. SMITH CO.	A.O. SMITH CO.	
CHECKED BY:	J.M. NOLAN	J.M. NOLAN	12/7/99
REVIEWED BY:	J.R. BRIGGS	J.R. BRIGGS	12/7/98
SCALE: NONE	PLOT SCALE: 1		
PLOT DATE:			

WATER STORAGE TANK PROJECT

TANK FOUNDATION

PROJECT LOCATION: FERNALD, OHIO — PROJECT NO. 980314

RTG **RESOURCE TECHNOLOGIES GROUP, INC.**
LAKEWOOD, COLORADO 80235 (303) 969-8511

CLIENT: FLUOR DANIEL FERNALD, FERNALD, OHIO

REVISION NO. 5 — DRAWING NO. 802

Scan 7/00

rasterv8 CADD9 paul7461 05/13/2005 10:10:52 AM

93g00703 CADD11 rabb7064 06/09/2005 07:09:29 AM

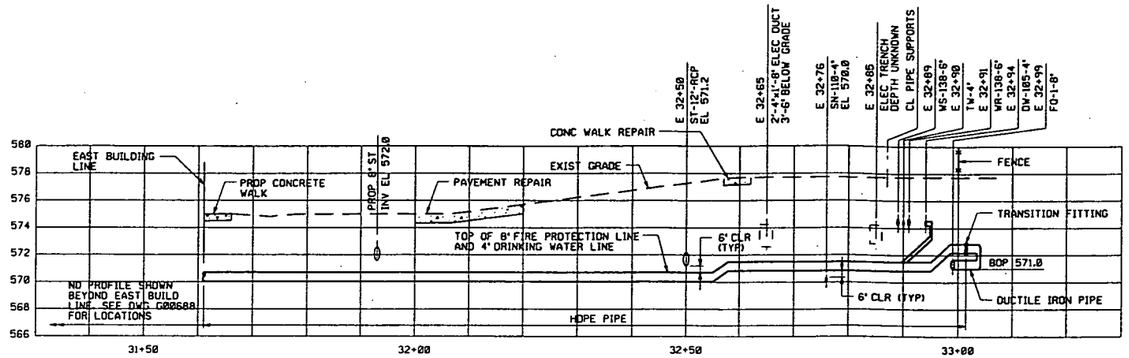

FIRE PROTECTION AND DRINKING WATER LINE PROFILE

SCALE: HORIZ. 1"=10'
VERT. 1"= 2'

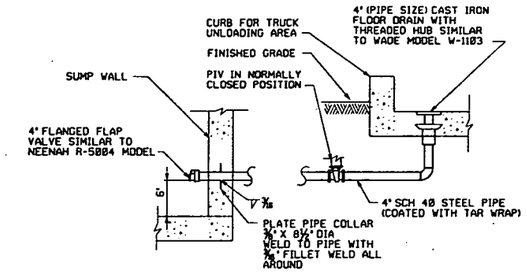

SECTION D
NTS

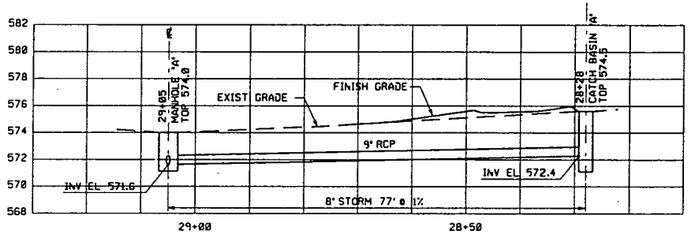

8" STORM LINE PROFILE

SCALE: HORIZ. 1"=10'
VERT. 1"= 2'

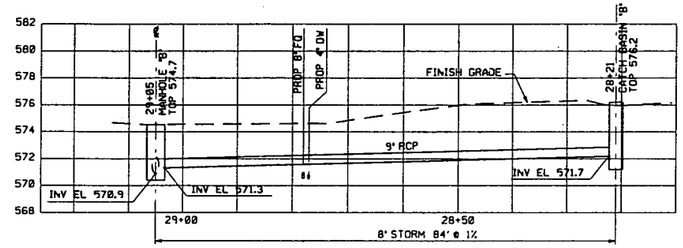

8" STORM LINE PROFILE

SCALE: HORIZ. 1"=10'
VERT. 1"= 2'

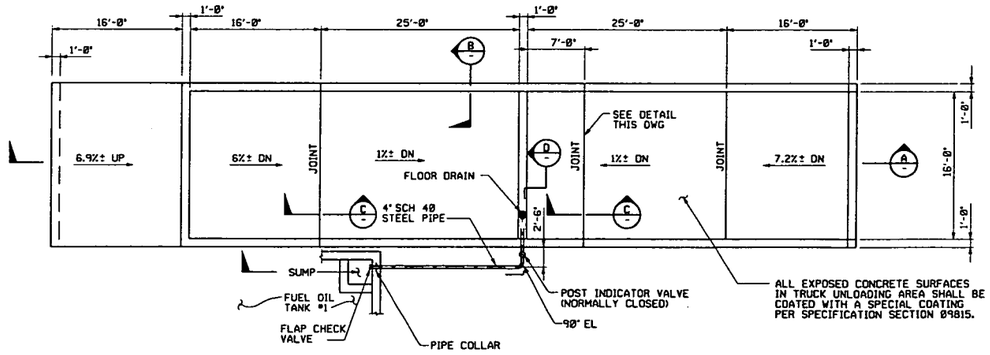

TRUCK UNLOADING AREA
NTS

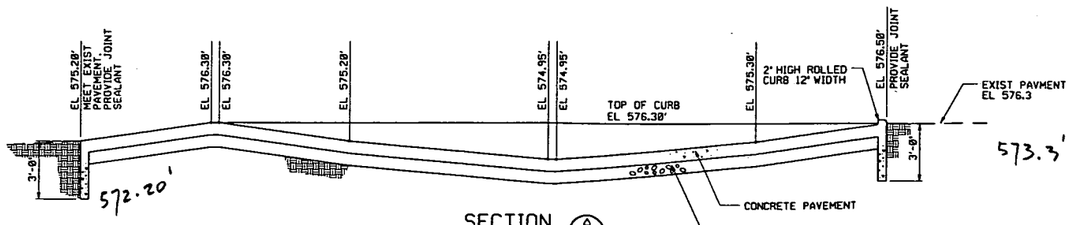

SECTION A
NTS

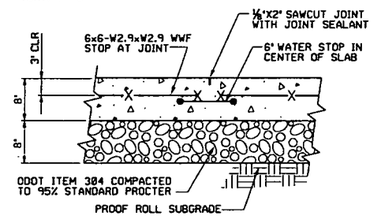

SECTION C
NTS

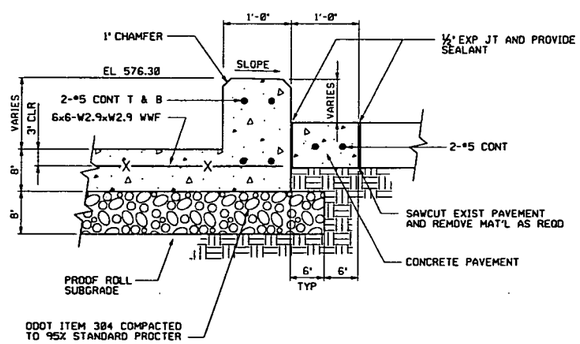

SECTION B
NTS

NOTES

1. EXISTING CONDITIONS SHOWN ON THIS DRAWING WERE PREPARED FROM FEMP SITE PROVIDED DATA FROM THE DOCUMENTS LISTED BELOW.

   EXISTING SITE DATA SOURCE (IN PLANT FILES)
   FEMP CADD GRID/UTILITY DRAWINGS
   FEMP CONTRACTOR PROJECT DESIGN DOCUMENTS

2. LOCATION AND DEPTH OF UNDERGROUND FEATURES AND UTILITIES ARE APPROXIMATE. CONTRACTOR IS TO LOCATE FEATURES AND UTILITIES PRIOR TO EXCAVATION FOR CONSTRUCTION. IF LOCATION AND DEPTH ARE DIFFERENT, OR UNKNOWN UNCHARTED UTILITIES ARE DISCOVERED, CONTRACTOR IS TO INFORM FERMCO CONSTRUCTION MANAGER BEFORE PROCEEDING.

3. UNLESS OTHERWISE NOTED ALL MATERIALS SHALL CONFORM TO THE STATE OF OHIO DEPARTMENT OF TRANSPORTATION (ODOT) CONSTRUCTION AND MATERIAL SPECIFICATIONS DATED JANUARY 1, 1995.

4. SEE PLAN ON DRAWING 93X-5900-G-00688 FOR LOCATION OF DETAILS.

5982

REF SHEET NO.	DRAWING TITLE
93X-5900-X-00685	DRAWING INDEX
93X-5900-X-00686	LEGEND AND SYMBOLS
93X-5900-G-00688	SITE GRADING AND UTILITY PLAN
93X-5900-S-00709	PERIMETER CONCRETE PADS

REV. NO.	ISSUE OR REVISION PURPOSE - DESCRIPTION	A-E INITIALS	FERMCO INITIALS	DATE
1	AS-BUILT PER RES 3145 AND FOF DCN #1631.011			
0	CERTIFIED FOR CONSTRUCTION	MPB	DE	6-6-95

UNITED STATES DEPARTMENT OF ENERGY
FERNALD ENVIRONMENTAL MANAGEMENT PROJECT

THIS DRAWING PREPARED BY
PARSONS
THE RALPH M. PARSONS CO. - PARSONS MAIN, INC. - ENGINEERING-SCIENCE, INC.
CINCINNATI, OHIO

PROJECT NAME
BOILERHOUSE REPLACEMENT PROJECT

DRAWING TITLE
CIVIL
UTILITY PROFILES AND SECTIONS

DRAWN BY	DATE	LEAD ENGINEER	DATE	CHECKED BY	DATE
R. ESPARZA	4/27/95	ED KUBRIN	6/5/95	E. KUBRIN	5/3/95

PLANT/BLDG. NO. | FLOOR | SCALE: AS NOTED | CLASS

SUBMITTED FOR APPROVAL: MICHAEL BOLAND 6-6-95
FERMCO CKD APPROVAL: D EDWARDS 6/6/95

PREPARED UNDER PARSONS PROJECT ORDER NUMBER	A-E DATE	COE PROJECT NO.	FEMP PROJECT NO.	DATE	DRAWING INDEX CODE NO.	SHEET NO.	REV. NO.
CRU3/PO144			WBS 1.1.1.5.3.2 00-90701		93X-5900-G-00703	G0005	1

93s00697 CADD11 rabb7064 06/08/2005 03:32:51 PM

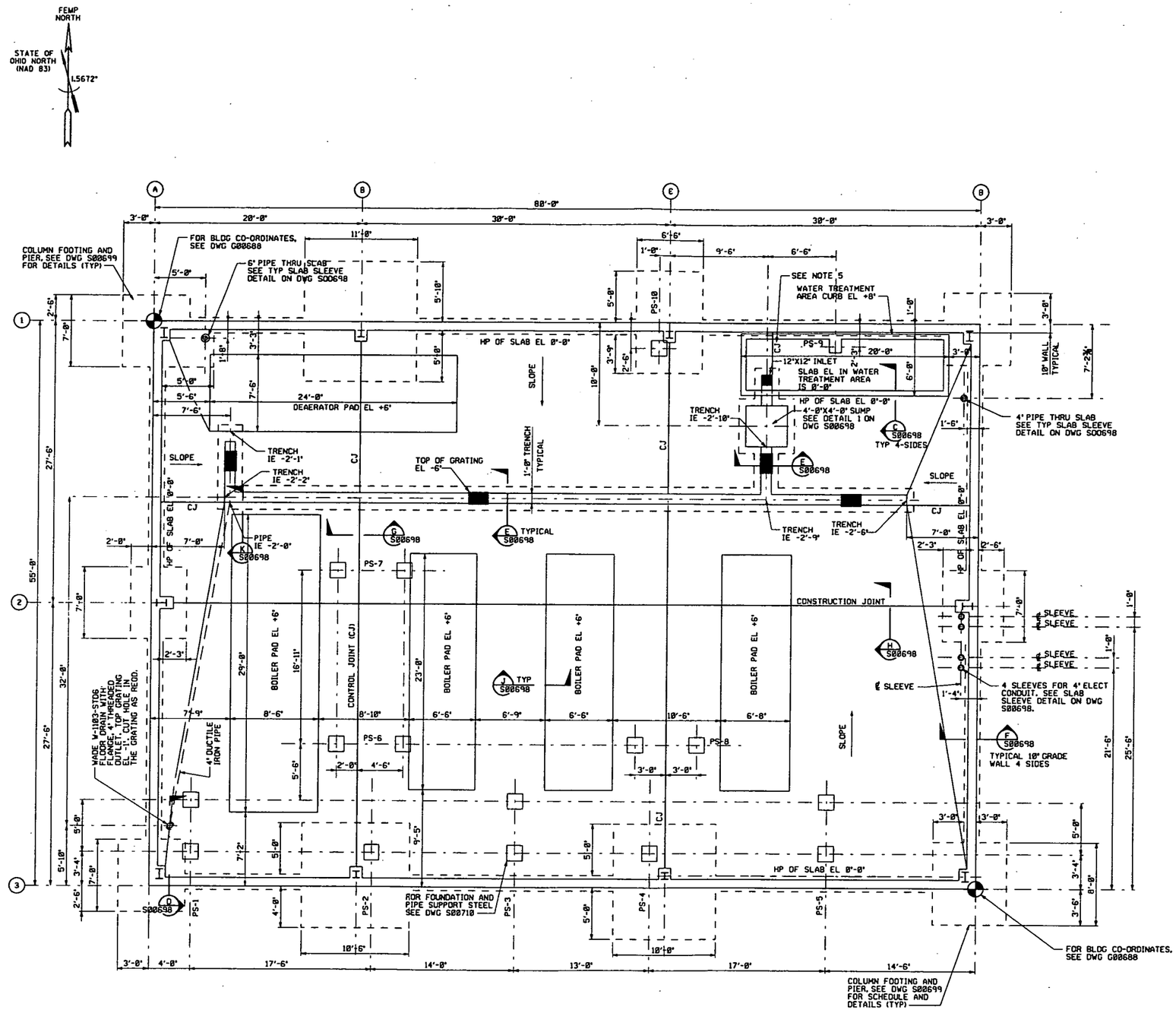

NOTES

GENERAL CONCRETE NOTES

1. DESIGN, MATERIAL AND WORKMANSHIP SHALL BE IN ACCORDANCE WITH SPECIFICATION SECTION 03001.
2. CONCRETE FOR SLAB ON GRADE SHALL HAVE A MINIMUM COMPRESSIVE STRENGTH OF 4000 PSI AT 28 DAYS. CONCRETE FOR FOUNDATIONS AND MISCELLANEOUS PADS SHALL HAVE A MINIMUM COMPRESSIVE STRENGTH OF 3000 PSI AT 28 DAYS.
3. REINFORCING STEEL SHALL CONFORM TO ASTM SPECIFICATION A-615, GRADE 60.
4. FOUNDATION DESIGN IS BASED ON NET SOIL BEARING PRESSURE ALLOWABLE OF 2000 PSF, PER RECOMMENDATION OF GEOTECHNICAL INVESTIGATION REPORTS BY SOIL AND MATERIAL ENGINEERS, INC. DATED SEPTEMBER 4, 1984 AND NOVEMBER 12, 1984. IF ANY SOFT, WET, ORGANIC OR LOOSE SOIL OR ANY OLD FILL IS ENCOUNTERED, THE FERMCO CONSTRUCTION CONTRACTS MANAGER SHALL BE INFORMED AND THE CONDITIONS RESOLVED BEFORE CONTINUATION OF CONCRETE WORK.
5. PROVIDE WATERSTOP IN CONTROL JOINTS IN CURBED AREAS ONLY. MAKE WATERSTOP CONTINUOUS WITH WATERSTOP IN TRENCH AND CURB.
6. ANCHOR BOLTS FOR PRE-ENGINEERED BUILDING COLUMNS AS SHOWN WERE DETERMINED USING BUTLER BUILDING CATALOG INFORMATION. FOUNDATION SIZES, PIER SIZES AND ANCHOR BOLT LOCATIONS SHALL BE CONFIRMED BY SELECTED PRE-ENGINEERED BUILDING VENDOR'S CERTIFIED DRAWINGS, BEFORE CONSTRUCTION OF THE FOUNDATION.
7. PAD SIZES AND ANCHOR BOLT REQUIREMENTS FOR BOILERS, DEAERATOR AND MISCELLANOUS EQUIPMENT WILL BE CONFIRMED WITH CERTIFIED VENDOR DRAWINGS BEFORE CONSTRUCTION.
8. ALL FLOOR AREAS, EQUIPMENT PADS AND TRENCHES SHALL BE COATED WITH A SPECIAL COATING PER SPECIFICATION SECTION 09815.
9. ELEVATION 0'-0" EQUALS MEAN SEA ELEVATION 575'-6". (SEE DRAWING 93X-5900-G-00688.)
10. FOR GROUNDING SYSTEM CONNECTION TO REINFORCEMENT, SEE DRAWING 93X-5900-E-00717.

5982

NOTES

1. FOR DRAWING INDEX, SEE DRAWING 93X-5900-X-00685.
2. FOR LEGEND AND SYMBOLS, SEE DRAWING 93X-5900-X-00686.

REF DWG NO.	DRAWING TITLE
93X-5900-X-00685	DRAWING INDEX
93X-5900-X-00686	LEGEND AND SYMBOLS
93X-5900-S-00698	SECTIONS AND DETAILS
93X-5900-S-00699	SECTIONS AND DETAILS
93X-5900-S-00710	PIPE SUPPORTS
93X-5900-E-00717	POWER PLAN
93X-5900-G-00688	SITE, GRADING AND UTILITY PLAN

REV. NO.	ISSUE OR REVISION PURPOSE - DESCRIPTION	A-E	FERMCO	DATE
1	AS-BUILT PER RES 3145 AND FDF DCN #1631-021 AND 020	MPB 6-6-95	DE 6/6/95	
0	CERTIFIED FOR CONSTRUCTION			

INITIALS AND DATE

UNITED STATES DEPARTMENT OF ENERGY
FERNALD ENVIRONMENTAL MANAGEMENT PROJECT

THIS DRAWING PREPARED BY
PARSONS
THE RALPH M. PARSONS CO. - PARSONS MAIN, INC. - ENGINEERING-SCIENCE, INC.
CINCINNATI, OHIO

PROJECT NAME
BOILERHOUSE REPLACEMENT PROJECT

DRAWING TITLE
STRUCTURAL
SLAB AND FOUNDATION PLAN
CONCRETE

DRAWN BY	DATE	LEAD ENGINEER	DATE	CHECKED BY	DATE
J.L.ONEY	04-17-95	RB JADHAV	6/5/95	R B JADHAV	5-5-95

PLANT/BLDG. NO.	FLOOR	SCALE	CLASS
		1/4"=1'-0"	

SUBMITTED FOR APPROVAL	FERMCO CRU APPROVAL
MICHAEL BOLAND 6-6-95	D EDWARDS 6/6/95

A-E DOE PROJECT NO.	FEMP PROJECT NO.	DRAWING INDEX CODE NO.	SHEET NO.	REV. NO.
PROMNED UNDER PARSONS PROJECT ORDER NUMBER CRU3/P0144	WBS 1.1.1.5.3.2 00-90701	93X-5900-S-00697	S0001	1

93s00698 CADD11 rabb7064 06/08/2005 03:19:19 PM

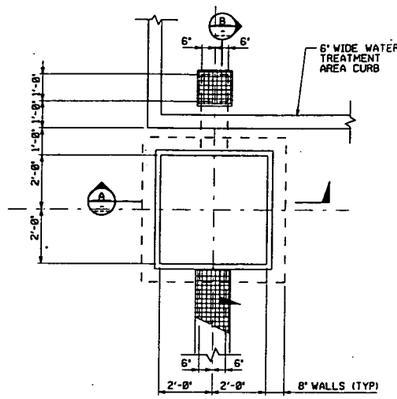

DETAIL 1 (½"=1'-0") REF S00698 S00697

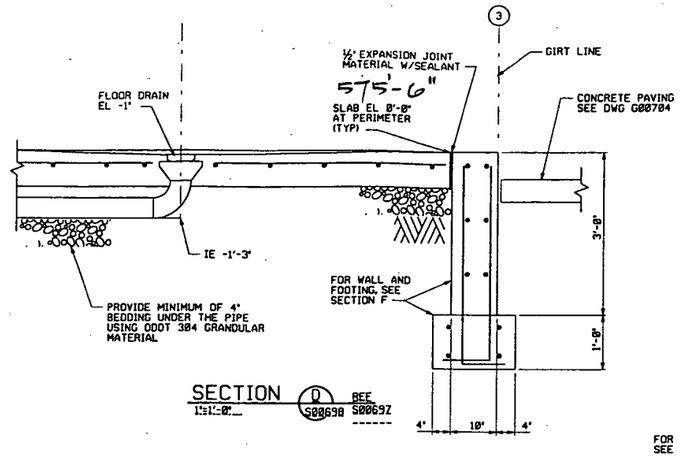

SECTION D (1"=1'-0") REF S00698 S00697

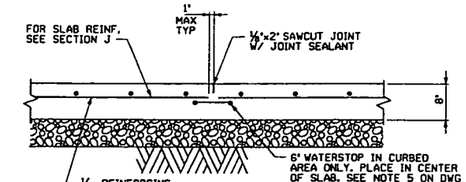

SECTION G (NTS) REF S00698 S00697

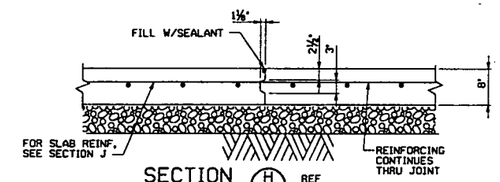

SECTION H (NTS) REF S00698 S00697

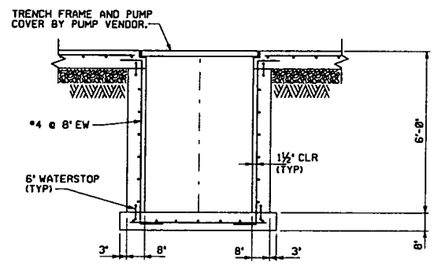

SECTION A (½"=1'-0") REF

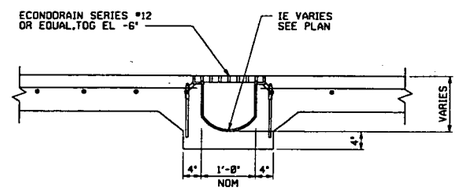

SECTION E (1"=1'-0") REF S00698 S00697

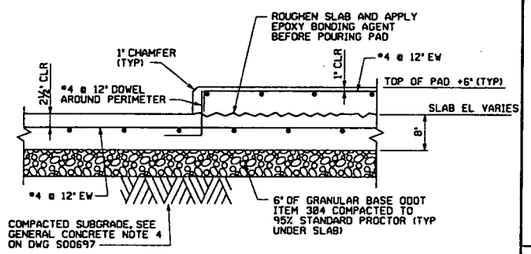

SECTION J (1"=1'-0") REF S00698 S00697

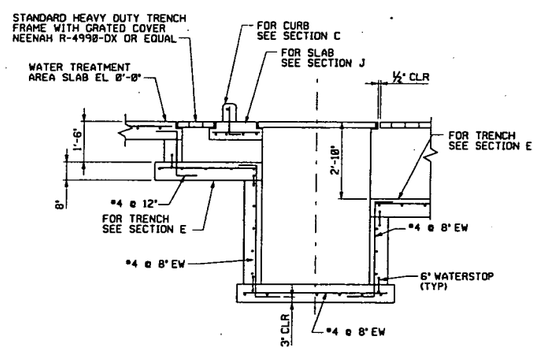

SECTION B (½"=1'-0") REF

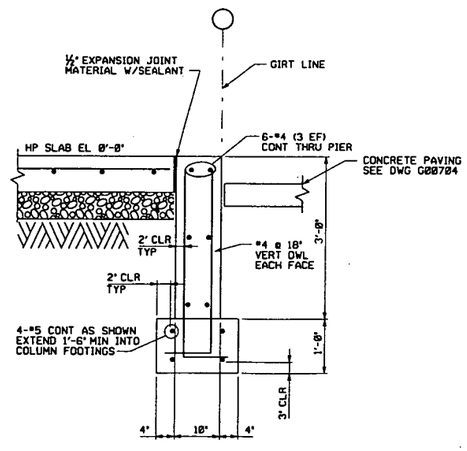

SECTION F (1"=1'-0") REF S00698 S00697

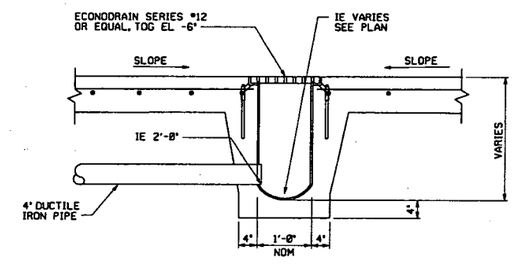

SECTION K (1"=1'-0") REF S00698 S00697

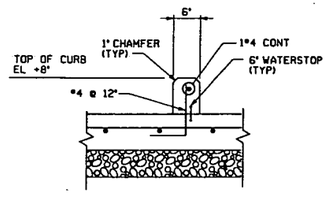

SECTION C (1"=1'-0") REF S00698 S00697

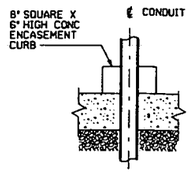

TYPICAL CONDUIT CURB DETAIL

NTS REF S00697

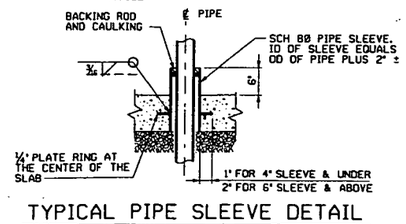

TYPICAL PIPE SLEEVE DETAIL

NTS REF S00697

NOTES

1. FOR DRAWING INDEX, SEE DRAWING 93X-5900-X-00685.
2. FOR LEGEND AND SYMBOLS, SEE DRAWING 93X-5900-X-00686.
3. FOR CONCRETE NOTES, SEE DRAWING 93X-5900-S-00697.

5982

575'-6"
-4 0
571'-6"
571'-0"

575'-6"
7
568'-6"
568

REF DWG NO.	DRAWING TITLE
93X-5900-X-00685	DRAWING INDEX
93X-5900-X-00686	LEGEND AND SYMBOLS
93X-5900-S-00697	SLAB AND FOUNDATION PLAN
93X-5900-G-00704	CIVIL DETAILS 1

REV. NO.	ISSUE OR REVISION PURPOSE - DESCRIPTION	A-E	FENWCO	DATE
		---	---	---
		---	---	---
1	69-PULT PER DES SIG	---	---	---
0	CERTIFIED FOR CONSTRUCTION	MPB 6-6-95	DE 6/6/95	---

INITIALS AND DATE

UNITED STATES DEPARTMENT OF ENERGY
FERNALD ENVIRONMENTAL MANAGEMENT PROJECT

THIS DRAWING PREPARED BY
PARSONS
THE RALPH M. PARSONS CO. - PARSONS MAIN, INC. - ENGINEERING-SCIENCE, INC.
CINCINNATI, OHIO

PROJECT NAME: BOILERHOUSE REPLACEMENT PROJECT

DRAWING TITLE: STRUCTURAL SECTIONS AND DETAILS CONCRETE

DRAWN BY	DATE	LEAD ENGINEER	DATE	ENGINEER	DATE
J.J.ONEY	04-17-95	R.B. JAGHAY	6/5/95	R.B. JAGHAY	5-5-95

PLANT/BLDG. NO.	FLOOR	SCALE	CLASS
		AS SHOWN	

SUBMITTED FOR APPROVAL	FENWCO CKU APPROVAL	
MICHAEL P. BOLAND 6-6-95	D. EDWARDS 6/6/95	

PREPARED UNDER PARSONS PROJECT ORDER NUMBER	A-E DOE PROJECT NO.	PEMP PROJECT NO.	DRAWING INDEX CODE NO.	SHEET NO.	REV. NO.
CRU3/P0144		WBS 1.1.1.5.3.2 00-9070	93X-5900-S-00698	S0002	1

93s00709 CADD11 rabb7064 06/08/2005 04:09:15 PM

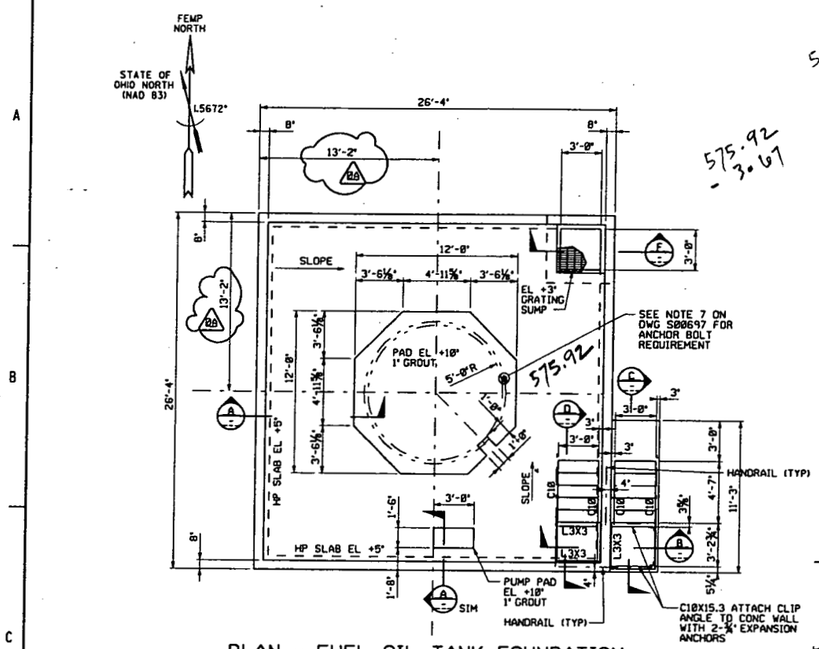

PLAN - FUEL OIL TANK FOUNDATION

¼"=1'-0"

575.9
-3.25
572.25

575.92
-3.67

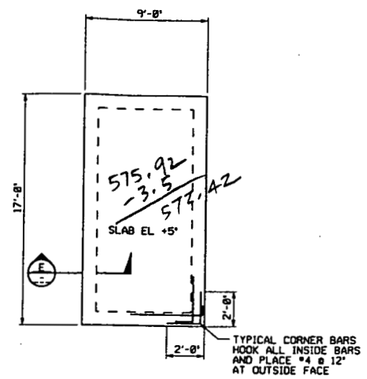

PLAN - DIESEL GENERATOR FOUNDATION

¼"=1'-0"

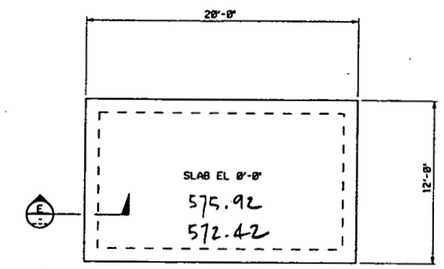

PLAN - AIR COMPRESSOR FOUNDATION

TYPICAL 2-PLACES

¼"=1'-0"

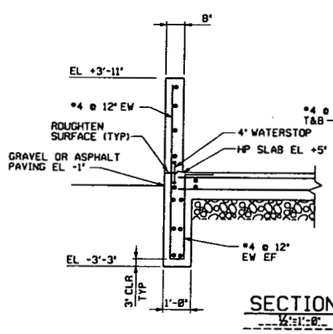

SECTION A

½"=1'-0"

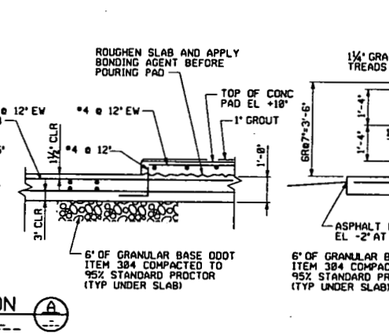

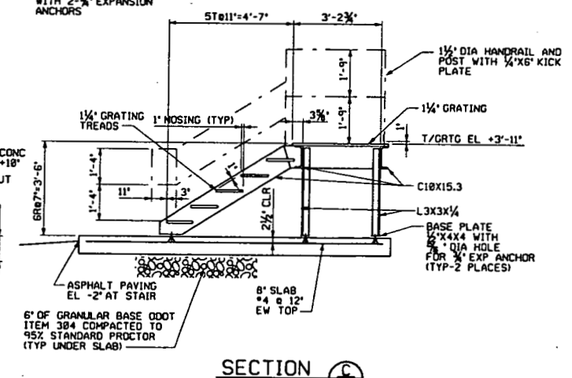

SECTION C

½"=1'-0"

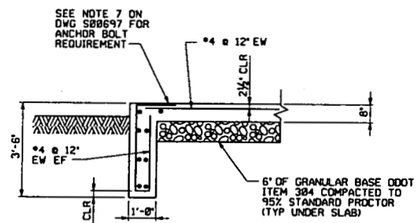

SECTION E

½"=1'-0"

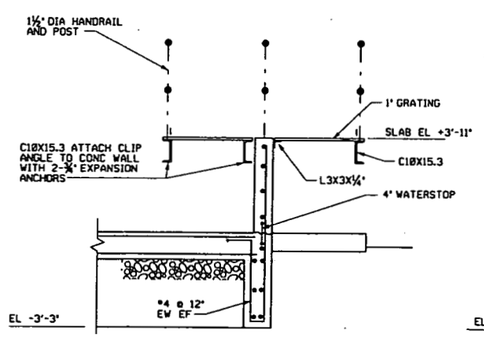

SECTION B

½"=1'-0"

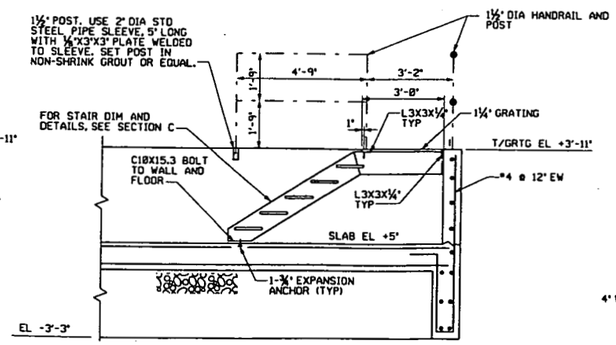

SECTION D

½"=1'-0"

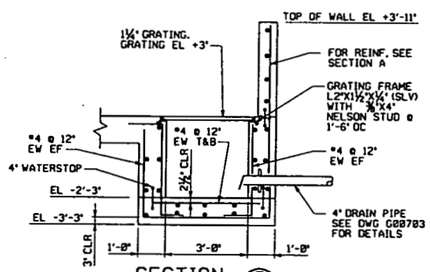

SECTION F

½"=1'-0"

NOTES

1. FOR DRAWING INDEX, SEE DRAWING 93X-5900-X-00685.
2. FOR LEGEND AND SYMBOLS, SEE DRAWING 93X-5900-X-00686.
3. FOR CONCRETE NOTES, SEE DRAWING 93X-5900-S-00697.
4. FOR STEEL NOTES, SEE DRAWING 93X-5900-S-00710.
5. FUEL OIL TANK CONTAINMENT INSIDE WALLS AND FOUNDATION PAD SHALL BE COATED WITH A SPECIAL COATING PER SPECIFICATION SECTION 09815.

L 5982

REF DWG NO.	DRAWING TITLE
93X-5900-X-00685	DRAWING INDEX
93X-5900-X-00686	LEGEND AND SYMBOLS
93X-5900-S-00697	SLAB AND FOUNDATION PLAN
93X-5900-S-00710	PIPE SUPPORTS
93X-5900-G-00703	UTILITY PROFILES AND SECTIONS

REV. NO.	ISSUE OR REVISION PURPOSE - DESCRIPTION	A-E	FEMCO	DATE
0	CERTIFIED FOR CONSTRUCTION	MPB 6-6-95	DE 6/6/95	

INITIALS AND DATE

UNITED STATES DEPARTMENT OF ENERGY
FERNALD ENVIRONMENTAL MANAGEMENT PROJECT

THIS DRAWING PREPARED BY
PARSONS
THE RALPH M. PARSONS CO. - PARSONS MAIN, INC. - ENGINEERING-SCIENCE, INC.
CINCINNATI, OHIO

PROJECT NAME: BOILERHOUSE REPLACEMENT PROJECT

DRAWING TITLE: STRUCTURAL PLANS, SECTIONS, AND DETAILS PERIMETER CONCRETE PADS

DRAWN BY	DATE	LEAD ENGINEER	DATE	CHECKED BY	DATE
J.J.ONEY	04-25-95	RB JACHBY	6/5/95	D.H.HIGBY	5-5-95

PLANT/BLDG. NO.	FLOOR	SCALE	CLASS
		AS SHOWN	

SUBMITTED FOR APPROVAL	FEMCO QU APPROVAL
MICHAEL BOLAND	D EDWARDS
6-6-95	6/6/95
A-E DATE	DATE

PREPARED UNDER PARSONS PROJECT ORDER NUMBER: CRU3/P0144

DOE PROJECT NO.	FEMP PROJECT NO.	DRAWING INDEX CODE NO.	SHEET NO.	REV. NO.
	WBS 1.1.1.5.3.2 00-90701	93X-5900-S-00709	S0004	0

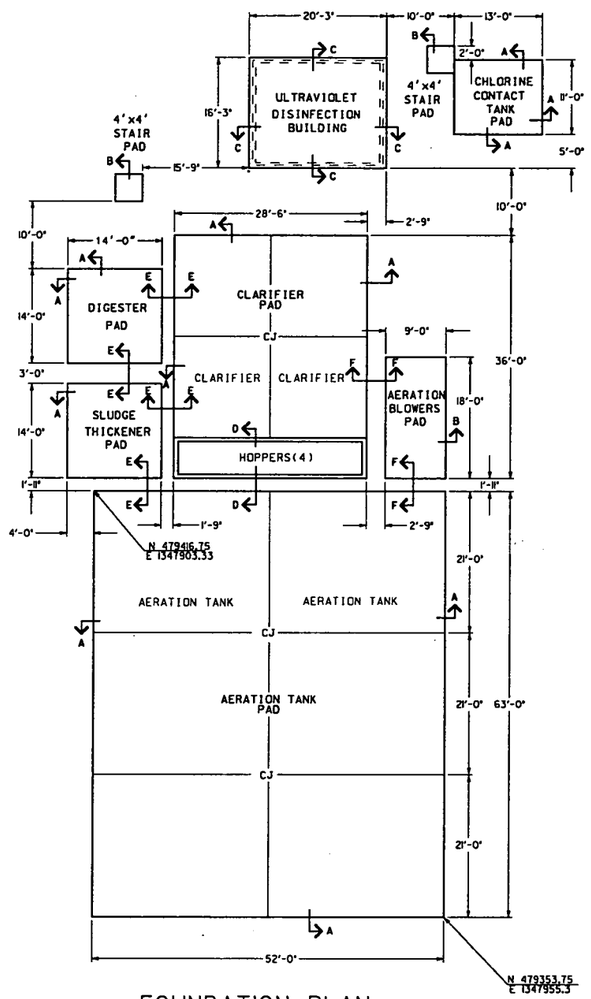

FOUNDATION PLAN

SCALE 1"=10'

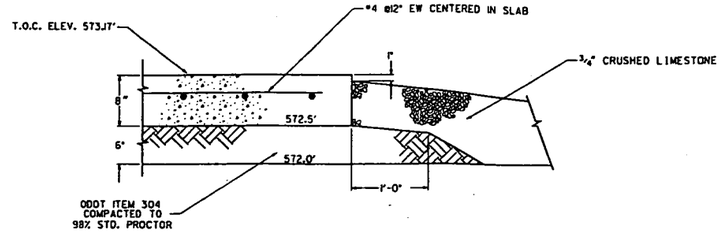

SECTION A

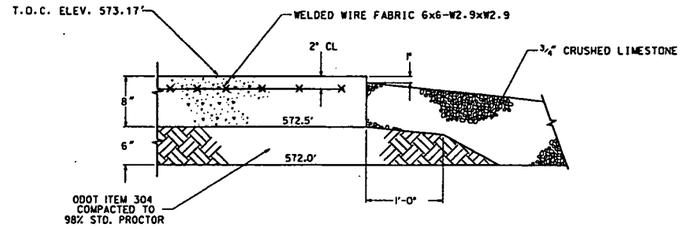

SECTION B

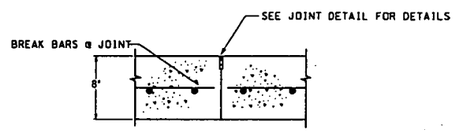

CONTROL JOINT

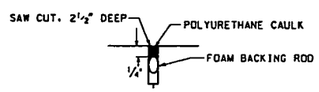

JOINT DETAIL

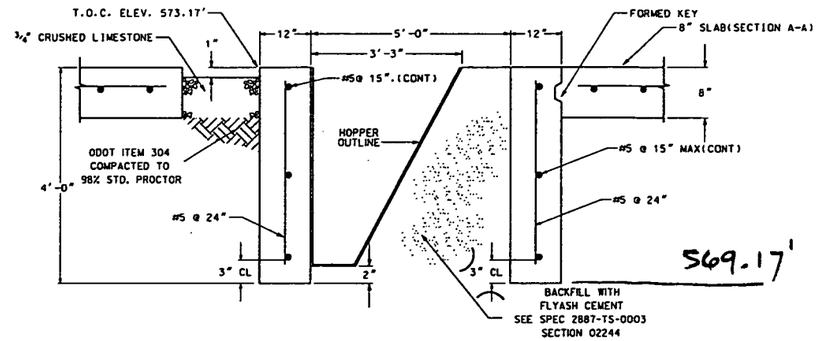

569.17'

HOPPER GRADE BEAM

SECTION D-D

5982

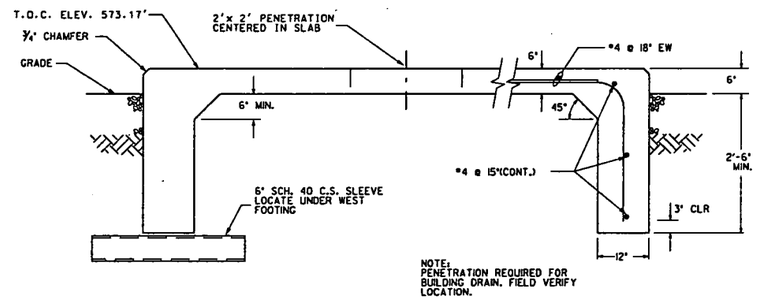

570.17'

TYP. WALL FOOTING

SECTION C-C

572'-0"

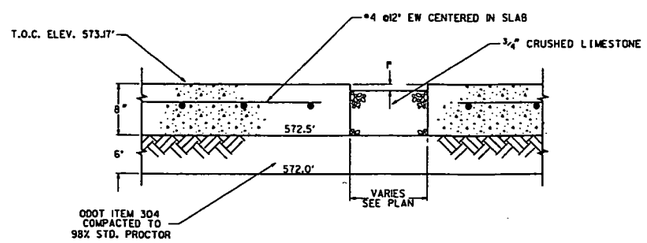

SECTION E-E

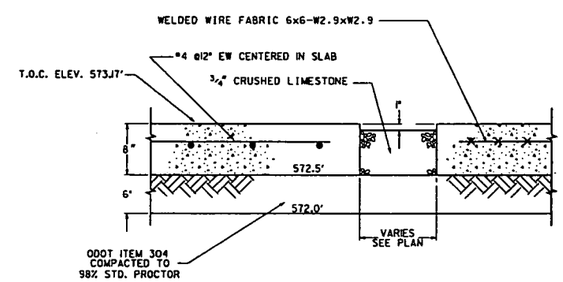

SECTION F-F

NOTES:
1 - CONCRETE TO HAVE A MINIMUM COMPRESSIVE STRENGTH OF 4000 PSI
2 - FINISHING TOLERANCE OF SLAB SURFACES SHALL BE CLASS 'B' PER ACI 301. PROVIDE FLOATED FINISH

LEGEND
T.O.C. - TOP OF CONCRETE
WWF - WELDED WIRE FABRIC
EW - EACH WAY
CONT - CONTINUOUS
CL - CLEAR
CJ - CONTROL JOINT

NO.	REVISIONS	DATE	DWN. BY	APPD.
3	AS BUILT	09-21-98	RSO	
2	REVISED PER DCN 1707-017	12-30-97	JsW	GEP
1	UPDATED PER DCN 1707-001	6-18-97	JsW	GEP
0	ISSUE CFC	1-6-97	JsW/RSO	GEP

REF. DWG. NO.: 25A-5500-G-00189

FORMAT REVISED 2/5/96 FORMAT REVISED 6/29/98 FDF4.DGN

NOTE: FLUOR DANIEL FERNALD CADD DRAWING, DO NOT REVISE MANUALLY.

CONFIGURATION MANAGEMENT DRAWING — YES / NO
SYSTEMS, STRUCTURES OR COMPONENTS REFERRED ON THIS DRAWING ARE UNDER CONFIGURATION MANAGEMENT CONTROL. SEE NOTES.
M. BORDMAN 09-22-97
COGNIZANT ENGINEER DATE

APPROVALS					
			SAFETY ENG.	R. LANING	09-23-97
CIVIL & STR.	M. BORDMAN	09-22-97	MAINTENANCE		
ELECTRICAL			FIRE PROTECT.		
ENGINEER	R. DEEP	09-23-97	WASTE MANAGE		
INSTRUMENT			SECURITY		
MECHANICAL			PROJECTS	J. LEWIS	09-23-97
			FAC. OWNER	E. HENRY	09-23-97
CHECKED	G.E.P.				
APPROVED	G.E. PAUL	09-24-97			

Fernald Environmental Management Project

FLUOR DANIEL FERNALD

U.S. DEPARTMENT OF ENERGY

WEST OF AWWT — FDF PROJECT NO. 55200

SEWAGE TREATEMENT RELOCATION
FOUNDATION PLAN & DETAILS
AS NOTED

RES 2887 — DATE Jan 15,1997 — DRAWN JsW

25A-5500-G-00190 — 3

FILE NAME: res2887/25ag0190.dgn

25ag0190 CADD9 paul7461 05/02/2005 08:21:40 AM

8788401c OSDF3 lind8392 05/09/2005 02:26:55 PM

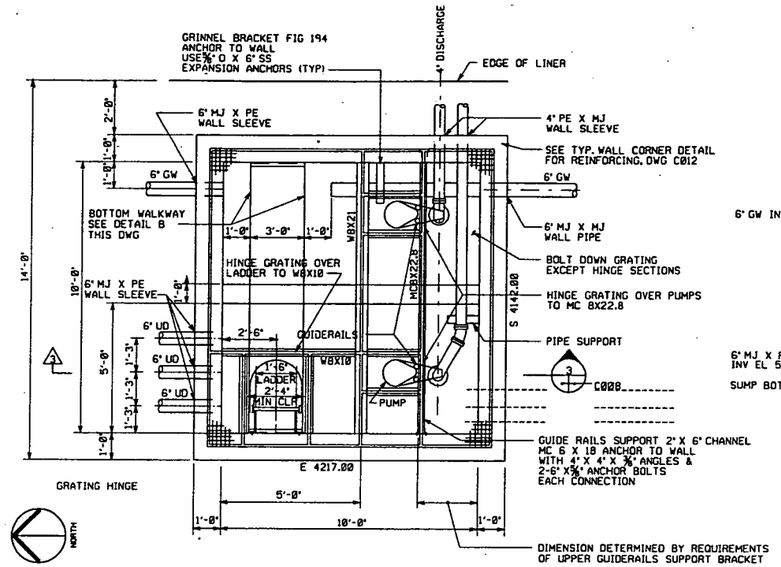

PLAN INSPECTION SUMP
NOT TO SCALE

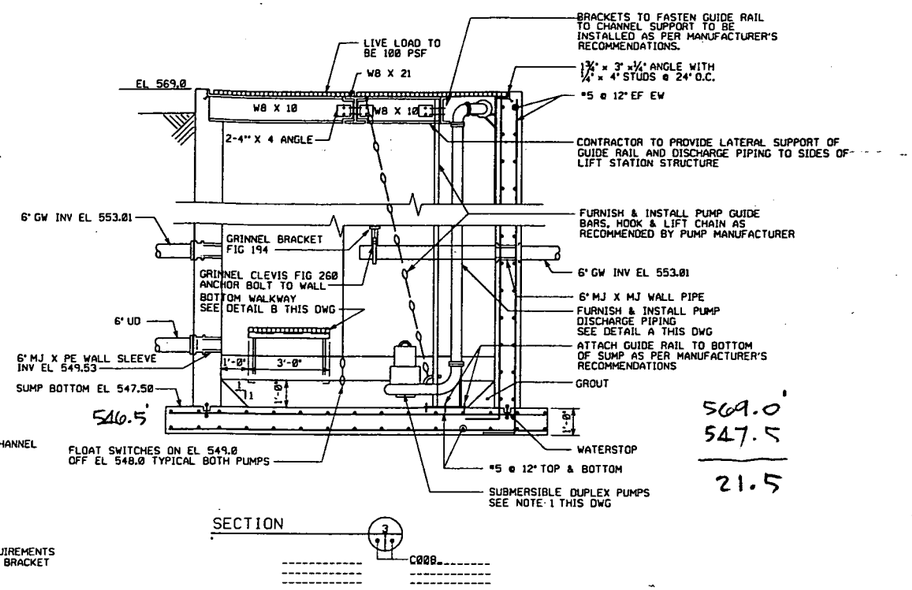

SECTION

INSPECTION SUMP NOTES:

1. CONTRACTOR TO FURNISH & INSTALL TWO FULLY SUBMERSIBLE PUMPS. PUMPS SHALL BE FLYGT CORPORATION 4" MODEL CP3085, 3 HP WITH IMPELLER CODE 434 OR APPROVED EQUAL. EACH PUMP SHALL BE EQUIPPED WITH LEVEL CONTROLS, FLYGT 8.400 WITH HAND-OFF-AUTO SELECTOR SWITCH, OR APPROVED EQUAL.
2. PUMPS AND CONTROLS SHALL BE INSTALLED TO OPERATE INDEPENDENTLY.
3. WATER ELEVATIONS FOR PUMP OPERATION SHALL BE:
   PUMP START ELEVATION 549.0
   PUMP OFF ELEVATION 548.0
4. PUMP DISCHARGE PIPE & FITTINGS SHALL BE FLANGED D.I.P. MANUFACTURED IN ACCORDANCE WITH ANSI/AWWA C115/A21.15
5. D.I.P. & FITTINGS SHALL HAVE STANDARD OUTSIDE COATING OF ONE MIL ASPHALTIC PAINT. LINING SHALL BE STANDARD ASPHALTIC OR CEMENT AS PER AWWA C104.
6. BOLTS, NUTS & GASKETS SHALL BE AS REQUIRED FOR AWWA C115 PIPE.
7. FOR CONCRETE AND STEEL SPECIFICATIONS SEE CONCRETE NOTES DWG C011.

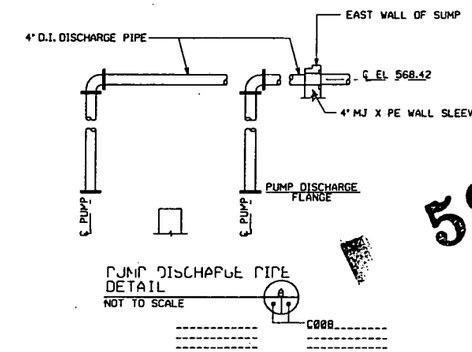

PUMP DISCHARGE PIPE DETAIL
NOT TO SCALE

5982

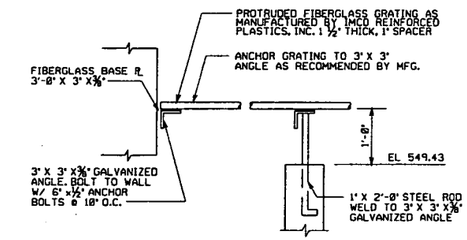

BOTTOM WALKWAY DETAIL
NOT TO SCALE

NOTE:
1. SEE DRAWING NUMBER C001 (PROJECT DRAWING NUMBER 18X-1900-X-00866) FOR DRAWING INDEX.

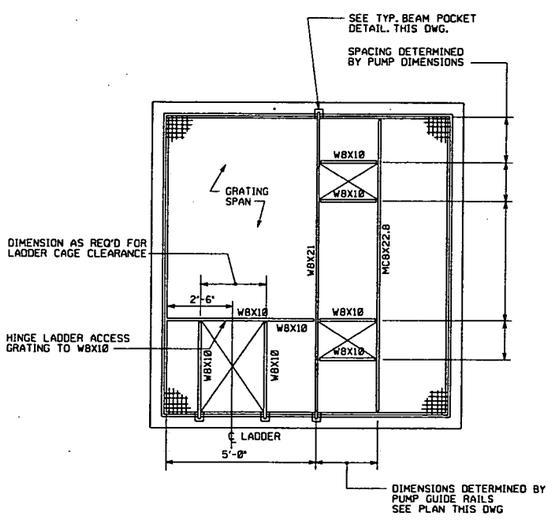

TOP PLAN
SCALE: 1" = 2'-0"

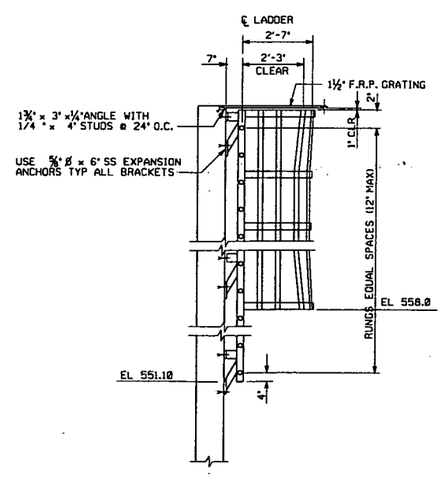

LADDER DETAIL
NOT TO SCALE

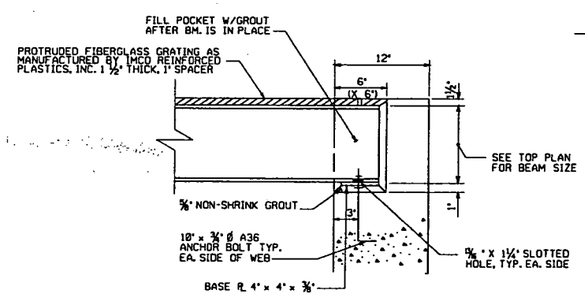

TYPICAL BEAM POCKET DETAIL
NOT TO SCALE

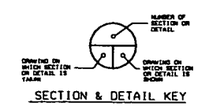

SECTION & DETAIL KEY

REV. NO.	ISSUE OR REVISION PURPOSE-DESCRIPTION	A-E INITIALS AND DATE	OPERATOR	DOE
0	ISSUED-CEC			

UNITED STATES
DEPARTMENT OF ENERGY

THIS DRAWING PREPARED BY
LOCKWOOD GREENE
Planners/Engineers/Architects/Managers
OAK RIDGE, TENNESSEE

DOE CONTRACT NO. DE-AC05-84-OR21800 A-E NO. 87884.01

PROJECT NAME
STORMWATER RETENTION BASIN EXPANSION

DRAWING TITLE
INSPECTION SUMP DETAILS

OPERATING CONTRACTOR CODE

DRAWN BY	DATE	DESIGNED CHECKED BY	DATE	CHECKED BY	DATE
M. KITCHINGS	11-97	A. MCCLANAHAN	11-97		

PLANT	BLDG.	FLOOR	SCALE	SYSTEM	CODE	ID	TYPE	SERIAL
EMPC	--	--	NONE	3	C	P	I	S	U

SUBMITTED FOR APPROVAL | APPROVAL RECOMMENDED | DRAWING APPROVED
A-E DATE | OPERATING CONTRACTOR DATE | DOE DATE

PROJECT DWG NUMBER	WORK ORDER NO.	DRAWING NUMBER	REV. NO.
18X-1900-S-00873		C008	0

WORK ORDER NO.
END NO. ACCOUNT
PROCUREMENT BY
INSTALLATION BY

NO REPRESENTATION OR WARRANTY, EXPRESSED OR IMPLIED, IS MADE AS TO THE ACCURACY, COMPLETENESS OR SUFFICIENCY OF THE INFORMATION OR STATEMENTS CONTAINED IN THESE DRAWINGS, OR THAT THE USE OR DISCLOSURE OF ANY INFORMATION, APPARATUS, METHOD OR PROCESS DISCLOSED IN THESE DRAWINGS MAY NOT INFRINGE ON THE PRIVATE RIGHTS OF OTHERS. NO LIABILITY IS ASSUMED WITH RESPECT TO THE USE OF, OR FOR DAMAGES RESULTING FROM THE USE OF ANY INFORMATION, APPARATUS, METHOD OR PROCESS DISCLOSED IN THESE DRAWINGS. DRAWINGS MADE AVAILABLE FOR INFORMATION TO BIDDERS ARE NOT TO BE USED FOR OTHER PURPOSES, AND ARE TO BE RETURNED UPON REQUEST OF THE FURNISHING CONTRACTOR.

PRF NAME: 1788408C B. CLARK 21:05:31

FILE NAME OS4:[100.1351]8788401C.008

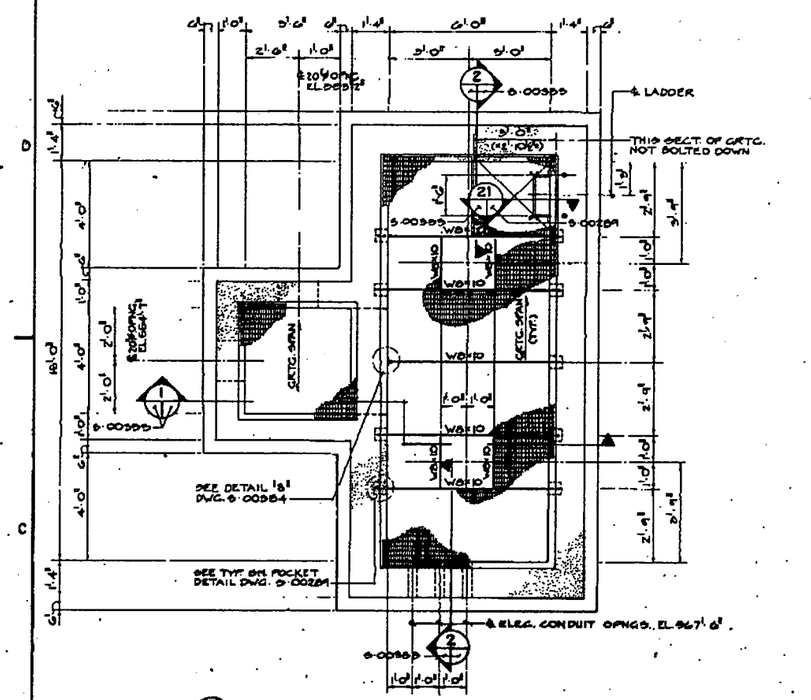

PLAN • TRANSFER PUMP STATION SCALE: 1/4"=1'-0"

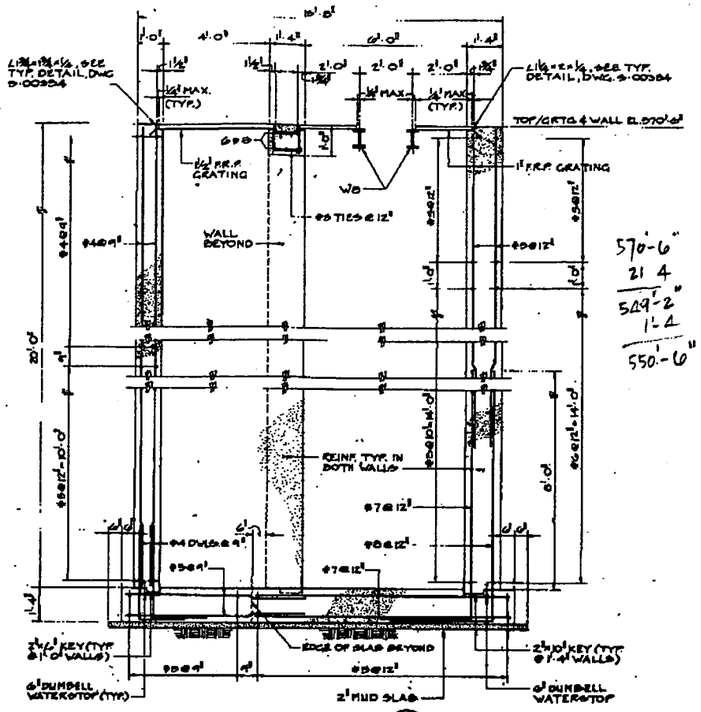

SECTION SCALE: 1/4"=1'-0"

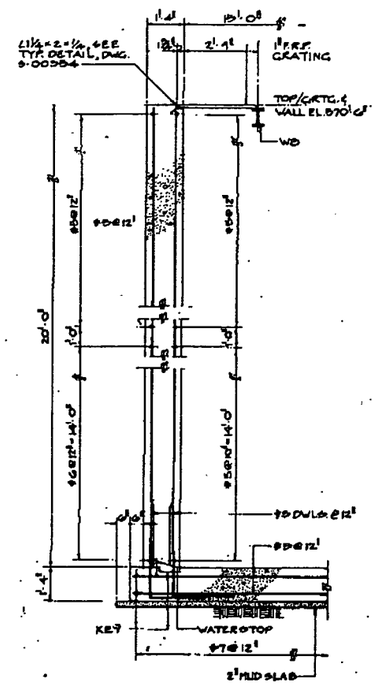

SECTION SCALE: 1/4"=1'-0"

NOTES:

1. SEE DWG. No. X-00262 FOR COVER SHEET & LOCATION PLAN.
2. SEE DWG. No. X-00263 FOR LIST OF DWGS.
3. SEE DWG. No. S-00287 FOR STRUCTURAL GENERAL NOTES.
4. SEE DWG. No. C-00343 FOR LOCATION OF STRUCTURES.
5. SEE DWG. No. S-00289 FOR TYP. BEAM POCKET DETAIL, TYP. WALL OPENING DETAIL, TYP. WALL CONSTRUCTION JOINT DETAIL & TYP. CORNER REINFORCING DETAIL.
6. SEE DWG. No. S-00384 FOR TYP. CURB ANGLE DETAIL.
7. SEE DWG. No. E-00388 FOR ELECTRICAL CONDUIT OPENINGS.
8. SEE DWG. No. X-00298 FOR PIPE SLEEVE DETAILS.

5982

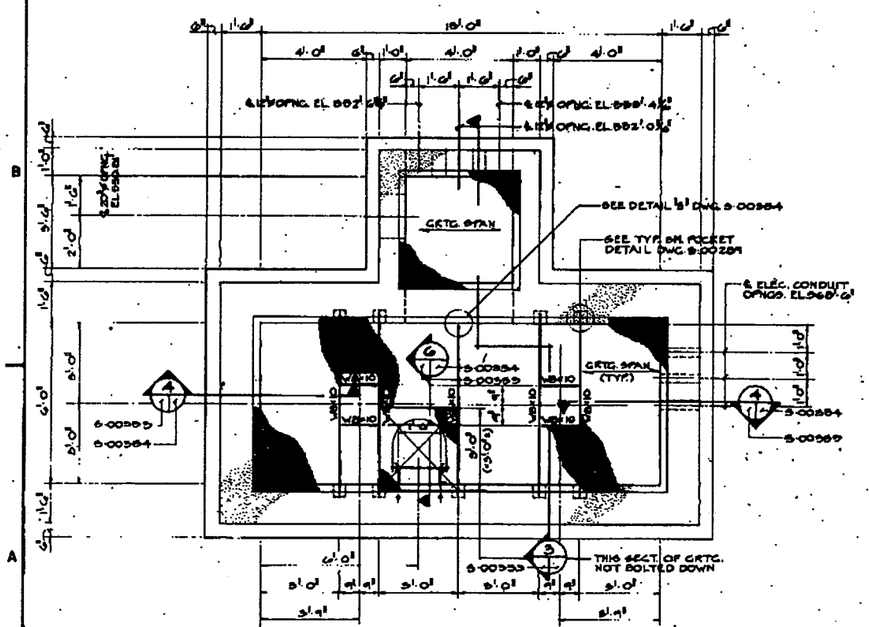

PLAN • UNDERDRAIN PUMP STATION SCALE: 1/4"=1'-0"

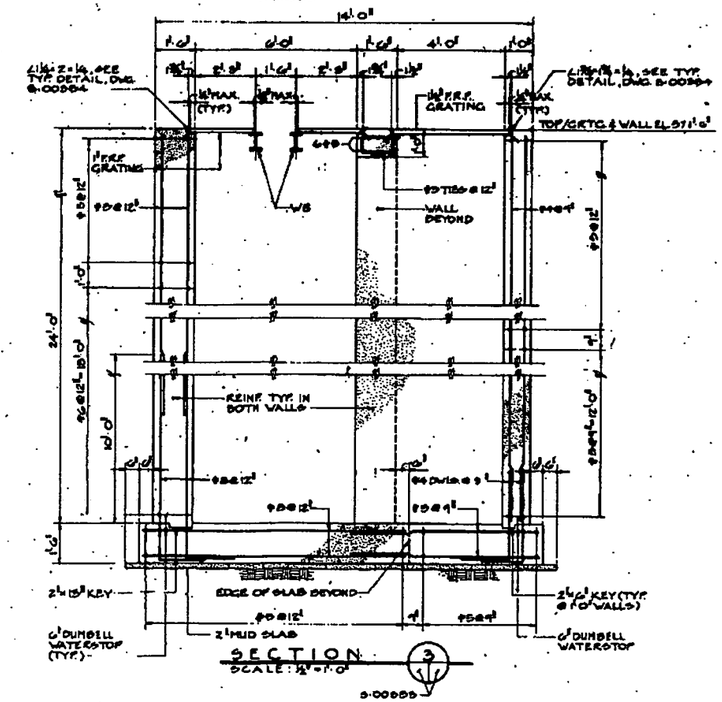

SECTION SCALE: 1/4"=1'-0"

REV. NO.	REVISE OR REVISION PURPOSE-DESCRIPTION	A-E	PCD	DOE INITIALS AND DATE
0	CERTIFIED FOR CONSTRUCTION			

UNITED STATES DEPARTMENT OF ENERGY

THIS DRAWING PREPARED BY WILEY & WILSON ARCHITECTS • ENGINEERS • PLANNERS LYNCHBURG, VIRGINIA

DOE CONTRACT NO. DE-AC02-80OR20834 A-E NO. 89102

PROJECT NAME: WATER POLLUTION CONTROL

DRAWING TITLE: STORM WATER COLLECTION STORM TRANSFER AND UNDERDRAIN PUMP STATIONS - PLANS & SECTIONS

DRAWN BY	DATE	DESIGNED AND CHECKED BY	DATE	CHECKED BY	DATE
J.D.D.	1/10/84	A.C.	1/10/84	C.A.B.	1/10/84

PLANT	BLDG.	FLOOR	SCALE	CLASS
PWPC	N/A	N/A	N/A	U

SUBMITTED FOR APPROVAL: A-E DATE 1/10/84 — APPROVAL RECOMMENDED: PCD DATE — DRAWING APPROVED: DOE DATE

PROJECT NO. 83-D-146 — DRAWING NUMBER 16A-1920-S-00352 — REV. NO. 0

rasterv8 CADD9 paul7461 05/02/2005 09:18:35 AM

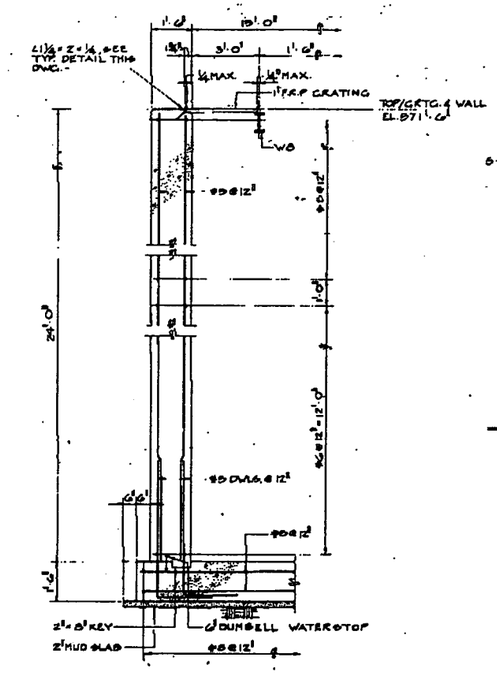

SECTION 4
SCALE: ½" = 1'-0"
S-00303 — S-00304

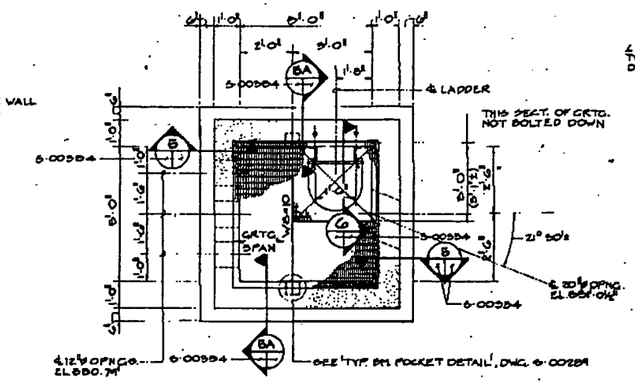

PLAN • INSPECTION SUMP
SCALE: ½" = 1'-0"

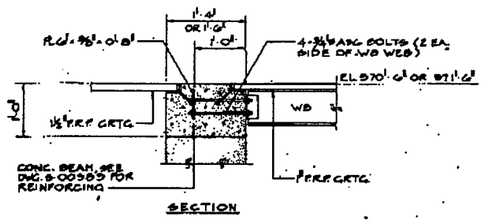

SECTION

DETAIL 1/B1
SCALE: 1" = 1'-0"

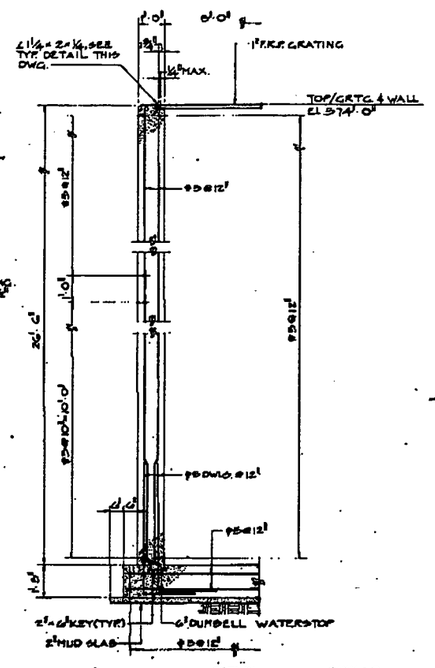

SECTION 5 BA
SCALE: ½" = 1'-0"
SHOWN — SIMILAR
S-00304 — S-00304

574'-0"
27'-11"
546'-1"

574'-0"
- 26 6
547'-6"

26'-6"
1'-5"
27'-11"

5982

NOTES:

1. SEE DWG. No. X-00262 FOR COVER SHEET & LOCATION PLAN.
2. SEE DWG. No. X-00263 FOR LIST OF DWGS.
3. SEE DWG. No. S-00287 FOR STRUCTURAL GENERAL NOTES.
4. SEE DWG. No. C-00348 FOR LOCATION OF STRUCTURES.
5. SEE DWG. S-00289 FOR TYP. BEAM POCKET DETAIL, TYP. WALL OPENING DETAIL, TYP. WALL CONSTRUCTION JOINT DETAIL & TYP. CORNER REINFORCING DETAIL.
6. SEE DWG. No. E-00388 FOR ELECTRICAL CONDUIT OPENINGS.
7. SEE DWG. No. X-00290 FOR PIPE SLEEVE DETAILS.

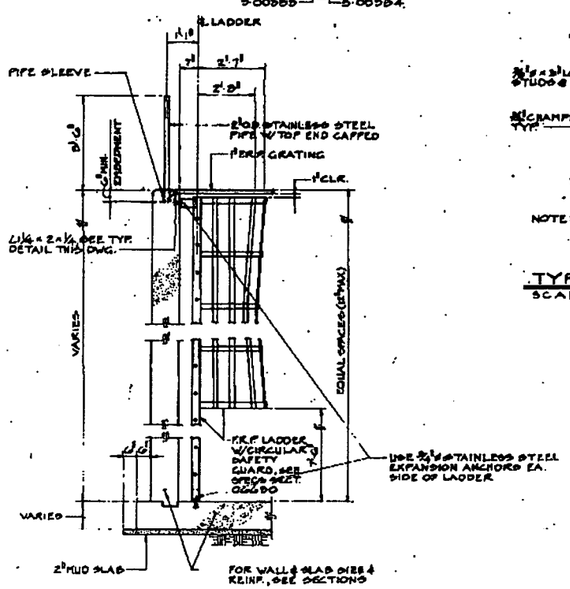

SECTION 6
SCALE: ½" = 1'-0"
S-00289, S-00303, S-00304 — S-00304

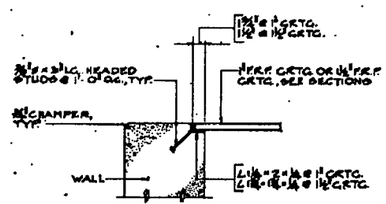

NOTE: OMIT ANGLE ACROSS 6" WIDTH OF BM. POCKET

SECTION

TYP. CURB ANGLE DETAIL
SCALE: 1½" = 1'-0"

REV. NO.	ISSUE OR REVISION PURPOSE-DESCRIPTION			
0	CERTIFIED FOR CONSTRUCTION			
		A.Y.	M.G.	BOE
		INITIALS AND DATE		

UNITED STATES
DEPARTMENT OF ENERGY

THIS DRAWING PREPARED BY
WILEY & WILSON
ARCHITECTS • ENGINEERS • PLANNERS
LYNCHBURG, VIRGINIA

DOE CONTRACT NO. DE-AC05-82OR10984 A-E NO. 08102

PROJECT NAME
WATER POLLUTION CONTROL

DRAWING TITLE
STORM WATER COLLECTION
INSPECTION SUMP
PLAN AND SECTIONS

DESIGNED BY	DATE	DESIGNED AND CHECKED BY	DATE	CHECKED BY	DATE
J.D.O.	1/1984	J.A.C.	1/1984	C.A.G.	1/1984

PLANT	BLDG.	FLOOR	SCALE		CLASS
FMPC	N/A	N/A	N/A		U

SUBMITTED FOR APPROVAL: A-E — DATE 1/1984 — M.G.
APPROVAL RECOMMENDED: DATE — BOE
DRAWING APPROVED: DATE

PROJECT NO. 83-D-146
DRAWING NUMBER 18A-1820-S-00384
REV. NO. 0

rasterv8 CADD9 paul7461 05/02/2005 09:19:55 AM

swrbareafdnplan CADD11 rabb7064 06/16/2005 01:42:52 PM

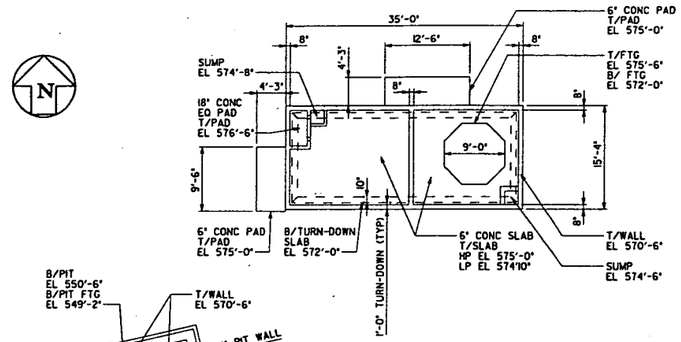

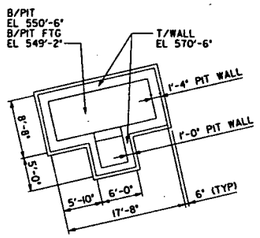

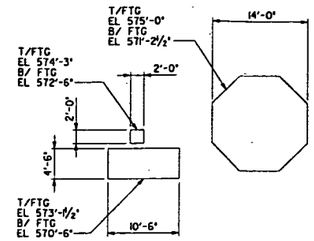

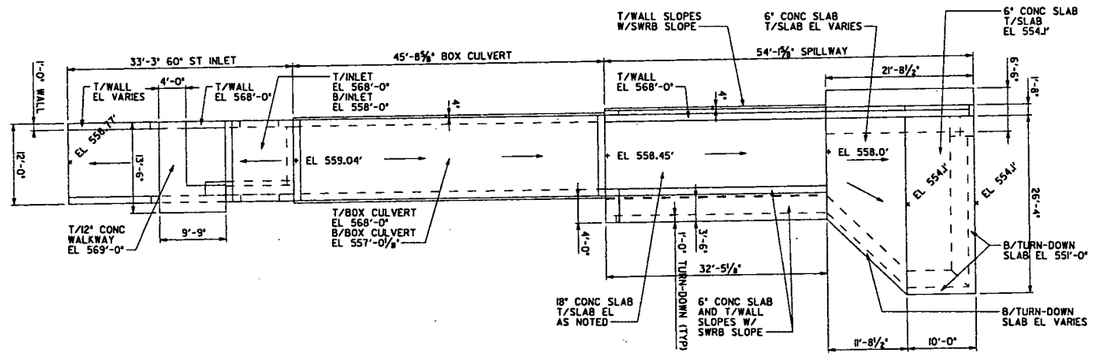

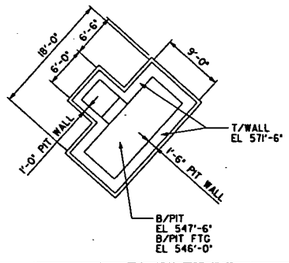

4' 0' 4' 8' 12' 16' 20'

SCALE: ⅛" = 1'-0"

PRELIMINARY

NOT FOR CONSTRUCTION

5982

REF DWG NO.	DRAWING TITLE
95X5900S00004	FOUNDATION PLAN & DETAILS INTERIM ADVANCED WASTE WATER TREATMENT
18A-1920-S-00363	STORM TRANSFER AND UNDERDRAIN PUMP STATIONS - PLANS & SECTIONS
18A-5500-S-01363	MIX TANK SYSTEM FOUNDATIONS PLAN AND DETAILS
18X-1900-S-00875	STORMWATER RETENTION BASIN EXPANSION STORMWATER STRUCTURE DETAILS - 1 OF 3
18X-1900-S-00876	STORMWATER RETENTION BASIN EXPANSION STORMWATER STRUCTURE DETAILS - 2 OF 3
18X-1900-G-00877	STORMWATER RETENTION BASIN EXPANSION STORMWATER STRUCTURE DETAILS - 3 OF 3

REV. NO.	ISSUE OR REVISION PURPOSE - DESCRIPTION	DATE	REV. BY	APPR.
A	ISSUED FOR TECHNICAL REFERENCE ONLY			

INITIALS AND DATE

UNITED STATES DEPARTMENT OF ENERGY
FERNALD CLOSURE PROJECT

THIS DRAWING PREPARED BY

FLUOR FERNALD, INC.

PROJECT NAME

DRAWING TITLE

AREA 7 (SILOS) AND GENERAL AREA
STORM WATER RETENTION BASIN AREA STRUCTURES
FOUNDATION AND SLAB PLAN

APPROVALS

COGNIZANT ENG.			SAFETY ENG.		
CIVIL & STR.			MAINTENANCE		
ELECTRICAL			FIRE PROTECT.		
ENGINEER			WASTE MANAGE		
INSTRUMENT			SECURITY		
MECHANICAL			QA		
			CONSTRUCTION		
CHECKED			SILOS PROJ. ENG.		
APPROVED					

DRAWN BY	PROJECT NO.	DRAWING INDEX CODE NO.	SHEET NO.	REV. NO.
K.L. RABBITT	20500	99X-5500-S-00XX2	S-X	A
RES PROJECT NO.	FILENAME swrbareafdnplan.dgn			

FCP5AE.DGN 5/30/03

silo3bldgfdnplan CADD11 rabb7064 06/16/2005 01:41:31 PM

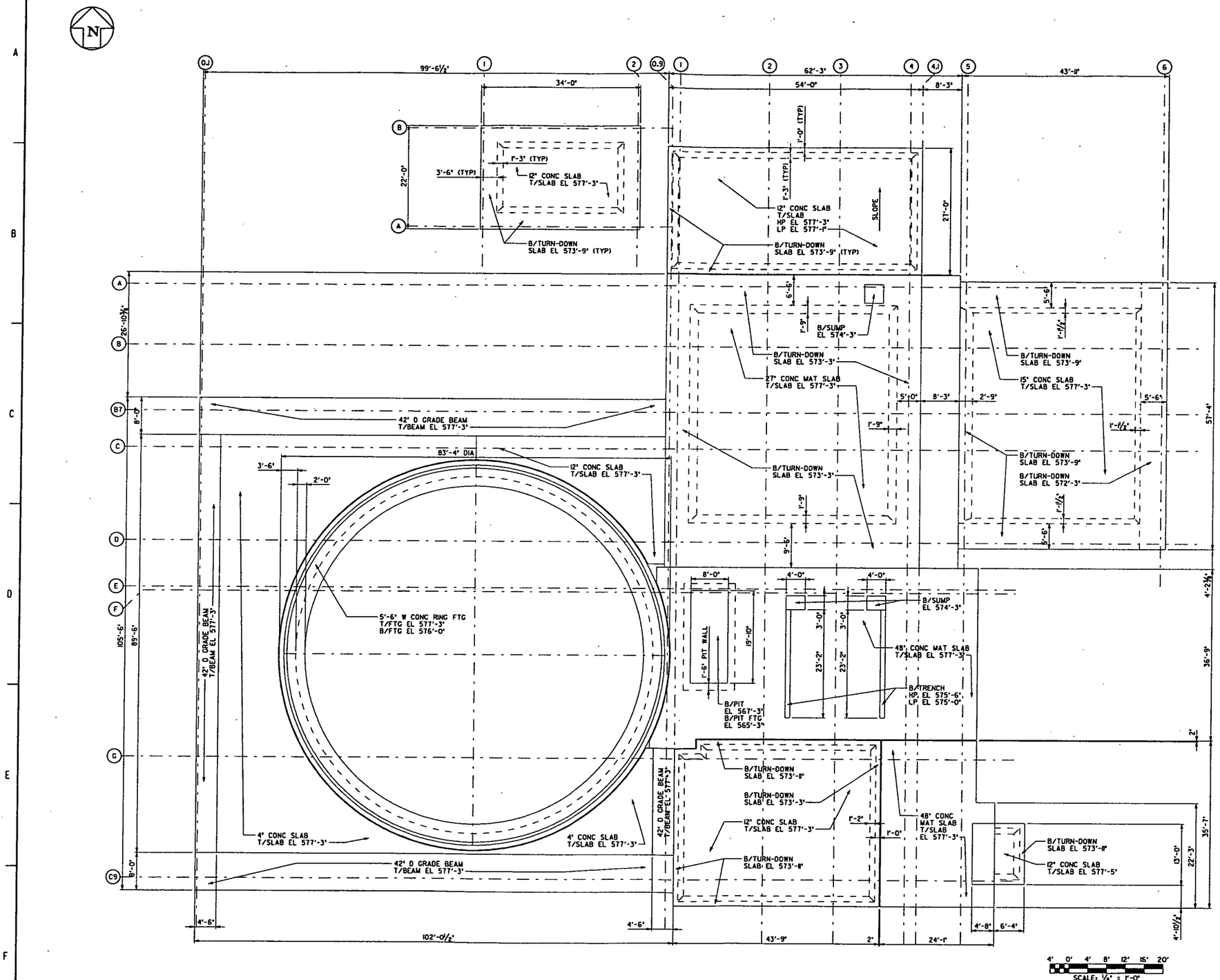

PRELIMINARY
NOT FOR CONSTRUCTION

5982

REF DWG NO.	DRAWING TITLE
94X-3900-S-01520	SILO 3 - FOUNDATIONS GENERAL SITE PLAN
94X-3900-S-01521	SILO 3 - STACK FOUNDATION AND EQUIPMENT PADS PLAN AND SECTIONS
94X-3900-S-01522	SILO 3 - SILO ENCLOSURE FOUNDATION PLAN
94X-3900-S-01523	SILO 3 - CARGO CONTAINER BUILDING FOUNDATION PLAN AND SECTIONS
94X-3900-S-01524	SILO 3 - PROCESS BUILDING FOUNDATION PLAN AND SECTIONS
94X-3900-S-01526	SILO 3 - EXCAVATOR BUILDING FOUNDATION PLAN, SECTIONS AND DETAILS
94X-3900-S-01527	SILO 3 - EXCAVATOR BUILDING SECTIONS
94X-3900-S-01530	SILO 3 - EXCAVATOR BUILDING INCLINED CONVEYOR RECESS
94X-3900-S-01535	SILO 3 - SILO ENCLOSURE FOUNDATION SECTIONS AND DETAILS
94X-3900-S-01536	SILO 3 - ELECTRICAL BUILDING FOUNDATION PLAN, SECTIONS AND DETAILS

REV. NO.	ISSUE OR REVISION PURPOSE - DESCRIPTION	DATE	REV. BY	APPR.
A	ISSUED FOR TECHNICAL REFERENCE ONLY			

INITIALS AND DATE

UNITED STATES DEPARTMENT OF ENERGY
FERNALD CLOSURE PROJECT

THIS DRAWING PREPARED BY
FLUOR FERNALD, INC.

PROJECT NAME

DRAWING TITLE
AREA 7 (SILOS) AND GENERAL AREA
SILO 3 ENCLOSURE 94M AND PROCESS BUILDINGS
FOUNDATION AND SLAB PLAN

APPROVALS

COGNIZANT ENG.			SAFETY ENG.		
CIVIL & STR.			MAINTENANCE		
ELECTRICAL			FIRE PROTECT.		
ENGINEER			WASTE MANAGE		
INSTRUMENT			SECURITY		
MECHANICAL			QA		
			CONSTRUCTION		
CHECKED			SILOS PROJ. ENG.		
APPROVED					

DRAWN BY	PROJECT NO.	DRAWING INDEX CODE NO.	SHEET NO.	REV. NO.
K.L. RABBITT	20500	99X-5500-S-00XX3	S-X	A
RES PROJECT NO.	FILENAME silo3bldgfdnplan.dgn			

FCPSAE.DGN 5/30/03

swrbareaisoplan CADD11 rabb7064 05/11/2005 12:32:35 PM

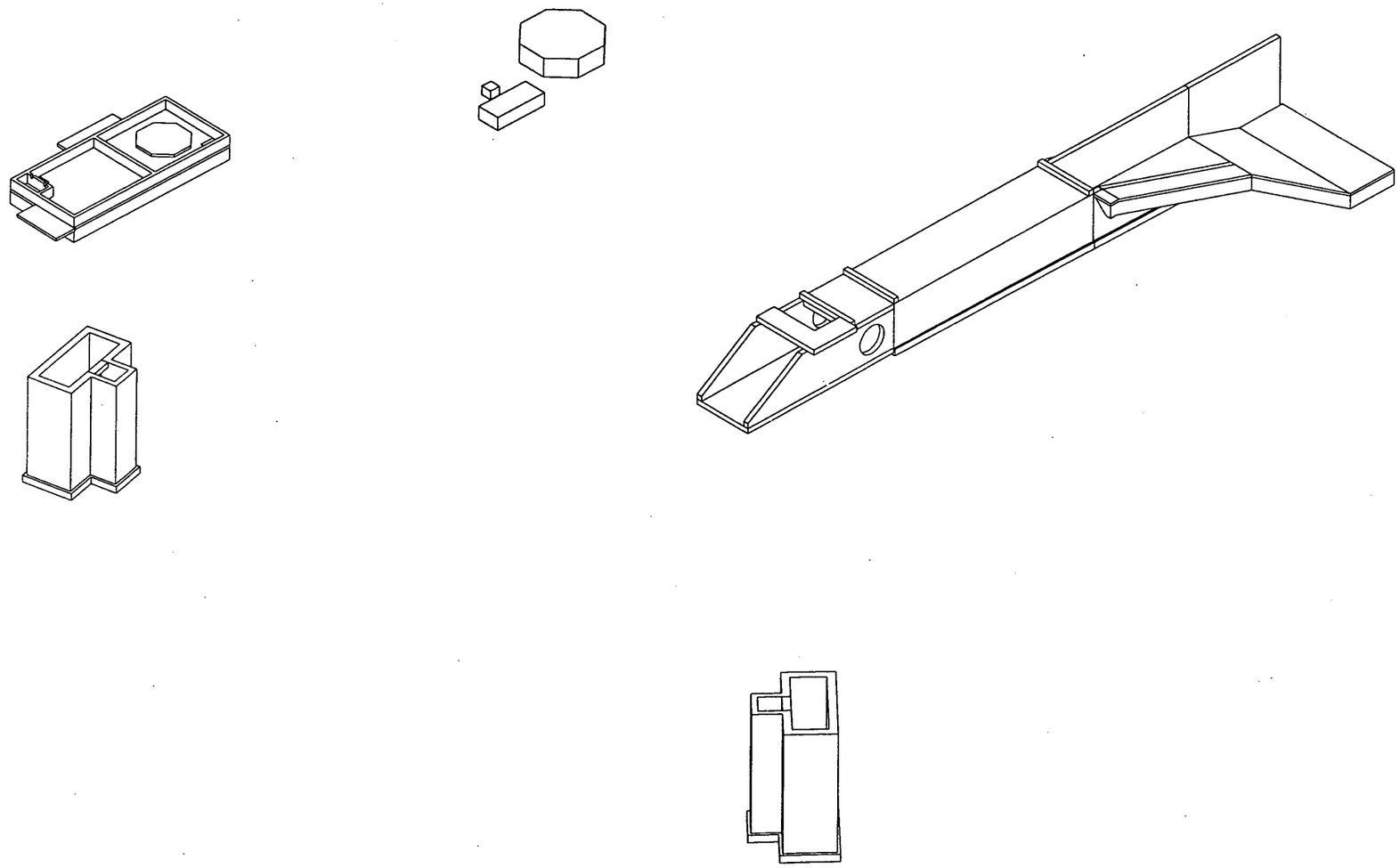

5982

REF DWG NO.	DRAWING TITLE
95X5900500004	FOUNDATION PLAN & DETAILS INTERIM ADVANCED WASTE WATER TREATMENT
18A-1920-S-00363	STORM TRANSFER AND UNDERDRAIN PUMP STATIONS - PLANS & SECTIONS
18A-5500-S-01363	MIX TANK SYSTEM FOUNDATIONS PLAN AND DETAILS
18X-1900-S-00875	STORMWATER RETENTION BASIN EXPANSION STORMWATER STRUCTURE DETAILS - 1 OF 3
18X-1900-S-00876	STORMWATER RETENTION BASIN EXPANSION STORMWATER STRUCTURE DETAILS - 2 OF 3
18X-1900-G-00877	STORMWATER RETENTION BASIN EXPANSION STORMWATER STRUCTURE DETAILS - 3 OF 3

REV. NO.	ISSUE OR REVISION PURPOSE - DESCRIPTION	DATE	REV. BY	APPR.
A	ISSUED FOR TECHNICAL REFERENCE ONLY			

INITIALS AND DATE

UNITED STATES DEPARTMENT OF ENERGY
FERNALD CLOSURE PROJECT

THIS DRAWING PREPARED BY
FLUOR FERNALD, INC.

PROJECT NAME

DRAWING TITLE
AREA 7 (SILOS) AND GENERAL AREA
STORM WATER RETENTION BASIN AREA STRUCTURES
ISOMETRIC VIEW

APPROVALS

COGNIZANT ENG.			SAFETY ENG.		
CIVIL & STR.			MAINTENANCE		
ELECTRICAL			FIRE PROTECT.		
ENGINEER			WASTE MANAGE		
INSTRUMENT			SECURITY		
MECHANICAL			QA		
			CONSTRUCTION		
CHECKED			SILOS PROJ. ENG.		
APPROVED					

PRELIMINARY
NOT FOR CONSTRUCTION

DRAWN BY	PROJECT NO.	DRAWING INDEX CODE NO.	SHEET NO.	REV. NO.
K.L. RABBITT	70500	SK-SWRB AREA	S-X	A
RES PROJECT NO.	FILENAME swrbar-aisoplan.dgn			

FCPSAE.DGN 5/30/03

silo3bldgisoplan CADD11 rabb7064 05/10/2005 02:47:13 PM

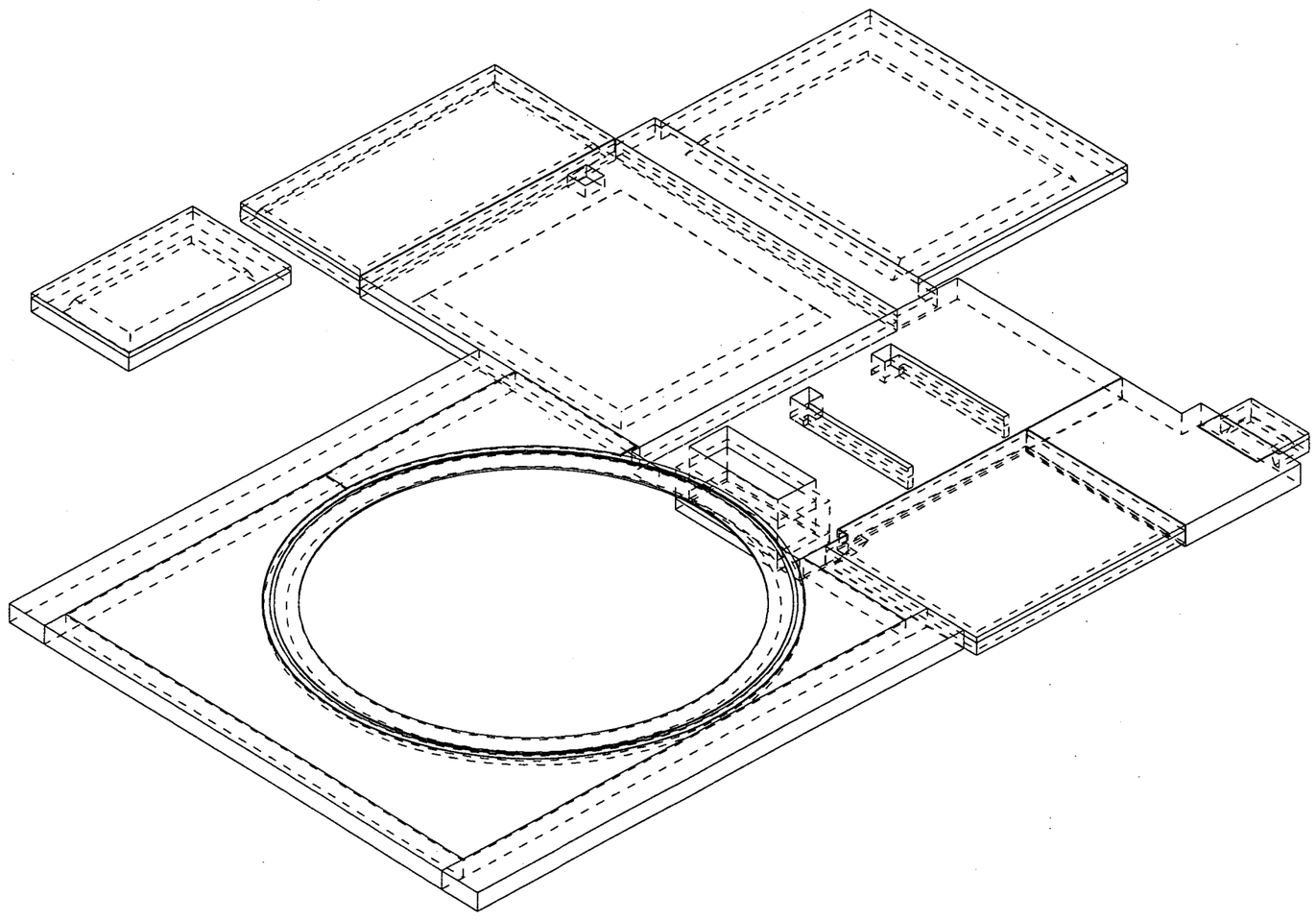

5982

REF DWG NO.	DRAWING TITLE
94X-3900-S-01520	SILO 3 - FOUNDATIONS GENERAL SITE PLAN
94X-3900-S-01521	SILO 3 - STACK FOUNDATION AND EQUIPMENT PADS PLAN AND SECTIONS
94X-3900-S-01522	SILO 3 - SILO ENCLOSURE FOUNDATION PLAN
94X-3900-S-01523	SILO 3 - CARGO CONTAINER BUILDING FOUNDATION PLAN AND SECTIONS
94X-3900-S-01524	SILO 3 - PROCESS BUILDING FOUNDATION PLAN AND SECTIONS
94X-3900-S-01526	SILO 3 - EXCAVATOR BUILDING FOUNDATION PLAN, SECTIONS AND DETAILS
94X-3900-S-01527	SILO 3 - EXCAVATOR BUILDING SECTIONS
94X-3900-S-01530	SILO 3 - EXCAVATOR BUILDING INCLINED CONVEYOR RECESS
94X-3900-S-01535	SILO 3 - SILO ENCLOSURE FOUNDATION SECTIONS AND DETAILS
94X-3900-S-01536	SILO 3 - ELECTRICAL BUILDING FOUNDATION PLAN, SECTIONS AND DETAILS

REV. NO.	ISSUE OR REVISION PURPOSE - DESCRIPTION	DATE	REV. BY	APPR.
A	ISSUED FOR TECHNICAL REFERENCE ONLY			

INITIALS AND DATE

UNITED STATES DEPARTMENT OF ENERGY
FERNALD CLOSURE PROJECT

THIS DRAWING PREPARED BY
FLUOR FERNALD, INC.

PROJECT NAME

DRAWING TITLE
AREA 7 (SILOS) AND GENERAL AREA
SILO 3 ENCLOSURE 94M AND PROCESS BUILDINGS
ISOMETRIC VIEW

APPROVALS

COGNZANT ENG.		SAFETY ENG.	
CIVIL & STR.		MAINTENANCE	
ELECTRICAL		FIRE PROTECT.	
ENGINEER		WASTE MANAGE.	
INSTRUMENT		SECURITY	
MECHANICAL		QA	
		CONSTRUCTION	
CHECKED		SILOS PROJ. ENG.	
APPROVED			

PRELIMINARY
NOT FOR CONSTRUCTION

DRAWN BY	PROJECT NO.	DRAWING INDEX CODE NO.	SHEET NO.	REV. NO.
K.L. RABBITT	20500	SK-SILO 3 & 94M	S-X	A
RES PROJECT NO.	FILENAME silo3bldgisoplan.dgn			

FCP5AE.DGN 5/30/03