UNITED STATES
DEPARTMENT OF ENERGY
FERNALD ENVIRONMENTAL MANAGEMENT PROJECT

006058

WASTE STORAGE AREA EXTRACTION SYSTEM
PHASE 2
OPERABLE UNIT 5
PROJECT No. 58110

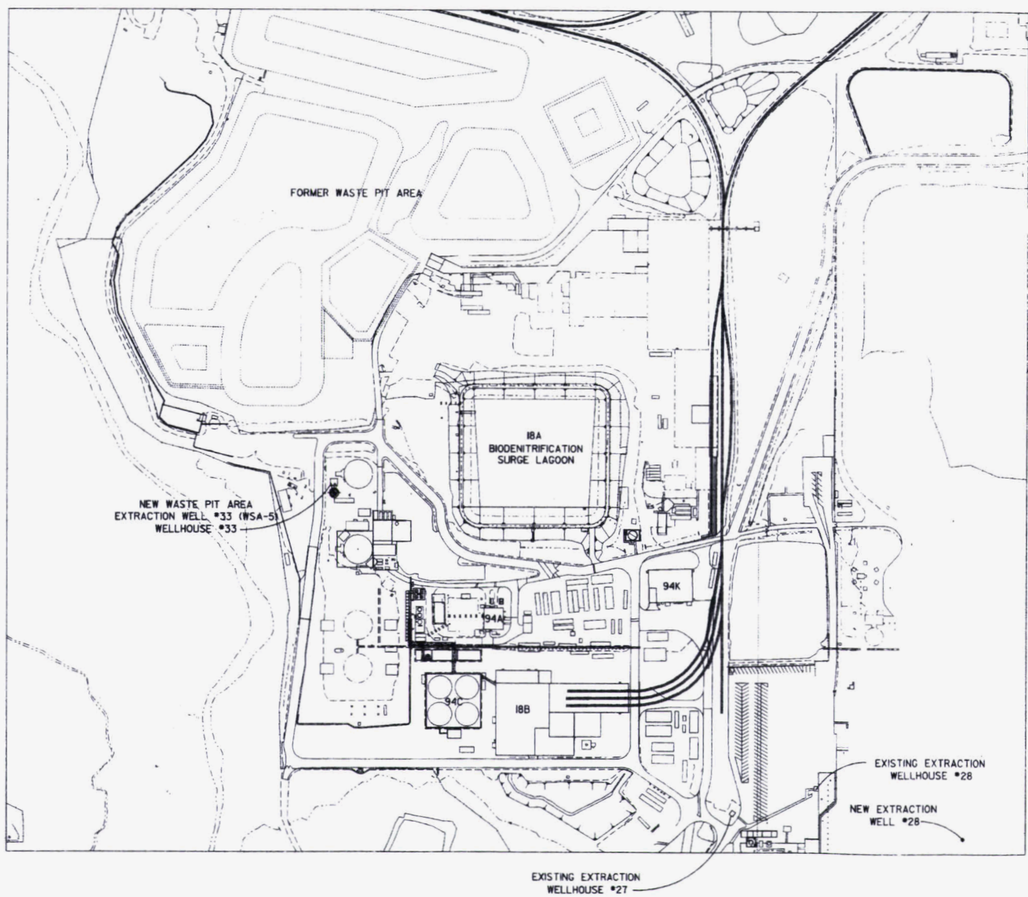

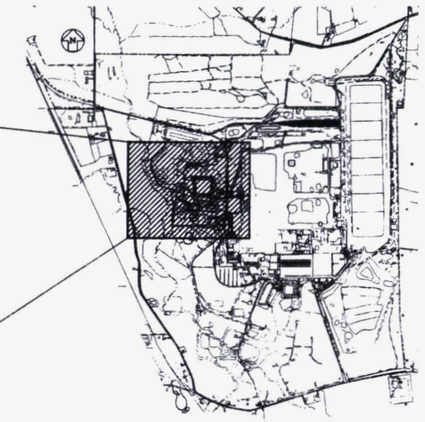

FEMP VICINITY MAP

DRAWING INDEX

FILENAME	DRAWING NO.	TITLE DESCRIPTION
95XX0000.DGN	95X-5500-X-02114	WASTE STORAGE AREA EXTRACTION SYSTEM, PHASE 2, TITLE AND INDEX SHEET
	95X-5500-A-02115	ARCHITECTURAL PLAN AND ELEVATIONS
	95X-5500-A-02116	ARCHITECTURAL SECTIONS AND DETAILS
	95X-5500-E-02117	ELECTRICAL SYMBOLS AND LEGEND, SHEET 1 OF 2
	95X-5500-E-02118	ELECTRICAL SYMBOLS AND LEGEND, SHEET 2 OF 2
	95X-5500-E-02120	480V DISTRIBUTION AND COMMUNICATIONS PLAN
	95X-5500-E-02121	ELECTRICAL SERVICE ENTRANCE DETAIL & MISC. DETAILS
	95X-5500-E-02122	POLE ELEVATIONS
	95X-5500-E-02123	COMMUNICATIONS DETAILS & HEAT RISER DIAGRAM
	95X-5500-E-02124	POLE MATERIAL LIST & STANDARD DETAILS
	95X-5500-E-02125	SINGLE LINE DIAGRAM
	95X-5500-E-02126	ELEMENTARY & INTERCONNECTION DIAGRAMS, PANEL SCHEDULES
	95X-5500-E-02127	ELECTRICAL CABLE SCHEDULE, SHEET 1 OF 3
	95X-5500-E-02128	ELECTRICAL CABLE SCHEDULE, SHEET 2 OF 3
	95X-5500-E-02129	ELECTRICAL CABLE SCHEDULE, SHEET 3 OF 3
	95X-5500-E-02130	CONDUIT SCHEDULE
	95X-5500-E-02131	WELLHOUSE POWER, INSTRUMENT & LIGHTING PLAN
	96X-5900-E-02007	13.2KV AERIAL DISTRIBUTION SINGLE LINE DIAGRAM, SHEET 3 OF 3
	16X-5500-E-00160	POLE 546 SINGLE LINE DIAGRAM
	18A-5500-E-01355	BIO-SURGE LAGOON SINGLE LINE AND PANEL SCHEDULE
	95X-5500-G-02132	CIVIL LEGEND AND SYMBOLS
	95X-5500-G-02133	OVERALL SITE PLAN
	95X-5500-G-02134	POST CLOSURE SITE PLAN - SHEET 1 OF 3
	95X-5500-G-02135	UTILITIES PLAN - SHEET 2 OF 3
	95X-5500-G-02136	UTILITIES PLAN - SHEET 3 OF 3
	95X-5500-G-02137	UTILITY PIPING PROFILES
	95X-5500-G-02138	WELLHOUSE #33 SITE LAYOUT
	95X-5500-G-02148	WELLHOUSE #28 SITE LAYOUT
	95X-5500-G-02139	CIVIL DETAILS, SHEET 1 OF 3
	95X-5500-G-02140	CIVIL DETAILS, SHEET 2 OF 3
	95X-5500-G-02147	CIVIL DETAILS, SHEET 3 OF 3
	95X-5500-N-02141	PIPING AND INSTRUMENTATION SYMBOLS AND LEGEND
	95X-5500-N-02142	P&ID
	95X-5500-N-02143	DCS PCS LOOP DIAGRAM
	95X-5500-N-02144	CONTROL SYSTEM ARCHITECTURE
	95X-5500-P-02145	TYPICAL WELLHOUSE PIPING PLAN
	95X-5500-P-02146	TYPICAL WELLHOUSE PIPING SECTION AND DETAIL

NO.	REVISIONS	DATE	DWN. BY	APPD.
0	ISSUED FOR CFC	9-9-05	GEP	
B	ISSUED FOR 90% REVIEW	8-8-05	GEP	
A	ISSUED FOR 60% REVIEW	5-3-05	GEP	

REF. DWG. NO.

NOTE: FLUOR FERNALD CADD DRAWING. DO NOT REVISE MANUALLY.

CONFIGURATION MANAGEMENT DRAWING

COGNIZANT ENGINEER DATE

APPROVALS

CIVIL & STR.		SAFETY ENG.	
ELECTRICAL		MAINTENANCE	
ENGINEER		FIRE PROTECT.	
INSTRUMENT		WASTE MANAGE	
MECHANICAL		SECURITY	
		PROJECTS	
CHECKED			
APPROVED			

Fernald Closure Project

FLUOR FERNALD, INC.

U.S. DEPARTMENT OF ENERGY

WASTE PIT AREA — GRID 31A

WASTE STORAGE AREA EXTRACTION SYSTEM
PHASE 2
PROJECT TITLE & INDEX SHEET

RES 4528
DATE MARCH 3, 2005
DRAWN G.E. PAUL

95X-5500-X-02114 | 0

FORMLSDGN 5/30/03

FILE NAME: /res4528/95xx2114.dgn

006058

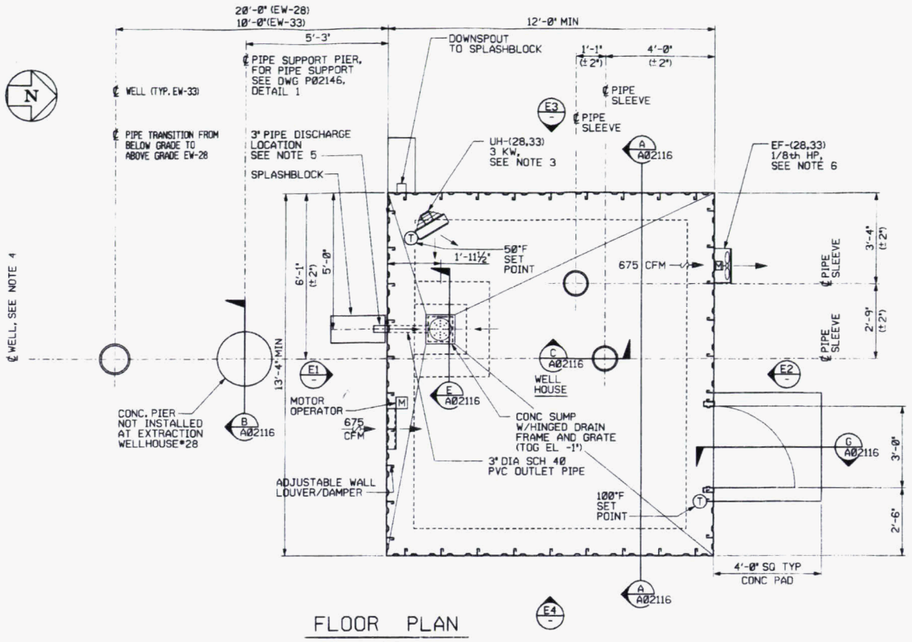

FLOOR PLAN (E4)

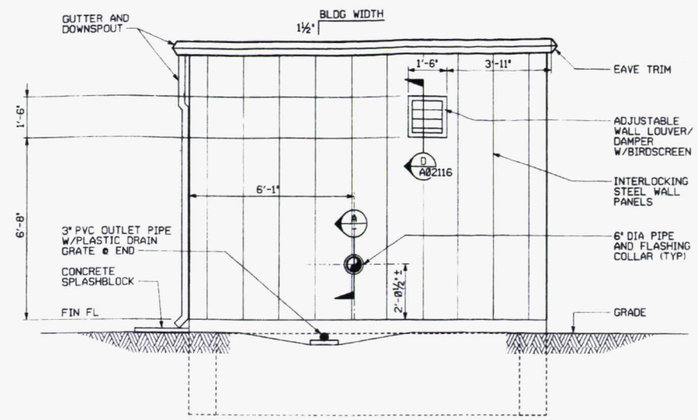

ELEVATION (E1)

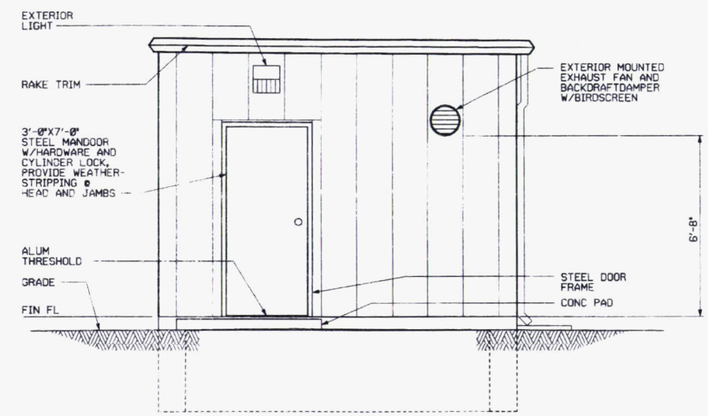

ELEVATION (E2)

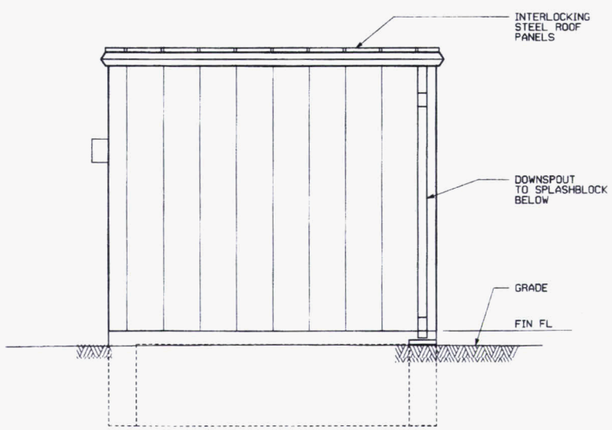

ELEVATION (E3)

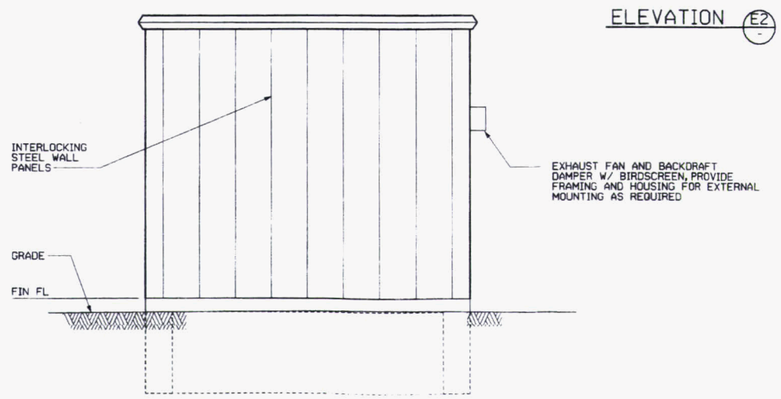

ELEVATION (E4)

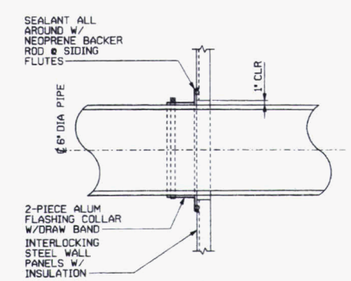

SECTION (A)
1"=1'-0"

LEGEND :

(T) - THERMOSTAT

[M] - MOTOR OPERATOR

NOTES :

1. SEE SPECIFICATION SECTION 15500 FOR EXHAUST FAN AND UNIT HEATER INFORMATION.
2. THE ADJUSTABLE LOUVER/DAMPER MOTOR OPERATORS SHALL BE INTERLOCKED WITH THE EXHAUST FAN.
3. THE EXHAUST FAN AND UNIT HEATER SHALL HAVE THE SAME EQUIPMENT TAG NUMBER AS THE WELL HOUSE NUMBER. ALL UNIT HEATERS SHALL BE INSTALLED A MINIMUM OF 6'-8" CLEAR ABOVE FINISH FLOOR.
4. SEE DRAWINGS 95X-5500-P-02145 & 95X-5500-P-02146. FOR CENTERLINE OF WELL COORDINATES AND FINISH FLOOR ELEVATIONS. LOCATE WELL HOUSE BASED ON THESE COORDINATES.
5. 3" OUTLET PIPE/SLASHBLOCK AS INDICATED AND THE CONTRACTOR TO GRADE BEYOND END OF PIPE AT 0.3% SLOPE AS NECESSARY TO ALLOW FREE DRAINING AT OUTLET.
6. THE EXHAUST FAN AND THE BACKDRAFT DAMPER SHALL BE EXTERIOR MOUNTED IN A WEATHERTIGHT HOUSING, AND ADDITIONAL ANGLE SUPPORTS ADDED IF REQUIRED. SUPPORTS MUST BE ATTACHED TO RIBS OF SIDING ONLY, USING WEATHERTIGHT FASTENERS.
7. SLOPE FLOOR TO PROVIDE POSITIVE DRAINAGE TO SUMP.

REF DWG NO.	DRAWING TITLE
95X-5500-X-02114	DRAWING INDEX
95X-5500-G-02132	LEGEND AND SYMBOLS
95X-5500-G-02133	SITE UTILITY PIPING PLAN
95X-5500-G-02---	SITE UTILITY PIPING PLAN
95X-5500-A-02116	SECTIONS AND DETAILS
95X-5500-P-02146	PIPE SUPPORT DETAILS
95X-5500-E-02131	480/120V POWER, INSTRUMENT, AND LIGHTING PLAN

NO.	REVISIONS	DATE	DWN. BY	APPD.
0	ISSUED FOR CFC	5-5-05	GEP	[illegible]
B	ISSUED FOR 90% REVIEW	4-4-05	GEP	
A	ISSUED FOR 60% REVIEW	3-3-05	GEP	

REF. DWG. NO.

NOTE: FLUOR FERNALD CADD DRAWING, DO NOT REVISE MANUALLY.

CONFIGURATION MANAGEMENT DRAWING — SYSTEMS, STRUCTURES OR COMPONENTS REFLECTED ON THIS DRAWING ARE UNDER CONFIGURATION MANAGEMENT CONTROL. SEE NOTES.

COGNIZANT ENGINEER — DATE

APPROVALS

CIVIL & STR.	[signature]	SAFETY ENG.	
ELECTRICAL	[signature]	MAINTENANCE	
ENGINEER		FIRE PROTECT.	
INSTRUMENT		WASTE MANAGE.	
MECHANICAL		SECURITY	
		PROJECTS	[signature] 4/13/05
CHECKED	[signature]		
APPROVED	[signature] 4/14/05		

Fernald Closure Project

FLUOR FERNALD, INC.

U.S. DEPARTMENT OF ENERGY

WASTE PIT AREA — GRID 31A

WASTE STORAGE AREA EXTRACTION SYSTEM

PHASE 2

ARCHITECTURAL PLAN AND ELEVATIONS, WELL HOUSE No. 33

RES 4528 — DATE APRIL 5, 2005 — DRAWN G.E. PAUL

95X-5500-A-02115 — 0

FDMS.DGN 5/30/03

FILE NAME: /res4528/95xa2115.dgn

006058

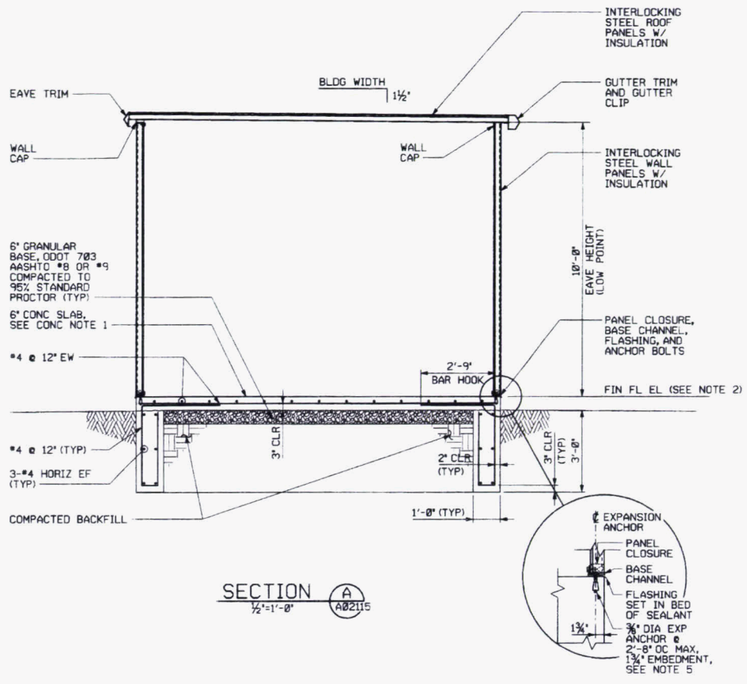

SECTION A
½"=1'-0" A02115

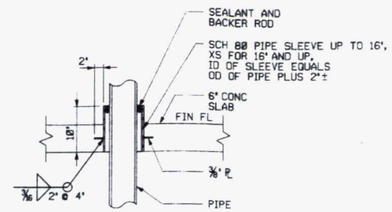

TYP PIPE SLEEVE SECTION C
1"=1'-0" A02115

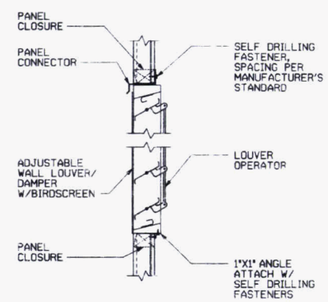

SECTION D
1½"=1'-0" A02115

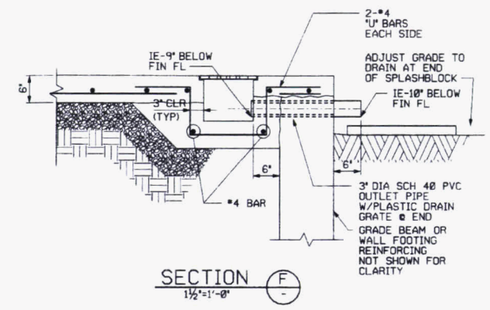

SECTION F
1½"=1'-0"

1. FOR GROUNDING SYSTEM CONNECTION TO REINFORCEMENT, SEE DRAWING 95X-5500-E-02131.
2. SEE PIPING DRAWING 95X-5500-P-02145 AND 95X-5500-P-02146 FOR FINISH FLOOR ELEVATIONS FOR WELL HOUSES 28 & 33

GENERAL CONCRETE NOTES

1. DESIGN, MATERIAL AND WORKMANSHIP SHALL BE IN ACCORDANCE WITH SPECIFICATION SECTION 03001.
2. CONCRETE FOR SLAB ON GRADE SHALL HAVE A MINIMUM COMPRESSIVE STRENGTH OF 4000 PSI AT 28 DAYS. CONCRETE FOR FOUNDATIONS AND MISCELLANEOUS PADS SHALL HAVE A MINIMUM COMPRESSIVE STRENGTH OF 3000 PSI AT 28 DAYS.
3. REINFORCING STEEL SHALL CONFORM TO ASTM SPECIFICATION A-615, GRADE 60.
4. FOUNDATION DESIGN IS BASED ON ASSUMED NET SOIL BEARING PRESSURE ALLOWABLE OF 2000 PSF. SITE SPECIFIC GEOLOGICAL INVESTIGATION WAS NOT PERFORMED. IF ANY SOFT, WET, ORGANIC OR LOOSE SOIL OR ANY OLD FILL IS ENCOUNTERED, THE FDF CONSTRUCTION MANAGER SHALL BE INFORMED AND THE CONDITIONS RESOLVED BEFORE CONTINUATION OF CONCRETE WORK.
5. ANCHOR BOLTS FOR PRE-ENGINEERED BUILDING AS SHOWN WERE DETERMINED USING PARKLINE BUILDING CATALOG INFORMATION. ANCHOR BOLT LOCATIONS SHALL BE CONFIRMED BY SELECTED PRE-ENGINEERED BUILDING VENDOR'S CERTIFIED DRAWINGS, BEFORE CONSTRUCTION OF THE FOUNDATION.
6. HOLD PLAN DIMENSION OF CONCRETE FOUNDATION +¼", -0" FOR ANCHOR BOLT EDGE DISTANCE REQUIREMENTS.

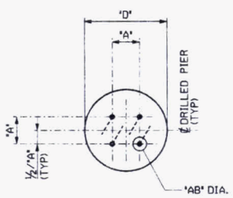

CONC PIER PLAN
1"=1'-0"

PIER SCHEDULE					
WELL HOUSE NO.	'D'	'A'	½"'A'	'B'	'AB'
28	18"	6"	3"	#5	½"
33	18"	6"	3"	#5	½"

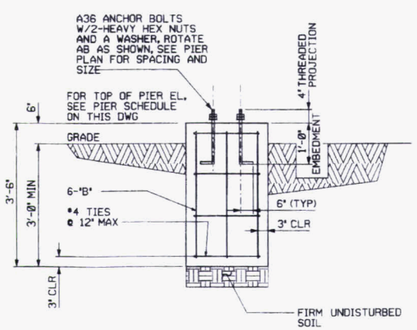

SECTION B
1"=1'-0" A02115

NOTE:
CONCRETE PIER NOT INSTALLED AT EXTRACTION WELLHOUSE #26

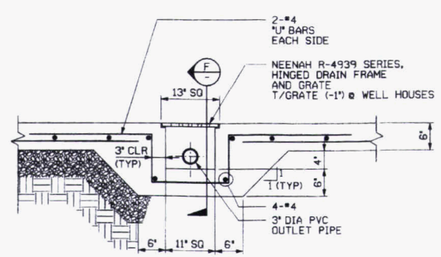

SECTION E
1½"=1'-0" A02115

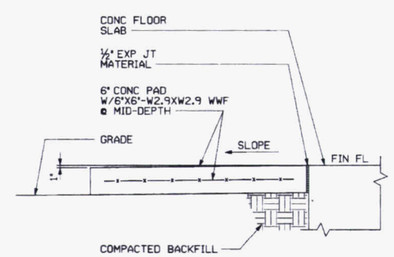

SECTION G
1"=1'-0" A02115

REF DWG NO.	DRAWING TITLE
95X-5500-X-02114	DRAWING INDEX
95X-5500-G-02132	LEGEND AND SYMBOLS
95X-5500-G-02133	OVERALL SITE PLAN
95X-5500-G-02134	UTILITIES PLAN SHEET 1 OF 3
95X-5500-G-02135	UTILITIES PLAN SHEET 2 OF 3
95X-5500-G-02136	UTILITIES PLAN SHEET 3 OF 3
95X-5500-A-02115	PLAN AND ELEVATIONS
95X-5500-E-02131	480/120V POWER, INSTRUMENT, AND LIGHTING PLAN

NO.	REVISIONS	DATE	DWN. BY	APPD.
0	ISSUED FOR CFC	9-4-05	GEP	
B	ISSUED FOR 90% REVIEW	8-11-05	GEP	
A	ISSUED FOR 60% REVIEW	5-3-05	GEP	

NOTE:
FLUOR FERNALD CADD DRAWING. DO NOT REVISE MANUALLY.

CONFIGURATION MANAGEMENT DRAWING — YES / NO
SYSTEMS, STRUCTURES OR COMPONENTS DEPICTED ON THIS DRAWING ARE UNDER DOCUMENTED CONFIGURATION MANAGEMENT CONTROL. SEE NOTES.
COGNIZANT ENGINEER — DATE

APPROVALS

CIVIL & STR.		SAFETY ENG.	
ELECTRICAL		MAINTENANCE	
ENGINEER		FIRE PROTECT.	
INSTRUMENT		WASTE MANAGE.	
MECHANICAL		SECURITY	
		PROJECTS	
CHECKED			
APPROVED			

Fernald Closure Project
FLUOR FERNALD, INC.
U.S. DEPARTMENT OF ENERGY

WASTE PIT AREA — GRID 31A
WASTE STORAGE AREA EXTRACTION SYSTEM
PHASE 2
ARCHITECTURAL SECTIONS AND DETAILS, WELL HOUSE No. 33

RES 4528
DATE APRIL 5, 2005
DRAWN G.E. PAUL

95X-5500-A-02116 — 0

FILE NAME: /res4528/95xa2116.dgn

FDP5.DGN 5/30/03

006058

SINGLE LINE DIAGRAM SYMBOLS

ARRESTER	YY-XXXX	'YY' INDICATES SPECIAL IDENTIFIER 'XXXX' INDICATES ID NO.
CIRCUIT BREAKER, LOW VOLTAGE	FFFF TTTT	'FFFF' INDICATES FRAME RATING AMPS (SHOWN ON SWITCHGEAR ONLY) 'TTTT' INDICATES TRIP RATING AMPS
CIRCUIT BREAKER, MEDIUM VOLTAGE	FFFF TTTT	'FFFF' INDICATES FRAME RATING AMPS 'TTTT' INDICATES TRIP RATING AMPS
COMBINATION STARTER, NON-REVERSING	TTTT ZZZZ	'TTTT' INDICATES TRIP RATING AMPS 'ZZZZ' INDICATES NEMA SIZE ← EQUIPMENT OUTLINE (TYP)
FUSED SWITCH	FFFF	'FFFF' INDICATES FUSE SIZE
CURRENT TRANSFORMER	YY ZZZZ	'YY' INDICATES NO. OF CT(S) 'ZZZZ' INDICATES CT RATIO(S)
DISCONNECT SWITCH	FFFF	'FFFF' INDICATES FRAME RATING AMPS
DRAW-OUT DEVICE/ RECEPTACLE		
FUSED DISCONNECT SWITCH	FFFF TTTT	'FFFF' INDICATES FRAME RATING AMPS 'TTTT' INDICATES TRIP RATING AMPS
FUSE	XXXX YY TTTT	'XXXX' INDICATES ID NO. 'YY' INDICATES SPECIAL IDENTIFIER 'TTTT' INDICATES TRIP RATING AMPS
GENERATOR		
INDICATING METER	XXXX YYY	'XXXX' INDICATES ID NO. 'YYY' INDICATES SPECIAL INDICATOR
LOAD, NON-MOTOR	ZZZ ZZZ	'ZZZ' INDICATES EQUIPMENT SIZE IN KVA OR KW
MOTOR	ZZZ HP	'ZZZ' INDICATES HORSEPOWER SIZE
MOTOR OVERLOAD RELAY		
MOTOR STARTER CONTACT	ZZ	'ZZ' INDICATES NEMA SIZE
PANEL MOUNTED SWITCH	XXXX YY	'YY' INDICATES SPECIAL IDENTIFIER 'XXXX' INDICATES ID NO.
POTENTIAL TRANSFORMER	ZZZZ	'ZZZZ' INDICATES VOLTAGE RATIO (TYP. 14.4K/120)
SYMBOL 3 PHASE DELTA	△	
SYMBOL, 3 PHASE WYE GROUNDED	Y	
TRANSFER SWITCH	YY-XXXX	'YY' INDICATES SPECIAL IDENTIFIER 'XXXX' INDICATES ID NO.
WELDING/POWER RECEPTACLE		
TRANSFORMER	XXXX ZZZZ	'XXXX' INDICATES ID NO. 'ZZZZ' INDICATES TRANSFORMER RATINGS - KVA, 1 OR 3 PHASE, VOLTAGE RATIO, IMPEDANCE

ELEMENTARY DIAGRAM SYMBOLS

CIRCUIT BREAKER	TTTT	'TTTT' INDICATES TRIP RATING AMPS
CONTACT	YY-XXXX	NORMALLY OPEN, CLOSES WHEN COIL IS ENERGIZED. 'XXXX' INDICATES ID NO., 'YY' INDICATES SPECIAL IDENTIFIER
CONTACT	YY-XXXX	NORMALLY CLOSED, OPENS WHEN COIL IS ENERGIZED. 'XXXX' INDICATES ID NO., 'YY' INDICATES SPECIAL IDENTIFIER
CONTROL POWER XFMR	H1 480V H2 CPT X1 120V X2	
DISCONNECT SWITCH	FFFF	'FFFF' INDICATES FRAME RATING AMPS
DISCONNECT SWITCH, 3 PHASE	DSWXXXX FFFF	'XXXX' INDICATES ID NO., 'FFFF' INDICATES FRAME RATING AMPS
EQUIPMENT LOAD, 1 PHASE	H1 H2 ZZZZ ZZZZ	'ZZZZ' INDICATES EQUIPMENT SIZE IN 'KVA' OR 'KW'
EQUIPMENT LOAD, 1 PHASE	H1 H2 ZZZZ ZZZZ	'ZZZZ' INDICATES EQUIPMENT SIZE IN 'KVA' OR 'KW'
EQUIPMENT LOAD, 3 PHASE	H1 H2 H3 ZZZZ ZZZZ	'ZZZZ' INDICATES EQUIPMENT SIZE IN 'KVA' OR 'KW'
FUSE	XXXX TTTT Y	'XXXX' INDICATES ID NO., 'TTTT' INDICATES TRIP RATING AMPS, 'Y' INDICATES SPECIAL IDENTIFIER
GROUND		
MOTOR, 1 PHASE	T1 T2 ZZZ HP	'ZZZ' INDICATES HP SIZE
MOTOR, 1 PHASE	T1 T2 ZZZ HP	'ZZZ' INDICATES HP SIZE
MOTOR, 3 PHASE	T1 T2 T3 ZZZ HP	'ZZZ' INDICATES HP SIZE
OVERLOAD ELEMENT	OL	
PILOT LIGHT	XXXX YY	'XXXX' INDICATES ID NO., 'YY' INDICATES SPECIAL IDENTIFIER
PUSH-TO-TEST LIGHT	XXXX YY	'XXXX' INDICATES ID NO., 'YY' INDICATES SPECIAL IDENTIFIER
RELAY	XXXX YY	'XXXX' INDICATES ID NO., 'YY' INDICATES SPECIAL IDENTIFIER
RELAY, TIME DELAY	TDR-XXXX TDAE TTTT	TIME DELAY AFTER ENERGIZED. 'XXXX' INDICATES ID NO. 'TTTT' INDICATES TIMING SET POINT
RELAY, TIME DELAY	TDR-XXXX TDAD TTTT	TIME DELAY AFTER DE-ENERGIZED. 'XXXX' INDICATES ID NO. 'TTTT' INDICATES TIMING SET POINT
RESISTOR	XXXX ZZZZ	'XXXX' INDICATES ID NO. 'ZZZZ' INDICATES SIZE IN OHMS
SOLENOID VALVE COIL	XXXX	'XXXX' INDICATES ID NO.
THERMAL OVERLOAD CONTACT	OL	NORMALLY CLOSED, OPENS WHEN OVERLOAD RELAY(S) TRIP

WIRING BY SUBCONTRACTOR ———

WIRING BY CONSTRUCTION - - - - - - - -

SWITCHES

FLOW SWITCH	NORMALLY CLOSED, OPENS ABOVE SET FLOW
FLOW SWITCH	NORMALLY OPEN, CLOSES ABOVE SET FLOW
FOOT SWITCH	NORMALLY OPEN, CLOSES WHEN ACTUATED
FOOT SWITCH	NORMALLY CLOSED, OPENS WHEN ACTUATED
LEVEL SWITCH	NORMALLY CLOSED, OPENS ABOVE SET LEVEL
LEVEL SWITCH	NORMALLY OPEN, CLOSES ABOVE SET LEVEL
LIMIT SWITCH	NORMALLY CLOSED, OPENS BY MECHANICAL OPERATION
LIMIT SWITCH	NORMALLY OPEN, CLOSES BY MECHANICAL OPERATION
VACUUM SWITCH	NORMALLY OPEN, CLOSES BELOW SET PRESSURE
VACUUM SWITCH	NORMALLY CLOSED, OPENS BELOW SET PRESSURE
PRESSURE SWITCH	NORMALLY CLOSED, OPENS ABOVE SET PRESSURE
PRESSURE SWITCH	NORMALLY OPEN, CLOSES ABOVE SET PRESSURE
PUSHBUTTON	XX MOMENTARY OR MAINTAIN CONTACT (XX = MC), NORMALLY OPEN CONTACT
PUSHBUTTON	XX MOMENTARY OR MAINTAIN CONTACT (XX = MC), NORMALLY CLOSED CONTACT
PUSHBUTTON, MUSHROOM HEAD	XX MOMENTARY OR MAINTAIN CONTACT (XX = MC), NORMALLY OPEN CONTACT
PUSHBUTTON, MUSHROOM HEAD	XX MOMENTARY OR MAINTAIN CONTACT (XX = MC), NORMALLY CLOSED CONTACT
SELECTOR SWITCH (GENERAL)	XXXX YY ZZ (XO) (OX) 'XXXX' INDICATES ID NO. 'YY' INDICATES NAME OF CURRENT SWITCH POSITION, 'ZZ' INDICATES NAME OF OTHER SWITCH POSITION(S) 'X' INDICATES CLOSED CIRCUIT POSITION 'O' INDICATES OPEN CIRCUIT POSITION (CONTACTS DIAGRAMMATICALLY SHOWN CLOSED)
TEMPERATURE SWITCH	NORMALLY CLOSED, OPENS ABOVE SET TEMPERATURE
TEMPERATURE SWITCH	NORMALLY OPEN, CLOSES ABOVE SET TEMPERATURE
TIMER SWITCH	NORMALLY CLOSED, OPENS ON TIME DELAY AFTER COIL IS ENERGIZED
TIMER SWITCH	NORMALLY OPEN, CLOSES ON TIME DELAY AFTER COIL IS ENERGIZED
TIMER SWITCH	NORMALLY CLOSED, CLOSES ON TIME DELAY AFTER COIL IS DE-ENERGIZED
TIMER SWITCH	NORMALLY OPEN, OPENS ON TIME DELAY AFTER COIL IS DE-ENERGIZED
TORQUE SWITCH	NORMALLY OPEN, CLOSES BELOW SET POINT
TORQUE SWITCH	NORMALLY CLOSED, OPENS ABOVE SET POINT

SPECIAL IDENTIFIERS

A	AMBER LIGHT OR AMMETER
AS	AMMETER SWITCH
ATS	AUTOMATIC TRANSFER SWITCH
C	CLEAR LIGHT
CB	CIRCUIT BREAKER
CL	CURRENT LIMITING FUSE
CR	CONTROL RELAY
CS	CONTROL SWITCH
E	HIGH SPEED, MEDIUM VOLTAGE FUSE
G	GREEN LIGHT
LA	LIGHTNING ARRESTER
LR	LATCHING RELAY
M	MOTOR RELAY
MTS	MANUAL TRANSFER SWITCH
PF	POWER FACTOR METER
R	RED LIGHT
SA	SURGE ARRESTER
SP	SPARE
T	TIME DELAY FUSE
V	VOLTMETER
VS	VOLTMETER SWITCH
W	WATTMETER
WH	WATTHOUR METER
WHD	WATTHOUR DEMAND METER

REF DWG NO.	DRAWING TITLE
95X-5500-X-02114	DRAWING INDEX
96X-5500-E-02007	SINGLE LINE DIAGRAM - 13.2 KV FEEDERS
95X-5500-E-02125	SINGLE LINE DIAGRAM - 480V FEEDERS
95X-5500-E-02126	ELEMENTARY AND INTERCONNECTION DIAGRAM

NO.	REVISIONS	DATE	DWN. BY	APPD.	NO.	REVISIONS	DATE	DWN. BY	APPD.	REF. DWG. NO.
					O	ISSUED FOR CFC	5-6-05	GEP		
					B	ISSUED FOR 90% REVIEW	3-17-05	GEP		
					A	ISSUED FOR 60% REVIEW	5-3-05	GEP		

NOTE:
FLUOR FERNALD CADD DRAWING, DO NOT REVISE MANUALLY.

CONFIGURATION MANAGEMENT DRAWING — YES / NO
EXISTING STRUCTURES OR COMPONENTS AFFECTED BY THIS DRAWING ARE UNDER CONFIGURATION MANAGEMENT CONTROL. SEE NOTES.
COGNIZANT ENGINEER — DATE

APPROVALS

CIVIL & STR.			SAFETY ENG.	
ELECTRICAL			MAINTENANCE	
ENGINEER			FIRE PROTECT.	
INSTRUMENT			WASTE MANAGE	
MECHANICAL			SECURITY	
			PROJECTS	
CHECKED				
APPROVED				

Fernald Closure Project

FLUOR FERNALD, INC.

U.S. DEPARTMENT OF ENERGY

WASTE PIT AREA — GRID 31A

WASTE STORAGE AREA EXTRACTION SYSTEM
PHASE 2
ELECTRICAL SYMBOLS AND LEGEND
SHEET 1 OF 2

RES 4528
DATE APRIL 5, 2005
DRAWN G.E. PAUL

95X-5500-E-02117 | 0

FCP5.DGN 5/30/03

FILE NAME: /res4528/95xe2117.dgn

006058

ELECTRICAL PLAN SYMBOLS

SWITCH AND RECEPTACLE SYMBOLS

- $ CKT — SWITCH, SINGLE POLE WALL MOUNTED FLUSH
- 3 $ CKT — SWITCH, THREE-WAY
- 4 $ CKT — SWITCH, FOUR-WAY
- CKT — INDICATES DISTRIBUTION PANEL AND CIRCUIT BREAKER NUMBER FROM WHICH POWER IS SUPPLIED (TYPICAL)
- CKT — SINGLE RECEPTACLE
- WP CKT — SINGLE RECEPTACLE WP = WEATHER PROOF
- G CKT — DUPLEX RECEPTACLE G = GROUND FAULT TYPE (GFCI)
- WELDING OR POWER RECEPTACLE
- DS(X) / 100A — DISCONNECT SWITCH WITH AMP RATING
- T(X) / 50KVA — TRANSFORMER WITH KVA RATING
- T — THERMOSTAT

LIGHTING SYMBOLS

- CKT — FLUORESCENT FIXTURE
- 70W CKT — WALL MOUNTED FLUORESCENT LIGHT FIXTURE, WITH INDIVIDUAL PHOTOCELL CONTROL, SUITABLE FOR OUTDOOR AND WET LOCATIONS, LAMP WATTAGE AS SHOWN
- CKT — TWO-LAMP EMERGENCY EGRESS LIGHT FIXTURE WITH RECHARGEABLE BATTERIES
- EXIT CKT — EXIT LIGHT
- 250W HPS CKT — CEILING OR PENDANT MOUNTED HIGH PRESSURE SODIUM LIGHT, WITH WIDE BEAM SPREAD, LOWBAY TYPE, FULLY ENCLOSED, LAMP WATTAGE AS SHOWN
- P 70W HPS CKT — POLE MOUNTED, WITH PHOTO CONTROL HIGH PRESSURE SODIUM FLOOD LIGHT, WITH LAMP WATTAGE AS SHOWN
- 150W INC CKT — STANCHION MOUNTED INCANDESCENT LIGHT WITH LAMP WATTAGE AS SHOWN
- 150W INC CKT — WALL MOUNTED INCANDESCENT LIGHT WITH LAMP WATTAGE SHOWN

COMMUNICATIONS SYMBOLS

- PA — PUBLIC ADDRESS SPEAKER WITH SINGLE HORN.
- PA — PUBLIC ADDRESS SPEAKER WITH DUAL HORN.
- PA — PUBLIC ADDRESS SPEAKER FLUSH CEILING MOUNTED
- TEL — TELEPHONE OUTLET
- B — BELL
- H — HORN
- EH — EVACUATION SYSTEM HORN/SPEAKER

MISCELLANEOUS SYMBOLS

- M — HORIZONTAL MOTOR
- M — VERTICAL MOTOR
- POWER POLE
- POLE DOWN-GUY AND ANCHOR
- HT — HEAT TRACING POWER CONNECTION
- D — OVERHEAD DOOR MOTOR CONNECTION

GROUNDING SYMBOLS

- G — GROUNDING CABLE EXPOSED
- G — GROUNDING CABLE EMBEDDED OR DIRECT BURIED
- G — GROUNDING CONNECTION
- GROUNDING ROD CONNECTION TO GROUNDING CABLE
- GROUNDING ROD TEST WELL, BOLTED CONNECTIONS TO GROUNDING CABLE
- G — GROUNDING CABLE WITH PARALLEL TAP TO TO STUB-UP WITH PIGTAIL

CABLE TRAY SYMBOLS

- COVER
- CABLE TRAY - END VIEW
- CABLE TRAY - SIDE VIEW
- CABLE TRAY - VERTICAL CURVE (TURNING DOWN)
- CABLE TRAY - VERTICAL CURVE (TURNING UP)
- P1 / 12" — TRAY SECTION DESIGNATION
  - I = INSTRUMENTATION (ANALOG)
  - P = POWER
  - C = CONTROL (DIGITAL)
  - TRAY WIDTH

CONDUIT, LINE AND DUCTBANK SYMBOLS

- CONDUIT, EXPOSED
- CONDUIT, ROUTED BELOW PLAN ELEVATION, EMBEDDED OR DIRECT BURIED
- CONDUIT TURNING TOWARDS
- CONDUIT TURNING AWAY
- CONDUIT AND CABLE HOMERUN TO LOCATION INDICATED
- DISCONNECT AND REMOVE CONDUIT (D&R)
- FLEXIBLE CONDUIT AND CONNECTOR AT END OF RIGID CONDUIT RUN
- SEALED CONDUIT CONNECTOR FOR FIRE PROTECTION, VAPOR BARRIER
- CONDUIT GROUPINGS ALONG FLOOR OR WALL
- 3-1/C#10 ,3/4"C — CONDUIT AND CABLE RUNS NOT LISTED IN CONDUIT AND CABLE SCHEDULE
- WEATHERHEAD AT END OF RIGID CONDUIT RUN
- C1(C) 1" — CONDUIT NUMBER AS IDENTIFIED ON CONDUIT SCHEDULE; CONDUIT IDENTIFICATION BUBBLE; CONDUIT SIZE AS IDENTIFIED ON CONDUIT SCHEDULE

PUSHBUTTON AND PANEL SYMBOLS

- PUSH BUTTON OR SELECTOR SWITCH , REMOTE MOUNTED, SINGLE
- PUSH BUTTON OR SELECTOR SWITCH , REMOTE MOUNTED, TWO OR MORE
- LP(X) — LIGHTING PANEL, SURFACE MOUNTED AND I.D. NUMBER
- PP(X) — POWER PANEL, FLUSH MOUNTED AND I.D. NUMBER
- TEL(X) — TELEPHONE PANEL
- ANNUN — ANNUNCIATOR

MONITOR SYMBOLS

- CM — CRITICALITY MONITOR WITH EMERGENCY POWER CIRCUIT
- RM — RADIATION MONITOR
- AM — AIR MONITOR STATION
- CO — CARBON MONOXIDE MONITOR PANEL
- XXXX — INSTRUMENT; XXXX - DEVICE NUMBER

REF DWG NO.	DRAWING TITLE
95X-5500-X-02114	DRAWING INDEX
95X-5500-E-02119	13.2 KV DISTRIBUTION & COMMUNICATION PLAN 1 OF 2
95X-5500-E-02120	13.2 KV DISTRIBUTION & COMMUNICATION PLAN 2 OF 2
95X-5500-E-02038	480/120V POWER, INSTRUMENT, AND LIGHTING PLAN - WELL HOUSE

NO.	REVISIONS	DATE	DWN. BY	APPD.
0	ISSUED FOR CFC	9-6-05	GEP	
B	ISSUED FOR 90% REVIEW	8-17-05	GEP	
A	ISSUED FOR 60% REVIEW	5-3-05	GEP	

REF. DWG. NO.

NOTE: FLUOR FERNALD CADD DRAWING, DO NOT REVISE MANUALLY.

CONFIGURATION MANAGEMENT DRAWING — YES / NO. SYSTEMS, STRUCTURES, OR COMPONENTS LISTED ON THIS DRAWING ARE UNDER CONFIGURATION MANAGEMENT CONTROL. SEE NOTES.

COGNIZANT ENGINEER DATE

APPROVALS: CIVIL & STR., ELECTRICAL, ENGINEER, INSTRUMENT, MECHANICAL, CHECKED, APPROVED; SAFETY ENG., MAINTENANCE, FIRE PROTECT., WASTE MANAGE., SECURITY, PROJECTS

Fernald Closure Project

FLUOR FERNALD, INC.

U.S. DEPARTMENT OF ENERGY

WASTE PIT AREA — GRID 3JA

WASTE STORAGE AREA EXTRACTION SYSTEM PHASE 2

ELECTRICAL SYMBOLS AND LEGEND SHEET 2 OF 2

RES 4528 — DATE APRIL 5, 2005 — DRAWN G.E. PAUL

95X-5500-E-02118 — 0

FILE NAME: /res4528/95xe218.dgn

FDPS.DRW 5/30/03

006058

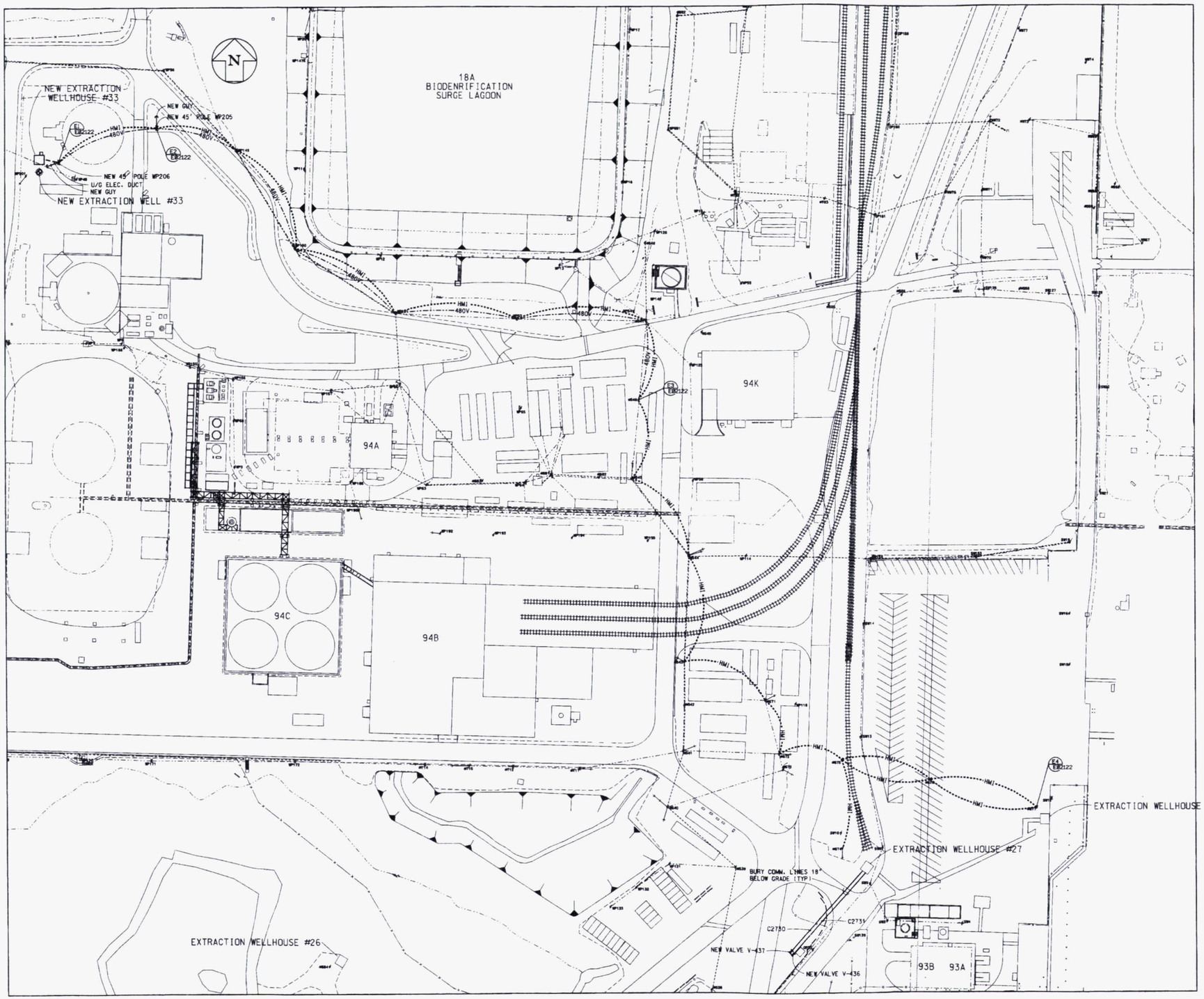

AS-BUILT POLE COORDINATES (NAD83)

POLE No.	POLE HEIGHT	POLE STATUS	EASTING	NORTHING	ELEV.	DETAIL DWG. No.	STATIC LINE	13.2 KV LINE	480 V LINE	COMM. LINE (FIBEROPTIC)	BISSECTOR	DEADEND
#546	45ft	EXIST.				95X-5500-E-02121	X	X		X		
#547	45ft	EXIST.				95X-5500-E-02121	X	X		X		X
#WP53	45ft	EXIST.				95X-5500-E-02121	X	X		X		
#WP151	45ft	EXIST.				95X-5500-E-02121	X	X		X		
#WP150	45ft	EXIST.				95X-5500-E-02121	X	X		X		
#WP149	45ft	EXIST.				95X-5500-E-02121	X	X		X		
#WP205	45ft	NEW	E1347112.7	N480977.0		95X-5500-E-02121	X	X		X	X	
#WP206	45ft	NEW	E1346984.8	N480932.1		95X-5500-E-02121	X	X		X		X

GUY WIRE ANCHORING:

POLE#	ANCHOR(S)	GUY(S)	SEE LEGEND. THIS DWG. ANGLE OF GUY θ	OR DISTANCE FROM POLE
#546	NOT REQUIRED			
#547	NOT REQUIRED			
#WP53	NOT REQUIRED			
#WP151	NOT REQUIRED			
#WP150	NOT REQUIRED			
#WP149	(2)-12"	(3)-5/8"	N/A	15ft
#WP205	(2)-12"	(3)-5/8"	N/A	15ft
#WP206	(2)-12"	(3)-5/8"	N/A	15ft

CABLE SAG BETWEEN POLES:

CABLE SPAN	SAG (@ 70°F)	REMARKS
#546 TO #547	4.00 FT	MATCH EXIST. 480V CABLES
#547 TO #WP53	4.00 FT	MATCH EXIST. 480V CABLES
#WP53 TO #WP151	4.00 FT	MATCH EXIST. 480V CABLES
#WP151 TO #WP150	4.00 FT	MATCH EXIST. 480V CABLES
#WP150 TO #WP149	4.00 FT	MATCH EXIST. 480V CABLES
#WP149 TO #WP205	4.00 FT	MATCH EXIST. 480V CABLES
#WP205 TO #WP206	4.00 FT	MATCH EXIST. 480V CABLES

H.M.I. FIBEROPTIC PATH (COMM. LINE)

CABLE SPAN	No. OF CABLES
#677 TO #676	1 CABLE
#676 TO #675	1 CABLE
#675 TO #672	1 CABLE
#672 TO #671	1 CABLE
#671 TO #543	1 CABLE
#543 TO #544	1 CABLE
#544 TO #545	1 CABLE
#545 TO #546	1 CABLE
#546 TC #547	1 CABLE
#547 TO #WP53	1 CABLE
#WP53 TO #WP151	1 CABLE
#WP151 TO #WP150	1 CABLE
#WP150 TO #WP149	1 CABLE
#WP149 TO #WP205	1 CABLE
#WP205 TO #WP206	1 CABLE

LEGEND:

POLE
GUY WIRE
GRADE
θ = ANGLE OF GUY WIRE TO GROUND

- LIGHT POLE (EXISTING)
- POWER POLE (EXISTING)
- POWER/LIGHT POLE (EXISTING)
- POWER POLE (NEW)
- GUY WIRE (NEW)
- COMMUNICATION LINE (EXISTING OVERHEAD LINE)
- HMI — H.M.I. FIBER OPTIC LINE. (COMMUNICATION LINE. NEW OVERHEAD LINE)
- 120-480V POWER LINE (EXISTING OVERHEAD LINE)
- 120-480V POWER LINE (NEW LINE)
- 13.2 KV LINE (EXISTING OVERHEAD LINE)
- 13.2 KV LINE (NEW OVERHEAD LINE)

NO.	REVISIONS	DATE	DWN. BY	APPD.
0	ISSUED FOR CFC	9-6-05	GEP	
B	ISSUED FOR 90% REVIEW	8-17-05	GEP	
A	ISSUED FOR 60% REVIEW	5-3-05	GEP	

NOTE: FLUOR FERNALD CADD DRAWING. DO NOT REVISE MANUALLY.

CONFIGURATION MANAGEMENT DRAWING
REFERENCE DRAWINGS OR COMPONENTS MARKED WITH THIS DRAWING ARE UNDER CONFIGURATION MANAGEMENT CONTROL. SEE NOTES.
COGNIZANT ENGINEER DATE

APPROVALS

CIVIL & STR.			SAFETY ENG.	
ELECTRICAL	J.S. Kuel	9/14/05	MAINTENANCE	
ENGINEER			FIRE PROTECT.	
INSTRUMENT			WASTE MANAGE.	
MECHANICAL			SECURITY	
			PROJECTS	
CHECKED				
APPROVED		9/14/05		

Fernald Closure Project

FLUOR FERNALD, INC.

U.S. DEPARTMENT OF ENERGY

WASTE PIT AREA — GRID 31A

WASTE STORAGE AREA EXTRACTION SYSTEM
PHASE 2
480V DISTRIBUTION & COMMUNICATIONS PLAN
SCALE: 1"=50'-0"

RES 4528
DATE APRIL 6, 2005
DRAWN G.E. PAUL

95X-5500-E-02120 | 0

FCPS.DGN 5/30/03

FILE NAME: /RES4528/95XE2120.DGN

006058

GENERAL NOTES :

1. SEE DRAWING 95X-5500-E-02124 FOR MATERIAL LIST.

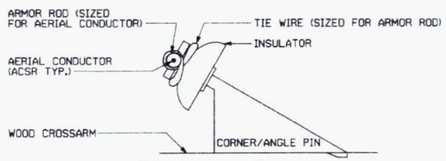

DETAIL 6
CROSSARM CORNER TYPE PINS
NTS
USE ON POLES AS REQUIRED
(NOT USED)

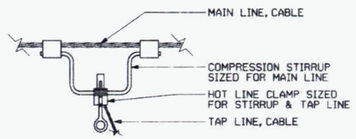

DETAIL 8
REMOVABLE TAP
NTS
(NOT USED)

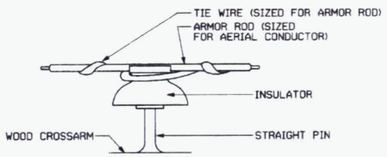

DETAIL 7
STRAIGHT ATTACHMENT TYPE PINS
NTS
USE ON POLES AS REQUIRED
(NOT USED)

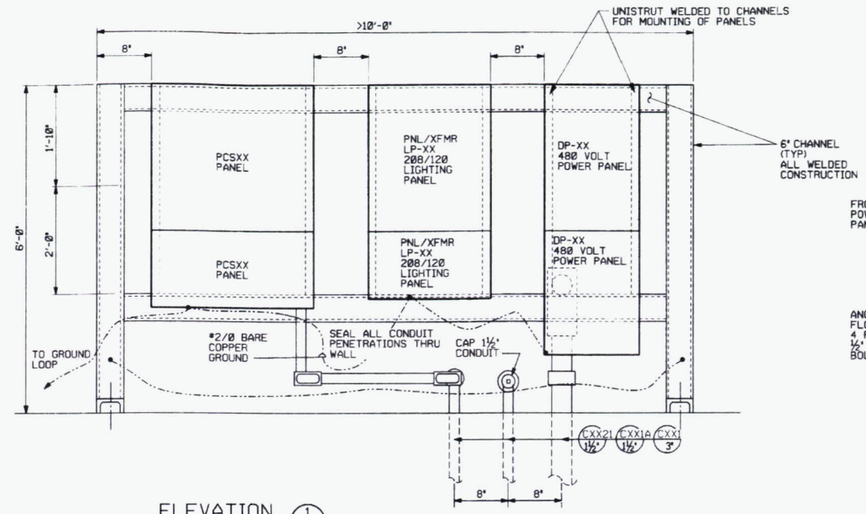

ELEVATION 1
SWITCHRACK
NTS
REQUIRED IN EACH WELL HOUSE

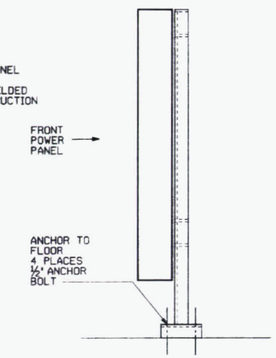

SIDE VIEW
NTS

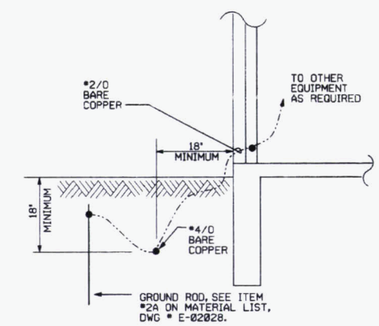

DETAIL 4
NTS E02131

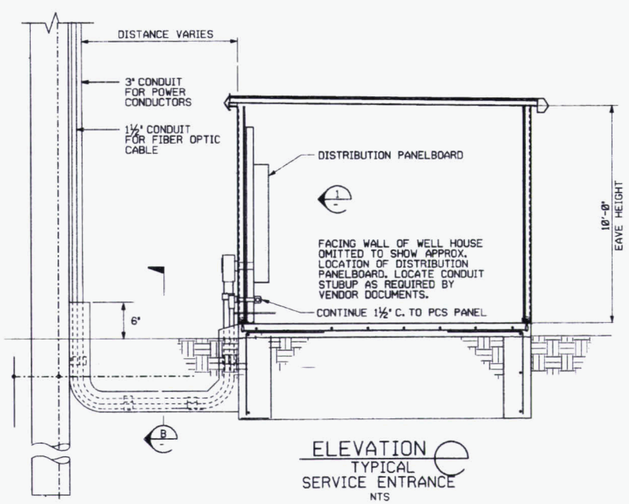

ELEVATION C
TYPICAL SERVICE ENTRANCE
NTS

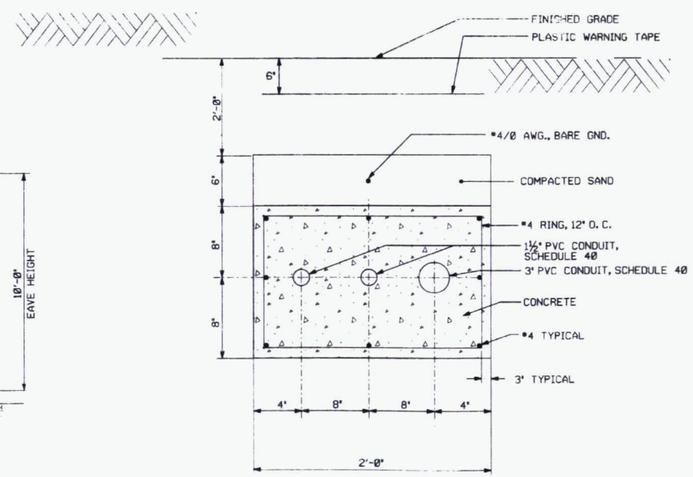

SECTION B
NTS E02131

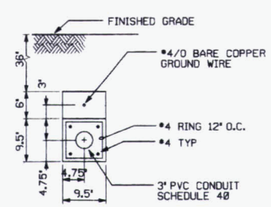

SECTION A
NTS

REF DWG NO.	DRAWING TITLE
95X-5500-X-02114	DRAWING INDEX
95X-5500-E-02119	ELEC. 13.2 KV DISTRIBUTION & COMM. PLAN
95X-5500-E-02120	ELEC. 13.2 KV DISTRIBUTION & COMM. PLAN
95X-5500-E-02122	POLE ELEVATIONS
95X-5500-E-02124	ELECTRICAL MATERIAL LIST AND STANDARD DETAILS

NO.	REVISIONS	DATE	DWN. BY	APPD.
0	ISSUED FOR CFC	3-3-05	GEP	
B	ISSUED FOR 90% REVIEW	1-17-05	GEP	
A	ISSUED FOR 60% REVIEW	5-3-05	GEP	

REF. DWG. NO.

NOTE: FLUOR FERNALD CADD DRAWING. DO NOT REVISE MANUALLY.

CONFIGURATION MANAGEMENT DRAWING — YES / NO
SYSTEMS, STRUCTURES OR COMPONENTS DEPICTED ON THIS DRAWING ARE UNDER CONFIGURATION MANAGEMENT CONTROL. SEE NOTES.
COGNIZANT ENGINEER — DATE

APPROVALS

CIVIL & STR.			SAFETY ENG.	
ELECTRICAL			MAINTENANCE	
ENGINEER			FIRE PROTECT.	
INSTRUMENT			WASTE MANAGE.	
MECHANICAL			SECURITY	
			PROJECTS	
CHECKED				
APPROVED				

Fernald Closure Project
FLUOR FERNALD, INC.
U.S. DEPARTMENT OF ENERGY

WASTE PIT AREA — GRID 31A
WASTE STORAGE AREA EXTRACTION SYSTEM
PHASE 2
ELECTRICAL SERVICE ENTRANCE
DETAIL AND MISC. DETAILS

RES 4528
DATE APRIL 5, 2005
DRAWN G.E. PAUL
95X-5500-E-02121 — 0

FILE NAME: /res4528/95XE2121.dgn

FCPS.DGN 5/30/03

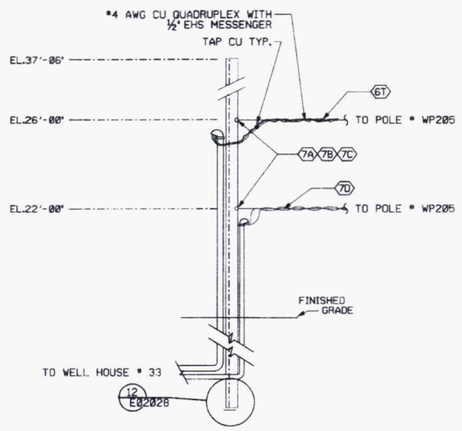

ELEVATION (E1) E02120
POLE WP206
NEW POLE
NTS

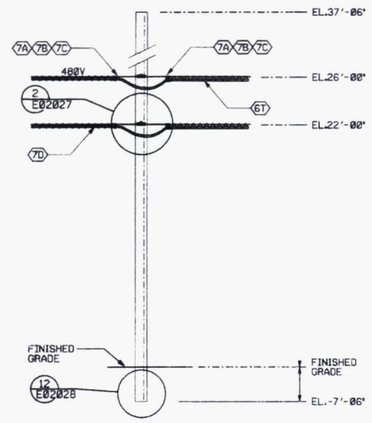

ELEVATION (E2) E02120
POLE WP205
NEW POLE
NTS

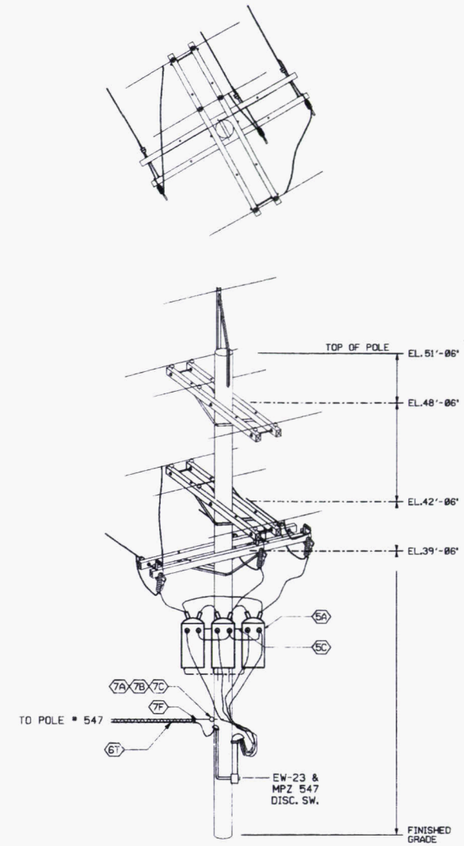

ELEVATION (E3) E02120
NTS
POLE 546

NOTE:
DCS FIBEROPTIC CABLE AND OTHER DISC. SW. NOT SHOWN FOR CLARITY

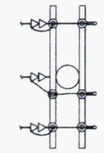

PLAN
NTS

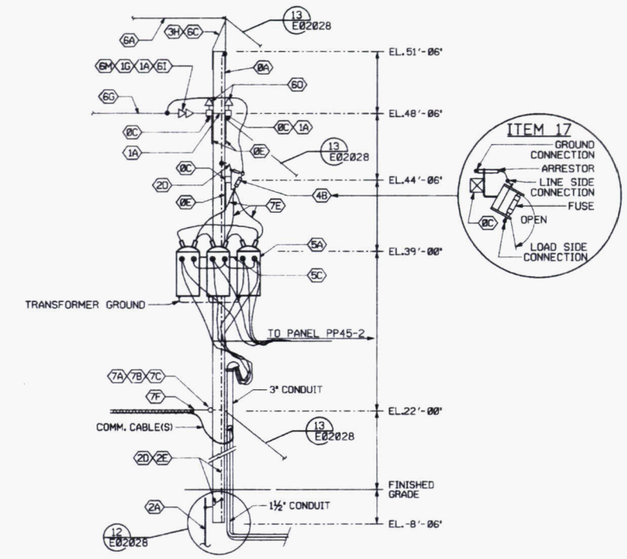

ELEVATION (E4) E02120
POLE 677

HMI FIBEROPTIC ADDED TO EXISTING POLES

POLE 676	DETAIL 2	96X-5500-E-02027
POLE 675	DETAIL 2	" "
POLE 672	DETAIL 9	" "
POLE 671	DETAIL 2	" "
POLE 543	DETAIL 9	" "
POLE 544	DETAIL 9	" "
POLE 545	DETAIL 9	" "
POLE 546	DETAIL 2	" "
POLE 547	DETAIL 9	" "
POLE WP53	DETAIL 2	" "
POLE WP151	DETAIL 9	" "
POLE WP150	DETAIL 2	" "
POLE WP149	DETAIL 9	" "

NOTE:

HMI FIBEROPTIC TO BE LOCATED IN COMM. ZONE OF POLE CABLES. MAINTAIN MIN. OF 18.5' ABOVE GRADE AT MAX. SPAN

480V AERIAL CABLE ADDED TO EXISTING POLES

POLE 547	DEADEND DETAIL, DWG. 16X-5500-E-00105
POLE WP53	MID-SPAN DETAIL, DWG. 16X-5500-E-00106
POLE WP151	DEADEND DETAIL, DWG. 16X-5500-E-00105
POLE WP150	MID-SPAN DETAIL, DWG. 16X-5500-E-00106
POLE WP145	DEADEND DETAIL, DWG. 16X-5500-E-00105

NOTE:

480V AERIAL CABLE TO BE LOCATED IN 480V ZONE OF POLE CABLES.

NO.	REVISIONS	DATE	DWN. BY	APPD.
0	ISSUED FOR CFC	5-4-05	GEP	
B	ISSUED FOR 90% REVIEW	4-11-05	GEP	
A	ISSUED FOR 60% REVIEW	3-3-05	GEP	

REF. DWG. NO.

NOTE:
FLUOR FERNALD CADD DRAWING, DO NOT REVISE MANUALLY.

CONFIGURATION MANAGEMENT DRAWING YES NO
SYSTEMS, STRUCTURES OR COMPONENTS DEPICTED ON THIS DRAWING ARE UNDER CONFIGURATION MANAGEMENT CONTROL. SEE NOTES.
COGNIZANT ENGINEER DATE

APPROVALS

CIVIL & STR.			SAFETY ENG.	
ELECTRICAL	J S Karl	5/3/05	MAINTENANCE	
ENGINEER			FIRE PROTECT.	
INSTRUMENT			WASTE MANAGE.	
MECHANICAL			SECURITY	
			PROJECTS	
CHECKED				
APPROVED				

Fernald Closure Project
FLUOR FERNALD, INC.
U.S. DEPARTMENT OF ENERGY

WASTE PIT AREA — GRID 31A
WASTE STORAGE AREA EXTRACTION SYSTEM
PHASE 2
POLE ELEVATIONS
NO SCALE

RES 4528
DATE APRIL 14, 2005
DRAWN G.E. PAUL

95X-5500-E-02122 | 0

FDMS.DGN 5/30/03

FILE NAME: /res4528/95xe2122.dgn

006058

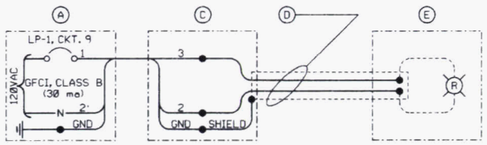

TYPICAL WIRING DIAGRAM FOR HEAT TRACING SYSTEM

BILL OF MATERIAL		
ITEM	QUANTITY	DESCRIPTION
A	1	CIRCUIT BKR, 20A, GFCI, CLASS B, 30MA, 1 POLE
C	1	POWER CONNECTION KIT
D	65 FT	SELF REGULATING HEAT TRACE, NOMINAL 15 W/FT
E	1	PILOT LIGHT CONNECTION KIT, WITH RED LIGHT

DETAIL 1 E02027
HEAT TRACE RISER DIAGRAM
NTS

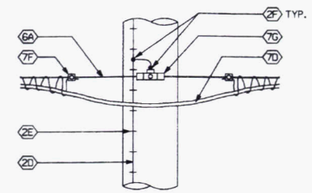

DETAIL 2 E02122
COMM. CABLE ATTACHMENT
NTS

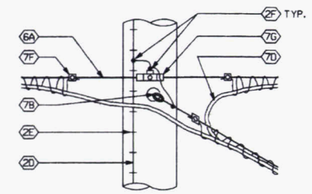

DETAIL 3 E02122
COMM. CABLE INTERSECTION
NTS

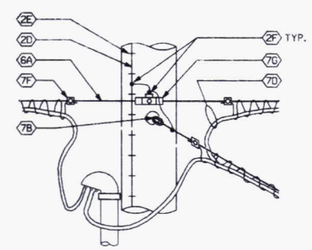

DETAIL 4
COMM. CABLE INTERSECTION
NTS

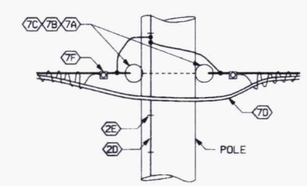

DETAIL 5 E02122
NTS

REF DWG NO.	DRAWING TITLE
95X-5500-X-02114	DRAWING INDEX
95X-5500-E-02119	ELEC. 13.2 KV DISTRIBUTION & COMM. PLAN
95X-5500-E-02120	ELEC. 13.2 KV DISTRIBUTION & COMM. PLAN
95X-5500-E-02122	POLE ELEVATIONS
95X-5500-E-02124	ELECTRICAL MATERIAL LIST AND STANDARD DETAILS

NO.	REVISIONS	DATE	DWN. BY	APPD.	NO.	REVISIONS	DATE	DWN. BY	APPD.	REF. DWG. NO.
					0	ISSUED FOR CFC	5/6/05	GEP		
					B	ISSUED FOR 90% REVIEW	1/17/05	GEP		
					A	ISSUED FOR 60% REVIEW	5/3/05	GEP		

NOTE:
FLUOR FERNALD CADD DRAWING, DO NOT REVISE MANUALLY.

CONFIGURATION MANAGEMENT DRAWING
SYSTEMS, STRUCTURES OR COMPONENTS DESCRIBED ON THIS DRAWING ARE UNDER CONFIGURATION MANAGEMENT CONTROL. SEE NOTES.
COGNIZANT ENGINEER DATE

APPROVALS

CIVIL & STR.		SAFETY ENG.	
		MAINTENANCE	
ELECTRICAL	5/6/05	FIRE PROTECT.	
ENGINEER		WASTE MANAGE	
INSTRUMENT		SECURITY	
MECHANICAL		PROJECTS	5/6/05
CHECKED			
APPROVED	5/6/05		

Fernald Closure Project
FLUOR FERNALD, INC.
U.S. DEPARTMENT OF ENERGY

WASTE PIT AREA GRID 31A
WASTE STORAGE AREA EXTRACTION SYSTEM
PHASE 2
COMMUNICATION DETAILS & HEAT RISER DIAGRAM
NO SCALE

RES 4528
DATE APRIL 5, 2005
DRAWN C.E. PAUL
95X-5500-E-02123 | 0

FCPS.DGN 5/30/03

FILE NAME: /res4528/95xe2123.dgn

MATERIAL LIST

ITEM TAG	POLE MATERIAL ITEMS
0A	WOODEN POLE - ANSI O5.1, CLASS 2, SOUTHERN PINE, PENTACHLOROPHENOL TREATED TO 12 lbs/ft³, AWPA C4. SEE "POLE SCHEDULE" FOR REQUIRED LENGTH.
0B	WOODEN CROSSARM - 3½" X 4½" X 6'-0". SOUTHERN PINE, PENTACHLOROPHENOL TREATED TO 8 lbs/ft³.
0C	WOODEN CROSSARM - 3½" X 4½" X 8'-0". SOUTHERN PINE, PENTACHLOROPHENOL TREATED TO 8 lbs/ft³.
0D	WOODEN CROSSARM - 3¾" X 4¾" X 10'-0". SOUTHERN PINE, PENTACHLOROPHENOL TREATED TO 8 lbs/ft³.
0E	CROSSARM ANGLE BRACE - 63" LONG X 18" DROP, HOT DIP GALVANIZED ASTM A675 (2 PIECE BRACES ARE ACCEPTABLE). (2 SINGLE CROSSARM BRACES SHALL BE USED WHEN REQUIRED BY ELEC. EQUIPMENT, I.E. FUSED CUTOUTS.)

ITEM TAG	HARDWARE ITEMS
1A	DOUBLE ARMING ⅝" BOLT - FULL THREAD, HOT DIP GALVANIZED, LENGTH AS REQUIRED.
1B	⅝" MACHINE BOLT - ANSI C135.1, LENGTH AS REQUIRED, HOT DIP GALVANIZED.
1C	SQUARE WASHER - FOR ⅝" BOLT, HOT DIP GALVANIZED.
1D	ROUND WASHER - FOR ⅝" BOLT, HOT DIP GALVANIZED.
1E	SPRING LOCK WASHER - FOR ⅝" BOLT, HOT DIP GALVANIZED.
1F	SQUARE NUT - FOR ⅝" BOLT, HOT DIP GALVANIZED.
1G	EYENUT - ANSI C135.1, FOR ⅝" BOLT, HOT DIP GALVANIZED.
1H	THIMBLE EYENUT - FOR ⅝" BOLT, HOT DIP GALVANIZED.
1J	ASSEMBLY, EXTENSION LINK 20", WITH END CLEVIS, ANCHOR SHACKLE AND EYENUT, ALL HOT DIP GALVANIZED, PLUS CLEVISES FOR DOUBLE ARMING BOLT ATTACHMENT.
1K	CROSSARM GAIN - 3" X 4", TEETH ON BOTH SIDES, HOT DIP GALVANIZED.

ITEM TAG	GROUNDING ITEMS
2A	GROUND ROD - ¾" DIAMETER X 10' LONG, COPPERWELD.
2B	GROUND ROD CLAMP (FOR GROUND WIRE CONNECTION) - ¾" DIA., BRONZE OR BRASS.
2C	GROUND CONDUCTOR - #2 AWG, BARE SOLID COPPER, SOFT DRAWN.
2D	GROUND CONDUCTOR - #4 AWG, BARE SOLID COPPER, SOFT DRAWN.
2E	GROUND STAPLE - COPPERCLAD, 1½" LONG.
2F	GROUNDING CLAMP - WIRE TO WIRE.
2G	POLE BOTTOM GROUND PLATE - COPPER (OR COIL GROUND WIRE ON POLE BOTTOM)

ITEM TAG	GUYING ITEMS
3A	GUY ANCHOR SYSTEM - HELIX SCREW TYPE, GALVANIZED STEEL, ASTM A36/36M WITH MINIMUM PULLOUT CAPACITY OF 23,000 lbs. FOR SOIL WITH BLOW COUNT OF 10, MID-STRENGTH INSTALLATION TORQUE SERIES, EYENUT TO ACCOMMODATE UP TO THREE GUY WIRES.
3B	GUY WIRE - ½" DIA. STRAND, CLASS A OR B GALVANIZED, ASTM A475 1 X 7 EXTRA HIGH STRENGTH CONSTRUCTION, MINIMUM TENSILE STRENGTH OF 26,000 lbs.
3C	DEADEND GRIP - PREFORMED TWISTED LOOP, CLASS A OR B GALVANIZED, SIZED FOR GUY WIRE.
3D	GUY STRAIN INSULATOR - ⅝" SIZE, ANSI C29.4 CLASS 54-1.
3E	FIBERGLASS GUY STRAIN INSULATOR - 16,000 LBS. RATING, HOT-DIPPED GALVANIZED CLEVIS-THIMBLE-EYE FITTINGS, LENGTH AS REQUIRED.
3F	¾" THIMBLEYE ANGLE BOLT (LENGTH AS REQUIRED), WASHER, SPRING LOCK WASHER, NUT, HOT DIP GALVANIZED, MINIMUM TENSILE STRENGTH OF 18,000 lbs.
3G	GUY WIRE MARKER - HALF ROUND UV RESISTANT YELLOW PLASTIC, 2" WIDE X 96" LONG, WITH MOUNTING HARDWARE.
3H	GUY STATIC ATTACHMENT - THIMBLEYES(2) WITH ROD SIZED FOR BAYONET HOLE, HOT DIP GALVANIZED.

ITEM TAG	ELECTRICAL SWITCH ITEMS
4A	CUTOUT SWITCH/ARRESTER COMBINATION UNIT, FOR CROSSARM MOUNTING; CUTOUTS, ANSI C37.42, LOAD BREAK, UNLESS EXISTING, DROPOUT TYPE, 110 KV BIL, SEE SINGLE LINE FOR RATINGS, SEE ITEM TAG 4E BELOW FOR ARRESTER REQUIREMENTS.
4B	FUSED CUTOUT SWITCH/ARRESTER COMBINATION UNIT, FOR CROSSARM MOUNTING; CUTOUTS, ANSI C37.42, LOAD BREAK, UNLESS EXISTING, DROPOUT TYPE, 110 KV BIL, FUSES, TYPE K, SEE SINGLE LINE FOR RATINGS, SEE ITEM TAG 4E BELOW FOR ARRESTER TYPE AND RATING.
4C	LOAD BREAK SWITCH, FOR CROSSARM MOUNTING; ANSI C37.30, 110 KV BIL, FUSES, WHERE REQUIRED, TYPE K, SEE SINGLE LINE FOR RATINGS.
4D	LOAD BREAK SWITCH, FOR CROSSARM MOUNTING, HORIZONTAL, S & C CAT. • 147432-D-S2; ANSI C37.30, 110 KV BIL, FUSES, WHERE REQUIRED, TYPE K; SEE SINGLE LINE FOR RATINGS.
4E	ARRESTER, DIRECT CONNECTED, 9 KV, IEEE C62.1, RISER POLE TYPE, METAL OXIDE VALVE W/CROSSARM MOUNTING HARDWARE.
4F	SWITCH NAMEPLATE - ¼" BAKELITE SIGN MATERIAL SIZED FOR NUMBER OF CHARACTERS, BLACK LETTERS ON WHITE BACKGROUND WITH MOUNTING HOLES SIZED FOR ¼" BOLTS SET AT BOTH ENDS. MOUNT THE NAMEPLATE AT EYE LEVEL NEAR OPERATING HANDLE. SEE DETAIL 5.

ITEM TAG	TRANSFORMER ITEMS
5A	TRANSFORMER - POLE MOUNTED, SEE SINGLE LINE FOR RATINGS AND QUANTITIES. ANSI C57.12.20, 1 PHASE, OIL FILLED, 125 KV BIL, 65°C OVER 30°C RISE, EXTERNALLY OPERATED CHANGER FOR TWO EACH 2½% ABOVE AND BELOW NORMAL VOLTAGE TAPS.
5B	POLE MOUNTED EQUIPMENT BRACKET FOR SINGLE TRANSFORMER - DOUBLE-BANDED, HEAVY DUTY CLUSTER MOUNT, HIGH-STRENGTH STEEL GALVANIZED OR ALUMINUM, WITH GROUNDING LUG. SIZED FOR ITEM 5A ABOVE.
5C	POLE MOUNTED EQUIPMENT BRACKET FOR THREE TRANSFORMERS - DOUBLE-BANDED, HEAVY DUTY CLUSTER MOUNT, HIGH-STRENGTH STEEL GALVANIZED OR ALUMINUM, WITH GROUNDING LUG. SIZED FOR ITEM 5A ABOVE.

ITEM TAG	STATIC LINE, CABLE(S) AND INSULATOR ITEMS
6A	STATIC LINE - ⅜" DIA. STRAND, CLASS A OR B GALVANIZED, 1 X 7 HIGH STRENGTH CONSTRUCTION, MINIMUM TENSILE STRENGTH OF 10,000 LBS.
6B	STATIC LINE BAYONET - STRAIGHT, 66" LENGTH, HOT DIP GALVANIZED.
6C	STATIC LINE BAYONET - CORNER, 66" LENGTH, HOT DIP GALVANIZED.
6D	STATIC LINE CLAMP - HOT DIP GALVANIZED J-BOLT DESIGNED TO FIT INTO TWO HOLES AT TOP OF BAYONET.
6E	13.2KV AERIAL CABLE - 336.4KCMIL ACSR "MERLIN", ASTM B232.
6G	13.2KV AERIAL CABLE - #2 AWG ACSR "SPARROW", ASTM B232.
6I	DEADEND CLAMP - ALUMINUM, STRAIGHT-LINE, SIZED FOR AERIAL CABLE.
6J	CABLE TO CABLE CONNECTOR USED FOR XFMR PRIMARY CONNECTION TO OVERHEAD - COMPRESSION STIRRUP (ALUM., SIZED FOR AERIAL CABLE) WITH MECHANICAL HOT LINE CLAMP (ALUM., SIZED FOR STIRRUP AND TAP CABLE). USE SILICON-BRONZE BOLTING MATERIALS.
6K	CABLE TO CABLE CONNECTOR USED FOR MAIN LINE TAPS TO BRANCH CIRCUITS - ALUMINUM MECHANICAL NON-CRIMP REMOVABLE CONNECTOR, SIZED FOR CABLES. USE SILICON-BRONZE BOLTING MATERIALS.
6L	CABLE TO CABLE CONNECTOR USED FOR MAIN LINE CONNECTIONS - ALUMINUM COMPRESSION CONNECTOR, SIZED FOR CABLES. USE SILICON-BRONZE BOLTING MATERIALS.
6M	SUSPENSION INSULATOR - CLEVIS TYPE, STEEL HARDWARE, ANSI C29.2, CLASS 52-9, 2 REQUIRED FOR 13.2KV SERVICE. OTHER INSULATOR ARRANGEMENTS SUITABLE FOR 15KV SERVICE MAY BE SUBMITTED FOR APPROVAL.
6O	STRAIGHT PIN/INSULATOR/ASSEMBLY. FOR WOOD CROSSARM - FLAT BASE LONG SHANK TYPE, MOUNTING HARDWARE, HOT DIP GALVANIZED; PIN INSULATOR - 14.4KV, GLAZED PORCELAIN, ANSI C29.5, CLASS 55-5, "F" NECK; ARMOR ROD - SIZED AND LENGTH AS REQUIRED BY AERIAL CABLE SIZE/SUPPORT(S); TIE WIRE - TYPE (COPPER OR ALUMINUM), SIZED AND LENGTH AS REQUIRED BY AERIAL CABLE SIZE/SUPPORT(S). SEAL WITH SILICON PUTTY WHEN NOT MOUNTED UPRIGHT.
6P	CORNER ANGLE PIN/INSULATOR/PREFORMED ARMOR ROD/TIE WIRE ASSEMBLY. CORNER ANGLE PIN FOR WOOD CROSSARM - MOUNTING HARDWARE, HOT DIP GALVANIZED; PIN INSULATOR - 14.4KV, GLAZED PORCELAIN, ANSI C29.5, CLASS 55-5, "F" NECK; ARMOR ROD - SIZED AND LENGTH AS REQUIRED BY AERIAL CABLE SIZE/SUPPORT(S); TIE WIRE - TYPE (COPPER OR ALUMINUM), SIZED AND LENGTH AS REQUIRED BY AERIAL CABLE SIZE/SUPPORT(S). SEAL WITH SILICON PUTTY WHEN NOT MOUNTED UPRIGHT.
6Q	POLE TOP PIN/INSULATOR/ASSEMBLY. POLE TOP PIN - C135.22, 15" LENGTH, MOUNTING HARDWARE FOR WOOD POLE, HOT DIP GALVANIZED; PIN INSULATOR - 14.4KV, GLAZED PORCELAIN, ANSI C29.5, CLASS 55-5, "F" NECK; ARMOR ROD - SIZED AND LENGTH AS REQUIRED BY AERIAL CABLE SIZE/SUPPORT(S); TIE WIRE - TYPE (COPPER OR ALUMINUM), SIZED AND LENGTH AS REQUIRED BY AERIAL CABLE SIZE/SUPPORT(S). SEAL WITH SILICON PUTTY WHEN NOT MOUNTED UPRIGHT.
6S	CABLE TERMINATION - SIZED FOR INSULATED CABLE WITH CROSSARM MOUNTING HARDWARE.
6T	SECONDARY SERVICE CABLE - 600V CROSS-LINKED POLYETHYLENE INSULATION, 3 WIRE OR 4 WIRE OR 5 WIRE SERVICE CABLE. 2, 3 OR 4 CONDUCTOR INSULATED AL. WITH BARE STEEL OR AL. CLAD STEEL MESSENGER, SEE SINGLE LINE DIAGRAM FOR WIRE SIZE.

ITEM TAG	MISC. HARDWARE ITEMS
7A	THIMBLE, FOR STATIC WIRE OR MESSENGER WIRE DEAD-END.
7B	EYE BOLT, OVAL EYE TYPE, FOR DEAD-END ⅝" DIA. WITH ONE SQUARE NUT, ADDITIONAL NUTS, WASHERS, AND LENGTH AS REQUIRED.
7C	GUY GRIP FOR STATIC WIRE, PREFORMED WIRE TYPE.
7D	COMMUNICATION (DCS) CABLE LASHED TO ⅜" MESSENGER.
7E	#2 AWG BARE COPPER.
7F	LASHING WIRE CLIP, SIZE AS REQUIRED.
7G	CLAMP, SUSPENSION, FOR ⅜" MESSENGER.

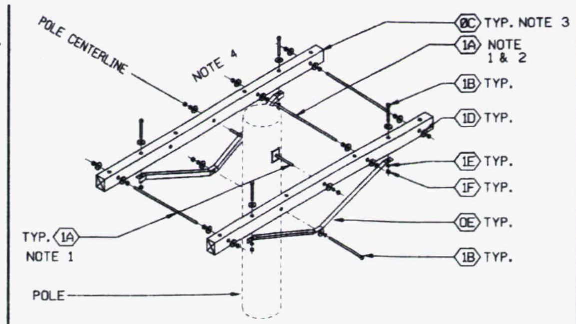

NOTES
1. PROVIDE ADEQUATE LENGTH OF THREAD TO FACILITATE THE ADDITION OF FUTURE EYENUTS ON END OF BOLT.
2. PROVIDE ITEM 1A WITH REQUIRED HARDWARE WHEN "OFFSET" IS NEEDED.
3. 0D REPLACES 0C WHERE NOTED. USE 4 CROSSARMS (ADJUST LENGTH OF 1A WHERE NOTED.
4. USE STANDARD CROSSARM DRILL HOLE SPACINGS.

DETAIL 1
CROSSARMS & MOUNTING ITEMS
NTS

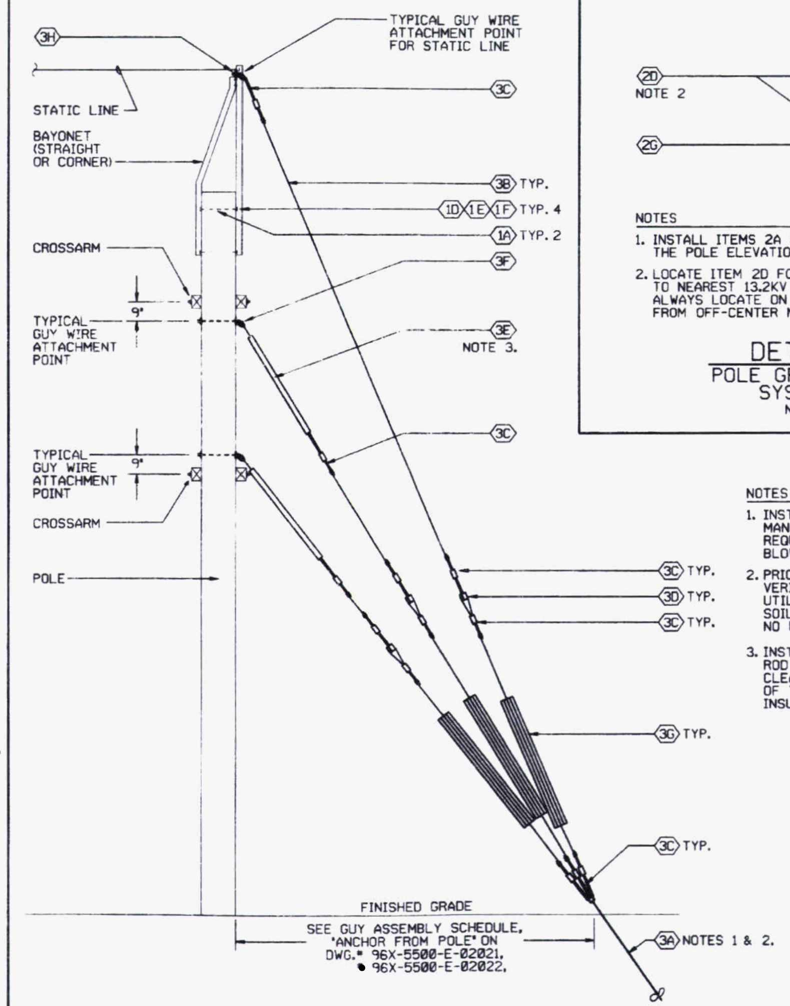

DETAIL 13
GUYING SYSTEM
NTS

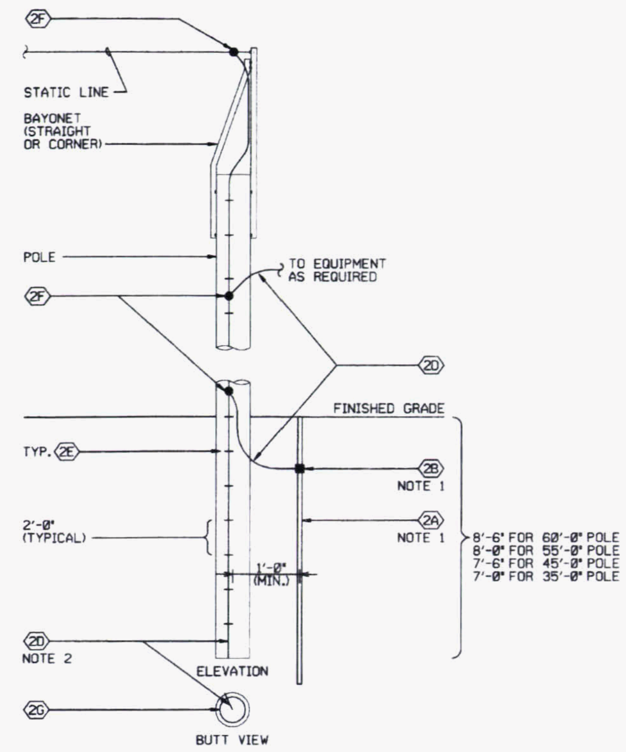

NOTES
1. INSTALL ITEMS 2A & 2B ONLY WHEN CALLED OUT ON THE POLE ELEVATION.
2. LOCATE ITEM 2D FOR MAXIMUM CLEARANCE TO NEAREST 13.2KV BARE AERIAL CONDUCTOR(S). ALWAYS LOCATE ON OPPOSITE SIDE OF POLE FROM OFF-CENTER MIDDLE PHASE FEATURES.

DETAIL 12
POLE GROUNDING SYSTEM
NTS

LEGEND:
XX - AERIAL MATERIAL OR EQUIPMENT

NOTES
1. INSTALL SOIL ANCHORS ACCORDING TO MANUFACTURER'S INSTRUCTIONS. FOR REQUIRED PULLOUT SOIL, ASSUME MINIMUM BLOW COUNT OF 10. (ASTM D1586).
2. PRIOR TO INSTALLATION OF EARTH ANCHORS, VERIFY LOCATION OF NEARBY UNDERGROUND UTILITIES AND PUSH SMALL DIAMETER STEEL SOIL PROBE THROUGH AREA TO VERIFY THAT NO UNDERGROUND OBSTRUCTIONS ARE PRESENT.
3. INSTALL GUY STRAIN INSULATORS (FIBERGLASS ROD TYPE) TO MAINTAIN LINE TO GROUND CLEARANCE TO ANY CONDUCTIVE PART OF THE GUY ASSEMBLY. USE MINIMUM 4 FOOT INSULATOR, IN SERIES IF REQUIRED.

REF DWG NO.	DRAWING TITLE
95X-5500-X-02114	DRAWING INDEX
95X-5500-E-02119	ELEC. 13.2 KV DISTRIBUTION & COMM. PLAN
95X-5500-E-02120	ELEC. 13.2 KV DISTRIBUTION & COMM. PLAN
95X-5500-E-02124	POLE ELEVATIONS

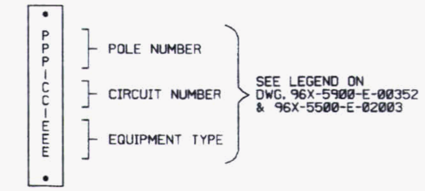

DETAIL 4
SWITCH NAMEPLATE LETTERING
NTS

NO.	REVISIONS	DATE	DWN. BY	APPD.	REF. DWG. NO.
0	ISSUED FOR CFC	9-6-05	GEP	[signature]	
B	ISSUED FOR 90% REVIEW	8-17-05	GEP		
A	ISSUED FOR 60% REVIEW	5-3-05	GEP		

NOTE: FLUOR FERNALD CADD DRAWING, DO NOT REVISE MANUALLY.

CONFIGURATION MANAGEMENT DRAWING — YES / NO
SYSTEMS, STRUCTURES OR COMPONENTS DEPICTED ON THIS DRAWING ARE UNDER CONFIGURATION MANAGEMENT CONTROL. SEE NOTES.
COGNIZANT ENGINEER — DATE

APPROVALS

CIVIL & STR.			SAFETY ENG.	
ELECTRICAL	[signature]	9/7/05	MAINTENANCE	
ENGINEER			FIRE PROTECT.	
INSTRUMENT			WASTE MANAGE	
MECHANICAL			SECURITY	
			PROJECTS	[signature] 9/8/05
CHECKED	[signature]			
APPROVED	[signature]	9/8/05		

Fernald Closure Project
FLUOR FERNALD, INC.
U.S. DEPARTMENT OF ENERGY

WASTE PIT AREA — GRID 31A
WASTE STORAGE AREA EXTRACTION SYSTEM
PHASE 2
MATERIAL LIST AND STANDARD DETAILS
NO SCALE

RES 4528
DATE APRIL 5, 2005
DRAWN G.E. PAUL
95X-5500-E-02124 — 0

FCPS.DGN 5/30/03

FILE NAME: /res42528/95xe2124.dgn

006058

GENERAL NOTES :

1. "XX" REPRESENTS THE CORRESPONDING EXTRACTION WELL HOUSE NUMBER.

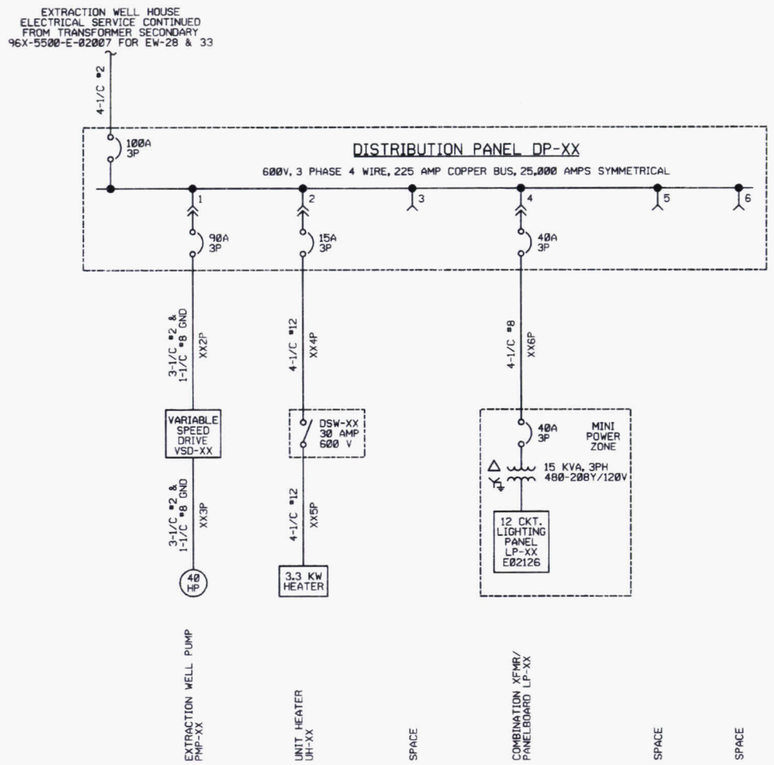

SINGLE LINE CONFIGURATION FOR EXTRACTION WELL HOUSES 28 AND 33

EQUIPMENT NAME : UNIT HEATER UH-XX

EQUIPMENT NO. : UH-XX
PANEL SCH'D DWG NO.: E02126
PLAN DWG NO. : E02131
PREFIX WIRE NUMBERS WITH UH-XX

INTERCONNECTION DIAGRAM : BY VENDOR

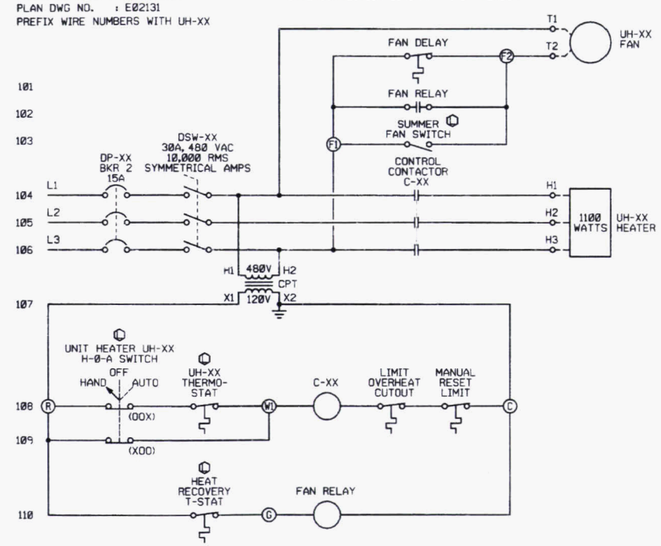

UNIT HEATER ELEMENTARY DIAGRAM

REF DWG NO.	DRAWING TITLE
95X-5500-X-02114	DRAWING INDEX
95X-5500-E-02117	SYMBOLS AND LEGEND
95X-5500-E-02118	SYMBOLS AND LEGEND
96X-5900-E-02007	SINGLE LINE DIAGRAM - 13.2 KV FEEDERS
95X-5500-E-02119	13.2 KV DISTRIBUTION & COMMUNICATION PLAN
95X-5500-E-02120	13.2 KV DISTRIBUTION & COMMUNICATION PLAN
95X-5500-E-02126	PANEL SCHEDULES
95X-5500-E-02127	CABLE SCHEDULE
95X-5500-E-02131	480/120V POWER, INSTRUMENT, AND LIGHTING PLAN - WELL HOUSE AND VALVE HOUSE
95X-5500-N-02143	INTERCONNECTION - WELL HOUSE DCS PCS

NO.	REVISIONS	DATE	DWN. BY	APPD.
0	ISSUED FOR CFC	9-4-05	GEP	
B	ISSUED FOR 90% REVIEW	8-8-05	GEP	
A	ISSUED FOR 60% REVIEW	5-3-05	GEP	

REF. DWG. NO.

NOTE: FLUOR FERNALD CADD DRAWING. DO NOT REVISE MANUALLY.

CONFIGURATION MANAGEMENT DRAWING — YES / NO

SYSTEMS, STRUCTURES OR COMPONENTS SPECIFIED ON THIS DRAWING ARE UNDER CONFIGURATION MANAGEMENT CONTROL. SEE NOTES.

COGNIZANT ENGINEER DATE

APPROVALS

CIVIL & STR.		SAFETY ENG.	
ELECTRICAL	J.S. Ford 9/7/05	MAINTENANCE	
ENGINEER		FIRE PROTECT.	
INSTRUMENT		WASTE MANAGE	
MECHANICAL		SECURITY	
		PROJECTS	9/7/05
CHECKED			
APPROVED	9/6/05		

Fernald Closure Project

FLUOR FERNALD, INC.

U.S. DEPARTMENT OF ENERGY

WASTE PIT AREA — GRID 31A

WASTE STORAGE AREA EXTRACTION SYSTEM
PHASE 2
ELECTRICAL SINGLE LINE DIAGRAM

RES 4528
DATE APRIL 5, 2005
DRAWN C.E. PAUL

95X-5500-E-02125 | 0

FOPS_DGN 5/30/03

FILE NAME: /res4528/95x02125.dgn

006058

DISTRIBUTION PANEL DP-XX

VOLTAGE : 480 VOLTS, 3 PHASE, 4 WIRE
MAIN BKR : 100 AMP
MOUNTING : SURFACE

REMARKS : 1. ALL BREAKERS SHALL BE LOCKABLE IN THE 'OFF' POSITION
2. SEE NOTE 1.

MAIN BUS 225 AMP

DIRECTORY	WATTS LOAD L1	WATTS LOAD L2	WATTS LOAD L3	CKT NO	WIRE SIZE	BKR AMPS	BKR AMPS	WIRE SIZE	CKT NO	WATTS LOAD L1	WATTS LOAD L2	WATTS LOAD L3	DIRECTORY
UNIT HEATER UH-XX	1100									5882			COMBINATION TRANSFORMER/PANELBOARD LP-XX
		1100		1	*12	15	40	*8	2		5882		
			1100									5882	
EXTRACTION WELL PUMP XX	10.8K												SPACE
		10.8K		3	*2	80			4				
			10.8K										
SPACE													SPACE
				5					6				
SUB-TOTALS	11.9K L1	11.9K L2	11.9K L3	NEUTRAL BUS						5882 L1	5882 L2	5882 L3	SUB-TOTALS

TOTAL WATTS L1 : 17.8K **TOTAL WATTS L2** : 17.8K **TOTAL WATTS L3** : 17.8K **TOTAL WATTS** : 53.4K

LIGHTING PANEL LP-XX

VOLTAGE : 208Y/120 VOLT, 3 PHASE, 4 WIRE
MAIN BKR : 50 AMP
MOUNTING : COMBINATION TRANSFORMER/PANEL

REMARKS : 1. * INDICATES GFCI, ** INDICATES 30MA GFEP
2. SEE NOTE 1.

MAIN BUS : 100 AMP

DIRECTORY	WATTS LOAD L1	WATTS LOAD L2	WATTS LOAD L3	CKT NO	WIRE SIZE	BKR AMPS	BKR AMPS	WIRE SIZE	CKT NO	WATTS LOAD L1	WATTS LOAD L2	WATTS LOAD L3	DIRECTORY
RECEPTACLES	900			1	*12	20	20	*12	2	80			INSTRUMENT POWER FIT (N00271) & PCSXX
LIGHTS - INSIDE		118		3	*12	20			4				SPACE
LIGHTS - OUTSIDE & EXIT			33	5	*12	20	20	*12	6			38	EXHAUST FAN EF-XX
SPACE				7		20			8				SPACE
SPACE				9		20			10				SPACE
SPACE				11		20			12				SPACE
SUB-TOTALS	900 L1	118 L2	33 L3	NEUTRAL BUS						80 L1	0 L2	38 L3	SUB-TOTALS

TOTAL WATTS L1 : 980 **TOTAL WATTS L2** : 118 **TOTAL WATTS L3** : 71 **TOTAL WATTS** : 1169

GENERAL NOTES :

1. 'XX' REPRESENTS THE CORRESPONDING EXTRACTION WELL HOUSE NUMBER.

EQUIPMENT NAME : WELL HOUSE XX EXHAUST FAN EF-XX (SEE NOTE 1 (TYPICAL))
EQUIPMENT NO. : EF-XX
S/L DWG NO. : E-02125
PLAN DWG NO. : E-02131
PANEL SCH'D DWG NO.: E-02126

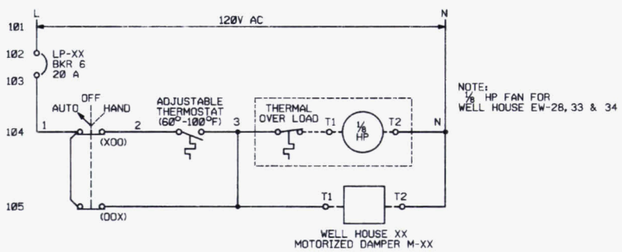

EXHAUST FAN ELEMENTARY DIAGRAM

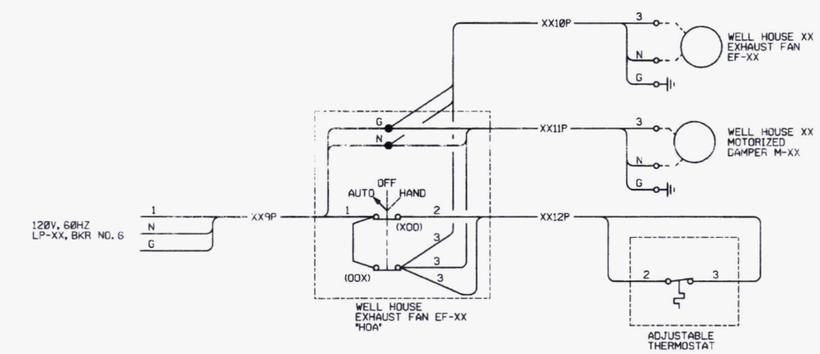

WELL HOUSE EXHAUST FAN EF-XX
INTERCONNECTION DIAGRAM

REF DWG NO.	DRAWING TITLE
95X-5500-X-02114	DRAWING INDEX
95X-5500-E-02119	SYMBOLS AND LEGEND
96X-5900-E-02007	SINGLE LINE DIAGRAM - 13.2 KV FEEDERS
95X-5500-E-02119	13.2 KV DISTRIBUTION & COMMUNICATION PLAN
95X-5500-E-02131	480/120V POWER, INSTRUMENT, AND LIGHTING PLAN - WELL HOUSE AND VALVE HOUSE
95X-5500-E-02128	CABLE SCHEDULE
95X-5500-E-02126	PANEL SCHEDULES
95X-5500-N-02143	INTERCONNECTION - WELL HOUSE DCS PCS

POLE MOUNTED TRANSFORMER CONNECTION

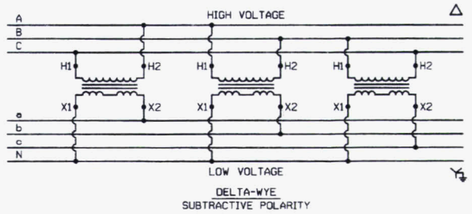

DELTA-WYE
SUBTRACTIVE POLARITY

NOTE : INSTALLER SHALL CONFIRM DESIGNATIONS WITH VENDOR SUPPLIED INFORMATION.

SINGLE PHASE TRANSFORMER JUMPER WIRE SIZING TABLE				
TRANSFORMER KVA	PRIMARY AMPS	SECONDARY AMPS	PRIMARY WIRE SIZE	SECONDARY WIRE SIZE
25	3.28	90.21	#2	#4

NO.	REVISIONS	DATE	DWN. BY	APPD.
0	ISSUED FOR CFC	5-6-05	GEP	
B	ISSUED FOR 90% REVIEW	3-11-05	GEP	
A	ISSUED FOR 60% REVIEW	5-3-05	GEP	

REF. DWG. NO.

NOTE: FLUOR FERNALD CADD DRAWING, DO NOT REVISE MANUALLY.

CONFIGURATION MANAGEMENT DRAWING
EXISTING STRUCTURES OR COMPONENTS MAY BE AFFECTED BY THIS DRAWING. CONFIGURATION MANAGEMENT CONTROL SEE NOTES.
COGNIZANT ENGINEER DATE

APPROVALS

CIVIL & STR.		SAFETY ENG.	
ELECTRICAL		MAINTENANCE	
ENGINEER		FIRE PROTECT.	
INSTRUMENT		WASTE MANAGE	
MECHANICAL		SECURITY	
		PROJECTS	
CHECKED			
APPROVED			

Fernald Closure Project
FLUOR FERNALD, INC.
U.S. DEPARTMENT OF ENERGY

WASTE PIT AREA GRID 31A
WASTE STORAGE AREA EXTRACTION SYSTEM
PHASE 2
ELEMENTARY & INTERCONNECTION DIAGRAMS AND PANEL SCHEDULES

RES 4528
DATE APRIL 5, 2005
DRAWN G.E. PAUL
95X-5500-E-02126 | 0

FILE NAME: /res4528/95xe2126.dgn

FCPS.DGN 5/30/03

006058

CABLE SCHEDULE

CABLE NO	FROM	TO	CONDUCTOR NUMBER	CONDUCTOR SIZE	CONDUCTOR MATL.	CONDUCTOR INSUL	CONDUCTOR FUNCTION	WIRE TERMINATIONS 1	2	3	4	5	6	7	8	9	10	11	12	ROUTING	REF DWG	REMARKS
XX1P	TRANSFORMER ZZZ	WELL HOUSE DISTRIBUTION PANEL DP-XX	4-1/C	#2 AWG	CU	600V	480V POWER	ZZZ -L1	ZZZ -L2	ZZZ -L3	ZZZ -GND									CXX1	SEE REF DWG. BLOCK	NOTE 4
XX2P	WELL HOUSE DISTRIBUTION PANEL DP-XX	VARIABLE SPEED DRIVE VSD-XX	3-1/C 1-1/C	#2 AWG #8 GND	CU	600V	480V POWER	VSD-XX -L1	VSD-XX -L2	VSD-XX -L3	VSD-XX -GND									CXX2	" "	NOTE 5
XX3P	VARIABLE SPEED DRIVE VSD-XX	EXTRACTION WELL PUMP MOTOR PMP-XX	3-1/C 1-1/C	#2 AWG #8 GND	CU	600V	480V POWER	PMP-XX -L1	PMP-XX -L2	PMP-XX -L3	PMP-XX -GND									CXX3	" "	NOTE 6
XX4P	WELL HOUSE DISTRIBUTION PANEL DP-XX	DISCONNECT SWITCH DSW-XX	4-1/C	#12 AWG	CU	600V	480V POWER	DSW-XX -L1	DSW-XX -L2	DSW-XX -L3	DSW-XX -GND									CXX4	" "	NOTE 7
XX5P	DISCONNECT SWITCH DSW-XX	UNIT HEATER UH-XX	4-1/C	#12 AWG	CU	600V	480V POWER	UH-XX -L1	UH-XX -L2	UH-XX -L3	UH-XX -GND									CXX5	" "	NOTE 8
XX6P	WELL HOUSE DISTRIBUTION PANEL DP-XX	COMBINATION TRANSFORMER/ PANELBOARD LP-XX	4-1/C	#8 AWG	CU	600V	480V POWER	LP-XX -L1	LP-XX -L2	LP-XX -L3	LP-XX -GND									CXX6	" "	NOTE 9
XX7P	COMBINATION TRANSFORMER/ PANELBOARD LP-XX, CKT. 2	INSTRUMENT POWER TO PCS-XX	3-1/C	#12 AWG	CU	600V	120V POWER	L	N	GND										CXX7	" "	
XX8P	COMBINATION TRANSFORMER/ PANELBOARD LP-XX, CKT. 2	INSTRUMENT POWER TO FITA	3-1/C	#12 AWG	CU	600V	120V POWER	L	N	GND										CXX8	" "	
XX9P	COMBINATION TRANSFORMER/ PANELBOARD LP-XX, CKT. 6	EXHAUST FAN EF-XX HAND-OFF-AUTO SWITCH	3-1/C	#12 AWG	CU	600V	120V POWER	EF-XX -1	EF-XX -N	EF-XX -GND										CXX9	" "	
XX10P	EXHAUST FAN EF-XX HAND-OFF-AUTO SWITCH	EXHAUST FAN EF-XX MOTOR	3-1/C	#12 AWG	CU	600V	120V POWER	EF-XX -3	EF-XX -N	EF-XX -GND										CXX10	" "	
XX11P	EXHAUST FAN EF-XX HAND-OFF-AUTO SWITCH	EXHAUST FAN EF-XX MOTORIZED DAMPER M-XX	3-1/C	#12 AWG	CU	600V	120V POWER	M-XX -3	M-XX -N	M-XX -GND										CXX11	" "	
XX12P	EXHAUST FAN EF-XX HAND-OFF-AUTO SWITCH	EXHAUST FAN EF-XX ADJUSTABLE THERMOSTAT	2-1/C	#12 AWG	CU	600V	120V POWER	T -2	T -3											CXX12	" "	

NOTES :

1. 'XX' REPRESENTS THE CORRESPONDING EXTRACTION WELL HOUSE NUMBER.
2. 'ZZZ' REPRESENTS THE CORRESPONDING POLE MOUNTED TRANSFORMER NUMBER FROM WHICH CABLE IS CONNECTED TO. SEE 96X-5900-E-02007 SINGLE LINE FOR CLARITY.
3. NOT USED.
4. CABLE ROUTING FROM XFMR SECONDARY TO WEATHERHEAD BELOW XFMR, TO CONDUIT UNDERGROUND, TO DISTRIBUTION PANEL.
5. CABLE NO. REPRESENTS THE FOLLOWING CABLE NUMBERS: 232P, 262P, 272P, 282P.
6. CABLE NO. REPRESENTS THE FOLLOWING CABLE NUMBERS: 253P, 263P, 273P, 283P.
7. CABLE NO. REPRESENTS THE FOLLOWING CABLE NUMBERS: 254P, 264P, 274P, 284P.
8. CABLE NO. REPRESENTS THE FOLLOWING CABLE NUMBERS: 255P, 265P, 275P, 285P.
9. CABLE NO. REPRESENTS THE FOLLOWING CABLE NUMBERS: 256P, 266P, 276P, 286P.

REF DWG NO.	DRAWING TITLE
95X-5500-X-02114	DRAWING INDEX
95X-5500-E-02007	SINGLE LINE DIAGRAM - 13.2 KV FEEDERS
95X-5500-E-02126	ELEC. PANEL SCHEDULE & DIAGRAMS
95X-5500-E-02122	ELEC. ELEVATIONS, SECTIONS AND DETAILS
95X-5500-E-02131	480/120V POWER, INSTRUMENT, AND LIGHTING PLAN -
95X-5500-E-02128	INSTUMENTATION INTERCONNECTION DIAGRAM WELL HOUSE

NO.	REVISIONS	DATE	DWN. BY	APPD.
0	ISSUED FOR CFC	9-4-05	GEP	
B	ISSUED FOR 90% REVIEW	8-11-05	GEP	
A	ISSUED FOR 60% REVIEW	5-3-05	GEP	

REF. DWG. NO.

NOTE: FLUOR FERNALD CADD DRAWING. DO NOT REVISE MANUALLY.

CONFIGURATION MANAGEMENT DRAWING YES NO

SYSTEMS, STRUCTURES OR COMPONENTS DESIGNATED AS SAFETY SYSTEMS, CONFIGURATION MANAGEMENT, OR UNREVIEWED. SEE NOTES.

COGNIZANT ENGINEER DATE

APPROVALS

CIVIL & STR.		SAFETY ENG.	
ELECTRICAL	J. S. Ford 9/16/05	MAINTENANCE	
ENGINEER		ENV. PROTECT.	
INSTRUMENT		WASTE MANAGE	
MECHANICAL		SECURITY	
		PROJECTS	9/16/05
CHECKED			
APPROVED	McPaul 9/16/05		

Fernald Closure Project

FLUOR FERNALD, INC.

U.S. DEPARTMENT OF ENERGY

WASTE PIT AREA GRID 31A

WASTE STORAGE AREA EXTRACTION SYSTEM
PHASE 2
ELECTRICAL CABLE SCHEDULE
SHEET 1 OF 3

DGS 4528
DATE APRIL 5, 2005
DRAWN G.E. PAUL

95X-5500-E-02127 | 0

FILE NAME: /res4528/95xe2127.dgn

FDPS_DGN 5/30/03

006058

CABLE SCHEDULE

CABLE NO	FROM	TO	CONDUCTOR NUMBER	CONDUCTOR SIZE	CONDUCTOR MATL.	CONDUCTOR INSUL	CONDUCTOR FUNCTION	WIRE TERMINATIONS 1	2	3	4	5	6	7	8	9	10	11	12	ROUTING	REF DWG	REMARKS
10201	CAWWT HMI	PCS-26	2/BNDL	62.5/125 MULTIMOD	FIBER OPTIC		COMM	1	2											NOTE 19	SEE REF DWG. BLOCK	FIELD ROUTE CABLE VIA EXISTING POLES NEAR BLDG 51 TO POLE #684
10211	PCS-26	PCS-27	2/BNDL	62.5/125 MULTIMOD	FIBER OPTIC		COMM	1	2											NOTE 20	SEE REF DWG. BLOCK	BELDEN NO. 225702 OR EQUAL
10221	PCS-27	PCS-28	2/BNDL	62.5/125 MULTIMOD	FIBER OPTIC		COMM	1	2											NOTE 21	SEE REF DWG. BLOCK	BELDEN NO. 225702 OR EQUAL
10231	PCS-28	PCS-33	2/BNDL	62.5/125 MULTIMOD	FIBER OPTIC		COMM	1	2											NOTE 22	SEE REF DWG. BLOCK	BELDEN NO. 225702 OR EQUAL , SEE NOTE 23
CYX1	DISC AT POLE 546	WEATHERHEAD AT POLE WP48		#4/0 AWG	AL	INS	480V													POLE 546 TO WP48, SEE PLAN VIEW		

NOTES :

1. 'XX' REPRESENTS THE CORRESPONDING EXTRACTION WELL HOUSE NUMBER.
2. FEA (ULTRASONIC TRANSMITTER) AND FEB (ULTRASONIC RECEIVER) MAKE UP THE FLOW ELEMENT FOR FITA.
3. FOR INSTRUMENT LOOP NUMBER MATRIX SEE DRAWING 95X-5900-N-00271.
4. INSTALL PER MANUFACTURERS INSTRUCTIONS
5. STARTING @ BUILDING 51, OVERHEAD VIA EXISTING POLES TO POLE #524(*), OVERHEAD TO C1521 @ POLE #631(*), TO PSC-15.
6. STARTING @ PCS-15 C1521 UNDERGROUND TO POLE#631(*), OVERHEAD TO C1721 @ POLE #655, TO PCS-17.
7. STARTING @ PCS-17 C1721 UNDERGROUND TO POLE#655, OVERHEAD TO C5720 POLE #635(*), TO PCS-VH1.
8. STARTING @ PCS-VH1 C572 UNDERGROUND TO POLE#635(*), OVERHEAD TO C1421 @ POLE #31A, TO PCS-14.
9. STARTING @ PCS-14 C1421 UNDERGROUND TO POLE#662, OVERHEAD TO C1321 @ POLE #36A(*), TO PCS-13.
10. STARTING @ PCS-13 C1321 UNDERGROUND TO POLE#36A(*), OVERHEAD TO C1621 @ POLE #636(*), TO PCS-16.
11. STARTING @ PCS-16 C1621 UNDERGROUND TO POLE #636(*), OVERHEAD TO C2221 @ POLE #641 TO PCS-22.
12. STARTING @ BUILDING 51, OVERHEAD VIA EXISTING POLES TO POLE #524(*), OVERHEAD TO C2121 @ POLE #576, TO PSC-21.
13. STARTING @ PCS-21 C2121 UNDERGROUND TO POLE#575, OVERHEAD TO C2021 @ POLE #579, TO PCS-20.
14. STARTING @ PCS-20 C2021 UNDERGROUND TO POLE#579, OVERHEAD TO C1921 @ POLE #583, TO PCS-19.
15. REROUTE EXISTING CABLE 10131 STARTING @ PCS-19 C1921 UNDERGROUND TO POLE#583, OVERHEAD TO C2321 @ POLE #587, TO PCS-23.
16. POLE NUMBERS FOLLOWED BY AN "(*)" ARE EXISTING OR ORIGINATE THEIR NUMBERS FROM THE "WASTE UNITS REMEDIATION - SOUTHERN WASTE UNITS - SITE PREPARATION PACKAGE" AND ARE TO BE CONSIDERED EXISTING AT THE TIME THIS JOB IS CONSTRUCTED.
17. STARTING @ PCS-23 C2321 UNDERGROUND TO POLE#587, OVERHEAD TO C2421 @ POLE #590, TO PCS-24.
18. STARTING @ PCS-24 C2421 UNDERGROUND TO POLE#590, OVERHEAD TO C1821 @ POLE #586, TO PCS-18.
19. STARTING @ BUILDING 51, OVERHEAD VIA EXISTING POLES TO POLE #684(*), UNDERGROUND TO C2621 @ POLE #684(*), TO PSC-26.
20. STARTING @ PCS-26 C2621 UNDERGROUND TO POLE#684(*), OVERHEAD TO C2721 @ POLE #674, TO PCS-27.
21. STARTING @ PCS-27 C2721 UNDERGROUND TO POLE#684, OVERHEAD TO C2821 @ POLE #677(*), TO PSC-28.
22. STARTING @ PCS-28, C2821 UNDERGROUND TO POLE #677, OVERHEAD TO C3321 @ POLE #WP48.
23. FIBER OPTIC LINE FROM PCS-27 TO PCS-28 NEEDS TO BE RE-INSTALLED WITH THIS PROJECT.

REF DWG NO.	DRAWING TITLE
95X-5500-X-02114	DRAWING INDEX
96X-5500-E-02007	13.2 KV ARIAL DISTRIBUTION SINGLE LINE DIAGRAM
95X-5500-E-02119	13.2 KV DISTRIBUTION & COMMUNICATION PLAN
95X-5500-E-02120	13.2 KV DISTRIBUTION & COMMUNICATION PLAN
95X-5500-E-02131	480/120 POWER, INSTUMENT & LIGHTING PLAN
95X-5500-N-02144	SOUTH FIELD EXTRATION SYSTEM INSTRUMENTATIONCONTROL SYSTEM ARCHITECTURE
95X-5500-N-02143	INSTRUMENTATION INTERCONNECTION DIAGRAM WELL HOUSE DCS PCS

NO.	REVISIONS	DATE	DWN. BY	APPD.
0	ISSUED FOR CFC	9-6-05	GEP	
B	ISSUED FOR 90% REVIEW	8-18-05	GEP	
A	ISSUED FOR 60% REVIEW	5-3-05	GEP	

REF. DWG. NO.

NOTE: FLUOR FERNALD CADD DRAWING, DO NOT REVISE MANUALLY.

CONFIGURATION MANAGEMENT DRAWING — YES / NO

STATING: STRUCTURES OR COMPONENTS SHOWN ON THIS DRAWING ARE UNDER CONFIGURATION MANAGEMENT CONTROL. SEE NOTES.

COGNIZANT ENGINEER — DATE

APPROVALS

CIVIL & STR.		SAFETY ENG.	
ELECTRICAL	J E Kerl 9/16/05	MAINTENANCE	
ENGINEER		FIRE PROTECT.	
INSTRUMENT		WASTE MANAGE	
MECHANICAL		SECURITY	
		PROJECTS	9/16/05
CHECKED			
APPROVED	9/16/05		

Fernald Closure Project

FLUOR FERNALD, INC.

U.S. DEPARTMENT OF ENERGY

WASTE PIT AREA — GRID 31A

WASTE STORAGE AREA EXTRACTION SYSTEM
PHASE 2
ELECTRICAL CABLE SCHEDULE
SHEET 2 OF 3

RES 4528
DATE APRIL 5, 2005
DRAWN G.E. PAUL

95X-5500-E-02128 | 0

FORLDGN 5/30/03

FILE NAME: /res4528/95xe2128.dgn

006058

CABLE SCHEDULE

FOR REFERENCE ONLY (cables 1001I through 1013I)

CABLE NO	FROM	TO	CONDUCTOR NUMBER	CONDUCTOR SIZE	CONDUCTOR MATL.	CONDUCTOR INSUL	CONDUCTOR FUNCTION	WIRE TERM. 1	2	3	4	5	6	7	8	9	10	11	12	ROUTING	REF DWG	REMARKS
1001I	CAWWT HMI	PCS-15	2/BNDL	62.5/125 MULTIMOD	FIBER OPTIC		COMM	1	2											NOTE 5	N-00271, N-00273 E-00244	FIELD ROUTE CABLE VIA EXISTING POLES NEAR BLDG 51 TO POLE 524
1002I	PCS-15	PCS-17	2/BNDL	62.5/125 MULTIMOD	FIBER OPTIC		COMM	1	2											NOTE 6	N-00271 N-00273, E-00244	BELDEN NO. 225702 OR EQUAL
1003I	PCS-17	PCSVH1	2/BNDL	62.5/125 MULTIMOD	FIBER OPTIC		COMM	1	2											NOTE 7	N-00271 N-00273, E-00244	BELDEN NO. 225702 OR EQUAL
1004I	PCSVH1	PCS-14	2/BNDL	62.5/125 MULTIMOD	FIBER OPTIC		COMM	1	2											NOTE 8	N-00272 N-00273, E-00244	BELDEN NO. 225702 OR EQUAL
1005I	PCS-14	PCS-13	2/BNDL	62.5/125 MULTIMOD	FIBER OPTIC		COMM	1	2											NOTE 9	N-00272 N-00273, E-00244	BELDEN NO. 225702 OR EQUAL
1006I	PCS-13	PCS-16	2/BNDL	62.5/125 MULTIMOD	FIBER OPTIC		COMM	1	2											NOTE 10	N-00271 N-00273, E-00244	BELDEN NO. 225702 OR EQUAL
1007I	PCS-16	PCS-22	2/BNDL	62.5/125 MULTIMOD	FIBER OPTIC		COMM	1	2											NOTE 11	N-00271 N-00273, E00244	BELDEN NO. 225702 OR EQUAL
1010I	AWWT DCS	PCS-25	2/BNDL	62.5/125 MULTIMOD	FIBER OPTIC		COMM	1	2											NOTE 12	X-02002 N-02042, N-02045	FIELD ROUTE CABLE VIA EXISTING POLES NEAR BLDG 51 TO POLE *574
135I	PCS-25	PCS-21	2/BNDL	62.5/125 MULTIMOD	FIBER OPTIC		COMM	1	2											NOTE 12A	N-02002 N-02042, N-02045	BELDEN NO. 225702 OR EQUAL
1011I	PCS-21	PCS-20	2/BNDL	62.5/125 MULTIMOD	FIBER OPTIC		COMM	1	2											NOTE 13	N-00271 N-00273, E-00244	BELDEN NO. 225702 OR EQUAL
1012I	PCS-20	PCS-19	2/BNDL	62.5/125 MULTIMOD	FIBER OPTIC		COMM	1	2											NOTE 14	N-00271 N-00273, E-00244	BELDEN NO. 225702 OR EQUAL
1013I	PCS-19	PCS-23	2/BNDL	62.5/125 MULTIMOD	FIBER OPTIC		COMM	1	2											NOTE 15	N-00271 N-00273, E-00244	BELDEN NO. 225702 OR EQUAL
1020I	FIT001	PCSVH1	1 PAIR	*16 AWG	CU	600V	ANALOG	+	-	SHLD										C575	N-00272 E-00245	
1021I	FE001A (TRANSMITTER)	FIT001	1/C COAX	VENDOR			ULTRSNC X-MITTR	+	SHLD											C585	N-00272 E-00245	VENDOR CABLE
1022I	FE001B (RECEIVER)	FIT001	1/C COAX	VENDOR			ULTRSNC RECEIVER	+	SHLD											C585, C586	N-00272 E-00245	VENDOR CABLE
1023I	PIT002	PCSVH1	1 PAIR	*16 AWG	CU	600V	ANALOG	+	-	SHLD										C575, C579	N-00272 E-00245	
1024I	FIT003	PCSVH1	1 PAIR	*16 AWG	CU	600V	ANALOG	+	-	SHLD										C575, C576	N-00272 E-00245	
1025I	FE003A (TRANSMITTER)	FIT003	1/C COAX	VENDOR			ULTRSNC X-MITTR	+	SHLD											C587	N-00272 E-00245	VENDOR CABLE
1026I	FE003B (RECEIVER)	FIT003	1/C COAX	VENDOR			ULTRSNC RECEIVER	+	SHLD											C587, C588	N-00272 E-00245	VENDOR CABLE
1027I	FCV001	PCSVH1	1 PAIR	*16 AWG			ANALOG	+	-	SHLD										C575, C584	N-00272 E-00245	
1028I	PCV002	PCSVH1	1 PAIR	*16 AWG	CU	600V	ANALOG	+	-	SHLD										C575, C589	N-00272 E-00245	
XX01I	FIT	PCS-XX	1 PAIR	*16 AWG	CU	600V	ANALOG	+	-	SHLD										CXX14	N-00271 E-00245	
XX04I	PITA	PCS-XX	1 PAIR	*16 AWG	CU	600V	ANALOG	+	-	SHLD										CXX14, CXX17	N-00271 E-00245	
XX05I	FYA	PCS-XX	1 PAIR	*16 AWG	CU	600V	ANALOG	+	-	SHLD										CXX19	N-00271 E-00245	
1001C	ZSH022/ZSL022	PCSVH1	3-1/C	*14 AWG	CU	600V	DIGITAL	1	2	3										C575, C580	N-00272 E-00245	
1002C	ZSH023/ZSL023	PCSVH1	3-1/C	*14 AWG	CU	600V	DIGITAL	1	2	3										C575, C582	N-00272 E-00245	
1003C	ZSH024/ZSL024	PCSVH1	3-1/C	*14 AWG	CU	600V	DIGITAL	1	2	3										C575, C581	N-00272 E-00245	
1004C	ZSH025/ZSL025	PCSVH1	3-1/C	*14 AWG	CU	600V	DIGITAL	1	2	3										C575, C577, C581	N-00272 E-00245	
1006C	ZSH027/ZSL027	PCSVH1	3-1/C	*14 AWG	CU	600V	DIGITAL	1	2	3										C575, C583	N-00272 E-00245	
1008C	ZSH030/ZSL030	PCSVH1	3-1/C	*14 AWG	CU	600V	DIGITAL	1	2	3										C575, C578	N-00272 E-00245	
1009C	FCV001	PCSVH1	2-1/C	*14 AWG	CU	600V	DIGITAL	1	2											C575, C584	N-00272 E-00245	(ZSL001)
XX01C	ZSHA/ZSLA	PCS-XX	3-1/C	*14 AWG	CU	600V	DIGITAL	1	2	3										CXX14, CXX15	N-00271 E-00245	
XX02C	ZSHB/ZSLB	PCS-XX	3-1/C	*14 AWG	CU	600V	DIGITAL	1	2	3										CXX14, CXX16	N-00271 E-00245	
XX03C	UNIT HEATER UH-XX	UNIT HEATER UH-XX HAND-OFF-AUTO SWITCH	3-1/C	*12 AWG	CU	600V	CONTROL	UH-XX-1	UH-XX-2	UH-XX-3	UH-XX-4	UH-XX-5								CXX18	E-00245 E-00243	NOTE 4
573C	UNIT HEATER UH-1	UNIT HEATER UH-1 HAND-OFF-AUTO SWITCH	3-1/C	*12 AWG	CU	600V	CONTROL	UH-1-1	UH-1-2	UH-1-3	UH-1-4	UH-1-5								C307, C573	E-00245 E-00243	NOTE 4
574C	UNIT HEATER UH-2	UNIT HEATER UH-2 HAND-OFF-AUTO SWITCH	3-1/C	*12 AWG	CU	600V	CONTROL	UH-2-1	UH-2-2	UH-2-3	UH-2-4	UH-2-5								C309, C574	E-00245 E-00243	NOTE 4
601C	UNIT HEATER UH-3	UNIT HEATER UH-3 HAND-OFF-AUTO SWITCH	3-1/C	*12 AWG	CU	600V	CONTROL	UH-3-1	UH-3-2	UH-3-3	UH-3-4	UH-3-5								C403, C601	E-00375 E-00243	NOTE 4
1030I	PCS-23	PCS-24	2/BNDL	62.5/125 MULTIMOD	FIBER OPTIC		COMM	1	2											NOTE 17	N-00271 N-00273, E-00244	BELDEN NO. 225702 OR EQUAL
1031I	PCS-24	PCS-18	2/BNDL	62.5/125 MULTIMOD	FIBER OPTIC		COMM	1	2											NOTE 18	N-00271 N-00273, E-00244	BELDEN NO. 225702 OR EQUAL
2C-24	TAP 2C-3 @ POLE *584	DEADEND TERMINATION @ POLE * 587	3-1/C	*2 AWG	ASCR	BARE	13.2KV POWER	F1A1-24 -L1	F1A1-24 -L2	F1A1-24 -L3										C403, C601	E-00375 E-00243	NOTE 4
2C-25	TAP 2C-24 @ POLE 587	FUSED CUTOUT FC-587 (POLE 587)	3-1/C	*2 AWG	ASCR	BARE	13.2KV POWER	F1A1-25 -L1	F1A1-25 -L2	F1A1-25 -L3											E00244 E00477	
2C-26	FUSED CUTOUT FC-587 (POLE 587)	TRANSFORMER T-587 (POLE 587)	3-1/C	*2 AWG	ASCR	BARE	13.2KV POWER	F1A1-26 -L1	F1A1-26 -L2	F1A1-26 -L3											E00244 E00477	
2C-27	TAP 2C-3 @ POLE *585	DEADEND TERMINATION @ POLE * 590	3-1/C	*2 AWG	ASCR	BARE	13.2KV POWER	F1A1-27 -L1	F1A1-27 -L2	F1A1-27 -L3											E00244 E00477	NOTE 4
2C-28	TAP 2C-27 @ POLE 590	FUSED CUTOUT FC-590 (POLE 590)	3-1/C	*2 AWG	ASCR	BARE	13.2KV POWER	F1A1-28 -L1	F1A1-28 -L2	F1A1-28 -L3											E00244 E00477	
2C-29	FUSED CUTOUT FC-590 (POLE 590)	TRANSFORMER T-590 (POLE 590)	3-1/C	*2 AWG	ASCR	BARE	13.2KV POWER	F1A1-29 -L1	F1A1-29 -L2	F1A1-29 -L3											E00244 E00477	

FOR REFERENCE ONLY (cables 1030I through 2C-29)

NOTES :

1. 'XX' REPRESENTS THE CORRESPONDING EXTRACTION WELL HOUSE NUMBER.
2. FEA (ULTRASONIC TRANSMITTER) AND FEB (ULTRASONIC RECEIVER) MAKE UP THE FLOW ELEMENT FOR FITA.
3. FOR INSTRUMENT LOOP NUMBER MATRIX SEE DRAWING 95X-5900-N-00271.
4. INSTALL PER MANUFACTURERS INSTRUCTIONS
5. STARTING @ BUILDING 51, OVERHEAD VIA EXISTING POLES TO POLE *524(•), OVERHEAD TO C1521 @ POLE *631(•), TO PSC-15.
6. STARTING @ PCS-15 C1521 UNDERGROUND TO POLE*631(•), OVERHEAD TO C1721 @ POLE *655, TO PCS-17.
7. STARTING @ PCS-17 C1721 UNDERGROUND TO POLE*655, OVERHEAD TO C572@ POLE *635(•), TO PCS-VH1.
8. STARTING @ PCS-VH1 C572 UNDERGROUND TO POLE*635(•), OVERHEAD TO C1421 @ POLE *31A, TO PCS-14.
9. STARTING @ PCS-14 C1421 UNDERGROUND TO POLE*662, OVERHEAD TO C1321 @ POLE *36A(•), TO PCS-13.
10. STARTING @ PCS-13 C1321 UNDERGROUND TO POLE*36A(•), OVERHEAD TO C1621 @ POLE *636(•), TO PCS-16.
11. STARTING @ PCS-16 C1621 UNDERGROUND TO POLE *636(•). OVERHEAD TO C2221 @ POLE *641 TO PCS-22.
12. STARTING @ BUILDING 51, OVERHEAD VIA EXISTING POLES TO POLE *524(•), OVERHEAD TO C2521 @ POLE *656, TO PSC-25.

12A. STARTING @ PSC-25 UNDERGROUND TO POLE *656 OVERHEAD TO C2121 @ POLE *576 TO PSC-21.

13. STARTING @ PCS-21 C2121 UNDERGROUND TO POLE*575, OVERHEAD TO C2021 @ POLE *579, TO PCS-20.
14. STARTING @ PCS-20 C2021 UNDERGROUND TO POLE*579, OVERHEAD TO C1921 @ POLE *583, TO PCS-19.
15. REROUTE EXISTING CABLE 1013I STARTING @ PCS-19 C1921 UNDERGROUND TO POLE*583, OVERHEAD TO C2321 @ POLE *587, TO PCS-23.
16. POLE NUMBERS FOLLOWED BY AN "(•)" ARE EXISTING OR ORIGINATE THEIR NUMBERS FROM THE 'WASTE UNITS REMEDIATION - SOUTHERN WASTE UNITS - SITE PREPARATION PACKAGE' AND ARE TO BE CONSIDERED EXISTING AT THE TIME THIS JOB IS CONSTRUCTED.
17. STARTING @ PCS-23 C2321 UNDERGROUND TO POLE*587, OVERHEAD TO C2421 @ POLE *590, TO PCS-24.
18. STARTING @ PCS-24 C2421 UNDERGROUND TO POLE*590, OVERHEAD TO C1821 @ POLE *586, TO PCS-18.

REF DWG NO.	DRAWING TITLE
95X-5500-X-02114	DRAWING INDEX
95X-5900-N-02144	INSTRUMENTATION CONTROL SYSTEM ARCHITECTURE
95X-5500-N-02126	INSTRUMENTATION INTERCONNECTION DIAGRAM

NO.	REVISIONS	DATE	DWN. BY	APPD.
0	ISSUED FOR CFC	9-6-05	GEP	[signature]
B	ISSUED FOR 90% REVIEW	8-17-05	GEP	
A	ISSUED FOR 60% REVIEW	5-3-05	GEP	

REF. DWG. NO.

NOTE: FLUOR FERNALD CADD DRAWING, DO NOT REVISE MANUALLY.

CONFIGURATION MANAGEMENT DRAWING — YES / NO

SYSTEMS, STRUCTURES OR COMPONENTS DEPICTED ON THIS DRAWING ARE UNDER CONFIGURATION MANAGEMENT CONTROL. SEE NOTES.

COGNIZANT ENGINEER — DATE

APPROVALS

CIVIL & STR.			SAFETY ENG.	
ELECTRICAL ENGINEER	J. E. Kerl	9/7/05	FIRE PROTECT.	
INSTRUMENT			MAINTENANCE	
MECHANICAL			WASTE MANAGE	
			SECURITY	
			PROJECTS	[signature] 9/8/05
CHECKED	[initials]			
APPROVED	[signature]	9/8/05		

Fernald Closure Project

FLUOR FERNALD, INC.

U.S. DEPARTMENT OF ENERGY

WASTE PIT AREA — GRID 31A

WASTE STORAGE AREA EXTRACTION SYSTEM PHASE 2 ELECTRICAL CABLE SCHEDULE SHEET 3 OF 3

RES 4528 DATE APRIL 5, 2005 DRAWN G.E. PAUL

95X-5500-E-02129 | 0

FCP5.DGN 5/30/03

FILE NAME: /res4528/95xe2129.dgn

CONDUIT SCHEDULE

CONDUIT NO	FROM	TO	COND SIZE	CONTAINS CABLE(S)	REMARKS
CXX1	WEATHERHEAD ON POLE	WELL HOUSE DISTRIBUTION PANEL DP-XX	3"	XX1P	WELL HOUSE XX CONDUITS
CXX1A	STUB-UP AT POLE	STUB-UP BELOW DISTRIBUTION PANEL DP-XX	1½"	(EMPTY)	
CXX2	WELL HOUSE DISTRIBUTION PANEL DP-XX	VARIABLE SPEED DRIVE VSD-XX	1½"	XX2P	
CXX3	VARIABLE SPEED DRIVE VSD-XX	EXTRACTION WELL PUMP MOTOR PMP-XX	1½"	XX3P	
CXX4	WELL HOUSE DISTRIBUTION PANEL DP-XX	DISCONNECT SWITCH DSW-XX	¾"	XX4P	
CXX5	DISCONNECT SWITCH DSW-XX	UNIT HEATER UH-XX	¾"	XX5P	
CXX6	WELL HOUSE DISTRIBUTION PANEL DP-XX	COMBINATION TRANSFORMER/ PANELBOARD LP-XX	¾"	XX6P	
CXX7	COMBINATION TRANSFORMER/ PANELBOARD LP-XX	PCS-XX	¾"	XX7P	
CXX8	COMBINATION TRANSFORMER/ PANELBOARD LP-XX	FLOW INDICATING TRANSMITTER FIT	¾"	XX8P	
CXX9	COMBINATION TRANSFORMER/ PANELBOARD LP-XX	EXHAUST FAN EF-XX HAND-OFF-AUTO SWITCH	¾"	XX9P, XX11P, 1112P	
CXX10	EXHAUST FAN EF-XX HAND-OFF-AUTO SWITCH	EXHAUST FAN EF-XX MOTOR	¾"	XX10P	
CXX11	TEE IN CXX9	EXHAUST FAN EF-XX MOTORIZED DAMPER M-XX	¾"	XX11P	
CXX12	TEE IN CXX9	EXHAUST FAN EF-XX ADJUSTABLE THERMOSTAT	¾"	XX12P	
CXX13	TEE IN CXX20	FLOW ELEMENT FEB (RECIEVER)	¾"	XX03I	WELL HOUSE XX CONDUITS
CXX14	PCS-XX	FLOW INDICATING TRANSMITTER FIT	¾"	XX01I, XX04I, XX01C, XX02C	
CXX15	TEE IN CXX14	POSITION SWITCHES ZSHA & ZSLA	¾"	XX01C	
CXX16	TEE IN CXX14	POSITION SWITCHES ZSHB & ZSLB	¾"	XX02C	
CXX17	TEE IN CXX14	PRESSURE INDICATING TRANSMITTER PITA	¾"	XX04I	
CXX18	UNIT HEATER UH-XX	UNIT HEATER HAND-OFF-AUTO SWITCH	¾"	XX03C	
CXX19	VARIABLE SPEED DRIVE VSD-XX	PCS-XX	¾"	XX05I	
CXX21	WEATHERHEAD AT POLE	PCS-XX	1½"	CONTAINS PCS COMM. CABLES	
C2730	V444 POS. SW.	PCS-27	¾"	XX03C	WELL HOUSE XX CONDUITS
C2731	V445 POS. SW.	PCS-27	¾"	XX04C	WELL HOUSE XX CONDUITS

NOTES :

1. CONDUIT RIGID GALVANIZED UNLESS OTHERWISE INDICATED.
2. "XX" REPRESENTS THE CORRESPONDING EXTRACTION WELL HOUSE NUMBER.
3. "ZZZ" REPRESENTS THE CORRESPONDING POLE MOUNTED TRANSFORMER NUMBER FROM WHICH CABLE IS CONNECTED TO. SEE DWG #96X-5500-E-02007 SINGLE LINE FOR CLARITY.

006058

REF DWG NO.	DRAWING TITLE
95X-5500-X-02114	DRAWING INDEX
95X-5500-E-02117	SYMBOLS AND LEGEND
96X-5900-E-02007	SINGLE LINE DIAGRAM - 13.2 KV FEEDERS
95X-5500-E-02119	13.2 KV DISTRIBUTION & COMMUNICATION PLAN
95X-5500-E-02131	480/120V POWER, INSTRUMENT, AND LIGHTING PLAN - WELL HOUSE AND VALVE HOUSE
95X-5500-E-02127	CABLE SCHEDULE
95X-5500-E-02126	PANEL SCHEDULES
95X-5500-N-02143	INTERCONNECTION - WELL HOUSE DCS PCS

NO.	REVISIONS	DATE	DWN. BY	APPD.
0	ISSUED FOR CFC	5-5-05	GEP	
B	ISSUED FOR 90% REVIEW	1-17-05	GEP	
A	ISSUED FOR 60% REVIEW	5-3-05	GEP	

REF. DWG. NO.

NOTE: FLUOR FERNALD CADD DRAWING, DO NOT REVISE MANUALLY.

CONFIGURATION MANAGEMENT DRAWING — INFO / OFFICIAL

SYSTEMS, STRUCTURES OR COMPONENTS SHOWN ON THIS DRAWING ARE UNDER CONFIGURATION MANAGEMENT CONTROL. SEE NOTES.

COGNIZANT ENGINEER — DATE

APPROVALS

CIVIL & STR.			SAFETY ENG.	
ELECTRICAL	J.E. Kent	9/7/05	MAINTENANCE	
ENGINEER			FIRE PROTECT.	
INSTRUMENT			WASTE MANAGE.	
MECHANICAL			SECURITY	
			PROJECTS	9/8/05
CHECKED				
APPROVED		9/8/05		

Fernald Closure Project

FLUOR FERNALD, INC.

U.S. DEPARTMENT OF ENERGY

WASTE PIT AREA — GRID 3/A

WASTE STORAGE AREA EXTRACTION SYSTEM
PHASE 2
ELECTRICAL CONDUIT SCHEDULE
NOT TO SCALE

RES 4528
DATE APRIL 5, 2005
DRAWN G.E. PAUL

95X-5500-E-02130 | 0

FILE NAME: /res4528/95xe2130.dgn

FDPS.DGN 5/30/03

006058

CABLE SCHEDULE

FOR REFERENCE ONLY (cables 1001I through 1013I; 1030I, 1031I and 2C-24 through 2C-29)

CABLE NO	FROM	TO	CONDUCTOR NUMBER	SIZE	MATL.	INSUL	FUNCTION	WIRE TERMINATIONS 1	2	3	4	5	6	7	8	9	10	11	12	ROUTING	REF DWG	REMARKS
1001I	CAWWT HMI	PCS-15	2/BNDL	62.5/125 MULTIMOD	FIBER OPTIC		COMM	1	2											NOTE 5	N-00271, N-00273 E-00244	FIELD ROUTE CABLE VIA EXISTING POLES NEAR BLDG 51 TO POLE 524
1002I	PCS-15	PCS-17	2/BNDL	62.5/125 MULTIMOD	FIBER OPTIC		COMM	1	2											NOTE 6	N-00271 N-00273, E-00244	BELDEN NO. 225702 OR EQUAL
1003I	PCS-17	PCSVH1	2/BNDL	62.5/125 MULTIMOD	FIBER OPTIC		COMM	1	2											NOTE 7	N-00271 N-00273, E-00244	BELDEN NO. 225702 OR EQUAL
1004I	PCSVH1	PCS-14	2/BNDL	62.5/125 MULTIMOD	FIBER OPTIC		COMM	1	2											NOTE 8	N-00272 N-00273, E-00244	BELDEN NO. 225702 OR EQUAL
1005I	PCS-14	PCS-13	2/BNDL	62.5/125 MULTIMOD	FIBER OPTIC		COMM	1	2											NOTE 9	N-00272 N-00273, E-00244	BELDEN NO. 225702 OR EQUAL
1006I	PCS-13	PCS-16	2/BNDL	62.5/125 MULTIMOD	FIBER OPTIC		COMM	1	2											NOTE 10	N-00271 N-00273, E-00244	BELDEN NO. 225702 OR EQUAL
1007I	PCS-16	PCS-22	2/BNDL	62.5/125 MULTIMOD	FIBER OPTIC		COMM	1	2											NOTE 11	N-00271 N-00273, E00244	BELDEN NO. 225702 OR EQUAL
1010I	AWWT DCS	PCS-25	2/BNDL	62.5/125 MULTIMOD	FIBER OPTIC		COMM	1	2											NOTE 12	X-02002 N-02042, N-02045	FIELD ROUTE CABLE VIA EXISTING POLES NEAR BLDG 51 TO POLE *574
135I	PCS-25	PCS-21	2/BNDL	62.5/125 MULTIMOD	FIBER OPTIC		COMM	1	2											NOTE 12A	N-02002 N-02042, N-02045	BELDEN NO. 225702 OR EQUAL
1011I	PCS-21	PCS-20	2/BNDL	62.5/125 MULTIMOD	FIBER OPTIC		COMM	1	2											NOTE 13	N-00271 N-00273, E-00244	BELDEN NO. 225702 OR EQUAL
1012I	PCS-20	PCS-19	2/BNDL	62.5/125 MULTIMOD	FIBER OPTIC		COMM	1	2											NOTE 14	N-00271 N-00273, E-00244	BELDEN NO. 225702 OR EQUAL
1013I	PCS-19	PCS-23	2/BNDL	62.5/125 MULTIMOD	FIBER OPTIC		COMM	1	2											NOTE 15	N-00271 N-00273, E-00244	BELDEN NO. 225702 OR EQUAL
1020I	FIT001	PCSVH1	1 PAIR	*16 AWG	CU	600V	ANALOG	+	-	SHLD										C575	N-00272 E-00245	
1021I	FE001A (TRANSMITTER)	FIT001	1/C COAX	VENDOR			ULTRSNC X-MITTR	+	SHLD											C585	N-00272 E-00245	VENDOR CABLE
1022I	FE001B (RECEIVER)	FIT001	1/C COAX	VENDOR			ULTRSNC RECEIVER	+	SHLD											C585, C586	N-00272 E-00245	VENDOR CABLE
1023I	PIT002	PCSVH1	1 PAIR	*16 AWG	CU	600V	ANALOG	+	-	SHLD										C575, C579	N-00272 E-00245	
1024I	FIT003	PCSVH1	1 PAIR	*16 AWG	CU	600V	ANALOG	+	-	SHLD										C575, C576	N-00272 E-00245	
1025I	FE003A (TRANSMITTER)	FIT003	1/C COAX	VENDOR			ULTRSNC X-MITTR	+	SHLD											C587	N-00272 E-00245	VENDOR CABLE
1026I	FE003B (RECEIVER)	FIT003	1/C COAX	VENDOR			ULTRSNC RECEIVER	+	SHLD											C587, C588	N-00272 E-00245	VENDOR CABLE
1027I	FCV001	PCSVH1	1 PAIR	*16 AWG			ANALOG	+	-	SHLD										C575, C584	N-00272 E-00245	
1028I	PCV002	PCSVH1	1 PAIR	*16 AWG	CU	600V	ANALOG	+	-	SHLD										C575, C589	N-00272 E-00245	
XX01I	FIT	PCS-XX	1 PAIR	*16 AWG	CU	600V	ANALOG	+	-	SHLD										CXX14	N-00271 E-00245	
XX04I	PITA	PCS-XX	1 PAIR	*16 AWG	CU	600V	ANALOG	+	-	SHLD										CXX14, CXX17	N-00271 E-00245	
XX05I	FYA	PCS-XX	1 PAIR	*16 AWG	CU	600V	ANALOG	+	-	SHLD										CXX19	N-00271 E-00245	
1001C	ZSH022/ZSL022	PCSVH1	3-1/C	*14 AWG	CU	600V	DIGITAL	1	2	3										C575, C580	N-00272 E-00245	
1002C	ZSH023/ZSL023	PCSVH1	3-1/C	*14 AWG	CU	600V	DIGITAL	1	2	3										C575, C582	N-00272 E-00245	
1003C	ZSH024/ZSL024	PCSVH1	3-1/C	*14 AWG	CU	600V	DIGITAL	1	2	3										C575, C581	N-00272 E-00245	
1004C	ZSH025/ZSL025	PCSVH1	3-1/C	*14 AWG	CU	600V	DIGITAL	1	2	3										C575, C577, C581	N-00272 E-00245	
1006C	ZSH027/ZSL027	PCSVH1	3-1/C	*14 AWG	CU	600V	DIGITAL	1	2	3										C575, C583	N-00272 E-00245	
1008C	ZSH030/ZSL030	PCSVH1	3-1/C	*14 AWG	CU	600V	DIGITAL	1	2	3										C575, C578	N-00272 E-00245	
1009C	FCV001	PCSVH1	2-1/C	*14 AWG	CU	600V	DIGITAL	1	2											C575, C584	N-00272 E-00245	(ZSL001)
XX01C	ZSHA/ZSLA	PCS-XX	3-1/C	*14 AWG	CU	600V	DIGITAL	1	2	3										CXX14, CXX15	N-00271 E-00245	
XX02C	ZSHB/ZSLB	PCS-XX	3-1/C	*14 AWG	CU	600V	DIGITAL	1	2	3										CXX14, CXX16	N-00271 E-00245	
XX03C	UNIT HEATER UH-XX	UNIT HEATER UH-XX HAND-OFF-AUTO SWITCH	3-1/C	*12 AWG	CU	600V	CONTROL	UH-XX-1	UH-XX-2	UH-XX-3	UH-XX-4	UH-XX-5								CXX18	E-00245 E-00243	NOTE 4
573C	UNIT HEATER UH-1	UNIT HEATER UH-1 HAND-OFF-AUTO SWITCH	3-1/C	*12 AWG	CU	600V	CONTROL	UH-1-1	UH-1-2	UH-1-3	UH-1-4	UH-1-5								C307, C573	E-00245 E-00243	NOTE 4
574C	UNIT HEATER UH-2	UNIT HEATER UH-2 HAND-OFF-AUTO SWITCH	3-1/C	*12 AWG	CU	600V	CONTROL	UH-2-1	UH-2-2	UH-2-3	UH-2-4	UH-2-5								C309, C574	E-00245 E-00243	NOTE 4
601C	UNIT HEATER UH-3	UNIT HEATER UH-3 HAND-OFF-AUTO SWITCH	3-1/C	*12 AWG	CU	600V	CONTROL	UH-3-1	UH-3-2	UH-3-3	UH-3-4	UH-3-5								C403, C601	E-00375 E-00243	NOTE 4
1030I	PCS-23	PCS-24	2/BNDL	62.5/125 MULTIMOD	FIBER OPTIC		COMM	1	2											NOTE 17	N-00271 N-00273, E-00244	BELDEN NO. 225702 OR EQUAL
1031I	PCS-24	PCS-18	2/BNDL	62.5/125 MULTIMOD	FIBER OPTIC		COMM	1	2											NOTE 18	N-00271 N-00273, E-00244	BELDEN NO. 225702 OR EQUAL
2C-24	TAP 2C-3 @ POLE *584	DEADEND TERMINATION @ POLE * 587	3-1/C	*2 AWG	ASCR	BARE	13.2KV POWER	F1A1-24 -L1	F1A1-24 -L2	F1A1-24 -L3										C403, C601	E-00375 E-00243	NOTE 4
2C-25	TAP 2C-24 @ POLE 587	FUSED CUTOUT FC-587 (POLE 587)	3-1/C	*2 AWG	ASCR	BARE	13.2KV POWER	F1A1-25 -L1	F1A1-25 -L2	F1A1-25 -L3											E00244 E00477	
2C-26	FUSED CUTOUT FC-587 (POLE 587)	TRANSFORMER T-587 (POLE 587)	3-1/C	*2 AWG	ASCR	BARE	13.2KV POWER	F1A1-26 -L1	F1A1-26 -L2	F1A1-26 -L3											E00244 E00477	
2C-27	TAP 2C-3 @ POLE *585	DEADEND TERMINATION @ POLE * 590	3-1/C	*2 AWG	ASCR	BARE	13.2KV POWER	F1A1-27 -L1	F1A1-27 -L2	F1A1-27 -L3											E00244 E00477	NOTE 4
2C-28	TAP 2C-27 @ POLE 590	FUSED CUTOUT FC-590 (POLE 590)	3-1/C	*2 AWG	ASCR	BARE	13.2KV POWER	F1A1-28 -L1	F1A1-28 -L2	F1A1-28 -L3											E00244 E00477	
2C-29	FUSED CUTOUT FC-590 (POLE 590)	TRANSFORMER T-590 (POLE 590)	3-1/C	*2 AWG	ASCR	BARE	13.2KV POWER	F1A1-29 -L1	F1A1-29 -L2	F1A1-29 -L3											E00244 E00477	

NOTES :

1. "XX" REPRESENTS THE CORRESPONDING EXTRACTION WELL HOUSE NUMBER.
2. FEA (ULTRASONIC TRANSMITTER) AND FEB (ULTRASONIC RECEIVER) MAKE UP THE FLOW ELEMENT FOR FITA.
3. FOR INSTRUMENT LOOP NUMBER MATRIX SEE DRAWING 95X-5900-N-00271.
4. INSTALL PER MANUFACTURERS INSTRUCTIONS
5. STARTING @ BUILDING 51, OVERHEAD VIA EXISTING POLES TO POLE *524(•), OVERHEAD TO C1521 @ POLE *631(•), TO PSC-15.
6. STARTING @ PCS-15 C1521 UNDERGROUND TO POLE*631(•), OVERHEAD TO C1721 @ POLE *655, TO PCS-17.
7. STARTING @ PCS-17 C1721 UNDERGROUND TO POLE*655, OVERHEAD TO C572@ POLE *635(•), TO PCS-VH1.
8. STARTING @ PCS-VH1 C572 UNDERGROUND TO POLE*635(•), OVERHEAD TO C1421 @ POLE *31A, TO PCS-14.
9. STARTING @ PCS-14 C1421 UNDERGROUND TO POLE*662, OVERHEAD TO C1321 @ POLE *36A(•), TO PCS-13.
10. STARTING @ PCS-13 C1321 UNDERGROUND TO POLE*36A(•), OVERHEAD TO C1621 @ POLE *636(•), TO PCS-16.
11. STARTING @ PCS-16 C1621 UNDERGROUND TO POLE *636(•). OVERHEAD TO C2221 @ POLE *641 TO PCS-22.
12. STARTING @ BUILDING 51, OVERHEAD VIA EXISTING POLES TO POLE *524(•), OVERHEAD TO C2521 @ POLE *656, TO PSC-25.

12A. STARTING @ PSC-25 UNDERGROUND TO POLE *656 OVERHEAD TO C2121 @ POLE *576 TO PSC-21.

13. STARTING @ PCS-21 C2121 UNDERGROUND TO POLE*575, OVERHEAD TO C2021 @ POLE *579, TO PCS-20.
14. STARTING @ PCS-20 C2021 UNDERGROUND TO POLE*579, OVERHEAD TO C1921 @ POLE *583, TO PCS-19.
15. REROUTE EXISTING CABLE 1013I STARTING @ PCS-19 C1921 UNDERGROUND TO POLE*583, OVERHEAD TO C2321 @ POLE *587, TO PCS-23.
16. POLE NUMBERS FOLLOWED BY AN "(•)" ARE EXISTING OR ORIGINATE THEIR NUMBERS FROM THE "WASTE UNITS REMEDIATION - SOUTHERN WASTE UNITS - SITE PREPARATION PACKAGE" AND ARE TO BE CONSIDERED EXISTING AT THE TIME THIS JOB IS CONSTRUCTED.
17. STARTING @ PCS-23 C2321 UNDERGROUND TO POLE*587, OVERHEAD TO C2421 @ POLE *590, TO PCS-24.
18. STARTING @ PCS-24 C2421 UNDERGROUND TO POLE*590, OVERHEAD TO C1821 @ POLE *586, TO PCS-18.

REF DWG NO.	DRAWING TITLE
95X-5500-X-02114	DRAWING INDEX
95X-5900-N-02144	INSTRUMENTATION CONTROL SYSTEM ARCHITECTURE
95X-5500-N-02126	INSTRUMENTATION INTERCONNECTION DIAGRAM

NO.	REVISIONS	DATE	DWN. BY	APPD.
0	ISSUED FOR CFC	9-6-05	GEP	[signature]
B	ISSUED FOR 90% REVIEW	8-17-05	GEP	
A	ISSUED FOR 60% REVIEW	5-3-05	GEP	

REF. DWG. NO.

NOTE: FLUOR FERNALD CADD DRAWING, DO NOT REVISE MANUALLY.

CONFIGURATION MANAGEMENT DRAWING — YES / NO
SYSTEMS, STRUCTURES OR COMPONENTS DEPICTED ON THIS DRAWING ARE UNDER CONFIGURATION MANAGEMENT CONTROL. SEE NOTES.
COGNIZANT ENGINEER — DATE

APPROVALS
CIVIL & STR. / ELECTRICAL J. E. Kerl 9/7/05 / ENGINEER / INSTRUMENT / MECHANICAL
SAFETY ENG. / MAINTENANCE / FIRE PROTECT. / WASTE MANAGE / SECURITY / PROJECTS [signature] 9/8/05
CHECKED [initials] / APPROVED [signature] 9/8/05

Fernald Closure Project
FLUOR FERNALD, INC.
U.S. DEPARTMENT OF ENERGY

WASTE PIT AREA — GRID 31A
WASTE STORAGE AREA EXTRACTION SYSTEM
PHASE 2
ELECTRICAL CABLE SCHEDULE
SHEET 3 OF 3

RES 4528
DATE APRIL 5, 2005
DRAWN G.E. PAUL
95X-5500-E-02129 | 0

FILE NAME: /res4528/95xe2129.dgn

FCP5.DGN 5/30/03

CONDUIT SCHEDULE

CONDUIT NO	FROM	TO	COND SIZE	CONTAINS CABLE(S)	REMARKS
CXX1	WEATHERHEAD ON POLE	WELL HOUSE DISTRIBUTION PANEL DP-XX	3"	XX1P	WELL HOUSE XX CONDUITS
CXX1A	STUB-UP AT POLE	STUB-UP BELOW DISTRIBUTION PANEL DP-XX	1½"	(EMPTY)	
CXX2	WELL HOUSE DISTRIBUTION PANEL DP-XX	VARIABLE SPEED DRIVE VSD-XX	1½"	XX2P	
CXX3	VARIABLE SPEED DRIVE VSD-XX	EXTRACTION WELL PUMP MOTOR PMP-XX	1½"	XX3P	
CXX4	WELL HOUSE DISTRIBUTION PANEL DP-XX	DISCONNECT SWITCH DSW-XX	¾"	XX4P	
CXX5	DISCONNECT SWITCH DSW-XX	UNIT HEATER UH-XX	¾"	XX5P	
CXX6	WELL HOUSE DISTRIBUTION PANEL DP-XX	COMBINATION TRANSFORMER/ PANELBOARD LP-XX	¾"	XX6P	
CXX7	COMBINATION TRANSFORMER/ PANELBOARD LP-XX	PCS-XX	¾"	XX7P	
CXX8	COMBINATION TRANSFORMER/ PANELBOARD LP-XX	FLOW INDICATING TRANSMITTER FIT	¾"	XX8P	
CXX9	COMBINATION TRANSFORMER/ PANELBOARD LP-XX	EXHAUST FAN EF-XX HAND-OFF-AUTO SWITCH	¾"	XX9P, XX11P, 1112P	
CXX10	EXHAUST FAN EF-XX HAND-OFF-AUTO SWITCH	EXHAUST FAN EF-XX MOTOR	¾"	XX10P	
CXX11	TEE IN CXX9	EXHAUST FAN EF-XX MOTORIZED DAMPER M-XX	¾"	XX11P	
CXX12	TEE IN CXX9	EXHAUST FAN EF-XX ADJUSTABLE THERMOSTAT	¾"	XX12P	
CXX13	TEE IN CXX20	FLOW ELEMENT FEB (RECIEVER)	¾"	XX03I	WELL HOUSE XX CONDUITS
CXX14	PCS-XX	FLOW INDICATING TRANSMITTER FIT	¾"	XX01I, XX04I, XX01C, XX02C	
CXX15	TEE IN CXX14	POSITION SWITCHES ZSHA & ZSLA	¾"	XX01C	
CXX16	TEE IN CXX14	POSITION SWITCHES ZSHB & ZSLB	¾"	XX02C	
CXX17	TEE IN CXX14	PRESSURE INDICATING TRANSMITTER PITA	¾"	XX04I	
CXX18	UNIT HEATER UH-XX	UNIT HEATER HAND-OFF-AUTO SWITCH	¾"	XX03C	
CXX19	VARIABLE SPEED DRIVE VSD-XX	PCS-XX	¾"	XX05I	
CXX21	WEATHERHEAD AT POLE	PCS-XX	1½"	CONTAINS PCS COMM. CABLES	
C2730	V444 POS. SW.	PCS-27	¾"	XX03C	WELL HOUSE XX CONDUITS
C2731	V445 POS. SW.	PCS-27	¾"	XX04C	WELL HOUSE XX CONDUITS

NOTES :

1. CONDUIT RIGID GALVANIZED UNLESS OTHERWISE INDICATED.
2. "XX" REPRESENTS THE CORRESPONDING EXTRACTION WELL HOUSE NUMBER.
3. "ZZZ" REPRESENTS THE CORRESPONDING POLE MOUNTED TRANSFORMER NUMBER FROM WHICH CABLE IS CONNECTED TO. SEE DWG #96X-5500-E-02007 SINGLE LINE FOR CLARITY.

006058

REF DWG NO.	DRAWING TITLE
95X-5500-X-02114	DRAWING INDEX
95X-5500-E-02117	SYMBOLS AND LEGEND
96X-5900-E-02007	SINGLE LINE DIAGRAM - 13.2 KV FEEDERS
95X-5500-E-02119	13.2 KV DISTRIBUTION & COMMUNICATION PLAN
95X-5500-E-02131	480/120V POWER, INSTRUMENT, AND LIGHTING PLAN - WELL HOUSE AND VALVE HOUSE
95X-5500-E-02127	CABLE SCHEDULE
95X-5500-E-02126	PANEL SCHEDULES
95X-5500-N-02143	INTERCONNECTION - WELL HOUSE DCS PCS

NO.	REVISIONS	DATE	DWN. BY	APPD.
0	ISSUED FOR CFC	5-5-05	GEP	
B	ISSUED FOR 90% REVIEW	3-11-05	GEP	
A	ISSUED FOR 60% REVIEW	2-2-05	GEP	

REF. DWG. NO.

NOTE: FLUOR FERNALD CADD DRAWING, DO NOT REVISE MANUALLY.

CONFIGURATION MANAGEMENT DRAWING — YES / NO

EXISTING STRUCTURES OR COMPONENTS AFFECTED ON THIS DRAWING ARE UNDER CONFIGURATION MANAGEMENT CONTROL. SEE NOTES.

COGNIZANT ENGINEER — DATE

APPROVALS

CIVIL & STR.		SAFETY ENG.	
ELECTRICAL	J.E. Kind 7/3/05	MAINTENANCE	
ENGINEER		FIRE PROTECT.	
INSTRUMENT		WASTE MANAGE	
MECHANICAL		SECURITY	
		PROJECTS	
CHECKED			
APPROVED	7/8/05		

Fernald Closure Project

FLUOR FERNALD, INC.

U.S. DEPARTMENT OF ENERGY

WASTE PIT AREA — GRID 3IA

WASTE STORAGE AREA EXTRACTION SYSTEM PHASE 2

ELECTRICAL CONDUIT SCHEDULE

NOT TO SCALE

RES 4528 — DATE APRIL 6, 2005 — DRAWN C.E. PAUL

95X-5500-E-02130 — 0

FILE NAME: /res4528/95xe2130.dgn

FDPSLDGN 5/30/03

006058

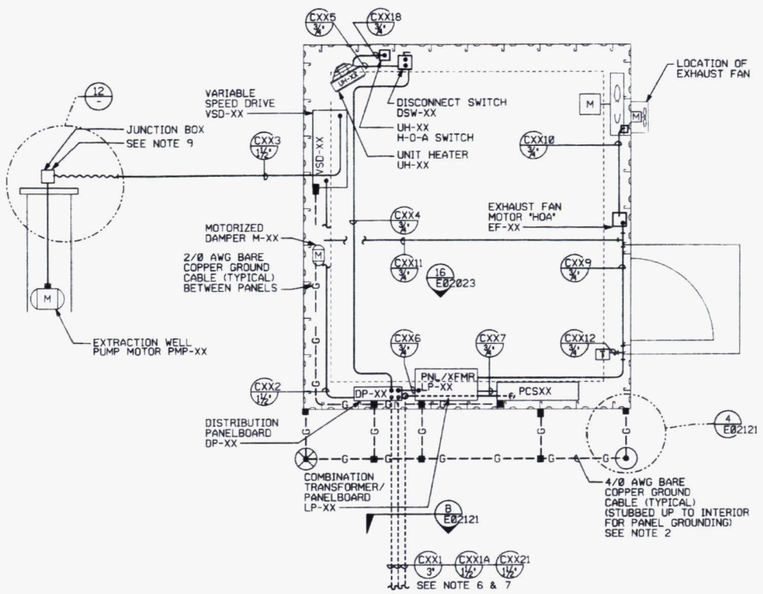

WELL HOUSE EW-XX
POWER PLAN

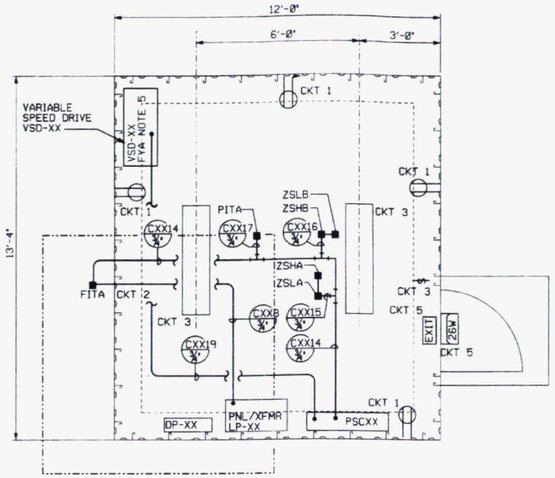

WELL HOUSE EW-XX
LIGHTING AND INSTRUMENT PLAN

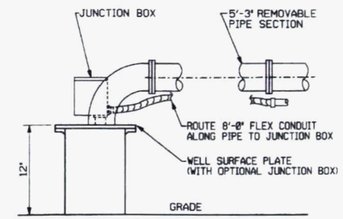

DETAIL 12
NTS

EXTRACTION WELL ELECTRICAL CONNECTION
TYPICAL FOR EW-33

NOTES :

1. "XX" REPRESENTS THE CORRESPONDING EXTRACTION WELL HOUSE NUMBER.
2. INSTALL #4/0 AWG BARE COPPER BUILDING GROUND GRID. CONNECT COLUMNS TO GROUND GRID USING #2/0 AWG BARE COPPER GROUND CABLE. ALLOW 10 FOOT PIGTAIL AT GROUND STUB UP LOCATIONS FOR CONNECTION TO EQUIPMENT.
3. CONDUIT RUNS ARE SHOWN DIAGRAMMATICALLY. FIELD ROUTE AND SUPPORT CONDUITS AS NECESSARY SUBJECT TO APPROVAL OF THE FERMCO CONSTRUCTION MANAGER.
4. ALL ELECTRICAL DISTRIBUTION RACK(S), PANEL(S), SWITCHE(S), TRANSFORMER(S), AND STARTER(S) SHALL BE GROUNDED USING A #1/0 AWG COPPER GROUND CABLE.
5. FYA DENOTES 4-20 MA INPUT TO VARIABLE SPEED DRIVE.
6. ROUTE CONDUIT TO POLE WITH TRANSFORMER (SEE DWG. 96X-5500-E-02007). PROVIDE 480 V SERVICE ENTRANCE AT POLE AND CONTINUE FEEDER TO TRANSFORMER. STUBUP SPARE CONDUIT AT POWER POLE AND INSIDE WELL HOUSE AT LP-1.
7. ROUTE COMMUNICATIONS CONDUIT WITH ELECTRICAL CONDUITS IN NOTE 6, SEE SECTION B, ON DWG. 95X-5500-E-02120.
8. FIELD ROUTE 120V POWER FOR LIGHTING AND RECEPTACLES IN ¾" RIGID GALVANIZED STEEL CONDUIT TO LIGHTING PANEL LP-XX (OR LP-1) CIRCUIT INDICATED. SEE DWG. 95X-5500-E-02126 FOR PANEL SCHEDULES.
9. TERMINATE MOTOR CONDUIT AND CABLES AT EXTRACTION WELL ELECTRICAL JUNCTION BOX.
10. NOT USED.
11. SUPPORT CONDUIT TO PIPE SUPPORTS WITH UNISTRUT OR STRUCTURAL CHANNEL.

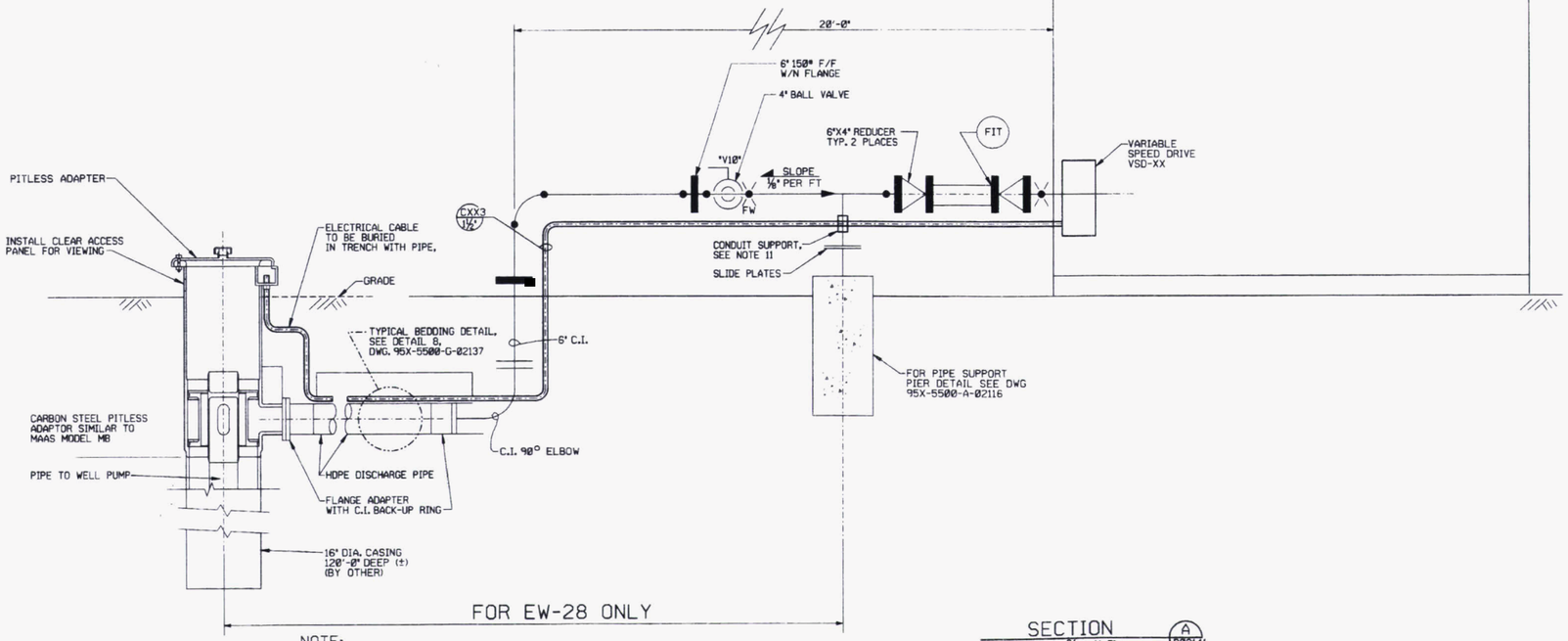

NOTE:
PITLESS ADAPTER TO BE USED FOR EW-28 DUE TO IT BEING REMOTE FROM WELL HOUSE

SECTION A P02141
SCALE : ¾" = 1'-0"
NOTE : FOR PIPING INFORMATION, SEE DWG. 95X-5500-P-02145

REF DWG NO.	DRAWING TITLE
95X-5500-X-02114	PROJECT TITLE & INDEX SHEET

NO.	REVISIONS	DATE	DWN. BY	APPD.
0	ISSUED FOR CFC	9/5/05	GEP	
B	ISSUED FOR 90% REVIEW	8/8/05	GEP	
A	ISSUED FOR 60% REVIEW	5/3/05	GEP	

NOTE: FLUOR FERNALD CADD DRAWING. DO NOT REVISE MANUALLY.

CONFIGURATION MANAGEMENT DRAWING
REFERENCE STRUCTURES OR COMPONENTS DESIGNATED AS "CM" ARE CONTROLLED BY CONFIGURATION MANAGEMENT CONTROL. SEE NOTES.
COGNIZANT ENGINEER DATE

APPROVALS

CIVIL & STR.			SAFETY ENG.	
ELECTRICAL			MAINTENANCE	
ENGINEER			FIRE PROTECT.	
INSTRUMENT			WASTE MANAGE.	
MECHANICAL			SECURITY	
			PROJECTS	
CHECKED				
APPROVED				

Fernald Closure Project
FLUOR FERNALD, INC.
U.S. DEPARTMENT OF ENERGY

WASTE PIT AREA — GRID 31A
WASTE STORAGE AREA EXTRACTION SYSTEM
PHASE 2
WELLHOUSE 480/120V POWER, INSTRUMENT & LIGHTING PLAN
NOT TO SCALE

RES 4528
DATE APRIL 6, 2005
DRAWN G.E. PAUL

95X-5500-E-02131 — 0

FILE NAME: /res4528/95xe2131.dgn

FCPS.DGN 5/30/03

006058

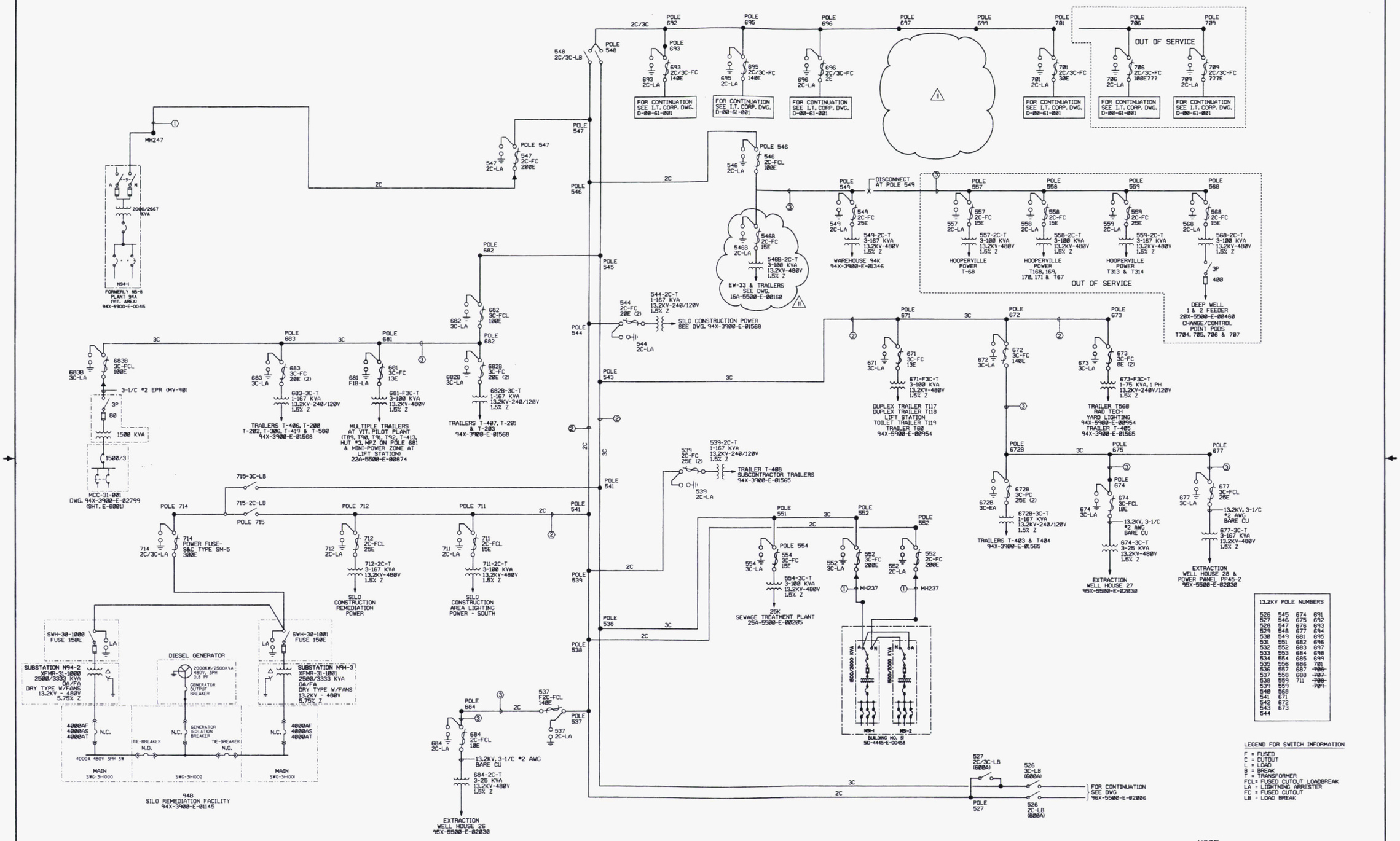

NOTE:
FOR REFERENCE FILES, LEGEND AND NOTES SEE DRAWING 96X-5500-E-02005

NO.	REVISIONS	DATE	DWN.	BY	APPD.
11	REMOVED EXTRACTION WELLHOUSE #33 & 34 PROPOSED ELECTRIC FROM POLES 697 & 699, ADDED REFERENCE DRAWING NO. TO POLE 546B	9/1/05	GEP		
10	POLES 706-709 OUT OF SERVICE PER COMP. W.O. RT004409 ADDED PROPOSED ELECTRICAL PER PROJECT 5880 (RES4528), ADDED DISCONNECT AT POLE 549 TO PLACE HOOPERVILLE OUT OF SERVICE PER DCN: 4525-004	6/27/05	GEP		
9	ADDED CONTROL POINT PODS, O.O.S. @ POLES 706-709	1/29/04	GEP		
8	ADDED SUBSTATION NUMBERS TO SILO REMEDIATION FACILITY	1/23/04	GEP		

REF. DWG. NO.

NOTE:
FLUOR FERNALD CADD DRAWING. DO NOT REVISE MANUALLY.

CONFIGURATION MANAGEMENT DRAWING
SYSTEMS, STRUCTURES OR COMPONENTS DESCRIBED ON THIS DRAWING ARE UNDER CONFIGURATION MANAGEMENT CONTROL. SEE NOTES.
COGNIZANT ENGINEER DATE

APPROVALS				
CIVIL & STR.			SAFETY ENG.	
ELECTRICAL	J.E. KER	8/26/02	MAINTENANCE	
ENGINEER			FIRE PROTECT.	
INSTRUMENT			WASTE MANAGE	
MECHANICAL			SECURITY	
			PROJECTS	9/16/05
CHECKED	GEP			
APPROVED	G.L. PAUL	8/26/02		

Fernald Environmental Management Project
FLUOR FERNALD, INC.
U.S. DEPARTMENT OF ENERGY

FEMP
REDESIGN OF 13.2 KV DISTRIBUTION
13.2 KV AERIAL DISTRIBUTION
SINGLE LINE DIAGRAM (SHEET 3 OF 3)

RES
DATE AUGUST 8, 2002
DRAWN R.M. LINDGREN
96X-5500-E-02007 | 11

FFS.DGN 3/22/00

FILE NAME: /PARSONS/POI79/96XE2007.DGN

006058

GENERAL LEGEND

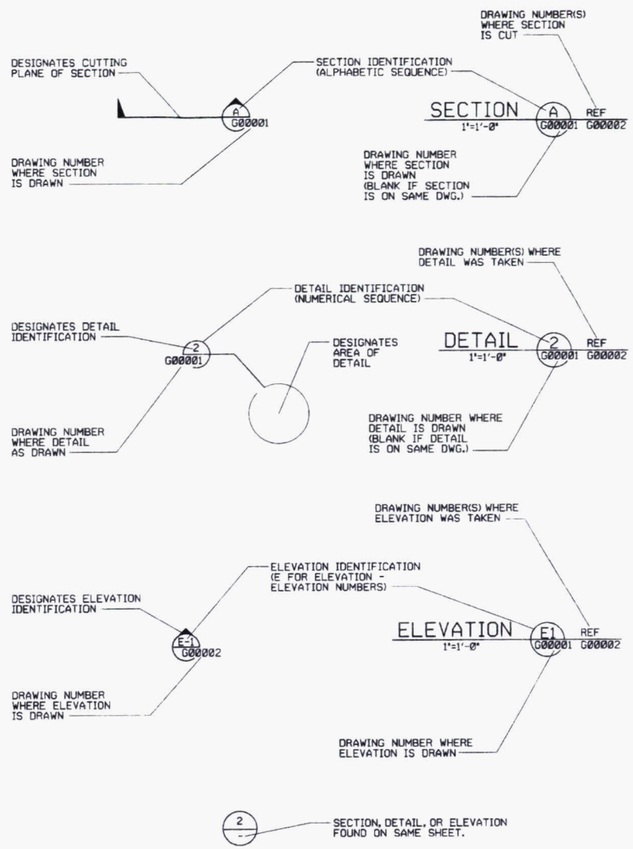

NOTE:

ABBREVIATED DRAWING NUMBERS WILL BE USED FOR ALL SECTIONS, DETAILS, ELEVATIONS, AND WITHIN NOTES AND CALL OUTS IN THE BODY OF THE DRAWING.

FOR EXAMPLE: 95X-5900-G-00002 = DRAWING NUMBER
G00002 = ABBREVIATED DRAWING NUMBER

DIMENSIONING:

DIMENSIONS AND/OR ELEVATIONS MARKED THUS (+/-) SHALL BE VERIFIED IN THE FIELD BY CONTRACTOR.

USE DIMENSIONS AS SHOWN, DO NOT SCALE.

NTS (NOT TO SCALE) IS SHOWN ONLY WHERE DIMENSION IS OBVIOUSLY OUT OF SCALE.

ABBREVIATIONS

AWWT	ADVANCED WASTEWATER TREATMENT
FCP	FERNALD CLOSURE PROJECT
SFES	SOUTH FIELD EXTRACTION SYSTEM
SPO	SOUTH PLUME OPTIMIZATION
ID	INJECTION DEMONSTRATION
SDR	SIDE WALL DIMENSION RATIO

CONSTRUCTION BY OTHERS

CONTOUR - MAJOR & MINOR
UTILITIES

UTILITY SYMBOLS

EXISTING		PROPOSED
ST	STORM SEWER	ST
SN	SANITARY SEWER	SN
FG	FUEL GAS	FG
DW	DRINKING WATER	DW
FQ1	FIRE PROTECTION	FQ1
LS	LIVE STEAM	LS
WS	WATER SUPPLY	WS
WR	COOLING WATER RETURN	WR
TW	PROCESS WATER	TW
CE	CONTAMINATE WATER	CE
FT	FILTRATE OR EFFLUENT	FT
DF	DEIONIZED FEED	DF
PW	DEIONIZED WATER	PW
BR	BRINE	BR
RW	RAW WATER	RW
A	ALARM	A
CN	STEAM CONDENSATE	CN
VE	VENT LINES	VE
SD	SUB-SURFACE DRAINAGE	SD
SL	SUMP LIQUOR	SL
E	ELECTRICAL	E
OE	OVERHEAD ELECTRICAL	
T	TELEPHONE	T
G	ELECTRIC GROUND	G
PA	PLANT AIR	PA
SA	INSTRUMENT AIR SUPPLY	SA
	ABANDONED	
	DISCHARGE	
	TREATMENT	

BALLOON LEGEND

PIV	POST INDICATOR VALVE
SMH	SANITARY MANHOLE
EMH	ELECTRICAL MANHOLE
TMH	TELEPHONE MANHOLE
CB	STORM SEWER CATCH BASIN
HFH	HIGH PRESSURE FIRE HYDRANT
LFH	LOW PRESSURE FIRE HYDRANT

GRADING SYMBOLS

EXISTING		PROPOSED
	SPOT ELEVATION	X 589.4
584	CONTOUR - MINOR	584
585	CONTOUR - MAJOR	585
(TOE)	SLOPE INDICATOR	(TOE)

SYMBOLS LEGEND

EXISTING		PROPOSED
	POST INDICATOR VALVE (PIV)	
	FIRE HYDRANT (FH)	
	MANHOLE (MH)	S OR D
	CATCH BASIN (CB)	D
	POLE	
	PIPE SUPPORT	
	ELECTRICAL MANHOLE	E
	TELEPHONE MANHOLE	T
	STREET WASHERS	
	VALVE BOX	
1313	MONITORING WELL	
	SURFACE DRAINAGE FLOW	
	GRAVEL ROADWAY/DRIVEWAY	
	ASPHALT ROADWAY/DRIVEWAY	
	CONCRETE PAD/ ROADWAY/DRIVEWAY	
	BUILDING/TRAILER	
	OU BOUNDARY	
	FENCE	
	TREE LINE	
	DECIDUOUS TREE	
	CONIFEROUS TREE	
	CENTERLINE DRAINAGE DITCH	
	RIVER/CREEK	
	TO BE REMOVED	
	SILT FENCE	
	ELECTRICAL TRANSFORMER	T
	TRANSMISSION TOWER	
	HEADWALL	OR
BM	BENCH MARK	
XX XX	CONSTRUCTION/WIND BARRIER FENCE	XX XX
	SIGN SINGLE/DOUBLE POST	
	BOLLARD/GUARD POST	
PB	ELECTRICAL PULL BOX	
	SURVEY CONTROL POINT	
	ROAD CENTERLINE OR BASELINE	
	BEND	OR
	TEE	
	THRUST BLOCK	
	REDUCER	
W OR U	UNKNOWN	
	STRAW BALE SILT BARRIER	
	GRAVEL EROSION CONTROL BARRIER	
	FENCE GATE	
	CONCRETE ENCASEMENT	
	EXTRACTION WELL (** IS NUMBER)	EW-**

REF DWG NO.	DRAWING TITLE
95X-5500-X-02114	DRAWING INDEX

NO.	REVISIONS	DATE	DWN. BY	APPD.
0	ISSUED FOR CFC	3-4-05	GEP	[illegible]
B	ISSUED FOR 90% REVIEW	11-4-05	GEP	
A	ISSUED FOR 60% REVIEW	5-3-05	GEP	

REF. DWG. NO.

NOTE: FLUOR FERNALD CADD DRAWING, DO NOT REVISE MANUALLY.

CONFIGURATION MANAGEMENT DRAWING — SYSTEMS, STRUCTURES OR COMPONENTS DESIGNATED AS CONTROLLED BY CONFIGURATION MANAGEMENT CONTROL. SEE NOTES.

COGNIZANT ENGINEER — DATE

APPROVALS: CIVIL & STR., ELECTRICAL, ENGINEER, INSTRUMENT, MECHANICAL, CHECKED, APPROVED; SAFETY ENG., MAINTENANCE, FIRE PROTECT., WASTE MANAGE., SECURITY, PROJECTS

Fernald Closure Project

FLUOR FERNALD, INC.

U.S. DEPARTMENT OF ENERGY

WASTE PIT AREA — GRID 31A

WASTE STORAGE AREA EXTRACTION SYSTEM PHASE 2
CIVIL LEGEND & SYMBOLS

RES 4528 — DATE APRIL 6, 2005 — DRAWN G.E. PAUL

95X-5500-G-02132 — 0

FILE NAME: /res4528/95xg2132.dgn

FDPLJON 5/30/03

006058

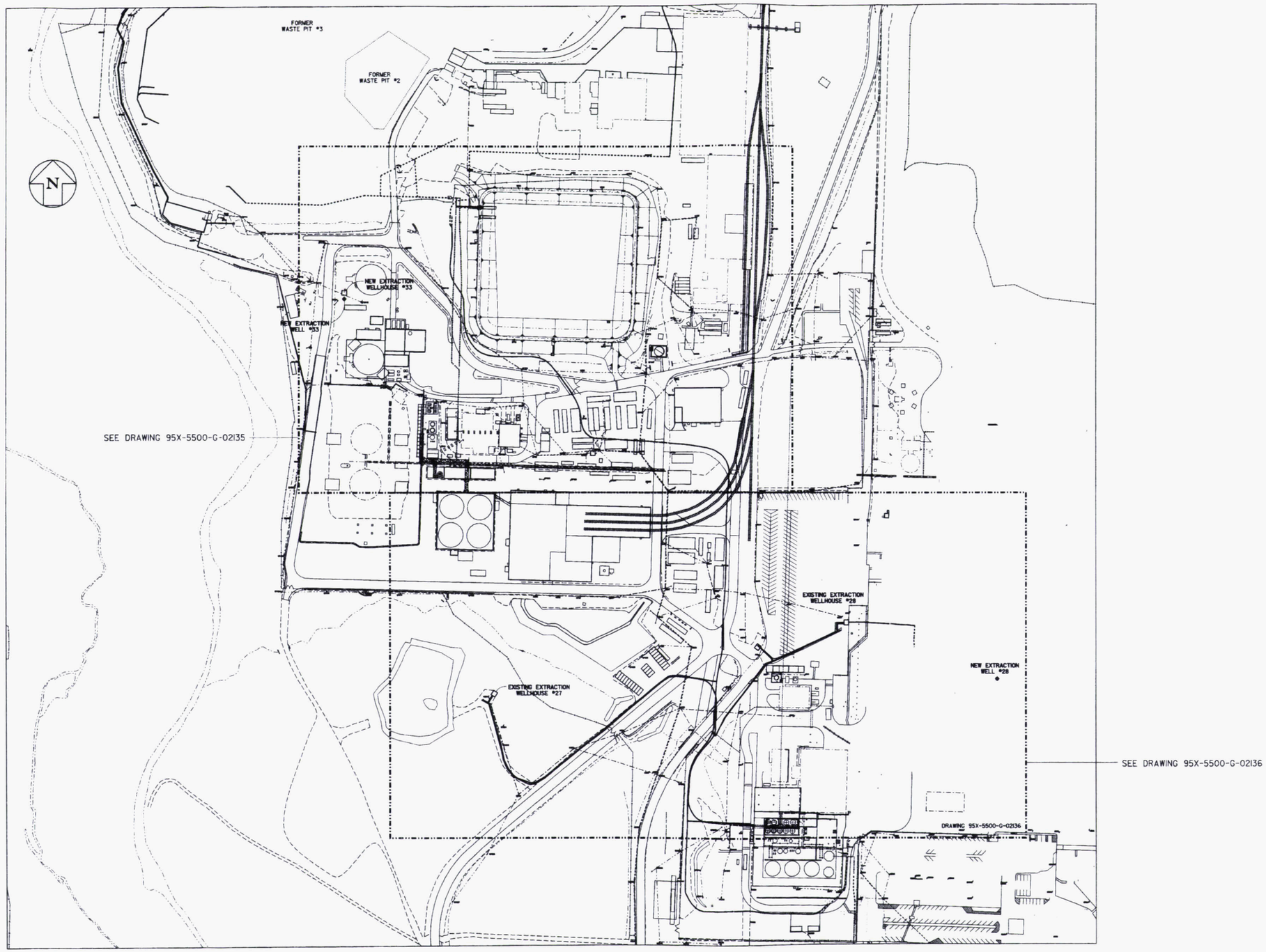

NO.	REVISIONS	DATE	DWN. BY	APPD.	NO.	REVISIONS	DATE	DWN. BY	APPD.	REF. DWG. NO.
					0	ISSUED FOR CFC	9-6-05	GEP		
					B	ISSUED FOR 90% REVIEW	8-17-05	GEP		
					A	ISSUED FOR 60% REVIEW	5-3-05	GEP		

NOTE:
FLUOR FERNALD CADD DRAWING, DO NOT REVISE MANUALLY.

CONFIGURATION MANAGEMENT DRAWING
YES / NO
SYSTEMS, STRUCTURES OR COMPONENTS CONTROLLED BY THIS DRAWING ARE UNDER CONFIGURATION MANAGEMENT CONTROL. SEE NOTES.
COGNIZANT ENGINEER DATE

APPROVALS

CIVIL & STR.		SAFETY ENG.	
ELECTRICAL		MAINTENANCE	
ENGINEER		FIRE PROTECT.	
INSTRUMENT		WASTE MANAGE	
MECHANICAL		SECURITY	
		PROJECTS	
CHECKED			
APPROVED			

Fernald Closure Project

FLUOR FERNALD, INC.

U.S. DEPARTMENT OF ENERGY

WASTE STORAGE AREA EXTRACTION SYSTEM
PHASE 2
OVERALL SITE PLAN
SCALE: 1"=100'-0"

RES 4528
DATE 4-20-05
DRAWN G.E. PAUL

95X-5500-G-02133 | 0

FORLDGN 5/30/03

FILE NAME: /RES4528/95XG2133.DGN

006058

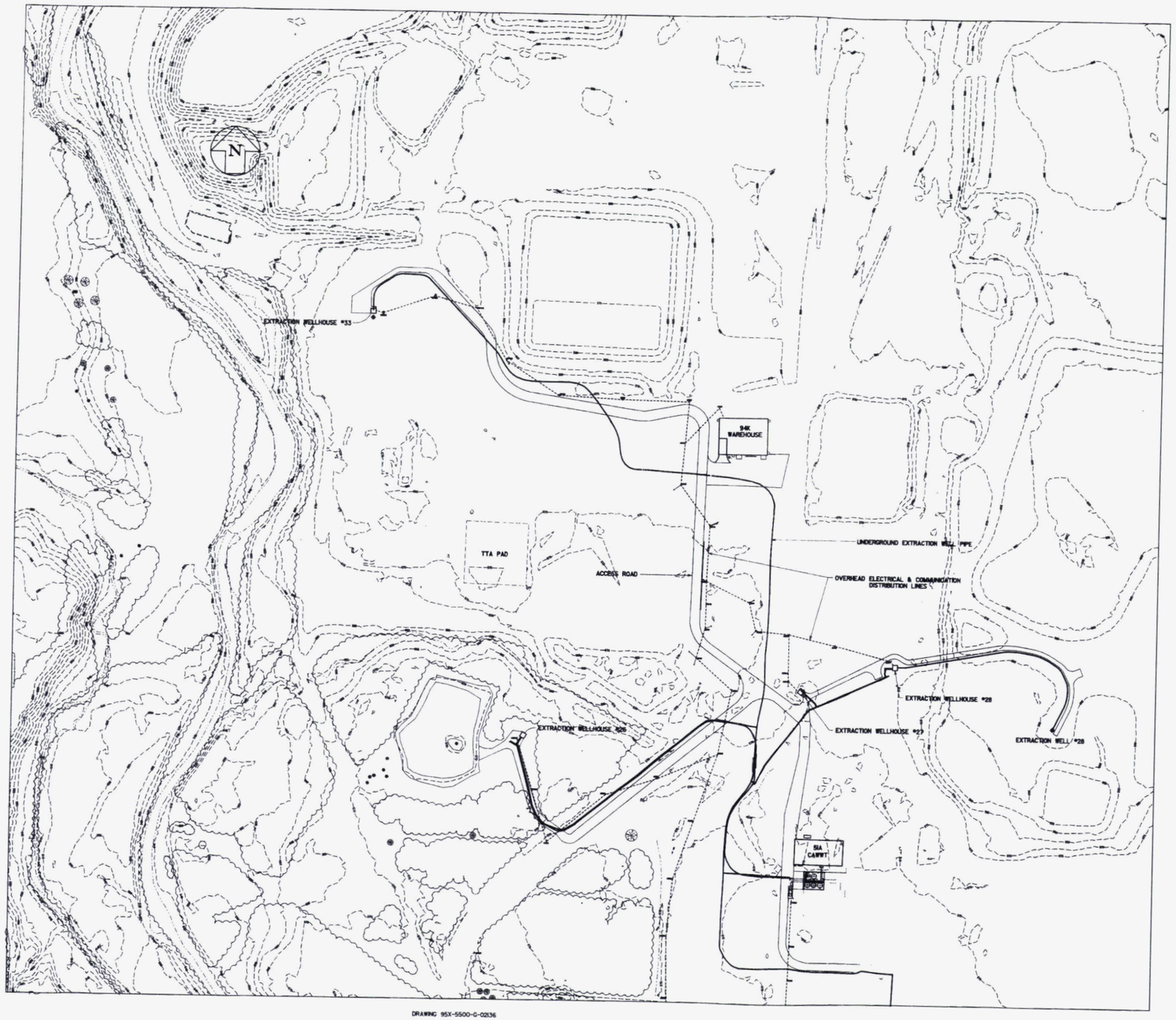

DRAWING 95X-5500-G-02136

NO.	REVISIONS	DATE	DWN. BY	APPD.	NO.	REVISIONS	DATE	DWN. BY	APPD.
					O	ISSUED FOR CFC	5-5-05	GEP	
					B	ISSUED FOR 90% REVIEW	4-11-05	GEP	
					A	ISSUED FOR 60% REVIEW	3-3-05	GEP	

REF. DWG. NO.

NOTE:
FLUOR FERNALD CADD DRAWING, DO NOT REVISE MANUALLY.

CONFIGURATION MANAGEMENT DRAWING
SYSTEMS, STRUCTURES OR COMPONENTS SHOWN ON THIS DRAWING ARE UNDER CONFIGURATION MANAGEMENT CONTROL. SEE ABOVE.

COGNIZANT ENGINEER DATE

APPROVALS

CIVIL & STR.			SAFETY ENG.
ELECTRICAL			MAINTENANCE
ENGINEER			FIRE PROTECT.
INSTRUMENT			WASTE MANAGE
MECHANICAL			SECURITY
			PROJECTS
CHECKED			
APPROVED			

Fernald Closure Project

FLUOR FERNALD, INC.

U.S. DEPARTMENT OF ENERGY

WASTE STORAGE AREA EXTRACTION SYSTEM
PHASE 2
POST CLOSURE SITE PLAN
SCALE: 1"=100'-0"

RES 4528
DATE 4-20-05
DRAWN C.Z. PAUL

95X-5500-G-02134 | 0

FILE NAME: /RES4528/95X02133.DGN

FCPS.DGN 5/30/03

006058

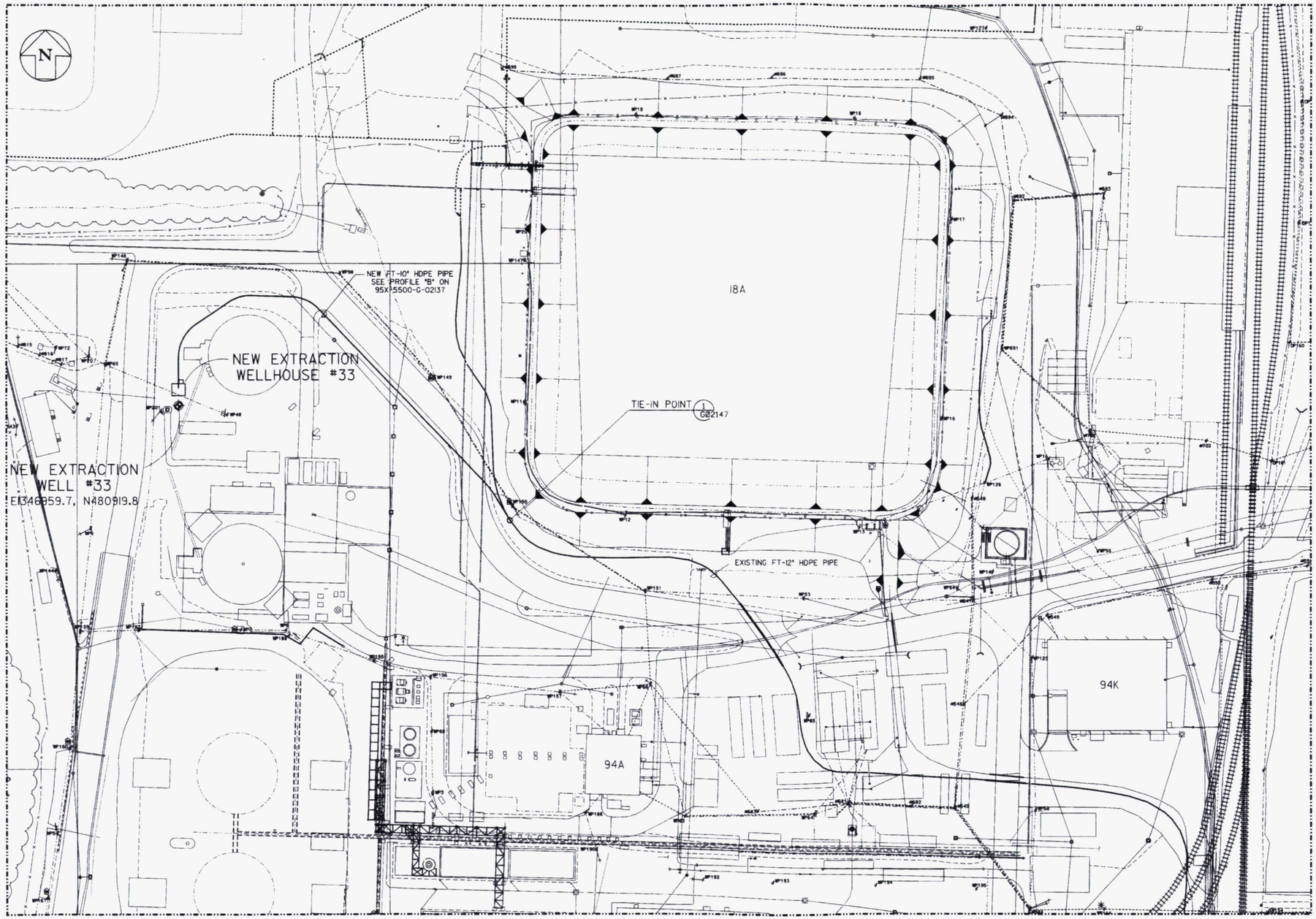

NOTES:

1. PLACE PIPES IN TRENCH IN ACCORDANCE WITH TRENCH PIPE DETAIL ON DRAWING 95X-5500-G-02136.
2. ALL EXCESS SOIL WILL BE SPREAD IN PLACE. NOTIFY WAD PRIOR TO EXCAVATION.
3. FIELD TO VERIFY ROUTING AND PIPE ELEVATIONS.

TIE-IN POINT COORDINATE

POINT NO.	NORTHING	EASTING	ELEV.
1	1347292.06	480804.71	573.86'

DRAWING 95X-5500-G-02136

NO.	REVISIONS	DATE	DWN.	BY	APPD.
0	ISSUE FOR CFC	9-6-05	GEP		
B	ISSUE FOR 90% REVIEW	7-8-05	GEP		
A	ISSUE FOR 60% REVIEW	5-3-05	GEP		

REF. DWG. NO.

NOTE:
FLUOR FERNALD CADD DRAWING, DO NOT REVISE MANUALLY.

CONFIGURATION MANAGEMENT DRAWING
YES / NO
EXISTING STRUCTURES OR COMPONENTS AFFECTED BY THIS DRAWING ARE UNDER CONFIGURATION MANAGEMENT CONTROL. SEE NOTES.
COGNIZANT ENGINEER DATE

APPROVALS

CIVIL & STR.		SAFETY ENG.	
ELECTRICAL		MAINTENANCE	
ENGINEER		FIRE PROTECT.	
INSTRUMENT		WASTE MANAGE	
MECHANICAL		SECURITY	
		PROJECTS	
CHECKED			
APPROVED			

Fernald Closure Project
FLUOR FERNALD, INC.
U.S. DEPARTMENT OF ENERGY

WASTE STORAGE AREA EXTRACTION SYSTEM
PHASE 2
UTILITIES PLAN
SCALE: 1"=40'-0" SHEET 1 OF 2

RES 4528
DATE 4-25-05
DRAWN G.E. PAUL

95X-5500-G-02135 | 0

FILE NAME: /RES4528/95XG2135.DGN

FGPS.DGN 5/30/03

006058

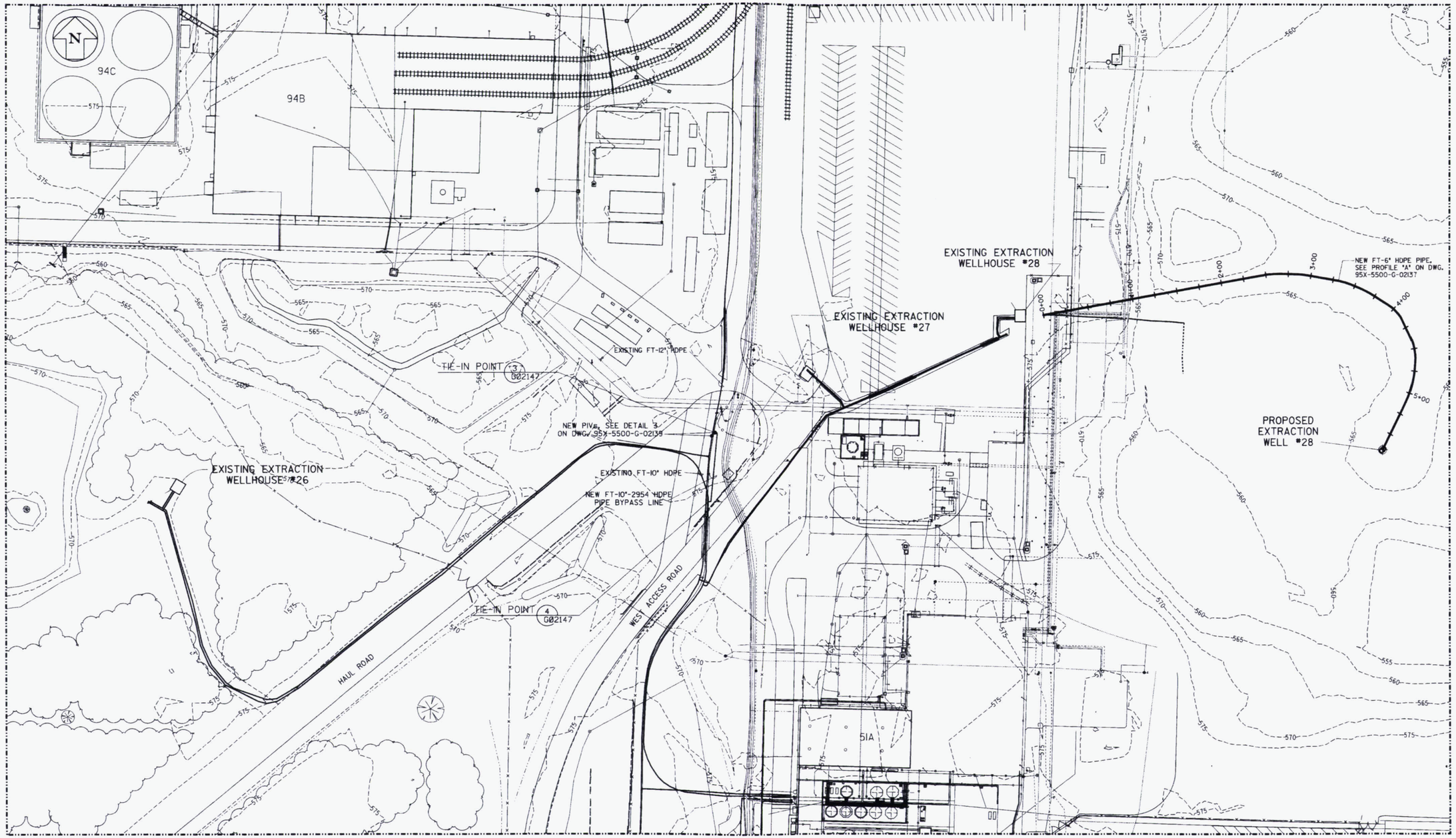

TIE-IN POINT COORDINATE			
POINT NO.	NORTHING	EASTING	ELEV.
3	1347944.93	479938.57	571.82'
4	1347939.73	479861.98	569.32'

NOTES:

1. PLACE PIPES IN TRENCH IN ACCORDANCE WITH TRENCH PIPE DETAIL ON DRAWING 95X-5500-G-02136.
2. ALL EXCESS SOIL WILL BE SPREAD IN PLACE. NOTIFY WAD PRIOR TO EXCAVATION.
3. FIELD TO VERIFY PIPE ROUTING AND PIPE ELEVATIONS.

NO.	REVISIONS	DATE	DWN. BY	APPD.
0	ISSUED FOR CFC	5-30-03	GEP	
B	ISSUED FOR 90% REVIEW	4-11-03	GEP	
A	ISSUED FOR 60% REVIEW	3-3-03	GEP	

REF. DWG. NO.

NOTE: FLUOR FERNALD CADD DRAWING. DO NOT REVISE MANUALLY.

CONFIGURATION MANAGEMENT DRAWING — SYSTEMS, STRUCTURES, OR COMPONENTS DEPICTED ON THIS DRAWING ARE UNDER CONFIGURATION MANAGEMENT CONTROL. SEE NOTES.

COGNIZANT ENGINEER DATE

APPROVALS			
CIVIL & STR.		SAFETY ENG.	
ELECTRICAL		MAINTENANCE	
ENGINEER		FIRE PROTECT.	
INSTRUMENT		WASTE MANAGE	
MECHANICAL		SECURITY	
		PROJECTS	
CHECKED			
APPROVED			

Fernald Closure Project

FLUOR FERNALD, INC.

U.S. DEPARTMENT OF ENERGY

WASTE STORAGE AREA EXTRACTION SYSTEM
PHASE 2
UTILITIES PLAN
SCALE: 1"=40'-0" SHEET 2 OF 2

RES 4528
DATE 4-25-05
DRAWN G.E. PAUL

95X-5500-G-02136 | 0

FCPS.DGN 5/30/03

FILE NAME: /RES4528/95XG2136.DGN

006058

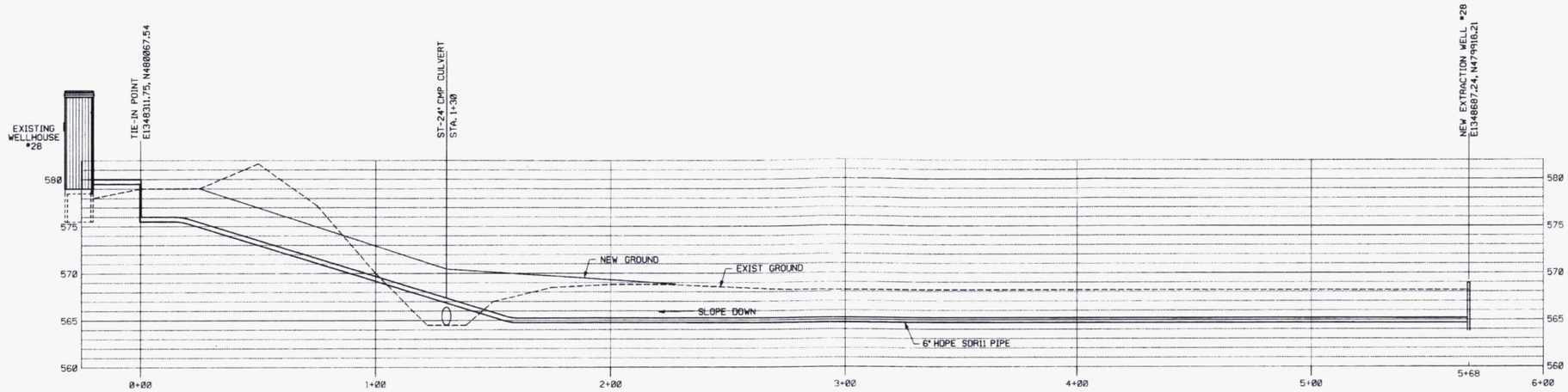

PROFILE (A) 95X-5500-G-02136
SCALE: HOR 1"=20' VER 1"=5'

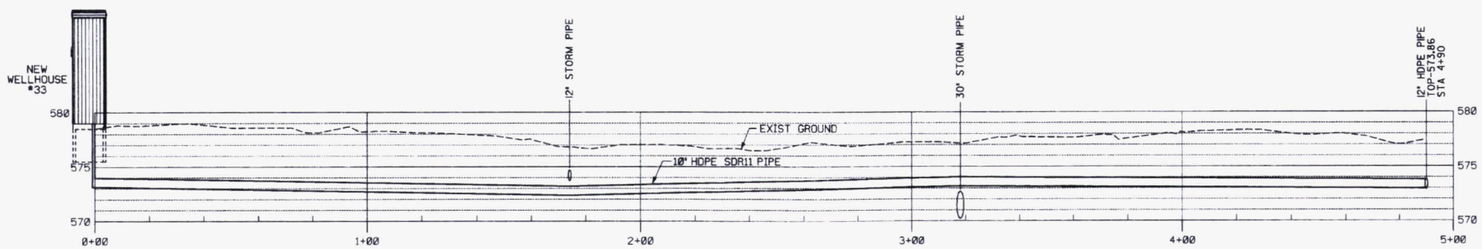

PROFILE (B) 95X-5500-G-02135
SCALE: HOR 1"=20' VER 1"=5'

NOTE:

GROUND COVER ABOVE TOP OF PIPE TO BE 36" MINIMUM.

NO.	REVISIONS	DATE	DWN. BY	APPD.
0	ISSUED FOR CFC	9/6/05	GEP	
B	ISSUED FOR 90% REVIEW	8/17/05	GEP	
A	ISSUED FOR 60% REVIEW	5/3/05	GEP	

REF. DWG. NO.

NOTE: FLUOR FERNALD CADD DRAWING. DO NOT REVISE MANUALLY.

CONFIGURATION MANAGEMENT DRAWING — YES / NO
SYSTEMS, STRUCTURES OR COMPONENTS DEPICTED ON THIS DRAWING ARE SUBJECT TO CONFIGURATION MANAGEMENT CONTROL. SEE NOTES.
COGNIZANT ENGINEER — DATE

APPROVALS

CIVIL & STR.			SAFETY ENG.	
ELECTRICAL			MAINTENANCE	
ENGINEER			FIRE PROTECT.	
INSTRUMENT			WASTE MANAGE	
MECHANICAL			SECURITY	
			PROJECTS	
CHECKED				
APPROVED				

Fernald Closure Project
FLUOR FERNALD, INC.
U.S. DEPARTMENT OF ENERGY

WASTE PIT AREA — SITE
WASTE STORAGE AREA EXTRACTION SYSTEM
PHASE 2
UTILITY PROFILES

RES 4528
DATE 4/28/05
DRAWN G.E. PAUL
95X-5500-G-02137 | 0

FDPS.DGN 5/30/03

FILE NAME: /res4528/95xg2137.dgn

006058

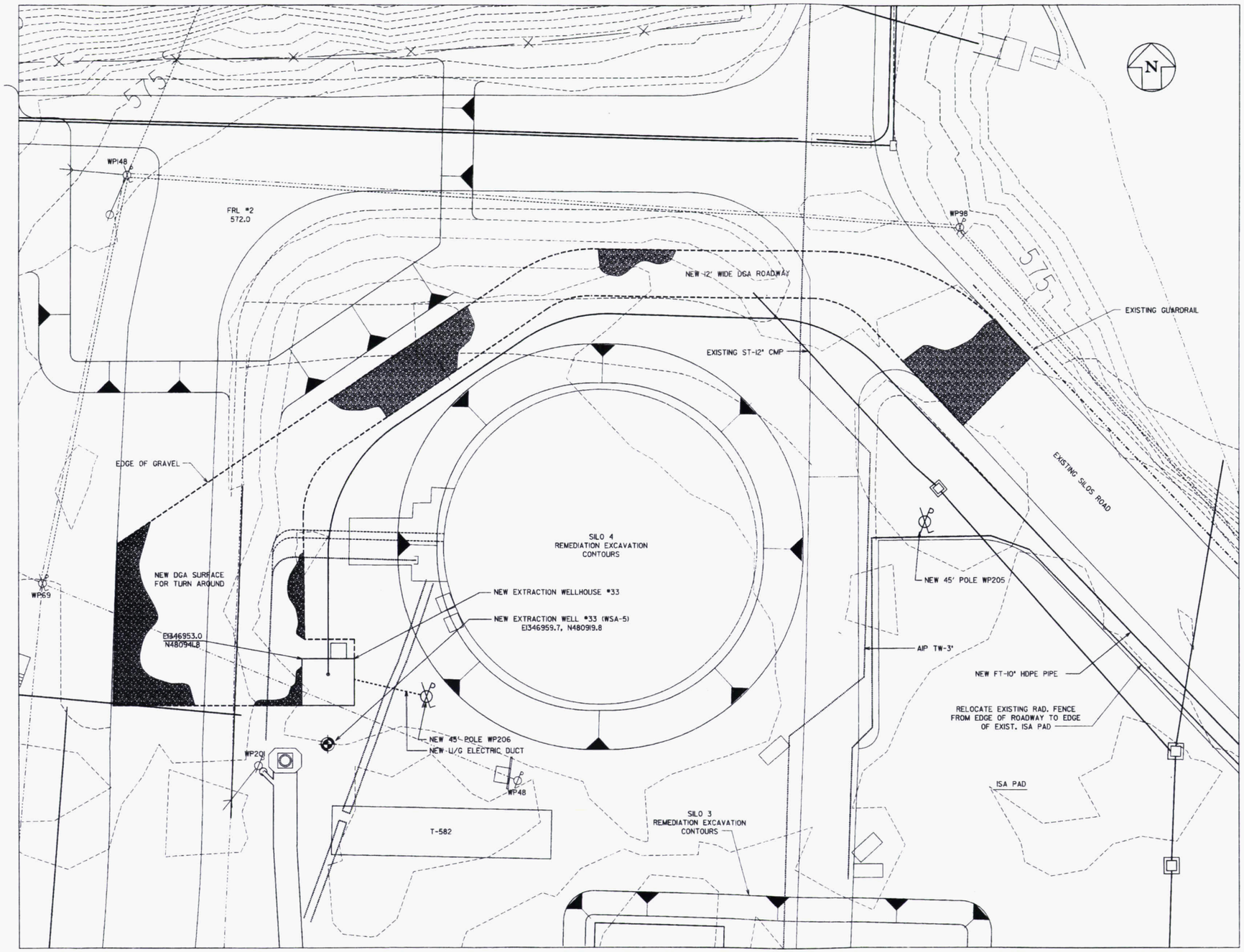

NO.	REVISIONS	DATE	DWN. BY	APPD.
0	ISSUE FOR CFC	5-5-05	GEP	
B	ISSUE FOR 90% REVIEW	11-17-05	GEP	

REF. DWG. NO.

NOTE:
FLUOR FERNALD CADD DRAWING, DO NOT REVISE MANUALLY.

CONFIGURATION MANAGEMENT DRAWING
YES / NO
SYSTEMS, STRUCTURES OR COMPONENTS DEPICTED ON THIS DRAWING ARE UNDER CONFIGURATION MANAGEMENT CONTROL. SEE NOTES.
COGNIZANT ENGINEER DATE

APPROVALS

CIVIL & STR.		9-2-05	SAFETY ENG.	
ELECTRICAL			MAINTENANCE	
ENGINEER			FIRE PROTECT.	
INSTRUMENT			WASTE MANAGE	
MECHANICAL			SECURITY	
			PROJECTS	11/1/05
CHECKED				
APPROVED		11/8/05		

Fernald Closure Project

FLUOR FERNALD, INC.

U.S. DEPARTMENT OF ENERGY

WASTE PIT AREA — GRID 31A

WASTE STORAGE AREA EXTRACTION SYSTEM

WELLHOUSE #33 SITE PLAN

SCALE: 1"=10' 0"

RES 4528
DATE AUGUST 16, 2005
DRAWN G.E. PAUL

95X-5500-G-02138 | 0

FCPS.DGN 5/30/03

FILE NAME: /RES4528/95XG2138.DGN

006058

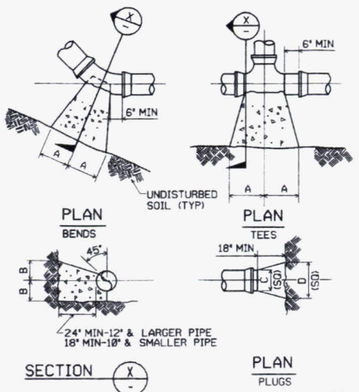

TYPE	SIZE	1/4 BENDS		1/8 BENDS		1/16 BENDS		TEES		PLUGS	
		A	B	A	B	A	B	A	B	C	D
2000 PSF SOIL	6"	16"	10"	9"	10"	6"	8"	10"	12"	10"	21"
	8"	22"	13"	12"	13"	8"	10"	13"	16"	12"	29"
	10"	26"	17"	14"	17"	10"	13"	16"	20"	14"	36"
	12"	29"	21"	16"	21"	11"	16"	18"	24"	16"	41"
	16"	38"	27"	-	-	-	-	24"	30"	-	-
	20"	42"	30"	-	-	-	-	27"	30"	-	-
	24"	48"	30"	-	-	-	-	36"	30"	-	-

NOTE: BASED ON 150 PSI STATIC PRESSURE PLUS A.W.W.A. WATER HAMMER. ALL BEARING SURFACES TO BE CARRIED TO UNDISTURBED GROUND.

THRUST BLOCK DETAILS (8)
NTS

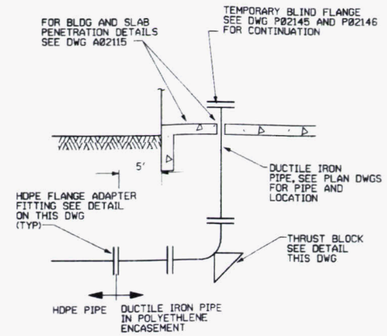

NOTE: OTHER THRUST BLOCKS NEARBY CAN BE COMBINED TOGETHER, AT CONTRACTOR'S OPTION. THIS DETAIL IS TYPICAL FOR ALL WELL HOUSES.

TYPICAL WELL/VALVE HOUSE TIE-IN DETAIL (2)
NTS

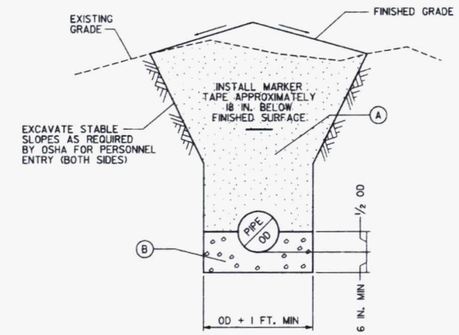

TYPICAL TRENCH PIPE DETAIL
NTS

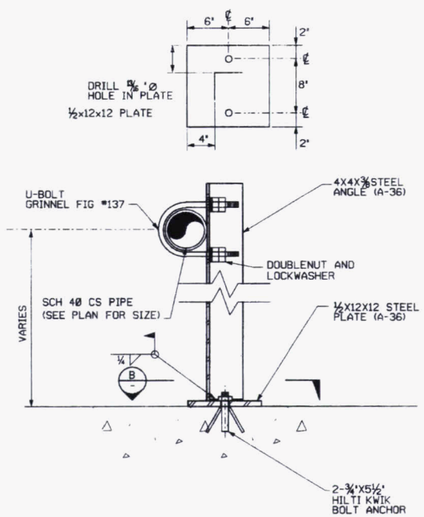

PIPE SUPPORT (6)
NTS

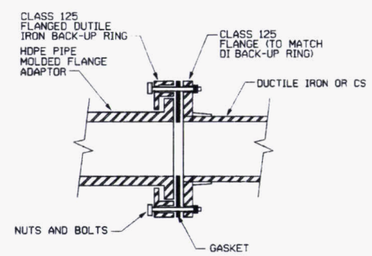

HDPE FLANGE ADAPTER DETAIL (5)
NTS G02147

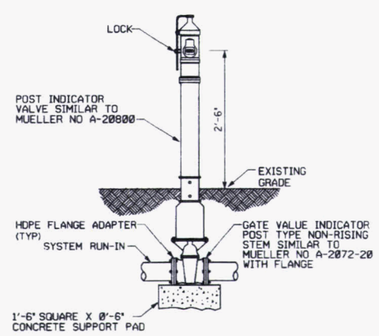

POST INDICATOR VALVE DETAIL (3)
LINES SIZES 12" AND LESS
NTS G02136

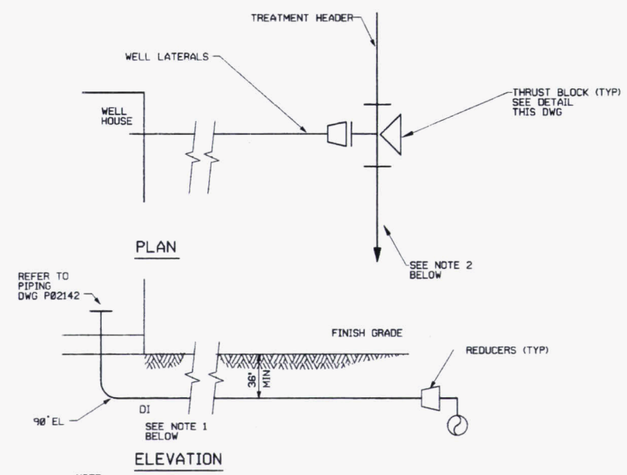

NOTE:

1. BEND TREATMENT LATERAL AND HEADER TO PROVIDE 8' CLEARANCE. MINIMUM BEND RADIUS IS 40 DIAMETERS OR AS SPECIFIED BY PIPE MANUFACTURER. NOT REQUIRED FOR WELL #28 ONLY
2. THE DISCHARGE HEADER IS NOT ALWAYS CLOSER TO WELL HOUSE. REFER TO SITE/GRADING/UTILITY PLAN FOR EACH TIE-IN.

TYPICAL WELL/VALVE HOUSE TIE-IN DETAIL (1)
NTS

GENERAL NOTES:

1. UNLESS OTHERWISE NOTED ALL MATERIALS SHALL CONFORM TO THE STATE OF OHIO DEPARTMENT OF TRANSPORTATION (ODOT) CONSTRUCTION AND MATERIAL SPECIFICATIONS DATED JANUARY 1, 1997.
2. UNLESS OTHERWISE NOTED ALL CONCRETE SHALL BE 3000 PSI AS STATED IN SPECIFICATION SECTION 03001.

ABBREVIATIONS

HDPE	HIGH DENSITY POLYETHYLENE
DI	DUCTILE IRON
PIV	POST INDICATOR VALVE
CO	CLEANOUT
CS	CAST STEEL

NO.	REVISIONS	DATE	DWN. BY	APPD.
0	ISSUED FOR CFC	5-5-05	GEP	[illegible]
B	ISSUED FOR 90% REVIEW	4-8-05	GEP	
A	ISSUED FOR 60% REVIEW	3-3-05	GEP	

REF. DWG. NO.

NOTE: FLUOR FERNALD CADD DRAWING. DO NOT REVISE MANUALLY.

CONFIGURATION MANAGEMENT DRAWING — SYSTEMS, STRUCTURES OR COMPONENTS INDICATED ON THIS DRAWING ARE UNDER CONFIGURATION MANAGEMENT CONTROL. SEE NOTES.

COGNIZANT ENGINEER — DATE

APPROVALS: CIVIL & STR., ELECTRICAL, ENGINEER, INSTRUMENT, MECHANICAL, CHECKED, APPROVED; SAFETY ENG., MAINTENANCE, FIRE PROTECT., WASTE MANAGE., SECURITY, PROJECTS

Fernald Closure Project

FLUOR FERNALD, INC.

U.S. DEPARTMENT OF ENERGY

WASTE PIT AREA — GRID 31A

WASTE STORAGE AREA EXTRACTION SYSTEM
PHASE 2
CIVIL DETAILS
SHEET 1 OF 3

RES 4528 — DATE APRIL 6, 2005 — DRAWN G.E. PAUL

95X-5500-G-02139 — 0

FILE NAME: /res4528/95xg2136.dgn

FCPSLDGN 5/30/03

006058

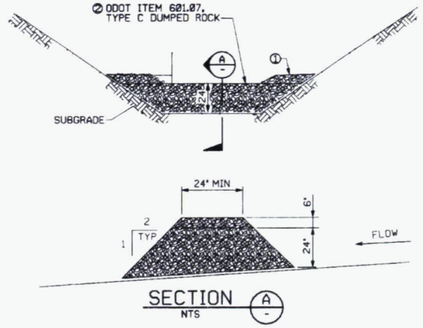

① ODOT ITEM 304 STABILIZED CRUSHED AGGREGATE (2-6" COURSES) ON FILTER FABRIC. ODOT ITEM 712, TYPE D.
② GRAVEL TO BE ODOT ITEM 601.07, TYPE C TOP WIDTH TO BE 2 FEET.

GRAVEL EROSION CONTROL DETAIL (11 / G02012) REF G02004 G02005
NTS

GENERAL NOTES :

1. UNLESS OTHERWISE NOTED ALL MATERIALS SHALL CONFORM TO THE STATE OF OHIO DEPARTMENT OF TRANSPORTATION (ODOT) CONSTRUCTION AND MATERIAL SPECIFICATIONS DATED JANUARY 1, 1997.
2. UNLESS OTHERWISE NOTED ALL CONCRETE SHALL BE 3000 PSI AS SPECIFIED IN THE SPECIFICATIONS.

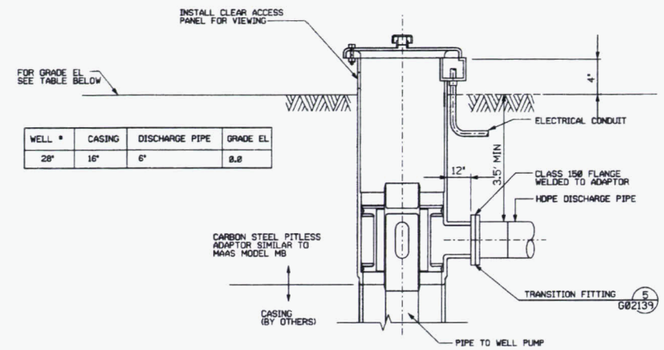

WELL #	CASING	DISCHARGE PIPE	GRADE EL
28'	16"	6"	0.0

TYPICAL PITLESS ADAPTOR (2 / P02145)

NOTE: PROVIDE WELL WITH A ¼" POLYETHYLENE CHLORINE INJECTION TUBE STRAPPED TO THE PUMP DISCHARGE COLUMN WITH NON CORRODING FASTENNERS AT 10' INTERVALS. TERMINATE LOWER END NEAR PUMP INLET SCREEN. CLAMP UPPER END OF TUBE TO PITLESS ADAPTOR UPPER CASING AND LEAVE SUFFICIENT LENGTH, COILED INSIDE UPPER CASING TO EXTEND 3' ABOVE GRADE.

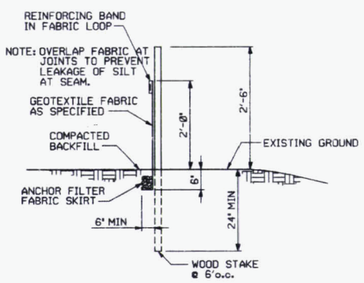

SILT FENCE (5 / G02012) REF G02004 G02005
NTS

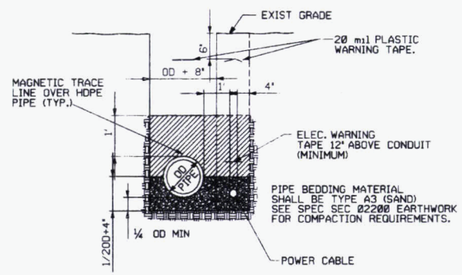

TYPICAL PIPE BEDDING DETAIL (8 / E02131)
NTS

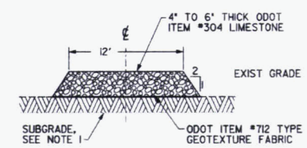

TYPICAL ACCESS ROAD CROSS SECTION

NOTES:

1. USE ODOT TYPE "D" DUMPED ROCK OR AASHTO #2 STONE TO IMPROVE UNSUITABLE EXISTING SUBGRADE.
2. GEOTEXTILE SEPARATOR SHALL BE IN ACCORDANCE WITH OSDF TECHNICAL SPECIFICATION 02714.
3. GEOTEXTILE SEPARATOR MAY BE USED IN AREAS WHEN WARRANTED BY SUBGRADE CONDITIONS.
4. CROSS SECTION APPLIES TO ACCESS DRIVE AND TRUCK TURN AROUND.

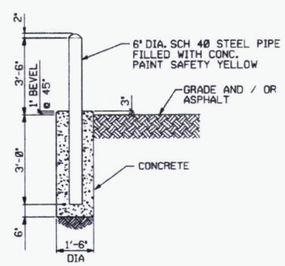

TYPICAL EXTERIOR GUARD POST DETAIL (4 / -)
NTS

NO.	REVISIONS	DATE	DWN. BY	APPD.
0	ISSUED FOR CFC	9-4-05	GEP	MAS
B	ISSUED FOR 90% REVIEW	8-8-05	GEP	
A	ISSUED FOR 60% REVIEW	5-3-05	GEP	

REF. DWG. NO.

NOTE: FLUOR FERNALD CADD DRAWING, DO NOT REVISE MANUALLY.

CONFIGURATION MANAGEMENT DRAWING — YES / NO
EXISTING STRUCTURES OR COMPONENTS AFFECTED BY THIS DRAWING ARE UNDER CONFIGURATION MANAGEMENT CONTROL. SEE NOTES.
COGNIZANT ENGINEER DATE

APPROVALS

CIVIL & STR.		SAFETY ENG.	
ELECTRICAL		MAINTENANCE	
ENGINEER		FIRE PROTECT.	
INSTRUMENT		WASTE MANAGE.	
MECHANICAL		SECURITY	
		PROJECTS	
CHECKED	MAS		
APPROVED			

Fernald Closure Project
FLUOR FERNALD, INC.
U.S. DEPARTMENT OF ENERGY

WASTE PIT AREA — GRID 31A
WASTE STORAGE AREA EXTRACTION SYSTEM
PHASE 2
CIVIL DETAILS
SHEET 2 OF 3

RES 4528
DATE APRIL 6, 2005
DRAWN G.E. PAUL
95X-5500-G-02140 | 0

FILE NAME: /res4528/95xg2137.dgn

FDPS_DGN 5/30/03

006058

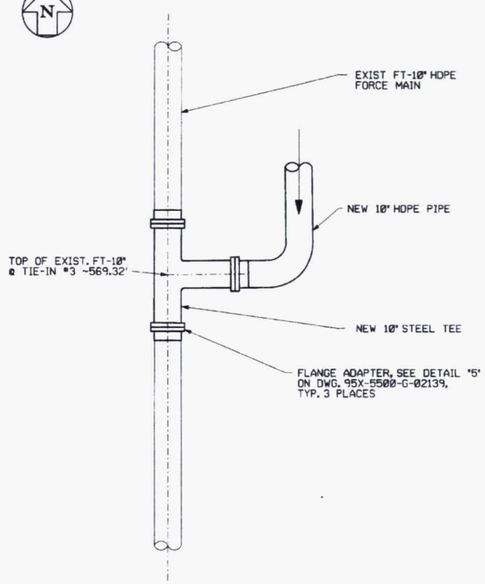

TIE-IN DETAIL 4 G02136
NTS

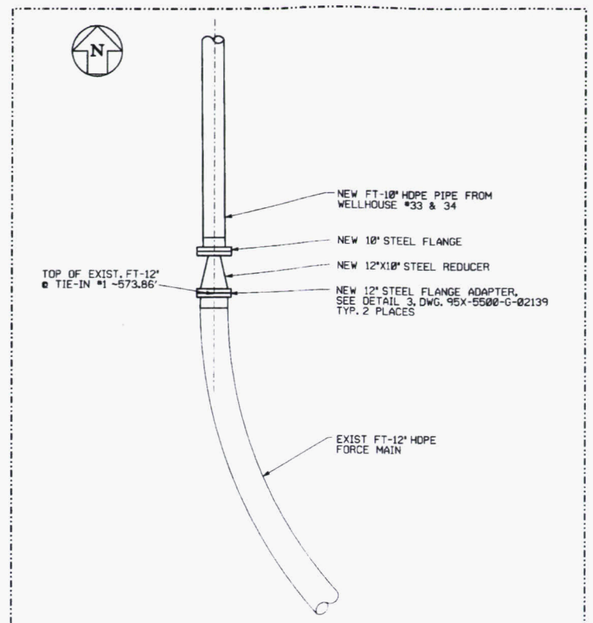

TIE-IN DETAIL 2 G02135
NTS

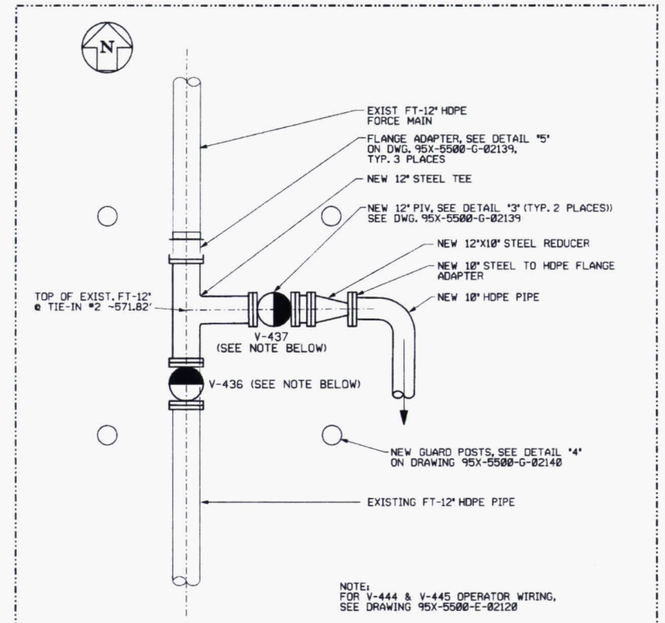

NOTE:
FOR V-444 & V-445 OPERATOR WIRING, SEE DRAWING 95X-5500-E-02120

TIE-IN DETAIL 3 G02136
NTS
SEE NOTE 1

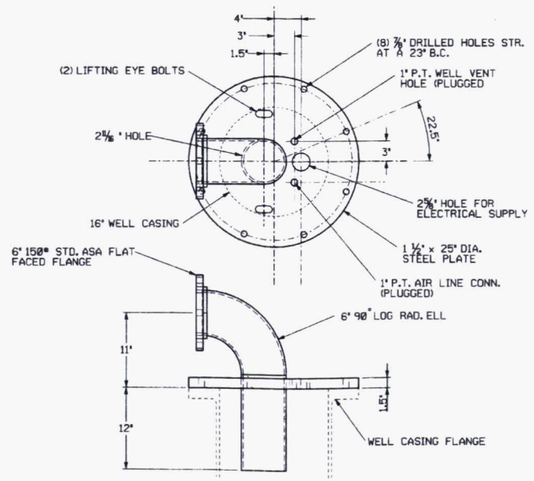

SURFACE PLATE DETAIL 5 P02145
NTS

NOTES:

1. PROVIDE CONCRETE BARRIERS, AS NEEDED, FOR GUARD POSTS.
2. FIELD TO VERIFY ROUTING AND PIPE ELEVATIONS.

NO.	REVISIONS	DATE	DWN. BY	APPD.	NO.	REVISIONS	DATE	DWN. BY	APPD.	REF. DWG. NO.
					0	ISSUED FOR CFC	3-1-05	GEP		
					B	ISSUED FOR 90% REVIEW	1-11-05	GEP		
					A	ISSUED FOR 60% REVIEW	5-3-05	GEP		

NOTE:
FLUOR FERNALD CADD DRAWING, DO NOT REVISE MANUALLY.

CONFIGURATION MANAGEMENT DRAWING YES NO
EXISTING STRUCTURES OR COMPONENTS SHOWN ON THIS DRAWING ARE UNDER CONFIGURATION MANAGEMENT CONTROL. SEE NOTES.

COGNIZANT ENGINEER DATE

APPROVALS

CIVIL & STR.		SAFETY ENG.	
ELECTRICAL		MAINTENANCE	
ENGINEER		FIRE PROTECT.	
INSTRUMENT		WASTE MANAGE.	
MECHANICAL		SECURITY	
		PROJECTS	
CHECKED			
APPROVED			

Fernald Environmental Management Project
FLUOR FERNALD, INC.
U.S. DEPARTMENT OF ENERGY

WASTE PIT AREA
WASTE STORAGE AREA EXTRACTION SYSTEM PHASE 2
CIVIL DETAILS
SHEET 3 OF 3

RES 4528
DATE APRIL 27, 2005
DRAWN G.E. PALS

95X-5500-G-02147 | 0

FFS.DGN 3/22/00

FILE NAME: /RES4528/95XG2147.DGN

006058

006058

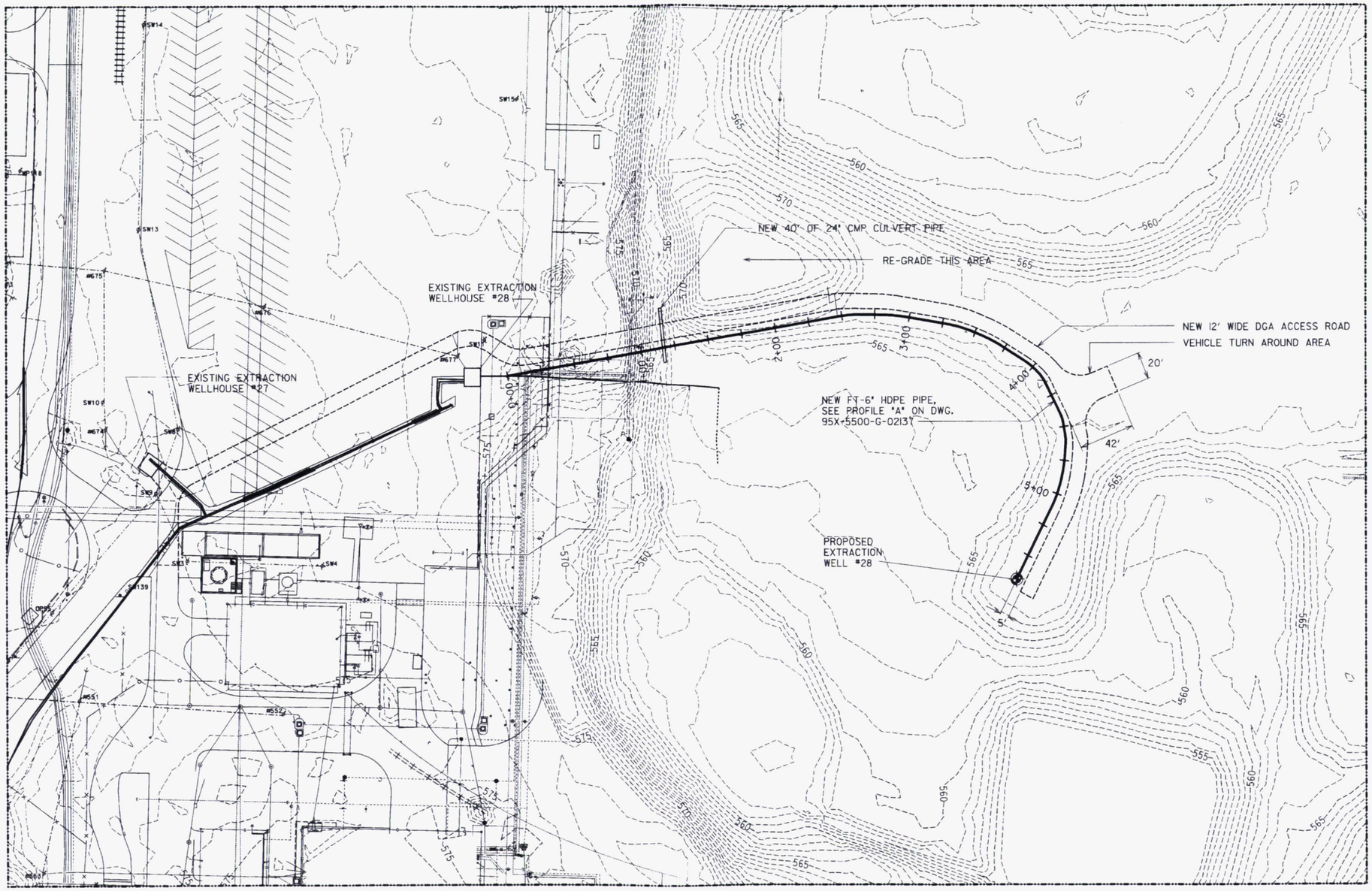

NO.	REVISIONS	DATE	DWN. BY	APPD.	NO.	REVISIONS	DATE	DWN. BY	APPD.	REF. DWG. NO.
					0	ISSUED FOR CFC	5-6-05	GEP	[illegible]	

NOTE:
FLUOR FERNALD CADD DRAWING. DO NOT REVISE MANUALLY.

CONFIGURATION MANAGEMENT DRAWING YES / NO
SYSTEMS, STRUCTURES OR COMPONENTS SHOWN ON THIS DRAWING ARE UNDER CONFIGURATION MANAGEMENT CONTROL. SEE NOTES.

COGNIZANT ENGINEER DATE

APPROVALS

CIVIL & STR.	[illegible]	9-2-05	SAFETY ENG.		
ELECTRICAL			MAINTENANCE		
ENGINEER			FIRE PROTECT.		
INSTRUMENT			WASTE MANAGE.		
MECHANICAL			SECURITY		
			PROJECTS	[illegible]	9/18/05
CHECKED	[illegible]				
APPROVED	[illegible]				

Fernald Closure Project

FLUOR FERNALD, INC.

U.S. DEPARTMENT OF ENERGY

WASTE STORAGE AREA EXTRACTION SYSTEM
PHASE 2
WELLHOUSE #28 SITE LAYOUT
SCALE: 1"=30'-0"

RES 4528
DATE 8-30-05
DRAWN G.E. PAUL

95X-5500-G-02148 | 0

FCPSLOGN 5/30/03

FILE NAME: /RES4528/95XG2136.DGN

006058

PIPING VALVES

CONFIGURATIONS FOR VALVE TYPE

ANGLE STRAIGHT 3-WAY 4-WAY

VALVE TYPES

- AIR RELEASE VALVE
- AIR AND VACUUM VALVE
- BACKPRESSURE REGULATOR
- BACKFLOW PREVENTER
- BALL
- BLOWDOWN
- BUTTERFLY/DAMPER
- CHECK, SWING TYPE
- CHECK, WAFER TYPE
- DELUGE
- DIAPHRAGM
- DIFFERENTIAL PRESSURE REGULATOR
- FLOAT
- FOOT
- GATE
- GLOBE
- HOSE
- KNIFE
- NEEDLE
- PINCH
- PRESSURE REGULATOR
- PLUG
- SAFETY RELIEF
- SLIDING GATE
- STOP CHECK
- VACUUM

PIPING SEGMENT BREAKS

- CONSTRUCTION REQUIREMENTS
- INSULATION REQUIREMENTS
- PIPING MATERIAL REQUIREMENTS
- UNDERGROUND ROUTING (SHADED AREA INDICATES DIRECTION OF UNDERGROUND)
- GROUP BREAK FOR END OF PIPING LINE NUMBER

PIPING FITTINGS

- BASKET STRAINER - SINGLE
- BASKET STRAINER - DUPLEX
- CAP
- CONCENTRIC REDUCER
- CONE STRAINER
- ECCENTRIC REDUCER
- EXPANSION FLANGE
- EXPANSION JOINT
- FILTER
- FLANGE
- FLEXIBLE HOSE
- HOSE CONNECTION
- HOSE QUICK COUPLING
- MECHANICAL COUPLING
- ORIFICE
- ORIFICE UNION
- PLUG
- REDUCING FLANGE
- STEAM TRAP
- SUMP STRAINER
- TEMPORARY STRAINER
- Y-STRAINER

PIPING SYMBOLOGY

- PRIMARY PIPING
- SECONDARY PIPING
- EXISTING PIPING
- FLEXIBLE HOSE
- FUTURE PIPING
- TIE-IN POINT
- INSULATED ELECTRIC HEAT TRACE

EQUIPMENT SYMBOLS

- AGITATOR (MIXER)
- CENTRIFUGAL BLOWER
- (AREA NAME) DEFINED BOUNDRY
- HORIZONTAL CENTRIFUGAL PUMP
- (SYSTEM NAME) PACKAGED SYSTEM BOUNDRY
- SUBMERSIBLE TURBINE PUMP
- SUMP PUMP WITH MOTOR

PIPING LINE NUMBER FORMAT

MEDIUM CODE
NOMINAL PIPE SIZE
NOMINAL CONTAINMENT PIPE SIZE (WHERE SHOWN)
MATERIAL CODE
LINE NUMBER
INSULATION CODE

GW-6101*-B4-2930-ET

MEDIUM FLOW DIRECTION

ABBREVIATIONS

AC	AIR TO CLOSE
AG	AGITATOR
AO	AIR TO OPEN
ARV	AIR RELEASE VALVE
AVV	AIR AND VACUUM VALVE
AWWT	ADVANCED WASTEWATER TREATMENT
BLW	BLOWER
BTU	BRITISH THERMAL UNIT
CFM	CUBIC FEET/MINUTE
CO	CLEAN OUT
CU FT	CUBIC FEET
ECC	ECCENTRIC
EF	EXHAUST FAN
FC	FAIL CLOSED
FO	FAIL OPEN
GPH	GALLONS PER HOUR
GPM	GALLONS PER MINUTE
GV	GRAVITY VENTILATOR
HDPE	HIGH DENSITY POLYETHYLENE
IA	INSTRUMENT AIR
KW	KILOWATT
LB/HR	POUNDS PER HOUR
MATL	MATERIAL
MED	MEDIUM
ME	MIST ELIMINATOR
NC	NORMALLY CLOSED
NO	NORMALLY OPEN
PIV	POST INDICATOR VALVE
PMP	PUMP
RED	REDUCER
RH	RELATIVE HUMIDITY
SCFM	STANDARD CUBIC FEET/MINUTE
SFES	SOUTH FIELD EXTRACTION SYSTEM
SWRB	STORMWATER RETENTION BASIN
TBD	TO BE DETERMINED
TF	TOP FLAT
TNK	TANK
TYP	TYPICAL
UH	UNIT HEATER
1	SOLENOID VALVE COMMON PORT
2	SOLENOID VALVE NORM. OPEN PORT
3	SOLENOID VALVE NORM. CLOSED PORT
ID	INJECTION DEMONSTRATION
SPO	SOUTH PLUME OPTIMIZATION

PIPING SPECIFICATIONS

FLOWING MEDIUM	MED. CODE	MATL. CODE
BACK WASH	BW	T
BLOWER AIR	BA	A
CHILLED WATER	CHS, CHR	A
CHLORINE	CL	B1
CONDENSATE	LC	W, T
CONDENSER WATER	CWS, CWR	A
COOLING WATER	WS, WR	A
DRAIN	DR	A, T
FILTRATE EFFLUENT	FT	A
FLOCCULANT	FL	A
FLUSH WATER	FW	T
FORCE MAIN	FM	M
GROUND WATER	GW	A, B, B4, M
INSTRUMENT AIR	IA	T
MELTER OFF-GAS	OG	T
NITRIC ACID	AN	T1
PERCHED GND WATER	PGW	B
PHOSPHORIC ACID	PAPH	T1
PLANT AIR	PA	W
POLISHED WATER	PW	A
POTABLE WATER	DW	W, B4, C1
PROCESS WATER	TW, TWX1	A, B4
PROCESS WASTEWATER	CE	A
RAW WATER	RW	A
RECYCLE WATER	RC	T, B2
SCRUBBER RECYCLE	RSL	T
SLURRY	SL	T
SODIUM CARBONATE	SC	A
SODIUM HYDROXIDE	NA	T
SODIUM SILICATE	SS	A
STORM WATER	ST	A, B4, B5
SULFURIC ACID	SB	T1
SUMP DISCHARGE	SU	T
THICKENER OVERFLOW	TO	T
VACUUM	V	A
VENTILATION AIR	VE	T, A
WASTE WATER	WW	T

MATL. CODE	DESCRIPTION
A	A53 SEAMLESS CARBON STEEL
B	PVC
B1	PVDF
B2	PVDF, 100PSI
B3	CPVC
B4	HDPE
B5	CORRUGATED HDPE
C1	CLASS 150, COPPER TUBING
L	FIBERGLASS REINFORCED PLASTIC
M	DUCTILE IRON
T	304L, STAINLESS STEEL
T1	316L, STAINLESS STEEL
W	A53, GR. A, GALVANIZED STEEL

INSUL. CODE	DESCRIPTION
ET	ELECTRIC TRACED AND INSULATED
IC	ANTI-CONDENSATION INSULATION
ST	STEAM TRACED AND INSULATED

LETTERS OF INSTRUMENT IDENTIFICATION

LETTER	1ST LETTER	2ND LETTER	3RD OR 4TH LETTER
	MEASURED OR INITIATING VARIABLE	MODIFIER	READ OUT OR PASSIVE FUNCTION
A	ANALYSIS	ALARM	ALARM
B	BURNER FLAME	----	----
C	CAMERA	CONTROLLER	CLOSED
D	DENSITY	DIFFERENTIAL	----
E	VOLTAGE	ELEMENT	ELEMENT
F	FLOW RATE	RATIO (FRACTION)	----
G	GAGING (DIM)	VIEWING DEVICE	GLASS
H	HAND (MANUAL)	----	----
I	CURRENT (ELEC)	INDICATE	INDICATE
J	POWER	SCAN	----
K	TIME	----	----
L	LEVEL	LIGHT	LOW
M	MOIST. OR HUMIDITY	----	----
N	----	----	----
O	OBSERVATION	ORIFICE	OPEN
P	PRESSURE OR VACUUM	----	POINT (TEST)
Q	QUANTITY OR EVENT	TOTALIZER	----
R	RESTRICTIVE	RECORDER	RECORDER
S	SPEED OR FREQUENCY	SAFETY/SWITCH	SWITCH
T	TEMPERATURE	TRANSMITTER	TRANSMITTER
U	USER'S GUIDE	----	MULTIFUNCTION
V	VISCOSITY	----	VENT, VALVE
W	WEIGHT OR FORCE	WELL	----
X	UNCLASSIFIED	---	UNCLASSIFIED
Y	RELAY	RELAY	----
Z	POSITION	----	----

FUNCTION LABELS

SYMBOLS	DESCRIPTION
AVG	AVERAGING
−	BIAS MINUS
+	BIAS PLUS
±	BIAS PLUS/MINUS
DER	DERIVATIVE
÷	DIVIDING
∫	INTEGRAL
X	MULTIPLYING
K	PROPORTIONAL
X^n	RAISE TO POWER
REV	REVERSE ACTION
$\sqrt{}$	ROOT EXTRACT
Σ	SUMMING

INSTRUMENT ACTUATOR LABELS

- BALL FLOAT
- CAPACITY SENSOR
- DIAPHRAGM
- DISPLACING FLOAT
- DUAL ACTION PISTON
- DUAL SOLENOID
- MANUAL
- MOTOR
- PILOT
- SINGLE ACTION PISTON
- SINGLE SOLENOID
- SINGLE SOLENOID WITH RESET

INSTRUMENT DEVICE TAG TYPES

- IN-LINE TAG WITH LEADER LINE
- LOCAL MOUNTED DEVICE
- FRONT OF PANEL MOUNTED DEVICE
- FRONT OF PANEL MOUNTED DEVICE AUXILLARY LOCATION
- REAR OF PANEL MOUNTED DEVICE
- REAR OF PANEL MOUNTED DEVICE AUXILLARY LOCATION
- SHARED DISPLAY COMPUTER CONTROL AND OPERATOR INTERFACE

EXAMPLE OF TAG CALLOUTS

- INSTRUMENT TAG TYPE
- LETTERS OF INSTRUMENT IDENT.
- LOOP NUMBER SUFFIX
- LOOP NUMBER
- SPECIAL DESIGNATION

INSTRUMENT IN-LINE DEVICES

- AVERAGING PITOT
- FLOW NOZZLE
- FLUME
- MAGNETIC FLOW METER
- ORIFICE PLATE
- POSITIVE DISPLACEMENT METER
- PROPELLER METER
- STRAIGHTING VANE
- SILENCER
- THERMOWELL
- ULTRASONIC FLOW METER
- VARIABLE AREA FLOW METER
- VENTURI
- VORTEX SHEDDING FLOW METER
- WEIR

INSTRUMENT SIGNAL LINES

- CONNECT TO PROCESS
- MECHANICAL LINK
- ELECTRIC BINARY
- PNEUMATIC BINARY
- GUIDED ELECTROMAG OR SONIC
- SOFTWARE/DATA LINK
- CAPILLARY
- ELECTRIC
- PNEUMATIC
- HYDRAULIC
- UNGUIDED ELECTROMAG OR SONIC
- UNDEFINED

MISC. INSTRUMENTATION SYMBOLS

- INTERLOCK
- DIAPHRAGM SEAL
- IA INSTRUMENT AIR SUPPLY

INSTRUMENT SPECIAL DESIGNATIONS

DESIGNATION	FUNCTION / ABBREVIATION
C	CLOSED
DIF	DIFFERENTIAL
EX	EXISTING INSTRUMENTATION
H	HIGH
HH	HIGH HIGH
HL	HIGH LOW
HOA	HAND-OFF-AUTO
IA	IN-AUTO
I/I	CURRENT TO CURRENT
I/O	INPUT/OUTPUT
I/P	CURRENT TO PNEUMATIC TRANSDUCER
L	LOW
LL	LOW LOW
LOR	LOCAL-OFF-REMOTE
O	OPEN
OA	OFF-AUTO
OCA	OPEN-CLOSED-AUTO
R	RUNNING
Y	UNDETERMINED COMPUTING RELAY

NO.	REVISIONS	DATE	DWN. BY	APPD.
0	ISSUED FOR CFC	9-9-05	GEP	[illegible]
B	ISSUED FOR 90% REVIEW	8-8-05	GEP	
A	ISSUED FOR 60% REVIEW	5-2-05	GEP	

REF. DWG. NO.

NOTE: FLUOR FERNALD CADD DRAWING, DO NOT REVISE MANUALLY.

CONFIGURATION MANAGEMENT DRAWING — EXISTING DATA (REFERENCE OR CONFIGURATION MANAGEMENT CONTROL) SEE NOTES.

COGNIZANT ENGINEER: DATE

APPROVALS: CIVIL & STR., ELECTRICAL, ENGINEER, INSTRUMENT, MECHANICAL, CHECKED, APPROVED; SAFETY ENG., MAINTENANCE, FIRE PROTECT., WASTE MANAGE., SECURITY, PROJECTS

Fernald Closure Project

FLUOR FERNALD, INC.

U.S. DEPARTMENT OF ENERGY

WASTE PIT AREA — GRID 31A

WASTE STORAGE AREA EXTRACTION SYSTEM PHASE 2

PIPING AND INSTRUMENTATION SYMBOLS & LEGEND

RES 4528 — DATE APRIL 6, 2005 — DRAWN G.E. PAUL

95X-5500-N-02141 — 0

FCPSLDGN 5/30/03

FILE NAME: /res4528/95xn2141.dgn

006058

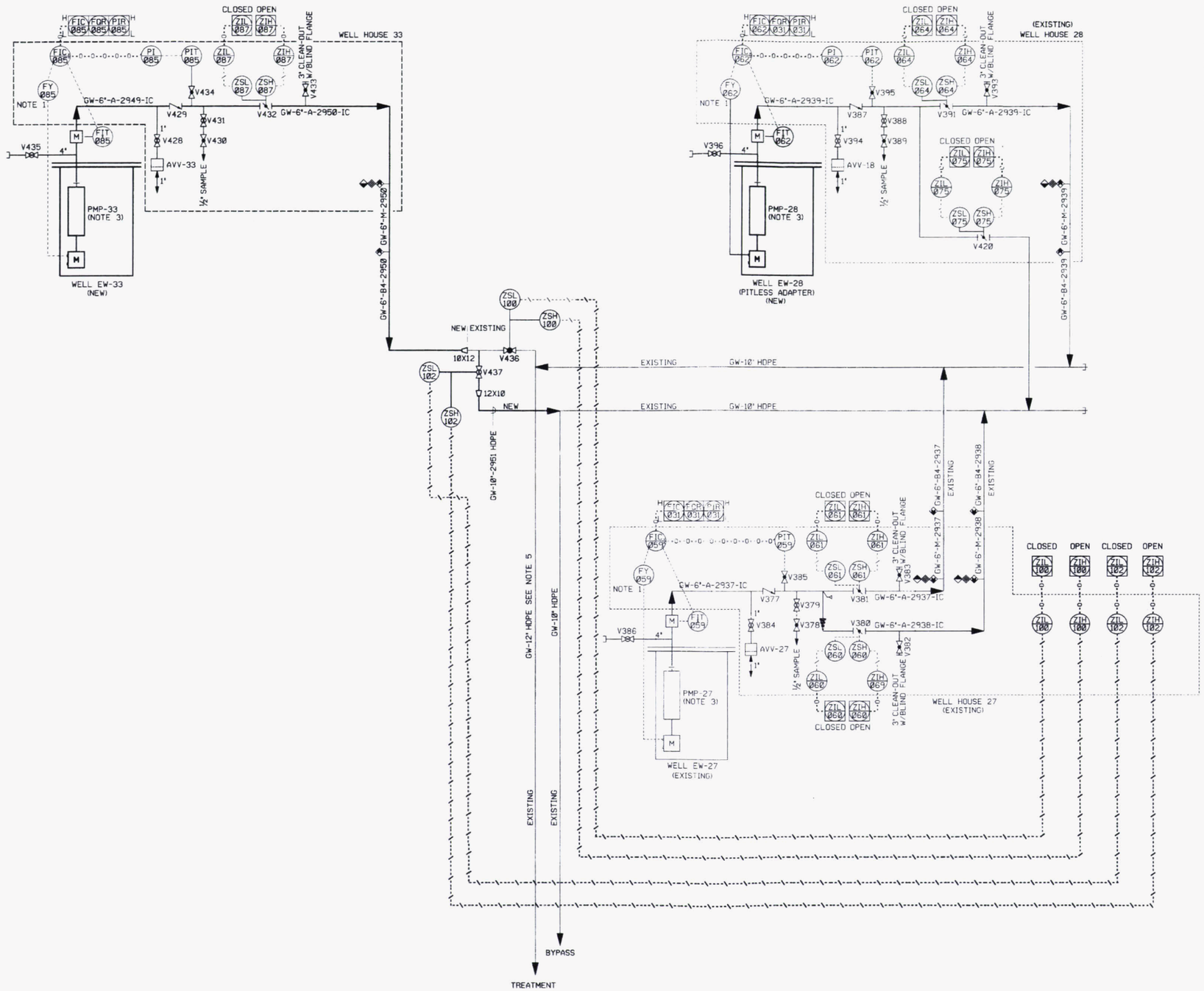

NOTES :

1. THE INSTRUMENTATION TAG DESIGNATION "FY" REPRESENTS A VARIABLE FREQUENCY DRIVE.
2. SEE CIVIL DRAWINGS FOR UNDERGROUND PIPING VENTS AND CLEAN-OUTS.
3. THE TWO DIGIT SUFFIX ASSIGNED TO THE PUMPS CORRESPOND TO THE EXTRACTION WELL NUMBER. SUBCONTRACTOR SHALL PROVIDE PIPE REDUCER AT PUMP DISCHARGE AS REQUIRED.
4. WELL SHALL BE PROVIDED WITH ½" POLYETHYLENE CHLORINE INJECTION TUBE.
5. EXISTING ABANDONED 12" ARASA LINE

LAST VALVE NUMBER	V437
LAST LINE NUMBER	2951

REF DWG NO.	DRAWING TITLE
95X-5500-X-02114	DRAWING INDEX
95X-5500-N-02141	INSTRUMENTATION SYMBOLS AND LEGEND

NO.	REVISIONS	DATE	DWN. BY	APPD.
0	ISSUED FOR CFC	7-1-05	GEP	
B	ISSUED FOR 90% REVIEW	1-17-05	GEP	
A	ISSUED FOR 60% REVIEW	5-3-05	GEP	

REF. DWG. NO.

NOTE: FLUOR FERNALD CADD DRAWING. DO NOT REVISE MANUALLY.

CONFIGURATION MANAGEMENT DRAWING — YES / NO
EXISTING STRUCTURES OR COMPONENTS REFLECTED ON THIS DRAWING ARE UNDER CONFIGURATION MANAGEMENT CONTROL. SEE NOTES.
COGNIZANT ENGINEER — DATE

APPROVALS

CIVIL & STR.		SAFETY ENG.	
ELECTRICAL		MAINTENANCE	
ENGINEER		FIRE PROTECT.	
INSTRUMENT		WASTE MANAGE	
MECHANICAL		SECURITY	
		PROJECTS	
CHECKED			
APPROVED			

Fernald Closure Project

FLUOR FERNALD, INC.

U.S. DEPARTMENT OF ENERGY

WASTE PIT AREA — GRID 31A

WASTE STORAGE AREA EXTRACTION SYSTEM PHASE 2

PIPING AND INSTRUMENTATION DIAGRAM WELL No's. 28 & 33

RES 4528
DATE APRIL 6, 2005
DRAWN C.E. PAUL

95X-5500-N-02142 — 0

FILE NAME: /res4528/95xn2142.dgn

FCPS.DGN 5/30/03

006058

TYPICAL WELL HOUSE XX/ PCS XX	INSTRUMENT LOOP NUMBER MATRIX									AUX. VALVES		
	FYA	FIT	PITA	V4	ZSLA	ZSHA	V5	ZSLB	ZSHB	V	ZSL	ZSH
33	FY085	FIT085	PIT085	NA	ZSL086	ZSH086	V432	ZSL087	ZSH087			
27	+	+	+	+	+	+	+	+	+	V436 V437	ZSL100 ZSL102	ZSH100 ZSH102

'+' = EXISTING

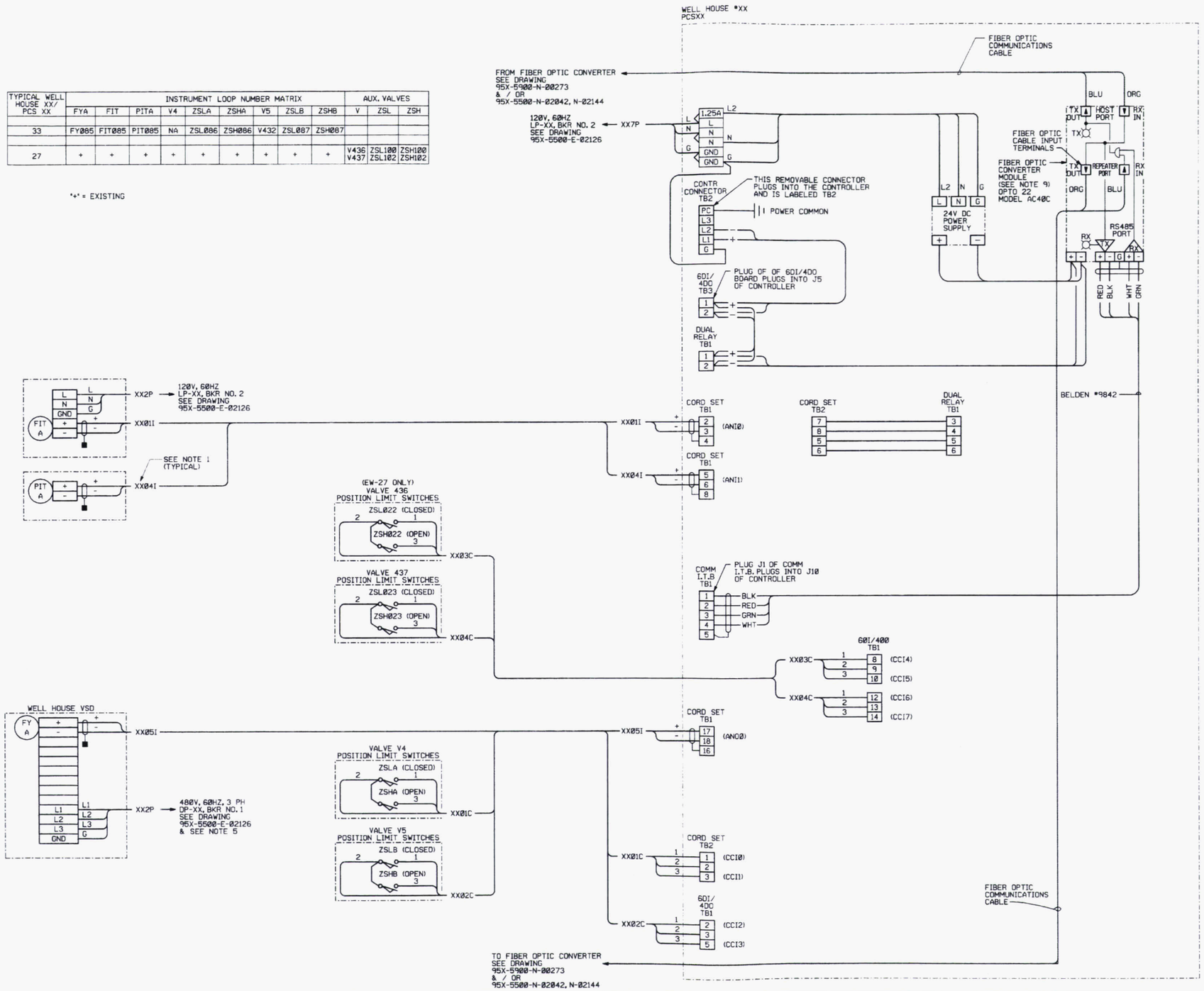

NOTES:

1. 'XX' REPRESENTS THE CORRESPONDING WELL NUMBER.
2. BE SURE THAT ONLY JUMPERS A2 & A5 ARE INSERTED IN THE FIBER OPTIC CONVERTER MODULE.
3. NOT USED
4. FOR CABLE SCHEDULES SEE DRAWING'S 95X-5500-E-02033, 02034, & 02035.
5. FOR THREE PHASE POWER CABLES, SEE DRAWING 95X-5900-E-00242.
6. NOT USED
7. ONE BAILEY FISCHER & PORTER MODEL 53MC5222A25BAC1XXCXX CONTROLLER WITH CORD SETS IS REQUIRED PER WELL HOUSE. THIS MODEL NUMBER INCLUDES ALL ITEMS IN THE WELL HOUSE INDICATED AS CONTR CONNECTOR, 6DI/4DO, DUAL RELAY, COMM I.T.B. AND CORD SET.
8. 6A, 24V DC POWER SUPPLY SHALL BE SOLA (GENERAL SIGNAL) TYPE 28-1024-1, OR APPROVED EQUAL.
9. BE SURE THAT ONLY JUMPERS A2 & A5 ARE INSERTED IN THE FIBER OPTIC CONVERTER MODULE.

LEGEND:

CONTRACTOR WIRING

SHIELD - CUT AND TAPED

REF DWG NO.	DRAWING TITLE
95X-5500-X-02114	DRAWING INDEX
95X-5500-E-02127	CABLE SCHEDULE
95X-5500-E-02128	CABLE SCHEDULE
95X-5500-E-02129	CABLE SCHEDULE
95X-5500-N-02141	PIPING AND INSTRUMENTATION DIAGRAM SYMBOLS AND LEGEND
95X-5500-N-02144	CONTROL SYSTEM ARCHITECTURE
95X-5500-E-02044	PIPING AND INSTRUMENTATION DIAGRAM WELL No'S. 1, 2 & 3

NO.	REVISIONS	DATE	DWN. BY	APPD.
0	ISSUED FOR CFC	9-4-05	GEP	
B	ISSUED FOR 90% REVIEW	8-8-05	GEP	
A	ISSUED FOR 60% REVIEW	5-3-05	GEP	

REF. DWG. NO.

NOTE: FLUOR FERNALD CADD DRAWING, DO NOT REVISE MANUALLY.

CONFIGURATION MANAGEMENT DRAWING

COGNIZANT ENGINEER DATE

APPROVALS: CIVIL & STR., ELECTRICAL, ENGINEER, INSTRUMENT, MECHANICAL, CHECKED, APPROVED; SAFETY ENG., MAINTENANCE, FIRE PROTECT., WASTE MANAGE., SECURITY, PROJECTS

Fernald Closure Project

FLUOR FERNALD, INC.

U.S. DEPARTMENT OF ENERGY

WASTE PIT AREA — GRID 31A

WASTE STORAGE AREA EXTRACTION SYSTEM PHASE 2

INSTRUMENTATION INTERCONNECTION DIAGRAM WELLHOUSE DCS PCS LOOP DIAGRAM

RES 4528 | DATE APRIL 6, 2005 | DRAWN G.E. PAUL | 95X-5500-N-02143 | 0

FILE NAME: /res4528/95xn2143.dgn

FCPSLDGN 5/30/03

006058

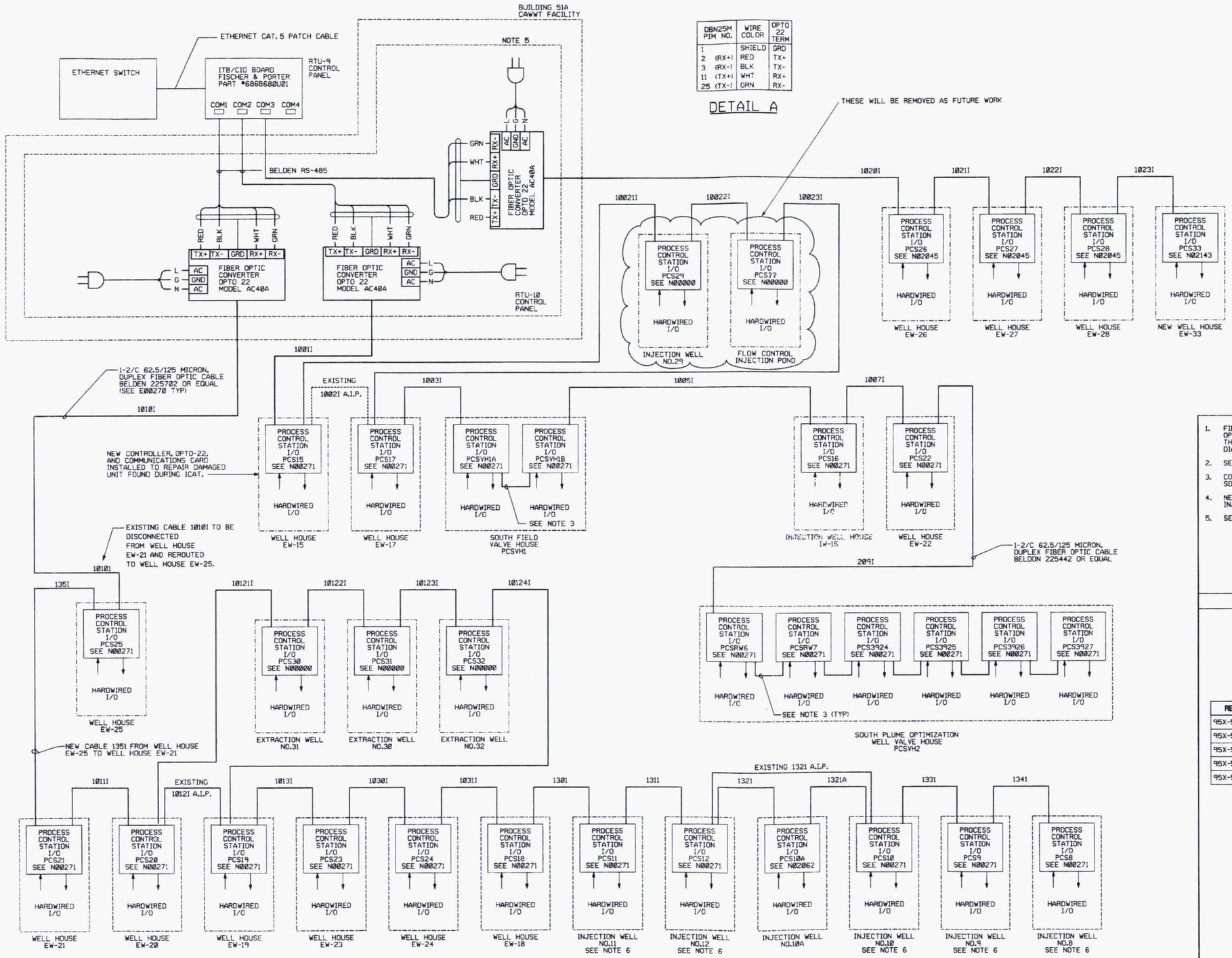

DBN25M PIM NO.	WIRE COLOR	OPTO 22 TERM
1	SHIELD	GRD
2 (RX+)	RED	TX+
3 (RX-)	BLK	TX-
11 (TX+)	WHT	RX+
25 (TX-)	GRN	RX-

DETAIL A

NOTES

1. FIBER OPTIC CONVERTERS REQUIRED FOR EACH END OF FIBER OPTIC COMMUNICATIONS CABLE. SEE DWG 95X-5500-N-00--- THRU 00272 FOR PROCESS CONTROL STATION INTERCONNECTION DIAGRAMS.
2. SEE DRAWING 95X-5500-E-020-- FOR PCS LOCATIONS.
3. CONTRACTOR SHALL PROVIDE DB25 MALE CONNECTOR WITH SOLDER CONNECTIONS AS SHOWN IN DETAIL A.
4. NEW EQUIPMENT AND CABLE REROUTING/ADDITIONS PROVIDED FOR INJECTION WELL 10A (WORK SHOWN BOLD).
5. SEE DUBLIN TECH. DRAWING 51D-5500-N-01380.

LEGEND

EXISTING
NEW/REPLACEMENT
A.I.P. ABANDONED IN PLACE

REF DWG NO.	DRAWING TITLE
95X-5500-X-02114	DRAWING INDEX
95X-5500-E-02117	ELECTRICAL SYMBOLS AND LEGEND
95X-5500-E-02118	ELECTRICAL SYMBOLS AND LEGEND
95X-5500-E-02127	CABLE SCHEDULE
95X-5500-N-02141	INSTRUMENTATION SYMBOLS AND LEGEND

NO.	REVISIONS	DATE	DWN. BY	APPD.
0	ISSUE FOR CFC	9/6/05	GEP	
B	ISSUE FOR 90% REVIEW	8/1/05	GEP	
A	ISSUE FOR 60% REVIEW	5/3/05	GEP	

REF. DWG. NO.

NOTE:
FLUOR FERNALD CADD DRAWING. DO NOT REVISE MANUALLY.

CONFIGURATION MANAGEMENT DRAWING
EXISTING STRUCTURES OR COMPONENTS AFFECTED BY THIS DRAWING WILL BEGIN CONFIGURATION MANAGEMENT CONTROL. SEE NOTES.
COGNIZANT ENGINEER DATE
YES NO

APPROVALS

CIVIL & STR.			SAFETY ENG.		
ELECTRICAL			MAINTENANCE		
ENGINEER			FIRE PROTECT.		
INSTRUMENT			WASTE MANAGE		
MECHANICAL		9/8/05	SECURITY		
			PROJECTS		9/8/05
CHECKED					
APPROVED		9/8/05			

Fernald Closure Project
FLUOR FERNALD, INC.
U.S. DEPARTMENT OF ENERGY

WASTE PIT AREA
GRID 31A
WASTE STORAGE AREA EXTRACTION SYSTEM
PHASE 2
INSTRUMENTATION
CONTROL SYSTEM ARCHITECTURE

RES 4528
DATE 4-25-05
DRAWN G.E. PAUL

95X-5500-N-02144 | 0

FILE NAME: /res4528/95xn2144.dgn

FDPS.DGN 5/30/03

006058

NOTES :

1. SEE 'TABLE A' FOR PUMP, LINE, INSTRUMENT, VALVE NUMBERS AND HIGH POINT FINISHED FLOOR (H.P.F.F.) ELEVATION.
2. SEE 95X-5500-G-02134, 02135 & 02136 SITE UTILITY PIPING PLAN DRAWINGS FOR ACTUAL WELL HOUSE ORIENTATIONS.
3. VENT LINE SHALL BE 1' FIELD ROUTE LINE TO 1'-0' ABOVE FLOOR AND PROVIDE PIPE SUPPORT.
4. FOR P&IDS SEE DRAWINGS 95X-5500-N-02139.
5. USE FLAT FACED FLANGE FOR MATING TO PUMP DISCHARGE FLANGE ONLY.
6. WELLS EW-28 & 33 THE FIT IS ALSO THE PRIMARY FLOW ELEMENT (FE).

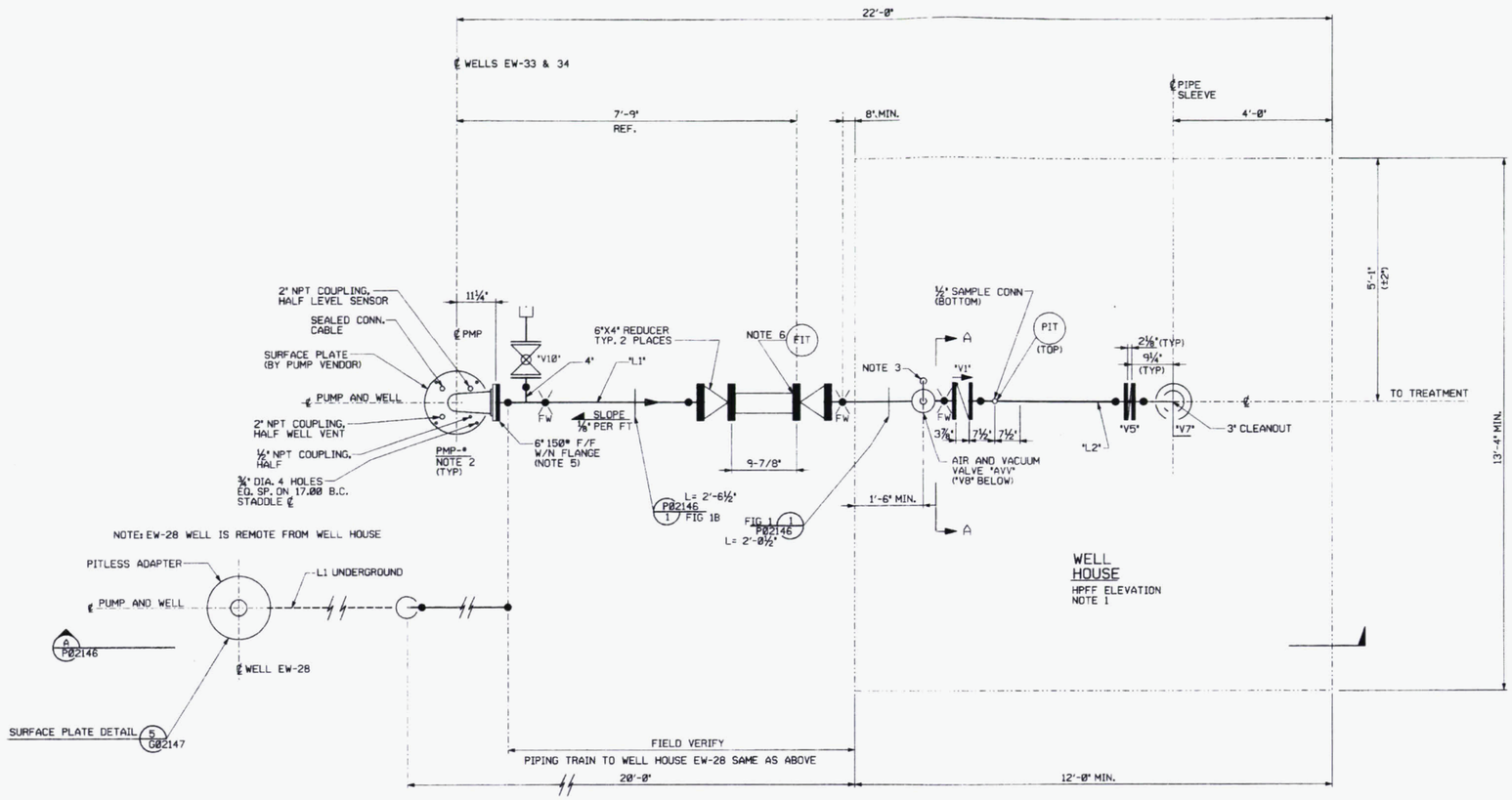

WELL HOUSE PLAN

SCALE : ¾" = 1'-0"

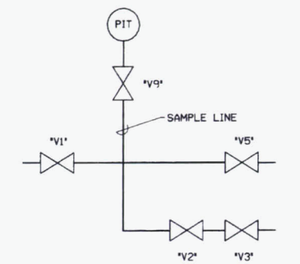

DETAIL "A-A"

TABLE "A"

PMP#	"L1"	"L2"	"L3"	"FIT"	"PIT"	"V1"	"V2"	"V3"	"V4"	"V5"	"V6"	"V7"	"V8"	"V9"	"V10"	"AVV"	H.P.F.F. ELEVATION
28	GW-6"-A-2939	GW-6"-A-2939-IC	GW-6"-A-2940-IC	062	062	V387	V388	V389	V390	V391	V392	V393	V394	V395	V396	28	578.00'
33	GW-6"-A-2949	GW-6"-A-2950-IC	———	085	085	V429	V431	V430	—	V432	—	V433	V428	V434	V435	33	

REF DWG NO.	DRAWING TITLE
95X-5500-X-02114	DRAWING INDEX
95X-5500-P-02146	WELLHOUSE SECTIONS AND DETAILS

NO.	REVISIONS	DATE	DWN. BY	APPD.
0	ISSUED FOR CFC	3-4-05	GEP	[illegible]
B	ISSUED FOR 90% REVIEW	1-11-05	GEP	
A	ISSUED FOR 60% REVIEW	5-3-05	GEP	

NOTE: FLUOR FERNALD CADD DRAWING, DO NOT REVISE MANUALLY.

CONFIGURATION MANAGEMENT DRAWING — YES / NO
SYSTEMS, STRUCTURES OR COMPONENTS PROTECTED, INCLUDING PIPELINES, PIPELINE SUPPORTS, FLOW MANAGEMENT CONTROL. SEE NOTES.
COGNIZANT ENGINEER — DATE

APPROVALS

CIVIL & STR.		SAFETY ENG.	
ELECTRICAL		MAINTENANCE	
ENGINEER		FIRE PROTECT.	
INSTRUMENT		WASTE MANAGE	
MECHANICAL	[illegible] 7/18/05	SECURITY	
		PROJECTS	[illegible] 7/18/05
CHECKED	[illegible]		
APPROVED	[illegible] 7/18/05		

Fernald Closure Project

FLUOR FERNALD, INC.

U.S. DEPARTMENT OF ENERGY

WASTE PIT AREA — GRID 31A

WASTE STORAGE AREA EXTRACTION SYSTEM
PHASE 2
TYPICAL WELLHOUSE PIPING PLAN
SCALE: NOTED

RES 4528
DATE APRIL 5, 2005
DRAWN G.E. PAUL

95X-5500-P-02145 | 0

FILE NAME: /res4528/95xp2145.dgn

FCPS.DGN 5/30/03

006058

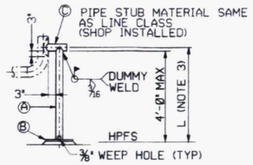

FIG 4

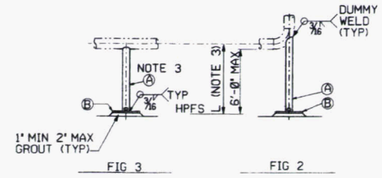

FIG 3 FIG 2

LINE SIZE	Ⓐ SUPPORTING PIPE SIZE	Ⓑ PIPE SUPPORT BASE PLATE	Ⓒ PIPE STUB SIZE	Ⓓ	Ⓔ	Ⓕ	Ⓖ LOWER BASE PLATE	Ⓣ
1 1/2, 2	1-1/2 XS	6X 6X 1/2	1-1/2 XS	1/2	1/4	4	12 X 12 X 1/2	1/2
3,4	2 XS	6X 6X 1/2	3 STD WT	1/2	1/4	4	12 X 12 X 1/2	1/2
6,8	3 STD WT	8X 8X 1/2	4 STD WT	1/2	3/8	6	14 X 14 X 1/2	3/4
10,12	4 STD WT	10X10 X 1/2	6 STD WT	1/2	3/8	8	16 X 16 X 1/2	1
14,16	6 STD WT	12X12 X 3/4	8 STD WT	3/4	3/8	8	18 X 18 X 3/4	1
18,20	10 STD WT	15 X 15 X 1	SEE	3/4	1/2	8	21 X 21 X 1	1-1/4
24	12 STD WT	16 X 16 X 1	NOTE 4	3/4	1/2	8	22 X 22 X 1	1-1/4

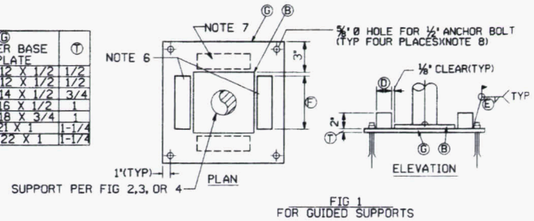

FIG 1
FOR GUIDED SUPPORTS

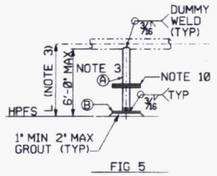

FIG 5

PIPE SUPPORT DETAIL 1 REF A02115
NTS

FIXED BASE SUPPORT

DETAIL "1" NOTES:

1. ALL SUPPORT MATERIAL SHALL BE CARBON STEEL.
2. SPOOL FABRICATOR SHALL FURNISH SUPPORT COMPLETE AS SHOWN AND BAND SUPPORT PARTS TO SPOOL FOR SHIPMENT. STUB Ⓐ SHALL HAVE BEVELED END.
3. DIMENSION L IS SHOWN ON PIPING DRAWING. FABRICATOR SHALL INCLUDE AN EXTRA 6 INCHES IN ITEM Ⓐ FOR FIELD FIT-UP AT INSTALLED LOCATION.
4. DO NOT USE FIGURE 3 FOR SIZE 18 INCHES AND LARGER.
5. PAINT PER SPECIFICATION.
6. INSTALL GUIDE BARS ON TWO SIDES ONLY FOR FIGURES WITH G DESIGNATION. GUIDES TO BE ORIENTED PER THE PIPING DRAWING.
7. INSTALL GUIDE BARS ON ALL SIDES FOR FIGURES WITH A DESIGNATION WHERE INDICATED ON THE PIPING DRAWING.
8. USE HILTI 1/2" X 3 1/2" MINIMUM EMBEDMENT ANCHOR BOLT OR APPROVED EQUAL FOR BASE PLATE.
9. ALL DIMENSIONS ARE IN INCHES, UNLESS NOTED OTHERWISE.
10. SLIDE PLATES TO BE ADDED IN ORDER TO MAKE SUPPORT REMOVABLE.

NOTES :

1. SEE "TABLE A" ON DRAWING 95X-5500-P-02141 FOR PUMP, LINE, INSTRUMENT, VALVE NUMBERS AND HIGH POINT OF FINISHED FLOOR.
2. USE A 1" SOCKOLET WITH A 1" BALL VALVE AND A 1" AIR AND VACUUM VALVE.
3. PROVIDE EACH WELL WITH A 3/4" POLYETHYLENE CHLORINE INJECTION TUBE STRAPPED TO THE PUMP DISCHARGE COLUMN WITH NON CORRODING FASTENERS AT 10' INTERVALS. TERMINATE LOWER END NEAR PUMP INLET SCREEN AND EXTEND UPPER END THROUGH THE PUMP SURFACE PLATE FOR EW-33.
4. TRIM CASING TO HEIGHT SHOWN AND INSTALL NEW CLASS 150 SS FLAT FACE FLANGE FOR EW-33.
5. WELLS EW-28 & 33 THE FIT IS ALSO THE PRIMARY FLOW ELEMENT (FE).

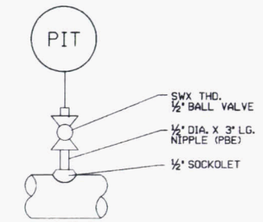

SCREWED INSTRUMENT INSTALLATION
DETAIL 3
NTS

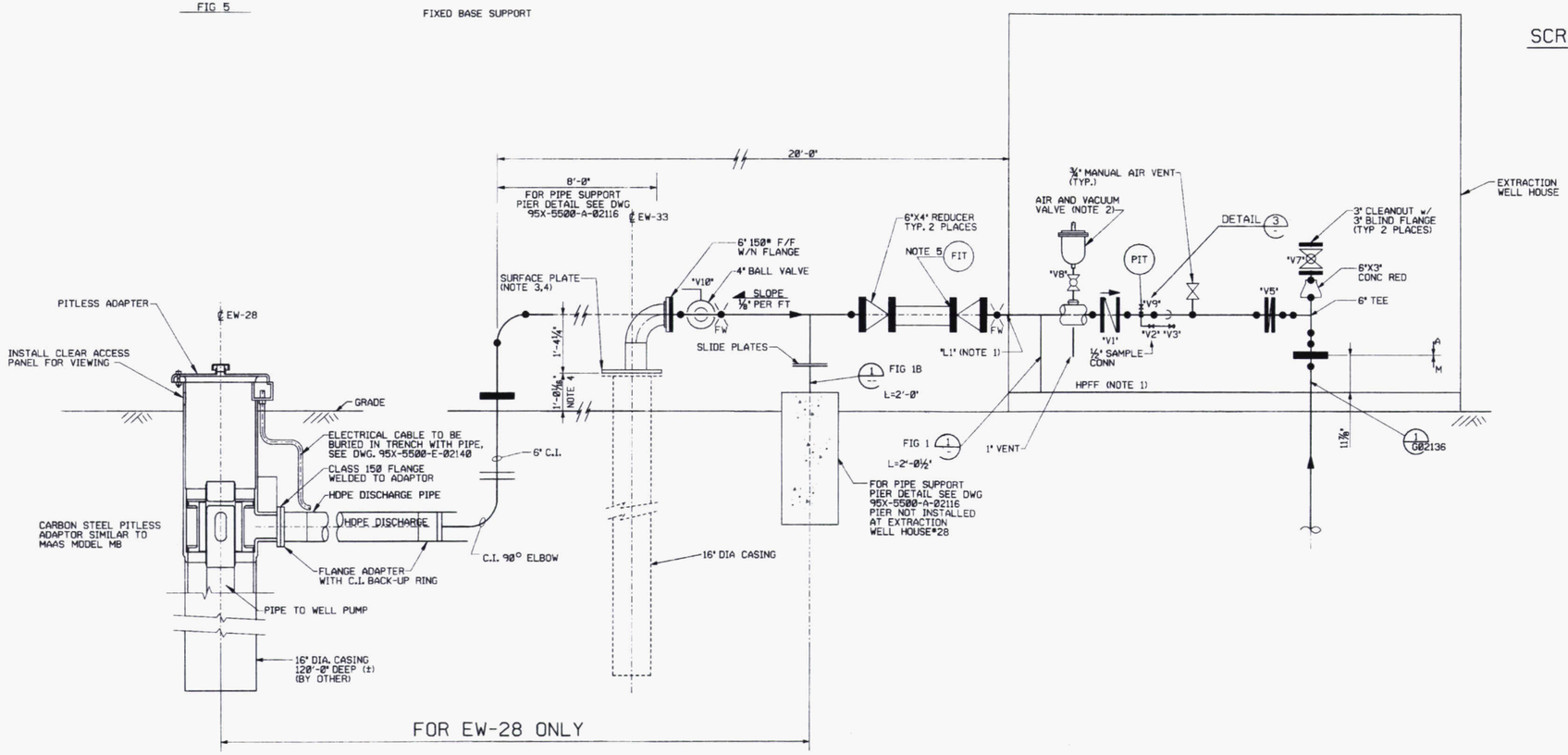

NOTE:
PITLESS ADAPTER TO BE USED FOR EW-28 DUE TO IT BEING REMOTE FROM WELL HOUSE

SECTION A P-02141
3/4"=1'-0"

REF DWG NO.	DRAWING TITLE
95X-5500-X-02114	DRAWING INDEX
95X-5500-A-02115	WELL HOUSE PLAN & ELEVATIONS
95X-5500-A-02116	SECTIONS AND DETAILS
95X-5500-G-02139	CIVIL DETAILS
95X-5500-G-02140	CIVIL DETAILS

NO.	REVISIONS	DATE	DWN. BY	APPD.
0	ISSUED FOR CFC	11-05	GEP	
B	ISSUED FOR 90% REVIEW	11-05	GEP	
A	ISSUED FOR 60% REVIEW	11-05	GEP	

REF. DWG. NO.

NOTE:
FLUOR FERNALD CADD DRAWING. DO NOT REVISE MANUALLY.

CONFIGURATION MANAGEMENT DRAWING
SYSTEMS, STRUCTURES OR COMPONENTS AFFECTED BY THIS DRAWING ARE UNDER CONFIGURATION MANAGEMENT CONTROL. SEE NOTES.
COGNIZANT ENGINEER DATE

APPROVALS

CIVIL & STR.			SAFETY ENG.	
ELECTRICAL			MAINTENANCE	
ENGINEER			FIRE PROTECT.	
INSTRUMENT			WASTE MANAGE	
MECHANICAL			SECURITY	
			PROJECTS	
CHECKED				
APPROVED				

Fernald Closure Project
FLUOR FERNALD, INC.
U.S. DEPARTMENT OF ENERGY

WASTE PIT AREA GRID 3/A
WASTE STORAGE AREA EXTRACTION SYSTEM
PHASE 2
WELLHOUSE PIPING SECTION & DETAIL
SCALE: NOTED

RES 4528
DATE APRIL 5, 2005
DRAWN G.E. PAUL

95X-5500-P-02146 | 0

FILE NAME: /res4528/95xp2146.dgn

FCPSLDGN 5/30/03

006058

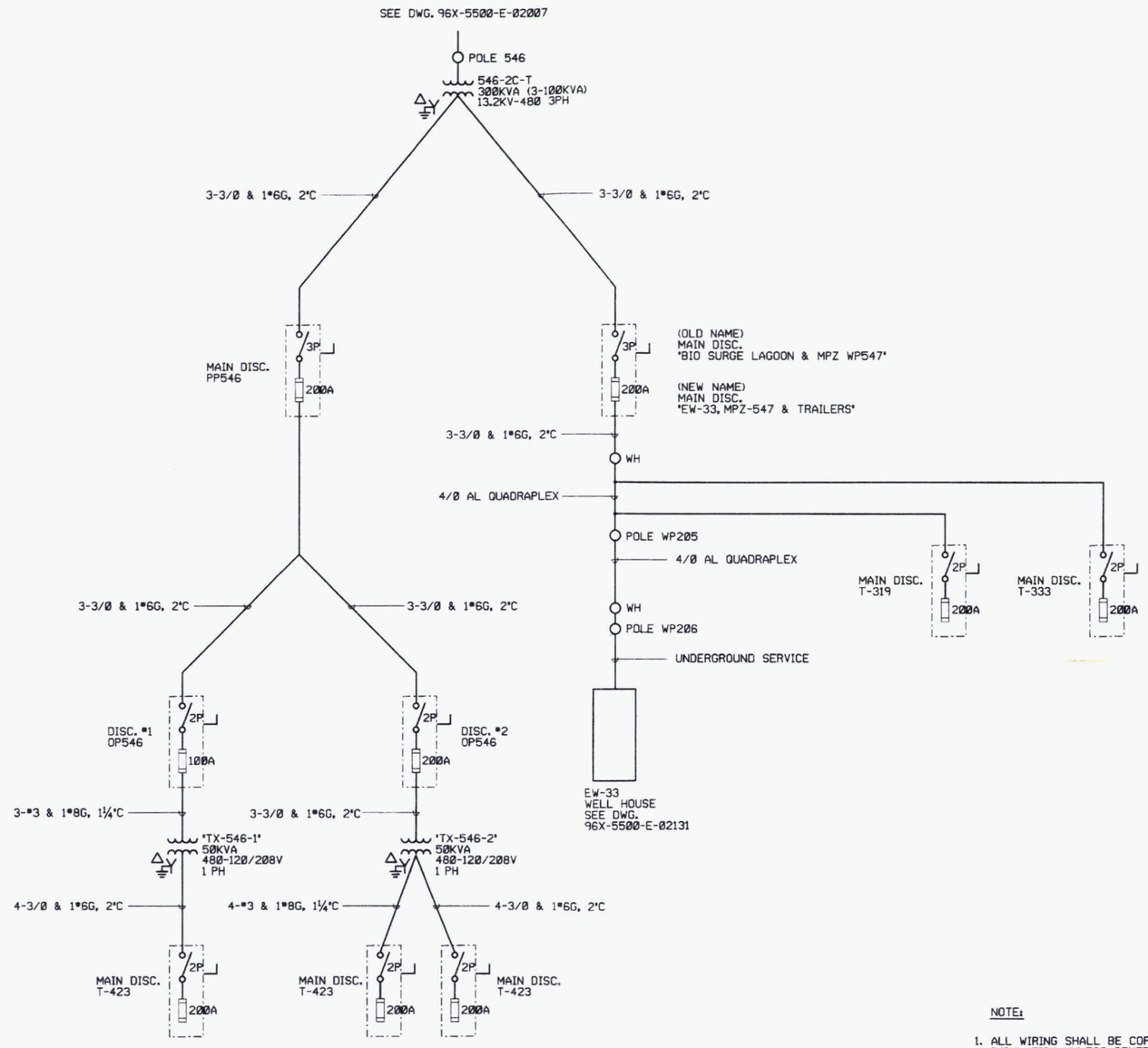

NOTE:

1. ALL WIRING SHALL BE COPPER WITH THWN INSULATION UNLESS OTHERWISE SPECIFIED.

NO.	REVISIONS	DATE	DWN. BY	APPD.

NO.	REVISIONS	DATE	DWN. BY	APPD.	REF. DWG. NO.
0	ISSUE CFC	9/1/05	GEP	JK	18A-5500-E-01355

NOTE:
FLUOR FERNALD CADD DRAWING, DO NOT REVISE MANUALLY.

CONFIGURATION MANAGEMENT DRAWING — YES / NO

SYSTEMS, STRUCTURES OR COMPONENTS DEPICTED ON THIS DRAWING ARE UNDER CONFIGURATION MANAGEMENT CONTROL. SEE NOTES.

COGNIZANT ENGINEER — DATE

APPROVALS

CIVIL & STR.				SAFETY ENG.	
ELECTRICAL	J. E. Kirk	9/7/05		MAINTENANCE	
ENGINEER				FIRE PROTECT.	
INSTRUMENT				WASTE MANAGE	
MECHANICAL				SECURITY	
				PROJECTS	9/8/05
CHECKED					
APPROVED					

Fernald Closure Project

FLUOR FERNALD, INC.

U.S. DEPARTMENT OF ENERGY

GRID 3IB — SURGE LAGOON AREA

POLE 546 SINGLE LINE DIAGRAM
NO SCALE

DATE 7/11/05
DRAWN G.E. PAUL

16A-5500-E-00160 | 0

FILE NAME: /BASE/MISC/16AE0160.DGN

FCP4.DGN 5/30/03

006058

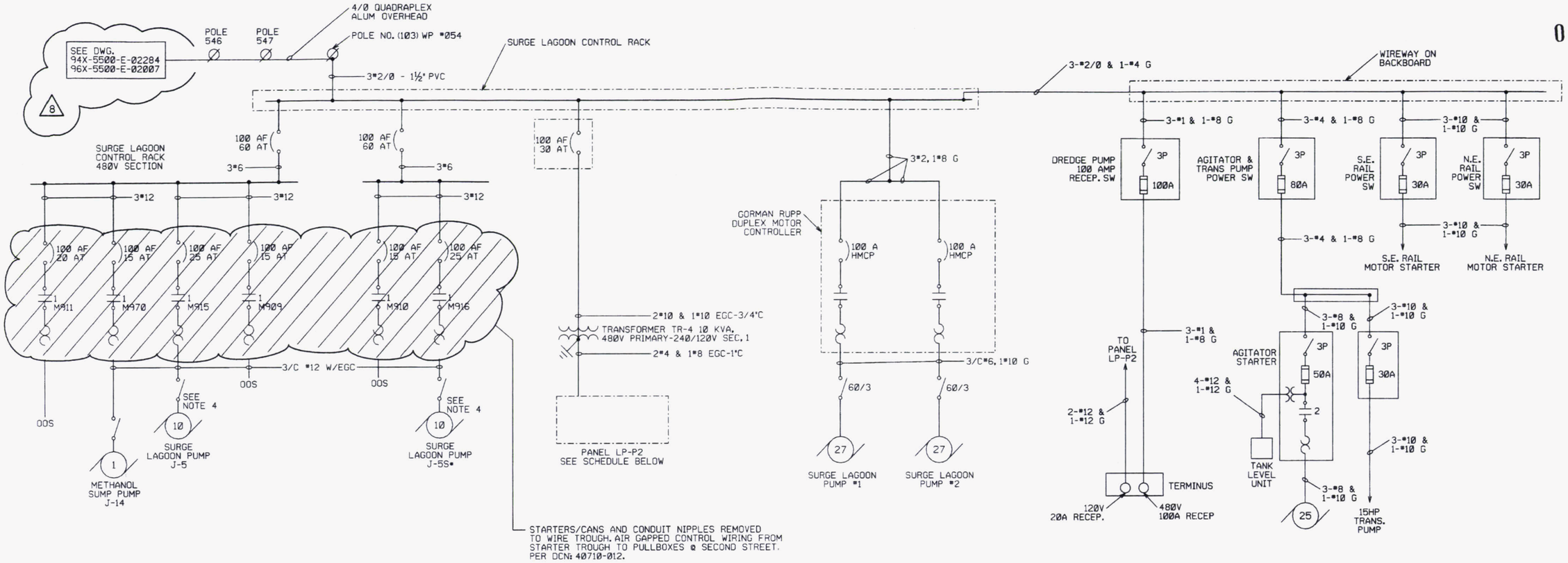

PANELBOARD LP-P2	VOLTAGE:	MOUNTING:
LOCATION: BIO SURGE LAGOON	☒ 120/240V., 1 PHASE, 3 WIRE ☐	☐ FLUSH ☐ COLUMN ☒ SURFACE ☐

COVER:	MAINS:		NEUTRAL:	
☒ DOOR WITH LOCK	☐ LUGS ONLY	AMP. ☐ TOP	☐ 50%	☐ NONE
☐ DOOR WITHOUT LOCK	☒ MAIN BREAKER	70 AMP. ☒ BOTTOM	☒ 100%	

TOTAL LOAD	VA
LOAD PHASE B	VA
LOAD PHASE A	VA

ALL BRANCH BREAKERS 20 AMP. UNLESS NOTED. BREAKER INTERRUPTING CAPACITY: RMS SYM. AMPS

DESCRIPTION	LOAD	NO.	A	B	NO.	LOAD	DESCRIPTION	A	B
		1	15	20	2		SOUTH UNDER DRAIN		
LIGHTS METH. AREA		3	15		4		(OFF)		
METH. DETECTED ON FLOW METER		5	15	20	6		GFCI REC.		
B.S.L. AIR MONITOR		7	20	20	8		LIGHTING CONT.		
		9	20	30	10				
HEAT TRACE N.W.		11		30	12				
LAGOON LITES		13	30	20	14		LAGOON LITES		
METH. TANK SE		15			16		LAGOON LITES		
TERMINUS RECEPTACLE		17	20	60	18		TO GFCI		
		19			20		N. TEST SIDE		
		21		20	22		OZONE GEN. STATION (HVAC CKT.)		
		23		20	24		OZONE GEN. STATION (OZONE GEN. CKT.)		

PANEL LP-P2 SCHEDULE

8

THIS DRAWING IS
VOID
SEE DRAWING
18A-5500-E-00160

REFERENCE DWGS.

1. SEE DWG. NO. 18X-1920-X-00262 FOR COVER SHEET & LOCATION PLAN.
2. SEE DWG. NO. 18X-1920-X-00305 FOR LEGEND & ABBREVIATIONS.
3. SEE DWG. NOS. AS FOLLOWS FOR ASSOCIATED PLANS:
   18D-1920-E-00306 SITE PLAN
   18D-1920-E-00310 BIODENITRIFICATION & METHANOL AREA GROUNDING
   18A-1920-E-00312 SURGE LAGOON, SHT. 1 OF 3
   18A-1920-E-00314 SURGE LAGOON, SHT. 3 OF 3
   18A-1920-E-00327 SLCP LADDER DIAGRAMS
   18A-1920-G-00349 SLCP DETAILS

NOTES:

1. ALL 480V BREAKERS SHALL HAVE 25,000 RMS SYM AMP INTERRUPTING CAPACITY.
2. OPERATOR HANDLE/BREAKER - SQUARE "D" CLASS 9422 WITH ELECTRICAL INTERLOCK - CLASS 9999, TYPE R27.
3. SEE FOLLOWING DRAWINGS FOR SLCP "B" INTERCONNECTING WIRING:
   I010 - CONTROL POWER DISTRIBUTION (SL) SHEET 1 OF 1.
   I037 - I/O SCHEMATICS FOR RACK #6B PRIMARY (SL) SHEET 1 OF 2.
4. PUMPS J-5 AND J-5S TO BE REPLACED WITH PUMPS #1 & #2 CONTROLLED BY NEW GORMAN-RUPP DUPLEX MOTOR CONTROLLER.
5. AFTER PUMP IS REMOVED, LABEL DISCONNECT "SPARE".
6. INSTALL A NEW 20 AMP SINGLE POLE BREAKER IN LP-P2 FOR THE 120V RECEPTACLE ON THE TERMINUS.

PROJECT NO. 55300

NO.	REVISIONS	DATE	DWN. BY	APPD.
8	ADDED 94X-5500-E-02284 AT POLE 546 PER DCN NO: 40750-008 VOIDED THIS DRAWING AND ADDED NEW REFERENCE DRAWING NO.	9/1/05	GEP	
7	INCORP. WORK COMPLETED DCN 40710-026 AND 40750-004	10/8/02	GEP	
6	AS-BUILT PER DCN: 40710-012 REDLINE DWGS.	01/08/01	GEP	GEP
5	AS-BUILT PER RES 3116, 3293 AND 3381	04/25/00	RML	GEP
4	AS-BUILT PER T.O. P-041 PHASE II & WALKDOWN	01/26/00	RP	PK
3	REVISED PER RES 3293	4/13/99	LJD	DJB/GEP
2	ISSUE FOR CFC PER RES #3116	8/27/98	LJD	WJL/GEP
1	REVISED PER OZONE GENERATOR, RES #3381	8/4/98	LJD	GEP
0	AS-BUILT	8/4/98	LJD	GEP

REF. DWG. NO.: 18A-1920-E-00312

MAT REVISED 8/5/96
MAT REVISED 6/29/98
FDF4.DGN

NOTE: FLUOR DANIEL FERNALD CADD DRAWING, DO NOT REVISE MANUALLY.

CONFIGURATION MANAGEMENT DRAWING
SYSTEMS, STRUCTURES OR COMPONENTS DEPICTED ON THIS DRAWING ARE UNDER CONFIGURATION MANAGEMENT CONTROL. SEE NOTES.
BILL LYONS 8/5/98
COGNIZANT ENGINEER DATE

APPROVALS				
			SAFETY ENG.	
CIVIL & STR.			MAINTENANCE	
ELECTRICAL	BILL LYONS	8/5/98	FIRE PROTECT.	
ENGINEER			WASTE MANAGE	
INSTRUMENT			SECURITY	
MECHANICAL	D.R. THOMSON	4/13/99	PROJECTS	9/1/05
CHECKED	GEP			
APPROVED	G.E. PAUL	8/5/98		

Fernald Environmental Management Project
FLUOR DANIEL FERNALD
U.S. DEPARTMENT OF ENERGY

BIODENITRIFICATION SYSTEM
SURGE LAGOON
SINGLE LINE & PANEL SCHEDULE

RES #3816
DATE Apr. 21, 1998
DRAWN L. DESSAUER
18A-5500-E-01355 | 8

FILE NAME: /RES3116/18AE1355.DGN

006058
006953

Department of Energy

Ohio Field Office
Fernald Closure Project
175 Tri-County Parkway
Springdale, Ohio 45246
(513) 648-3155

SEP 29 2005

Mr. James A. Saric, Remedial Project Manager
United States Environmental Protection Agency
Region V-SRF-5J
77 West Jackson Boulevard
Chicago, Illinois 60604-3590

DOE-0338-05

Mr. Thomas Schneider, Project Manager
Ohio Environmental Protection Agency
Southwest District Office
401 East Fifth Street
Dayton, Ohio 45402-2911

Dear Mr. Saric and Mr. Schneider:

TRANSMITTAL OF THE CERTIFIED FOR CONSTRUCTION DESIGN DRAWINGS FOR THE WASTE STORAGE AREA EXTRACTION SYSTEM, PHASE II

Enclosed are the subject drawings for your information. Note that the drawings cover the installation of one extraction well. An additional well may be required pending resolution of EPA/OEPA comments on the Waste Storage Area Phase II Design Report received in August 2005. We are currently preparing responses to the comments. Should additional wells be required, additional design drawings would be generated to cover them.

If you have any questions or require additional information, please contact Johnny Reising at (513) 648-3139.

Sincerely,

Johnny Reising

for William J. Taylor
Director

FCP:Skintik

Enclosure

cc w/enclosure:
J. Saric, USEPA-V, SRF-5J
G. Jablonowski, USEPA-V, 5HRE-8J
M. Cullerton, Tetra Tech
T. Schneider, OEPA-Dayton (3 copies of enclosure)
M. Shupe, HIS GeoTrans
F. Bell, ATSDR
R. Vandergrift, ODOH
Dave Lojek, DOE-OH
AR Coordinator, Fluor Fernald, Inc., MS78

cc w/o enclosure:
Johnny W. Reising, DOE-OH-FCP
Helen E. Bilson, MS 1
J. Chiou, Fluor Fernald, MS88
W. Hertel, Fluor Fernald, MS12
M. Jewett, Fluor Fernald, MS1
F. Johnston, Fluor Fernald, MS12
J. Stone, Fluor Fernald, MS20
J. Thompson, Fluor Fernald, MS55