Fluor Fernald, Inc.
P.O. Box 538704
Cincinnati, OH 45253-8704

(513) 648-3000

FLUOR

January 7, 2005

Fernald Closure Project
Letter No. C:SP:2005-0001

Mr. John M. Sattler
U. S. Department of Energy
Ohio Field Office - Fernald Closure Project
175 Tri-County Parkway
Cincinnati, Ohio 45246

Dear Mr. Sattler:

CONTRACT DE-AC24-01OH20115, SUBMITTAL OF NEVADA TEST SITE WASTE PROFILE ONLO-000000132, REVISION 1, SILOS 1 & 2 – STABILIZED URANIUM ORE PROCESSING RESIDUES

Enclosed is a signed copy of Nevada Test Site (NTS) Waste Profile ONLO-000000132, Revision 1, Silos 1 & 2 – Stabilized Uranium Ore Processing Residues. Revision 1 is the result of the annual profile review and is being submitted to update the profile to meet the requirements of the Nevada Test Site Waste Acceptance Criteria, Revision 5. To aid in the review, we have provided a detailed list of changes made to the profile and related documents.

A suggested cover letter for transmitting this Waste Profile to Nevada is enclosed for your convenience. Should you have any questions, or require additional information, please contact Steve Heffron at (513) 648-5650.

Sincerely,

Mark Ch for

Dennis Carr
Senior Project Director
Silos Project

DC:DSA:kl
Enclosure(s)

c: David S. Adkins, MS52-3
Terri L. Binau, DOE Contracting Officer, DOE-OH
Reinhard Friske, MS52-3
Steve Heffron, MS 52-3
Ralph E. Holland, DOE Contracting Officer, DOE-OH/FCP
John North, MS20
Dennis Sizemore, Fluor Fernald, Inc. Prime Contract, MS 2
File Record Subject Submittal of Nevada Test Site Waste Profile ONLO-000000132, Revision 1, Silos 1 & 2 – Stabilized Uranium Ore Processing Residues
Project Number 40600/1.1
WM Letter log copy
Administrative Record, MS 78

To: John B. Jones, NNSA/NSO

From: John Sattler

Subject: Submittal of Profile ONLO-000000132, Revision 1, Silos 1 & 2 – Stabilized Uranium Ore Processing Residues

Enclosed is a signed copy of Nevada Test Site (NTS) Waste Profile ONLO-000000132, Revision 1, Silos 1 & 2 – Stabilized Uranium Ore Processing Residues. Revision 1 is the result of the annual profile review and is being submitted to update the profile to meet the requirements of the Nevada Test Site Waste Acceptance Criteria, Revision 5. To aid in the review, we have provided a detailed list of changes made to the profile and related documents.

c: Without Enclosures
Reinhard Friske, MS52-3
Steve Heffron, MS52-3
John North, MS20

Fernald Closure Project Waste Profile
Silos 1 & 2 – Stabilized Uranium Ore Processing Residues
ONLO-000000132, Rev. 1
Detailed List of Changes

1. General- Completed new waste profile form as required by NTSWAC, Revision 5.

2. Section B.2.b- Changed the profile revision number and date.

3. Section B.6- Provided annual and total volumes and changed to an on-going waste stream.

4. Section B.7- Added estimation of remaining shipments and frequency.

5. Section C.9- Added "Project related trash" as a waste component at 0.5% of total volume.

6. Section E.1- Updated container drawing number with most recent drawing number.

7. Plutonium Gram Equivalent Calculations- Revised table with calculations for maximum package activity and maximum container volume. Results are well below NTSWAC, Revision 5 requirements.

8. Procedures Reference List- Removed reference to EW-1016, Waste Management Project Work Authorization Program and replaced with Silos 1 & 2 project specific procedure. Silos 1 and 2 Waste Treatment and Packaging Process Control Plan, 40700-PL-0010, replaces EW-1016.

9. Process Knowledge Narrative, Pages 6 & 7- Revised discussion on waste curing and control of free liquids. See PKN.

10. Process Knowledge Narrative, Page 8- Removed the Plutonium Gram Equivalent table from document. This table was revised to meet the NTSWAC, Revision 5 format, and is included as a freestanding document. Added sodium, nickel and barium as constituents found in Silos 1 and 2 material. This change was made to agree with MEF 3706 and the site RI/FS data. Removed plastisizer as an additive during the stabilization process and added a defoaming agent as a new additive.

11. Process Knowledge Narrative, Page 9- Added project related trash and void filler material discussion to the PKN.

12. Waste Characterization Approach document- Revised document to clarify approach to waste characterization of the Silos 1 and 2 waste.

13. WAC Deviations Document- Added new WAC Deviation Request allowing, if necessary, the placement of the Package Certification Label into the NTS envelope for each shipment instead of placing the label on the container.

14. Drawings- Replaced container drawings with updated versions.

15. Replaced previous cure time/free liquid report with more recent study titled "Silo 1 and 2 Treatment Development – Improved Set Time Formulations", document number 40750-RP-0058.

Waste Profile Sheet

☒ NTS Only ☐ Hanford Only ☐ Both NTS and Hanford

A. Generator Information

1. Company name: **Fernald Closure Project**
2. Address: **P. O. Box 538704, Cincinnati, OH 45253-8704**
3. Generator facility: **Various**

4. Primary Technical Contact: **David S. Adkins** email: **david.adkins@fernald.gov** Phone: **513-648-4364** Fax: **513-648-4925**

5. DOE Contact: **John Sattler** email: **john.sattler@fernald.gov** Phone: **513-648-3145** Fax: **513-648-3076**

6. Waste Certification Official: **Reinhard Friske** email: **reinhard.friske@fernald.gov** Phone: **513-648-5477** Fax: **513-648-5002**

7. Generator's EPA Identification Number (If profile involves hazardous materials): **N/A**

B. General Waste Stream Information

1. Waste stream name: **Silos 1 & 2 - Stabilized Uranium Ore Processing Residues**

2.a. NTS Waste stream identification number: ONLO-000000132 N/A ☐

2.b. Hanford Profile Sheet Tracking Number:_____ N/A ☒

☐ New Profile
☒ Revised Profile (attach summary of changes) Revision Number: **1** Profile Revision Date: **01/07/05**

3. Waste generating process description: *Describe the process that generated the waste stream identified by this profile sheet. Attach process flow charts and other available information if helpful in explaining the generating process.* **This waste was generated through the processing of high-grade uranium ores and consists of stabilized residues. See attached process knowledge narrative (PKN).**

4. Waste management services requested:
   ☒ Disposal
   ☐ Storage (Available only at Hanford)
   ☐ Treatment (Available only at Hanford); describe:
   ☐ Other; describe:

5. Waste Category (Check all that apply)
   ☐ Low Level ☐ Mixed Low-Level
   ☐ Mixed Low-Level (Generated within Nevada Only)
   ☐ "Classified Waste" ☐ "Classified Waste" requiring protection from visual observation
   ☐ Asbestiform Low-Level Waste ☒ 11(e)2 By-product Material (Small Quantities)
   ☐ Transuranic Waste ☐ Hanford Category 1 LLW
   ☐ Hanford Category 3 LLW ☐ Exceeds Hanford Category 3 LLW
   ☐ DOE Equivalence GTCC ☐ Contains accountable nuclear material

6. Estimated volume: ☒On-going (m^3/yr):**26,745** Total remaining volume (m^3):**38,900**
   ☐One Time Only (m^3):

7. Estimated frequency of shipments per fiscal year: **2400 shipments year 1 of profile anniversary date, 1100 shipments year 2 of profile anniversary date.**

C. Physical/Chemical Characterization

1. Physical/Chemical process knowledge. Describe the process knowledge information used for physical/chemical characterization of this waste stream:

Waste Profile Sheet

☒ Material Safety Data Sheets. Attach MSDSs used to designate this waste stream (Hanford Site users can list Hanford MSDS numbers below in lieu of providing MSDSs).

☐ Mass balance from process inputs. Describe how process inputs are controlled and recorded:

☒ Historical process and analytical data. Describe: **Refer to Process Knowledge Narrative.**

☐ Inert debris characterized by inventory control. Check this box when the waste stream consists largely of inert debris items that are characterized by inventory control procedures and recorded on inventory sheets. Briefly list or describe inventory procedures:

☐ Other. Describe:

☐ Physical/chemical characterization varies. Check this box when the characterization strategy varies from container to container. Describe below the strategy used to meet the acceptable knowledge requirements of the waste acceptance criteria.

2. Physical/chemical analysis. Describe the sampling and analysis performed to characterize this waste stream:

☐ No analysis performed.
☐ Field screening performed. Describe the frequency and type of field screening performed:
☐ Laboratory analysis performed. Describe the sample source and sampling frequency and methods:

List the analytical methods used, including upper confidence limits and explanations of anomalies for all analytes analyzed. Attach representative analytical sample result summary. For NTS, attach Table B-1 and data validation summary.
Silos 1 & 2 waste is 11(e)2 By-Product Material and is exempt from solid waste regulations. Refer to Process Knowledge Narrative for additional information regarding the physical and chemical composition.

3. Regulatory status. Check all boxes below that describe the regulatory status of the waste stream: **Silos 1 & 2 waste is 11(e)2 By-Product Material and is exempt from solid waste regulations. Refer to Process Knowledge Narrative for additional information regarding the regulatory status.**

☐ Federally regulated (RCRA) hazardous waste (40 CFR 261). List all RCRA U, P, F, K or D waste codes that could apply to the waste stream; place waste codes that do not apply to all containers in parentheses:
☐ For Hanford only, Washington State dangerous waste (WaAdminCode173-303), excluding W001. List all Washington waste codes that apply; place waste codes that do not apply to all containers in parentheses:

☐ For Hanford only, Washington State dangerous PCB waste (Waste code W001 of WaAdminCode173-303): Describe PCB source and concentration:
☐ TSCA regulated PCB (40 CFR 761). Describe category of PCB (i.e. PCB waste, PCB bulk product waste, PCB remediation waste, PCB analytical waste, etc). Describe PCB source and concentration:
☒ Waste generated from cleanup activities conducted under CERCLA
☐ Waste is not regulated under any of the above regulations.
☐ Waste is hazardous per state-of-generation regulations? If yes, identify hazardous components and state regulations.

4. Federal land disposal restrictions. Check all boxes that apply:
☒ Waste stream is not subject to federal land disposal restrictions

☐ Waste stream requires treatment to meet land disposal restrictions of 40 CFR Part 268.
If checked, provide the following information:
☐ Wastewater ☐ Nonwastewater ☐ Hazardous debris
☐ Waste contains Underlying Hazardous Constituents (applicable UHCs must be included in Item C.9)
Was the waste treated after August 24, 1998? Yes ☐ No ☐

☐ Waste stream meets some of the applicable land disposal restrictions of 40 CFR 268. Check this box if the waste has been treated to meet some federal land disposal restrictions or if it meets some federal

Waste Profile Sheet

land disposal restrictions as generated. If checked, describe the treatment performed and analytical data to support LDR determination:

☐ Waste stream meets all applicable land disposal restrictions of 40 CFR 268. Check this box if the waste has been treated to meet all federal land disposal restrictions or if it meets the land disposal restrictions as generated. If checked, describe the treatment performed and analytical data to support LDR determination:

5. (For Hanford only) Waste characteristics. Check any of the boxes for regulated characteristics (WaAdminCode173-303-090) that apply to the waste stream:

☐ Flash point < 38°C ☐ Flash point 38°C - <60°C ☐ Flash point 60°C – 93.3°C
☐ Ignitable solid ☐ Oxidizer
☐ pH 2 or less ☐ pH 12.5 or greater
☐ Liquid that corrodes steel at a rate greater than or equal to 0.25 inches/year
☐ Reactive cyanide ☐ Reactive sulfide ☐ Water Reactive
☐ Explosive, unstable or pyrophoric ☐ Generates toxic gases, vapors or fumes

6. Physical state:
☐ Liquid ☐ Sludge ☐ Debris ☐ Solid
☐ Powder/Dust ☐ Sealed Source ☐ Encapsulated ☒ Solidified
☐ Other; describe:

7. Liquid form. If the waste stream contains liquid, check all that apply:
☐ Containerized liquid ☐ Absorbed Liquid ☒ Stabilized liquid

8. Other contents: Check any of the following that are components of the waste stream, and provide a description of how the waste acceptance criteria for each are met:

☐ Animal carcasses
☐ Infectious waste ☐ Vegetation ☒ Free liquids
WM:PKGG-A-0002. 11-C-361, 11-C-362, 11-C-378
☐ Chelating agents ☐ Organic liquids ☐ Asbestos waste ☐ Particulates
☐ Gases ☐ PCBs ☐ Explosives ☐ Pyrophorics
☐ Beryllium Dust ☐ Other

9. Waste composition. Describe the gross composition/component of the waste stream and all hazardous constituents that contribute to any waste codes or LDR treatment standards.
☐ If the chemical composition varies greatly from container to container, check this box and provide bounding values or ranges here. Further evaluation will occur on the specific package paperwork as it is provided for highly variable streams

CAS Number	Chemical constituent	Waste Component	Estimated weight percent ☐ Estimated volume percent ☒
		MEF 3706, Stabilized uranium-ore process residues	**99.5**
		Project related trash	**0.5**

D. Radiological Characterization

1. Radiological process knowledge. Describe the source(s) of the radioactive material in this waste stream (i.e., the radiological processes that introduced the radioactive material into the waste stream).
This waste was generated through the processing of high-grade uranium ores and consists of stabilized residues. See attached process knowledge narrative (PKN).

2. Radiological characterization methods. Describe the analysis and characterization methods used to determine the radionuclide inventory of the waste stream. Check all that apply.

☒ Radionuclide material accountability. Describe the accounting methods used to help establish the radionuclide inventory: **Site MC&A accountability procedures. Refer to Process Knowledge Narrative.**
☒ Radiochemical analysis. Describe type and frequency of sampling and analysis: For NTS, attach Table B-1 and data validation summary **Gamma spec performed in 1990/1991 as part of Operable Unit 4 Remedial Investigation (OU4 RI). This data is historical sample data, therefore, a data validation summary is not included.**
☐ Nondestructive assay. Describe type and frequency of assay performed:
☐ Field measurement instruments. Describe the type of instruments and how they are used to help establish the radionuclide inventory:
☐ Scaling factors. Explain how the scaling factors were derived and how they are used:
☐ Computer models. Describe the computer model used and how it is used to establish the radionuclide inventory:
☒ Other. Describe method: **Using the 1990/91 OU4 RI data, ratios of major isotopes versus Ra-226 were developed. Ra-226 in the final waste will be monitored by calibrated in-line equipment. Using the Ra-226 value, all major isotopes will be calculated from the OU4 RI ratios.**

If several methods are checked above, describe how the methods are used together to establish the radiological inventory of the waste stream. For complex or highly variable waste streams, explain the strategy used to meet the acceptable knowledge requirements of the waste acceptance criteria. **All isotopes, with the exception of U-238, U-234, U-235, Ac-227 and Pa-231 are developed as discussed above. U-238, U-234 and U-235 are derived from a mass balance of all material placed in Silos 1 & 2. Ac-227 and Pa-231 are derived from the U-235 value.**

3. Estimated Radiation Dose of disposal package (mSv/hr):

Surface **0.3 to 1.0** 30 cm **0.2 to 0.8** One Meter **0.1 to 0.3**

4. (Section D4 need not be filled out for Hanford only profiles)
☐Yes ☒No Does the waste contain enriched uranium (^{235}U wt% ≥ 0.90), ^{233}U, ^{239}Pu, ^{241}Pu, ^{242m}Am, ^{243}Cm, ^{245}Cm, ^{247}Cm, ^{249}Cf, ^{251}Cf? If yes, answer the following and check those that apply for compliance with the criticality safety criteria of the NTSWAC. If no, skip to Section D.5.

4.1 ☐ Attach completed NTSWAC, Appendix E, Table E.3, ^{235}U FGE and ^{235}U Effective Enrichment, for each enrichment level or range.

4.2 ☐ Waste package contains 15 g of ^{235}U FGE or less.
Specify controlling document:

4.3 ☐ Fissile material does not exceed 350 g of ^{235}U FGE per package nor does it exceed 2 g of ^{235}U FGE per kilogram of waste (mass of the package is not included in the mass of the waste) (graphite and beryllium must not exceed 1% of the mass of the waste).
Specify controlling document:

4.4 ☐ Waste complies with the limits and conditions as specified in NTSWAC, Appendix E, Table E.4.
Specify controlling document:

4.5 ☐ Graphite and beryllium exceeds 1% of the mass of the waste.

4.6 ☐ Waste complies with the limits and conditions as specified in NTSWAC, Appendix E, Tables E.5 and E.6. Specify controlling document:

4.7 ☐ A waste specific nuclear criticality safety evaluation (NCSE) was performed to show compliance with the NTSWAC, Section 3.2.1. Attach NCSE for review and specify controlling document.

5. Reportable radionuclides. List the radionuclides that could be reportable in the waste stream:
☒ If the nuclides vary greatly from container to container, check this box and provide bounding values or ranges here. Further evaluation will occur on the specific package paperwork as it is provided for highly variable streams. *Note: For the NTS, concentrations must be entered in Becquerel/cubic meter.*

Isotope	Concentration Ci/m3 (**Bq/m3**); Range and Activity Representative of Final Waste Form			
	Activity Range			Representative
Th-230	**6.5E+07**	**To**	**3.8E+09**	**7.1E+08**
Th-232	**7.1E+05**	**To**	**5.6E+07**	**7.2E+06**
Ra-226	**4.6E+08**	**To**	**9.8E+09**	**4.8E+09**
Pb-210	**4.6E+08**	**To**	**9.8E+09**	**4.8E+09**
Ac-227	**1.1E+07**	**To**	**6.3E+08**	**8.8E+07**
Pa-231	**1.1E+07**	**To**	**6.3E+08**	**8.8E+07**

6. Does the waste contain any alpha-emitting transuranic radionuclides with a half-life greater than 5 years, ^{241}Pu, or ^{242}Cm? **NO** If yes, list below.

Transuranic Nuclide	Concentration (nCi/g); Range and Activity Representative of Final Waste Form			
	Activity Range			Representative

7. Are there any packages in this waste stream that exceed the Plutonium Gram Equivalent limits specified in NTSWAC, Section 3.2.2? Yes ☐ No ☒
Provide container type(s), quantity, and supporting PGE calculations. **PGE calculations attached.**

8. For Hanford only, Total FGE as defined in Hanford Site Solid Waste Acceptance Criteria, HNF-EP-0063.

E. Packaging

1. Packaging used. Check the applicable boxes.
☐ Drum; describe size(s), type, and weight range:
☐ Metal box; describe size(s), type, and weight range
☐ Wood box; describe size(s), type, and weight range:
Do the Metal or Wood boxes meet the 3,375 lb/ft^2 strength test? Yes **X** No ☐ N/A ☐
****Silos 1 & 2 container certified to meet the 3,375 lb/ft^2 strength test.****
☐ High integrity container; describe size(s), type, and weight range:
☐ Intermodal transport container; describe size(s), type, and weight range:
☒ Other container; describe size(s), type, and weight range: **75 3/4" diameter X 78 7/8" high (nominal), Custom-designed carbon steel containers, Fernald Drawing # C-065-166031-002 (attached), IP2, 5500 kg to 10000 kg. Lids are secured by rivets. This will be used in place of a TID. Grapple lifting device required for handling will be supplied by FCP.**
☐ Bulk waste – bulk package and shipment dimensions and weight ranges – describe (supersack, burrito wraps, equipment, etc.):
☐ Vented; describe type of venting:
☐ Shielded; describe type of shielding:

Waste Profile Sheet

☒ Sorbents; describe type and amount used: **As required by WM:PKGG-A-0002**
☐ Radiologically stabilized in concrete or other stabilization agent; describe type and amount of material used and provide data to demonstrate waste meets stabilization criteria:

2. Maximum container size: **1.93 m diameter X 2.03 m height**

3. Maximum container gross weight: **10000 kg**

4. Describe any liners/protective coatings used to ensure that the container is compatible with the waste: **NA**

5. Does each container meet each of the package criteria as defined in the waste acceptance criteria?
   ☒ Yes ☐ No
   List documentation that demonstrates compliance with waste acceptance criteria.

The Fernald controlling document is PT-0014, Procurement of Storage and Shipping Containers. Container specific test data is available upon request.

6. Reference any special handling procedures and ALARA documentation, if applicable. **Fernald Waste Container for Silos 1 & 2, Preliminary Design Package, IP2 Container**

F. Additional Information

1. Comments: **NA**

2. Exception or Deviation Request to waste acceptance criteria: Complete if needed
   a) Identify specific requirement for which an exception or deviation is desired: **NTSWAC, Rev. 5, Section 3.2.8 and Appendix D, table of approved containers. See attached WAC deviation request.**
   b) Provide reason an exception or deviation is needed:
   c) Describe any proposed alternative methods to meet the general intent of the requirement:

3. Attachments. List any attachments provided with this profile: **WAC Deviation Request, Procedures Reference List, Process Knowledge Narrative, Silos 1 & 2 Waste Characterization Approach, 1 Container and 3 grapple drawings, 5 MSDS, Report 40750-RP-0058, Rev 0., PE-g calculations**

G. Generator Signatures

To the best of my knowledge, the information provided on this form and the attached documentation is a full, true and accurate description of the waste stream. Willful and deliberate omissions have not been made. All known and suspected hazardous materials have been disclosed.

Technical Contact Name: **David S. Adkins** Date: 01/07/05

Signature: _____

Waste Certification Official Name: **Reinhard Friske** Date: 0-07-05

Signature: _____

PROFILE ONLO-000000132, REVISION 1
WAC Deviations

Requirement: NTSWAC, Revision 5, Section 3.2.8 states "....packages shall not exceed 4082 kg (9000lbs) per box and 544 kg (1200 lbs) per drum".

Justification: The custom designed containers planned for use on the Silo 1 & 2 waste exceed the maximum weight for a box or drum as specified in the referenced section of the NTSWAC. The maximum gross weight of a filled Silo 1 & 2 waste container is 10,000 kg (~22,000 lbs).

Duration: The duration of the deviation is the length of the Silo 1 & 2 project (~7000 containers).

Corrective Action: None required.

Requirement: NTSWAC, Revision 5, Appendix D, lists a table of approved disposal containers.

Justification: The custom designed container planned for use on the Silo 1 & 2 project is not listed in the table as an approved disposal container. Fernald container drawing number C-038-044166-016 is included as an attachment to this submittal.

Duration: The duration of the deviation is the length of the Silo 1 & 2 project (~7000 containers).

Corrective Action: None required.

Requirement: NTSWAC, Revision 5, Section 3.2.11, Marking and Labeling states "Each waste package must be marked and labeled according to Appendix C. Markings and labels must be intact and readable when the shipment arrives at the disposal site."

Justification: FCP plans are to adhere to the above requirement. The DOT and bar code labels will be applied in the normal fashion prior to the containers leaving the Silos 1 and 2 process facility. However, the PCLs are applied at a later time once the containers have left the facility. FCP requests to have the flexibility of including the Package Certification Label (PCL) as part of the NTS envelope with each shipment instead of placing it on the container. This practice will only be incorporated if a safety or ALARA concern arises related to the placement of the PCL on the containers.

Duration: The duration of the deviation is the length of the Silo 1 & 2 project (~7000 containers).

Corrective Action: None required.

Plutonium Gram Equivalent Calculations for
Reportable Isotopes included in NTS Profile ONLO-000000132, Rev.1

Isotope	Package Activity, Bq/m3	PE-g Conversion Factors	PE-g/m3
Th-230	3.80E+09	2.77E-10	1.05E+00
Th-232	5.60E+07	1.39E-09	7.78E-02
Ra-226	9.80E+09	7.30E-12	7.15E-02
Pb-210	9.80E+09	1.16E-11	1.14E-01
Ac-227	6.30E+08	5.07E-09	3.19E+00
Pa-231	6.30E+08	1.09E-09	6.87E-01
		PE-g/m^3 =	**5.20E+00**
			<< 190.5 PE-g/m^3
Silo 1 & 2 Container Volume (m^3) =	5.30	**Container Total PE-g =**	**2.75E+01**
			<< 300 PE-g
Max PE-g per shipment	10.60	**Shipment Max PE-g =**	**5.51E+01**
			<< 750 PE-g
Used profile max activities and container max internal volume. With 2 containers per shipment, cannot exceed 750 PE-g per shipment.			
Meets package activity limits in 3.2.2 of NTSWAC, rev.5.			

Procedures Reference List
for Profile ONLO000000132, Revision 1

EW-0001	MEF Characterization Process Procedure
PT-0014	Procurement of Storage and Shipping Containers
PT-0018	Preparation of Documentation for Off-Site Shipment of Hazardous Material
RM-0053	Waste Characterization Information Manual
WM:CHAR-T-0001	Radiological Characterization for Waste Disposal
WM:PKGG-A-0001	Certification of Low Level Radioactive Waste and Supporting Paperwork
WM:PKGG-A-0002	Absorbent Determination
WM:SHIP-T-0003	Inspection of Waste Packages and Loaded Transport Vehicles
DOE, NV Letter From Carl P. Gertz Dated 6/20/02	"Disposal of Fernald Silos Waste Materials at the Nevada Test Site (NTS)"
40700-PL-0010, Rev. 0	Silos 1 and 2 Waste Treatment and Packaging Process Control Plan
40700-RP-0058, Rev. 0	Silos 1 and 2 Treatment Development-Improved Set Time Formulations, Phase I Final Report, December 17, 2004
FEMP-04RI-6 FINAL	Remedial Investigation Report for Operable Unit 4 Final, November 1993.
	Fernald Waste Container for Silos 1 & 2, Preliminary Design Package, IP2 Container
MSDS	NALCLEAR 7768
MSDS	Defoamer 7011L
MSDS 13750	Bento Grout
MSDS 22534	Fly Ash (Typical)
MSDS 21018	Portland Cement (Typical)

PROCESS KNOWLEDGE NARRATIVE
PROFILE ONLO-000000132, REVISION 1
Silos 1 & 2 - Stabilized Uranium Ore Processing Residues

Determination

11(e)(2) byproduct material

Descriptive Name

Stabilized Silos 1 and 2 material consisting of uranium ore processing residues (K-65 material) and Bentogrout™ that meets the current revision of NTS Profile ONLO-000000132.

Process Generating the Waste

Background

The Feed Materials Production Center (FMPC), now known as the Fernald Closure Project (FCP) is owned by the U.S. Department of Energy (DOE) and was operated from 1952 to 1989. While in operation, the uranium ore processing facility provided high-purity uranium metal products in support of the nuclear weapons production program.

In May 1951, the Atomic Energy Commission, predecessor to the DOE, initiated construction operations at the FMPC. Full-scale production was initiated after pilot operations began in 1952 and continued until July 1989. Production ceased in the summer of 1989 and plant resources were directed toward environmental remediation activities. The facility was formally closed by congressional authorization in June 1991.

These remedial actions included the FCP's Operable Unit 4 (OU4). OU4 includes the following facilities and associated environmental media: Silos 1&2 and their contents; Silos 3 and its contents; an empty Silos 4; the decant sump; a radon treatment system; a portion of a concrete pipe trench and other concrete structures; an earthen berm surrounding Silos 1&2; soils beneath and immediately surrounding Silos 1, 2, 3, and 4; perched groundwater in the vicinity of the Silos that are encountered during the implementation of remedial actions.

Operational History of Silos 1&2

Originally constructed in 1951 and 1952, three of the four reinforced concrete storage Silos within OU4 received by-product materials until 1960. Silos 1 and 2 received residues generated from the processing of high assay uranium ores at the FMPC and Mallinckrodt Chemical Works (MCW) in St. Louis, MO. The ores processed at MCW came primarily from one mine located in the Belgian Congo. Those ores contained relatively high concentrations of uranium oxides in the range of 40 to 50 percent as well as high concentrations of radium.

The FMPC refinery processed two basic classes of materials: (1) mined pitchblende ores from the Shinkolobwe Mine in the Belgian Congo, the Rum Jungle Mine, and the Radium Hill Mine in Australia; and, (2) other uranium concentrates that had already been refined to some degree. The second class of materials included uranium concentrates that had undergone a preliminary refining process at an off-site mill and material recovered at various stages of FMPC operations. The term "K-65" was used to describe the processing of both the Belgian Congo and the Australian ores and consequently, these materials are currently known as "K-65 Residues".

Uranium-bearing ores, as they are mined, contain not only uranium, but also equilibrium activity-concentrations of radionuclides that are a part of the natural-uranium decay chains. These radionuclides, including radium, are removed either in a preliminary milling process or in the refining process, if the ores are not preprocessed through a mill. When the FMPC refinery processed pitchblende ores, the refinery wastes contained a high concentration of the radioactive uranium decay-chain products. These refinery wastes were referred to as "hot" raffinates. The term "hot" was used to indicate that the materials contained a high concentration of the radionuclide radium and gamma-emitting progenies that result in a significant direct penetrating radiation exposure rate.

Liquid "hot" raffinates were filtered. Resulting filter cake contained most of the radium as insoluble barium-radium sulfate. The filter cake was re-slurried, neutralized, and pumped to Silo 2. The filtrate along with non-pitchblende raffinates from other FMPC production runs was evaporated, calcined, and pneumatically conveyed to Silo 3 as "cold" metal oxides. Some of the radium remained with the filtrate, and some of the thorium-230, a uranium-238 decay product, remained within the non-pitchblende uranium concentrates due to the inefficiency of the source mill in removing this metal. Those materials are called "cold" metal oxides because they have lower radiation levels than the raffinates in Silos 1 & 2, but they are also radioactive.

The material stored in Silo 1 was generated at Mallinckrodt Chemical Works (MCW) in St. Louis, Missouri, as a result of processing to extract uranium from pitchblende ores. The pitchblende ores processed at MCW and the great majority of the pitchblende ores processed at the FMPC site came from one mine, the Shinkolobwe Mine in the Belgian Congo. The ores contained relatively high concentrations of uranium oxide (U_3O_8), in the range of 40 to 50%.

Initially, the materials from the MCW refining operations were sent back to the African Metals Corporation. Beginning in April 1949, the materials were no longer returned to the African Metals Corporation following processing; they were stored at MCW for future disposition. Later, ownership of the waste was transferred to the U.S. Department of Energy - Fernald Environmental Management Project, currently called the FCP.

As production continued, storage became a problem. Therefore, the drummed K-65 materials were sent from MCW to the Lake Ontario Ordnance Works (LOOW) near Niagara Falls, New York, for storage. Some of the drums that were sent to LOOW were emptied into a concrete water tower at that site. Approximately 6,000 drums

were shipped from LOOW to the FMPC site for storage. Beginning in 1951, continued production at the MCW resulted in approximately 25,000 drums being sent directly from St. Louis to the FMPC.

Before construction of the FMPC refinery, MCW operated a refinery for the production of uranium. The MCW refinery used a dual-cycle ether process that was somewhat different from the tributyl phosphate (TBP)-kerosene extraction system used at the FMPC site. Another difference between the FMPC process and the MCW refinery operation was the method used to extract radium and other impurities from the uranium. Unlike the FMPC process, impurities were removed from the K-65 materials at MCW in the ore digestion process before the uranium extraction system.

The removal of uranium from pitchblende at MCW consisted of milling the ores to pass a 100-mesh sieve and, secondly, a 3-hour leach in concentrated nitric acid, which resulted in the radium precipitating as radium sulfate ($RaSO_4$). Barium sulfate ($BaSO_4$) was added during digestion to ensure co-precipitation. If insufficient sulfide was present in the ore, sulfuric acid (H_2SO_4) was added to ensure the precipitation of radium and lead. The precipitated materials were vacuum-filtered, then re-slurried and digested with sodium carbonate (Na_2CO_3) and sodium formate ($NaHCO_2$). This second digestion process was to recover approximately 2% of the original uranium, which remained in this waste fraction. The second digestion also led to the precipitation of impurities including ferric, aluminum, and manganese hydroxides. Following the carbonate leach, the slurry was again vacuum-filtered and packaged in drums as K-65 materials. Much of the thorium (most importantly Th-230), as a nitrate, remained soluble and traveled in solution with the uranyl nitrate to the extraction process area. Therefore, Th-230 is not present in secular equilibrium with radium in the K-65 materials.

Approximately 24,000 of the 31,000 drums of pitchblende ore processing materials received at the FMPC site from MCW and LOOW were transferred to Silo 1 for storage. The remaining 7,000 drums of K-65 materials received from MCW and LOOW were transferred to Silo 2. As the drums were received by railroad car at the FMPC site, the drums were temporarily staged in an area to the east of Silos 3 and 4. The drummed material was transferred to Silos 1 from July 1952 until November 1953 via a specially constructed Drum Handling Building.

Wet solids were delivered to the K-65 Drum Handling Building in 55-gal drums, each containing approximately 230 kilograms (kg) (500 lb.) of material. The material had a bulk density of approximately 1.44 grams/cubic centimeter (g/cm^3) (90 lbs/ft^3) and contained approximately 40% moisture by weight. One drum of material was handled at a time.

Each drum was placed on a slat conveyor and moved inside the building. There it was placed onto a skip hoist and raised to a point above the slurry tank, where it was inverted. The contents of the drum were dumped into the slurry tank by vibration, aided by a high-velocity water jet. The water jet also washed the drum, which was eventually returned to the conveyor and removed from the building. Approximately 280 liters (L) [75 gal] of slurrying liquor, which was fresh water during initial operations, were consumed in removal of the solids from one drum.

The resulting slurry, which had a consistency of approximately 4 pounds (lb.) of wet solids per gallon of slurry, was continuously agitated in the slurry tank.

When approximately 7,570 L (2,000 gal) of slurry had been produced, the contents of the slurry tank were pumped to storage in Silo 1. This slurry pumping was followed by a 6,250-liter (1,650-gal) clear liquor wash that was passed through the slurry tank, slurry pump, transfer line, and into the storage Silo.

The slurries pumped into storage Silo 1 were allowed to settle into two layers. The slurry liquor, which consisted of either water or a metal nitrate solution, formed the top layer over a bed of the settled, wet solids. This layer of liquid was decanted from the Silos through the decant ports and placed into the decant sump tank.

From here, the decanted liquid was periodically pumped back to the Drum Handling Building where it passed through a pressure filter and was stored in a filtrate storage tank. The filtrate storage tank was located within the Drum Handling Building on the concrete pad, forming the floor of the structure. The filtered liquid was then used for slurry preparation in the K-65 Drum Handling Building. Excess liquids were transported back to the FMPC Plant 8 for treatment, then to the General Sump for final treatment before being discharged to the Great Miami River. The K-65 Drum Handling Building was demolished in 1983 to allow for installation of the earthen berm.

Although MCW processed the pitchblende ores by batch runs on the incoming ores from the Shinkolobwe Mine, no conscious attempt was made at Fernald to transfer the material to the Silos by the original MCW batch or lot number. Therefore, the materials within Silo 1 represent a range of processing runs at MCW, displaying the variations present in the natural ores and the generating production process.

While Silo 1 consists solely of transferred drummed materials from MCW and LOOW, Silo 2 is a mixture of MCW K-65 materials and FMPC-generated K-65 materials. As previously stated, 7,000 drums of K-65 materials transferred from MCW and LOOW to Fernald were emptied into Silo 2. The transfer of the drummed materials received from off-site into Silo 2 occurred between late 1953 and January 1956. The generating process and the methodology to transfer the MCW/LOOW materials into Silo 2 are similar to those used in Silo 1, as discussed in the previous section.

Additionally, Silo 2 received materials that were generated at the FMPC site (resulting from the processing of pitchblende ores shipped directly from the Shinkolobwe Mine) and a small quantity of Australian ores (from the Rum Jungle Mine and the Radium Hill Mine). The processing completed at the FMPC site was performed to extract the uranium from these very rich pitchblende ores. Belgian Congo ores were processed from May 1954 until August 1958. Australian ores were processed following the Belgian ores from May 1957 until March 1958. The last K-65 slurry was added to Silo 2 in January 1959. The Australian ore residues constitute less than 180,000 kg (200 tons) of the estimated 4.4 million kg (4,900 tons) in Silo 2.

Fernald-generated material in Silo 2 is a by-product of refinery operations conducted in Plant 2/3 and supporting structures at the facility. Pitchblende ores were received at Plant 1 of the FMPC site where the ores were thawed (if necessary), milled, and assayed for their uranium content. Milling, performed to facilitate the digestion process, took place in a Williams Mill where the ores were ground until they could pass a 100-mesh sieve. The milled ores, following assay, were conveyed to the Plant 1 ore Silo for storage until they were processed in the refinery (Plant 2/3).

At the refinery, the milled ores were transferred to digester tanks by batch. Each batch varied from 1,820 to 2,270 kg (4,000 to 5,000 lb.) of uranium and 2,270 to 4,550 kg (5,000 to 10,000 lb.) of net feed. Nitric acid and water were added to the ores in the digesters to yield a final slurry concentration of 200 grams (g) of uranium per liter and 3 Normal excess nitric acid. Following a typical 3-hour digestion, the digest slurry was transferred to a feed holding tank in the extraction area of the refinery.

The uranium extraction system at the FMPC site, at the time of K-65 processing, employed a series of three perforated plate pulse columns, including an extraction column, a scrub column, and a re-extraction column. The aqueous feed slurry from the hold tank was introduced into the top of the extraction column. An organic extractant, 33.5% by volume TBP in an inert purified kerosene diluent, was introduced into the bottom of the same extraction column. The combined liquid phases were pulsed through the stationary perforated plates, with the aqueous feed slurry passing down and the organic phase moving up through the column. The organic extractant flow rate and the feed stream flow rate were controlled to maintain a constant uranium saturation level in the organic product stream. The uranyl nitrate solution was removed from the aqueous feed slurry by the organic extractant. Extraction of the uranium from the ores was essentially complete when the organic product stream left the top of the extraction column.

The remaining metals and other impurities in the pitchblende ores were left in the bottom of the extraction column. This by-product stream was known as K-65 raffinates. The K-65 raffinates were freed of the organic phase in a disengagement chamber at the base of the extraction column. Despite this disengagement process, considerable quantities of entrained TBP remained in the raffinate leaving the column. In order to recover these reusable concentrations of TBP, the raffinates were transferred to a single stage mixer settler to be combined with continuously recycled kerosene.

The TBP extraction system was relatively specific toward uranyl nitrate; other nitrate compounds, such as thorium nitrate, present in the feed slurry were physically entrained in the organic product phase leaving the extraction column. In order to remove these impurities from the feed stream and achieve product quality standards, a second purification step was performed in the scrub column. In the scrub column, the organic product stream from the extraction column entered the bottom while deionized water entered the top of the column. During the continuous flow through the scrub column, essentially all of the remaining metallic impurities were transferred to the aqueous phase, together with a small quantity of uranium. The aqueous phase was directed back to the extraction column to recover the

remaining uranyl nitrate. The pure organic phase continued through the final re-extraction column where the TBP-kerosene was separated from the uranyl nitrate. The operation of the re-extraction column is not relevant to the generation of the K-65 materials and is, therefore, not presented. The impurities residing in the aqueous phase from the scrub column were transferred to the K-65 raffinates leaving the extraction column.

The kerosene-washed K-65 raffinates were filtered through a pre-coated rotary vacuum filter to remove suspended solids. Most of the gamma-emitting uranium progeny and radium were filtered out in this step. Filtrate was passed on to the cold metal, oxide process for transfer to Silo 3. The filter cake from the rotary filter contained the gamma-emitting uranium progeny; therefore, it was termed "hot raffinate." This filter cake was re-slurried and then neutralized with lime [$Ca(OH)_2$]. The resulting slurry had a consistency of about 0.5 kg of wet solids per liter of slurry (4 lb. of wet solids/1 gal of slurry). Once each day during refinery operation, the hot raffinate slurry was pumped into Silo 2 through a 7.6-cm (3-inch) Schedule 80-transfer line located in a concrete trench that extended from the refinery to the Silo. This slurry transfer was followed by a 4,500- to 5,500-liter (1,200- to 1,500-gal) process water wash to clean the transfer line.

Following completion of K-65 processing operations at the FMPC site, approximately 150 drums of radium-contaminated material, consisting of soils from the MCW/LOOW drum staging area, cleanup materials, and excess K-65 samples, were placed into Silos 2 in June 1960. In response to concerns of the FMPC Operating Contractor [National Lead of Ohio (NLO), Inc.] regarding chronic Rn-222 emissions from the Silos, all vents, manways, and other penetrations through the domes of Silos 1 and 2 were sealed in 1979. Additionally, Bentogrout™ (a non-radioactive bentonite clay) was added as a top layer over the Silos 1 and 2 waste in 1991 to control radon emissions. Material (with the exception of decant liquid and samples) has not been removed from Silos 1 or 2 since the final filling.

Treatment Process

The K-65 material and Bentogrout™ in Silos 1 and 2 will be removed from the Silos as a water/Silos material slurry and temporarily stored in the Tank Transfer Area (TTA) until processing in the Remediation Facility. The material is sluiced from the TTA and transported as a slurry with nominally 15 weight percent solids to the slurry receipt tanks in the Remediation Facility.

Material from the slurry receipt tanks is continuously transferred to the reaction/polymer addition tank where a polymer flocculating agent is added. The material then goes to the clarifier for thickening (to nominally 30% solids). Material is transferred continuously from the clarifier underflow to slurry feed tanks. While the slurry is in the feed tanks, which are agitated to maintain the homogeneity of the slurry, the Ra-226 concentration and the percent solids for the entire contents of the tanks will be measured using in-line, real-time instruments installed on the tank recirculation loop. Based on these measurements, a mixing batch formulation of waste, fly ash, and Portland cement will be calculated such that that the final product contains less than 9.8 E+09 Bq/m3 of Ra-226 and meets the NTSWAC

requirements of no free liquid. The comparability of these weights will be assessed by WC personnel to verify that the batch will produce a final waste product that, based on data from the Silo 1 and 2 Treatment Development-Improved Set Time Formulations, Phase I Final Report (40750-RP-0058), will meet the NTSWAC requirements of no free liquid. In addition, WC personnel will verify the Ra-226 activity is less than 9.8 E+09 Bq/m3. The packaging of this material will also be performed under the oversight of the FCP NTS Quality Control group, who will document that the packaging meets the requirements as stated above.

Depending upon the Ra-226 concentrations in the slurry feed, waste loading is expected to range from approximately 10% to 40% (nominal 20%) on a weight basis. Nominal waste loading results in a density of the final waste form that is approximately 1.6 g/cc. The final product is produced in mixers by batches, each sized to fill one disposal container, using one of three parallel mixer lines. The disposal containers are filled with stabilized product and sealed for disposal at NTS.

The solidified waste was evaluated to determine its potential to release liquids during handling, storage, and transportation. This evaluation is documented in the Silo 1 and 2 Treatment Development-Improved Set Time Formulations, Phase I Final Report (40750-RP-0058). A temperature-cycling test was conducted over a ten-day period during which samples of various formulations, after curing 24 hours, were kept at approximately 24°C during daytime hours and placed in a freezer at less than 0°C overnight. After ten days, no free water had collected on the top surface of the cured grout. A shaker test was performed on samples of various formulations, after curing 24 hours, using a wrist shaker set at a low frequency, but high amplitude, for 36 hours. At the end of the shaker test, no free water had collected on the top surface of the cured grout. The results of these tests demonstrate that the treated material is not a high moisture content waste and meets the NTS free liquids WAC (free liquid does not exceed 0.5 percent of the volume of the waste processed to a solidified form).

Based on the studies, formulations that stayed within a particular range of %waste loading and % solids were demonstrated to cure within 24 hours and meet the NTS WAC free liquids criteria. Stabilized Silos 1 and 2 material meeting this criteria is adequately cured and meets NTS WAC free liquids criteria after 24 hours of cure.

If the grout mix in a container does not fall within the formulation criteria for a 24 hour cure cycle, the mix will be allowed to cure for 120 hours or until free liquid testing (shaker test) demonstrates that the material meets NTS WAC free liquid criteria. Initially for this case, process samples for free liquids testing are planned and as operational data are developed, additional criteria can be developed and samples may not be needed. If sample results indicate that free liquid is present that does not meet the NTS WAC criteria, then sufficient absorbent will be added to the container, per WM:PKGG-A-0002, to ensure that the NTS WAC free liquids criteria are met.

Radiological Composition

As discussed in the preceding section, the wastes in Silos 1 & 2 are residues derived from processing uranium ores. Consequently, they contain decay-chain

products of uranium-238, uranium-235, and thorium-232. The relative concentrations of the radionuclides will vary depending on the extent to which they were removed from the ore during processing. Based on the Remedial Investigation Report for Operable Unit 4, average concentrations for selected radionuclides in the final waste form for stabilized Silos 1 and 2 material are approximately: U-238 - 85 pCi/g, Th-230 – 12,500 pCi/g, Th-232 - 128 pCi/g, and Ra-226 – 85,000 pCi/g. U-235 in Silos 1 & 2 material is 0.711% (uranium basis), based on Materials Control and Accountability records.

Chemical Composition

The in-situ Silos 1 and 2 material consists of bentonite clay (Bentogrout™ - composed of crystalline quartz), hydroxides, carbonates, and sulfates. Bentogrout™ comprises approximately 2.2 % by weight. Carbonates and sulfates comprise approximately 20% of the waste. Major metallic constituents found in the waste include: calcium, iron, magnesium, sodium, nickel, barium and lead.

In addition to the previously mentioned constituents for in-situ material, the following constituents will be included in the stabilized waste form. These include: Portland cement (composed primarily of calcium silicates and other calcium compounds), fly ash (composed of silica, alumina, and various oxides), polymer flocculant (proprietary formula) and a defoaming agent (~5ppm, proprietary formula).

Hazardous Waste Listings and Characteristics

F-listing: This waste consists of stabilized K-65 residues. This waste does not contain any of the spent solvents listed in 40 CFR 261.31/OAC 3745-51-31. It also does not meet the listing description of a listed hazardous waste from a non-specific source at 40 CFR 261.31/OAC 3745-51-31. Based on process knowledge, this waste does not meet the listing description of a spent solvent or hazardous waste from a non-specific source by virtue of the mixture rule, derived-from rule or the contained-in policy.

K-listing: This waste does not meet the listing description of a listed hazardous waste from a specific source at 40 CFR 261.32/OAC 3745-51-32. Based on process knowledge, this waste does not meet the listing description of a spent solvent or hazardous waste from a specific source by virtue of the mixture rule, derived-from rule or the contained-in policy.

P and U-listing: This waste does not meet the listing description of a listed discarded commercial chemical product, etc. at 40 CFR 261.33/OAC 3745-51-33. Based on process knowledge, this waste does not meet the listing description of a listed discarded commercial chemical product, etc. by virtue of the mixture rule, derived-from rule or the contained-in policy.

Toxicity Characteristics: This waste is stabilized Silos 1 and 2 material consisting of K-65 material and Bentogrout™. In-situ Silos 1 and 2 waste is 11(e)(2) byproduct material under the Atomic Energy Act of 1954. As a result of the slurry retrieval method for the material, it must re-solidified before disposal. As previously

discussed, the retrieval and re-solidification is accomplished by the addition of a polymer flocculating agent, flyash, Portland cement and a defoaming agent (~5ppm, proprietary formula). Based on the relevant MSDSs for these additives, no RCRA hazardous characteristics are imparted to the stabilized waste by their addition. Consequently, the stabilized Silos 1 and 2 material is also 11(e)(2) byproduct material. Byproduct material is excluded from the definition of a solid waste under the Ohio Administrative Code (OAC) and RCRA (3745-51-04 and 40 CFR 261.4, respectively). Because the waste is not a solid waste, it cannot be a hazardous waste under the OAC or RCRA.

Small volumes of Personal Protection Equipment (PPE) and assorted forms of project related trash (such as process control samples, plastic, paper, wood, bolts, bags, hepa filters, etc.) will generated during the Silo 1 and 2 waste processing. These materials will be co-packaged with the Silo 1 and 2 waste in some of the waste containers, depending upon the availability of freeboard space. This material will not exceed 0.5% of the total estimated waste stream volume. Negligible activity is added to the shipment by the presence of these materials and does not increase the total activity within the number of significant figures reported. The added volume is not included in the estimate of the waste volume used in calculating volume activity concentrations. This yields a conservative value for the volume activity concentrations.

Silos 1 and 2 containers will be filled,nominally, to 90% of the container capacity. If a condition arises where a completed container has excess void space, the space will be filled with an inert void space filler such as vermiculite.

SILOS 1 & 2 – STABILIZED URANIUM ORE PROCESSING RESIDUES WASTE CHARACTERIZATION APPROACH
1/7/2005

Silos 1 & 2, located at the Fernald Closure Project, contains approximately 8,890 cubic yards of uranium ore processing residues generated during former operations. The Silos 1 & 2 uranium ore processing residues are 11(e)(2) byproduct material as defined under the Atomic Energy Act of 1954, as amended.

The Silos 1 & 2 material will be removed from the silos as a water/silos material slurry and temporarily stored in the Tank Transfer Area (TTA) until processing in the Remediation Facility. The material is sluiced from the TTA and transported as a slurry with nominally 15 weight percent solids to the slurry receipt tanks in the Remediation Facility. Material from the slurry receipt tanks is continuously transferred to the reaction/polymer addition tank where a polymer flocculating agent is added. The material then goes to the clarifier for thickening. Material is transferred continuously from the clarifier underflow to slurry feed tanks. While the slurry is in the feed tanks, which are agitated to maintain the homogeneity of the slurry, the Ra-226 concentration and the percent solids for the entire contents of the tanks will be measured using in-line, real-time instruments installed on the slurry feed tank re-circulation loop. Based on these measurements, the mixing batch formulation of waste, fly ash, and Portland cement will be calculated.

To characterize this waste stream for disposal at NTS, Waste Characterization (WC) relied on its existing program with minor modifications. This approach included using MC&A assays and radiological data from Operable Unit 4 Remedial Investigation (OU4 RI). From this data the concentrations of radionuclides of concern were calculated on the basis of relationships derived from Operable Unit 4 Remedial Investigation (OU4 RI) data.

To ensure shipping containers of stabilized Silos 1 and 2 material are consistent with the profile parameters outlined in NTS Profile ONLO-000000132, data from inline process control instrumentation will be used. To verify the accuracy of this instrumentation, samples will be collected from the feed stream and from the final product. Additionally, during the initial startup of operations testing will verify bench scale data on grout formulations to full-scale operations.

Using this characterization data, WC will characterize each shipping container in accordance with procedure EW-0001, MEF Characterization Process Procedure. Based on this characterization, Waste Characterization personnel will verify that each shipping container meets the NTS waste acceptance criteria (WAC) and is consistent with criteria identified in NTS Profile ONLO-000000132. Once this is confirmed, Waste Characterization personnel will complete form FS-F-4208, MEF Verification, and the container(s) will be assigned to a Material Evaluation File (MEF) established specifically for stabilized Silos 1 & 2 material that meets the NTS WAC and criteria in NTS Profile ONLO-000000132. The MEF Verification form will provide auditable documentation that each container meets the NTS WAC and NTS profile criteria.

Because Silos 1 & 2 waste will be characterized as it is packaged, confirmation of characterization for disposition at NTS will be completed as the waste is generated and documented using the MEF Verification, form FS-F-4208. Using the MEF Verification process, the Silos 1 and 2 process control limits will be compared to the individual container recipe for container acceptance into the MEF. This will differ from the confirmation of characterization for disposition to NTS that the Fernald Closure Project has completed for backlog containerized waste inventory. For backlog waste inventory, the deliverable product for confirmation of characterization is a memorandum documenting review/release of the inventory. The memorandum is reviewed (Blue Sheet Review) by the Waste Certification Official (WCO) and other groups designated by the project, as appropriate. In the case of Silos 1 & 2 waste, there is no preexisting containerized waste inventory for review/release, so there will be no review/release memorandum. Instead, the MEF Verification form will document confirmation of characterization for disposition at NTS for the newly generated Silos 1 & 2 waste containers.

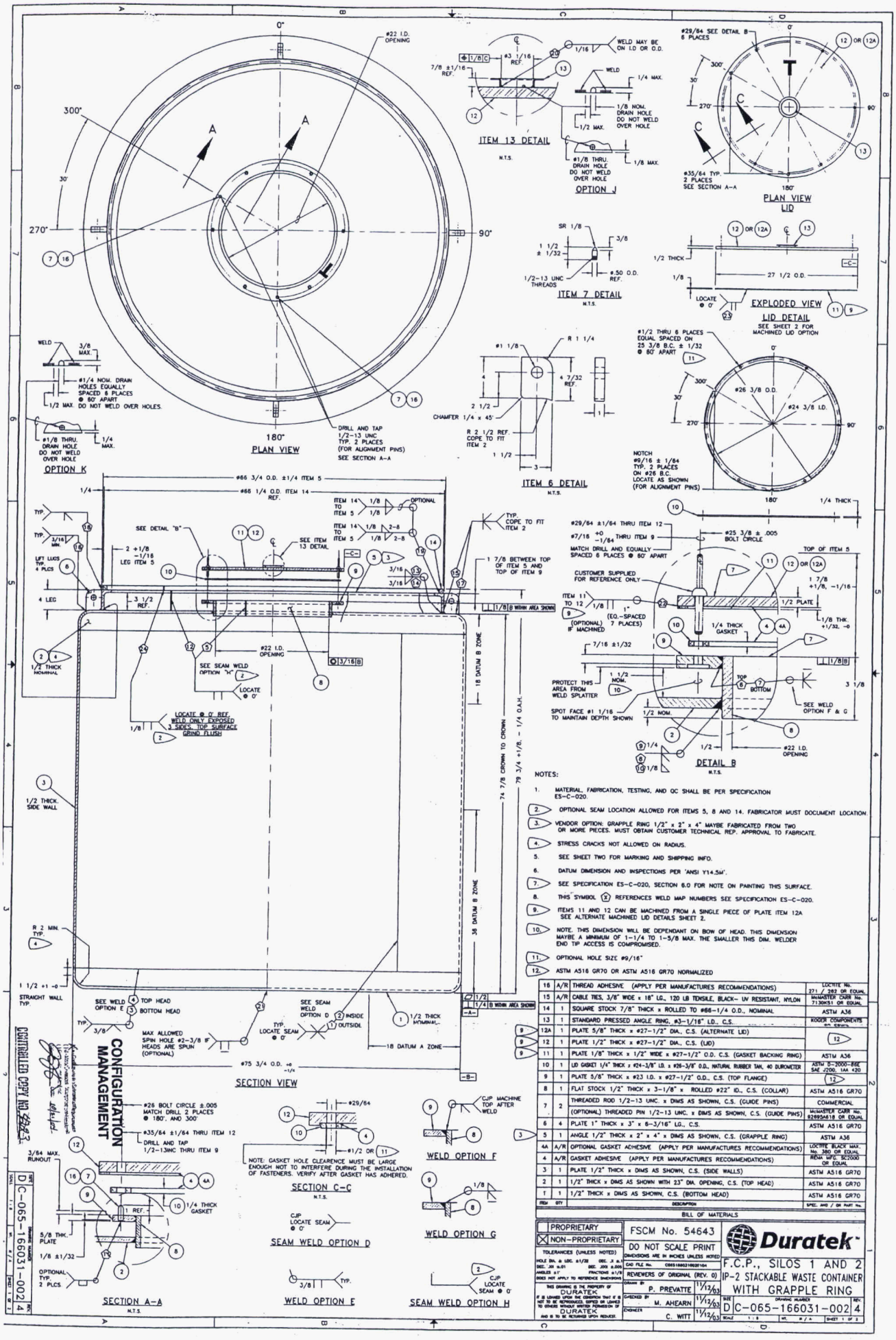

NOTES:

1. MATERIAL, FABRICATION, TESTING, AND QC SHALL BE PER SPECIFICATION ES-C-020.
2. OPTIONAL SEAM LOCATION ALLOWED FOR ITEMS 5, 8 AND 14. FABRICATOR MUST DOCUMENT LOCATION.
3. VENDOR OPTION: GRAPPLE RING 1/2" x 2" x 4" MAYBE FABRICATED FROM TWO OR MORE PIECES. MUST OBTAIN CUSTOMER TECHNICAL REP. APPROVAL TO FABRICATE.
4. STRESS CRACKS NOT ALLOWED ON RADIUS.
5. SEE SHEET TWO FOR MARKING AND SHIPPING INFO.
6. DATUM DIMENSION AND INSPECTIONS PER 'ANSI Y14.5M'.
7. SEE SPECIFICATION ES-C-020, SECTION 6.0 FOR NOTE ON PAINTING THIS SURFACE.
8. THIS SYMBOL (2) REFERENCES WELD MAP NUMBERS SEE SPECIFICATION ES-C-020.
9. ITEMS 11 AND 12 CAN BE MACHINED FROM A SINGLE PIECE OF PLATE ITEM 12A SEE ALTERNATE MACHINED LID DETAILS SHEET 2.
10. NOTE: THIS DIMENSION WILL BE DEPENDANT ON BOW OF HEAD. THIS DIMENSION MAYBE A MINIMUM OF 1-1/4 TO 1-5/8 MAX. THE SMALLER THIS DIM. WELDER END TIP ACCESS IS COMPROMISED.
11. OPTIONAL HOLE SIZE #9/16"
12. ASTM A516 GR70 OR ASTM A516 GR70 NORMALIZED

ITEM	QTY	DESCRIPTION	SPEC. AND / OR PART No.
16	A/R	THREAD ADHESIVE (APPLY PER MANUFACTURES RECOMMENDATIONS)	LOCTITE No. 271 / 262 OR EQUAL
15	A/R	CABLE TIES, 3/8" WIDE x 18" LG., 120 LB TENSILE, BLACK- UV RESISTANT, NYLON	McMASTER CARR No. 7130K51 OR EQUAL
14	1	SQUARE STOCK 7/8" THICK x ROLLED TO #66-1/4 O.D., NOMINAL	ASTM A36
13	1	STANDARD PRESSED ANGLE RING, #3-1/16" I.D., C.S.	ROGER COMPONENTS OR EQUAL
9 12A	1	PLATE 5/8" THICK x #27-1/2" DIA., C.S. (ALTERNATE LID)	12
9 12	1	PLATE 1/2" THICK x #27-1/2" DIA., C.S. (LID)	
9 11	1	PLATE 1/8" THICK x 1/2" WIDE x #27-1/2" O.D. C.S. (GASKET BACKING RING)	ASTM A36
10	1	LID GASKET 1/4" THICK x #24-3/8" I.D. x #26-3/8" O.D., NATURAL RUBBER TAN, 40 DUROMETER	ASTM D-2000-88C SAE J200, 1AA 420
9	1	PLATE 5/8" THICK x #23 I.D. x #27-1/2" O.D., C.S. (TOP FLANGE)	12
8	1	FLAT STOCK 1/2" THICK x 3-1/8" x ROLLED #22" ID., C.S. (COLLAR)	ASTM A516 GR70
7	2	THREADED ROD 1/2-13 UNC. x DIMS AS SHOWN, C.S. (GUIDE PINS)	COMMERCIAL
		(OPTIONAL) THREADED PIN 1/2-13 UNC. x DIMS AS SHOWN, C.S. (GUIDE PINS)	McMASTER CARR No. 92895A618 OR EQUAL
6	4	PLATE 1" THICK x 3" x 6-3/16" LG., C.S.	ASTM A516 GR70
3 5	1	ANGLE 1/2" THICK x 2" x 4" x DIMS AS SHOWN, C.S. (GRAPPLE RING)	ASTM A36
4A	A/R	OPTIONAL GASKET ADHESIVE (APPLY PER MANUFACTURES RECOMMENDATIONS)	LOCTITE BLACK MAX. No. 380 OR EQUAL
4	A/R	GASKET ADHESIVE (APPLY PER MANUFACTURES RECOMMENDATIONS)	REMA NFC SC2000 OR EQUAL
3	1	PLATE 1/2" THICK x DIMS AS SHOWN, C.S. (SIDE WALLS)	ASTM A516 GR70
2	1	1/2" THICK x DIMS AS SHOWN WITH 23" DIA. OPENING, C.S. (TOP HEAD)	ASTM A516 GR70
1	1	1/2" THICK x DIMS AS SHOWN, C.S. (BOTTOM HEAD)	ASTM A516 GR70

BILL OF MATERIALS

PROPRIETARY / NON-PROPRIETARY

FSCM No. 54643

DO NOT SCALE PRINT

TOLERANCES (UNLESS NOTED)

DIMENSIONS ARE IN INCHES UNLESS NOTED

CAD FILE No. C065166031002\104

REVIEWERS OF ORIGINAL (REV. 0)

DRAWN BY P. PREVATTE 11/12/03

CHECKED BY M. AHEARN 11/12/03

ENGINEER C. WITT 11/12/03

THIS DRAWING IS THE PROPERTY OF DURATEK. IT IS LOANED UPON THE CONDITION THAT IT IS NOT TO BE REPRODUCED, COPIED OR LOANED TO OTHERS WITHOUT WRITTEN PERMISSION OF DURATEK AND IS TO BE RETURNED UPON REQUEST.

Duratek

F.C.P., SILOS 1 AND 2
IP-2 STACKABLE WASTE CONTAINER
WITH GRAPPLE RING

SIZE D DRAWING NUMBER C-065-166031-002 REV. 4

SCALE 1:8 WT. #/A SHEET 1 OF 2

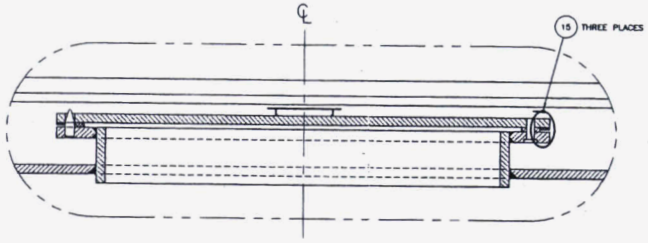

SHIPPING CONFIGURATION
N.T.S.

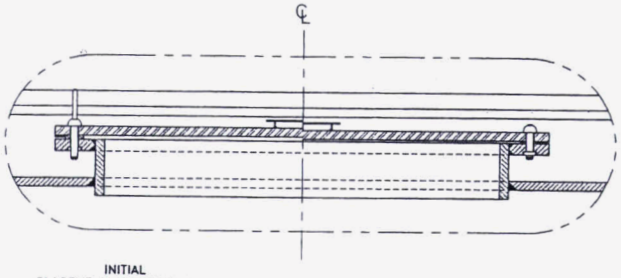

INITIAL PLACEMENT CONFIGURATION
N.T.S.

SEALED CONFIGURATION
N.T.S.

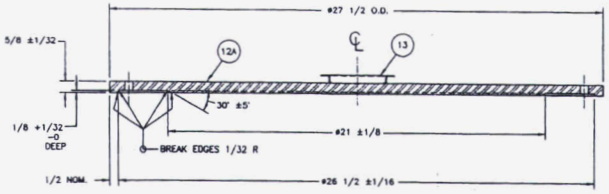

ITEM 12A
ALTERNATE MACHINED LID DETAIL
N.T.S.

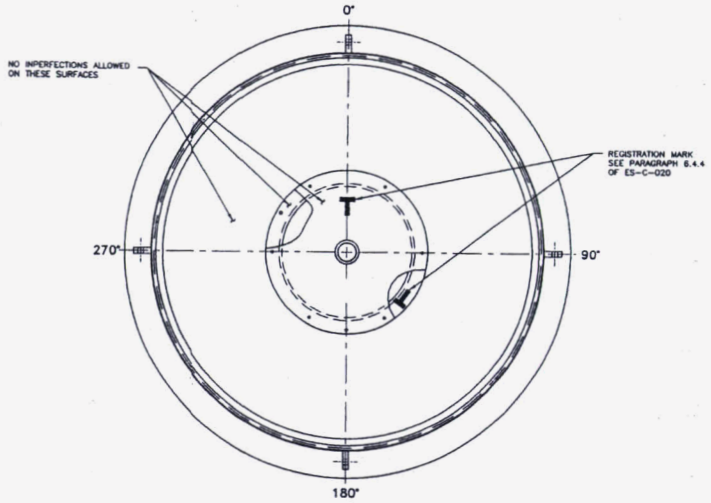

PLAN VIEW

RQ, RADIOACTIVE MATERIAL, LOW SPECIFIC ACTIVITY (LSA-II) (SODIUM ARSENITE, LEAD SULFATE) UN3321

TYPE IP-2 USA

ARIAL BLACK, BOLD, 1" HIGH

DOT PROPER SHIPPING DESCRIPTION STENCIL

SCALE: FULL

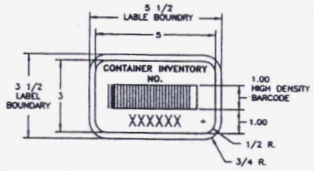

CONTAINER INVENTORY LABEL

SCALE: FULL

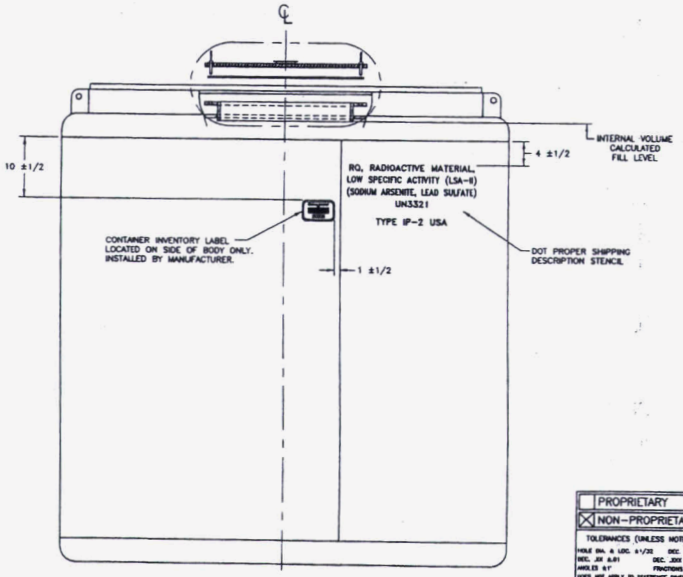

ELEVATION VIEW

CONFIGURATION MANAGEMENT

10/21/04

CONTAINER WEIGHT AND CAPACITY

CONTAINER BODY AND LID WEIGHT:	4,075 LBS.
INTERNAL VOLUME:	186 CUBIC FEET
EXTERNAL VOLUME:	208 CUBIC FEET

PROPRIETARY / NON-PROPRIETARY	FSCM No. 54643	Duratek
TOLERANCES (UNLESS NOTED)	DO NOT SCALE PRINT	F.C.P., SILOS 1 AND 2 IP-2 STACKABLE WASTE CONTAINER WITH GRAPPLE RING
REVIEWERS OF ORIGINAL (REV. 0)	P. PREVATTE 11/12/03	
	M. AHEARN 11/12/03	
	C. WITT 11/12/03	
SIZE D	DRAWING NUMBER C-065-166031-002	REV. 4
SCALE 1:10	WT. N/A	SHEET 1 OF 2

THIS DRAWING IS THE PROPERTY OF DURATEK. IT IS LOANED UPON ITS COMMISSION THAT IT IS NOT TO BE REPRODUCED, COPIED OR LOANED TO OTHERS WITHOUT WRITTEN PERMISSION OF DURATEK AND IS TO BE RETURNED UPON REQUEST.

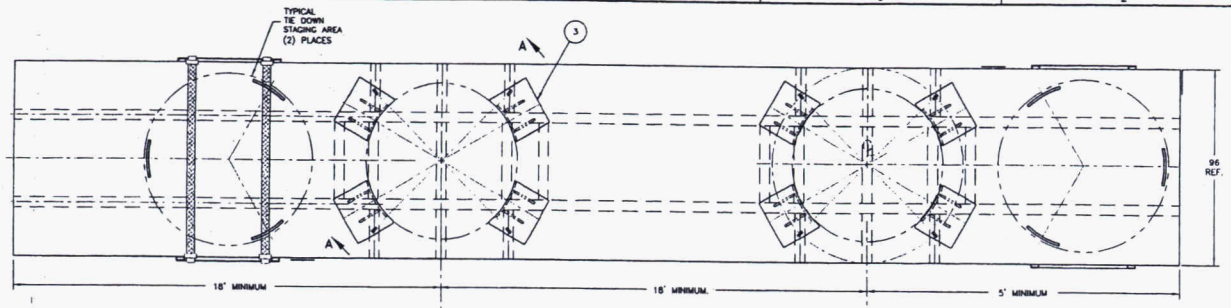

PLAN VIEW

WEIGHTS

(2) CONTAINERS	–	21,500 LBS MAXIMUM EACH
(2) SETS OF TIE DOWN	–	850 LBS EACH
(2) SETS OF 4 CHOCKS/PLATES	–	1205 LBS EACH
TOTAL PAYLOAD	–	47,110 LBS

THIS LEAVES 32,890 LBS FOR A TRACTOR/TRAILER COMBINED WEIGHT TO MEET THE 80,000 LBS MAX ON ROAD WEIGHT.

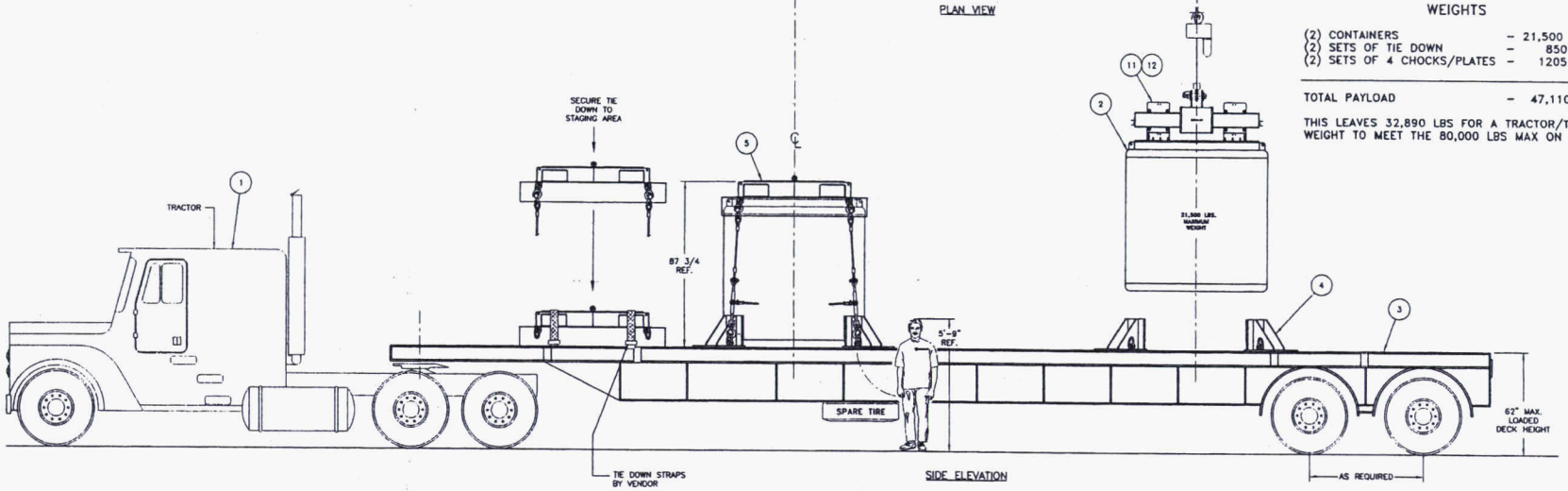

SIDE ELEVATION

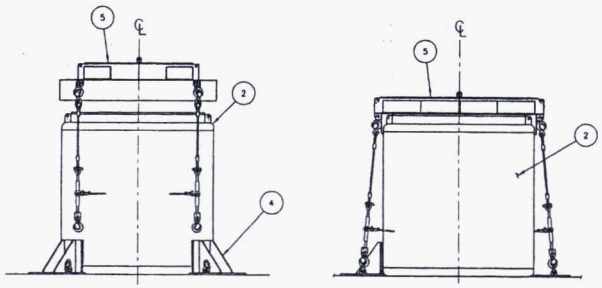

SECTION A–A

BATTERY GRAPPLE CHART

6 GRAPPLE FABRICATION DRAWING No.	TAG No.	7 GRAPPLE ELECTRICAL SCHEMATIC DRAWING No.
C-065-166031-006	RLD-25-1007S	C-065-166031-007
C-065-166031-026	RLD-25-1008S	C-065-166031-027
C-065-166031-024	RLD-25-1008	C-065-166031-025
C-065-166031-022	RLD-25-1007	C-065-166031-023

HARDWIRED GRAPPLE CHART

11 GRAPPLE FABRICATION		12 GRAPPLE ELECTRICAL SCHEMATIC
C-065-166031-008	RLD-25-1000	C-065-166031-009
C-065-166031-012	RLD-25-1002A	C-065-166031-013
C-065-166031-014	RLD-25-1002B	C-065-166031-015
C-065-166031-016	RLD-25-1002C	C-065-166031-017
C-065-166031-018	RLD-25-1001	C-065-166031-019
C-065-166031-020	RLD-25-1001S	C-065-166031-021

REV	QTY	DESCRIPTION	SPEC. AND / OR PART No.
12	6	GRAPPLE ELECTRICAL SCHEMATIC – HARDWIRED	SEE HARDWIRED GRAPPLE CHART
11	6	GRAPPLE – HARDWIRED	SEE HARDWIRED GRAPPLE CHART
10	A/R	CONTAINER SLINGS	SEE DRAWING C-065-166031-012
9	A/R	GRAPPLE STAND	SEE DRAWING C-065-166031-011
8	–	GRAPPLE FORK LIFT ATTACHMENT	SEE DRAWING C-065-166031-010
7	4	GRAPPLE ELECTRICAL SCHEMATIC PENDANT BATTERY POWERED	SEE BATTERY GRAPPLE CHART
6	4	GRAPPLE – REMOTE PENDANT BATTERY POWERED	SEE BATTERY GRAPPLE CHART
5	2	TRANSPORT TIE DOWN FRAME	SEE DRAWING C-065-166031-005
4	8	TRAILER CHOCKS	SEE DRAWING C-065-166031-004
3	1	CUSTOM TRAILER	SEE DRAWING C-065-166031-003
2	2	CONTAINER	SEE DRAWING C-065-166031-002
1	1	TRACTOR	---

BILL OF MATERIALS

[X] A - Conforms to the Subcontract Requirements
[ ] B - Minor Comment - Incorporate and Resubmit
[ ] C - Revise and Resubmit
Sig. [signature] Date 11-15-04

CONTROLLED COPY NO. 4463

PROPRIETARY
[X] NON-PROPRIETARY

FSCM No. 54643

DO NOT SCALE PRINT

TOLERANCES (UNLESS NOTED)
HOLE DIA. ± LOC. ±1/32 DEC. .X ±.1
DEC. .XX ± .01 DEC. .XXX ± .005
ANGLES ±1° FRACTIONS ±1/8
DOES NOT APPLY TO REFERENCE DIMENSIONS

DIMENSIONS ARE IN INCHES UNLESS NOTED
CAD FILE No. C065-166031-010-101
REVIEWERS OF ORIGINAL (REV. 0)
DRAWN BY P. PREVATTE 03/24/04
CHECKED BY M. AHEARN 03/26/04
ENGINEER C. WITT 03/26/04

THIS DRAWING IS THE PROPERTY OF DURATEK IT IS LOANED UPON THE CONDITION THAT IT IS NOT TO BE REPRODUCED, COPIED OR LOANED TO OTHERS WITHOUT WRITTEN PERMISSION OF DURATEK AND IS TO BE RETURNED UPON REQUEST.

Duratek

F.C.P., SILOS 1 AND 2
MATERIAL
PROJECT EQUIPMENT

DRAWING NUMBER: C-065-166031-001 REV. 1 (REV. D)
SCALE 1:30 WT. N/A SHEET 1 OF 2

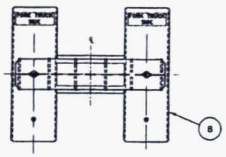

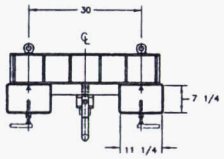

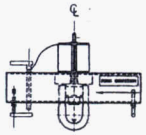

GRAPPLE FORK LIFT ATTACHMENT

WEIGHT:

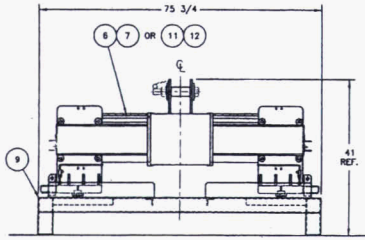

GRAPPLE AND GRAPPLE STAND

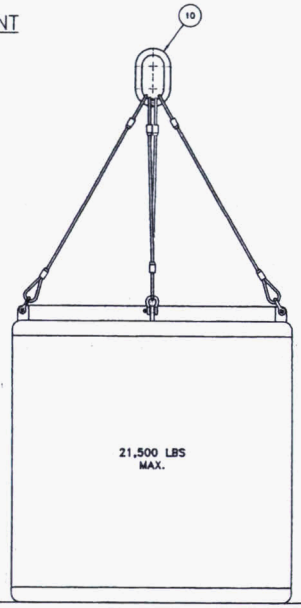

CONTAINER WITH SLINGS ATTACHED

TIE DOWN HANDLING USING FORKLIFT

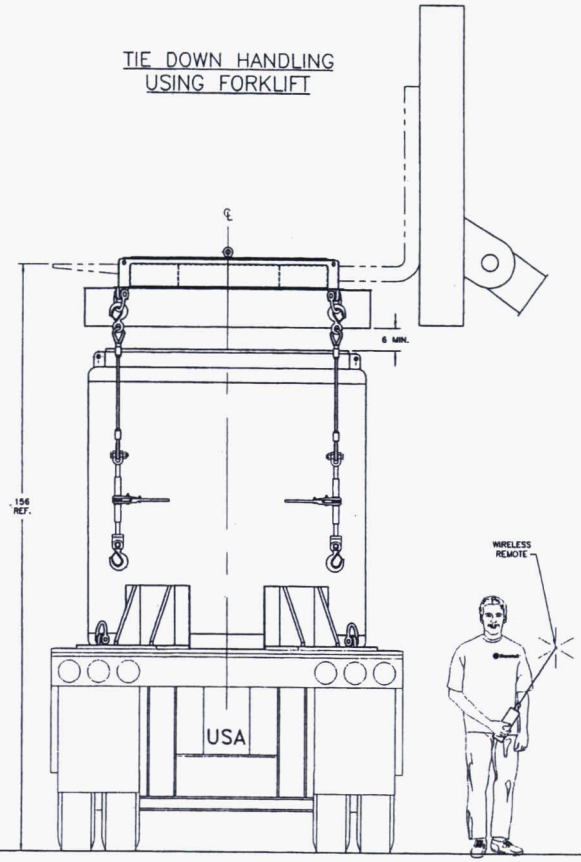

END ELEVATION

CONTAINER HANDLING USING FORKLIFT

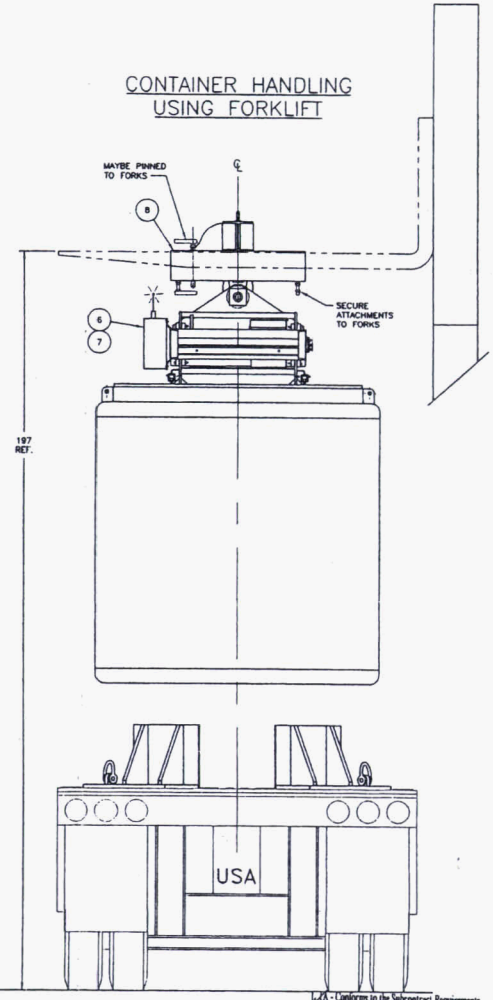

END ELEVATION

A - Conforms to the Subcontract Requirements
B - Minor Comment - Incorporate and Resubmit
C - Revise and Resubmit

Date 11-15-09

☐ PROPRIETARY ☒ NON-PROPRIETARY	FSCM No. 54643	Duratek
TOLERANCES (UNLESS NOTED)	DO NOT SCALE PRINT	F.C.P., SILOS 1 AND 2 MATERIAL PROJECT EQUIPMENT
WHOLE DIM. ± 1DEC. ±1/32 DEC. .X ±.1 DEC. .XX ±.01 DEC. .XXX ±.005 ANGLES ±1° FRACTIONS ±1/16 DIMS. NOT APPLY TO REFERENCE DIMENSIONS	DIMENSIONS ARE IN INCHES UNLESS NOTED CAD FILE No. C065189631020102D1	
	REVIEWERS OF ORIGINAL (REV. 0)	
THIS DRAWING IS THE PROPERTY OF DURATEK. IT IS LOANED UPON THE CONDITION THAT IT IS NOT TO BE REPRODUCED, COPIED OR LOANED TO OTHERS WITHOUT WRITTEN PERMISSION OF DURATEK AND IS TO BE RETURNED UPON REQUEST.	DRAWN BY P. PREVATTE 03/24/04 CHECKED BY M. AHEARN 03/26/04 ENGINEER C. WITT 03/26/04	SIZE D DRAWING NUMBER C-065-166031-001 REV. 1 SCALE 1:16 WT. N/A SHEET 2 OF 2

13750

15 Ton
12-65
5 lb Bag
1 Ton

AMERICAN COLLOID COMPANY

One North Arlington • 1500 West Shure Drive
Arlington Heights, Illinois 60004-1424 • USA
(708) 392-4600 • Telex ITT 4330321
Fax (708) 506-6199

77602
101

MATERIAL SAFETY DATA SHEET - May be used to comply with OSHA's Hazard Communication Standard, 29 CFR 1910.1200. Standard must be consulted for specific requirements.

PRODUCT NAME: BENTO GROUT

Section I MANUFACTURER'S INFORMATION

Manufacturer's Name & Address:

American Colloid Company
1500 West Shure Drive
One North Arlington
Arlington Heights, Illinois 60004

Emergency Telephone Number: 708-392-4600
Telephone Number for Information: 708-392-4600
Date Prepared: July 5, 1990

Section II HAZARDOUS INGREDIENTS/IDENTITY INFORMATION

Hazardous Components (Specific Chemical Identity: Common Name(s))		OSHA PEL	ACGIH TLV	Other Limits Recommended	% (optional)
Crystalline Quartz CASN 14808-60-7		-	-	*	2-6%
Respirable Crystalline Quartz				NIOSH	
	present (TWA)	0.1mg/m^3	0.1mg/m^3 TWA	50ug/m^3 TWA	62%
	proposed (TWA)		50ug/m^3 TWA	-	-
Nuisance Dust					
-	Respirable	5mg/m^3	5mg/m^3	-	-
-	Total Dust	15mg/m^3	10mg/m^3	-	-

* WARNING:
This clay product contains a small amount of crystalline silica which may cause delayed respiratory disease if inhaled over a prolonged period of time. Avoid breathing dust. Use NIOSH/MSHA approved respirator where TLV for crystalline silica may be exceeded. IARC Monographs on the evaluation of the Carcinogenic Risk of Chemicals to Humans (volume 42, 1987) concludes that there is "limited evidence" of the carcinogenicity of crystalline silica to humans. IARC classification 2A.

PRODUCT IDENTIFICATION

Chemical Name: Bentonite Clay
Chemical Family: Natural Mineral, Montmorillonite
CAS No.: 1302-78-9
FORMULA: Naturally occurring hydrated aluminosilicate of sodium, calcium, magnesium, and iron
NFPA/HMIS: Health - 1, Fire - 0, Reactivity - 0, Specific Hazard - See Section VI
Dot Class: Not Regulated

13750

AMERICAN COLLOID COMPANY

One North Arlington • 1500 West Shure Drive
Arlington Heights, Illinois 60004-1424 • USA
(708) 392-4600 • Telex ITT 4330325
Fax (708) 506-6199

77602
101

PRODUCT NAME: BENTO GROUT

Section III PHYSICAL/CHEMICAL CHARACTERISTICS

Boiling Point	• Not Applicable	Specific Gravity (H_2O = 1)	• 2.5
Vapor Pressure (mm Hg.)	• Not Applicable	Melting Point	• Not Applicable
Vapor Density (AIR = 1)	• Not Applicable	Evaporation Rate (Butyl Acetate = 1)	• Not Applicable
Solubility in Water	• Negligible		
Appearance and Odor	• Pale grey to buff powder or granules, odorless		

Section IV FIRE AND EXPLOSION HAZARD DATA

Flash Point (Method Used) • Not Applicable
Flammable Limits • Not Applicable LEL- • UEL- •
Extinguishing Media • Not Applicable
Special Fire Fighting Procedures • Inorganic Mineral/Non-Flammable
Unusual Fire and Explosion Hazards • Not Applicable

Section V REACTIVITY DATA

Stability Unstable • Conditions to Avoid • None Known
Stable • X

Incompatibility (Materials to Avoid) • None Known
Hazardous Decomposition or By-products • None Known

Hazardous Polymerization May Occur • Conditions to Avoid • None Known
Will Not Occur • X

Section VI HEALTH HAZARD DATA

Route(s) of Entry: Inhalation? Yes Skin? No Ingestion? No

Health Hazards (Acute and Chronic) • May cause delayed respiratory disease if dust inhaled over a prolonged period of time.

Carcinogenicity: NTP? No IARC Monographs? Yes OSHA Regulated? No

IARC Monographs on the evaluation of the Carcinogenic Risk of Chemicals to Humans (volume 42, 1987) concludes that there is "limited evidence" of the carcinogenicity of crystalline silica to humans. IARC classification 2A.

Signs and Symptoms of Exposure • Excessive inhalation of dust may result in shortness of breath and reduced pulmonary function.

Medical Conditions Generally Aggravated by Exposure • Individuals with pulmonary and/or respiratory disease including but not limited to asthma and bronchitis should be precluded from exposure to dust.

Emergency and First Aid Procedures • Eyes • Flush with water.
• Gross inhalation of dust • Remove to fresh air; give oxygen or artificial respiration if necessary; get medical attention.

13750

AMERICAN COLLOID COMPANY

One North Arlington • 1600 West Shure Drive
Arlington Heights, Illinois 60004-1434 • USA
(708) 392-4600 • Telex ITT 4330321
Fax (708) 506-6199

77602
101

PRODUCT NAME: BENTO GROUT

Section VII PRECAUTIONS FOR SAFE HANDLING AND USE

Steps to be Taken in Case Material is Released or Spilled • Vacuum if possible to avoid generating airborne dust. Avoid breathing dust. Wear an approved respirator. Avoid adding water, the product will become slippery when wet.

Waste Disposal Method - Follow federal, state and local regulations for solid waste.

Precautions to Be Taken in Handling and Storing • Avoid breathing dust, use NIOSH/MSHA approved respirator where TLV limits for Crystalline Silica may be exceeded.

Other Precautions - Slippery when wet.

Section VIII CONTROL MEASURES

Respiratory Protection (Specify Type) - OSHA standard 1910.134 or ANSI Z88.2-1980 specification.

Ventilation	• Local Exhaust	- As appropriate	Special	• None
	• Mechanical (General)	• As appropriate	Other	• None
Protective Gloves -	Not Required		Eye Protection	• Recommended

Other Protective Clothing or Equipment - None
Work/Hygienic Practices - Use good housekeeping practices.

The information herein has been compiled from sources believed to be reliable and is accurate to the best of our knowledge. However, American Colloid Company cannot give any guarantees regarding information from other sources, and expressly does not make any warranties, nor assumes any liability, for its use.

MATERIAL SAFETY DATA SHEET

PRODUCT

NALCLEAR® 7768

EMERGENCY TELEPHONE NUMBER(S)

(800) 424-9300 (24 Hours) CHEMTREC

1. CHEMICAL PRODUCT AND COMPANY IDENTIFICATION

PRODUCT NAME : **NALCLEAR® 7768**

APPLICATION : FLOCCULANT

COMPANY IDENTIFICATION : Ondeo Nalco Energy Services, L.P.
P.O. Box 87
Sugar Land, Texas
77487-0087

EMERGENCY TELEPHONE NUMBER(S) : (800) 424-9300 (24 Hours) CHEMTREC

NFPA 704M/HMIS RATING
HEALTH : 0 / 1 FLAMMABILITY : 1 / 1 INSTABILITY : 0 / 0 OTHER :
0 = Insignificant 1 = Slight 2 = Moderate 3 = High 4 = Extreme

2. COMPOSITION/INFORMATION ON INGREDIENTS

Based on our hazard evaluation, none of the substances in this product are hazardous.

3. HAZARDS IDENTIFICATION

****EMERGENCY OVERVIEW****

CAUTION
May cause irritation with prolonged contact.
Do not get in eyes, on skin, on clothing. Do not take internally. Wear suitable protective clothing. Keep container tightly closed. Water in contact with the product will cause slippery floor conditions. In case of contact with eyes, rinse immediately with plenty of water and seek medical advice. After contact with skin, wash immediately with plenty of soap and water. Protect product from freezing.
May evolve oxides of carbon (COx) under fire conditions. May evolve oxides of nitrogen (NOx) under fire conditions.

PRIMARY ROUTES OF EXPOSURE :
Eye, Skin

HUMAN HEALTH HAZARDS - ACUTE :

EYE CONTACT :
May cause irritation with prolonged contact.

SKIN CONTACT :
May cause irritation with prolonged contact.

INGESTION :
Not a likely route of exposure. No adverse effects expected.

INHALATION :
Not a likely route of exposure. No adverse effects expected.

SYMPTOMS OF EXPOSURE :
Acute :
A review of available data does not identify any symptoms from exposure not previously mentioned.
Chronic :
A review of available data does not identify any symptoms from exposure not previously mentioned.

AGGRAVATION OF EXISTING CONDITIONS :
A review of available data does not identify any worsening of existing conditions.

4. FIRST AID MEASURES

EYE CONTACT :
Flush affected area with water. If symptoms develop, seek medical advice.

SKIN CONTACT :
Remove contaminated clothing. Wash off affected area immediately with soap and plenty of water. If symptoms develop, seek medical advice.

INGESTION :
Do not induce vomiting without medical advice. If conscious, washout mouth and give water to drink. If symptoms develop, seek medical advice.

INHALATION :
Remove to fresh air, treat symptomatically. If symptoms develop, seek medical advice.

NOTE TO PHYSICIAN :
Based on the individual reactions of the patient, the physician's judgement should be used to control symptoms and clinical condition.

5. FIRE FIGHTING MEASURES

FLASH POINT :	> 200 °F / > 93 °C (PMCC)
LOWER EXPLOSION LIMIT :	Not flammable
UPPER EXPLOSION LIMIT :	Not flammable

EXTINGUISHING MEDIA :
Foam, Dry powder, Carbon dioxide, Other extinguishing agent suitable for Class B fires

UNSUITABLE EXTINGUISHING MEDIA :
Do not use water unless flooding amounts are available.

FIRE AND EXPLOSION HAZARD :
May evolve oxides of carbon (COx) under fire conditions. May evolve oxides of nitrogen (NOx) under fire conditions.

SPECIAL PROTECTIVE EQUIPMENT FOR FIRE FIGHTING :
In case of fire, wear a full face positive-pressure self contained breathing apparatus and protective suit.

6. ACCIDENTAL RELEASE MEASURES

PERSONAL PRECAUTIONS :
Notify appropriate government, occupational health and safety and environmental authorities. Do not touch spilled material. Stop or reduce any leaks if it is safe to do so. Use personal protective equipment recommended in Section 8 (Exposure Controls/Personal Protection).

METHODS FOR CLEANING UP :
SMALL SPILLS: Soak up spill with absorbent material. Place residues in a suitable, covered, properly labeled container. Wash affected area. LARGE SPILLS: Contain liquid using absorbent material, by digging trenches or by diking. Reclaim into recovery or salvage drums or tank truck for proper disposal. Contact an approved waste hauler for disposal of contaminated recovered material. Dispose of material in compliance with regulations indicated in Section 13 (Disposal Considerations).

ENVIRONMENTAL PRECAUTIONS :
This product is toxic to fish. It should not be directly discharged into lakes, ponds, streams, waterways or public water supplies.

7. HANDLING AND STORAGE

HANDLING :
Do not take internally. Have emergency equipment (for fires, spills, leaks, etc.) readily available. Ensure all containers are labelled. Avoid eye and skin contact.

STORAGE CONDITIONS :
Store separately from oxidizers. Store the containers tightly closed.

SUITABLE CONSTRUCTION MATERIAL :
PVC, Teflon, Mild steel, Stainless Steel 304, Stainless Steel 316L, Hastelloy C-276, Kalrez, Compatibility with Plastic Materials can vary; we therefore recommend that compatibility is tested prior to use.

UNSUITABLE CONSTRUCTION MATERIAL :
Nylon, Ethylene propylene, Polypropylene, Polyethylene, Carbon Steel C1018, Plexiglass, EPDM, Alfax, Copper, Brass, Buna-N, HDPE (high density polyethylene), Natural rubber, Polyurethane, Hypalon, Viton, Neoprene, Aluminum, Compatibility with Plastic Materials can vary; we therefore recommend that compatibility is tested prior to use.

8. EXPOSURE CONTROLS/PERSONAL PROTECTION

OCCUPATIONAL EXPOSURE LIMITS :
This product does not contain any substance that has an established exposure limit.

ENGINEERING MEASURES :
General ventilation is recommended.

RESPIRATORY PROTECTION :
Where concentrations in air may exceed the limits given in this section, the use of a half face filter mask or air supplied breathing apparatus is recommended. A suitable filter material depends on the amount and type of chemicals being handled. Consider the use of filter type: Organic vapor cartridge (Black) with a Particulate pre-filter (Purple). If respiratory protection is required, institute a complete respiratory protection program including selection, fit testing, training, maintenance and inspection.

HAND PROTECTION :
Nitrile gloves, PVC gloves

SKIN PROTECTION :
Wear standard protective clothing.

EYE PROTECTION :
Wear chemical splash goggles.

HYGIENE RECOMMENDATIONS :
Keep an eye wash fountain available. Keep a safety shower available.

HUMAN EXPOSURE CHARACTERIZATION :
Based on our recommended product application and personal protective equipment, the potential human exposure is: Moderate

9. PHYSICAL AND CHEMICAL PROPERTIES

PHYSICAL STATE	Liquid
APPEARANCE	Off-white
ODOR	Slight, Hydrocarbon

SPECIFIC GRAVITY	1.04 @ 77 °F / 25 °C
DENSITY	8.5 - 9.0 lb/gal
SOLUBILITY IN WATER	Emulsifiable
pH (1 %)	6.8
VISCOSITY	300 - 1,700 cps @ 77 °F / 25 °C
FREEZING POINT	26 °F / -3 °C
BOILING POINT	215 °F / 102 °C
VOC CONTENT	23.3 %

Note: These physical properties are typical values for this product and are subject to change.

10. STABILITY AND REACTIVITY

STABILITY :
Stable under normal conditions.

HAZARDOUS POLYMERIZATION :
Hazardous polymerization will not occur.

CONDITIONS TO AVOID :
Freezing temperatures.

MATERIALS TO AVOID :
Addition of water results in gelling. Contact with strong oxidizers (e.g. chlorine, peroxides, chromates, nitric acid, perchlorate, concentrated oxygen, permanganate) may generate heat, fires, explosions and/or toxic vapors.

HAZARDOUS DECOMPOSITION PRODUCTS :
Under fire conditions: Oxides of carbon, Oxides of nitrogen

11. TOXICOLOGICAL INFORMATION

No toxicity studies have been conducted on this product.

SENSITIZATION :
This product is not expected to be a sensitizer.

CARCINOGENICITY :
None of the substances in this product are listed as carcinogens by the International Agency for Research on Cancer (IARC), the National Toxicology Program (NTP) or the American Conference of Governmental Industrial Hygienists (ACGIH).

HUMAN HAZARD CHARACTERIZATION :
Based on our hazard characterization, the potential human hazard is: Low

12. ECOLOGICAL INFORMATION

ECOTOXICOLOGICAL EFFECTS :

The following results are for the product and a 1% aqueous solution of the product.

ACUTE FISH RESULTS :

Species	Exposure	LC50	Test Descriptor
Fathead Minnow	96 hrs	240 mg/l	Similar Product
Rainbow Trout	96 hrs	8,500 mg/l	1% Aqueous Solution of Product
Sheepshead Minnow	96 hrs	> 1,000 mg/l	1% Aqueous Solution of a Similar Product
Inland Silverside	96.00 hrs	90.700 mg/l	Product

Rating : Slightly toxic

ACUTE INVERTEBRATE RESULTS :

Species	Exposure	LC50	EC50	Test Descriptor
Mysid Shrimp (Mysidopsis bahia)	96 hrs	188 mg/l		Similar Product
Daphnia magna	48 hrs	200 mg/l		1% Aqueous Solution of Product
Mysid Shrimp (Mysidopsis	96.00 hrs	67.400 mg/l		Product

bahia)				

Rating : Slightly toxic

AQUATIC PLANT RESULTS :

Species	Exposure	EC50/LC50	Test Descriptor
Marine Algae (Skeletonema costatum)	72 hrs	23 mg/l (EC50)	Product

Rating : Slightly toxic

PERSISTENCY AND DEGRADATION :

Chemical Oxygen Demand (COD) : 429,000 mg/l

Biological Oxygen Demand (BOD) :

Incubation Period	Value	Test Descriptor
5 d	200,000 mg/l	Product

The organic portion of this preparation is expected to be inherently biodegradable.

MOBILITY :
The environmental fate was estimated using a level III fugacity model embedded in the EPI (estimation program interface) Suite TM , provided by the US EPA. The model assumes a steady state condition between the total input and output. The level III model does not require equilibrium between the defined media. The information provided is intended to give the user a general estimate of the environmental fate of this product under the defined conditions of the models. If released into the environment this material is expected to distribute to the air, water and soil/sediment in the approximate respective percentages;

Air	Water	Soil/Sediment
<5%	10 - 30%	50 - 70%

The portion in water is expected to be soluble or dispersible.

BIOACCUMULATION POTENTIAL
Component substances have a potential to bioconcentrate.

ENVIRONMENTAL HAZARD AND EXPOSURE CHARACTERIZATION
Based on our hazard characterization, the potential environmental hazard is: Low
Based on our recommended product application and the product's characteristics, the potential environmental exposure is: Moderate

If released into the environment, see CERCLA/SUPERFUND in Section 15.

13. DISPOSAL CONSIDERATIONS

If this product becomes a waste, it is not a hazardous waste as defined by the Resource Conservation and Recovery Act (RCRA) 40 CFR 261, since it does not have the characteristics of Subpart C, nor is it listed under Subpart D.

As a non-hazardous waste, it is not subject to federal regulation. Consult state or local regulation for any additional handling, treatment or disposal requirements. For disposal, contact a properly licensed waste treatment, storage, disposal or recycling facility.

14. TRANSPORT INFORMATION

The information in this section is for reference only and should not take the place of a shipping paper (bill of lading) specific to an order. Please note that the proper Shipping Name / Hazard Class may vary by packaging, properties, and mode of transportation. Typical Proper Shipping Names for this product are as follows.

LAND TRANSPORT :

Proper Shipping Name : PRODUCT IS NOT REGULATED DURING TRANSPORTATION

AIR TRANSPORT (ICAO/IATA) :

Proper Shipping Name : PRODUCT IS NOT REGULATED DURING TRANSPORTATION

MARINE TRANSPORT (IMDG/IMO) :

Proper Shipping Name : PRODUCT IS NOT REGULATED DURING TRANSPORTATION

15. REGULATORY INFORMATION

NATIONAL REGULATIONS, USA :

OSHA HAZARD COMMUNICATION RULE, 29 CFR 1910.1200 :
Based on our hazard evaluation, none of the substances in this product are hazardous.

CERCLA/SUPERFUND, 40 CFR 117, 302 :
Notification of spills of this product is not required.

SARA/SUPERFUND AMENDMENTS AND REAUTHORIZATION ACT OF 1986 (TITLE III) - SECTIONS 302, 311, 312, AND 313 :

SECTION 302 - EXTREMELY HAZARDOUS SUBSTANCES (40 CFR 355) :
This product does not contain substances listed in Appendix A and B as an Extremely Hazardous Substance.

SECTIONS 311 AND 312 - MATERIAL SAFETY DATA SHEET REQUIREMENTS (40 CFR 370) :
Our hazard evaluation has found that this product is not hazardous under 29 CFR 1910.1200.

Under SARA 311 and 312, the EPA has established threshold quantities for the reporting of hazardous chemicals. The current thresholds are: 500 pounds or the threshold planning quantity (TPQ), whichever is lower, for extremely hazardous substances and 10,000 pounds for all other hazardous chemicals.

SECTION 313 - LIST OF TOXIC CHEMICALS (40 CFR 372) :
This product does not contain substances on the List of Toxic Chemicals.

TOXIC SUBSTANCES CONTROL ACT (TSCA) :
The substances in this preparation are included on or exempted from the TSCA 8(b) Inventory (40 CFR 710)

NSF INTERNATIONAL :
This product has received NSF/International certification under ANSI/NSF Standard 60 in the coagulation and flocculation category. The official name is "Polyacrylamide." Maximum product application dosage is : 1 mg/l. Only product manufactured at Plants 101 and 109 USA and whose container label bears the ANSI/NSF Mark may be used in potable water treatment applications.

FEDERAL WATER POLLUTION CONTROL ACT, CLEAN WATER ACT, 40 CFR 401.15 / formerly Sec. 307, 40 CFR 116.4 / formerly Sec. 311 :
None of the substances are specifically listed in the regulation.

CLEAN AIR ACT, Sec. 111 (40 CFR 60, Volatile Organic Compounds), Sec. 112 (40 CFR 61, Hazardous Air Pollutants), Sec. 602 (40 CFR 82, Class I and II Ozone Depleting Substances) :
None of the substances are specifically listed in the regulation.

CALIFORNIA PROPOSITION 65 :
This product does not contain substances which require warning under California Proposition 65.

MICHIGAN CRITICAL MATERIALS :
None of the substances are specifically listed in the regulation.

STATE RIGHT TO KNOW LAWS :
None of the substances are specifically listed in the regulation.

NATIONAL REGULATIONS, CANADA :

WORKPLACE HAZARDOUS MATERIALS INFORMATION SYSTEM (WHMIS) :
This product has been classified in accordance with the hazard criteria of the Controlled Products Regulations (CPR) and the MSDS contains all the information required by the CPR.

WHMIS CLASSIFICATION :
Not considered a WHMIS controlled product.

CANADIAN ENVIRONMENTAL PROTECTION ACT (CEPA) :
The substances in this preparation are listed on the Domestic Substances List (DSL), are exempt, or have been reported in accordance with the New Substances Notification Regulations.

INTERNATIONAL CHEMICAL CONTROL LAWS

AUSTRALIA
All substances in this product comply with the National Industrial Chemicals Notification & Assessment Scheme (NICNAS) and are listed on the Australian Inventory of Chemical Substances (AICS).

EUROPE
The substances in this preparation have been reviewed for compliance with the EINECS or ELINCS inventories.

JAPAN
All substances in this product comply with the Law Regulating the Manufacture and Importation Of Chemical Substances and are listed on the Ministry of International Trade & industry List (MITI).

KOREA
All substances in this product comply with the Toxic Chemical Control Law (TCCL) and are listed on the Existing Chemicals List (ECL)

THE PHILIPPINES
All substances in this product comply with the Republic Act 6969 (RA 6969) and are listed on the Philippine Inventory of Chemicals & Chemical Substances (PICCS).

16. OTHER INFORMATION

Due to our commitment to Product Stewardship, we have evaluated the human and environmental hazards and exposures of this product. Based on our recommended use of this product, we have characterized the product's general risk. This information should provide assistance for your own risk management practices. We have evaluated our product's risk as follows:

* The human risk is: Low

* The environmental risk is: Low

Any use inconsistent with our recommendations may affect the risk characterization. Our sales representative will assist you to determine if your product application is consistent with our recommendations. Together we can implement an appropriate risk management process.

This product material safety data sheet provides health and safety information. The product is to be used in applications consistent with our product literature. Individuals handling this product should be informed of the recommended safety precautions and should have access to this information. For any other uses, exposures should be evaluated so that appropriate handling practices and training programs can be established to insure safe workplace operations. Please consult your local sales representative for any further information.

REFERENCES

Threshold Limit Values for Chemical Substances and Physical Agents and Biological Exposure Indices, American Conference of Governmental Industrial Hygienists, OH., (Ariel Insight# CD-ROM Version), Ariel Research Corp., Bethesda, MD.

Hazardous Substances Data Bank, National Library of Medicine, Bethesda, Maryland (TOMES CPS# CD-ROM Version), Micromedex, Inc., Englewood, CO.

IARC Monographs on the Evaluation of the Carcinogenic Risk of Chemicals to Man, Geneva: World Health Organization, International Agency for Research on Cancer.

Integrated Risk Information System, U.S. Environmental Protection Agency, Washington, D.C. (TOMES CPS# CD-ROM Version), Micromedex, Inc., Englewood, CO.

Annual Report on Carcinogens, National Toxicology Program, U.S. Department of Health and Human Services, Public Health Service.

Title 29 Code of Federal Regulations, Part 1910, Subpart Z, Toxic and Hazardous Substances, Occupational Safety and Health Administration (OSHA), (Ariel Insight# CD-ROM Version), Ariel Research Corp., Bethesda, MD.

Registry of Toxic Effects of Chemical Substances, National Institute for Occupational Safety and Health, Cincinnati, OH, (TOMES CPS# CD-ROM Version), Micromedex, Inc., Englewood, CO.

Ariel Insight# (An integrated guide to industrial chemicals covered under major regulatory and advisory programs), North American Module, Western European Module, Chemical Inventories Module and the Generics Module (Ariel Insight# CD-ROM Version), Ariel Research Corp., Bethesda, MD.

The Teratogen Information System, University of Washington, Seattle, WA (TOMES CPS# CD-ROM Version), Micromedex, Inc., Englewood, CO.

Prepared By : Product Safety Department
Date issued : 12/11/2002
Replaces : 09/07/2001

Essroc
Italcementi Group

3251 Bath Pike
Nazareth, Pa. 18064

MATERIAL SAFETY DATA SHEET

Section 1 - IDENTIFICATION

Product Name: Portland Cement

CAS Reg. No.: 65997-15-1

Chemical Name and Synonyms: Portland Cement. Portland Cement is also known as hydraulic cement and cement.

MSDS Information: This Material Safety Data Sheet was produced in September 1997 and replaces any prior versions.

Chemical Family: Calcium compounds. Calcium silicate compounds and other calcium compounds containing iron and aluminum make up the majority of this product. Major products include:

$3CaO \cdot SiO_2$	Tricalcium silicate
$2CaO \cdot SiO_2$	Dicalcium silicate
$3CaO \cdot Al_2O_3$	Tricalcium Aluminate
$4CaO \cdot Al_2O_3 \cdot Fe_2O_3$	Tetracalcium aluminoferrate
$CaS0_2 \cdot 2H_20$	Calcium sulfate dihydrate or Gypsum

Formula: This product consists of finely ground portland cement clinker mixed with a small amount of calcium sulfate dihydrate (gypsum).

Informational Phone Numbers: (800) 437-7762 Customer Service-Nazareth, Pa.
(800) 336-0366 Customer Service-Speed, IN.

Emergency Contact Information: (800) 424-9300 Chemtrec

MSDS Prepared By: Essroc MSDS Development Committee
(610) 837-6725
October 1997

Section 2 - COMPONENTS

Hazardous Ingredients:

Portland cement (CAS# 65997-15-1) - approximately 90 to 95% by weight

ACGIH TLV-TWA (1995-1996) = 10 mg total dust/m^3

OSHA PEL (8-hour TWA) = 50 million particles/ft^3

LD50 = Not Established

LC50 = TWA 50 mppcf

Gypsum (CAS# 7778-18-9) - approximately 2 to 5% by weight

ACGIH TLV-TWA (1995-1996) = 10 mg total dust/m^3

OSHA PEL (8-hour TWA) = 10 mg total dust/m^3

OSHA PEL (8-hour TWA) = 5mg respirable dust/m^3

LD50 = inhalation human TC Lo 194 gm/m^3

LC50 = TWA 80mg/m^3

Quartz (CAS# 14808-60-7) - approximately 0 to .20% by weight

ACGIH TLV-TWA (1995-1996) = 0.10 mg respirable quartz dust/m^3

OSHA PEL (8-hour TWA) = (10 mg of respirable dust/m^3) / (percent silica + 2)

NIOSH REL (8-hour TWA) = 0.05mg respirable quartz dust/m^3

LD50 = ipr rat LD Lo 400 mg/kg

LC50 = TWA 50ug/m^3

Trace Elements: Portland Cement is made from materials mined from the earth and is processed using energy provided by fuels. Trace amounts of naturally occurring, potentially harmful chemicals might be detected during chemical analysis. Trace constituents may include calcium oxide (also known as free lime or quick lime), free magnesium oxide, potassium and sodium sulfate compounds, chromium compounds, nickel compounds, and free crystalline silica.

Section 3 - HAZARDS IDENTIFICATION

Emergency Overview:

Portland Cement is a light gray powder that poses little immediate hazard. A single short term exposure to the dry powder is not likely to cause serious harm. However, exposure of sufficient duration to wet portland cement can cause serious, potentially irreversible tissue (skin or eye) destruction in the form of chemical (caustic) burns, including third degree burns. The same type of tissue destruction can occur if wet or moist areas of the body are exposed for sufficient duration to dry portland cement.

Potential Health Effects:

Relevant Routes of Exposure: Eye contact, skin contact, inhalation and ingestion.

Effects resulting <u>from eye contact</u>: Exposure to airborne dust may cause immediate or delayed irritation or inflammation.

Eye contact by larger amounts of dry powder or splashes of wet portland cement may cause effects ranging from moderate eye irritation to chemical burns and blindness. Such exposures require immediate first aid (see Section 4) and medical attention to prevent significant damage to the eye.

Effects resulting <u>from skin contact</u>: Discomfort or pain cannot be relied upon to alert a person to hazardous skin exposure. Consequently, the only effective means of avoiding skin injury or illness involves minimizing skin contact, particularly contact with wet cement. Exposed persons may not feel discomfort until hours after the exposure has ended and significant injury has occurred.

Exposure to dry portland cement may cause drying of the skin with consequent mild irritation or more significant effects attributable to aggravation or other conditions. Dry portland cement contacting wet skin or exposure to moist or wet portland cement may cause more severe skin effects including thickening, cracking, or fissuring of the skin. Prolonged exposure can cause severe skin damage in the form of (caustic) chemical burns.

21018

Some individuals may exhibit an allergic response upon exposure to portland cement, possibly due to trace amounts of chromium. The response may appear in a variety of forms ranging from a mild rash to severe skin ulcers. Persons already sensitized may react to their first contact with the product. Other persons may first experience this effect after years of contact with portland cement products.

Effects resulting from inhalation: Portland cement may contain trace amounts of free crystalline silica. Prolonged exposure to airborne free crystalline silica may cause delayed lung injury including silicosis, a disabling and potentially fatal lung disease, and/or other diseases. (also see "Carcinogenic potential" below.) It may also aggravate other lung conditions. Exposure to portland cement may cause irritation to the moist mucous membranes of the nose, throat, and upper respiratory system. It may also leave unpleasant deposits in the nose.

Effects resulting from ingestion: Although ingestion of small quantities of portland cement are not known to be harmful, ill effects are possible especially if larger quantities are consumed. Portland cement should not be eaten.

Carcinogenic potential: Portland cement is not listed as a carcinogen by the National Toxicology Program (NTP), International Agency for Research (IARC) or the Occupational Safety and Health Administration (OSHA). It may, however, contain trace amounts of substances listed as carcinogens by these organizations.

Crystalline silica, a potential trace level contaminant in portland cement, is now classified by IARC as a known human carcinogen (Group 1). NTP has characterized respirable silica a "reasonably anticipated to be a carcinogen".

Medical conditions which may be aggravated by inhalation or dermal exposure:
Pre-existing upper respiratory and lung diseases.
Unusual (hyper) sensitivity to hexavalent chromium (chromium^{+6}) salts.

Section 4 - FIRST AID

Eyes: Immediate flush eyes thoroughly with water. Continue flushing eye for at least 15 minutes including under lids, to remove all particles. Call physician immediately.

Skin: Wash skin with cool water and pH-neutral soap or a mild detergent intended for use on skin. Seek medical treatment in all cases of prolonged exposure to wet cement, cement mixtures, liquids from fresh cement products, or prolonged wet skin exposure to dry cement.

Inhalation of airborne dust: Remove to fresh air. Seek medical help if coughing and other symptoms do not subside. ("Inhalation" of gross amounts of portland cement requires immediate medical attention.)

Ingestion: Do not induce vomiting. If conscious, have the victim drink plenty of water and call a physician immediately.

Section 5 - FIRE AND EXPLOSION DATA

Flash Point.....None
Lower Explosive Limit .....None
Upper Explosive Limit .....None
Auto ignition temperature .....Not combustible
Extinguishing media.....Not combustible
Hazardous combustion products.....None
Unusual fire and explosion hazards .....None
Special fire fighting procedures.....None*

**Although portland cement poses no fire-related hazards, a self-contained breathing apparatus is recommended to limit exposure to combustion products when fighting any fire.*

Section 6 - ACCIDENTAL RELEASE MEASURES

Collect dry material using a scoop. Avoid actions that cause dust to become airborne. Avoid inhalation of dust and contact with skin. Wear appropriate personal protective equipment as described in Section 8.

Scrape up wet material and place in appropriate container. Allow the material to "dry" before disposal. Do not attempt to wash portland cement down drains.

Dispose of waste material according to local, state, and federal regulations.

Section 7 - HANDLING AND STORAGE

Keep portland cement dry until used. Normal temperatures and pressures do not affect the material. Promptly remove dusty clothing or clothing which is wet with cement fluids and launder before reuse. Wash thoroughly after exposure to dust or wet cement mixtures or fluids.

Section 8 - EXPOSURE CONTROLS/PERSONAL PROTECTION

Skin protection: Prevention is essential to avoid potentially severe skin injury. Avoid contact with unhardened (wet) portland cement products. If contact occurs, promptly wash affected area with soap and water. Where prolonged exposure to unhardened portland cement products might occur, wear impervious clothing and gloves to eliminate skin contact. Where required, wear boots that are impervious to water to eliminate foot and ankle exposure.

Do not rely on barrier creams; barrier creams should not be used in place of gloves.

Periodically wash areas contacted by dry portland cement or by wet cement or concrete fluids with a pH neutral soap. Wash again at the end of the work. If irritation occurs, immediately wash the affected area and seek treatment. If clothing becomes saturated with wet concrete, it should be removed and replaced with clean dry clothing.

Respiratory protection: Avoid actions that cause dust to become airborne. Use local or general ventilation to control exposures below applicable exposure limits.

Use NIOSH/MSHA-approved (under 30 CFR 11) or NIOSH-approved (under 42 CFR 84) respirators in poorly ventilated areas, if an applicable exposure limit is exceeded, or when dust causes discomfort or irritation. (Advisory: Respirators and filters purchased after July 10, 1998, must be certified under 42 CFR 84.)

21018

Ventilation: Use local exhaust or general dilution ventilation to control exposure within applicable limits.

Eye protection: When engaged in activities where cement dust or wet cement or concrete could contact the eye, wear safety glasses with side shields or goggles. In extremely dusty environments and unpredictable environments, wear unvented or indirectly vented goggles to avoid eye irritation or injury. Contact lenses should not be worn when working with portland cement or fresh cement products.

Section 9 - PHYSICAL AND CHEMICAL PROPERTIES

Appearance	Gray or white with powder
Odor	No distinct odor
Physical state	Solid (powder)
pH (in water)(ASTM D 1293-95)	12 to 13
Solubility in water	Slightly soluble (0.1 to 1.0%)
Vapor pressure	Not applicable
Vapor density	Not applicable
Boiling point	Not applicable (i.e., >1000 deg. C)
Melting point	Not applicable
Specific gravity (H_2O = 1.0)	3.15
Evaporation Rate	Not applicable
Freezing Point	Not Applicable
Coefficient of oil to water distribution	Not Applicable

Section 10 - STABILITY AND REACTIVITY

Stability: Stable.

Conditions to avoid: Unintentional contact with water.

Incompatibility: Wet portland cement is alkaline. As such it is incompatible with acids, ammonium salts and aluminum metal.

Hazardous decomposition: Will not spontaneously occur. Adding water results in hydration and produces (caustic) calcium hydroxide.

Hazardous polymerization: Will not occur.

Section 11 - TOXICOLOGICAL INFORMATION

Route of Entry .....Section 3
Effects of acute exposure to product.....Section 3
Effects of chronic exposure to product .....Section 3
Exposure Limits.....Section 2
Irritancy of product.....Section 3
Sensitization to product.....Section 3
Carcinogenicity.....Section 3
Reproductive Toxicity.....Not Applicable
Teratogenicity .....Not Applicable
Mutagenicity.....Not Applicable
Toxicologically synergistic products.....Section 3, Section 16

For a description of available, more detailed toxicological information, call one of the informational phone numbers listed at the end of Section 1.

Section 12 - ECOLOGICAL INFORMATION

Ecotoxicity: No recognized unusual toxicity to plants or animals.

Relevant physical and chemical properties: See Sections 9 and 10.

Section 13 - DISPOSAL

Dispose of waste material according to local, state, and federal regulations. (Since portland cement is stable, uncontaminated material may be saved for future use.)
Dispose of bags in an approved landfill or incinerator.

Section 14 - TRANSPORTATION DATA

Hazardous materials description/proper shipping name: Portland cement is not hazardous under U.S. Department of Transportation (DOT) regulations.

Hazard class: Not applicable.

Identification number: Not applicable.

Required label text: Not applicable.

Hazardous substances/reportable quantities (RQ): Not applicable.

Section 15 - OTHER REGULATORY INFORMATION

Status under USDOL-OSHA Hazard Communication Rule, 29 CFR 1910.1200: Portland cement is considered a "hazardous chemical" under this regulation, and should be part of any hazard communication program.

Status under CERCLA/Superfund, 40 CFR 117 and 302: Not Listed.

21018

Hazard Category under SARA TITLE III, Sections 311-312: Portland cement qualifies as a "hazard substance" with delayed health effects.

Status under SARA Title III, Section 313: This product contains NONE of the substances subject to the reporting requirements of Section 313 of Title III of the Superfund Amendments and Reauthorization Act of 1986 and 40 CFR Part 372 in concentrations above deminimis levels.

Toxic Substance Control Act (TSCA): Some substances in portland cement are on TSCA's inventory list.

Status under the Federal Hazardous Substances Act: Portland cement is a "hazardous substance" subject to statutes promulgated under the subject act.

Status under Canadian Environmental Protection Act: Not listed.

Status under WHMIS: Portland cement is considered to be a hazardous material under the Hazardous Products Act as defined by the Controlled Products Regulations (Class E - Corrosive material) and is therefore subject to the labeling and MSDS requirements of the Workplace Hazardous Materials Information System (WHMIS).

SECTION 16 - OTHER INFORMATION

Prepared by:	**Essroc MSDS Development Committee**
Abbreviations:	
ACGIH	American Conference of Government Industrial Hygienists
ASTM	American Society of Testing Materials
CAS	Chemical Abstract Service
CFR	Code of Federal Regulations
DOT	Department of Transportation
IARC	International Agency for Research
m^3	Cubic meter
mg	Milligram
mm	Millimeter
MSDS	Material Safety Data Sheet
MSHA	Mine Safety and Health Administration
NIOSH	National Institute for Occupational Safety and Health
NTP	National Toxicity Program
OSHA	Occupational Safety and Health Administration
PEL	Permissible Exposure Limit
RQ	Reportable Quantities
SARA	Superfund Amendments and Reauthorization Act
TLV	Threshold Limit Value
TWA	Time Weighted Average
URT	Upper Respiratory Tract
WHMIS	Workplace Hazardous Material Information System

Other important information:

Portland cement should only be used by knowledgeable persons. A key to using the product safely requires the user to recognize that portland cement chemically reacts with water, and that some of the intermediate products of this reaction (that is, those present while portland cement is "setting") pose a far more severe hazard than does portland cement itself.

While the information provided in this material safety data sheet is believed to provide a useful summary of the hazards of portland cement as it is commonly used, the sheet cannot anticipate and provide all of the information that might be needed in every situation. Inexperienced product users should obtain proper training before using this product.

In particular, the data furnished in this sheet do not address hazards that may be posed by other materials mixed with portland cement to product portland cement products. Users should review other relevant material safety data sheets before working with this portland cement or working on portland cement products, for example, portland cement concrete.

SELLER MAKES NO WARRANTY, EXPRESSED OR IMPLIED, CONCERNING THE PRODUCT OR THE MERCHANTABILITY OR FITNESS THEREOF FOR ANY PURPOSE OR CONCERNING THE ACCURACY OF ANY INFORMATION PROVIDED BY ESSROC CEMENT CORP., except that the product shall conform to contracted specifications. The information provided herein was believed by Essroc Cement Corp. to be accurate at the time of preparation or prepared from sources believed to be reliable, but it is the responsibility of the user to investigate and understand other pertinent sources of information to comply with all laws and procedures applicable to the safe handling and use of the product and to determine the suitability of the product for its intended use. Buyer's exclusive remedy shall be for damages and no claim of any kind, whether as to product delivered or for non-delivery of product, and whether based on contract, breach or warranty, negligence, or otherwise shall be greater in amount than the purchase price of the quantity of product in respect of which damages are claimed. In no event Seller be liable for incidental or consequential damages, whether Buyer's claim is based on contract, breach of warranty, negligence or otherwise.

COAL ASH

22534

CINERGY®

139 East Fourth Street
Cincinnati, Ohio 45202
Phone (513) 421-9500

Material Safety Data Sheet

Section 1. PRODUCT INFORMATION

PRODUCT NAME:	**COAL ASH**
CHEMICAL DESCRIPTION:	Inorganic Oxides (varying from fused or vitrified to fine granular solid)
PRODUCT CLASS:	Boiler Slag, Bottom Ash, or Fly Ash from Coal Combustion

Section 2. INFORMATION ON INGREDIENTS

Chemical Name	CAS Number	% by weight	OSHA PEL (mg/M³)	ACGIH TLV (mg/M³)
Silicon dioxide, SiO_2, fused amorphous	60676-86-0	40 - 60	10/(%SiO_2+2) resp. dust 30/(%SiO_2+2) total dust	0.1 (respirable)
Aluminum oxide, Al_2O_3	1344-28-1	15 - 30	15 total dust 5 resp. dust	10
Iron oxide, Fe_2O_3, dust and fume, as Fe	1309-37-1	5 - 35	10	5
Titanium dioxide, TiO_2	12137-20-1	1 - 3	15 total dust	10
Calcium oxide, CaO	1305-78-8	1 - 3	5	2
Potassium hydroxide, KOH	1310-58-3	1 - 3	none established	2 (ceiling)
Sulfur trioxide, SO_3	7446-11-9	0 - 1	none established	none established
Water	7732-18-5	<1 - 20	none established	none established

Section 3. HAZARDS IDENTIFICATION

EMERGENCY OVERVIEW

CAUTION! – Contact with wet skin may cause severe irritation.

Eye contact can cause severe irritation or conjunctivitis.

Inhalation of dust may irritate the throat or lungs.

Long-term overexposure may reduce pulmonary function.

Section 3. HAZARDS IDENTIFICATION (Continued)

PRIMARY ROUTES OF ENTRY: Inhalation of dust. Eye and skin contact. Ingestion of dust.

TARGET ORGANS: Eyes, skin, mucous membranes, lungs, kidney, liver, and blood.

MEDICAL CONDITIONS: (AGGRAVATED BY EXPOSURE) Individuals with pre-existing conditions of emphysema or asthma may experience respiratory irritation from breathing dust. Skin conditions or dermatitis may be aggravated by contact with this material.

POTENTIAL HEALTH EFFECTS:

EYE CONTACT: Contact with eyes may cause irritation resulting in conjunctivitis.

SKIN CONTACT: Prolonged contact may result in minor irritation, mild reddening, or skin rash depending on the sulfur trioxide content. SO_3 reacts vigorously with water (or sweat) to form hydrosulfurous acid.

INGESTION: Ingestion of this product may cause diarrhea or irritation of the mucous membranes of the mouth, throat, esophagus and stomach.

INHALATION: Dust may cause respiratory irritation or fibrosing alveolitis (growth of fibrous tissue in the lung).

ACUTE/CHRONIC: Short-term exposure can produce dermatitis (skin inflammation), horny growths on the skin, conjunctivitis, and diarrhea. Long-term exposure to fly ash in extremely dusty environments (above the OSHA PEL) may result in pathology of the nerves in the extremities, blood-forming effects such as anemia, gastrointestinal irritation/colic, and cancer of the skin, liver, and lungs.

CARCINOGENICITY: NTP: No IARC: Yes (SO_3) OSHA: No

Section 4. FIRST AID MEASURES

EYE CONTACT: In case of contact, flush eyes for 15 minutes. Seek medical aid to ensure foreign matter is removed.

SKIN CONTACT: Avoid skin contact with fly ash. Wash skin thoroughly after exposure ceases.

INHALATION: Move victim to a dust-free environment. Support breathing as necessary.

INGESTION: Do not induce vomiting. Consult a physician.

Section 5. FIRE FIGHTING MEASURES

FLASH POINT: None.

LOWER FLAMMABLE LIMIT: None.

AUTO-IGNITION TEMERATURE: None.

DECOMPOSITION PRODUCTS: None.

EXTINGUISHING MEDIA: None required.

FIRE-FIGHTING INSTRUCTIONS: None required.

FIRE & EXPLOSION HAZARDS: None.

NFPA RATINGS: Health = 1 Flammability = 0 Reactivity = 0 Special Hazard = None

Scale: 0 = Normal material 1 = Slightly hazardous 2 = Hazardous 3 = Extremely dangerous 4 = Deadly

Section 6. ACCIDENTAL RELEASE MEASURES

STEPS TO BE TAKEN IF MATERIAL IS SPILLED OR RELEASED: Dispose of as conventional waste suitable for a municipal landfill.

Section 7. HANDLING AND STORAGE

HANDLING: No special requirements.

STORAGE: No special requirement; material is chemically and thermally stable.

Section 8. EXPOSURE CONTROLS / PERSONAL PROTECTION

PERSONAL PROTECTIVE EQUIPMENT:

EYE/FACE PROTECTION: Use safety goggles if handling dry powder.

SKIN PROTECTION: Use coveralls and gloves to avoid skin contact with coal ash.

RESPIRATORY PROTECTION: Use a NIOSH-approved, high-efficiency, air-purifying respirator for dusty environments that exceed 10 mg/m^3 total dust.

ENGINEERING CONTROLS: Local exhaust or general dilution ventilation.

WORK PRACTICES: Do not "blow down" with compressed air or dry sweep. Use only a HEPA-filtered vacuum. Use wet methods or sweeping compound to minimize dust generation.

Section 9. PHYSICAL AND CHEMICAL PROPERTIES

BOILING POINT: Not applicable.

VAPOR PRESSURE: Not applicable.

VAPOR DENSITY: Not applicable.

%VOLATILE BY WEIGHT: 0

SOLUBILITY IN WATER: Moderate.

SPECIFIC GRAVITY (Apparent density): 2.2 - 2.8 g/cm^3

pH: Varies from acidic to basic dependent upon coal source.

FREEZING POINT: Not applicable.

APPEARANCE AND ODOR: **Fly ash** consists of minute glass spheres with some crystalline matter and varying amounts of unburned carbon. It ranges in color from light tan or light gray to almost black depending on the proportions of carbon and iron. **Bottom ash** is a granular material similar to fine concrete aggregate (concrete sand). It ranges in color from a medium brown or medium gray to almost black. **Boiler slag** is granular and angular with particle size similar to bottom ash. Slag is shiny black in color and its form resembles crushed coal or black glass. No odor.

Section 10. STABILITY AND REACTIVITY

CONDITIONS TO AVOID: None.

INCOMPATABILITY: None.

DECOMPOSITION PRODUCTS: None.

HAZARDOUS POLYMERIZATION: Will not occur.

CHEMICAL STABILITY: Stable under normal temperature and pressures.

Section 11. TOXICOLOGICAL INFORMATION

ON PRODUCT: Minor skin irritation (prolonged contact), conjunctivitis, and diarrhea.

ON INGREDIENTS:

	ROUTE OF ADMINISTRATION		
Chemical Name	Oral	Dermal (LD50)	Inhalation (TCLo)
Crystalline silica, fused	Not available	Not available	197 mg/m^3 (rat)
Aluminum oxide	Not available	Not available	Not available
Iron oxide	Not available	Not available	500 ug/m^3 (rat)
Titanium dioxide	Not available	300 ug/3D-Mild	250 ug/m^3 (rat)
Calcium oxide	Not available	Not available	Not available
Potassium hydroxide	273 mg/kg	1 mg/24H rinse-Mod.	Not available
Sulfur trioxide	Not available	Not available	30 mg/m^3 (human)

Section 12. ECOLOGICAL INFORMATION

Aquatic Toxicity: Testing on ash ponds consistently show the effluent to not be acutely toxic in 100% effluent for Ceriodaphnia dubia (water flea) and Pimephales promelas (fathead minnow).

Environmental Fate: Nearly all ash is inert upon release to the environment and would be deposited in the sediment. Less than 1% of ash would be dissolved in the water column.

Environmental Toxicity: When handled and disposed of properly, coal ash does not present an environmental threat.

Section 13. DISPOSAL CONSIDERATIONS

RCRA STATUS: This material is not a RCRA listed hazardous waste nor does it exhibit any hazardous waste characteristics.

DISPOSAL: Dispose of in a manner consistent with federal, state, or local laws and regulations.

Section 14. TRANSPORT INFORMATION

D.O.T. CLASSIFICATION: Not applicable; not a D.O.T. hazardous material.

Section 15. REGULATORY INFORMATION

TSCA: Not applicable.

CERCLA: Contains no known hazardous substances.

SARA TITLE III:

Section 302 Extremely Hazardous Substances: None at or above de minimis concentrations.

Section 311/312 Health and Physical Hazards: Delayed (chronic) health hazard from long-term inhalation of dust.

Section 313 Toxic Chemicals: None at or above de minimis concentrations.

Section 16. OTHER INFORMATION

HMIS RATINGS: Health = 1 Flammability = 0 Reactivity = 0 Personal Protection = B = Safety glasses + gloves

Hazard rating scale: 0 = Minimal 1 = Slight 2 = Moderate 3 = Serious 4 = Severe

While this information and recommendations set forth herein are believed to be accurate as of the date hereof, CINERGY CORPORATION MAKES NO WARRANTY WITH RESPECT HERETO AND DISCLAIMS ALL LIABILITY FROM RELIANCE THEREON.

PREPARED BY: Mark T. Nutter, CIH, CSP, Occupational Hygienist
Patrick C. Coyle, Sr. Environmental Scientist
Randall P. Born, Sr. Environmental Scientist
James J. Stieritz, Sr. Environmental Scientist

FRITZ *Industries, Inc.* Material Safety Data Sheet

NFPA	HCS Risk Phrases	Protective Clothing
	Not controlled under the HCS (United States).	

Section I. Chemical Product and Company Identification		
Common Name Trade Name	**7011L**	Revision Date: 10-26-98
Supplier	FRITZ INDUSTRIES, INC. 500 SAM HOUSTON ROAD MESQUITE, TX 75149 (972) 285-5471 (800) 955-1323	In Case of Emergency. (800) 424-9300 Week Days: (972) 285-5471 (800) 955-1323
Chemical Name	**Material Uses**	Cement.

Section II. Composition and Information on Ingredients: Non-Hazardous

Section III. Hazards Identification: Non-Hazardous

Section IV. First Aid Measures	
Eye Contact	Flush eyes with running water for at least 15 Minutes, keeping eyelids open.
Skin Contact	Rinse with water for a few minutes.
Inhalation	Allow the individual to rest in a well-ventilated area.
Ingestion	DO NOT induce vomiting. Loosen tight clothing such as a collar, tie, or belt. Seek medical attention

Section V. Fire and Explosion Data	
Flammability of the Product	Will burn with ignition.
Fire Fighting Media And Instructions	SMALL FIRE: Use DRY chemicals, CO_2, water spray or foam. LARGE FIRE: Use water spray, fog or foam. DO NOT use water jet.

Section VI. Accidental Release Measures	
Spills Large spills	Absorb with an inert material and put the spilled material in an appropriate waste disposal. Keep away from heat and sources of ignition. Stop leak. Finish cleaning by spreading water on the contaminated surface and dispose of according to local and regional authority requirements.

Section VII. Handling and Storage	
Precautions	Keep away from heat. Keep away from sources of ignition. DO NOT breathe vapor or spray
Storage	Keep container dry and tightly closed. Keep in a cool, well-ventilated place. Combustible materials should be stored away from extreme heat and away from strong oxidizing agents.

Section VIII. Exposure Controls/Personal Protection	
Engineering Controls	Provide exhaust ventilation or other engineering controls to keep the airborne concentrations of vapors below their respective threshold limit value. Ensure that eyewash stations and safety showers are proximal to the workstation location.
Personal Protection	Safety glasses. Gloves .
In case of Large spill	Safety goggles. Gloves.

Section IX. Physical and Chemical Properties		
Physical state and Appearance	Liquid.	Color: Clear.
Specific Gravity	1.01 (Water=1).	

Section X. Stability and Reactivity Data: The product is Stable.

Section XI. Toxicological Information

Routes of Entry	Ingestion.

Section XII. Ecological Information

Products of Biodegradation	Possible hazardous short-term degradation products are not likely.

Section XIII. Disposal Considerations

Waste Disposal	Recycle, if possible. Consult your local or regional authorities.

Section XIV. Transport Information - Not a DOT controlled material (United States).

Section XV. Other Regulatory Information and Pictograms

HMIS (U.S.A.)	0 HEALTH 1 FLAMMABILITY 0 REACTIVITY a PROTECTIVE EQUIPMENT	National Fire Protection Association (U.S.A.)	Health	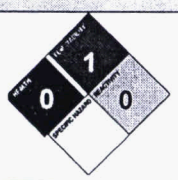	Fire Hazard Reactivity Specific Hazard
WHMIS (Canada) (Pictograms)					
TDG(Canada) (Pictograms)					

Section XVI. Other Information

Notice to Reader

The information contained herein is based on data considered accurate. However, no warranty is expressed or implied regarding the accuracy of these data or the results to be obtained from the use thereof. Fritz Industries, Inc. assumes no responsibility for personal injury or property damage to vendees, users or third parties caused by the material. Such vendees or users assume all risks associated with the use of the material.

Silo 1 and 2 Treatment Development - Improved Set Time Formulations

Phase I Final Report – Revision 0
Document No. 40750-RP-0058

Prepared for:

Mr. John North
Fernald Closure Site
PO Box 538704
Cincinnati, OH 45253-8704

Submitted by:

Brian M. Kauffman and Mike McCarthy

Diagnostic Instrumentation and Analysis Laboratory
Mississippi State University
205 Research Blvd.
Starkville, MS 39759

ORIGINAL

Submission date:

December 17, 2004

Table of Contents

1.0 PROJECT DESCRIPTION 1

1.1 PURPOSE 1
1.2 PRELIMINARY WORK SCOPE 2
1.3 PERFORMANCE GOALS - RETESTING CURRENT FORMULATIONS 3

2.0 QUALITY ASSURANCE 3

2.1 QUALITY ASSURANCE MANAGERS 3
2.2 PROJECT PARTICIPANT RESPONSIBILITIES 4

3.0 EXPERIMENTAL APPROACH 4

3.1 SAMPLE PREPARATION 4
3.2 TEST METHODS 5
3.2.1 Modified Vicat Set Test 5
3.2.2 Grout Flow Test 6
3.2.3 Shaker Test 6
3.2.4 Freeze – Thaw Test 6
3.3 BASELINE FORMULATION DEVELOPMENT 7
3.3.1 FLOW CHARACTERISTICS 7
3.3.2 WATER RETENTION 8
3.3.3 ENVELOPE TESTING 8
3.4 ADDITIONAL WATER RETENTION AND FLOW TESTING 9
3.4.1 INCREASED PERCENT SOLIDS PLUS THINNING AGENTS 9
3.4.2 FORMULATED CEMENTS 9

4.0 RESULTS 9

4.1 BASELINE FORMULATIONS 10
4.2 ADJUSTMENTS – CEMENT CONCENTRATION 15
4.3 ADVACAST 500 FORMULATIONS 15
4.4 SLAG FORMULATIONS 21
4.5 ADDITIONAL OBSERVATIONS 21
4.5.1 POLYMER 21
4.5.2 GROUT STIFFENING 22
4.5.3 ADVACAST - GROUT THINNING TIME 22

5.0 SCALE-UP 23

5.1 CURING TIME – BLEED WATER 23
5.2 MIXING CONSISTENCY 23

6.0 ADDITIONAL WORK 24

6.1 HIGH SALT FORMULATIONS 24
6.2 HIGH AND LOW WASTE LOADING GROUT FORMULATIONS 24
6.3 ADVACAST 500 25
6.4 ROBUSTNESS OF FORMULATION 25
6.5 AFFECTS OF ADDITIVES 25

1.0 Project Description

1.1 Purpose

The Silos 1 and 2 material, known as K-65, is currently being removed from the silos, transferred to, and temporarily stored at the Transfer Tank Area (TTA) prior to final treatment. The K-65 will be retrieved from the TTA tanks as a thin slurry containing nominally 15% solids and then dewatered to increase the waste loading of the material to be treated. The 15-wt% slurry is expected to be dewatered using a clarifier, wherein the solids concentration in the clarifier underflow will be increased to approximately 40 wt%. The thickened K-65 slurry will then be mixed with stabilization additives to form a solid that meets the waste acceptance criteria of the disposal facility and requirements imposed by the Department of Transportation. A general stabilization formulation was developed at the University of Cincinnati to treat Fernald Silos K-65 waste so that it meets TCLP as well as disposal and transportation requirements. The University of Cincinnati team demonstrated that the general stabilization formulations met all the requirements by subjecting the treated material to TCLP and a series of thermal cycling and vibration tests designed to simulate the transportation conditions. Most of those verification tests were, however, performed on samples that were cured for five days. The selection of that curing time was based on an earlier process baseline that assumed a five-day holding period between waste mixing and shipping the containerized treated waste. That baseline has changed so that the plan is to ship treated waste between 24 and 48 hours after mixing.

The primary waste acceptance criterion established by the Nevada Test Site (NTS) is that the treated material must contain no free water. However, stakeholders, including the Ohio EPA, have requested that the final grout formulations also meet TCLP requirements. Therefore, the grout formulas tested at DIAL contain between 8% and 12% cement by weight. Grout formulations with cement concentrations in this range have been demonstrated by the University of Cincinnati to pass the TCLP.

In addition to disposal and transportation requirements, operational requirements must also be met. The freshly mixed grout will be discharged from the mixer into a disposal

container, and it must fill the entire container unaided by vibration or other mechanical leveling techniques. Therefore, the grout must be free flowing and self-leveling. Also, any additives must be in liquid form or must be readily converted to a liquid form. Addition of dry additives would require that they be pre-blended with the cement or fly ash, and the remediation facility does not have a mechanism to introduce additional dry treatment agents.

The studies described in this document were an extension of the previous work performed at the University of Cincinnati. They focus on reducing the time required for the grout mix to set, on optimizing the free water and rheologic properties of the mix as a function of percent solids, waste loading and different chemical additives; and on investigating the effects of a grout viscosity modifier that allows higher percent solids grouts to be produced.

1.2 Preliminary Work Scope

A thirteen-kilogram sample of archived Silo 1 material was shipped from Fernald to DIAL in a 5-gallon plastic bucket, overpacked in a 30-gallon metal drum. This sample was considered by Fernald Environmental Scientists to be the best archived Silos material remaining at the Fernald Closure Project.

Approximately half of the material received by DIAL was transferred to a 4-gallon, plastic lined, metal can. This material was thoroughly mixed by hand and subsequently placed in 500 mL plastic sample containers. The consistency of the K-65 material resembled loose potting soil.

Three samples of K-65 were analyzed for percent moisture. The results are shown in the table below.

Table 1: K-65 Percent Moisture

Sample ID	A	B	C
Dish Tare (g)	1.03	1.00	0.99
Dish + Moist Sample (g)	22.70	23.22	22.31
Diash + Dry Sample (g)	16.36	16.77	15.86
Moisture Content (%)	29.26	29.03	30.25

The percent moisture was calculated as follows:

$$\%Moisture = 100\% \times \left[1 - \frac{Dry\ Sample\ Weight}{Moist\ Sample\ Weight}\right]$$

An average of 29.5% was used for preparing grout formulations.

1.3 Performance Goals - Retesting Current Formulations

The general objective in retesting the formulation developed by the University of Cincinnati was to determine whether or not the formulated grouts would meet the disposal and transportation requirements within 24-hours. In addition, the flow characteristics of the treated material were evaluated as a function of the total percent solids and waste loading in the final grout mix. The intended use for this information is to allow an operating envelope to be established for the final waste stabilization formulations.

2.0 Quality Assurance

2.1 Quality Assurance Managers

1. Teresa Leone, Quality Assurance Officer, DIAL at MSU

Teresa Leone was responsible for providing oversight of the QAPP for the treatability work described in this document. Additionally, the DIAL QA officer was responsible for reviewing QA data from work performed at DIAL.

2.2 Project Participant Responsibilities

John North, Larbi Bounini, and Chris Sutton had the primary responsibility for providing technical direction, project coordination, and communication for the tasks outlined in this document. Larbi Bounini served as the primary contact between Fluor Fernald and DIAL.

Brian Kauffman served as Principe Investigator and had the responsibility of planning, conducting and reporting for the work performed at DIAL. Laboratory Technicians participated in the research under the responsibility of the Principle Investigator.

3.0 Experimental Approach

3.1 Sample Preparation

Bentogrout additions were made with a 10% solids slurry that had been hydrated for a minimum of twenty-four hours. The polymer used in batch preparation was a 0.2% solution, as directed by the Fernald technical lead. With a few exceptions, ADVACAST 500 (viscosity modifier) additions were made using straight ADVACAST solution (no dilutions of the manufacturer's grade solution). Complete batch formulations, on an as mixed basis, were provided in Appendix 2. The formulation spreadsheets can be provided electronically to the Silos Project upon request, and list the specific weight of each component added for a given batch.

The sample preparation method was as follows:

1. Make-up water was weighed
2. Bentogrout Slurry was weighed, added to the water, and mixed
3. Polymer, cement, fly ash, and slag (when necessary) were weighed
4. Raw K-65 (not dried) was weighed
5. The K-65 was added to the water/Bentogrout solution and mixed
6. The polymer was added to the K-65 slurry and mixed
7. ADVACAST 500 was initially added and mixed (where indicated)

8. The cement was added and mixed thoroughly
9. Approximately half of the fly ash was added and mixed thoroughly
10. The remaining fly ash was added and mixed thoroughly
11. At this point additional ADVACAST 500 was added in small increments as necessary until an acceptable grout consistency was reached

After all of the components were integrated into the mix, the batch was stirred vigorously for approximately five minutes. Mixing continued for approximately two minutes after the batch ceased to thin out.

3.2 Test Methods

Test methods are briefly described below and in more detail in Appendix 1.

3.2.1 Modified Vicat Set Test

A modified Vicat test method was developed in order to track set time of grout samples. The procedure was based in part on ASTM Method C-191. The samples for the Vicat Set Method were two inches in diameter and one inch tall. Immediately after mixing, the grout was poured into a plastic cylinder sample container and the following observations were made:

- Whether or not the mixture appeared to be self-leveling
- Whether or not the grout settled with entrapped air
- Whether or not a separate water phase was present

A plastic plate was then placed on the sample container in order to ensure that the moisture content in the sample container headspace approximated that of a final disposal container.

The use of a plastic plate did not provide an adequate seal for the container. Therefore, samples were placed in containers with fitted lids. The samples were not opened for 24 hours. This precluded the implementation of the full Modified Vicat procedure. The degree of set was checked at 24 hours. This was a semi-quantitative observation. The

penetration depth of the Vicat needle was estimated and noted in order to provide an idea of how hard or soft the grout was at 24 hours. However, there was not a requirement for a minimum degree of set or compressive strength of the grout product.

3.2.2 Grout Flow Test

The grout flow test was designed to qualitatively evaluate the flow properties of freshly mixed grout. This test was to help identify whether or not a grout formulation was self-leveling and whether or not the grout had the ability to fill a disposal container unaided by vibration or other mechanical leveling techniques. For this test, a hollow cylinder with a 1½" inner diameter was placed on a rigid flat surface. Freshly mixed grout was placed in the cylinder to a height of two inches (approximately 100 grams of grout). The cylinder was then carefully removed in a vertical motion and the grout was allowed to flow radially. The degree of slump or flow was noted.

3.2.3 Shaker Test

For this test, a 200-gram sample of grout was prepared according to the appropriate formula. The freshly mixed grout was then poured into a wide-mouth 250 mL Erlenmeyer flask and a sealed with a lid. The sample was then allowed to cure for 24 hours, or until the grout was set and no free water was visible. In full-scale operations, the grout would be ready to ship.

After the sample cured, it was attached to a wrist shaker and agitated for 36 hours at a low frequency and high amplitude setting. At the end of the shake duration, the sample lid was removed and the grout was inspected for visible signs of water released during the shaker test.

3.2.4 Freeze – Thaw Test

Freshly mixed grout was poured into a plastic sample cylinder, the lids then placed on, and the samples allowed to cure until no free water was present (a minimum of twenty four hours, however). The samples were then placed in a freezer to lower the temperature of the sample to less than 0 °C. The samples were held below the freezing

temperature overnight. The following morning, the samples were removed from the freezer, allowed to thaw, and subsequently checked to determine if phase separation had occurred. This cycle was repeated a minimum of 10 times.

3.3 Baseline Formulation Development

The first task in testing to be performed at DIAL was to re-evaluate the baseline grout formulas and determine if they generated grout that meets the shipping and disposal requirements after a 24-hour cure time. Given the small sample volumes necessary for ALARA and sample amount limitation reasons, the mixing for these tests was performed by hand. All mixing observations were recorded.

3.3.1 Flow Characteristics

Flow characterization was to be based primarily on the results of the Grout Flow Test. However, samples that were relatively thin as they were being mixed exhibited little, if any subsequent flow or slump when subjected to the Grout flow Test. Early testing demonstrated that if a sample did in fact flow when subjected to the Grout Flow Test, the samples would likely fail the free water criteria at twenty-four hours. Based on these observations, the DIAL Principal Investigator and Fernald technical lead revised the flow criteria to include only the mixing behavior of the grout batches. Observational judgments were made during the mixing step, and samples were given a pass/fail rating based on the mixing characteristics. The acceptability of a grout flow/mix property was based on two observations. First, a batch was evaluated after all ingredients were added. If, after the addition of all ingredients, the grout mix became stiff, formed dry lumps and did not thin out and become smooth after several minutes of mixing, then it was given a fail rating and designated an overly stiff mix. If the batch thinned upon mixing, then it was evaluated for flowability based on the ability to remove it from the mixing container. In this regard in addition to thinning out after all ingredients were incorporated, if the batch could be removed from the mixing container and poured into a plastic sleeve with a side to side motion of the mixing spatula, then the batch was considered to have acceptable mix properties.

3.3.2 Water Retention

Formulations were considered to have acceptable water retention characteristics if no free liquid was present after a curing period of 24 hours, and cured samples did not release water after being subjected to the Shaker and Freeze/Thaw tests. If a sample did not re-adsorb free water within 24 hours, then it was evaluated at 48 hours and 72 hours. A note was made for samples that reabsorbed water within 48 to 72 hours, however, these samples were not subjected to the Shaker or the Freeze/Thaw Tests. If free water was not re-adsorbed within 72 hours, then the sample was identified as a failure and was not evaluated further.

3.3.3 Envelope Testing

If the samples met the transportation, disposal, and operational requirements, then the next step was to determine the operating envelop for the formulation, (i.e., minimum percent total solids required to prevent free liquid from forming, and the maximum percent total solids grout that still has acceptable rheologic properties). The University of Cincinnati study evaluated grout formulations with a solids range of 65 to 72 weight percent, and a waste loading range of 12.7 to 30 percent. There were early indications in this study that the range of solids evaluated by University of Cincinnati was going to produce samples that were too thick to be considered operationally acceptable. So, for this study, samples were prepared with total solids contents ranging from 54 to 68 weight percent. A list of the Envelope Testing formulations prepared by DIAL is provided in Appendix 2

Samples prepared for the envelope study were subjected to the Flow Test, the Modified Vicat Test, and Bleed Water Observation. Once the formulation envelope was identified, additional testing was performed with viscosity modifiers and blended cements, as outlined in the sections below.

3.4 Additional Water Retention and Flow Testing

For samples that did not meet the water retention and flow requirements, the tests described in Section 3.4.1 and 3.4.2 were performed until a suitable grout formula was developed.

3.4.1 Increased Percent Solids Plus Thinning Agents

As a follow-up to the envelope testing, the effect of increasing the total percent solids through the use of ADVACAST 500 was explored. In general, it was known that as the percent solids increase, the water retention properties of the mix improve, but the flow properties deteriorate. ADVACAST 500 is a well-known viscosity modifier, described as a high-efficiency polycarboxylate superplacticizer intended for use with pre-cast concrete mixes. The expected result was that ADVACAST formulations would produce acceptable grout mixtures with higher total percent solids while maintaining acceptable flow properties.

3.4.2 Formulated Cements

The use of formulated cements, e.g., Portland cement and blast furnace slag, was intended to improve flow and water retention characteristics of grout mixtures. Grout formulation tests were conducted using a 50/50 mix of Type I Portland cement and slag.

4.0 Results

More than eighty grout batches were prepared in the Phase 1 study, approximately twenty surrogate and sixty K-65 bearing samples.

It was discovered early in the study that a plastic cover did not provide an adequate seal for the sample headspaces. In some of the initial formulations, samples that appeared to be free of bleed water at twenty four hours, in fact, did not set up in that time frame when placed in air-tight containers. Therefore, all subsequent batches were poured into plastic cylinder molds with airtight lids. The samples were then left to set for twenty-four hours, removing the lid as infrequently as possible. This was to ensure that the relative humidity of the container headspace was representative of the relative humidity anticipated

disposal container headspace, that is, 100% relative humidity. This precluded the use of the full Modified Vicat Test, which would have required frequent removal of the container lid. For many of the samples, however, the Modified Vicat needle was used to check for degree of set after twenty-four hours. The needle, with one weight, was placed on the sample surface and the approximate penetration depth was noted.

The results of all individual tests performed, including the Vicat Test, are provided in Appendix 2.

4.1 Baseline Formulations

As noted in Section 3.3.3, the total percent solids reported in the University of Cincinnati study produced grout mixtures that were considered too thick to meet operational flowability requirements. Efforts were then directed to determine the range of percent solids that would produce an acceptable mix consistency for the K-65 material used by DIAL.

For batches containing only cement and fly ash as additives the mixing consistency of the grout was primarily a function of both total percent solids and the waste loading value (the effects of ADVACAST and slag are discussed later in this document). As the waste loading was increased, the total percent solids had to be decreased in order to maintain acceptable mixing characteristics.

Realizing this trend, samples were then prepared at four waste loadings: 14%, 20%, 28%, and 32%. At all four waste loadings, samples were prepared with varying total percent solids in order to define the envelope of acceptable grout formulations. Starting with an initial percent solids in grout formulation, the total percent solids level was decreased until the samples failed due to the presence of bleed water at twenty-four hours. The total solids level was then increased until the batch mix properties were judged to be too stiff. These two extremes defined the working envelope for the four waste loading levels.

The range of total percent solids that produced acceptable batches was narrower at the lower waste loading values. For 14% and 20% waste loading, acceptable grouts were produced with total percent solids values of 68% and 66%, respectively. For 28% waste

loading, acceptable grouts were produced in the range of 60% to 63%. For 32% waste loading, the range of total percent solids was 57% to 60%. The data provided in Table 2 was used to establish the acceptable formulation trend shown graphically in figure 1. The data in Table 2 includes formulations with 10% cement, fly ash, but no ADVACAST.

The formulations were simply given a pass/fail rating. Samples received a pass rating in the event that no free water was evident after twenty-four hours, the mix properties were judged to be acceptable, and no water was released during either the Shaker or Freeze/Thaw test. These formulations are colored blue in Figure 1. Samples that failed any of the criteria listed above were shaded red or gray. Red indicates that samples either failed due to the presence of water at twenty-four hours or that the mix was judged to be overly stiff. A gray block indicates that the sample mix characteristics were acceptable, but free water was present at twenty-four hours. The free water, however, was re-absorbed within 72 hours.

Additional batches were prepared in order to test the acceptable formulations against the Shaker and Freeze/Thaw tests. For the 15%, 20%, 28% and 32% waste loading formulas, the Shaker and Freeze/Thaw tests were only performed on the lower total percent solids value. It was fully expected that the lower total percent solids mixtures were more prone to release water. All samples within the acceptable mix range passed both the Shaker and Freeze/Thaw requirements.

Table 2: As Mixed Data Used for Pass/Fail Table – No Advacast

Formula ID	Percent Solids, %	Waste Loading %	%Cement	%Flyash	Mix Consistency	Free Water at 24 Hours	Passed Shaker Test	Passed Freeze/Thaw Test	Pass or Fail?
F04-K-B02-R1	64%	18%	10%	36%	*	48			Fail
F04-K-B04-R1	57%	20%	10%	27%	*	Fail			Fail
F04-K-B24-R1	63%	14%	10%	39%	Thin, Pourable	48-72			Fail
F04-K-B25-R1	63%	20%	10%	33%	Medium thin transferrable	48-72			Fail
F04-K-B26-R1	63%	28%	10%	25%	Borderline Too Thick	No			Pass
F04-K-B27-R1	68%	14%	10%	44%	Medium	No			Pass
F04-K-B28-R1	60%	28%	10%	22%	Medium	No			Pass
F04-K-B29-R1	60%	32%	10%	18%	Medium Thick	No			Pass
F04-K-B30-R1	57%	32%	10%	15%	Medium Thick	No			Pass
F04-K-B31-R1	66%	20%	10%	36%	soft butter	No			Pass
F04-K-B33-R1	60%	14%	10%	36%	Very Thin	Fail			Fail
F04-K-B34-R1	66%	14%	10%	42%	Thin, Pourable	48-72			Fail
F04-K-B35-R1	69%	14%	10%	45%	Thick, Over borderline	No			Fail
F04-K-B36-R1	60%	20%	10%	30%	Very Thin	Fail			Fail
F04-K-B37-R1	68%	20%	10%	38%	Failed - Too Stiff	No			Fail
F04-K-B38-R1	57%	28%	10%	19%	Thin, Pourable	Fail			Fail
F04-K-B39-R1	66%	28%	10%	28%	Failed - Too Stiff	No			Fail
F04-K-B40-R1	63%	32%	10%	20%	Thick, Over borderline	No			Fail
F04-K-B41-R1	54%	32%	10%	12%	Thin	Fail			Fail
F04-K-B48-R1	66%	20%	10%	36%	Medium Thick	No		Yes	Pass
F04-K-B49-R1	57%	32%	10%	15%	Medium Thick	??		Yes	Pass
F04-K-B50-R1	66%	20%	10%	36%	Cake Frosting	No	Yes		Pass
F04-K-B51-R1	58%	32%	10%	15%	Medium Frosting	No	Yes		Pass
F04-K-B52-R1	68%	14%	10%	44%	Thin Frosting	No	Yes		Pass
F04-K-B53-R1	60%	28%	10%	22%	Medium thin transferrable	No	Yes		Pass
F04-K-B54-R1	60%	28%	10%	22%	Thin Frosting	No		Yes	Pass
F04-K-B55-R1	68%	14%	10%	44%	Medium thin transferrable	No		Yes	Pass

Figure 1: Grout Formulation Results

Pass Mixing, Free Water, Shaker, and Freeze/Thaw

Fail mixing or water

48-72 hrs to absorb water

10% Cement, no Advacast							
Waste Loading, %	54% Solids	57% Solids	60% Solids	63% Solids	66% Solids	68% Solids	69% Solids
14			water				*Mix
20		water	water			*Mix	
28		Water			*Mix		
32	Water			*Mix			

Borderline - too thick

4.2 Adjustments – Cement Concentration

Some baseline formulations that demonstrated acceptable mixing properties but did not re-absorb bleed water until 72 hours were tested again with higher cement concentrations. Based upon results of the University of Cincinnati study, the cement concentration needed to remain in the range of 8 to 12 weight percent. Therefore, formulations were modified to include 12% cement, and adjusting the fly ash downward accordingly. The total percent solids and waste loading values were held constant.

The adjusted cement level did not appear to improve the ability of the grout to re-absorb bleed water at a faster rate, still requiring 48 to 72 hours.

4.3 ADVACAST 500 Formulations

ADVACAST 500 is a viscosity modifier, described as high-efficiency polycarboxylate superplacticizers intended for use with pre-cast concrete mixes. It was tested to determine if its use would produce grout with higher total percent solids while maintaining acceptable flow properties and meeting bleed water requirements.

Using the envelope testing samples as a guide, grout formulations were prepared with varying levels of ADVACAST 500. The tests were conducted at two waste loadings: 20% and 32%. Grout formulas that failed due to an overly stiff mixing consistency (in Figure 1, those red blocks indicating a failure due to mix) were prepared with increasing amounts of ADVACAST 500. The level of ADVACAST 500 was incrementally increased until a grout mix was obtained that demonstrated acceptable mixing properties. The samples were then checked for the presence of free water at twenty-four hours. If water was present, then the formula was given a fail rating.

For a given waste loading and solids level, increasing the amount of ADVACAST until acceptable mixing properties were obtained caused formulations to fail due to free water. The next step was to repeat the same procedure with a grout formulation that had a higher total percent solids, while maintaining the same level of ADVACAST and waste loading.

The result was that the new formulas failed due to overly stiff mixtures. Finally, starting with this overly stiff mix, the ADVACAST level was increased again until the mixing properties were acceptable, while holding the total percent solids constant. The samples were again checked for the presence of free water at twenty-four hours.

The data provided in Table 3 were used to establish the acceptable formulation trends shown graphically in Figures 2 and 3. The data in Table 3 includes formulations with 10% cement, fly ash, and ADVACAST 500.

Figure 2: ADVACAST 500 Tests, 20% Waste Loading; and Figure 3: ADVACAST 500 Tests, 32% Waste Loading, graphically present the results of the ADVACAST Testing. The same color-coding was used in Figures 2 and 3 as was used in Figure 1. Results show that ADVACAST 500 is sensitive to the total percent solids level of the batch formulations. These preliminary data suggest that if ADVACAST 500 is to be used to thin an overly stiff grout, then additional fly ash must also be added in order to prevent free water from developing at 24 hours.

Additional testing is needed in order to develop an operating envelope and operational guidelines for the addition of ADVACAST (refer to Section 6).

4.4 Slag Formulations

Eight formulations were tested that included blast furnace slag as an ingredient, both with and without ADVACAST 500. It is common to use blended cement/slag products wherein the cement and slag are provided as a premixed ingredient, often at a 50/50 ratio. For the tests performed at DIAL, the cement and slag were obtained separately. Therefore, they were weighed separately and mixed prior to adding the dry ingredients to the grout batches. The cement content was fixed at 10 wt%, so the amount of slag used in the formulation, also 10 wt%, replaced an equal amount of fly ash.

A 20% waste loading, 68% total solids formulation, with 10% slag and 1.9% ADVACAST 500, demonstrated superior mixing characteristics. The batch was thin, poured easily from the container, and was self leveling. No free water was present after twenty-four hours. However, investigation by the Fernald technical lead indicated that blended cement/slag products were not readily available for use at the Fernald Closure Site. Consequently, the slag formulations were not duplicated, nor were they subjected to either the Shaker or Freeze/Thaw Tests.

4.5 Additional Observations

4.5.1 Polymer

During the surrogate testing, it was noted that increasing the polymer content of the batch caused an increase in the stiffness of the mix. Some indication of this same effect was observed during the K-65 testing. It was therefore decided by the Fernald and DIAL technical leads that the concentration of the diluted polymer solution (150 times dilution of the manufacturer supplied polymer solution) in the grout batch would not exceed 7.5 percent of the total batch weight. .

The polymer used at DIAL was the same product that was used during the University of Cincinnati studies. The polymer was prepared according to the manufacturer's recommendations, and was also prepared using the same method used by the University of Cincinnati. However, the Fernald technical lead observed that the DIAL polymer

solution did not behave in the same manner as the University of Cincinnati polymer solution. He noted that the DIAL solution was substantially more viscous.

The polymer manufacturer was contacted and verified that the preparation method used by DIAL was correct. DIAL therefore requested that a new polymer sample be provided. Upon receipt of the new sample, DIAL prepared a new 0.2% solution. There was no discernable difference between the old and new solutions. A decision was made by the Fernald technical lead to continue using the 0.2% polymer solution as prepared by DIAL.

4.5.2 Grout Stiffening

As noted previously, fly ash was the last and usually the most abundant dry component added to the batch. For formulations that ultimately passed the acceptance criteria, the batch thickened considerably following the addition of fly ash. The consistency of the mix became more dry and formed large clumps. Mixing became much more difficult to accomplish by hand and several minutes of vigorous agitation were necessary in order to get the batch to thin out to an acceptable consistency.

4.5.3 ADVACAST - Grout Thinning Time

During an ADVACAST batch preparation, the batch was mixed as described in Section 3.1, and was then left undisturbed for approximately one to two minutes. The batch was re-mixed prior to being poured into a container. Upon re-mixing, it was observed that the batch was noticeably thinner. This same resting period was repeated on a subsequent ADVACAST batch, and the same observation was made, however, the additional thinning was not as pronounced as it was with the first sample. The subsequent test was on a different waste loading and a different total solids percent, so the degree of thinning was not expected to be the same. However, since the thinning observation was again observed, it is recommended that this phenomenon be investigated further if ADVACAST is to be used.

5.0 Scale-up

Batches prepared at DIAL ranged from 100 to 500 grams. All mixing was performed by hand using a metal laboratory spatula. There are grout characteristics that are expected to change as the size of the batch is increased from bench-scale to 17,000 pounds and with the use of a large industrial ribbon blender. The extent to which these characteristics will change is not known and scale-up testing was not a feasible option given the lack of material available, the size of the testing facility, and the associated clean-up costs.

Figures 1 through 3 provided in this document should serve as a guide for determining the appropriate grout formulations during full-scale operation. The absolute values presented, however, may shift based on the scale-up effects. Several full-scale batches will need to be prepared in order to quantify the degree to which the formulations will shift.

5.1 Curing Time – Bleed Water

The increased batch mass of 17,000 lb is expected to cause a greater temperature rise during the curing process than the bench-scale batch sizes in this study. This increase in temperature rise may decrease the time required for the batch to cure. This study did not include the determination of temperature profiles for the various formulations, so the relation between temperature and cure time for the formulations in this study was not determined. Additionally, the different geometry and size of the shipping containers to be used in Silos 1 and 2 treatment operations may change the rate at which the grout re-absorbs free water.

5.2 Mixing Consistency

Using ribbon blenders – The shear force imparted on the grout mix by the ribbon blender can not be approximated by hand, so it is fully expected that the grout will be thinner during full scale mixing than it was at DIAL. However, the consistency of the grout during the discharge/filling operation may be thicker since the shear forces will again be reduced. In addition, the ability of the grout to flow to the edges of the shipping

container and to self-level should be aided by the drop distance from the mixer to the container and by the increased batch weight. Although the shear upon impact should improve the grout flowability, to what extent cannot be determined based on these studies.

6.0 Additional Work

The following additional grout tests have been identified as based upon the tests that have been completed to date, based upon system operability testing of the remediation facility performed at the Fernald site, and based upon observations and results of Advanced Waste Retrieval operations at Fernald.

6.1 High Salt Formulations

During the transfer of K-65 from the Silos to the Temporary Transfer Tanks, slurry samples have been collected. Supernatant from these samples was analyzed, and the resultant data indicated high concentrations of sodium nitrate, sodium sulfate, and sodium carbonate. Based on these analyses, the Fernald technical lead requested that DIAL evaluate how salt concentrations in the grout preparation water affect the final grout product. Three different salt concentration levels will be evaluated.

6.2 High and Low Waste Loading Grout Formulations

Surrogate testing of the Fernald clarifier has demonstrated that slurry solids concentrations as high as 70% can be reached. As a result, DIAL will determine the operating envelope for waste loadings of 36%, 40%, 42%, and 43%, using the same acceptance criteria as was used in the current study.

In addition, DIAL will develop formulations for low waste loading grouts. Lower waste loadings may be necessary near the end of the processing campaign in order to treat slurries with low solids content.

6.3 ADVACAST 500

As discussed in Section 4, additional testing of ADVACAST 500 is required in order to determine operational guidelines for its use as a grout additive. Its sensitivity to the solids content of grout formulations will be investigated further. In addition, testing will be performed to determine if there are any time limits relative to curing associated with its use.

6.4 Robustness of Formulation

Formulations developed in this study will be tested to evaluate the sensitivity to errors in additive weight and to the order in which ingredients were added. These tests will be conducted to mimic potential process errors that may occur during full-scale operations and are intended to experimentally determine the acceptable grout envelope relative to errors in various process instruments.

6.5 Affects of Additives

Transfer and handling of the Silos waste may require the use of chemical additives (such as defoaming or anti-foaming reagents) not tested in the current study. In the event that use of such agents is likely to occur, DIAL will perform additional testing to determine the affects that the additives have on the grout formulations.

Appendix 1

Test Methods

Test Methods

Modified Vicat Set Test

A modified Vicat test method has been developed in order to track set time of grout samples. The procedure is based in part on ASTM Method C-191. The samples for the Vicat Set Method will be sized for a 2-inch diameter, 1-inch tall cylinder. Immediately after mixing, the grout will be poured into a plastic cylinder sample container and the following observations will be made:

- Whether or not the mixture appears to be self-leveling
- Whether or not the grout would settle with entrapped air
- Whether or not a separate water phase is present

An airtight lid or a glass plate will then be placed on the sample container in order to ensure that the moisture content in the sample container headspace approximates that of a final disposal container. The apparatus for performing the modified Vicat test was presented in Figure 1 below.

The modified Vicat needle used for this procedure consists of a 1/16-inch stainless steel wire with 40-gram removable disc weights. The length of the penetration portion of the needle is approximately one inch. The overall weight of the needle with one weight is 21.37 grams, excluding the removable disc weights. A diagram of the modified Vicat needle is shown in Figure 2 below.

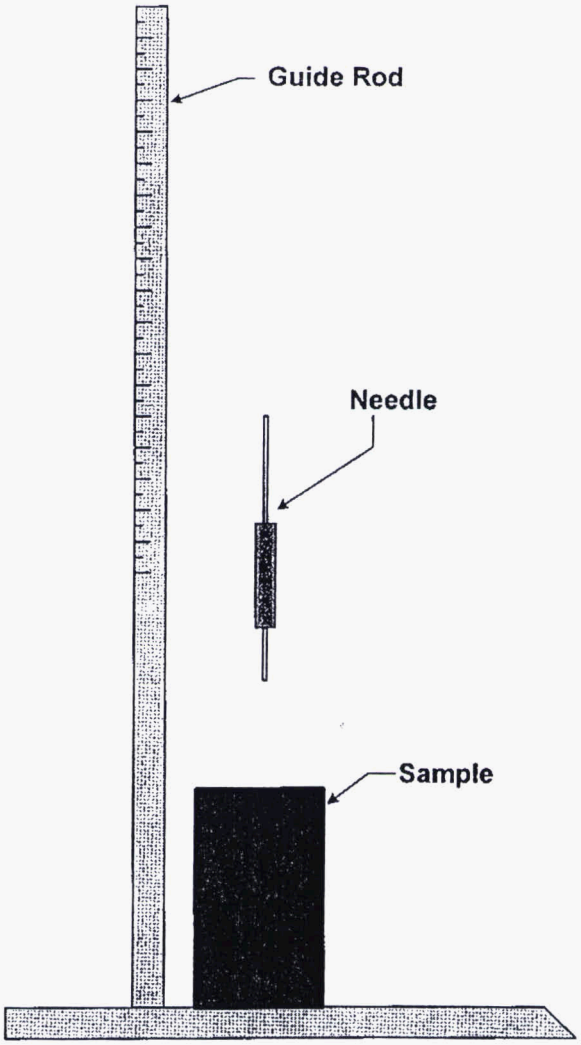

Figure 1: Modified Vicat Apparatus

To perform this test, place 100 to 200 grams of the freshly mixed grout in a sample container. Take a photograph of the prepared sample. Note and record the ease with which the grout was placed in the cylinders, and whether it appears that air was entrapped in the sample. Place the sample in the curing area. After 1, 2, 3, and 4 hours, remove the sample container lids and record the following observations and tests results:

1. Whether or not the grout sample resisted penetration of the Vicat needle.
2. Note the presence or absence of bleed water.
3. Note whether the samples appears wet, moist, or dry.

At the end of 24 hours, if the material appears to be free of bleed water, attempt to remove the sample from the cylinder. If the sample can be removed, note the physical form, including whether or not the material retains its shape without support. Return the sample to the cylinder and replace the lid after the testing and observations have been made at each time interval indicated.

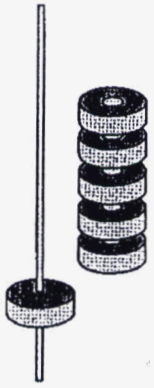

Figure 2: Modified Vicat Needle

Grout Flow Test

The grout flow test was designed to qualitatively evaluate the flow properties of freshly mixed grout. This test helped to identify whether or not the grout formulation was self-leveling and whether or not it had the ability to fill a disposal container unaided by vibration or other mechanical leveling techniques. For this test, a hollow cylinder with a 1½" inner diameter was placed on a rigid flat surface, which has been covered with a piece of wax paper in order to minimize contamination. Freshly mixed grout was placed in the cylinder to a height of two inches (approximately 100 grams of grout). The cylinder was then carefully removed in a vertical motion and the grout was allowed to flow radially, as shown in Figure 3.

In order to determine the diameter of the grout flow, measurements were taken in two perpendicular directions. The average of the two measurements was taken to be the diameter of the grout flow. The grout diameter was recorded at 0, 30, and 90 seconds after the cylinder has been removed.

Shaker Test

A freshly mixed grout is poured into a wide-mouth 250 mL Erlenmeyer flask. The lid is placed on the flask and sealed with Teflon tape. The sample was then allowed to cure for 24 hours, or until the grout is set and no free water is visible.

After the sample has cured, it is attached to a shaker table or wrist shaker. The sample is then agitated for 36 hours at a low frequency and high amplitude setting that best simulates transportation in a truck. At the end of the shake duration, the sample lid is removed and inspected for signs of water that may have been released from the sample.

Freeze – Thaw Test

A freshly mixed grout is then poured into a plastic sample cylinder. The lid is placed on the sample cylinder and the sample s allowed to cure for 24 hours, or until the grout has set. The sample is then placed in a freezer to lower the temperature of the sample to less than 0 °C. The sample was held below the freezing temperature overnight. The following morning, the sample is removed from the freezer, allowed to thaw, and subsequently checked to determine if phase separation occurred. This cycle is repeated a minimum of 10 times.

Appendix 2

Grout Formulations – As mixed

Table A2 – 1: Grout Formulation Summary

Formula ID	Percent Solids, %	Waste Loading %	%Cement	%Slag	%Flyash	Percent Advacast, %
F04-K-B01-R1	64%	18%	8%	0%	38%	0.0%
F04-K-B02-R1	64%	18%	10%	0%	36%	0.0%
F04-K-B03-R1	66%	17%	11%	0%	38%	0.0%
F04-K-B01-R2	66%	20%	8%	0%	38%	0.0%
F04-K-B02-R2	66%	20%	10%	0%	36%	0.0%
F04-K-B03-R2	66%	20%	12%	0%	35%	0.0%
F04-K-B04-R1	57%	20%	10%	0%	27%	0.0%
F04-K-B05-R1	60%	20%	10%	0%	30%	0.0%
F04-K-B06-R1	63%	20%	10%	0%	33%	0.0%
[1,3]Advacast Test 1	63%	20%	10%	0%	33%	0.7%
[1,3]Advacast Test 2	69%	20%	10%	0%	39%	1.6%
[2]Advacast Test 3	63%	20%	10%	0%	33%	0.7%
Advacast Test 4	63%	20%	10%	0%	33%	0.7%
[3]Advacast Test 5	66%	21%	10%	0%	35%	8.4%
[3]Advacast Test 6	66%	21%	10%	0%	35%	7.6%
Advacast Test 5 *R2*	63%	20%	10%	0%	33%	0.8%
Advacast Test 7	63%	20%	10%	0%	33%	0.9%
F04-K-B07-R1	69%	20%	10%	0%	39%	0.7%
F04-K-B08-R1	69%	20%	10%	0%	39%	0.8%
F04-K-B09-R1	69%	20%	10%	0%	39%	0.9%
F04-K-B09-R2	69%	20%	10%	0%	39%	1.0%
F04-K-B10-R1	69%	20%	10%	0%	39%	1.1%
F04-K-B10-R2	68%	20%	10%	0%	39%	1.0%
F04-K-B11-R1	68%	20%	10%	0%	38%	1.7%
F04-K-B11-R2	68%	20%	10%	0%	38%	1.7%
F04-K-B11-R3	68%	20%	10%	0%	38%	1.7%
F04-K-B12-R1	68%	20%	12%	0%	37%	1.7%
F04-K-B12-R2	68%	20%	12%	0%	37%	1.7%
F04-K-B13-R1	69%	20%	10%	0%	40%	1.7%
F04-K-B14-R1	69%	20%	10%	10%	29%	0.0%
F04-K-B15-R1	68%	20%	10%	10%	29%	1.9%
F04-K-B15-R2	68%	20%	10%	10%	29%	1.9%
F04-K-B15-R3	68%	20%	10%	10%	29%	1.9%
F04-K-B16-R1	68%	14%	10%	0%	44%	1.7%
F04-K-B17-R1	69%	14%	10%	10%	35%	0.0%
F04-K-B18-R1	68%	14%	10%	10%	34%	2.0%
F04-K-B19-R1	68%	32%	10%	0%	26%	2.6%
F04-K-B20-R1	69%	32%	10%	10%	17%	0.0%
F04-K-B21-R1	68%	32%	10%	0%	27%	1.7%
F04-K-B21-R2	68%	32%	10%	0%	27%	2.0%
F04-K-B22-R1	69%	32%	10%	10%	17%	0.0%
F04-K-B23-R1	68%	20%	10%	0%	38%	1.7%
F04-K-B24-R1	63%	14%	10%	0%	39%	0.0%
F04-K-B25-R1	63%	20%	10%	0%	33%	0.0%
F04-K-B26-R1	63%	28%	10%	0%	25%	0.0%

Formula ID	Percent Solids, %	Waste Loading %	%Cement	%Slag	%Flyash	Percent Advacast, %
F04-K-B27-R1	68%	14%	10%	0%	44%	0.0%
F04-K-B28-R1	60%	28%	10%	0%	22%	0.0%
F04-K-B29-R1	60%	32%	10%	0%	18%	0.0%
F04-K-B30-R1	57%	32%	10%	0%	15%	0.0%
F04-K-B31-R1	66%	20%	10%	0%	36%	0.0%
F04-K-B32-R1						
F04-K-B33-R1	60%	14%	10%	0%	36%	0.0%
F04-K-B34-R1	66%	14%	10%	0%	42%	0.0%
F04-K-B35-R1	69%	14%	10%	0%	45%	0.0%
F04-K-B36-R1	60%	20%	10%	0%	30%	0.0%
F04-K-B37-R1	68%	20%	10%	0%	38%	0.0%
F04-K-B38-R1	57%	28%	10%	0%	19%	0.0%
F04-K-B39-R1	66%	28%	10%	0%	28%	0.0%
F04-K-B40-R1	63%	32%	10%	0%	20%	0.0%
F04-K-B41-R1	54%	32%	10%	0%	12%	0.0%
F04-K-B42-R1	68%	20%	10%	0%	38%	0.7%
F04-K-B43-R1	63%	32%	10%	0%	21%	1.4%
F04-K-B44-R1A	68%	20%	10%	0%	38%	1.4%
F04-K-B44-R1B	68%	20%	10%	0%	37%	2.0%
F04-K-B45-R1A	63%	32%	10%	0%	21%	1.7%
F04-K-B45-R1B	63%	32%	10%	0%	21%	2.0%
F04-K-B46-R1A	72%	20%	10%	0%	41%	1.7%
F04-K-B46-R1B	72%	20%	10%	0%	41%	2.0%
F04-K-B47-R1A	66%	32%	10%	0%	24%	2.0%
F04-K-B47-R1B	66%	31%	10%	0%	24%	2.3%
F04-K-B48-R1	66%	20%	10%	0%	36%	0.0%
F04-K-B49-R1	57%	32%	10%	0%	15%	0.0%
F04-K-B50-R1	66%	20%	10%	0%	36%	0.0%
F04-K-B51-R1	58%	32%	10%	0%	15%	0.0%
F04-K-B52-R1	68%	14%	10%	0%	44%	0.0%
F04-K-B53-R1	60%	28%	10%	0%	22%	0.0%
F04-K-B54-R1	60%	28%	10%	0%	22%	0.0%
F04-K-B55-R1	68%	14%	10%	0%	44%	0.0%

Solids Wt% in K-65	70.5%
Solids Wt% in Nalco	0.2%
ml of as-received Nalco/ 100g of waste solids	0.125
Solids Wt% in Bentogrout	10%
Dry solids ratio of Bentogrout to K-65	0.03
Advacast mL per gram total mix	0.0018

[1] Suspect Samples (inaccurate measure on advacast addition)

[2] K-65 slightly dry (left out, covered but not sealed)

[3] 100% Avdvacast used instead of 10% solution

[4] 10% Advacast used

[5] Freee water never re-absorbed

Table A2 - 2: Test Result Summary

Formula ID	Flow	Free Water at 24 Hours	Vicat	Shaker	F/T
F04-K-B01-R1	None	48-72	Full @ 72	-	-
F04-K-B02-R1	None	48	1/8" @ 24	-	-
F04-K-B03-R1	None	No	1/8" @ 24	-	-
F04-K-B01-R2	None	X	1/8" @ 24	-	-
F04-K-B02-R2	None	X	1/8" @ 24	-	-
F04-K-B03-R2	None	No	0" @ 24	-	-
F04-K-B04-R1	Yes	Fail	Full @ 24	-	-
F04-K-B05-R1	Minor	X	1/4" @ 24	-	-
F04-K-B06-R1	None	No	0" @ 24	-	-
[1,3]Advacast Test 1			1/8" @ 24	-	-
[1,3]Advacast Test 2			1/8" @ 24	-	-
[2]Advacast Test 3	None	X	?	-	-
Advacast Test 4	None	No	1/8" @ 24	-	-
[3]Advacast Test 5	Complete		NA	-	-
[3]Advacast Test 6	Complete		NA	-	-
Advacast Test 5 *R2*	None	No	1/8" @ 24	-	-
Advacast Test 7	None	48??	1/4" @ 24	-	-
F04-K-B07-R1	Soft Clay -	NA	NA	-	-
F04-K-B08-R1	Cake	NA	-	-	-
F04-K-B09-R1	Cake	NA	-	-	-
F04-K-B09-R2	Cake	NA	-	-	-
F04-K-B10-R1	Cake	No	0" @ 24	-	-
F04-K-B10-R2	Cake	NA	-	-	-
F04-K-B11-R1	Medium thin	NA	1/16" @ 24	-	-
F04-K-B11-R2	Medium thin	NA	0" @ 24	-	-
F04-K-B11-R3	Medium thin	48-72	0" @ 24	Pass	Pass
F04-K-B12-R1	??	NA	0" @ 24	Pass	-
F04-K-B12-R2	Medium thin	48-72	-	-	-
F04-K-B13-R1	Medium thin	48-72	-	-	-
F04-K-B14-R1	Borderline	No	-	?	-
F04-K-B15-R1	Thin,	No	-	?	-
F04-K-B15-R2	Thin,	No	-	-	-
F04-K-B15-R3	Thin,	No	-	-	-
F04-K-B16-R1	Thin,	[5]Yes	-	-	-
F04-K-B17-R1	Soft Butter	No	-	-	-
F04-K-B18-R1	Thin,	[5]Yes	-	-	-
F04-K-B19-R1	Soft Butter	No	-	-	-
F04-K-B20-R1	Failed - Too	No	-	-	-
F04-K-B21-R1	Peanut	No	-	-	-
F04-K-B21-R2	Peanut	No	-	-	-
F04-K-B22-R1	Peanut	No	-	-	-
F04-K-B23-R1	Thin,	No	-	-	-
F04-K-B24-R1	Thin,	48-72	-	-	-
F04-K-B25-R1	Medium thin	48-72	-	-	-
F04-K-B26-R1	Borderline	No	-	-	-

Formula ID	Flow	Free Water at 24 Hours	Vicat	Shaker	F/T
F04-K-B27-R1	Medium	No	-	-	-
F04-K-B28-R1	Medium	No	-	-	-
F04-K-B29-R1	Medium	No	-	-	-
F04-K-B30-R1	Medium	No	-	-	-
F04-K-B31-R1	soft butter	No	-	-	-
F04-K-B32-R1			-	-	-
F04-K-B33-R1	Very Thin	Fail	-	-	-
F04-K-B34-R1	Thin,	48-72	-	-	-
F04-K-B35-R1	Thick, Over	No	0" @ 24	-	-
F04-K-B36-R1	Very Thin	Fail	Full @ 72	-	-
F04-K-B37-R1	Failed - Too	No	0" @ 24	-	-
F04-K-B38-R1	Thin,	Fail	0" @ 72	-	-
F04-K-B39-R1	Failed - Too	No	0" @ 24	-	-
F04-K-B40-R1	Thick, Over	No	0" @ 24	-	-
F04-K-B41-R1	Thin	Fail	0" @ 24	-	-
F04-K-B42-R1	Thick, Over	No		-	-
F04-K-B43-R1	Thick, Over	No		-	-
F04-K-B44-R1A	Thick - Cake	NA		-	-
F04-K-B44-R1B	Thin - Self	Fail	0" @ 72	-	-
F04-K-B45-R1A	Thick - Cake	NA		-	-
F04-K-B45-R1B	Medium -	Fail	1/8" @ 72	-	-
F04-K-B46-R1A	Thick, Over	NA		-	-
F04-K-B46-R1B	Thin	No	0" @ 24	-	Pass
F04-K-B47-R1A	Thick, Over	NA		-	-
F04-K-B47-R1B	Medium -	No	0" @ 24	-	Pass
F04-K-B48-R1	Medium	No	0" @ 24	-	Pass
F04-K-B49-R1	Medium	??	1/4" @ 24	-	Pass
F04-K-B50-R1	Cake	No	-	Pass	-
F04-K-B51-R1	Medium	No	-	Pass	-
F04-K-B52-R1	Thin	No	-	Pass	-
F04-K-B53-R1	Medium thin	No	-	Pass	-
F04-K-B54-R1	Thin	No	-	-	Pass
F04-K-B55-R1	Medium thin	No	-	-	Pass

Solids Wt% in K-65	70.5%
Solids Wt% in Nalco	0.2%
ml of as-received Nalco/ 100g of waste solids	0.125
Solids Wt% in Bentogrout	10%
Dry solids ratio of Bentogrout to K-65	0.03
Advacast mL per gram total mix	0.0018

[1] Suspect Samples (inaccurate measure on advacast addition)

[2] K-65 slightly dry (left out, covered but not sealed)

[3] 100% Avdvacast used instead of 10% solution

[4] 10% Advacast used

[5] Freee water never re-absorbed

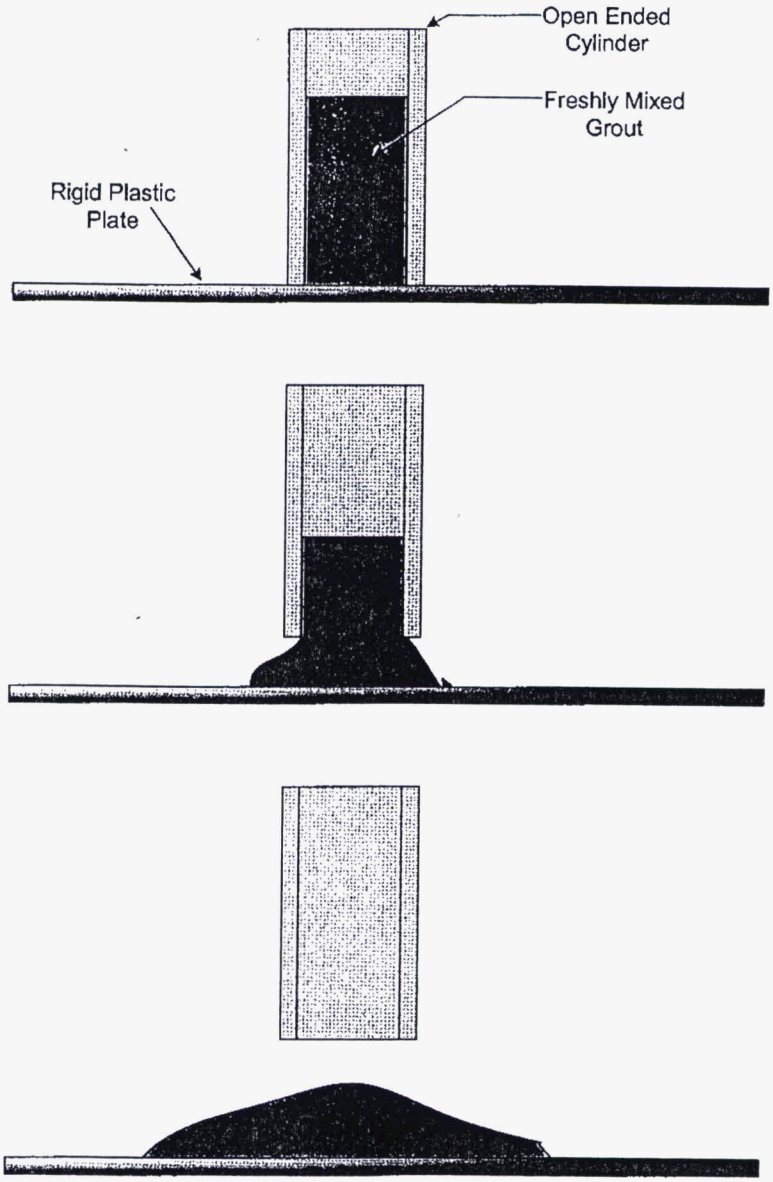

Figure 3: Flow Test Schematic