Fluor Fernald, Inc.
P.O. Box 538704
Cincinnati, OH 45253-8704

(513) 648-3000

FLUOR

November 23, 2004

Fernald Closure Project
Letter No. SP:2004-0077

Mr. John M. Sattler
U. S. Department of Energy
Ohio Field Office - Fernald Closure Project
175 Tri-County Parkway
Cincinnati, Ohio 45246

Dear Mr. Sattler:

CONTRACT DE-AC24-01OH20115, SUBMITTAL OF NEVADA TEST SITE WASTE PROFILE ONLO-000000133, REVISION 1, SILO 3- URANIUM ORE PROCESSING RESIDUES

Enclosed is a signed copy of Nevada Test Site (NTS) Waste Profile ONLO-000000133, Revision 1, Silo 3- Uranium Ore Processing Residues. Revision 1 is the result of the annual profile review and is being submitted to update the profile to meet the requirements of the Nevada Test Site Waste Acceptance Criteria, Revision 5. To aid in the review, we have provided a detailed list of changes made to the profile and related documents.

A suggested cover letter for transmitting this Waste Profile to Nevada is enclosed for your convenience. Should you have any questions, or require additional information, please contact Steve Heffron at (513) 648-5650.

Sincerely,

Dennis Carr
Senior Project Director
Silos Project

DC:DSA:kl
Enclosure(s)

c: David S. Adkins, MS52-3
Terri L. Binau, DOE Contracting Officer, DOE-OH
Doris Edwards, MS84
Reinhard Friske, MS52-3
Steve Heffron, MS52-3
Ralph E. Holland, DOE Contracting Officer, DOE-OH/FCP
Dennis Sizemore, Fluor Fernald, Inc. Prime Contract, MS 2
File Record Subject Submittal of Nevada Test Site Waste Profile ONLO-000000133, Revision 1, Silo 3- Uranium Ore Processing Residues
Project Number 40600/1.1
WM Letter log copy
Administrative Record, MS 78

To: John B. Jones, NNSA/NSO

From: John Sattler

Subject: Submittal of Profile ONLO-000000133, Revision 1, Silo 3- Uranium Ore Processing Residues

Enclosed is a signed copy of Nevada Test Site (NTS) Waste Profile ONLO-000000133, Revision 1, Silo 3- Uranium Ore Processing Residues. Revision 1 is the result of the annual profile review and is being submitted to update the profile to meet the requirements of the Nevada Test Site Waste Acceptance Criteria, Revision 5. To aid in the review, we have provided a detailed list of changes made to the profile and related documents.

c: Without Enclosures
Reinhard Friske, MS52-3
Steve Heffron, MS52-3
Doris Edwards, MS84

Fernald Closure Project Waste Profile
Silo 3- Uranium Ore Processing Residues
ONLO-000000133, Rev. 1
Detailed List of Changes

1. General- Completed new waste profile form as required by NTSWAC, Revision 5.

2. Section B.2.b- Changed the profile revision number and date.

3. Section B.7- Added estimation of remaining shipments and frequency.

4. Section E.1- Increased maximum weight for soft-sided bag to 7000 pounds.

5. Procedures Reference List- Removed EW-1016. This procedure was replaced with 11-C-319, 11-C-322 and 11-C-344. Added 40430-RP-0016 and 40430-RP-0031. Changed MSDS number for Ferrous Sulfate Solution.

6. Plutonium Gram Equivalent Calculations- Revised table with calculations for maximum package activity and maximum container volume. Results are well below NTSWAC, Revision 5 requirements.

7. Process Knowledge Narrative, Page 4- Removed the Plutonium Gram Equivalent table from document. This table was revised to meet the NTSWAC, Revision 5 format, and is included as a freestanding document.

Waste Profile Sheet

☒ **NTS Only** ☐ **Hanford Only** ☐ **Both NTS and Hanford**

A. Generator Information

1. Company name: **Fernald Closure Project**
2. Address: **P. O. Box 538704, Cincinnati, OH 45253-8704**
3. Generator facility: **Various**

4. Primary Technical Contact: **David S. Adkins** email: **david.adkins@fernald.gov** Phone: **513-648-4364**
   Fax: **513-648-4925**

5. DOE Contact: **John Sattler** email: **john.sattler@fernald.gov** Phone: **513-648-3145**
   Fax: **513-648-3076**

6. Waste Certification Official: **Reinhard Friske** email: **reinhard.friske@fernald.gov** Phone: **513-648-5477**
   Fax: **513-648-5131**

7. Generator's EPA Identification Number (If profile involves hazardous materials): **N/A**

B. General Waste Stream Information

1. Waste stream name: **Silo 3 - Uranium Ore Processing Residues**

2.a. NTS Waste stream identification number: **ONLO-000000133** N/A ☐

2.b. Hanford Profile Sheet Tracking Number:_____ N/A ☒

☐ New Profile
☒ Revised Profile (attach summary of changes) Revision Number: **1** Profile Revision Date: **11/23/04**

3. Waste generating process description: *Describe the process that generated the waste stream identified by this profile sheet. Attach process flow charts and other available information if helpful in explaining the generating process.* **The waste consists of calcined residues (Silo 3 Cold Metal Oxides) resulting from uranium ore processing. The calcined residue is conditioned with water, sodium lignosulfonate, and ferrous sulfate solution prior to packaging in a 30 mil liner sealed inside of an IP-2 soft-sided shipping container. See attached process knowledge narrative (PKN).**

4. Waste management services requested:
   ☒ Disposal
   ☐ Storage (Available only at Hanford)
   ☐ Treatment (Available only at Hanford); describe:
   ☐ Other; describe:

5. Waste Category (Check all that apply)
   ☐ Low Level ☐ Mixed Low-Level
   ☐ Mixed Low-Level (Generated within Nevada Only)
   ☐ "Classified Waste" ☐ "Classified Waste" requiring protection from visual observation
   ☐ Asbestiform Low-Level Waste ☒ 11(e)2 By-product Material (Small Quantities)
   ☐ Transuranic Waste ☐ Hanford Category 1 LLW
   ☐ Hanford Category 3 LLW ☐ Exceeds Hanford Category 3 LLW
   ☐ DOE Equivalence GTCC ☐ Contains accountable nuclear material

6. Estimated volume: ☐On-going (m^3/yr): Total remaining volume (m^3):
   ☒One Time Only (m^3):**4600**

7. Estimated frequency of shipments per fiscal year: **Beginning February, 2005, 15 shipments per week to continue for approximately 19 weeks for a total of approximately 280 shipments**

C. Physical/Chemical Characterization

1. Physical/Chemical process knowledge. Describe the process knowledge information used for physical/chemical characterization of this waste stream:

Waste Profile Sheet

☒ Material Safety Data Sheets. Attach MSDSs used to designate this waste stream (Hanford Site users can list Hanford MSDS numbers below in lieu of providing MSDSs). **Ferrous Sulfate, Sodium Lignosulfonate**

☐ Mass balance from process inputs. Describe how process inputs are controlled and recorded:

☒ Historical process and analytical data. Describe: **FCP Material Control & Accountability tracked all waste sent to Silo 3 and documented the uranium assay for each lot placed in the silo. These process documents were used in support of the OU4 RI data for uranium values. Refer to Process Knowledge Narrative.**

☐ Inert debris characterized by inventory control. Check this box when the waste stream consists largely of inert debris items that are characterized by inventory control procedures and recorded on inventory sheets. Briefly list or describe inventory procedures:

☒ Other. Describe: **OU4 RI and additional historical sampling were used for moisture and density values used in characterization of waste. See attached process knowledge narrative for additional information.**

☐ Physical/chemical characterization varies. Check this box when the characterization strategy varies from container to container. Describe below the strategy used to meet the acceptable knowledge requirements of the waste acceptance criteria.

2. Physical/chemical analysis. Describe the sampling and analysis performed to characterize this waste stream:

☐ No analysis performed.
☐ Field screening performed. Describe the frequency and type of field screening performed:
☐ Laboratory analysis performed. Describe the sample source and sampling frequency and methods:

List the analytical methods used, including upper confidence limits and explanations of anomalies for all analytes analyzed. Attach representative analytical sample result summary. For NTS, attach Table B-1 and data validation summary.

***N/A- Waste is 11(e)2, exempt from solid waste regulations. See PKN for additional information.**

3. Regulatory status. Check all boxes below that describe the regulatory status of the waste stream: **Silos 3 waste is 11(e)2 By-Product Material and is exempt from solid waste regulations. Refer to Process Knowledge Narrative for additional information regarding the regulatory status.**

☐ Federally regulated (RCRA) hazardous waste (40 CFR 261). List all RCRA U, P, F, K or D waste codes that could apply to the waste stream; place waste codes that do not apply to all containers in parentheses:
☐ For Hanford only, Washington State dangerous waste (WaAdminCode173-303), excluding W001. List all Washington waste codes that apply; place waste codes that do not apply to all containers in parentheses:

☐ For Hanford only, Washington State dangerous PCB waste (Waste code W001 of WaAdminCode173-303): Describe PCB source and concentration:
☐ TSCA regulated PCB (40 CFR 761). Describe category of PCB (i.e. PCB waste, PCB bulk product waste, PCB remediation waste, PCB analytical waste, etc). Describe PCB source and concentration:
☒ Waste generated from cleanup activities conducted under CERCLA
☐ Waste is not regulated under any of the above regulations.
☐ Waste is hazardous per state-of-generation regulations? If yes, identify hazardous components and state regulations.

4. Federal land disposal restrictions. Check all boxes that apply:
☒ Waste stream is not subject to federal land disposal restrictions

☐ Waste stream requires treatment to meet land disposal restrictions of 40 CFR Part 268.

Waste Profile Sheet

If checked, provide the following information:
☐ Wastewater ☐ Nonwastewater ☐ Hazardous debris
☐ Waste contains Underlying Hazardous Constituents (applicable UHCs must be included in Item C.9)
Was the waste treated after August 24, 1998? Yes ☐ No ☐

☐ Waste stream meets some of the applicable land disposal restrictions of 40 CFR 268. Check this box if the waste has been treated to meet some federal land disposal restrictions or if it meets some federal land disposal restrictions as generated. If checked, describe the treatment performed and analytical data to support LDR determination:

☐ Waste stream meets all applicable land disposal restrictions of 40 CFR 268. Check this box if the waste has been treated to meet all federal land disposal restrictions or if it meets the land disposal restrictions as generated. If checked, describe the treatment performed and analytical data to support LDR determination:

5. (For Hanford only) Waste characteristics. Check any of the boxes for regulated characteristics (WaAdminCode173-303-090) that apply to the waste stream:

☐ Flash point < 38°C ☐ Flash point 38°C - <60°C ☐ Flash point 60°C – 93.3°C
☐ Ignitable solid ☐ Oxidizer
☐ pH 2 or less ☐ pH 12.5 or greater
☐ Liquid that corrodes steel at a rate greater than or equal to 0.25 inches/year
☐ Reactive cyanide ☐ Reactive sulfide ☐ Water Reactive
☐ Explosive, unstable or pyrophoric ☐ Generates toxic gases, vapors or fumes

6. Physical state:
☐ Liquid ☐ Sludge ☐ Debris ☒ Solid
☒ Powder/Dust ☐ Sealed Source ☐ Encapsulated ☐ Solidified
☐ Other; describe:

7. Liquid form. If the waste stream contains liquid, check all that apply:
☐ Containerized liquid ☐ Absorbed Liquid ☐ Stabilized liquid

8. Other contents: Check any of the following that are components of the waste stream, and provide a description of how the waste acceptance criteria for each are met:

☐ Animal carcasses
☐ Infectious waste ☐ Vegetation ☒ Free liquids
WM:PKGG-A-0002, 40430-PL-0003
☐ Chelating agents ☐ Organic liquids ☐ Asbestos waste ☒ Particulates
11-C-319, 11-C-322, 11-C-344, see PKN
☐ Gases ☐ PCBs ☐ Explosives ☐ Pyrophorics

☐ Beryllium Dust ☐ Other

9. Waste composition. Describe the gross composition/component of the waste stream and all hazardous constituents that contribute to any waste codes or LDR treatment standards.
☐ If the chemical composition varies greatly from container to container, check this box and provide bounding values or ranges here. Further evaluation will occur on the specific package paperwork as it is provided for highly variable streams

CAS Number	Chemical constituent	Waste Component	Estimated weight percent ☐ Estimated volume percent ☒
		MEF 3851, Conditioned Silo 3 Cold Metal Oxide	**100**

CAS Number	Chemical constituent	Waste Component	Estimated weight percent ☐ Estimated volume percent ☒

D. Radiological Characterization

1. Radiological process knowledge. Describe the source(s) of the radioactive material in this waste stream (i.e., the radiological processes that introduced the radioactive material into the waste stream).
This waste was generated through the processing of high-grade uranium ores . See attached process knowledge narrative (PKN).

2. Radiological characterization methods. Describe the analysis and characterization methods used to determine the radionuclide inventory of the waste stream. Check all that apply.

☒ Radionuclide material accountability. Describe the accounting methods used to help establish the radionuclide inventory:**Site MC&A accountability procedures. Refer to Process Knowledge Narrative.**
☒ Radiochemical analysis. Describe type and frequency of sampling and analysis: For NTS, attach Table B-1 and data validation summary **Gamma spec performed in 1989 as part of Operable Unit 4 Remedial Investigation (OU4 RI). This data is historical sample data, therefore, a data validation summary is not included.**
☐ Nondestructive assay. Describe type and frequency of assay performed:
☐ Field measurement instruments. Describe the type of instruments and how they are used to help establish the radionuclide inventory:
☐ Scaling factors. Explain how the scaling factors were derived and how they are used:
☐ Computer models. Describe the computer model used and how it is used to establish the radionuclide inventory:
☒ Other. Describe method: **Using the 1989 RI data, ratios of major isotopes versus Ra-226 were developed. Ra-226 in the final waste will be calculated from dose rates on a bag by bag basis. Using the Ra-226 value, all major isotopes will be calculated from the RI ratios.**

If several methods are checked above, describe how the methods are used together to establish the radiological inventory of the waste stream. For complex or highly variable waste streams, explain the strategy used to meet the acceptable knowledge requirements of the waste acceptance criteria. **All isotopes, with the exception of U-238, U-234, U-235, Ac-227 and Pa-231 are developed as discussed above. U-238, U-234 and U-235 are derived from a mass balance of all material placed in Silo 3. Ac-227 and Pa-231 are derived from the U-235 value.**

3. Estimated Radiation Dose of disposal package (mSv/hr):

Surface **0.04 to 0.2** 30 cm **0.03 to 0.17** One Meter **0.01 to 0.05**

4. (Section D4 need not be filled out for Hanford only profiles)
☐Yes ☒No Does the waste contain enriched uranium (^{235}U wt% ≥ 0.90), ^{233}U, ^{239}Pu, ^{241}Pu, ^{242m}Am, ^{243}Cm, ^{245}Cm, ^{247}Cm, ^{249}Cf, ^{251}Cf? If yes, answer the following and check those that apply for compliance with the criticality safety criteria of the NTSWAC. If no, skip to Section D.5.

4.1 ☐ Attach completed NTSWAC, Appendix E, Table E.3, ^{235}U FGE and ^{235}U Effective Enrichment, for each enrichment level or range.

4.2 ☐ Waste package contains 15 g of ^{235}U FGE or less.
Specify controlling document:

4.3 ☐ Fissile material does not exceed 350 g of ^{235}U FGE per package nor does it exceed 2 g of ^{235}U FGE per kilogram of waste (mass of the package is not included in the mass of the waste) (graphite and beryllium must not exceed 1% of the mass of the waste).

Waste Profile Sheet

Specify controlling document:

4.4 ☐ Waste complies with the limits and conditions as specified in NTSWAC, Appendix E, Table E.4. Specify controlling document:

4.5 ☐ Graphite and beryllium exceeds 1% of the mass of the waste.

4.6 ☐ Waste complies with the limits and conditions as specified in NTSWAC, Appendix E, Tables E.5 and E.6. Specify controlling document:

4.7 ☐ A waste specific nuclear criticality safety evaluation (NCSE) was performed to show compliance with the NTSWAC, Section 3.2.1. Attach NCSE for review and specify controlling document.

5. Reportable radionuclides. List the radionuclides that could be reportable in the waste stream:
☒ If the nuclides vary greatly from container to container, check this box and provide bounding values or ranges here. Further evaluation will occur on the specific package paperwork as it is provided for highly variable streams. *Note: For the NTS, concentrations must be entered in Becquerel/cubic meter.*

Isotope	Concentration Ci/m3 (**Bq/m3**); Range and Activity Representative of Final Waste Form			
	Activity Range			Representative
U-234	**2.8E+06**	**to**	**9.6E+07**	**5.4E+07**
U-238	**2.8E+06**	**to**	**9.6E+07**	**5.4E+07**
Th-230	**2.4E+08**	**to**	**5.8E+09**	**1.8E+09**
Th-232	**1.8E+06**	**to**	**8.8E+07**	**2.5E+07**
Ra-226	**5.8E+06**	**to**	**2.8E+08**	**1.1E+08**
Pb-210	**5.8E+06**	**to**	**2.8E+08**	**1.1E+08**
Ac-227	**2.7E+06**	**to**	**5.9E+07**	**2.7E+07**
Pa-231	**2.7E+06**	**to**	**5.9E+07**	**2.7E+07**

6. Does the waste contain any alpha-emitting transuranic radionuclides with a half-life greater than 5 years, ^{241}Pu, or ^{242}Cm? **NO** If yes, list below.

Transuranic Nuclide	Concentration (nCi/g); Range and Activity Representative of Final Waste Form			
	Activity Range			Representative

7. Are there any packages in this waste stream that exceed the Plutonium Gram Equivalent limits specified in NTSWAC, Section 3.2.2? Yes ☐ No ☒
Provide container type(s), quantity, and supporting PGE calculations. **PGE calculations attached.**

8. For Hanford only, Total FGE as defined in Hanford Site Solid Waste Acceptance Criteria, HNF-EP-0063.

E. Packaging

1. Packaging used. Check the applicable boxes.
☐ Drum; describe size(s), type, and weight range:
☒ Metal box; describe size(s), type, and weight range **Nominal 4'x4'x8', NTS code 210, 1600Kg to 4082 Kg**
☐ Wood box; describe size(s), type, and weight range:
Do the Metal or Wood boxes meet the 3,375 lb/ft^2 strength test? Yes **X** No ☐ N/A ☐
☐ High integrity container; describe size(s), type, and weight range:
☒ Intermodal transport container; describe size(s), type, and weight range:**8x8x20 cargo container,11000 kg to 19051 kg**

Waste Profile Sheet

- ☐ Other container; describe size(s), type, and weight range:
- ☒ Bulk waste – bulk package and shipment dimensions and weight ranges – describe (supersack, burrito wraps, equipment, etc.): **Nominal 3-cubic yard capacity soft-sided IP2 package with 30 mil plastic (PVC) liner, inside a cargo container on skids or on skids in a van trailer, 1000 Kg (2205 lbs) to 3175 Kg (7000 lbs) lbs)**
- ☒ Vented; describe type of venting: **As required, industry standard vents for sealands**
- ☐ Shielded; describe type of shielding:
- ☒ Sorbents; describe type and amount used: **Absorbent pads will be placed on interior bottom surface of cargo containers as required by WM:PKGG-A-0002 (Absorbent Determination)**
- ☐ Radiologically stabilized in concrete or other stabilization agent; describe type and amount of material used and provide data to demonstrate waste meets stabilization criteria:

2. Maximum container size: **6.1m x 2.44m x 2.44m**

3. Maximum container gross weight: **19051 kg**

4. Describe any liners/protective coatings used to ensure that the container is compatible with the waste: **NA**

5. Does each container meet each of the package criteria as defined in the waste acceptance criteria?
   ☒ Yes ☐ No
   List documentation that demonstrates compliance with waste acceptance criteria.

The Fernald controlling document is PT-0014, Procurement of Storage and Shipping Containers. Container specific test data is available upon request.

6. Reference any special handling procedures and ALARA documentation, if applicable.

F. Additional Information

1. Comments: **NA**

2. Exception or Deviation Request to waste acceptance criteria: Complete if needed
   a) Identify specific requirement for which an exception or deviation is desired:
   b) Provide reason an exception or deviation is needed:
   c) Describe any proposed alternative methods to meet the general intent of the requirement:

3. Attachments. List any attachments provided with this profile: **Procedures Reference List, Process Knowledge Narrative, Waste Characterization Approach, PE-g Calculations, Pallet Sketch, MSDS for Ferrous Sulfate Solution, MSDS for Lignosulfonate, Free Liquid Testing Report**

G. Generator Signatures

To the best of my knowledge, the information provided on this form and the attached documentation is a full, true and accurate description of the waste stream. Willful and deliberate omissions have not been made. All known and suspected hazardous materials have been disclosed.

Technical Contact Name: **David S. Adkins** Date: 11/23/04

Signature: David S. Adkins

Waste Certification Official Name: **Reinhard Friske** Date: 11-23-04

Signature: Reinhard Friske

Procedures Reference List
for Profile ONLO000000133, Revision 1

EW-0001	MEF Characterization Process Procedure
PT-0014	Procurement of Storage and Shipping Containers
PT-0018	Preparation of Documentation for Off- Site Shipment of Hazardous Material
RM-0053	Waste Characterization Information Manual
WM:CHAR-T-0001	Radiological Characterization for Waste Disposal
WM:PKGG-A-0001	Certification of Low Level Radioactive Waste and Supporting Paperwork
WM:PKGG-A-0002	Absorbent Determination
WM:SHIP-T-0003	Inspection of Waste Packages and Loaded Transport Vehicles
11-C-319	Silo 3 Packaging Station Operation
11-C-322	Silo 3 Container Preparation
11-C-344	Loading Silo 3 Soft-Sided Shipping Containers for Off-Site Shipment
40430-PL-0003	Process Control Plan for the Silo 3 Project
40430-RP-0015	Silo 3 Design Data Development Report
40430-RP-0016	Silo 3 Dedusting Report
40430-RP-0025	Silo 3 Conditioning Report
40430-RP-0027	Free Liquid Testing Report
40430-RP-0031	Silo 3 Conditioning Summary Report
FEMP-04RI-6 FINAL	OU4 Remedial Investigation/Feasibility Study
Fernald Memo M:SP:98-0017	Characterization of Silo 3 Material
WSRC-TR-2000-00523, Rev.0	Characterization of Fernald Silo 3 Waste
WSRC-RP-2001-00167, Rev.0	Silo 3 Waste Treatment Phase 1 Physical Testing Final Report
	NTS Generator Work Group "Position Paper for High Moisture Content Waste", Rev.0, 11/03/98
DOE, NV Letter From Carl P. Gertz Dated 6/20/02	"Disposal of Fernald Silos Waste Materials at the Nevada Test Site (NTS)"
MSDS 22396	Ferrous Sulfate Solution
MSDS 22277	REAX SN Solution (Lignosulfonate)

Plutonium Gram Equivalent Calculations for
Reportable Isotopes included in NTS Profile ONLO-000000133, Rev.1

Isotope	Package Activity, Bq/m3	PE-g Conversion Factors	PE-g/m3
U-234	9.60E+07	1.13E-10	1.08E-02
U-238	9.60E+07	1.02E-10	9.79E-03
Th-230	5.80E+09	2.77E-10	1.61E+00
Th-232	8.80E+07	1.39E-09	1.22E-01
Ra-226	2.80E+08	7.30E-12	2.04E-03
Pb-210	2.80E+08	1.16E-11	3.25E-03
Ac-227	5.90E+07	5.07E-09	2.99E-01
Pa-231	5.90E+07	1.09E-09	6.43E-02
		PE-g/m^3 =	**2.12E+00**
Silo 3 Bag Volume (m^3) =	2.72	**Container Total PE-g =**	**5.76E+00**
			< 6 PE-g
Metal box Volume (m^3) =	2.72	**Container Total PE-g =**	**5.76E+00**
			<<300 PE-g
Max PE-g per shipment in sealand (8 bags)	21.76	**Sealand/Shipment Max PE-g =**	**4.61E+01**
			< 300 PE-g
Used profile max activities and container max internal volume. With 8 containers per shipment, cannot exceed 750 PE-g per shipment.			
Meets package activity limits in 3.2.2 of NTSWAC, rev.5.			

PROCESS KNOWLEDGE NARRATIVE
PROFILE ONLO-000000133, REVISION 1
Silo 3 Uranium Ore Processing Residues

Determination

11(e)(2) byproduct material

Descriptive Name

Conditioned Silo 3 Cold Metal Oxides

Process Generating the Waste

This waste consists of Silo 3 cold metal oxides conditioned with water, sodium lignosulfonate solution, and ferrous sulfate solution to increase particle size and reduce the mobility of chromium. The conditioning is being performed to address stakeholder comments on the Silo 3 remediation. The Silo 3 cold metal oxides material will be retrieved from Silo 3 and transferred to a packaging system, where an aqueous solution of sodium lignosulfonate and ferrous sulfate will be applied to the material prior to packaging in 30 mil plastic (PVC) lined (sealed) IP-2 soft-sided shipping containers (3 cubic yard bags) or in a metal box (NTS code 210) for off-site shipment and disposal. The Silo 3 cold metal oxide material is 11(e)(2) byproduct material as defined under the Atomic Energy Act of 1954, as amended.

Cold metal oxide was generated primarily as a result of extraction-refining of uranium from low-radium uranium ore concentrates between the mid to late 1950s at the Fernald Closure Project, formerly called the Feed Materials Production Center (FMPC). During that period, the FMPC Refinery processed uranium ores and ore concentrates received from numerous foreign and domestic uranium mills. Cold metal oxide was generated from processing the aqueous raffinate stream from the uranium extraction-refining operations. Extraction raffinate was concentrated by evaporation followed by calcination of the resulting thickened slurry that contained metal nitrates.

The FMPC Refinery processed two basic classes of materials: (1) pitchblende ores from the Belgian Congo and Australia and (2) uranium ore concentrates that were produced from processing low-grade ores at the mill sites to upgrade the uranium assay and also uranium process residues generated in subsequent FMPC operations. Uranium ore concentrates are the primary source of cold metal oxides in Silo 3. The term "K-65" was used to describe the tailings stored in Silos 1 and 2 that were derived from processing of the Belgian Congo and the Australian pitchblende ores.

Uranium-bearing ores, as they are mined, contain not only uranium, but also equilibrium (activity) concentrations of uranium progeny (i.e., the isotopes of other elements formed through the sequential, radioactive decay chains that begin with uranium U-235 and U-238). The progeny, which include radium, are removed either in a preliminary milling process or in the refining process (if the ores are not preprocessed through a mill). Thus, when the FMPC Refinery processed pitchblende ores, the refinery wastes contained a high concentration of the radioactive uranium progeny. These refinery wastes were known as "hot" raffinates. The term "hot" was used to indicate that the materials contained a high concentration of radium and gamma-emitting progeny. "Cold" indicated that material

contained a much lesser concentration of radium and gamma-emitting progeny. In the case of uranium ore concentrates, most of the radium was removed in processing at the mills before delivery to the FMPC.

The FMPC Refinery used a tributyl phosphate (TBP)-kerosene extraction system to remove uranium from acid leached slurries of ores and concentrates. At the Refinery, milled ores and concentrates were transferred to digester tanks by batch. Nitric acid and water were added to the ores and/or concentrates in the digesters to form an impure uranyl nitrate solution. Following digestion, the digest slurry was transferred to a feed holding tank in the extraction area of the Refinery.

The uranium extraction system employed a series of perforated plate pulse columns, including an extraction column, a scrub column, and a re-extraction column. The aqueous feed slurry from the hold tank was introduced into the top of the extraction column. An organic extractant, tri-butyl phosphate (TBP) in an inert purified kerosene diluent, was introduced into the bottom of the same extraction column. The combined liquid phases were pulsed through the stationary perforated plates, with the aqueous feed slurry passing down and the organic phase moving up through the column. The organic extractant flow rate and the feed stream flow rate were controlled to maintain a constant uranium saturation level in the organic product stream. The uranyl nitrate solution was removed from the aqueous feed slurry by the organic extractant. Extraction of the uranium from the ores or concentrates was essentially complete when the organic product stream left the top of the extraction column.

The remaining metals and other impurities left the bottom of the extraction column. This by-product stream was known as raffinates. The raffinates were freed of the organic phase in a disengagement chamber at the base of the extraction column. Despite this disengagement process, considerable quantities of entrained TBP remained in the raffinate leaving the column. To recover these reusable concentrations of TBP, the raffinates were transferred to the kerosene-wash mixer settler to be combined with continuously recycled kerosene.

While the TBP extraction system was relatively specific toward uranyl nitrate, other nitrate compounds, such as thorium nitrate present in the feed slurry, were either co-extracted or physically entrained in the organic product phase leaving the extraction column. To remove these impurities from the feed stream and achieve product quality standards, a second purification step was performed in the scrub column. In the scrub column, the organic product stream from the extraction column entered the bottom while deionized water entered the top of the column. During the continuous flow through the scrub column, essentially all of the remaining metallic impurities were transferred to the aqueous phase, together with a small quantity of uranium. The aqueous phase was directed back to the extraction column to recover the remaining uranyl nitrate. The pure organic phase continued through the final re-extraction column where the uranyl nitrate was re-extracted from the organic extract using high-purity water. The impurities residing in the aqueous phase from the scrub column were transferred to the raffinates leaving the extraction column.

The entire kerosene-washed raffinate stream from the extraction column during ore concentrate processing and filtrate from a rotary vacuum filter step during operation involving pitchblend ores were combined for subsequent processing that produced the cold metal oxides present in Silo 3. In the case of pitchblend ores, the raffinate was filtered through a rotary vacuum filter, where most of the gamma-emitting uranium progeny and radium (as insoluble barium-radium sulfate) were filtered out. The filter cake from the

rotary vacuum filter was re-slurried, neutralized with lime, and pumped into Silo 2, while the filtrate was passed on to the cold metal oxide process. In the case of uranium ore concentrates, some of the thorium progeny of uranium (i.e., thorium-230) remained within the uranium concentrates due to the inefficiency of the source mill in removing this metal and was passed through to the cold metal oxides material.

In the cold metal oxide process, the raffinate waste streams were transferred to a series of agitating holding tanks in the refinery area. The waste was then fed to a set of evaporators where approximately 90 percent of the liquids were evaporated and the remaining 10 percent concentrates were withdrawn for further processing. Evaporator temperatures ranged from 90°C (200°F) to 120°C (250°F). The concentrated solution from the evaporator was transferred to one of two processing operations depending on when they were transferred.

From plant start-up through the mid-1950s, the concentrates were transferred to a spray calciner. The spray calciner operated at a temperature of 510°C (950°F) to remove the remaining liquids and thermally decompose metal nitrates present in the concentrates to recover nitric acid values. Due to operational difficulties experienced with the spray calciners, a second process was installed to complete the drying of the concentrates. In this process, the concentrates from the evaporators were transferred to a drum dryer where the materials were spread in a rotating dryer. In the dryer, liquids were removed from the concentrates by centrifugal action generated by the rotating drum. The drum-dried concentrates were then transferred to a rotary kiln to remove the remaining liquids and to complete conversion of the metal nitrates into oxides. The concentrates were retained in the furnace zone at 650°C (1200°F) to 820°C(1500°F) for approximately 10 minutes. The calcined product (cold metal oxides) was pneumatically transferred to Silo 3.

The material remained in undisturbed storage from the 1950s except for sampling efforts. A new facility has been constructed for the retrieval and conditioning of Silo 3 material. The Silo 3 material, which is exempt from treatment requirements, is being conditioned and treated as a best management approach to reduce dispersability and mobility of metals.

An aqueous conditioning solution of water, sodium lignosulfonate solution and ferrous sulfate solution will be added to the Silo 3 cold metal oxides material in order to reduce the overall dispersability of the material. Historical moisture data indicates an in-situ moisture range of 2.3-10.2% moisture for Silo 3 material. Statistical evaluation of this data along with process knowledge of the waste placed in the silo indicates a maximum expected in-situ moisture content of 13%. Using a worst case scenario that all of the pre-conditioned Silo 3 waste is at 13% moisture content, the conditioned waste product will be maintained at less than or equal to 25% moisture by maintaining a target waste loading factor of 90% with a minimum waste loading factor of 88%.

The addition of conditioning solution to the Silo 3 waste will be controlled on a weight basis. Silo3 project document number 40430-PL-0003, "Process Control Plan for the Silo 3 Project" specifies the process controls in place to control/monitor the amount, on a weight basis, of conditioning solution added to the waste. Waste characterization personnel will verify the total bag weight and the total weight of conditioning solution added on a bag-by-bag basis as part of the MEF verification process. The packaging of this material will also be performed under the oversight of the FCP WMP Quality Control Operations, who will document the packaging meets the requirements as stated above. Test data ("Free Liquid Testing Report", FCP Document #40430-RP-0027) indicates no

free liquids for this waste stream at 27% moisture content. The conditioned Silo 3 waste meets the requirements of NTSWAC Section 3.1.5 regarding free liquids.

The sodium lignosulfonate solution is a polymeric organic binder that is 47 weight percent sodium lignosulfonate. The solution is a lignin waste product of pulp and paper processing. It is a dark brown liquid with a characteristic vanilla-like odor. The sodium lignosulfonate solution and water added to the Silo 3 material results in an increase in particle size of the Silo 3 material. The ferrous sulfate solution is 15% ferrous sulfate (typical) in less than 6% sulfuric acid.

The Silo 3 waste is 11(e)(2) byproduct material under the Atomic Energy Act and is excluded from the definition of solid waste under RCRA and as such is not a hazardous waste under RCRA. Process knowledge indicates that no RCRA regulated constituents were added to this material during the uranium extraction process.

Radiological/Chemical Composition

This waste consists of 11(e)(2) byproduct material (Silo 3 cold metal oxides) conditioned with water, ferrous sulfate and sodium lignosulfonate.

Some of the thorium progeny of uranium (i.e., thorium-230) and some radium remained within the uranium ore concentrates due to the inefficiency of the source mill in removing these metals and remained in the raffinates processed to cold metal oxides. U-235 in Silo 3 material, based on process knowledge, is 0.711% (uranium basis).

Hazardous Waste Listings and Characteristics

F-listing: This waste consists of conditioned Silo 3 cold metal oxides. This waste does not contain any of the spent solvents listed in 40 CFR 261.31/OAC 3745-51-31. It also does not meet the listing description of a listed hazardous waste from a non-specific source at 40 CFR 261.31/OAC 3745-51-31. Based on process knowledge, this waste does not meet the listing description of a spent solvent or hazardous waste from a non-specific source by virtue of the mixture rule, derived-from rule or the contained-in policy.

K-listing: This waste does not meet the listing description of a listed hazardous waste from a specific source at 40 CFR 261.32/OAC 3745-51-32. Based on process knowledge, this waste does not meet the listing description of a spent solvent or hazardous waste from a specific source by virtue of the mixture rule, derived-from rule or the contained-in policy.

P and U-listing: This waste does not meet the listing description of a listed discarded commercial chemical product, etc. at 40 CFR 261.33/OAC 3745-51-33. Based on process knowledge, this waste does not meet the listing description of a listed discarded commercial chemical product, etc. by virtue of the mixture rule, derived-from rule or the contained-in policy.

Ignitability: This waste consists of conditioned Silo 3 cold metal oxides and:

- Is not a liquid with a flash point less than 140 °F,
- Is not a liquid, and does not cause fire through friction under standard temperatures and pressures; does not cause fire through absorption of moisture or cause spontaneous chemical changes; would not burn so vigorously and persistently if ignited, that it would create a hazard,

- Is not an ignitable compressed gas as defined in 49 CFR 173.300 and as determined by test methods described in that regulation or equivalent test methods approved by the Administrator under 40 CFR 260.20 and 260.21, and
- Is not an oxidizer as defined in 49 CFR 173.151. The waste does contain some residual nitrates that remained after calcining (such as sodium nitrate). The nitrates are dispersed in the waste form, so that the conditioned cold metal oxide is not an oxidizer as defined in 49 CFR 173.151. The Silo 3 waste is 11(e)(2) byproduct material under the Atomic Energy Act and is excluded from the definition of solid waste under RCRA and as such is not a hazardous waste under RCRA.

Corrosivity: The final waste form is conditioned Silo 3 cold metal oxides and does not meet the RCRA definition of corrosivity because it pertains to aqueous materials and liquids. The ferrous sulfate solution is 15% ferrous sulfate (typical) in less than 6% sulfuric acid. The final Silo 3 material waste form is a moist solid material (cold metal oxide particles clumping together) with no free liquids. The pH of the conditioned Silo 3 material is approximately 8 (10% by weight conditioned Silo 3 material in water with pH measured at the waste/water interface).

Reactivity: Conditioned Silo 3 material does not meet the RCRA definition of reactivity. This material does not meet the criteria because it:

- Is not normally unstable, readily undergoing violent changes without detonating,
- Does not react violently with water,
- Does not form potentially explosive mixtures with water,
- Does not, when mixed with water, generate toxic gases, vapors, or fumes in a quantity sufficient to present a danger to human health or the environment,
- Is not a cyanide or sulfide-bearing waste which when exposed to pH conditions between 2 and 12.5, can generate toxic gases, vapors or fumes in a quantity sufficient to present a danger to human health or the environment,
- Is not capable of detonation or explosive reaction if it is subjected to a strong initiating source or if heated under confinement,
- It is not readily capable of detonation or explosive decomposition or reaction at standard temperature and pressure, and
- Is not a forbidden explosive as defined in 49 CFR 171.51, or a Class A explosive as defined in 49 CFR 173.53 or a Class B explosive as defined in 49 CFR 173.88 – 261.23(a)(8).

Toxicity Characteristics: This waste consists of conditioned Silo 3 cold metal oxides. The Silo 3 material is classified by the Department of Energy (DOE) as 11e. (2) byproduct material under the Atomic Energy Act (AEA) of 1954, as amended. As such, this material is specifically exempt, as defined, from regulation as solid waste under the Resource Conservation and Recovery Act (RCRA), 40 CFR Part 261.4(a)(4) and under Ohio Administrative Code 3745-51-04. Section 312 of Public Law 108-137 further clarified that the Fernald Silos Material is 11e.(2).

Based on the MSDSs for ferrous sulfate solution and sodium lignosulfonate, no TC organics or metals exceed their respective regulatory limits.

SILO 3 COLD METAL OXIDES
WASTE CHARACTERIZATION APPROACH
11/23/2004

Silo 3, located at the Fernald Closure Project, contains approximately 5,088 cubic yards of cold metal oxides generated during Fernald's uranium processing operations. The Silo 3 cold metal oxides material is 11(e)(2) byproduct material as defined under the Atomic Energy Act of 1954, as amended. The cold metal oxides will be removed from Silo 3, conditioned with an aqueous solution of sodium lignosulfonate and ferrous sulfate, and packaged in 30 mil plastic (PVC) lined 3 cubic yard soft sided shipping containers. The soft sided containers will then be packaged into a cargo container on skids or on skids in a van trailer for shipment and disposal at the Nevada Test Site (NTS). In lieu of the 3 cubic yard soft sided containers, the conditioned waste may be placed in a metal box (NTS code 210) for shipment/disposal.

To characterize this waste for disposal at NTS, Waste Characterization plans to rely on its existing program with minor modifications. Toward that end, the waste stream is characterized on the basis of existing data from the Operable Unit 4 (OU4) Remedial Investigation (RI) supplemented by ancillary data obtained from subsequent testing of Silo 3 material.

To ensure shipping containers of conditioned Silo 3 material are consistent with the radiological parameters outlined in NTS Profile ONLO-000000133 , the filled containers will be surveyed (external survey with hand held instruments). Radiological Engineering has reviewed the isotopic constituents associated with this waste, defined by, or through analytical methods described in the OU4 RI data. Consideration of variations and ranges of this data in conjunction with mass loading variables dependent on the packaging process were then used as input parameters to a standardized model projecting dose rate effects, through a series of MicroShield software calculations.

Several direct relationships have been identified between the variable material mass densities, isotopic activity concentrations and contact dose rates calculated for the package. This methodology will be finalized at initial start up of the project. It has been determined that the calculated dose rate at a specified point on a waste package is approximately 75% attributable to the Ra-226 decay chain, and 22% attributable to the Th-232 decay chain. The Th-230 content accounts for less than 1% of the calculated dose rate.

Having identified these relationships, and given a standardized waste package volume of ~81 ft^3, the individual (specific) package weight and the measured dose rate at a specified package location, the total Ra-226 inventory can be calculated. From this value, the primary radionuclides of concern can be calculated on the basis of relationships derived from the RI/FS data.

Using this characterization data, MC&A assays, and process data on waste loading, Waste Characterization personnel will characterize each 3 cubic yard soft sided shipping container in accordance with procedure EW-0001, MEF Characterization Process Procedure. Based on this characterization, Waste Characterization

personnel will verify that each shipping container meets the NTS waste acceptance criteria (WAC) and is consistent with criteria identified in NTS Profile ONLO-000000133. Once this is confirmed, Waste Characterization personnel will complete form FS-F-4208, MEF Verification, and the container(s) will be assigned to a Material Evaluation File (MEF) established specifically for conditioned Silo 3 material that meets the NTS WAC and criteria in NTS Profile ONLO-000000133. The MEF Verification form will provide auditable documentation that each container meets the NTS WAC and NTS profile criteria.

Because Silo 3 waste will be characterized as it is packaged, confirmation of characterization for disposition at NTS will be completed as the waste is generated and documented using the MEF Verification, form FS-F-4208. This will differ from the confirmation of characterization for disposition to NTS that the Fernald Closure Project has completed for backlog containerized waste inventory. For backlog waste inventory, the deliverable product for confirmation of characterization is a memorandum documenting review/release of the inventory. The memorandum is reviewed (Blue Sheet Review) by the Waste Certification Official (WCO) and other groups designated by the project, as appropriate. In the case of Silo 3 waste, there is no preexisting containerized waste inventory for review/release, so there will be no review/release memorandum. Instead, the MEF Verification form will document confirmation of characterization for disposition at NTS for the newly generated Silo 3 waste containers.

TRANSPORT PALLET FOR
96 CU. FT. SOFT SIDE CONTAINER

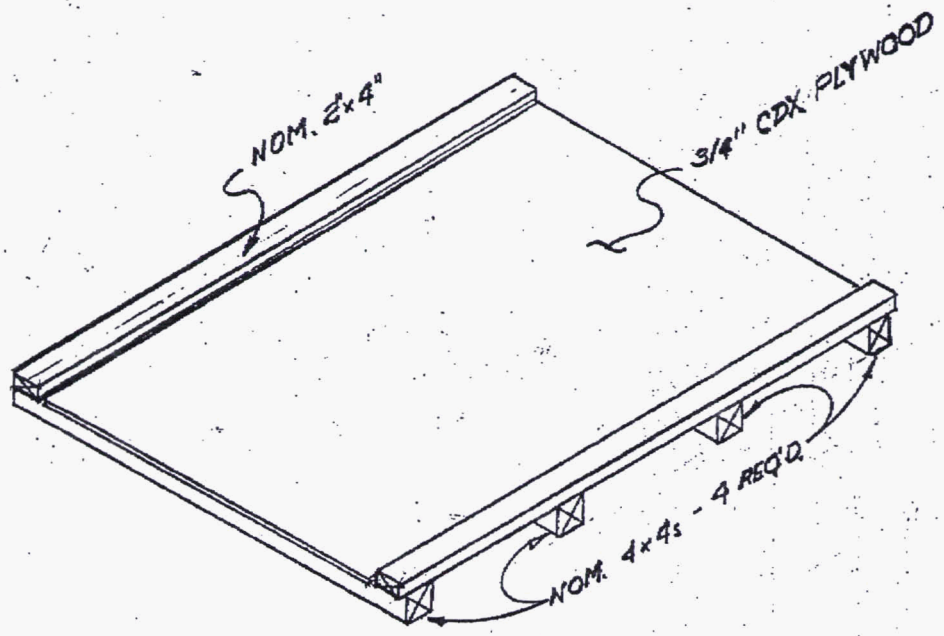

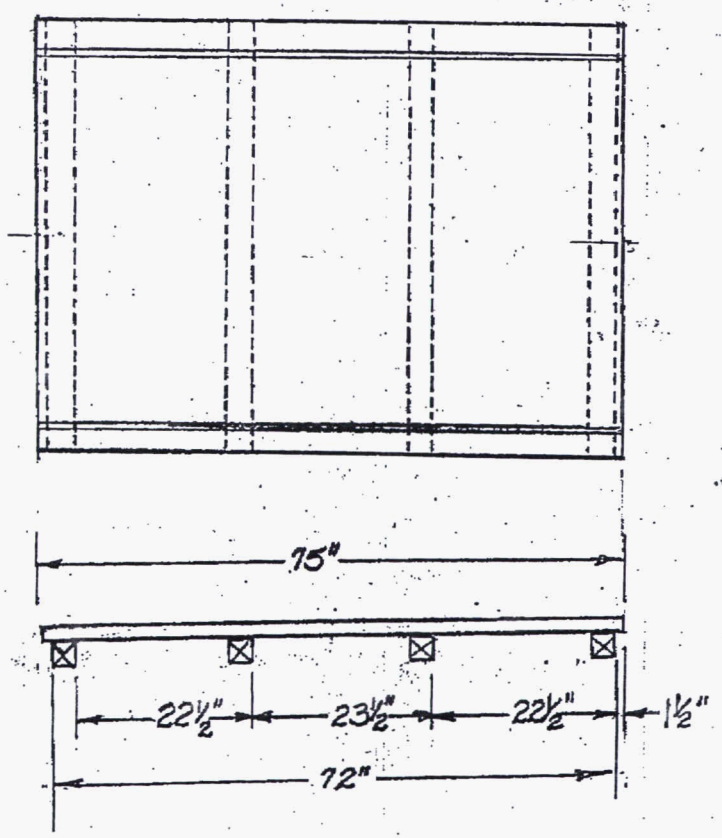

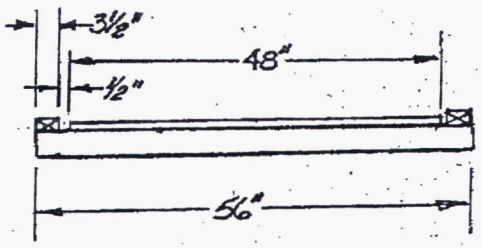

22396

LIQUID FERROUS SULFATE
Tech Iron 5% - 6%

Material Safety Data Sheet

NFPA Ratings (scale 0-4) : Health=2 Fire=0 Reactivity=0

CROWN TECHNOLOGY, INC.
7513 E.96TH ST.
INDIANAPOLIS, IN 46256
(317)845-0045

Emergency Number: (317)845-0045
Chemtrec Emergency: (800)424-9300

Last Revision: 05/18/2000

Substance Identification

Substance: Ferrous Sulfate Heptahydrate, solution CAS# 7782-63-0

Trade Names/synonyms: copperas, iron sulfate, green vitriol
Chemical Family: inorganic salt solution

Molecular Formula: $FeSO_4$ $7H_2O$ Molecular Weight: 278.01(heptahydrate)

Components and Contaminants

Component: Ferrous sulfate heptahydrate 25-40%

Exposure limits: Iron salts, soluble, as Fe
1 mg/m3 ACGIH TWA
1000 pounds reportable quantity CERCLA section 103

Physical Data

Description: Blue-green solution , tends to oxidize when heated

Solubility: Soluble in water
Melting point: N/A
Boiling point: approx. 212 degrees F Specific gravity: 1.14-1.21
pH: 1.5 - 3.0

Fire and Explosion Information

Fire and Explosion Hazard: Negligible fire hazard when exposed to heat or flame
Firefighting Media: Dry chemical, carbon dioxide, water spray or foam

Firefighting: Move container from fire area if possible. Do not scatter spilled material with high pressure water. Use agents appropriate to surrounding fire.

Toxicity

Ferrous Sulfate Heptahydrate: 1520 mg/kg oral-mouse LD50
Carcinogen: Non-carcinogenic
Local effects: Corrosive-eye, ingestion. Skin irritant, mucous membranes.
Acute Toxicity Level: moderately toxic by ingestion (heptahydrate)
Organs affected: Poisoning may affect the liver, kidneys, circulatory, cardiovascular and central nervous systems.
Additional Data: Interactions with medicines may cause adverse effects.

Health Effects and First Aid

Inhalation: Irritant.
Acute exposure: may cause irritation of the respiratory tract.
Chronic exposure: No information available.
First Aid:
Remove from exposure area to fresh air. If breathing has stopped, perform artificial respiration. Consult physician.

Skin Contact:
Acute exposure: may cause irritation.
Chronic exposure: repeated exposure to irritants may cause dermatitis.
First Aid:
Remove contaminated clothing and shoes immediately. Wash affected area with soap and water.

Eye contact: Corrosive
Acute Exposure:contact with eyes may cause severe irritation and corrosive action due to acidity.
Chronic exposure: effects depend on concentration and duration of exposure. Prolonged contact with corrosives may result in conjunctivitis.

Ingestion:
Acute exposure: side effects of ingestion of iron salts may include heartburn nausea, gastric discomfort, constipation or diarrhea. Symptons of severe poisoning may occur within 30 minutes or be delayed for several hours. Severe hemorrhagic gastritis with abdominal pain, retching, violent diarrhea and vomiting may occur. Circulatory system may be affected with symptoms of shock, rapid, weak or no pulse, severe hypotension and pulmonary changes with dyspnea, and emphysema may occur. The average lethal dose of iron is about 200 to 250 mg per kg of body weight.
Chronic exposure: Reproductive effects have been reported in animals.

First Aid: In patients not in shock or coma, induce emesis with syrup of ipecac if vomiting has not occurred. Follow with gastric lavage using deferoxamine, 2 grams in 1 liter of water which contains sodium bicarbonate 20 gm/L. Leave 10 grams of deferoxamine in 50 ml of 5% sodium bicarbonate in the stomach. Maintain airway, blood pressure and respiration. Treat symptomatically and supportively. (Dreisbach, Handbook of Poisoning, 11th edition.) Get medical attention. Treatment should be administered by qualified medical personnel.

The decision whether the severity of poisoning requires administering of

Qualified medical personnel should make any antidotes and actual dose required.

Reactivity

Stable under normal temperatures and pressures.

Incompatibilities: Alkalies
Arsenic trioxide and sodium nitrate: spontaneously combustible mixture.
Methyl isocyanoacetate: may decompose explosively at 25 degrees C.

Decomposition: Thermal decomposition products may include toxic sulfur oxides.
Polymerization: Does not occur

Storage and Disposal

Obey all federal, state, and local regulations when storing or disposing of ferrous sulfate heptahydrate. Always store away from incompatible substances.

Conditions to avoid: Low temperatures may cause crystallization

---

Spill and Leak Procedures

Contain soil spill or liquid spills, and neutralize with lime or sodium carbonate if necessary. Place into suitable container for later disposal.

Reportable Quantity: 1000 pounds (heptahydrate)
If the release of this substance is reportable under CERCLA section 103, the National Response Center must be notified immediately at 800-424-8802.

Protective Equipment

Respirator: Specific respirators selected must be based on levels of the substance in the workplace. They must not exceed the working limits of the respirator and be jointly approved by the National Institute for Occupational Safety and Health and The Mine Safety and Health Administration. (NIOSH-MSHA)
Clothing: Clean body covering clothing
Gloves: rubber gloves or other appropriate protective gloves
Eye protection: Splash safety goggles recommended.
Eye wash station.

DOT shipping description:

Corrosive liquid, acidic, inorganic, n.o.s., 8, UN3264, III, RQ, (ferrous sulfate)

Judgements as to the suitability of information herein for purchaser's purposes are purchaser's responsibility. Therefore, although reasonable care has been taken in the preparation of such information, Crown Technology extends no warranties, makes no representations and assumes no responsibility as to the accuracy or suitability of such information for application to purchaser's intended purposes or for the consequences of its use.

MATERIAL SAFETY DATA SHEET

22277

REAX SN Solution

Revision Date: 02/22/2002

1. PRODUCT AND COMPANY IDENTIFICATION

Product Name: **REAX SN Solution**
Chemical Name: Lignosulfonic acid, sodium salt
Chemical Family: Lignosulfonate, sodium salt
Chemical Formula: {(CH3O)(NaO)Ar[(C3H5O)(SO3Na)x]}y
CAS Registry Number: 68131-31-7

Manufacturer:

MeadWestvaco Corporation
Specialty Chemicals Division
Polychemicals Department
PO Box 118005
Charleston
South Carolina 29423-8005

Telephone

Transportation

CHEMTREC (USA):	(800) 424-9300 (24 hours)
CHEMTREC (INTERNATIONAL):	(202) 483-7616 (24 hours, call collect)
MeadWestvaco Switchboard:	(843) 745-3000 (8:00am - 4:30pm EST, M-F)
Polychemicals Customer Service:	(843) 740-2245 (8:00am - 4:30pm EST, M-F)

2. COMPOSITION / INFORMATION ON INGREDIENTS

Hazardous* Components:	CAS Registry Number:	% Weight:
Sulfite liquors and cooking liquors, spent, alkali-treated	68131-31-7	47

* Hazardous as defined in 29 CFR 1910.1200

See Section 3 for Hazards Identification and Section 8 for Exposure

3. HAZARDS IDENTIFICATION

EMERGENCY OVERVIEW

Dark brown liquid with characteristic vanilla-like odor; Liquid may be irritating to skin and eyes.

3. HAZARDS IDENTIFICATION (continued)

Potential Health Effects:

Routes of Entry: Ingestion, inhalation, eyes

Medical Conditions Aggravated by Exposure: None documented.

Eyes: Can cause slight irritation. Inflammation should disappear after 48 hours.

Skin: May cause skin irritation. Animal tests indicate material is not a primary skin irritant.

Ingestion: Not a hazard in normal industrial use. The LD50 (rats) indicates that it is not toxic by OSHA definition.

Inhalation: Not established for mixture. However, breathing mists or heated vapors should be avoided because they may cause irritation of the respiratory system.

Target Organ Effects: Eyes - Irritant

Chronic Effects, (Including Cancer Information):

NTP: Not listed

IARC: Not listed

OSHA: Not regulated

4. FIRST AID MEASURES

Eyes: Flush eyes and under eyelids for 15 minutes with water. Get immediate medical attention if redness or irritation persists.

Skin: Wash with soap and water and rinse thoroughly. Remove any contaminated clothing or shoes prior to cleaning skin. Get medical attention if redness or irritation develops.

Ingestion: Drink 2-3 glasses of water. Contact physician for further treatment.

Inhalation: Remove to fresh air. Restore breathing if required. Administer oxygen if breathing is difficult. Contact physician.

5. FIRE FIGHTING MEASURES

Hazardous Combustion Products: Once the water has evaporated, the material will burn in a fire releasing combustion products which may be toxic (SO_2, CO, CO_2, and volatile organics).

General Hazards: No abnormal hazards known.

Extinguishing Media: Water spray, CO_2, dry chemical or chemical foam.

Fire Fighting Instructions: Wear self-contained breathing apparatus (pressure demand, MSHA/NIOSH approved or equivalent), protective clothing and work upwind of the fire.

Other Information:

Flashpoint: Not established

Autoignition Temperature : Not established

Flammability Limits in Air (%): **LEL:** Not established

UEL: Not established

6. ACCIDENTAL RELEASE (SPILL) MEASURES

Highway or Rail Spill (US): Call CHEMTREC at 1-800-424-9300

Highway or Rail Spill (Int): Call CHEMTREC INTERNATIONAL at (202)-483-7616 (call collect, 24 hrs)

Large Spill: For large spills, dike up spill and pump to appropriate DOT containers or truck for disposal or use. Workers should use protective equipment including a self-contained or air supplied breathing apparatus with full face-shield for large spills.

Small Spill: On small spills, use appropriate absorbent and collect for disposal. Do not flush to sewer.

7. HANDLING AND STORAGE MEASURES

Handling: Avoid contact with eyes and skin. Avoid breathing vapors or mists Wash thoroughly after handling. Remove contaminated clothing and wash before reuse.

Storage: Normal warehouse storage of drums is satisfactory. Avoid aluminum, copper, tin, zinc and their alloys. For bulk storage, use carbon steel or stainless steel tanks.

8. EXPOSURE CONTROLS / PERSONAL PROTECTION MEASURES

Eye Protection: Safety glasses with side shields or goggles must be worn.

Skin Protection: An apron with a long sleeved shirt or blouse, lab coat or coveralls should be worn. Work or disposable gloves are recommended when handling large quantities.

Respiratory Protection: None required unless breathing mists, or heated vapors, or acidified vapors.

Engineering Controls: Exhaust ventilation is recommended.

Exposure Guidelines: None established

Other Protective Equipment: None

9. PHYSICAL AND CHEMICAL PROPERTIES (TYPICAL)

Boiling Point, °C:	Ca. 100	**Viscosity, cps, 25°C :**	<250
Melting Point, °C:	Not applicable	**Solubility in Water :**	Complete
Freezing Point, °C:	Ca. 0	**Specific Gravity, 25°C:**	1.110
Vapor Pressure, mmHg :	Similar to water	**Volatiles, % :**	53
Vapor Density (Air =1):	Similar to water	**Physical State, 25°C :**	Liquid
Evaporation Rate (Ether=1):	Similar to water	**Appearance, 25°C :**	Brown liquid
pH (15% Solution) :	9.0	**Odor :**	Vanilla-like

10. STABILITY AND REACTIVITY

Chemical Stability: Stable.

Conditions to Avoid: Avoid excessive heat, ignition sources and strong oxidizing agents.

Hazardous Decomposition : SO_2 (at temperatures >177 C)

Hazardous Polymerization : Will not occur.

11. TOXICOLOGICAL INFORMATION

Eyes : Not established.

Skin : Not established.

Ingestion : Not established.

Inhalation : Not established.

Subchronic Effects : Not established.

Teratology (Birth defects) : Not established.

Mutagenicity (Genetic effects) : Not established.

12. ECOLOGICAL INFORMATION

Ecotoxicological Information (for a neutral solution of the test substance):

LC_{50}, ppm : **24hr:** Not established **48hr:** Not established **72hr:** Not established **96hr:** Not established
(Pimephales promelas)

Minimum concentration causing 100% mortality, ppm : Not established

No Observable Effects Concentration, NOEC, (96hr), ppm : Not established

EC_{50}, ppm : **24 hr:** Not established **48 hr:** Not established
(Daphnia magna)

No Observable Effects Concentration, NOEC, (48hr) ppm : Not established

EC_{50}, ppm : (Green algae) **48 hr:** Not established **No Observable Effects Concentration, NOEC, ppm :** Not established

Chemical Fate Information :

BOD_5, mg O / g : Not established **BOD_{30}, mg O / g :** Not established

COD, mg O / g : Not established **TOC, mg C / g :** Not established

13. DISPOSAL CONSIDERATIONS

Disposal by landfill or incineration is suggested, but all local, state and federal regulations must be followed. Contact with a reputable waste disposal company is recommended.

14. TRANSPORTATION INFORMATION

Proper Shipping Name: Not regulated by DOT as a hazardous material, ()

Hazard Class : None

UN Number : None

Packing Group : None

15. REGULATORY INFORMATION

U.S. Federal Regulations :

OSHA (29 CFR 1910. 1200) : This product should be included in a hazard communication program that includes container labeling and other forms of warning, material safety data sheets, and employee training.

RCRA (40 CFR 261) : Product is not listed hazardous waste.
Product does not exhibit characteristics of a hazardous waste.

CERCLA (40 CFR 302.4): The following components of this product are specifically listed as hazardous substances in 40 CFR 302.4 and are present at levels that may require reporting:

	Chemical(s)	CASRN:	%
No component subject to reporting			

SARA Section 312 : **Physical Hazards :** None known **Health Hazards :** Immediate (acute) - Irritant

SARA Section 313 : No chemicals present subject to reporting

TSCA Status / CASRN : Listed in the TSCA inventory.

State Right to Know Regulations :

	Chemical(s)	CASRN:	Concentration
Connecticut :	No component subject to reporting		
Florida :	No component subject to reporting		
Illinois:	No component subject to reporting		
Louisiana :	No component subject to reporting		
Massachussetts :	No component subject to reporting		
New Jersey :	No component subject to reporting		
Pennsylvania :	No component subject to reporting		
Rhode Island :	No component subject to reporting		

California – Proposition 65 : The required chemical analyses and risk assessments were performed on this product.Results indicate that there are no significant risks (or observable effects), as defined by this statute, associated with this product under conditions of normal use.

International Inventories :

Australia (AICS) : 50-17-9A **Japan (ENCS) :** Not Listed

Canada (DSL) : 68131-31-7 **Korea (ECL) :** Not Listed

European Community (EINECS) : 268-613-8

Canada - WHMIS Ingredient Disclosure List:	Chemical(s)	CASRN	%
No component subject to reporting			

Canada - WHMIS Hazard Class(es) : D2B
Canada-NPRI: No component subject to reporting

16. OTHER INFORMATION

HMIS : **Health:** 1
Flammability: 1
Reactivity : 0
Personal Protective Equipment (PPE): To be set by user

Revision Summary : Company Name Update

Abbreviations

LC50	A concentration in air or water where 50% of test animals die.
LD50	A dosage of a material where 50% of test animals die.
LDLO	The lowest concentration and dosage of a toxic which kills test organisms.
LEL	Lower Explosive Limit
MSHA	Mine Safety and Health Administration
NIOSH	National Institute for Occupational Safety and Health
NJTSR#	New Jersey Trade Secret Registry number
NTP	National Toxicology Programs
OSHA	Occupational Safety and Health Administration
PEL	Permissible exposure Limit established by OSHA
RCRA	Resource Conservation and Recovery Act
SARA	Superfund Amendments and Reauthorization Act of 1986
TLV	Threshold Limit Value
TSCA	Toxic Substance Control Act
TWA	Time Weighted Average
UEL	Upper Explosive Limit

Free Liquid Testing Report

Document Number 40430-RP-0027

Prepared by:

Nat Politi
Silo 3 Technical Representative

Project Management:

Larbi Bounini
Silos Process Control

Signed Copy on File

Donald W. Luken, PhD
Silos Process Control

Doris Edwards
Silo 3 Project Manager

FERNALD CLOSURE PROJECT

Fluor Fernald, Inc.
P.O. BOX 538704
CINCINNATI, OHIO 45253-8704

TABLE OF CONTENTS

Section Title	Page
RECORD OF ISSUE/REVISION	ii
1.0 Introduction	1
2.0 Goals of Study	1
3.0 Experimental Set Up	1
4.0 Procedure	2
5.0 Tests Performed and Results	3
6.0 Conclusions	5
7.0 References	5

INDEX OF TABLES

Table 1 Silo 3 Material Physical Characterization	2
Table 2 Conditioning Solution Composition	3
Table 3 Oven Drying Result	3
Table 4 Shake Results	4
Table 5 Summary of Test Results	5

RECORD OF ISSUE/REVISION

ISSUE AUTHORIZATION DATE	EFFECTIVE DATE	PCN No.	REV No.	DESCRIPTION
07-30-03	07-30-03		0	Initiated by Silo 3 Team

1.0 Introduction

Testing conditioned Silo 3 material for free liquid is needed to aid in the determination of moisture content of the final waste stream to be shipped to Nevada Test Site (NTS). The design basis conditioning formula was based on the recommended formula in The Silo 3 Conditioning Report, Document No. 40430-RP-0025. The recommended formula suggests not more than 20 parts water, depending on the Silo 3 in-situ moisture, 0.108 parts sodium lignosulfonate solution and 8 parts ferrous sulfate solution added to 100 parts Silo 3 material. The sodium lignosulfonate and ferrous sulfate solutions are held constant but the 20 parts moisture will vary depending on testing moisture objectives.

Tests to be performed in this report will follow the guidance set forth by the Nevada Test Site, Generator Work Group, High Moisture Content Waste Subgroup's Position Paper for High Moisture Content Waste, Revision 0, November 3, 1998. The Guidance Decision Block Flowchart was used to determine if conditioned Silo 3 waste meets the NTS WAC. Testing will include the oven, shake and freeze-thaw tests.

2.0 Goals of Study

The goal of this study was to test the design basis conditioning formula, which produces a final product of 20% moisture by weight, to determine if free liquid is present during testing. Specific project objectives were:

- To produce a conditioned product with no visible liquid when initially mixed.
- To produce a conditioned product that will not release free liquid during handling, storage, and transportation.

3.0 Experimental Set Up

The materials and equipment used in the treatability studies are described in the following sections:

3.1 Silo 3 Material

Material for this study came from the Small-Scale Waste Retrieval effort collected from the side of Silo 3 in 1997 and stored in drums. This material was fine-grained, dry, very loose, and represented the material located in the middle to lower portions of the silo. Material for the testing originated from Silo 3 drum number W195435 (55-gallon drum inventory number) which was previously homogenized by Clemson Environmental Technologies Laboratory as part of a study conducted for the Westinghouse Savannah River Company (SRS) in December 2000. The material in drum number W195435 was divided evenly into five sub drums numbered W210394, 395, 396, 397 and 398 to inspect the contents and facilitate material handling and taking of samples. The material from drum number W210395, which has not been opened since the transfer mentioned above, was used for the free liquid testing.

TABLE I SILO 3 MATERIAL PHYSICAL CHARACTERIZATION *		
Characteristics	**Units**	**Total**
Moisture	%	2.8
pH of 10% suspension		5.86
Bulk density (compacted)	g/cm^3	0.76

* As-is Silo 3 material data was reported in: "Silo 3 Design Data Development Report", Document No. 40430-RP-0015.

3.2 Reagents

Reagents were selected because they are either proven commercial products as in the case of REAX, a dust suppressant, or known for their heavy metal reducing properties. Under normal operating conditions the reagents are non-toxic, easily handled and applied, and are cost effective.

REAX SN, Sodium Lignosulfonate Solution is a polymeric organic binder produced by MeadWestvaco Corporation. The solution is 47-weight percent sodium lignosulfonate. The solution is a lignin waste product of pulp and paper processing; it is dark brown with a characteristic vanilla-like odor.

Ferrous Sulfate Solution, $FeSO_4$. This reagent was obtained from EagleBrook® Company in the form of a solution composed of 15% ferrous sulfate, 85% water and less than 6% sulfuric acid having a pH of less than 1.0. It was used to reduce chromium.

Ferrous sulfate is commonly used as a reducing agent and is the least expensive of those tested in the Silo 3 Conditioning Report, Document No. 40430-RP-0025. It is known to be effective in reducing Cr^{+6} to Cr^{+3} at low or neutral pH levels, but may be less effective at high pH levels. Cr^{+3} is more amenable to stabilization with alkaline bonding agents than Cr^{+6}.

3.3 Equipment

The following equipment was used in the testing.

Freezer, laboratory refrigerator, Precision® 812, Set at −10° C.

Burrell Model 75 wrist action shaker, Catalog Number75-775-12, Side Arm Capacity 12.

A Mercury thermometer was used with a range of −20 to 120° Celsius.

4.0 Procedure

The testing procedure consisted of the addition of three solutions, 1, 2 and 3, by weight to existing Silo 3 material. The table below shows the composition of each solution.

TABLE 2 CONDITIONING SOLUTION COMPOSITION				
Solution	Water	Ferrous Sulfate Solution (15% ferrous sulfate)	Sodium Lignosulfonate Solution (47% sodium lignosulfonate)	Silo 3 Material
1	36.5 parts	8 parts	0.108 parts	100 parts
2	26.8 parts	8 parts	0.108 parts	100 parts
3	18.6 parts	8 parts	0.108 parts	100 parts

Solution 1 was made by mixing 146 weight parts of water to 0.432 weight parts of sodium lignosulfonate solution then adding 32 weight parts ferrous sulfate solution. Solution 1 was added to 400 weight parts of Silo 3 material, at 2.8% in-situ moisture by weight, to give the final conditioned product 31.4% moisture by weight. This sample was labeled 1-A and used to perform the shake and freeze thaw tests. A sub-sample was taken and labeled 1-B, which was used to perform the oven drying test.

Solution 2 was made by mixing 107 weight parts of water with 0.432 weight parts of sodium lignosulfonate solution then adding 32 weight parts of ferrous sulfate solution. Solution 2 was added to 400 weight parts grams of Silo 3 material, at 2.8% in-situ moisture by weight, to give the final conditioned product 27% moisture by weight. This sample was labeled 3-A and used to perform shake test.

Solution 3 was made by mixing 74.4 weight parts of water with 0.432 weight parts of sodium lignosulfonate solution then adding 32 weight parts of ferrous sulfate solution. Solution 2 was added to 400 weight parts of Silo 3 material, at 2.8% in-situ moisture by weight, to give the final conditioned product 22.3% moisture by weight. This sample was labeled 2-A and used to perform shake and freeze-thaw tests.

The conditioning solution was added to the Silo 3 material by pouring a portion of solution onto a portion of the Silo 3 material until both were combined. The sample was then hand mixed to blend the entire sample. The samples were allowed to sit over night before testing.

5.0 Test Performed and Results

5.1 OVEN DRYING TEST

The objective of this test is to determine if the conditioned Silo 3 product is classified as a dry waste according to the NTS Position Paper for High Moisture Content Waste. The test was performed according to the position paper, which calls for the sample to be dried at 50° C for two hours. The paper states, if a significant release of moisture occurs, then the waste is not a dry waste. The results of the drying tests are in table 3.

TABLE 3 OVEN DRYING RESULT					
Sample ID	Total moisture in conditioned material	Initial weight of sample	Final sample weight after heating at 50° C	Moisture lost weight	Moisture lost percent
1-B	31.4 %	50.2 grams	48.4 grams	1.8 grams	3.6 %

Sample 1-B, total moisture of 31.4 %, lost 3.6 % by weight of its original moisture.

5.2 SHAKE TEST

The objective of the shake test is to determine if moisture is bound to the waste matrix or can be released as free liquid. Each of the three conditioned samples were tested using the wrist action shaker according to Fluor Fernald's, Free Liquids Test for Soils, Method Number 6527. Each conditioned sample was separated into three Erlenmeyer flasks, sealed and placed on the shaker for a minimum 24-hours. The results are summarized below:

TABLE 4
SHAKE RESULTS

Sample ID	Total Moisture of sample, Percent	Free Liquids	Amount	Comments
1-A	31.4	Positive	3.5 grams	Post shake test: there was visible free liquid with high solids content. See Figure 1.
2-A	22.3	Negative	N/A	Visible dark moist areas indicating higher moisture content. There was no visible free liquid. See figure 2.
3-A	27.0	Negative	N/A	Samples had a large solid moist mass at the bottom of the flasks. On the top of each sample were large circular granular particles. There were no visible free liquid. See figure 3.

Figure 1 2 3

D0187.jpg D0208.jpg D0244.jpg

The test results showed free liquid separation in sample 1-A containing 31.4 weight % moisture 17 hours after the shake test was completed. The free liquid accumulated on the surface of the sample and was able to be poured off and weighed. Test 2-A and 3-A did not show any free liquid.

5.3 FREEZE-THAW

The objective of the freeze-thaw test is to determine if moisture is bound to the waste matrix or can be released as free liquid. The freeze-thaw test was performed for samples 1-A and 2-A and followed the NTS Position Paper for High Moisture Content Waste testing guidelines. The test cycles samples down to −6° C for a minimum of six hours and then back to room temperature for a period of time sufficient for thaw. Observations were made after each thaw of the ten-cycle test. The results of the freeze-thaw testing showed no visible moisture for samples 1-A or 2-A.

6.0 CONCLUSIONS

Silo 3 material, conditioned with various solutions to reduce potential dust generation and leachability of some heavy metals, was tested for risk of liquid separation under temperature variation and simulated transportation vibration following the NTS Position Paper for High Moisture. The test results are summarized in Table 5. Based on the test results it can be concluded that:

Samples treated with solution 1 and containing 31.4% moisture by weight, showed free liquid after the shake test was concluded but showed no visible free liquid during the freeze-thaw test. It is therefore expected that a product with 31.4% moisture by weight or higher would be at risk of forming free liquid when subject to vibration during transportation.

A Sample treated with Solution 2 and containing 27% moisture by weight did not produce visible free liquid when the shake test was performed. The freeze-thaw test was not conducted on this sample because material with higher moisture content (31.4 wt%) did not produce visible liquid during the freeze-thaw test. It is therefore expected that a product with 27 % moisture by weight or lower will not be at risk of forming free liquid when subjected to vibration during transportation or to temperature variations.

As expected from the above results, a sample treated with Solution 3 and containing 22.3% moisture by weight, did not produce visible free liquid when the shake and freeze-thaw tests were performed. It is therefore expected that a product with 22.3 % moisture by weight or lower will not be at risk of forming free liquid when subjected to vibration during transportation or to temperature variations.

TABLE 5
SUMMARY OF TEST RESULTS

Sample ID	Treated w/ Solution	Total Moisture of Sample	Shake Test	Freeze-Thaw Test	Dry Test
1-A	1	31.4%	Observed free liquid separation	No free liquid separation	3.6 % weight lost
3-A	2	27%	No free liquid separation	N/A	N/A
2-A	3	22.3%	No free liquid separation	No free liquid separation	N/A

7.0 REFERENCES

Nevada Test Site Generator Work Group, High Moisture Content Waste Subgroup, Position Paper for High Moisture Content Waste, Revision 0, November 3, 1998.

Fluor Fernald, Free Liquids Test for Soils, Method Number 6527.

Silo 3 Conditioning Report, Fluor Fernald, Document Number, 40430-RP-0025, REV 0, February 09, 2003.

Silo 3 Design Data Development Report, Fluor Fernald, Document Number, 40430-RP-0015.

Westinghouse Savannah River Company (SRS) in December 2000.