CONSTRUCTION QUALITY ASSURANCE
FINAL REPORT

ENHANCED PERMANENT LEACHATE TRANSMISSION SYSTEM

ON-SITE DISPOSAL FACILITY

United States Department of Energy
Fernald Environmental Management Project
Fernald, Ohio

prepared by

GEOSYNTEC CONSULTANTS

7400 Willey Road
Hamilton, Ohio 45103

under

Fluor Fernald, Inc.
Contract No. 95PS005028

REVISION 0
OCTOBER 2001
VOLUME IV

CONSTRUCTION QUALITY ASSURANCE
FINAL REPORT

ENHANCED PERMANENT LEACHATE TRANSMISSION SYSTEM ON-SITE DISPOSAL FACILITY

United States Department of Energy
Fernald Environmental Management Project
Fernald, Ohio

REVISION 0
OCTOBER 2001
VOLUME IV

APPENDIX F

APPENDIX F

HDPE PIPE TEST LOGS

BUTT FUSION JOINING

GEOSYNTEC CONSULTANTS

FLUOR FERNALD, INC.

BUTT FUSION JOINING LOG

PROJECT: ON-SITE DISPOSAL FACILITY (OSDF)

LOCATION: FERNALD, OHIO PROJECT NO.: G01029 TASK NO.: 4.2

DESCRIPTION: Phase II YEAR: 2000

CONTRACTOR: Stauer

MATERIAL DESCRIPTION: FORCEMAIN: ☐ CONTAINMENT: ☐ CARRIER: ☐ OTHER: ☐

PIPE DIAMETER: 6" SDR: 11

JOINT NO.	DATE (day/mo)	OPER. ID	MACH. ID	GAUGE PRESSURE ( ) WELDING	GAUGE PRESSURE ( ) COOL DOWN	PLATE TEMPERATURE (F)	PIPE ALIGNMENT ACCEPT/REJECT	ROLL BACK DIMENSION	PASS/ FAIL	QA ID
Test 1	9 Aug	DH	1224	100		418	Accept	1/4"	P	KS
600/cap				100		424	Accept	1/4"	P	KS
602/600				100		413	Accept	1/4"	P	KS
603/602				100		424	Accept	1/4"	P	KS
604/603				100		415	Accept	1/4"	P	KS
605/flange				100		423	Accept	1/4"	P	KS
606/flange				100		420	Accept	1/4"	P	KS
6/604				100		418	Accept	1/4"	P	KS
612/605				100		419	Accept	1/4"	P	KS
613/612				100		416	Accept	1/4"	P	KS
611/613				100		425	Accept	1/4"	P	KS

COPY TO: File

GEOSYNTEC CONSULTANTS

FLUOR FERNALD, INC.

BUTT FUSION JOINING LOG

PROJECT: ON-SITE DISPOSAL FACILITY (OSDF)

LOCATION: FERNALD, OHIO PROJECT NO.: GQ1029 TASK NO.: 4.2

DESCRIPTION: EPLTS YEAR: 2000

CONTRACTOR: STAUER / Rieck

MATERIAL DESCRIPTION: FORCEMAIN: ☐ CONTAINMENT: ☐ CARRIER: ☑ OTHER: ☐

PIPE DIAMETER: 6" SDR: 11

JOINT NO.	DATE (day/mo)	OPER. ID	MACH. ID	GAUGE PRESSURE ( ) WELDING	GAUGE PRESSURE ( ) COOL DOWN	PLATE TEMPERATURE (F)	PIPE ALIGNMENT ACCEPT/REJECT	ROLL BACK DIMENSION	PASS/ FAIL	QA ID
TEST	10 Aug 00	PT	1224	≈ 101		413 Gun	Accept	3/16 [redacted] TD	P	TD
LARGE FACTOR 610				≈ 101		416 Gun	Accept	3/16	P	TD
610/611				≈ 101		GAGE 440 / 411 Gun	Reject		F	TD
610/611				≈ 101		GAGE 440 / 420 Gun	Accept	3/16	P	TD

COPY TO: File

GEOSYNTEC CONSULTANTS

FLUOR FERNALD, INC.

BUTT FUSION JOINING LOG

PROJECT: ON-SITE DISPOSAL FACILITY (OSDF)

LOCATION: FERNALD, OHIO PROJECT NO.: G01029 TASK NO.: 4.2

DESCRIPTION: EPLTS YEAR: 2000

CONTRACTOR: Staver / Rieck

MATERIAL DESCRIPTION: FORCEMAIN: ☒ CONTAINMENT: ☐ CARRIER: ☒ OTHER: ☐

PIPE DIAMETER: 6" SDR: 11

JOINT NO.	DATE (day/mo)	OPER. ID	MACH. ID	GAUGE PRESSURE ( ) WELDING	GAUGE PRESSURE ( ) COOL DOWN	PLATE TEMPERATURE (F)	PIPE ALIGNMENT ACCEPT/REJECT	ROLL BACK DIMENSION	PASS/ FAIL	QA ID
Test	11 Aug	DH	1224	100	~~100~~	405°	Accept/Pass	1/4"	P	KS
606/605	↓	↓	↓	100	100	424°	Accept	1/4"	P	KS

COPY TO: File

GEOSYNTEC CONSULTANTS

FLUOR FERNALD, INC.

BUTT FUSION JOINING LOG

PROJECT: ON-SITE DISPOSAL FACILITY (OSDF)

LOCATION: FERNALD, OHIO PROJECT NO.: G01029 TASK NO.: 4.2

DESCRIPTION: EPLTS YEAR: 2000

CONTRACTOR: STAVER / RIECK

MATERIAL DESCRIPTION: FORCEMAIN: ☐ CONTAINMENT: ☐ CARRIER: ☑ OTHER: ☐

PIPE DIAMETER: 6" SDR: 11

JOINT NO.	DATE (day/mo)	OPER. ID	MACH. ID	GAUGE PRESSURE ( ) WELDING	GAUGE PRESSURE ( ) COOL DOWN	PLATE TEMPERATURE (F) Plate	PLATE TEMPERATURE (F) Gun	PIPE ALIGNMENT ACCEPT/REJECT	ROLL BACK DIMENSION	PASS/ FAIL	QA ID
Test	16 Aug 00	PT	1224	≈ 100		450	420	Accept	3/16	P	TD
609/ESCAR				≈ 100		445	414	Accept	3/16	P	TD
609/608				≈ 100		445	420	Accept	3/16	P	TD
608/607				≈ 100		445	410	Accept	3/16	P	TD
607/614				≈ 100		445	410	Accept	3/16	P	TD

COPY TO:

GEOSYNTEC CONSULTANTS

FLUOR FERNALD, INC.

BUTT FUSION JOINING LOG

PROJECT: ON-SITE DISPOSAL FACILITY (OSDF)

LOCATION: FERNALD, OHIO PROJECT NO.: G01029 TASK NO.: 4.2

DESCRIPTION: EPLTS YEAR: 2000

CONTRACTOR: STAver / Riecik

MATERIAL DESCRIPTION: FORCEMAIN: ☐ CONTAINMENT: ☐ CARRIER: ☑ OTHER: ☐

PIPE DIAMETER: 6" SDR: 11

JOINT NO.	DATE (day/mo)	OPER. ID	MACH. ID	GAUGE PRESSURE ( ) WELDING	GAUGE PRESSURE ( ) COOL DOWN	PLATE TEMPERATURE (F) GAGE	PLATE TEMPERATURE (F) GUN	PIPE ALIGNMENT ACCEPT/REJECT	ROLL BACK DIMENSION	PASS/FAIL	QA ID
Test	17 Aug 00	PT	1224	≈ 100		440	412	Accept	3/16	P	TD
614/601				≈ 100		435	406	Accept	3/16	P	TD
601/~~Accept~~				≈ 100		435	405	Accept	3/16	P	TD
615/616				≈ 100		435	408	Accept	3/16	P	TD
616/617				≈ 100		435	405	Accept	3/16	P	TD
617/618				≈ 100		435	405	Accept	3/16	P	TD
618/619				≈ 100		435	406	Accept	3/16	P	TD
4/Flange				≈ 100		440	414	Accept	3/16	P	TD
601/615				≈ 100			408	Accept	3/16	P	TD

COPY TO:

GEOSYNTEC CONSULTANTS

FLUOR FERNALD, INC.

BUTT FUSION JOINING LOG

PROJECT: ON-SITE DISPOSAL FACILITY (OSDF)

LOCATION: FERNALD, OHIO PROJECT NO.: G01029. TASK NO.: 4.2

DESCRIPTION: EPLTS YEAR: 2000

CONTRACTOR: STAVER/ Riecle

MATERIAL DESCRIPTION: FORCEMAIN: ☐ CONTAINMENT: ☐ CARRIER: ☑ OTHER: ☐

PIPE DIAMETER: 6" SDR: 11

JOINT NO.	DATE (day/mo)	OPER. ID	MACH. ID	GAUGE PRESSURE ( ) WELDING	GAUGE PRESSURE ( ) COOL DOWN	PLATE TEMPERATURE (F) Gauge	PLATE TEMPERATURE (F) Gun	PIPE ALIGNMENT ACCEPT/REJECT	ROLL BACK DIMENSION	PASS/ FAIL	QA ID
Test	24 Aug 00	DH	1224	≈ 100		445	409	Accept	3/16	P	TD
600 Flow	24 Aug	DH	1224	101		440	410	Accept	3/8	P	TD

COPY TO:

GEOSYNTEC CONSULTANTS

FLUOR FERNALD, INC.

BUTT FUSION JOINING LOG

PROJECT: ON-SITE DISPOSAL FACILITY (OSDF)

LOCATION: FERNALD, OHIO PROJECT NO.: G01029 TASK NO.: 4.2

DESCRIPTION: EPLTS YEAR: 2000

CONTRACTOR: STAUER/RICK

MATERIAL DESCRIPTION: FORCEMAIN: ☐ CONTAINMENT: ☐ CARRIER: ☑ OTHER: ☐

PIPE DIAMETER: 6" SDR: 11

JOINT NO.	DATE (day/mo)	OPER. ID	MACH. ID	GAUGE PRESSURE ( ) WELDING	GAUGE PRESSURE ( ) COOL DOWN	PLATE TEMPERATURE (F) 6 o'clock	PLATE TEMPERATURE (F) 6 o'clock	PIPE ALIGNMENT ACCEPT/REJECT	ROLL BACK DIMENSION	PASS/ FAIL	QA ID
Test Factory/Field	25 Aug	DH	1224	2/00		430	410	Accept	3/16	P	KS
						440	406	Accept	3/16	P	TD

COPY TO:

GEOSYNTEC CONSULTANTS

FLUOR FERNALD, INC.

BUTT FUSION JOINING LOG

PROJECT: ON-SITE DISPOSAL FACILITY (OSDF)

LOCATION: FERNALD, OHIO PROJECT NO.: G01029 TASK NO.: 4.2

DESCRIPTION: EPLTS YEAR: 2000

CONTRACTOR: STAVER / Rick

MATERIAL DESCRIPTION: FORCEMAIN: ☐ CONTAINMENT: ☐ CARRIER: ☑ OTHER: ☐

PIPE DIAMETER: 6" SDR: 11

JOINT NO.	DATE (day/mo)	OPER. ID	MACH. ID	GAUGE PRESSURE ( ) WELDING	GAUGE PRESSURE ( ) COOL DOWN	PLATE TEMPERATURE (°F) GAGE	PLATE TEMPERATURE (°F) GUN	PIPE ALIGNMENT ACCEPT/REJECT	ROLL BACK DIMENSION	PASS/ FAIL	QA ID
1st	6 Sept	DH	1224	≈ 100		430	420	Accept	3/16"	P	TD
645/642				≈ 100		430	420	Accept	3/16"	P	TD
642/638				≈ 100		425	416	Accept	3/16"	P	TD
638/636				≈ 100		425	412	Accept	3/16"	P	TD

COPY TO:

GEOSYNTEC CONSULTANTS

FLUOR FERNALD, INC.

BUTT FUSION JOINING LOG

PROJECT: ON-SITE DISPOSAL FACILITY (OSDF)

LOCATION: FERNALD, OHIO PROJECT NO.: G01029 TASK NO.: 4.2

DESCRIPTION: EPLTS. YEAR: 2000

CONTRACTOR: STAUCR/Riedl

MATERIAL DESCRIPTION: FORCEMAIN: ☐ CONTAINMENT: ☐ CARRIER: ☑ OTHER: ☐

PIPE DIAMETER: 6" SDR: 11

JOINT NO.	DATE (day/mo)	OPER. ID	MACH. ID	GAUGE PRESSURE ( ) WELDING	GAUGE PRESSURE ( ) COOL DOWN	PLATE TEMPERATURE (F) GAGE	PLATE TEMPERATURE (F) GUN	PIPE ALIGNMENT ACCEPT/REJECT	ROLL BACK DIMENSION	PASS/ FAIL	QA ID
Test	6 Sept	DH	1224	≈ 100		440	408	Accept	3/16"	P	TD
636/644				≈ 100		425	408	Accept	3/16"	P	TD
636/645				≈ 100		440	406	Accept	3/16"	P	TD
644/Flange				≈ 100		425	419	Accept	3/16"	P	TD
641/637				≈ 100		420	408	Accept	3/16"	P	TD
637/643				≈ 100		420	410	Accept	3/16"	P	TD
643/635				≈ 100		440	409	Accept	3/16"	P	TD
635/640				≈ 100		445	405	Accept	3/16"	P	TD
640/Flange				≈ 100		445	407	Accept	3/16"	P	TD
641/644				≈ 100		445	412	Accept	3/16	P	TD

COPY TO:

GEOSYNTEC CONSULTANTS

FLUOR FERNALD, INC.

BUTT FUSION JOINING LOG

PROJECT: ON-SITE DISPOSAL FACILITY (OSDF)

LOCATION: FERNALD, OHIO PROJECT NO.: G01029. TASK NO.: 4.2

DESCRIPTION: EP/TB YEAR: 2000

CONTRACTOR: STAVER/Rieck

MATERIAL DESCRIPTION: FORCEMAIN: ☐ CONTAINMENT: ☐ CARRIER: ☑ OTHER: ☐

PIPE DIAMETER: 6" SDR: 11

JOINT NO.	DATE (day/mo)	OPER. ID	MACH. ID	GAUGE PRESSURE ( ) WELDING	GAUGE PRESSURE ( ) COOL DOWN	PLATE TEMPERATURE (F) Gauge	PLATE TEMPERATURE (F) Gun	PIPE ALIGNMENT ACCEPT/REJECT	ROLL BACK DIMENSION	PASS/ FAIL	QA ID
Test	7 Sept	DH	1224	≈100		445	410	Accept	3/16"	P	TD
BT CAP/632				≈100		415	419	Accept	3/16"	P	TD
632/625				≈100		445	418	Accept	3/16"	P	TD
625/633				≈100		450	418	Accept	3/16"	P	TD
633/634				≈100		445	412	Accept	3/16"	P	TD
Flange/639				≈100		445	409	Accept	3/16"	P	TD
634/639				≈100		445	405	Accept	3/16"	P	TD
639/629				≈100		440	407	Accept	3/16"	P	TD
9/100 628/631				≈100		435	410	Accept	3/16	P	TD
~~[illegible]/630~~				≈100		445	419	Accept	3/16"	P	TD 9-7-00
9/7 631/630				≈100		445	410	Accept	3/16"	P	TD
Tank/624				≈100		445	410	Accept	3/16"	P	TD
630/624				≈100		430	413	Accept	3/16"	P	TD

COPY TO:

GEOSYNTEC CONSULTANTS

FLUOR FERNALD, INC.

BUTT FUSION JOINING LOG

PROJECT: ON-SITE DISPOSAL FACILITY (OSDF)

LOCATION: FERNALD, OHIO PROJECT NO.: G01029 TASK NO.: 4.2

DESCRIPTION: EPLTS YEAR: 2000

CONTRACTOR: STAUER/RIECK

MATERIAL DESCRIPTION: FORCEMAIN: ☐ CONTAINMENT: ☐ CARRIER: ☑ OTHER: ☐

PIPE DIAMETER: 6" SDR: 11

JOINT NO.	DATE (day/mo)	OPER. ID	MACH. ID	GAUGE PRESSURE ( ) WELDING	GAUGE PRESSURE ( ) COOL DOWN	PLATE TEMPERATURE GAGE (F)	PLATE TEMPERATURE GUN	PIPE ALIGNMENT ACCEPT/REJECT	ROLL BACK DIMENSION	PASS/ FAIL	QA ID
Test	8 Sept	DH	1224	≈ 100		440	405	Accept	3/16"	P	TO
639/629				≈ 100		435	407	Accept	3/16	P	TO

COPY TO:

GEOSYNTEC CONSULTANTS

FLUOR DANIEL FERNALD

BUTT FUSION WELDING LOG

PROJECT: ON-SITE DISPOSAL FACILITY (OSDF)

LOCATION: FERNALD, OHIO PROJECT NO.: GQ0409 TASK NO.: 4.1

DESCRIPTION: EPLTS YEAR: 2000

CONTRACTOR: STAVER / RICK

MATERIAL DESCRIPTION: FORCEMAIN: ☐ CONTAINMENT: ☐ CARRIER: ☑ OTHER: ☐

PIPE DIAMETER: 6" SDR: 11

JOINT NO.	DATE (day/mo)	OPER. ID	MACH. ID	GAUGE PRESSURE ( ) WELDING	GAUGE PRESSURE ( ) COOL DOWN	PLATE TEMPERATURE GAGE (°F)	PLATE TEMPERATURE GW	PIPE ALIGNMENT ACCEPT/REJECT	ROLL BACK DIMENSION	PASS/ FAIL	QA ID
Test	13 Sept	DH	1224	≈ 100		445	405	Accept	3/16"	P	TD
636/644	↓	↓	↓	≈ 100		430	405	Accept	3/16"	P	TD
649/Flange				≈ 100		430	405	Accept	3/16"	P	TD

52°F
RENOLD CUT OUT

COPY TO:

GEOSYNTEC CONSULTANTS

FLUOR FERNALD, INC.

BUTT FUSION JOINING LOG

PROJECT: ON-SITE DISPOSAL FACILITY (OSDF)

LOCATION: FERNALD, OHIO PROJECT NO.: G01029. TASK NO.: 4.2

DESCRIPTION: EPLTS YEAR: 2000

CONTRACTOR: STAVER/RIEDIC

MATERIAL DESCRIPTION: FORCEMAIN: ☐ CONTAINMENT: ☑ CARRIER: ☐ OTHER: ☐

PIPE DIAMETER: 6" SOR: 11

JOINT NO.	DATE (day/mo)	OPER. ID	MACH. ID	GAUGE PRESSURE ( ) WELDING	GAUGE PRESSURE ( ) COOL DOWN	PLATE TEMPERATURE (°F) GAGE	PLATE TEMPERATURE (°F) GUN	PIPE ALIGNMENT ACCEPT/REJECT	ROLL BACK DIMENSION	PASS/FAIL	QA ID
Test	15 Sept	DH	1224	≈ 100		430	409	Accept	3/16"	P	TD
619/flange	↓	DH	1224	≈ 100		435	410	Accept	3/16	P	TD
609/flange	↓	DH	1224	~ 100		437	414	Reject/Rain		F	DLE
609/flange	15 Sept	DH	1224	≈ 100	20 min	430	415	Accept	3/16	P ~~DLE~~	DLE

COPY TO:

GEOSYNTEC CONSULTANTS

FLUOR FERNALD, INC.

BUTT FUSION JOINING LOG

PROJECT: ON-SITE DISPOSAL FACILITY (OSDF)

LOCATION: FERNALD, OHIO PROJECT NO.: G01029. TASK NO.: 4.2

DESCRIPTION: EPLTS YEAR: 2000

CONTRACTOR: STAUER/RIECK

MATERIAL DESCRIPTION: FORCEMAIN: ☐ CONTAINMENT: ☐ CARRIER: ☑ OTHER: ☐

PIPE DIAMETER: 6" SDR: 11

JOINT NO.	DATE (day/mo)	OPER. ID	MACH. ID	GAUGE PRESSURE ( ) WELDING	GAUGE PRESSURE ( ) COOL DOWN	PLATE TEMPERATURE (F) Gauge	PLATE TEMPERATURE (F) Gun	PIPE ALIGNMENT ACCEPT/REJECT	ROLL BACK DIMENSION	PASS/FAIL	QA ID
Test	20 Sept	Off	1224	≈ 100		430	420	Accept	3/16"	P	TD
Flange/655				≈ 100		430	412	Accept	3/16"	P	TD
655/657				≈ 100		445	411	Accept	3/16"	P	TD
657/654				≈ 100		440	412	Accept	3/16"	P	TD
654/658				≈ 100		425	415	Accept	3/16"	P	TD
658/653				≈ 100		440	413	Accept	3/16"	P	TD
653/Flange				≈ 100		425	415	Accept			

COPY TO:

GEOSYNTEC CONSULTANTS

FLUOR FERNALD, INC.

BUTT FUSION JOINING LOG

PROJECT: ON-SITE DISPOSAL FACILITY (OSDF)

LOCATION: FERNALD, OHIO PROJECT NO.: G01029. TASK NO.: 4.2

DESCRIPTION: EPLTS YEAR: 2000

CONTRACTOR: Staver/Rieck

MATERIAL DESCRIPTION: FORCEMAIN: ☐ CONTAINMENT: ☐ CARRIER: ☑ OTHER: ☐

PIPE DIAMETER: 6" SDR: 11

JOINT NO.	DATE (day/mo)	OPER. ID	MACH. ID	GAUGE PRESSURE ( ) WELDING	GAUGE PRESSURE ( ) COOL DOWN	PLATE TEMPERATURE GAGE (F)	PLATE TEMPERATURE GUN	PIPE ALIGNMENT ACCEPT/REJECT	ROLL BACK DIMENSION	PASS/FAIL	QA ID
Test	21 Sept	PT	1224	≈ 100		440	412	Accept	3/16"	P	TD
Flange/659				≈ 100		440	414	Accept	3/16"	P	TD
659/652				≈ 100		430	406	Accept	3/16"	P	TD
652/660				≈ 100		435	412	Accept	3/16"	P	TD
660/650				≈ 100		440	409	Accept	3/16"	P	TD
650/656				≈ 100		445	410	Accept	3/16"	P	TD

54"

COPY TO:

GEOSYNTEC CONSULTANTS

FLUOR FERNALD, INC.

BUTT FUSION JOINING LOG

PROJECT: ON-SITE DISPOSAL FACILITY (OSDF)

LOCATION: FERNALD, OHIO PROJECT NO.: G01029. TASK NO.: 4.2

DESCRIPTION: EPLTS YEAR: 2000

CONTRACTOR: STAUER / RECK

MATERIAL DESCRIPTION: FORCEMAIN: ☐ CONTAINMENT: ☐ CARRIER: ☑ OTHER: ☐

PIPE DIAMETER: 6" SDR: 11

JOINT NO.	DATE (day/mo)	OPER. ID	MACH. ID	GAUGE PRESSURE ( ) WELDING	GAUGE PRESSURE ( ) COOL DOWN	PLATE TEMPERATURE (°F) Gage	PLATE TEMPERATURE (°F) Gun	PIPE ALIGNMENT ACCEPT/REJECT	ROLL BACK DIMENSION	PASS/ FAIL	QA ID
TEST	22 Sept	PT	1224	≈100		440	415	Accept	3/16"	P	TD
654/655	↓	↓		≈100		440	412	Accept	3/16"	P	TD

49°

COPY TO:

GEOSYNTEC CONSULTANTS

FLUOR FERNALD, INC.

BUTT FUSION JOINING LOG

PROJECT: ON-SITE DISPOSAL FACILITY (OSDF)

LOCATION: FERNALD, OHIO PROJECT NO.: G01029. TASK NO.: 4.2

DESCRIPTION: EPLTS YEAR: 2000

CONTRACTOR: STAVER / RICK

MATERIAL DESCRIPTION: FORCEMAIN: ☐ CONTAINMENT: ☐ CARRIER: ☑ OTHER: ☐

PIPE DIAMETER: 6" SDR: 11

JOINT NO.	DATE (day/mo)	OPER. ID	MACH. ID	GAUGE PRESSURE ( ) WELDING	GAUGE PRESSURE ( ) COOL DOWN	PLATE TEMPERATURE (°F) BASE	PLATE TEMPERATURE (°F) GUN	PIPE ALIGNMENT ACCEPT/REJECT	ROLL BACK DIMENSION	PASS/ FAIL	QA ID
Test 653/FAT. FLANGE	3 OCT	DH	1224	≈ 100		430	408	Accept	3/16"	P	TD
				≈ 100		430	412	Accept	3/16"	P	TD
FLANGE				≈ 100		440	405	Accept	3/16"	P	TD

COPY TO:

GEOSYNTEC CONSULTANTS

FLUOR FERNALD, INC.

BUTT FUSION JOINING LOG

PROJECT: ON-SITE DISPOSAL FACILITY (OSDF)

LOCATION: FERNALD, OHIO PROJECT NO.: G01029 TASK NO.: 4.2

DESCRIPTION: EPLTS YEAR: 2000

CONTRACTOR: STAUER / RIECK

MATERIAL DESCRIPTION: FORCEMAIN: ☐ CONTAINMENT: ☐ CARRIER: ☑ OTHER: ☐

PIPE DIAMETER: 6 SDR: 11

JOINT NO.	DATE (day/mo)	OPER. ID	MACH. ID	GAUGE PRESSURE ( ) WELDING	GAUGE PRESSURE ( ) COOL DOWN	PLATE TEMPERATURE GAGE (°F)	PLATE TEMPERATURE GUN	PIPE ALIGNMENT ACCEPT/REJECT	ROLL BACK DIMENSION	PASS/ FAIL	QA ID
TEST 632/FLANGE	24 oct	PT	1224	≈100		450	415	Accept	3/16"	P	TD
				≈100		440	415	Accept	3/16"	P	TD
624 FLANGE				≈100		450	420	Accept	3/16"	P	TD

COPY TO:

GEOSYNTEC CONSULTANTS

FLUOR FERNALD, INC.

BUTT FUSION JOINING LOG

PROJECT: ON-SITE DISPOSAL FACILITY (OSDF)

LOCATION: FERNALD, OHIO PROJECT NO.: G01029 TASK NO.: 4.2

DESCRIPTION: EPLTS YEAR: 2000

CONTRACTOR: STAUER/RICK

MATERIAL DESCRIPTION: FORCEMAIN: ☐ CONTAINMENT: ☐ CARRIER: ☑ OTHER: ☐

PIPE DIAMETER: 6 SDR: 11

JOINT NO.	DATE (day/mo)	OPER. ID	MACH. ID	GAUGE PRESSURE ( ) WELDING	GAUGE PRESSURE ( ) COOL DOWN	PLATE TEMPERATURE (F) Gabe	PLATE TEMPERATURE (F) Gw	PIPE ALIGNMENT ACCEPT/REJECT	ROLL BACK DIMENSION	PASS/ FAIL	QA ID
Test 6"/flange	11-1-00	DH ~~1224~~	1224	≈100		445	418	Accept	1/4"	P	TD
6"/flange				≈100		445	407	Accept	1/4	P	TD
6"/flange				≈100		445	408	Accept	1/4"	P	TD

51°

COPY TO:

GEOSYNTEC CONSULTANTS

FLUOR FERNALD, INC.

BUTT FUSION JOINING LOG

PROJECT: ON-SITE DISPOSAL FACILITY (OSDF)

LOCATION: FERNALD, OHIO PROJECT NO.: G01029 TASK NO.: 4.2

DESCRIPTION: EPLTS YEAR: 2000

CONTRACTOR: STAUFF / RICK

MATERIAL DESCRIPTION: FORCEMAIN: ☐ CONTAINMENT: ☐ CARRIER: ☑ OTHER: ☐

PIPE DIAMETER: 6 SDR: 11

JOINT NO.	DATE (day/mo)	OPER. ID	MACH. ID	GAUGE PRESSURE ( ) WELDING	GAUGE PRESSURE ( ) COOL DOWN	PLATE TEMPERATURE Gage (F)	PLATE TEMPERATURE Gun	PIPE ALIGNMENT ACCEPT/REJECT	ROLL BACK DIMENSION	PASS/ FAIL	QA ID
TEST	2-11	PT	1224	≈ 100		440	414	Accept	3/16"	P	TD
670/BUTT CAP	↓	↓	↓	≈ 100		440	412	Accept	3/16"	P	TD
670/671				≈ 100		450	420	Accept	3/16"	P	TD
671/672				≈ 100		450	418	Accept	3/16"	P	TD

COPY TO:

GEOSYNTEC CONSULTANTS

FLUOR FERNALD, INC.

BUTT FUSION JOINING LOG

PROJECT: ON-SITE DISPOSAL FACILITY (OSDF)

LOCATION: FERNALD, OHIO PROJECT NO.: G01029 TASK NO.: 4.2

DESCRIPTION: Phase III YEAR: 2000

CONTRACTOR: Staven / Bieck

MATERIAL DESCRIPTION: FORCEMAIN: ☐ CONTAINMENT: ☐ CARRIER: ☒ OTHER: ☐

PIPE DIAMETER: 6 in SDR: 11

JOINT NO.	DATE (day/mo)	OPER. ID	MACH. ID	GAUGE PRESSURE ( ) WELDING	GAUGE PRESSURE ( ) COOL DOWN	PLATE TEMPERATURE (F) Gun	PLATE TEMPERATURE (F)	PIPE ALIGNMENT ACCEPT/REJECT	ROLL BACK DIMENSION	PASS/ FAIL	QA ID
weld	3 Nov	DH	1224	100	20 min	450	424	accept	1/4	P	DLE
672/673	3 Nov	DH	1224	100	20 min	440	420	accept	1/4	P	DLE
673/674	3 Nov	DH	1224	100	20 min	438	407	accept	1/4	P	DLE
674/675	3 Nov	DH	1224	100	20 min	440	412	accept	1/4	P	DLE
675/676	3 Nov	DH	1224	100	20 min	440	405	accept	1/4	P	DLE
676/677	3 Nov	DH	1224	100	20 min	440	405	accept	1/4		

COPY TO:

GEOSYNTEC CONSULTANTS

FLUOR FERNALD, INC.

BUTT FUSION JOINING LOG

PROJECT: ON-SITE DISPOSAL FACILITY (OSDF)

LOCATION: FERNALD, OHIO PROJECT NO.: G01029 TASK NO.: 4.2

DESCRIPTION: EPLTS YEAR: 2000

CONTRACTOR: STAVER/RIECK

MATERIAL DESCRIPTION: FORCEMAIN: ☐ CONTAINMENT: ☐ CARRIER: ☑ OTHER: ☐

PIPE DIAMETER: 6" SDR: 11

JOINT NO.	DATE (day/mo)	OPER. ID	MACH. ID	GAUGE PRESSURE ( ) WELDING	GAUGE PRESSURE ( ) COOL DOWN	PLATE TEMPERATURE (F) GAGE	PLATE TEMPERATURE (F) GUN	PIPE ALIGNMENT ACCEPT/REJECT	ROLL BACK DIMENSION	PASS/FAIL	QA ID
Test	6 Nov	DH	1224	≈100		445	420	Accept	5/16"	P	TD
677/678				≈100		430	420	Accept	3/16"	P	TD
678/679				≈100		425	410	Accept	3/16"	P	TD
679/680				≈100		430	405	Accept	3/16"	P	TD
680/681				≈100		430	408	Accept	3/16"	P	TD
681/682				≈100		430	415	Accept	3/16"	P	TD
71/Flange				≈100		440	420	Accept	3/16"	P	TD
626/Flange				≈100		440	412	Accept	3/16"	P	TD

45°

COPY TO:

GEOSYNTEC CONSULTANTS

FLUOR FERNALD, INC.

BUTT FUSION JOINING LOG

PROJECT: ON-SITE DISPOSAL FACILITY (OSDF)

LOCATION: FERNALD, OHIO PROJECT NO.: G01029 TASK NO.: 4.2

DESCRIPTION: CPLTS YEAR: 2000

CONTRACTOR: STAVER/RICK

MATERIAL DESCRIPTION: FORCEMAIN: ☐ CONTAINMENT: ☐ CARRIER: ☑ OTHER: ☐

PIPE DIAMETER: 6 SDR: 11

JOINT NO.	DATE (day/mo)	OPER. ID	MACH. ID	GAUGE PRESSURE ( ) WELDING	GAUGE PRESSURE ( ) COOL DOWN	PLATE TEMPERATURE (F) Gauge	PLATE TEMPERATURE (F) Gun	PIPE ALIGNMENT ACCEPT/REJECT	ROLL BACK DIMENSION	PASS/FAIL	QA ID
Test	7 Nov	PT	1224	≈ 100		430	415	Accept	3/16"	P	TD
626/627				≈ 100		430	408	Accept	3/16"	P	TD
627/682				≈ 100		440	407	Accept	3/16"	P	TD
682/651				≈ 100		440	407	Accept	3/16"	P	TD
622/657				≈ 100		445	405	Accept	3/16"	P	TD
622/623				≈ 100		440	410	Accept	3/16"	P	TD
620				≈ 100		440	407	Accept	3/16"	P	TD

61

COPY TO:

GEOSYNTEC CONSULTANTS

FLUOR FERNALD, INC.

BUTT FUSION JOINING LOG

PROJECT: ON-SITE DISPOSAL FACILITY (OSDF)

LOCATION: FERNALD, OHIO PROJECT NO.: G01029 TASK NO.: 4.2

DESCRIPTION: Phase III YEAR: 2000

CONTRACTOR: Rieck / Staver

MATERIAL DESCRIPTION: FORCEMAIN: ☐ CONTAINMENT: ☐ CARRIER: ☒ OTHER: ☐

PIPE DIAMETER: 6 inch SDR:

JOINT NO.	DATE (day/mo)	OPER. ID	MACH. ID	GAUGE PRESSURE ( ) WELDING	GAUGE PRESSURE ( ) COOL DOWN	PLATE TEMPERATURE (F) Gauge	PLATE TEMPERATURE (F) Gun	PIPE ALIGNMENT ACCEPT/REJECT	ROLL BACK DIMENSION	PASS/ FAIL	QA ID
(1) Test	10 Nov.	D.H.	1224	100	20 min.	435	400	Accept	1/4	P	DLE
(2) 620/696	10 Nov.	D.H	1224	100	20 min.	435	414	Accept	1/4	P	DLE
(3) 696/695	10 Nov.	D.H.	1224	100	20 min.	435	415	Accept	1/4	P	DLE
(4) 695/694	10 Nov.	D.H	1224	100	20 min.	435	412	Accept	1/4	P	DLE
(5) 694/693	10 Nov.	D.H.	1224	100	20 min.	435	415	Accept	1/4	P	DLE
(6) 693/692	10 Nov	D.H.	1224	100	20 min.	430	414	Accept	1/4	P	DLE
(7) 98 Flange	10 Nov	D.H.	1224	100	20 min.	435	415	Accept	1/4	P	DLE
(8) 053/691	10 Nov	D.H.	1224	100	20 min.	430	408	Accept	1/4	P	DLE

Note, Bend Test Passed at 1250 hrs, Between Welds #5 and #6

COPY TO:

GEOSYNTEC CONSULTANTS

FLUOR FERNALD, INC.

BUTT FUSION JOINING LOG

PROJECT: ON-SITE DISPOSAL FACILITY (OSDF)

LOCATION: FERNALD, OHIO PROJECT NO.: GQ1029 TASK NO.: 4.2

DESCRIPTION: EPLTS YEAR: 2000

CONTRACTOR: STAVER/Rieck

MATERIAL DESCRIPTION: FORCEMAIN: ☐ CONTAINMENT: ☐ CARRIER: ☑ OTHER: ☐

PIPE DIAMETER: 6" SDR: 11

JOINT NO.	DATE (day/mo)	OPER. ID	MACH. ID	GAUGE PRESSURE ( ) WELDING	GAUGE PRESSURE ( ) COOL DOWN	PLATE TEMPERATURE (°F) Gauge	PLATE TEMPERATURE (°F) Gun	PIPE ALIGNMENT ACCEPT/REJECT	ROLL BACK DIMENSION	PASS/ FAIL	QA ID
Test	14 Nov	PT	1224	≈ 100		440	415	Accept	3/16"	P	TD
681 ~~682~~ TD 683						445	414	Accept	3/16"	P	TD
683/684						430	418	Accept	3/16"	P	TD
684/685						440	415	Accept	3/16"	P	TD
685/686						430	418	Accept	3/16"	P	TD
686/687						435	416	Accept	3/16"	P	TD
687/688						440	412	Accept	3/16"	P	TD
688/689						440	410	Accept	3/16"	P	TD
689/690						440	415	Accept	3/16"	P	TD

34°F

COPY TO:

GEOSYNTEC CONSULTANTS

FLUOR FERNALD, INC.

BUTT FUSION JOINING LOG

PROJECT: ON-SITE DISPOSAL FACILITY (OSDF)

LOCATION: FERNALD, OHIO PROJECT NO.: G01029 TASK NO.: 4.2

DESCRIPTION: EPLTS YEAR: 2000

CONTRACTOR: STAUER/RIECK

MATERIAL DESCRIPTION: FORCEMAIN: ☐ CONTAINMENT: ☐ CARRIER: ☑ OTHER: ☐

PIPE DIAMETER: 6 SDR: 11

JOINT NO.	DATE (day/mo)	OPER. ID	MACH. ID	GAUGE PRESSURE ( ) WELDING	GAUGE PRESSURE ( ) COOL DOWN	PLATE TEMPERATURE (°F) Gauge	PLATE TEMPERATURE (°F) Gun	PIPE ALIGNMENT ACCEPT/REJECT	ROLL BACK DIMENSION	PASS/FAIL	QA ID
TEST	15 NOV	DH	1224	≈ 100		440	412	Accept	3/16"	P	TD
697/698	↓	↓	↓	≈ 100		440	418	Accept	3/16"	P	TD
698/699				≈ 100		440	415	Accept	3/16"	P	TD
699/700				≈ 100		440	410	Accept	3/16"	P	TD
700/701				≈ 100		440	408	Accept	3/16"	P	TD
701/690				≈ 100		440	410	Accept	3/16"	P	TD

COPY TO:

GEOSYNTEC CONSULTANTS

FLUOR FERNALD, INC.

BUTT FUSION JOINING LOG

PROJECT: ON-SITE DISPOSAL FACILITY (OSDF)

LOCATION: FERNALD, OHIO PROJECT NO.: G01029 TASK NO.: 4.2

DESCRIPTION: EPLTS YEAR: ~~2000~~ to 2001

CONTRACTOR: STAUER / RIECK

MATERIAL DESCRIPTION: FORCEMAIN: ☐ CONTAINMENT: ☐ CARRIER: ☑ OTHER: ☐

PIPE DIAMETER: 6" SDR: 11

JOINT NO.	DATE (day/mo)	OPER. ID	MACH. ID	GAUGE PRESSURE ( ) WELDING	GAUGE PRESSURE ( ) COOL DOWN	PLATE TEMPERATURE (F) GUN	PLATE TEMPERATURE (F) GAGE	PIPE ALIGNMENT ACCEPT/REJECT	ROLL BACK DIMENSION	PASS/ FAIL	QA ID
~~Test~~ 693	03/JAN	PT	1224	≈100		415	440	Accept	1/4"	P	TD
670	1	1	1	≈100		410	440	Accept	1/4"	P	TD

Note: Pipe # 692 is part of Pipe Fab 8
" " 670 " " " " 7

COPY TO:

GEOSYNTEC CONSULTANTS

FLUOR DANIEL FERNALD

BUTT FUSION WELDING LOG

PROJECT: ON-SITE DISPOSAL FACILITY (OSDF)

LOCATION: FERNALD, OHIO PROJECT NO.: GQ0409 TASK NO.: 4.2

DESCRIPTION: CPITS YEAR: 2001

CONTRACTOR: Staver/Rieck

MATERIAL DESCRIPTION: FORCEMAIN: ☐ CONTAINMENT: ☐ CARRIER: ☑ OTHER: ☐

PIPE DIAMETER: 6" SDR: 11

JOINT NO.	DATE (day/mo)	OPER. ID	MACH. ID	GAUGE PRESSURE ( ) WELDING	GAUGE PRESSURE ( ) COOL DOWN	PLATE TEMPERATURE (°F) GAUGE	PLATE TEMPERATURE (°F) GAUGE	PIPE ALIGNMENT ACCEPT/REJECT	ROLL BACK DIMENSION	PASS/ FAIL	QA ID
Test	4 JAN	PT	1224	±100		420	440	Accept	3/16"	P	TD
621/609	1	1	1	1		412	440	Accept	3/16"	P	TD

NOTE: Pipe 621 is part of PR FAB #7
" 609 " " " " #9

COPY TO:

GEOSYNTEC CONSULTANTS

FLUOR FERNALD, INC.

BUTT FUSION JOINING LOG

PROJECT: ON-SITE DISPOSAL FACILITY (OSDF)

LOCATION: FERNALD, OHIO PROJECT NO.: G01029 TASK NO.: 4.2

DESCRIPTION: EPLTS YEAR: ~~2000~~ TO 2001

CONTRACTOR: STAUER/RIECK

MATERIAL DESCRIPTION: FORCEMAIN: ☐ CONTAINMENT: ☐ CARRIER: ☑ OTHER: ☐

PIPE DIAMETER: 6" SDR: 11

JOINT NO.	DATE (day/mo)	OPER. ID	MACH. ID	GAUGE PRESSURE ( ) WELDING	GAUGE PRESSURE ( ) COOL DOWN	PLATE TEMPERATURE (F) Gauge	PLATE TEMPERATURE (F) Gauge	PIPE ALIGNMENT ACCEPT/REJECT	ROLL BACK DIMENSION	PASS/ FAIL	QA ID
Test	9 JAN	PT	1224	≈ 100		415	445	Accept	1/4"	P	TD
900/Face	↓	↓	↓	≈ 100		425	440	Accept	1/4"	P	TD
900/901				≈ 100		415	440	Accept	1/4"	P	TD
901/~~902~~ 697				≈ 100		410	440	Accept	1/4"	P	TD

COPY TO:

GEOSYNTEC CONSULTANTS

FLUOR DANIEL FERNALD

BUTT FUSION WELDING LOG

PROJECT: ON-SITE DISPOSAL FACILITY (OSDF)

LOCATION: FERNALD, OHIO PROJECT NO.: GQ0409 TASK NO.: 4.2

DESCRIPTION: CPLTS YEAR: 2001

CONTRACTOR: STAUFF/Rinck

MATERIAL DESCRIPTION: FORCEMAIN: ☐ CONTAINMENT: ☐ CARRIER: ☑ OTHER: ☐

PIPE DIAMETER: 16 SDR: 11

JOINT NO.	DATE (day/mo)	OPER. ID	MACH. ID	GAUGE PRESSURE ( ) WELDING	GAUGE PRESSURE ( ) COOL DOWN	PLATE TEMPERATURE (F) Gw	PLATE TEMPERATURE (F) Gase	PIPE ALIGNMENT ACCEPT/REJECT	ROLL BACK DIMENSION	PASS/ FAIL	QA ID
Test 901/Hale	11 JAN	PT	1224	≈ 100		420	432	Accept	~~A~~ TD 3/16"	P	TD
						415	445	Accept	3/16"	P	TD

COPY TO:

GEOSYNTEC CONSULTANTS

FLUOR DANIEL FERNALD

BUTT FUSION WELDING LOG

PROJECT: ON-SITE DISPOSAL FACILITY (OSDF)

LOCATION: FERNALD, OHIO PROJECT NO.: GQ0409 TASK NO.: 4.1

DESCRIPTION: EPLTS YEAR: 2001

CONTRACTOR: STAVER / REICK

MATERIAL DESCRIPTION: FORCEMAIN: ☐ CONTAINMENT: ☐ CARRIER: ☒ OTHER: ☐

PIPE DIAMETER: SDR: 11

JOINT NO.	DATE (day/mo)	OPER. ID	MACH. ID	GAUGE PRESSURE (psi) WELDING	GAUGE PRESSURE (psi) COOL DOWN	PLATE TEMPERATURE (°F)	PIPE ALIGNMENT ACCEPT/REJECT	ROLL BACK DIMENSION	PASS/ FAIL	QA ID
626/BLIND FLANG	11 JAN	PT	1224	101		416	ACCEPT	1/4"	PASS	TBW

COPY TO:

GEOSYNTEC CONSULTANTS

FLUOR DANIEL FERNALD

BUTT FUSION WELDING LOG

PROJECT: ON-SITE DISPOSAL FACILITY (OSDF)

LOCATION: FERNALD, OHIO PROJECT NO.: G00409 (1970) TASK NO.: 4.2

DESCRIPTION: EPLTS YEAR: 2001

CONTRACTOR: STAVER/Rieck

MATERIAL DESCRIPTION: FORCEMAIN: ☐ CONTAINMENT: ☐ CARRIER: ☑ OTHER: ☐

PIPE DIAMETER: SDR:

JOINT NO.	DATE (day/mo)	OPER. ID	MACH. ID	GAUGE PRESSURE ( ) WELDING	GAUGE PRESSURE ( ) COOL DOWN	PLATE TEMPERATURE (°F)	PIPE ALIGNMENT ACCEPT/REJECT	ROLL BACK DIMENSION	PASS/ FAIL	QA ID
Test	4 April	DH	1224	2220		409 to 444	Accept	3/16	P	TD

COPY TO:

GEOSYNTEC CONSULTANTS

FLUOR DANIEL FERNALD

BUTT FUSION WELDING LOG

PROJECT: ON-SITE DISPOSAL FACILITY (OSDF)

LOCATION: FERNALD, OHIO PROJECT NO.: G00~~409~~ 134 TASK NO.: 4.2

DESCRIPTION: EPLTS YEAR: 2001

CONTRACTOR: STAVER / RICK

MATERIAL DESCRIPTION: FORCEMAIN: ☐ CONTAINMENT: ☐ CARRIER: ☑ OTHER: ☐

PIPE DIAMETER: 6" SDR: 11

JOINT NO.	DATE (day/mo)	OPER. ID	MACH. ID	GAUGE PRESSURE ( ) WELDING	GAUGE PRESSURE ( ) COOL DOWN	PLATE TEMPERATURE (°F)	PIPE ALIGNMENT ACCEPT/REJECT	ROLL BACK DIMENSION	PASS/ FAIL	QA ID
Test ~~Fusion~~ ~~Flange~~ → ~~Flange~~	12 April	PT	1224	≈ 100		407	Accept	1/4"	P	TD
						405	Accept	3/16"	P	TD
						407	Accept	1/4"	P	TD

COPY TO:

GEOSYNTEC CONSULTANTS

FLUOR DANIEL FERNALD

BUTT FUSION WELDING LOG

PROJECT: ON-SITE DISPOSAL FACILITY (OSDF)

LOCATION: FERNALD, OHIO PROJECT NO.: ~~GQ0409~~ 1342 TD TASK NO.: 4.2

DESCRIPTION: EPLTS YEAR: 01

CONTRACTOR: STAVER / Rieck

MATERIAL DESCRIPTION: FORCEMAIN: ☐ CONTAINMENT: ☐ CARRIER: ☑ OTHER: ☐

PIPE DIAMETER: 6" SDR: 11

JOINT NO.	DATE (day/mo)	OPER. ID	MACH. ID	GAUGE PRESSURE ( ) WELDING	GAUGE PRESSURE ( ) COOL DOWN	PLATE TEMPERATURE (°F) Low/High	PIPE ALIGNMENT ACCEPT/REJECT	ROLL BACK DIMENSION	PASS/ FAIL	QA ID
Test mH2Spd Flange	23/April	PT	1224	> 100		410/425	Accept	3/16"	P	TD
mHe Spd Flange						408/420	Accept	3/16"	P	TD
						406/420	Accept	3/16"	P	TD

COPY TO:

GEOSYNTEC CONSULTANTS

FLUOR DANIEL FERNALD

BUTT FUSION WELDING LOG

PROJECT: ON-SITE DISPOSAL FACILITY (OSDF)

LOCATION: FERNALD, OHIO PROJECT NO.: GQ~~0409~~ 1341 TASK NO.: 4.2

DESCRIPTION: EPLTS YEAR: 01

CONTRACTOR: STAUCE / Rock

MATERIAL DESCRIPTION: FORCEMAIN: ☐ CONTAINMENT: ☐ CARRIER: ☑ OTHER: ☐

PIPE DIAMETER: 6 SDR: 11

JOINT NO.	DATE (day/mo)	OPER. ID	MACH. ID	GAUGE PRESSURE ( ) WELDING	GAUGE PRESSURE ( ) COOL DOWN	PLATE TEMPERATURE (°F) Low	PLATE TEMPERATURE (°F) Gauge	PIPE ALIGNMENT ACCEPT/REJECT	ROLL BACK DIMENSION	PASS/FAIL	QA ID
Test	1 MAY	DH	1224	≈ 100		409	425	Accept	3/16"	P	TD

Note: This is A Test weld For The monitoring wells @, 1H 1-2+3, For The 45° Turn up. The Top of The Pipe is open To The Environment.

COPY TO:

GEOSYNTEC CONSULTANTS

FLUOR DANIEL FERNALD

BUTT FUSION WELDING LOG

PROJECT: ON-SITE DISPOSAL FACILITY (OSDF)

LOCATION: FERNALD, OHIO PROJECT NO.: ~~GO0405~~ 1341 TR TASK NO.: 4.2

DESCRIPTION: Epits YEAR: 01

CONTRACTOR: STAVER / Rieck

MATERIAL DESCRIPTION: FORCEMAIN: ☐ CONTAINMENT: ☑ CARRIER: ☐ OTHER: ☐

PIPE DIAMETER: SDR: 11

JOINT NO.	DATE (day/mo)	OPER. ID	MACH. ID	GAUGE PRESSURE ( ) WELDING	GAUGE PRESSURE ( ) COOL DOWN	PLATE TEMPERATURE (°F) Gun	PLATE TEMPERATURE (°F) Gage	PIPE ALIGNMENT ACCEPT/REJECT	ROLL BACK DIMENSION	PASS/FAIL	QA ID
Test	18 June	PT	1224	101		410	445	Accept	1/4"	P	TD
Tee 1 Flange				101		405	445	Accept	1/4"	P	TD
Tee 3 Flange				101		411	445	Accept	3/8"	P	TD
Tee 2 Flange				101		412	445	Accept	3/8"	P	TD
10" Flange				101		416	445	Accept	3/8"	P	TD
10" End Seal				101							

COPY TO:

GEOSYNTEC CONSULTANTS

FLUOR FERNALD, INC.

BUTT FUSION JOINING LOG

PROJECT: ON-SITE DISPOSAL FACILITY (OSDF)

LOCATION: FERNALD, OHIO PROJECT NO.: G01029 TASK NO.: 4.2

DESCRIPTION: Phase II YEAR: 2000

CONTRACTOR: STAVER

MATERIAL DESCRIPTION: FORCEMAIN: ☐ CONTAINMENT: ☑ CARRIER: ☐ OTHER: ☐

PIPE DIAMETER: 10" SDR: 11

JOINT NO.	DATE (day/mo)	OPER. ID	MACH. ID	GAUGE PRESSURE ( ) WELDING	GAUGE PRESSURE ( ) COOL DOWN	PLATE TEMPERATURE (F)	PIPE ALIGNMENT ACCEPT/REJECT	ROLL BACK DIMENSION	PASS/ FAIL	QA ID
Test 1	4 Aug 00	DH	1224	218		440	Accept	1/4"	P	TD
406/407				≈218		440	Accept	1/4"	P	TD
407/408				≈218		440	Accept	1/4"	P	TD
408/403				≈218		440	Accept	1/4"	P	TD
403/405				220 psi		440	Accept	1/4"	P	TD
405/404	4 Aug	DH	1224	[illegible]		437	Accept	1/4"	P	DLE
404/400	↓	↓	↓	218		439	Accept	3/8	P	DLE
400/402	4 Aug	DH	1224	218		440	Accept	3/8	P	[illegible]

COPY TO:

GEOSYNTEC CONSULTANTS

FLUOR FERNALD, INC.

BUTT FUSION JOINING LOG

PROJECT: ON-SITE DISPOSAL FACILITY (OSDF)

LOCATION: FERNALD, OHIO PROJECT NO.: G01029 TASK NO.: 4.2

DESCRIPTION: EPLTS YEAR: 2000

CONTRACTOR: STAVER

MATERIAL DESCRIPTION: FORCEMAIN: ☐ CONTAINMENT: ☑ CARRIER: ☐ OTHER: ☐

PIPE DIAMETER: 10" SDR: 11

JOINT NO.	DATE (day/mo)	OPER. ID	MACH. ID	GAUGE PRESSURE ( ) WELDING	GAUGE PRESSURE ( ) COOL DOWN	PLATE TEMPERATURE (F)	PIPE ALIGNMENT ACCEPT/REJECT	ROLL BACK DIMENSION	PASS/ FAIL	QA ID
~~401/402~~	~~8/16~~	~~DM~~	~~1224~~	~~220~~		~~440~~ 440	Accept ~~Accept~~	1/4"		CN
402/407				220		420	Accept	1/4"		CN
400/401				220		440	~~Accept~~	1/4"	P	TD
407/408A				220		430	Accept	1/4"		CN
TEST				220		440	Accept	1/4"		CN
408/Flange				220		434	Accept	1/4"		CN

COPY TO:

GEOSYNTEC CONSULTANTS

FLUOR FERNALD, INC.

BUTT FUSION JOINING LOG

PROJECT: ON-SITE DISPOSAL FACILITY (OSDF)

LOCATION: FERNALD, OHIO PROJECT NO.: G01029 TASK NO.: 4.2

DESCRIPTION: EPLTS YEAR: 2000

CONTRACTOR: STAUCH/Rieck

MATERIAL DESCRIPTION: FORCEMAIN: ☐ CONTAINMENT: ☑ CARRIER: ☐ OTHER: ☐

PIPE DIAMETER: 10" SDR: 11

JOINT NO.	DATE (day/mo)	OPER. ID	MACH. ID	GAUGE PRESSURE ( ) WELDING	GAUGE PRESSURE ( ) COOL DOWN	PLATE TEMPERATURE (F) GAGE	PLATE TEMPERATURE (F) GUN	PIPE ALIGNMENT ACCEPT/REJECT	ROLL BACK DIMENSION	PASS/FAIL	QA ID
Test 1	14 Aug	DH	1224	≈218		440	406	Accept	1/4"	P	TD
Test 2	14 Aug	P.T.	1224	≈220		440	405	Accept	1/4"	P	TD
409B/406 Page	14 Aug	P.T.	1224	≈220		440	410	Accept	1/4"	P	TD
409B/418	14 Aug	PT	1224	≈220		440	413	Accept	1/4"	P	TD
418/417	14 Aug	P.T.	1224	210		440	416	Accept	1/4"	P	CS

COPY TO:

GEOSYNTEC CONSULTANTS

FLUOR FERNALD, INC.

BUTT FUSION JOINING LOG

PROJECT: ON-SITE DISPOSAL FACILITY (OSDF)

LOCATION: FERNALD, OHIO PROJECT NO.: G01029. TASK NO.: 4.2

DESCRIPTION: E.P.L.T.S YEAR: 2000

CONTRACTOR: STAVER/RICK

MATERIAL DESCRIPTION: FORCEMAIN: ☐ CONTAINMENT: ☑ CARRIER: ☐ OTHER: ☐

PIPE DIAMETER: 10" SDR: 11

JOINT NO.	DATE (day/mo)	OPER. ID	MACH. ID	GAUGE PRESSURE ( ) WELDING	GAUGE PRESSURE ( ) COOL DOWN	PLATE TEMPERATURE (F) PLATE	PLATE TEMPERATURE (F) GUN	PIPE ALIGNMENT ACCEPT/REJECT	ROLL BACK DIMENSION	PASS/FAIL	QA ID
Test	15 Aug	DH	1224	≈ 220		440	420	Accept	1/4"	P	TD
416/417	↓	↓	↓	≈ 220		440	424	Accept	1/4"	P	TD
416 417/415				≈ 220		440	418	Accept	1/4"	P	TD
415/410				≈ 220		440	409	Accept	1/4"	P	TD
410/411				≈ 220		440	414	Accept	1/4"	P	TD
411/414				≈ 220		445	414	Accept	1/4"	P	TD
412/413				≈ 220		445	410	Accept	1/4"	P	TD
413/Plate				≈ 220		445	407	Accept	1/4"	P	TD

COPY TO:

GEOSYNTEC CONSULTANTS

FLUOR FERNALD, INC.

BUTT FUSION JOINING LOG

PROJECT: ON-SITE DISPOSAL FACILITY (OSDF)

LOCATION: FERNALD, OHIO PROJECT NO.: G01029 TASK NO.: 4.2

DESCRIPTION: EPLTS YEAR: 2000

CONTRACTOR: STAVER/RIECK

MATERIAL DESCRIPTION: FORCEMAIN: ☐ CONTAINMENT: ☑ CARRIER: ☐ OTHER: ☐

PIPE DIAMETER: 10" SDR: 11

JOINT NO.	DATE (day/mo)	OPER. ID	MACH. ID	GAUGE PRESSURE ( ) WELDING	GAUGE PRESSURE ( ) COOL DOWN	PLATE TEMPERATURE (°F) GAGE	PLATE TEMPERATURE (°F) GUN	PIPE ALIGNMENT ACCEPT/REJECT	ROLL BACK DIMENSION	PASS/ FAIL	QA ID
Test	16 Aug	PT	1224	≈220		445	416	Accept	1/4"	P	TD
412/414	1	1	1	≈220		445	411	Accept	1/4"	P	TD

COPY TO:

GEOSYNTEC CONSULTANTS

FLUOR FERNALD, INC.

BUTT FUSION JOINING LOG

PROJECT: ON-SITE DISPOSAL FACILITY (OSDF)

LOCATION: FERNALD, OHIO PROJECT NO.: G01029 TASK NO.: 4.2

DESCRIPTION: EPLTS YEAR: 2000

CONTRACTOR: STAVER/ RIECK

MATERIAL DESCRIPTION: FORCEMAIN: ☐ CONTAINMENT: ☑ CARRIER: ☐ OTHER: ☐

PIPE DIAMETER: 10 SDR: 11

JOINT NO.	DATE (day/mo)	OPER. ID	MACH. ID	GAUGE PRESSURE ( ) WELDING	GAUGE PRESSURE ( ) COOL DOWN	PLATE TEMPERATURE (°F) PLATE	PLATE TEMPERATURE (°F) GUN	PIPE ALIGNMENT ACCEPT/REJECT	ROLL BACK DIMENSION	PASS/ FAIL	QA ID
Test 406/SPUD 403/STUB	23 AUG 00	PT	1224	≈ 220		445	410	ACCEPT	1/4"	P	TD
	↓	↓	↓	≈ 600	≈ 580	445	414	ACCEPT	1/4"	P	TD
				≈ 220		440	414	ACCEPT	1/4"	P	TD

NOTE: WELD #2 (406/STUB 2) DRAG PRESSURE ON PIPE ≈ 380 PSI +
WELD PRESSURE @ 220 = 600

COPY TO:

GEOSYNTEC CONSULTANTS

FLUOR FERNALD, INC.

BUTT FUSION JOINING LOG

PROJECT: ON-SITE DISPOSAL FACILITY (OSDF)

LOCATION: FERNALD, OHIO PROJECT NO.: G01029. TASK NO.: 4.2

DESCRIPTION: EPLTS YEAR: 2000

CONTRACTOR: STAVER/RIECK

MATERIAL DESCRIPTION: FORCEMAIN: ☐ CONTAINMENT: ☑ CARRIER: ☐ OTHER: ☐

PIPE DIAMETER: 10 SDR: 11

JOINT NO.	DATE (day/mo)	OPER. ID	MACH. ID	GAUGE PRESSURE ( ) WELDING	GAUGE PRESSURE ( ) COOL DOWN	PLATE TEMPERATURE (F) GAGE	PLATE TEMPERATURE (F) GUN	PIPE ALIGNMENT ACCEPT/REJECT	ROLL BACK DIMENSION	PASS/FAIL	QA ID
Test	30 AUG	PT	1224	≈220		428	417	Accept	1/4"	P	TD
419/Blank	↓	↓	↓	≈220		445	413	Accept	1/4"	P	TD
419/421				≈220		445	412	Accept	1/4"	P	TD
421/420				≈220		440	413	Accept	1/4"	P	TD

COPY TO:

GEOSYNTEC CONSULTANTS

FLUOR FERNALD, INC.

BUTT FUSION JOINING LOG

PROJECT: ON-SITE DISPOSAL FACILITY (OSDF)

LOCATION: FERNALD, OHIO PROJECT NO.: G01029. TASK NO.: 4.2

DESCRIPTION: EPLTS YEAR: 2000

CONTRACTOR: STAUFFER/RIECK

MATERIAL DESCRIPTION: FORCEMAIN: ☐ CONTAINMENT: ☑ CARRIER: ☐ OTHER: ☐

PIPE DIAMETER: 10" SDR: 11

JOINT NO.	DATE (day/mo)	OPER. ID	MACH. ID	GAUGE PRESSURE ( ) WELDING	GAUGE PRESSURE ( ) COOL DOWN	PLATE TEMPERATURE (°F) 6400	PLATE TEMPERATURE (°F) GUN	PIPE ALIGNMENT ACCEPT/REJECT	ROLL BACK DIMENSION	PASS/FAIL	QA ID
TEST	31 AUG	DH	1224	≈220		425	413	Accept	1/4"	P	TD
420/422				≈220		440	412	Accept	1/4"	P	TD
422/423				≈220		440	415	Accept	1/4"	P	TD
423 ~~422~~/425				≈220		440	415	Accept	1/4"	P	TD
425/426				≈220		440	408	Accept	1/4"	P	TD
426/424				≈220		443	465	Accept	1/4"	P	TD
424/427				≈220		435	409	Accept	1/4"	P	TD
427/428A				≈220		445	412	Accept	1/4"	P	TD
428A/PONDE				≈220		445	415	Accept	1/4"	P	TD

COPY TO:

GEOSYNTEC CONSULTANTS

FLUOR FERNALD, INC.

BUTT FUSION JOINING LOG

PROJECT: ON-SITE DISPOSAL FACILITY (OSDF)

LOCATION: FERNALD, OHIO PROJECT NO.: G01029 TASK NO.: 4.2

DESCRIPTION: EPLTS YEAR: 2000

CONTRACTOR: STAUER RICK

MATERIAL DESCRIPTION: FORCEMAIN: ☐ CONTAINMENT: ☑ CARRIER: ☐ OTHER: ☐

PIPE DIAMETER: 10" SDR: 11

JOINT NO.	DATE (day/mo)	OPER. ID	MACH. ID	GAUGE PRESSURE ( ) WELDING	GAUGE PRESSURE ( ) COOL DOWN	PLATE TEMPERATURE GAGE (F)	PLATE TEMPERATURE GUN	PIPE ALIGNMENT ACCEPT/REJECT	ROLL BACK DIMENSION	PASS/ FAIL	QA ID
TEST	1 SEPT	DH	1224	2220		440	413	Accept	1/4"	P	TD
428/429	↓	↓	↓	↓		445	407	Accept	1/4"	P	TD
429/430						440	413	Accept	1/4	P	TD
430/431						440	415	Accept	1/4"	P	TD
431/432						440	412	Accept	1/4"	P	TD
432/433						440	404	Accept	1/4"	P	TD
433/434						440	413	Accept	1/4"	P	TD

COPY TO:

GEOSYNTEC CONSULTANTS

FLUOR FERNALD, INC.

BUTT FUSION JOINING LOG

PROJECT: ON-SITE DISPOSAL FACILITY (OSDF)

LOCATION: FERNALD, OHIO PROJECT NO.: G01029 TASK NO.: 4.2

DESCRIPTION: EPLTS YEAR: 2000

CONTRACTOR: STAUER/KIECK

MATERIAL DESCRIPTION: FORCEMAIN: ☐ CONTAINMENT: ☑ CARRIER: ☐ OTHER: ☐

PIPE DIAMETER: 10" SDR: 11

JOINT NO.	DATE (day/mo)	OPER. ID	MACH. ID	GAUGE PRESSURE ( ) WELDING	GAUGE PRESSURE ( ) COOL DOWN	PLATE TEMPERATURE Gage (F)	PLATE TEMPERATURE Gun	PIPE ALIGNMENT ACCEPT/REJECT	ROLL BACK DIMENSION	PASS/FAIL	QA ID
Test	5 Sept	DH	1224	≈ 220		425	410	Accept	1/4"	P	TD
434/436	↓	↓	↓	≈ 220		425	415	Accept	1/4"	P	TD
435/436				≈ 220		435	415	Accept	1/4"	P	TD
435/437				≈ 220		425	415	Accept	1/4"	P	TD
437/428B				≈ 220		425	415	Accept	1/4"	P	TD

COPY TO:

GEOSYNTEC CONSULTANTS

FLUOR FERNALD, INC.

BUTT FUSION JOINING LOG

PROJECT: ON-SITE DISPOSAL FACILITY (OSDF)

LOCATION: FERNALD, OHIO PROJECT NO.: G01029. TASK NO.: 4.2

DESCRIPTION: EPLTS YEAR: 2000

CONTRACTOR: STAVER/Rieck

MATERIAL DESCRIPTION: FORCEMAIN: ☐ CONTAINMENT: ☑ CARRIER: ☐ OTHER: ☐

PIPE DIAMETER: 10" SDR: 11

JOINT NO.	DATE (day/mo)	OPER. ID	MACH. ID	GAUGE PRESSURE ( ) WELDING	GAUGE PRESSURE ( ) COOL DOWN	PLATE TEMPERATURE (°F)		PIPE ALIGNMENT ACCEPT/REJECT	ROLL BACK DIMENSION	PASS/FAIL	QA ID
10" TOST 409B VH3 S.STAND 412 VH2 S.STAND	14 Sept	PT	1224	2220 590 PULL FUSE 2220 FUSE		435	408	Accept	1/4"	P	TD
	↓	↓	↓	2220		430	407	Accept	1/4"	P	TD
						425	405	Accept	1/4"	P	TD

COPY TO:

GEOSYNTEC CONSULTANTS

FLUOR DANIEL FERNALD

BUTT FUSION WELDING LOG

PROJECT: ON-SITE DISPOSAL FACILITY (OSDF)

LOCATION: FERNALD, OHIO PROJECT NO.: GQ0409 TASK NO.: 42

DESCRIPTION: EPLTS YEAR: 2000

CONTRACTOR: STARK/RICK

MATERIAL DESCRIPTION: FORCEMAIN: ☐ CONTAINMENT: ☑ CARRIER: ☐ OTHER: ☐

PIPE DIAMETER: 10" SDR: 11

JOINT NO.	DATE (day/mo)	OPER. ID	MACH. ID	GAUGE PRESSURE ( ) WELDING	GAUGE PRESSURE ( ) COOL DOWN	PLATE TEMPERATURE (°F) GAGE	PLATE TEMPERATURE (°F) GUN	PIPE ALIGNMENT ACCEPT/REJECT	ROLL BACK DIMENSION	PASS/ FAIL	QA ID
Test	18/Sept	DH	1224	≈220		440	415	Accept	1/4"	P	TD
439/Flange				≈220		420	408	Accept	1/4"	P	TD
439/440				≈220		420	405	Accept	1/4"	P	TD
440/438				≈220		440	410	Accept	1/4"	P	TD
438/441				≈220		425	410	Accept	1/4"	P	TD
441/442				≈220		425	405	Accept	1/4"	P	TD

COPY TO:

GEOSYNTEC CONSULTANTS

FLUOR DANIEL FERNALD

BUTT FUSION WELDING LOG

PROJECT: ON-SITE DISPOSAL FACILITY (OSDF)

LOCATION: FERNALD, OHIO PROJECT NO.: GQ0409 TASK NO.: 4.2

DESCRIPTION: EPLTS YEAR: 2000

CONTRACTOR: STAVER / RICK

MATERIAL DESCRIPTION: FORCEMAIN: ☐ CONTAINMENT: ☑ CARRIER: ☐ OTHER: ☐

PIPE DIAMETER: 10" SDR: 11

JOINT NO.	DATE (day/mo)	OPER. ID	MACH. ID	GAUGE PRESSURE ( ) WELDING	GAUGE PRESSURE ( ) COOL DOWN	PLATE TEMPERATURE (°F)		PIPE ALIGNMENT ACCEPT/REJECT	ROLL BACK DIMENSION	PASS/ FAIL	QA ID
TEST	19 Sept	PT	1224	≈220		425	406	Accept	1/4"	P	TD
442/443				≈220		410	405	Accept	1/4"	P	TD
443/444				≈220		445	411	Accept	1/4"	P	TD
444/448				≈220		430	405	Accept	1/4"	P	TD
448/449				≈220		420	410	Accept	1/4"	P	TD
449/445A				≈220		435	420	Accept	1/4"	P	TD
445A/A6				≈220		440	411	Accept			

COPY TO:

GEOSYNTEC CONSULTANTS

FLUOR FERNALD, INC.

BUTT FUSION JOINING LOG

PROJECT: ON-SITE DISPOSAL FACILITY (OSDF)

LOCATION: FERNALD, OHIO PROJECT NO.: G01029. TASK NO.: 4.2

DESCRIPTION: EPTS YEAR: 2000

CONTRACTOR: STAUER/RICCK

MATERIAL DESCRIPTION: FORCEMAIN: ☐ CONTAINMENT: ☑ CARRIER: ☐ OTHER: ☐

PIPE DIAMETER: 10 SDR: 11

JOINT NO.	DATE (day/mo)	OPER. ID	MACH. ID	GAUGE PRESSURE ( ) WELDING	GAUGE PRESSURE ( ) COOL DOWN	PLATE TEMPERATURE Gage (F)	PLATE TEMPERATURE Gun	PIPE ALIGNMENT ACCEPT/REJECT	ROLL BACK DIMENSION	PASS/ FAIL	QA ID
TST	29 Sept	PT	1224	≈ 220		440	407	Accept	1/4"	P	90
~~445A~~ ~~STUB OUT~~				≈ 220		425	407	Accept	1/4"	P	90
VH4 Stub-out											
@											

COPY TO:

GEOSYNTEC CONSULTANTS

FLUOR FERNALD, INC.

BUTT FUSION JOINING LOG

PROJECT: ON-SITE DISPOSAL FACILITY (OSDF)

LOCATION: FERNALD, OHIO PROJECT NO.: GQ1029. TASK NO.: 4.2

DESCRIPTION: EPLTS YEAR: 2000

CONTRACTOR: STAVER/RICK

MATERIAL DESCRIPTION: FORCEMAIN: ☐ CONTAINMENT: ☑ CARRIER: ☐ OTHER: ☐

PIPE DIAMETER: 10 SDR: 11

JOINT NO.	DATE (day/mo)	OPER. ID	MACH. ID	GAUGE PRESSURE ( ) WELDING	GAUGE PRESSURE ( ) COOL DOWN	PLATE TEMPERATURE (°F) GABE	PLATE TEMPERATURE (°F) GUY	PIPE ALIGNMENT ACCEPT/REJECT	ROLL BACK DIMENSION	PASS/ FAIL	QA ID
Test	2 oct	PT	1224	≈220		425	410	Accept	1/4"	P	TD
413C/ 8 SEE OUT DH3	↓	↓	↓	≈220		430	420	Accept	1/4"	P	TD
	Void	This	Line								
413C/ 439	2 oct	PT	1224	≈220		425	406	Accept			

COPY TO:

GEOSYNTEC CONSULTANTS

FLUOR FERNALD, INC.

BUTT FUSION JOINING LOG

PROJECT: ON-SITE DISPOSAL FACILITY (OSDF)

LOCATION: FERNALD, OHIO PROJECT NO.: G01029 TASK NO.: 4.2

DESCRIPTION: EPLTS YEAR: 2000

CONTRACTOR: STAUCR / RICCK

MATERIAL DESCRIPTION: FORCEMAIN: ☐ CONTAINMENT: ☑ CARRIER: ☐ OTHER: ☐

PIPE DIAMETER: 10" SDR: 11

JOINT NO.	DATE (day/mo)	OPER. ID	MACH. ID	GAUGE PRESSURE ( ) WELDING	GAUGE PRESSURE ( ) COOL DOWN	PLATE TEMPERATURE (F)		PIPE ALIGNMENT ACCEPT/REJECT	ROLL BACK DIMENSION	PASS/ FAIL	QA ID
TOT FLANGE 450	10 oct	PT	1224	≈ 220		450	420	Accept	≈ 5/16"	P	TO
450/451	↓	↓	↓	≈ 220		440	410	Accept	≈ 5/16"	P	TO
451/452	↓	↓	↓	≈ 220		440	420	Accept	≈ 1/4"	P	TO
				≈ 220		445	413	Accept	≈ 1/4	P	TO

NOTE: Cold Weather Procedures in use (ASTM) D2657 A1

COPY TO:

GeoSyntec Consultants

FLUOR FERNALD, INC.

BUTT FUSION JOINING LOG

PROJECT: ON-SITE DISPOSAL FACILITY (OSDF)

LOCATION: FERNALD, OHIO PROJECT NO.: GQ1029. TASK NO.: 4. 2

DESCRIPTION: EPLTS YEAR: 2000

CONTRACTOR: STAUER/Rieck

MATERIAL DESCRIPTION: FORCEMAIN: ☐ CONTAINMENT: ☑ CARRIER: ☐ OTHER: ☐

PIPE DIAMETER: 10" SOR: 11

JOINT NO.	DATE (day/mo)	OPER. ID	MACH. ID	GAUGE PRESSURE ( ) WELDING	GAUGE PRESSURE ( ) COOL DOWN	PLATE TEMPERATURE (F) Gage	PLATE TEMPERATURE (F) Gun	PIPE ALIGNMENT ACCEPT/REJECT	ROLL BACK DIMENSION	PASS/FAIL	QA ID
Test	11 oct	DH	1224	≈ 220		440	410	Accept	5/16"	P	TD
~~254/255~~ 452/453	↓	↓	↓	≈ 220		445	415	Accept	5/16	P	TD

Note: Cold weather procedures in use

COPY TO:

GEOSYNTEC CONSULTANTS

FLUOR FERNALD, INC.

BUTT FUSION JOINING LOG

PROJECT: ON-SITE DISPOSAL FACILITY (OSDF)

LOCATION: FERNALD, OHIO PROJECT NO.: G01029. TASK NO.: 4.2

DESCRIPTION: EPLTS YEAR: 2000

CONTRACTOR: STAVER/RICK

MATERIAL DESCRIPTION: FORCEMAIN: ☐ CONTAINMENT: ☑ CARRIER: ☐ OTHER: ☐

PIPE DIAMETER: 10 SDR: 11

JOINT NO.	DATE (day/mo)	OPER. ID	MACH. ID	GAUGE PRESSURE ( ) WELDING	GAUGE PRESSURE ( ) COOL DOWN	PLATE TEMPERATURE (°F) Gage	PLATE TEMPERATURE (°F) Gun	PIPE ALIGNMENT ACCEPT/REJECT	ROLL BACK DIMENSION	PASS/ FAIL	QA ID
Test	16 Oct	DH	1224	≈ 220		445	415	Accept	1/4"	P	TD
453/454				≈ 220		430	412	Accept	1/4"	P	TD
454/446				≈ 220		435	410	Accept	1/4"	P	TD
446/447				≈ 220		445	407	Accept	1/4"	P	TD
447/455				≈ 220		445	418	Accept	1/4"	P	TD
455/456				≈ 220		440	407	Accept	1/4"	P	TD
456/457				≈ 220		445	412	Accept	1/4"	P	TD

COPY TO:

GEOSYNTEC CONSULTANTS

FLUOR DANIEL FERNALD

BUTT FUSION WELDING LOG

PROJECT: ON-SITE DISPOSAL FACILITY (OSDF)

LOCATION: FERNALD, OHIO PROJECT NO.: G01029 TASK NO.: 4.2

DESCRIPTION: Phase III YEAR: 2000

CONTRACTOR: Staver / Bieck

MATERIAL DESCRIPTION: FORCEMAIN: ☐ CONTAINMENT: ☒ CARRIER: ☐ OTHER: ☐

PIPE DIAMETER: 10 inch SDR:

JOINT NO.	DATE (day/mo)	OPER. ID	MACH. ID	GAUGE PRESSURE ( ) WELDING	GAUGE PRESSURE ( ) COOL DOWN	PLATE TEMPERATURE (°F)	PIPE ALIGNMENT ACCEPT/REJECT	ROLL BACK DIMENSION	PASS/ FAIL	QA ID
(1) Test	18 Oct	PT	1224	218 / 80 Factory	30 min	420°	Accept	1/4	P	DLE
2 ~~453~~ TO 458	" "	PT	1224	218	"	417°	Accept	1/4	P	DLE
3 458 TO 459	18 Oct	PT	1224	218	"	411°	Accept	1/4	P	DLE
(4) 459 TO 460	" "	PT	1224	218	"	420°	Accept	1/4	P	DLE
(5) 460 TO 461	" "	PT	1224	218	"	414°	Accept	1/4	P	DLE
(6) 461 TO 462	" "	PT	1224	218	"	417	Accept	1/4	P	DLE
~~2 TO~~ 163	~~18 Oct~~	~~PT~~	~~1224~~	~~218~~	~~30 min~~	DLE Equipment Break Down				

COPY TO:

GEOSYNTEC CONSULTANTS

FLUOR DANIEL FERNALD

BUTT FUSION WELDING LOG

PROJECT: ON-SITE DISPOSAL FACILITY (OSDF)

LOCATION: FERNALD, OHIO PROJECT NO.: 641029 TASK NO.: 04.2

DESCRIPTION: PHASE II YEAR: 2000

CONTRACTOR: STAUER/RIECK

MATERIAL DESCRIPTION: FORCEMAIN: ☐ CONTAINMENT: ☒ CARRIER: ☐ OTHER: ☐

PIPE DIAMETER: 10" SDR-11 DRISCO 1000 SDR: 11

JOINT NO.	DATE (day/mo)	OPER. ID	MACH. ID	GAUGE PRESSURE ( ) WELDING	GAUGE PRESSURE ( ) COOL DOWN	PLATE TEMPERATURE (°F)	PIPE ALIGNMENT ACCEPT/REJECT	ROLL BACK DIMENSION	PASS/FAIL	QA ID
ALL TRIAL	19 OCT	DH	1224	220	22 MIN	412	ACCEPT	1/4"-5/16"	P	SQ
462/463	19 OCT	DH	1224	225	23 MIN	415	ACCEPT	1/4"-5/16"	P	SQ
463/464	19 OCT	DH	1224	225	23 MIN	410	ACCEPT	1/4"-5/16"	P	SQ
464/465	19 OCT	DH	1224	220	26 MIN	402	ACCEPT	1/4"-5/16"	P	SQ
465/466	19 OCT	DH	1224	220	27 MIN	405	ACCEPT	1/4"-5/16"	P	SQ
466/467	19 OCT	DH	1224	220	24 MIN	409	ACCEPT	1/4"-5/16"	P	SQ
18	19 OCT	DH	1224	215	29 MIN	413	ACCEPT	≈5/16"	P	SQ

COPY TO:

GEOSYNTEC CONSULTANTS

FLUOR DANIEL FERNALD

BUTT FUSION WELDING LOG

PROJECT: ON-SITE DISPOSAL FACILITY (OSDF)

LOCATION: FERNALD, OHIO PROJECT NO.: GQ1029 TASK NO.: 04.2

DESCRIPTION: PHASE-II (EPCTS) YEAR: 2000

CONTRACTOR: STAUER

MATERIAL DESCRIPTION: FORCEMAIN: ☐ CONTAINMENT: ☒ CARRIER: ☐ OTHER: ☐

PIPE DIAMETER: 10" SDR: 11 DRISCO-1000

JOINT NO.	DATE (day/mo)	OPER. ID	MACH. ID	GAUGE PRESSURE ( ) WELDING	GAUGE PRESSURE ( ) COOL DOWN	PLATE TEMPERATURE (°F)	PIPE ALIGNMENT ACCEPT/REJECT	ROLL BACK DIMENSION	PASS/ FAIL	QA ID
TRIAL WELD	20 OCT	PT	1224	220	21 MIN	416	ACCEPT	1/4" - 5/16"	P	SQ
469/FLANGE	20 OCT	PT	1224	220	19 MIN	410	ACCEPT	1/4" - 5/16"	P	SQ
468/469	20 OCT	PT	1224	220	23 MIN	420	ACCEPT	1/4" - 5/16"	P	SQ

COPY TO:

GEOSYNTEC CONSULTANTS

FLUOR FERNALD, INC.

BUTT FUSION JOINING LOG

PROJECT: ON-SITE DISPOSAL FACILITY (OSDF)

LOCATION: FERNALD, OHIO PROJECT NO.: G01029 TASK NO.: 4.2

DESCRIPTION: EPLTS YEAR: 2000

CONTRACTOR: STAVER / RICK

MATERIAL DESCRIPTION: FORCEMAIN: ☐ CONTAINMENT: ☑ CARRIER: ☐ OTHER: ☐

PIPE DIAMETER: 10" SDR: 11

JOINT NO.	DATE (day/mo)	OPER. ID	MACH. ID	GAUGE PRESSURE ( ) WELDING	GAUGE PRESSURE ( ) COOL DOWN	PLATE TEMPERATURE (°F) Gauge	PLATE TEMPERATURE (°F) Gun	PIPE ALIGNMENT ACCEPT/REJECT	ROLL BACK DIMENSION	PASS/ FAIL	QA ID
Test	23/ oct	PT	1224	≈220		440	418	Accept	1/4"	P	TD
~~429/VH5~~ ~~VH4~~ N. STROBE	VH5 ②			220		445	416	Accept	1/4"	P	TD
~~426/VH4~~ ~~S. STROBE~~				220		440	411	Accept	1/4	P	TD
428 B ~~Stub VH5~~ VH4	②										

COPY TO:

GEOSYNTEC CONSULTANTS

FLUOR FERNALD, INC.

BUTT FUSION JOINING LOG

PROJECT: ON-SITE DISPOSAL FACILITY (OSDF)

LOCATION: FERNALD, OHIO PROJECT NO.: G01029 TASK NO.: 4.2

DESCRIPTION: EPLTS YEAR: 2000

CONTRACTOR: STAUER/RICK

MATERIAL DESCRIPTION: FORCEMAIN: ☐ CONTAINMENT: ☑ CARRIER: ☐ OTHER: ☐

PIPE DIAMETER: 10" SDR: 11

JOINT NO.	DATE (day/mo)	OPER. ID	MACH. ID	GAUGE PRESSURE ( ) WELDING	GAUGE PRESSURE ( ) COOL DOWN	PLATE TEMPERATURE (F) Gauge	PLATE TEMPERATURE (F) Gun	PIPE ALIGNMENT ACCEPT/REJECT	ROLL BACK DIMENSION	PASS/FAIL	QA ID
D Test 446 To 454	25 Oct	DH	1224	=220	30 min	445	410	Accept	3/16	P	TD
2 446 To 454	25 Oct	DH	1224	=270	30 min	442	408	Accept	3/16	P	DLE
3 457 To 406 Flange	25 Oct	DH	1224	=270	30 min	442	409	Accept	3/16	P	DLE
4 Heat Test For Air Est											

Note #2 weld, is where a stone gouge 3 ft away from joints #446 To #454, Cut out of Bad Area and Re weld of #446 To #454. @ 1422

Heat of 1528

COPY TO:

GEOSYNTEC CONSULTANTS

FLUOR FERNALD, INC.

BUTT FUSION JOINING LOG

PROJECT: ON-SITE DISPOSAL FACILITY (OSDF)

LOCATION: FERNALD, OHIO PROJECT NO.: G01029 TASK NO.: 4.2

DESCRIPTION: EPLTS YEAR: 2000

CONTRACTOR: STAVER / RICK

MATERIAL DESCRIPTION: FORCEMAIN: ☐ CONTAINMENT: ☑ CARRIER: ☐ OTHER: ☐

PIPE DIAMETER: 10 SDR: 11

JOINT NO.	DATE (day/mo)	OPER. ID	MACH. ID	GAUGE PRESSURE ( ) WELDING	GAUGE PRESSURE ( ) COOL DOWN	PLATE TEMPERATURE (°F) Gage	PLATE TEMPERATURE (°F) Gun	PIPE ALIGNMENT ACCEPT/REJECT	ROLL BACK DIMENSION	PASS/ FAIL	QA ID
Test	26 Oct	PT	1224	≈ 220		445	412	Accept	1/4"	P	TD
470/flange				≈ 220		440	412	Accept	1/4"	P	TD
470/471				≈ 220		445	414	Accept	1/4"	P	TD
471/472				≈ 220		445	411	Accept	1/4"	P	TD

COPY TO:

GEOSYNTEC CONSULTANTS

FLUOR FERNALD, INC.

BUTT FUSION JOINING LOG

PROJECT: ON-SITE DISPOSAL FACILITY (OSDF)

LOCATION: FERNALD, OHIO PROJECT NO.: G01029 TASK NO.: 4.2

DESCRIPTION: Phase III YEAR: 2000

CONTRACTOR: Steven / Rick

MATERIAL DESCRIPTION: FORCEMAIN: ☐ CONTAINMENT: ☒ CARRIER: ☐ OTHER: ☐

PIPE DIAMETER: 10 SDR: 11

JOINT NO.	DATE (day/mo)	OPER. ID	MACH. ID	GAUGE PRESSURE ( ) WELDING	GAUGE PRESSURE ( ) COOL DOWN	PLATE TEMPERATURE (F) Gauge	PLATE TEMPERATURE (F) Gun	PIPE ALIGNMENT ACCEPT/REJECT	ROLL BACK DIMENSION	PASS/ FAIL	QA ID
5 (1) Test 472/473	27 Oct	DH	1224	220	30 min	448	408	accept	3/16	P	DLE
(2) 473/474	27 Oct	DH	1224	220	30 min	450	418	accept	3/16	P	DLE
(3) 474/475	27 Oct	DH	1224	220	30 min	435	412	accept	3/16	P	DLE
(4) 475/476	27 Oct	DH	1224	220	30 min	440	415	accept	3/16	P	DLE
(5) 476/477	|	|	|	≈ 220		445	412	Accept	1/4"	P	TD
	|	|	|	≈ 220		445	416	Accept	1/4"	P	TD

COPY TO:

GEOSYNTEC CONSULTANTS

FLUOR FERNALD, INC.

BUTT FUSION JOINING LOG

PROJECT: ON-SITE DISPOSAL FACILITY (OSDF)

LOCATION: FERNALD, OHIO PROJECT NO.: G01029 TASK NO.: 4.2

DESCRIPTION: EPLTS YEAR: 2000

CONTRACTOR: STAver / Rieck

MATERIAL DESCRIPTION: FORCEMAIN: ☐ CONTAINMENT: ☑ CARRIER: ☐ OTHER: ☐

PIPE DIAMETER: 10 SDR: 11

JOINT NO.	DATE (day/mo)	OPER. ID	MACH. ID	GAUGE PRESSURE ( ) WELDING	GAUGE PRESSURE ( ) COOL DOWN	PLATE TEMPERATURE (F) Gauge	PLATE TEMPERATURE (F) Gun	PIPE ALIGNMENT ACCEPT/REJECT	ROLL BACK DIMENSION	PASS/ FAIL	QA ID
Test	30 Oct	DH	1224	≈ 220		450	418	Accept.	1/4"	P	TD
477/478				≈ 220		445	414	Accept	3/16"	P	TD
478/479				≈ 220		445	422	Accept	3/16"	P	TD
479/480				≈ 220		435	410	Accept	3/16"	P	TD
480/481				≈ 220		445	415	Accept	3/16"	P	TD
481/482				≈ 220		445	412	Accept	3/16"	P	TD
482/End				≈ 220		445	418	Accept	3/16"	P	TD

COPY TO:

GEOSYNTEC CONSULTANTS

FLUOR FERNALD, INC.

BUTT FUSION JOINING LOG

PROJECT: ON-SITE DISPOSAL FACILITY (OSDF)

LOCATION: FERNALD, OHIO PROJECT NO.: G01029 TASK NO.: 4.2

DESCRIPTION: Phase III YEAR: 2000

CONTRACTOR: Steven / Rieck 31/Oct/2000

MATERIAL DESCRIPTION: FORCEMAIN: ☐ CONTAINMENT: ☒ CARRIER: ☐ OTHER: ☐

PIPE DIAMETER: 10 inch SDR:

JOINT NO.	DATE (day/mo)	OPER. ID	MACH. ID	GAUGE PRESSURE ( ) WELDING	GAUGE PRESSURE ( ) COOL DOWN	PLATE TEMPERATURE (F)		PIPE ALIGNMENT ACCEPT/REJECT	ROLL BACK DIMENSION	PASS/ FAIL	QA ID
1) Test weld To	31 Oct	P.T.	1224	220 PSI	30 min	440	418	Accept	3/16	P	DLE
VH6 To 445:A 25→	31 Oct	P.T	1224	220 PSI	30 min	440	416	accept	3/16	P	DLE
428 To VH5 3rd Shoot 2)	31 Oct	PT	1224	220 PSI	30 min	438	412	Accept	3/16	P	DLE

COPY TO:

GEOSYNTEC CONSULTANTS

FLUOR FERNALD, INC.

BUTT FUSION JOINING LOG

PROJECT: ON-SITE DISPOSAL FACILITY (OSDF)

LOCATION: FERNALD, OHIO PROJECT NO.: G01029. TASK NO.: 4.2

DESCRIPTION: EPLTS YEAR: 2000

CONTRACTOR: STAUER/RIECK

MATERIAL DESCRIPTION: FORCEMAIN: ☐ CONTAINMENT: ☑ CARRIER: ☐ OTHER: ☐

PIPE DIAMETER: 16 SDR: 11

JOINT NO.	DATE (day/mo)	OPER. ID	MACH. ID	GAUGE PRESSURE ( ) WELDING	GAUGE PRESSURE ( ) COOL DOWN	PLATE TEMPERATURE (°F) GAGE	PLATE TEMPERATURE (°F) GUN	PIPE ALIGNMENT ACCEPT/REJECT	ROLL BACK DIMENSION	PASS/ FAIL	QA ID
CAP	17 NOV	PT	1224	≈165		440	418	Accept	1/4"	P	TD

NOTE: PER MIKE GODBER NO TEST WELD REQUIRED. THIS END CAP IS ON A DEAD LINE. LINE SHOULD BE REMOVED WITHIN NEXT 2 YRS.

PIPE IS SDR 26. CAP IS SDR 11
PRESSURE FOR WELDING WAS SPLIT BETWEEN 114 FOR THE 26 AND 219 FOR THE 11 TO 165 PSI

COPY TO:

GEOSYNTEC CONSULTANTS

FLUOR FERNALD, INC.

BUTT FUSION JOINING LOG

PROJECT: ON-SITE DISPOSAL FACILITY (OSDF)

LOCATION: FERNALD, OHIO PROJECT NO.: G01029. TASK NO.: 4.2

DESCRIPTION: EPLTS YEAR: 2000

CONTRACTOR: STAVER/RICCIC

MATERIAL DESCRIPTION: FORCEMAIN: ☐ CONTAINMENT: ☑ CARRIER: ☐ OTHER: ☐

PIPE DIAMETER: 10 SDR: 11

JOINT NO.	DATE (day/mo)	OPER. ID	MACH. ID	GAUGE PRESSURE ( ) WELDING	GAUGE PRESSURE ( ) COOL DOWN	PLATE TEMPERATURE GAGE (F)	PLATE TEMPERATURE GUN	PIPE ALIGNMENT ACCEPT/REJECT	ROLL BACK DIMENSION	PASS/FAIL	QA ID
Test	26 Nov	DH	1224	≈220		440	414	Accept	3/16"	P	TD
450/469	1	1	1	≈220		445	418	Accept	1/4"	P	TD

NOTE: Pipe #450 is part of Pipe FAB 4
" #469 is part of Pipe FAB 5

COPY TO:

GEOSYNTEC CONSULTANTS

FLUOR FERNALD, INC.

BUTT FUSION JOINING LOG

PROJECT: ON-SITE DISPOSAL FACILITY (OSDF)

LOCATION: FERNALD, OHIO PROJECT NO.: G01029. TASK NO.: 4.2

DESCRIPTION: EPLTS YEAR: 2000

CONTRACTOR: STAUER / RIECK

MATERIAL DESCRIPTION: FORCEMAIN: ☐ CONTAINMENT: ☑ CARRIER: ☐ OTHER: ☐

PIPE DIAMETER: 10 SDR: 11

JOINT NO.	DATE (day/mo)	OPER. ID	MACH. ID	GAUGE PRESSURE ( ) WELDING	GAUGE PRESSURE ( ) COOL DOWN	PLATE TEMPERATURE (F) Gun	PLATE TEMPERATURE (F)	PIPE ALIGNMENT ACCEPT/REJECT	ROLL BACK DIMENSION	PASS/ FAIL	QA ID
Test 458	29 Nov	PT	1224	~ 220		445	408	Accept	1/4"	P	TO
CUH STUB	1	1	1	1		440	413	Accept	3/8"	P	TO

COPY TO:

GEOSYNTEC CONSULTANTS

FLUOR FERNALD, INC.

BUTT FUSION JOINING LOG

PROJECT: ON-SITE DISPOSAL FACILITY (OSDF)

LOCATION: FERNALD, OHIO PROJECT NO.: G01029 TASK NO.: 4.2

DESCRIPTION: EPLTS YEAR: 2000

CONTRACTOR: STAUCA/Rieck

MATERIAL DESCRIPTION: FORCEMAIN: ☐ CONTAINMENT: ☑ CARRIER: ☐ OTHER: ☐

PIPE DIAMETER: 10" SDR: 11

JOINT NO.	DATE (day/mo)	OPER. ID	MACH. ID	GAUGE PRESSURE ( ) WELDING	GAUGE PRESSURE ( ) COOL DOWN	PLATE TEMPERATURE (°F) Gun	PLATE TEMPERATURE (°F) Gage	PIPE ALIGNMENT ACCEPT/REJECT	ROLL BACK DIMENSION	PASS/ FAIL	QA ID
TEST	22/Dec	DH	1224	2 220		415	835	Accept	3/16"	P	TD

COPY TO:

GEOSYNTEC CONSULTANTS

FLUOR FERNALD, INC.

BUTT FUSION JOINING LOG

PROJECT: ON-SITE DISPOSAL FACILITY (OSDF)

LOCATION: FERNALD, OHIO PROJECT NO.: G01029 TASK NO.: 4.2

DESCRIPTION: EPLTS YEAR: 2000

CONTRACTOR: STAUCE/Rieck

MATERIAL DESCRIPTION: FORCEMAIN: ☐ CONTAINMENT: ☑ CARRIER: ☐ OTHER: ☐

PIPE DIAMETER: 10" SDR: 11

JOINT NO.	DATE (day/mo)	OPER. ID	MACH. ID	GAUGE PRESSURE ( ) WELDING	GAUGE PRESSURE ( ) COOL DOWN	PLATE TEMPERATURE Gun (F)	PLATE TEMPERATURE Gage	PIPE ALIGNMENT ACCEPT/REJECT	ROLL BACK DIMENSION	PASS/FAIL	QA ID
Test	27/Dec	DH	1224	≈220		405	425	Accept	3/16"	P	YD
~~440~~ 406	1	1	1	≈220		420	445	Accept	5/16"	P	YD
~~#4~~	—	—	—	—	—	—	—	—	—	—	

COPY TO:

GEOSYNTEC CONSULTANTS

FLUOR DANIEL FERNALD

BUTT FUSION WELDING LOG

PROJECT: ON-SITE DISPOSAL FACILITY (OSDF)

LOCATION: FERNALD, OHIO PROJECT NO.: GQ0409 TASK NO.: 42

DESCRIPTION: EPITS YEAR: 2001

CONTRACTOR: STAUCH/RIECK

MATERIAL DESCRIPTION: FORCEMAIN: ☐ CONTAINMENT: ☑ CARRIER: ☐ OTHER: ☐

PIPE DIAMETER: 10" SDR: 11

JOINT NO.	DATE (day/mo)	OPER. ID	MACH. ID	GAUGE PRESSURE ( ) WELDING	GAUGE PRESSURE ( ) COOL DOWN	PLATE TEMPERATURE (°F) GUN	PLATE TEMPERATURE (°F) GAGE	PIPE ALIGNMENT ACCEPT/REJECT	ROLL BACK DIMENSION	PASS/FAIL	QA ID
Test	02/01	DH	1224	2220		420	440	Accept	5/16"	P	TO
482/483	1	1	1	1		415	440	Accept	5/16	P	TO

COPY TO:

GEOSYNTEC CONSULTANTS

FLUOR DANIEL FERNALD

BUTT FUSION WELDING LOG

PROJECT: ON-SITE DISPOSAL FACILITY (OSDF)

LOCATION: FERNALD, OHIO PROJECT NO.: G00409 TASK NO.: 4.2

DESCRIPTION: Epits YEAR: 2001

CONTRACTOR: Stauer / Riello

MATERIAL DESCRIPTION: FORCEMAIN: ☐ CONTAINMENT: ☑ CARRIER: ☐ OTHER: ☐

PIPE DIAMETER: 10 SDR: 11

JOINT NO.	DATE (day/mo)	OPER. ID	MACH. ID	GAUGE PRESSURE ( ) WELDING	GAUGE PRESSURE ( ) COOL DOWN	PLATE TEMPERATURE (°F) Cup	PLATE TEMPERATURE (°F) Gage	PIPE ALIGNMENT ACCEPT/REJECT	ROLL BACK DIMENSION	PASS/ FAIL	QA ID
Test 450/50th Straight	10 JAN	D H	1224	≈220		415	425	Accept	5/16"	P	TD
		DH	1224	≈220		415	440	Accept	5/16	P	TD

COPY TO:

GEOSYNTEC CONSULTANTS

FLUOR DANIEL FERNALD

BUTT FUSION WELDING LOG

PROJECT: ON-SITE DISPOSAL FACILITY (OSDF)

LOCATION: FERNALD, OHIO PROJECT NO.: GQ0409 TASK NO.: 42

DESCRIPTION: EPITS YEAR: 01

CONTRACTOR: STAUER / RICK

MATERIAL DESCRIPTION: FORCEMAIN: ☐ CONTAINMENT: ☐ CARRIER: ☑ OTHER: ☐

PIPE DIAMETER: 6" SDR: 11

JOINT NO.	DATE (day/mo)	OPER. ID	MACH. ID	GAUGE PRESSURE ( ) WELDING	GAUGE PRESSURE ( ) COOL DOWN	PLATE TEMPERATURE (°F) Low	PLATE TEMPERATURE (°F) Gage	PIPE ALIGNMENT ACCEPT/REJECT	ROLL BACK DIMENSION	PASS/ FAIL	QA ID
Test Flange 6" Existing N. End	23 JAN	PT	R24	≈100		420	445	Accept	3/16"	P	TD
	↓	↓	↓	↓		420	440	Accept	3/16"	P	TD

COPY TO:

GeoSyntec Consultants

FLUOR DANIEL FERNALD

BUTT FUSION WELDING LOG

PROJECT: ON-SITE DISPOSAL FACILITY (OSDF)

LOCATION: FERNALD, OHIO PROJECT NO.: GQ0409 TASK NO.: 4.2

DESCRIPTION: EPLTS YEAR: 2001

CONTRACTOR: Staver / Rick

MATERIAL DESCRIPTION: FORCEMAIN: ☐ CONTAINMENT: ☐ CARRIER: ☑ OTHER: ☐

PIPE DIAMETER: 6 SDR: 11

JOINT NO.	DATE (day/mo)	OPER. ID	MACH. ID	GAUGE PRESSURE ( ) WELDING	GAUGE PRESSURE ( ) COOL DOWN	PLATE TEMPERATURE (F) Gun	PLATE TEMPERATURE (F) Gage	PIPE ALIGNMENT ACCEPT/REJECT	ROLL BACK DIMENSION	PASS/ FAIL	QA ID
Test Panel Exist-6 6" South	24 Jan	DH	1224	≈100		408	445	Accept	3/16"	P	TD
	↓	↓	↓	≈100		410	440	Accept	1/4"	P	TD

COPY TO:

GEOSYNTEC CONSULTANTS

FLUOR DANIEL FERNALD

BUTT FUSION WELDING LOG

PROJECT: ON-SITE DISPOSAL FACILITY (OSDF)

LOCATION: FERNALD, OHIO PROJECT NO.: ~~GQ0409~~ 1341 TASK NO.: 4.2

DESCRIPTION: EPLTS YEAR: 01

CONTRACTOR: STAVER / RIECK

MATERIAL DESCRIPTION: FORCEMAIN: ☐ CONTAINMENT: ☑ CARRIER: ☐ OTHER: ☐

PIPE DIAMETER: 6 SDR: 11

JOINT NO.	DATE (day/mo)	OPER. ID	MACH. ID	GAUGE PRESSURE ( ) WELDING	GAUGE PRESSURE ( ) COOL DOWN	PLATE TEMPERATURE Gage (°F)	PLATE TEMPERATURE Gun	PIPE ALIGNMENT ACCEPT/REJECT	ROLL BACK DIMENSION	PASS/ FAIL	QA ID
TEST	10 MAY	PT	1224	≈ 100		450	418	Accept	≈ 3/16"	P	TD
VH3 Spot End A				≈ 100		450	418	Accept	≈ 3/16"	P	TD
VH3 Spot End B				≈ 100		450	412	Accept	≈ 3/16	P	TO

COPY TO:

GEOSYNTEC CONSULTANTS

FLUOR DANIEL FERNALD

BUTT FUSION WELDING LOG

PROJECT: ON-SITE DISPOSAL FACILITY (OSDF)

LOCATION: FERNALD, OHIO PROJECT NO.: GQ0~~409~~ 1541 TASK NO.: 4.2

DESCRIPTION: EPLTS YEAR: 2001

CONTRACTOR: Stauer / Rieck

MATERIAL DESCRIPTION: FORCEMAIN: ☐ CONTAINMENT: ☑ CARRIER: ☑ OTHER: ☐

PIPE DIAMETER: 6" – 10" Simultaneous SDR: 11

JOINT NO.	DATE (day/mo)	OPER. ID	MACH. ID	GAUGE PRESSURE ( ) WELDING	GAUGE PRESSURE ( ) COOL DOWN	PLATE TEMPERATURE (°F)	PIPE ALIGNMENT ACCEPT/REJECT	ROLL BACK DIMENSION	PASS/ FAIL	QA ID
Test	5 Apr	~~1224~~ DA	1224	≈220		405 to 468	Accept	5/16"	P	TD
WH/1 to LDS				≈220		403 to 460	Accept	5/16"	P	TD

COPY TO:

GEOSYNTEC CONSULTANTS

FLUOR DANIEL FERNALD

BUTT FUSION WELDING LOG

PROJECT: ON-SITE DISPOSAL FACILITY (OSDF)

LOCATION: FERNALD, OHIO PROJECT NO.: GO~~2409~~ 1341 TASK NO.: 4.2

DESCRIPTION: EPCTS YEAR: 2001

CONTRACTOR: STAVOR/Rieck

MATERIAL DESCRIPTION: FORCEMAIN: ☐ CONTAINMENT: ☑ CARRIER: ☑ OTHER: ☐

PIPE DIAMETER: 6" + 10" SDR: 11

JOINT NO.	DATE (day/mo)	OPER. ID	MACH. ID	GAUGE PRESSURE ( ) WELDING	GAUGE PRESSURE ( ) COOL DOWN	PLATE TEMPERATURE (°F)	PIPE ALIGNMENT ACCEPT/REJECT	ROLL BACK DIMENSION	PASS/ FAIL	QA ID
Test Exist Line VH1/3	10 APRIL	PT	1224	≈ 220		407-464	Accept	5/16"	P	TD
						401 460	Accept	1/4"	P	TD

COPY TO:

GEOSYNTEC CONSULTANTS

FLUOR DANIEL FERNALD

BUTT FUSION WELDING LOG

PROJECT: ON-SITE DISPOSAL FACILITY (OSDF)

LOCATION: FERNALD, OHIO PROJECT NO.: ~~GQ0409~~ 1341 TASK NO.: 4.2

DESCRIPTION: EPITS YEAR: 2001

CONTRACTOR: STAver/Ricle

MATERIAL DESCRIPTION: FORCEMAIN: ☐ CONTAINMENT: ☑ CARRIER: ☑ OTHER: ☐

PIPE DIAMETER: 6" + 10" simultanious weld SDR: 11

JOINT NO.	DATE (day/mo)	OPER. ID	MACH. ID	GAUGE PRESSURE ( ) WELDING	GAUGE PRESSURE ( ) COOL DOWN	PLATE TEMPERATURE (°F)	PIPE ALIGNMENT ACCEPT/REJECT	ROLL BACK DIMENSION	PASS/ FAIL	QA ID
Test Entries UH1/2	13 April	PT	1224	2220	2 TD	402-455	Accept	3/16"	P	TD
	↓	↓	↓			402-452	Accept	1/4"	P	TD

COPY TO:

GEOSYNTEC CONSULTANTS

FLUOR DANIEL FERNALD

BUTT FUSION WELDING LOG

PROJECT: ON-SITE DISPOSAL FACILITY (OSDF)

LOCATION: FERNALD, OHIO PROJECT NO.: G00~~409~~ 1341 TD TASK NO.: 4.2

DESCRIPTION: EPLTS YEAR: 2001

CONTRACTOR: S Taven / Rieck

MATERIAL DESCRIPTION: FORCEMAIN: ☐ CONTAINMENT: ☑ CARRIER: ☑ OTHER: ☐

PIPE DIAMETER: 6" + 10" SDR: 11

JOINT NO.	DATE (day/mo)	OPER. ID	MACH. ID	GAUGE PRESSURE ( ) WELDING	GAUGE PRESSURE ( ) COOL DOWN	PLATE TEMPERATURE (°F)	PIPE ALIGNMENT ACCEPT/REJECT	ROLL BACK DIMENSION	PASS/ FAIL	QA ID
TEST STRIP OS BAR/S	19/April	PT	1224	≈ 220		405-465	Accept	1/4"	P	TD
				≈ 220		401-469	Accept	1/4"	P	TD

COPY TO:

GEOSYNTEC CONSULTANTS

FLUOR DANIEL FERNALD

BUTT FUSION WELDING LOG

PROJECT: ON-SITE DISPOSAL FACILITY (OSDF)

LOCATION: FERNALD, OHIO PROJECT NO.: G00409 1371 TASK NO.: 4.1

DESCRIPTION: EPUTS YEAR: 01

CONTRACTOR: STAVER / RICCIK

MATERIAL DESCRIPTION: FORCEMAIN: ☐ CONTAINMENT: ☑ CARRIER: ☑ OTHER: ☐

PIPE DIAMETER: 6" + 10 SDR: 11

JOINT NO.	DATE (day/mo)	OPER. ID	MACH. ID	GAUGE PRESSURE ( ) WELDING	GAUGE PRESSURE ( ) COOL DOWN	PLATE TEMPERATURE (F)	PIPE ALIGNMENT ACCEPT/REJECT	ROLL BACK DIMENSION	PASS/ FAIL	QA ID
Test st. Loop UH2/2	25 APR	PT	1224	≈220		414 to 464	Accept	≈ 1/4"	P	TD
				≈220		400 to 453	Accept	≈ 3/16"	P	TD

COPY TO:

GEOSYNTEC CONSULTANTS

FLUOR DANIEL FERNALD

BUTT FUSION WELDING LOG

PROJECT: ON-SITE DISPOSAL FACILITY (OSDF)

LOCATION: FERNALD, OHIO PROJECT NO.: GQ~~0409~~ 1341 TASK NO.: 4.2

DESCRIPTION: EPITS YEAR: 01

CONTRACTOR: Stover / Ricci

MATERIAL DESCRIPTION: FORCEMAIN: ☐ CONTAINMENT: ☑ CARRIER: ☑ OTHER: ☐

PIPE DIAMETER: 6" + 10" SDR: 11

JOINT NO.	DATE (day/mo)	OPER. ID	MACH. ID	GAUGE PRESSURE ( ) WELDING	GAUGE PRESSURE ( ) COOL DOWN	PLATE TEMPERATURE (°F)	PIPE ALIGNMENT ACCEPT/REJECT	ROLL BACK DIMENSION	PASS/ FAIL	QA ID
Test Strip Lis UH2-1	30APR	PT	1724	2220		400 To 470	Accept	≈ 1/4"	P	TD
				2220		416 TO 452	Accept	≈ 1/4"	P	TD

COPY TO:

GEOSYNTEC CONSULTANTS

FLUOR DANIEL FERNALD

BUTT FUSION WELDING LOG

PROJECT: ON-SITE DISPOSAL FACILITY (OSDF)

LOCATION: FERNALD, OHIO PROJECT NO.: GQ~~0409~~ 1391 TASK NO.: 4.2

DESCRIPTION: EPLTS YEAR: 01

CONTRACTOR: Strauss/Reick

MATERIAL DESCRIPTION: FORCEMAIN: ☐ CONTAINMENT: ☑ CARRIER: ☑ OTHER: ☐

PIPE DIAMETER: 6" + 10" SDR: 11

JOINT NO.	DATE (day/mo)	OPER. ID	MACH. ID	GAUGE PRESSURE ( ) WELDING	GAUGE PRESSURE ( ) COOL DOWN	PLATE TEMPERATURE (°F)	PIPE ALIGNMENT ACCEPT/REJECT	ROLL BACK DIMENSION	PASS/ FAIL	QA ID
Test 3-6 LDS 3 UH3/3	7 May	PT	1224	≈220		400 to 465	Accept	3/16"	P	TD
				≈220		415 to 463	Accept	1/4"	P	TD

COPY TO:

GEOSYNTEC CONSULTANTS

FLUOR DANIEL FERNALD

BUTT FUSION WELDING LOG

PROJECT: ON-SITE DISPOSAL FACILITY (OSDF)

LOCATION: FERNALD, OHIO PROJECT NO.: GQ~~0409~~ 1341 TASK NO.: 4.2

DESCRIPTION: EPLTS YEAR: 01

CONTRACTOR: Stauer/Rieck

MATERIAL DESCRIPTION: FORCEMAIN: ☐ CONTAINMENT: ☑ CARRIER: ☑ OTHER: ☐

PIPE DIAMETER: 6" + 10" SDR: 11

JOINT NO.	DATE (day/mo)	OPER. ID	MACH. ID	GAUGE PRESSURE ( ) WELDING	GAUGE PRESSURE ( ) COOL DOWN	PLATE TEMPERATURE (F)	PIPE ALIGNMENT ACCEPT/REJECT	ROLL BACK DIMENSION	PASS/ FAIL	QA ID
Test ST LCSR UH3 UH3/1	9 MAY	PT	1224	≈220		406 To 460	Accept	≈ 1/4"	P	TD
				≈220		407 To 433	Accept	≈ 1/4"	P	TD

COPY TO:

GEOSYNTEC CONSULTANTS

FLUOR DANIEL FERNALD

BUTT FUSION WELDING LOG

PROJECT: ON-SITE DISPOSAL FACILITY (OSDF)

LOCATION: FERNALD, OHIO PROJECT NO.: GQ~~0409~~ 1341 TR TASK NO.: 4.2

DESCRIPTION: Eplts YEAR: 01

CONTRACTOR: STAVER / Rieck

MATERIAL DESCRIPTION: FORCEMAIN: ☐ CONTAINMENT: ☑ CARRIER: ☑ OTHER: ☐

PIPE DIAMETER: 6" + 10" SDR: 11

JOINT NO.	DATE (day/mo)	OPER. ID	MACH. ID	GAUGE PRESSURE ( ) WELDING	GAUGE PRESSURE ( ) COOL DOWN	PLATE TEMPERATURE (°F)	PIPE ALIGNMENT ACCEPT/REJECT	ROLL BACK DIMENSION	PASS/FAIL	QA ID
Test ~~1 STING 6"~~ UH3/2	14 May	PT	1224	≈220		413 to 456	Accept	≈ 3/16"	P	TD
				≈220		400 to 456	Accept	≈ 1/4"	P	TD

COPY TO:

GEOSYNTEC CONSULTANTS

FLUOR DANIEL FERNALD

BUTT FUSION WELDING LOG

PROJECT: ON-SITE DISPOSAL FACILITY (OSDF)

LOCATION: FERNALD, OHIO PROJECT NO.: ~~C00409~~ 1341 TASK NO.: 4.2

DESCRIPTION: Epits YEAR: 01

CONTRACTOR: STAUER / RIEUK

MATERIAL DESCRIPTION: FORCEMAIN: ☐ CONTAINMENT: ☑ CARRIER: ☑ OTHER: ☐

PIPE DIAMETER: 6" + 10" SDR: 11

JOINT NO.	DATE (day/mo)	OPER. ID	MACH. ID	GAUGE PRESSURE ( ) WELDING	GAUGE PRESSURE ( ) COOL DOWN	PLATE TEMPERATURE (°F) Gun	PLATE TEMPERATURE (°F) Gage	PIPE ALIGNMENT ACCEPT/REJECT	ROLL BACK DIMENSION	PASS/FAIL	QA ID
Test Factory End Seal	19 June	DH	1224	≈ 220		408	450	Accept	≈ 1/4"	P	TD
Contingent Leachate Line @ UHG						412	445	Accept	≈ 5/16"	P	TD

COPY TO:

PNEUMATIC TESTING RESULTS

GEOSYNTEC CONSULTANTS

FLUOR FERNALD, INC.

PRESSURE TEST LOG

PROJECT: ON-SITE DISPOSAL FACILITY (OSDF)

LOCATION: FERNALD, OHIO PROJECT NO.: GQ1029 TASK NO.: 4.2

DESCRIPTION: EPLTS YEAR: 2000

CONTRACTOR: STAVER / RICK

TEST DESCRIPTION: HYDROSTATIC: ☐ PNEUMATIC (ATTACH WRITTEN AUTHORIZATION): ☑

PASS/FAIL CRITERION:

MATERIAL DESCRIPTION: FORCEMAIN: ☐ CONTAINMENT: ☑ CARRIER ☐ OTHER: ☐

TARGET PRESSURE: 10 PSI TEST DURATION: 15 min GAUGE NO.: 01 GAUGE LOCATION: VH1 End

TEST LOCATION: VH1 TO VH2

FOR CONTAINMENT PIPE TESTING, CARRIER PIPE PRESSURIZED FIRST: ☐ YES ☐ NO N/A

READING NO.	STABILIZATION TEST PERIOD	DATE (day/mo)	TIME	Pipe Temp F	READING	CHANGE IN READING	QA ID
1	@ 5 PSI	10 AUG 00	1357	120°	6 PSI	0	TD
2	↓	↓	1404	130°	6 PSI	0	TD
3	↓	↓	1411	132°	6 PSI	0	TD
4	Pressurizing to 10 PSI	↓	1413	—	—	—	TD
5	@ 10 PSI	↓	1429	125°	10	—	KS
6	↓	↓	1435	135°	10	0	KS
7	↓	↓	1444	144°	10	0	KS

* Preliminary Test *

PASS: ☒ No Visual Leaks / No Change in Gage Pressure in 15 Min

FAIL: ☐

VISUAL MONITORING: Brian S. Wood (FF) 10/8/00 — CONTRACTOR'S REPRESENTATIVE day/mo/yr; CQA REPRESENTATIVE 10 AUG 00 day/mo/yr

FINAL APPROVAL: 10/8/00 — CONTRACTOR'S REPRESENTATIVE day/mo/yr; SITE CQA MANAGER 10 Aug 2000 day/mo/yr

COPY TO: File

GEOSYNTEC CONSULTANTS

FLUOR FERNALD, INC.

PRESSURE TEST LOG

PROJECT: ON-SITE DISPOSAL FACILITY (OSDF)

LOCATION: FERNALD, OHIO PROJECT NO.: GQ1029 TASK NO.: 4.2

DESCRIPTION: EPLTS YEAR: 2000

CONTRACTOR: Stauer/Rieck

TEST DESCRIPTION: HYDROSTATIC: ☐ PNEUMATIC (ATTACH WRITTEN AUTHORIZATION): ☒

PASS/FAIL CRITERION:

MATERIAL DESCRIPTION: FORCEMAIN: ☒ CONTAINMENT: ☐ CARRIER ☒ OTHER: ☐

TARGET PRESSURE: 10 PSI TEST DURATION: 15 min. GAUGE NO.: 01 GAUGE LOCATION: VH-1 end

TEST LOCATION: VH-1 TO VH-2

FOR CONTAINMENT PIPE TESTING, CARRIER PIPE PRESSURIZED FIRST: ☐ YES ☐ NO

READING NO.	STABILIZATION TEST PERIOD	DATE (day/mo)	TIME	Temp. °F	READING	CHANGE IN READING	QA ID
1	@ 5 PSI	11 Aug	0750	79°	6 PSI	Ø	KS
2	↓	↓	0758	78°	6 PSI	Ø	KS
3	↓	↓	0804	79°	6 PSI	Ø	KS
4	Pressurize to 10 PSI	↓	0805	85°	—	—	KS
5	@ 10 PSI	↓	0811	91°	10 PSI	Ø	KS
6	↓	↓	0817	95°	10 PSI	Ø	KS
7	↓	↓	0823	99°	10 PSI	Ø	KS
8	↓	↓	0826	101°	10 PSI	Ø	KS

PASS: ☒ No visual leaks / No change in guage pressure

FAIL: ☐

VISUAL MONITORING: [signature] 11/08/00 — CONTRACTOR'S REPRESENTATIVE (day/mo/yr) [signature] 11 Aug 00 — CQA REPRESENTATIVE (day/mo/yr)

FINAL APPROVAL: [signature] 11/01/01 — CONTRACTOR'S REPRESENTATIVE (day/mo/yr) [signature] 11 Aug 2000 — SITE CQA MANAGER (day/mo/yr)

COPY TO: File

GEOSYNTEC CONSULTANTS

FLUOR FERNALD, INC.

PRESSURE TEST LOG

PROJECT: ON-SITE DISPOSAL FACILITY (OSDF)

LOCATION: FERNALD, OHIO PROJECT NO.: GQ1029 TASK NO.: 4.2

DESCRIPTION: EPLTS YEAR: 2000

CONTRACTOR: Stauer / Rieck

TEST DESCRIPTION: HYDROSTATIC: ☐ PNEUMATIC (ATTACH WRITTEN AUTHORIZATION): ☒

PASS/FAIL CRITERION:

MATERIAL DESCRIPTION: FORCEMAIN: ☒ CONTAINMENT: ☐ CARRIER ☒ OTHER: ☐

TARGET PRESSURE: 10 PSI TEST DURATION: 15 min. GAUGE NO.: 01 GAUGE LOCATION: VH1 end

TEST LOCATION: VH-1 TO VH-2

FOR CONTAINMENT PIPE TESTING, CARRIER PIPE PRESSURIZED FIRST: ☐ YES ☐ NO

READING NO.	STABILIZATION TEST PERIOD	DATE (day/mo)	TIME	Temp °F	READING (PSI)	CHANGE IN READING	QA ID
1	@ 5 PSI	11 Aug	1335	135	6	Ø	KS
2	↓	↓	1340	127	6	Ø	KS
3	↓	↓	1347	115	6	Ø	KS
4	Pressurizing to 10 PSI	↓	1350	—	—	—	KS
5	@ 10 PSI	↓	1356	124	10	Ø	KS
6	↓	↓	1405	133	10	Ø	KS
8	↓	↓	1410	122	10	Ø	KS

PASS: ☒ No visual leaks / No change in guage pressure

FAIL: ☐

VISUAL MONITORING: [signature] 11/08/00 — CONTRACTOR'S REPRESENTATIVE, day/mo/yr; [signature] 11 Aug 2000 — CQA REPRESENTATIVE, day/mo/yr

FINAL APPROVAL: [signature] 16/01/01 — CONTRACTOR'S REPRESENTATIVE, day/mo/yr; [signature] 11 Aug 2000 — SITE CQA MANAGER, day/mo/yr

COPY TO: File

GEOSYNTEC CONSULTANTS

FLUOR FERNALD, INC.

PRESSURE TEST LOG

PROJECT: ON-SITE DISPOSAL FACILITY (OSDF)

LOCATION: FERNALD, OHIO PROJECT NO.: GQ1029 TASK NO.: 4.2

DESCRIPTION: C.P.L.T.S. YEAR: 2000

CONTRACTOR: STAVER/Rieck

TEST DESCRIPTION: HYDROSTATIC: ☐ PNEUMATIC (ATTACH WRITTEN AUTHORIZATION): ☐

PASS/FAIL CRITERION: HOLD ½ Pressure 15 min HOLD Full Pressure, 10PSI, 15 min @ Joints SOAPO

MATERIAL DESCRIPTION: FORCEMAIN: ☐ CONTAINMENT: ☑ CARRIER ☐ OTHER: ☐

TARGET PRESSURE: 10 PSI TEST DURATION: 15 min GAUGE NO.: 01 GAUGE LOCATION: VH2 END

TEST LOCATION: VH2 TO VH3 TO

FOR CONTAINMENT PIPE TESTING, CARRIER PIPE PRESSURIZED FIRST: ☐ YES ☐ NO N/A

READING NO.	STABILIZATION TEST PERIOD	DATE (day/mo)	TIME	READING	CHANGE IN READING	QA ID
1	START	16 AUG 2000	1000	0	N/A	TD
2	½ Pressure Test	↓	1030	6	—	TD
3	END ½ Press. Test		1045	6.5	.5	TD
—	Filling to 10PSI		1045	6.5	—	TD
4	Full Pressure		1056	10	—	TD
5	END of Test		1112	10	0	TD

PASS: ☐

FAIL: ☐

VISUAL MONITORING: R Wood 16/Aug/00 — CONTRACTOR'S REPRESENTATIVE day/mo/yr; Tony Dick 16 AUG 00 — CQA REPRESENTATIVE day/mo/yr

FINAL APPROVAL: R Wood 16/01/01 — CONTRACTOR'S REPRESENTATIVE day/mo/yr; Calvin Sutton 16 Aug 2000 — SITE CQA-MANAGER day/mo/yr

COPY TO:

GEOSYNTEC CONSULTANTS

FLUOR FERNALD, INC.

PRESSURE TEST LOG

PROJECT: ON-SITE DISPOSAL FACILITY (OSDF)

LOCATION: FERNALD, OHIO PROJECT NO.: GQ1029 TASK NO.: 4.2

DESCRIPTION: E.P.L.T.S YEAR: 2000

CONTRACTOR: STAUER/ RICK

TEST DESCRIPTION: HYDROSTATIC: ☐ PNEUMATIC (ATTACH WRITTEN AUTHORIZATION): ☑

PASS/FAIL CRITERION: No change in GAGE - No BUBBLES @ JOINTS

MATERIAL DESCRIPTION: FORCEMAIN: ☐ CONTAINMENT: ☐ CARRIER ☑ OTHER: ☐

TARGET PRESSURE: 10PSI TEST DURATION: 15 min GAUGE NO.: 01 GAUGE LOCATION:

TEST LOCATION: South half UH2 TO UH3

FOR CONTAINMENT PIPE TESTING, CARRIER PIPE PRESSURIZED FIRST: ☐ YES ☐ NO N/A

READING NO.	STABILIZATION TEST PERIOD	DATE (day/mo)	TIME	READING	CHANGE IN READING	QA ID
1	PRESSURIZE TO 6 PSI	17 AUG 00	0939	0	—	TO
2			0942	6	—	TO
3	PRESSURIZE TO 10 PSI		0957	6	0	TO
4			0959	10	—	TO
5	END TEST		1015	10	0	TO

PASS: ☐

FAIL: ☐

VISUAL MONITORING: [signature] 17/Aug/00 [signature] 17 AUG 00

CONTRACTOR'S REPRESENTATIVE day/mo/yr CQA REPRESENTATIVE day/mo/yr

FINAL APPROVAL: [signature] 16/01/01 [signature] 17 Aug 00

CONTRACTOR'S REPRESENTATIVE day/mo/yr SITE CQA MANAGER day/mo/yr

COPY TO:

GEOSYNTEC CONSULTANTS | FLUOR FERNALD, INC.

PRESSURE TEST LOG

PROJECT: ON-SITE DISPOSAL FACILITY (OSDF)

LOCATION: FERNALD, OHIO PROJECT NO.: GQ1029 TASK NO.: 4.2

DESCRIPTION: EPLTS YEAR: 2000

CONTRACTOR: STAUER/RIECK

TEST DESCRIPTION: HYDROSTATIC: ☐ PNEUMATIC (ATTACH WRITTEN AUTHORIZATION): ☑

PASS/FAIL CRITERION: No Movement of Gage / No Bubbles on Joints

MATERIAL DESCRIPTION: FORCEMAIN: ☐ CONTAINMENT: ☐ CARRIER ☑ OTHER: ☐

TARGET PRESSURE: 10 PSI TEST DURATION: 15 min GAUGE NO.: 91 GAUGE LOCATION: ~~VH2~~ VH3 END

TEST LOCATION: ~~VH1~~ VH2 North half TO ~~VH2~~ VH3

FOR CONTAINMENT PIPE TESTING, CARRIER PIPE PRESSURIZED FIRST: ☐ YES ☐ NO N/A

READING NO.	STABILIZATION TEST PERIOD	DATE (day/mo)	TIME	READING	CHANGE IN READING	QA ID
1	PRESSURIZE TO 6 PSI	18 AUG 00	0746	—	—	TD
2	@ 6 PSI		0751	6	0	TD
3	PRESSURIZE TO 10 PSI		0806	—	—	TD
4	@ 10 PSI		812	10	4	TD
5	END OF TEST		0827	10	0	TD

PASS: ☑

FAIL: ☐

VISUAL MONITORING: [signature] 8/18/00 — CONTRACTOR'S REPRESENTATIVE day/mo/yr; [signature] 18 AUG 00 — CQA REPRESENTATIVE day/mo/yr

FINAL APPROVAL: [signature] 18/01/01 — CONTRACTOR'S REPRESENTATIVE day/mo/yr; [signature] 8/18/2000 — SITE CQA MANAGER day/mo/yr; [signature] for 18 Aug 2000

COPY TO:

GEOSYNTEC CONSULTANTS

FLUOR FERNALD, INC.

PRESSURE TEST LOG

PROJECT: ON-SITE DISPOSAL FACILITY (OSDF)

LOCATION: FERNALD, OHIO PROJECT NO.: GQ1029 TASK NO.: 4.2

DESCRIPTION: E.P.L.T.S YEAR: 2000

CONTRACTOR: STAUER / RIEEK

TEST DESCRIPTION: HYDROSTATIC: ☐ PNEUMATIC (ATTACH WRITTEN AUTHORIZATION): ☑

PASS/FAIL CRITERION: NO DROP IN GAGE PRESSURE - NO VISIBLE LEAKS

MATERIAL DESCRIPTION: FORCEMAIN: ☐ CONTAINMENT: ☑ CARRIER - ☑ OTHER: ☐

TARGET PRESSURE: 10 PSI TEST DURATION: 15 min GAUGE NO.: 0.1 GAUGE LOCATION: PIPE 426/FLANGE END

TEST LOCATION: PRODUCTION RUN - LOCATION NOT YET DETERMINED AS YET

FOR CONTAINMENT PIPE TESTING, CARRIER PIPE PRESSURIZED FIRST: ☐ YES ☐ NO N/A

READING NO.	STABILIZATION TEST PERIOD	DATE (day/mo)	TIME	READING	CHANGE IN READING	QA ID
1	PRESSURIZATION	1 SEPT	0719	0	—	TD
2	STABILIZATION	↓	0742	6	6	TD
3	PRESSURIZATION		0758	6	0	TD
4	START TEST		0825	10	4	TD
5	END TEST		0843	10	0	TD

PASS: ☐

FAIL: ☐

VISUAL MONITORING: [signature] 16/01/01 — CONTRACTOR'S REPRESENTATIVE, day/mo/yr

[signature] 01 SEPT 00 — CQA REPRESENTATIVE, day/mo/yr

FINAL APPROVAL: [signature] 16/01/01 — CONTRACTOR'S REPRESENTATIVE, day/mo/yr

[signature] 1 Sept 2000 — SITE CQA MANAGER, day/mo/yr

COPY TO:

GEOSYNTEC CONSULTANTS

FLUOR FERNALD, INC.

PRESSURE TEST LOG

PROJECT: ON-SITE DISPOSAL FACILITY (OSDF)

LOCATION: FERNALD, OHIO PROJECT NO.: GQ1029 TASK NO.: 4.2

DESCRIPTION: EPLTS YEAR: 2000

CONTRACTOR: STAKER / RICK

TEST DESCRIPTION: HYDROSTATIC: ☐ PNEUMATIC (ATTACH WRITTEN AUTHORIZATION): ☑

PASS/FAIL CRITERION: No DROP ON GAGE - NO LEAKS VISIBLE ON JOINTS

MATERIAL DESCRIPTION: FORCEMAIN: ☐ CONTAINMENT: ☑ CARRIER ☐ OTHER: ☐

TARGET PRESSURE: 10PSI TEST DURATION: 15min GAUGE NO.: 01 GAUGE LOCATION:

TEST LOCATION: TO

FOR CONTAINMENT PIPE TESTING, CARRIER PIPE PRESSURIZED FIRST: ☐ YES ☐ NO N/A

READING NO.	STABILIZATION TEST PERIOD	DATE (day/mo)	TIME	READING	CHANGE IN READING	QA ID
1	PRESSURIZATION	5 SEPT	1012	0	—	TD
2	STABILIZATION	↓	1032	6	6	TD
3	PRESSURIZATION		1048	6	0	TD
4	TEST		1108	10	4	TD
5	END TEST		1103	10	0	TD

PASS: ☐

FAIL: ☐

VISUAL MONITORING: [signature] 16/01/01 — CONTRACTOR'S REPRESENTATIVE, day/mo/yr

[signature] 5/SEPT/00 — CQA REPRESENTATIVE, day/mo/yr

FINAL APPROVAL: [signature] 16/01/01 — CONTRACTOR'S REPRESENTATIVE, day/mo/yr

[signature] 6 Sept 2000 — SITE CQA MANAGER, day/mo/yr

COPY TO:

GEOSYNTEC CONSULTANTS

FLUOR FERNALD, INC.

PRESSURE TEST LOG

PROJECT: ON-SITE DISPOSAL FACILITY (OSDF)

LOCATION: FERNALD, OHIO PROJECT NO.: GQ1029 TASK NO.: 4.2

DESCRIPTION: CPCTS YEAR: 2000

CONTRACTOR: STAVER/ RIECK

TEST DESCRIPTION: HYDROSTATIC: ☐ PNEUMATIC (ATTACH WRITTEN AUTHORIZATION): ☑

PASS/FAIL CRITERION: No DROP on GAGE - No VISIBLE LEAK

MATERIAL DESCRIPTION: FORCEMAIN: ☐ CONTAINMENT: ☐ CARRIER ☑ OTHER: ☐

TARGET PRESSURE: 10 TEST DURATION: 15 min GAUGE NO.: GAUGE LOCATION:

TEST LOCATION: 1ST 200' of 400' Line MADE ON 5 & 6 Sept

FOR CONTAINMENT PIPE TESTING, CARRIER PIPE PRESSURIZED FIRST: ☐ YES ☐ NO

READING NO.	STABILIZATION TEST PERIOD	DATE (day/mo)	TIME	READING	CHANGE IN READING	QA ID
1	PRESSURIZE	6 Sept.	1015	0	—	TD
2	STABLIZE	↓	1018	6	6	TD
3	PRESSURIZE		1032	6	0	TD
4	TEST		1035	10	4	TD
5	END TEST		1050	10	0	TD

PASS: ☐

FAIL: ☐

VISUAL MONITORING: [signature] 16/01/01 — CONTRACTOR'S REPRESENTATIVE day/mo/yr; [signature] 6 Sept 00 — CQA REPRESENTATIVE day/mo/yr

FINAL APPROVAL: [signature] 16/01/01 — CONTRACTOR'S REPRESENTATIVE day/mo/yr; [signature] 6 Sept 2000 — SITE CQA MANAGER day/mo/yr

COPY TO:

GEOSYNTEC CONSULTANTS

FLUOR FERNALD, INC.

PRESSURE TEST LOG

PROJECT: ON-SITE DISPOSAL FACILITY (OSDF)

LOCATION: FERNALD, OHIO PROJECT NO.: GQ1029 TASK NO.: 4.2

DESCRIPTION: EPLTS YEAR: 2000

CONTRACTOR: Stauer/Rieck

TEST DESCRIPTION: HYDROSTATIC: ☐ ~~#4~~ TO 9/400 PNEUMATIC (ATTACH WRITTEN AUTHORIZATION): ☑

PASS/FAIL CRITERION: No Drop in Pressure on Gage - No Visible Leaks

MATERIAL DESCRIPTION: FORCEMAIN: ☐ CONTAINMENT: ☐ CARRIER ☑ OTHER: ☐

TARGET PRESSURE: 10 TEST DURATION: 15 min GAUGE NO.: 01 GAUGE LOCATION:

TEST LOCATION: 2nd 200' of 400' MADE ON 6 Sept ~~10~~

FOR CONTAINMENT PIPE TESTING, CARRIER PIPE PRESSURIZED FIRST: ☐ YES ☐ NO N/A

READING NO.	STABILIZATION TEST PERIOD	DATE (day/mo)	TIME	READING	CHANGE IN READING	QA ID
1	Pressurize	~~7~~ ~~TO 9/7/00~~ Sept	0718	0	—	TO
2	Stabilize		0721	6	6	TO
3	Pressurize		0736	6	0	TO
4	Test		0742	10	4	TO
5	End Test		0757	10	0	

PASS: ☐

FAIL: ☐

VISUAL MONITORING: [signature] 7/9/00 [signature] 7 Sept 00

CONTRACTOR'S REPRESENTATIVE day/mo/yr CQA REPRESENTATIVE day/mo/yr

FINAL APPROVAL: [signature] 6/01/01 [signature] 7 Sept 2000

CONTRACTOR'S REPRESENTATIVE day/mo/yr SITE CQA MANAGER day/mo/yr

COPY TO:

GEOSYNTEC CONSULTANTS

FLUOR FERNALD, INC.

PRESSURE TEST LOG

PROJECT: ON-SITE DISPOSAL FACILITY (OSDF)

LOCATION: FERNALD, OHIO PROJECT NO.: GQ1029 TASK NO.: 4.2

DESCRIPTION: EPLTS YEAR: 2000

CONTRACTOR: Staver / Rieck

TEST DESCRIPTION: HYDROSTATIC: ☐ PNEUMATIC (ATTACH WRITTEN AUTHORIZATION): ☑

PASS/FAIL CRITERION: No Drop in Gage Pressure - No visible leaks

MATERIAL DESCRIPTION: FORCEMAIN: ☐ CONTAINMENT: ☐ CARRIER ☑ OTHER: ☐

TARGET PRESSURE: TEST DURATION: 15min GAUGE NO.: 01 GAUGE LOCATION:

TEST LOCATION: 1st 200' of 400' of Pre FAB #2 TO

FOR CONTAINMENT PIPE TESTING, CARRIER PIPE PRESSURIZED FIRST: ☐ YES ☐ NO N/A

READING NO.	STABILIZATION TEST PERIOD	DATE (day/mo)	TIME	READING	CHANGE IN READING	QA ID
1	Pressurize	7 Sept	1304	0	6	TD
2	Stabilize		1307	6		TD
3	Pressurize		1322	5.75	-.25	TD
4	Test		1326	Test Stopped Due To		
5	End Test	Leaking	Pressure Relief Valve. Valve Replaced			
1	Pressurize	7 Sept	1330	0	6	TD
2	Stabilize	↓	1335	6	0	TD
3	Pressurize		1350	6	4	TD
4	Test		1353	10	10	TD
5	Test End		1408	10	10	TP

PASS: ☐

FAIL: ☐

VISUAL MONITORING: [signature] 7/9/00 — CONTRACTOR'S REPRESENTATIVE, day/mo/yr [signature] 7 Sept 00 — CQA REPRESENTATIVE, day/mo/yr

FINAL APPROVAL: [signature] 16/01/01 — CONTRACTOR'S REPRESENTATIVE, day/mo/yr [signature] 7 Sept 2000 — SITE CQA MANAGER, day/mo/yr

COPY TO:

©GEOSYNTEC CONSULTANTS FILE NO. F-001

GEOSYNTEC CONSULTANTS

FLUOR FERNALD, INC.

PRESSURE TEST LOG

PROJECT: ON-SITE DISPOSAL FACILITY (OSDF)

LOCATION: FERNALD, OHIO PROJECT NO.: GQ1029 TASK NO.: 4.2

DESCRIPTION: EPLTS YEAR: 2000

CONTRACTOR: STAUER / RICCK

TEST DESCRIPTION: HYDROSTATIC: ☐ PNEUMATIC (ATTACH WRITTEN AUTHORIZATION): ☑

PASS/FAIL CRITERION: No DROP in GAGE PRESSURE - No Visible LEAKS

MATERIAL DESCRIPTION: FORCEMAIN: ☐ CONTAINMENT: ☐ CARRIER ☑ OTHER: ☐

TARGET PRESSURE: 10 PSI TEST DURATION: 15 min GAUGE NO.: 01 GAUGE LOCATION:

TEST LOCATION: PRE FAB # 2 200' TO 400' TO

FOR CONTAINMENT PIPE TESTING, CARRIER PIPE PRESSURIZED FIRST: ☐ YES ☐ NO N/A

READING NO.	STABILIZATION TEST PERIOD	DATE (day/mo)	TIME	READING	CHANGE IN READING	QA ID
1	PRESSURIZE	8 Sept	1256	0	6 ~~+0~~ TD 9/8	TD
2	STABLIZE	↓	1305	TD 9/8 +06	0	TD
3	PRESSURIZE		1320	10	4	TD
4	TEST		1327	10	0	TD
5	END TEST		1342	10	0	TD

PASS: ☐

FAIL: ☐

VISUAL MONITORING: R Wood 8/9/00 — CONTRACTOR'S REPRESENTATIVE day/mo/yr; [signature] 8 Sept 00 — CQA REPRESENTATIVE day/mo/yr

FINAL APPROVAL: R Wood 16/01/01 — CONTRACTOR'S REPRESENTATIVE day/mo/yr; [signature] 8 Sept 2000 — SITE CQA MANAGER day/mo/yr

COPY TO:

GEOSYNTEC CONSULTANTS

FLUOR FERNALD, INC.

PRESSURE TEST LOG

PROJECT: ON-SITE DISPOSAL FACILITY (OSDF)

LOCATION: FERNALD, OHIO PROJECT NO.: GQ1029 TASK NO.: 4.2

DESCRIPTION: EPLTS YEAR: 2000

CONTRACTOR: STAVER / Riedl

TEST DESCRIPTION: HYDROSTATIC: ☐ PNEUMATIC (ATTACH WRITTEN AUTHORIZATION): ☑

PASS/FAIL CRITERION: No Drop in Pressure on Gage - No Visible Leakage

MATERIAL DESCRIPTION: FORCEMAIN: ☐ CONTAINMENT: ☐ CARRIER ☑ OTHER: ☐

TARGET PRESSURE: 10 TEST DURATION: 15 min GAUGE NO.: 01 GAUGE LOCATION:

TEST LOCATION: ReTest Pipe 636 TO 684 (Joint Cut out For Test)

FOR CONTAINMENT PIPE TESTING, CARRIER PIPE PRESSURIZED FIRST: ☐ YES ☐ NO N/A

READING NO.	STABILIZATION TEST PERIOD	DATE (day/mo)	TIME	READING	CHANGE IN READING	QA ID
1	Pressurize	13 Sept	1017	0	~~6~~ TD 9/13/00	TD
2	Stabilize	↓	1022	6	6 ~~4~~ TD 9/13/00	TD
3	Pressurize		1037	6	0	TD
4	Test		1043	10	4	TD
5	End Test		1058	10	0	TD

PASS: ☐

FAIL: ☐

VISUAL MONITORING: [signature] 16/01/01 — CONTRACTOR'S REPRESENTATIVE day/mo/yr; [signature] 13 Sept 00 — CQA REPRESENTATIVE day/mo/yr

FINAL APPROVAL: [signature] 16/01/01 — CONTRACTOR'S REPRESENTATIVE day/mo/yr; [signature] 13 Sept 00 — SITE CQA MANAGER day/mo/yr

COPY TO:

GEOSYNTEC CONSULTANTS

FLUOR DANIEL FERNALD

PRESSURE TEST LOG

PROJECT: ON-SITE DISPOSAL FACILITY (OSDF)

LOCATION: FERNALD, OHIO PROJECT NO.: GQ0409 TASK NO.: 4.2

DESCRIPTION: EPLTS YEAR: 2000

CONTRACTOR: STAUER/RIECK

TEST DESCRIPTION: HYDROSTATIC: ☐ PNEUMATIC (ATTACH WRITTEN AUTHORIZATION): ☑

PASS/FAIL CRITERION: NO DROP in GAGE PRESSURE, NO VISIBLE LEAKS

MATERIAL DESCRIPTION: FORCEMAIN: ☐ CONTAINMENT: ☑ CARRIER ☐ OTHER: ☐

TARGET PRESSURE: 10 PSI TEST DURATION: 15 min GAUGE NO.: 01 GAUGE LOCATION:

TEST LOCATION: PREFAB #3 ENTIRE LENGTH

FOR CONTAINMENT PIPE TESTING, CARRIER PIPE PRESSURIZED FIRST: ☐ YES ☐ NO N/A

READING NO.	STABILIZATION TEST PERIOD	DATE (day/mo)	TIME	READING	CHANGE IN READING	QA ID
1	PRESSURIZE	21/Sept	0815	0	6	TD
2	STABLIZE		0840	6	0	TD
3	PRESSURIZE		0855	6	4	TD
4	TEST		0945	10	0	TD
5	END TEST		1000	10	—	

PASS: ☐

FAIL: ☐

VISUAL MONITORING: R. Wood 16/01/01 — CONTRACTOR'S REPRESENTATIVE day/mo/yr; Doug Dixon 20 Sept 00 — CQA REPRESENTATIVE day/mo/yr

FINAL APPROVAL: R. Wood 16/01/01 — CONTRACTOR'S REPRESENTATIVE day/mo/yr; Collin P. Clayton 20 Sept 2000 — CQA REPRESENTATIVE day/mo/yr

COPY TO:

GEOSYNTEC CONSULTANTS

FLUOR DANIEL FERNALD

PRESSURE TEST LOG

PROJECT: ON-SITE DISPOSAL FACILITY (OSDF)

LOCATION: FERNALD, OHIO PROJECT NO.: GQ0409 TASK NO.: 4.2

DESCRIPTION: YEAR: 2000

CONTRACTOR:

TEST DESCRIPTION: HYDROSTATIC: ☐ PNEUMATIC (ATTACH WRITTEN AUTHORIZATION): ☑

PASS/FAIL CRITERION: No Drop in Gage Pressure, No Visible Leaks

MATERIAL DESCRIPTION: FORCEMAIN: ☐ CONTAINMENT: ☐ CARRIER ☑ OTHER: ☐

TARGET PRESSURE: 10 PSI TEST DURATION: 15 min GAUGE NO.: 01 GAUGE LOCATION:

TEST LOCATION: 1ST 200' of 6" PREFAB #3 TO

FOR CONTAINMENT PIPE TESTING, CARRIER PIPE PRESSURIZED FIRST: ☐ YES ☐ NO N/A

READING NO.	STABILIZATION TEST PERIOD	DATE (day/mo)	TIME	READING	CHANGE IN READING	QA ID
1	Pressurization	21 Sept	1021	0	6	RD
2	Stabilization	↓	1029	6	0	RD
3	Pressurize		1044	6	4	RD
4	Test		1053	10	0	RD
5	End Test		1108	10	—	RD

PASS: ☐

FAIL: ☐

VISUAL MONITORING: R. Wood 16/01/01 — CONTRACTOR'S REPRESENTATIVE day/mo/yr; [signature] 21 Sept 00 — CQA REPRESENTATIVE day/mo/yr

FINAL APPROVAL: R. Wood 16/01/01 — CONTRACTOR'S REPRESENTATIVE day/mo/yr; Collin P. Ritter 21 Sept 2000 — CQA REPRESENTATIVE day/mo/yr

COPY TO:

GEOSYNTEC CONSULTANTS

FLUOR DANIEL FERNALD

PRESSURE TEST LOG

PROJECT: ON-SITE DISPOSAL FACILITY (OSDF)

LOCATION: FERNALD, OHIO PROJECT NO.: GQ0409 TASK NO.: 4.2

DESCRIPTION: EPLTS YEAR: 2000

CONTRACTOR: STAVER/RICCIS

TEST DESCRIPTION: HYDROSTATIC: ☐ PNEUMATIC (ATTACH WRITTEN AUTHORIZATION): ☑

PASS/FAIL CRITERION: NO DROP IN GAGE PRESSURE, NO VISIBLE LEAKS

MATERIAL DESCRIPTION: FORCEMAIN: ☐ CONTAINMENT: ☐ CARRIER ☑ OTHER: ☐

TARGET PRESSURE: 10PSI TEST DURATION: 15 min GAUGE NO.: 01 GAUGE LOCATION:

TEST LOCATION: PREFAB #3 400' Length TO

FOR CONTAINMENT PIPE TESTING, CARRIER PIPE PRESSURIZED FIRST: ☐ YES ☐ NO N/A

READING NO.	STABILIZATION TEST PERIOD	DATE (day/mo)	TIME	READING	CHANGE IN READING	QA ID
1	Pressurize	22 Sept	0929	0	6	TD
2	Stablize		0940	6	0	TD
3	Pressurize		0955	6	4	TD
4	Test		1014	10	0	TD
5	End Test		1029	10	—	TD

PASS: ☐

FAIL: ☐

VISUAL MONITORING: [signature] 16/01/01 CONTRACTOR'S REPRESENTATIVE day/mo/yr [signature] 22 Sept 00 QA REPRESENTATIVE day/mo/yr

FINAL APPROVAL: [signature] 16/01/01 CONTRACTOR'S REPRESENTATIVE day/mo/yr [signature] 22 Sept 2000 QA REPRESENTATIVE day/mo/yr

COPY TO:

GEOSYNTEC CONSULTANTS

FLUOR DANIEL FERNALD

PRESSURE TEST LOG

PROJECT: ON-SITE DISPOSAL FACILITY (OSDF)

LOCATION: FERNALD, OHIO PROJECT NO.: GQ0409 TASK NO.: 42

DESCRIPTION: Phase III YEAR: 2000

CONTRACTOR: Steuer / Ricke

TEST DESCRIPTION: HYDROSTATIC: ☐ PNEUMATIC (ATTACH WRITTEN AUTHORIZATION): ☒

PASS/FAIL CRITERION: No Drop in pressure, No visable leaks

MATERIAL DESCRIPTION: FORCEMAIN: ☐ CONTAINMENT: ☒ CARRIER ☐ OTHER: ☐

TARGET PRESSURE: TEST DURATION: GAUGE NO.: #1 Cal. Date 9 Aug 2000 GAUGE LOCATION:

TEST LOCATION: VH6 TO CVH, 480 ft Long

FOR CONTAINMENT PIPE TESTING, CARRIER PIPE PRESSURIZED FIRST: ☒ YES ☐ NO

READING NO.	STABILIZATION TEST PERIOD	DATE (day/mo)	TIME	READING	CHANGE IN READING	QA ID
(1) Start		20 Oct.	1325	6 PSI	0	DLE
(2)	Pump up	" "	1340	10 PSI	0	DLE
>		" "	1405	10 PSI	0	DLE
(4)		" "	1420 hrs	10 PSI	0	DLE

PASS: ☒

FAIL: ☐

VISUAL MONITORING: [signature] 16/01/01 — CONTRACTOR'S REPRESENTATIVE day/mo/yr; [signature] 20 Oct/00 — CQA REPRESENTATIVE day/mo/yr

FINAL APPROVAL: [signature] 16/01/01 — CONTRACTOR'S REPRESENTATIVE day/mo/yr; [signature] 23 Oct 2000 — CQA REPRESENTATIVE day/mo/yr

COPY TO:

GEOSYNTEC CONSULTANTS

FLUOR DANIEL FERNALD

PRESSURE TEST LOG

PROJECT: ON-SITE DISPOSAL FACILITY (OSDF)

LOCATION: FERNALD, OHIO PROJECT NO.: ~~GQ0409~~ GQ1029 DAE TASK NO.: 4.2

DESCRIPTION: Phase III YEAR: 2000

CONTRACTOR: Ricks / Stauer

TEST DESCRIPTION: HYDROSTATIC: ☐ PNEUMATIC (ATTACH WRITTEN AUTHORIZATION): ☒

PASS/FAIL CRITERION: 6 PSI for 15 min, 10 PSI for 15 min, (Soap) Hold for 15 min (AL. Date 9 Aug 2000)

MATERIAL DESCRIPTION: FORCEMAIN: ☐ CONTAINMENT: ☒ CARRIER ☐ OTHER: ☐

TARGET PRESSURE: TEST DURATION: GAUGE NO.: #1 GAUGE LOCATION: Test Pipe

TEST LOCATION: 400 ft Section of Pipe, VH6 TO The Control House Section

FOR CONTAINMENT PIPE TESTING, CARRIER PIPE PRESSURIZED FIRST: N/A ☐ YES ☐ NO

READING NO.	STABILIZATION TEST PERIOD	DATE (day/mo)	TIME	READING	CHANGE IN READING	QA ID
Start up	of Air Pressure,	8 Nov ~~0800 hrs~~	~ 0800 hrs	<Pump up>	N/A	DLE
1	15 min	8 Nov.	0807	6 PSI	No change	DLE
2	15 min	8 Nov.	0822	10 PSI	4 PSI ↑	DLE
3	15 min	8 Nov.	0837	10 PSI	no change	DLE
4	15 min	8 Nov.	0852	10 PSI	no change	DLE

PASS: ☒

FAIL: ☐

VISUAL MONITORING: [signature] 16/01/01 CONTRACTOR'S REPRESENTATIVE day/mo/yr — [signature] 8/Nov/2000 CQA REPRESENTATIVE day/mo/yr

FINAL APPROVAL: [signature] 16/01/01 CONTRACTOR'S REPRESENTATIVE day/mo/yr — [signature] 8/Nov/2000 CQA REPRESENTATIVE day/mo/yr

COPY TO:

GEOSYNTEC CONSULTANTS

FLUOR DANIEL FERNALD

PRESSURE TEST LOG

PROJECT: ON-SITE DISPOSAL FACILITY (OSDF)

LOCATION: FERNALD, OHIO PROJECT NO.: ~~GQ0409~~ GQ1029 PHE TASK NO.: 42

DESCRIPTION: Phase III YEAR: 2000

CONTRACTOR: Rieck / Stauer

TEST DESCRIPTION: HYDROSTATIC: ☐ PNEUMATIC (ATTACH WRITTEN AUTHORIZATION): ☒

PASS/FAIL CRITERION: 6 PSI for 15 min, 10 PSI for 15 min (Soap), Hold for 15 min

MATERIAL DESCRIPTION: FORCEMAIN: ☐ CONTAINMENT: ☐ CARRIER ☑ OTHER: ☒

TARGET PRESSURE: TEST DURATION: GAUGE NO.: #1 GAUGE LOCATION: Calibrate 9/Aug/2000

TEST LOCATION: 520 ft of Pipe Section VI to to Control House

FOR CONTAINMENT PIPE TESTING, CARRIER PIPE PRESSURIZED FIRST: N/A ☐ YES ☐ NO

READING NO.	STABILIZATION TEST PERIOD	DATE (day/mo)	TIME	READING	CHANGE IN READING	QA ID
Start up of Air pressure,		8 Nov.	0950	Pump up	N/A	DLE
(1) Start of test	15 min	8 Nov.	1002	6. PSI	—	DLE
	15 min	8 Nov.	1017	6 PSI	0	DLE
(3)	Pump up 23 min	8. Nov.	1040	pass leak test 10 PSI	4 PSI ↑	DLE
(4)	15 min	8 Nov.	1055	10 PSI	—	DLE

PASS: ☒
FAIL: ☐

VISUAL MONITORING: [signature] 16/01/01 — CONTRACTOR'S REPRESENTATIVE day/mo/yr — [signature] 8/Nov/2000 — CQA REPRESENTATIVE day/mo/yr

FINAL APPROVAL: [signature] 16/01/01 — CONTRACTOR'S REPRESENTATIVE day/mo/yr — [signature] 8 Nov 2000 — CQA REPRESENTATIVE day/mo/yr

COPY TO:

©GeoSyntec Consultants

GEOSYNTEC CONSULTANTS

FLUOR FERNALD, INC.

PRESSURE TEST LOG

PROJECT: ON-SITE DISPOSAL FACILITY (OSDF)

LOCATION: FERNALD, OHIO PROJECT NO.: GQ1029 TASK NO.: 4.2

DESCRIPTION: PHASE II EPLTS YEAR: 2000

CONTRACTOR: STAVER / RIECK

TEST DESCRIPTION: HYDROSTATIC: ☐ PNEUMATIC (ATTACH WRITTEN AUTHORIZATION): ☒

PASS/FAIL CRITERION:

MATERIAL DESCRIPTION: FORCEMAIN: ☐ CONTAINMENT: ☐ CARRIER ☒ OTHER: ☐

TARGET PRESSURE: 10 TEST DURATION: 15 MIN GAUGE NO.: 1 GAUGE LOCATION: END OF PIPE

TEST LOCATION: 1000 FT, 6" TO

FOR CONTAINMENT PIPE TESTING, CARRIER PIPE PRESSURIZED FIRST: ☐ YES ☒ NO N/A

READING NO.	STABILIZATION TEST PERIOD	DATE (day/mo)	TIME	READING	CHANGE IN READING	QA ID
1	–	14 NOV	0822	START FILLING	PIPE	MH
2	15 MIN	14 NOV	0835	6.5	–	MH
3		14 NOV	0850	6.5	0	MH
	15 MIN	14 NOV	0902	10	–	MH
			0917	10	–	MH

PASS: ☒

FAIL: ☐

VISUAL MONITORING: [signature] 14/NOV/00 — CONTRACTOR'S REPRESENTATIVE day/mo/yr

[signature] 14 NOV 00 — CQA REPRESENTATIVE day/mo/yr

FINAL APPROVAL: [signature] 16/01/01 — CONTRACTOR'S REPRESENTATIVE day/mo/yr

[signature] 14 Nov 2000 — SITE CQA MANAGER day/mo/yr

COPY TO:

©GEOSYNTEC CONSULTANTS FILE NO. F-P71

GEOSYNTEC CONSULTANTS

FLUOR DANIEL FERNALD

PRESSURE TEST LOG

PROJECT: ON-SITE DISPOSAL FACILITY (OSDF)

LOCATION: FERNALD, OHIO PROJECT NO.: GQ0409 TASK NO.: 4.2

DESCRIPTION: EPLTS YEAR: 2000

CONTRACTOR: STAVER/RICCIE

TEST DESCRIPTION: HYDROSTATIC: ☐ PNEUMATIC (ATTACH WRITTEN AUTHORIZATION): ☑

PASS/FAIL CRITERION: NO DROP IN PRESSURE ON GAUGE / NO VISIBLE LEAKS

MATERIAL DESCRIPTION: FORCEMAIN: ☐ CONTAINMENT: ☐ CARRIER ☑ OTHER: ☐

TARGET PRESSURE: 10 PSIG TEST DURATION: 15 min GAUGE NO.: 01 GAUGE LOCATION:

TEST LOCATION: PREFAB 9 TO

FOR CONTAINMENT PIPE TESTING, CARRIER PIPE PRESSURIZED FIRST: ☐ YES ☐ NO N/A

READING NO.	STABILIZATION TEST PERIOD	DATE (day/mo)	TIME	READING	CHANGE IN READING	QA ID
1	PRESSURIZE	16 NOV	0957	0	—	TD
2	STABLIZE		1003	6	+6	TD
3	PRESSURIZE		1018	6	0	TD
4	STABLIZE		1022	10	+4	TD
5	TEST		1037	10	0	TD

NOTE: ≈ 415 FT PIPE
TEMP 48°F

PASS: ☐
FAIL: ☐

VISUAL MONITORING: [signature] 16/Nov/00 [signature] 16 NOV 00
CONTRACTOR'S REPRESENTATIVE day/mo/yr CQA REPRESENTATIVE day/mo/yr

FINAL APPROVAL: [signature] 16/01/01 [signature] 16 Nov 2000
CONTRACTOR'S REPRESENTATIVE day/mo/yr CQA REPRESENTATIVE day/mo/yr

COPY TO:

GEOSYNTEC CONSULTANTS

FLUOR DANIEL FERNALD

PRESSURE TEST LOG

PROJECT: ON-SITE DISPOSAL FACILITY (OSDF)

LOCATION: FERNALD, OHIO PROJECT NO.: GQ0409 TASK NO.: 4.2

DESCRIPTION: EPLTS YEAR: 2000

CONTRACTOR: STAUER/RICCIS

TEST DESCRIPTION: HYDROSTATIC: ☐ PNEUMATIC (ATTACH WRITTEN AUTHORIZATION): ☑

PASS/FAIL CRITERION: NO DROP IN GAGE PRESSURE - NO VISIBLE LEAKS

MATERIAL DESCRIPTION: FORCEMAIN: ☐ CONTAINMENT: ☑ CARRIER ☐ OTHER: ☐

TARGET PRESSURE: 10 TEST DURATION: 15 min GAUGE NO.: 01 GAUGE LOCATION:

TEST LOCATION: PREFAB 7 TO PREFAB 8

FOR CONTAINMENT PIPE TESTING, CARRIER PIPE PRESSURIZED FIRST: ☐ YES ☐ NO N/A

READING NO.	STABILIZATION TEST PERIOD	DATE (day/mo)	TIME	READING	CHANGE IN READING	QA ID
1	PRESSURIZE	4 JAN	0954	0	—	TD
2	STABILIZE	↓	1011	6	6	TD
3	PRESSURIZE		1026	6	0	TD
4	TEST		1040	~~4~~ 10	4	TD
5	END TEST		1055	10	0	TD

PASS: ☐

FAIL: ☐

VISUAL MONITORING: [signature] 16/01/01 — CONTRACTOR'S REPRESENTATIVE, day/mo/yr; [signature] 4/JAN/01 — CQA REPRESENTATIVE, day/mo/yr

FINAL APPROVAL: [signature] 16/01/01 — CONTRACTOR'S REPRESENTATIVE, day/mo/yr; [signature] 5 Jan 2001 — CQA REPRESENTATIVE, day/mo/yr

COPY TO:

GEOSYNTEC CONSULTANTS

FLUOR DANIEL FERNALD

PRESSURE TEST LOG

PROJECT: ON-SITE DISPOSAL FACILITY (OSDF)

LOCATION: FERNALD, OHIO PROJECT NO.: GQ0409 TASK NO.: 4.2

DESCRIPTION: EPLTS YEAR: ~~2000~~ YD 2001

CONTRACTOR: STAUER/RICCIS

TEST DESCRIPTION: HYDROSTATIC: ☐ PNEUMATIC (ATTACH WRITTEN AUTHORIZATION): ☑

PASS/FAIL CRITERION: NO DROP IN PRESSURE ON GAGE

MATERIAL DESCRIPTION: FORCEMAIN: ☐ CONTAINMENT: ☐ CARRIER ☑ OTHER: ☐

TARGET PRESSURE: 10 PSI TEST DURATION: 15 min GAUGE NO.: 01 GAUGE LOCATION:

TEST LOCATION: PREFAB ~~8~~ YD 7 TO PREFAB 9

FOR CONTAINMENT PIPE TESTING, CARRIER PIPE PRESSURIZED FIRST: ☐ YES ☐ NO N/A

READING NO.	STABILIZATION TEST PERIOD	DATE (day/mo)	TIME	READING	CHANGE IN READING	QA ID
1	PRESSURIZE	5 JAN	0752	0	—	YD
2	STABLIZE		0822	6	6	YD
3	PRESSURIZE		0837	6	0	YD
4	TEST		0857	10	4	YD
5	END TEST		0912	10	10	YD

PASS: ☑

FAIL: ☐

VISUAL MONITORING: [signature] 16/01/01 — CONTRACTOR'S REPRESENTATIVE, day/mo/yr; [signature] 5 JAN 01 — CQA REPRESENTATIVE, day/mo/yr

FINAL APPROVAL: [signature] 16/01/01 — CONTRACTOR'S REPRESENTATIVE, day/mo/yr; [signature] 5 Jan 2001 — CQA REPRESENTATIVE, day/mo/yr

COPY TO:

GEOSYNTEC CONSULTANTS

FLUOR DANIEL FERNALD

PRESSURE TEST LOG

PROJECT: ON-SITE DISPOSAL FACILITY (OSDF)

LOCATION: FERNALD, OHIO PROJECT NO.: GQ0409 TASK NO.: 4.2

DESCRIPTION: EPLTS YEAR: ~~2000~~ 2001

CONTRACTOR: STAUER/RICCIS

TEST DESCRIPTION: HYDROSTATIC: ☐ PNEUMATIC (ATTACH WRITTEN AUTHORIZATION): ☑

PASS/FAIL CRITERION: No Drop in Gauge Pressure - No Visible Leaks

MATERIAL DESCRIPTION: FORCEMAIN: ☐ CONTAINMENT: ☐ CARRIER ☑ OTHER: ☐

TARGET PRESSURE: 10 TEST DURATION: 15 min GAUGE NO.: 01 GAUGE LOCATION:

TEST LOCATION: TO

FOR CONTAINMENT PIPE TESTING, CARRIER PIPE PRESSURIZED FIRST: ☐ YES ☐ NO N/A

READING NO.	STABILIZATION TEST PERIOD	DATE (day/mo)	TIME	READING	CHANGE IN READING	QA ID
1	Pressurize	10 JAN	0756	0	—	TD
2	Stabilize	↓	0822	6	6	TD
3	Pressurize		0837	6	0	TD
4	Test		0858	10	4	TD
5	End Test		0913	10	0	TD

PASS: ☐

FAIL: ☐

VISUAL MONITORING: [signature] 16/01/01 CONTRACTOR'S REPRESENTATIVE day/mo/yr [signature] 10 JAN 01 CQA REPRESENTATIVE day/mo/yr

FINAL APPROVAL: [signature] 16/01/01 CONTRACTOR'S REPRESENTATIVE day/mo/yr [signature] 10 Jan 2001 CQA REPRESENTATIVE day/mo/yr

COPY TO:

GEOSYNTEC CONSULTANTS

FLUOR DANIEL FERNALD

PRESSURE TEST LOG

PROJECT: ON-SITE DISPOSAL FACILITY (OSDF)

LOCATION: FERNALD, OHIO PROJECT NO.: GQ01029 TASK NO.: 4.1

DESCRIPTION: EPLTS YEAR: 01

CONTRACTOR: STAVER/RICHL

TEST DESCRIPTION: HYDROSTATIC: ☐ PNEUMATIC (ATTACH WRITTEN AUTHORIZATION): ☐

PASS/FAIL CRITERION: No Drop In Pressure on Gage

MATERIAL DESCRIPTION: FORCEMAIN: ☐ CONTAINMENT: ☐ CARRIER ☑ 6" OTHER: ☐

TARGET PRESSURE: 16 TEST DURATION: GAUGE NO.: 01 GAUGE LOCATION:

TEST LOCATION: VH1/1 - VH1/2 - VH1/3 (Pipe #3) TO

FOR CONTAINMENT PIPE TESTING, CARRIER PIPE PRESSURIZED FIRST: ☐ YES ☐ NO

READING NO.	STABILIZATION TEST PERIOD	DATE (day/mo)	TIME	READING	CHANGE IN READING	QA ID
1	Pressurize	29 MARCH	1302	0	—	TD
2	STABLIZE		1304	6	+6	TD
3	Pressurize		1319	6	0	TD
4	STABLIZE		1319	10	+4	TD
5	End Test		1334	10	0	TD

Ambient Temp 48° F

PASS: ☐

FAIL: ☐

VISUAL MONITORING: CONTRACTOR'S REPRESENTATIVE day/mo/yr — CQA REPRESENTATIVE 29 MARCH 01 day/mo/yr

FINAL APPROVAL: CONTRACTOR'S REPRESENTATIVE 30/03/01 day/mo/yr — CQA REPRESENTATIVE 30 March 2001 day/mo/yr

COPY TO:

GEOSYNTEC CONSULTANTS

FLUOR FERNALD, INC.

PRESSURE TEST LOG

PROJECT: ON-SITE DISPOSAL FACILITY (OSDF)

LOCATION: FERNALD, OHIO PROJECT NO.: GQ1029 TASK NO.: 4.2

DESCRIPTION: EPLTS YEAR: 2001

CONTRACTOR: STAUER / RIECK

TEST DESCRIPTION: HYDROSTATIC: ☐ PNEUMATIC (ATTACH WRITTEN AUTHORIZATION): ☑

PASS/FAIL CRITERION: NO DROP in PRESSURE ON GAGE

MATERIAL DESCRIPTION: FORCEMAIN: ☐ CONTAINMENT: ☑ 10" CARRIER ☑ ~~10~~ 3/4 OTHER: ☐

TARGET PRESSURE: 10 TEST DURATION: 15 min GAUGE NO.: 01 GAUGE LOCATION:

TEST LOCATION: Pipe#s VHI/1 VHI/2 VHI/3 TO

FOR CONTAINMENT PIPE TESTING, CARRIER PIPE PRESSURIZED FIRST: ☐ YES ☐ NO

READING NO.	STABILIZATION TEST PERIOD	DATE (day/mo)	TIME	READING	CHANGE IN READING	QA ID
1	Pressurize	29 March	1345	0	0	TD
2	STABLIZE		1357	6	+6	TD
3	Pressurize		~~135~~ TD 1412	6	0	TD
4	STABLIZE		1413	10	+4	TD
5	End Test		1428	10	0	TD
	Ambient Temp = 48° F					

PASS: ☑

FAIL: ☐

VISUAL MONITORING: [signature] 29 March 01

CONTRACTOR'S REPRESENTATIVE day/mo/yr CQA REPRESENTATIVE day/mo/yr

FINAL APPROVAL: [signature] 30 Mar 2001 [signature] 30 March 2001

CONTRACTOR'S REPRESENTATIVE day/mo/yr SITE CQA MANAGER day/mo/yr

COPY TO:

GEOSYNTEC CONSULTANTS

FLUOR FERNALD, INC.

PRESSURE TEST LOG

PROJECT: ON-SITE DISPOSAL FACILITY (OSDF)

LOCATION: FERNALD, OHIO PROJECT NO.: GQ1029 1341 TASK NO.: 4.2

DESCRIPTION: EPLTS YEAR: 2000

CONTRACTOR: STAVER/RICK

TEST DESCRIPTION: HYDROSTATIC: ☐ PNEUMATIC (ATTACH WRITTEN AUTHORIZATION): ☑

PASS/FAIL CRITERION: No Drop in Pressure on Gage

MATERIAL DESCRIPTION: FORCEMAIN: ☐ CONTAINMENT: ☐ CARRIER ☑ OTHER: ☐

TARGET PRESSURE: 10PSI TEST DURATION: 15 min GAUGE NO.: 01 GAUGE LOCATION:

TEST LOCATION: VH2/1 VH2/2 VH2/3 PIPES TO

FOR CONTAINMENT PIPE TESTING, CARRIER PIPE PRESSURIZED FIRST: ☐ YES ☐ NO

READING NO.	STABILIZATION TEST PERIOD	DATE (day/mo)	TIME	READING	CHANGE IN READING	QA ID
1	Pressurize	3 APRIL	0900	0	6	TD
2	STABLIZE		0903	6	0	TD
3	Pressurize		0920	10	+4	TD
4	STABLIZE		0921	10	—	TD
5	END TEST		0937	10	—	TD

PASS: ☑

FAIL: ☐

VISUAL MONITORING: [signature] 3 4 01 [signature] 3 APR 01

CONTRACTOR'S REPRESENTATIVE day/mo/yr CQA REPRESENTATIVE day/mo/yr

FINAL APPROVAL: [signature] 4/Apr/01 [signature] 4 April 2001

CONTRACTOR'S REPRESENTATIVE day/mo/yr SITE CQA MANAGER day/mo/yr

COPY TO:

GEOSYNTEC CONSULTANTS

FLUOR FERNALD, INC.

PRESSURE TEST LOG

PROJECT: ON-SITE DISPOSAL FACILITY (OSDF)

LOCATION: FERNALD, OHIO PROJECT NO.: ~~GQ1029~~ 1341 TO TASK NO.: 4.2

DESCRIPTION: CPLTS YEAR: 2000

CONTRACTOR: STAver/Rieck

TEST DESCRIPTION: HYDROSTATIC: ☐ PNEUMATIC (ATTACH WRITTEN AUTHORIZATION): ☑

PASS/FAIL CRITERION: No Drop in Pressure

MATERIAL DESCRIPTION: FORCEMAIN: ☐ CONTAINMENT: ☑ CARRIER ☐ OTHER: ☐

TARGET PRESSURE: 10 TEST DURATION: 15min GAUGE NO.: 01 GAUGE LOCATION:

TEST LOCATION: VH2/1 VH2/2 VH2/3 Pipe TO

FOR CONTAINMENT PIPE TESTING, CARRIER PIPE PRESSURIZED FIRST: ☐ YES ☐ NO N/A

READING NO.	STABILIZATION TEST PERIOD	DATE (day/mo)	TIME	READING	CHANGE IN READING	QA ID
1	Pressurize	3 April	1027	0	—	TD
2	Stabize		1029	6	+6	TD
3	Pressurize		1044	6	0	TD
4	Stabize		1045	10	+4	TD
5	End Test		1100	10	0	TD

PASS: ☑

FAIL: ☐

VISUAL MONITORING: Darrell Chatteen 3-4-01 — CONTRACTOR'S REPRESENTATIVE day/mo/yr; T. J. [illegible] 3 APR 01 — CQA REPRESENTATIVE day/mo/yr

FINAL APPROVAL: [illegible] 4 Apr. 01 — CONTRACTOR'S REPRESENTATIVE day/mo/yr; Collins P. [illegible] 4 April 2001 — SITE CQA MANAGER day/mo/yr

COPY TO:

GEOSYNTEC CONSULTANTS | **FLUOR FERNALD, INC.**

PRESSURE TEST LOG

PROJECT: ON-SITE DISPOSAL FACILITY (OSDF)

LOCATION: FERNALD, OHIO PROJECT NO.: ~~G01029~~ 1341 TO TASK NO.: 4.2

DESCRIPTION: EPLTS YEAR: 2000

CONTRACTOR: STAVER

TEST DESCRIPTION: HYDROSTATIC: ☐ PNEUMATIC (ATTACH WRITTEN AUTHORIZATION): ☐

PASS/FAIL CRITERION: NO DROP IN PRESSURE ON GAGE

MATERIAL DESCRIPTION: FORCEMAIN: ☐ CONTAINMENT: ☑ CARRIER ☐ OTHER: ☐

TARGET PRESSURE: 10 PSI TEST DURATION: 15 GAUGE NO.: 01 GAUGE LOCATION:

TEST LOCATION: EXISTING LDS 10" Cell 1 TO

FOR CONTAINMENT PIPE TESTING, CARRIER PIPE PRESSURIZED FIRST: ☐ YES ☐ NO

READING NO.	STABILIZATION TEST PERIOD	DATE (dcy/mo)	TIME	READING	CHANGE IN READING	QA ID
1	PRESSURIZE	4 APRIL	1320	0	6	TO
2	STABLIZE		1322	6	—	TO
*	TEST STOPPED DUE TO LEAK		1324	—	—	TO
1	PRESSURIZE		1328	0	6	TO
2	STABLIZE		1330	6	-1	TO
3	PRESSURIZE		1350	5	+5	TO
4	STABLIZE		1351	10	-2	TO
5	END TEST		1406	8	—	TO

NOTE @ 1428 PRESSURE HAS DROPPED TO 4 PSI

PASS: ☐
FAIL: ☑ PRESSURE DROPPED 2PSI IN 15 min

VISUAL MONITORING:

CONTRACTOR'S REPRESENTATIVE day/mo/yr — CQA REPRESENTATIVE 4/4/01 day/mo/yr

FINAL APPROVAL

CONTRACTOR'S REPRESENTATIVE 5/Apr/01 day/mo/yr — SITE CQA MANAGER 5 April 2001 day/mo/yr

COPY TO:

GEOSYNTEC CONSULTANTS

FLUOR FERNALD, INC.

PRESSURE TEST LOG

PROJECT: ON-SITE DISPOSAL FACILITY (OSDF)

LOCATION: FERNALD, OHIO PROJECT NO.: ~~G01029~~ 1341 TASK NO.: 4.2

DESCRIPTION: EPLTS YEAR: 2000

CONTRACTOR: STAVER / RIECH

TEST DESCRIPTION: HYDROSTATIC: ☐ PNEUMATIC (ATTACH WRITTEN AUTHORIZATION): ☑

PASS/FAIL CRITERION:

MATERIAL DESCRIPTION: FORCEMAIN: ☐ CONTAINMENT: ☑ CARRIER ☐ OTHER: ☐

TARGET PRESSURE: 10 PSI TEST DURATION: 15 min GAUGE NO.: 01 GAUGE LOCATION:

TEST LOCATION: Cell 1 Existing LDS ReTest TO

FOR CONTAINMENT PIPE TESTING, CARRIER PIPE PRESSURIZED FIRST: ☐ YES ☐ NO

READING NO.	STABILIZATION TEST PERIOD	DATE (day/mo)	TIME	READING	CHANGE IN READING	QA ID
1	Pressurize	5 April	1031	0	—	TO
2	Stabilize		1033	6	6	TO
3	Pressurize		1048	5 1/2	-1/2	TO
4	Stabilize		1049	~~6~~ 10	+ ~~4~~ 4 1/2	TO
5	End Test		1105	7 1/2	2 1/2	TO

PASS: ☐

FAIL: ☑

VISUAL MONITORING:

CONTRACTOR'S REPRESENTATIVE day/mo/yr — COA REPRESENTATIVE 5 APR 01 day/mo/yr

FINAL APPROVAL

CONTRACTOR'S REPRESENTATIVE 5/Apr/01 day/mo/yr — SITE COA MANAGER 5 April 2001 day/mo/yr

COPY TO:

GEOSYNTEC CONSULTANTS

FLUOR FERNALD, INC.

PRESSURE TEST LOG

PROJECT: ON-SITE DISPOSAL FACILITY (OSDF)

LOCATION: FERNALD, OHIO PROJECT NO.: G01029 ~~10~~ 1341 TASK NO.: 4.2

DESCRIPTION: EPLTS YEAR: 2000

CONTRACTOR: STAVER/ RICCK

TEST DESCRIPTION: HYDROSTATIC: ☐ PNEUMATIC (ATTACH WRITTEN AUTHORIZATION): ☑

PASS/FAIL CRITERION:

MATERIAL DESCRIPTION: FORCEMAIN: ☐ CONTAINMENT: ☑ CARRIER ☐ OTHER: ☐

TARGET PRESSURE: 10 TEST DURATION: 15 min GAUGE NO.: 01 GAUGE LOCATION:

TEST LOCATION: VH1/1 To Existing LDS TO

FOR CONTAINMENT PIPE TESTING, CARRIER PIPE PRESSURIZED FIRST: ☐ YES ☐ NO

READING NO.	STABILIZATION TEST PERIOD	DATE (day/mo)	TIME	READING	CHANGE IN READING	QA ID
NOTE:	This Pipe Previously Failed Air Test on Existing Pipe. This Test is A Soap Test of The Weld Joint of VH1/1 To Existing LDS					
1	Pressurize	6 April	0814	0	—	TD
2	Stablize		0816	6	+6	TD
3	Pressurize		0831	5½	-½	TD
4	Stablize		0836	10	+5½	TD
5	End Test		0851	8½	-2 TD -1½	TD
NOTE:	The Soap Test Passed However, The Pressure Test Continues To Fail.					

PASS: ☐

FAIL: ☐

VISUAL MONITORING:

CONTRACTOR'S REPRESENTATIVE day/mo/yr — CQA REPRESENTATIVE 6 APR 01 day/mo/yr

FINAL APPROVAL:

CONTRACTOR'S REPRESENTATIVE 6/Apr/01 day/mo/yr — SITE CQA MANAGER 6 April 2001 day/mo/yr

COPY TO:

GEOSYNTEC CONSULTANTS

FLUOR FERNALD, INC.

PRESSURE TEST LOG

PROJECT: ON-SITE DISPOSAL FACILITY (OSDF)

LOCATION: FERNALD, OHIO PROJECT NO.: ~~G01029~~ 1341 TASK NO.: 4.2

DESCRIPTION: EPLTS YEAR: 2000

CONTRACTOR: STAVER / RIECK

TEST DESCRIPTION: HYDROSTATIC: ☐ PNEUMATIC (ATTACH WRITTEN AUTHORIZATION): ☑

PASS/FAIL CRITERION:

MATERIAL DESCRIPTION: FORCEMAIN: ☐ CONTAINMENT: ☐ CARRIER ☐ OTHER: ☐

TARGET PRESSURE: 10 TEST DURATION: 15 min GAUGE NO.: 01 GAUGE LOCATION:

TEST LOCATION: EXISTING 10" LDSR PIPE TO

FOR CONTAINMENT PIPE TESTING, CARRIER PIPE PRESSURIZED FIRST: ☐ YES ☐ NO

READING NO.	STABILIZATION TEST PERIOD	DATE (day/mo)	TIME	READING	CHANGE IN READING	QA ID
1	PRESSURIZE	10 APRIL	1022	0	+6	TD
2	STABLIZE		1025	6	0	TD
3	PRESSURIZE		1040	6	+4	TD
4	STABLIZE		1042	10	-0	TD
5	END TEST		1058	10	—	TD

PASS: ☐

FAIL: ☐

VISUAL MONITORING: CONTRACTOR'S REPRESENTATIVE 10 Apr 01 day/mo/yr — CQA REPRESENTATIVE 10 APRIL 01 day/mo/yr

FINAL APPROVAL: CONTRACTOR'S REPRESENTATIVE 11 Apr 01 day/mo/yr — SITE CQA MANAGER 11 April 2001 day/mo/yr

COPY TO:

GEOSYNTEC CONSULTANTS

FLUOR FERNALD, INC.

PRESSURE TEST LOG

PROJECT: ON-SITE DISPOSAL FACILITY (OSDF)

LOCATION: FERNALD, OHIO PROJECT NO.: ~~G01029~~ 1341 TO TASK NO.: 4.2

DESCRIPTION: YEAR: 2000

CONTRACTOR:

TEST DESCRIPTION: HYDROSTATIC: ☐ PNEUMATIC (ATTACH WRITTEN AUTHORIZATION): ☑

PASS/FAIL CRITERION: No DROP in PRESSURE on GAGE

MATERIAL DESCRIPTION: FORCEMAIN: ☐ CONTAINMENT: ☐ CARRIER ☐ OTHER: ☐

TARGET PRESSURE: 10 PSI TEST DURATION: 15 min GAUGE NO.: 01 GAUGE LOCATION:

TEST LOCATION: EXISTING + NEW LCSR VH1 TO

FOR CONTAINMENT PIPE TESTING, CARRIER PIPE PRESSURIZED FIRST: ☐ YES ☐ NO

READING NO.	STABILIZATION TEST PERIOD	DATE (day/mo)	TIME	READING	CHANGE IN READING	QA ID
1	PRESSURIZE	11-APR-01	0818	0	0	TD
2	STABLIZE		0821	6	~~6~~ TD 0	TD
3	PRESSURIZE		0836	6	~~+4~~ TD 0	TD
4	STABLIZE		0840	10	+4	TD
5	END TEST		0855	10	0	TD

PASS: ☑

FAIL: ☐

VISUAL MONITORING: CONTRACTOR'S REPRESENTATIVE day/mo/yr — CQA REPRESENTATIVE 11 APR 01 day/mo/yr

FINAL APPROVAL: CONTRACTOR'S REPRESENTATIVE 12/Apr/01 day/mo/yr — SITE CQA MANAGER 12 April 2001 day/mo/yr

COPY TO:

GEOSYNTEC CONSULTANTS

FLUOR DANIEL FERNALD

PRESSURE TEST LOG

PROJECT: ON-SITE DISPOSAL FACILITY (OSDF)

LOCATION: FERNALD, OHIO PROJECT NO.: GQ1341 TASK NO.: 4.2

DESCRIPTION: EPLTS YEAR: 2001

CONTRACTOR: STRAUER/RICCIE

TEST DESCRIPTION: Air

PASS/FAIL CRITERION: No Drop in Gage Pressure

MATERIAL DESCRIPTION: FORCEMAIN: ☐ CONTAINMENT: ☑ MANHOLE: ☐ OTHER: CARRIER

TEST LOCATION: EXISTING LCS @ MH2

READING NO.	DATE (day/mo)	TIME	READING	CHANGE IN READING	PASS/ FAIL	COMMENTS	QA ID
Pressurize	12 APRIL	1247	0	6			TD
STABLIZE		1250	6	0			TD
Pressurize		1308	6	~~0~~ TD +4			TD
STABLIZE		1312	10	0			TD
End Test		1328	10	—	P		TD

VISUAL MONITORING: CONTRACTOR'S REPRESENTATIVE day/mo/yr — CQA REPRESENTATIVE 12 APRIL 01 day/mo/yr

FINAL APPROVAL: CONTRACTOR'S REPRESENTATIVE 13/Apr/01 day/mo/yr — CQA REPRESENTATIVE 13 April 2001 day/mo/yr

COPY TO:

GEOSYNTEC CONSULTANTS

FLUOR DANIEL FERNALD

PRESSURE TEST LOG

PROJECT: ON-SITE DISPOSAL FACILITY (OSDF)

LOCATION: FERNALD, OHIO PROJECT NO.: 6Q1341 TASK NO.: 4.2

DESCRIPTION: EPLTS YEAR: 2001

CONTRACTOR: STAUER / RICK

TEST DESCRIPTION: 10 PSI FOR 15 min

PASS/FAIL CRITERION: NO DROP IN PRESSURE OR GAGE

MATERIAL DESCRIPTION: FORCEMAIN: ☐ CONTAINMENT: ☑ MANHOLE: ☐ OTHER: ____

TEST LOCATION: NEW LCS (VH1/2) TO EXISTING LCS LINE

READING NO.	DATE (day/mo)	TIME	READING	CHANGE IN READING	PASS/ FAIL	COMMENTS	QA ID
1	16 APRIL	0807	0	6		PRESSURIZE	TD
2		0812	6	0		STABLIZE	TD
3		0827	6	+4		PRESSURIZE	TD
4		0828	10	0		STABLIZE	TD
5		0843	10	—	PASS	END TEST	

VISUAL MONITORING: _____ CONTRACTOR'S REPRESENTATIVE day/mo/yr; [signature] 16 April 2001 CQA REPRESENTATIVE day/mo/yr

FINAL APPROVAL: [signature] 17 Apr/01 CONTRACTOR'S REPRESENTATIVE day/mo/yr; [signature] 17 April/2001 CQA REPRESENTATIVE day/mo/yr

COPY TO: _____

GEOSYNTEC CONSULTANTS

FLUOR DANIEL FERNALD

PRESSURE TEST LOG

PROJECT: ON-SITE DISPOSAL FACILITY (OSDF)

LOCATION: FERNALD, OHIO PROJECT NO.: 6Q1341 TASK NO.: 4.2

DESCRIPTION: EPLTS YEAR: 2001

CONTRACTOR: STAUER / RICK

TEST DESCRIPTION:

PASS/FAIL CRITERION: NO DROP IN PRESSURE OR GAGE

MATERIAL DESCRIPTION: FORCEMAIN: ☐ CONTAINMENT: ☑ MANHOLE: ☐ OTHER:

TEST LOCATION: EXISTING LPS @ MH2

READING NO.	DATE (day/mo)	TIME	READING	CHANGE IN READING	PASS/ FAIL	COMMENTS	QA ID
1	19 APRIL	0903	0	—		PRESSURIZE	TD
2		0904	6	+6		STABILIZE	TD
3		0921	6	~~0~~ +4		PRESSURIZE	TD
4		0922	10	~~+4~~ 0		STABILIZE	TD
5		0937	10	—	PASS	END TEST	TD

VISUAL MONITORING:

CONTRACTOR'S REPRESENTATIVE day/mo/yr — CQA REPRESENTATIVE 19 APRIL 01 day/mo/yr

FINAL APPROVAL

CONTRACTOR'S REPRESENTATIVE 20/Apr/01 day/mo/yr — CQA REPRESENTATIVE 20 April 2001 day/mo/yr

COPY TO:

GEOSYNTEC CONSULTANTS

FLUOR DANIEL FERNALD

PRESSURE TEST LOG

PROJECT: ON-SITE DISPOSAL FACILITY (OSDF)

LOCATION: FERNALD, OHIO PROJECT NO.: 60 1341 TASK NO.: 4.2

DESCRIPTION: EPLTS YEAR: 2001

CONTRACTOR: STAUER / RICK

TEST DESCRIPTION:

PASS/FAIL CRITERION: NO DROP IN PRESSURE or GAGE

MATERIAL DESCRIPTION: FORCEMAIN: ☐ CONTAINMENT: ☑ MANHOLE: ☐ OTHER:

TEST LOCATION: VH2/3 TO EXISTING LDS

READING NO.	DATE (day/mo)	TIME	READING	CHANGE IN READING	PASS/ FAIL	COMMENTS	QA ID
1	20 APRIL	0810	0	+6		PRESSURIZE	TD
2		0817	6	~~0~~ 0		STABLIZE	TD
3		0833	6	+4		PRESSURIZE	TD
4		0836	10	0		STABLIZE	TD
5		0853	10	0		END TEST	TD

VISUAL MONITORING:

CONTRACTOR'S REPRESENTATIVE day/mo/yr — CQA REPRESENTATIVE 20 APRIL 01 day/mo/yr

FINAL APPROVAL:

CONTRACTOR'S REPRESENTATIVE 23/Apr/01 day/mo/yr — CQA REPRESENTATIVE 23 April 2001 day/mo/yr

COPY TO:

GEOSYNTEC CONSULTANTS

FLUOR DANIEL FERNALD

PRESSURE TEST LOG

PROJECT: ON-SITE DISPOSAL FACILITY (OSDF)

LOCATION: FERNALD, OHIO PROJECT NO.: 6Q1341 TASK NO.: 4.2

DESCRIPTION: EPLTS YEAR: 2001

CONTRACTOR: STAUER / RICK

TEST DESCRIPTION:

PASS/FAIL CRITERION: NO DROP IN PRESSURE OR GAGE

MATERIAL DESCRIPTION: FORCEMAIN: ☐ CONTAINMENT: ☐ MANHOLE: ☐ OTHER: CARRIER

TEST LOCATION: VH3/1, VH3/2, VH3/3 CARRIER PIPE

READING NO.	DATE (day/mo)	TIME	READING	CHANGE IN READING	PASS/ FAIL	COMMENTS	QA ID
1	24 APRIL	1043	~~20~~ 0	6		PRESSURIZE	YD
2		1044	6	0		STABLIZE	YD
3		1059	6	+4		PRESSURIZE	YD
4		1100	10	0		STABLIZE	YD
5		1115	10	—		END TEST	

VISUAL MONITORING: CONTRACTOR'S REPRESENTATIVE day/mo/yr — CQA REPRESENTATIVE 24 APR 01 day/mo/yr

FINAL APPROVAL: CONTRACTOR'S REPRESENTATIVE 25/Apr/01 day/mo/yr — CQA REPRESENTATIVE 25 April 2001 day/mo/yr

COPY TO:

GEOSYNTEC CONSULTANTS

FLUOR DANIEL FERNALD

PRESSURE TEST LOG

PROJECT: ON-SITE DISPOSAL FACILITY (OSDF)

LOCATION: FERNALD, OHIO PROJECT NO.: 60 1341 TASK NO.: 4.2

DESCRIPTION: EPLTS YEAR: 2001

CONTRACTOR: STAUER / RICK

TEST DESCRIPTION:

PASS/FAIL CRITERION: NO DROP IN PRESSURE OR GAGE

MATERIAL DESCRIPTION: FORCEMAIN: ☐ CONTAINMENT: ☑ MANHOLE: ☐ OTHER:

TEST LOCATION: VH3/1, VH3/2, VH3/3

READING NO.	DATE (day/mo)	TIME	READING	CHANGE IN READING	PASS/ FAIL	COMMENTS	QA ID
1	24/APRIL	1257	0	6		PRESSURIZE	TO
2		1258	6	0		STABLIZE	TO
3		1312	6	+ 4		PRESSURIZE	TO
4		1314	10	0		STABLIZE	TO
5		1329	10	—		END TEST	TO

VISUAL MONITORING:

CONTRACTOR'S REPRESENTATIVE day/mo/yr — CQA REPRESENTATIVE 24 APR 01 day/mo/yr

FINAL APPROVAL:

CONTRACTOR'S REPRESENTATIVE 25/Apr/01 day/mo/yr — CQA REPRESENTATIVE 25 April 2001 day/mo/yr

COPY TO:

GEOSYNTEC CONSULTANTS

FLUOR DANIEL FERNALD

PRESSURE TEST LOG

PROJECT: ON-SITE DISPOSAL FACILITY (OSDF)

LOCATION: FERNALD, OHIO PROJECT NO.: 60 1341 TASK NO.: 4.2

DESCRIPTION: EPLTS YEAR: 2001

CONTRACTOR: STAUCE / RICCK

TEST DESCRIPTION:

PASS/FAIL CRITERION: NO DROP IN PRESSURE OR GAGE

MATERIAL DESCRIPTION: FORCEMAIN: ☐ CONTAINMENT: ☑ MANHOLE: ☐ OTHER:

TEST LOCATION: MH2 EXISTING LCSP

READING NO.	DATE (day/mo)	TIME	READING	CHANGE IN READING	PASS/ FAIL	COMMENTS	QA ID
1	25 APR	1017	0	6		PRESSURIZE	TD
2		1018	6	0		STABLIZE	TD
3		1033	6	+4		PRESSURIZE	TD
4		1034	10	0		STABLIZE	TD
5		1049	10	—	PASS	END TEST	TD

VISUAL MONITORING:

CONTRACTOR'S REPRESENTATIVE day/mo/yr CQA REPRESENTATIVE 25 APRIL 01 day/mo/yr

FINAL APPROVAL:

CONTRACTOR'S REPRESENTATIVE 26/Apr/01 day/mo/yr CQA REPRESENTATIVE 26 April 2001 day/mo/yr

COPY TO:

GEOSYNTEC CONSULTANTS

FLUOR DANIEL FERNALD

PRESSURE TEST LOG

PROJECT: ON-SITE DISPOSAL FACILITY (OSDF)

LOCATION: FERNALD, OHIO PROJECT NO.: 60 1341 TASK NO.: 4.2

DESCRIPTION: EPLTS YEAR: 2001

CONTRACTOR: STAUER / RICK

TEST DESCRIPTION:

PASS/FAIL CRITERION: NO DROP IN PRESSURE OR GAGE

MATERIAL DESCRIPTION: FORCEMAIN: ☐ CONTAINMENT: ☑ MANHOLE: ☐ OTHER:

TEST LOCATION: EXISTING LCSR AND VH2/2 WELD ON V.H.2

READING NO.	DATE (day/mo)	TIME	READING	CHANGE IN READING	PASS/ FAIL	COMMENTS	QA ID
1	26/APR	0717	0	6		PRESSURIZE	TO
2		0721	6	0		STABILIZE	TO
3		0736	6	+4		PRESSURIZE	TO
4		0738	10	0		STABLIZE	TO
5		0754	10	–	PASS	END TEST	TO

VISUAL MONITORING:

CONTRACTOR'S REPRESENTATIVE day/mo/yr CQA REPRESENTATIVE 26 APR 01 day/mo/yr

FINAL APPROVAL:

CONTRACTOR'S REPRESENTATIVE 26/Apr/01 day/mo/yr CQA REPRESENTATIVE 26 April 2001 day/mo/yr

COPY TO:

GEOSYNTEC CONSULTANTS

FLUOR DANIEL FERNALD

PRESSURE TEST LOG

PROJECT: ON-SITE DISPOSAL FACILITY (OSDF)

LOCATION: FERNALD, OHIO PROJECT NO.: 601341 TASK NO.: 4.2

DESCRIPTION: EPLTS YEAR: 2001

CONTRACTOR: STAUER / RICK

TEST DESCRIPTION:

PASS/FAIL CRITERION: NO DROP IN PRESSURE ON GAGE

MATERIAL DESCRIPTION: FORCEMAIN: ☐ CONTAINMENT: ☑ MANHOLE: ☐ OTHER:

TEST LOCATION: LCS ON UH2

READING NO.	DATE (day/mo)	TIME	READING	CHANGE IN READING	PASS/ FAIL	COMMENTS	QA ID
1	27 APR	1333	0	6		PRESSURIZE	TD
2		1335	6	6		STABLIZE	TD
3		1350	6	+4		PRESSURIZE	TD
4		1352	10	0		STABLIZE	TD
5		1407	10	—	PASS	END TEST	TD

VISUAL MONITORING: 27 APR 01

CONTRACTOR'S REPRESENTATIVE day/mo/yr GQA REPRESENTATIVE day/mo/yr

FINAL APPROVAL: 30/Apr/01 30 April 2001

CONTRACTOR'S REPRESENTATIVE day/mo/yr CQA REPRESENTATIVE day/mo/yr

COPY TO:

GEOSYNTEC CONSULTANTS

FLUOR DANIEL FERNALD

PRESSURE TEST LOG

PROJECT: ON-SITE DISPOSAL FACILITY (OSDF)

LOCATION: FERNALD, OHIO PROJECT NO.: 60 1341 TASK NO.: 4.2

DESCRIPTION: EPLTS YEAR: 2001

CONTRACTOR: STAUER / RIECK

TEST DESCRIPTION:

PASS/FAIL CRITERION: NO DROP IN PRESSURE OR GAGE

MATERIAL DESCRIPTION: FORCEMAIN: ☐ CONTAINMENT: ☑ MANHOLE: ☐ OTHER:

TEST LOCATION: VH2/1 + EXISTING LCS LINE

READING NO.	DATE (day/mo)	TIME	READING	CHANGE IN READING	PASS/ FAIL	COMMENTS	QA ID
1	30 APR	1256	0	+6		PRESSURIZE	TD
2		1256	6	0		STABLIZE	TD
3		1311	6	+4		PRESSURIZE	TD
4		1312	10	0		STABLIZE	TD
5		1327	10	—	PASS	END TEST	TD

VISUAL MONITORING:

CONTRACTOR'S REPRESENTATIVE day/mo/yr — CQA REPRESENTATIVE 30 APR 1101 day/mo/yr

FINAL APPROVAL:

CONTRACTOR'S REPRESENTATIVE 1 May 01 day/mo/yr — CQA REPRESENTATIVE 1 May 2001 day/mo/yr

COPY TO:

GEOSYNTEC CONSULTANTS

FLUOR DANIEL FERNALD

PRESSURE TEST LOG

PROJECT: ON-SITE DISPOSAL FACILITY (OSDF)

LOCATION: FERNALD, OHIO PROJECT NO.: 6Q1341 TASK NO.: 4.2

DESCRIPTION: EPLTS YEAR: 2001

CONTRACTOR: STAVEE / RICK

TEST DESCRIPTION: 6" HDPE

PASS/FAIL CRITERION: NO DROP IN PRESSURE or GAGE

MATERIAL DESCRIPTION: ~~FORCE~~MAIN: ☑ CONTAINMENT: ☐ MANHOLE: ☐ OTHER:

TEST LOCATION: CVH TO PLS

GAGE 683

READING NO.	DATE (day/mo)	TIME	READING	CHANGE IN READING	PASS/ FAIL	COMMENTS	QA ID
1	2 MAY	1110	0	+60		PRESSURIZE	TO
2		1116	60	-2		STABLIZE	TO
3		1216	58	+2		PRESSURIZE	TO
4		1218	60	0		STABLIZE	TO
5		1318	60	0		STABLIZE	TO
6		1418	60	0		STABLIZE	TO
7		1518	60	0		STABLIZE	TO
8		1618	60	0	PASS	END TEST	TO
NOTE	WATER TEMP	IN TRENCH	64°F			AMBIENT TEMP 72°F	
	" "	IN LINE	55°F				

VISUAL MONITORING:

CONTRACTOR'S REPRESENTATIVE day/mo/yr — CQA REPRESENTATIVE day/mo/yr: 2 May 01

FINAL APPROVAL:

CONTRACTOR'S REPRESENTATIVE day/mo/yr: 3/May/01 — CQA REPRESENTATIVE day/mo/yr: 3 May 2001

COPY TO:

GEOSYNTEC CONSULTANTS

FLUOR DANIEL FERNALD

PRESSURE TEST LOG

PROJECT: ON-SITE DISPOSAL FACILITY (OSDF)

LOCATION: FERNALD, OHIO PROJECT NO.: GQ 1341 TASK NO.: 4.2

DESCRIPTION: EPLTS YEAR: 2001

CONTRACTOR: STAUER/RIECK

TEST DESCRIPTION:

PASS/FAIL CRITERION: NO DROP in PRESSURE ON GAGE

MATERIAL DESCRIPTION: FORCEMAIN: ☐ CONTAINMENT: ☑ MANHOLE: ☐ OTHER: CARRIER

TEST LOCATION: CVH TO PLS

GAGE B83

READING NO.	DATE (day/mo)	TIME	READING	CHANGE IN READING	PASS/ FAIL	COMMENTS	QA ID
1	3 MAY	0730	0	+16		PRESSURIZE	TD
2		0734	16	0		STABLIZE	TD
3		0834	16	-1		STABLIZE	TD
4		0934	15	+1		RETIGHTEN TEST RIG FITTINGS PRESSURIZE	TD
5		0940	16	0		STABLIZE	TD
6		1040	16	0		STABLIZE	TD
7		1140	16	0		~~END TEST~~ STABLIZE TD	TD
8		1240	16		PASS	END TEST	TD

VISUAL MONITORING: _____ CONTRACTOR'S REPRESENTATIVE day/mo/yr; [signature] CQA REPRESENTATIVE 3 May 01 day/mo/yr

FINAL APPROVAL: [signature] CONTRACTOR'S REPRESENTATIVE 7/May/01 day/mo/yr; [signature] CQA REPRESENTATIVE 7 May 2001 day/mo/yr

COPY TO:

GEOSYNTEC CONSULTANTS

FLUOR DANIEL FERNALD

PRESSURE TEST LOG

PROJECT: ON-SITE DISPOSAL FACILITY (OSDF)

LOCATION: FERNALD, OHIO PROJECT NO.: G01841 TASK NO.: 4.2

DESCRIPTION: EPLTS YEAR: 01

CONTRACTOR: STAUBER/RIECK

TEST DESCRIPTION: EXISTING LDS AND VH3/3 WELD

PASS/FAIL CRITERION: NO DROP IN PRESSURE

MATERIAL DESCRIPTION: FORCEMAIN: ☐ CONTAINMENT: ☑ MANHOLE: ☐ OTHER:

TEST LOCATION: EXISTING LDS AND VH3/3 WELD

READING NO.	DATE (day/mo)	TIME	READING	CHANGE IN READING	PASS/ FAIL	COMMENTS	QA ID
1	7 MAY	1422	0	+6		PRESSURIZE	TD
2		1424	6	0		STABLIZE	TD
3		1439	6	+4		PRESSURIZE	TD
4		1441	10	0		STABLIZE	TD
5		1456	10	—	PASS	TEST	TD

VISUAL MONITORING: CONTRACTOR'S REPRESENTATIVE day/mo/yr — CQA REPRESENTATIVE 7 MAY 01 day/mo/yr

FINAL APPROVAL: CONTRACTOR'S REPRESENTATIVE 7 May 01 day/mo/yr — CQA REPRESENTATIVE 7 May 2001 day/mo/yr

COPY TO:

GEOSYNTEC CONSULTANTS

FLUOR DANIEL FERNALD

7284 Vol. 4

PRESSURE TEST LOG

PROJECT: ON-SITE DISPOSAL FACILITY (OSDF)

LOCATION: FERNALD, OHIO PROJECT NO.: 6Q1341 TASK NO.: 4.2

DESCRIPTION: EPLTS YEAR: 01

CONTRACTOR: STAUER/RICCK

TEST DESCRIPTION:

PASS/FAIL CRITERION: NO DROP IN PRESSURE ON GAGE

MATERIAL DESCRIPTION: FORCEMAIN: ☐ CONTAINMENT: ☑ MANHOLE: ☐ OTHER:

TEST LOCATION: EXISTING LDS @ MH3

READING NO.	DATE (day/mo)	TIME	READING	CHANGE IN READING	PASS/ FAIL	COMMENTS	QA ID
1	~~8~~ 7 MAY	0722	0	6		PRESSURIZE	TD
2		0724	6	0		STABLIZE	TD
3		0739	6	+4		PRESSURIZE	TD
4		0742	10	0		STABLIZE	TD
5		0757	10	—	PASS	TEST	TD

VISUAL MONITORING:

CONTRACTOR'S REPRESENTATIVE day/mo/yr CQA REPRESENTATIVE 7 MAY 01 day/mo/yr

FINAL APPROVAL:

CONTRACTOR'S REPRESENTATIVE 8/May/01 day/mo/yr CQA REPRESENTATIVE 8 May 2001 day/mo/yr

COPY TO:

GEOSYNTEC CONSULTANTS

FLUOR DANIEL FERNALD

PRESSURE TEST LOG

PROJECT: ON-SITE DISPOSAL FACILITY (OSDF)

LOCATION: FERNALD, OHIO PROJECT NO.: 60184 TASK NO.: 4.2

DESCRIPTION: EPLTS YEAR: 01

CONTRACTOR: STAUER / RIECK

TEST DESCRIPTION:

PASS/FAIL CRITERION: NO DROP in PRESSURE on GAGE

MATERIAL DESCRIPTION: FORCEMAIN: ☐ CONTAINMENT: ☑ MANHOLE: ☐ OTHER:

TEST LOCATION: EXISTING LCSR VH3

READING NO.	DATE (day/mo)	TIME	READING	CHANGE IN READING	PASS/ FAIL	COMMENTS	QA ID
1	9 MAY	1250	0	+6		PRESSURIZE	TD
2		1254	6	0		STABLIZE	TD
3		1309	6	+4		PRESSURIZE	TD
4		1311	10	-1		STABLIZE	TD
5		1327	9	-1	FAIL	END TEST	TD
6		1345	8	-2		EXTENDED TEST	TD

VISUAL MONITORING:

CONTRACTOR'S REPRESENTATIVE day/mo/yr — CQA REPRESENTATIVE 9 MAY 01 day/mo/yr

FINAL APPROVAL:

CONTRACTOR'S REPRESENTATIVE 11 May 01 day/mo/yr — CQA REPRESENTATIVE 11 May 2001 day/mo/yr

COPY TO:

GEOSYNTEC CONSULTANTS

FLUOR DANIEL FERNALD

PRESSURE TEST LOG

PROJECT: ON-SITE DISPOSAL FACILITY (OSDF)

LOCATION: FERNALD, OHIO PROJECT NO.: GQ1341 TASK NO.: 4.2

DESCRIPTION: EPLTS YEAR: 02

CONTRACTOR: STAVER

TEST DESCRIPTION:

PASS/FAIL CRITERION: NO DROP in PRESSURE ON GAGE

MATERIAL DESCRIPTION: FORCEMAIN: ☐ CONTAINMENT: ☑ MANHOLE: ☐ OTHER:

TEST LOCATION: LCSR WELD TO VH3/1

READING NO.	DATE (day/mo)	TIME	READING	CHANGE IN READING	PASS/ FAIL	COMMENTS	QA ID
1	10 MAY	0724	0	+6		PRESSURIZE	TD
2		0727	6	0		STABLIZE	TD
3		0742	6	+4		PRESSURIZE	TD
4		0745	10	0 TO ½		STABLIZE	TD
5		0800	9½ TO 10	—	FAIL	END TEST	TD
6		0815	9½			ADDITIONAL TIME	TD
7		1008	8			"	TD
NOTE:	READING # 5	WAS	BETWEEN	9½ TO 10	BUT	CLOSER TO 10	ON THE SPRING GAGE TD
	" # 6	"	"	" "	"	" TO 9½	" " " " TD

VISUAL MONITORING:

CONTRACTOR'S REPRESENTATIVE day/mo/yr CQA REPRESENTATIVE 10 May 01 day/mo/yr

FINAL APPROVAL:

CONTRACTOR'S REPRESENTATIVE 11/May/01 day/mo/yr CQA REPRESENTATIVE 11 May 2001 day/mo/yr

COPY TO:

GEOSYNTEC CONSULTANTS

FLUOR DANIEL FERNALD

7201 Vol. 4

PRESSURE TEST LOG

PROJECT: ON-SITE DISPOSAL FACILITY (OSDF)

LOCATION: FERNALD, OHIO PROJECT NO.: GQ1341 TASK NO.: 4.2

DESCRIPTION: EPLTS YEAR: 02

CONTRACTOR: STAVER

TEST DESCRIPTION:

PASS/FAIL CRITERION: NO DROP in PRESSURE on GAGE

MATERIAL DESCRIPTION: FORCEMAIN: ☐ CONTAINMENT: ☑ MANHOLE: ☐ OTHER:

TEST LOCATION: EXISTING LCS CONTAINMENT @ UH3

READING NO.	DATE (day/mo)	TIME	READING	CHANGE IN READING	PASS/ FAIL	COMMENTS	QA ID
1	11 MAY	1037	0	+6		PRESSURIZE	TD
2		1040	6	0		STABLIZE	TD
3		1055	6	+4		PRESSURIZE	TD
4		1057	10	0		STABLIZE	TD
5		1112	10	–	PASS	END TEST	TD

VISUAL MONITORING: CONTRACTOR'S REPRESENTATIVE day/mo/yr CQA REPRESENTATIVE 11 MAY 01 day/mo/yr

FINAL APPROVAL: CONTRACTOR'S REPRESENTATIVE 14 May 01 day/mo/yr CQA REPRESENTATIVE 14 May 2001 day/mo/yr

COPY TO:

GEOSYNTEC CONSULTANTS FILE NO. 1 48-P11

SHEET NO. 1 OF 1

GEOSYNTEC CONSULTANTS

FLUOR DANIEL FERNALD

PRESSURE TEST LOG

PROJECT: ON-SITE DISPOSAL FACILITY (OSDF)

LOCATION: FERNALD, OHIO PROJECT NO.: 6Q1341 TASK NO.: 4.2

DESCRIPTION: EPLTS YEAR: 02

CONTRACTOR: STAVER

TEST DESCRIPTION:

PASS/FAIL CRITERION: NO DROP in PRESSURE ON GAGE

MATERIAL DESCRIPTION: FORCEMAIN: ☐ CONTAINMENT: ☑ MANHOLE: ☐ OTHER:

TEST LOCATION: LES EXISTING TO UH3/2

READING NO.	DATE (day/mo)	TIME	READING	CHANGE IN READING	PASS/ FAIL	COMMENTS	QA ID
1	14 MAY	1257	0	~~1257~~ TD +6		PRESSURIZE	TD
2		1300	6	0		STABLIZE	TD
3		1315	6	+4		PRESSURIZE	TD
4		1317	10	0		STABLIZE	TD
5		1332	10	–	PASS	END TEST	TD

VISUAL MONITORING: CONTRACTOR'S REPRESENTATIVE day/mo/yr — CQA REPRESENTATIVE 14 MAY 01 day/mo/yr

FINAL APPROVAL: CONTRACTOR'S REPRESENTATIVE 14/May/01 day/mo/yr — CQA REPRESENTATIVE 14 May 2001 day/mo/yr

COPY TO:

GEOSYNTEC CONSULTANTS

FLUOR DANIEL FERNALD

PRESSURE TEST LOG

PROJECT: ON-SITE DISPOSAL FACILITY (OSDF)

LOCATION: FERNALD, OHIO PROJECT NO.: GQ1341 TASK NO.: 4.2

DESCRIPTION: EPLTS YEAR: 01

CONTRACTOR: STAVER

TEST DESCRIPTION: PRESSURIZE TO 5 PSI. SOAP TEST LINK SEAL

PASS/FAIL CRITERION: ~~NO DROP IN PRESSURE ON GAGE~~ TO 4/20

MATERIAL DESCRIPTION: FORCEMAIN: ☐ CONTAINMENT: ☑ MANHOLE: ☐ OTHER:

TEST LOCATION: EPLTS FROM VH4 TO VH5

READING NO.	DATE (day/mo)	TIME	READING	CHANGE IN READING	PASS/ FAIL	COMMENTS	QA ID
1	20 June	1429	0	5			TD
2		1430	5	0			TD
3		1450	5	0	PASS	SOAP BUBBLES WERE	TD
						DETECTED ON THE	TD
						VH4 LINK SEAL. SEAL	TD
						TIGHTENED LEAK STOPPED	TD

VISUAL MONITORING: CONTRACTOR'S REPRESENTATIVE day/mo/yr — CQA REPRESENTATIVE 20 June 01 day/mo/yr

FINAL APPROVAL: CONTRACTOR'S REPRESENTATIVE 20 Jun 01 day/mo/yr — CQA REPRESENTATIVE 20 June 2001 day/mo/yr

COPY TO:

GEOSYNTEC CONSULTANTS

FLUOR DANIEL FERNALD

Vol. 4

PRESSURE TEST LOG

PROJECT: ON-SITE DISPOSAL FACILITY (OSDF)

LOCATION: FERNALD, OHIO PROJECT NO.: GQ1341 TASK NO.: 4.2

DESCRIPTION: EPLTS YEAR: 02

CONTRACTOR: STAVER

TEST DESCRIPTION: Pressurize To 5 PSI. Soap Test Link Seals

PASS/FAIL CRITERION: ~~No Drop in Pressure on Gage~~ TD 6/20

MATERIAL DESCRIPTION: FORCEMAIN: ☐ CONTAINMENT: ☑ MANHOLE: ☐ OTHER:

TEST LOCATION: EPLTS From VH5 To VH6

READING NO.	DATE (day/mo)	TIME	READING	CHANGE IN READING	PASS/ FAIL	COMMENTS	QA ID
1	20 June	1306	0	—	—	Test Stopped Due To Leak	TD
1		1345	3	5			TD
2		1349	5	0			TD
3		1403	N/A	N/A	PASS	No Soap Bubbles Found	TD
						on Link Seals in VH5	TD
						and VH6	TD

VISUAL MONITORING: CONTRACTOR'S REPRESENTATIVE day/mo/yr — CQA REPRESENTATIVE 20 June 01 day/mo/yr

FINAL APPROVAL: CONTRACTOR'S REPRESENTATIVE 20 Jun 01 day/mo/yr — CQA REPRESENTATIVE 20 June 2001 day/mo/yr

COPY TO:

GEOSYNTEC CONSULTANTS

FLUOR DANIEL FERNALD

PRESSURE TEST LOG

PROJECT: ON-SITE DISPOSAL FACILITY (OSDF)

LOCATION: FERNALD, OHIO PROJECT NO.: 601341 TASK NO.: 4.2

DESCRIPTION: EPLTS YEAR: 01

CONTRACTOR: STAVER

TEST DESCRIPTION: PRESSURIZE TO 5 PSI, SOAP JOINTS / LINK SEAL FOR LEAKS

PASS/FAIL CRITERION: ~~NO DROP IN PRESSURE ON GAGE~~ TD 6/20

MATERIAL DESCRIPTION: FORCEMAIN: ☐ CONTAINMENT: ☑ MANHOLE: ☐ OTHER: ____

TEST LOCATION: EPLTS LINE FROM VH6 TO C.VH

READING NO.	DATE (day/mo)	TIME	READING	CHANGE IN READING	PASS/ FAIL	COMMENTS	QA ID
1	20 JUNE	1029	0	5			TD
2		1054	5	N/A			TD
3		1105	N/A	N/A	PASS	NO SOAP BUBBLES FOUND	TD
						ON CVH SEAL AND ON	TD
						LINK SEAL IN VH6	TD

VISUAL MONITORING: _____ CONTRACTOR'S REPRESENTATIVE day/mo/yr _____ CQA REPRESENTATIVE 20 June 01 day/mo/yr

FINAL APPROVAL: _____ CONTRACTOR'S REPRESENTATIVE 20 Jun 01 day/mo/yr _____ CQA REPRESENTATIVE 20 June 2001 day/mo/yr

COPY TO: ____

GEOSYNTEC CONSULTANTS

FLUOR DANIEL FERNALD

PRESSURE TEST LOG

PROJECT: ON-SITE DISPOSAL FACILITY (OSDF)

LOCATION: FERNALD, OHIO PROJECT NO.: GQ1341 TASK NO.: 4.2

DESCRIPTION: EPLTS YEAR: 01

CONTRACTOR: STAVER

TEST DESCRIPTION: PRESSURIZE TO 5 PSI. SOAP JOINTS FOR LEAKS

PASS/FAIL CRITERION: ~~NO DROP IN PRESSURE ON GAGE~~ TD 6/20 NO BUBBLES ON SOAP TEST

MATERIAL DESCRIPTION: FORCEMAIN: ☐ CONTAINMENT: ☑ MANHOLE: ☐ OTHER: ____

TEST LOCATION: CONTINGENT LEACHATE LINE VH 6 TO CONTROL V.H.

READING NO.	DATE (day/mo)	TIME	READING	CHANGE IN READING	PASS/ FAIL	COMMENTS	QA ID
1	20 JUNE	0735	0	5			TD
2		0758	5				TD
*	TEST STOPPED DUE TO LEAK IN BALL VALVE						TD
1		0846	0	5		TEST RE STARTED	TD
2		0914	5	N/A			TD
3		0928	N/A	N/A	PASS	NO SOAP BUBBLES FOUND	TD
						ON EXTERIOR 10" AND	TD
						INTERIOR 8.6".	TD

VISUAL MONITORING: _____ CONTRACTOR'S REPRESENTATIVE day/mo/yr — [signature] CQA REPRESENTATIVE 20 JUNE 01 day/mo/yr

FINAL APPROVAL: [signature] CONTRACTOR'S REPRESENTATIVE 20 Jun 01 day/mo/yr — Collin P. Sullivan CQA REPRESENTATIVE 20 June 2001 day/mo/yr

COPY TO: ____

GEOSYNTEC CONSULTANTS

FLUOR DANIEL FERNALD

PRESSURE TEST LOG

PROJECT: ON-SITE DISPOSAL FACILITY (OSDF)

LOCATION: FERNALD, OHIO PROJECT NO.: 6Q1341 TASK NO.: 4.2

DESCRIPTION: EPLTS YEAR: 01

CONTRACTOR: STAVER

TEST DESCRIPTION: Pressurize To 5 PSI. Soap Test Link Seals

PASS/FAIL CRITERION: ~~No Drop in Pressure on Gage~~ TD 6/21

MATERIAL DESCRIPTION: FORCEMAIN: ☐ CONTAINMENT: ☑ MANHOLE: ☐ OTHER:

TEST LOCATION: VH 4 To VH3

READING NO.	DATE (day/mo)	TIME	READING	CHANGE IN READING	PASS/ FAIL	COMMENTS	QA ID
1	21 June	1037	0	5		Long Fill Time Due To Leak @ VH 4	TD
2		1101	5	n/a			TD
3		1130	5	n/a	PASS	Soap Bubbles were	TD
						Detected on VH4	TD
						Link Seal. Seal Tightened	TD
						Leak Stopped.	TD

VISUAL MONITORING:

CONTRACTOR'S REPRESENTATIVE day/mo/yr — CQA REPRESENTATIVE 21 June 01 day/mo/yr

FINAL APPROVAL:

CONTRACTOR'S REPRESENTATIVE 21 Jun 01 day/mo/yr — CQA REPRESENTATIVE 21 June 2001 day/mo/yr

COPY TO:

GEOSYNTEC CONSULTANTS

FLUOR DANIEL FERNALD

PRESSURE TEST LOG

PROJECT: ON-SITE DISPOSAL FACILITY (OSDF)

LOCATION: FERNALD, OHIO PROJECT NO.: GQ1341 TASK NO.: 4.2

DESCRIPTION: EPLTS YEAR: 01

CONTRACTOR: STAVER

TEST DESCRIPTION: PRESSURIZE TO 5 PSI SOAP TEST LINK SEALS

PASS/FAIL CRITERION: ~~NO DROP IN PRESSURE ON GAGE~~ NO 4/1

MATERIAL DESCRIPTION: FORCEMAIN: ☐ CONTAINMENT: ☑ MANHOLE: ☐ OTHER:

TEST LOCATION: UH 2 to UH3

READING NO.	DATE (day/mo)	TIME	READING	CHANGE IN READING	PASS/ FAIL	COMMENTS	QA ID
1	21 June	1359	0	5			TD
		1406	5	N/A			YD
		1435	5	N/A	PASS	No Soap Bubbles	YD
						Detected @UH 2	TD
						or UH3	YD

VISUAL MONITORING: CONTRACTOR'S REPRESENTATIVE day/mo/yr CQA REPRESENTATIVE 21 June 01 day/mo/yr

FINAL APPROVAL: CONTRACTOR'S REPRESENTATIVE 21 Jun 01 day/mo/yr CQA REPRESENTATIVE 21 June 2001 day/mo/yr

COPY TO:

7284 Vol. 4

GEOSYNTEC CONSULTANTS

FLUOR DANIEL FERNALD

PRESSURE TEST LOG

PROJECT: ON-SITE DISPOSAL FACILITY (OSDF)

LOCATION: FERNALD, OHIO PROJECT NO.: 6Q1341 TASK NO.: 4.2

DESCRIPTION: EPLTS YEAR: 01

CONTRACTOR: STAVER

TEST DESCRIPTION: PRESSURIZE TO 5 PSI. SOAP TEST LINK SEALS

PASS/FAIL CRITERION: ~~NO DROP IN PRESSURE ON GAGE~~ TO 4.5

MATERIAL DESCRIPTION: FORCEMAIN: ☐ CONTAINMENT: ☑ MANHOLE: ☐ OTHER:

TEST LOCATION: VH1 TO VH2

READING NO.	DATE (day/mo)	TIME	READING	CHANGE IN READING	PASS/ FAIL	COMMENTS	QA ID
1	25 June	1350	0	5			TD
2		1408	5	N/A			TD
3		1425	5	N/A	PASS	NO SOAP BUBBLES	TD
						DETECTED @ VH1 +	TD
						VH2	TD

VISUAL MONITORING: CONTRACTOR'S REPRESENTATIVE day/mo/yr — CQA REPRESENTATIVE 25 June 01 day/mo/yr

FINAL APPROVAL: CONTRACTOR'S REPRESENTATIVE 25 Jun/01 day/mo/yr — CQA REPRESENTATIVE 25 June 2001 day/mo/yr

COPY TO:

GEOSYNTEC CONSULTANTS

EPLTS CONSTRUCTION
HYDROSTATIC PRESSURE TESTING
ALLOWANCE FOR EXPANSION/CONTRACTION

6-in. SDR HDPE PIPE AT 60 psi
TEST PRESSURE ADJUSTMENT FACTOR = 0.25
10-in. SDR HDPE PIPE AT 15 psi
TEST PRESSURE ADJUSTMENT FACTOR = 0.0625

ONE HOUR TEST

Length between each valve house (VH-1 to VH-6)
L = 388 ft.

AMBIENT TEMP (^{0}F)	CORRECTION FACTOR	MAKE-UP WATER			
		6-in. CARRIER		10-in. CONTAINMENT	
		gal.	liters	gal.	liters
75	1.00*	0.29	1.10	0.1820	0.69
74	0.96	0.28	1.06	0.1747	0.66
73	0.92	0.27	1.01	0.1674	0.63
72	0.89	0.26	0.98	0.1620	0.61
71	0.86	0.25	0.95	0.1565	0.59
70	0.82	0.24	0.90	0.1492	0.57
69	0.78	0.23	0.83	0.1420	0.54
68	0.75*	0.22	0.81	0.1365	0.52
67	0.74	0.215	0.815	0.1345	0.51
66	0.73	0.212	0.80	0.1329	0.50
65	0.72	0.21	0.79	0.1310	0.50
64	0.70	0.20	0.77	0.1274	0.48
63	0.69	0.20	0.76	0.1256	0.48
62	0.68	0.20	0.75	0.1238	0.47
61	0.66	0.19	0.73	0.1201	0.46
60	0.64	0.19	0.70	0.1165	0.44
59	0.63	0.18	0.69	0.1147	0.43
58	0.61	0.18	0.67	0.1110	0.42
57	0.60	0.17	0.66	0.1092	0.41
56	0.59	0.17	0.65	0.1074	0.41
55	0.57	0.17	0.63	1.1037	0.39
54	0.56	0.16	0.62	0.1019	0.39
53	0.55	0.16	0.61	0.1001	0.38
52	0.53	0.15	0.58	0.0965	0.37
51	0.52	0.15	0.57	0.0946	0.36
50	0.50	0.15	0.55	0.091	0.35

* Actual values from AWWA; others are interpolated.

1 gal = 3.785 liters

1 liter = 0.264 gal.

EPLTS CONSTRUCTION
HYDROSTATIC PRESSURE TESTING
ALLOWANCE FOR EXPANSION/CONTRACTION

6-in. SDR HDPE PIPE AT 60 psi
TEST PRESSURE ADJUSTMENT FACTOR = 0.25
10-in. SDR HDPE PIPE AT 15 psi
TEST PRESSURE ADJUSTMENT FACTOR = 0.0625

ONE HOUR TEST

Length between control valve house (CVH) and end of RIMIA
L = 705 ft.

AMBIENT TEMP (^{0}F)	CORRECTION FACTOR	MAKE-UP WATER			
		6-in. CARRIER		10-in. CONTAINMENT	
		gal.	liters	gal.	liters
75	1.00*	0.529	2.0023	0.3305	1.2509
74	0.96	0.508	1.9228	0.3130	1.1847
73	0.92	0.486	1.8395	0.2959	1.1200
72	0.89	0.471	1.7827	0.2824	1.0689
71	0.86	0.455	1.7222	0.2690	1.0182
70	0.82	0.434	1.6427	0.2529	0.9572
69	0.78	0.412	1.5594	0.2371	0.8974
68	0.75*	0.397	1.5026	0.2247	0.8505
67	0.74	0.391	1.4799	0.2185	0.8270
66	0.73	0.386	1.4610	0.2123	0.8036
65	0.72	0.381	1.4421	0.2062	0.7805
64	0.70	0.370	1.4005	0.1974	0.7472
63	0.69	0.365	1.3815	0.1915	0.7248
62	0.68	0.360	1.3626	0.1858	0.7033
61	0.66	0.349	1.3210	0.1774	0.6715
60	0.64	0.338	1.2793	0.1692	0.6404
59	0.63	0.333	1.2604	0.1638	0.6200
58	0.61	0.323	1.2226	0.1559	0.5901
57	0.60	0.317	1.1998	0.1507	0.5704
56	0.59	0.312	1.1809	0.1456	0.5511
55	0.57	0.301	1.1393	0.1381	0.5227
54	0.56	0.296	1.1204	0.1332	0.5042
53	0.55	0.291	1.1014	0.1284	0.4860
52	0.53	0.280	1.0598	0.1214	0.4595
51	0.52	0.275	1.0409	0.1169	0.4425
50	0.50	0.264	0.9992	0.1102	0.4171

* Actual values from AWWA; others are interpolated.

1 gal = 3.785 liters

1 liter = 0.264 gal.

Figure B2: Temperature Correction

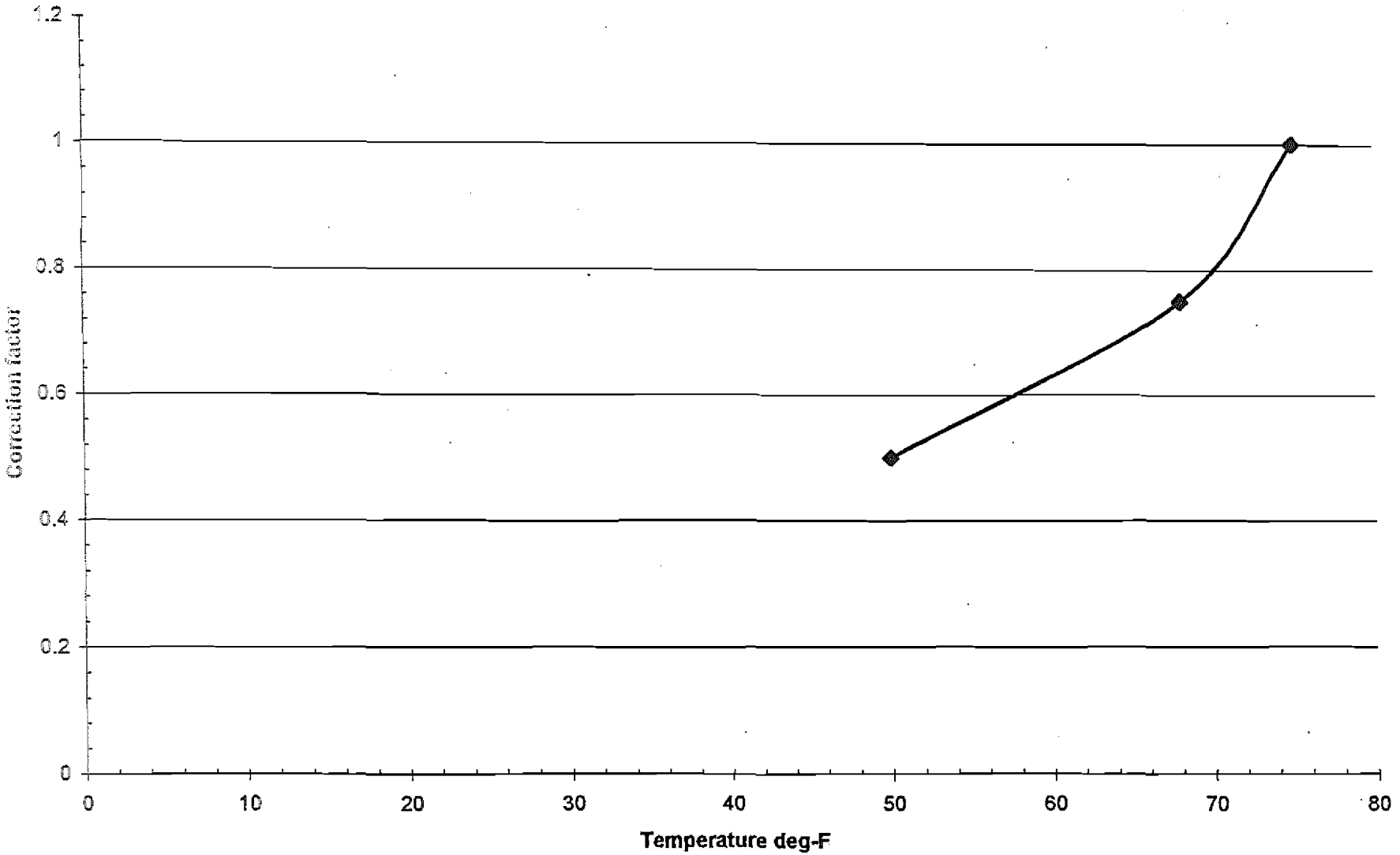

EPLTS CONSTRUCTION
HYDROSTATIC PRESSURE TESTING
6-in. CARRIER PIPE ONLY – 60 psi TEST PRESSURE

1. **VH-1 to VH-2 (L = 388 ft.)**

TEST DATE: 8/28/00

START TEST TIME (INITIAL EXPANSION PHASE): 7:40 A.M.

AMBIENT TEMP: 62°F WATER TEMP: NOT MEASURED

START ACTUAL TEST TIME (ACTUAL TEST PHASE): 11:50 A.M.

AMBIENT TEMP: 78°F WATER TEMP: NOT MEASURED

END ACTUAL TEST TIME: 12:50 P.M.

AMBIENT TEMP: 79°F WATER TEMP: NOT MEASURED

TEMP. CORRECTION FACTOR > 1.0

ALLOWABLE MAKE-UP WATER > 0.29 gal. (1.1 liters)

MEASURED MAKE-UP WATER = 0.13 gal. (0.5 liters)

2. **VH-2 to VH-3 (L = 388 ft.)**

ORIGINAL TEST DATE: 9/19/00

START TEST TIME (INITIAL EXPANSION PHASE): 7:50 A.M.

AMBIENT TEMP: 50°F WATER TEMP: NOT MEASURED

START ACTUAL TEST TIME (ACTUAL TEST PHASE): 11:50 A.M.

AMBIENT TEMP: 74°F WATER TEMP: NOT MEASURED

END ACTUAL TEST TIME: 12:55 P.M.

AMBIENT TEMP: 79°F WATER TEMP: NOT MEASURED

TEMP CORRECTION FACTOR = 0.96

ALLOWABLE MAKE-UP WATER = 0.28 gal. (1.06 liters)

MEASURED MAKE-UP WATER = 0.26 gal. (1.0 liters)

BECAUSE THE MEASURED MAKE-UP WATER WAS CLOSE TO THE ALLOWABLE, A RE-TEST WAS PERFORMED ON 7 FEBRUARY 2001

EPLTS CONSTRUCTION
HYDROSTATIC PRESSURE TESTING
6-in. CARRIER PIPE ONLY – 60 psi TEST PRESSURE

2A. **VH-2 to VH-3 (L = 388 ft.)**

RE-TEST DATE: 02/07/01 (ALTERNATIVE TEST PERFORMED)

START TEST TIME (INITIAL EXPANSION PHASE): 9:01 A.M.

AMBIENT TEMP: 32°F
WATER TEMP: 36°F

START ACTUAL TEST TIME (ACTUAL TEST PHASE): 1:02 P.M.

AMBIENT TEMP:
WATER TEMP:

END ACTUAL TEST TIME: 2:02 P.M.

AMBIENT TEMP:
WATER TEMP:

TEMP. CORRECTION FACTOR = N/A

START OF ACTUAL TEST PHASE PRESSURE = 60 psi
END OF ACTUAL TEST PHASE PRESSURE = 60 psi
CHANGE IN ACTUAL TEST PHASE PRESSURE = 0 psi

EPLTS CONSTRUCTION
HYDROSTATIC PRESSURE TESTING
6-in. CARRIER PIPE ONLY – 60 psi TEST PRESSURE

VH-3 to VH-4 (L = 388 ft.)

TEST DATE: 10/5/00

START TEST TIME (INITIAL EXPANSION PHASE): 8:00 A.M.

AMBIENT TEMP: 64°F WATER TEMP: NOT MEASURED

START ACTUAL TEST TIME (ACTUAL TEST PHASE): 12:00 P.M.

AMBIENT TEMP: 68°F WATER TEMP: NOT MEASURED

END ACTUAL TEST TIME: 1:00 P.M.

AMBIENT TEMP: 75°F WATER TEMP: NOT MEASURED

TEMP CORRECTION FACTOR = 0.75

ALLOWABLE MAKE-UP WATER = 0.22 gal. (0.8 liters)

MEASURED MAKE-UP WATER = 0.13 gal. (0.5 liters)

VH-4 to VH-5 (L = 388 ft.)

TEST DATE: 10/27/00

START TEST TIME (INITIAL EXPANSION PHASE): 7:46 A.M.

AMBIENT TEMP: 57°F WATER TEMP: NOT MEASURED

START ACTUAL TEST TIME (ACTUAL TEST PHASE): 11:46 A.M.

AMBIENT TEMP: 71°F WATER TEMP: NOT MEASURED

END ACTUAL TEST TIME: 12:46 P.M.

AMBIENT TEMP: 77°F WATER TEMP: NOT MEASURED

TEMP CORRECTION FACTOR = 0.86

ALLOWABLE MAKE-UP WATER = 0.25 gal. (0.95 liters)

MEASURED MAKE-UP WATER = 0 gal. (0 liters)

EPLTS CONSTRUCTION
HYDROSTATIC PRESSURE TESTING
10-IN. CONTAINMENT PIPE ONLY – 15 PSI TEST PRESSURE

1. **VH-1 to VH-2 (L = 388 ft.)**

TEST DATE: 8/29/00

START TEST TIME (INITIAL EXPANSION PHASE): 7:42 A.M.

AMBIENT TEMP: 63°F WATER TEMP:

START ACTUAL TEST TIME (ACTUAL TEST PHASE): 11.23 A.M.

AMBIENT TEMP: 85°F WATER TEMP:

END ACTUAL TEST TIME: 12:23 P.M.

AMBIENT TEMP: 90°F WATER TEMP:

TEMP CORRECTION FACTOR > 1.0

ALLOWABLE MAKE-UP WATER > 0.18 gal. (0.69 liters)

MEASURED MAKE-UP WATER = 0 gal. (0 liters)

2. **VH-2 to VH-3 (L = 388 ft.)**

TEST DATE: 9/20/00

START TEST TIME (INITIAL EXPANSION PHASE): 8:50 A.M.

AMBIENT TEMP: 70°F WATER TEMP:

START ACTUAL TEST TIME (ACTUAL TEST PHASE): 12.50 P.M.

AMBIENT TEMP: 80°F WATER TEMP:

END ACTUAL TEST TIME: 1:50 P.M.

AMBIENT TEMP: 78°F WATER TEMP:

TEMP CORRECTION FACTOR > 1.0

ALLOWABLE MAKE-UP WATER > 0.18 gal. (0.69 liters)

MEASURED MAKE-UP WATER = 0 gal. (0 liters)

EPLTS CONSTRUCTION
HYDROSTATIC PRESSURE TESTING
10-IN. CONTAINMENT PIPE ONLY – 15 PSI TEST PRESSURE

3. **VH-3 to VH-4 (L = 388 ft.)**

TEST DATE: 10/09/00

START TEST TIME (INITIAL EXPANSION PHASE): 8:10 A.M.

AMBIENT TEMP: 38°F WATER TEMP:

START ACTUAL TEST TIME (ACTUAL TEST PHASE): 12.15 P.M.

AMBIENT TEMP: 48°F WATER TEMP:

END ACTUAL TEST TIME: 1:15 P.M.

AMBIENT TEMP: 49°F WATER TEMP:

TEMP CORRECTION FACTOR ≤ 0.50

ALLOWABLE MAKE-UP WATER < 0.09 gal. (0.35 liters)

MEASURED MAKE-UP WATER = 0 gal. (0 liters)

4. **VH-4 to VH-5 (L = 388 ft.)**

TEST DATE: 10/31/00

START TEST TIME (INITIAL EXPANSION PHASE): 7:23 A.M.

AMBIENT TEMP: 34°F WATER TEMP:

START ACTUAL TEST TIME (ACTUAL TEST PHASE): 1.05 P.M.

AMBIENT TEMP: 62°F WATER TEMP:

END ACTUAL TEST TIME: 2:05 P.M.

AMBIENT TEMP: 65°F WATER TEMP:

TEMP CORRECTION FACTOR ≈ 0.68

ALLOWABLE MAKE-UP WATER ≈ 0.12 gal. (0.47 liters)

MEASURED MAKE-UP WATER = 0 gal. (0 liters)

EPLTS CONSTRUCTION
HYDROSTATIC PRESSURE TESTING
10-IN. CONTAINMENT PIPE ONLY – 15 PSI TEST PRESSURE

5. **VH-5 to VH-6 (L = 388 ft.)**

TEST DATE: 11/03/00

START TEST TIME (INITIAL EXPANSION PHASE): 9:53 A.M.

AMBIENT TEMP: 66°F WATER TEMP: 64°F

START ACTUAL TEST TIME (ACTUAL TEST PHASE): 1:56 P.M.

AMBIENT TEMP: 74°F WATER TEMP:

END ACTUAL TEST TIME: 2:56 P.M.

AMBIENT TEMP: 71°F WATER TEMP: 63°F

TEMP CORRECTION FACTOR = 0.96

ALLOWABLE MAKE-UP WATER = 0.17 gal. (0.66 liters)

MEASURED MAKE-UP WATER = 0 gal. (0 liters)

6. **VH-6 to CVH (L = 1410 ft.)**

TEST DATE: 01/20/01

START TEST TIME (INITIAL EXPANSION PHASE): 8:30 A.M.

AMBIENT TEMP: WATER TEMP:

START ACTUAL TEST TIME (ACTUAL TEST PHASE): 12.32 P.M.

AMBIENT TEMP: WATER TEMP:

END ACTUAL TEST TIME: 1:32 P.M.

AMBIENT TEMP: WATER TEMP:

TEMP CORRECTION FACTOR

ALLOWABLE MAKE-UP WATER =

MEASURED MAKE-UP WATER = 0 gal. (0 liters)

GEOSYNTEC CONSULTANTS

FLUOR FERNALD, INC.

PRESSURE TEST LOG

PROJECT: ON-SITE DISPOSAL FACILITY (OSDF)

LOCATION: FERNALD, OHIO PROJECT NO.: GQ1029 TASK NO.: 4.2

DESCRIPTION: E.P.L.T.S. YEAR: 2000

CONTRACTOR: STAVER / RICK

TEST DESCRIPTION: HYDROSTATIC: ☑ PNEUMATIC (ATTACH WRITTEN AUTHORIZATION): ☐

PASS/FAIL CRITERION: No Visible Leaks - Less make up water Than Listed in TABLE 02605-3

MATERIAL DESCRIPTION: FORCEMAIN: ☐ CONTAINMENT: ☐ CARRIER ☑ OTHER: ☐

TARGET PRESSURE: 60 PSI TEST DURATION: 5hr 21min GAUGE NO.: B8-3 GAUGE LOCATION: VH2 END

TEST LOCATION: VH1 TO VH2

FOR CONTAINMENT PIPE TESTING, CARRIER PIPE PRESSURIZED FIRST: ☐ YES ☐ NO N/A

READING NO.	STABILIZATION TEST PERIOD	DATE (day/mo)	TIME	READING	CHANGE IN READING	QA ID
1	PRESSURIZE	28 AUG	0736	0		TD
2	TD 8/28/00 ~~STABILIZATION~~ START TEST		0742	60	60	TD
3	STABILIZATION		0845	49	11	TD
4	PRESSURIZE		0847	60	11	TD
5	STABILIZATION		0945	55	5	TD
6	PRESSURIZE		0946	61	6	TD
7	STABILIZATION		1046	56	5	TD
8	PRESSURIZE		1047	60	4	TD
9	STABILIZATION		1149	57	3	TD
10	PRESSURIZE		1150	60	3	TD
11	TEST HOUR		1251	57	3	TD
12	MAKE UP WATER		1257	1/2 LITER MAKE UP WATER USED		TD

PASS: ☑

FAIL: ☐

VISUAL MONITORING: [signature] 16/01/01 CONTRACTOR'S REPRESENTATIVE day/mo/yr [signature] 28/8/00 CQA REPRESENTATIVE day/mo/yr

FINAL APPROVAL: [signature] 16/01/01 CONTRACTOR'S REPRESENTATIVE day/mo/yr [signature] 29 Aug 2000 SITE CQA MANAGER day/mo/yr

COPY TO:

Calibration Report # 1000 3549 3 2258 00 7633 728 Vol. 4 Pg 1 of 2

GEOSYNTEC CONSULTANTS

FLUOR FERNALD, INC.

PRESSURE TEST LOG

Gauge Manufacture Weiss

PROJECT: ON-SITE DISPOSAL FACILITY (OSDF)

LOCATION: FERNALD, OHIO PROJECT NO.: GQ1029 TASK NO.: 4.2

DESCRIPTION: Phase III YEAR: 2000

CONTRACTOR: Staven / Rieck / Calibration Date, 9 Aug 2000 JPS @ BMI of Dayton

TEST DESCRIPTION: HYDROSTATIC: ☒ PNEUMATIC (ATTACH WRITTEN AUTHORIZATION): ☐

PASS/FAIL CRITERION: (16 psi)

MATERIAL DESCRIPTION: FORCEMAIN: ☐ CONTAINMENT: ☒ CARRIER ☐ OTHER: ☐

TARGET PRESSURE: TEST DURATION: GAUGE NO.: 01 GAUGE LOCATION: N/# 2

TEST LOCATION: Manhole one TO Manhole Two

FOR CONTAINMENT PIPE TESTING, CARRIER PIPE PRESSURIZED FIRST: ☐ YES ☑ NO

READING NO.	STABILIZATION TEST PERIOD	DATE (day/mo)	TIME	READING	CHANGE IN READING	QA ID
1	Start of 15 hr.	29 Aug	07:42	16	Start	DLE
2	@ 10 min.		07:52	16	None	
3	@ 26 min.		08:08	16	"	
4	@ 41 min.		08:23	16	"	
5	@ 51 min.		08:33	14	- 2 LB	
6	Repressure	add water	08:38	16	add water Restart	
7	@ 15 min.		08:53	16	None	
8	@ 15 min.		09:03	16	None	
9	@ 15 min.		09:18	16	None	
10	@ 15 min.		09:33	15	1 LB	
11	Repressure	add water	09:35	15	add water	
12	@ 2 min.		09:37	16	None	
13	@ 15 min.		09:52	16	None	
14	@ 22 min.	add water	10:20	15	add water ~~Restart~~	
15	@ 3 min.		10:23	16	Restart	
16	@ 15 min.		10:38	16	None	DLE

PASS: ☒

FAIL: ☐

VISUAL MONITORING: R. Wood — CONTRACTOR'S REPRESENTATIVE — 16/01/01 day/mo/yr — David L. Evans — CQA REPRESENTATIVE — 29 Aug 2000 day/mo/yr

FINAL APPROVAL: R. Wood — CONTRACTOR'S REPRESENTATIVE — 16/01/01 day/mo/yr — Collin P. Johnson — SITE CQA MANAGER — 29 Aug 2000 day/mo/yr

COPY TO:

Page 2 of 2

7284 Vol. 4

Calibration Report # 1000 3549 3.2258 007633

GEOSYNTEC CONSULTANTS

FLUOR FERNALD, INC.

PRESSURE TEST LOG

PROJECT: ON-SITE DISPOSAL FACILITY (OSDF)

LOCATION: FERNALD, OHIO PROJECT NO.: GQ1029 TASK NO.: 4.2

DESCRIPTION: Phase III YEAR: 2000

CONTRACTOR: Steven / Rick / Calibration Date, 9, Aug. 2000

TEST DESCRIPTION: HYDROSTATIC: ☒ / PNEUMATIC (ATTACH WRITTEN AUTHORIZATION): ☐

PASS/FAIL CRITERION: 16 PSI

MATERIAL DESCRIPTION: FORCEMAIN: ☐ CONTAINMENT: ☒ CARRIER ☐ OTHER: ☐

TARGET PRESSURE: TEST DURATION: GAUGE NO.: 01 GAUGE LOCATION: M/H 2

TEST LOCATION: Manhole one TO Manhole Two

FOR CONTAINMENT PIPE TESTING, CARRIER PIPE PRESSURIZED FIRST: ☐ YES ☒ NO

READING NO.	STABILIZATION TEST PERIOD	DATE (day/mo)	TIME	READING	CHANGE IN READING	QA ID
17	@15 min	29 Aug	10:53	16	None	DLE
18	@15 min	29 Aug	11:08	16	"	
19	@15 min	29 Aug	11:23	16	"	
20	0 min. start	29 Aug	1123	16	Start Test no loss	
21	1 hour	29 Aug	1223	16	No Prop in pressure	P+E

PASS: ☒

FAIL: ☐

VISUAL MONITORING: [signature] 16/01/01 — CONTRACTOR'S REPRESENTATIVE, day/mo/yr

David L. Evans 29 Aug 2000 — CQA REPRESENTATIVE, day/mo/yr

FINAL APPROVAL: [signature] 16/01/01 — CONTRACTOR'S REPRESENTATIVE, day/mo/yr

[signature] 29 Aug 2000 — SITE CQA MANAGER, day/mo/yr

COPY TO:

GEOSYNTEC CONSULTANTS

FLUOR FERNALD, INC.

PRESSURE TEST LOG

PROJECT: ON-SITE DISPOSAL FACILITY (OSDF)

LOCATION: FERNALD, OHIO PROJECT NO.: G01029 TASK NO.: 4.2

DESCRIPTION: Phase III YEAR: 2000

CONTRACTOR: Staver / Rieck ~~B&H~~ / 3/2001

TEST DESCRIPTION: HYDROSTATIC: ☒ PNEUMATIC (ATTACH WRITTEN AUTHORIZATION): ☐

PASS/FAIL CRITERION: 60 PSI (Approx 400 ft) Test Length

MATERIAL DESCRIPTION: FORCEMAIN: ☐ CONTAINMENT: ☐ CARRIER ☒ OTHER: ☐

TARGET PRESSURE: TEST DURATION: GAUGE NO. Ser# BB-3 GAUGE LOCATION: Test Flange VH 3

TEST LOCATION: Between Manhole #2 TO Manhole #3

FOR CONTAINMENT PIPE TESTING, CARRIER PIPE PRESSURIZED FIRST: ☒ YES ☐ NO

READING NO.	STABILIZATION TEST PERIOD	DATE (day/mo)	TIME	READING	CHANGE IN READING	QA ID
Start ①	11:20 60 LBS	18/Sept/00	11:20	60 LBS	Start	DLE
②	add water	18/Sept/00	12:20	51 / 60 LBS	stabilization	DLE
③	add Water	18/Sept 00	13:25	56 / 60 LBS	" 4	DLE
④	add water	18/Sept 00	14:26	55 / 60 LBS	" 5	DLE
⑤						

Test Stopped / Hose Broke on the Final Fill will try 19/Sept/00

Note! The Hydro Test Failed Due To Fill Hose on the Last Fill, for make up water

PASS: ☐

FAIL: ☒

VISUAL MONITORING: David L Evans 18/Sept/00

CONTRACTOR'S REPRESENTATIVE day/mo/yr CQA REPRESENTATIVE day/mo/yr

FINAL APPROVAL: Colin Jackson 18 Sept 2000

CONTRACTOR'S REPRESENTATIVE day/mo/yr SITE CQA MANAGER day/mo/yr

COPY TO:

GEOSYNTEC CONSULTANTS

FLUOR FERNALD, INC.

PRESSURE TEST LOG

PROJECT: ON-SITE DISPOSAL FACILITY (OSDF)

LOCATION: FERNALD, OHIO PROJECT NO.: GQ1029 TASK NO.: 4.2

DESCRIPTION: Phase III YEAR: 2000

CONTRACTOR: Stauer / Rieck 18/Sept/00

TEST DESCRIPTION: HYDROSTATIC: ☒ PNEUMATIC (ATTACH WRITTEN AUTHORIZATION): ☐

PASS/FAIL CRITERION: 60PSI (approx 400 ft of Pipe To Test)

MATERIAL DESCRIPTION: FORCEMAIN: ☐ CONTAINMENT: ☐ CARRIER ☒ OTHER: ☐

TARGET PRESSURE: TEST DURATION: GAUGE NO.: Spec # B 8.3 GAUGE LOCATION: TEST FLANGE V.H. #3

TEST LOCATION: Between Manhole #2 TO Manhole #3

FOR CONTAINMENT PIPE TESTING, CARRIER PIPE PRESSURIZED FIRST: ☒ YES ☐ NO

READING NO.	STABILIZATION TEST PERIOD	DATE (day/mo)	TIME	READING	CHANGE IN READING	QA ID
Start 1	11:20	18 Sept. 00	11:20	61 LBS	start	DLE
2	add water	"	12:20	51 / 60LBS	stab.	DLE
3	" "	"	13:25	56 / 60LBS	"	DLE
4	" "	"	14:26	55 / 60LBS	"	DLE
5	" "	"	15:26	54 / 60LBS	1 Hour test start test	DLE
6	" "	"	16:26			
				STARTED TO ADDED WATER - HOSE BUSTED & WENT TO 50 PSI		TRL
				TEST FAILED RETRY TOMORROW		TRL

PASS: ☐

FAIL: ☐

VISUAL MONITORING: R Wood 16/01/01 CONTRACTOR'S REPRESENTATIVE day/mo/yr — Timothy Bergfeld 18 Sept 2000 CQA REPRESENTATIVE day/mo/yr

FINAL APPROVAL: R Wood 16/01/01 CONTRACTOR'S REPRESENTATIVE day/mo/yr — Collin P. Jackson 19 Sept 2000 SITE CQA MANAGER day/mo/yr

COPY TO:

GEOSYNTEC CONSULTANTS

FLUOR FERNALD, INC.

PRESSURE TEST LOG

PROJECT: ON-SITE DISPOSAL FACILITY (OSDF)

LOCATION: FERNALD, OHIO PROJECT NO.: GQ1029 TASK NO.: 4.2

DESCRIPTION: Phase III YEAR: 2000

CONTRACTOR: STAVER / Black

TEST DESCRIPTION: HYDROSTATIC: ☑ PNEUMATIC (ATTACH WRITTEN AUTHORIZATION): ☐

PASS/FAIL CRITERION: 60 LBS, for 1 Hour approx 400 ft. of Pipe Tested

MATERIAL DESCRIPTION: FORCEMAIN: ☐ CONTAINMENT: ☐ CARRIER ☒ OTHER: ☐

TARGET PRESSURE: 60 TEST DURATION: 1 hr. (4 hr Stab.) GAUGE NO.: Gen. 88.3 GAUGE LOCATION: Test Flange VH-3

TEST LOCATION: Between Valve House 2 TO Valve House 3

FOR CONTAINMENT PIPE TESTING, CARRIER PIPE PRESSURIZED FIRST: ☐ YES ☑ NO

READING NO.	STABILIZATION TEST PERIOD	DATE (day/mo)	TIME	READING	CHANGE IN READING	QA ID
(1) First Fill	First Fill	19/Sept/00	0750 hrs.	60 LBS.	—	DLE
(2)	2nd Fill	"	0855 hrs.	50/To 50 LBS	10 LBS	DLE
(3)	3rd Fill	"	0955 hrs.	56/To 60 LBS	4 LBS	DLE
	4th Fill	"	1055 hrs.	59/To 60 LBS	1 LBS	DLE
(5)	5th Fill	"	1155 hrs.	59/To 60 LBS	1 LBS	DLE
(6)	6th Fill	19 Sept. 00	1255 hrs.	59/To 60 LBS	1 LBS	DLE
		add 1 Liter of Makeup water To 60 LBS.				

PASS: ☑

FAIL: ☐

VISUAL MONITORING: [signature] 19/01/01 CONTRACTOR'S REPRESENTATIVE day/mo/yr [signature] 19 Sept. 00 CQA REPRESENTATIVE day/mo/yr

FINAL APPROVAL: [signature] 19/01/01 CONTRACTOR'S REPRESENTATIVE day/mo/yr [signature] 19 Sept 2000 SITE CQA MANAGER day/mo/yr

COPY TO:

©GEOSYNTEC CONSULTANTS FILE NO. F-PTL

SHEET NO. 1 OF 1

GEOSYNTEC CONSULTANTS

FLUOR DANIEL FERNALD

PRESSURE TEST LOG

PROJECT: ON-SITE DISPOSAL FACILITY (OSDF)

LOCATION: FERNALD, OHIO PROJECT NO.: GQ0409 TASK NO.: 4.2

DESCRIPTION: EPLTS YEAR: 2000

CONTRACTOR: STAVER/RICCIS

TEST DESCRIPTION: HYDROSTATIC: ☑ PNEUMATIC (ATTACH WRITTEN AUTHORIZATION): ☐

PASS/FAIL CRITERION: No DROP in PRESSURE on GAGE

MATERIAL DESCRIPTION: FORCEMAIN: ☐ CONTAINMENT: ☐ CARRIER ☑ OTHER: ☐

TARGET PRESSURE: 60 PSI TEST DURATION: GAUGE NO.: 01 GAUGE LOCATION: ~~01~~ TD

TEST LOCATION: VH2 TO VH3

FOR CONTAINMENT PIPE TESTING. CARRIER PIPE PRESSURIZED FIRST: ☐ YES ☐ NO n/a

READING NO.	STABILIZATION TEST PERIOD	DATE (day/mo)	TIME	READING	CHANGE IN READING	QA ID
1	PRESSURIZE	21 Dec	1123	60	—	TD
2	STABLIZE		1223	57	-3	TD
3	STANDBY		1223	—	—	—
4	PRESSURIZE		1239	60	+3	TD
5	STABLIZE		1339	58	-2	TD
6	PRESSURIZE		1340	60	+2	TD
7	STABLIZE		~~1240~~ 1440	59	-1	TD
8	PRESSURIZE		1440	60	+1	TD
9	[illegible]		1540	60	—	MH
10			1640	64	+4	MH
11		21 Dec	~~1740~~ 1715	78	+14	CS
12		21 Dec	1740	84	+6	CS
	ANULAR SPACE TEMP	44°F	Annular Space Temp @ 1730 39°F			
	WATER TEMP	34°F	Pressure released from VH2 @ 1750			

PASS: ☐
FAIL: ☐

Guage and steel pipe in VH-3 frozen and release valve unable to release pressure.

VISUAL MONITORING: [signature] 16/01/01 — CONTRACTOR'S REPRESENTATIVE day/mo/yr

[signature] 21/Dec/00 — CQA REPRESENTATIVE day/mo/yr

FINAL APPROVAL: CONTRACTOR'S REPRESENTATIVE day/mo/yr

[signature] 21/Dec/00 — CQA REPRESENTATIVE day/mo/yr

COPY TO:

GEOSYNTEC CONSULTANTS

FLUOR DANIEL FERNALD

PRESSURE TEST LOG

PROJECT: ON-SITE DISPOSAL FACILITY (OSDF)

LOCATION: FERNALD, OHIO PROJECT NO.: G00409 TASK NO.: 42

DESCRIPTION: EPLTS YEAR: 2001

CONTRACTOR: STAVER/RICK

TEST DESCRIPTION: HYDROSTATIC: ☑ PNEUMATIC (ATTACH WRITTEN AUTHORIZATION): ☐

PASS/FAIL CRITERION: No Visible Leaks – No Drop in Pressure more than 5%

MATERIAL DESCRIPTION: FORCEMAIN: ☐ CONTAINMENT: ☐ CARRIER ☑ OTHER: ☐

TARGET PRESSURE: 60 TEST DURATION: 5 hr GAUGE NO.: 68-3 GAUGE LOCATION: VH3

TEST LOCATION: VH2 TO VH3

FOR CONTAINMENT PIPE TESTING, CARRIER PIPE PRESSURIZED FIRST: ☐ YES ☐ NO N/A

READING NO.	STABILIZATION TEST PERIOD	DATE (day/mo)	TIME	READING	CHANGE IN READING	QA ID
1	Pressurize	7-Feb	0856	0	–	TD
2	Stabilize		0901	70	70	TD
3	Pressurize		1001	60	-10	TD
4	Stabilize		1003	70	+10	TD
5	Pressurize		1100	66	-4	TD
6	Stabilize		1101	70	+4	TD
7	Pressurize		1200	69	-1	TD
8	Stabilize		1201	70	+1	TD
9	Reduce Pressure		1301	70	0	TD
10	Test		1302	60	-10	TD
11	End Test		1402	60	0	TD

Water Temp 36°F
Ambient Temp 32°F

PASS: ☑
FAIL: ☐

VISUAL MONITORING: (Rick) 2-7-01 — CONTRACTOR'S REPRESENTATIVE day/mo/yr; 7 Feb 01 — CQA REPRESENTATIVE day/mo/yr

FINAL APPROVAL: 22/Feb/01 — CONTRACTOR'S REPRESENTATIVE day/mo/yr; 16 Feb 01 — CQA REPRESENTATIVE day/mo/yr

COPY TO:

GEOSYNTEC CONSULTANTS

FLUOR FERNALD, INC.

PRESSURE TEST LOG

PROJECT: ON-SITE DISPOSAL FACILITY (OSDF)

LOCATION: FERNALD, OHIO PROJECT NO.: GQ1029 TASK NO.: 4.2

DESCRIPTION: Phase III YEAR: 2000

CONTRACTOR: Rieck / Shaver

TEST DESCRIPTION: HYDROSTATIC: ☒ PNEUMATIC (ATTACH WRITTEN AUTHORIZATION): ☐

PASS/FAIL CRITERION: 16 PSI 0-60 PSI Gauge

MATERIAL DESCRIPTION: FORCEMAIN: ☐ CONTAINMENT: ☒ CARRIER ☐ OTHER: ☐

TARGET PRESSURE: TEST DURATION: GAUGE NO.: 02 GAUGE LOCATION:

TEST LOCATION: Between VH 2 TO VH 3

FOR CONTAINMENT PIPE TESTING, CARRIER PIPE PRESSURIZED FIRST: ☐ YES ☒ NO

READING NO.	STABILIZATION TEST PERIOD	DATE (day/mo)	TIME	READING	CHANGE IN READING	QA ID
(1) First Fill	—	20 Sept. 00	0850	16 PSI	—	DLE
(2) 2nd Fill	—	" " "	0950	15 To 16 PSI	1 PSI	DLE
(3) 3rd Fill	—	" " "	10 50	15 To 16 PSI	1 PSI	DLE
4th Fill	—	" " "	11 50	15 To 16 PSI	1 PSI	DLE
+ at → (5) 5th Fill	1 hr. Test	" " "	1250	16	0	DLE
(6) No Fill	Complete	20 Sept 00	1350	16	0	DLE

PASS: ☐

FAIL: ☐

VISUAL MONITORING: [signature] 16/01/01 — CONTRACTOR'S REPRESENTATIVE, day/mo/yr

[signature] 20/Sept/00 — CQA REPRESENTATIVE, day/mo/yr

FINAL APPROVAL: [signature] 16/01/01 — CONTRACTOR'S REPRESENTATIVE, day/mo/yr

[signature] 20 Sept 2000 — SITE CQA MANAGER, day/mo/yr

COPY TO:

GEOSYNTEC CONSULTANTS

FLUOR DANIEL FERNALD

PRESSURE TEST LOG

PROJECT: ON-SITE DISPOSAL FACILITY (OSDF)

LOCATION: FERNALD, OHIO PROJECT NO.: GQ0409 TASK NO.: 4.2

DESCRIPTION: EPLTS YEAR: 2000

CONTRACTOR: STAVER / RICCK

TEST DESCRIPTION: HYDROSTATIC: ☑ PNEUMATIC (ATTACH WRITTEN AUTHORIZATION): ☐

PASS/FAIL CRITERION: No visible leaks - Less makeup water than listed in TABLE 02605-3

MATERIAL DESCRIPTION: FORCEMAIN: ☐ CONTAINMENT: ☐ CARRIER ☑ OTHER: ☐

TARGET PRESSURE: TEST DURATION: GAUGE NO.: 1 GAUGE LOCATION: VH4

TEST LOCATION: 6" Pipeline Between VH 3 to VH4

FOR CONTAINMENT PIPE TESTING, CARRIER PIPE PRESSURIZED FIRST: ☐ YES ☐ NO

READING NO.	STABILIZATION TEST PERIOD	DATE (day/mo)	TIME	READING	CHANGE IN READING	QA ID
1	Pressurize	5 OCT	0750	0	61	TD
2	STABLIZE		0800	61	~~56~~ TO 6	TD
3	Pressurize		0900	56	4	TD
4	STABLIZE		0900	60	0	TD
5	Pressurize		1000	60	2	TD
6	STABLIZE		1100	58	2	TD
7	Pressurize		1100	60	1	TD
8	STABLIZE		1200	59	1	TD
9	~~PRES~~ TO Test		1200	60	.5	TD
10	End Test		1300	59.5		TD

PASS: ☑ 1/2 L. MAKE UP WATER USED

FAIL: ☐

VISUAL MONITORING: [signature] 5/10/00 [signature] 05/10/00

CONTRACTOR'S REPRESENTATIVE day/mo/yr CQA REPRESENTATIVE day/mo/yr

FINAL APPROVAL: [signature] 10/01/01 [signature] 5/10/00

CONTRACTOR'S REPRESENTATIVE day/mo/yr CQA REPRESENTATIVE day/mo/yr

COPY TO:

GEOSYNTEC CONSULTANTS

FLUOR DANIEL FERNALD

PRESSURE TEST LOG

PROJECT: ON-SITE DISPOSAL FACILITY (OSDF)

LOCATION: FERNALD, OHIO PROJECT NO.: GQ0409 TASK NO.: 4.2

DESCRIPTION: EPLTS YEAR: 2000

CONTRACTOR: STAVER/RICCIS

TEST DESCRIPTION: HYDROSTATIC: ☑ PNEUMATIC (ATTACH WRITTEN AUTHORIZATION): ☐

PASS/FAIL CRITERION: No Visible Leaks - Less make up water used Than Listed in TABLE 02605-3

MATERIAL DESCRIPTION: FORCEMAIN: ☐ CONTAINMENT: ☑ CARRIER ☐ OTHER: ☐

TARGET PRESSURE: ' TEST DURATION: GAUGE NO.: GAUGE LOCATION: UH4

TEST LOCATION: Containment Between UH3 TO UH4

FOR CONTAINMENT PIPE TESTING, CARRIER PIPE PRESSURIZED FIRST: ☐ YES ☑ NO

READING NO.	STABILIZATION TEST PERIOD	DATE (day/mo)	TIME	READING	CHANGE IN READING	QA ID
1	Pressurize	9 OCT	0810	0	~~8~~ TD 16	TD
2	Stabilize		0815	16	0	TD
3	Stabilize		0915	16	-1.5	TD
4	Pressurize		1015	14.5	+1.5	TD
5	Stabilize		1015	16	0	TD
6	Stabilize		1115	16	-0	TD
7	Pressurize		1215	16.5	-.5	TD
8	~~Stabilize~~ Test		1215	16.0	0	TD
9	End Test		1315	16	—	TD

PASS: ☐

FAIL: ☐

VISUAL MONITORING: R Wood 16/01/01 — CONTRACTOR'S REPRESENTATIVE day/mo/yr; [signature] 9 Oct 00 — CQA REPRESENTATIVE day/mo/yr

FINAL APPROVAL: R Wood 16/01/01 — CONTRACTOR'S REPRESENTATIVE day/mo/yr; Cathy P. Johnson 30 Oct 2000 — CQA REPRESENTATIVE day/mo/yr

COPY TO:

GEOSYNTEC CONSULTANTS

FLUOR DANIEL FERNALD

PRESSURE TEST LOG

PROJECT: ON-SITE DISPOSAL FACILITY (OSDF)

LOCATION: FERNALD, OHIO PROJECT NO.: GQ0409 TASK NO.: 4.1

DESCRIPTION: EPLTS YEAR: 2000

CONTRACTOR: STAVER / RICHE

TEST DESCRIPTION: HYDROSTATIC: ☑ PNEUMATIC (ATTACH WRITTEN AUTHORIZATION): ☐

PASS/FAIL CRITERION: NO DROP IN PRESSURE - NO VISIBLE LEAKS

MATERIAL DESCRIPTION: FORCEMAIN: ☐ CONTAINMENT: ☐ CARRIER ☑ OTHER: ☐

TARGET PRESSURE: TEST DURATION: GAUGE NO.: ~~07~~ BG-3 to GAUGE LOCATION: VH5

TEST LOCATION: VH 4 TO VH5

FOR CONTAINMENT PIPE TESTING, CARRIER PIPE PRESSURIZED FIRST: ☐ YES ☑ NO NA

READING NO.	STABILIZATION TEST PERIOD	DATE (day/mo)	TIME	READING	CHANGE IN READING	QA ID
1	PRESSURIZE	10/27/00	0735	0	—	TD
2	STABLIZE		0746	60	60	TD
3	PRESSURIZE		0845	55	-5	TD
4	STABLIZE		0846	60	+5	TD
5	PRESSURIZE		0945	59	-1	TD
6	STABLIZE		0946	60	+1	TD
7	STABLIZE		1046	60	0	TD
8	STABLIZE - End		1146	60	0	TD
9	TEST - End		1246	60	0	TD

PASS: ☐

FAIL: ☐

VISUAL MONITORING: R Wood — CONTRACTOR'S REPRESENTATIVE — 16/01/01 day/mo/yr — Tom Dale — QA REPRESENTATIVE — 27 Oct 00 day/mo/yr

FINAL APPROVAL: R Wood — CONTRACTOR'S REPRESENTATIVE — 16/01/01 day/mo/yr — 31 Oct 2000 — QA REPRESENTATIVE — day/mo/yr

COPY TO:

GEOSYNTEC CONSULTANTS

FLUOR DANIEL FERNALD

PRESSURE TEST LOG

PROJECT: ON-SITE DISPOSAL FACILITY (OSDF)

LOCATION: FERNALD, OHIO PROJECT NO.: GQ0409 TASK NO.: 4.2

DESCRIPTION: EPLTS YEAR: 2000

CONTRACTOR: STAVER/RICKS

TEST DESCRIPTION: HYDROSTATIC: ☑ PNEUMATIC (ATTACH WRITTEN AUTHORIZATION): ☐

PASS/FAIL CRITERION: NO DROP IN PRESSURE, or LESS MAKEUP WATER THAN LISTED IN TABLE 02605-2

MATERIAL DESCRIPTION: FORCEMAIN: ☐ CONTAINMENT: ☑ CARRIER ☐ OTHER: ☐

TARGET PRESSURE: ~~60~~ 16 TO TEST DURATION: 5hr GAUGE NO.: 01 GAUGE LOCATION:

TEST LOCATION: VH 4 TO VH 5

FOR CONTAINMENT PIPE TESTING, CARRIER PIPE PRESSURIZED FIRST: ☐ YES ☑ NO

READING NO.	STABILIZATION TEST PERIOD	DATE (day/mo)	TIME	READING	CHANGE IN READING	QA ID
1	PRESSURIZE	10-31	0723	0	—	TD
2	STABLIZE		0756	16	16	TD
3	PRESSURIZE		0855	15.75	-.25	TD
4	STABLIZE		0856	16	+.25	TD
5	PRESSURIZE		0955	15	-1	TD
6	STABLIZE		0956	16	+1	TD
7	PRESSURIZE		1055	15	-1	TD
8	STABLIZE		1056	16	+1	TD
9	~~STABLIZE~~ TEST		1156	16	0	TD
10	TEST		1256	15	-1	TD
11	PRESSURIZE/TEST		1305	16	+1	TD
12	TEST		1405	16	0	TD
	TEST END TEMP	F = 73°				

PASS: ☐

FAIL: ☐

VISUAL MONITORING: [signature] CONTRACTOR'S REPRESENTATIVE 16/01/01 day/mo/yr [signature] CQA REPRESENTATIVE 31 10 00 day/mo/yr

FINAL APPROVAL: [signature] CONTRACTOR'S REPRESENTATIVE 16/01/01 day/mo/yr [signature] CQA REPRESENTATIVE 1 NOV/2000 day/mo/yr

COPY TO:

GEOSYNTEC CONSULTANTS

FLUOR DANIEL FERNALD

PRESSURE TEST LOG

PROJECT: ON-SITE DISPOSAL FACILITY (OSDF)

LOCATION: FERNALD, OHIO PROJECT NO.: GQ0409 TASK NO.: 4.2

DESCRIPTION: EPLTS YEAR: 2000

CONTRACTOR: STAUER/RICCIS

TEST DESCRIPTION: HYDROSTATIC: ☑ PNEUMATIC (ATTACH WRITTEN AUTHORIZATION): ☐

PASS/FAIL CRITERION:

MATERIAL DESCRIPTION: FORCEMAIN: ☐ CONTAINMENT: ☐ CARRIER ☑ OTHER: ☐

TARGET PRESSURE: 60 TEST DURATION: GAUGE NO.: B83 GAUGE LOCATION:

TEST LOCATION: VH5 TO VH6

FOR CONTAINMENT PIPE TESTING, CARRIER PIPE PRESSURIZED FIRST: ☐ YES ☑ NO @ NA

READING NO.	STABILIZATION TEST PERIOD	DATE (day/mo)	TIME	READING	CHANGE IN READING	QA ID	
1	PRESSURIZE	2-11	1008	0	–	TD	71°
2	STABLIZE		1014	60	-10	TD	
3	PRESSURIZE		1113	50	+10	TD	
4	STABLIZE		1122	60	-3	TD	
5	PRESSURIZE		1221	57	+3	TD	
6	STABLIZE		1222	60	-1	TD	74°
7	PRESSURIZE		1321	59	+1	TD	
8	STABLIZE		1322	60	-1	TD	81°
9	PRESSURIZE		1421	59	+1	TD	81°
10	STABLIZE/TEST		1422	60	0	TD	81°
11	TEST		1522	60	—	TD	

NOTE: TEST WATER TEMP = 69°F

PASS: ☑

FAIL: ☐

VISUAL MONITORING: [signature] 02/11/00 — CONTRACTOR'S REPRESENTATIVE day/mo/yr; [signature] 02/11/00 — CQA REPRESENTATIVE day/mo/yr

FINAL APPROVAL: [signature] 6/01/01 — CONTRACTOR'S REPRESENTATIVE day/mo/yr; [signature] 6 Nov 2000 — CQA REPRESENTATIVE day/mo/yr

COPY TO:

GEOSYNTEC CONSULTANTS

FLUOR DANIEL FERNALD

PRESSURE TEST LOG

PROJECT: ON-SITE DISPOSAL FACILITY (OSDF)

LOCATION: FERNALD, OHIO PROJECT NO.: GQ0409 TASK NO.: 4.1

DESCRIPTION: EPLTS YEAR:

CONTRACTOR: Staver/Rieck

TEST DESCRIPTION: HYDROSTATIC: ☑ PNEUMATIC (ATTACH WRITTEN AUTHORIZATION): ☐

PASS/FAIL CRITERION:

MATERIAL DESCRIPTION: FORCEMAIN: ☐ CONTAINMENT: ☑ CARRIER ☐ OTHER: ☐

TARGET PRESSURE: 16 TEST DURATION: 5hr GAUGE NO.: 01 GAUGE LOCATION:

TEST LOCATION: UH5 TO UH6

FOR CONTAINMENT PIPE TESTING, CARRIER PIPE PRESSURIZED FIRST: ☐ YES ☑ NO

READING NO.	STABILIZATION TEST PERIOD	DATE (day/mo)	TIME	READING	CHANGE IN READING	QA ID	
1	Pressurize	3-11	0953	0	—	TD	66°
2	Stablize		0956	16	16	TD	
3	Pressurize		1056	14	-2	TD	
4	Stablize		1056	16	+2	TD	70°
5	Pressurize		1155	15	-1	TD	
6	Stablize		1156	16	+1	TD	71°
7	Pressurize		1255	15	-1	TD	
8	Stablize		1256	16	+1	TD	73°
9	Pressurize		1356	15.5	-.5	TD	
10	~~Stablize~~ to Test		1356	16	+.5	TD	74°
11	Test		1456	16	0	TD	71°

Note: Water Temp in Pipe @ Start of Test 64°F End of Test Temp 63°

PASS: ☑

FAIL: ☐

VISUAL MONITORING: [signature] 16/01/01 CONTRACTOR'S REPRESENTATIVE day/mo/yr [signature] COA REPRESENTATIVE day/mo/yr

FINAL APPROVAL: [signature] 16/01/01 CONTRACTOR'S REPRESENTATIVE day/mo/yr [signature] 6 Nov 2001 COA REPRESENTATIVE day/mo/yr

COPY TO:

GEOSYNTEC CONSULTANTS

FLUOR DANIEL FERNALD

PRESSURE TEST LOG

PROJECT: ON-SITE DISPOSAL FACILITY (OSDF)

LOCATION: FERNALD, OHIO PROJECT NO.: GQ0409 TASK NO.: 42

DESCRIPTION: EPLTS YEAR: 2001

CONTRACTOR: STAUER / RIECK

TEST DESCRIPTION: HYDROSTATIC: ☑ PNEUMATIC (ATTACH WRITTEN AUTHORIZATION): ☐

PASS/FAIL CRITERION: ALT. TEST USED — NO MORE THAN 5% DROP FROM 60 PSI - NO VISIBLE LEAKS

MATERIAL DESCRIPTION: FORCEMAIN: ☐ CONTAINMENT: ☑ CARRIER ☑ OTHER: ☐

TARGET PRESSURE: 60 TEST DURATION: 1hr GAUGE NO.: B8-3 GAUGE LOCATION: VHG

TEST LOCATION: VHG TO CUH

FOR CONTAINMENT PIPE TESTING, CARRIER PIPE PRESSURIZED FIRST: ☐ YES ☐ NO N/A

READING NO.	STABILIZATION TEST PERIOD	DATE (day/mo)	TIME	READING	CHANGE IN READING	QA ID
1	PRESSURIZE	16 JAN	0843	50	0	TD
2	STABILIZE		0844	70	20	TD
3	PRESSURIZE		0944	64	-6	TD
4	STABILIZE		0944	70	+6	TD
5	PRESSURIZE		1044	67	-3	TD
6	STABILIZE		1044	70	+3	TD
7	PRESSURIZE		1044	68	-2	TD
8	STABILIZE		1144	70	+2	TD
9	START of TEST		1244	70	0	TD
10	RELEASE of PRESSURE FOR TEST		1244	60	-10	TD
11	END of TEST		1344	60	0	TD
	AMBIENT TEMP 36° F					
	WATER TEMP 52° F					

PASS: ☑

FAIL: ☐

VISUAL MONITORING: [signature] 16/01/01 [signature] 16 Jan 2001 16/JAN/01

CONTRACTOR'S REPRESENTATIVE day/mo/yr COQA REPRESENTATIVE day/mo/yr

FINAL APPROVAL: [signature] 16/01/01 [signature] 17 Jan 2001

CONTRACTOR'S REPRESENTATIVE day/mo/yr COQA REPRESENTATIVE day/mo/yr

COPY TO:

GEOSYNTEC CONSULTANTS

FLUOR DANIEL FERNALD

PRESSURE TEST LOG

PROJECT: ON-SITE DISPOSAL FACILITY (OSDF) 64'1029

LOCATION: FERNALD, OHIO PROJECT NO.: ~~GQ0409~~ MH TASK NO.: 4.2

DESCRIPTION: EPLTS YEAR: 2000

CONTRACTOR: STAVER/RICCIS

TEST DESCRIPTION: HYDROSTATIC: ☒ PNEUMATIC (ATTACH WRITTEN AUTHORIZATION): ☐

PASS/FAIL CRITERION:

MATERIAL DESCRIPTION: FORCEMAIN: ☐ CONTAINMENT: ☒ CARRIER ☐ OTHER: ☐

TARGET PRESSURE: 15 TEST DURATION: 1 HR + 4 HRS STABILIZATION GAUGE NO.: 01 GAUGE LOCATION: E o P

TEST LOCATION: CONTROL VALVE HOUSE TO 406 FLANGE

FOR CONTAINMENT PIPE TESTING, CARRIER PIPE PRESSURIZED FIRST: ~~☐~~ ☐ YES ☑ NO

READING NO.	STABILIZATION TEST PERIOD	DATE (day/mo)	TIME	READING	CHANGE IN READING	QA ID
		30 NOV	0842	START FILLING PIPE		MH
1	1st READING HOUR	30 NOV	1300	16	—	MH
2	2ND READING HOUR	30 NOV	1400	16	—	MH
3	3RD READING HOUR	30 NOV	1500	16	—	MH
4	4th READING HOUR	30 NOV	1600	16	—	MH
5	START TEST	30 NOV	1700	16	—	MH
6	END TEST	30 NOV	1800	16	—	MH

PASS: ☒

FAIL: ☐

VISUAL MONITORING: [signature] 16/01/01 — CONTRACTOR'S REPRESENTATIVE day/mo/yr

[signature] 30 NOV 2000 — CQA REPRESENTATIVE day/mo/yr

FINAL APPROVAL: 16/01/01 — CONTRACTOR'S REPRESENTATIVE day/mo/yr

[signature] 1 Dec 2000 — CQA REPRESENTATIVE day/mo/yr

COPY TO:

GEOSYNTEC CONSULTANTS

FLUOR FERNALD, INC.

PRESSURE TEST LOG

PROJECT: ON-SITE DISPOSAL FACILITY (OSDF)

LOCATION: FERNALD, OHIO PROJECT NO.: GQ1029 TASK NO.: 4.2

DESCRIPTION: EPLTS YEAR: ~~2000~~ KS 2001

CONTRACTOR: Stauer / Rieck

TEST DESCRIPTION: HYDROSTATIC: ☒ PNEUMATIC (ATTACH WRITTEN AUTHORIZATION): ☐

PASS/FAIL CRITERION:

MATERIAL DESCRIPTION: FORCEMAIN: ☐ CONTAINMENT: ☒ CARRIER ☐ OTHER: ☐

TARGET PRESSURE: 16 PSI TEST DURATION: GAUGE NO.: 01 GAUGE LOCATION: CVH

TEST LOCATION: VH-6 TO CVH

FOR CONTAINMENT PIPE TESTING, CARRIER PIPE PRESSURIZED FIRST: ☒ YES ☐ NO

READING NO.	STABILIZATION TEST PERIOD	DATE (day/mo)	TIME	READING	CHANGE IN READING	QA ID
1	Pressurize	20 Jan	0830	16	—	KS
2	Stabilize		0930	14	-2	KS
3	Pressurize		0931	16	—	KS
4	Stabilize		KS 1030	15	-1	KS
5	Pressurize		1031	16	+1	KS
6	Stabilize		1130	15	-1	KS
7	Pressurize		1131	16	+1	KS
8	Stabilize		1230	15.5	-0.5	KS
9	Pressurize		1231	16	+0.5	KS
	Start test		1232	16	—	KS
10	Stabilize		1332	16	—	KS
	Ambient temp ~28°F at start ~36°F by termination.					

PASS: ☑

FAIL: ☐

VISUAL MONITORING: R Wood — CONTRACTOR'S REPRESENTATIVE — 24/2/01 day/mo/yr — Ken Spiller — CQA REPRESENTATIVE — 20 Jan 2001 day/mo/yr

FINAL APPROVAL: R Wood — CONTRACTOR'S REPRESENTATIVE — 24/2/01 day/mo/yr — Collin P. Jackson — SITE CQA MANAGER — 22 Jan 2001 day/mo/yr

COPY TO:

CONTRACTOR

SUPPLIER DOCUMENT SUBMITTAL

7284 Vol. 4

FDF PROJ NO: 20111	CONTRACT NO: FSC - 641	SUBMITTAL NO: 02605-009	REV: 0	03-Mar-01	1 OF 1

FROM: The STAVER GROUP, Inc.
Ron Wood
SIGNATURE: R Wood

TO: FDF ENGINEERING/CONSTRUCTION DOCUMENT CONTROL (ECDC), MS 52-7
RECEIVED BY: Erika Barrett DATE: 3/5/01

QTY	DOCUMENT NUMBER	REV	DOCUMENT FAMILY PRO	H&S	MED	TRG	CON	ENG	QAC	OPER	TITLE/DESCRIPTION	SUBMITTAL TYPE DRFT	CFC	INF	ASSOCIATED SPECIFICATION	SUBMITTAL ACTION A	B	C
8	641-02605-009	0						X			6' LTS HDPE Pipe		X		02605	X		
											Test Reports							

REVIEW DISTRIBUTION

NAME	MS	NAME	MS	NAME	MS
Mike Griffin	525				
Tim Cherry	525				
Jim Jenkins	525				
Mike Godber	64				
Rob Kneip	525				
Scott Wheeler	525				
Kwasi Badu-Tweneboah	38				

RECEIVED MAR 06 2001

NO COMMENTS: COMMENTS: (PLEASE USE SPACE BELOW FOR COMMENTS OR INDICATE IF ATTACHMENTS)

WHAT ABOUT STEEL G-IN LINES?

RECEIVED BY: [signature] DATE 3/7/01
(SIGN/DATE AND RETURN A COPY TO ECDC, MS 52-7)

SUBMITTAL TYPE: (BY SUPPLIER)
CFC - CERTIFIED FOR CONSTRUCTION
INF - INFORMATION/RECORD
DRFT - DRAFT/PRELIMINARY

SUBMITTAL ACTION CODE: (BY FDF)
A - Conforms to Subcontract Requirements
B - Minor Comments - Incorporate and Resubmit
C - Revise and Resubmit (SEE COMMENTS)

ORIGINAL

Mechanical Electrical Services, Inc.
Planners, Constructors & Maintainers

PIPE TEST REPORT

JOB NAME: EPLTS JOB NO.: FSC 641

DATE OF TEST: ~~January~~ February 07, 2001

TESTING TYPE: AIR ☐ HYDROSTATIC – Primary ☐ HYDROSTATIC – Alternate ☑

TEST FLUID: WATER NAME OF SYSTEM TESTED: 6" HDPE VH 2-3

LINE DESIGNATION NO: CE-6"-B4-0002

TIME AT TEST BEGINNING: 0901 (expansion) 1302 (TEST PHASE)

PRESSURE AT BEGINNING: 70 psi. (expansion) 60 psi TEST

FLUID TEST TEMP: 36°F GAUGE NO: PP-3 CALIBRATION DATE: ~~01~~-00

AMBIENT TEMP.: 32°F MAKEUP WATER ADDED NONE

TIME AT TEST ENDING: 1402 PRESSURE AT ENDING: 60

REPRESENTATIVE (Witnessing test beginning) _____

TOTAL TIME AT TEST PRESSURE 1hr TEST DURATION ~~5 hr~~ (Stabilization 1 Hr Test) HRS.

RESULTS OF TEST: NO visible leaks NO Drop in pressure

CONTRACTOR REPRESENTATVE:

(Rick) DATE: 2/07/01

CQC CONSULTANT

DATE: 7 Feb 01

CONSTRUCTION MANAGER REPRESENTATIVE

SUPPLIER DOCUMENT SUBMITTAL

FDF PROJECT NO: 20111	CONTRACT NO: FSC - 641	SUBMITTAL NO: 02605-009	REV: 0	03-Mar-01	PAGE 1 OF 1

FROM: The STAVER GROUP, Inc.

Ron Wood

SIGNATURE: R Wood

TO: FDF ENGINEERING/CONSTRUCTION DOCUMENT CONTROL (ECDC), MS 52-7

RECEIVED BY: Jerma Yazoo DATE: 03/07/01

QTY	DOCUMENT NUMBER	REV	DOCUMENT FAMILY PRO	H&S	MED	TRG	CON	ENG	QAC	OPER	TITLE/DESCRIPTION	SUBMITTAL TYPE DRFT	CFC	INF	ASSOCIATED SPECIFICATION	SUBMITTAL ACTION A	B	C
8	641-02605-009	0						X			6' LTS HDPE Pipe		X		02605	X		
											Test Reports							

REVIEW DISTRIBUTION

NAME	MS	NAME	MS	NAME	MS
Mike Griffin (Approver)	525				
Jim Cherry	525				
Jim Jenkins	525				
Mike Barber	64				
Bob Knip	525				
Scott Wheeler	525				
Pirasi-Ben Juenebark (Hydrotec)	38				

RECEIVED MAR 15 2001

NO COMMENTS: COMMENTS: (PLEASE USE SPACE BELOW FOR COMMENTS OR INDICATE IF ATTACHMENTS)

LTS 6" Line tested on 10/27/00 is from VH-4 to VH-5.
NOTE THAT VH-2 TO VH-3 WAS RETESTED ON 2/07/01

RECEIVED BY: [signature] DATE 3/19/01

(SIGN/DATE AND RETURN A COPY TO ECDC, MS 52-7)

SUBMITTAL TYPE: (BY SUPPLIER)
CFC - CERTIFIED FOR CONSTRUCTION
INF - INFORMATION/RECORD
DRFT - DRAFT/PRELIMINARY

SUBMITTAL ACTION CODE: (BY FDF)
A - Conforms to Subcontract Requirements
B - Minor Comments - Incorporate and Resubmit
C - Revise and Resubmit (SEE COMMENTS)

ORIGINAL

Fluor Contract FSC-641
OSDF Enhanced Permanent Leachate
Transmission System Project
STAVER # 7052

Submittal # 641-02605-009
Reviewed By: RW
Date: 3/3/01

RIECK
Mechanical Electrical Services, Inc.
Planners, Constructors & Maintainers

PIPE TEST REPORT

JOB NAME: ELPTS JOB NO.: FSC-641

DATE OF TEST: 10/5/00

TESTING TYPE: AIR ☐ HYDROSTATIC – Primary ☒ HYDROSTATIC – Alternate ☐

TEST FLUID: Water NAME OF SYSTEM TESTED: 6" SDR 11 UH3-4

LINE DESIGNATION NO: CE 6"-B4-003 (Pre-Fab #3)

TIME AT TEST BEGINNING: 12:00

PRESSURE AT BEGINNING: 60

FLUID TEST TEMP: N/A GAUGE NO: B8-3 CALIBRATION DATE: 3/14/00

AMBIENT TEMP.: 67° F MAKEUP WATER ADDED .5 Liter

TIME AT TEST ENDING: 1:00 PRESSURE AT ENDING: 59.5.

REPRESENTATIVE (Witnessing test beginning) R. Wood

TOTAL TIME AT TEST PRESSURE 1 TEST DURATION 5 HRS.

RESULTS OF TEST: NO DROP exceeding allowable Makeup Water.
8:00 61 PSI — 9:00 55 PSI 9:00 60 PSI 10:00 60 PSI
11:00 58 PSI – 11:00 60 PSI 12:00 59 PSI 12:00
begin test @ 60 psi 1:00 pressure 59.5 ADDED .5L
makeup water

CONTRACTOR REPRESENTATVE:

R Wood DATE: 10/5/00

CQC CONSULTANT

Collin P. Johns DATE: 10/5/00

CONSTRUCTION MANAGER REPRESENTATIVE

JECK
echanical Electrical Services, Inc.
anners, Constructors & Maintainers

PIPE TEST REPORT

JOB NAME: EPLTS JOB NO.: FSC-641

DATE OF TEST: 10/27/00

TESTING TYPE: AIR ☐ HYDROSTATIC – Primary ☒ HYDROSTATIC – Alternate ☐

TEST FLUID: Water NAME OF SYSTEM TESTED: LTS 6" SDR 11

LINE DESIGNATION NO: CE-6"-B4-004

TIME AT TEST BEGINNING: 7:46 (expansion) 11:46 (Test Phase)

PRESSURE AT BEGINNING: 60 PSI

FLUID TEST TEMP: 61° F GAUGE NO: B863 CALIBRATION DATE: 3/14/00

AMBIENT TEMP.: 60° F MAKEUP WATER ADDED NONE

TIME AT TEST ENDING: 12:46 PRESSURE AT ENDING: 60 PSI

REPRESENTATIVE (Witnessing test beginning) [signature]

TOTAL TIME AT TEST PRESSURE: 1 hr TEST DURATION 5 HRS.

RESULTS OF TEST: 8:46 Pressure Dropped to 55 PSI. Pressure was brought back to 60 PSI. At 9:45 Pressure Dropped to 59 PSI and was brought back to 60 PSI. Pressure remained stable at 60 PSI through the remaining test period

CONTRACTOR REPRESENTATVE:

[signature] (Rick) DATE: 10-27-00

CQC CONSULTANT

[signature] DATE: 10-27-00

CONSTRUCTION MANAGER REPRESENTATIVE

RIECK
Mechanical Electrical Services, Inc.
Planners, Constructors & Maintainers

PIPE TEST REPORT

JOB NAME: EPLTS JOB NO.: FSC-6041

DATE OF TEST: 11/2/00

TESTING TYPE: AIR ☐ HYDROSTATIC – Primary ☒ HYDROSTATIC – Alternate ☐

TEST FLUID: Water NAME OF SYSTEM TESTED: 6" UH-S-6 LTS

LINE DESIGNATION NO: CE-6"-B4-005

TIME AT TEST BEGINNING: 10:14 a.m. (expansion) 2:22 pm TEST

PRESSURE AT BEGINNING: 60 PSI

FLUID TEST TEMP: 69° F GAUGE NO: B8-3 CALIBRATION DATE: 3/14/00

AMBIENT TEMP.: 81° F MAKEUP WATER ADDED 0

TIME AT TEST ENDING: 3:22 p.m PRESSURE AT ENDING: 60 PSI

REPRESENTATIVE (Witnessing test beginning) _____

TOTAL TIME AT TEST PRESSURE 5 TEST DURATION 1 HRS.

RESULTS OF TEST: 10:14 - 60 PSI 11:14 50 PSI 11:22 - 60 PSI
12:22 57 PSI 12:22 60 PSI 1:21 59 PSI
1:22 60 PSI 2:21 59 PSI 3:22 60 PSI.
NO Makeup water ADDED. NO visible leaks.

CONTRACTOR REPRESENTATVE:

[signature] DATE: 11/2/00

CQC CONSULTANT

[signature] DATE: 11/2/00

CONSTRUCTION MANAGER REPRESENTATIVE

[signature]

Electrical Electrical Services, Inc.
Designers, Constructors & Maintainers

PIPE TEST REPORT

JOB NAME: EPLTS JOB NO.: ESC-641

DATE OF TEST: 1/16/01

TESTING TYPE: AIR ☐ HYDROSTATIC – Primary ☐ HYDROSTATIC – Alternate ☒

TEST FLUID: Water NAME OF SYSTEM TESTED: 6" UH6-CUH LTS

LINE DESIGNATION NO: CE-6"-B4-0006

TIME AT TEST BEGINNING: 0844 (Expansion) 1244 (Test)

PRESSURE AT BEGINNING: 70 psi (Initial) 60psi (Test)

FLUID TEST TEMP: N/A GAUGE NO: B8-3 CALIBRATION DATE: 3/14/01

AMBIENT TEMP.: N/A MAKEUP WATER ADDED N/A

TIME AT TEST ENDING: 1344 PRESSURE AT ENDING: 60psi

REPRESENTATIVE (Witnessing test beginning) _____

TOTAL TIME AT TEST PRESSURE 5 TEST DURATION 1 HRS.

RESULTS OF TEST: 8:44 70 psi 9:44 64 psi (Raised to 70)
10:44 67 psi + 70 11:44 65 psi + 70 12:44 70 psi
At 12:44 Dropped pressure to the test pressure of
60 psi. & started test, 1:44 60 psi. No loss in pressure
or visible

CONTRACTOR REPRESENTATVE:

R Wood DATE: 1/16/01

CQC CONSULTANT

Collin P. Fulton DATE: 1/16/01

CONSTRUCTION MANAGER REPRESENTATIVE

IECK
echanical Electrical Services, Inc.
enners, Constructors & Maintainers

PIPE TEST REPORT

JOB NAME: ELPTS JOB NO.: FSC-641

DATE OF TEST: 9/19/00

TESTING TYPE: AIR [ ] HYDROSTATIC – Primary [X] HYDROSTATIC – Alternate [ ]

TEST FLUID: Water NAME OF SYSTEM TESTED: 6" SDR 11 LTS UH2-UH3

LINE DESIGNATION NO: CE-6"-B4-002

TIME AT TEST BEGINNING: 11:56 A.M.

PRESSURE AT BEGINNING: 60 PSI

FLUID TEST TEMP: 60° GAUGE NO: B8-3 CALIBRATION DATE: 3/14/00

AMBIENT TEMP.: 48° F MAKEUP WATER ADDED 1 liter

TIME AT TEST ENDING: 12:56 P.M. PRESSURE AT ENDING: 59 PSI

REPRESENTATIVE (Witnessing test beginning) R Wood

TOTAL TIME AT TEST PRESSURE 1 TEST DURATION 1 HRS.

RESULTS OF TEST: Initial Expansion Phase: 7:50 60PSI 8:50-50PSI 8:55-60 PSI 9:55 56 PSI 9:56-60 PSI 10:55 59 PSI 10:56 60 PSI 11:56 59 PSI. END OF Expansion Phase. Test Began 11:56 ENDED 12:56 with NO visible leaks, loss of 1 lb. pressure & and the Addition of 1 liter of make up water.

CONTRACTOR REPRESENTATVE:

R Wood DATE: 9/19/00

CQC CONSULTANT

Collin R. Jackson DATE: 9/19/00

CONSTRUCTION MANAGER REPRESENTATIVE

IECK
echanical Electrical Services, Inc.
anners, Constructors & Maintainers

PIPE TEST REPORT

JOB NAME: EPLTS JOB NO.: FSC-641

DATE OF TEST: 8/28/00

TESTING TYPE: AIR ☐ HYDROSTATIC – Primary ☒ HYDROSTATIC – Alternate ☐

TEST FLUID: Water NAME OF SYSTEM TESTED: 6" SDR 11 UH-1-UH2 LTS

LINE DESIGNATION NO: CE - 6" - B4-0001

TIME AT TEST BEGINNING: 11:51

PRESSURE AT BEGINNING: 60 PSI

FLUID TEST TEMP: 60° F GAUGE NO: B8-3 CALIBRATION DATE: 3/14/00

AMBIENT TEMP.: 60° F MAKEUP WATER ADDED .5 Liter

TIME AT TEST ENDING: 12:51 PRESSURE AT ENDING: 57 PSI

REPRESENTATIVE (Witnessing test beginning) R. Wood

TOTAL TIME AT TEST PRESSURE 1 hr TEST DURATION 5 hr 21 min HRS.

RESULTS OF TEST: NO visible leaks - Passing Results

CONTRACTOR REPRESENTATVE:

(Rick) DATE: 8/28/00

CQC CONSULTANT

DATE: 8/28/00

CONSTRUCTION MANAGER REPRESENTATIVE:

RUECK
Mechanical Electrical Services, Inc.
Planners, Constructors & Maintainers

PIPE TEST REPORT

JOB NAME: EPLTS JOB NO.: FSC 641

DATE OF TEST: ~~Jan~~ February 07, 2001

TESTING TYPE: AIR ☐ HYDROSTATIC – Primary ☐ HYDROSTATIC – Alternate ☑

TEST FLUID: WATER NAME OF SYSTEM TESTED: 6" HDPE VH 2-3

LINE DESIGNATION NO: CE-6"-B4-0002

TIME AT TEST BEGINNING: 0901 (expansion) 1302 (TEST PHASE)

PRESSURE AT BEGINNING: 70 psi (expansion) 60 psi TEST

FLUID TEST TEMP: 36°F GAUGE NO: DP-3 CALIBRATION DATE: 12-00

AMBIENT TEMP.: 32°F MAKEUP WATER ADDED NONE

TIME AT TEST ENDING: 1402 PRESSURE AT ENDING: 60

REPRESENTATIVE (Witnessing test beginning) _____

TOTAL TIME AT TEST PRESSURE 1 hr TEST DURATION 4 hr (stabilization) (1 hr. TEST) HRS.

RESULTS OF TEST: NO visible leaks NO Drop in pressure

CONTRACTOR REPRESENTATVE:

(Rick) DATE: 2/07/01

CQC CONSULTANT

DATE: 7 Feb 01

CONSTRUCTION MANAGER REPRESENTATIVE

SUPPLIER DOC[illegible]NT SUBMITTAL

FDF PROJECT NO: 20111	CONTRACT NO: FSC - 641	SUBMITTAL NO: 02605-010	REV: 1	19-Mar-01	PAGE 1 OF 1

FROM: The STAVER GROUP, Inc.
Ron Wood
SIGNATURE: R Wood

TO: FDF ENGINEERING/CONSTRUCTION DOCUMENT CONTROL (ECDC), MS 52-7
RECEIVED BY: Denise Wentz DATE: 3/20/01

			DOCUMENT FAMILY									SUBMITTAL TYPE				SUBMITTAL ACTION		
QTY	DOCUMENT NUMBER	REV	PRO	H&S	MED	TRG	CON	ENG	QAC	OPER	TITLE/DESCRIPTION	DRFT	CFC	INF	ASSOCIATED SPECIFICATION	A	B	C
3	641-02605-010	1						X			10" LTS HDPE Pipe		X		02605			
											Test Reports							

REVIEW DISTRIBUTION

NAME	MS	NAME	MS	NAME	MS
Mike Griffin	52-5				
Tim Cherry	52-5				
Jim Jenkins	52-5				
Mike Godber	64				
Rob Kneup	52-5				
B. Scott Wheeler	52-5				
Geo-Synthetic Consultants	38				

RECEIVED
MAR 22 2001

NO COMMENTS: COMMENTS: (PLEASE USE SPACE BELOW FOR COMMENTS OR INDICATE IF ATTACHMENTS)

SEE COMMENTS ON SHEETS 2, 3 & 5.

RECEIVED BY: [signature] DATE 3/22/01
(SIGN/DATE AND RETURN A COPY TO ECDC, MS 52-7)

SUBMITTAL TYPE: (BY SUPPLIER)
CFC - CERTIFIED FOR CONSTRUCTION
INF - INFORMATION/RECORD
DRFT - DRAFT/PRELIMINARY

SUBMITTAL ACTION CODE: (BY FDF)
A - Conforms to Subcontract Requirements
B - Minor Comments - Incorporate and Resubmit
C - Revise and Resubmit (SEE COMMENTS)

ORIGINAL

Fluor Contract FSC-641
OSDF Enhanced Permanent Leachate
Transmission System Project
STAVER # 7052

Submittal # 641-02605-010
Reviewed By: RW
Date: 3/19/01

ical Electrical Services, Inc.
rs, Constructors & Maintainers

PIPE TEST REPORT

JOB NAME: EPLTS JOB NO.: FSC-641

DATE OF TEST: 8/29/00

TESTING TYPE: AIR ☐ HYDROSTATIC – Primary ☒ HYDROSTATIC – Alternate ☐

TEST FLUID: Water NAME OF SYSTEM TESTED: 10" containment UH-1-2 LTS

LINE DESIGNATION NO: CE-10"-B4-0001

TIME AT TEST BEGINNING: 11:23 a.m.

PRESSURE AT BEGINNING: 16 psi

FLUID TEST TEMP: N/A GAUGE NO: 01 CALIBRATION DATE: 8/9/00

AMBIENT TEMP.: 61° MAKEUP WATER ADDED NONE

TIME AT TEST ENDING: 12:23 p.m. PRESSURE AT ENDING: 16 psi

REPRESENTATIVE (Witnessing test beginning) R Wood

TOTAL TIME AT TEST PRESSURE 5 TEST DURATION 1 HRS.

RESULTS OF TEST: No visible leaks. No loss in pressure.

CONTRACTOR REPRESENTATIVE:

R Wood DATE: 8/29/00

CQC CONSULTANT

Calvin Johnson DATE: 8/29/00

CONSTRUCTION MANAGER REPRESENTATIVE

Ben S. Wilk DATE: 8/29/00

al Electrical Services, Inc.
, Constructors & Maintainers

PIPE TEST REPORT

JOB NAME: ELPTS JOB NO.: FSC-641

DATE OF TEST: 9/20/00

TESTING TYPE: AIR [ ] HYDROSTATIC – Primary [X] HYDROSTATIC – Alternate [ ]

TEST FLUID: Water NAME OF SYSTEM TESTED: 10" SDR 11 LTS UH-23

LINE DESIGNATION NO: CE-10"-B4-0002

TIME AT TEST BEGINNING: 12:50 PM

PRESSURE AT BEGINNING: 16 psi

FLUID TEST TEMP: N/A GAUGE NO: B8-3 CALIBRATION DATE: 3/14/00

AMBIENT TEMP.: 76° MAKEUP WATER ADDED 0

TIME AT TEST ENDING: 1:50 pm. PRESSURE AT ENDING: 16psi

REPRESENTATIVE (Witnessing test beginning) R Wood

TOTAL TIME AT TEST PRESSURE 5 TEST DURATION 1 HRS.

RESULTS OF TEST: Initial expansion phase began @ 8:50 16psi 9:50 15 PSI 9:50 ↑ 16 PSI 10:50 15 10:50 ↑ 16 psi 11:50 15 psi 11:50 ↑ 16 12:50 16psi start test 1:50 16psi NO leaks NO loss in pressure

CONTRACTOR REPRESENTATVE:

R Wood DATE: 9/20/00

CQC CONSULTANT

[signature] DATE: 9/20/00

CONSTRUCTION MANAGER REPRESENTATIVE

[signature] DATE: 9/20/00

RIECK
Mechanical Electrical Services, Inc.
Planners, Constructors & Maintainers

PIPE TEST REPORT

JOB NAME: ELPTS JOB NO.: FSC-641

DATE OF TEST: 10/9/00

TESTING TYPE: AIR [ ] HYDROSTATIC – Primary [X] HYDROSTATIC – Alternate [ ]

TEST FLUID: Water NAME OF SYSTEM TESTED: 10" SDR 11 Containment LTS VH-3 TO VH-

LINE DESIGNATION NO: CE-10"-B4-003 (Pre-Fab 3) KB5

TIME AT TEST BEGINNING: 12:15

PRESSURE AT BEGINNING: 16 PSI

FLUID TEST TEMP: N/A GAUGE NO: 01 CALIBRATION DATE: 8/9/00

AMBIENT TEMP.: 45° F MAKEUP WATER ADDED 0

TIME AT TEST ENDING: 1:15 PRESSURE AT ENDING: 16

REPRESENTATIVE (Witnessing test beginning)

TOTAL TIME AT TEST PRESSURE 1 TEST DURATION 5 HRS.

RESULTS OF TEST: Expansion Phase. 8:15 16 PSI 9:15 16 PSI 9:15 - 16 PSI 10:15 14.5 10:15 16 PSI 11:15 16 PSI 11:15 16 PSI 12:15 15.5 PSI 12:15 16 PSI Began Test Phase 1:15 16 PSI End Test Phase. No Drop in Pressure. No Makeup Water Added At End of Test

CONTRACTOR REPRESENTATIVE:

R Wood DATE: 10/9/00

CQC CONSULTANT

Calvin Fitzsimmons DATE: 10/9/00

CONSTRUCTION MANAGER REPRESENTATIVE

Bruce Reid

TEST DATE IS 10/31/00 EBT

Electrical Services, Inc.
Constructors & Maintainers

PIPE TEST REPORT

JOB NAME: EPLTS JOB NO.: FSC-641

DATE OF TEST: 10/3/00

TESTING TYPE: AIR ☐ HYDROSTATIC – Primary ☒ HYDROSTATIC – Alternate ☐

TEST FLUID: Water NAME OF SYSTEM TESTED: 10" SDR11 LTSUH46

LINE DESIGNATION NO: CE-10"-34-0004

TIME AT TEST BEGINNING: 1305

PRESSURE AT BEGINNING: 16 PSI

FLUID TEST TEMP: N/A GAUGE NO: 01 CALIBRATION DATE: 8/9/00

AMBIENT TEMP.: 73° F MAKEUP WATER ADDED 0

TIME AT TEST ENDING: 1405 PRESSURE AT ENDING: 16 PSI

REPRESENTATIVE (Witnessing test beginning) [signature]

TOTAL TIME AT TEST PRESSURE 1 TEST DURATION 5 HRS.

RESULTS OF TEST: NO Loss in Pressure. NO visible leaks.

CONTRACTOR REPRESENTATVE:

[signature] DATE: 10/31/00

CQC CONSULTANT

[signature] DATE: 10/31/00

CONSTRUCTION MANAGER REPRESENTATIVE

[signature] DATE: 10/31/00

RIECK
Mechanical Electrical Services, Inc.
Planners, Constructors & Maintainers

PIPE TEST REPORT

JOB NAME: EPLTS JOB NO.: FSC-641

DATE OF TEST: 11/3/00

TESTING TYPE: AIR [ ] HYDROSTATIC – Primary [X] HYDROSTATIC – Alternate [ ]

TEST FLUID: Water NAME OF SYSTEM TESTED: SDR 11 10" UH-5-6 LTS

LINE DESIGNATION NO: CE-10"-B4-005

TIME AT TEST BEGINNING: 9:56 a.m.

PRESSURE AT BEGINNING: 16 PSI

FLUID TEST TEMP: 64° GAUGE NO: 01 CALIBRATION DATE: 8/9/00

AMBIENT TEMP.: 74° end MAKEUP WATER ADDED 0

TIME AT TEST ENDING: 2:56 p.m. PRESSURE AT ENDING: 16 psi

REPRESENTATIVE (Witnessing test beginning) _____

TOTAL TIME AT TEST PRESSURE 5 TEST DURATION 1 HRS.

RESULTS OF TEST: 9:56 16 PSI 10:56 14 PSI 11:56 15 PSI 12:55 15 PSI 1:56 15 PSI 2:56 16 PSI
No visible leaks. No Drop in pressure. No Makeup water added. The Temperature at Com. Center was reported at 68° at end of test period.

CONTRACTOR REPRESENTATVE:
(Rieck) DATE: 11-3-00

CQC CONSULTANT
DATE: 11/3/00

CONSTRUCTION MANAGER REPRESENTATIVE
DATE: 11/8/00

DEFINE WHICH SEGMENT OF PIPE FIRST

Mechanical Electrical Services, Inc.
Planners, Constructors & Maintainers

PIPE TEST REPORT

JOB NAME: ELPTS JOB NO.: FSC-641

DATE OF TEST: 11/30/00

TESTING TYPE: AIR [ ] HYDROSTATIC – Primary [X] HYDROSTATIC – Alternate [ ]

TEST FLUID: Water NAME OF SYSTEM TESTED: 10" SDR 11 Containment LTS

LINE DESIGNATION NO: CE-10"-B4-0006

TIME AT TEST BEGINNING: 5:00 P.M.

PRESSURE AT BEGINNING: 16 psi

FLUID TEST TEMP: 47° GAUGE NO: B8-3 CALIBRATION DATE: 3/14/00

AMBIENT TEMP.: 39° F MAKEUP WATER ADDED 0

TIME AT TEST ENDING: 6:00 P.M. PRESSURE AT ENDING: 16

REPRESENTATIVE (Witnessing test beginning)

TOTAL TIME AT TEST PRESSURE 5 TEST DURATION 1 HRS.

RESULTS OF TEST: Initial expansion phase 1:00 - 16psi . 2:00 16psi 3:00 16 psi 4:00 16 psi 5:00 16PSI 6:00 16 PSI pressure remained constant NO make-up water was added. NO visible leaks

CONTRACTOR REPRESENTATVE:

DATE: 11/30/00

CQC CONSULTANT

DATE: 11/30/00

CONSTRUCTION MANAGER REPRESENTATIVE

DATE: 11/30/00

SUPPLIER DOCUMENT SUBMITTAL

FDF PROJECT NO: 20111	CONTRACT NO: FSC - 641	SUBMITTAL NO: 02605-010	REV: 0	03-Mar-01	PAGE 1 OF 1

FROM: The STAVER GROUP, Inc.
Ron Wood
SIGNATURE: Ron Wood

TO: FDF ENGINEERING/CONSTRUCTION DOCUMENT CONTROL (ECDC), MS 52-7
RECEIVED BY: Erika Jarrett DATE: 3/5/01

			DOCUMENT FAMILY									SUBMITTAL TYPE				SUBMITTAL ACTION		
QTY	DOCUMENT NUMBER	REV	PRO	H&S	MED	TRG	CON	ENG	QAC	OPER	TITLE/DESCRIPTION	DRFT	CFC	INF	ASSOCIATED SPECIFICATION	A	B	C
8	641-02605-010	0						X			10" LTS HDPE Pipe		X		02605	X		
											Test Reports							

REVIEW DISTRIBUTION

NAME	MS	NAME	MS	NAME	MS
Mike Griffin	525				
Jim Cherry	525				
Jim Jenkins	525				
Mike Godber	41				
Rob Knaip	525				
Scott Wheeler	525				
Kwasi Badu-Tuxeneboah	38				

RECEIVED
MAR 06 2001

NO COMMENTS: COMMENTS: (PLEASE USE SPACE BELOW FOR COMMENTS OR INDICATE IF ATTACHMENTS)

WHAT ABOUT STAVER LA-1A LINES? VA-1 TO VA-2, VA-3 TO VA-4, ETC.

RECEIVED BY: [signature] DATE 3/7/01
(SIGN/DATE AND RETURN A COPY TO ECDC, MS 52-7)

SUBMITTAL TYPE: (BY SUPPLIER)
CFC - CERTIFIED FOR CONSTRUCTION
INF - INFORMATION/RECORD
DRFT - DRAFT/PRELIMINARY

SUBMITTAL ACTION CODE: (BY FDF)
A - Conforms to Subcontract Requirements
B - Minor Comments - Incorporate and Resubmit
C - Revise and Resubmit (SEE COMMENTS)

ORIGINAL

Mechanical Electrical Services, Inc.
Engineers, Constructors & Maintainers

PIPE TEST REPORT

JOB NAME: ELPTS JOB NO.: FSC-641

DATE OF TEST: 9/20/00

TESTING TYPE: AIR [ ] HYDROSTATIC – Primary [X] HYDROSTATIC – Alternate [ ]

TEST FLUID: Water NAME OF SYSTEM TESTED: 10" SDR11 LTS UH-23

LINE DESIGNATION NO: CE-10"-B4-0002

TIME AT TEST BEGINNING: 12:50 pm

PRESSURE AT BEGINNING: 16 psi

FLUID TEST TEMP: N/A GAUGE NO: B8-3 CALIBRATION DATE: 3/14/00

AMBIENT TEMP.: 76° MAKEUP WATER ADDED 0

TIME AT TEST ENDING: 1:50 pm. PRESSURE AT ENDING: 16psi

REPRESENTATIVE (Witnessing test beginning) R Wood

TOTAL TIME AT TEST PRESSURE 5 TEST DURATION 1 HRS.

RESULTS OF TEST: Initial expansion phase began @ 8:50 16psi 9:50 15 PSI 9:50 ↑ 16 PSI 10:50 15 10:50 ↑ 16 psi 11:50 15 psi 11:50 ↑ 16 12:50 16psi start test 1:50 16psi NO leaks NO loss in pressure

CONTRACTOR REPRESENTATVE:

R Wood DATE: 9/20/00

CQC CONSULTANT

Collin P. Wilson DATE: 9/20/00

CONSTRUCTION MANAGER REPRESENTATIVE

B. Sewell DATE: 9/20/00

HYDROSTATIC PRESSURE TEST RESULTS

- GeoSyntec Consultants
- Contractor

CCT VIDEO SURVEY AND INSPECTION LOGS

- GeoSyntec Consultants
- Contractor

GEOSYNTEC CONSULTANTS

M E M O R A N D U M

TO: Willie Frazier
EPLTS Construction Contracts Manager
Fluor Fernald, Inc.

FROM: Kwasi Badu-Tweneboah, P.E.
GeoSyntec Consultants

DATE: March 27, 2001

SUBJECT: Review of Video Camera Inspections of Carrier Pipe
Enhanced Permanent Leachate Transmission
System (EPLTS) Project – FSC-641
Fernald Environmental Management Project
Fernald, Ohio

As requested by Fluor Fernald, GeoSyntec Consultants (GeoSyntec) has prepared this memorandum to document the review of the video camera inspections on the 6-in. nominal diameter HDPE SDR-11 carrier pipe for the Enhanced Permanent Leachate Transmission System (EPLTS) project. The video camera inspections of the EPLTS carrier pipe were reviewed to confirm compliance with Section 02605, Part 3.05.F of the EPLTS Technical Specifications. GeoSyntec received copies of the videotapes, recorded in January and February 2001, from Fluor Fernald on 28 February 2001.

GeoSyntec CQC personnel have reviewed the video tapes for the following segments of the LTS carrier pipe: (i) from VH-2 to VH-1, recorded on 4 January 2001; (ii) from VH-2 to VH-3, recorded on 3 January 2001; (iii) from VH-4 to VH-3, originally recorded on 4 January 2001 and then re-recorded on 22 February 2001; (iv) from VH-4 to VH-5, recorded on 4 January 2001; (v) from VH-6 to VH-5, recorded on 18 January 2001; (vi) from VH-6 to approximately 400 ft north of the CVH recorded on 18 January 2001; and (vii) from the CVH to approximately 500 ft north of the CVH. The 4 January 2001 video camera inspection from VH-4 to VH-3 was terminated at about 303 ft from VH-4 due to an apparent obstruction of the camera movement by debris in the pipe. The VH-3 to VH-4 LTS pipe was subsequently cleaned by flushing, and another video camera inspection was conducted on 22 February 2001.

Copies of the video camera inspection logs prepared by GeoSyntec CQC personnel for each segment of the LTS pipe are attached. As indicated on the logs, slight ponding and some light debris were observed in some of the pipes. However, the presence of slight ponding and light debris in the pipes to not appear to have any impact on the performance of the LTS pipelines from a flow capacity and transmission point of view. No evidence of out-of-roundness of the pipes was observed from a review of the videotapes.

Therefore, based on a review of the video camera inspections, the LTS carrier pipe from VH-1 to the CVH appears to be satisfactory.

Should you have any questions on the above, please do not hesitate to contact the author of this memorandum.

Attachment

Copies to:
Mike Griffin, Fluor Fernald
B. Scott Wheeler, Fluor Fernald
Jay Beech, GeoSyntec

* * * * *

GeoSyntec Consultants

FLUOR FERNALD

VIDEO TAPE SUMMARY

Carrier Pipe

Enhanced Permanent Leachate Transmission System

TAPE NO: 1 DATE OF RECORDING: 4 Jan 2001 TIME: _____

STATION: START: VH-2 FINISH: VH-1

FOOTAGE: START: 0.0 FINISH: 384.1

LOCATION FOOTAGE (FT)	JOINT TYPE BUTT/COUPLING	JOINT CONFIG.	REMARKS
2.4	Butt	Round	Sediment in pipe
5.5	Butt	Round	Sediment in pipe
40.3	Butt	Round	
80.1	Butt	Round	
120.2	Butt	Round	
120.2-125.1	—	—	Sediment in pipe
159.5	Butt	Round	
159.5-162.0	—	—	Sediment in pipe
199.5	Butt	Round	
237.1 - 238.0	—	—	Sediment in pipe
275.1	Butt	Round	
315.5	Butt	Round	
354.0	Butt	Round	
370.5-384.1	—	—	Sediment + debris in pipe
384.1	Butt	Round	

PER: Keer Sparks

SHEET NO. 1 OF 1

GeoSyntec Consultants

FLUOR FERNALD

VIDEO TAPE SUMMARY

Carrier Pipe

Enhanced Permanent Leachate Transmission System

TAPE NO: 2-ZKS DATE OF RECORDING: 3 Jan 2001 TIME: _____

STATION: START: VH-2 FINISH: VH-3

FOOTAGE: START: 5.0 FINISH: 114.2 Δ

LOCATION FOOTAGE (FT)	JOINT TYPE BUTT/COUPLING	JOINT CONFIG.	REMARKS
13.7	Butt	Round	
35.5	Butt	Round	
75.5	Butt	Round	
113.5	Butt	Round	
114.2	—	—	Sediment in pipe
	Butt	Round	
	Butt	Round	
	Butt	Round	
	Butt	Round	

PER: Ken Sparks

* actual footages are incorrect
Δ footage no longer displayed

SHEET NO. 1 OF 2

GeoSyntec Consultants

FLUOR FERNALD

VIDEO TAPE SUMMARY

Carrier Pipe

Enhanced Permanent Leachate Transmission System

TAPE NO: 2 DATE OF RECORDING: 3 Jan 2001 TIME: _____

STATION: START: VH-2 FINISH: VH-3 (Rerun)

FOOTAGE: START: 2.0 FINISH: 440.0' (estimated)

LOCATION FOOTAGE (FT)	JOINT TYPE BUTT/COUPLING	JOINT CONFIG.	REMARKS
2.0	Butt	Round	
2.0-5.0	—	—	Standing water + debris in pipe
14.0	Butt	Round	Standing water + sediment around joi
29.6	Butt	Round	Standing water + sediment around joint
60.1	Butt	Round	Standing water + sediment around joint
61.3-64.0	—	—	No footage
4.0-86.1	—	—	Standing water in pipe
86.1	Butt	Round	
86.1-102.0	—	—	Standing water in pipe
102.0	Butt	Round	
102.0-113.7	—	—	Standing water in pipe
113.7	Butt	Round	
113.7-122.3	—	—	Standing water in pipe
122.3	Butt	Round	
122.3-126.2	—	—	Standing water in pipe
126.2-129.1	—	—	Sediment in pipe
129.1	—	—	Footage counter off
	Butt	Round	
129.1 —	—	—	Sediment in pipe
	Butt	Round	
'nd			When pulling camera out counter
			+ filming start @ 76' and end
			@ 372.0' therefore finish footage
			is estimated to be 440'

PER: Ken Sparks

SHEET NO. 2 OF 2

GeoSyntec Consultants

FLUOR FERNALD

VIDEO TAPE SUMMARY

Carrier Pipe

Enhanced Permanent Leachate Transmission System

TAPE NO: 3 DATE OF RECORDING: 4 Jan 2001 TIME: _____

STATION: START: VH-4 FINISH: VH-3

FOOTAGE: START: 2.0 FINISH: 303.0

LOCATION FOOTAGE (FT)	JOINT TYPE BUTT/COUPLING	JOINT CONFIG.	REMARKS
2.0	Butt	Round	
27.7	Butt	Round	
67.7	Butt	Round	
107.0	—	—	Debris in pipe
109.5	Butt	Round	
147.9	Butt	Round	
7.9-168.6	—	—	Standing water + debris in pipe
186.9	Butt	Round	
186.9-192.4	—	—	Standing water + debris in pipe
197.3	—	—	debris in pipe
216.6	—	—	debris in pipe
218.7-223.0	—	—	Standing water + debris in pipe
223.0	Butt	Round	
223.0-229.0	—	—	Standing water + debris in pipe
231.2-241.0	—	—	large debris pile in pipe
243.0-250.0	—	—	debris in pipe
253.0	—	—	debris in pipe
257.0	—	—	large debris pile in pipe
260.0	Butt	Round	
260.0-264.5	—	—	Standing water + debris in pipe
7.0-300.6	—	—	Standing water + debris in pipe
300.6	Butt	Round	
300.6-303.0	—	—	Standing water + debris in pipe

PER: Ken Sparks

SHEET NO. 1 OF 2

GeoSyntec Consultants

FLUOR FERNALD

VIDEO TAPE SUMMARY

Carrier Pipe

Enhanced Permanent Leachate Transmission System

TAPE NO: 3 DATE OF RECORDING: 4 Jan 2001 TIME: _____

STATION: START: VH-4 FINISH: VH-3

FOOTAGE: START: 2.0 FINISH: 303.0

LOCATION FOOTAGE (FT)	JOINT TYPE BUTT/COUPLING	JOINT CONFIG.	REMARKS
303.0	—	—	discontinued filming due to debris obstructing the advancement of the camera. Pipe will need to be hydro-flushed.

PER: Ken Sparks

SHEET NO. 2 OF 2

GeoSyntec Consultants

FLUOR FERNALD

VIDEO TAPE SUMMARY

Carrier Pipe

Enhanced Permanent Leachate Transmission System

TAPE NO: #3 (KBT) DATE OF RECORDING: 4 Jan 2001 TIME: _____

STATION: START: VH-4 FINISH: VH-5

FOOTAGE: START: 2.0 FINISH: 389.9

LOCATION FOOTAGE (FT)	JOINT TYPE BUTT/COUPLING	JOINT CONFIG.	REMARKS
13.0 - 20.0	—	—	Sediment in pipe
35.5	Butt	Round	
75.0	Butt	Round	
119.0	Butt	Round	
158.0	Butt	Round	
199.0	Butt	Round	
240.6	Butt	Round	
275.2	Butt	Round	
304.7 - 314.0	—	—	Sediment in pipe
314.0	Butt	Round	
338.0 - 353.4	—	—	Sediment in pipe
353.8	Butt	Round	
385.6	Butt	Round	

PER: _____ SHEET NO. ____ OF ____

GeoSyntec Consultants

FLUOR FERNALD

VIDEO TAPE SUMMARY

Carrier Pipe

Enhanced Permanent Leachate Transmission System

TAPE NO: 4 DATE OF RECORDING: 22 Feb 2001 TIME: _____

STATION: START: VH-4 FINISH: VH-3 (Rerun)

FOOTAGE: START: 5.6 FINISH: 390.0

LOCATION FOOTAGE (FT)	JOINT TYPE BUTT/COUPLING	JOINT CONFIG.	REMARKS
5.6	—	—	Water in pipe, camera on side of p
42.4	Butt	Round	standing water no longer apparent
81.4	Butt	Round	water in pipe, camera upside dow
121.3	Butt	Round	water in pipe, camera upside dow
165.3	Butt	Round	water in pipe, camera upside dow
199.4	Butt	Round	water no longer apparent, camera upsi
238.5	Butt	Round	
278.3	Butt	Round	standing water in pipe
308.4-315.3	—	—	Debris in pipe
319.7	Butt	Round	standing water in pipe
354.9	Butt	Round	standing water in pipe
374.0	—	—	standing water deeper in pipe
382.6	Butt	Round	standing water in pipe
390.0	Butt	Round	

PER: Ken Sparks

SHEET NO. 1 OF 1

GeoSyntec Consultants

FLUOR FERNALD

VIDEO TAPE SUMMARY

Carrier Pipe

Enhanced Permanent Leachate Transmission System

TAPE NO: 6 DATE OF RECORDING: 18 Jan 2001 TIME: _____

STATION: START: VH-6 FINISH: ~400' N of CVH

FOOTAGE: START: 2.0 FINISH: 1276.4

LOCATION FOOTAGE (FT)	JOINT TYPE BUTT/COUPLING	JOINT CONFIG.	REMARKS
14.0	Butt	Round	
20.4	Butt	Round	
28.4	Butt	Round	
36.3	Butt	Round	
42.4	Butt	Round	
50.6	Butt	Round	
90.1	Butt	Round	
128.7	Butt	Round	
168.2	Butt	Round	
207.5	Butt	Round	
247.5	Butt	Round	
287.3	Butt	Round	
327.0	Butt	Round	
365.5	Butt	Round	
404.1	Butt	Round	
414.7	Butt	Round	
418.9	Butt	Round	
446.8	Butt	Round	
471.1	Butt	Round	
507.0	Butt	Round	
543.9	Butt	Round	
582.0	Butt	Round	
620.8	Butt	Round	

PER: Ken Sparks

SHEET NO. 1 OF 3

GeoSyntec Consultants

FLUOR FERNALD

VIDEO TAPE SUMMARY

Carrier Pipe

Enhanced Permanent Leachate Transmission System

TAPE NO: 6 DATE OF RECORDING: 18 Jan 2001 TIME: _____

STATION: START: VH-6 FINISH: ~400' N of CVH

FOOTAGE: START: 2.0 FINISH: 1276.4

LOCATION FOOTAGE (FT)	JOINT TYPE BUTT/COUPLING	JOINT CONFIG.	REMARKS
658.8	Butt	Round	
697.7	Butt	Round	
736.4	Butt	Round	
775.1	Butt	Round	
813.3	Butt	Round	
853.9	Butt	Round	
890.6	Butt	Round	
928.0	Butt	Round	
976.5	Butt	Round	
1006.7	Butt	Round	
1040.6	Butt	Round	
1080.2	Butt	Round	
1118.2	Butt	Round	
1157.9	Butt	Round	standing water in pipe
1198.3	Butt	Round	
1239.5	Butt	Round	
1276.4	Butt	Round	
	~~Butt~~ FS	~~Round~~ FS	

PER: Ken Sparks

SHEET NO. 2 OF 3

GeoSyntec Consultants

FLUOR FERNALD

VIDEO TAPE SUMMARY

Carrier Pipe

Enhanced Permanent Leachate Transmission System

TAPE NO: 6 DATE OF RECORDING: 18 Jan 2001 TIME: _____

STATION: START: CVH FINISH: ~500' N of CVH

FOOTAGE: START: 2.0 FINISH: 509.0

LOCATION FOOTAGE (FT)	JOINT TYPE BUTT/COUPLING	JOINT CONFIG.	REMARKS
30.1	Butt	Round	
64.0	Butt	Round	
88.2	Butt	Round	
118.7	Butt	Round	
146.7	Butt	Round	
170.1	Butt	Round	
205.7	Butt	Round	
230.4	Butt	Round	
262.2	Butt	Round	
299.3	Butt	Round	
336.7	Butt	Round	
372.8	Butt	Round	
429.2	Butt	Round	
472.7	Butt	Round	
504.8	Butt	Round	

PER: Ken Sparks

SHEET NO. 3 OF 3

CONTRACTOR

SUPPLIER DOCUMENT SUBMITTAL

FDF PROJECT NO: 20111	CONTRACT NO: FSC - 641	SUBMITTAL NO: 02600 - 001	REV: 0	DATE: 08-Mar-01	PAGE 1 OF 1

FROM: The STAVER GROUP, Inc.
David R. Opalka
SIGNATURE: David R. Opalka

TO: FDF ENGINEERING/CONSTRUCTION DOCUMENT CONTROL (ECDC), MS 52-7
RECEIVED BY: Denise Wentz DATE: 3/12/2001

			DOCUMENT FAMILY									SUBMITTAL TYPE				SUBMITTAL ACTION		
QTY	DOCUMENT NUMBER	REV	PRO	H&S	MED	TRG	CON	ENG	QAC	OPER	TITLE/DESCRIPTION	DRFT	CFC	INF	ASSOCIATED SPECIFICATION	A	B	C
8	641-02605-011	0						X			Video Inspection Log Reports*		X		02605	X		
2	641-02605-012	0						X			Video Tape Records*		X		02605	X		
											* Revideo to verify CE-6"\10"-B4-0003							

REVIEW DISTRIBUTION

NAME	MS	NAME	MS	NAME	MS

NO COMMENTS: COMMENTS: (PLEASE USE SPACE BELOW FOR COMMENTS OR INDICATE IF ATTACHMENTS)

RECEIVED BY: [illegible] DATE 3/29/01
(SIGN/DATE AND RETURN A COPY TO ECDC, MS 52-7)

SUBMITTAL TYPE: (BY SUPPLIER)
CFC - CERTIFIED FOR CONSTRUCTION
INF - INFORMATION/RECORD
DRFT - DRAFT/PRELIMINARY

SUBMITTAL ACTION CODE: (BY FDF)
A - Conforms to Subcontract Requirements
B - Minor Comments - Incorporate and Resubmit
C - Revise and Resubmit (SEE COMMENTS)

ORIGINAL

WATER WORKS

LOG REPORT
02-22-80

áàJOB INFORMATION
PROJECT: :REICK
DATE :02/22/01
OPERATOR :james dugas
TAPE # :
TAPE START:0HR 000MI00SEC
LOCATION,ROSS FERNALD
VALVE HOUSE#4/#3

PIPE INFORMATION
UPSTREAM :CLEANOUTS
DOWNSTREAM :NORTH/#3
TYPE OF PIPE :HDPE
PIPE SIZE :6"
LENGTH :480
DEPTH :10'
FLOW RATE :NONE

reason for inspection
TO CHECK THE CONDITION OF
THE NEW PIPE AND JOINTS
WEATHER:cold/light SNOW

FERNALD FOR REICK MECH
INSPECTION OF 6"NEW
PIPE FROM VALVE HOUSE
4 TO VALVE HOUSE 3
APROX 480 FEET

FOOTAGE: FAULT OR COMMENTS:

[X] A - Conforms to the Subcontract Requirements
[ ] B - Minor Comment - Incorporate and Resubmit
[ ] C - Revise and Resubmit
Sig: MWA Date: 3/29/01

INFORMATION ONLY

Submittal # 20111-641-02600-001 Rev 0

Doc # 641-02605-012

VIDEO TAPE FOR 6" LTS LINE CE-6"-B4-0003

Also see (Reference) Submittal # 20111-641-02605-009

[✓] A - Conforms to the Subcontract Requirements
[ ] B - Minor Comment - Incorporate and Resubmit
[ ] C - Revise and Resubmit
Sig: MW/SM Date: 3/29/01

INFORMATION ONLY

CONTRACT NO: F[illegible]41 | SUBMITTAL NO: 02605-009 | REV: 0 | DATE: 22 -01 | PAGE 72 of Vol. 4

TO: FDF ENGINEERING/CONSTRUCTION DOCUMENT CONTROL (ECDC), MS 52-7

The STAVER GROUP, Inc.

David R. Opalka

SIGNATURE: R Wood

RECEIVED BY: Denise Wentz DATE: 4/3/01

			DOCUMENT FAMILY									SUBMITTAL TYPE				SUBMITTAL ACTION		
QTY	DOCUMENT NUMBER	REV	PRO	H&S	MED	TRG	CON	ENG	QAC	OPER	TITLE/DESCRIPTION	DRFT	CFC	INF	ASSOCIATED SPECIFICATION	A	B	C
8	641-02605-009 ✓	~~1~~ 0						X			Video Inspection Log Reports *		X		02605	X		
2 ea	641-02605-010 ✓	~~1~~ 0						X			Video Tape Records*		X		02605	X		
											*Pipe Lines CE-6"\10"-B4-(0001 - 0006)							

REVIEW DISTRIBUTION

NAME	MS	NAME	MS	NAME	MS

NO COMMENTS: COMMENTS: (PLEASE USE SPACE BELOW FOR COMMENTS OR INDICATE IF ATTACHMENTS)

RECEIVED BY: MW Gill DATE 3/29/01

(SIGN/DATE AND RETURN A COPY TO ECDC, MS 52-7)

SUBMITTAL TYPE: (BY SUPPLIER)

CFC - CERTIFIED FOR CONSTRUCTION

INF - INFORMATION/RECORD

DRFT - DRAFT/PRELIMINARY

SUBMITTAL ACTION CODE: (BY FDF)

A - Conforms to Subcontract Requirements

B - Minor Comments - Incorporate and Resubmit

C - Revise and Resubmit (SEE COMMENTS)

ORIGINAL

STAVER SUBMITTAL 20111-641-02605-009, Rev 0
22-FEB-01

Doc #: 20111-641-02605-010, Rev 0

LTS VIDEOTAPE

TAPE 1	– PIPE ID	CE6-1-B4-0001	
2	–	CE6	-B4-0002
3	–	CE6	-B4-0003
		CE6	-B4-0004
4	–	CE6	-B4-0005
5	–	CE6	-B4-0006

[✓] A - Conforms to the Subcontract Requirements
[ ] B - Minor Comment - Incorporate and Resubmit
[ ] C - Revise and Resubmit
Sig: [signature] Date: 3/29/01

INFORMATION ONLY

Submittal 20111-641-02605-009, Rev 0
Doc # 641-02605-009
Video Inspection Log Reports

[✓] A - Conforms to the Subcontract Requirements
[ ] B - Minor Comment - Incorporate and Resubmit
[ ] C - Revise and Resubmit
Sig: [signature] Date: 3/29/01

INFORMATION ONLY

Water works

LOG REPORT
01-04-80

ÀÀJOB INFORMATION
PROJECT: :fernald
DATE :01/04/01
OPERATOR :james dugas
TAPE # :
TAPE START:0HR 000MI00SEC
LOCATION.valve house TWO
fernald ohio

PIPE INFORMATION
UPSTREAM :B4-0001
DOWNSTREAM :B4-0002
TYPE OF PIPE :CE-6
PIPE SIZE :6"
LENGTH :400
DEPTH :0'
FLOW RATE :NONE

reason for inspection
TO CHECK THE CONDITION OF
THE PIPE and joints
WEATHER:cold/light wind

WE ARE RUNNING NORTH IN
PIPE NUMBER B40001 FROM
VALVE HOUSE#2

FOOTAGE: FAULT OR COMMENTS:

water works

LOG REPORT
01-03-80

ááJOB INFORMATION
PROJECT: :fernald
DATE :01/03/01
OPERATOR :james dugas
TAPE # :
TAPE START:0HR 000MI00SEC
LOCATION,valve house TWO
fernald ohio

PIPE INFORMATION
UPSTREAM :B4-0001
DOWNSTREAM :B4-0002
TYPE OF PIPE :hdpe
PIPE SIZE :6"
LENGTH :800
DEPTH :0'
FLOW RATE :NONE

reason for inspection
TO CHECK THE CONDITION OF
THE PIPE and joints
WEATHER:cold/light wind

WE ARE RUNNING NORTH IN
PIPE NUMBER B40001 FROM
VALVE HOUSE#2 AND SOUTH
IN LINE#B4-0002 FROM VALVE
HOUSE#2

FOOTAGE: FAULT OR COMMENTS:

water works

LOG REPORT
01-04-80

ããJOB INFORMATION
PROJECT: :fernald
DATE :01/04/01
OPERATOR :james dugas
TAPE # :
TAPE START:0HR 000MI00SEC
LOCATION.valve house FOUR
fernald ohio

PIPE INFORMATION
UPSTREAM :B4-0003
DOWNSTREAM :B4-0004
TYPE OF PIPE :hdpe
PIPE SIZE :6"
LENGTH :000
DEPTH :0'
FLOW RATE :NONE

reason for inspection
TO CHECK THE CONDITION OF
THE PIPE and joints
WEATHER:cold/light wind

WE ARE RUNNING NORTH IN
PIPE NUMBER B40003 FROM
VALVE HOUSE#4

FOOTAGE: TIME OF DAY: FAULT OR COMMENTS:

water works

LOG REPORT
01-04-80

ããJOB INFORMATION
PROJECT: :fernald
DATE :01/04/01
OPERATOR :james dugas
TAPE # :
TAPE START:OHR 000MI00SEC
LOCATION,valve house FOUR
fernald ohio

PIPE INFORMATION
UPSTREAM :B4-0004
DOWNSTREAM :B4-0005
TYPE OF PIPE :hdpe
PIPE SIZE :6"
LENGTH :00
DEPTH :0'
FLOW RATE :NONE

reason for inspection
TO CHECK THE CONDITION OF
THE PIPE and joints
WEATHER:cold/light wind

WE ARE RUNNING SOUTH IN
PIPE NUMBER B40004 FROM
VALVE HOUSE#4

FOOTAGE: FAULT OR COMMENTS:

WATER WORKS

LOG REPORT
01-18-80

ããJOB INFORMATION
PROJECT: :RIECK MECH
DATE :01/18/01
OPERATOR :james dugas
TAPE # :
TAPE START:0HR 000MI00SEC
LOCATION.VALVE HOUSE#6 TO
VALVE HOUSE #5

PIPE INFORMATION
UPSTREAM :B4-0006
DOWNSTREAM :B4-0005
TYPE OF PIPE :SDR/11
PIPE SIZE :6"
LENGTH :400'
DEPTH :10'
FLOW RATE :NONE

reason for insbection
TO CHECK THE CONDITION OF
THE PIPE AND JOINTS
WEATHER:WARM/light wind

WE ARE RUNNING NORTH IN
6" LINE FROM VALVE HOUSE
#6 TO VALVE HOUSE #5
B4-0006 TO B4-0005

FOOTAGE: FAULT OR COMMENTS:

WATER WORKS

LOG REPORT
01-18-80

ããJOB INFORMATION 5
PROJECT: :RIECK NEC
DATE: :01/18/01
OPERATOR: :JAMES DUGAS
TAPE: :SP
TAPE START:0HR 000MI00SEC
LOCATION.FERNALD FERNALD
OHIO

PIPE INFORMATION
UPSTREAM :#7
DOWNSTREAM :#6
TYPE OF PIPE :CE-6
PIPE SIZE :6"
LENGTH :1600
DEPTH :10'
FLOW RATE :NONE

reason for inspection
TO CHECK THE CONDITION OF
THE PIPE AND JOINTS
WEATHER:cold/light wind

WE ARE RUNNING EAST FROM
VALVE HOUSE#7 TO VALVE
HOUSE#6TO END OF RUN IN
6"CE6

FOOTAGE: FAULT OR COMMENTS:

APPENDIX G

APPENDIX G

CONCRETE PROTECTIVE LINER MONITORING LOGS

TRIAL SEAM LOGS

GEOSYNTEC CONSULTANTS

FLUOR DANIEL FERNALD

TRIAL SEAM LOG - EXTRUSION

PROJECT: ON-SITE DISPOSAL FACILITY (OSDF)

LOCATION: FERNALD, OHIO PROJECT NO: 6Q1029 TASK NO.: 04.2

DESCRIPTION: EPLTS YEAR: 2000

CONTRACTOR: Stauer/ISCO TENSIOMETER DESCRIPTION: N/A

	TRIAL SEAM NO.	DATE (day/mo)	TIME	MACHINE NO.	OPER ID	MATERIAL DESCRIPTION (1)	EXTRUSION PREHEAT (SET/C/F)	EXTRUSION BARREL (°C/°F)	TEST RESULTS Spark ~~PEEL~~ (~~ppi/psi~~)	TEST RESULTS bend ~~SHEAR~~ (~~ppi/psi~~)	TEST RESULTS PASS	TEST RESULTS FAIL	RE-TEST NO.	QA ID	
*	1	23 Aug	1335	5013	JO	bekaplast	500	446	✓	✓	✓			KS	
*	2	↓	1400	5013	STH		498	440	✓	✓	✓			KS	
*	3	24 Aug	0755	5013	STH		499	444	✓	✓	✓			KS	
*	4		0800	0097	JO		510	422	✓	✓	✓			KS	
Δ *	5		0850	9924	STH		—	608	✓	✓	✓			KS	
A *	6		0900	6851	JO		—	620	✓	✓		✓(bend)		KS	4mm
A *	7	↓	0945	6851	JO		—	620	✓	✓		✓(bend)		KS	4mm
	8	25 Aug	0730	5013	STH		500	446	✓	✓	✓			KS	
	9	28 Aug	1345	5013	STH		500	446	✓	N/A	✓			KS	
Δ	10	↓	1359	9924	STH	↓	—	608	✓	N/A	✓			KS	
	11	31 Aug	0810	5013	JO	HDPE Pipe	500	446	✓	~~N/A~~ ✓ KS 9/31/00	✓			KS	
Δ	12	↓	0815	9924	STH	↓	—	608	✓	N/A	✓			KS	
19	~~18~~	28 ~~Aug~~ Sept	1500	0097	JO	bekaplast	500	448	✓	N/A	✓			KS	
20	~~19~~	29 Sept	0815	5013	STH		500	446	✓	N/A	✓			KS	

*, rive humidity over 80% requiring "cold bend" test A Hot air welding

NOTE: (1) MATERIAL DESCRIPTION REFERS TO EITHER SMOOTH/SMOOTH (S/S); SMOOTH/TEXTURED (S/T); OR TEXTURED/TEXTURED (T/T).

GEOSYNTEC CONSULTANTS

FLUOR DANIEL FERNALD

TRIAL SEAM LOG - EXTRUSION

PROJECT: ON-SITE DISPOSAL FACILITY (OSDF)

LOCATION: FERNALD, OHIO PROJECT NO: GO0409 TASK NO.: 04.1

DESCRIPTION: PHASE II YEAR: 2000

CONTRACTOR: STAVER/ISCO TENSIOMETER DESCRIPTION:

TRIAL SEAM NO.	DATE (day/mo)	TIME	MACHINE NO.	OPER ID	MATERIAL DESCRIPTION (1)	EXTRUSION PREHEAT (SET/°C/°F)	EXTRUSION BARREL (°C/°F)	TEST RESULTS SPARK ~~PEEL~~ (ppi/psi)	TEST RESULTS ~~BEND~~ SHEAR (ppi/psi)	TEST RESULTS PASS	TEST RESULTS FAIL	RE-TEST NO.	QA ID
13	18 Sept	0940	0097	STEVE HOLPP	BECKAPLAST	500	420	PASS	PASS	P	—	—	TBC
14	18 Sept	0945	5013	JACK OLSEN	BECKAPLAST	500	420	PASS	PASS	P	—	—	TBC
15	20 Sept	1410	0097	Jack Olsen	Beckaplast	500	420	PASS	~~PASS~~ N/A	P			
16	21 Sept	0905	0097	STEVE HOLPP	Beckaplast	502	446	Pass	N/A	P			
17	21 Sept	0923	5013	Jack Olsen	Beckaplast	502	446	Pass	N/A	P			
18	21 Sept	1605	Hot Air Gun 9924	STEVE HOLPP	Beckaplast	600°	—	Pass	N/A	P			
21	10 OCT	1030	0097	JACK OLSEN	BECKAPLAST	500	446	PASS	PASS	P	—	—	TBC
22	10 OCT	1040	5013	STEVE HOLPP	BECKAPLAST	500	446	PASS	PASS	P	—	—	TBC
23	11 Oct	1315	5013	STEVE HOLPP	Beckaplast	500	450	Pass	N/A	P			
24	11 Oct	1320	5013	JACK OLSEN	Beckaplate	500	450	Pass	N/A	P			
25	12 Oct	1520	0097	STEVE HOLPP	Beckaplast	500	450	Pass	N/A	P			
26	12 Oct	1525	5013	Jack Olsen	Beckaplast	500	450	Pass	N/A	P			
27	13 Oct	1115	5013	Jack OLSEN	Beckaplast	500	450	Pass	Pass	P			
28	18 Oct	1255	0097	SH	B.plast	500	450	Pass	Pass	P			
29	18 Oct	1305	499	JO	B.plast	500	450	Pass	Pass	P			
30 19	18 Oct	1045	499	JO	B.plast	500	450	Pass	Pass	P			
31 19	18 Oct	1055	0097	SH	B.plast	500	450	Pass	Pass	P			
32	24 Oct	0900	499	SH	B.plast	500	450	Pass	Pass	P			
32a	24 Oct	0905	0097	JO	B.plast	500	450	Pass	Pass	P			
33	24 Oct	1300	Hot Air weld 9924	SH	B.plast	500	450	Pass	Pass	P			
34	25 Oct	1045	499	SH	B.plast	425°	450	Pass	Pass	P			
35	25 Oct	1045	0097	JO	B.plast	425°	450	Pass	Pass	P			
36	26 Oct	0900	0097	SH	B.plast	425	450	Pass	Pass	P			
37	26 Oct	0905	499	JO	B.plast	425	450	Pass	Fail	F			
38	26 Oct	0930	499	JO	B.plast	425	450	Pass	Pass	P			

NOTE: (1) MATERIAL DESCRIPTION REFERS TO EITHER SMOOTH/SMOOTH (S/S); SMOOTH/TEXTURED (S/T); OR TEXTURED/TEXTURED (T/T).

GEOSYNTEC CONSULTANTS

FLUOR DANIEL FERNALD

TRIAL SEAM LOG - EXTRUSION

PROJECT: ON-SITE DISPOSAL FACILITY (OSDF)

LOCATION: FERNALD, OHIO PROJECT NO: GQ1029 TASK NO.: 04.2

DESCRIPTION: EPLTS YEAR: 2000

CONTRACTOR: ISCO/STAVER TENSIOMETER DESCRIPTION: N/A

TRIAL SEAM NO.	DATE (day/mo)	TIME	MACHINE NO.	OPER ID	(1) MATERIAL DESCRIPTION	EXTRUSION PREHEAT (SET/C/F)	EXTRUSION BARREL (°C/°F)	TEST RESULTS ~~PEEL~~ Bend (ppi/psi)	TEST RESULTS ~~SHEAR~~ SPARK (ppi/psi)	TEST RESULTS PASS	TEST RESULTS FAIL	RE-TEST NO.	QA ID
39	27 Oct	0930	499	JO	B.Plast	425	450	Pass	Pass	P			CS
40	15 Nov	0845	499	JO	B.Plast	425	450	N/A	Pass	P			CS
41	16 Nov	0815	499	JO	B.Plast	425	450	N/A	Pass	P			CS
42	4 Dec	0800	0097	JO	B.Plast	425	450	Pass	Pass	P			CS
43	4 Dec	0815	499	SH	B.Plast	425	450	Pass	Pass	P			CS

NOTE: (1) MATERIAL DESCRIPTION REFERS TO EITHER SMOOTH/SMOOTH (S/S); SMOOTH/TEXTURED (S/T); OR TEXTURED/TEXTURED (T/T).

GEOSYNTEC CONSULTANTS

FLUOR DANIEL FERNALD

TRIAL SEAM LOG - EXTRUSION

PROJECT: ON-SITE DISPOSAL FACILITY (OSDF)

LOCATION: FERNALD, OHIO PROJECT NO: GQ~~0409~~ 1039 KS TASK NO.: 04.2

DESCRIPTION: EPLTS YEAR: 2001

CONTRACTOR: ISCO TENSIOMETER DESCRIPTION:

TRIAL SEAM NO.	DATE (day/mo)	TIME	MACHINE NO.	OPER ID	(1) MATERIAL DESCRIPTION	EXTRUSION		TEST RESULTS				RE-TEST NO.	QA ID
						PREHEAT (SET/°C/°F)	BARREL (°C/°F)	Spark ~~PEEL~~ (ppi/psi)	SHEAR (ppi/psi)	PASS	FAIL		
1	18 Jan	0836	499	JO	Bekaplast	420	450	✓		✓			KS

NOTE: (1) MATERIAL DESCRIPTION REFERS TO EITHER SMOOTH/SMOOTH (S/S); SMOOTH/TEXTURED (S/T); OR TEXTURED/TEXTURED (T/T).

GEOSYNTEC CONSULTANTS

FLUOR DANIEL FERNALD

TRIAL SEAM LOG - EXTRUSION

PROJECT: ON-SITE DISPOSAL FACILITY (OSDF)

LOCATION: FERNALD, OHIO PROJECT NO: ~~GQ0409~~ 1029 TASK NO.: 04.2

DESCRIPTION: ~~PHASE II~~ EPLTS YEAR: 2001

CONTRACTOR: ISCO TENSIOMETER DESCRIPTION: N/A

TRIAL SEAM NO.	DATE (day/mo)	TIME	MACHINE NO.	OPER ID	(1) MATERIAL DESCRIPTION	EXTRUSION PREHEAT (SET/°C/°F)	EXTRUSION BARREL (°C/°F)	TEST RESULTS PEEL (ppi/psi)	TEST RESULTS SHEAR (ppi/psi)	TEST RESULTS PASS	TEST RESULTS FAIL	RE-TEST NO.	QA ID
N/A	25 Jan	1435	WG17	TD	HDPE Pipe	250	220	N/A	N/A	N/A			KS

NOTE: (1) MATERIAL DESCRIPTION REFERS TO EITHER SMOOTH/SMOOTH (S/S); SMOOTH/TEXTURED (S/T); OR TEXTURED/TEXTURED (T/T).

GEOSYNTEC CONSULTANTS

FLUOR DANIEL FERNALD

TRIAL SEAM LOG - EXTRUSION

PROJECT: ON-SITE DISPOSAL FACILITY (OSDF)

LOCATION: FERNALD, OHIO PROJECT NO: GQ~~0409~~ 1029 TASK NO.: 04.2

DESCRIPTION: EPLTS YEAR: 2001

CONTRACTOR: Stawer/ISCO TENSIOMETER DESCRIPTION: NA

TRIAL SEAM NO.	DATE (day/mo)	TIME	MACHINE NO.	OPER ID	(1) MATERIAL DESCRIPTION	EXTRUSION PREHEAT (SET/°C/°F)	EXTRUSION BARREL (°C/°F)	TEST RESULTS Spark ~~PEEL~~ (ppi/psi)	TEST RESULTS SHEAR (ppi/psi)	TEST RESULTS PASS	TEST RESULTS FAIL	RE-TEST NO.	QA ID
	13 March	0830	0111	JO	Bekaplast	230°C	220°C	✓		✓			KS
	14 March	0745	0111	JO	Bekaplast	230°C	220°C	✓		✓			KS
	15 March	0805	0111	JO	Bekaplast	230°C	220°C	✓		✓			KS
	20 March	0800	0111	JO	Bekaplast	230°C	220°C	✓		✓			KS
	21 March	0730	0111	JO	Bekaplast	230°C	220°C	✓		✓			KS
	22 March	0840	0111	JO	Bekaplast	230°C	220°C	✓		✓			KS
	23 March	1315	0111	JO	Bekaplast	230°C	220°C	✓		✓			KS
	27 March	0815	0111	JO	Bekaplast	230°C	220°C	✓		✓			KS
	28 March	0745	0111	JO	Bekaplast	230°C	220°C	✓		✓			KS
	3 April	0855	0111	JO	Bekaplast	235°C	235°C	✓		✓			TBV
	24 MAY	1300	0111	JO	BEKAPLAST	230°C	220°C	✓		✓			TBV

NOTE: (1) MATERIAL DESCRIPTION REFERS TO EITHER SMOOTH/SMOOTH (S/S); SMOOTH/TEXTURED (S/T); OR TEXTURED/TEXTURED (T/T).

GEOSYNTEC CONSULTANTS

FLUOR DANIEL FERNALD

TRIAL SEAM LOG - EXTRUSION

PROJECT: ON-SITE DISPOSAL FACILITY (OSDF)

LOCATION: FERNALD, OHIO PROJECT NO: GQ~~0409~~ 1341 TASK NO.: 04.2

DESCRIPTION: EPLTS YEAR: 2001

CONTRACTOR: Stawer / ISCO TENSIOMETER DESCRIPTION:

TRIAL SEAM NO.	DATE (day/mo)	TIME	MACHINE NO.	OPER ID	(1) MATERIAL DESCRIPTION	EXTRUSION PREHEAT (SET/°C/°F)	EXTRUSION BARREL (°C/°F)	TEST RESULTS ~~PEEL~~ Spark (ppi/psi)	TEST RESULTS SHEAR (ppi/psi)	TEST RESULTS PASS	TEST RESULTS FAIL	RE-TEST NO.	QA ID
	21 May	0930	5013	JO	Bekaplast	430	450	✓	—	✓			KS
	22 MAY	1005	5013	JO	"	450	425	✓	—	✓			TO
	23 MAY	1012	5013	JO	"	450	433	✓	—	✓			TO
	24 MAY	0945	~~LET~~ 7937	JO	"	450	430						

NOTE: (1) MATERIAL DESCRIPTION REFERS TO EITHER SMOOTH/SMOOTH (S/S); SMOOTH/TEXTURED (S/T); OR TEXTURED/TEXTURED (T/T).

PRODUCTION SEAM SUMMARY LOGS

- Valve House No.1
- Valve House No.2
- Valve House No.3
- Valve House No.4
- Valve House No.5
- Valve House No.6
- Control Valve House

VALVE HOUSE NO. 1

GEOSYNTEC CONSULTANTS

FLUOR DANIEL FERNALD

PRODUCTION SEAM SUMMARY LOG

PROJECT: ON-SITE DISPOSAL FACILITY (OSDF)

LOCATION: FERNALD, OHIO PROJECT NO.: GQ 1029 TASK NO.: 04.2

DESCRIPTION: EPLTS - Value House #1 YEAR: 2000

PRIMARY: ☐ SECONDARY: ☒ OTHER: ☒ Bekaplast liner CONTRACTOR: Staver/ISCO

PRODUCTION SEAM				LOCATION					NONDESTRUCTIVE TEST						
DATE (day/mo)	TIME	MACHINE NO.	OPERATOR ID	SEAM NO.	BEGIN	END	ACTUAL SEAM LENGTH (ft)	QA ID	LOCATION (ft)	Spark ~~AIR PRESSURE~~ (___psi for 5 min.)	VACUUM BOX (____sec.)	OPERATOR ID	PASS/ FAIL	ACTION	QA ID
23 Aug	1520	5013	STH	1-3/1-4	top	bottom	5	KS	5	Pass	N/A	STH	✓	None	KS
	1535		JO	1-10/1-1	top	bottom	5	KS	5	Pass		STH	✓	None	KS
	1553		STH	1-1/1-2	top	bottom	5	KS	5	Pass		STH	✓	None	KS
	1600		JO	1-8/1-9	top	bottom	5	KS	5	Pass		STH	✓	None	KS
	1614		STH	1-5/1-6	top	bottom	5	KS	5	Pass		STH	✓	None	KS
△ 24 Aug	0915		STH	1-4/Sump	East wall	South wall	2	KS	2	Pass		STH	✓	None	KS
△	0927	9924	STH	1-4/Sump	~~East~~ South wall	~~South~~ East wall	2	KS	2	Pass		STH	✓	None	KS
	1005	5013	JO	1-6 corner	Corner	Corner	5	KS	5	Pass		STH	✓	None	KS
	1014	0097	STH	1-4 corner	Corner	Corner	5	KS	5	Pass		STH	✓	None	KS
	1040	5013	JO	1-9 corner	Corner	Corner	5	KS	5	Pass		STH	✓	None	KS
	1058	0097	STH	1-1 corner	Corner	Corner	5	KS	5	Pass		STH	✓	None	KS
	1100	Factory weld		1-2/1-3	top	bottom	5	KS	5	Pass		STH	✓	None	KS
	1103	Factory weld		1-7/1-8	top	bottom	5	KS	5	Pass		STH	✓	None	KS
				TOTAL (1)											

NOTE: (1) SEAM LENGTH: THIS PAGE _____ (ft) ACCUMULATED _____ (ft)

△ - Hot air welding

GEOSYNTEC CONSULTANTS

FLUOR DANIEL FERNALD

PRODUCTION SEAM SUMMARY LOG

PROJECT: ON-SITE DISPOSAL FACILITY (OSDF)

LOCATION: FERNALD, OHIO PROJECT NO.: GQ1029 TASK NO.: 04.2

DESCRIPTION: EPLTS - Value House #1 YEAR: 2000

PRIMARY: ☐ SECONDARY: ☐ OTHER: ☒ Bekaplast CONTRACTOR: Stauer/ISCO

PRODUCTION SEAM				LOCATION					NONDESTRUCTIVE TEST						
DATE (dcy/mo)	TIME	MACHINE NO.	OPERATOR ID	SEAM NO.	BEGIN	END	ACTUAL SEAM LENGTH (ft)	QA ID	LOCATION (ft)	Spark ~~AIR PRESSURE~~ (__t__psi for 5 min.)	VACUUM BOX (_____sec.)	OPERATOR ID	PASS/ FAIL	ACTION	QA ID
24 Aug	1340	9924	STH	1-6/capl 1-7	Top	Bottom	5	KS	5	✓	N/A	STH	✓		KS
	↓	↓	↓	1-7/capl 1-6	Top	Bottom	5	KS	5	✓	↓	↓	✓		KS
	1410			1-4/capl 1-5	Top	Bottom	5	KS	5	✓			✓		KS
	↓			1-5/capl 1-4	Top	Bottom	5	KS	5	✓			✓		KS
	1505			1-9/capl 1-10	Top	Bottom	5	KS	5	✓			✓		KS
	↓	↓	↓	1-10/capl 1-9	Top	Bottom	5	KS	5	✓		↓	✓		KS
3 Aug	0830	5013	JO	VH-1 Flange exterior	N/A	N/A	~~N/A~~ diameter	KS	N/A	✓		JO	✓		KS
						TOTAL (1)									

NOTE: (1) SEAM LENGTH: THIS PAGE _____ (ft) ACCUMULATED _____ (ft)

GEOSYNTEC CONSULTANTS

FLUOR DANIEL FERNALD

PRODUCTION SEAM SUMMARY LOG

PROJECT: ON-SITE DISPOSAL FACILITY (OSDF)

LOCATION: FERNALD, OHIO PROJECT NO.: 601029 TASK NO.: 04.1

DESCRIPTION: EPLTS - VALVE HOUSE #1 YEAR: 2000

PRIMARY: ☐ SECONDARY: ☐ OTHER: ■ BEKAPLAST CONTRACTOR: STAVER / ISCO

PRODUCTION SEAM				LOCATION					NONDESTRUCTIVE TEST							
DATE (day/mo)	TIME	MACHINE NO.	OPER ID	SEAM NO.	BEGIN	END	ACTUAL SEAM LENGTH (ft)	QA ID	LOCATION (ft)	AIR PRESSURE (__+__psi for 5 min.)	SPARK TEST ~~V-BOX~~ (____sec.)	OPERATOR ID	PASS/ FAIL	RETEST DATE	QA ID
10 OCT	1102	0097	JO	1-11/1-17	EAST	WEST	4-in	TBM	ALL	—	PASS	SH 10 OCT	P / —	—	TBM
10 OCT	1103	0097	JO	1-11/1-16	EAST	WEST	4'7"	TBM	ALL	—	PASS	SH 10 OCT	P / —	—	TBM
10 OCT	1106	0097	JO	1-12/1-16	EAST	WEST	3-in	TBM	ALL	—	PASS	SH 10 OCT	P / —	—	TBM
10 OCT	1107	0097	JO	1-12/1-15	EAST	WEST	4'8"	TBM	ALL	—	PASS	SH 10 OCT	P / —	—	TBM
10 OCT	1110	0097	JO	1-13/1-15	EAST	WEST	3-in	TBM	ALL	—	PASS	SH 10 OCT	P / —	—	TBM
10 OCT	1111	0097	JO	1-13/1-14	EAST	WEST	4'7"	TBM	ALL	—	PASS	SH 10 OCT	P / —	—	TBM
10 OCT	1113	0097	JO	1-14/1-21	EAST	WEST	4-in	TBM	ALL	—	PASS	SH 10 OCT	P / —	—	TBM
10 OCT	1114	5013	SH	1-3/1-17	SOUTH	NORTH	5'7"	TBM	ALL	—	PASS	JO 10 OCT	P / —	—	TBM
10 OCT	1118	5013	SH	1-2/1-17	SOUTH	NORTH	2'5"	TBM	ALL	—	PASS	JO 10 OCT	P / —	—	TBM
10 OCT	1120	5013	SH	1-2/1-11	SOUTH	NORTH	7'6"	TBM	ALL	—	PASS	JO 10 OCT	P / —	—	TBM
10 OCT	1124	5013	SH	1-1/1-11	SOUTH	NORTH	2'3"	TBM	ALL	—	PASS	JO 10 OCT	P / —	—	TBM
10 OCT	1127	0097	JO	1-12/1-13	SOUTH	NORTH	9'10"	TBM	ALL	—	PASS	SH 10 OCT	P / —	—	TBM
10 OCT	1148	0097	JO	1-11/1-12	SOUTH	NORTH	9'10"	TBM	ALL	—	PASS	SH 10 OCT	P / —	—	TBM
						TOTAL (1)									

NOTE: (1) SEAM LENGTH: THIS PAGE _____ (ft) ACCUMULATED _____ (ft)

N/A = NOT APPLICABLE

GEOSYNTEC CONSULTANTS

FLUOR DANIEL FERNALD

PRODUCTION SEAM SUMMARY LOG

PROJECT: ON-SITE DISPOSAL FACILITY (OSDF)

LOCATION: FERNALD, OHIO PROJECT NO.: GQ1029 TASK NO.: 04.1

DESCRIPTION: EPLTS - VALVE HOUSE #1 YEAR: 2000

PRIMARY: ☐ SECONDARY: ☐ OTHER: ■ BEKAPLAST CONTRACTOR: STAVER / ISCO

PRODUCTION SEAM				LOCATION					NONDESTRUCTIVE TEST						
DATE (day/mo)	TIME	MACHINE NO.	OPER ID	SEAM NO.	BEGIN	END	ACTUAL SEAM LENGTH (ft)	QA ID	LOCATION (ft)	AIR PRESSURE (__±__psi for 5 min.)	SPARK TEST ~~V-BOX~~ (___sec.)	OPERATOR ID	PASS/ FAIL	RETEST DATE	QA ID
10 Oct	1150	5013	SH	1-4/1-17	NORTH	SOUTH	2'3"	TBU	ALL	—	PASS	JO 10 Oct	P –	—	TBU
10 Oct	1152	5013	SH	SUMP 1-16/1-17	EAST	WEST	1'	TBU	ALL	—	Pass	SH 13 Oct	P –	—	CL
10 Oct	FACTORY SEAM			1-16/1-17	—	—	9'2"	TBU	ALL	—	PASS	JO 10 Oct	P –	—	TBU
10 Oct	1327	5013	SH	SUMP 1-16/1-18	NORTH	SOUTH	1'	TBU	ALL	—	Pass	SH 13 Oct	P –	—	CL
10 Oct	FACTORY SEAM			1-16/1-18	—	—	3'0"	TBU	ALL	—	PASS	SH 10 Oct	P –	—	TBU
10 Oct	1334	5013	SH	1-5/1-18	WEST	EAST	2'7"	TBU	ALL	—	*Pass	SH 13 Oct	P –	—	CL
10 Oct	1336	5013	SH	1-4/1-18	WEST	EAST	2'8"	TBU	ALL	—	*Pass	SH 13 Oct	P –	—	CL
10 Oct	1353	0097	JO	1-14/1-15	NORTH	SOUTH	9'10"	TBU	ALL	—	PASS	JO 10 Oct	P –	—	TBU
10 Oct	1357	0097	JO	1-19/1-20	NORTH	SOUTH	4-in	TBU	ALL	—	Pass	SH 13 Oct	P –	—	CL
10 Oct	1357	5013	SH	1-9/1-21	WEST	EAST	4-in	TBU	ALL	—	PASS	JO 10 Oct	P –	—	TBU
10 Oct	1358	5013	SH	1-9/1-13	WEST	EAST	2'4"	TBU	ALL	—	PASS	JO 10 Oct	P –	—	TBU
10 Oct	1400	5013	SH	1-10/1-13	WEST	EAST	2'7"	TBU	ALL	—	PASS	JO 10 Oct	P –	—	TBU
10 Oct	1402	5013	SH	1-10/1-12	WEST	EAST	4'11"	TBU	ALL	—	PASS	JO 10 Oct	P –	—	TBU
					TOTAL (1)										

NOTE: (1) SEAM LENGTH: THIS PAGE * WELDS RECONSTRUCTED ON 13 Oct and passed (ft) ACCUMULATED _____ (ft)

N/A = NOT APPLICABLE spark testing.

GEOSYNTEC CONSULTANTS

FLUOR DANIEL FERNALD

PRODUCTION SEAM SUMMARY LOG

PROJECT: ON-SITE DISPOSAL FACILITY (OSDF)

LOCATION: FERNALD, OHIO PROJECT NO.: GQ1029 TASK NO.: 04.1

DESCRIPTION: EPLTS - VALVE HOUSE #1 YEAR: 2000

PRIMARY: ☐ SECONDARY: ☐ OTHER: ■ BEKAPLAST CONTRACTOR: STAVER/ISCO

PRODUCTION SEAM				LOCATION					NONDESTRUCTIVE TEST						
DATE (day/mo)	TIME	MACHINE NO.	OPER ID	SEAM NO.	BEGIN	END	ACTUAL SEAM LENGTH (ft)	QA ID	LOCATION (ft)	AIR PRESSURE (__±__psi for 5 min.)	SPARK TEST ~~V-BOX~~ (____sec.)	OPERATOR ID	PASS/FAIL	RETEST DATE	QA ID
10 Oct	1407	5013	SH	1-10/1-11	WEST	EAST	2'2"	TBC	ALL	—	PASS	JO 10 Oct	P / —	—	TBC
10 Oct	1409	5013	SH	1-1/1-11	WEST	EAST	2'8"	TBC	ALL	—	PASS	JO 10 Oct	P / —	—	TBC
10 Oct	1422	0097	JO	1-15/1-16	North	South	9'10"	TBC	ALL	—	PASS	SH 10 Oct	P / —	—	TBC
10 Oct	1427	0097	JO	1-18/1-19	North	South	4-in	TBC	ALL	—	*Pass	SH 13 Oct	P / —	—	CL
10 Oct	FACTORY SEAM			1-15/1-19	—	—	4'11	TBC	ALL	—	PASS	SH 10 Oct	P / —	—	TBC
10 Oct	FACTORY SEAM			1-14/1-20	—	—	4'4"	TBC	ALL	—	PASS	SH 10 Oct	P / —	—	TBC
10 Oct	FACTORY SEAM			1-13/1-21	—	—	9'10"	TBC	ALL	—	PASS	SH 10 Oct	P / —	—	TBC
10 Oct	1455	5013	SH	1-9/1-21	North	South	2'3"	TBC	ALL	—	PASS	SH 10 Oct	P / —	—	TBC
10 Oct	1458	5013	SH	1-8/1-21	North	South	5'6"	TBC	ALL	—	PASS	JO 10 Oct	P / —	—	TBC
10 Oct	1503	5013	SH	1-7/1-21	North	South	1'11"	TBC	ALL	—	PASS	JO 10 Oct	P / —	—	TBC
10 Oct	1505	5013	SH	1-7/1-14	North	South	8'1"	TBC	ALL	—	Pass	SH 13 Oct	P / —	—	CL
11 Oct	1345	5013	JO	1-6/outside Flange			dia	CL	ALL	—	Pass	SH 13 Oct	P / —	—	CL
11 Oct	1350	5013	JO	1-6/inside Flange			dia	CL	ALL	—	Pass	SH 13 Oct	P / —	—	CL
				TOTAL (1)											

NOTE: (1) SEAM LENGTH: THIS PAGE * WELD RECONSTRUCTED ON 13 Oct and passed (ft) ACCUMULATED (ft)

N/A = NOT APPLICABLE spark testing

GEOSYNTEC CONSULTANTS

FLUOR DANIEL FERNALD

PRODUCTION SEAM SUMMARY LOG

PROJECT: ON-SITE DISPOSAL FACILITY (OSDF)

LOCATION: FERNALD, OHIO PROJECT NO.: GQ1029 TASK NO.: 042 ~~04.10~~

DESCRIPTION: EPLTS Valve house #1 YEAR: 2000

PRIMARY: ☐ SECONDARY: ☐ OTHER: ☒ Bekaplast CONTRACTOR: ISCO/STAVER

PRODUCTION SEAM				LOCATION					NONDESTRUCTIVE TEST						
DATE (day/mo)	TIME	MACHINE NO.	OPER ID	SEAM NO.	BEGIN	END	ACTUAL SEAM LENGTH (ft)	QA ID	LOCATION (ft)	SPARK ~~AIR PRESSURE~~ (__±__psi for 5 min.)	V-BOX (____sec.)	OPERATOR ID	PASS/ FAIL	RETEST DATE	QA ID
13 Oct	0950	5013	JO	1-6 W / 1-14	0'	2'3"	2'3"	CS	2'3"	Pass 13 Oct	N/A	STH	✓	—	CS
13 Oct	1005	5013	JO	1-6 ~~W~~ / 1-20	0'	2'8"	2'8"	CS	2'8"	Pass 13 Oct	↓	↓	✓	—	CS
13 Oct	1020	5013	JO	1-5 / 1-20	0	2'2"	2'2"	CS	2'2"	Pass 13 Oct	↓	↓	✓	—	CS
13 Oct	1045	5013	JO	1-5 / 1-19	0	4'11	4'11	CS	4'11"	Pass 13 Oct	↓	↓	✓	—	CS
13 Oct	1050	5013	JO	1-5 / 1-18	0	2'7"	2'7"	CS	2'7"	Pass 13 Oct	↓	↓	✓	—	CS
13 Oct	1115	5013	JO	1-4 / 1-18	0	2'8"	2'8"	CS	2'8"	Pass 13 Oct	↓	↓	✓	—	CS
13 Oct	1125	5013	JO	1-18 / ~~1-16~~ 1-19	ALL	–	4-in	CS	4-in	Pass 13 Oct	Na	STH	✓	—	CS
					TOTAL (1)										

NOTE: (1) SEAM LENGTH: THIS PAGE _____ (ft) ACCUMULATED _____ (ft)

N/A = NOT APPLICABLE

GEOSYNTEC CONSULTANTS

FLUOR DANIEL FERNALD

PRODUCTION SEAM SUMMARY LOG

PROJECT: ON-SITE DISPOSAL FACILITY (OSDF)

LOCATION: FERNALD, OHIO PROJECT NO.: 6Q1341 TASK NO.: 04.2

DESCRIPTION: EPLTS - Valve House 1 YEAR: 2001

PRIMARY: ☐ SECONDARY: ☐ OTHER: ☒ BeKaplast CONTRACTOR: Staver / ISCO

PRODUCTION SEAM				LOCATION					NONDESTRUCTIVE TEST							
DATE (day/mo)	TIME	MACHINE NO.	OPERATOR ID	SEAM NO.	BEGIN	END	ACTUAL SEAM LENGTH (ft)	QA ID	LOCATION (ft)	Spark KS ~~AIR PRESSURE~~ (_±_psi for 5 min.)	Sponge KS ~~VACUUM BOX~~ (_____sec.)	OPERATOR ID	PASS/ FAIL	ACTION	QA ID
21 May	1030	5013	JO	north flange on the east wall			outside diameter	KS	N/A	✓	✓	JO	✓		TO
	1040	5013	JO	north flange on the east wall			inside diameter	KS	N/A	✓	✓	JO	✓		TO
	1055	5013	JO	middle flange on the east wall			outside diameter	KS	N/A	✓	✓	JO	✓		TO
	1110	5013	JO	middle flange on the east wall			inside diameter	KS	N/A	✓	✓	JO	✓		TO
	1313	5013	JO	South flange on the east wall			Inside Diameter	TO	N/A	✓	✓	JO	✓		TO
	1318	5013	JO	South flange on the east wall			OUTSIDE DIAMETER	TO	N/A	✓	✓	JO	✓		TO
							TOTAL (1)								

NOTE: (1) SEAM LENGTH: THIS PAGE _____ (ft) ACCUMULATED _____ (ft)

GEOSYNTEC CONSULTANTS

FLUOR DANIEL FERNALD

SEAM AND PANEL REPAIR LOCATION LOG

PROJECT: ON-SITE DISPOSAL FACILITY (OSDF)

LOCATION: FERNALD, OHIO PROJECT NO: ~~000409~~ GQ1029 TASK NO.: 04.2

DESCRIPTION: EPLTS - VALVE HOUSE #1 FLOOR DATE: 10 day OCT month 2000 year

CONTRACTOR: STAVER / ISCO

PRIMARY: ☐ SECONDARY: ☐ OTHER: ■ PRODUCT TYPE: BEKAPLAST

NORTH

NOTE:
SEE OTHER SIDE FOR SYMBOLS

QA ID: TBD

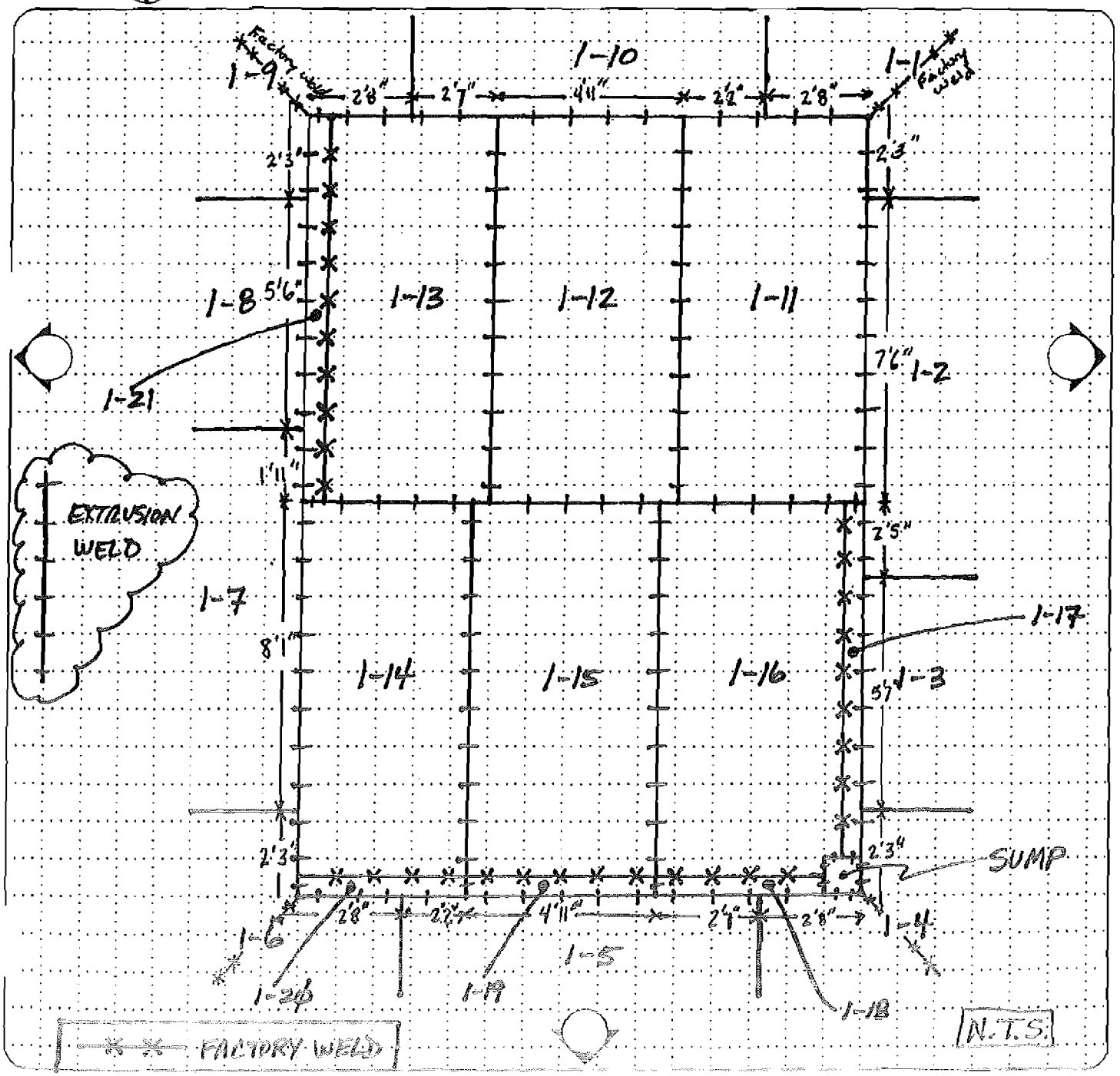

GEOSYNTEC CONSULTANTS

FLUOR DANIEL FERNALD

SEAM AND PANEL REPAIR LOCATION LOG

PROJECT: ON-SITE DISPOSAL FACILITY (OSDF)

LOCATION: FERNALD, OHIO PROJECT NO: GQ1029 TASK NO.: 04.2

DESCRIPTION: EPLTS - VALVE HOUSE # 1 DATE: 24 day Aug month 2000 year

CONTRACTOR: STAVER / ISCO

PRIMARY: ☐ SECONDARY: ☐ OTHER: ☒ PRODUCT TYPE: BEKAPLAST

NORTH

NOTE:
SEE OTHER SIDE FOR SYMBOLS

QA ID: KS

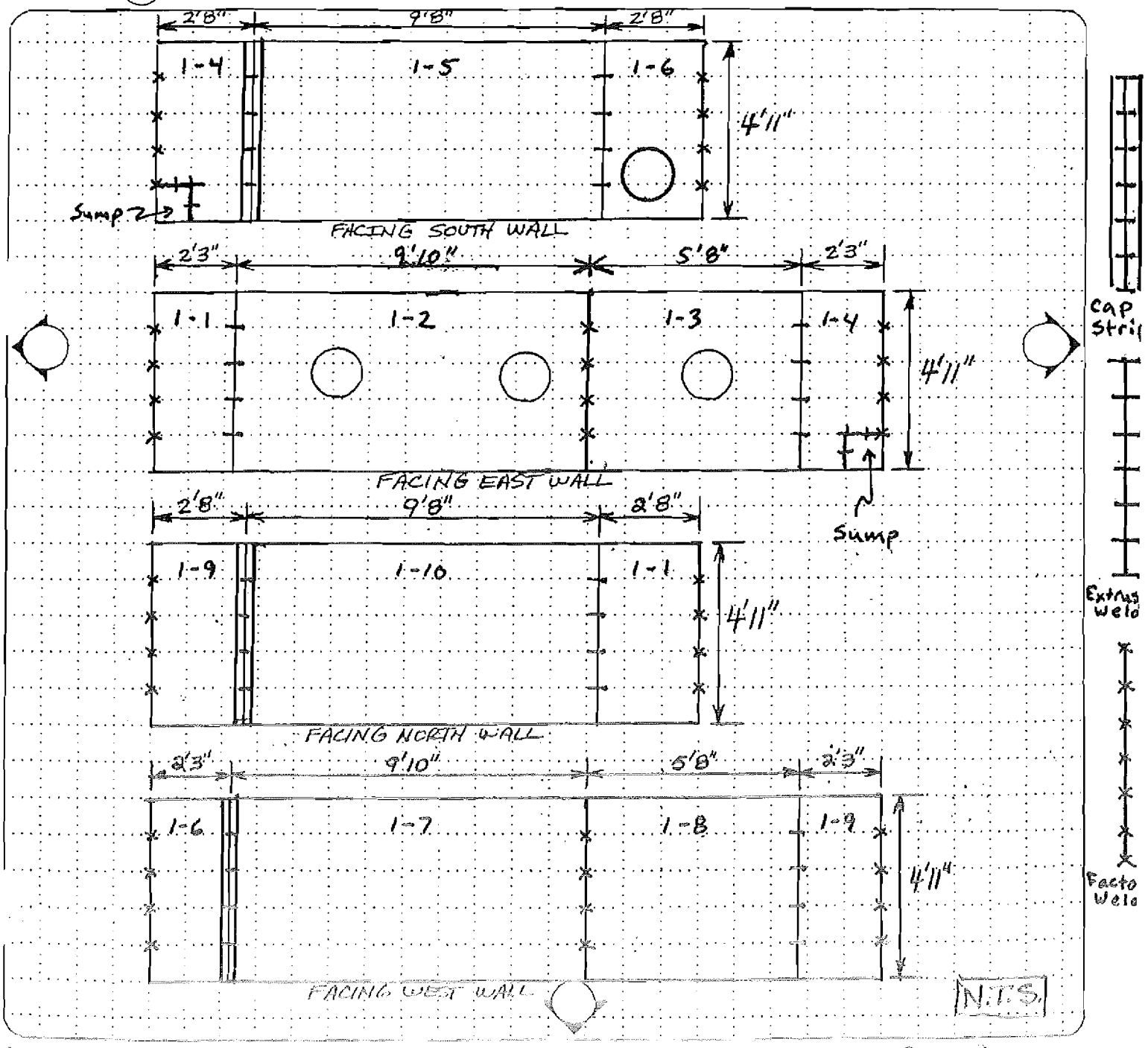

VALVE HOUSE NO. 2

GEOSYNTEC CONSULTANTS

FLUOR DANIEL FERNALD

PRODUCTION SEAM SUMMARY LOG

PROJECT: ON-SITE DISPOSAL FACILITY (OSDF)

LOCATION: FERNALD, OHIO PROJECT NO.: GQ1029 TASK NO.: 04.2

DESCRIPTION: EPLTS - Valve House #2 YEAR: 2000

PRIMARY: ☐ SECONDARY: ☐ OTHER: ☒ Bekaplast Liner CONTRACTOR: Stauer/ISCO

PRODUCTION SEAM				LOCATION					NONDESTRUCTIVE TEST						
DATE (day/mo)	TIME	MACHINE NO.	OPERATOR ID	SEAM NO.	BEGIN	END	ACTUAL SEAM LENGTH (ft)	QA ID	LOCATION (ft)	Spark ~~AIR PRESSURE~~ (__±__psi for 5 min.)	~~VACUUM BOX~~ (_____sec.)	OPERATOR ID	PASS/ FAIL	ACTION	QA ID
25 Aug	0811	5013	STH	2-6/2-7	Top	Bottom	5	KS	5	✓	—	STH	✓	—	KS
	0830	5013	STH	2-4/2-5				KS		✓	—	STH	✓	—	KS
	0845	5013	STH	2-3/2-4				KS		✓	—	STH	✓	—	KS
	0859	Factory	weld	2-2/2-3				KS		✓	—	STH	✓	—	KS
	0904	5013	STH	2-1/2-2				KS		✓	—	STH	✓	—	KS
	0913	5013	STH	2-10/2-1				KS		✓	—	STH	✓	—	KS
	0945	5013	STH	2-8/2-9				KS		✓	—	STH	✓	—	KS
	0940	Factory	weld	2-7/2-8				KS		✓	—	STH	✓	—	KS
	1005	5013	STH	corner 2-9				KS		✓	—	STH	✓	—	KS
	1025	5013	STH	corner 2-1				KS		✓	—	STH	✓	—	KS
	1035	5013	STH	corner 2-4				KS		✓	—	STH	✓	—	KS
	1042	5013	STH	corner 2-6				KS		✓	—	STH	✓	—	KS
Δ 28 Aug	1545	9924	STH	2-5/2-6				KS			—	STH	✓	—	KS
						TOTAL (1)									

NOTE: (1) SEAM LENGTH: THIS PAGE Δ - Hot air weld (ft) ACCUMULATED N/A (ft)

GEOSYNTEC CONSULTANTS

FLUOR DANIEL FERNALD

PRODUCTION SEAM SUMMARY LOG

PROJECT: ON-SITE DISPOSAL FACILITY (OSDF)

LOCATION: FERNALD, OHIO PROJECT NO.: 6Q1029 TASK NO.: 04.2

DESCRIPTION: EPLTS - Valve House 2 YEAR: 2000

PRIMARY: ☐ SECONDARY: ☐ OTHER: ☒ Bekaplast Liner CONTRACTOR: Staver/ISCO

PRODUCTION SEAM				LOCATION					NONDESTRUCTIVE TEST						
DATE (day/mo)	TIME	MACHINE NO.	OPERATOR ID	SEAM NO.	BEGIN	END	ACTUAL SEAM LENGTH (ft)	QA ID	LOCATION (ft)	Spark ~~AIR PRESSURE~~ KS (_ ± _ psi for 5 min.)	VACUUM BOX (_____ sec.)	OPERATOR ID	PASS/ FAIL	ACTION	QA ID
28 Aug.	1515	5013	STH	2-4/Sump	East wall	South wall	2'	KS	2'	✓	—	STH	✓	—	KS
△	1545	9924	STH	2-6/cap/ 2-5	Top	Bottom	5'	KS	5'	✓	—	STH	✓	—	KS
△	1645	9924	STH	2-9/cap/ 2-10	Top	Bottom	5'	KS	5'	✓	—	STH	✓	—	KS
△	1650	9924	STH	2-10/cap/ 2-9	Top	Bottom	9'10"	KS	9'10"	✓	—	STH	✓	—	KS
28 Sept	1511	0097	JO	2F-13/ 2F-15	North	South	9'10"	KS	9'10"	✓	—	JO	✓	—	KS
	1528			2F-11/ 2F-13	North	South	9'10"	KS	9'10"	✓	—	JO	✓	—	KS
	1545			2F-14/ 2F-16	North	South	9'10"	KS	9'10½	✓	—	STH	✓	—	KS
	1600			2F-12/ 2F-14	North	South	9'10"	KS	9'10"	✓	—	STH	✓	—	KS
29 Sept	0840	5013	STH	★ E wall/ Floor,	North	South	20'	KS	20'	✓	—	STH	✓	—	KS
	0925			★ S wall/ Floor	East	West	15'	KS	15'	✓	—	STH	✓	—	KS
	1015			N wall/ Floor	West	East	15'	KS	15'	✓	—	STH	✓	—	KS
	1300			W wall/ Floor	South	North	20'	KS	20'	✓	—	STH	✓	—	KS
*	1330			Floor Cap E-W	West / East	East / West	15'	KS	15'	✓	—	STH	✓	—	KS
						TOTAL (1)									

NOTE: (1) SEAM LENGTH: THIS PAGE △ - Hot air weld (ft) ACCUMULATED _____ (ft)

* - Floor cap

★ Floor/Sump welds

GEOSYNTEC CONSULTANTS

FLUOR DANIEL FERNALD

PRODUCTION SEAM SUMMARY LOG

PROJECT: ON-SITE DISPOSAL FACILITY (OSDF)

LOCATION: FERNALD, OHIO PROJECT NO.: 6Q1029 TASK NO.: 04.2

DESCRIPTION: EPLTS - Valve House 2 YEAR: 2000

PRIMARY: ☐ SECONDARY: ☐ OTHER: ☒ Bekaplast Liner CONTRACTOR: Stower / ISCO

PRODUCTION SEAM				LOCATION					NONDESTRUCTIVE TEST						
DATE (day/mo)	TIME	MACHINE NO.	OPERATOR ID	SEAM NO.	BEGIN	END	ACTUAL SEAM LENGTH (ft)	QA ID	LOCATION (ft)	Spark ~~AIR PRESSURE~~ KS (_±_psi for 5 min.)	VACUUM BOX (_____sec.)	OPERATOR ID	PASS/ FAIL	ACTION	QA ID
* 31 Aug	1015	5013/ 9924	STH/ JO	VH-2N Flange outside	N/A	N/A	Diameter	KS	Diameter	✓	—	STH	✓	—	KS
↓	1030	↓	↓	VH-2N Flange inside	N/A	N/A	Diameter	KS	Diameter	✓	—	↓	✓	—	KS
↓	0935	5013	JO	VH-2N Flange exterior	N/A	N/A	Diameter	KS	Diameter	✓	—	JO	✓	—	KS
						TOTAL (1)									

NOTE: (1) SEAM LENGTH: THIS PAGE * Tacked into place with hot air gun and extrusion welded into place (ft) ACCUMULATED _____ (ft)

GEOSYNTEC CONSULTANTS

FLUOR DANIEL FERNALD

PRODUCTION SEAM SUMMARY LOG

PROJECT: ON-SITE DISPOSAL FACILITY (OSDF)

LOCATION: FERNALD, OHIO PROJECT NO.: 6Q1029 TASK NO.: 04.2

DESCRIPTION: EPLTS - Value House 2 YEAR: 2000

PRIMARY: ☐ SECONDARY: ☐ OTHER: ☒ Bekaplast Liner CONTRACTOR: Stayer / ISCO

PRODUCTION SEAM				LOCATION					NONDESTRUCTIVE TEST							
DATE (day/mo)	TIME	MACHINE NO.	OPERATOR ID	SEAM NO.	BEGIN	END	ACTUAL SEAM LENGTH (ft)	QA ID	LOCATION (ft)	Spark ~~AIR PRESSURE~~ KS (__±__psi for 5 min.)	VACUUM BOX (_____sec.)	OPERATOR ID	PASS/ FAIL	ACTION	QA ID
~~29 Sept~~ ~~31 Aug~~	0935	5013	~~STH~~ JO	VH-2S Pipe flange outside	N/A	N/A	Diameter	KS	Diameter	✓	—	JO	✓		KS
*	1015	5013/ 9924	STH/JO	VH-2S Pipe flange inside	N/A	N/A	Diameter	KS	Diameter	✓	—	STH	✓		KS
							TOTAL (1)								

NOTE: (1) SEAM LENGTH: THIS PAGE * JO assisted in welding the 2. seam together the ~~last~~ day, but the primary welder. (ft) ACCUMULATED _____ (ft)

GEOSYNTEC CONSULTANTS

FLUOR DANIEL FERNALD

PRODUCTION SEAM SUMMARY LOG

PROJECT: ON-SITE DISPOSAL FACILITY (OSDF)

LOCATION: FERNALD, OHIO PROJECT NO.: 6Q1029 TASK NO.: 04.2

DESCRIPTION: EPLTS VH2 YEAR: 2001

PRIMARY: ☐ SECONDARY: ☐ OTHER: ☒ end seal ~~VH-1~~ KS CONTRACTOR: Rieck

PRODUCTION SEAM				LOCATION					NONDESTRUCTIVE TEST						
DATE (dcy/mo)	TIME	MACHINE NO.	OPERATOR ID	SEAM NO.	BEGIN	END	ACTUAL SEAM LENGTH (ft)	QA ID	LOCATION (ft)	AIR PRESSURE (_±_psi for 5 min.)	VACUUM BOX (_____sec.)	OPERATOR ID	PASS/ FAIL	ACTION	QA ID
2 March	0850	WG 17	DH/PT	VH-1 end seal	N/A	N/A	diameter ~~N/A~~ KS	KS	—	—	—	—			KS
↓	1100	↓	↓	VH-2 end seal north	N/A	N/A	diameter	KS	—	—	—	—			KS
↓	1125	↓	↓	VH-2 end seal south	N/A	N/A	diameter	KS	—	—	—	—			KS
						TOTAL (1)									

NOTE: (1) SEAM LENGTH: THIS PAGE _____ (ft) ACCUMULATED _____ (ft)

GEOSYNTEC CONSULTANTS

FLUOR DANIEL FERNALD

PRODUCTION SEAM SUMMARY LOG

PROJECT: ON-SITE DISPOSAL FACILITY (OSDF)

LOCATION: FERNALD, OHIO PROJECT NO.: 6Q1341 TASK NO.: 04.2

DESCRIPTION: EPLTS VHZ YEAR: 2001

PRIMARY: ☐ SECONDARY: ☐ OTHER: ☒ BEKA PLAST CONTRACTOR: STAUER / ISCO

PRODUCTION SEAM				LOCATION					NONDESTRUCTIVE TEST							
DATE (day/mo)	TIME	MACHINE NO.	OPERATOR ID	SEAM NO.	BEGIN	END	ACTUAL SEAM LENGTH (ft)	QA ID	LOCATION (ft)	SPARK ~~AIR PRESSURE~~ (__±__psi for 5 min.)	SPARK ~~VACUUM BOX~~ (_____sec.)	OPERATOR ID	PASS/ FAIL	ACTION	QA ID
21 MAY	1455	5030	JO	North Flange on the EAST WALL			Inside Diameter	TD	N/A	✓	✓	JO	✓		TD
	1502	"	JO	"	"		Outside Diameter	TD	N/A	✓	✓	JO	✓		TD
	1539	"	JO	Center Flange on The EAST WALL			Inside Diameter	TD	N/A	✓	✓	JO	✓		TD
	1545	"	JO	"	"		Outside Diameter	TD	N/A	✓	✓	JO	✓		TD
	1610	"	JO	South Flange on the EAST WALL			Inside Diameter	TD	N/A	✓	✓	JO	✓		TD
	1620	"	JO	"	"		Outside Diameter	TD	N/A	✓	✓	JO	✓		TD
						TOTAL (1)									

NOTE: (1) SEAM LENGTH: THIS PAGE _____ (ft) ACCUMULATED _____ (ft)

GEOSYNTEC CONSULTANTS

FLUOR DANIEL FERNALD

SEAM AND PANEL REPAIR LOCATION LOG

PROJECT: ON-SITE DISPOSAL FACILITY (OSDF)

LOCATION: FERNALD, OHIO PROJECT NO: GQ1029 TASK NO.: 04.2

DESCRIPTION: EPLTS - VALVE HOUSE #2 DATE: 25 day Aug month 2000 year

CONTRACTOR: STAVER / ISCO

PRIMARY: ☐ SECONDARY: ☐ OTHER: ☒ PRODUCT TYPE: BEKAPLAST

NORTH

NOTE:
SEE OTHER SIDE FOR SYMBOLS

QA ID: KS

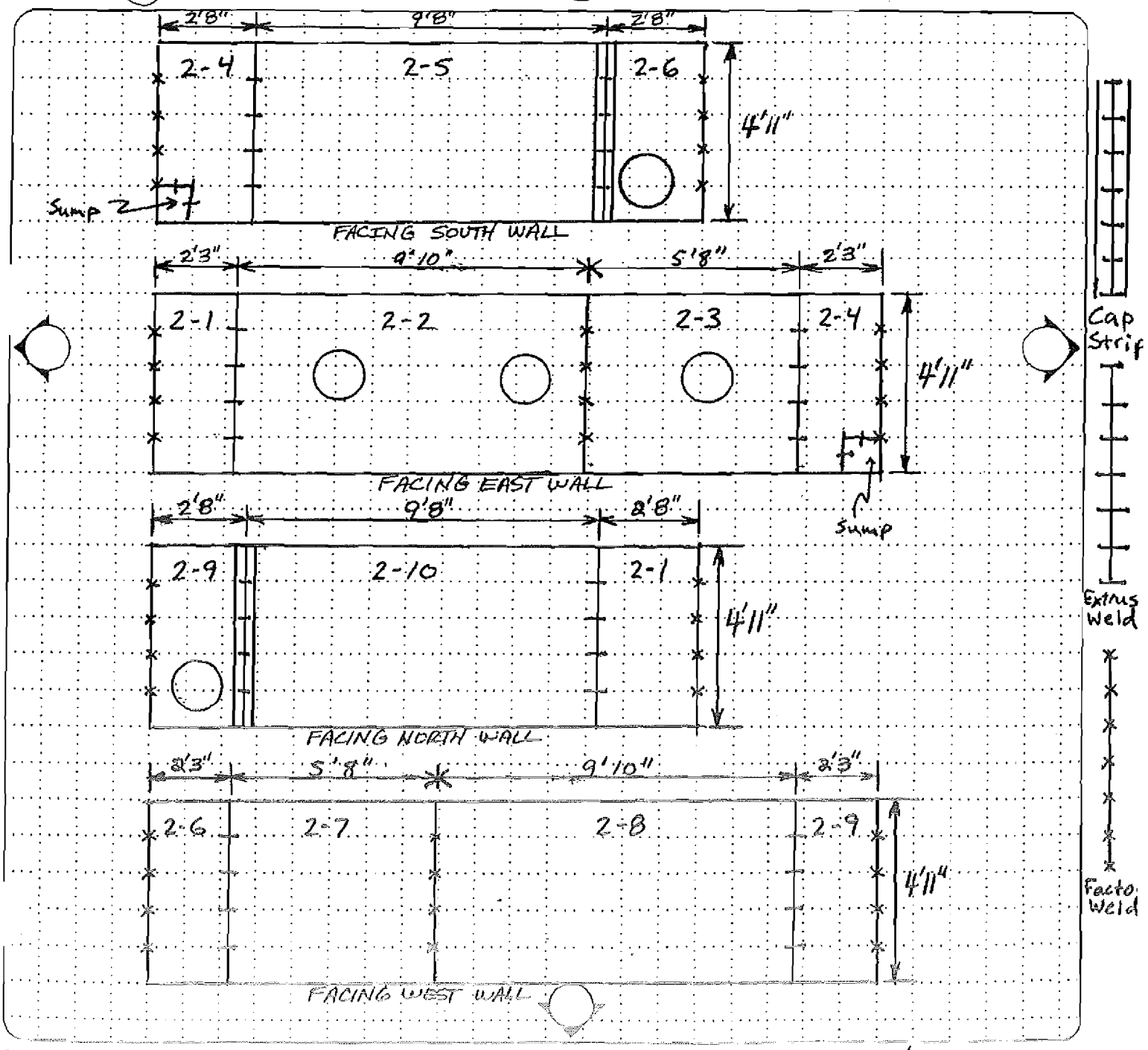

GEOSYNTEC CONSULTANTS

FLUOR DANIEL FERNALD

SEAM AND PANEL REPAIR LOCATION LOG

PROJECT: ON-SITE DISPOSAL FACILITY (OSDF)

LOCATION: FERNALD, OHIO PROJECT NO: GQGQ1029 TASK NO.: 04.2

DESCRIPTION: EPLTS - Valve House #2 DATE: 29 day Sept. month 2000 year

CONTRACTOR: Staver / ISCO

PRIMARY: ☐ SECONDARY: ☐ OTHER: ☒ PRODUCT TYPE: Bekaplast

NORTH

NOTE:
SEE OTHER SIDE FOR SYMBOLS

QA ID: KS

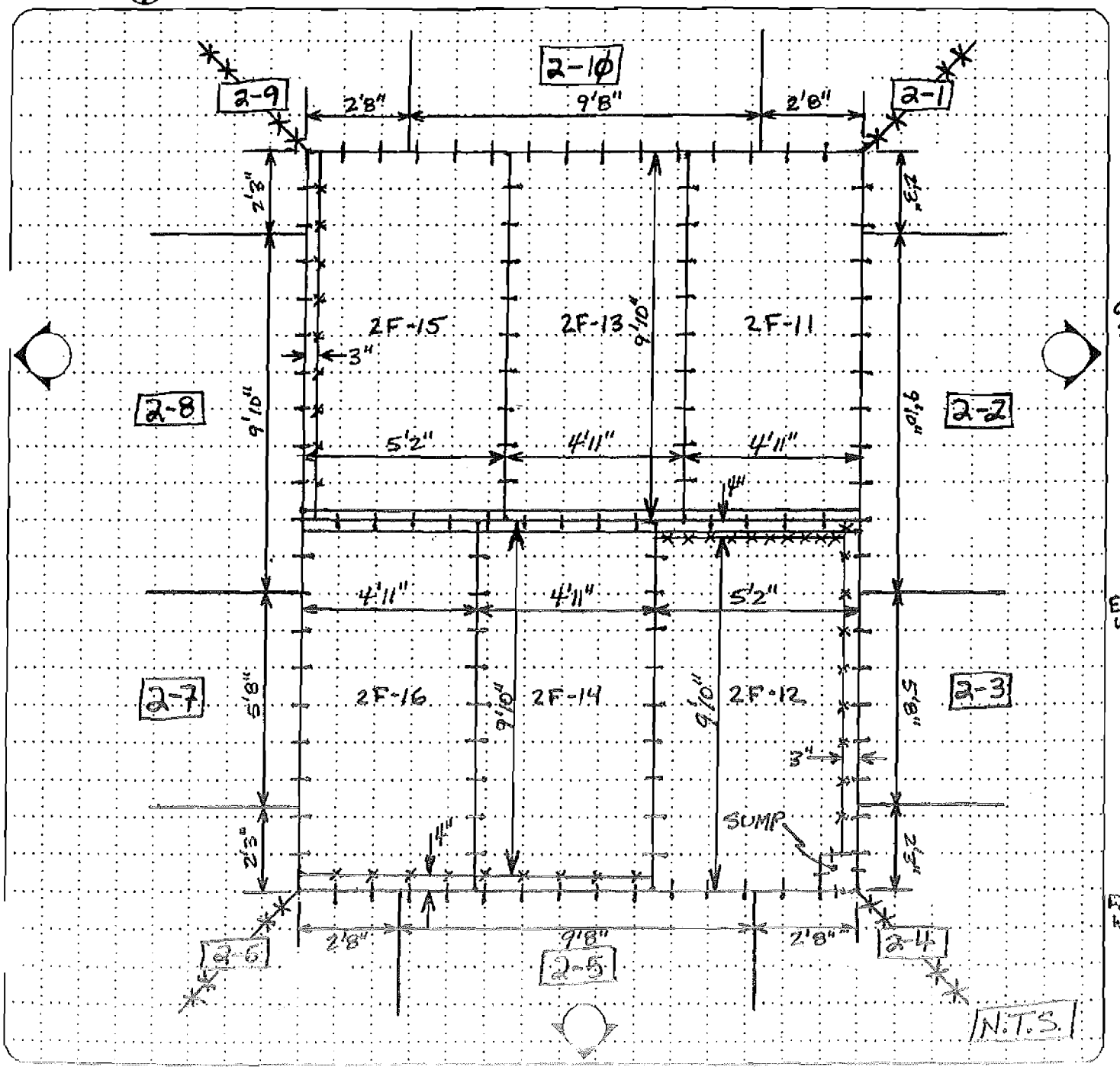

VALVE HOUSE NO. 3

GEOSYNTEC CONSULTANTS

FLUOR DANIEL FERNALD

PRODUCTION SEAM SUMMARY LOG

PROJECT: ON-SITE DISPOSAL FACILITY (OSDF)

LOCATION: FERNALD, OHIO PROJECT NO.: GQ1029 TASK NO.: 04.2

DESCRIPTION: EPLTS - VALVE HOUSE #3 YEAR: 2000

PRIMARY: ☐ SECONDARY: ☐ OTHER: ☒ BERAPLAST CONTRACTOR: STAVER/ISCO

PRODUCTION SEAM				LOCATION					NONDESTRUCTIVE TEST							
DATE (dy/mo)	TIME	MACHINE NO.	OPERATOR ID	SEAM NO.	BEGIN	END	ACTUAL SEAM LENGTH (ft)	QA ID	LOCATION (ft)	AIR PRESSURE (__±__psi for 5 min.)	SPARK TEST ~~VACUUM BOX~~ (TBL) (____sec.)	OPERATOR ID	PASS/FAIL	ACTION	QA ID
18 SEPT	1045	5013	JO	3-1/3-2	TOP	BOT.	5	TBL	TOP-BOT.	—	PASS	JO 18SEPT	P —	—	TBL
18 SEPT	1048	0097	SH	3-5/3-6	TOP	BOT.	5	TBL	TOP-BOT.	—	PASS	SH 18SEPT	P —	—	TBL
18 SEPT	1100	5013	JO	3-11/3-12	TOP	BOT.	5	TBL	TOP-BOT.	—	PASS	JO 18SEPT	P —	—	TBL
18 SEPT	FACTORY SEAM			3-6/3-7	—	—	—	TBL	TOP-BOT.	—	PASS	SH 18SEPT	P —	—	TBL
18 SEPT	1103	0097	SH	3-3/3-4	TOP	BOT.	5	TBL	TOP-BOT.	—	PASS	SH 18SEPT	P —	—	TBL
18 SEPT	1109	5013	JO	3-8/3-9	TOP	BOT.	5	TBL	TOP-BOT.	—	PASS	JO 18SEPT	P —	—	TBL
18 SEPT	FACTORY SEAM			3-13/3-14	—	—	—	TBL	TOP-BOT.	—	PASS	JO 18SEPT	P —	—	TBL
18 SEPT	1119	0097	SH	3-2/3-3	TOP	BOT	5	TBL	TOP-BOT.	—	PASS	JO 18SEPT	P —	—	TBL
18 SEPT	1123	0097	SH	SUMP SECTIONER	NORTH	SOUTH	3	TBL	NORTH-SOUTH	—	PASS	SH 18SEPT	P —	—	TBL
18 SEPT	1324	0097	SH	3-1/3-14	TOP	BOT	5	TBL	TOP-BOT.	—	PASS	SH 18SEPT	P —	—	TBL
18 SEPT	1325	5013	JO	3-4/3-5	TOP	BOT.	5	TBL	TOP-BOT.	—	PASS	SH 18SEPT	P —	—	TBL
18 SEPT	1335	0097	SH	3-12/3-13	TOP	BOT.	5	TBL	TOP-BOT.	—	PASS	JO 18SEPT	P —	—	TBL
18 SEPT	1340	0097	SH	3-10/3-11	TOP	BOT.	5	TBL	TOP-BOT.	—	PASS	JO 18SEPT	P —	—	TBL
						TOTAL (1)									

NOTE: (1) SEAM LENGTH: THIS PAGE _____ (ft) ACCUMULATED _____ (ft)

GEOSYNTEC CONSULTANTS

FLUOR DANIEL FERNALD

PRODUCTION SEAM SUMMARY LOG

PROJECT: ON-SITE DISPOSAL FACILITY (OSDF)

LOCATION: FERNALD, OHIO PROJECT NO.: GQ1029 TASK NO.: 04-2

DESCRIPTION: EPLTS - VALVE HOUSE #3 YEAR: 2000

PRIMARY: ☐ SECONDARY: ☐ OTHER: ☒ BERCAPLAST CONTRACTOR: STAVER / ISCO

PRODUCTION SEAM				LOCATION					NONDESTRUCTIVE TEST							
DATE (day/mo)	TIME	MACHINE NO.	OPERATOR ID	SEAM NO.	BEGIN	END	ACTUAL SEAM LENGTH (ft)	QA ID	LOCATION (ft)	AIR PRESSURE (__±__psi for 5 min.)	SPARK TEST ~~VACUUM BOX~~ (TBV) (_____sec.)	OPERATOR ID	PASS/ FAIL	ACTION	QA ID
18 SEPT	1350	0077	SH	3-7/3-8	TOP	BOT	5	TBV	TOP-BOT	—	PASS	JO 18SEPT	P —	—	TBV
18 SEPT	1355	0097	SH	3-9/3-10	TOP	BOT	5	TBV	TOP-BOT	—	PASS	JO 18SEPT	P —	—	TBV
18 SEPT	1435	5013	JO	PIPE PEN. OUTSIDE N.W CORNER	CLOCKWISE		5	TBV	CLOCKWISE	—	PASS	SH 18SEPT	P —	—	TBV
18 SEPT	1455	5013	JO	PIPE PEN. INSIDE N.W CORNER	CLOCKWISE		2	TBV	CLOCKWISE	—	PASS	SH 18SEPT	P —	—	TBV
				TOTAL (1)											

NOTE: (1) SEAM LENGTH: THIS PAGE _____ (ft) ACCUMULATED _____ (ft)

GEOSYNTEC CONSULTANTS

FLUOR DANIEL FERNALD

PRODUCTION SEAM SUMMARY LOG

PROJECT: ON-SITE DISPOSAL FACILITY (OSDF)

LOCATION: FERNALD, OHIO PROJECT NO.: GQ1029 TASK NO.: 04.2

DESCRIPTION: EPLTS- Valve House #3 YEAR: 2000

PRIMARY: ☐ SECONDARY: ☐ OTHER: ☒ Bekaplast CONTRACTOR: Stauer/ISCO

PRODUCTION SEAM				LOCATION					NONDESTRUCTIVE TEST						
DATE (day/mo)	TIME	MACHINE NO.	OPERATOR ID	SEAM NO.	BEGIN	END	ACTUAL SEAM LENGTH (ft)	QA ID	LOCATION (ft)	Spark ~~AIR PRESSURE~~ KS (__±__psi for 5 min.)	~~VACUUM BOX~~ (_____sec.)	OPERATOR ID	PASS/ FAIL	ACTION	QA ID
29 Sept	1450	5013	STH	VH-3N pipe flange outside	N/A	N/A	~~N/A~~ Diameter	KS	~~N/A~~ Diameter	✓	—	STH	✓	—	KS
							TOTAL (1)								

NOTE: (1) SEAM LENGTH: THIS PAGE _____ (ft) ACCUMULATED _____ (ft)

GEOSYNTEC CONSULTANTS

FLUOR DANIEL FERNALD

PRODUCTION SEAM SUMMARY LOG

PROJECT: ON-SITE DISPOSAL FACILITY (OSDF)

LOCATION: FERNALD, OHIO PROJECT NO.: GQ1029 TASK NO.: 84.2

DESCRIPTION: EPLTS Valve House #3 YEAR: 2000

PRIMARY: ☐ SECONDARY: ☐ OTHER: ☒ Bekaplast CONTRACTOR: STAVEK/ISCO

PRODUCTION SEAM				LOCATION					NONDESTRUCTIVE TEST						
DATE (day/mo)	TIME	MACHINE NO.	OPER ID	SEAM NO.	BEGIN	END	ACTUAL SEAM LENGTH (ft)	QA ID	LOCATION (ft)	Spark ~~AIR PRESSURE~~ (__±__psi for 5 min.)	V-BOX (____sec.)	OPERATOR ID	PASS/ FAIL	RETEST DATE	QA ID
11 Oct	1445	5013	SH	inside/~~outside~~	s. end of	VH3/dia		CA	diameter	Pass	—	SH 11 OCT	P	—	CA
						TOTAL (1)									

NOTE: (1) SEAM LENGTH: THIS PAGE _____ (ft) ACCUMULATED _____ (ft)

N/A = NOT APPLICABLE

GEOSYNTEC CONSULTANTS

FLUOR DANIEL FERNALD

PRODUCTION SEAM SUMMARY LOG

PROJECT: ON-SITE DISPOSAL FACILITY (OSDF)

LOCATION: FERNALD, OHIO PROJECT NO. CQ1029 TASK NO.: ~~04.1~~ 04.2

DESCRIPTION: EPLTS Value House #3 YEAR: 2000

PRIMARY: ☐ SECONDARY: ☐ OTHER: ☒ Bekaplast CONTRACTOR: STAVER/ISCO

PRODUCTION SEAM				LOCATION					NONDESTRUCTIVE TEST						
DATE (day/mo)	TIME	MACHINE NO.	OPER ID	SEAM NO.	BEGIN	END	ACTUAL SEAM LENGTH (ft)	QA ID	LOCATION (ft)	AIR PRESSURE (__ ± __ psi for 5 min.)	SPARK TEST ~~V-BOX~~ (____sec.)	OPERATOR ID	PASS/ FAIL	RETEST DATE	QA ID
18 Oct	1325	0097	SH	3-15/3-16	South	North	9'10"	CS	ALL	—	PASS	JO 19 Oct	P	—	CS
18 Oct	1330	499	JO	3-7/3-15	S	N	2'8"	CS	ALL	—	PASS	JO 19 Oct	P	—	CS
18 Oct	1335	499	JO	3-8/3-15	S	N	2'8"	CS	ALL	—	PASS	JO 19 Oct	P	—	CS
18 Oct	1335	0097	SH	3-16/3-17	S	N	9'10"	CS	ALL	—	PASS	JO 19 Oct	P	—	CS
18 Oct	1345	499	JO	3-9/3-15	W	E	2'8"	CS	ALL	—	PASS	JO 19 Oct	P	—	CS
18 Oct	1348	499	JO	3-10/3-15	E	W	2'2"	CS	ALL	—	PASS	JO 19 Oct	P	—	CS
18 Oct	1350	499	JO	3-10/3-16	E	W	4'11"	CS	ALL	—	PASS	JO 19 Oct	P	—	CS
18 Oct	1350	0097	SH	3-18/3-19	N	S	10'2"	CS	ALL	—	PASS	JO 19 Oct	P	—	CS
18 Oct	1410	499	JO	3-10/3-17	E	W	2'7"	CS	ALL	—	PASS	JO 19 Oct	P	—	CS
18 Oct	1415	499	JO	3-11/3-17	E	W	2'8"	CS	ALL	—	PASS	JO 19 Oct	P	—	CS
18 Oct	1420	0097	SH	3-16/3-19	E	W	4'8"	CS	ALL	—	PASS	JO 19 Oct	P	—	CS
18 Oct	1425	0097	SH	3-17/3-19	E	W	3-in	CS	ALL	—	PASS	JO 19 Oct	P	—	CS
18 Oct	1430	0097	SH	3-17/3-18	E	W	4'8"	CS	ALL	—	PASS	JO 19 Oct	P	—	CS
					TOTAL (1)										

NOTE: (1) SEAM LENGTH: THIS PAGE _____ (ft) ACCUMULATED _____ (ft)

N/A = NOT APPLICABLE

GEOSYNTEC CONSULTANTS

FLUOR DANIEL FERNALD

PRODUCTION SEAM SUMMARY LOG

PROJECT: ON-SITE DISPOSAL FACILITY (OSDF)

LOCATION: FERNALD, OHIO PROJECT NO.: GQ1029 TASK NO.: ~~04.1~~ 04.2

DESCRIPTION: EPLTS Valve House #3 YEAR: 2000

PRIMARY: ☐ SECONDARY: ☐ OTHER: ☒ Bekaplast CONTRACTOR: STAVER/ISCO

PRODUCTION SEAM				LOCATION					NONDESTRUCTIVE TEST							
DATE (day/mo)	TIME	MACHINE NO.	OPER ID	SEAM NO.	BEGIN	END	ACTUAL SEAM LENGTH (ft)	QA ID	LOCATION (ft)	AIR PRESSURE (__±__psi for 5 min.)	~~V-BOX~~ SPARK TEST (____sec.)	OPERATOR ID	PASS/FAIL	RETEST DATE	QA ID
18 Oct	1435	0097	SH	3-19/3-20	North	South	10'2"	CJ	ALL	—	PASS	JO 19 Oct	P —	—	CJ
18 Oct	1440	499	JO	3-12/3-17	S	N	2'8"	CJ	ALL	—	PASS	JO 19 Oct	P —	—	CJ
18 Oct	1445	499	JO	3-13/3-17	N	S	5'8"	CJ	ALL	—	PASS	JO 19 Oct	P —	—	CJ
18 Oct	1500	499	JO	3-14/3-17	N	S	1'11"	CJ	ALL	—	PASS	JO 19 Oct	P —	—	CJ
18 Oct	1505	499	JO	3-14/3-18	N	S	~~9'11"~~ 7'1"	CJ	ALL	—	PASS	JO 19 Oct	P —	—	CJ
18 Oct	1540	0097	SH	3-16/3-20	W	E	3-in	CJ	ALL	—	PASS	JO 19 Oct	P —	—	CJ
18 Oct	1545	0097	SH	3-15/3-20	W	E	4'8"	CJ	ALL	—	PASS	JO 19 Oct	P —	—	CJ
18 Oct	1615	499	JO	3-1/3-18	N	S	2'8"	CJ	ALL	—	PASS	JO 19 Oct	P —	—	CJ
18 Oct	1625	499	JO	3-2/3-18	E	W	2'3"	CJ	ALL	—	PASS	JO 19 Oct	P —	—	CJ
18 Oct	1640	0097	SH	3-3/3-18	W	E	2'2"	CJ	ALL	—	PASS	JO 19 Oct	P —	—	CJ
19 Oct	1700	0097	SH	3-7/3-15	N	S	3'0"	CJ	ALL	—	PASS	JO 19 Oct	P —	—	CJ
19 Oct	1704	0097	SH	3-6/3-15	N	S	1'11"	CJ	ALL	—	PASS	JO 19 Oct	P —	—	CJ
19 Oct	1706	0097	SH	3-6/3-20	N	S	7'11"	CJ	ALL	—	PASS	JO 19 Oct	P —	—	CJ
						TOTAL (1)									

NOTE: (1) SEAM LENGTH: THIS PAGE _____ (ft) ACCUMULATED _____ (ft)

N/A = NOT APPLICABLE

GEOSYNTEC CONSULTANTS

FLUOR DANIEL FERNALD

PRODUCTION SEAM SUMMARY LOG

PROJECT: ON-SITE DISPOSAL FACILITY (OSDF)

LOCATION: FERNALD, OHIO PROJECT NO.: GQ1029 TASK NO.: ~~04.1~~ 04.2

DESCRIPTION: EPLTS Valve House #3 YEAR: 2000

PRIMARY: ☐ SECONDARY: ☐ OTHER: ☒ Bekaplast CONTRACTOR: STAVER/ISCO

PRODUCTION SEAM				LOCATION					NONDESTRUCTIVE TEST						
DATE (day/mo)	TIME	MACHINE NO.	OPER ID	SEAM NO.	BEGIN	END	ACTUAL SEAM LENGTH (ft)	QA ID	LOCATION (ft)	AIR PRESSURE (__±__psi for 5 min.)	~~V-BOX~~ SPARK (____sec.)	OPERATOR ID	PASS/FAIL	RETEST DATE	QA ID
19 Oct	1712	0097	SH	3-5/3-20	North	South	1'8"	CS	ALL	—	PASS	JO 19 Oct	P —	—	CS
19 Oct	1713	0097	SH	Sump/3-20	—	—	1'x1'	CS	ALL	—	PASS	JO 19 Oct	P —	—	CS
19 Oct	1715	0099	SH	3-4/3-20	W	E	2'8"	CS	ALL	—	PASS	JO 19 Oct	P —	—	CS
19 Oct	1718	0097	SH	3-1/3-20	E	W	2'7"	CS	ALL	—	PASS	JO 19 Oct	P —	—	CS
19 Oct	1720	0097	SH	3-3/3-19	E	W	4'11"	CS	ALL	—	PASS	JO 19 Oct	P —	—	CS
19 Oct	1736	0097	SH	3-2 S-Wall Outside diameter				CS	ALL	—	PASS	JO 19 Oct	P —	—	CS
19 Oct	1744	0097	SH	3-2 S-wall inside diameter				CS	ALL	—	PASS	JO 19 Oct	P —	—	CS
						TOTAL (1)									

NOTE: (1) SEAM LENGTH: THIS PAGE ALL FLOOR FACTORY WELDS PASSED SPARK TESTING (ft) ACCUMULATED _____ (ft)

N/A = NOT APPLICABLE

GEOSYNTEC CONSULTANTS

FLUOR DANIEL FERNALD

PRODUCTION SEAM SUMMARY LOG

PROJECT: ON-SITE DISPOSAL FACILITY (OSDF)

LOCATION: FERNALD, OHIO PROJECT NO.: 601341 TASK NO.: 04.2

DESCRIPTION: EPCTS VAA 3 YEAR: 2001

PRIMARY: ☐ SECONDARY: ☐ OTHER: ☑ BEKA PLAST CONTRACTOR: STAUCH/ISCO

PRODUCTION SEAM				LOCATION					NONDESTRUCTIVE TEST							
DATE (day/mo)	TIME	MACHINE NO.	OPERATOR ID	SEAM NO.	BEGIN	END	ACTUAL SEAM LENGTH (ft)	QA ID	LOCATION (ft)	SPARK ~~AIR PRESSURE~~ TD (___psi for 5 min.)	SPONGE ~~VACUUM BOX~~ TD (_____sec.)	OPERATOR ID	PASS/ FAIL	ACTION	QA ID
22 MAY	1057	~~TS~~ TD 5013	JO	NORTH FLANGE ON THE EAST WALL			INSIDE DIAMETER	TD	N/A	✓	✓	JO	✓		TD
	1057			" "			OUTSIDE DIAMETER	TD		✓	✓		✓		TD
	1310			CENTER FLANGE ON THE EAST WALL			INSIDE DIAMETER	TD		✓	✓		✓		TD
	1317			" "			OUTSIDE DIAMETER	TD		✓	✓		✓		TD
	1401			SOUTH FLANGE ON THE EAST WALL			INSIDE DIAMETER	TD		✓	✓		✓		TD
	1410			" "			OUTSIDE DIAMETER	TD		✓	✓		✓		TD
						TOTAL (1)									

NOTE: (1) SEAM LENGTH: THIS PAGE _____ (ft) ACCUMULATED _____ (ft)

GEOSYNTEC CONSULTANTS

FLUOR DANIEL FERNALD

SEAM AND PANEL REPAIR LOCATION LOG

PROJECT: ON-SITE DISPOSAL FACILITY (OSDF)

LOCATION: FERNALD, OHIO PROJECT NO: GQ0409 TASK NO.: 04.2

DESCRIPTION: EPLTS - VALVE HOUSE #3 DATE: ____ day ____ month ____ year

CONTRACTOR: STAVER/ISCO

PRIMARY: ☐ SECONDARY: ☐ OTHER: ☐ PRODUCT TYPE: BEKAPLAST

NORTH

NOTE:
SEE OTHER SIDE FOR SYMBOLS

QA ID: TBY

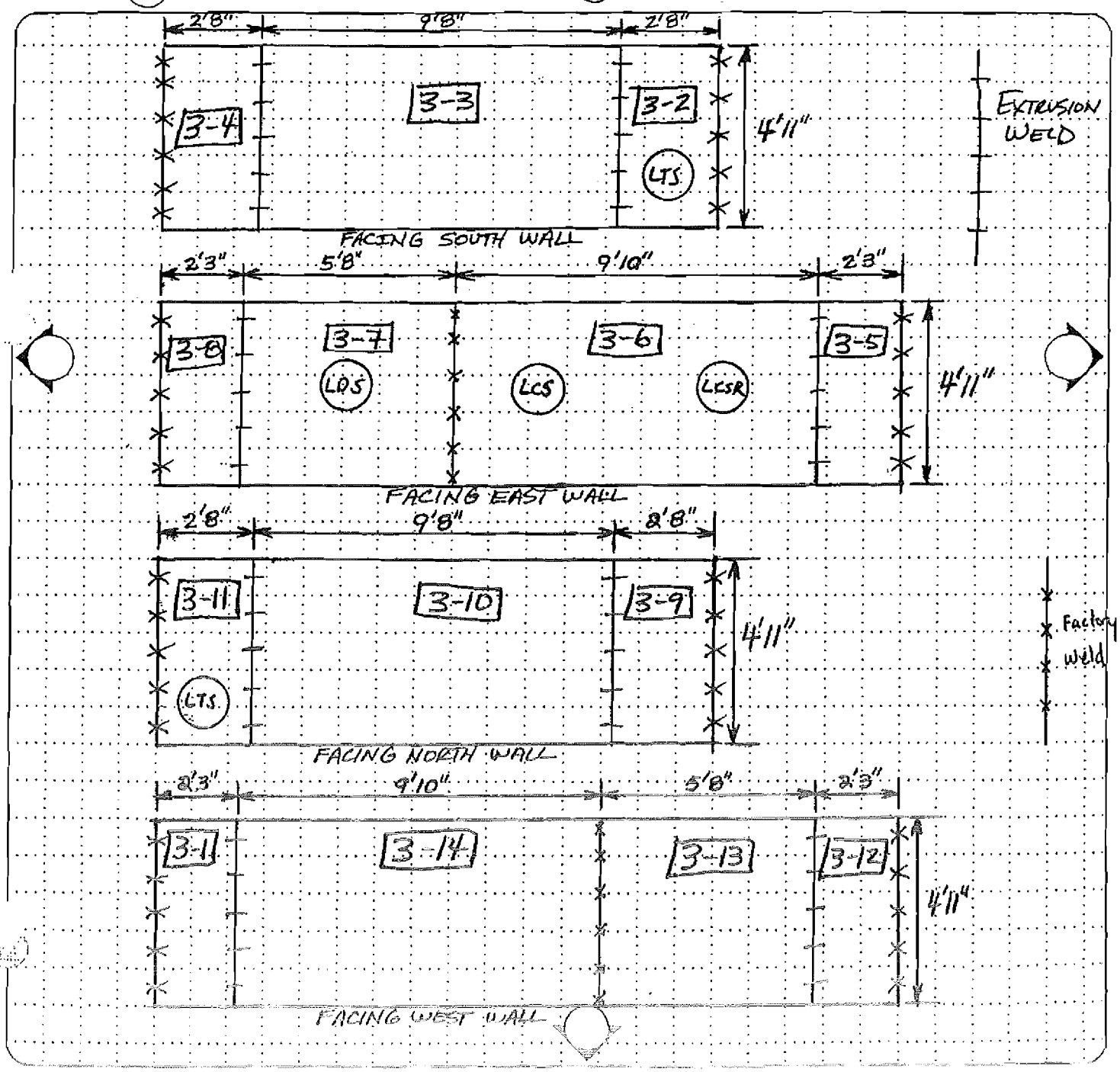

GEOSYNTEC CONSULTANTS

FLUOR DANIEL FERNALD

SEAM AND PANEL REPAIR LOCATION LOG

PROJECT: ON-SITE DISPOSAL FACILITY (OSDF)

LOCATION: FERNALD, OHIO PROJECT NO: 6Q1029 TASK NO.: 04.2

DESCRIPTION: EPLTS Valve House #3 DATE: ____ day ____ month ____ year

CONTRACTOR: STAVER/ISCO

PRIMARY: ☐ SECONDARY: ☐ OTHER: ■ PRODUCT TYPE: BEKAPLAST

NORTH

NOTE:
SEE OTHER SIDE FOR SYMBOLS

QA ID: [illegible]

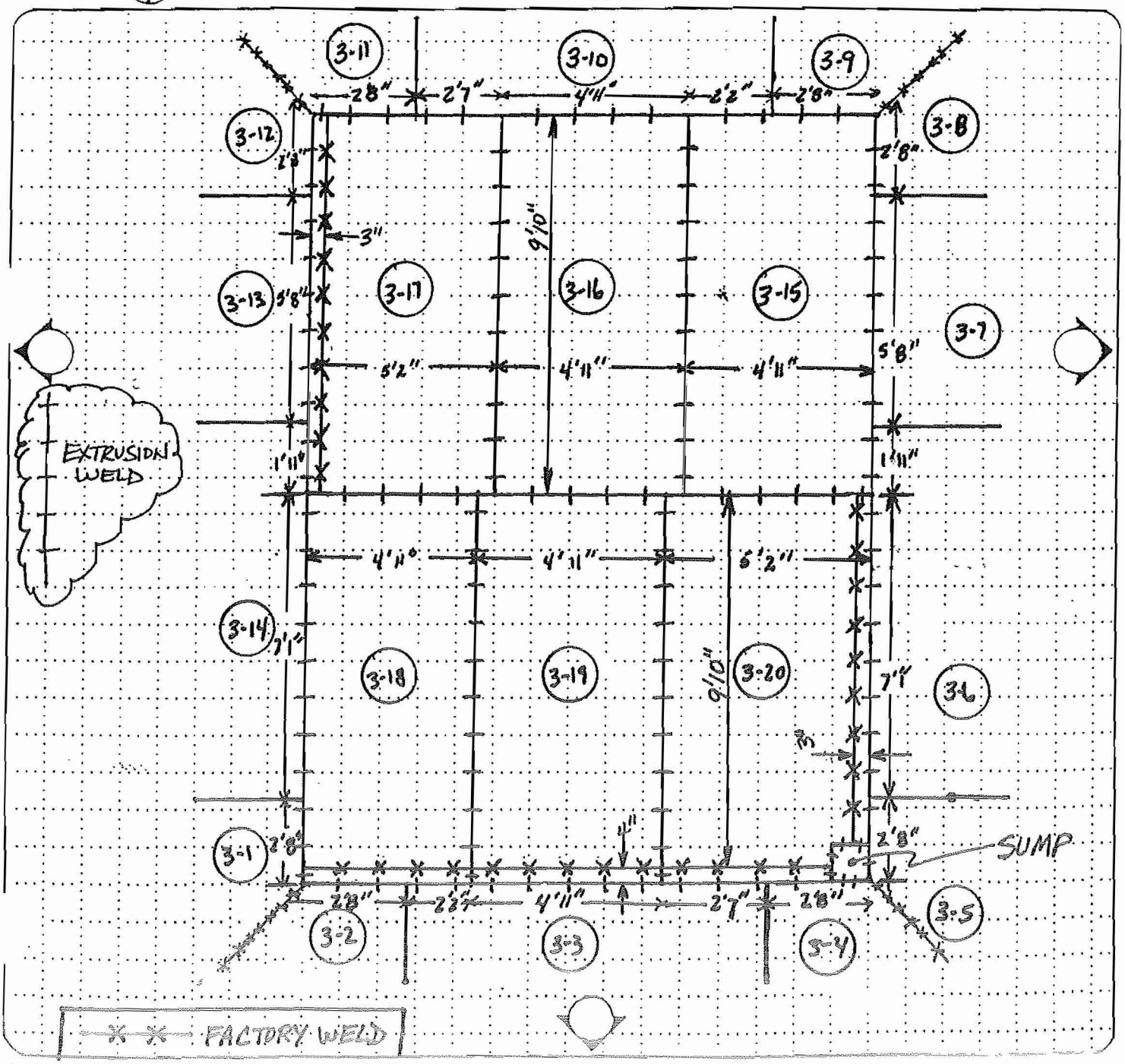

VALVE HOUSE NO. 4

GEOSYNTEC CONSULTANTS

FLUOR DANIEL FERNALD

PRODUCTION SEAM SUMMARY LOG

PROJECT: ON-SITE DISPOSAL FACILITY (OSDF)

LOCATION: FERNALD, OHIO PROJECT NO.: GQ1029 TASK NO.: ~~04.1~~ 04.2

DESCRIPTION: EPLTS VALVE HOUSE #4 YEAR: 2000

PRIMARY: ☐ SECONDARY: ☐ OTHER: ☒ Bekaplast CONTRACTOR: ISCO/STAUBER

PRODUCTION SEAM				LOCATION					NONDESTRUCTIVE TEST						
DATE (day/mo)	TIME	MACHINE NO.	OPER ID	SEAM NO.	BEGIN	END	ACTUAL SEAM LENGTH (ft)	QA ID	LOCATION (ft)	AIR PRESSURE (__±__psi for 5 min.)	SPARK ~~V-BOX~~ (____sec.)	OPERATOR ID	PASS/ FAIL	RETEST DATE	QA ID
20 Sept	1430	0097	JO	4-6/4-7	TOP	Bottom	5'2"	CS	ALL	—	Pass	SH 21 Sept	P	—	CS
21 Sept	0942	5013	JO	4-3/4-4	TOP	Bottom	5'2"	CS	ALL	—	Pass	SH 21 Sept	P	—	CS
21 Sept	0956	5013	JO	4-7/4-8	Top	Bottom	5'2"	CS	ALL	—	Pass	SH 21 Sept	P	—	CS
21 Sept	1012	5013	JO	4-10/4-11	TOP	Bottom	5'2"	CS	ALL	—	Pass	SH 21 Sept	P	—	CS
21 Sept	1051	5013	JO	LDS outside	ALL	—	dia	CS	ALL	—	Pass	SH 21 Sept	P	—	CS
21 Sept	1059	5013	JO	LDS inside	ALL	—	dia	CS	ALL	—	Pass	SH 21 Sept	P	—	CS
21 Sept	1053	0097	SH	Sump to 4-1	ALL	—	dia	CS	ALL	—	PASS	SH 21 Sept	P	—	CS
21 Sept	1054	0097	SH	Sump to 4-14	ALL	—	dia	CS	ALL	—	PASS	SH 21 Sept	P	—	CS
21 Sept	1101	~~5013~~ 0097	SH	4-13/4-14	TOP	Bottom	5'2"	CS	ALL	—	PASS	SH 21 Sept	P	—	CS
21 Sept	1113	0097	SH	4-2/4-3	TOP	Bottom	5'2"	CS	ALL	—	Pass	SH 21 Sept	P	—	CS
21 Sept	1113	5013	JO	LCS outside	ALL	—	dia	CS	ALL	—	Pass	SH 21 Sept	P	—	CS
21 Sept	1116	5013	JO	LCS inside	ALL	—	dia	CS	ALL	—	Pass	SH 21 Sept	P	—	CS
21 Sept	1301	0097	SH	4-4/4-5	TOP	Bottom	5'2"	CS	ALL	—	Pass	SH 21 Sept	P	—	CS
					TOTAL (1)										

NOTE: (1) SEAM LENGTH: THIS PAGE _____ (ft) ACCUMULATED _____ (ft)

N/A = NOT APPLICABLE

GEOSYNTEC CONSULTANTS

FLUOR DANIEL FERNALD

PRODUCTION SEAM SUMMARY LOG

PROJECT: ON-SITE DISPOSAL FACILITY (OSDF)

LOCATION: FERNALD, OHIO PROJECT NO.: GQ1029 TASK NO.: ~~04.1~~ 042

DESCRIPTION: EPLTS Valve House #4 YEAR: 2000

PRIMARY: ☐ SECONDARY: ☐ OTHER: ☒ Bekaplast CONTRACTOR: ISCO/STAVER

PRODUCTION SEAM				LOCATION					NONDESTRUCTIVE TEST						
DATE (day/mo)	TIME	MACHINE NO.	OPER ID	SEAM NO.	BEGIN	END	ACTUAL SEAM LENGTH (ft)	QA ID	LOCATION (ft)	AIR PRESSURE (__±__psi for 5 min.)	~~V-BOX~~ SPARK (____sec.)	OPERATOR ID	PASS/ FAIL	RETEST DATE	QA ID
21 Sept	1315	0097	SH	4-8/4-9	Top	Bottom	5'2"	CS	— ALL	—	Pass	SH 21 Sept	✓	—	CS
21 Sept	1319	5013	JO	LCSR outside	ALL	—	dia	CS	— ALL	—	Pas	SH 21 Sept	✓	—	CS
21 Sept	1320	Factory	weld	4-5/4-6	ALL	—	5'2"	CS	— ALL	—	Pass	SH 21 Sept	✓	—	CS
21 Sept	1327	5013	JO	LCSR inside	ALL	—	dia	CS	— ALL	—	Pas	SH 21 Sept	✓	—	CS
21 Sept	1336	5013	JO	4-1/4-14	TOP	Bottom	5'2"	CS	— ALL	—	Pass	SH 21 Sept	✓	—	CS
21 Sept	1337	0097	SH	4-9/4-10	Top	Bottom	5'2"	CS	— ALL	—	Pass	SH 21 Sept	✓	—	CS
21 Sept	1344	0097	SH	4-10/4-11	Top	Bottom	5'2"	CS	— ALL	—	Pass	SH 21 Sept	✓	—	CS
21 Sept	1345	Factory	weld	4-11/4-12	ALL	—	5'2"	CS	— ALL	—	Pass	SH 21 Sept	✓	—	CS
21 Sept	1412	5013	JO	outside LTS-N.	ALL	—	Dia	CS	— ALL	—	Pass	SH 21 Sept	✓	—	CS
21 Sept	1430	5013	JO	inside LTS-N.	ALL	—	Dia	CS	— ALL	—	Pass	SH 21 Sept	✓	—	CS
21 Sept	1615	Lyster 0424	SH	4-1/CAP 4-2	Top	Bottom	5'2"	CS	— ALL	—	Pass	SH 21 Sept	✓	—	CS
21 Sept	1620	Lyster 0424	SH	4-2/CAP 4-3	Top	Bottom	5'2"	CS	— ALL	—	Pass	SH 21 Sept	✓	—	CS

TOTAL (1)

NOTE: (1) SEAM LENGTH: THIS PAGE 1 Hot air weld (ft) ACCUMULATED _____ (ft)

N/A = NOT APPLICABLE 4-10/4-11 double recorded

GEOSYNTEC CONSULTANTS

FLUOR DANIEL FERNALD

PRODUCTION SEAM SUMMARY LOG

PROJECT: ON-SITE DISPOSAL FACILITY (OSDF)

LOCATION: FERNALD, OHIO PROJECT NO.: 601029 TASK NO.: ~~04.1~~ 04.2

DESCRIPTION: EPLTS Valve House #4 YEAR: 2000

PRIMARY: ☐ SECONDARY: ☐ OTHER: ☒ Bekaplast CONTRACTOR: ISCO/STAVBK

PRODUCTION SEAM				LOCATION					NONDESTRUCTIVE TEST						
DATE (day/mo)	TIME	MACHINE NO.	OPER ID	SEAM NO.	BEGIN	END	ACTUAL SEAM LENGTH (ft)	QA ID	LOCATION (ft)	AIR PRESSURE (__±__psi for 5 min.)	~~SPARK~~ ~~V-BOX~~ (____sec.)	OPERATOR ID	PASS/ FAIL	RETEST DATE	QA ID
10-24	0915	499	SH	4-9/4-17	ALL	—	2'8"	CS	ALL	—	Pass	SH 24 oct	P	—	CS
10-24	0920	0097	JO	4-15/4-16	ALL	—	9'10"	CS	ALL	—	Pass	SH 24 oct	P	—	CS
10-24	0921	499	SH	4-8/4-17	ALL	—	2'8"	CS	ALL	—	Pass	SH 24 oct	P	—	CS
10-24	0925	499	SH	4-7/4-17	ALL	—	2'3"	CS	ALL	—	Pass	SH 24 oct	P	—	CS
10-24	0929	0097	JO	4-16/4-17	ALL	—	9'10"	CS	ALL	—	Pass	SH 24 oct	P	—	CS
10-24	0936	499	SH	4-13/4-15	ALL	—	1'9"	CS	ALL	—	Pass	SH 24 oct	P	—	CS
10-24	0938	499	SH	4-12/4-15	ALL	—	5'8"	CS	ALL	—	Pass	SH 24 oct	P	—	CS
10-24	0942	499	SH	4-11/4-15	ALL	—	2'3"	CS	ALL	—	Pass	SH 24 oct	P	—	CS
10-24	0945	499	SH	4-10/4-15	ALL	—	2'8"	CS	ALL	—	Pass	SH 24 oct	P	—	CS
10-24	0947	499	SH	4-9/4-15	ALL	—	2'3"	CS	ALL	—	Pass	SH 24 oct	P	—	CS
10-24	0951	499	SH	4-5/4-16	ALL	—	4'11"	CS	ALL	—	Pass	SH 24 oct	P	—	CS
10-24	0951	0097	JO	4-17/4-18	ALL	—	9'10"	CS	ALL	—	Pass	SH 24 oct	P	—	CS
10-24	0955	0097	JO	4-17/4-19	ALL	—	0'4"	CS	ALL	—	Pass	SH 24 oct	P	—	CS
						TOTAL (1)									

NOTE: (1) SEAM LENGTH: THIS PAGE _____ (ft) ACCUMULATED _____ (ft)

N/A = NOT APPLICABLE

GEOSYNTEC CONSULTANTS

FLUOR DANIEL FERNALD

PRODUCTION SEAM SUMMARY LOG

PROJECT: ON-SITE DISPOSAL FACILITY (OSDF)

LOCATION: FERNALD, OHIO PROJECT NO.: 641029 TASK NO.: ~~04.1~~ 04.2

DESCRIPTION: EPLTS Value Hose #4 YEAR: 2000

PRIMARY: ☐ SECONDARY: ☐ OTHER: ☒ BeKaplast CONTRACTOR: ISCO/STAVER

PRODUCTION SEAM				LOCATION					NONDESTRUCTIVE TEST						
DATE (dcy/mo)	TIME	MACHINE NO.	OPER ID	SEAM NO.	BEGIN	END	ACTUAL SEAM LENGTH (ft)	QA ID	LOCATION (ft)	AIR PRESSURE (__±__psi for 5 min.)	~~V-BOX~~ SPARK (____sec.)	OPERATOR ID	PASS/ FAIL	RETEST DATE	QA ID
10-24	0956	0097	JO	4-16/4-19	ALL	–	4'7"	CS	ALL	—	Pass	SH 24 Oct	P	—	CS
10-24	0958	499	SH	4-3/4-17	ALL	–	1'9"	CS	ALL	—	Pass	SH 24 Oct	P	—	CS
10-24	1000	499	SH	4-6/4-17	ALL	–	5'8"	CS	ALL	—	Pass	SH 24 Oct	P	—	CS
10-24	1002	0097	JO	4-16/4-20	ALL	–	0'4"	CS	ALL	—	Pass	SH 24 Oct	P	—	CS
10-24	1003	0097	JO	4-15/4-20	ALL	–	4'11"	CS	ALL	—	Pass	SH 24 Oct	P	—	CS
10-24	1005	499	SH	4-13/4-20	ALL	–	7'11"	CS	ALL	—	Pass	SH 24 Oct	P	—	CS
10-24	1012	499	SH	4-14/4-20	ALL	–	2'3"	CS	ALL	—	Pass	SH 24 Oct	P	—	CS
10-24	1021	499	SH	4-3/4-20	ALL	–	2'8"	CS	ALL	—	Pass	SH 24 Oct	P	—	CS
10-24	1024	0097	JO	4-18/4-19	ALL	–	10'2"	CS	ALL	—	Pass	SH 24 Oct	P	—	CS
10-24	1024	499	SH	4-2/4-20	ALL	–	2'6"	CS	ALL	—	Pass	SH 24 Oct	P	—	CS
10-24	1028	499	SH	4-2/4-19	ALL	–	4'11"	CS	ALL	—	Pass	SH 24 Oct	P	—	CS
10-24	1033	499	SH	4-5/4-18	ALL	–	7'11"	CS	ALL	—	Pass	SH 24 Oct	P	—	CS
10-24	1037	0097	JO	4-19/4-20	ALL	–	10'2"	CS	ALL	—	Pass	SH 24 Oct	P	—	CS
					TOTAL (1)										

NOTE: (1) SEAM LENGTH: THIS PAGE _____ (ft) ACCUMULATED _____ (ft)

N/A = NOT APPLICABLE

GEOSYNTEC CONSULTANTS

FLUOR DANIEL FERNALD

PRODUCTION SEAM SUMMARY LOG

PROJECT: ON-SITE DISPOSAL FACILITY (OSDF)

LOCATION: FERNALD, OHIO PROJECT NO.: GQ1029 TASK NO.: ~~04.1~~ 04.2

DESCRIPTION: EPLTS Valve House #4 YEAR: 2000

PRIMARY: ☐ SECONDARY: ☐ OTHER: ☒ Bekaplast CONTRACTOR: STAVEK/ISCO

PRODUCTION SEAM				LOCATION					NONDESTRUCTIVE TEST						
DATE (day/mo)	TIME	MACHINE NO.	OPER ID	SEAM NO.	BEGIN	END	ACTUAL SEAM LENGTH (ft)	QA ID	LOCATION (ft)	AIR PRESSURE (__±__psi for 5 min.)	SPARK ~~V-BOX~~ (____sec.)	OPERATOR ID	PASS/ FAIL	RETEST DATE	QA ID
10-Oct	1049	499	SH	4-4/4-18	ALL	—	2'3"	CJ	ALL	—	PASS	SH 24 Oct	P —	—	CJ
10 Oct	1054	499	SH	4-3/4-18	ALL	—	2'8"	CJ	ALL	—	PASS	SH 24 Oct	P —	—	CJ
10 Oct	1059	0097	JO	4-20/Sump	ALL	—	1'x1'	CJ	ALL	—	PASS	SH 24 Oct	P —	—	CJ
10 Oct	1120	499	SH	4-2/4-18	ALL	—	2'3"	CJ	ALL	—	PASS	SH 24 Oct	P —	—	CJ
10 Oct	1345	0097	JO	LDS Outside of VH-4		—	dia	CJ	ALL	—	PASS	SH 24 Oct	P —	—	CJ
10 Oct	1350	0097	JO	LCS Outside of VH-4		—	dia	CJ	ALL	—	PASS	SH 24 Oct	P —	—	CJ
10 Oct	1355	0097	JO	LCSR Outside of VH-4		—	dia	CJ	ALL	—	PASS	SH 24 Oct	P —	—	CJ
27 Oct	0950	499	JO	LTS Outside of VH-4 North end			dia	CJ	ALL	—	PASS	JO 27 Oct	P —	—	CJ
27 Oct	010	499	JO	LTS Outside of VH-4 South end			dia	CJ	ALL	—	PASS	JO 27 Oct	P —	—	CJ
16 Nov	1045	0097	JO	4-3/outside ring		—	dia	CJ	ALL	—	PASS	JO 16 Nov	P —	—	CJ
16 Nov	1105	0097	JO	4-3/inside ring		—	dia	CJ	ALL	—	PASS	JO 16 Nov	P —	—	CJ
						TOTAL (1)									

NOTE: (1) SEAM LENGTH: THIS PAGE ALL FLOOR FACTORY WELDS PASSED SPARK TESTING (ft) ACCUMULATED _____ (ft)

N/A = NOT APPLICABLE

GEOSYNTEC CONSULTANTS

FLUOR DANIEL FERNALD

SEAM AND PANEL REPAIR LOCATION LOG

PROJECT: ON-SITE DISPOSAL FACILITY (OSDF)

LOCATION: FERNALD, OHIO PROJECT NO: GQ0409 TASK NO.: 04

DESCRIPTION: EPLTS - VALVE HOUSE #4 DATE: 24 day Oct month 2000 year

CONTRACTOR: STAVER / ISCO

PRIMARY: ☐ SECONDARY: ☐ OTHER: ☐ PRODUCT TYPE: BEKAPLAST

NORTH

NOTE:
SEE OTHER SIDE FOR SYMBOLS

QA ID: CA

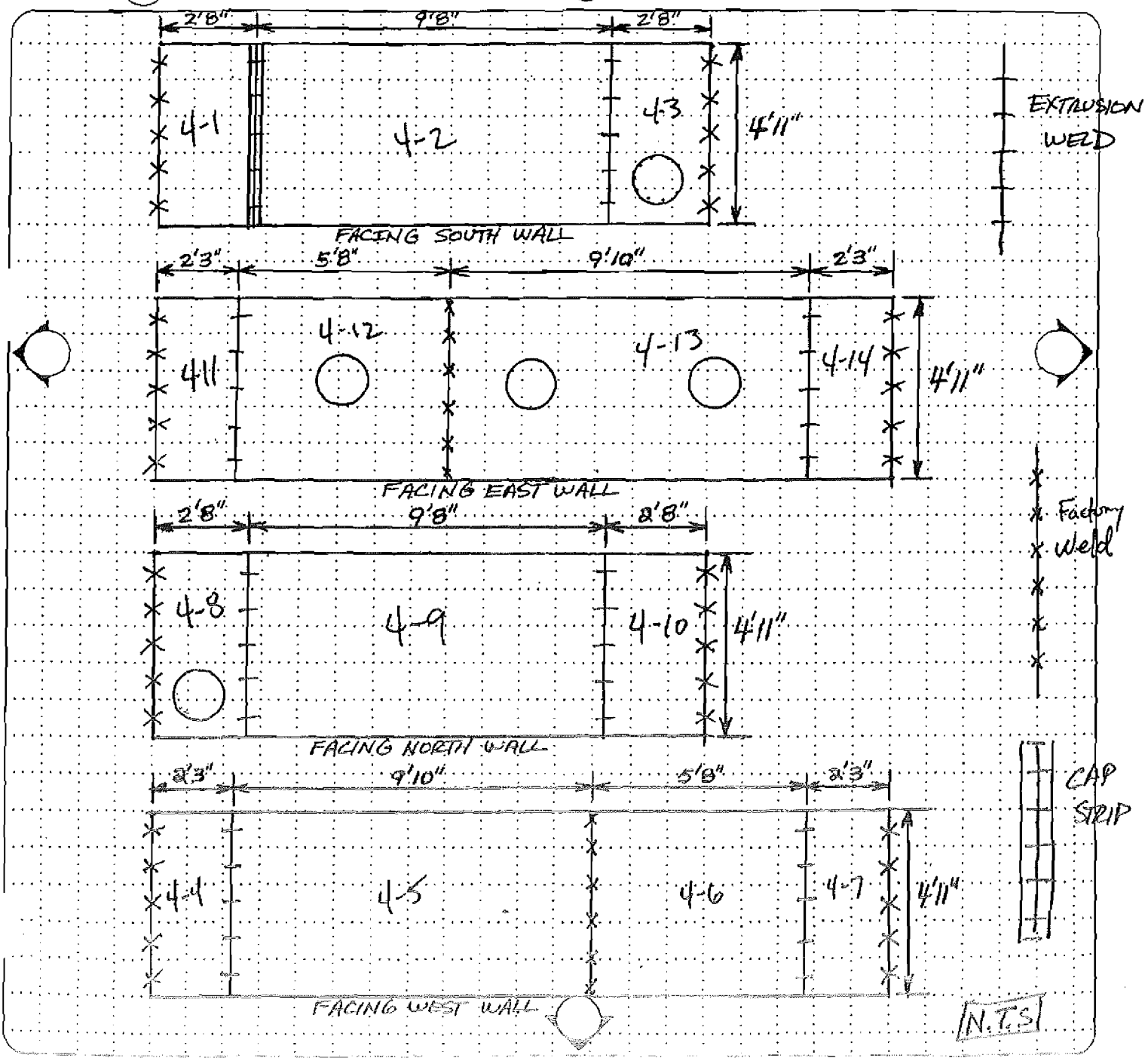

GEOSYNTEC CONSULTANTS

FLUOR DANIEL FERNALD

SEAM AND PANEL REPAIR LOCATION LOG

PROJECT: ON-SITE DISPOSAL FACILITY (OSDF)

LOCATION: FERNALD, OHIO PROJECT NO: 601029 TASK NO.: 04.2

DESCRIPTION: Phase II/GPLTS DATE: 24 day Oct month 2000 year

CONTRACTOR: ISCO/STAVER

PRIMARY: ☐ SECONDARY: ☐ OTHER: ■ PRODUCT TYPE: Bekaplast

NORTH

NOTE:
SEE OTHER SIDE FOR SYMBOLS

QA ID: GL

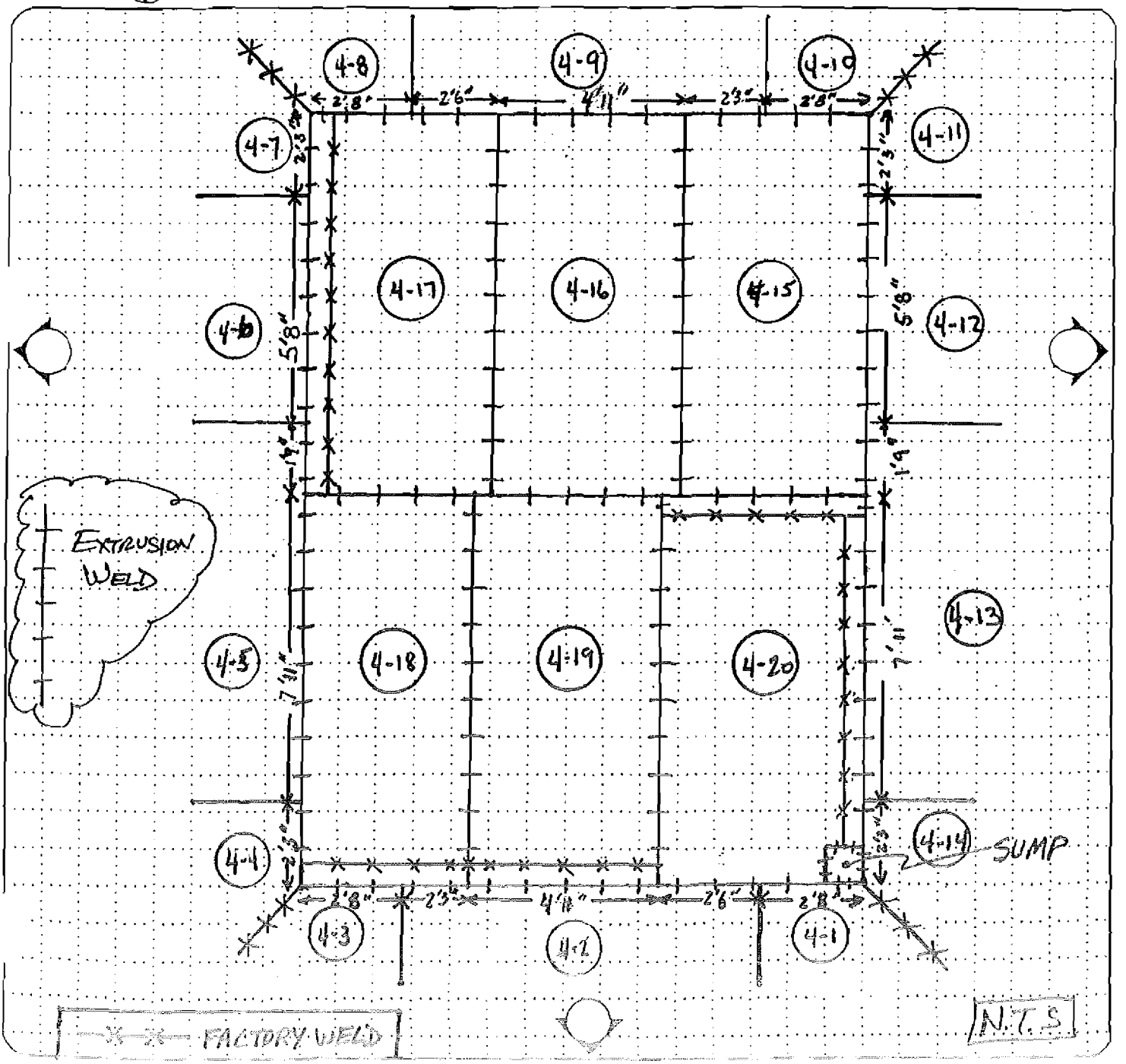

VALVE HOUSE NO. 5

GEOSYNTEC CONSULTANTS

FLUOR DANIEL FERNALD

PRODUCTION SEAM SUMMARY LOG

PROJECT: ON-SITE DISPOSAL FACILITY (OSDF)

LOCATION: FERNALD, OHIO PROJECT NO.: GQ1029 TASK NO.: 04.1

DESCRIPTION: EPLTS Valve House 5 YEAR: 2000

PRIMARY: ☐ SECONDARY: ☐ OTHER: ☒ Bekaplast CONTRACTOR: ISCO/STAVEK

PRODUCTION SEAM				LOCATION					NONDESTRUCTIVE TEST						
DATE (day/mo)	TIME	MACHINE NO.	OPER ID	SEAM NO.	BEGIN	END	ACTUAL SEAM LENGTH (ft)	QA ID	LOCATION (ft)	AIR PRESSURE (__±__psi for 5 min.)	SPARK ~~V-BOX~~ (____sec.)	OPERATOR ID	PASS/ FAIL	RETEST DATE	QA ID
11 Oct	1530	5013	JO	5-1/5-2	Top	Bottom	5'2"	CL	ALL —	—	Pass	SH 12 Oct	P	—	CL
11 Oct	1540	5013	JO	5-5/5-6	Top	Bottom	5'2"	CL	ALL —	—	Pass	SH 12 Oct	P	—	CL
11 Oct	1550	5013	SH	5-8/5-9	Top	Bottom	5'2"	CL	ALL —	—	Pass	SH 12 Oct	P	—	CL
12 Oct	1430	0097	SH ~~JO~~	5-4/5-5	Top	Bottom	5'2"	CL	ALL —	—	Pass	SH 12 Oct	P	—	CL
12 Oct	Factory Weld			5-3/5-3	Factory weld		5'2"	CL	ALL —	—	Pass	SH 12 Oct	P	—	CL
12 Oct	1450	0097	SH	5-1/5-14	Top	Bottom	5'2"	CL	ALL —	—	Pass	SH 12 Oct	P	—	CL
12 Oct	Factory Weld		—	5-10/5-11	—		5'2"	CL	ALL —	—	Pass	SH 12 Oct	P	—	CL
12 Oct	1510	0097	SH	5-6/5-7	Top	Bottom	5'2"	CL	ALL —	—	Pass	SH 12 Oct	P	—	CL
12 Oct	1530	0097	SH	5-13/5-14	Top	Bottom	5'2"	CL	ALL —	—	Pass	SH 12 Oct	P	—	CL
12 Oct	1550	0097	SH	5-13/5-14	Top	Bottom	5'2"	CL	ALL —	—	Pass	SH 12 Oct	P	—	CL
12 Oct	1610	0097	SH	5-9/5-10	Top	Bottom	5'2"	CL	ALL —	—	Pass	SH 12 Oct	P	—	CL
12 Oct	1630	0097	SH	5-7/5-8	Top	Bottom	5'2"	CL	ALL —	—	Pass	SH 12 Oct	P	—	CL
				TOTAL (1)											

NOTE: (1) SEAM LENGTH: THIS PAGE _____ (ft) ACCUMULATED _____ (ft)

N/A = NOT APPLICABLE

GEOSYNTEC CONSULTANTS

FLUOR DANIEL FERNALD

PRODUCTION SEAM SUMMARY LOG

PROJECT: ON-SITE DISPOSAL FACILITY (OSDF)

LOCATION: FERNALD, OHIO PROJECT NO.: GQ1029 TASK NO.: ~~04.1~~ 04.2

DESCRIPTION: EPLTS YEAR: 2000

PRIMARY: ☐ SECONDARY: ☐ OTHER: ☒ Bekaplast CONTRACTOR: ISCO/STAVER

PRODUCTION SEAM				LOCATION					NONDESTRUCTIVE TEST						
DATE (day/mo)	TIME	MACHINE NO.	OPER ID	SEAM NO.	BEGIN	END	ACTUAL SEAM LENGTH (ft)	QA ID	LOCATION (ft)	AIR PRESSURE (__ psi for 5 min.)	SPARK ~~V-BOX~~ (__ sec.)	OPERATOR ID	PASS/ FAIL	RETEST DATE	QA ID
12 Oct	1635	5013	JO	LCSP outside 5-11	—	—	dia	CL	—	—	Pass	SH/11 Oct	P	—	CL
12 Oct	1638	5013	JO	LCSP inside 5-11	—	—	dia	CL	—	—	Pass	SH/11 Oct	P	—	CL
12 Oct	1640	5013	JO	LDS outside 5-10	—	—	dia	CL	—	—	Pass	SH 12 Oct	P	—	CL
12 Oct	1645	5013	JO	LDS inside 5-10	—	—	dia	CL	—	—	Pass	SH 12 Oct	P	—	CL
12 Oct	1650	0097	SH	5-12/Sump	0	1	1'	CL	—	—	Pass	SH 12 Oct	P	—	CL
12 Oct	1650	5013	JO	LCS outside 5-11	—	—	dia	CL	—	—	Pass	SH 12 Oct	P	—	CL
12 Oct	1655	0097	SH	5-13/Sump	0	1	1'	CL	—	—	Pass	SH 12 Oct	P	—	CL
12 Oct	1655	5013	JO	LCS inside 5-11	—	—	dia	CL	—	—	Pass	SH 12 Oct	P	—	CL
12 Oct	1710	0097	SH	5-12 5-13	TOP	Bottom	5'2"	CL	—	—	Pass	SH 12 Oct	P	—	CL
12 Oct	1725	0097	SH	outside ring 5-6	—	—	dia	CL	—	—	Pass	SH 12 Oct	P	—	CL
12 Oct	1730	0097	SH	inside ring 5-6	—	—	dia	CL	—	—	Pass	SH 12 Oct	P	—	CL
												~~SH~~			
				TOTAL (1)											

NOTE: (1) SEAM LENGTH: THIS PAGE _____ (ft) ACCUMULATED _____ (ft)

N/A = NOT APPLICABLE

GEOSYNTEC CONSULTANTS

FLUOR DANIEL FERNALD

PRODUCTION SEAM SUMMARY LOG

PROJECT: ON-SITE DISPOSAL FACILITY (OSDF)

LOCATION: FERNALD, OHIO PROJECT NO.: GQ1029 TASK NO.: ~~04.1~~ 04.2

DESCRIPTION: EPLTS Valve House 5 YEAR: 2000

PRIMARY: ☐ SECONDARY: ☐ OTHER: ☒ Bekaplast CONTRACTOR: ISCO/STAVER

PRODUCTION SEAM				LOCATION					NONDESTRUCTIVE TEST						
DATE (day/mo)	TIME	MACHINE NO.	OPER ID	SEAM NO.	BEGIN	END	ACTUAL SEAM LENGTH (ft)	QA ID	LOCATION (ft)	AIR PRESSURE (__± __psi for 5 min.)	SPARK ~~V-BOX~~ (____sec.)	OPERATOR ID	PASS/ FAIL	RETEST DATE	QA ID
25 Oct	1315	499	SH	5-7/5-15	ALL	-2'3"	~~2'6"~~	CS	—	—	Pass	SH 26 Oct	P	—	CS
25 Oct	1318	499	SH	5-8/5-15	ALL	—	2'8"	CS	—	—	Pass	SH 26 Oct	P	—	CS
25 Oct	1321	499	SH	5-9/5-15	ALL	—	2'3"	CS	—	—	Pass	SH 26 Oct	P	—	CS
25 Oct	1325	499	SH	5-10/5-15	ALL	-5'8"	~~4'8"~~	CS	—	—	Pass	SH 26 Oct	P	—	CS
25 Oct	1331	499	SH	5-11/5-15	ALL	—	2'0"	CS	—	—	Pass	SH 26 Oct	P	—	CS
25 Oct	1332	499	SH	5-11/5-20	ALL	—	7'11"	CS	—	—	Pass	SH 26 Oct	P	—	CS
25 Oct	1332	0097	JO	5-16/5-17	ALL	—	9'10"	CS	—	—	Pass	SH 26 Oct	P	—	CS
25 Oct	1340	0097	JO	5-15/5-16	ALL	—	9'10"	CS	—	—	Pass	SH 26 Oct	P	—	CS
25 Oct	1341	499	SH	5-12/5-20	ALL	—	1'3"	CS	—	—	Pass	SH 26 Oct	P	—	CS
25 Oct	1343	499	SH	5-20/5-Jump	ALL	—	1'x1'	CS	—	—	Pass	SH 26 Oct	P	—	CS
25 Oct	1400	0097	JO	5-19/5-20	ALL	—	10'2"	CS	—	—	Pass	SH 26 Oct	P	—	CS
25 Oct	1401	499	SH	5-7/5-16	ALL	—	4'11"	CS	—	—	Pass	SH 26 Oct	P	—	CS
25 Oct	1405	499	SH	5-17/5-7	ALL	—	2'6"	CS	—	—	Pass	SH 26 Oct	P	—	CS
25 Oct	1408	499	SH	5-6/5-17	TOTAL (1) ALL		2'8"	CS	—	—	Pass	SH 26 Oct	P	—	CS

NOTE: (1) SEAM LENGTH: THIS PAGE _____ (ft) ACCUMULATED _____ (ft)

N/A = NOT APPLICABLE

GEOSYNTEC CONSULTANTS

FLUOR DANIEL FERNALD

PRODUCTION SEAM SUMMARY LOG

PROJECT: ON-SITE DISPOSAL FACILITY (OSDF)

LOCATION: FERNALD, OHIO PROJECT NO.: GQ1029 TASK NO.: ~~84.1~~ 84.2

DESCRIPTION: EPLTS Valve House 5 YEAR: 2000

PRIMARY: ☐ SECONDARY: ☐ OTHER: ☒ Bekaplast CONTRACTOR: ISCO/STAVER

PRODUCTION SEAM				LOCATION					NONDESTRUCTIVE TEST							
DATE (day/mo)	TIME	MACHINE NO.	OPER ID	SEAM NO.	BEGIN	END	ACTUAL SEAM LENGTH (ft)	QA ID	LOCATION (ft)	AIR PRESSURE (__ psi for 5 min.)	Spark ~~V-BOX~~ (___sec.)	OPERATOR ID	PASS/ FAIL	RETEST DATE	QA ID
25 Oct	1413	499	SH	5-5/5-17	ALL		2'3"	CS	ALL —	—	Pass	SH 26 Oct	P	—	CS
25 Oct	1425	0097 499	JO	5-18/5-19	ALL		10'2"	CS	ALL —	—	Pass	SH 26 Oct	P	—	CS
25 Oct	1445	~~0097~~ 499	SH	5-1/5-17	ALL		7'7"	CS	ALL —	—	Pass	SH 26 Oct	P	—	CS
25 Oct	1448	~~0097~~ 499	SH	5-2/5-18	ALL		1'9"	CS	ALL —	—	Pass	SH 26 Oct	P	—	CS
25 Oct	1450	499	SH	5-3/5-18	ALL		6'2"	CS	ALL —	—	Pass	SH 26 Oct	P	—	CS
25 Oct	1455	499	SH	5-2/5-18	ALL		2'3"	CS	ALL —	—	Pass	SH 26 Oct	P	—	CS
25 Oct	1520	499	SH	5-1/5-18	ALL		2'8"	CS	ALL —	—	Pass	SH 26 Oct	P	—	CS
25 Oct	1524	499	SH	5-4/5-18	ALL		2'3"	CS	ALL —	—	Pass	SH 26 Oct	P	—	CS
25 Oct	1527	499	SH	5-4/5-19	ALL		4'11"	CS	ALL —	—	Pass	SH 26 Oct	P	—	CS
25 Oct	1532	499	SH	5-14/5-20	ALL		2'6"	CS	ALL —	—	Pass	SH 26 Oct	P	—	CS
25 Oct	1535	499	SH	5-13/5-20	ALL		1'8"	CS	ALL —	—	Pass	SH 26 Oct	P	—	CS
26 Oct	0945	499	JO	5-19/Cap	ALL		4'11½"	CS	ALL —	—	Pass	SH 26 Oct	P	—	CS
26 Oct	0951	499	JO	5-19/Cap	ALL		4'11"	CS	ALL —	—	Pass	SH 26 Oct	P	—	CS
					TOTAL (1)										

NOTE: (1) SEAM LENGTH: THIS PAGE _____ (ft) ACCUMULATED _____ (ft)

N/A = NOT APPLICABLE

GEOSYNTEC CONSULTANTS

FLUOR DANIEL FERNALD

PRODUCTION SEAM SUMMARY LOG

PROJECT: ON-SITE DISPOSAL FACILITY (OSDF)

LOCATION: FERNALD, OHIO PROJECT NO.: GQ1029 TASK NO.: ~~04.1~~ 04.2

DESCRIPTION: EPLTS Valve House 5 YEAR: 2000

PRIMARY: ☐ SECONDARY: ☐ OTHER: ☒ Bekaplast CONTRACTOR: ISCO / STAVER

PRODUCTION SEAM				LOCATION					NONDESTRUCTIVE TEST						
DATE (day/mo)	TIME	MACHINE NO.	OPER ID	SEAM NO.	BEGIN	END	ACTUAL SEAM LENGTH (ft)	QA ID	LOCATION (ft)	AIR PRESSURE (__ psi for 5 min.)	SPARK ~~V-BOX~~ (___sec.)	OPERATOR ID	PASS/ FAIL	RETEST DATE	QA ID
26 Oct	0957	499	JO	5-20 Cap	ALL		5'3"	CS	—	—	Pass	SH 26 Oct	P	—	CS
26 Oct	1005	499	JO	5-15 Cap	ALL		4'11"	CS	—	—	Pass	SH 26 Oct	P	—	CS
26 Oct	1010	499	JO	5-16 Cap	ALL		4'11"	CS	—	—	Pass	SH 26 Oct	P	—	CS
26 Oct	1017	499	JO	5-17 Cap	ALL		5'3"	CS	—	—	Pass	SH 26 Oct	P	—	CS
26 Oct	1022	0097	SH	LCSB outside of VH Ring			dia	CS	—	—	Pass	SH 26 Oct	P	—	CS
26 Oct	1031	0097	SH	LCS outside of VH Ring			dia	CS	—	—	Pass	SH 26 Oct	P	—	CS
26 Oct	1044	0097	SH	LDS outside of VH Ring			dia	CS	—	—	Pass	SH 26 Oct	P	—	CS
26 Oct	1103	0097	SH	LTS North side outside of VH Ring			dia	CS	—	—	Pass	SH 26 Oct	P	—	CS
16 Nov	0850	499	JO	5-1 outside ring			dia	CS	—	—	Pass	JO 16 Nov	P	—	CS
16 Nov	0910	499	JO	5-1 inside ring			dia	CS	—	—	Pass	JO 16 Nov	P	—	CS
16 Nov	0945	499	JO	LTS south side outside of VH-5 ring			dia	CS	—	—	Pass	JO 16 Nov	P	—	CS
					TOTAL (1)										

NOTE: (1) SEAM LENGTH: THIS PAGE All floor factory welds were spark (ft) ACCUMULATED _____ (ft)

N/A = NOT APPLICABLE tested on 26 Oct as per specifications.

GEOSYNTEC CONSULTANTS

FLUOR DANIEL FERNALD

SEAM AND PANEL REPAIR LOCATION LOG

PROJECT: ON-SITE DISPOSAL FACILITY (OSDF)

LOCATION: FERNALD, OHIO PROJECT NO: ~~GQ0409~~ GQ01029 TASK NO.: 04.2

DESCRIPTION: EPLTS - VALVE HOUSE # 5 DATE: 12 day Oct month 2000 year

CONTRACTOR: STAVER / ISCO

PRIMARY: ☐ SECONDARY: ☐ OTHER: ■ PRODUCT TYPE: BEKAPLAST

NORTH

NOTE:
SEE OTHER SIDE FOR SYMBOLS

QA ID: CJ

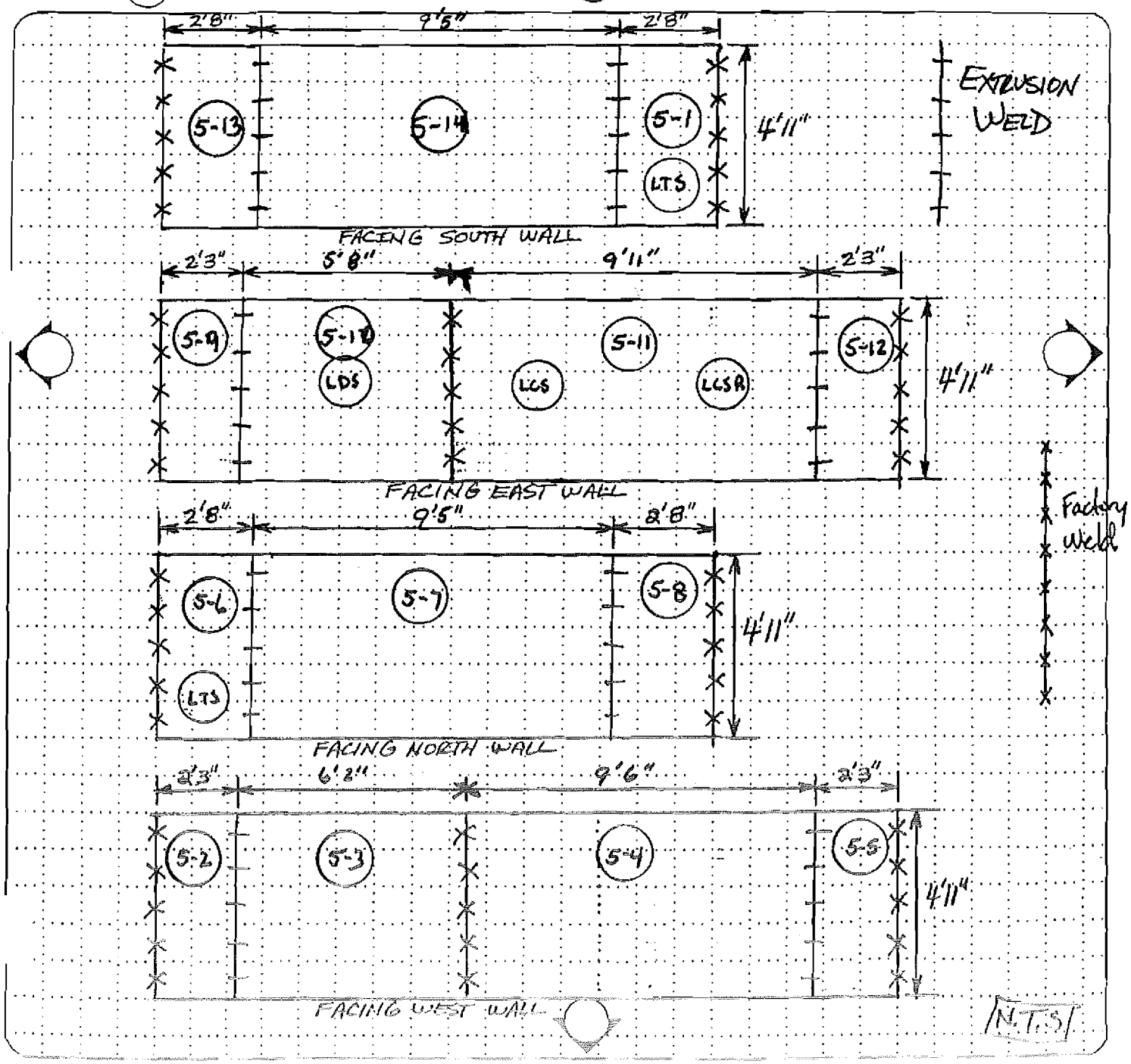

GEOSYNTEC CONSULTANTS

FLUOR DANIEL FERNALD

SEAM AND PANEL REPAIR LOCATION LOG

PROJECT: ON-SITE DISPOSAL FACILITY (OSDF)

LOCATION: FERNALD, OHIO PROJECT NO: GO1029 TASK NO.: 04.2

DESCRIPTION: EPLTS - Valve House #5 DATE: 26 day Oct month 2000 year

CONTRACTOR: STAVER / ISCO

PRIMARY: ☐ SECONDARY: ☐ OTHER: ■ PRODUCT TYPE: Bekaplast

NORTH

NOTE:
SEE OTHER SIDE FOR SYMBOLS

OA ID: CS

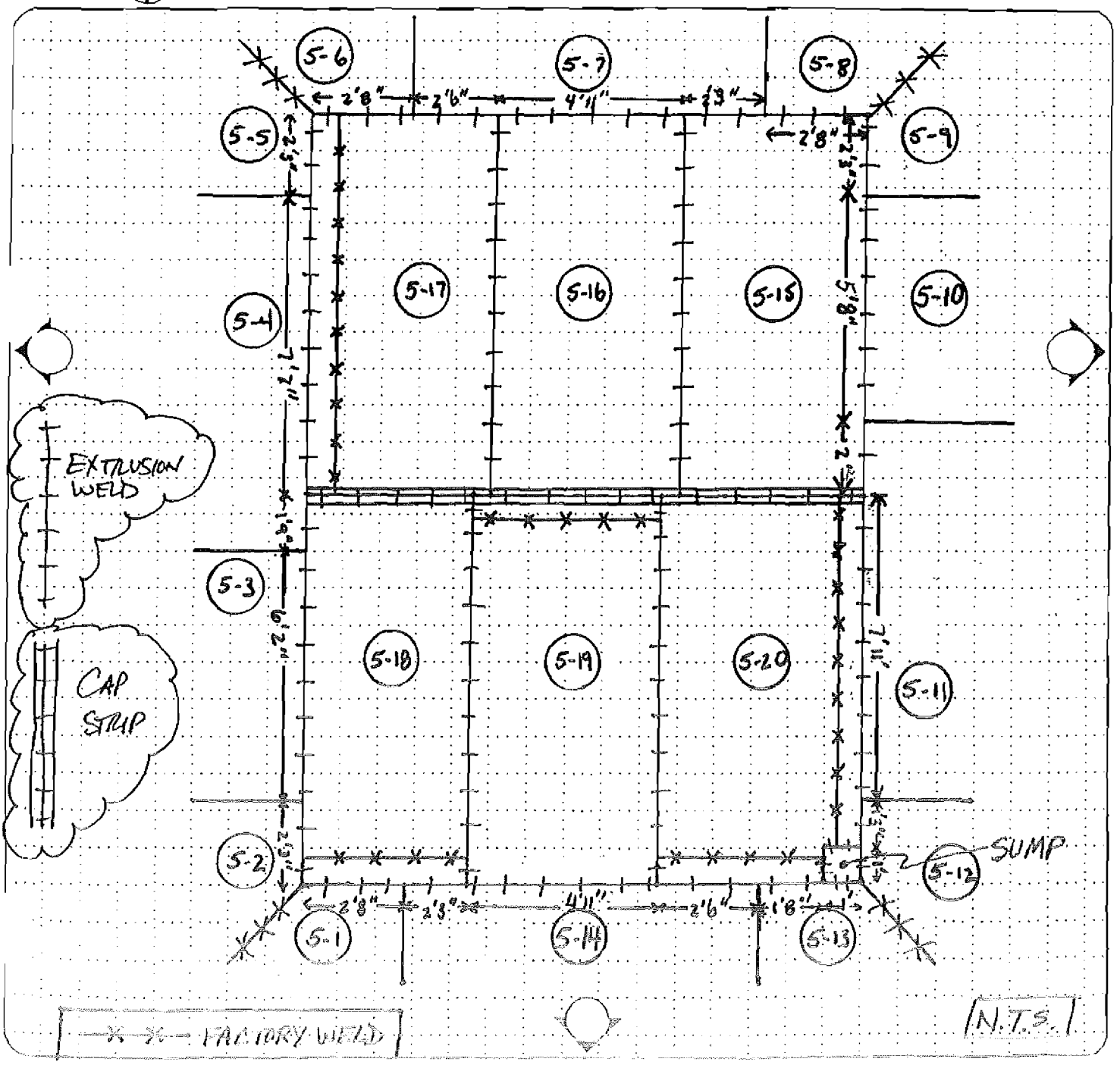

VALVE HOUSE NO. 6

GEOSYNTEC CONSULTANTS

FLUOR DANIEL FERNALD

PRODUCTION SEAM SUMMARY LOG

PROJECT: ON-SITE DISPOSAL FACILITY (OSDF)

LOCATION: FERNALD, OHIO PROJECT NO.: GQ1029 TASK NO.: ~~04.1~~ 04.2

DESCRIPTION: EPLTS Valve House #6 YEAR: 2000

PRIMARY: ☐ SECONDARY: ☐ OTHER: ■ Bekaplast CONTRACTOR: ISO/STAVER

PRODUCTION SEAM				LOCATION					NONDESTRUCTIVE TEST							
DATE (day/mo)	TIME	MACHINE NO.	OPER ID	SEAM NO.	BEGIN	END	ACTUAL SEAM LENGTH (ft)	QA ID	LOCATION (ft)	AIR PRESSURE (__±__psi for 5 min.)	SPARK ~~V-BOX~~ (____sec.)	OPERATOR ID	PASS/ FAIL	RETEST DATE	QA ID
19 Oct	1110	~~1110~~ 499	JO	6-2/6-3	Top	Bottom	5'2"	CS	ALL	—	PASS	JO 26 Oct	P —	—	CS
19 Oct	1125	499	JO	6-1/6-2	Top	Bottom	5'2"	CS	ALL	—	PASS	JO 26 Oct	P —	—	CS
19 Oct	1140	499	JO	6-11/6-12	Top	Bottom	5'2"	CS	ALL	—	PASS	JO 26 Oct	P —	—	CS
19 Oct	Factory Weld			6-5/6-6	Top	Bottom	5'2"	CS	ALL	—	PASS	JO 26 Oct	P —	—	CS
19 Oct	Factory Weld			6-12/6-13	Top	Bottom	5'2"	CS	ALL	—	PASS	JO 26 Oct	P —	—	CS
19 Oct	1145	0097	SH	6-7/6-8	Top	Bottom	5'2"	CS	ALL	—	PASS	JO 26 Oct	P —	—	CS
19 Oct	1159	0097	SH	6-10/6-11	Top	Bottom	5'2"	CS	ALL	—	PASS	JO 26 Oct	P —	—	CS
19 Oct	1213	0097	SH	6-3/6-4	Top	Bottom	5'2"	CS	ALL	—	PASS	JO 26 Oct	P —	—	CS
19 Oct	1221	0097	SH	LCSR outside	—	—	dia	CS	ALL	—	PASS	JO 26 Oct	P —	—	CS
19 Oct	1226	0097	SH	LCSR inside	—	—	dia	CS	ALL	—	PASS	JO 26 Oct	P —	—	CS
19 Oct	1244	0097	SH	6-13/cap 6-14	Top	Bottom	5'2"	CS	ALL	—	PASS	JO 26 Oct	P —	—	CS
19 Oct	1255	0097	SH	6-14/cap 6-15	Top	Bottom	5'2"	CS	ALL	—	PASS	JO 26 Oct	P —	—	CS
19 Oct	1435	499	JO	6-9/6-10	Top	Bottom	5'2"	CS	ALL	—	PASS	JO 26 Oct	P —	—	CS
				TOTAL (1)											

NOTE: (1) SEAM LENGTH: THIS PAGE _____ (ft) ACCUMULATED _____ (ft)

N/A = NOT APPLICABLE

GEOSYNTEC CONSULTANTS

FLUOR DANIEL FERNALD

PRODUCTION SEAM SUMMARY LOG

PROJECT: ON-SITE DISPOSAL FACILITY (OSDF)

LOCATION: FERNALD, OHIO PROJECT NO.: GQ1029 TASK NO.: ~~04.1~~ 04.2

DESCRIPTION: EPLTS Valve House #6 YEAR: 2000

PRIMARY: ☐ SECONDARY: ☐ OTHER: ■ Bekaplast CONTRACTOR: STAVER/ISCO

PRODUCTION SEAM				LOCATION					NONDESTRUCTIVE TEST							
DATE (day/mo)	TIME	MACHINE NO.	OPER ID	SEAM NO.	BEGIN	END	ACTUAL SEAM LENGTH (ft)	QA ID	LOCATION (ft)	AIR PRESSURE (__ ± __ psi for 5 min.)	SPARK ~~V-BOX~~ (____sec.)	OPERATOR ID	PASS/ FAIL	RETEST DATE	QA ID
19 Oct	1437	0097	SH	LCS Outside	—	—	dia	CS	ALL	—	PASS	JO 26 Oct	P —	—	CS
19 Oct	1444	0097	SH	LCS inside	—	—	dia	CS	ALL	—	PASS	JO 26 Oct	P —	—	CS
19 Oct	1449	499	JO	6-8/6-9	Top	Bottom	5'2"	CS	ALL	—	PASS	JO 26 Oct	P —	—	CS
19 Oct	1456	0097	SH	LDS Outside	—	—	dia	CS	ALL	—	PASS	JO 26 Oct	P —	—	CS
19 Oct	1504	0097	SH	LDS Outinside	—	—	dia	CS	ALL	—	PASS	JO 26 Oct	P —	—	CS
19 Oct	1521	499	JO	6-6/6-7	Top	Bottom	5'2"	CS	ALL	—	PASS	JO 26 Oct	P —	—	CS
19 Oct	1529	499	JO	6-1/6-14	Top	Bottom	5'2"	CS	ALL	—	PASS	JO 26 Oct	P —	—	CS
19 Oct	1536	499	JO	6-1/Sump	ALL	—	1'	CS	ALL	—	PASS	JO 26 Oct	P —	—	CS
19 Oct	1542	499	JO	6-14/Sump	ALL	—	1'	CS	ALL	—	PASS	JO 26 Oct	P —	—	CS
19 Oct	1551	0097	SH	South wall LTS Outside		—	dia	CS	ALL	—	PASS	JO 26 Oct	P —	—	CS
19 Oct	1600	0097	SH	South wall LTS inside		—	dia	CS	ALL	—	PASS	JO 26 Oct	P —	—	CS
19 Oct	1606	499	JO	6-5/Cap 6-4	TOP	Bottom	5'2"	CS	ALL	—	PASS	JO 26 Oct	P —	—	CS
19 Oct	1627	499	JO	6-4/Cap 6-3	TOP	Bottom	5'2"	CS	ALL	—	PASS	JO 26 Oct	P —	—	CS
					TOTAL (1)										

NOTE: (1) SEAM LENGTH: THIS PAGE _____ (ft) ACCUMULATED _____ (ft)

N/A = NOT APPLICABLE

GEOSYNTEC CONSULTANTS

FLUOR DANIEL FERNALD

PRODUCTION SEAM SUMMARY LOG

PROJECT: ON-SITE DISPOSAL FACILITY (OSDF)

LOCATION: FERNALD, OHIO PROJECT NO. ~~2000~~ G01029 TASK NO.: ~~04.1~~ 04.2

DESCRIPTION: EPLTS Valve House #6 YEAR: 2000

PRIMARY: ☐ SECONDARY: ☐ OTHER: ■ Bekaplast CONTRACTOR: STAVER/ISCO

PRODUCTION SEAM				LOCATION					NONDESTRUCTIVE TEST							
DATE (day/mo)	TIME	MACHINE NO.	OPER ID	SEAM NO.	BEGIN	END	ACTUAL SEAM LENGTH (ft)	QA ID	LOCATION (ft)	AIR PRESSURE (__t__psi for 5 min.)	~~V-BOX~~ SPARK (____sec.)	OPERATOR ID	PASS/ FAIL	RETEST DATE	QA ID
26 Oct	1315	0097	SH	LDS Outside VH E.side			dia	CS	ALL	—	PASS	SH 26 Oct	P / —	—	CS
26 Oct	1320	0097	SH	LCS Outside VH-6			dia	CS	ALL	—	PASS	SH 26 Oct	P / —	—	CS
26 Oct	1325	0097	SH	LCSR Outside VH-6			dia	CS	ALL	—	PASS	SH 26 Oct	P / —	—	CS
26 Oct	1410	0097	SH	Outside VH-6 Outer Flange		N. End	dia	CS	ALL	—	PASS	SH 26 Oct	P / —	—	CS
						TOTAL (1)									

NOTE: (1) SEAM LENGTH: THIS PAGE _____ (ft) ACCUMULATED _____ (ft)

N/A = NOT APPLICABLE

GEOSYNTEC CONSULTANTS

FLUOR DANIEL FERNALD

PRODUCTION SEAM SUMMARY LOG

PROJECT: ON-SITE DISPOSAL FACILITY (OSDF)

LOCATION: FERNALD, OHIO PROJECT NO.: GQ1029 TASK NO.: ~~04.1~~ 04.2

DESCRIPTION: EPLTS Valve House #6 YEAR: 2000

PRIMARY: ☐ SECONDARY: ☐ OTHER: ■ Bekaplast CONTRACTOR: STAVEK/ISCO

PRODUCTION SEAM				LOCATION					NONDESTRUCTIVE TEST						
DATE (day/mo)	TIME	MACHINE NO.	OPER ID	SEAM NO.	BEGIN	END	ACTUAL SEAM LENGTH (ft)	QA ID	LOCATION (ft)	AIR PRESSURE (__±__psi for 5 min.)	~~V-BOX~~ SPARK (____sec.)	OPERATOR ID	PASS/ FAIL	RETEST DATE	QA ID
15 Nov	0854	499	JO	6-16/6-17	S	N	9'10"	CS	ALL	—	PASS	JO 15 Nov	✓ —	—	CS
15 Nov	0913	499	JO	6-15/6-16	S	N	9'10"	CS	ALL	—	PASS	JO 15 Nov	✓ —	—	CS
15 Nov	0936	499	JO	6-19/6-20	N	S	10'2"	CS	ALL	—	PASS	JO 15 Nov	✓ —	—	CS
15 Nov	0952	499	JO	6-18/6-19	N	S	10'2"	CS	ALL	—	PASS	JO 15 Nov	✓ —	—	CS
15 Nov	1012	499	JO	6-17/6-19	E	W	3-in	CS	ALL	—	PASS	JO 15 Nov	✓ —	—	CS
15 Nov	1013	499	JO	6-17/6-18	E	W	4'11"	CS	ALL	—	PASS	JO 15 Nov	✓ —	—	CS
15 Nov	1028	499	JO	6-16/6-19	W	E	4'8"	CS	ALL	—	PASS	JO 15 Nov	✓ —	—	CS
15 Nov	1037	499	JO	6-16/6-20	W	E	3-in	CS	ALL	—	PASS	JO 15 Nov	✓ —	—	CS
15 Nov	1039	499	JO	6-15/6-20	W	E	4'11"	CS	ALL	—	PASS	JO 15 Nov	✓ —	—	CS
15 Nov	1105	499	JO	6-20/Sump	—	—	1x1	CS	ALL	—	PASS	JO 15 Nov	✓ —	—	CS
15 Nov	1305	499	JO	6-1/6-20	W	E	1'8"	CS	ALL	—	PASS	JO 15 Nov	✓ —	—	CS
15 Nov	1309	499	JO	6-14/6-20	S	N	1'3"	CS	ALL	—	PASS	JO 15 Nov	✓ —	—	CS
15 Nov	1309	499	JO	6-13/6-20	S	N	5'8"	CS	ALL	—	PASS	JO 15 Nov	✓ —	—	CS
					TOTAL (1)										

NOTE: (1) SEAM LENGTH: THIS PAGE _____ (ft) ACCUMULATED _____ (ft)

N/A = NOT APPLICABLE

GEOSYNTEC CONSULTANTS

FLUOR DANIEL FERNALD

PRODUCTION SEAM SUMMARY LOG

PROJECT: ON-SITE DISPOSAL FACILITY (OSDF)

LOCATION: FERNALD, OHIO PROJECT NO.: G01029 TASK NO.: ~~04.1~~ 04.2

DESCRIPTION: EPLTS Valve House #6 YEAR: 2000

PRIMARY: ☐ SECONDARY: ☐ OTHER: ■ Bekaplast CONTRACTOR: STAVER/ISCO

PRODUCTION SEAM				LOCATION					NONDESTRUCTIVE TEST						
DATE (day/mo)	TIME	MACHINE NO.	OPER ID	SEAM NO.	BEGIN	END	ACTUAL SEAM LENGTH (ft)	QA ID	LOCATION (ft)	AIR PRESSURE (__±__psi for 5 min.)	~~V-BOX~~ Spark (___sec.)	OPERATOR ID	PASS/ FAIL	RETEST DATE	QA ID
15 Nov	1327	499	JO ~~499~~	6-12/6-20	S	N	~~2'3"~~ 1'11"	CS	ALL	—	PASS	JO 15 Nov	✓ / —	—	CS
15 Nov	1332	499	JO	6-12/6-15	S	N	7'11"	CS	ALL	—	PASS	JO 15 Nov	✓ / —	—	CS
15 Nov	1335	499	JO	6-11/6-15	S	N	2'3"	CS	ALL	—	PASS	JO 15 Nov	✓ / —	—	CS
15 Nov	1349	499	JO	6-10/6-15	W	E	2'8"	CS	ALL	—	PASS	JO 15 Nov	✓ / —	—	CS
15 Nov	1411	499c	JO	6-9/6-15	E	W	2'5"	CS	ALL	—	PASS	JO 15 Nov	✓ / —	—	CS
15 Nov	1417	499	JO	6-9/6-16	E	W	4'11"	CS	ALL	—	PASS	JO 15 Nov	✓ / —	—	CS
15 Nov	1422	499	JO	6-9/6-17	E	W	2'6"	CS	ALL	—	PASS	JO 15 Nov	✓ / —	—	CS
15 Nov	1427	499	JO	6-8/6-17	E	W	2'8"	CS	ALL	—	PASS	JO 15 Nov	✓ / —	—	CS
15 Nov	1440	499	JO	6-7/6-17	S	N	2'3"	CS	ALL	—	PASS	JO 15 Nov	✓ / —	—	CS
15 Nov	1500	499	JO	6-6/6-17	N	S	7'11"	CS	ALL	—	PASS	JO 15 Nov	✓ / —	—	CS
15 Nov	1505	499	JO	6-6/6-18	N	S	1'11"	CS	ALL	—	PASS	JO 15 Nov	✓ / —	—	CS
15 Nov	1512	499	JO	6-5/6-18	N	S	5'8"	CS	ALL	—	PASS	JO 15 Nov	✓ / —	—	CS
15 Nov	1517	499	JO	6-4/6-18	N	S	2'3"	CS	ALL	—	PASS	JO 15 Nov	✓ / —	—	CS
						TOTAL (1)									

NOTE: (1) SEAM LENGTH: THIS PAGE _____ (ft) ACCUMULATED _____ (ft)

N/A = NOT APPLICABLE

GEOSYNTEC CONSULTANTS

FLUOR DANIEL FERNALD

PRODUCTION SEAM SUMMARY LOG

PROJECT: ON-SITE DISPOSAL FACILITY (OSDF)

LOCATION: FERNALD, OHIO PROJECT NO.: GQ1029 TASK NO.: ~~04.1~~ 04.2

DESCRIPTION: EPLTS Valve House #6 YEAR: 2000

PRIMARY: ☐ SECONDARY: ☐ OTHER: ■ Bekaplast CONTRACTOR: STAVER/ISCO

PRODUCTION SEAM				LOCATION					NONDESTRUCTIVE TEST						
DATE (day/mo)	TIME	MACHINE NO.	OPER ID	SEAM NO.	BEGIN	END	ACTUAL SEAM LENGTH (ft)	QA ID	LOCATION (ft)	~~GAP~~ ~~AIR PRESSURE~~ (__±__psi for 5 min.)	SPARK ~~V-BOX~~ (____sec.)	OPERATOR ID	PASS/ FAIL	RETEST DATE	QA ID
15 Nov	1522	499	JO	6-3/6-18	E	W	2'8"	CJ	~~ALL~~	—	Pass	JO 15Nov	✓	—	CJ
15 Nov	1539	499	JO	6-2/6-20	E	W	2'6"	CJ	~~ALL~~	—	Pass	JO 15Nov	✓	—	CJ
15 Nov	1543	499	JO	6-2/6-19	E	W	4'11"	CJ	~~ALL~~	—	Pass	JO 15Nov	✓	—	CJ
15 Nov	~~1550~~ 1550	499	JO	6-2/6-18	E	W	2'3"	CJ	~~ALL~~	—	Pass	JO 15Nov	✓	—	CJ
15 Nov	1604	499	JO	North wall LTS Outside		—	dia	CJ	~~ALL~~	—	Pass	JO 15Nov	✓	—	CJ
15 Nov	1616	499	JO	North wall LTS Inside		—	dia	CJ	~~ALL~~	—	Pass	JO 15Nov	✓	—	CJ
18 Jan	1545	499	JO	Outside flange VH-6 South end			dia	KS	ALL	—	Pass	JO 18Jan	✓	—	KS
						TOTAL (1)									

NOTE: (1) SEAM LENGTH: THIS PAGE ALL FLOOR FACTORY WELDS PASSED SPARK TESTING (ft) ACCUMULATED _____ (ft)

N/A = NOT APPLICABLE

GEOSYNTEC CONSULTANTS

FLUOR DANIEL FERNALD

PRODUCTION SEAM SUMMARY LOG

PROJECT: ON-SITE DISPOSAL FACILITY (OSDF)

LOCATION: FERNALD, OHIO PROJECT NO.: GQ1029 TASK NO.: 04 1

DESCRIPTION: EPLTS UH-6 YEAR: 2001

PRIMARY: ☐ SECONDARY: ☐ OTHER: ☒ Bekaplast CONTRACTOR:

PRODUCTION SEAM				LOCATION					NONDESTRUCTIVE TEST							
DATE (day/mo)	TIME	MACHINE NO.	OPERATOR ID	SEAM NO.	BEGIN	END	ACTUAL SEAM LENGTH (ft)	QA ID	LOCATION (ft)	AIR PRESSURE (_±_psi for 5 min.)	SPARK ~~VACUUM BOX~~ (_____sec.)	OPERATOR ID	PASS/ FAIL	ACTION	QA ID
13 March	1329	0111	JO	S. Flange outside diameter			dia	CL	ALL	—	Pass 13 Mar	JO	✓		CL
13 Mar	1417	0111	JO	S Flange inside diameter			dia	CL	ALL	—	Pass 13 Mar	JO	✓		CL
						TOTAL (1)									

NOTE: (1) SEAM LENGTH: THIS PAGE _____ (ft) ACCUMULATED _____ (ft)

GEOSYNTEC CONSULTANTS

FLUOR DANIEL FERNALD

SEAM AND PANEL REPAIR LOCATION LOG

PROJECT: ON-SITE DISPOSAL FACILITY (OSDF)

LOCATION: FERNALD, OHIO PROJECT NO: ~~GQ0400~~ GQ1029 TASK NO.: 04.2

DESCRIPTION: EPLTS - VALVE HOUSE # 6 DATE: 19 day Oct month 2000 year

CONTRACTOR: STAVER / ISCO

PRIMARY: ☐ SECONDARY: ☐ OTHER: ■ PRODUCT TYPE: BEKAPLAST

NORTH

NOTE:
SEE OTHER SIDE FOR SYMBOLS

QA ID:

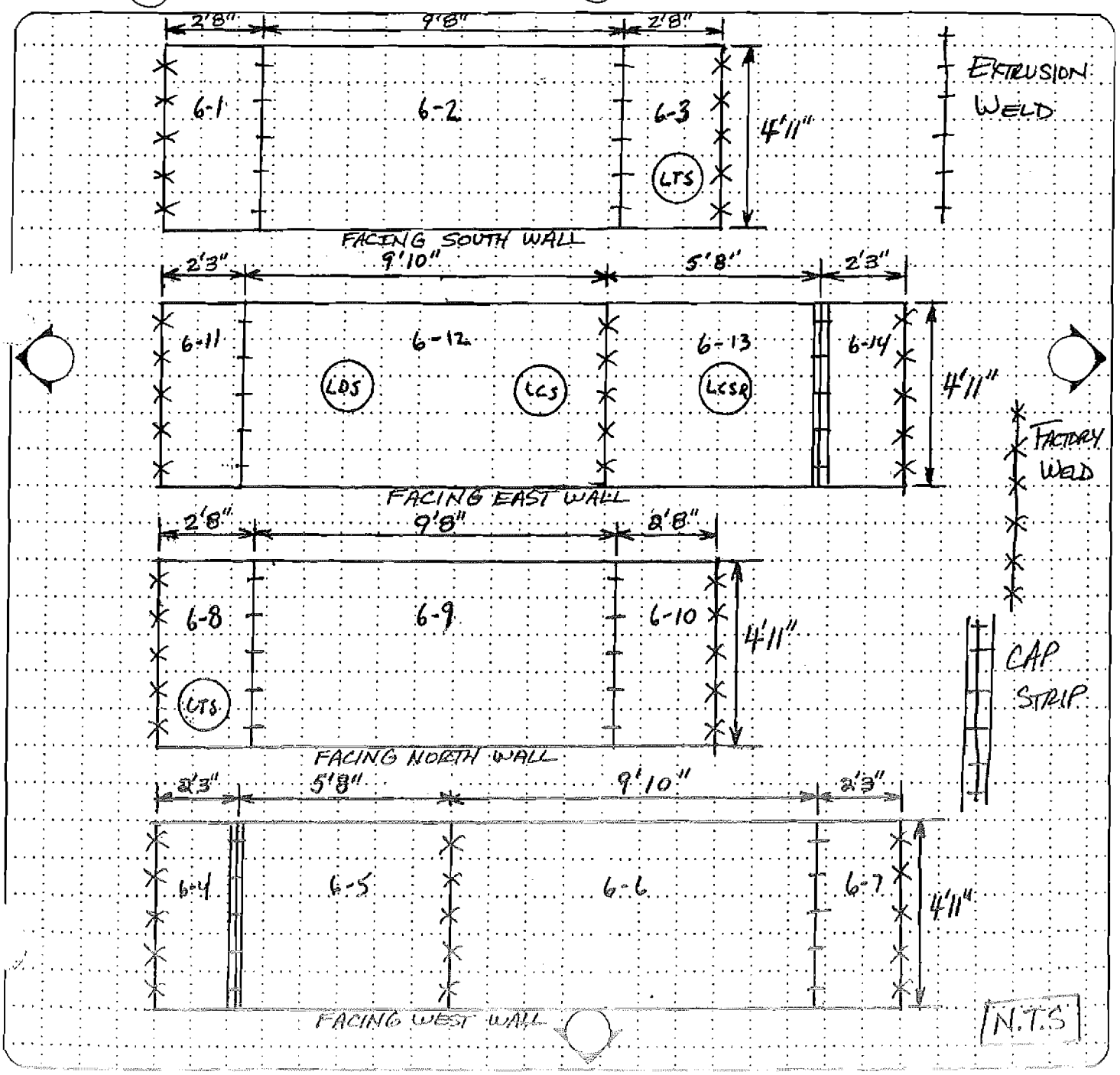

GEOSYNTEC CONSULTANTS

FLUOR DANIEL FERNALD

SEAM AND PANEL REPAIR LOCATION LOG

PROJECT: ON-SITE DISPOSAL FACILITY (OSDF)

LOCATION: FERNALD, OHIO PROJECT NO: GQ1029 TASK NO.: 04.2

DESCRIPTION: EPLTS Value House #6 DATE: 15 day Nov month 2000 year

CONTRACTOR:

PRIMARY: ☐ SECONDARY: ☐ OTHER: ■ PRODUCT TYPE: Bekaplast

NORTH

NOTE:
SEE OTHER SIDE FOR SYMBOLS

QA ID:

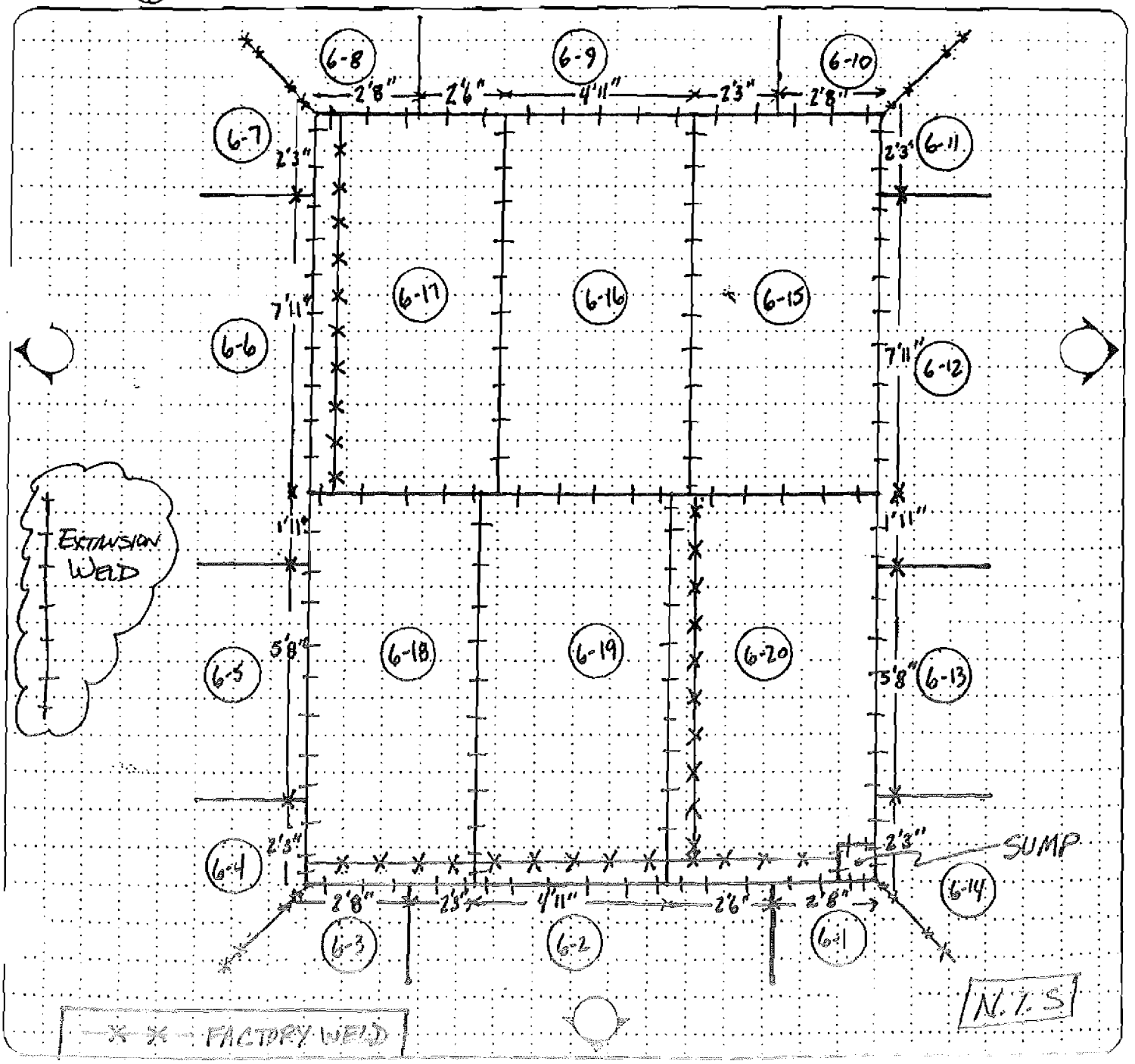

CONTROL VALVE HOUSE

GEOSYNTEC CONSULTANTS

FLUOR DANIEL FERNALD

PRODUCTION SEAM SUMMARY LOG

PROJECT: ON-SITE DISPOSAL FACILITY (OSDF)

LOCATION: FERNALD, OHIO PROJECT NO.: GQ1029 TASK NO.: ~~04.1~~ 04.2

DESCRIPTION: EPLTS Control Valve House YEAR: 2000

PRIMARY: ☐ SECONDARY: ☐ OTHER: ☒ Bekaplast CONTRACTOR: ISCO/STAVER

PRODUCTION SEAM				LOCATION					NONDESTRUCTIVE TEST						
DATE (day/mo)	TIME	MACHINE NO.	OPER ID	SEAM NO.	BEGIN	END	ACTUAL SEAM LENGTH (ft)	QA ID	LOCATION (ft)	AIR PRESSURE (__± psi for 5 min.)	SPARK ~~V-BOX~~ (____sec.)	OPERATOR ID	PASS/ FAIL	RETEST DATE	QA ID
16 Nov	1254	499	JO	South side CVH (outside) inside ring			dia	CJ	ALL	—	Pass	JO 16 Nov	✓ -	—	CJ
16 Nov	1309	499	JO	NE side of outside CVH inside ring			dia	CJ	ALL	—	Pass	JO 16 Nov	✓ -	—	CJ
16 Nov	1324	499	JO	NW side of outside CVH inside ring			dia	CJ	ALL	—	Pass	JO 16 Nov	✓ -	—	CJ
						TOTAL (1)									

NOTE: (1) SEAM LENGTH: THIS PAGE _____ (ft) ACCUMULATED _____ (ft)

N/A = NOT APPLICABLE

GEOSYNTEC CONSULTANTS

FLUOR DANIEL FERNALD

PRODUCTION SEAM SUMMARY LOG

PROJECT: ON-SITE DISPOSAL FACILITY (OSDF)

LOCATION: FERNALD, OHIO PROJECT NO.: G21029 TASK NO.: 04 1

DESCRIPTION: EPLTS Control Valve House YEAR: 2000

PRIMARY: ☐ SECONDARY: ☐ OTHER: ☒ Bekaplast CONTRACTOR: STAVER/PSCO

PRODUCTION SEAM				LOCATION					NONDESTRUCTIVE TEST						
DATE (day/mo)	TIME	MACHINE NO.	OPERATOR ID	SEAM NO.	BEGIN	END	ACTUAL SEAM LENGTH (ft)	QA ID	LOCATION (ft)	AIR PRESSURE (__±__psi for 5 min.)	SPARK ~~VACUUM BOX~~ (_____sec.)	OPERATOR ID	PASS/ FAIL	ACTION	QA ID
4 Dec	0849	499	SH	V-3/V-4	Top	Bottom	5'2"	CS	ALL	—	Pass	SH 4 Dec	✓/–	—	CS
4 Dec	0904	0097	JO	V-5/V-6	Top	Bottom	5'2"	CS	ALL	—	Pass	SH 4 Dec	✓/–	—	CS
4 Dec	0921	0097	~~SH~~ JO	V-7/V-8	Top	Bottom	5'2"	CS	ALL	—	Pass	SH 4 Dec	✓/–	—	CS
4 Dec	0933	499	SH	V-1/V-2	Top	Bottom	5'2"	CS	ALL	—	Pass	SH 4 Dec	✓/–	—	CS
4 Dec	0939	0097	JO	V-8/V-9	Top	Bottom	5'2"	CS	ALL	—	Pass	SH 4 Dec	✓/–	—	CS
4 Dec	1045	499	SH	V-3/Sump	ALL	—	1'	CS	ALL	—	Pass	SH 4 Dec	✓/–	—	CS
4 Dec	1047	0097	JO	V-4/V-5	Top	Bottom	5'2"	CS	ALL	—	Pass	SH 4 Dec	✓/–	—	CS
4 Dec	1048	499	SH	V-2/Sump	ALL	—	1'	CS	ALL	—	Pass	SH 4 Dec	✓/–	—	CS
4 Dec	1052	0097	JO	V-6/V-7	Top	Bottom	5'2"	CS	ALL	—	Pass	SH 4 Dec	✓/–	—	CS
4 Dec	1103	499	SH	V-1/V-12	Top	Bottom	5'2"	CS	ALL	—	Pass	SH 4 Dec	✓/–	—	CS
4 Dec	1108	0097	JO	V-7/V-8	Top	Bottom	5'2"	CS	ALL	—	Pass	SH 4 Dec	✓/–	—	CS
4 Dec	1117	0097	JO	V-9/V-10	Top	Bottom	5'2"	CS	ALL	—	Pass	SH 4 Dec	✓/–	—	CS
4 Dec	1120	499	SH	V-10/V-11	Top	Bottom	5'2"	CS	ALL	—	Pass	SH 4 Dec	✓/–	—	CS
						TOTAL (1)									

NOTE: (1) SEAM LENGTH: THIS PAGE _____ (ft) ACCUMULATED _____ (ft)

GEOSYNTEC CONSULTANTS

FLUOR DANIEL FERNALD

PRODUCTION SEAM SUMMARY LOG

PROJECT: ON-SITE DISPOSAL FACILITY (OSDF)

LOCATION: FERNALD, OHIO PROJECT NO.: GQ1029 TASK NO.: ~~04.1~~ 04.2

DESCRIPTION: EPLTS Control Valve House YEAR: 2000

PRIMARY: ☐ SECONDARY: ☐ OTHER: ☒ Bekaplast CONTRACTOR: ISCO / STAVEK

PRODUCTION SEAM				LOCATION					NONDESTRUCTIVE TEST						
DATE (day/mo)	TIME	MACHINE NO.	OPER ID	SEAM NO.	BEGIN	END	ACTUAL SEAM LENGTH (ft)	QA ID	LOCATION (ft)	AIR PRESSURE (__ psi for 5 min.)	SPARK ~~V BOX~~ (__ sec.)	OPERATOR ID	PASS/FAIL	RETEST DATE	QA ID
4 Dec	1305	499	SH	V-2 / V-3	Top	Bottom	5'2"	CJ	ALL	—	SH 4 Dec	Pass	✓ / —	—	CJ
4 Dec	1321	499	SH	V-11 / V-12	Top	Bottom	5'2"	CJ	ALL	—	Pass	SH 4 Dec	✓ / —	—	CJ
4 Dec	1344	499	SH	V-7, V-6 EPLTS	outside	ring	dia	CJ	ALL	—	Pass	SH 4 Dec	✓ / —	—	CJ
4 Dec	1409	499	SH	V-7 / EPLTS	inside	ring	dia	CJ	ALL	—	Pass	SH 4 Dec	✓ / —	—	CJ
						TOTAL (1)									

NOTE: (1) SEAM LENGTH: THIS PAGE _____ (ft) ACCUMULATED _____ (ft)

N/A = NOT APPLICABLE

GeoSyntec Consultants

FLUOR DANIEL FERNALD

PRODUCTION SEAM SUMMARY LOG

PROJECT: ON-SITE DISPOSAL FACILITY (OSDF)

LOCATION: FERNALD, OHIO PROJECT NO.: GQ1029 TASK NO.: 04.2

DESCRIPTION: EPLTS YEAR: _____

PRIMARY: ☐ SECONDARY: ☐ OTHER: ☒ BeKaplast Liner CONTRACTOR: Stauer/ISCO

PRODUCTION SEAM				LOCATION					NONDESTRUCTIVE TEST						
DATE (day/mo)	TIME	MACHINE NO.	OPERATOR ID	SEAM NO.	BEGIN	END	ACTUAL SEAM LENGTH (ft)	QA ID	LOCATION (ft)	AIR PRESSURE (_±_psi for 5 min.)	Spark ~~VACUUM BOX~~ KS (_____sec.)	OPERATOR ID	PASS/ FAIL	ACTION	QA ID
18 Jan	1245	499	JO	V-13/V-14	E	W	8'	KS	All	—	Pass	JO	✓	—	KS
18 Jan	1230	499	JO	V-14/V-15	E	W	8'	KS	All	—	Pass	JO	✓	—	KS
18 Jan	1315	499	JO	V-13/V-5	N	S	3'4"	KS	All	—	Pass	JO	✓	—	KS
18 Jan	1319	499	JO	V-13/V-4	S	N	1'9"	KS	All	—	Pass	JO	✓	—	KS
18 Jan	1322	499	JO	V-14/V-4	S	N	4'8"	KS	All	—	Pass	JO	✓	—	KS
18 Jan	1329	499	JO	V-15/V-4	S	N	1'11"	KS	All	—	Pass	JO	✓	—	KS
18 Jan	1332	499	JO	V-15/V-3	S	N	3'4"	KS	All	—	Pass	JO	✓	—	KS
18 Jan	1337	499	JO	V-15/Sump	All	—	1'x1'	KS	All	—	Pass	JO	✓	—	KS
18 Jan	1343	499	JO	V-15/V-2	W	E	8'	KS	All	—	Pass	JO	✓	—	KS
18 Jan	1345	499	JO	V-15/V-1	E	W	4'9"	KS	All	—	Pass	JO	✓	—	KS
18 Jan	1350	499	JO	V-15/V-12	E	W	1'7"	KS	All	—	Pass	JO	✓	—	KS
18 Jan	1357	499	JO	V-13/V-9	N	S	3'4"	KS	All	—	Pass	JO	✓	—	KS
18 Jan	1404	499	JO	V-13/V-10	S	N	1'9"	KS	All	—	Pass	JO	✓	—	KS
				TOTAL (1)											

NOTE: (1) SEAM LENGTH: THIS PAGE _____ (ft) ACCUMULATED _____ (ft)

GeoSyntec Consultants

FLUOR DANIEL FERNALD

PRODUCTION SEAM SUMMARY LOG

PROJECT: ON-SITE DISPOSAL FACILITY (OSDF)

LOCATION: FERNALD, OHIO PROJECT NO.: 6Q1029 TASK NO.: 04.2

DESCRIPTION: EPLTS YEAR: 2001

PRIMARY: ☐ SECONDARY: ☐ OTHER: ☒ Bekaplast Liner CONTRACTOR: Staver / ISCO

PRODUCTION SEAM				LOCATION					NONDESTRUCTIVE TEST						
DATE (day/mo)	TIME	MACHINE NO.	OPERATOR ID	SEAM NO.	BEGIN	END	ACTUAL SEAM LENGTH (ft)	QA ID	LOCATION (ft)	AIR PRESSURE (__±__psi for 5 min.)	~~VACUUM BOX~~ Spark (_____sec.) KS	OPERATOR ID	PASS/ FAIL	ACTION	QA ID
18 Jan	1407	499	JO	V-14/ V-10	S	N	4'8"	KS	All	—	Pass	JO	✓	—	KS
18 Jan	1412	499	JO	V-15/ V-10	S	N	1'11"	KS	All	—	Pass	JO	✓	—	KS
18 Jan	1415	499	JO	V-15/ V-11	S	N	3'4"	KS	All	—	Pass	JO	✓	—	KS
18 Jan	1430	499	JO	V-13/ V-8	E	W	1'8"	KS	All	—	Pass	JO	✓	—	KS
18 Jan	1436	499	JO	V-13/ V-7	W	E	4'9"	KS	All	—	Pass	JO	✓	—	KS
18 Jan	1443	499	JO	V-13/ V-6	W	E	1'7"	KS	All	—	Pass	JO	✓	—	KS
18 Jan	1545	499	JO	outer flange V14-6 South	—	—	diameter	KS	All	—	Pass	JO	✓	—	KS
						TOTAL (1)									

NOTE: (1) SEAM LENGTH: THIS PAGE _____ (ft) ACCUMULATED _____ (ft)

GEOSYNTEC CONSULTANTS

FLUOR DANIEL FERNALD

PRODUCTION SEAM SUMMARY LOG

PROJECT: ON-SITE DISPOSAL FACILITY (OSDF)

LOCATION: FERNALD, OHIO PROJECT NO.: ~~G00409~~ 1029 TASK NO.: 04.~~2~~

DESCRIPTION: ~~PHASE II~~ KS EPLTS YEAR: 2001

PRIMARY: ☐ SECONDARY: ☒ KS OTHER: ☐ End seal 6" to 10" HDPE pipe in CVH CONTRACTOR: ISCO / Staver

PRODUCTION SEAM				LOCATION					NONDESTRUCTIVE TEST						
DATE (day/mo)	TIME	MACHINE NO.	OPERATOR ID	SEAM NO.	BEGIN	END	ACTUAL SEAM LENGTH (ft)	QA ID	LOCATION (ft)	Spark ~~AIR PRESSURE~~ (___psi for 5 min.)	VACUUM BOX (_____sec.)	OPERATOR ID	PASS/ FAIL	ACTION	QA ID
25Jan	1445	WG 17	TD	End seal 6" to 10" - CVH				KS	N/A	N/A	N/A	N/A	N/A	N/A	KS
							TOTAL (1)								

NOTE: (1) SEAM LENGTH: THIS PAGE _____ (ft) ACCUMULATED _____ (ft)

GEOSYNTEC CONSULTANTS

FLUOR DANIEL FERNALD

PRODUCTION SEAM SUMMARY LOG

PROJECT: ON-SITE DISPOSAL FACILITY (OSDF)

LOCATION: FERNALD, OHIO PROJECT NO.: GQ1029 TASK NO.: 04.2

DESCRIPTION: EPLTS Control Valve House YEAR: 2001

PRIMARY: ☐ SECONDARY: ☐ OTHER: ☒ Bekaplast CONTRACTOR: Stauer / ISCO

PRODUCTION SEAM				LOCATION					NONDESTRUCTIVE TEST						
DATE (day/mo)	TIME	MACHINE NO.	OPERATOR ID	SEAM NO.	BEGIN	END	ACTUAL SEAM LENGTH (ft)	QA ID	LOCATION (ft)	Spark ~~AIR PRESSURE~~ (__±__psi for 5 min.)	VACUUM BOX (_____sec.)	OPERATOR ID	PASS/ FAIL	ACTION	QA ID
13 March	0920	0111	JO	CVH S int. flange outer	—	—	diameter	KS	diameter	Pass 13 March	—	JO	✓	—	KS/QA
13 March	0935	0111	JO	CVH S int. flange inner	—	—	diameter	KS	diameter	Pass 13 March	—	JO	✓	—	KS/QA
13 March	1015	0111	JO	CVH N int. flange outer			diameter	KS	diameter	Pass 13 March	—	JO	✓	—	KS/QA
13 March	1035	0111	JO	CVH N int. flange inner CVH			diameter	KS	diameter	Pass 13 March	—	JO	✓	—	KS/QA
					TOTAL (1)										

NOTE: (1) SEAM LENGTH: THIS PAGE Ambient temp - 57.8°F (CVH) (ft) ACCUMULATED _____ (ft)

GEOSYNTEC CONSULTANTS

FLUOR DANIEL FERNALD

SEAM AND PANEL REPAIR LOCATION LOG

PROJECT: ON-SITE DISPOSAL FACILITY (OSDF)

LOCATION: FERNALD, OHIO PROJECT NO: ~~CQ0409~~ CQ1029 TASK NO.: 04.2

DESCRIPTION: ~~PHASE II~~ EPLTS Control Valve House DATE: 18 day Jan month 2001 year

CONTRACTOR: STAVGR / ISCO

PRIMARY: ☐ SECONDARY: ☐ OTHER: ☒ PRODUCT TYPE: Bekaplast

NORTH

NOTE:
SEE OTHER SIDE FOR SYMBOLS

QA ID: [illegible]

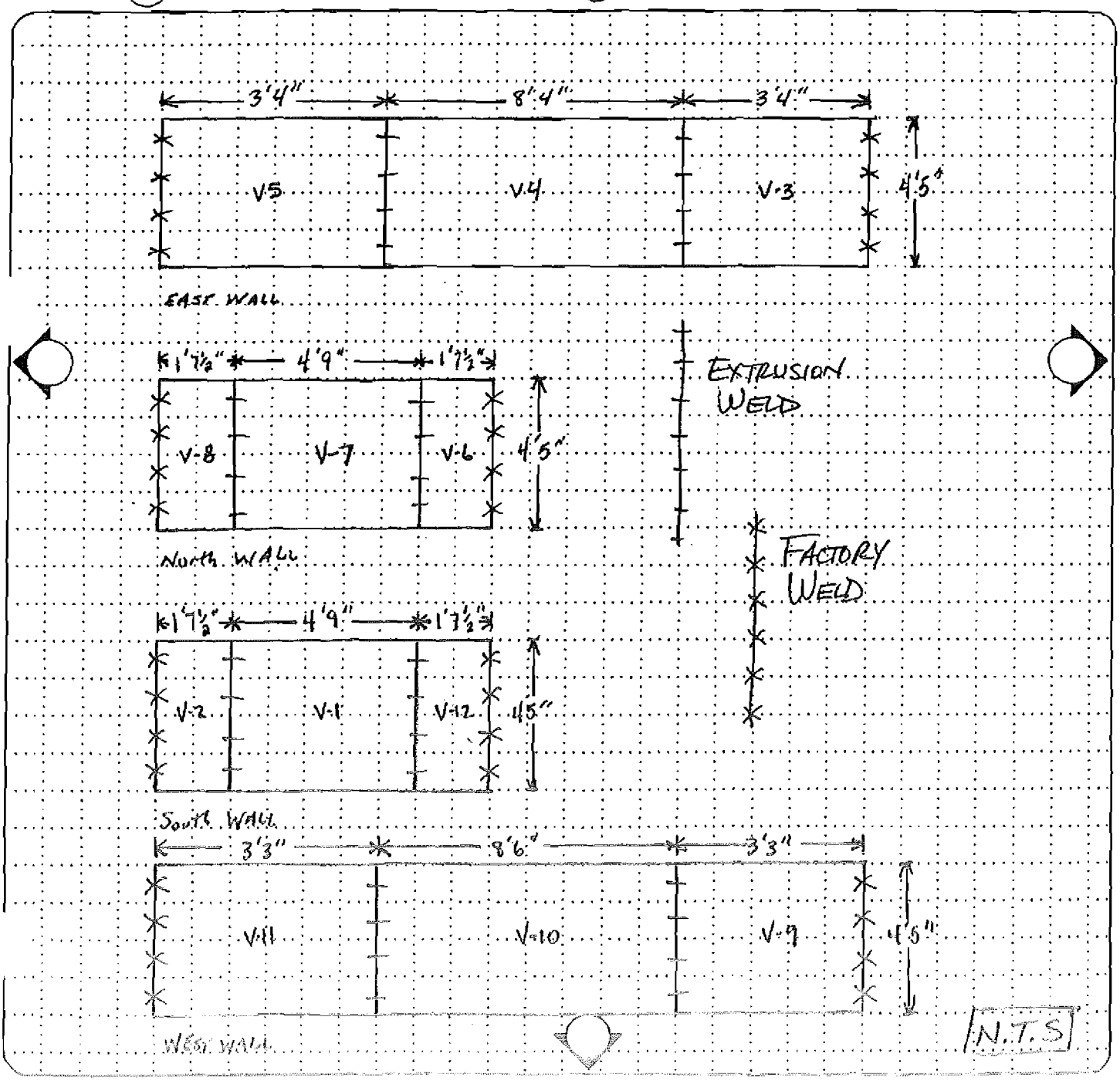

GEOSYNTEC CONSULTANTS

FLUOR DANIEL FERNALD

SEAM AND PANEL REPAIR LOCATION LOG

PROJECT: ON-SITE DISPOSAL FACILITY (OSDF)

LOCATION: FERNALD, OHIO PROJECT NO: GQ~~0409~~ 1029 KS TASK NO.: 04.2

DESCRIPTION: ~~PHASE II~~ KS EPLTS CONTROL VALVE HOUSE DATE: 22 18 KS day Jan month 2001 year

CONTRACTOR: STAVER/ ISCO

PRIMARY: ☐ SECONDARY: ☒ OTHER: ☒ PRODUCT TYPE: Bekaplast

NORTH

NOTE:
SEE OTHER SIDE FOR SYMBOLS

QA ID: KS

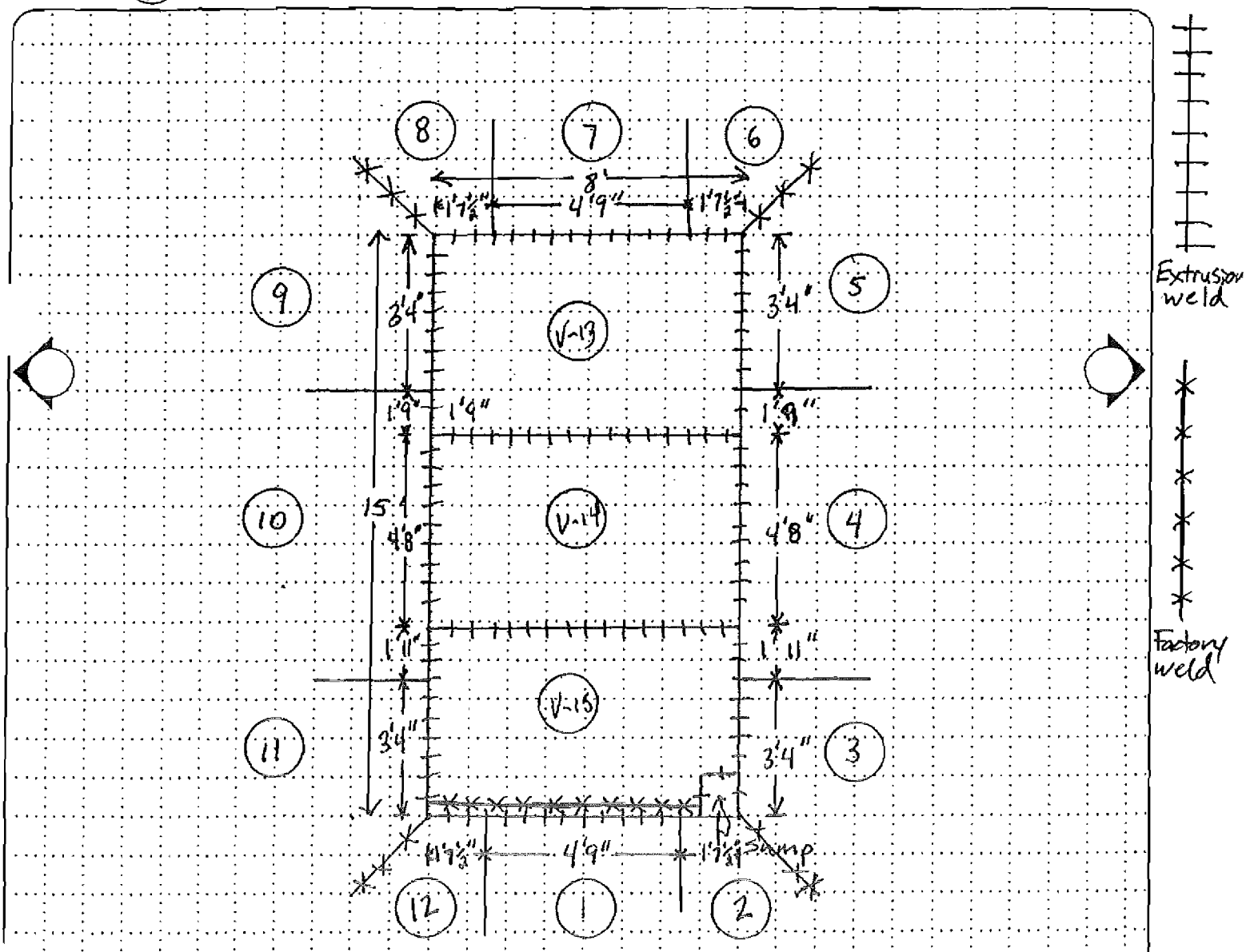

EXTRUSION WELD

FACTORY WELD

N.T.S.

REPAIR SUMMARY AND LOCATION LOGS

- Valve House No.1
- Valve House No.2
- Valve House No.3
- Valve House No.4
- Valve House No.5
- Valve House No.6
- Control Valve House

VALVE HOUSE NO. 1

GEOSYNTEC CONSULTANTS

FLUOR DANIEL FERNALD

REPAIR SUMMARY LOG

PROJECT: ON-SITE DISPOSAL FACILITY (OSDF)

LOCATION: FERNALD, OHIO PROJECT NO.: 62/029 TASK NO.: 042

DESCRIPTION: EPLTS VH-1 YEAR: 2001

PRIMARY: ☐ SECONDARY: ☐ OTHER: ☒ Bekaplast CONTRACTOR: Stawer / ISCO

REPAIR NO. AND CODE (1)	DATE (day/mo)	LOCATION			REPAIR TYPE (2)	SIZE			WELDER ID		QA ID	NON-DESTRUCTIVE ~~TESTING~~ Sponge Test KS Spark Tes				QA ID
		PANEL OR SEAM NO.	DIST. (ft)	OFFSET (ft)		LENGTH (ft)	WIDTH (ft)	DIA (ft)	MACH NO.	OPER ID		DATE (day/mo)	OPER ID	PASS/ FAIL	ACTION	
1-1R	21 Mar	SE Panel-N. Central (1-16)	—	—	cap w/ extrusion	—	—	~~4"~~ KS 5"	0111	JO	KS	21 Mar	JO	✓	—	KS
(15)																

NOTES: (1) REPAIR NO.: REPAIRS CAN BE NUMBERED SEQUENTIALLY, IF NECESSARY.
(1) REPAIR CODES: P = PATCH, C = CAP, S = ANCHOR TRENCH EXTENSION (SKIRT), DS = DESTRUCTIVE SAMPLE, G = GRIND & WELD, T = TOPPING ALONG FUSION SEAM, R = RECONSTRUCTION
(2) REPAIR TYPES: E = EXTRUSION, F = FUSION

©GEOSYNTEC CONSULTANTS FILE NO. 3-09-RSL REVIEWED BY: TBH SHEET NO. 1 OF 2

GEOSYNTEC CONSULTANTS

FLUOR DANIEL FERNALD

SEAM AND PANEL REPAIR LOCATION LOG

PROJECT: ON-SITE DISPOSAL FACILITY (OSDF)

LOCATION: FERNALD, OHIO PROJECT NO: ~~000409~~ 001029 (TBD) TASK NO: 04.2

DESCRIPTION: EPLTS - VALVE HOUSE #1 FLOOR DATE: ~~10~~ 21 day ~~OCT~~ March month ~~2000~~ 2001 year

CONTRACTOR: STAVER / ISCO

PRIMARY: ☐ SECONDARY: ☐ OTHER: ■ PRODUCT TYPE: BEKAPLAST

NORTH

NOTE:
SEE OTHER SIDE FOR SYMBOLS

QA ID: TBD

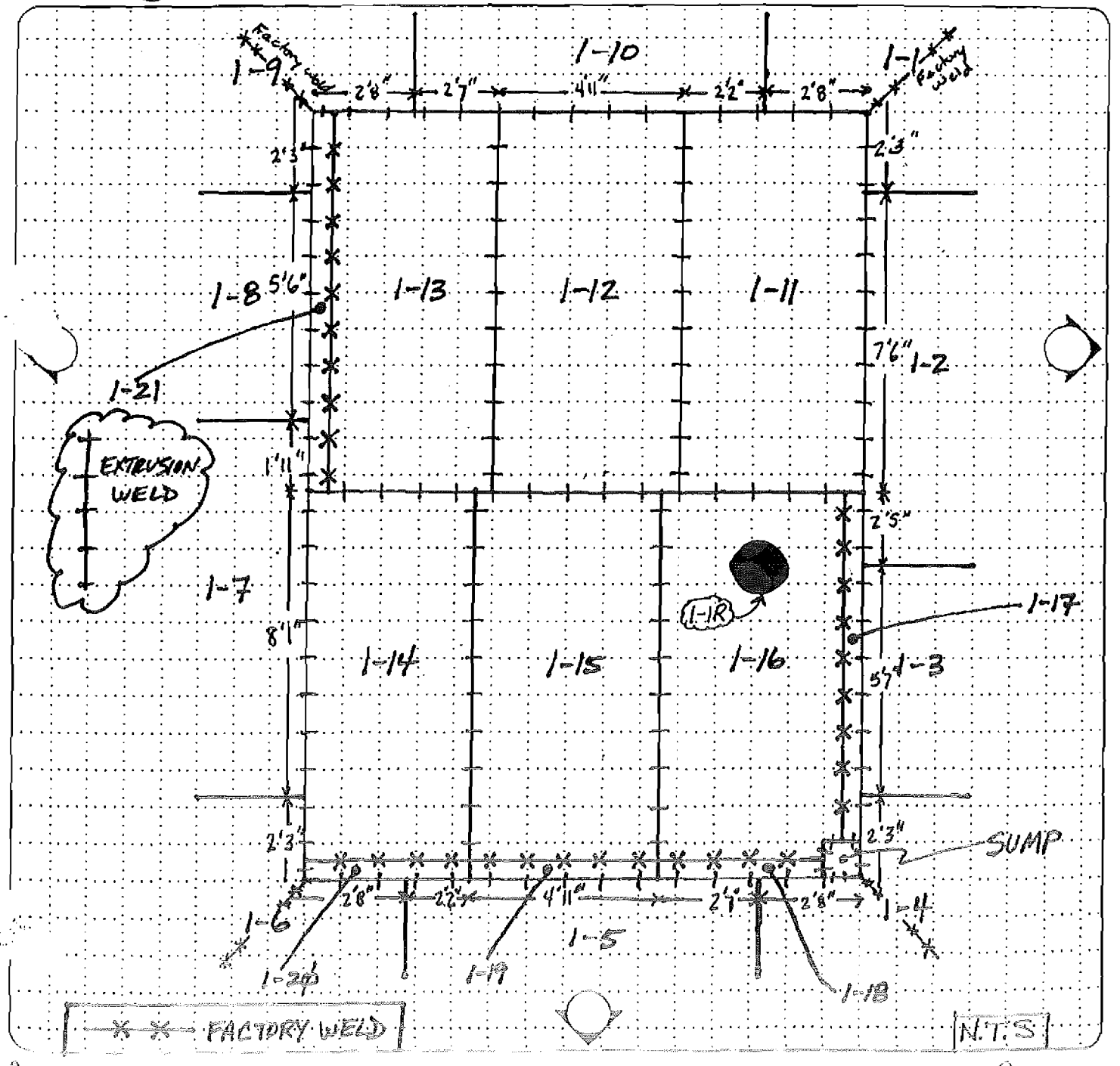

VALVE HOUSE NO. 2

GEOSYNTEC CONSULTANTS

FLUOR DANIEL FERNALD

REPAIR SUMMARY LOG

PROJECT: ON-SITE DISPOSAL FACILITY (OSDF)

LOCATION: FERNALD, OHIO PROJECT NO.: 6Q1029 TASK NO.: 04.2

DESCRIPTION: EPCTS VH-2 YEAR: 2001

PRIMARY: ☐ SECONDARY: ☐ OTHER: ☒ Bekaplast CONTRACTOR: Staver/ ISCO

REPAIR NO. AND CODE (1)	DATE (day/mo)	LOCATION			REPAIR TYPE (2)	SIZE			WELDER ID		QA ID	~~NON-DESTRUCTIVE TESTING~~ Sponge test/ KS Spark test				
		PANEL OR SEAM NO.	DIST. (ft)	OFFSET (ft)		LENGTH (ft)	WIDTH (ft)	DIA (ft)	MACH NO.	OPER ID		DATE (day/mo)	OPER ID	PASS/ FAIL	ACTION	QA ID
2-1R	20 Mar	East-West Cap 2F-14/Cap	—	—	extrusion	6"	—	—	0111	JO	TBY	20 Mar	JO	✓	—	KS
2-2R	20 Mar	East-West cap 2F-16/Cap	—	—	extrusion	6"	—	—	0111	JO	TBY	20 Mar	JO	✓	—	KS
2-3R	20 Mar	East-West cap 2F-16/Cap	—	—	extrusion	6"	—	—	0111	JO	TBY	20 Mar	JO	✓	—	KS
2-4R	20 Mar	East-West cap 2F-12/Cap	—	—	extrusion	1'	—	—	0111	JO	TBY	20 Mar	JO	✓	—	KS
2-5R	20 Mar	East-West cap 2F-11/Cap	—	—	extrusion	6"	—	—	0111	JO	KS	20 Mar	JO	✓	—	KS
2-6R	20 Mar	5 Wall/Floor Seam 2-5/cap/26/2F-16	—	—	extrusion	6"	—	—	0111	JO	KS	20 Mar	JO	✓	—	KS
2-7R	20 Mar	repair under 5 Flange 2-~~2F-16~~ KS	—	—	extrusion	1.5'	—	—	0111	JO	KS	20 Mar	JO	✓	—	KS
2-8R	20 Mar	repair under N Flange 2-9	—	—	extrusion	1'	—	—	0111	JO	KS	20 Mar	JO	✓	—	KS
2-9R	27 Mar	East-West cap 2F-14/Cap	—	—	extrusion	8"	—	—	0111	JO	KS	27 Mar	JO	✓	—	KS
(15)																

NOTES: (1) REPAIR NO.: REPAIRS CAN BE NUMBERED SEQUENTIALLY, IF NECESSARY.
(1) REPAIR CODES: P = PATCH, C = CAP, S = ANCHOR TRENCH EXTENSION (SKIRT), DS = DESTRUCTIVE SAMPLE, G = GRIND & WELD, T = TOPPING ALONG FUSION SEAM, R = RECONSTRUCTION
(2) REPAIR TYPES: E = EXTRUSION, F = FUSION

©GEOSYNTEC CONSULTANTS FILE NO. 3-09-RSL REVIEWED BY: TOM

GEOSYNTEC CONSULTANTS

FLUOR DANIEL FERNALD

EAM AND PANEL REPAIR LOCATION LOG

PROJECT: ON-SITE DISPOSAL FACILITY (OSDF)

LOCATION: FERNALD, OHIO PROJECT NO: GQ6Q1025 TASK NO.: 04.2

DESCRIPTION: EPLTS - Valve House #2 DATE: 29 day Sept. month 2000 year

CONTRACTOR: Staver / ISCO

PRIMARY: ☐ SECONDARY: ☐ OTHER: ☒ PRODUCT TYPE: Bekaplast

NORTH

NOTE:
SEE OTHER SIDE FOR SYMBOLS

QA ID: KS

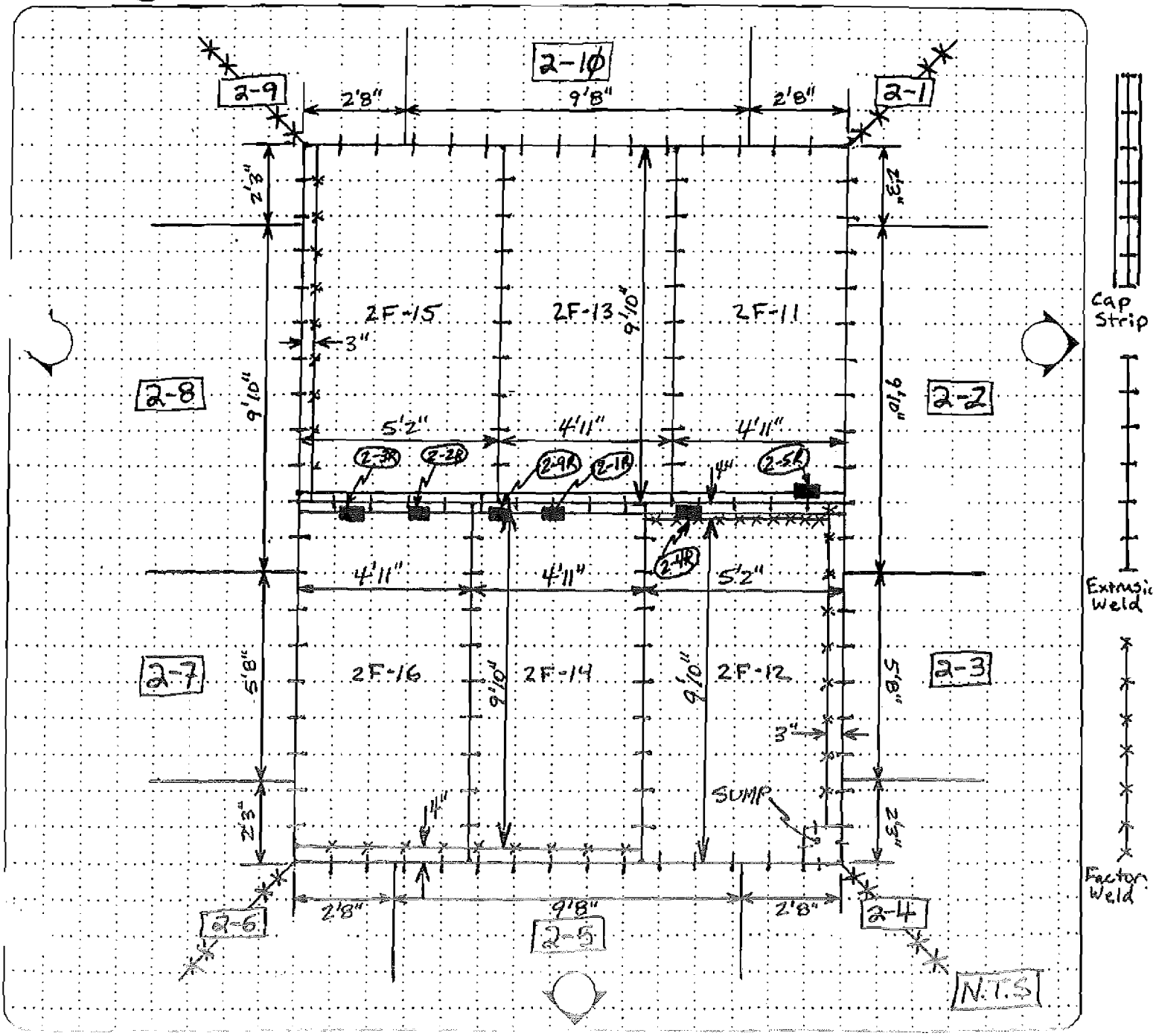

GEOSYNTEC CONSULTANTS

FLUOR DANIEL FERNALD

SEAM AND PANEL REPAIR LOCATION LOG

PROJECT: ON-SITE DISPOSAL FACILITY (OSDF)

LOCATION: FERNALD, OHIO PROJECT NO: GQ1029 TASK NO.: 04.2

DESCRIPTION: EPLTS - VALVE HOUSE # 2 DATE: ~~25~~ 20 KS day ~~August~~ march month ~~2000~~ 2001 KS year

CONTRACTOR: STAVER / ISCO

PRIMARY: ☐ SECONDARY: ☐ OTHER: ☒ PRODUCT TYPE: BEKAPLAST

NORTH

NOTE:
SEE OTHER SIDE FOR SYMBOLS

QA ID: KS

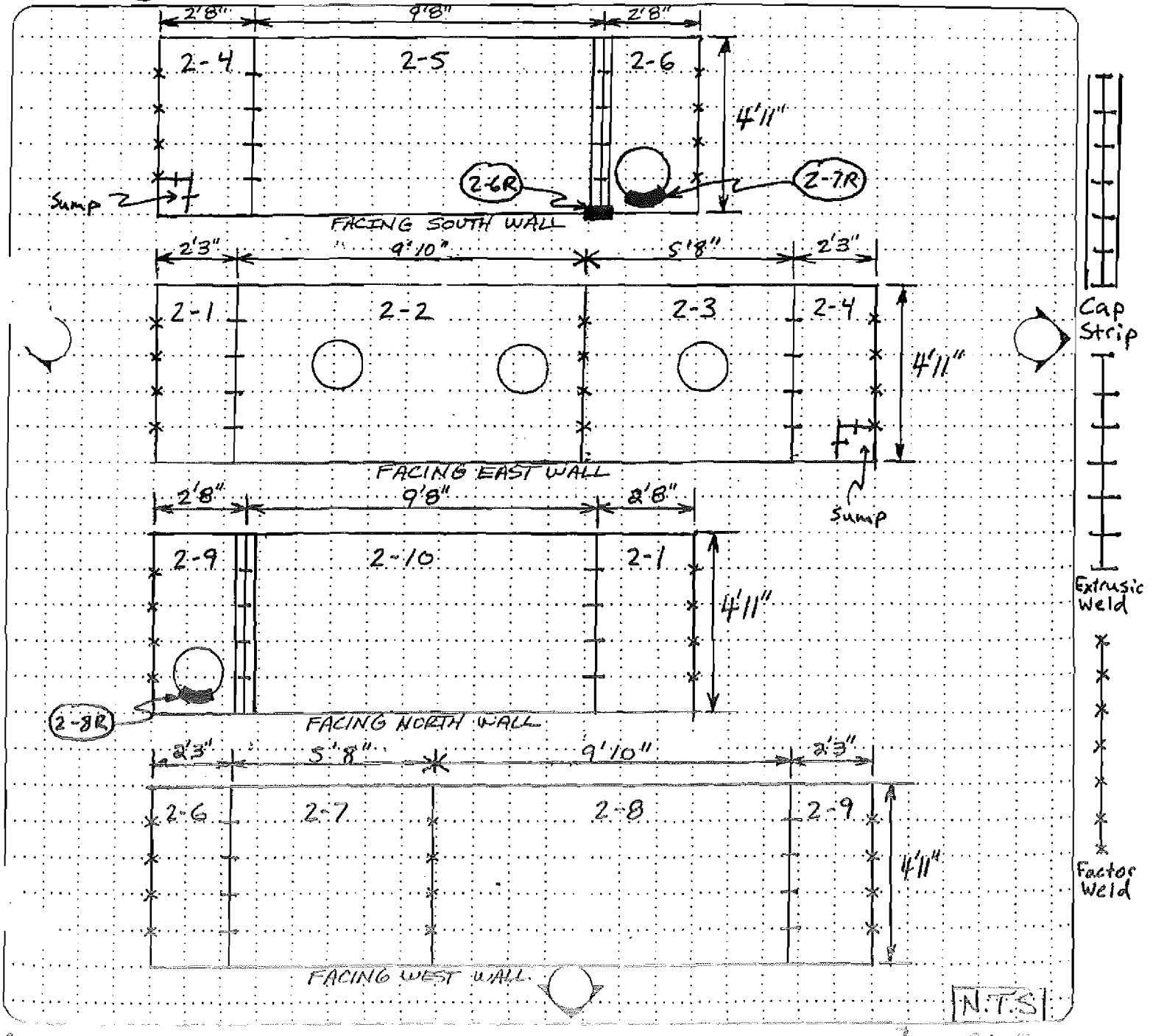

VALVE HOUSE NO. 3

GEOSYNTEC CONSULTANTS

FLUOR DANIEL FERNALD

REPAIR SUMMARY LOG

PROJECT: ON-SITE DISPOSAL FACILITY (OSDF)

LOCATION: FERNALD, OHIO PROJECT NO.: GQ1029 TASK NO.: 04.2

DESCRIPTION: EPLTS UH-3 YEAR: 2001

PRIMARY: ☐ SECONDARY: ☐ OTHER: ☒ Bekaplast CONTRACTOR: Staver/ISCO

REPAIR NO. AND CODE (1)	DATE (day/mo)	LOCATION			REPAIR TYPE (2)	SIZE			WELDER ID		QA ID	~~NON-DESTRUCTIVE TESTING~~ Sponge test/ KS Spark test				
		PANEL OR SEAM NO.	DIST. (ft)	OFFSET (ft)		LENGTH (ft)	WIDTH (ft)	DIA (ft)	MACH NO.	OPER ID		DATE (day/mo)	OPER ID	PASS/ FAIL	ACTION	QA ID
3-1R	20 Mar	SW corner 3-1/3-2/3-18	—	—	extrusion	—	—	—	0111	JO	KS	20 Mar	JO	✓	—	KS
3-2R	20 Mar	West wall 3-13/3-12	—	—	extrusion	8"	—	—	0111	JO	KS	20 Mar	JO	✓	—	KS
3-3R	21 Mar	Sump-NE corner	—	—	extrusion	6"	—	—	0111	JO	KS	21 Mar	JO	✓	—	KS
3-4R	20 Mar	Floor / Wall seam 3-11 / 3-17	—	—	extrusion	18"	—	—	0111	JO	KS	20 Mar	JO	✓	—	KS
3-5R	21 Mar	Hole in floor Panel 3-15	—	—	cap/ extrusion	—	—	6"	0111	JO	KS	21 Mar	JO	✓	—	KS
3-6R	28 Mar	South flange	—	—	extrusion	6"	—	—	0111	JO	KS	28 Mar	JO	✓	—	KS
(15)																

NOTES: (1) REPAIR NO.: REPAIRS CAN BE NUMBERED SEQUENTIALLY, IF NECESSARY.
(1) REPAIR CODES: P = PATCH, C = CAP, S= ANCHOR TRENCH EXTENSION (SKIRT), DS = DESTRUCTIVE SAMPLE, G = GRIND & WELD, T = TOPPING ALONG FUSION SEAM, R = RECONSTRUCTION
(2) REPAIR TYPES: E = EXTRUSION, F = FUSION

GEOSYNTEC CONSULTANTS

FLUOR DANIEL FERNALD

SEAM AND PANEL REPAIR LOCATION LOG

PROJECT: ON-SITE DISPOSAL FACILITY (OSDF)

LOCATION: FERNALD, OHIO PROJECT NO: GQ0409 TASK NO.: 04.2

DESCRIPTION: EPLTS - VALVE HOUSE #3 DATE: 28 day March month 2001 year

CONTRACTOR: STAVER / ISCO

PRIMARY: ☐ SECONDARY: ☐ OTHER: ☐ PRODUCT TYPE: BEKAPLAST

NORTH

NOTE:
SEE OTHER SIDE FOR SYMBOLS

QA ID: TBY

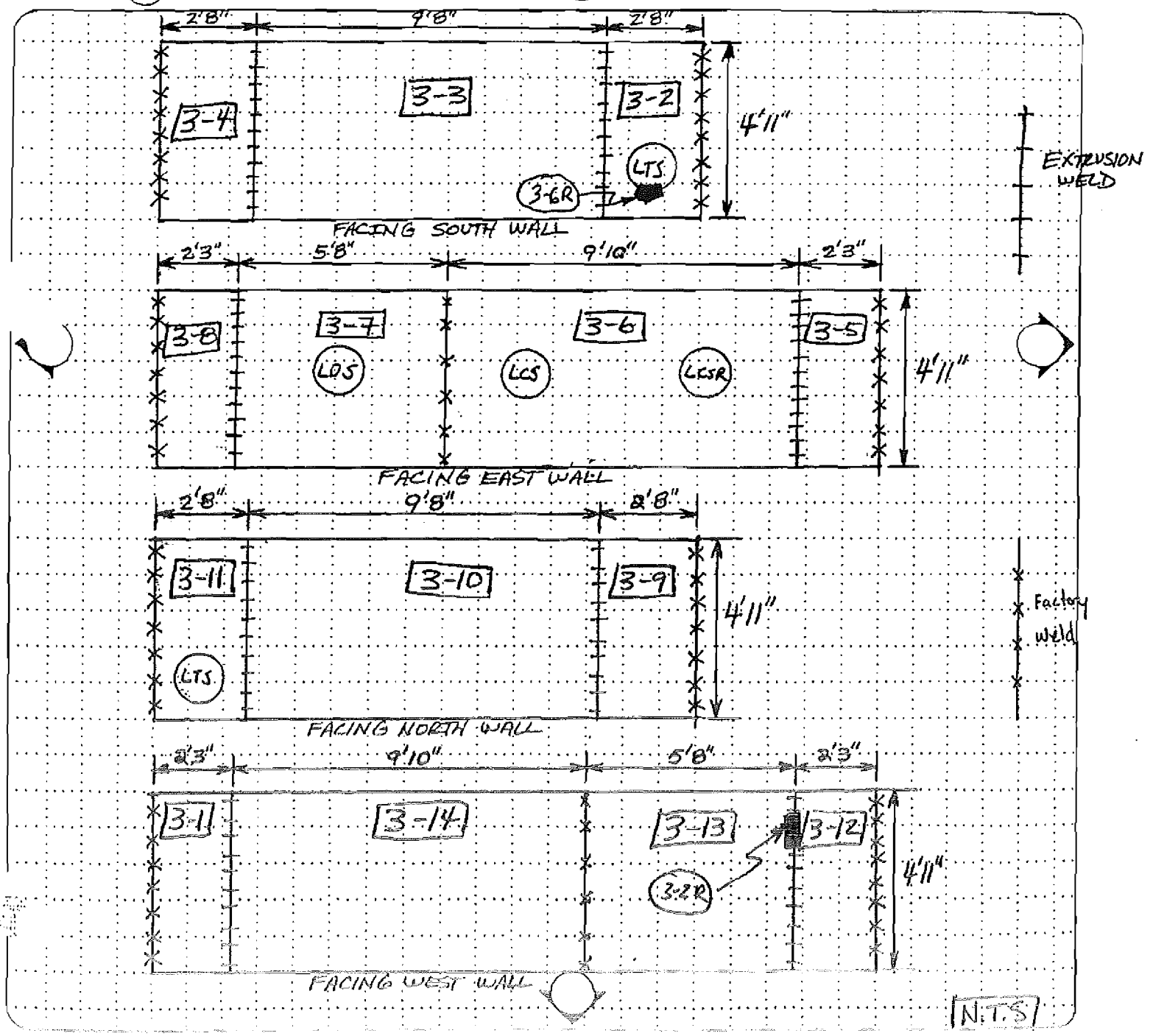

GEOSYNTEC CONSULTANTS

FLUOR DANIEL FERNALD

SEAM AND PANEL REPAIR LOCATION LOG

PROJECT: ON-SITE DISPOSAL FACILITY (OSDF)

LOCATION: FERNALD, OHIO PROJECT NO: GQ1029 TASK NO.: 04.2

DESCRIPTION: EPLTS Valve House #3 DATE: 28 day March month 2001 year

CONTRACTOR: STAVER/ISCO

PRIMARY: ☐ SECONDARY: ☐ OTHER: ■ PRODUCT TYPE: BEKAPLAST

NORTH

NOTE: SEE OTHER SIDE FOR SYMBOLS

QA ID:

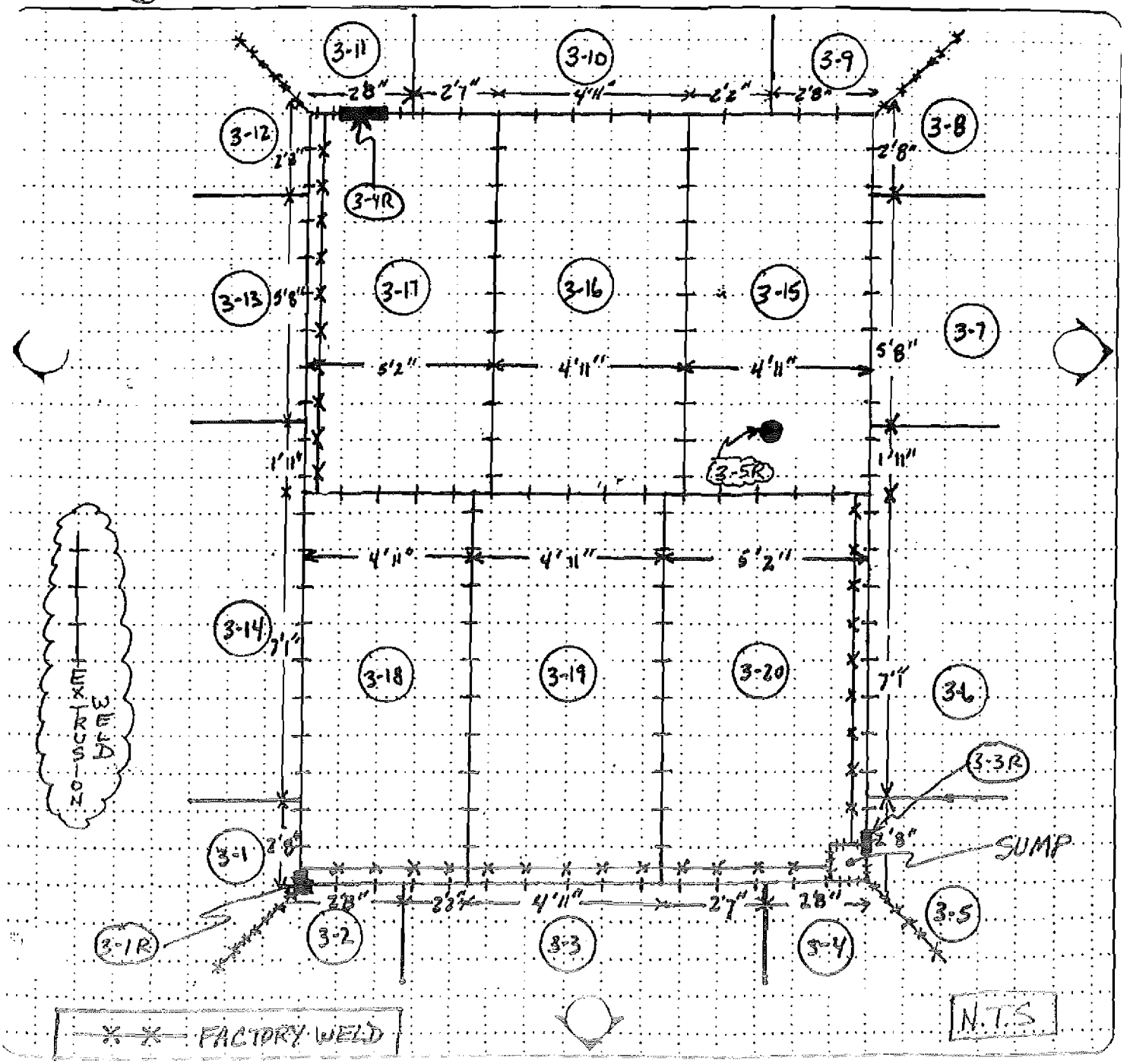

VALVE HOUSE NO. 4

VALVE HOUSE NO. 5

GEOSYNTEC CONSULTANTS

FLUOR DANIEL FERNALD

REPAIR SUMMARY LOG

PROJECT: ON-SITE DISPOSAL FACILITY (OSDF)

LOCATION: FERNALD, OHIO PROJECT NO.: GQ1029 TASK NO.: 042

DESCRIPTION: EPLTS - Valve House #5 YEAR: 2001

PRIMARY: ☐ SECONDARY: ☐ OTHER: ☒ Bekaplast CONTRACTOR: Stover / ISCO

REPAIR NO. AND CODE (1)	DATE (day/mo)	LOCATION			REPAIR TYPE (2)	SIZE			WELDER ID		QA ID	NON-DESTRUCTIVE TESTING				
		PANEL OR SEAM NO.	DIST. (ft)	OFFSET (ft)		LENGTH (ft)	WIDTH (ft)	DIA (ft)	MACH NO.	OPER ID		DATE (day/mo)	OPER ID	PASS/ FAIL	ACTION	QA ID
5-1R	14 Mar	hole repair 5-20	—	—	Cap	—	—	5"	0111	JO	KS	14 Mar	JO	✓	—	KS
5-2R	14 Mar	5-18 / Cap	—	—	E	1'	—	—	0111	JO	KS	14 Mar	JO	✓	—	KS
5-3R	14 Mar	5-18 / Cap	—	—	E	1'	—	—	0111	JO	KS	14 Mar	JO	✓	—	KS
5-4R	23 Mar	Flange on South wall / 5-1	—	—	E	18"	—	—	0111	JO	KS	23 Mar	JO	✓	—	KS
5-5R	14 Mar	10" pipe / Flange 5-6	—	—	E	1'	—	—	0111	JO	KS	14 Mar	JO	✓	—	KS
5-6R	14 Mar	Sump - NE corner	—	—	E	5"	—	—	0111	JO	KS	14 Mar	JO	✓	—	KS
5-7R	24 May	HOLE REPAIR ON PANEL 5-16	—	—	E	—	—	4"	Ø11	JO	TBC	24 Mar	JO	✓	—	TBC
5-8R	24 MAY	HOLE REPAIR ON PANEL 5-18	—	—	E	—	—	4"	Ø11	JO	TBC	24 Mar	JO	✓	—	TBC
5-9R	24 MAY	HOLE REPAIR ON PANEL 5-18	—	—	E	—	—	4"	Ø11	JO	TBC	24 Mar	JO	✓	—	TBC
(15)																

NOTES: (1) REPAIR NO.: REPAIRS CAN BE NUMBERED SEQUENTIALLY, IF NECESSARY.
(1) REPAIR CODES: P = PATCH, C = CAP, S= ANCHOR TRENCH EXTENSION (SKIRT), DS = DESTRUCTIVE SAMPLE, G = GRIND & WELD, T = TOPPING ALONG FUSION SEAM, R = RECONSTRUCTION
(2) REPAIR TYPES: E = EXTRUSION, F = FUSION

GEOSYNTEC CONSULTANTS

FLUOR DANIEL FERNALD

TAM AND PANEL REPAIR LOCATION LOG

PROJECT: ON-SITE DISPOSAL FACILITY (OSDF)

LOCATION: FERNALD, OHIO PROJECT NO: ~~C00409~~ G01029 TASK NO.: 04.2

DESCRIPTION: EPLTS - VALVE HOUSE # 5 DATE: ~~12~~ 23 KS day ~~Oct~~ KS March month ~~2000~~ 2001 KS year

CONTRACTOR: STAVER / ISCO

PRIMARY: ☐ SECONDARY: ☐ OTHER: ■ PRODUCT TYPE: BEKAPLAST

NORTH

NOTE:
SEE OTHER SIDE FOR SYMBOLS

QA ID: CL

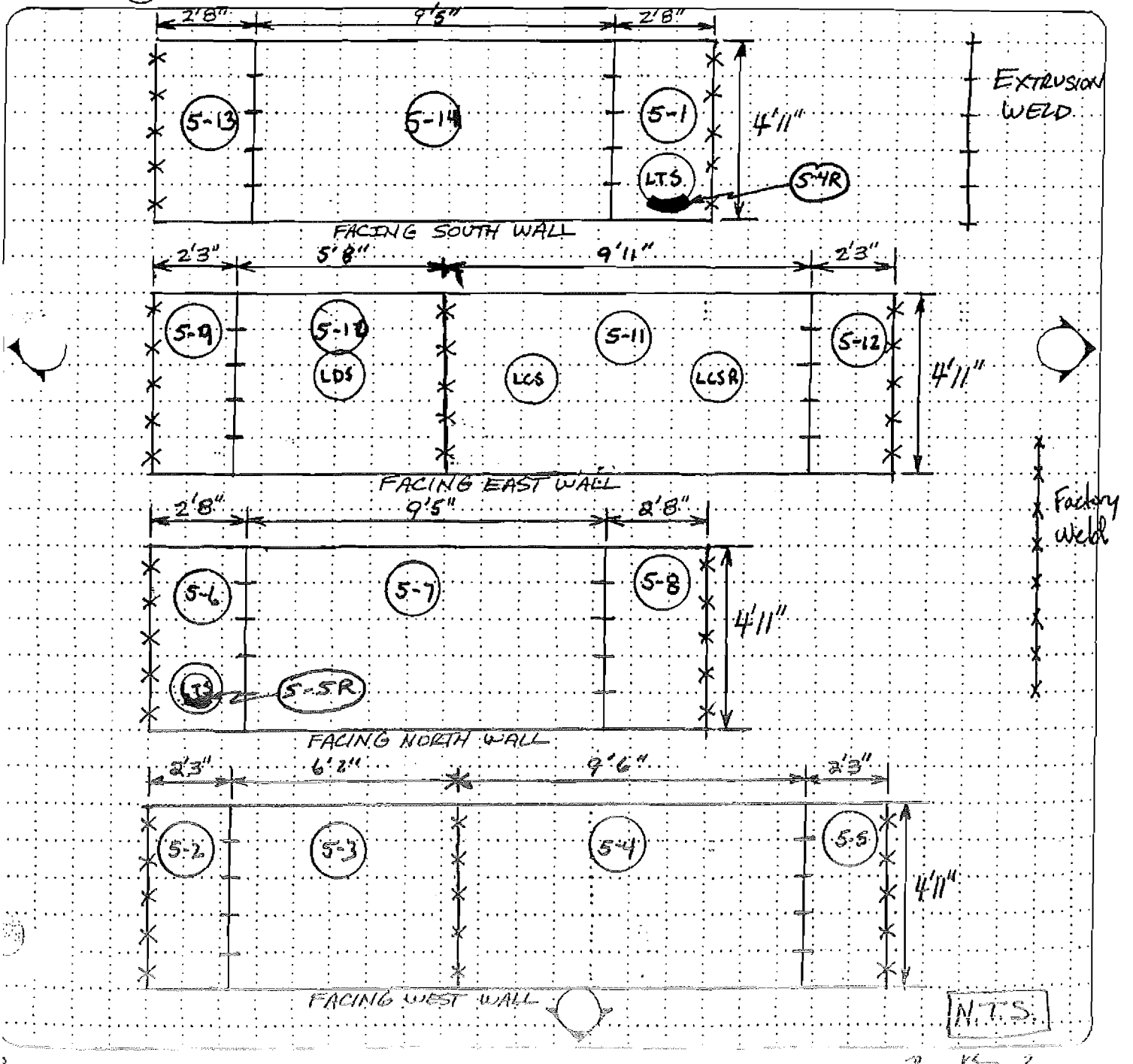

GEOSYNTEC CONSULTANTS

FLUOR DANIEL FERNALD

AM AND PANEL REPAIR LOCATION LOG

PROJECT: ON-SITE DISPOSAL FACILITY (OSDF)

LOCATION: FERNALD, OHIO PROJECT NO: GO1029 TASK NO.: 04.2

DESCRIPTION: EPLTS - Value House #5 DATE: 26 day Oct month 2000 year

CONTRACTOR: STAVER / ISCO

PRIMARY: ☐ SECONDARY: ☐ OTHER: ■ PRODUCT TYPE: Bekaplast

NORTH

NOTE:
SEE OTHER SIDE FOR SYMBOLS

QA ID: CS

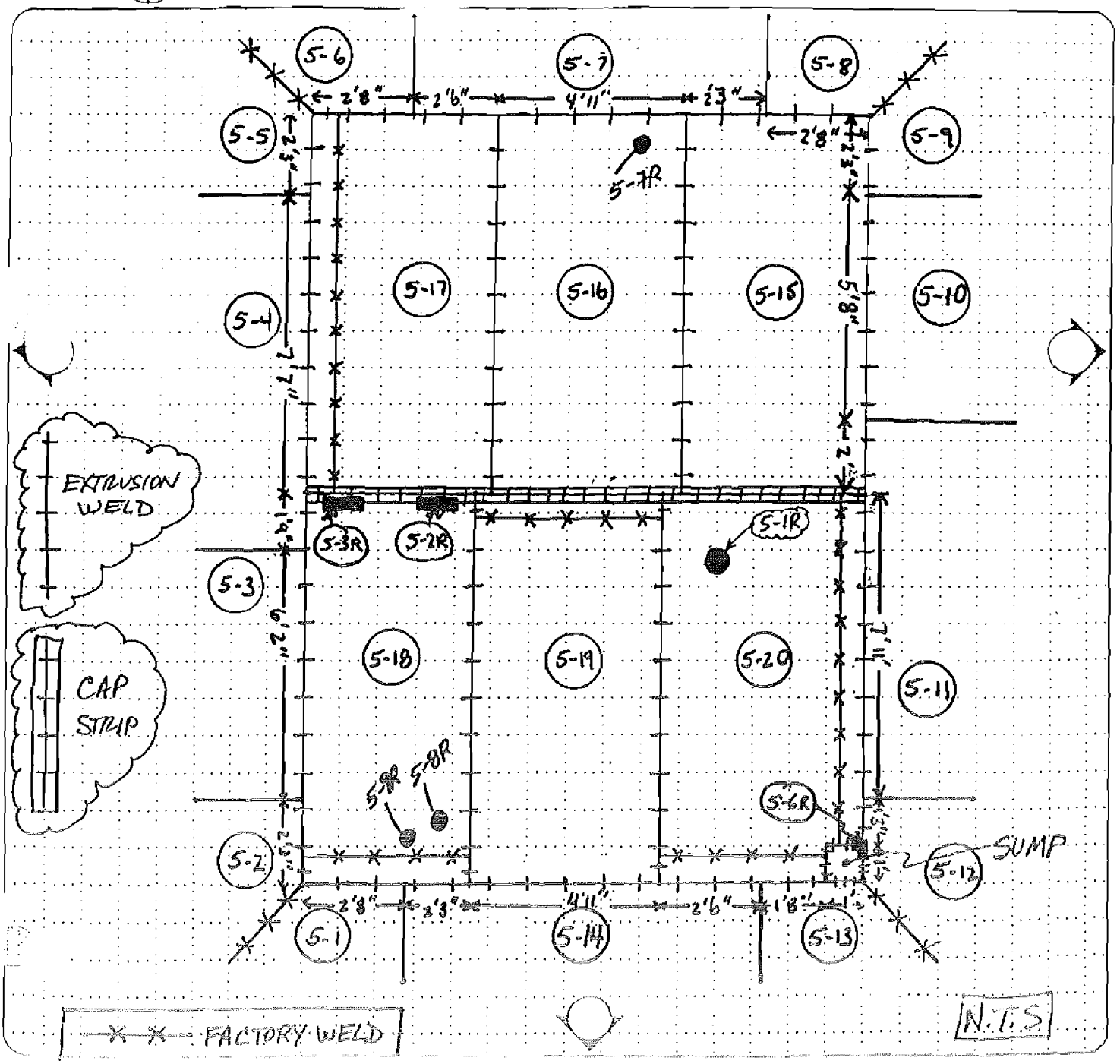

VALVE HOUSE NO. 6

CONTROL VALVE HOUSE

GEOSYNTEC CONSULTANTS

FLUOR DANIEL FERNALD

REPAIR SUMMARY LOG

PROJECT: ON-SITE DISPOSAL FACILITY (OSDF)

LOCATION: FERNALD, OHIO PROJECT NO.: GQ1029 TASK NO.: 04.2

DESCRIPTION: EPLTS - Control Valve House YEAR: 2001

PRIMARY: ☐ SECONDARY: ☐ OTHER: ☒ Bekaplast CONTRACTOR: Staver/ISCO

REPAIR NO. AND CODE (1)	DATE (day/mo)	LOCATION			REPAIR TYPE (2)	SIZE			WELDER ID		QA ID	NON-DESTRUCTIVE TESTING				
		PANEL OR SEAM NO.	DIST. (ft)	OFFSET (ft)		LENGTH (ft)	WIDTH (ft)	DIA (ft)	MACH NO.	OPER ID		DATE (day/mo)	OPER ID	PASS/ FAIL	ACTION	QA ID
CVH-1R	21 Mar	V-5/V-4 NW corner	—	—	E	8"	—	—	0111	JO	KS	21 Mar	JO	✓	—	KS
CVH-2R	22 Mar	V-9/V-8/V-13	—	—	E	—	—	—	0111	JO	KS	22 Mar	JO	✓	—	KS
CVH-3R	22 Mar	Sump-SW corner	—	—	E	6"	—	—	0111	JO	KS	22 Mar	JO	✓	—	KS
(15)																

NOTES: (1) REPAIR NO.: REPAIRS CAN BE NUMBERED SEQUENTIALLY, IF NECESSARY.
(1) REPAIR CODES: P = PATCH, C = CAP, S= ANCHOR TRENCH EXTENSION (SKIRT), DS = DESTRUCTIVE SAMPLE, G = GRIND & WELD, T = TOPPING ALONG FUSION SEAM, R = RECONSTRUCTION
(2) REPAIR TYPES: E = EXTRUSION, F = FUSION

GEOSYNTEC CONSULTANTS

FLUOR DANIEL FERNALD

SEAM AND PANEL REPAIR LOCATION LOG

PROJECT: ON-SITE DISPOSAL FACILITY (OSDF)

LOCATION: FERNALD, OHIO PROJECT NO: GQ~~0409~~ 1029 KS TASK NO.: 04.2

DESCRIPTION: PHASE II KS EPCTS CONTROL VALVE HOUSE DATE: ~~22~~ 18 KS day ~~Jan~~ March month 2001 year

CONTRACTOR: STAVER/ISCO

PRIMARY: ☐ SECONDARY: ☒ OTHER: ☒ PRODUCT TYPE: Beka plast

NORTH

NOTE:
SEE OTHER SIDE FOR SYMBOLS

QA ID: KS

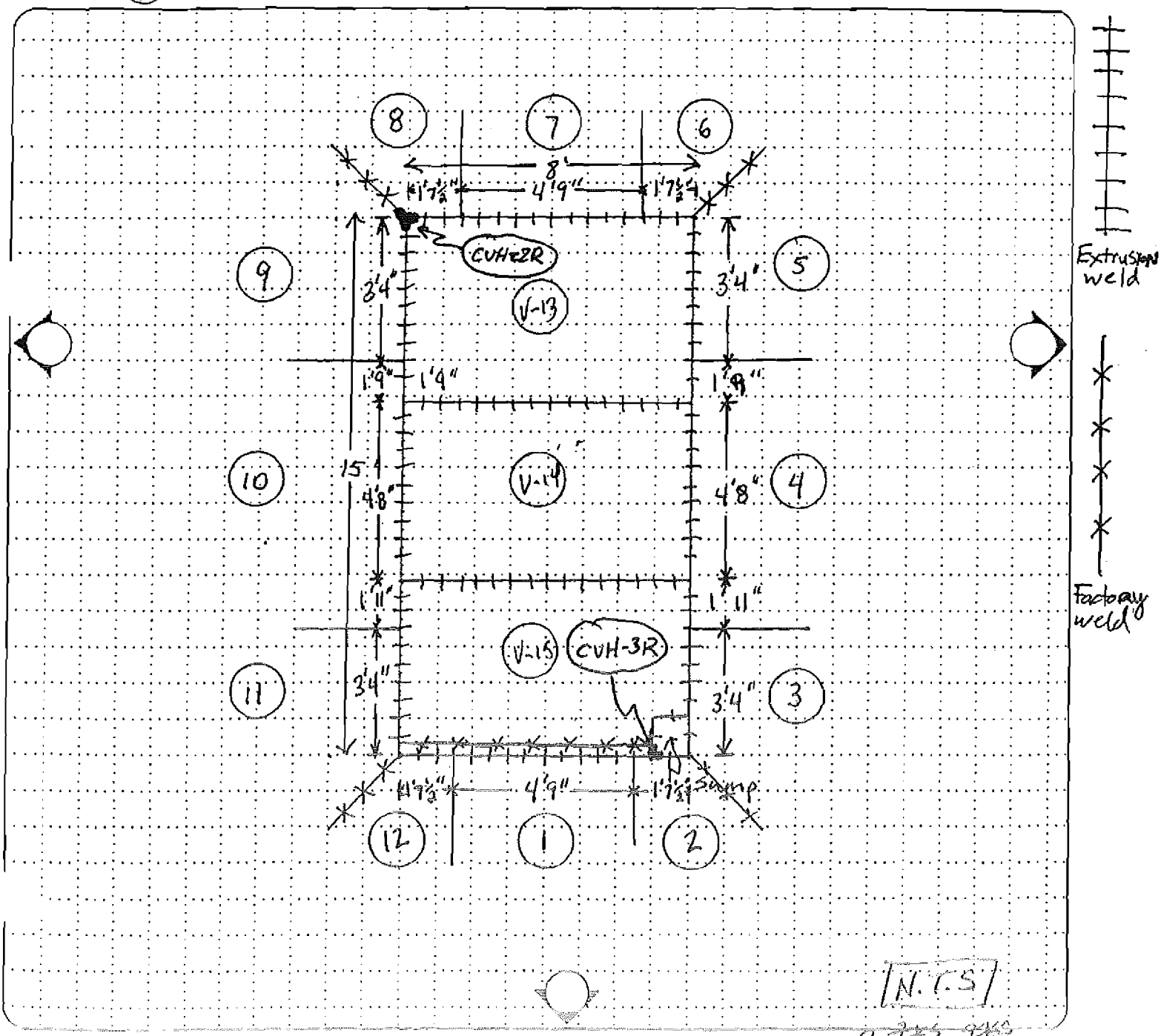

GEOSYNTEC CONSULTANTS

FLUOR DANIEL FERNALD

SEAM AND PANEL REPAIR LOCATION LOG

PROJECT: ON-SITE DISPOSAL FACILITY (OSDF)

LOCATION: FERNALD, OHIO PROJECT NO: ~~GQ0409~~ GQ1029 TASK NO.: 04.2

DESCRIPTION: ~~PHASE II~~ EPLTS Control Valve House DATE: ~~18~~ 22 day ~~Jan~~ March month 2001 year

CONTRACTOR: STAVER / ISCO

PRIMARY: ☐ SECONDARY: ☐ OTHER: ☒ PRODUCT TYPE: Bekaplast

NORTH

NOTE:
SEE OTHER SIDE FOR SYMBOLS

QA ID:

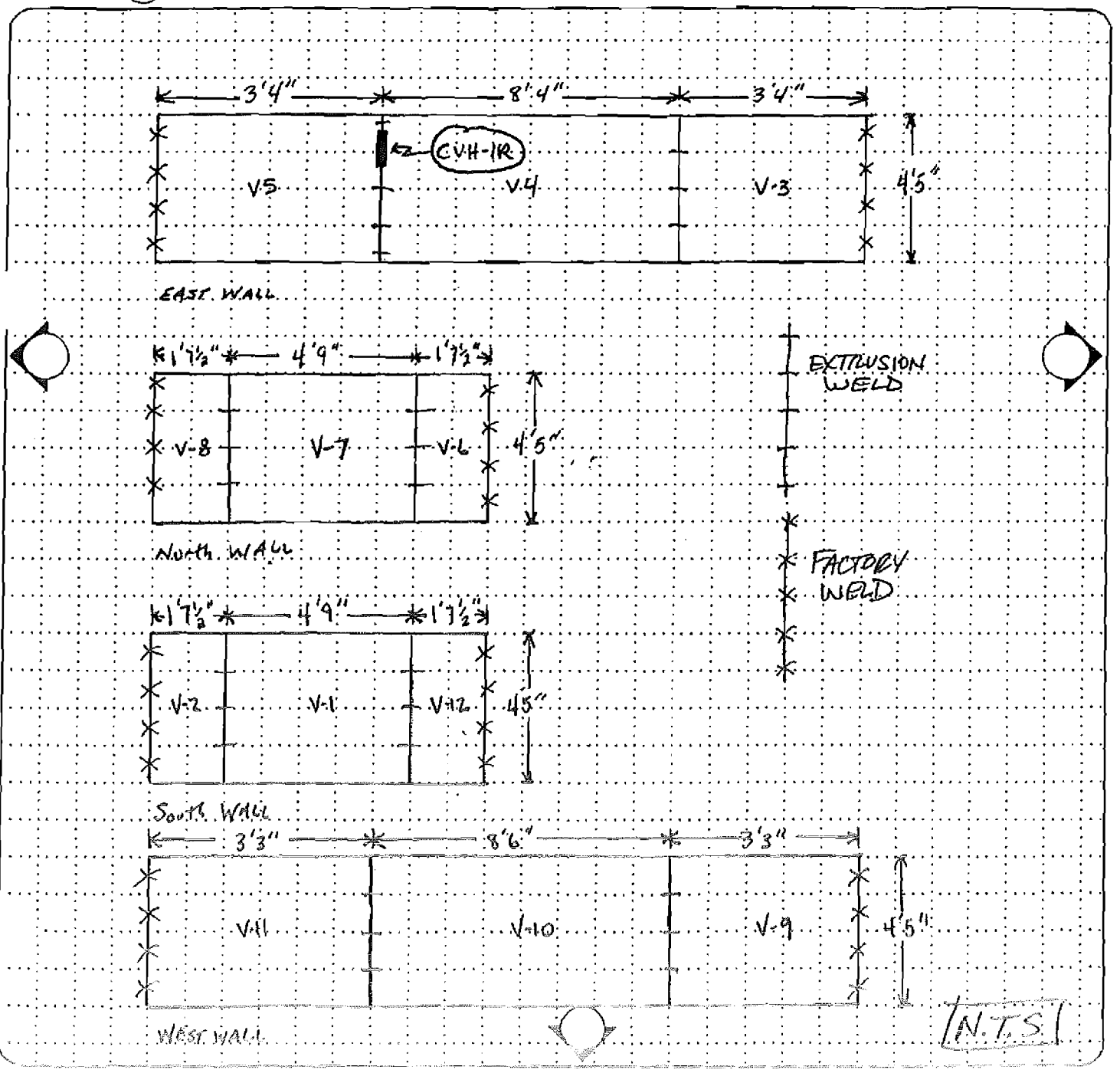

APPENDIX H

APPENDIX H

AS-BUILT SURVEY DATA AND RECORD DRAWINGS

AS-BUILT SURVEY DATA

- Valve Houses and GIS
- Top of LTS Pipe
- Miscellaneous

SUPPLIER DOCUMENT SUBMITTAL

FDF PROJECT NO: 20111	CONTRACT NO: FSC - 641	SUBMITTAL NO: 02100-001	REV: 0	DATE: 30-May-00	PAGE 1 OF 1

FROM: The STAVER GROUP, Inc.
Ron Wood
SIGNATURE: Ron Wood

TO: FDF ENGINEERING/CONSTRUCTION DOCUMENT CONTROL (ECDC), MS 52-7
RECEIVED BY: Denise Wenta DATE: 5/30/00

QTY	DOCUMENT NUMBER	REV	DOCUMENT FAMILY PRO	H&S	MED	TRG	CON	ENG	QAC	OPER	TITLE/DESCRIPTION	SUBMITTAL TYPE DRFT	CFC	INF	ASSOCIATED SPECIFICATION	SUBMITTAL ACTION A	B	C
7	641-02100-001	0						X			Surveyor Resume & PLS			x	02100		X	
											Certification							

REVIEW DISTRIBUTION

NAME	MS	NAME	MS	NAME	MS
Mike Griffin	52-5				
Tim Cherry	52-5				
Jim Jenkins	52-5				
Tom Escue	52-C				
Rob Kneip	52-5				
B. Scott Wheeler	52-5				
Kwasi Boutweneboah	~~65~~ 38				

RECEIVED
MAY 31 2000

EBT 6-1-00

NO COMMENTS: COMMENTS: (PLEASE USE SPACE BELOW FOR COMMENTS OR INDICATE IF ATTACHMENTS)

FLUOR FEDERAL TO DECIDE IF RESUME IS DETAILED ENOUGH FOR THIS PROJECT.

RECEIVED BY: [signature] DATE 6/1/00
(SIGN/DATE AND RETURN A COPY TO ECDC, MS 52-7)

SUBMITTAL TYPE: (BY SUPPLIER)
CFC - CERTIFIED FOR CONSTRUCTION
INF - INFORMATION/RECORD
DRFT - DRAFT/PRELIMINARY

SUBMITTAL ACTION CODE: (BY FDF)
A - Conforms to Subcontract Requirements
B - Minor Comments - Incorporate and Resubmit
C - Revise and Resubmit (SEE COMMENTS)

ORIGINAL ENTERED

BAUMANN ENGINEERING
10170 International Boulevard
Cincinnati, OH 45246-4846
Phone (513) 860-3999 FAX (513) 860-0287

THOMAS P. BAUMANN, PLS, head of surveying, is licensed in Ohio and Kentucky. He is OSHA and HAZMAT trained and certified to work on Department of Energy sites. Projects include: University of Cincinnati Design Art, Architecture and Planning building; Adams County Schools, Corbett Center of Music, University of Cincinnati and Mercy Hospital, Hamilton parking facility survey.

This is not a resume
EBT
6/1/00

Fluor Contract FSC-641
OSDF Enhanced Permanent Leachate
Transmission System Project
STAVIER # 70152

Submittal # (if): 02100-001
Reviewed By: PW
Date: 5/30/00

State of Ohio

Be It Known That

Thomas Paul Baumann

having submitted satisfactory evidence of fitness as to age, character, ability, education and practical experience in accordance with the provisions of the Ohio Revised Code, is granted this

Certificate of Registration

and is hereby authorized to practice in this State as a

Professional Surveyor

as long as this Certificate is not revoked and is renewed according to law.

ISSUED BY THE
OHIO STATE BOARD OF REGISTRATION
FOR PROFESSIONAL ENGINEERS
AND SURVEYORS

SERIAL NO. 7450

In Testimony Whereof we affix our hand and seal this 7th day of July 1992

Charles Heff
CHAIRMAN

Patrick [illegible]
SECRETARY

This is okay but a copy of annual license renewal would be helpful. Has license lapsed or not? Hopefully not! DJS
7/1/00

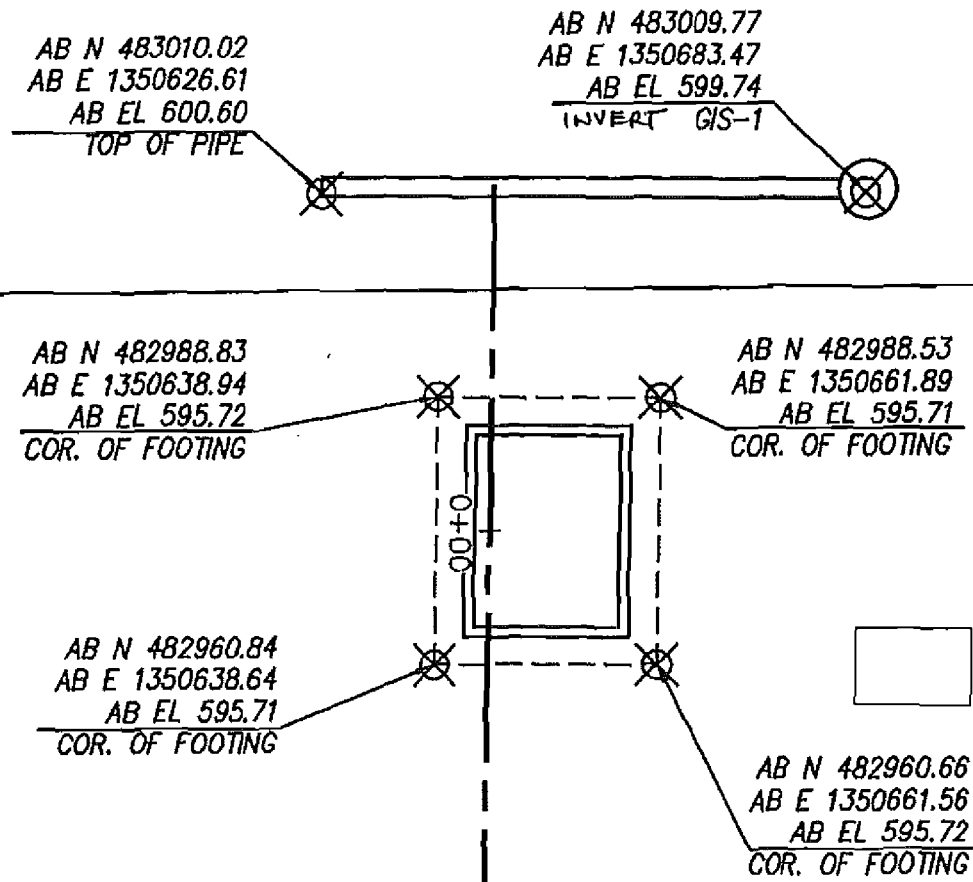

H:\DWGS\20120FER\ASBUILTS\20120ABL .d-VH1, 07/06/00 02:29:11 PM, 1:1

BAUMANN ENGINEERING
10170 INTERNATIONAL BLVD.
WORLD PARK
CINCINNATI, OHIO 45246
VOICE (513) 860.3999
FAX (513) 860.0287
EMAIL: LBAUMANN@ONE.NET

ENHANCED PERMANENT LEACHATE TRANSMISSION SYSTEM
CONTRACT # FCS-641
THE STAVER GROUP, INC.

VALVE HOUSE 1 & GIS 1

PROJECT:	DATE:	
20120	7.6.00	1/1

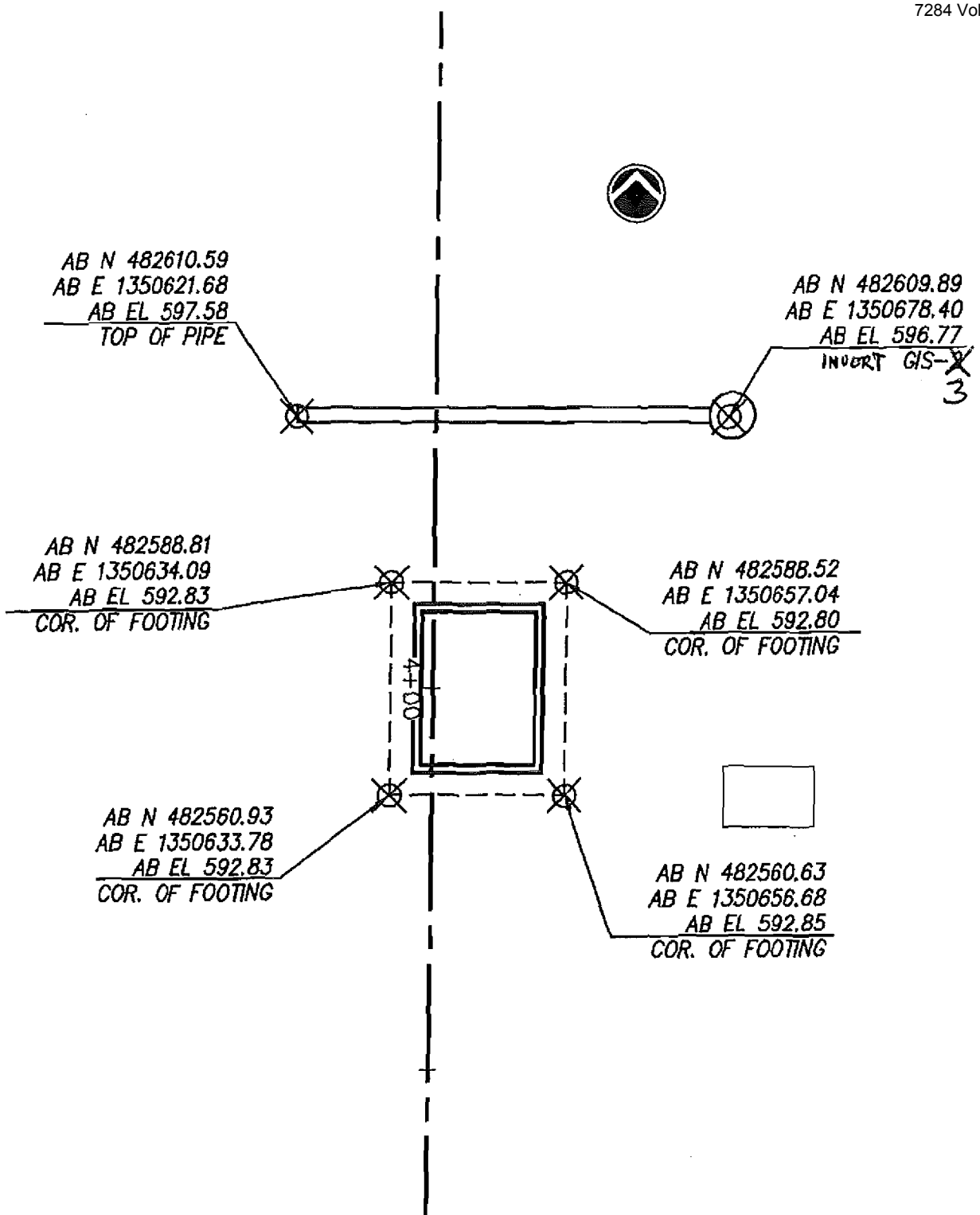

H:\DWGS\20120FER\ASBUILTS\20120ABL.dwg-VH2, 07/06/00 02:29:05 PM, 1:1

BAUMANN ENGINEERING
10170 INTERNATIONAL BLVD.
WORLD PARK
CINCINNATI, OHIO 45246
VOICE (513) 860.3999
FAX (513) 860.0287
EMAIL: LBAUMANN@ONE.NET

ENHANCED PERMANENT LEACHATE TRANSMISSION SYSTEM
CONTRACT # FCS-641
THE STAVER GROUP, INC.

VALVE HOUSE 2 & GIS ~~2~~ 3

PROJECT:	DATE:	
20120	7.6.00	1/1

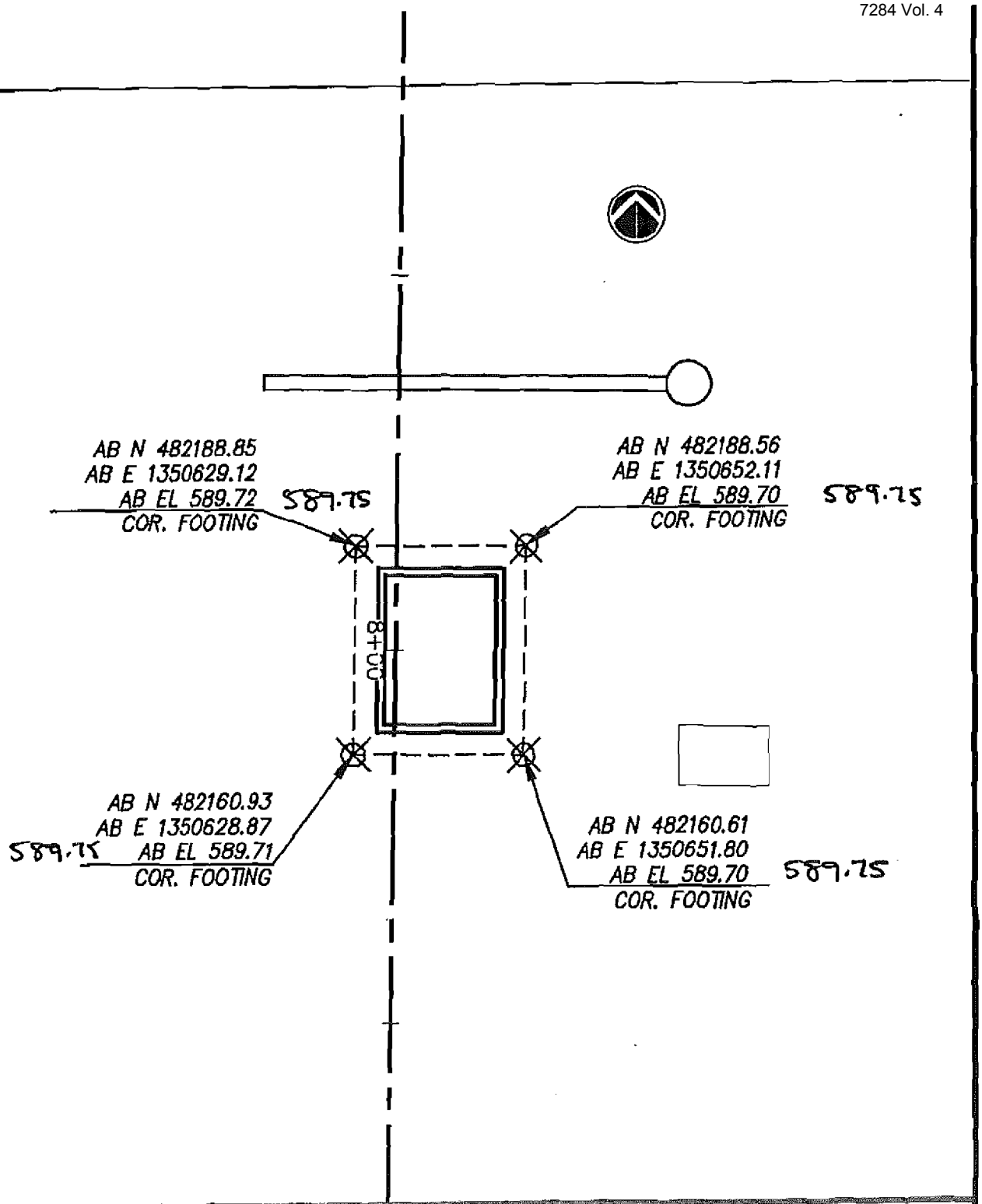

BAUMANN ENGINEERING
10170 INTERNATIONAL BLVD.
WORLD PARK
CINCINNATI, OHIO 45246
VOICE (513) 860.3999
FAX (513) 860.0287
EMAIL: LBAUMANN@ONE.NET

ENHANCED PERMANENT LEACHATE TRANSMISSION SYSTEM
CONTRACT # FCS-641
THE STAVER GROUP, INC.

VALVE HOUSE 3

PROJECT:	DATE:	
20120	8.2.00	1/1

H:\DWGS\20120FER\ASBUILTS\20120ABL.dwg 3-VH3, 08/02/00 02:37:27 PM, 1:1

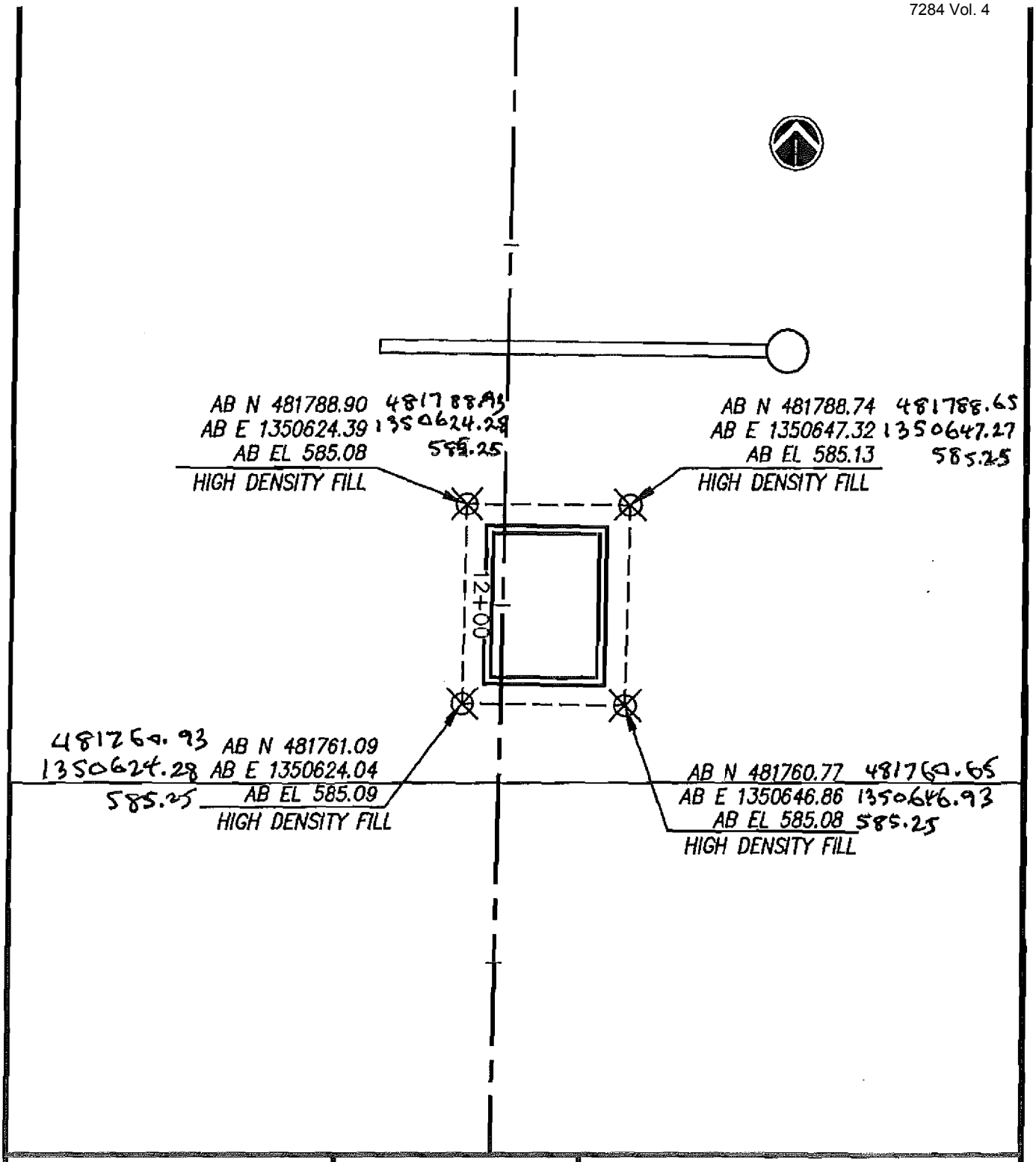

BAUMANN ENGINEERING
10170 INTERNATIONAL BLVD.
WORLD PARK
CINCINNATI, OHIO 45246
VOICE (513) 860.3999
FAX (513) 860.0287
EMAIL: LBAUMANN@ONE.NET

ENHANCED PERMANENT LEACHATE TRANSMISSION SYSTEM
CONTRACT # FCS-641
THE STAVER GROUP, INC.

VALVE HOUSE 4

PROJECT:	DATE:	
20120	8.2.00	1/1

H:\DWGS\20120FER\ASBUILTS\20120AB1.dv 3-VH4, 08/02/00 02:37:21 PM, 1:1

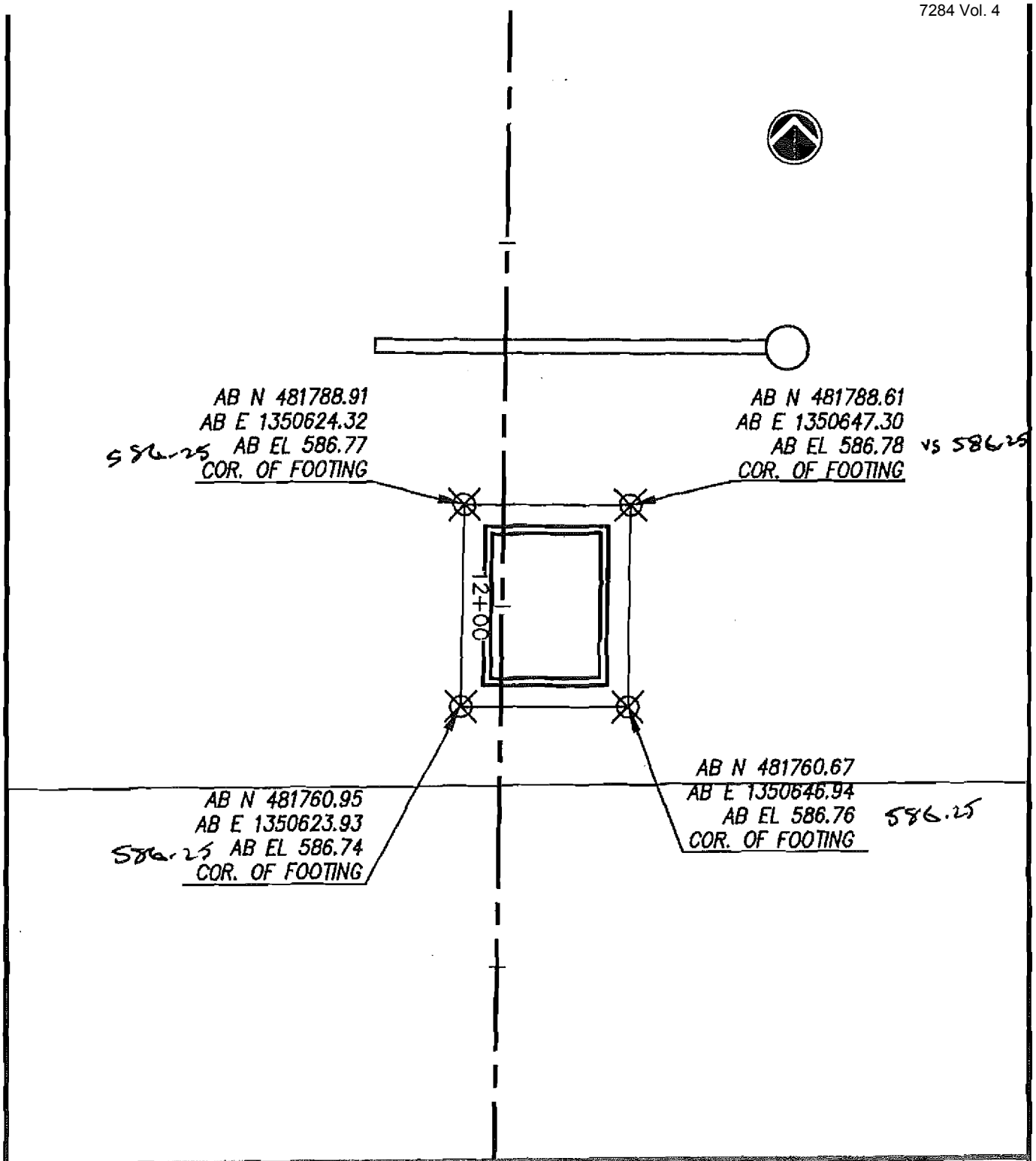

BAUMANN ENGINEERING
10170 INTERNATIONAL BLVD.
WORLD PARK
CINCINNATI, OHIO 45246
VOICE (513) 860.3999
FAX (513) 860.0287
EMAIL: LBAUMANN@ONE.NET

ENHANCED PERMANENT LEACHATE TRANSMISSION SYSTEM
CONTRACT # FCS-641
THE STAVER GROUP, INC.

VALVE HOUSE 4

PROJECT:	DATE:	
20120	9.13.00	1/1

H:\DWGS\20120FER\ASBUILTS\20120ABI .8-VH4, 09/13/00 12:01:19 PM, 1:1

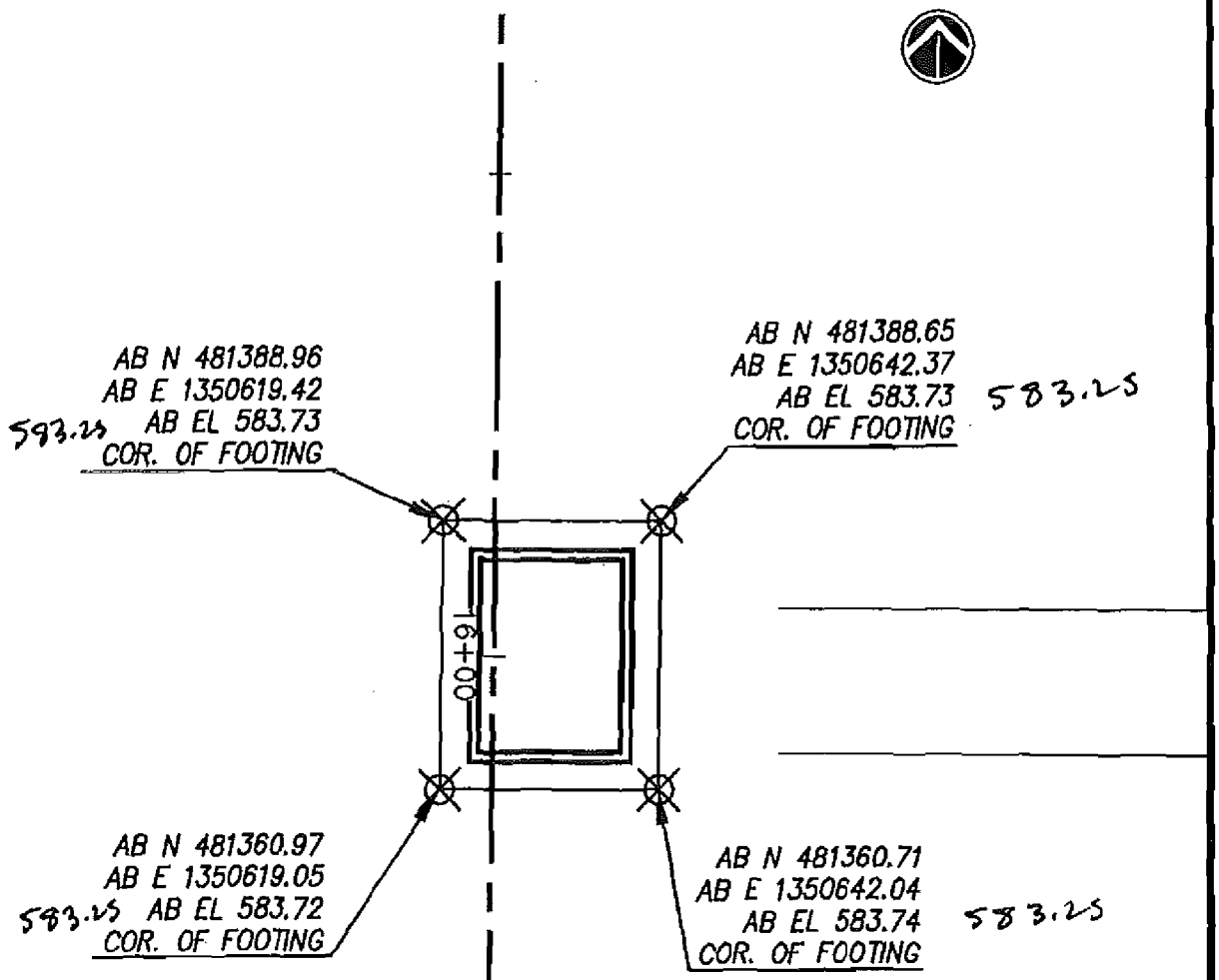

BAUMANN ENGINEERING
10170 INTERNATIONAL BLVD.
WORLD PARK
CINCINNATI, OHIO 45246
VOICE (513) 860.3999
FAX (513) 860.0287
EMAIL: LBAUMANN@ONE.NET

ENHANCED PERMANENT LEACHATE TRANSMISSION SYSTEM
CONTRACT # FCS-641
THE STAVER GROUP, INC.

VALVE HOUSE 5

PROJECT:	DATE:	
20120	9.13.00	1/1

H:\DWGS\20120FER\ASBUILTS\20120ABL. \B-VH5, 09/13/00 12:01:06 PM, 1:1

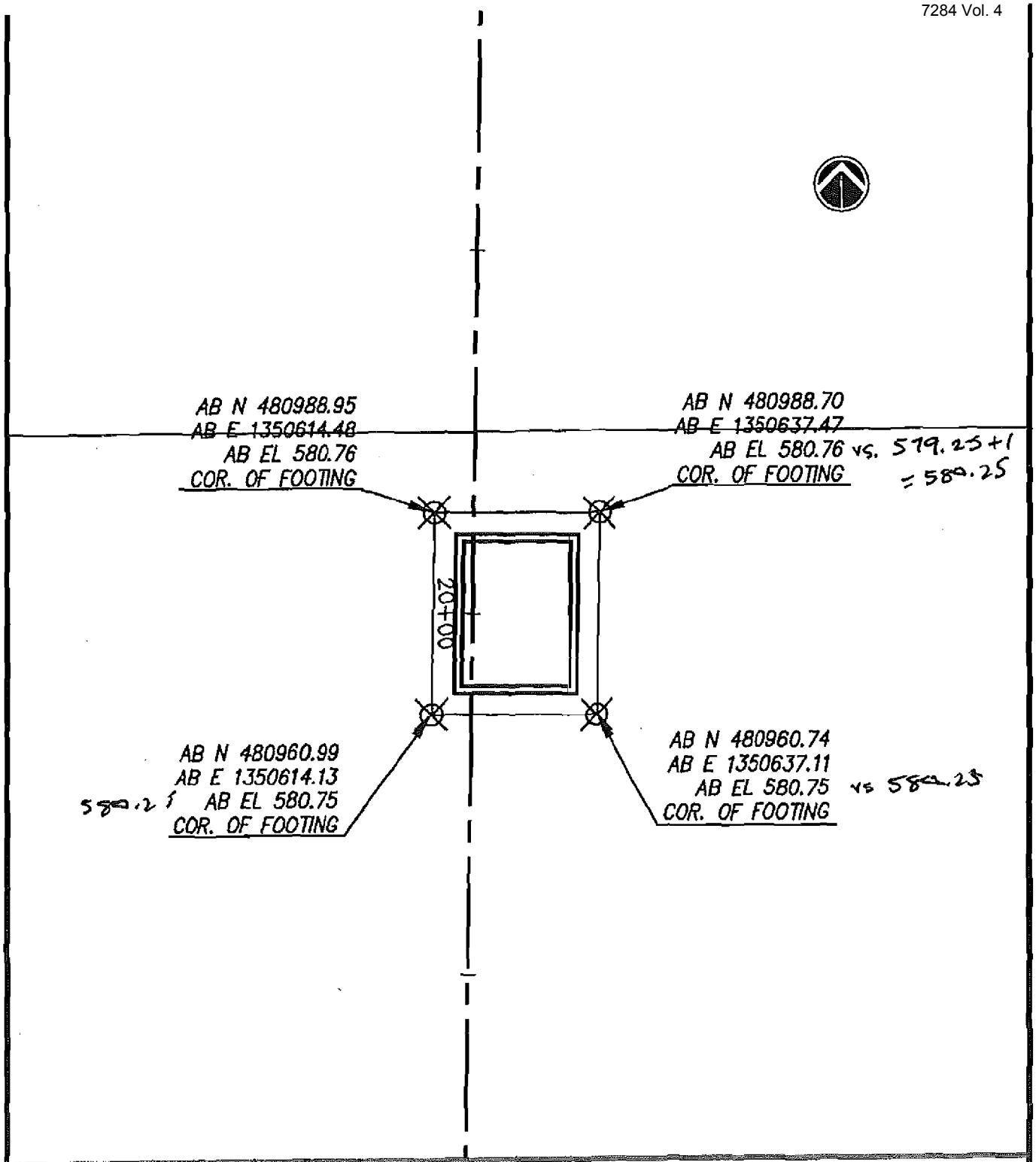

BAUMANN ENGINEERING
10170 INTERNATIONAL BLVD.
WORLD PARK
CINCINNATI, OHIO 45246
VOICE (513) 860.3999
FAX (513) 860.0287
EMAIL: LBAUMANN@ONE.NET

ENHANCED PERMANENT LEACHATE TRANSMISSION SYSTEM
CONTRACT # FCS-641
THE STAVER GROUP, INC.

VALVE HOUSE 6

PROJECT:	DATE:	
20120	9.13.00	1/1

H:\DWGS\20120FER\ASBUILTS\20120ABL .d-VH6, 09/13/00 12:01:13 PM, 1:1

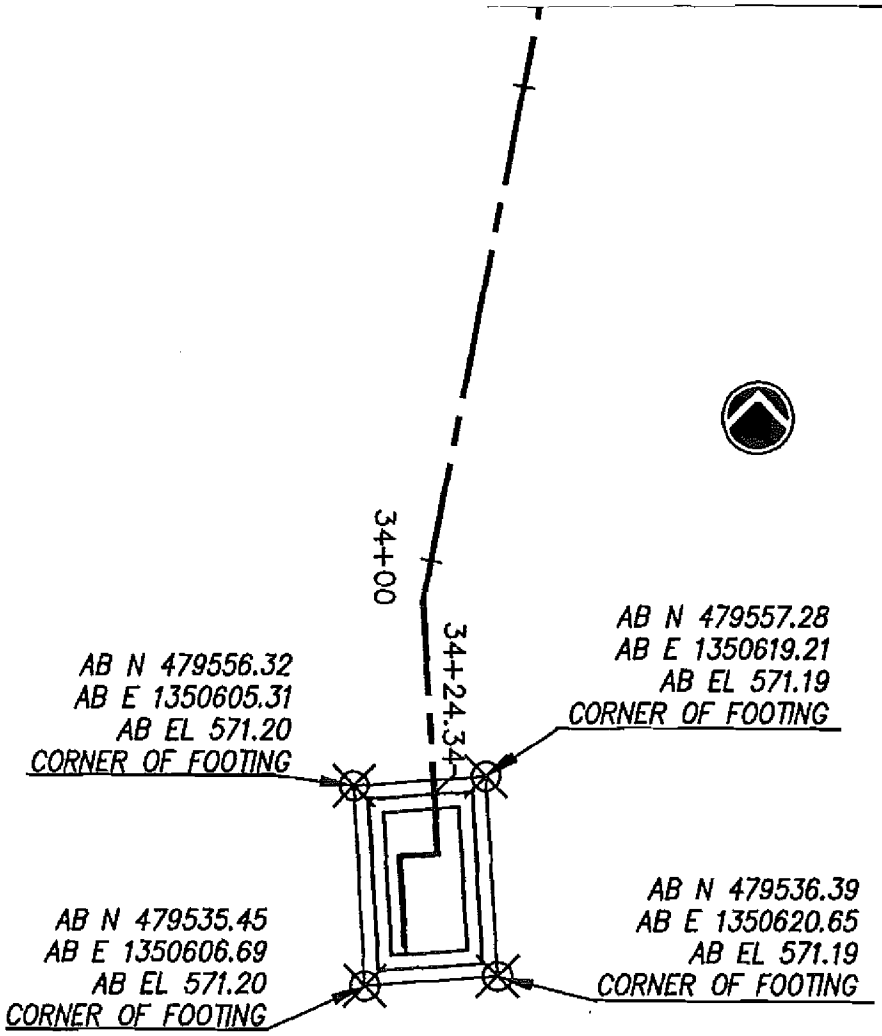

H:\20120FER\ASBUILTS\20120ABL.dwg !OUSE, 11/10/00 04:58:34 PM, 1:1

BAUMANN ENGINEERING
10170 INTERNATIONAL BLVD.
WORLD PARK
CINCINNATI, OHIO 45246
VOICE (513) 860.3999
FAX (513) 860.0287
EMAIL: LBAUMANN@ONE.NET

ENHANCED PERMANENT LEACHATE TRANSMISSION SYSTEM
CONTRACT # FCS-641
THE STAVER GROUP, INC.

CONTROL VALVE HOUSE

PROJECT:	DATE:	
20120	10.24.00	1/1

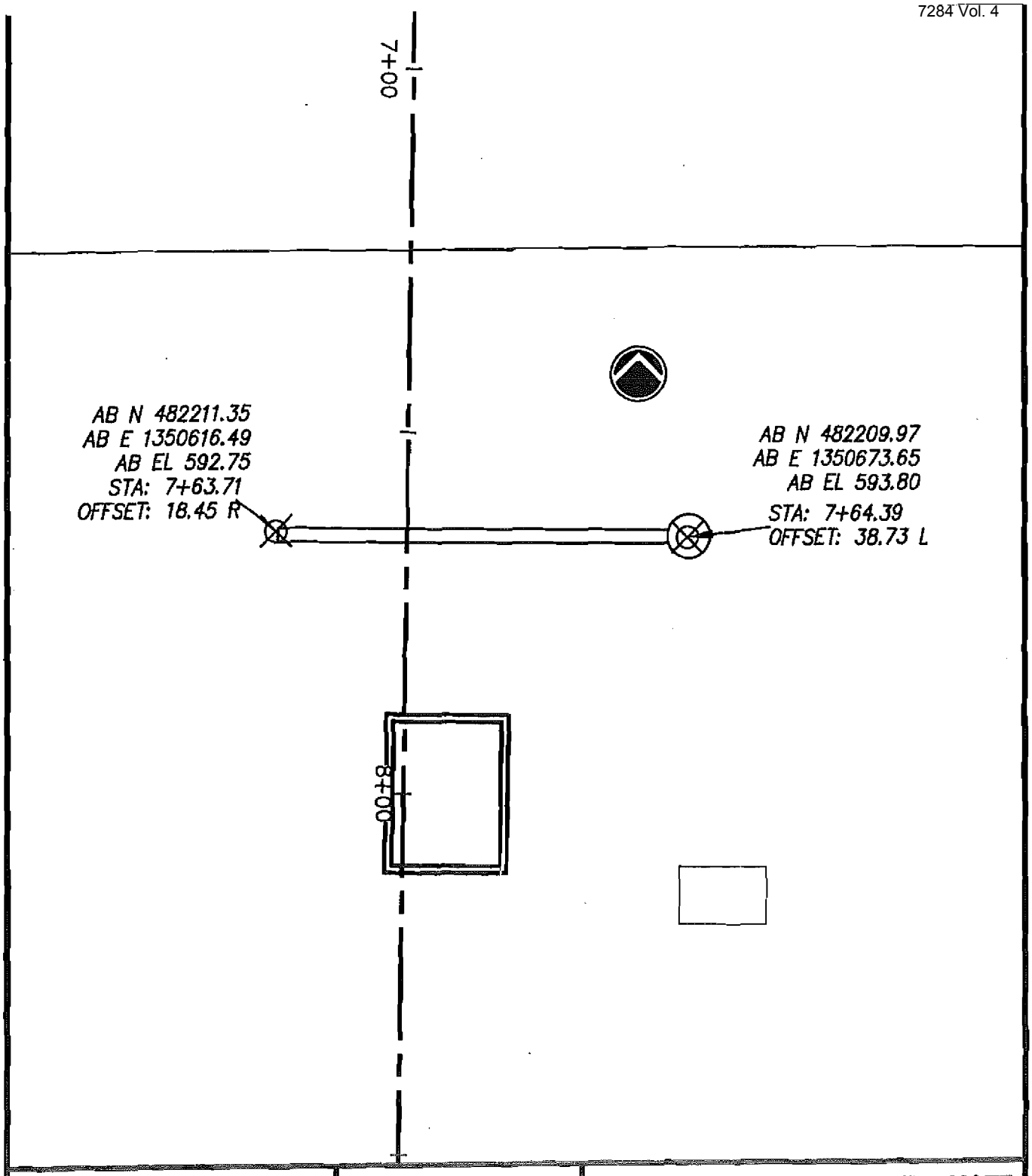

H:\20120FER\ASBUILTS\20120ABL.dwg, ; 11/10/00 04:58:00 PM, 1:1

BAUMANN ENGINEERING
10170 INTERNATIONAL BLVD.
WORLD PARK
CINCINNATI, OHIO 45246
VOICE (513) 860.3999
FAX (513) 860.0287
EMAIL: LBAUMANN@ONE.NET

ENHANCED PERMANENT LEACHATE TRANSMISSION SYSTEM
CONTRACT # FCS-641
THE STAVER GROUP, INC.

AS-BUILT GIS 5

PROJECT:	DATE:	
20120	10.31.00	1/1

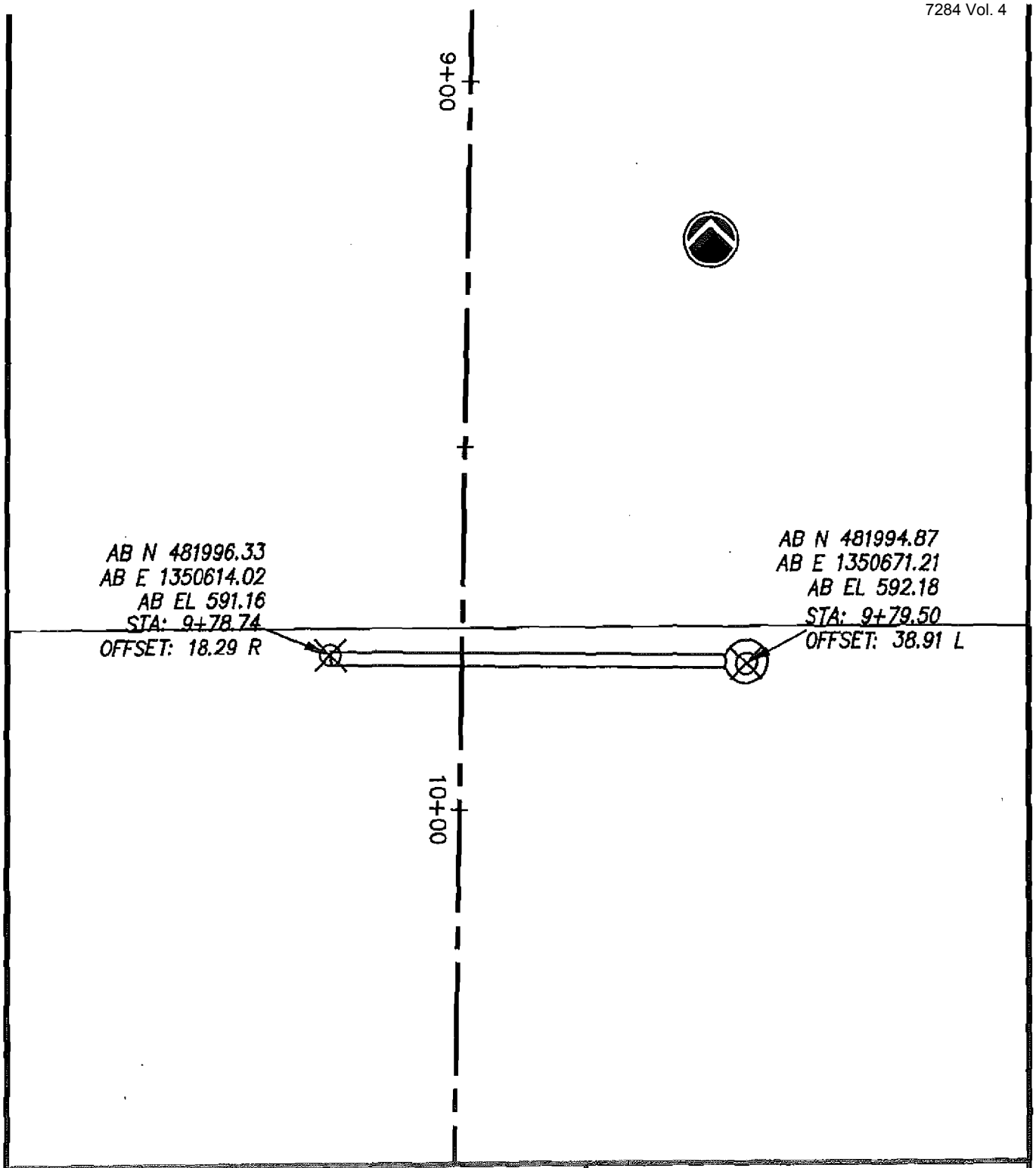

BAUMANN ENGINEERING
10170 INTERNATIONAL BLVD.
WORLD PARK
CINCINNATI, OHIO 45246
VOICE (513) 860.3999
FAX (513) 860.0287
EMAIL: LBAUMANN@ONE.NET

ENHANCED PERMANENT LEACHATE TRANSMISSION SYSTEM
CONTRACT # FCS-641
THE STAVER GROUP, INC.

AS-BUILT GIS 6

PROJECT:	DATE:	
20120	10.31.00	1/1

H:\20120FER\ASBUILTS\20120ABL.dwg 6, 11/10/00 04:58:06 PM, 1:1

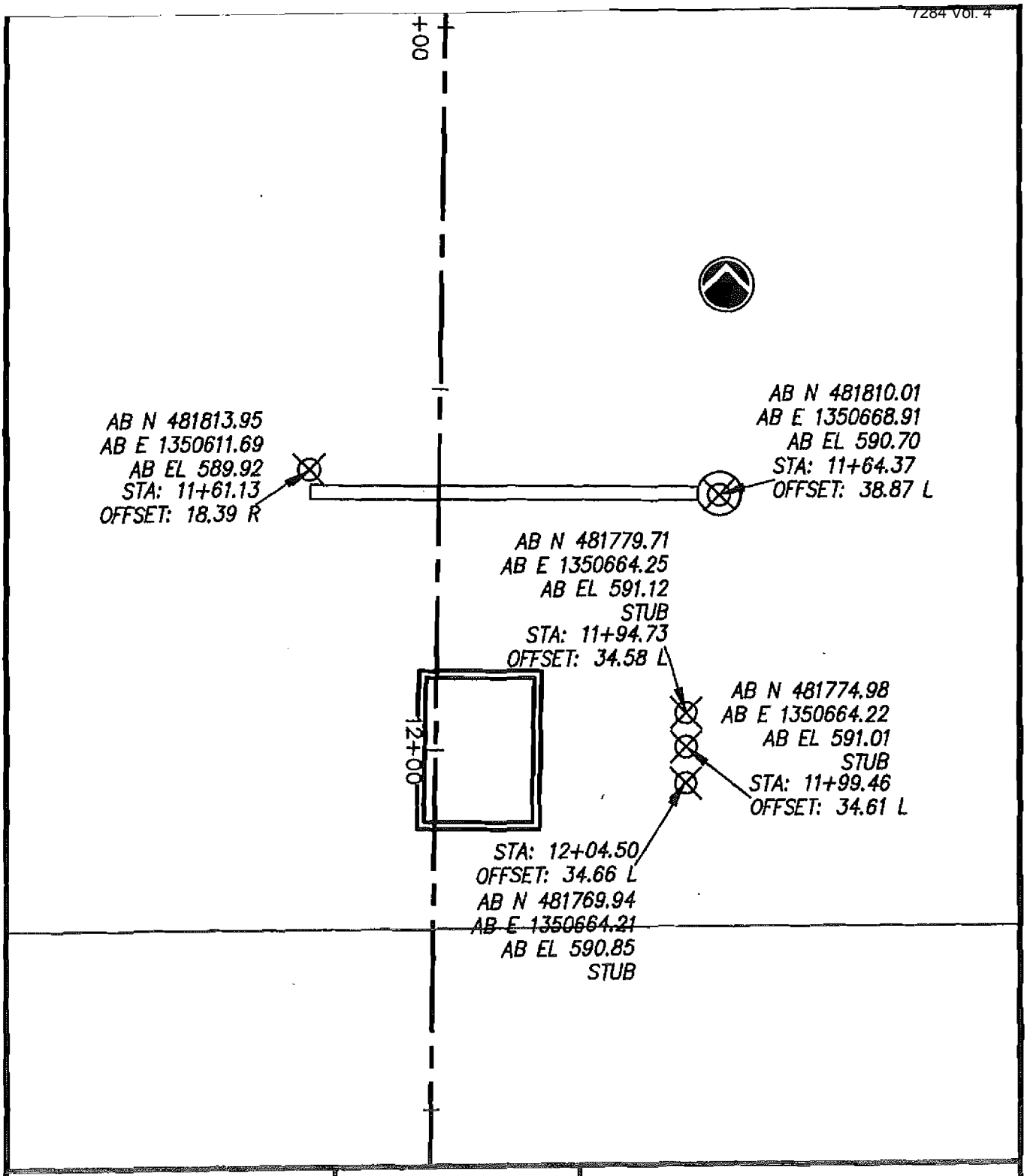

BAUMANN ENGINEERING
10170 INTERNATIONAL BLVD.
WORLD PARK
CINCINNATI, OHIO 45246
VOICE (513) 860.3999
FAX (513) 860.0287
EMAIL: LBAUMANN@ONE.NET

ENHANCED PERMANENT LEACHATE TRANSMISSION SYSTEM
CONTRACT # FCS-641
THE STAVER GROUP, INC.

AS-BUILT GIS 7
AB-BUILT STUBS VH-4

PROJECT:	DATE:	
20120	10.31.00	1/1

H:\20120FERVASBUILTS\20120ABL.dwg, 7, 11/10/00 04:58:11 PM, 1:1

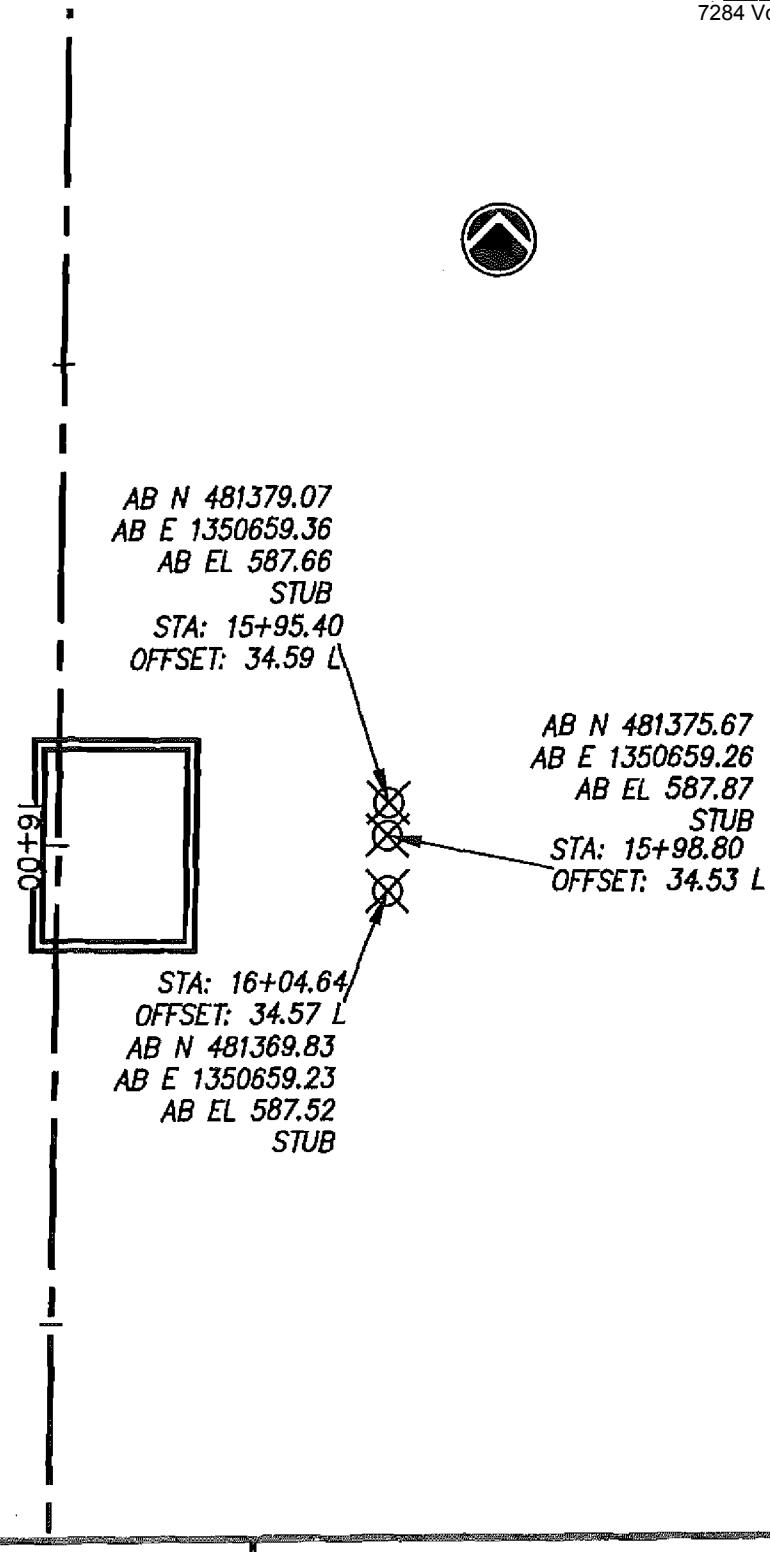

H:\20120FER\ASBUILTS\20120ABL.dwg, IBVH5, 11/10/00 04:58:23 PM, 1:1

BAUMANN ENGINEERING
10170 INTERNATIONAL BLVD.
WORLD PARK
CINCINNATI, OHIO 45246
VOICE (513) 860.3999
FAX (513) 860.0287
EMAIL: LBAUMANN@ONE.NET

ENHANCED PERMANENT LEACHATE TRANSMISSION SYSTEM
CONTRACT # FCS-641
THE STAVER GROUP, INC.

AB-BUILT STUBS VH-5

PROJECT:	DATE:	
20120	10.31.00	1/1

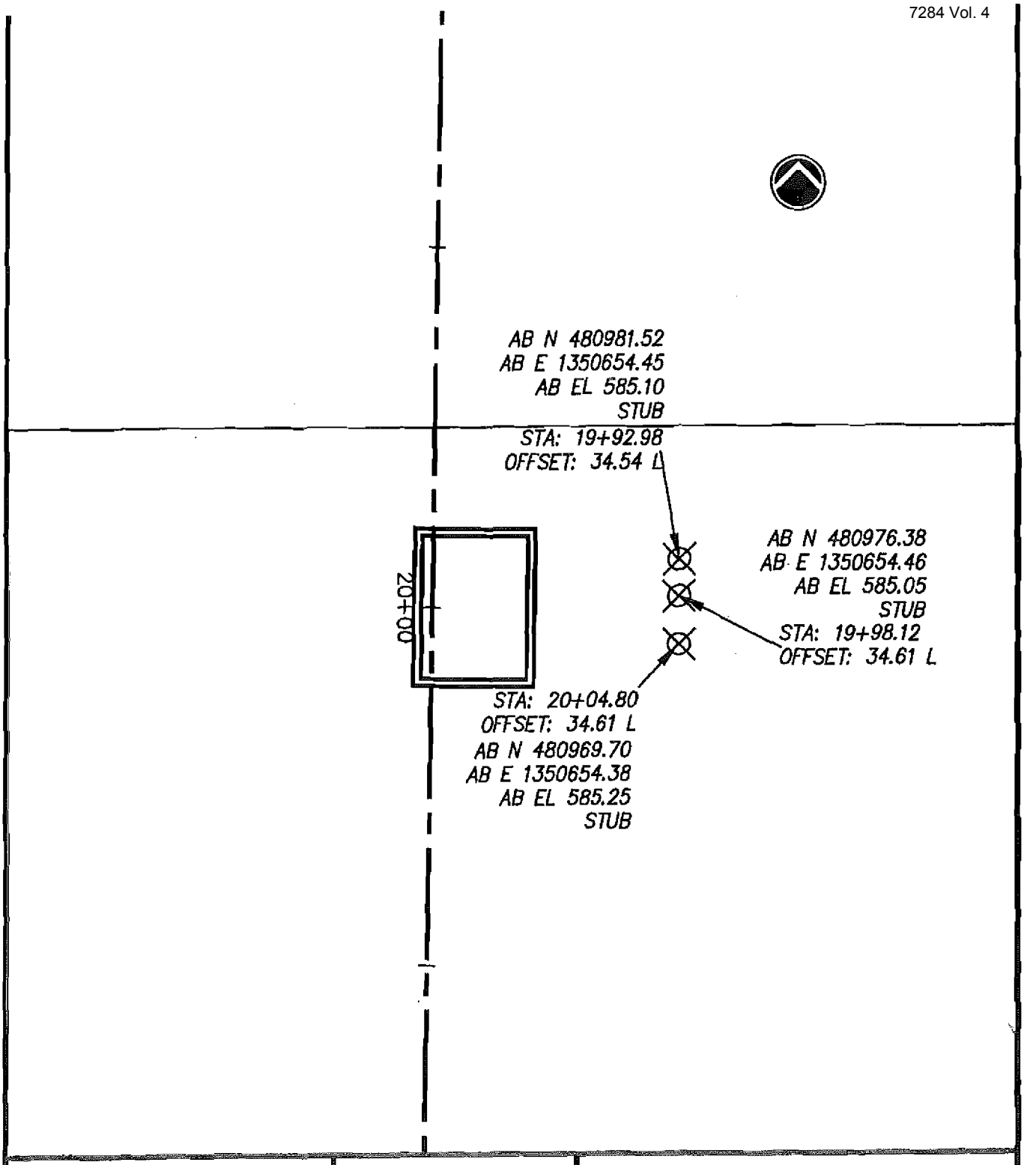

H:\20120FER\ASBUILTS\20120ABL.dwg IBVH6, 11/10/00 04:58:28 PM, 1:1

BAUMANN ENGINEERING
10170 INTERNATIONAL BLVD.
WORLD PARK
CINCINNATI, OHIO 45246
VOICE (513) 860.3999
FAX (513) 860.0287
EMAIL: LBAUMANN@ONE.NET

ENHANCED PERMANENT LEACHATE TRANSMISSION SYSTEM
CONTRACT # FCS-641
THE STAVER GROUP, INC.

AB-BUILT STUBS VH-6

PROJECT:	DATE:	
20120	10.31.00	1/1

Spectra Precision Software, Inc.
5901 Peachtree-Dunwoody Road, N.E.
Atlanta, GA 30328-5548

Thu, Aug 24, 2000

℄ PIPE

PT # 776 = 0+25
PT # 790 = 3+75 } 350'

TOP PIPE @ 0+25 EL = 597.818
TOP PIPE @ 3+75 EL = 595.109
− 2.709

STAKEOUT REPORT
Design Area File: C:\staver\0120-25.are
Staking Job File: C:\staver\0824F2.job

==========

AS-BLT TOP PIPE VH-1 TO VH-2
8-24-00
BAUMANN ENGINERING
THOMAS P. BAUMANN P.S. 8-24-00

==========

$\frac{-2.709}{350} = -0.0077$

− 0.77% FALL
BETWEEN VH1 + VH2

1' SOUTH OF VH-1 TOP PIPE

Point No.	Design Northing	Design Easting	Design Elevation	Staked Elevation	Delta North	Delta East	Cut	Fill
775	482974.773	1350644.269	597.050	597.765	-12.300	0.030	0.715	
Point No.	Design Northing	Design Easting	Design Elevation	Staked Elevation	Delta North	Delta East	Cut	Fill
776 0+25	482949.775	1350643.963	596.850	597.818	0.050	0.290	0.968	
Point No.	Design Northing	Design Easting	Design Elevation	Staked Elevation	Delta North	Delta East	Cut	Fill
777	482924.777	1350643.658	596.740	597.623	0.030	0.440	0.883	
Point No.	Design Northing	Design Easting	Design Elevation	Staked Elevation	Delta North	Delta East	Cut	Fill
778	482899.779	1350643.352	596.540	597.448	0.040	0.410	0.908	
Point No.	Design Northing	Design Easting	Design Elevation	Staked Elevation	Delta North	Delta East	Cut	Fill
779	482874.780	1350643.047	596.350	597.231	-0.130	-0.300	0.881	
Point No.	Design Northing	Design Easting	Design Elevation	Staked Elevation	Delta North	Delta East	Cut	Fill
780	482849.782	1350642.741	596.150	597.094	-0.120	-0.250	0.944	
Point No.	Design Northing	Design Easting	Design Elevation	Staked Elevation	Delta North	Delta East	Cut	Fill
781	482824.784	1350642.436	595.950	596.830	-0.110	-0.330	0.880	
Point No.	Design Northing	Design Easting	Design Elevation	Staked Elevation	Delta North	Delta East	Cut	Fill
782	482799.786	1350642.130	595.750	596.667	0.070	-0.050	0.917	

Point No.	Design Northing	Design Easting	Design Elevation	Staked Elevation	Delta North	Delta East	Cut	Fill
783	482774.788	1350641.825	595.550	596.533	0.000	0.210	0.983	
Point No.	Design Northing	Design Easting	Design Elevation	Staked Elevation	Delta North	Delta East	Cut	Fill
784	482749.790	1350641.519	595.350	596.310	-0.030	0.120	0.960	
Point No.	Design Northing	Design Easting	Design Elevation	Staked Elevation	Delta North	Delta East	Cut	Fill
785	482724.792	1350641.214	595.160	596.110	0.000	0.030	0.950	
Point No.	Design Northing	Design Easting	Design Elevation	Staked Elevation	Delta North	Delta East	Cut	Fill
786	482699.794	1350640.908	594.960	595.810	0.000	0.050	0.850	
Point No.	Design Northing	Design Easting	Design Elevation	Staked Elevation	Delta North	Delta East	Cut	Fill
787	482674.795	1350640.603	594.760	595.722	-0.060	0.530	0.962	
Point No.	Design Northing	Design Easting	Design Elevation	Staked Elevation	Delta North	Delta East	Cut	Fill
788	482649.797	1350640.297	594.560	595.458	-0.090	0.560	0.898	
Point No.	Design Northing	Design Easting	Design Elevation	Staked Elevation	Delta North	Delta East	Cut	Fill
789	482624.799	1350639.992	594.360	595.314	0.010	0.250	0.954	
Point No.	Design Northing	Design Easting	Design Elevation	Staked Elevation	Delta North	Delta East	Cut	Fill
790 · 3+75	482599.801	1350639.686	594.160	595.109	0.010	-0.060	0.949	
Point No.	Design Northing	Design Easting	Design Elevation	Staked Elevation	Delta North	Delta East	Cut	Fill
791	482574.803	1350639.381	594.050	595.036	11.680	0.160	0.986	

1' NORTH OF VH-2 TOP PIPE

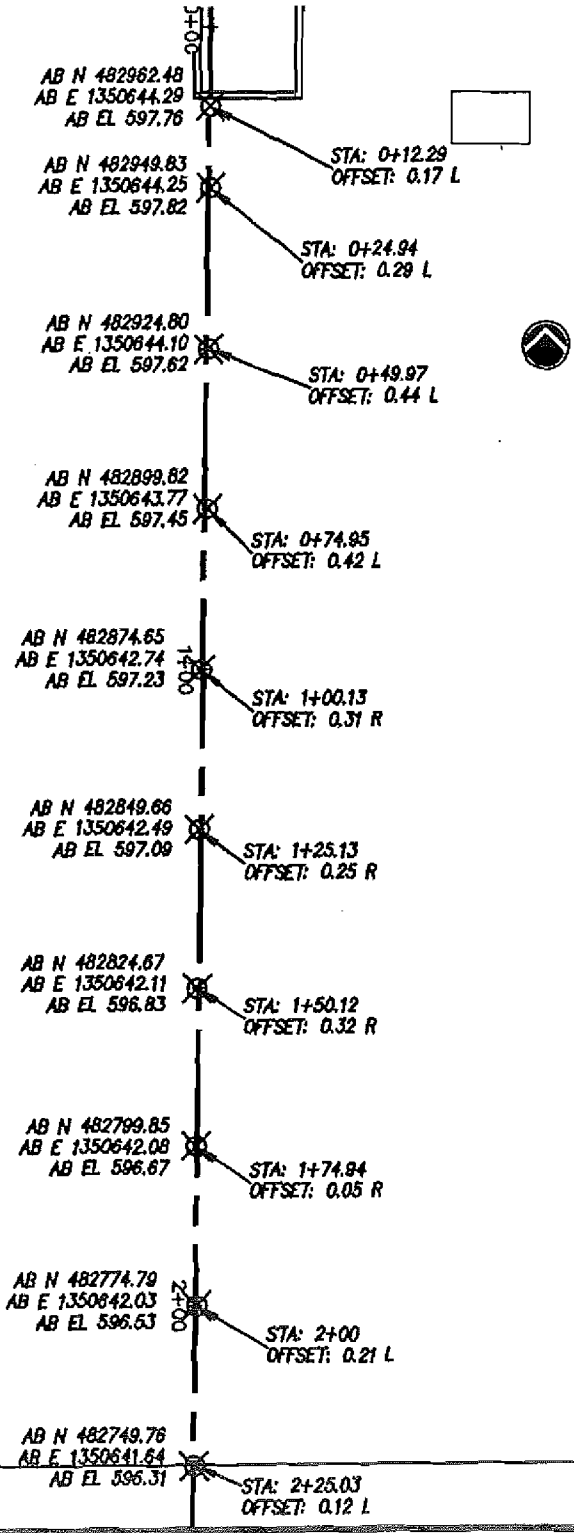

BAUMANN ENGINEERING
10170 INTERNATIONAL BLVD.
WORLD PARK
CINCINNATI, OHIO 45246
VOICE (513) 860.3999
FAX (513) 860.0287
EMAIL: LBAUMANN@ONE.NET

ENHANCED PERMANENT LEACHATE TRANSMISSION SYSTEM
CONTRACT # FCS-641
THE STAVER GROUP, INC.

TOP OF PIPE AS-BUILT

PROJECT:	DATE:	
20120	9.13.00	1/2

H:\DWGS\20120FER\ASBUILTS\20120ABL. \B91300(1), 09/13/00 11:25:27 AM, 1:1

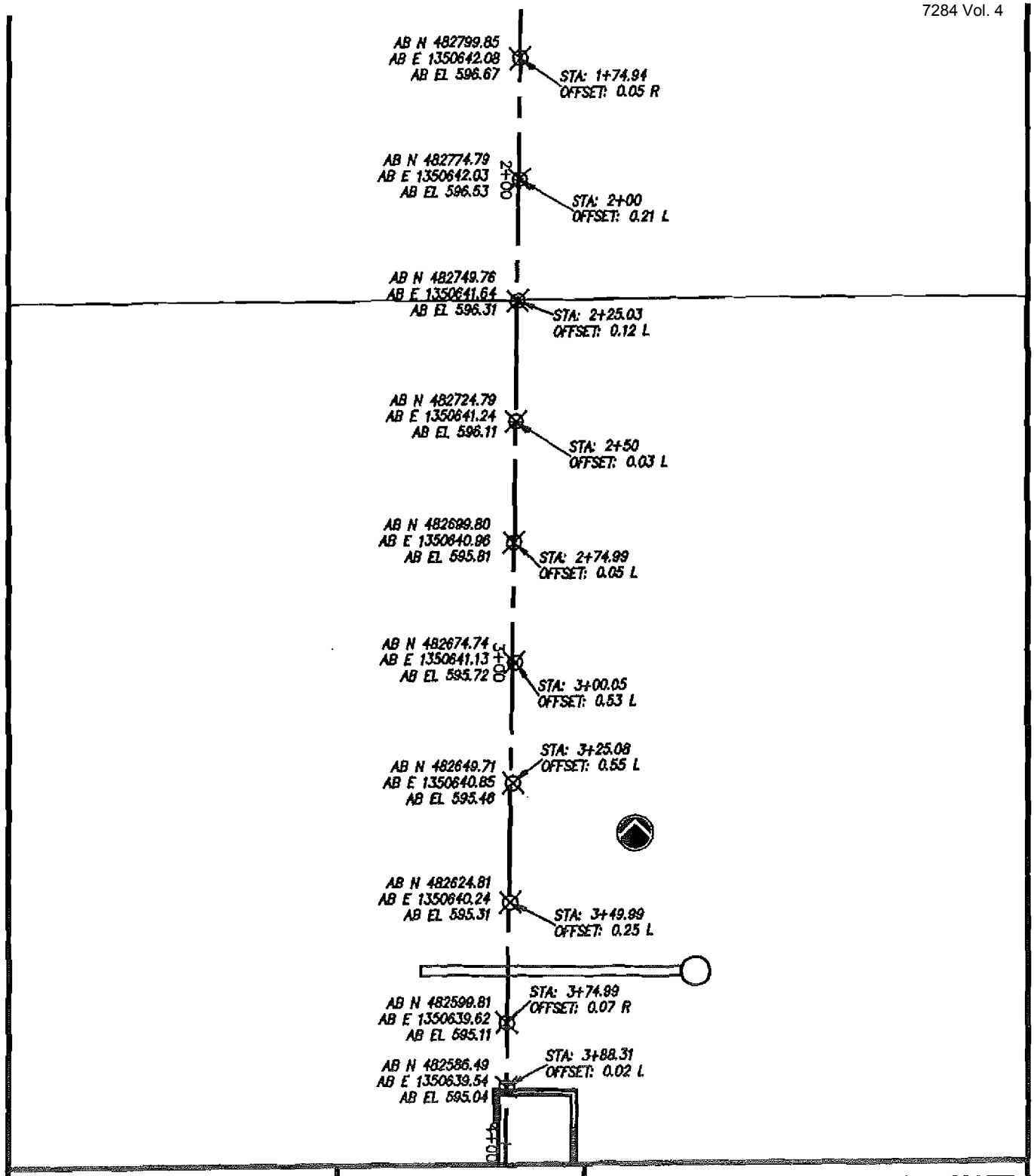

BAUMANN ENGINEERING
10170 INTERNATIONAL BLVD.
WORLD PARK
CINCINNATI, OHIO 45246
VOICE (513) 860.3999
FAX (513) 860.0287
EMAIL: LBAUMANN@ONE.NET

ENHANCED PERMANENT LEACHATE TRANSMISSION SYSTEM
CONTRACT # FCS-641
THE STAVER GROUP, INC.

TOP OF PIPE AS-BUILT

PROJECT:	DATE:	
20120	9.13.00	2/2

H:\DWGS\20120FER\ASBUILTS\20120ABL -B91300(2), 09/13/00 11:25:22 AM, 1:1

BAUMANN ENGINEERING

CIVIL ENGINEERING • LAND PLANNING • LAND SURVEYING

Surveyor's Log

B.E. Project #: 20120

Project: Enhanced Permanent Leachate Transmission System Contract # FSC-641

Site: Fernald Environmental Management Project

Client: The Staver Group, Inc.

Date: 9/29/00

LOG:

REPEATED AS-BUILT TOP OF PIPE BETWEEN VH-2 AND VH-3 BECAUSE OF HEAVY RAIN BEFORE DITCH COULD BE BACKFILLED. AS-BUILT TOP OF PIPE FROM STATION 9+75 TO 10+75 SO DITCH ACROSS HAUL ROAD COULD BE BACKFILLED OVER THE WEEKEND.

ATTACHMENTS: RAW DATA FILES

Entered By: Thomas P. Baumann, PS
State of Ohio P.S # 7450

10170 INTERNATIONAL BOULEVARD • CINCINNATI, OHIO 45246
VOICE (513) 860-3999 • FAX (513) 860-0287
EMAIL: LBAUMANN@ONE.NET
WWW.BAUMANNENG.COM

Spectra Precision Software, Inc.
5901 Peachtree-Dunwoody Road, N.E.
Atlanta, GA 30328-5548

Fri, Sep 29, 2000

STAKEOUT REPORT
Design Area File: C:\staver\0120-25.are
Staking Job File: C:\staver\0929AB1.job

==========

2ND AS-BUILT TOP OF PIPE BETWEEN VH2 & VH3 9-29-2000
BAUMANN ENGINEERING
THOMAS P. BAUMANN PS

==========

Point No.	Design Northing	Design Easting	Design Elevation	Staked Elevation	Delta North	Delta East	Cut	Fill
792	482549.805	1350639.075	593.890	595.092	0.000	0.110	1.202	
Point No.	Design Northing	Design Easting	Design Elevation	Staked Elevation	Delta North	Delta East	Cut	Fill
793	482524.807	1350638.770	593.740	594.922	-0.050	0.020	1.182	
Point No.	Design Northing	Design Easting	Design Elevation	Staked Elevation	Delta North	Delta East	Cut	Fill
794	482499.808	1350638.464	593.540	594.794	0.030	0.050	1.254	
Point No.	Design Northing	Design Easting	Design Elevation	Staked Elevation	Delta North	Delta East	Cut	Fill
795	482474.810	1350638.159	593.350	594.718	-0.060	0.230	1.368	
Point No.	Design Northing	Design Easting	Design Elevation	Staked Elevation	Delta North	Delta East	Cut	Fill
796	482449.812	1350637.853	593.150	594.471	0.060	0.200	1.321	
Point No.	Design Northing	Design Easting	Design Elevation	Staked Elevation	Delta North	Delta East	Cut	Fill
797	482424.814	1350637.548	592.950	594.355	0.050	0.170	1.405	
Point No.	Design Northing	Design Easting	Design Elevation	Staked Elevation	Delta North	Delta East	Cut	Fill
798	482399.816	1350637.242	592.750	594.257	-0.040	-0.040	1.507	
Point No.	Design Northing	Design Easting	Design Elevation	Staked Elevation	Delta North	Delta East	Cut	Fill
799	482374.818	1350636.936	592.550	594.079	0.020	-0.060	1.529	
Point	Design	Design	Design	Staked	Delta	Delta		

No.	Northing	Easting	Elevation	Elevation	North	East	Cut	Fill
800	482349.820	1350636.631	592.350	593.885	0.050	-0.040	1.535	
Point	Design	Design	Design	Staked	Delta	Delta		
No.	Northing	Easting	Elevation	Elevation	North	East	Cut	Fill
801	482324.822	1350636.325	592.160	593.631	0.040	0.090	1.471	
Point	Design	Design	Design	Staked	Delta	Delta		
No.	Northing	Easting	Elevation	Elevation	North	East	Cut	Fill
802	482299.823	1350636.020	591.960	593.383	-0.050	0.040	1.423	
Point	Design	Design	Design	Staked	Delta	Delta		
No.	Northing	Easting	Elevation	Elevation	North	East	Cut	Fill
803	482274.825	1350635.714	591.760	593.223	-0.010	-0.070	1.463	
Point	Design	Design	Design	Staked	Delta	Delta		
No.	Northing	Easting	Elevation	Elevation	North	East	Cut	Fill
804	482249.827	1350635.409	591.560	592.845	0.010	0.010	1.285	
Point	Design	Design	Design	Staked	Delta	Delta		
No.	Northing	Easting	Elevation	Elevation	North	East	Cut	Fill
805	482224.829	1350635.103	591.360	592.727	-0.060	-0.010	1.367	
Point	Design	Design	Design	Staked	Delta	Delta		
No.	Northing	Easting	Elevation	Elevation	North	East	Cut	Fill
806	482199.831	1350634.798	591.200	592.183	-0.070	-0.070	0.983	

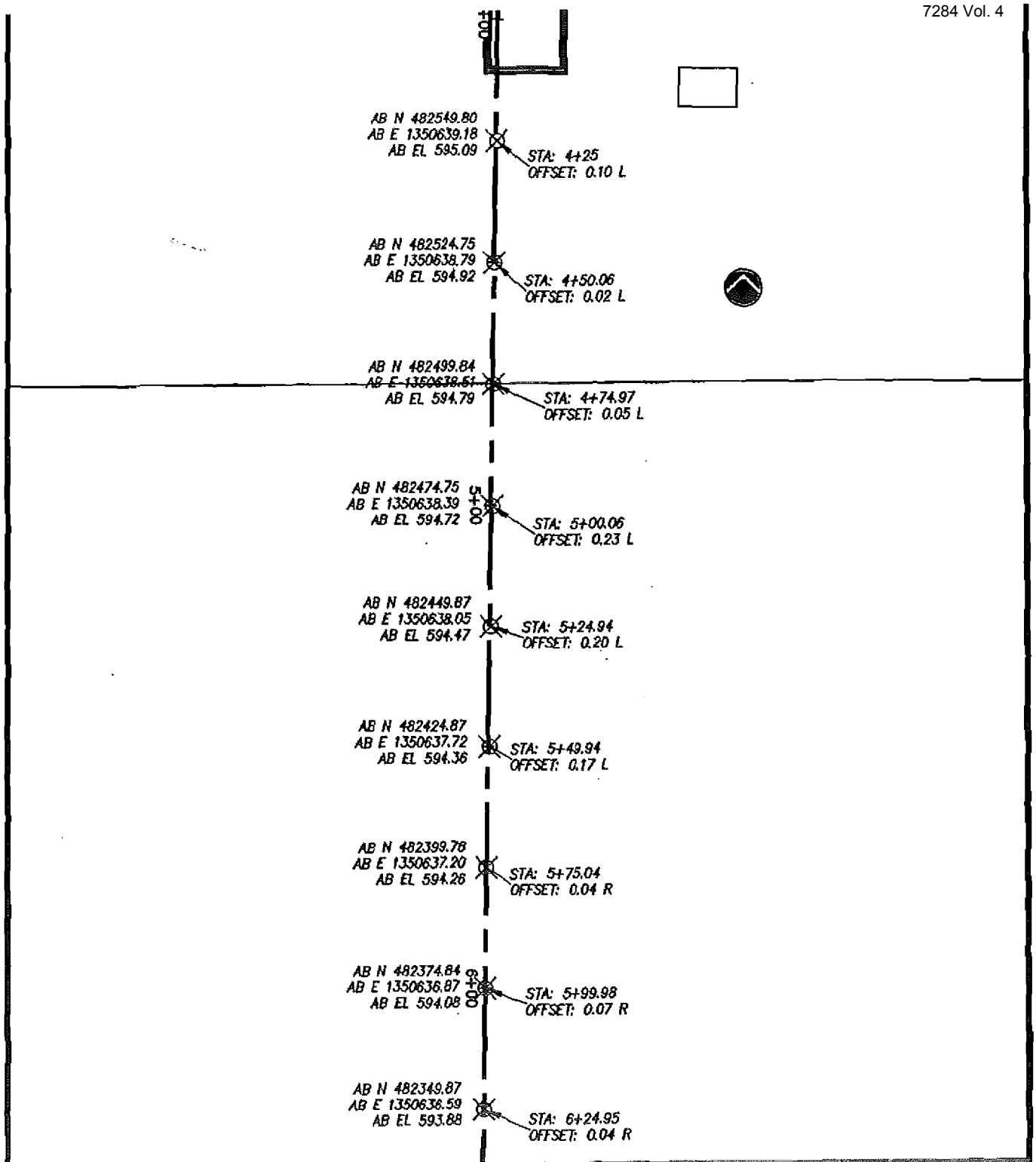

H:\20120FER\ASBUILTS\20120ABL.dwg, 00(1), 11/10/00 04:57:43 PM, 1:1

BAUMANN ENGINEERING
10170 INTERNATIONAL BLVD.
WORLD PARK
CINCINNATI, OHIO 45246
VOICE (513) 860.3999
FAX (513) 860.0287
EMAIL: LBAUMANN@ONE.NET

ENHANCED PERMANENT LEACHATE TRANSMISSION SYSTEM
CONTRACT # FCS-641
THE STAVER GROUP, INC.

TOP OF PIPE AS-BUILT

PROJECT:	DATE:	
20120	9.29.00	1/2

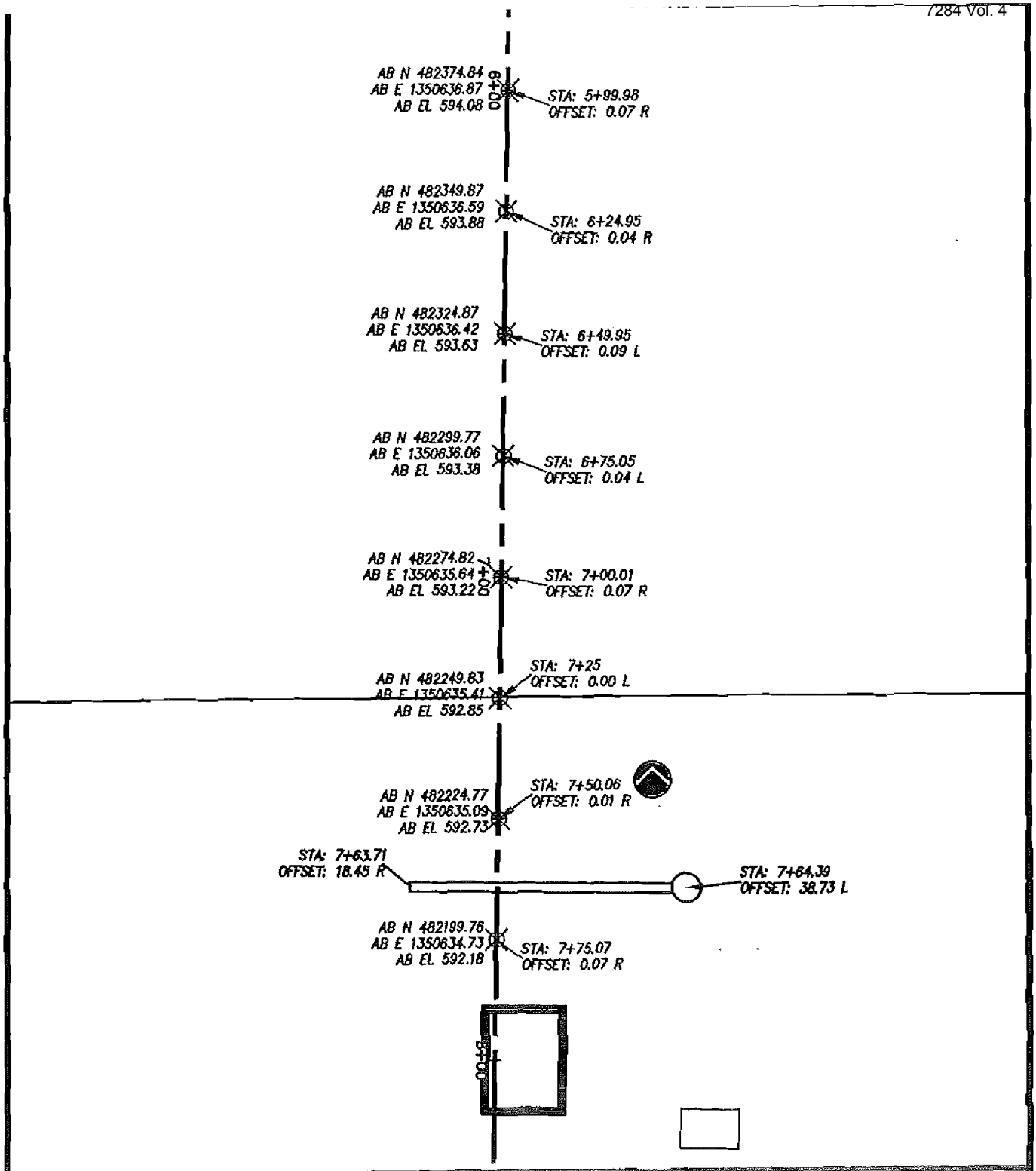

BAUMANN ENGINEERING
10170 INTERNATIONAL BLVD.
WORLD PARK
CINCINNATI, OHIO 45246
VOICE (513) 860.3999
FAX (513) 860.0287
EMAIL: LBAUMANN@ONE.NET

ENHANCED PERMANENT LEACHATE TRANSMISSION SYSTEM
CONTRACT # FCS-641
THE STAVER GROUP, INC.

TOP OF PIPE AS-BUILT

PROJECT:	DATE:	
20120	9.29.00	2/2

H:\20120FER\ASBUILTS\20120ABL.dwg, 0(2), 11/10/00 04:57:49 PM, 1:1

Spectra Precision Software, Inc.
5901 Peachtree-Dunwoody Road, N.E.
Atlanta, GA 30328-5548

Fri, Sep 29, 2000

STAKEOUT REPORT
Design Area File: C:\staver\0120-25.are
Staking Job File: C:\staver\0929AB2.job

==========

AS-BUILT TOP OF PIPE STATION 9+75 TO 11+00
ACROSS HAUL ROAD
BAUMANN ENGINEERING
THOMAS BAUMANN PS

==========

Point No.	Design Northing	Design Easting	Design Elevation	Staked Elevation	Delta North	Delta East	Cut	Fill
814	481999.846	1350632.354	589.750	590.819	0.040	-0.100	1.069	
Point No.	Design Northing	Design Easting	Design Elevation	Staked Elevation	Delta North	Delta East	Cut	Fill
815	481974.848	1350632.048	589.550	590.606	0.070	0.090	1.056	
Point No.	Design Northing	Design Easting	Design Elevation	Staked Elevation	Delta North	Delta East	Cut	Fill
816	481949.850	1350631.743	589.350	590.289	-0.050	-0.260	0.939	
Point No.	Design Northing	Design Easting	Design Elevation	Staked Elevation	Delta North	Delta East	Cut	Fill
817	481924.851	1350631.437	589.160	590.222	0.010	0.030	1.062	
Point No.	Design Northing	Design Easting	Design Elevation	Staked Elevation	Delta North	Delta East	Cut	Fill
818	481899.853	1350631.132	588.960	589.957	-0.010	-0.080	0.997	
Point No.	Design Northing	Design Easting	Design Elevation	Staked Elevation	Delta North	Delta East	Cut	Fill
819	481874.855	1350630.826	588.760	589.829	-0.040	-0.150	1.069	

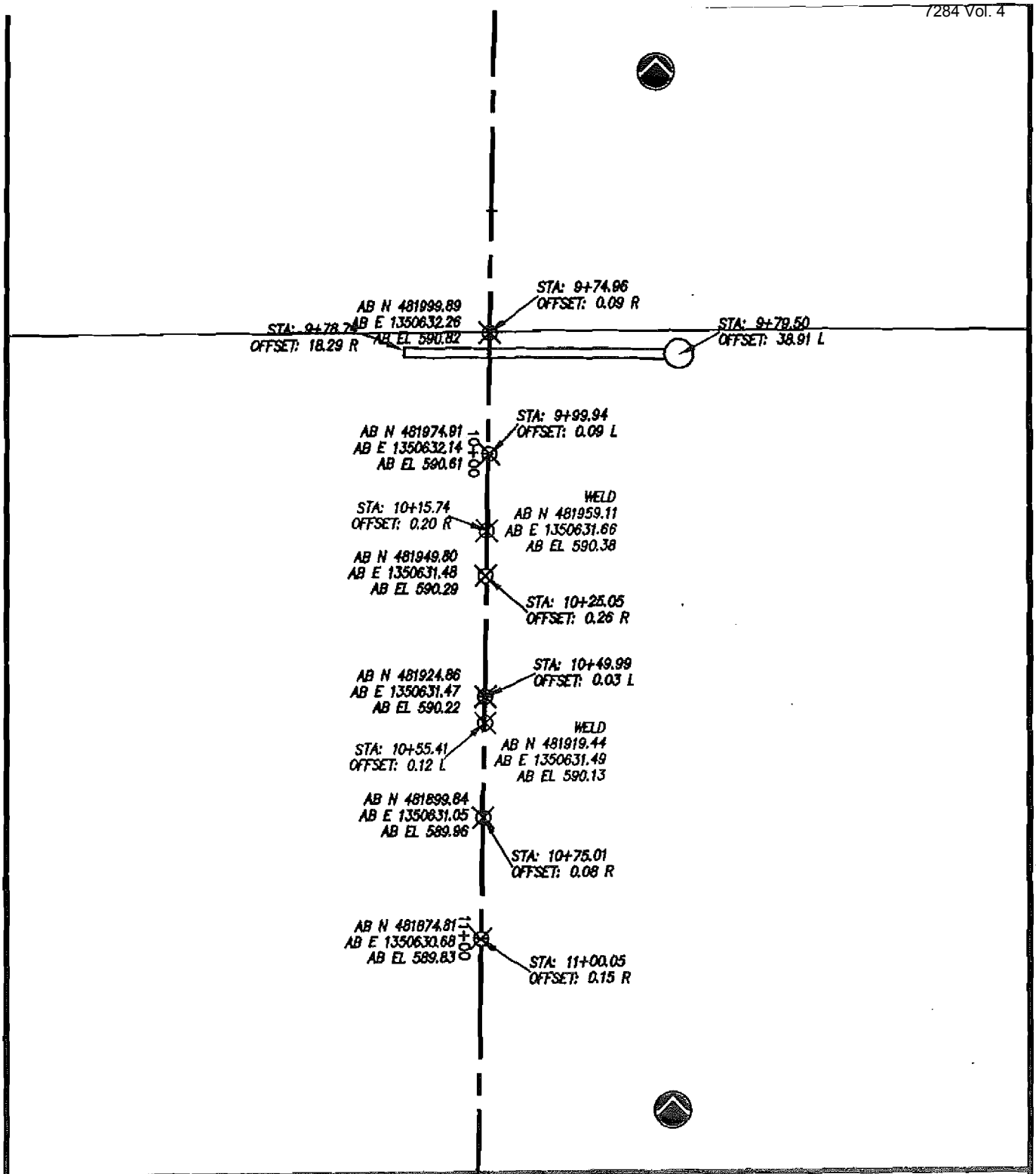

BAUMANN ENGINEERING
10170 INTERNATIONAL BLVD.
WORLD PARK
CINCINNATI, OHIO 45246
VOICE (513) 860.3999
FAX (513) 860.0287
EMAIL: LBAUMANN@ONE.NET

ENHANCED PERMANENT LEACHATE TRANSMISSION SYSTEM
CONTRACT # FCS-641
THE STAVER GROUP, INC.

TOP OF PIPE AS-BUILT
WELD AS-BUILT

PROJECT:	DATE:	
20120	9.29.00	1/1

H:\20120FER\ASBUILTS\20120ABL.dwg, 002, 11/10/00 04:57:08 PM, 1:1

BAUMANN ENGINEERING

CIVIL ENGINEERING • LAND PLANNING • LAND SURVEYING

Surveyor's Log

B.E. Project #: 20120

Project: Enhanced Permanent Leachate Transmission System Contract # FSC-641

Site: Fernald Environmental Management Project

Client: The Staver Group, Inc.

Date: 9/15/2000

LOG:

As-built top of pipe between VH2 AND VH3.

ATTACHMENTS: CUT SHEET OF AS-BUILT AND RAW DATA FILE 0915AB

Entered By: Thomas P. Baumann, PS
State of Ohio P.S # 7450

10170 INTERNATIONAL BOULEVARD • CINCINNATI, OHIO 45246
VOICE (513) 860-3999 • FAX (513) 860-0287
EMAIL: LBAUMANN@ONE.NET
WWW.BAUMANNENG.COM

Spectra Precision Software, Inc.
5901 Peachtree-Dunwoody Road, N.E.
Atlanta, GA 30328-5548

Fri, Sep 15, 2000

STAKEOUT REPORT
Design Area File: C:\staver\0120-25.are
Staking Job File: C:\staver\0915AB.job

AS-BUILT TOP PIPE BETWEEN VH-2 AND VH-3
BAUMANN ENGINEERING
THOMAS BAUMANN P.S.

Point No.	Design Northing	Design Easting	Design Elevation	Staked Elevation	Delta North	Delta East	Cut	Fill
792	482549.805	1350639.075	593.890	595.105	0.100	0.560	1.215	
Point No.	Design Northing	Design Easting	Design Elevation	Staked Elevation	Delta North	Delta East	Cut	Fill
793	482524.807	1350638.770	593.740	594.924	-0.030	-0.050	1.184	
Point No.	Design Northing	Design Easting	Design Elevation	Staked Elevation	Delta North	Delta East	Cut	Fill
794	482499.808	1350638.464	593.540	594.755	-0.140	-0.290	1.215	
Point No.	Design Northing	Design Easting	Design Elevation	Staked Elevation	Delta North	Delta East	Cut	Fill
795	482474.810	1350638.159	593.350	594.574	-0.070	0.080	1.224	
Point No.	Design Northing	Design Easting	Design Elevation	Staked Elevation	Delta North	Delta East	Cut	Fill
796	482449.812	1350637.853	593.150	594.380	0.400	0.510	1.230	
Point No.	Design Northing	Design Easting	Design Elevation	Staked Elevation	Delta North	Delta East	Cut	Fill
797	482424.814	1350637.548	592.950	594.197	-0.330	0.720	1.247	
Point No.	Design Northing	Design Easting	Design Elevation	Staked Elevation	Delta North	Delta East	Cut	Fill
798	482399.816	1350637.242	592.750	593.946	-0.040	0.420	1.196	
Point No.	Design Northing	Design Easting	Design Elevation	Staked Elevation	Delta North	Delta East	Cut	Fill
799	482374.818	1350636.936	592.550	593.795	-0.080	0.390	1.245	
Point No.	Design Northing	Design Easting	Design Elevation	Staked Elevation	Delta North	Delta East	Cut	Fill

800	482349.820	1350636.631	592.350	593.647	-0.060	0.450	1.297	
Point	Design	Design	Design	Staked	Delta	Delta		
No.	Northing	Easting	Elevation	Elevation	North	East	Cut	Fill
801	482324.822	1350636.325	592.160	593.361	-0.040	0.400	1.201	
Point	Design	Design	Design	Staked	Delta	Delta		
No.	Northing	Easting	Elevation	Elevation	North	East	Cut	Fill
802	482299.823	1350636.020	591.960	593.198	0.000	-0.010	1.238	
Point	Design	Design	Design	Staked	Delta	Delta		
No.	Northing	Easting	Elevation	Elevation	North	East	Cut	Fill
803	482274.825	1350635.714	591.760	593.038	0.030	-0.100	1.278	
Point	Design	Design	Design	Staked	Delta	Delta		
No.	Northing	Easting	Elevation	Elevation	North	East	Cut	Fill
804	482249.827	1350635.409	591.560	592.736	-0.020	0.440	1.176	
Point	Design	Design	Design	Staked	Delta	Delta		
No.	Northing	Easting	Elevation	Elevation	North	East	Cut	Fill
805	482224.829	1350635.103	591.360	592.616	0.000	0.510	1.256	
Point	Design	Design	Design	Staked	Delta	Delta		
No.	Northing	Easting	Elevation	Elevation	North	East	Cut	Fill
806	482199.831	1350634.798	591.200	592.269	-0.040	0.180	1.069	

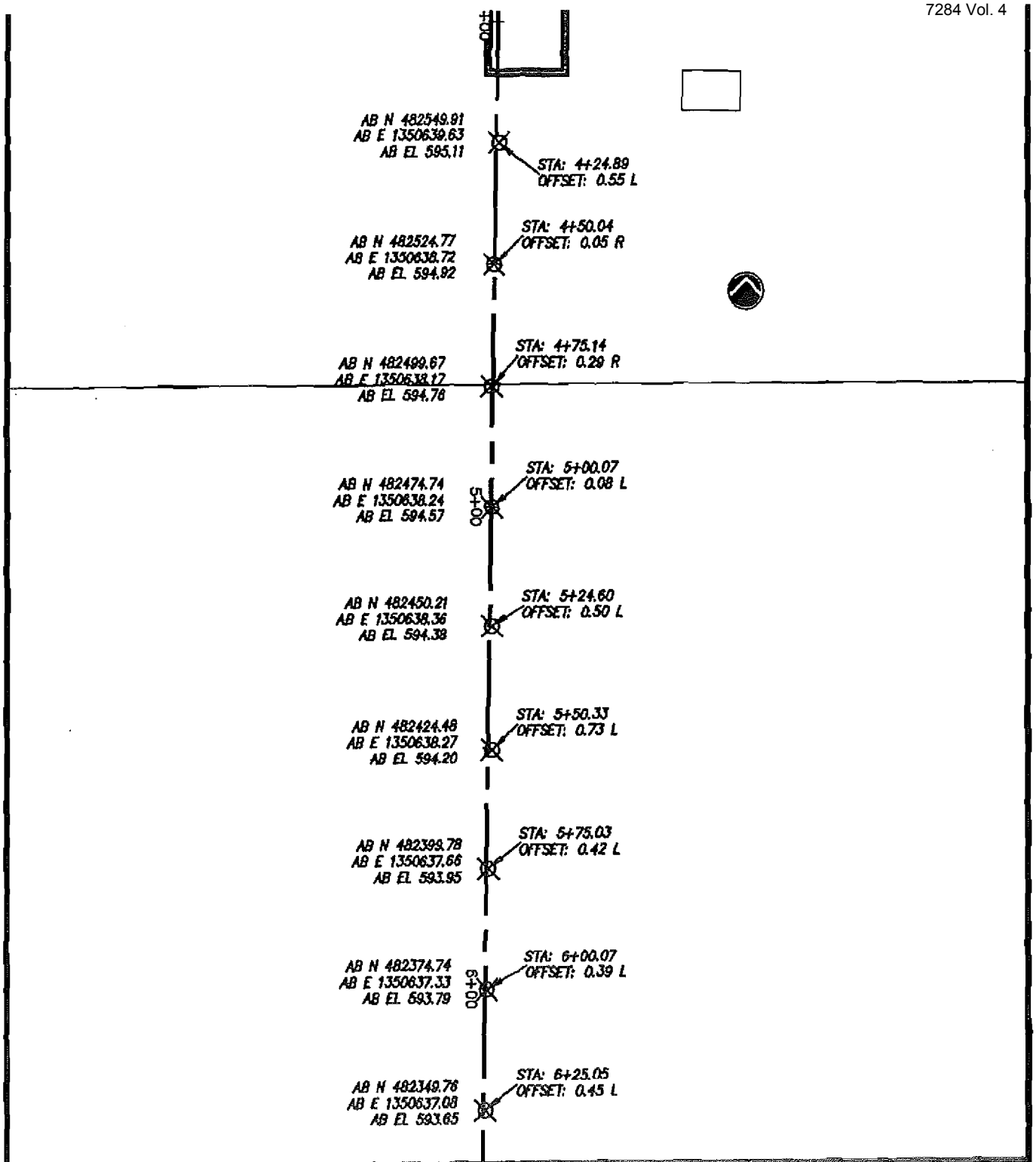

BAUMANN ENGINEERING
10170 INTERNATIONAL BLVD.
WORLD PARK
CINCINNATI, OHIO 45246
VOICE (513) 860.3999
FAX (513) 860.0287
EMAIL: LBAUMANN@ONE.NET

ENHANCED PERMANENT LEACHATE TRANSMISSION SYSTEM
CONTRACT # FCS-641
THE STAVER GROUP, INC.

TOP OF PIPE AS-BUILT

PROJECT:	DATE:	
20120	~~9.28.00~~ 9-15-00	1/2

H:\20120FER\ASBUILTS\20120ABL.dwg,), 09/28/00 04:32:46 PM, 1:1

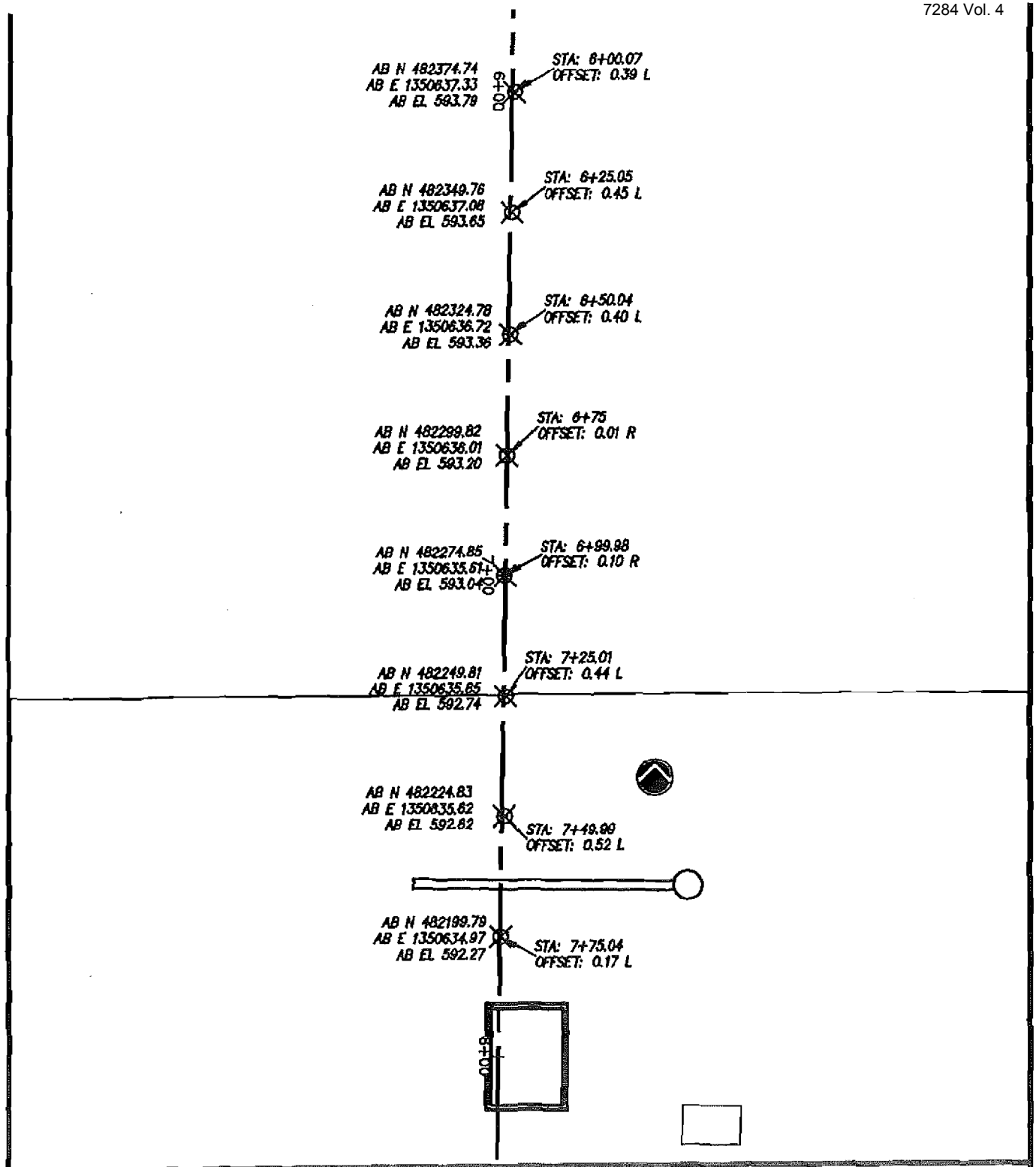

BAUMANN ENGINEERING
10170 INTERNATIONAL BLVD.
WORLD PARK
CINCINNATI, OHIO 45246
VOICE (513) 860.3999
FAX (513) 860.0287
EMAIL: LBAUMANN@ONE.NET

ENHANCED PERMANENT LEACHATE TRANSMISSION SYSTEM
CONTRACT # FCS-641
THE STAVER GROUP, INC.

TOP OF PIPE AS-BUILT

PROJECT:	DATE:	
20120	~~9-28-00~~	2/2

9-15-00

H:\20120FER\ASBUILTS\20120ABL.dwg, 2), 09/28/00 04:32:39 PM, 1:1

Spectra Precision Software, Inc.
5901 Peachtree-Dunwoody Road, N.E.
Atlanta, GA 30328-5548

Wed, Oct 04, 2000

STAKEOUT REPORT
Design Area File: C:\staver\0120-25.are
Staking Job File: C:\staver\1004AB.job

==========

AS-BUILT TOP PIPE VH-3 TO VH-4 NORTH AND SOUTH OF HAUL ROAD
BAUMANN ENGINEERING
THOMAS P. BAUMANN

==========

Point No.	Design Northing	Design Easting	Design Elevation	Staked Elevation	Delta North	Delta East	Cut	Fill
808	482149.835	1350634.187	590.890	591.939	0.030	0.190	1.049	
Point No.	Design Northing	Design Easting	Design Elevation	Staked Elevation	Delta North	Delta East	Cut	Fill
809	482124.836	1350633.881	590.740	591.777	0.010	-0.020	1.037	
Point No.	Design Northing	Design Easting	Design Elevation	Staked Elevation	Delta North	Delta East	Cut	Fill
810	482099.838	1350633.576	590.540	591.624	-0.040	-0.170	1.084	
Point No.	Design Northing	Design Easting	Design Elevation	Staked Elevation	Delta North	Delta East	Cut	Fill
811	482074.840	1350633.270	590.350	591.487	0.030	0.140	1.137	
Point No.	Design Northing	Design Easting	Design Elevation	Staked Elevation	Delta North	Delta East	Cut	Fill
812	482049.842	1350632.965	590.150	591.244	0.040	0.180	1.094	
Point No.	Design Northing	Design Easting	Design Elevation	Staked Elevation	Delta North	Delta East	Cut	Fill
813	482024.844	1350632.659	589.950	590.976	-0.030	-0.110	1.026	
Point No.	Design Northing	Design Easting	Design Elevation	Staked Elevation	Delta North	Delta East	Cut	Fill
814	481999.846	1350632.354	589.750	590.803	-0.060	-0.090	1.053	
Point No.	Design Northing	Design Easting	Design Elevation	Staked Elevation	Delta North	Delta East	Cut	Fill
815	481974.848	1350632.048	589.550	590.540	-0.010	0.040	0.990	
Point	Design	Design	Design	Staked	Delta	Delta		

No.	Northing	Easting	Elevation	Elevation	North	East	Cut	Fill
818	481899.853	1350631.132	588.960	589.941	-0.040	-0.090	0.981	
Point	Design	Design	Design	Staked	Delta	Delta		
No.	Northing	Easting	Elevation	Elevation	North	East	Cut	Fill
819	481874.855	1350630.826	588.760	589.792	-0.080	-0.080	1.032	
Point	Design	Design	Design	Staked	Delta	Delta		
No.	Northing	Easting	Elevation	Elevation	North	East	Cut	Fill
820	481849.857	1350630.521	588.560	589.660	-0.070	-0.210	1.100	
Point	Design	Design	Design	Staked	Delta	Delta		
No.	Northing	Easting	Elevation	Elevation	North	East	Cut	Fill
821	481824.859	1350630.215	588.360	589.416	-0.030	-0.160	1.056	
Point	Design	Design	Design	Staked	Delta	Delta		
No.	Northing	Easting	Elevation	Elevation	North	East	Cut	Fill
822	481799.861	1350629.909	588.16	589.000	0.040	0.100	0.840	

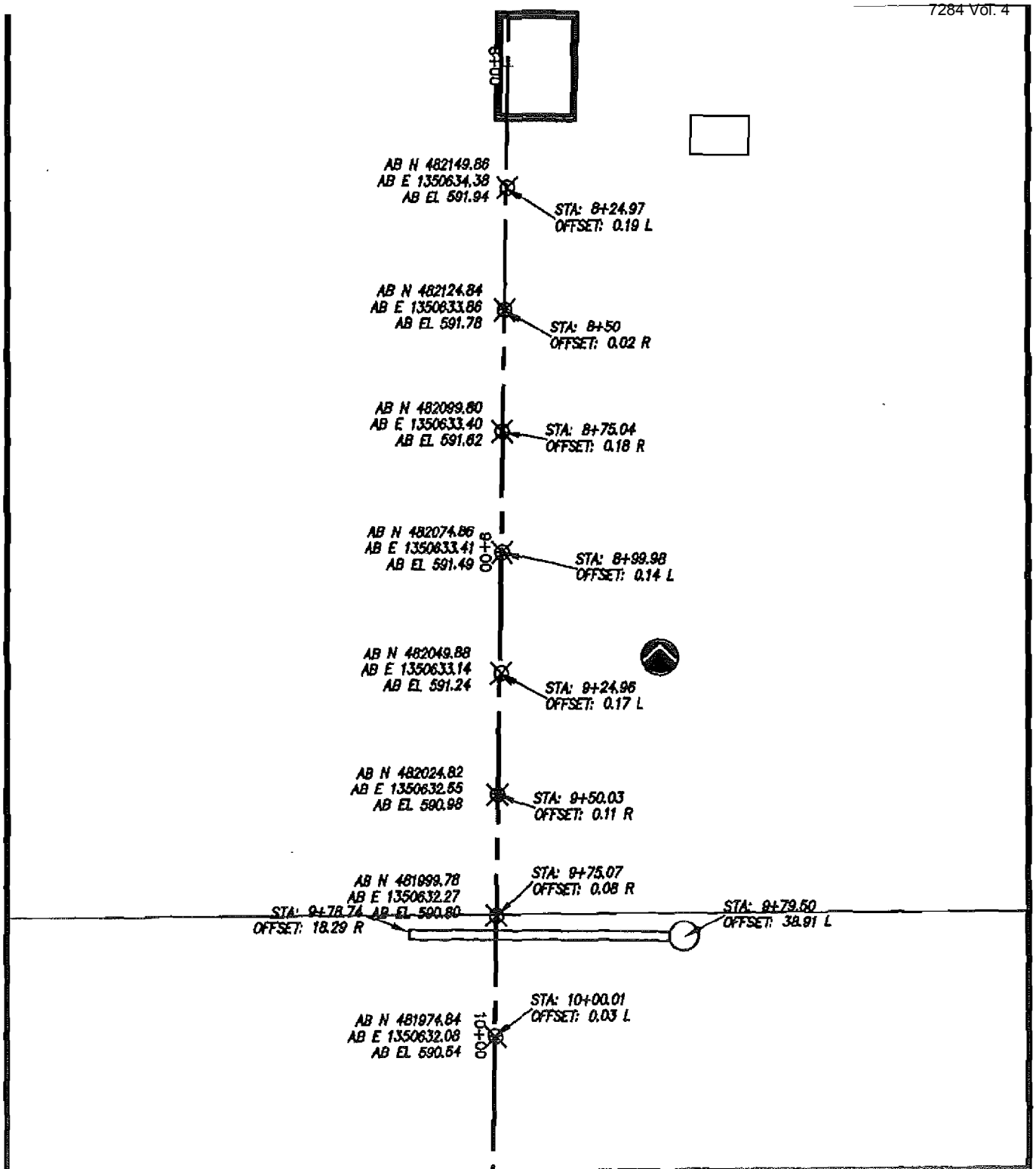

BAUMANN ENGINEERING
10170 INTERNATIONAL BLVD.
WORLD PARK
CINCINNATI, OHIO 45246
VOICE (513) 860.3999
FAX (513) 860.0287
EMAIL: LBAUMANN@ONE.NET

ENHANCED PERMANENT LEACHATE TRANSMISSION SYSTEM
CONTRACT # FCS-641
THE STAVER GROUP, INC.

TOP OF PIPE AS-BUILT

PROJECT:	DATE:	
20120	10.04.00	1/2

H:\20120FER\ASBUILTS\20120ABL.dwg, (1), 11/10/00 04:57:54 PM, 1:1

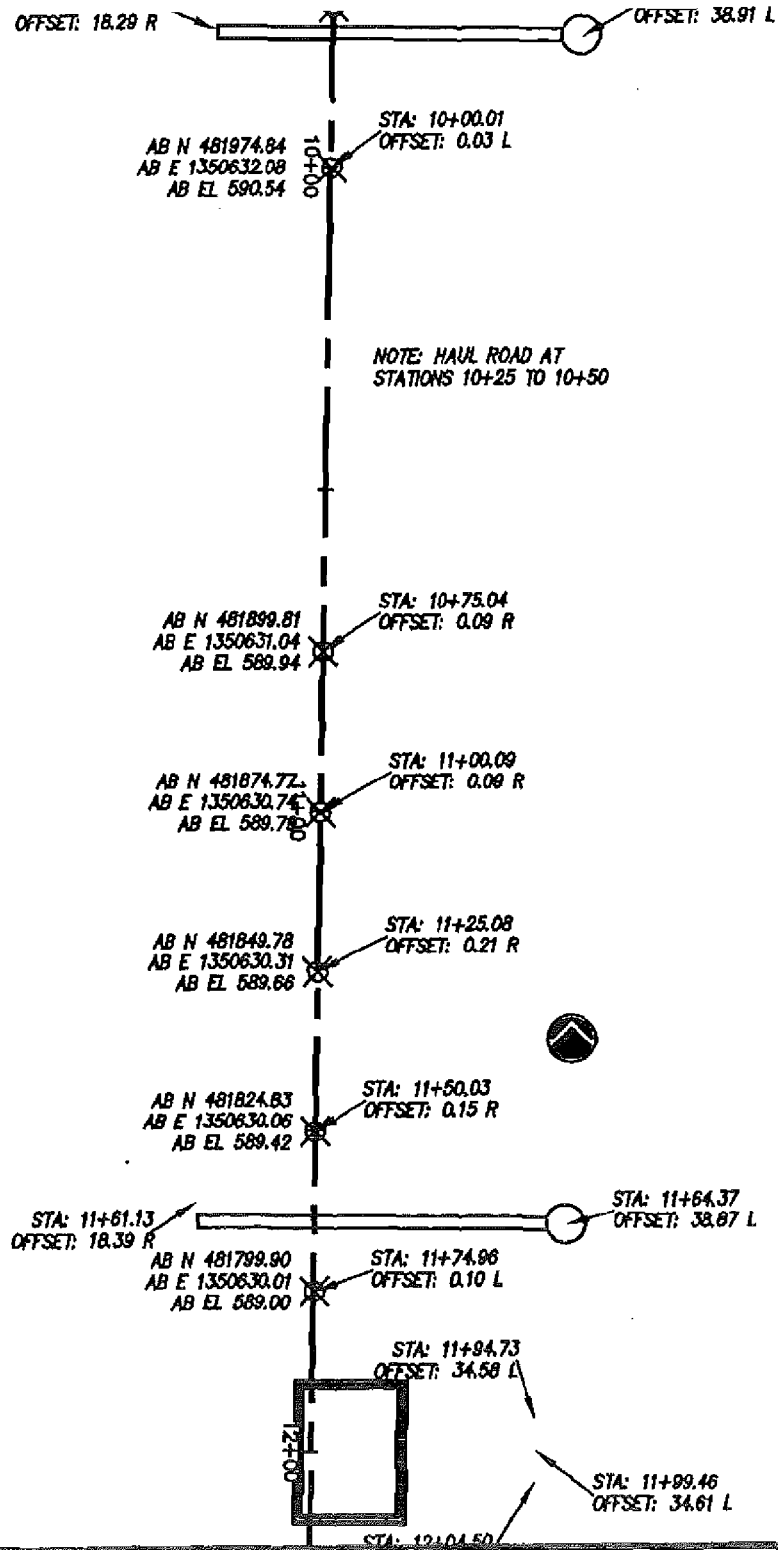

BAUMANN ENGINEERING
10170 INTERNATIONAL BLVD.
WORLD PARK
CINCINNATI, OHIO 45246
VOICE (513) 860.3999
FAX (513) 860.0287
EMAIL: LBAUMANN@ONE.NET

ENHANCED PERMANENT LEACHATE TRANSMISSION SYSTEM
CONTRACT # FCS-641
THE STAVER GROUP, INC.

TOP OF PIPE AS-BUILT

PROJECT:	DATE:	
20120	10.04.00	2/2

H:\20120FER\ASBUILTS\20120ABL.dwg, (2), 11/10/00 04:57:14 PM, 1:1

Spectra Precision Software, Inc.
5901 Peachtree-Dunwoody Road, N.E.
Atlanta, GA 30328-5548

Tue, Oct 24, 2000

STAKEOUT REPORT
Design Area File: C:\staver\0120-25.are
Staking Job File: C:\staver\1024AB.job

AS-BUILT TOP PIPE VH-4 TO VH5
BAUMANN ENGINEERING
THOMAS P. BAUMANN P.S.

Point	Design	Design	Design	Staked	Delta	Delta		
No.	Northing	Easting	Elevation	Elevation	North	East	Cut	Fill
824	481749.864	1350629.298	587.890	588.868	-0.030	0.080	0.978	
Point	Design	Design	Design	Staked	Delta	Delta		
No.	Northing	Easting	Elevation	Elevation	North	East	Cut	Fill
825	481724.866	1350628.993	587.740	588.780	0.020	0.030	1.040	
Point	Design	Design	Design	Staked	Delta	Delta		
No.	Northing	Easting	Elevation	Elevation	North	East	Cut	Fill
826	481699.868	1350628.687	587.540	588.610	-0.040	-0.030	1.070	
Point	Design	Design	Design	Staked	Delta	Delta		
No.	Northing	Easting	Elevation	Elevation	North	East	Cut	Fill
827	481674.870	1350628.382	587.350	588.327	0.000	-0.010	0.977	
Point	Design	Design	Design	Staked	Delta	Delta		
No.	Northing	Easting	Elevation	Elevation	North	East	Cut	Fill
828	481649.872	1350628.076	587.150	588.196	0.040	0.100	1.046	
Point	Design	Design	Design	Staked	Delta	Delta		
No.	Northing	Easting	Elevation	Elevation	North	East	Cut	Fill
829	481624.874	1350627.771	586.950	587.971	0.030	0.030	1.021	
Point	Design	Design	Design	Staked	Delta	Delta		
No.	Northing	Easting	Elevation	Elevation	North	East	Cut	Fill
830	481599.876	1350627.465	586.750	587.708	0.060	0.120	0.958	
Point	Design	Design	Design	Staked	Delta	Delta		
No.	Northing	Easting	Elevation	Elevation	North	East	Cut	Fill
831	481574.878	1350627.160	586.550	587.523	-0.010	0.030	0.973	
Point	Design	Design	Design	Staked	Delta	Delta		

No.	Northing	Easting	Elevation	Elevation	North	East	Cut	Fill
832	481549.879	1350626.854	586.350	587.440	0.030	0.040	1.090	
Point	Design	Design	Design	Staked	Delta	Delta		
No.	Northing	Easting	Elevation	Elevation	North	East	Cut	Fill
833	481524.881	1350626.549	586.160	587.139	-0.010	-0.130	0.979	
Point	Design	Design	Design	Staked	Delta	Delta		
No.	Northing	Easting	Elevation	Elevation	North	East	Cut	Fill
834	481499.883	1350626.243	585.960	587.010	0.050	-0.170	1.050	
Point	Design	Design	Design	Staked	Delta	Delta		
No.	Northing	Easting	Elevation	Elevation	North	East	Cut	Fill
835	481474.885	1350625.938	585.760	586.804	0.010	-0.070	1.044	
Point	Design	Design	Design	Staked	Delta	Delta		
No.	Northing	Easting	Elevation	Elevation	North	East	Cut	Fill
836	481449.887	1350625.632	585.560	586.630	0.010	-0.220	1.070	
Point	Design	Design	Design	Staked	Delta	Delta		
No.	Northing	Easting	Elevation	Elevation	North	East	Cut	Fill
837	481424.889	1350625.327	585.360	586.353	0.090	-0.200	0.993	
Point	Design	Design	Design	Staked	Delta	Delta		
No.	Northing	Easting	Elevation	Elevation	North	East	Cut	Fill
838	481399.891	1350625.021	585.200	586.030	-0.080	-0.160	0.830	

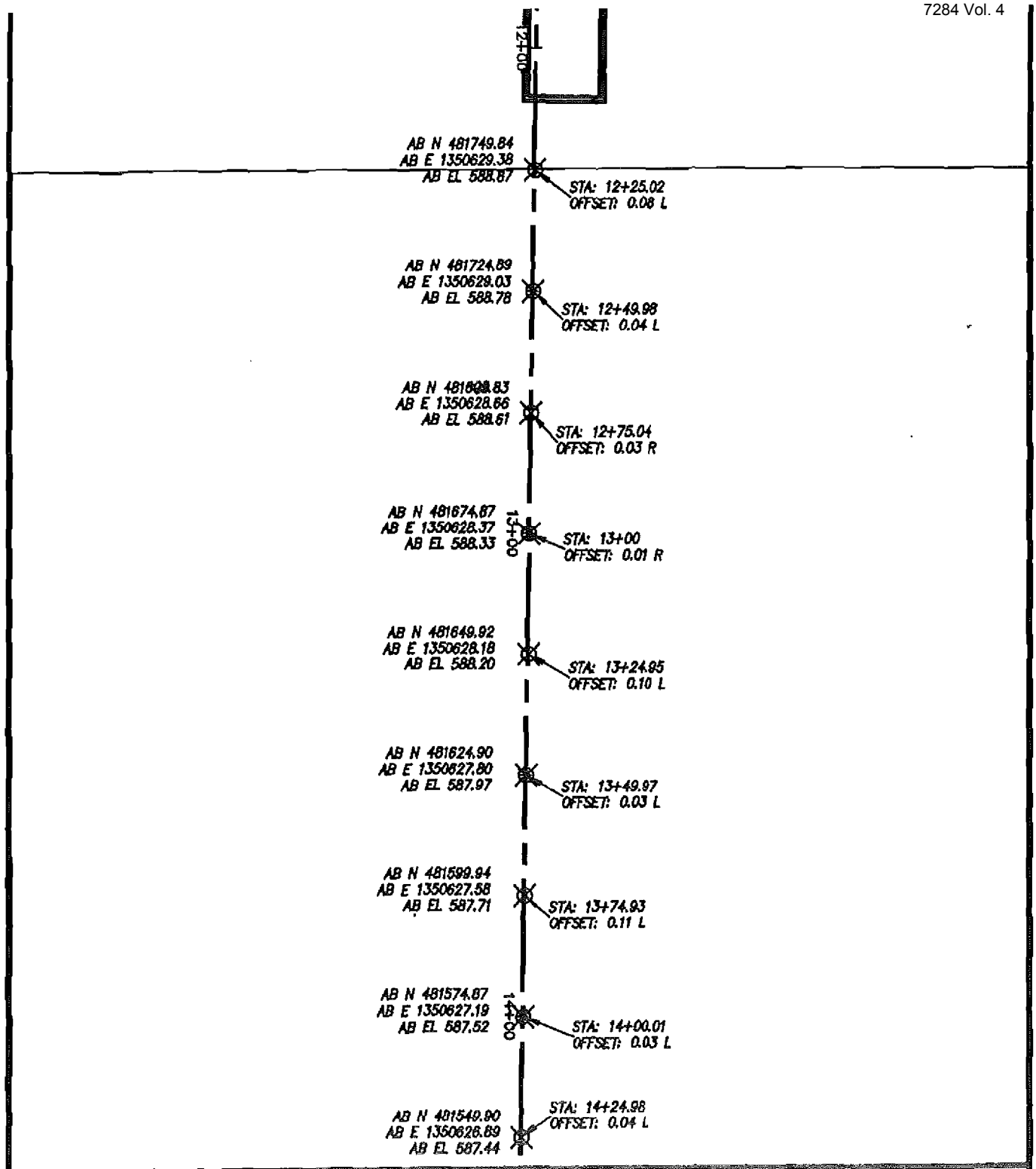

BAUMANN ENGINEERING
10170 INTERNATIONAL BLVD.
WORLD PARK
CINCINNATI, OHIO 45246
VOICE (513) 860.3999
FAX (513) 860.0287
EMAIL: LBAUMANN@ONE.NET

ENHANCED PERMANENT LEACHATE TRANSMISSION SYSTEM
CONTRACT # FCS-641
THE STAVER GROUP, INC.

TOP OF PIPE AS-BUILT

PROJECT:	DATE:	
20120	10.24.00	1/2

H:\20120FER\ASBUILTS\20120ABL.dwg. k(1), 11/09/00 06:09:11 PM, 1:1

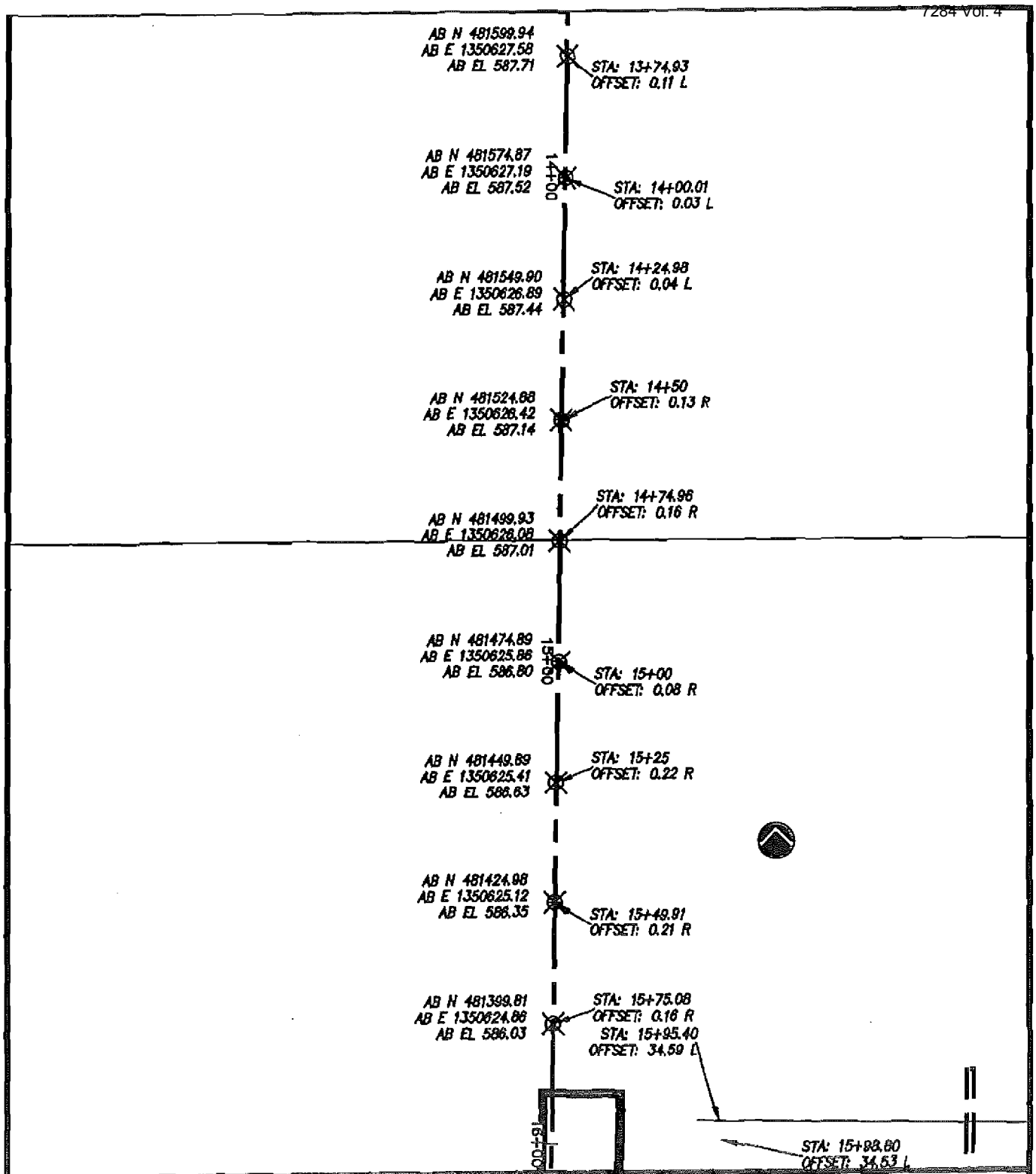

BAUMANN ENGINEERING
10170 INTERNATIONAL BLVD.
WORLD PARK
CINCINNATI, OHIO 45246
VOICE (513) 860.3999
FAX (513) 860.0287
EMAIL: LBAUMANN@ONE.NET

ENHANCED PERMANENT LEACHATE TRANSMISSION SYSTEM
CONTRACT # FCS-641
THE STAVER GROUP, INC.

TOP OF PIPE AS-BUILT

PROJECT:	DATE:	
20120	10.24.00	2/2

H:\20120FER\ASBUILTS\20120ABL.dwg, (2), 11/10/00 04:57:27 PM, 1:1

PT#841=16+50 EL=585.516
PT#853=19+50 EL=583.161
300' DIF 2.355

$\frac{2.355}{300} = 0.00785 \times 100 = 0.785\%$

Spectra Precision Software, Inc.
5901 Peachtree-Dunwoody Road, N.E.
Atlanta, GA 30328-5548

Tue, Oct 31, 2000

STAKEOUT REPORT
Design Area File: C:\staver\0120-25.are
Staking Job File: C:\staver\1031AB2.job

AS-BUILT TOP PIPE BETWEEN VH5 & VH6
BAUMANN ENGINEERING
THOMAS P. BAUMANN PS

Point No.	Design Northing	Design Easting	Design Elevation	Staked Elevation	Delta North	Delta East	Cut	Fill
840	481349.894	1350624.410	584.690	585.809	-0.050	-0.010	1.119	
Point No.	Design Northing	Design Easting	Design Elevation	Staked Elevation	Delta North	Delta East	Cut	Fill
841	481324.896	1350624.105	584.740	585.516	0.010	-0.110	0.776	
Point No.	Design Northing	Design Easting	Design Elevation	Staked Elevation	Delta North	Delta East	Cut	Fill
842	481299.898	1350623.799	584.540	585.541	-0.020	-0.060	1.001	
Point No.	Design Northing	Design Easting	Design Elevation	Staked Elevation	Delta North	Delta East	Cut	Fill
843	481274.900	1350623.494	584.350	585.310	0.020	0.200	0.960	
Point No.	Design Northing	Design Easting	Design Elevation	Staked Elevation	Delta North	Delta East	Cut	Fill
844	481249.902	1350623.188	584.150	584.917	-0.030	-0.080	0.767	
Point No.	Design Northing	Design Easting	Design Elevation	Staked Elevation	Delta North	Delta East	Cut	Fill
845	481224.904	1350622.882	583.950	584.889	0.010	0.210	0.939	
Point No.	Design Northing	Design Easting	Design Elevation	Staked Elevation	Delta North	Delta East	Cut	Fill
846	481199.906	1350622.577	583.750	584.710	-0.030	0.260	0.960	
Point No.	Design Northing	Design Easting	Design Elevation	Staked Elevation	Delta North	Delta East	Cut	Fill
847	481174.907	1350622.271	583.550	584.449	0.040	0.230	0.899	
Point No.	Design Northing	Design Easting	Design Elevation	Staked Elevation	Delta North	Delta East	Cut	Fill

848	481149.909	1350621.966	583.350	584.334	0.270	0.420	0.984	
Point No.	Design Northing	Design Easting	Design Elevation	Staked Elevation	Delta North	Delta East	Cut	Fill
849	481124.911	1350621.660	583.160	583.998	-0.300	0.320	0.838	
Point No.	Design Northing	Design Easting	Design Elevation	Staked Elevation	Delta North	Delta East	Cut	Fill
850	481099.913	1350621.355	582.960	583.836	-0.170	0.580	0.876	
Point No.	Design Northing	Design Easting	Design Elevation	Staked Elevation	Delta North	Delta East	Cut	Fill
851	481074.915	1350621.049	582.760	583.586	0.060	-0.120	0.826	
Point No.	Design Northing	Design Easting	Design Elevation	Staked Elevation	Delta North	Delta East	Cut	Fill
852	481049.917	1350620.744	582.560	583.435	0.040	-0.240	0.875	
Point No.	Design Northing	Design Easting	Design Elevation	Staked Elevation	Delta North	Delta East	Cut	Fill
853	481024.919	1350620.438	582.360	583.161	0.030	0.040	0.801	
Point No.	Design Northing	Design Easting	Design Elevation	Staked Elevation	Delta North	Delta East	Cut	Fill
854	480999.921	1350620.133	582.200	583.055	-0.010	-0.040	0.855	

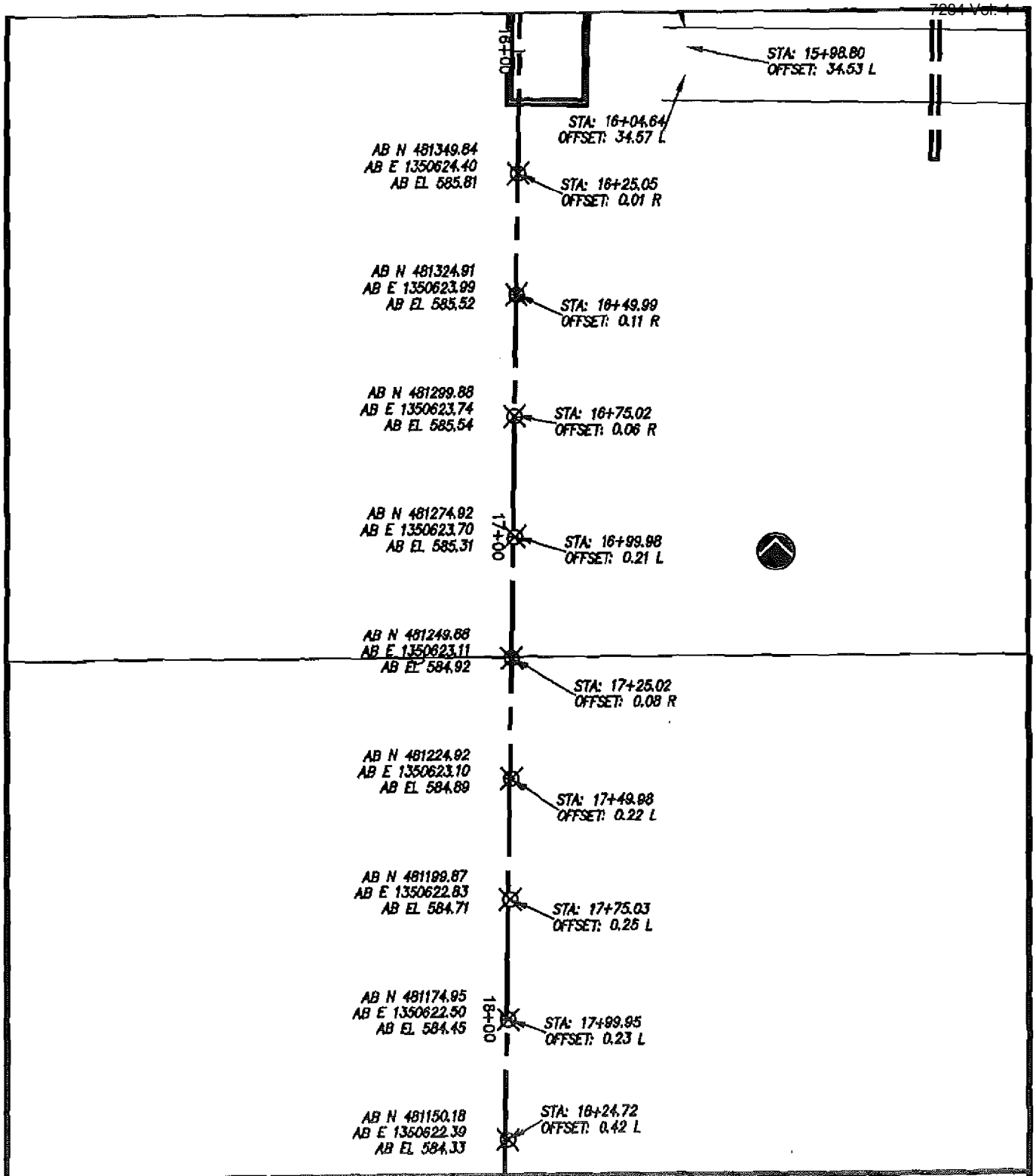

H:\20120FER\ASBUILTS\20120ABL.dwg, (1), 11/10/00 04:57:32 PM, 1:1

BAUMANN ENGINEERING
10170 INTERNATIONAL BLVD.
WORLD PARK
CINCINNATI, OHIO 45246
VOICE (513) 860.3999
FAX (513) 860.0287
EMAIL: LBAUMANN@ONE.NET

ENHANCED PERMANENT LEACHATE TRANSMISSION SYSTEM
CONTRACT # FCS-641
THE STAVER GROUP, INC.

TOP OF PIPE AS-BUILT

PROJECT:	DATE:	
20120	10.31.00	1/2

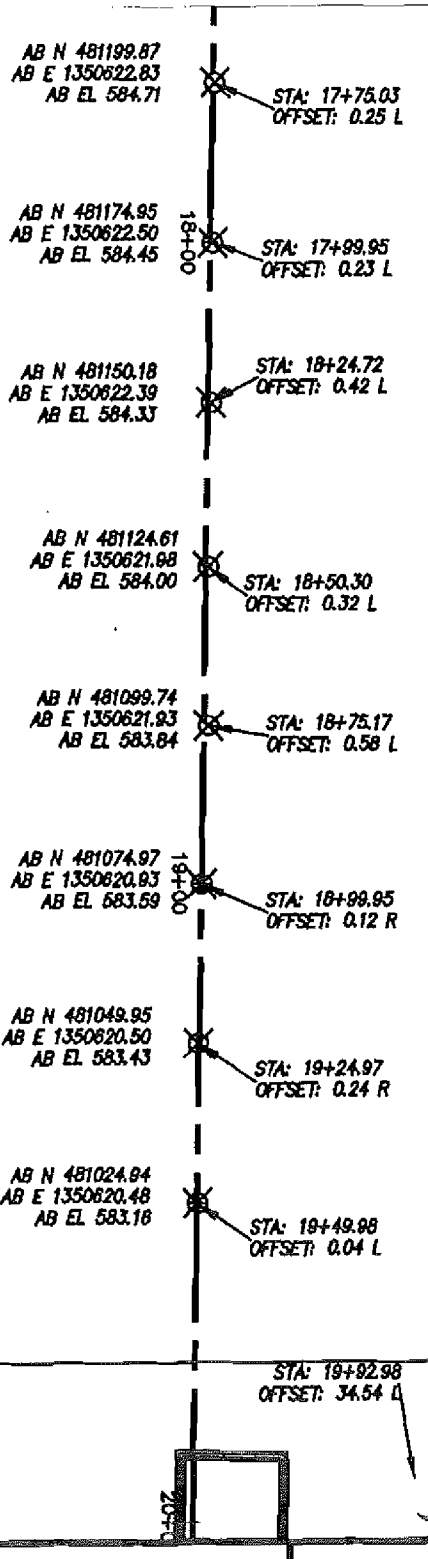

BAUMANN ENGINEERING
10170 INTERNATIONAL BLVD.
WORLD PARK
CINCINNATI, OHIO 45246
VOICE (513) 860.3999
FAX (513) 860.0287
EMAIL: LBAUMANN@ONE.NET

ENHANCED PERMANENT LEACHATE TRANSMISSION SYSTEM
CONTRACT # FCS-641
THE STAVER GROUP, INC.

TOP OF PIPE AS-BUILT

PROJECT:	DATE:	
20120	10.31.00	2/2

H:\20120FER\ASBUILTS\20120ABL.dwg, 1(2), 11/10/00 04:57:38 PM, 1:1

PT #856 EL = 582.644 20+25
PT #857 EL = 582.258 20+50
DFF 0.386 25' LF

$\frac{0.386}{25'} = 0.0154 \times 100 = 1.54\%$

Spectra ecision Software, Inc.
5901 Peachtree-Dunwoody Road, N.E.
Atlanta, GA 30328-5548

Sun, Jan 14, 2001

STAKEOUT REPORT
Design Area File: C:\STAVER\0120-25.are
Staking Job File: C:\STAVER\0112AB.job

==========

TOP OF PIPE AS-BUILT STATION 20+25 TO 20+50
BAUMANN ENGINEERING
THOMAS P. BAUMANN PS

==========

Point No.	Design Northing	Design Easting	Design Elevation	Staked Elevation	Delta North	Delta East	Cut	Fill
856	480949.924	1350619.522	581.770	582.644	-0.050	0.000	0.874	
Point No.	Design Northing	Design Easting	Design Elevation	Staked Elevation	Delta North	Delta East	Cut	Fill
857	480924.926	1350619.216	581.500	582.258	-0.050	0.590	0.758	

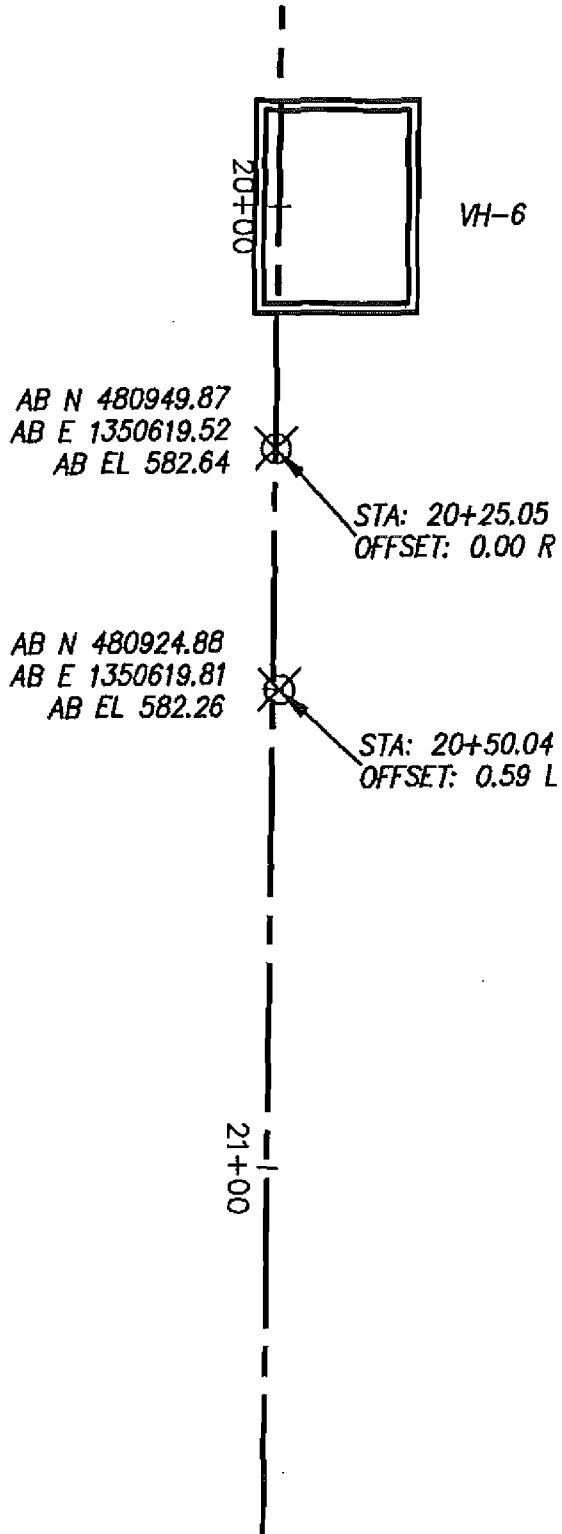

H:\20120FER\ASBUILTS\20120ABL.dwg, AP 12/15/01 05:49:34 PM, 1:1

BAUMANN ENGINEERING
10170 INTERNATIONAL BLVD.
WORLD PARK
CINCINNATI, OHIO 45246
VOICE (513) 860.3999
FAX (513) 860.0287
EMAIL: LBAUMANN@ONE.NET

ENHANCED PERMANENT LEACHATE TRANSMISSION SYSTEM
CONTRACT # FCS-641
THE STAVER GROUP, INC.

TOP OF PIPE AS-BUILT

PROJECT:	DATE:	
20120	01.12.01	1/1

PT#858 = 20+75 EL T/PIPE = 581.794
PT#867 = 23+00 EL T/PIPE = 578.827
225' LF
2.967' DIFF

$\frac{2.967}{225} = 0.132 \times 100 = 1.32\%$

Spectra cision Software, Inc.
5901 Pea ree-Dunwoody Road, N.E.
Atlanta, GA 30328-5548

Fri, Jan 05, 2001

STAKEOUT REPORT
Design Area File: C:\STAVER\0120-25.are
Staking Job File: C:\STAVER\0105AB.job

==========

TOP OF PIPE AS-BUILT STATION 20+75 TO 23+00
BAUMANN ENGINEERING
THOMAS P. BAUMANN PS

==========

Point No.	Design Northing	Design Easting	Design Elevation	Staked Elevation	Delta North	Delta East	Cut	Fill
858	480899.928	1350618.911	581.140	581.974	0.030	0.570	0.834	
Point No.	Design Northing	Design Easting	Design Elevation	Staked Elevation	Delta North	Delta East	Cut	Fill
859	480874.930	1350618.605	580.790	581.626	0.100	0.130	0.836	
Point No.	Design Northing	Design Easting	Design Elevation	Staked Elevation	Delta North	Delta East	Cut	Fill
860	480849.932	1350618.300	580.430	581.315	0.030	0.330	0.885	
Point No.	Design Northing	Design Easting	Design Elevation	Staked Elevation	Delta North	Delta East	Cut	Fill
861	480824.934	1350617.994	580.080	580.919	-0.040	0.230	0.839	
Point No.	Design Northing	Design Easting	Design Elevation	Staked Elevation	Delta North	Delta East	Cut	Fill
862	480799.935	1350617.689	579.720	580.614	0.080	0.080	0.894	
Point No.	Design Northing	Design Easting	Design Elevation	Staked Elevation	Delta North	Delta East	Cut	Fill
863	480774.937	1350617.383	579.370	580.218	0.130	0.340	0.848	
Point No.	Design Northing	Design Easting	Design Elevation	Staked Elevation	Delta North	Delta East	Cut	Fill
864	480749.939	1350617.078	579.010	579.924	0.200	0.240	0.914	
Point No.	Design Northing	Design Easting	Design Elevation	Staked Elevation	Delta North	Delta East	Cut	Fill
865	480724.941	1350616.772	578.660	579.572	0.040	0.100	0.912	
Point	Design	Design	Design	Staked	Delta	Delta		

No.	Northing	Easting	Elevation	El[illegible]ion	North	East	Cut	Fill
866	480699.943	1350616.467	578.300	57[illegible].6	-0.130	0.320	0.916	
Point	Design	Design	Design	Staked	Delta	Delta		
No.	Northing	Easting	Elevation	Elevation	North	East	Cut	Fill
867	480674.945	1350616.161	577.950	578.827	0.120	-0.470	0.877	

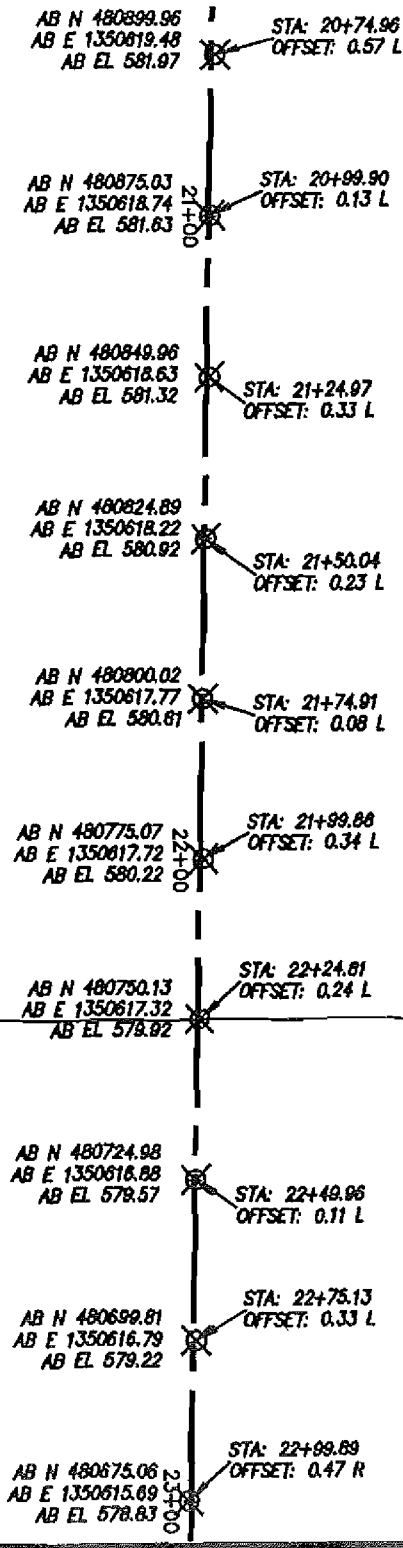

BAUMANN ENGINEERING

10170 INTERNATIONAL BLVD.
WORLD PARK
CINCINNATI, OHIO 45246
VOICE (513) 860.3999
FAX (513) 860.0287
EMAIL: LBAUMANN@ONE.NET

ENHANCED PERMANENT LEACHATE TRANSMISSION SYSTEM
CONTRACT # FCS-641
THE STAVER GROUP, INC.

TOP OF PIPE AS-BUILT

PROJECT:	DATE:	
20120	01.05.01	1/1

H:\20120FER\ASBUILTS\20120ABL.dwg, AB 02/15/01 05:51:03 PM, 1:1

Spectra P ision Software, Inc.
5901 Pea .ee-Dunwoody Road, N.E.
Atlanta, GA 30328-5548

Wed, Dec 27, 2000

PT# 878 25+75 } 250'

EL= 577.948

0.979 DIFF / 250' = 0.0039

0.0039 x 100 = 0.391%

STAKEOUT REPORT
Design Area File: C:\STAVER\0120-25.are
Staking Job File: C:\STAVER\1227F.job

==========

TOP PIPE AS-BUILTS STATION 23+25 TO 25+75
BAUMANN ENGINEERING
THOMAS P. BAUMANN PS

==========

Point No.	Design Northing	Design Easting	Design Elevation	Staked Elevation	Delta North	Delta East	Cut	Fill
868	480649.947	1350615.855	577.850	578.927	-0.320	-1.100	1.077	
Point No.	Design Northing	Design Easting	Design Elevation	Staked Elevation	Delta North	Delta East	Cut	Fill
869	480624.949	1350615.550	577.750	578.622	-0.260	-1.200	1.122	
Point No.	Design Northing	Design Easting	Design Elevation	Staked Elevation	Delta North	Delta East	Cut	Fill
870	480599.950	1350615.244	577.650	578.658	-0.070	-0.890	1.008	
Point No.	Design Northing	Design Easting	Design Elevation	Staked Elevation	Delta North	Delta East	Cut	Fill
871	480574.952	1350614.939	577.550	578.563	-0.220	-0.820	1.013	
Point No.	Design Northing	Design Easting	Design Elevation	Staked Elevation	Delta North	Delta East	Cut	Fill
872	480549.954	1350614.633	577.450	578.387	0.030	-0.120	0.937	
Point No.	Design Northing	Design Easting	Design Elevation	Staked Elevation	Delta North	Delta East	Cut	Fill
873	480525.055	1350616.513	577.350	578.470	0.010	0.000	1.120	
Point No.	Design Northing	Design Easting	Design Elevation	Staked Elevation	Delta North	Delta East	Cut	Fill
874	480500.188	1350619.082	577.250	578.278	0.030	-0.090	1.028	
Point No.	Design Northing	Design Easting	Design Elevation	Staked Elevation	Delta North	Delta East	Cut	Fill
875	480475.320	1350621.651	577.150	578.100	-0.020	0.290	0.950	
Point	Design	Design	Design	Staked	Delta	Delta		

No.	Northing	Easting	Elevation	Elevation	North	East	Cut	Fill
876	480450.452	1350624.220	577.050	578.1	-0.010	0.280	1.138	
Point No.	Design Northing	Design Easting	Design Elevation	Staked Elevation	Delta North	Delta East	Cut	Fill
877	480425.585	1350626.789	576.950	578.003	-0.050	0.250	1.053	
Point No.	Design Northing	Design Easting	Design Elevation	Staked Elevation	Delta North	Delta East	Cut	Fill
878	480400.717	1350629.358	576.850	577.948	-0.020	-0.120	1.098	

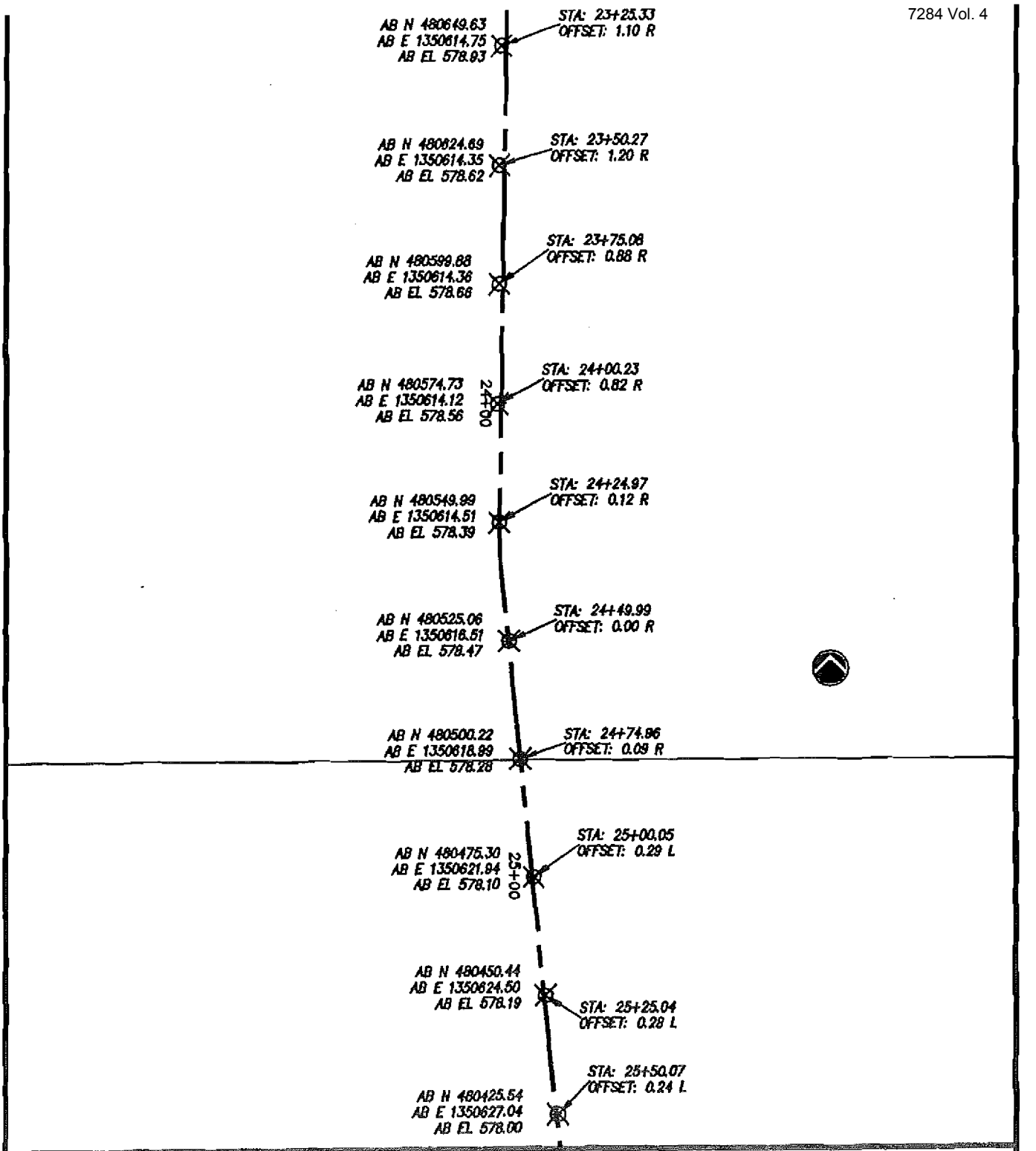

BAUMANN ENGINEERING
10170 INTERNATIONAL BLVD.
WORLD PARK
CINCINNATI, OHIO 45246
VOICE (513) 860.3999
FAX (513) 860.0287
EMAIL: LBAUMANN@ONE.NET

ENHANCED PERMANENT LEACHATE TRANSMISSION SYSTEM
CONTRACT # FCS-641
THE STAVER GROUP, INC.

TOP OF PIPE AS-BUILT

PROJECT:	DATE:	
20120	12.27.00	1/1

H:\20120FER\ASBUILTS\20120ABL.dwg, A/ 1, 02/15/01 05:58:18 PM, 1:1

Spectr ecision Software, Inc.
3901 Pe ntree-Dunwoody Road, N.E.
Atlanta, GA 30328-5548

Fri, Dec 15, 2000

150' DIF BET. PT# 879 - 885

DIF EL = 576.947
577.828

$\frac{0.881'}{150} = 0.00587 = 0.587\%$

STAKEOUT REPORT
Design Area File: F:\20120FER\as-blt\0120-25.are
Staking Job File: F:\20120FER\as-blt\1213AB.job

==========

AS-BUILT TOP PIPE 26+00 TO 27+50
BAUMANN ENGINEERING
THOMAS P. BAUMANN

12-15-00

==========

Point No.	Design Northing	Design Easting	Design Elevation	Staked Elevation	Delta North	Delta East	Cut	Fill
879	480375.849	1350631.927	576.750	577.828	-0.210	0.290	1.078	
Point No.	Design Northing	Design Easting	Design Elevation	Staked Elevation	Delta North	Delta East	Cut	Fill
880	480350.982	1350634.497	576.650	577.705	0.180	0.290	1.055	
Point No.	Design Northing	Design Easting	Design Elevation	Staked Elevation	Delta North	Delta East	Cut	Fill
881	480326.114	1350637.066	576.550	577.584	-0.030	-0.090	1.034	
Point No.	Design Northing	Design Easting	Design Elevation	Staked Elevation	Delta North	Delta East	Cut	Fill
882	480301.246	1350639.635	576.450	577.510	0.020	-0.390	1.060	
Point No.	Design Northing	Design Easting	Design Elevation	Staked Elevation	Delta North	Delta East	Cut	Fill
883	480276.379	1350642.204	576.350	577.212	0.020	-0.410	0.862	
Point No.	Design Northing	Design Easting	Design Elevation	Staked Elevation	Delta North	Delta East	Cut	Fill
884	480251.511	1350644.773	576.250	577.299	-0.130	0.510	1.049	
Point No.	Design Northing	Design Easting	Design Elevation	Staked Elevation	Delta North	Delta East	Cut	Fill
885	480226.643	1350647.342	576.150	576.947	0.040	0.480	0.797	

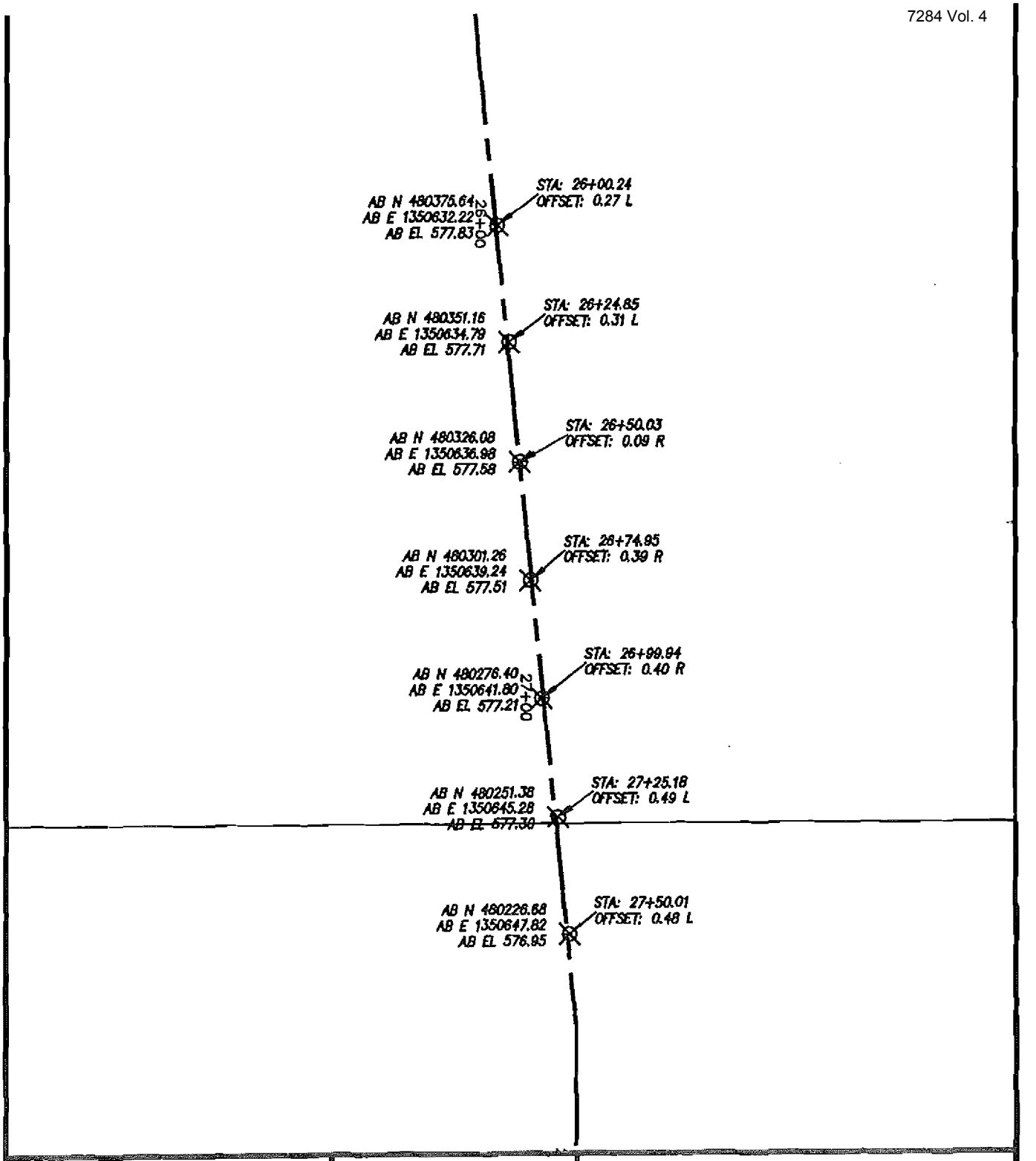

H:\20120FER\ASBUILTS\20120ABL.dwg, AB 1, 02/15/01 08:02:02 PM, 1:1

BAUMANN ENGINEERING
10170 INTERNATIONAL BLVD.
WORLD PARK
CINCINNATI, OHIO 45246
VOICE (513) 860.3999
FAX (513) 860.0287
EMAIL: LBAUMANN@ONE.NET

ENHANCED PERMANENT LEACHATE TRANSMISSION SYSTEM
CONTRACT # FCS-641
THE STAVER GROUP, INC.

TOP OF PIPE AS-BUILT

PROJECT:	DATE:	
20120	12.13.00	1/1

11-29-00

Spectra I ision Software, Inc.
5901 Peachtree-Dunwoody Road, N.E.
Atlanta, GA 30328-5548

Wed, Nov 29, 2000

STAKEOUT REPORT
Design Area File: F:\20120FER\as-blt\0120-25.are
Staking Job File: F:\20120FER\as-blt\1129AB.job

==========

AS- BUILT TOP OF PIPE FROM STATION 28+00 TO CVH

BAUMANN ENGINEERING
THOMAS P. BAUMANN PS

==========

PT # 887 T/PIPE EL= 576.908
PT# 911 " EL= 574.554
2.354 DIFF

28+00 → 34+00 = 600'LF
PT# 887 PT# 911

$\frac{2.354}{600} = 0.0039 \times 100 = 0.392\%$

Point No.	Design Northing	Design Easting	Design Elevation	Staked Elevation	Delta North	Delta East	Cut	Fill
887	480176.758	1350649.175	575.950	576.908	0.000	-0.300	0.958	
Point No.	Design Northing	Design Easting	Design Elevation	Staked Elevation	Delta North	Delta East	Cut	Fill
888	480151.760	1350648.870	575.850	576.665	-0.110	-0.200	0.815	
Point No.	Design Northing	Design Easting	Design Elevation	Staked Elevation	Delta North	Delta East	Cut	Fill
889	480126.762	1350648.564	575.750	576.699	-0.050	-0.250	0.949	
Point No.	Design Northing	Design Easting	Design Elevation	Staked Elevation	Delta North	Delta East	Cut	Fill
890	480101.764	1350648.259	575.650	576.562	-0.010	0.300	0.912	
Point No.	Design Northing	Design Easting	Design Elevation	Staked Elevation	Delta North	Delta East	Cut	Fill
891	480076.766	1350647.953	575.550	576.500	-0.040	0.160	0.950	
Point No.	Design Northing	Design Easting	Design Elevation	Staked Elevation	Delta North	Delta East	Cut	Fill
892	480051.767	1350647.648	575.450	576.453	0.000	0.040	1.003	
Point No.	Design Northing	Design Easting	Design Elevation	Staked Elevation	Delta North	Delta East	Cut	Fill
893	480026.769	1350647.342	575.350	576.260	-0.080	0.090	0.910	
Point No.	Design Northing	Design Easting	Design Elevation	Staked Elevation	Delta North	Delta East	Cut	Fill
894	480001.771	1350647.037	575.250	576.236	0.050	0.400	0.986	
Point	Design	Design	Design	Staked	Delta	Delta		

No.	Northing	Easting	Elevation	Elev on	North	East	Cut	Fill
895	479976.773	1350646.731	575.150	576.220	0.140	0.630	1.070	
Point	Design	Design	Design	Staked	Delta	Delta		
No.	Northing	Easting	Elevation	Elevation	North	East	Cut	Fill
896	479951.775	1350646.426	575.050	576.199	0.070	0.520	1.149	
Point	Design	Design	Design	Staked	Delta	Delta		
No.	Northing	Easting	Elevation	Elevation	North	East	Cut	Fill
897	479926.777	1350646.120	574.950	576.060	-0.390	0.490	1.110	
Point	Design	Design	Design	Staked	Delta	Delta		
No.	Northing	Easting	Elevation	Elevation	North	East	Cut	Fill
898	479901.779	1350645.814	574.850	575.853	-0.110	0.090	1.003	
Point	Design	Design	Design	Staked	Delta	Delta		
No.	Northing	Easting	Elevation	Elevation	North	East	Cut	Fill
899	479876.781	1350645.509	574.750	575.748	0.000	-0.120	0.998	
Point	Design	Design	Design	Staked	Delta	Delta		
No.	Northing	Easting	Elevation	Elevation	North	East	Cut	Fill
900	479851.782	1350645.203	574.640	575.647	0.040	-0.150	1.007	
Point	Design	Design	Design	Staked	Delta	Delta		
No.	Northing	Easting	Elevation	Elevation	North	East	Cut	Fill
901	479826.784	1350644.898	574.550	575.651	0.090	-0.170	1.101	
Point	Design	Design	Design	Staked	Delta	Delta		
No.	Northing	Easting	Elevation	Elevation	North	East	Cut	Fill
902	479801.786	1350644.592	574.450	575.512	0.110	-0.440	1.062	
Point	Design	Design	Design	Staked	Delta	Delta		
No.	Northing	Easting	Elevation	Elevation	North	East	Cut	Fill
903	479776.788	1350644.287	574.350	575.438	-0.060	0.110	1.088	
Point	Design	Design	Design	Staked	Delta	Delta		
No.	Northing	Easting	Elevation	Elevation	North	East	Cut	Fill
904	479751.790	1350643.981	574.250	575.192	-0.020	-0.100	0.942	
Point	Design	Design	Design	Staked	Delta	Delta		
No.	Northing	Easting	Elevation	Elevation	North	East	Cut	Fill
905	479727.073	1350640.817	574.150	575.201	0.040	0.030	1.051	
Point	Design	Design	Design	Staked	Delta	Delta		
No.	Northing	Easting	Elevation	Elevation	North	East	Cut	Fill
906	479702.495	1350636.244	574.050	575.082	-0.010	-0.130	1.032	
Point	Design	Design	Design	Staked	Delta	Delta		
No.	Northing	Easting	Elevation	Elevation	North	East	Cut	Fill
907	479677.917	1350631.671	573.950	574.896	0.050	-0.420	0.946	
Point	Design	Design	Design	Staked	Delta	Delta		
No.	Northing	Easting	Elevation	Elevation	North	East	Cut	Fill
908	479653.339	1350627.098	573.850	574.803	0.120	-0.330	0.953	
Point	Design	Design	Design	Staked	Delta	Delta		
No.	Northing	Easting	Elevation	Elevation	North	East	Cut	Fill
909	479628.760	1350622.525	573.750	574.741	0.080	-0.130	0.991	
Point	Design	Design	Design	Staked	Delta	Delta		
No.	Northing	Easting	Elevation	Elevation	North	East	Cut	Fill
910	479604.182	1350617.952	573.650	574.628	0.050	-0.120	0.978	
Point	Design	Design	Design	Staked	Delta	Delta		
No.	Northing	Easting	Elevation	Elevation	North	East	Cut	Fill
911	479579.604	1350613.379	573.550	574.554	0.020	0.320	1.004	

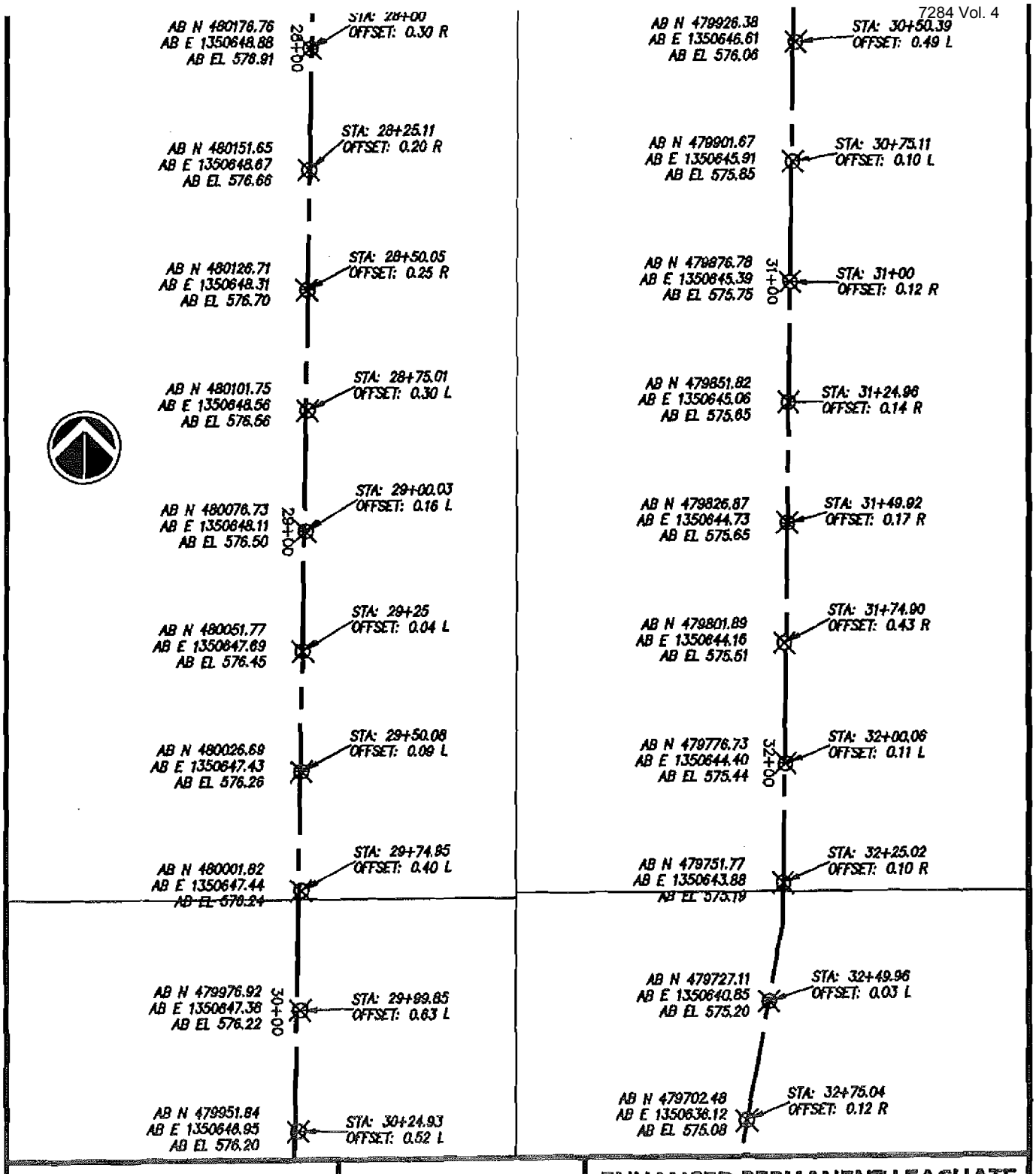

BAUMANN ENGINEERING
10170 INTERNATIONAL BLVD.
WORLD PARK
CINCINNATI, OHIO 45246
VOICE (513) 860.3999
FAX (513) 860.0287
EMAIL: LBAUMANN@ONE.NET

ENHANCED PERMANENT LEACHATE TRANSMISSION SYSTEM
CONTRACT # FCS-641
THE STAVER GROUP, INC.

TOP OF PIPE AS-BUILT

PROJECT:	DATE:	
20120	11.29.00	1/2

H:\20120FER\ASBUILTS\20120ABL.dwg, A 0(1), 02/16/01 12:22:32 PM, 1:1

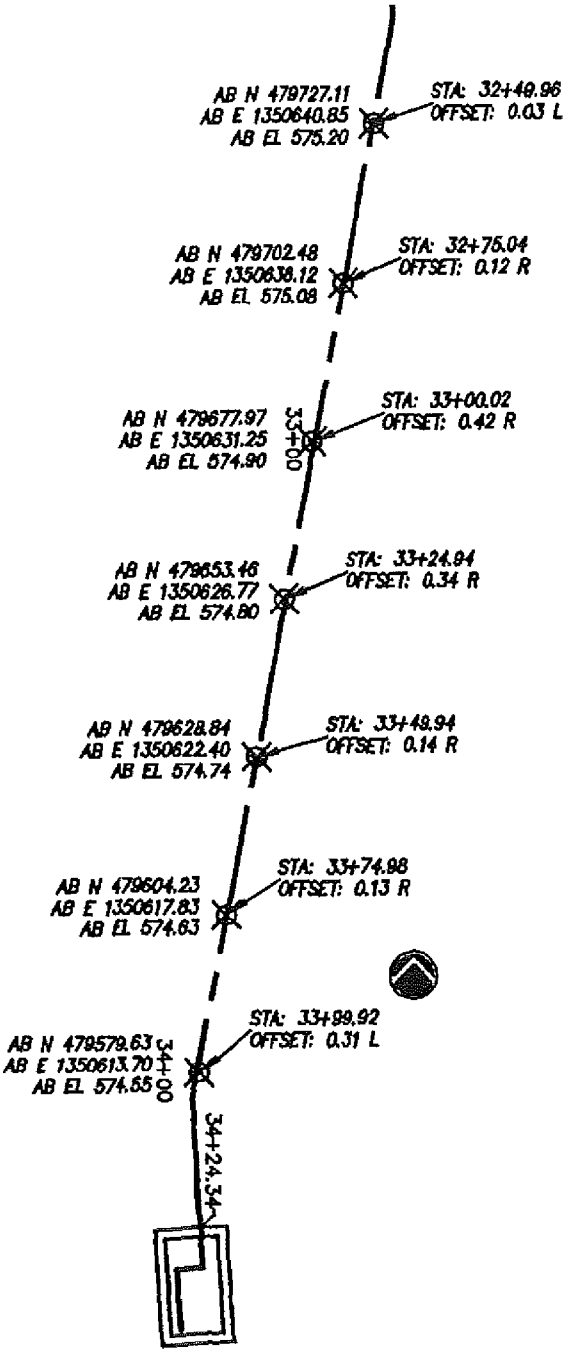

H:\20120FER\ASBUILTS\20120ABL.dwg, AF)(2), 02/16/01 12:22:23 PM, 1:1

BAUMANN ENGINEERING
10170 INTERNATIONAL BLVD.
WORLD PARK
CINCINNATI, OHIO 45246
VOICE (513) 860.3999
FAX (513) 860.0287
EMAIL: LBAUMANN@ONE.NET

ENHANCED PERMANENT LEACHATE TRANSMISSION SYSTEM
CONTRACT # FCS-641
THE STAVER GROUP, INC.

TOP OF PIPE AS-BUILT

PROJECT:	DATE:	
20120	11.29.00	2/2

STAVER
FERNALD JOBSITE
FAX TRANSMITTAL

DATE: 4/20/01 **TO:** MIKE GRIFFIN

COMPANY: FLWOR **FAX NO.:** 4029

FROM: DAVID OPALKA

RECEIVED
APR 20 2001
KBT 12:04 PM

FERNALD FAX: (513) 648 – 4187
PHONE (513) 648 – 4118

NUMBER OF PAGES (including Cover Page): 2

MESSAGE:

REVISED AS-BUILT INFO FOR MH1-VH1
FOR HOPE PIPING TIE-INS

RECEIVED
APR 20 2001
KBT

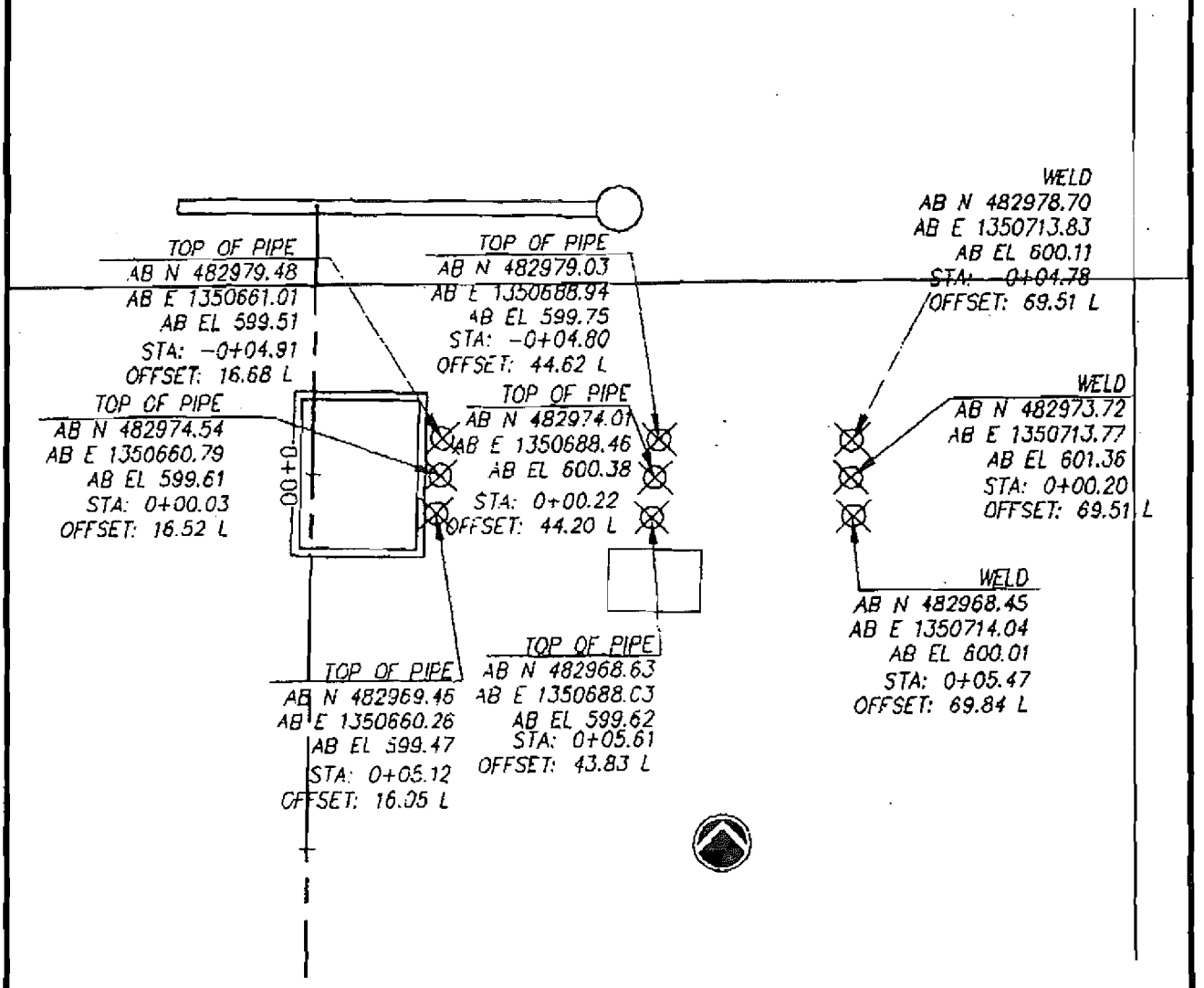

BAUMANN ENGINEERING
10170 INTERNATIONAL BLVD.
WORLD PARK
CINCINNATI, OHIO 45246
VOICE (513) 860.3999
FAX (513) 860.0287
EMAIL: LBAUMANN@ONE.NET

ENHANCED PERMANENT LEACHATE TRANSMISSION SYSTEM
CONTRACT # FCS-641
THE STAVER GROUP, INC.
TIE-IN PIPE AS-BUILT
AT VALVE HOUSE 1

PROJECT:	DATE:	
20120	4.19.01	1/1

H:\20120FER\ASBUILTS\20120ABL.dwg 11-Tl, 04/18/01 04:25:23 PM, 1:1

→ FWD TO : KWAS 1
FAX 3415

STAVER
FERNALD JOBSITE
FAX TRANSMITTAL

DATE: 5/2/01 **TO:** MIKE GRIFFIN

COMPANY: FLUOR **FAX NO.:** 4029

FROM: OPALICA

FERNALD FAX: (513) 648 – 4187
PHONE (513) 648 – 4118

NUMBER OF PAGES (including Cover Page): 2

MESSAGE:

As Built Survey data for cell tie-ins
@ Valvehouse #2

RECEIVED
MAY 02 2001
KST

RECEIVED
MAY 2 2001
KB7

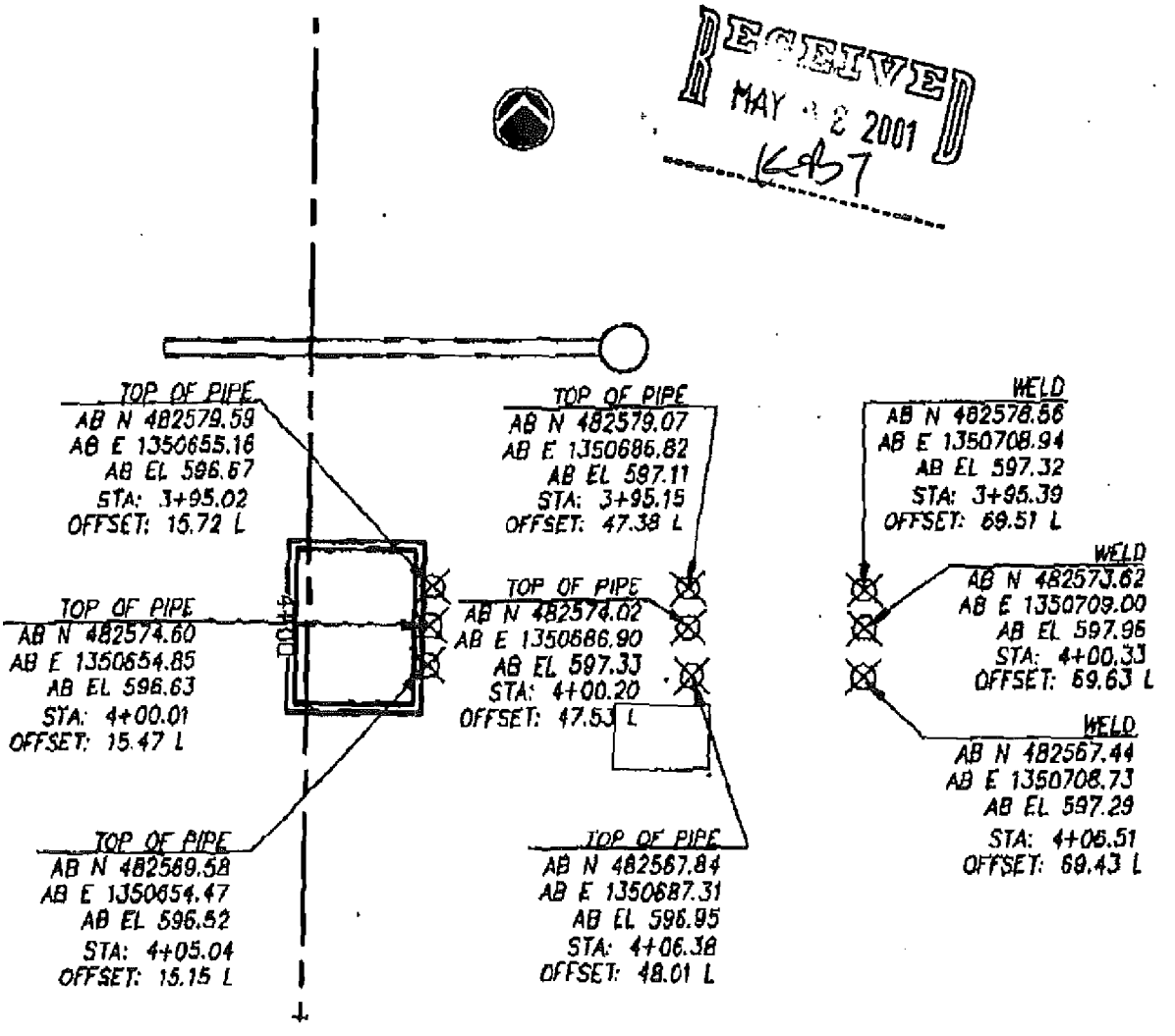

BAUMANN ENGINEERING
10170 INTERNATIONAL BLVD.
WORLD PARK
CINCINNATI, OHIO 45246
VOICE (513) 860.3999
FAX (513) 860.0287
EMAIL: LBAUMANN@ONE.NET

ENHANCED PERMANENT LEACHATE TRANSMISSION SYSTEM
CONTRACT # FCS-641
THE STAVER GROUP, INC.
TIE-IN PIPE AS-BUILT
AT VALVE HOUSE 2

PROJECT:	DATE:	
20120	5.1.01	1/1

K:\20120\FERA\SBUILTS\2012\ABL.dwg, AB-VH2-TI, 05/02/01 10:03:50 AM, 1:1

STAVER
FERNALD JOBSITE
FAX TRANSMITTAL

DATE: 5/17/01 **TO:** MIKE G / KWASI

COMPANY: FLUOR/Geosyntec **FAX NO.:** 4029/3415

FROM: DAVE OPALKA

FERNALD FAX: (513) 648 – 4187
PHONE (513) 648 – 4118

RECEIVED MAY 17 2001 KBT

NUMBER OF PAGES (including Cover Page): 2

MESSAGE:

Survey data for Valvehouse #3 tie-ins

please call w/ any questions

Dave

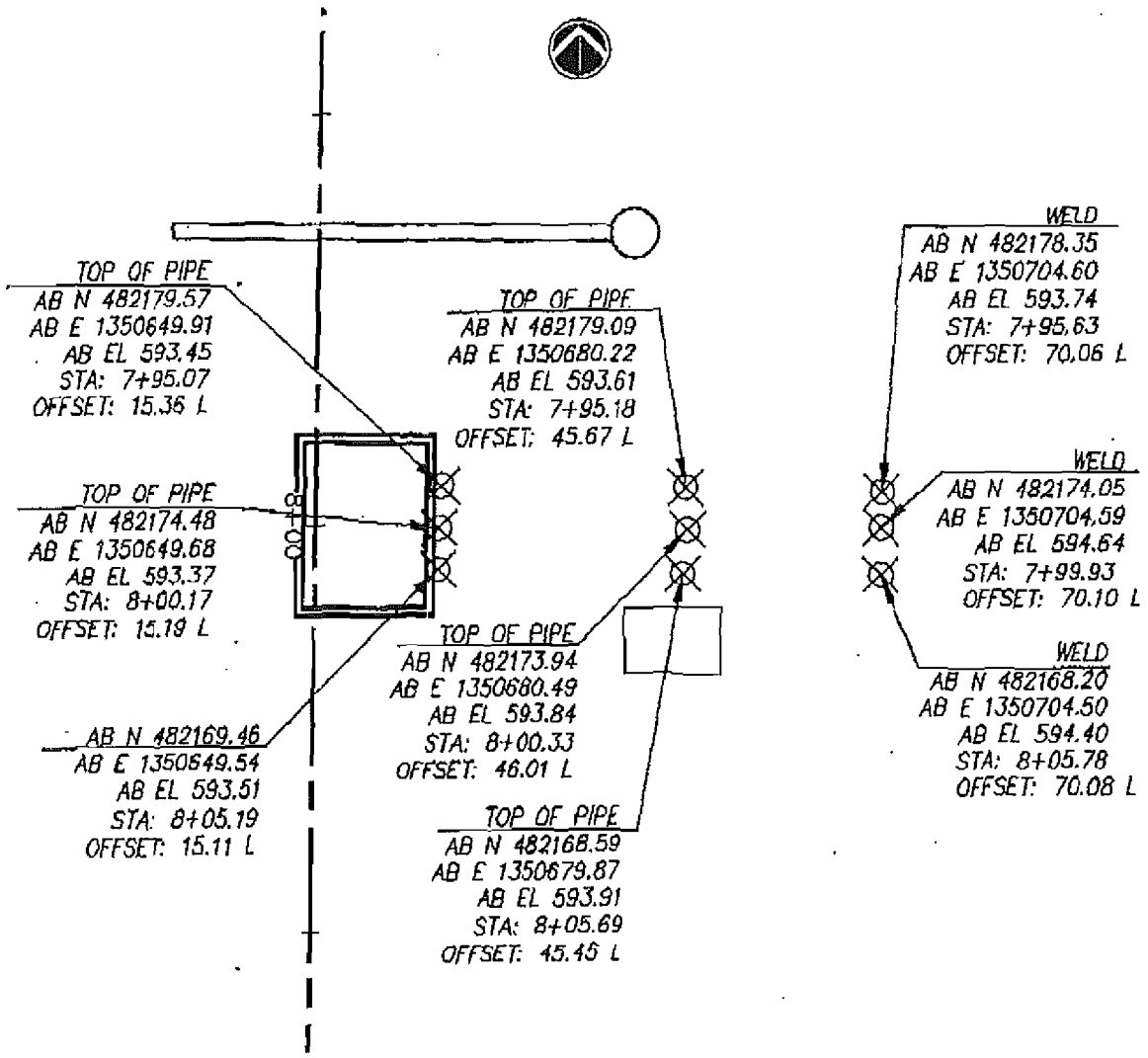

H:\20120FER\ASBUILTS\20120ABL.dwg, AB-...3-TI, 05/16/01 09:39:57 AM, 1:1

BAUMANN ENGINEERING

10170 INTERNATIONAL BLVD.
WORLD PARK
CINCINNATI, OHIO 45246
VOICE (513) 860.3999
FAX (513) 860.0287
EMAIL: LBAUMANN@ONE.NET

ENHANCED PERMANENT LEACHATE TRANSMISSION SYSTEM
CONTRACT # FCS-641
THE STAVER GROUP, INC.
TIE-IN PIPE AS-BUILT
AT VALVE HOUSE 3

PROJECT:	DATE:	
20120	5.16.01	1/1

AS-BUILT
TOP EXISTING 48" CMP RISERS
1-12-01
BAUMANN ENGINEERING
THOMAS P. BAUMANN PS

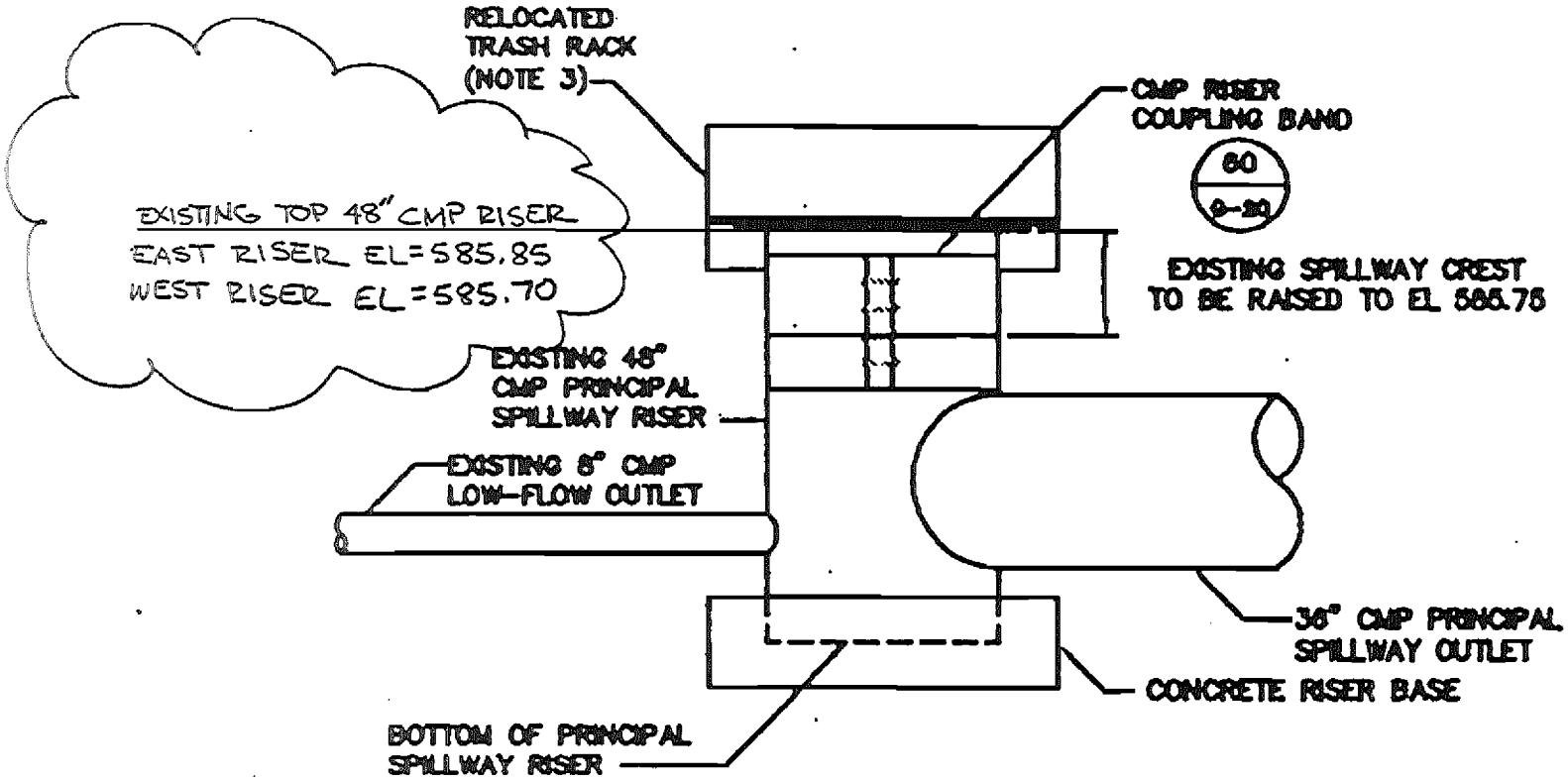

ELEVATION

59
G-20

DETAIL

OSDF SEDIMENTATION BASIN 1 RISER MEDIFICATION

(NOTE 1)
SCALE: 1" = 3'

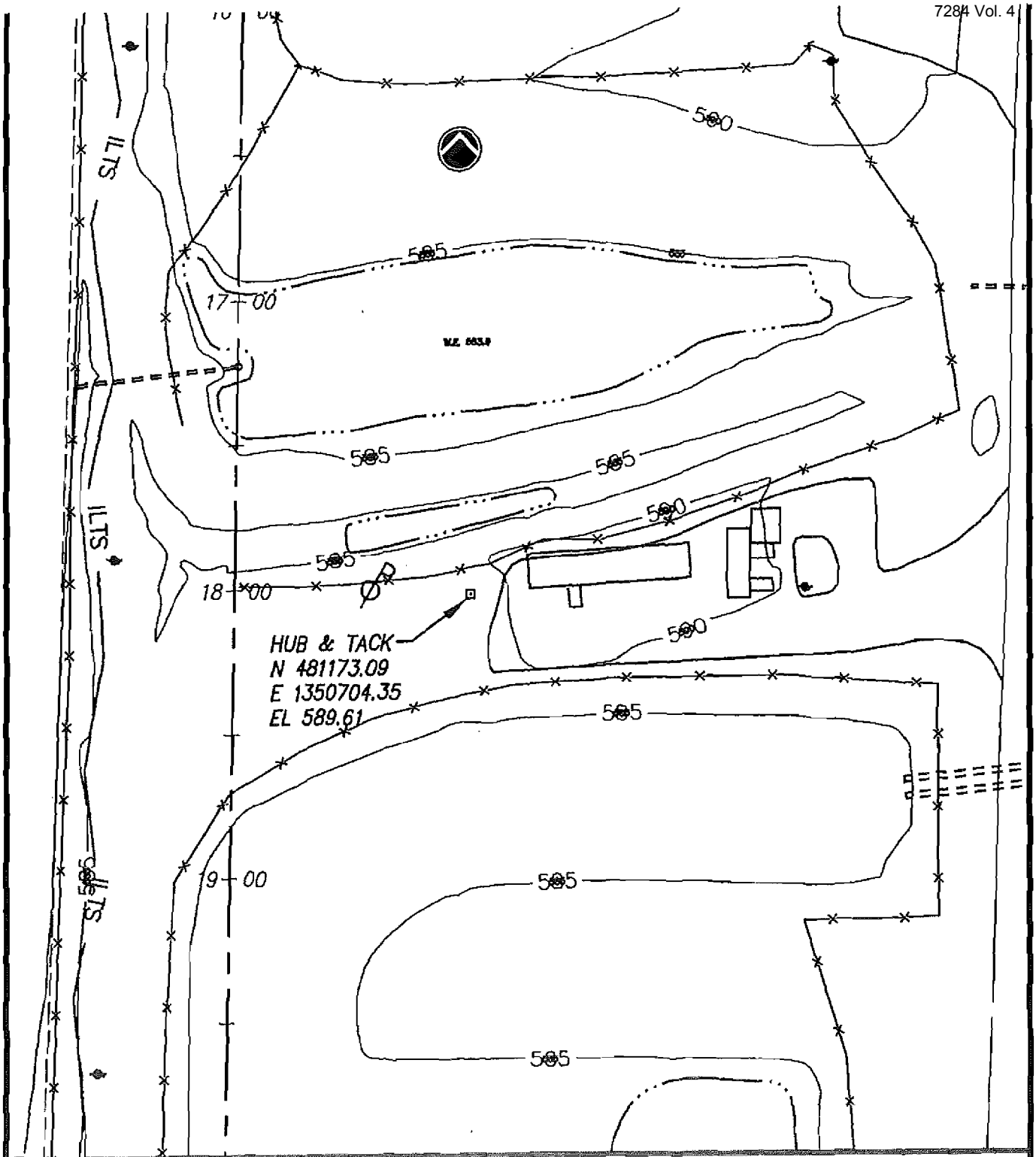

H:\DWGS\20120FER\ASBUILTS\20120AB.c JB 7-19-00, 07/19/00 12:08:05 PM, 1:1

BAUMANN ENGINEERING

10170 INTERNATIONAL BLVD.
WORLD PARK
CINCINNATI, OHIO 45246
VOICE (513) 860.3999
FAX (513) 860.0287
EMAIL: LBAUMANN@ONE.NET

ENHANCED PERMANENT LEACHATE TRANSMISSION SYSTEM
CONTRACT # FCS-641
THE STAVER GROUP, INC.

CONTROL POINT # 2020

PROJECT:	DATE:	
20120	7.19.00	1/1

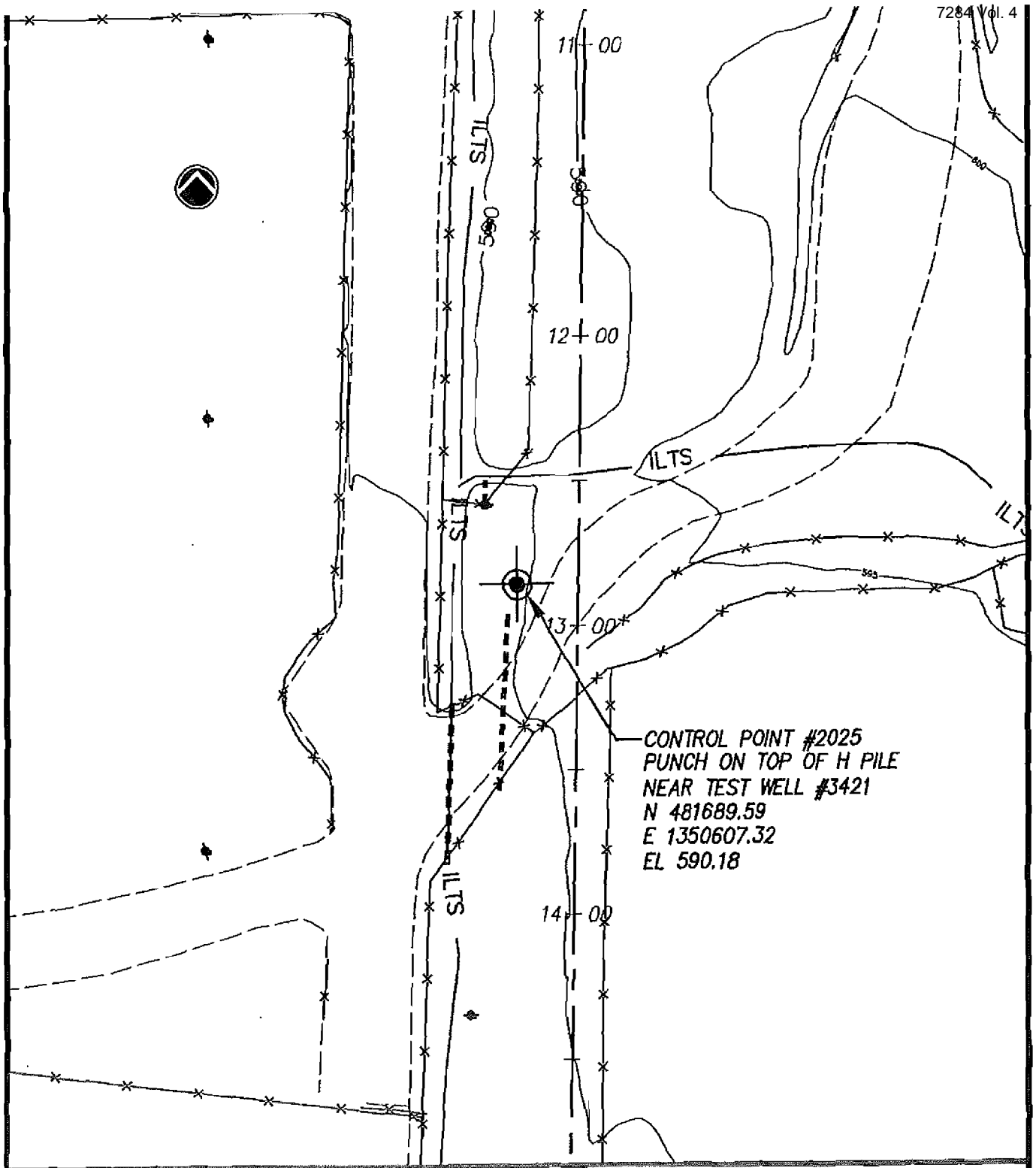

BAUMANN ENGINEERING
10170 INTERNATIONAL BLVD.
WORLD PARK
CINCINNATI, OHIO 45246
VOICE (513) 860.3999
FAX (513) 860.0287
EMAIL: LBAUMANN@ONE.NET

ENHANCED PERMANENT LEACHATE TRANSMISSION SYSTEM
CONTRACT # FCS-641
THE STAVER GROUP, INC.

CONTROL POINT # 2025

PROJECT:	DATE:	
20120	8.2.00	1/1

H:\DWGS\20120FER\ASBUILTS\20120AB.dwg 5, 08/02/00 01:33:13 PM, 1:1

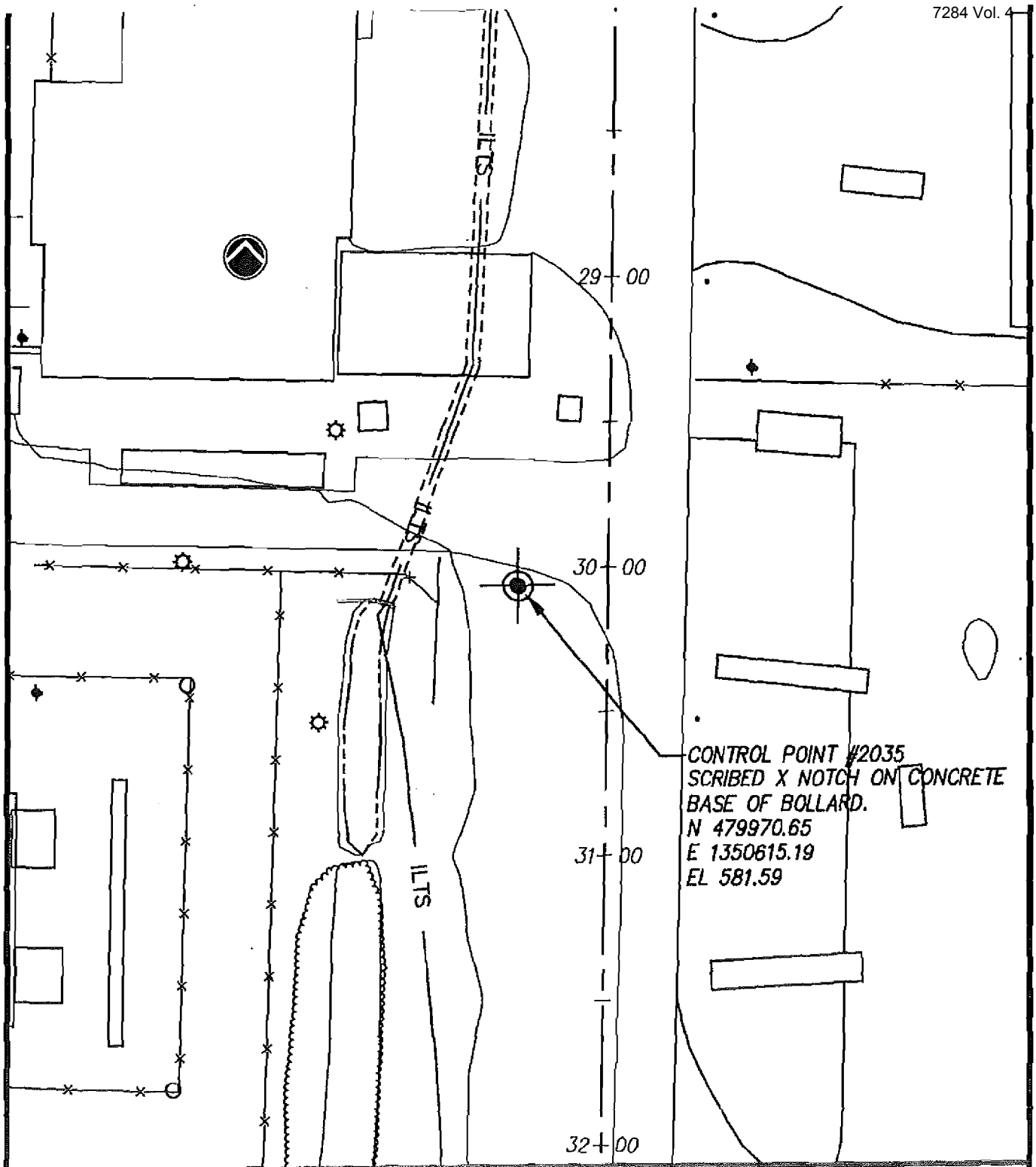

BAUMANN ENGINEERING
10170 INTERNATIONAL BLVD.
WORLD PARK
CINCINNATI, OHIO 45246
VOICE (513) 860.3999
FAX (513) 860.0287
EMAIL: LBAUMANN@ONE.NET

ENHANCED PERMANENT LEACHATE TRANSMISSION SYSTEM
CONTRACT # FCS-641
THE STAVER GROUP, INC.

CONTROL POINT # 2035

PROJECT:	DATE:	
20120	8.2.00	1/1

H:\DWGS\20120FER\ASBUILTS\20120AB.dwg 5, 08/02/00 02:41:11 PM, 1:1

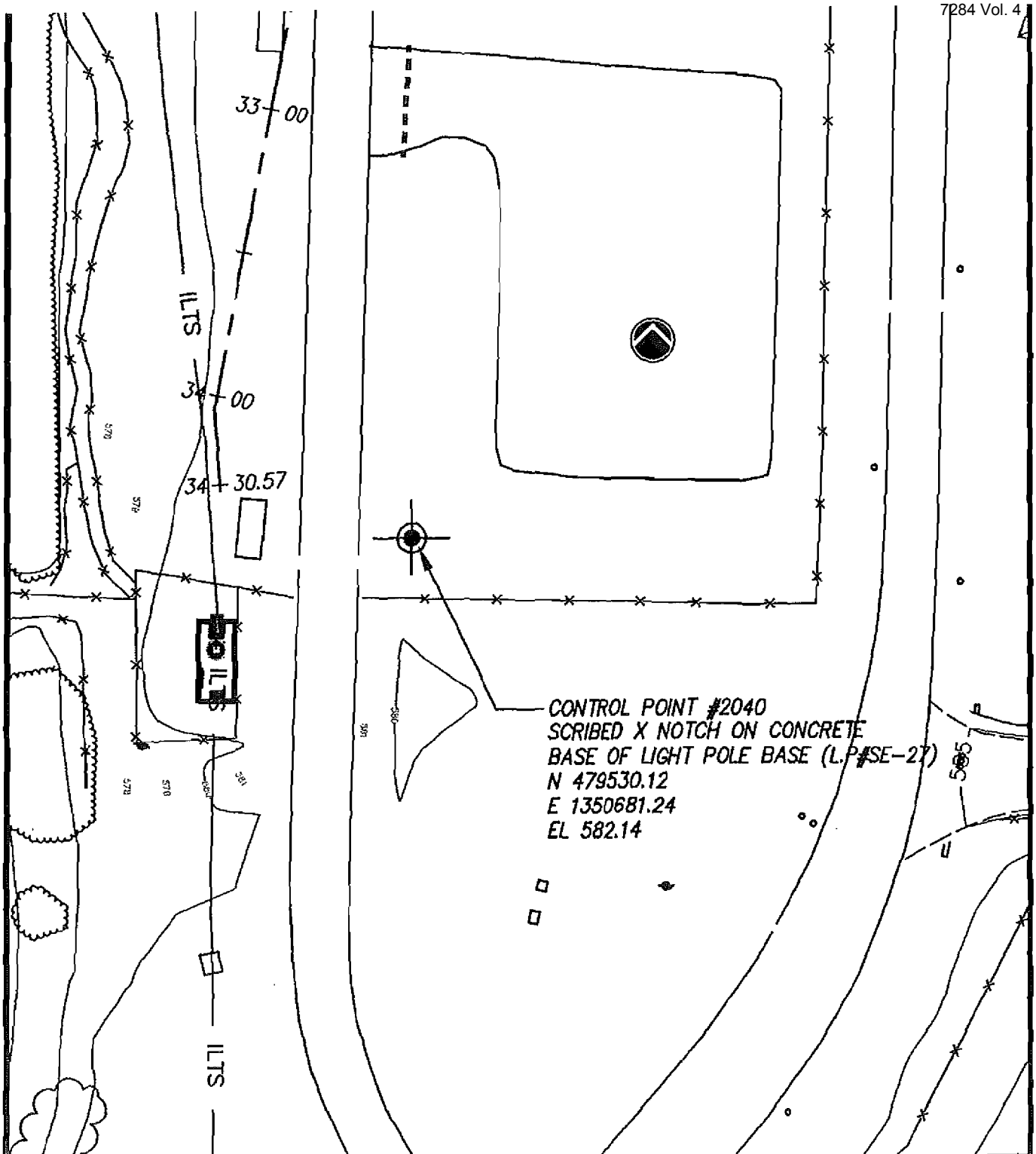

BAUMANN ENGINEERING
10170 INTERNATIONAL BLVD.
WORLD PARK
CINCINNATI, OHIO 45246
VOICE (513) 860.3999
FAX (513) 860.0287
EMAIL: LBAUMANN@ONE.NET

ENHANCED PERMANENT LEACHATE TRANSMISSION SYSTEM
CONTRACT # FCS-641
THE STAVER GROUP, INC.

CONTROL POINT # 2040

PROJECT:	DATE:	
20120	9.13.00	1/1

H:\DWGS\20120FERVASBUILTS\20120AB.c .0, 09/13/00 12:00:28 PM, 1:1

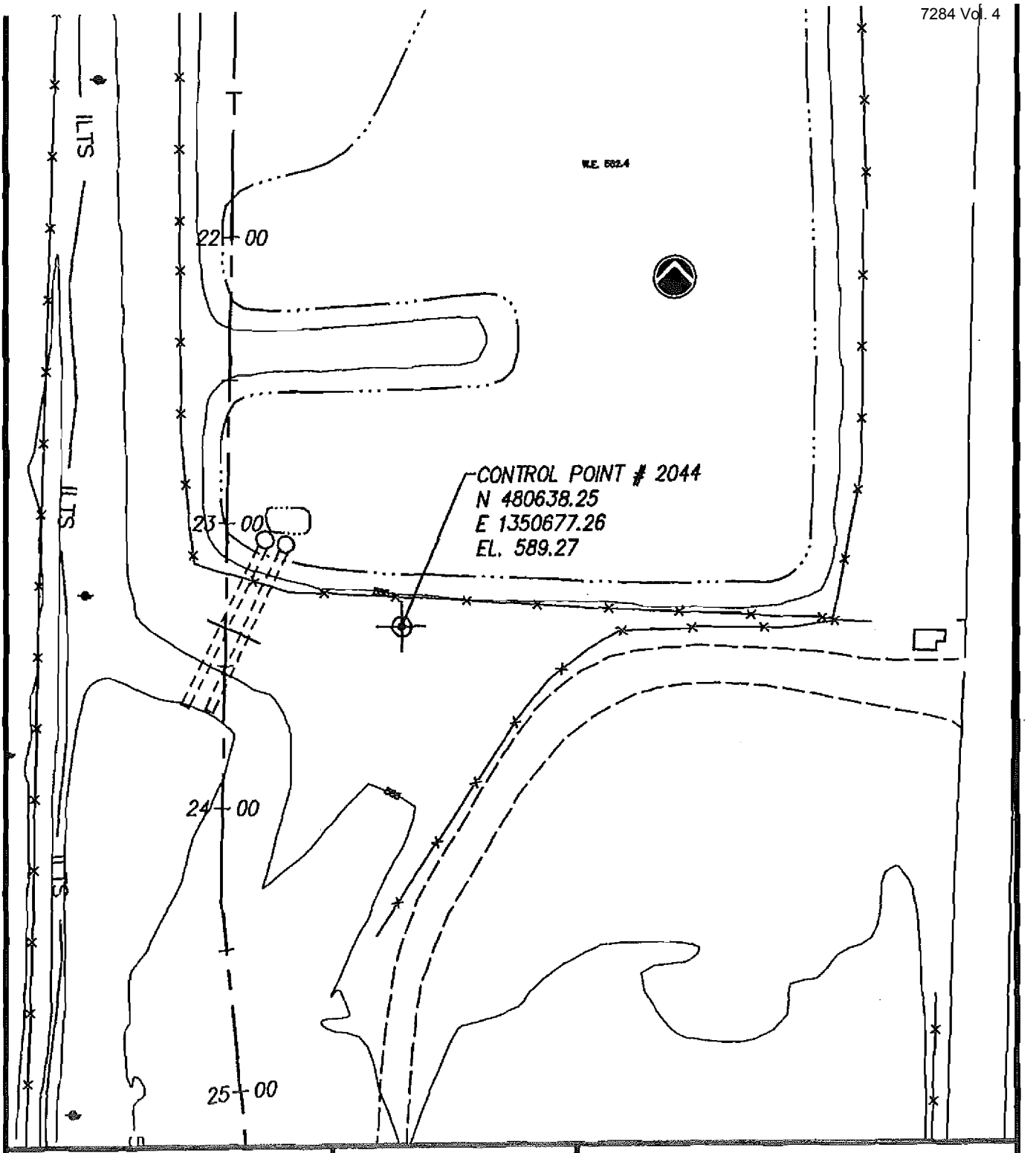

H:\20120FER\ASBUILTS\20120AB.dwg, 20- 3/01 09:44:39 AM, 1:1

BAUMANN ENGINEERING
10170 INTERNATIONAL BLVD.
WORLD PARK
CINCINNATI, OHIO 45246
VOICE (513) 860.3999
FAX (513) 860.0287
EMAIL: LBAUMANN@ONE.NET

ENHANCED PERMANENT LEACHATE TRANSMISSION SYSTEM
CONTRACT # FCS-641
THE STAVER GROUP, INC.

CONTROL POINT # 2044

PROJECT:	DATE:	
20120	12.06.00	1/1

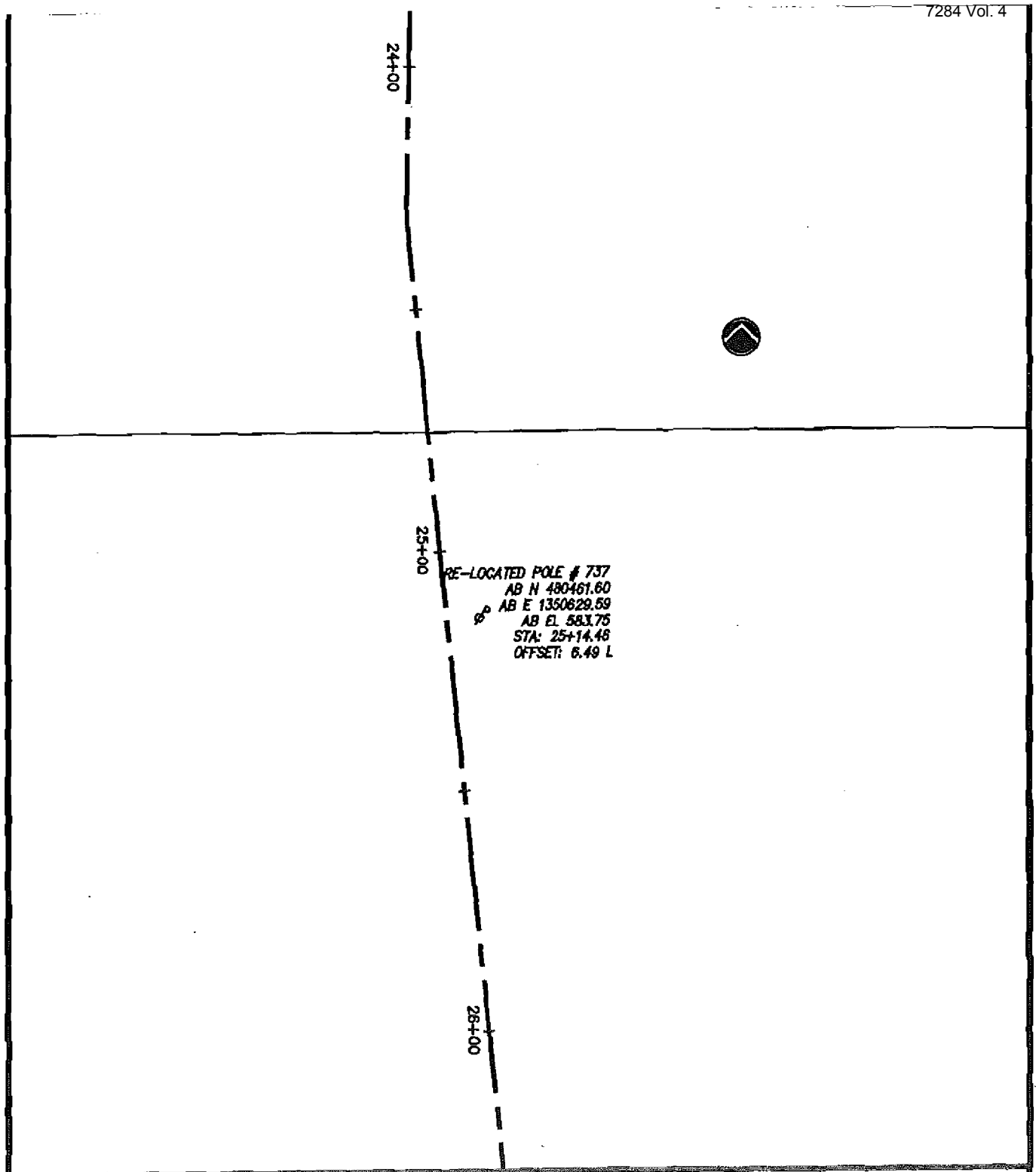

H:\20120FER\ASBUILTS\20120ABL.dwg, 737, 11/10/00 04:58:17 PM, 1:1

BAUMANN ENGINEERING
10170 INTERNATIONAL BLVD.
WORLD PARK
CINCINNATI, OHIO 45246
VOICE (513) 860.3999
FAX (513) 860.0287
EMAIL: LBAUMANN@ONE.NET

ENHANCED PERMANENT LEACHATE TRANSMISSION SYSTEM
CONTRACT # FCS-641
THE STAVER GROUP, INC.

RE-LOCATED POLE # 737

PROJECT:	DATE:	
20120	10.24.00	1/1

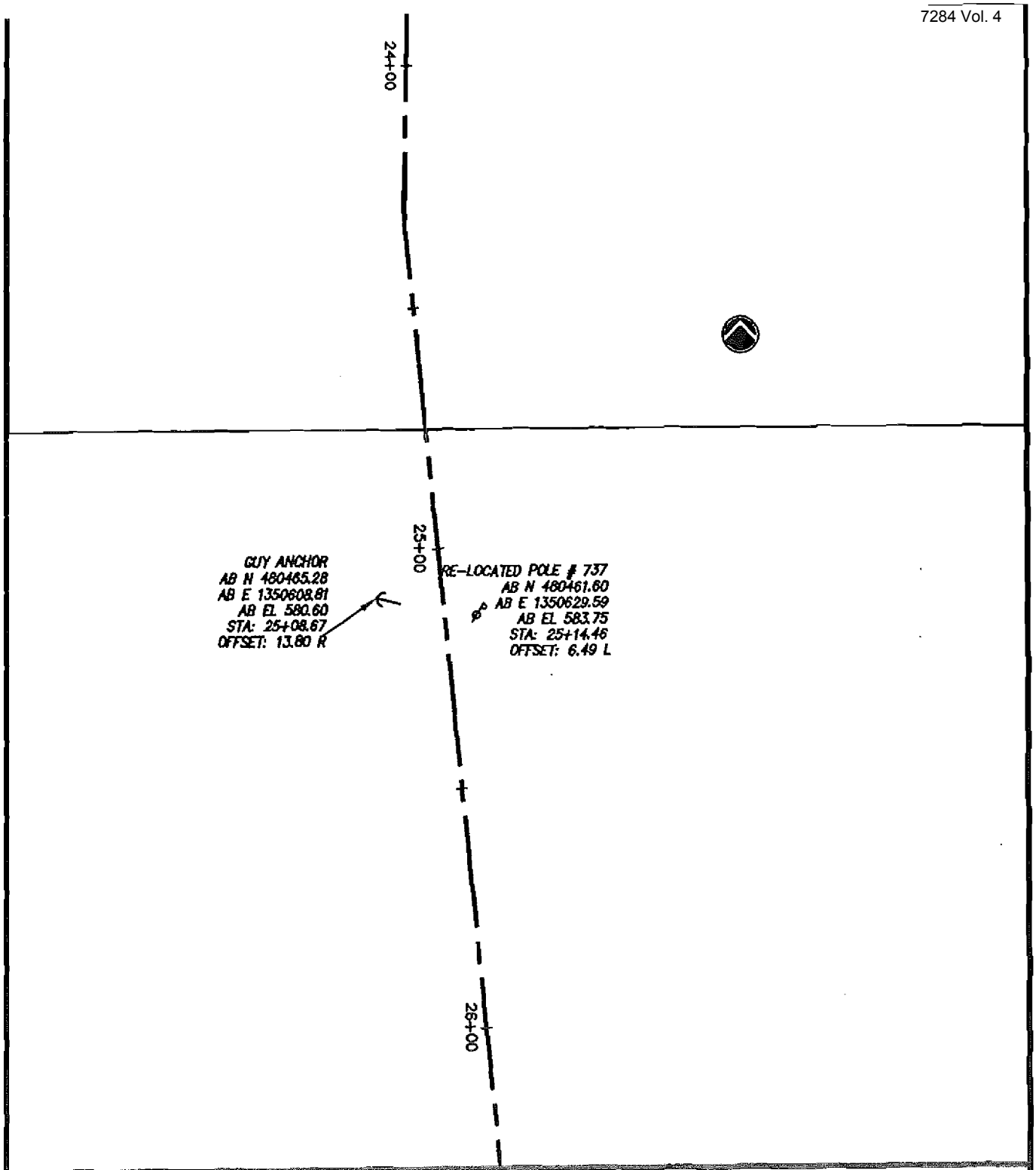

BAUMANN ENGINEERING
10170 INTERNATIONAL BLVD.
WORLD PARK
CINCINNATI, OHIO 45246
VOICE (513) 860.3999
FAX (513) 860.0287
EMAIL: LBAUMANN@ONE.NET

ENHANCED PERMANENT LEACHATE TRANSMISSION SYSTEM
CONTRACT # FCS-641
THE STAVER GROUP, INC.

GUY ANCHOR LOCATION

PROJECT:	DATE:	
20120	1.29.01	1/1

H:\20120FER\ASBUILTS\20120ABL.dwg, AF 12/15/01 06:22:08 PM, 1:1

RECORD DRAWINGS

- Valve House No.1
- Valve House No.2
- Valve House No.3
- Valve House No.4
- Valve House No.5
- Valve House No.6
- Control Valve House

CONTROL VALVE HOUSE

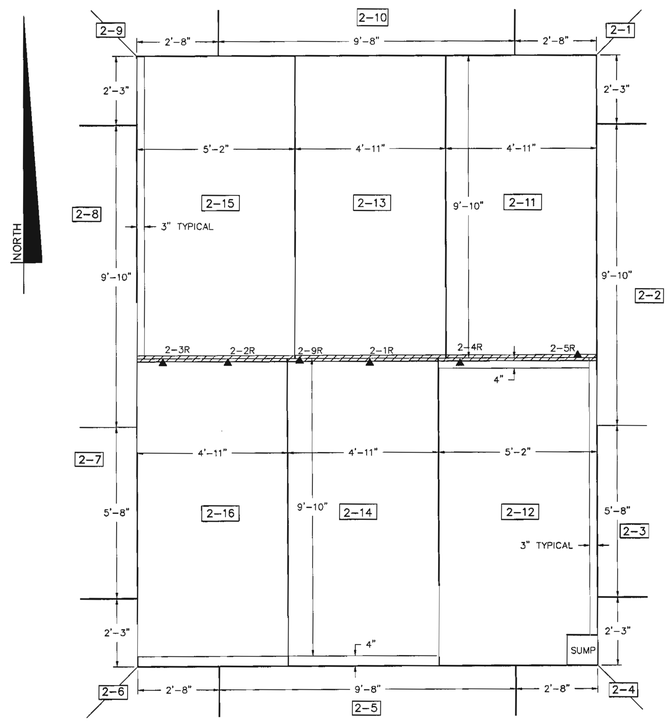

PLAN
EPLTS – VALVE HOUSE # 2
SCALE: N.T.S.

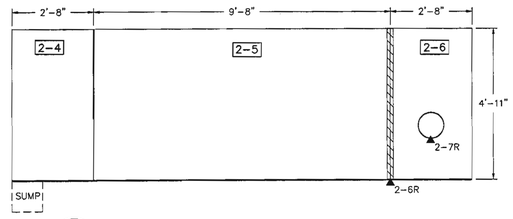

ELEVATION
EPLTS – VALVE HOUSE # 2 SOUTH WALL
SCALE: N.T.S.

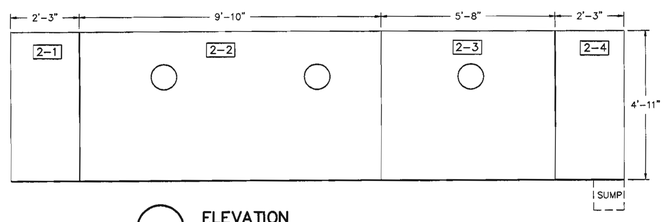

ELEVATION
EPLTS – VALVE HOUSE # 2 EAST WALL
SCALE: N.T.S.

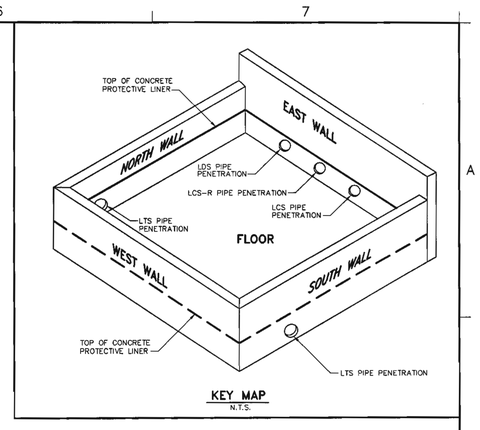

KEY MAP
N.T.S.

LEGEND

2-10	CONCRETE PROTECTIVE LINER PANEL NUMBER
	FACTORY FUSION WELDED SEAM
	CAPPED SEAM OR REPAIRED PANEL
	EXTRUDED SEAM
2-1R	EXTRUDED SEAM REPAIR

NOTES:

1. THE CONCRETE PROTECTIVE LINER PANELS, REFERRED TO AS "BEKAPLAST" CONSIST OF POLYETHYLENE FLAT STOK WITH ANCHORS WHICH WERE EMBEDDED INTO CONCRETE. ADJACENT PANELS AND REPAIRS WERE THEN EXTRUSION WELDED AFTER PROPER PREPARTION OF THE AREA. A CAP STRIP OF FLAT STOCK WAS USED OVER GAPS BETWEEN PANELS GREATER THAN 5/8".
2. THE SUMP WAS FABRICATED AND INSTALLED IN A 1 BY 1 FT RECESS IN CONCRETE FLOOR.
3. LOCATION OF REPAIRS ARE APPROXIMATE. SEE SEAM AND PANEL REPAIR LOCATION LOGS IN APPENDIX H OF THE CQA FINAL REPORT.
4. AROUND THE PERIMETER, OF THE PLAN VIEW, THE LOCATION OF THE SIDE PANELS HAVE BEEN INCLUDED TO ILLUSTRATE THE LAYOUT OF THE ELEVATION PANELS.

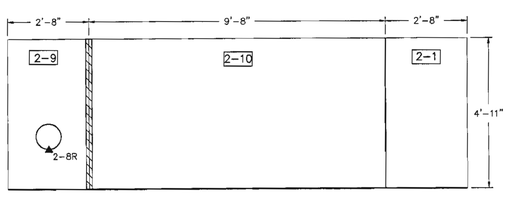

ELEVATION
EPLTS – VALVE HOUSE # 2 NORTH WALL
SCALE: N.T.S.

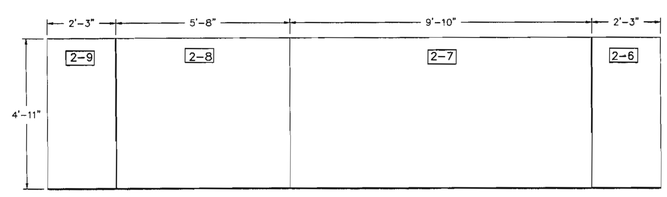

ELEVATION
EPLTS – VALVE HOUSE # 2 WEST WALL
SCALE: N.T.S.

REV. NO.	DATE	DESCRIPTION	DESIGN	CADD	CHECK	REVIEW	APPROVED

OWNER/FACILITY:
UNITED STATES DEPARTMENT OF ENERGY
FERNALD ENVIRONMENTAL MANAGEMENT PROJECT

CLIENT:

FLUOR FERNALD, INC.

PROJECT:
ENHANCED PERMANENT LEACHATE TRANSMISSION SYSTEM

TITLE:
VALVE HOUSE NO. 2

THIS DRAWING MAY NOT BE ISSUED FOR PROJECT TENDER OR CONSTRUCTION, UNLESS SEALED.

SIGNATURE
DATE

STATE OF OHIO
KWASI BADU-TWENEBOAH
E-65354
REGISTERED
PROFESSIONAL ENGINEER
SEAL

GEOSYNTEC CONSULTANTS
1100 LAKE HEARN DRIVE
ATLANTA, GEORGIA 30342 USA

PROJECT NO.:	20111
CONTRACT NO.:	95PS005028
FEMP DRAWING NO.:	
GEOSYNTEC PROJECT NO.:	GO1342-04.2
GEOSYNTEC DOCUMENT NO.:	F01-002
SHEET NO.:	2 OF 7
REVISION NO.:	0

VALVE HOUSE NO. 1

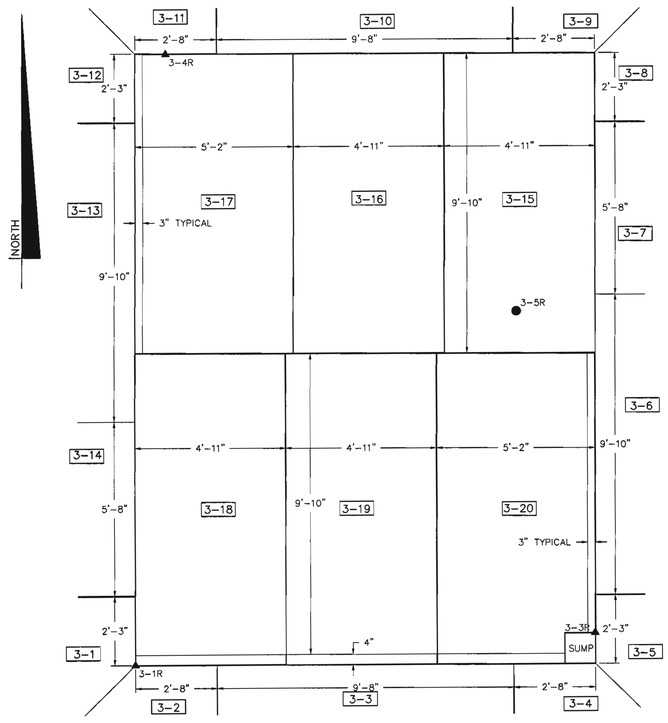

PLAN
EPLTS – VALVE HOUSE # 3
SCALE: N.T.S.

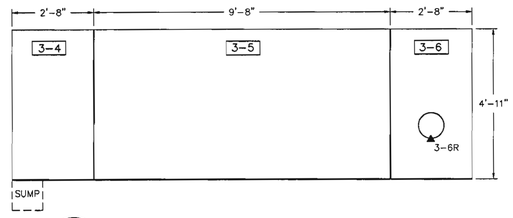

ELEVATION
EPLTS – VALVE HOUSE # 3 SOUTH WALL
SCALE: N.T.S.

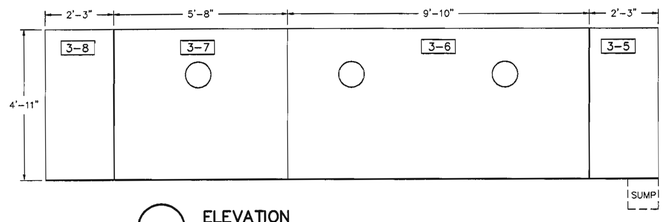

ELEVATION
EPLTS – VALVE HOUSE # 3 EAST WALL
SCALE: N.T.S.

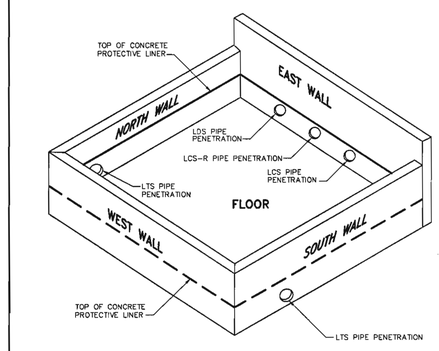

KEY MAP
N.T.S.

LEGEND

3-10	CONCRETE PROTECTIVE LINER PANEL NUMBER
	FACTORY FUSION WELDED SEAM
	CAPPED SEAM OR REPAIRED PANEL
	EXTRUDED SEAM
3-6R	EXTRUDED SEAM REPAIR
3-5R	EXTRUDED PANEL REPAIR

NOTES:

1. THE CONCRETE PROTECTIVE LINER PANELS, REFERRED TO AS "BEKAPLAST" CONSIST OF POLYETHYLENE FLAT STOK WITH ANCHORS WHICH WERE EMBEDDED INTO CONCRETE. ADJACENT PANELS AND REPAIRS WERE THEN EXTRUSION WELDED AFTER PROPER PREPARTION OF THE AREA. A CAP STRIP OF FLAT STOCK WAS USED OVER GAPS BETWEEN PANELS GREATER THAN 5/8".
2. THE SUMP WAS FABRICATED AND INSTALLED IN A 1 BY 1 FT RECESS IN CONCRETE FLOOR.
3. LOCATION OF REPAIRS ARE APPROXIMATE. SEE SEAM AND PANEL REPAIR LOCATION LOGS IN APPENDIX H OF THE CQA FINAL REPORT.
4. AROUND THE PERIMETER, OF THE PLAN VIEW, THE LOCATION OF THE SIDE PANELS HAVE BEEN INCLUDED TO ILLUSTRATE THE LAYOUT OF THE ELEVATION PANELS.

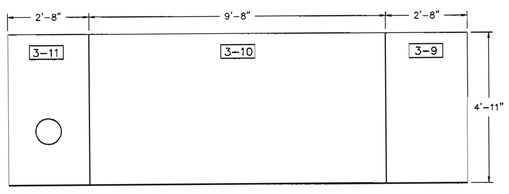

ELEVATION
EPLTS – VALVE HOUSE # 3 NORTH WALL
SCALE: N.T.S.

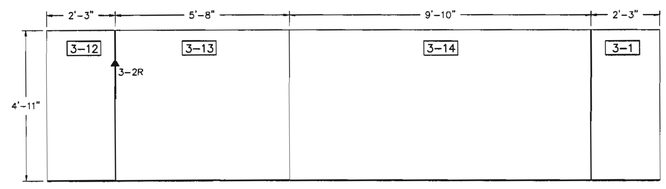

ELEVATION
EPLTS – VALVE HOUSE # 3 WEST WALL
SCALE: N.T.S.

REV. NO.	DATE	DESCRIPTION	DESIGN	CADD	CHECK	REVIEW	APPROVED

OWNER/FACILITY:
UNITED STATES DEPARTMENT OF ENERGY
FERNALD ENVIRONMENTAL MANAGEMENT PROJECT

CLIENT:
FLUOR FERNALD, INC.

PROJECT:
ENHANCED PERMANENT LEACHATE TRANSMISSION SYSTEM

TITLE:
VALVE HOUSE NO. 3

THIS DRAWING MAY NOT BE ISSUED FOR PROJECT TENDER OR CONSTRUCTION, UNLESS SEALED.

SIGNATURE

DATE

STATE OF OHIO
KWASI BADU-TWENEBOAH
E-55354
REGISTERED PROFESSIONAL ENGINEER

SEAL

GEOSYNTEC CONSULTANTS
1100 LAKE HEARN DRIVE
ATLANTA, GEORGIA 30342 USA

PROJECT NO.:	20111
CONTRACT NO.:	95PS005028
FEMP DRAWING NO.:	
GEOSYNTEC PROJECT NO.:	GO1342-04.2
GEOSYNTEC DOCUMENT NO.:	F01-003
SHEET NO.:	3 OF 7
REVISION NO.:	0

VALVE HOUSE NO. 2

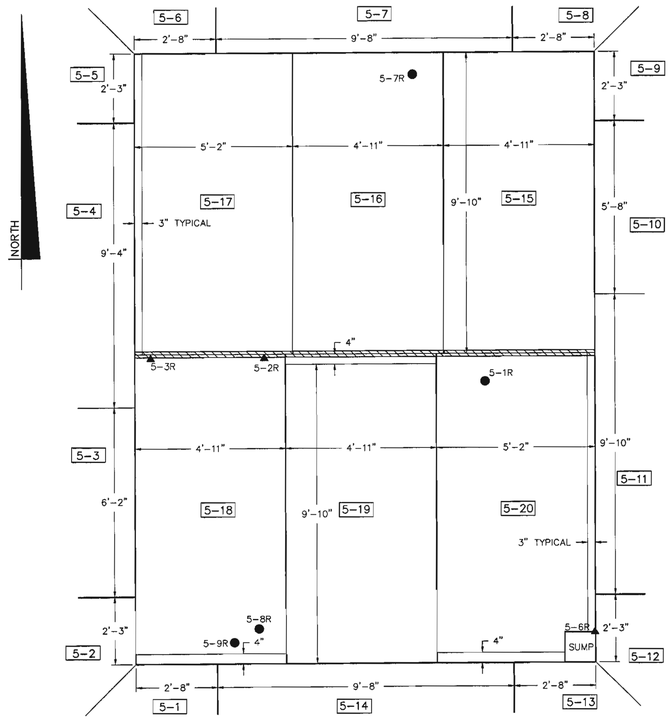

PLAN
EPLTS – VALVE HOUSE # 5
SCALE: N.T.S.

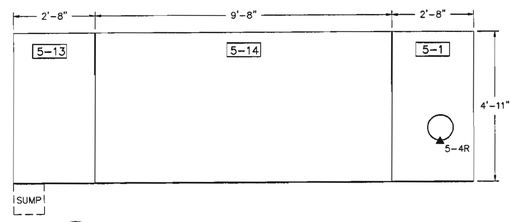

ELEVATION
EPLTS – VALVE HOUSE # 5 SOUTH WALL
SCALE: N.T.S.

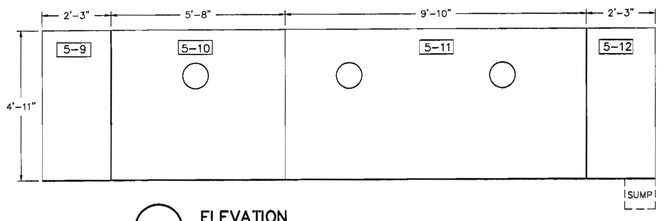

ELEVATION
EPLTS – VALVE HOUSE # 5 EAST WALL
SCALE: N.T.S.

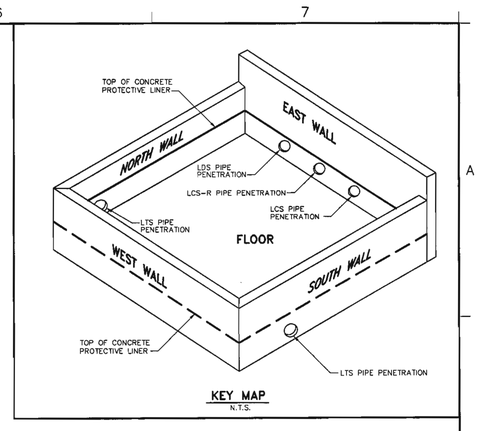

KEY MAP
N.T.S.

LEGEND

5-10	CONCRETE PROTECTIVE LINER PANEL NUMBER
	FACTORY FUSION WELDED SEAM
	CAPPED SEAM OR REPAIRED PANEL
	EXTRUDED SEAM
5-2R	EXTRUDED PANEL REPAIR
5-1R	EXTRUDED SEAM REPAIR

NOTES:

1. THE CONCRETE PROTECTIVE LINER PANELS, REFERRED TO AS "BEKAPLAST" CONSIST OF POLYETHYLENE FLAT STOK WITH ANCHORS WHICH WERE EMBEDDED INTO CONCRETE. ADJACENT PANELS AND REPAIRS WERE THEN EXTRUSION WELDED AFTER PROPER PREPARTION OF THE AREA. A CAP STRIP OF FLAT STOCK WAS USED OVER GAPS BETWEEN PANELS GREATER THAN 5/8".
2. THE SUMP WAS FABRICATED AND INSTALLED IN A 1 BY 1 FT RECESS IN CONCRETE FLOOR.
3. LOCATION OF REPAIRS ARE APPROXIMATE. SEE SEAM AND PANEL REPAIR LOCATION LOGS IN APPENDIX H OF THE CQA FINAL REPORT.
4. AROUND THE PERIMETER, OF THE PLAN VIEW, THE LOCATION OF THE SIDE PANELS HAVE BEEN INCLUDED TO ILLUSTRATE THE LAYOUT OF THE ELEVATION PANELS.

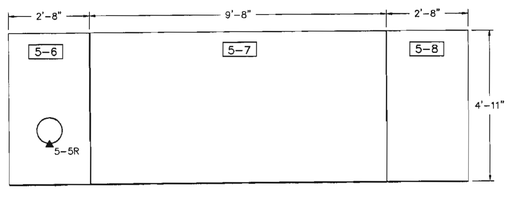

ELEVATION
EPLTS – VALVE HOUSE # 5 NORTH WALL
SCALE: N.T.S.

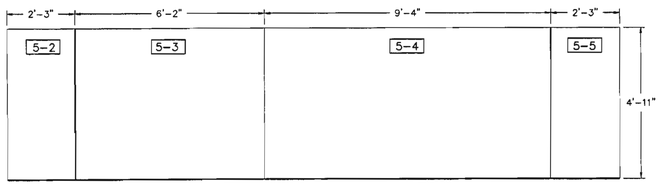

ELEVATION
EPLTS – VALVE HOUSE # 5 WEST WALL
SCALE: N.T.S.

REV. NO.	DATE	DESCRIPTION	DESIGN	CADD	CHECK	REVIEW	APPROVED

OWNER/FACILITY:
UNITED STATES DEPARTMENT OF ENERGY
FERNALD ENVIRONMENTAL MANAGEMENT PROJECT

CLIENT:
FLUOR FERNALD, INC.

PROJECT:
ENHANCED PERMANENT LEACHATE TRANSMISSION SYSTEM

TITLE:
VALVE HOUSE NO. 5

THIS DRAWING MAY NOT BE ISSUED FOR PROJECT TENDER OR CONSTRUCTION, UNLESS SEALED.

SIGNATURE
DATE

STATE OF OHIO
KWASI BADU-TWENEBOAH
E-55354
REGISTERED
PROFESSIONAL ENGINEER
SEAL

GEOSYNTEC CONSULTANTS
1100 LAKE HEARN DRIVE
ATLANTA, GEORGIA 30342 USA

PROJECT NO.:	20111
CONTRACT NO.:	95PS005028
FEMP DRAWING NO.:	
GEOSYNTEC PROJECT NO.:	GO1342-04.2
GEOSYNTEC DOCUMENT NO.:	F01-005
SHEET NO.:	5 OF 7
REVISION NO.:	0

VALVE HOUSE NO. 3

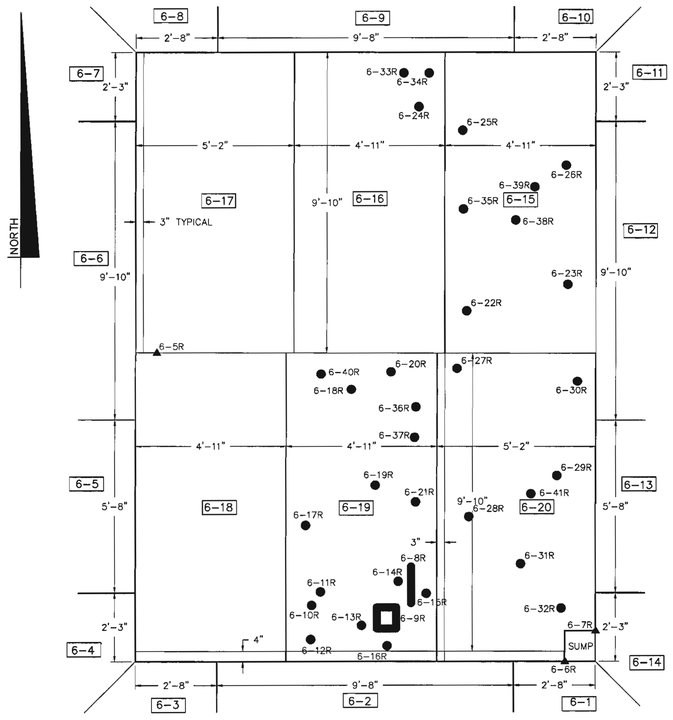

PLAN
EPLTS – VALVE HOUSE # 6
SCALE: N.T.S.

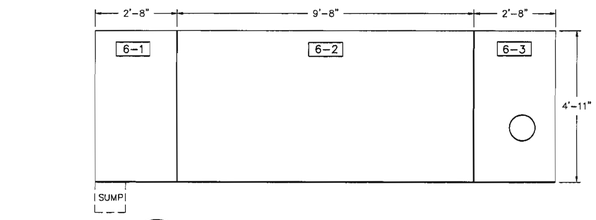

ELEVATION
EPLTS – VALVE HOUSE # 6 SOUTH WALL
SCALE: N.T.S.

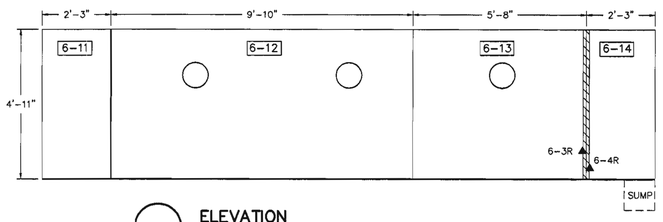

ELEVATION
EPLTS – VALVE HOUSE # 6 EAST WALL
SCALE: N.T.S.

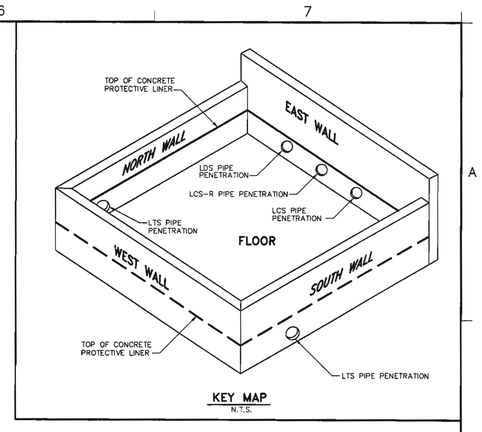

KEY MAP
N.T.S.

LEGEND

6-10	CONCRETE PROTECTIVE LINER PANEL NUMBER
	FACTORY FUSION WELDED SEAM
	CAPPED SEAM OR REPAIRED PANEL
	EXTRUDED SEAM
▲ 6-3R	EXTRUDED SEAM REPAIR
● 6-22R	EXTRUDED PANEL REPAIR

NOTES:

1. THE CONCRETE PROTECTIVE LINER PANELS, REFERRED TO AS "BEKAPLAST" CONSIST OF POLYETHYLENE FLAT STOK WITH ANCHORS WHICH WERE EMBEDDED INTO CONCRETE. ADJACENT PANELS AND REPAIRS WERE THEN EXTRUSION WELDED AFTER PROPER PREPARTION OF THE AREA. A CAP STRIP OF FLAT STOCK WAS USED OVER GAPS BETWEEN PANELS GREATER THAN 5/8".
2. THE SUMP WAS FABRICATED AND INSTALLED IN A 1 BY 1 FT RECESS IN CONCRETE FLOOR.
3. LOCATION OF REPAIRS ARE APPROXIMATE. SEE SEAM AND PANEL REPAIR LOCATION LOGS IN APPENDIX H OF THE CQA FINAL REPORT.
4. AROUND THE PERIMETER, OF THE PLAN VIEW, THE LOCATION OF THE SIDE PANELS HAVE BEEN INCLUDED TO ILLUSTRATE THE LAYOUT OF THE ELEVATION PANELS.

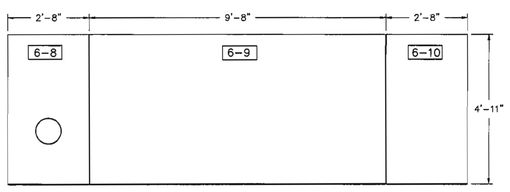

ELEVATION
EPLTS – VALVE HOUSE # 6 NORTH WALL
SCALE: N.T.S.

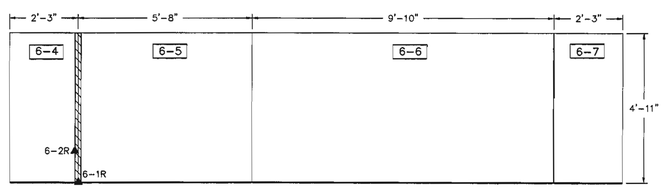

ELEVATION
EPLTS – VALVE HOUSE # 6 WEST WALL
SCALE: N.T.S.

REV. NO.	DATE	DESCRIPTION	DESIGN	CADD	CHECK	REVIEW	APPROVED

OWNER/FACILITY:
UNITED STATES DEPARTMENT OF ENERGY
FERNALD ENVIRONMENTAL MANAGEMENT PROJECT

CLIENT:
FLUOR FERNALD, INC.

PROJECT:
ENHANCED PERMANENT LEACHATE TRANSMISSION SYSTEM

TITLE:
VALVE HOUSE NO. 6

THIS DRAWING MAY NOT BE ISSUED FOR PROJECT TENDER OR CONSTRUCTION, UNLESS SEALED.

SIGNATURE
DATE

STATE OF OHIO
KWASI BADU-TWENEBOAH
E-55354
REGISTERED PROFESSIONAL ENGINEER
SEAL

GEOSYNTEC CONSULTANTS
1100 LAKE HEARN DRIVE
ATLANTA, GEORGIA 30342 USA

PROJECT NO.:	20111
CONTRACT NO.:	95PS005028
FEMP DRAWING NO.:	
GEOSYNTEC PROJECT NO.:	GQ1342-04.2
GEOSYNTEC DOCUMENT NO.:	F01-006
SHEET NO.:	6 OF 7
REVISION NO.:	0

VALVE HOUSE NO. 4

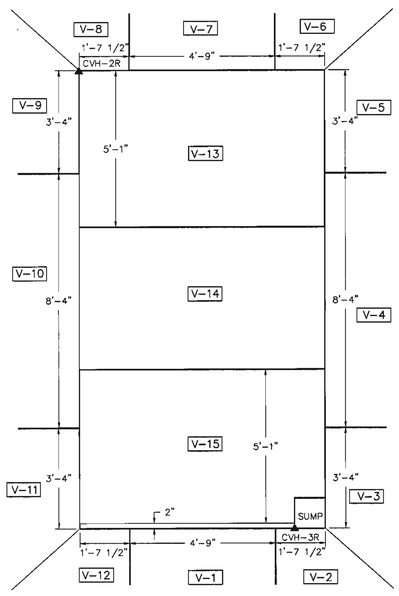

PLAN
EPLTS – CONTROL VALVE HOUSE
SCALE: N.T.S.

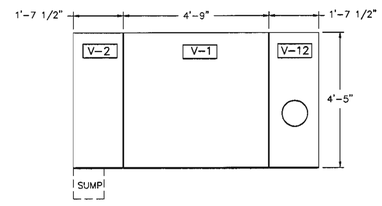

ELEVATION
EPLTS – CONTROL VALVE HOUSE SOUTH WALL
SCALE: N.T.S.

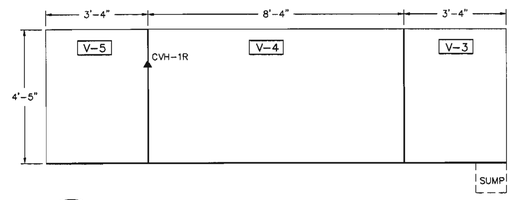

ELEVATION
EPLTS – CONTROL VALVE HOUSE EAST WALL
SCALE: N.T.S.

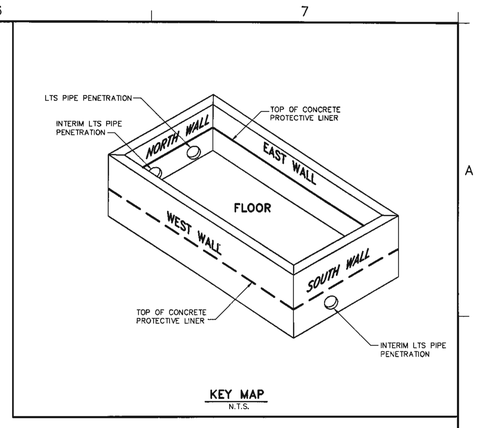

KEY MAP
N.T.S.

LEGEND

V-3	CONCRETE PROTECTIVE LINER PANEL NUMBER
	FACTORY FUSION WELDED SEAM
	CAPPED SEAM OR REPAIRED PANEL
	EXTRUDED SEAM
CVH-1R	EXTRUDED SEAM REPAIR

NOTES:

1. THE CONCRETE PROTECTIVE LINER PANELS, REFERRED TO AS "BEKAPLAST" CONSIST OF POLYETHYLENE FLAT STOK WITH ANCHORS WHICH WERE EMBEDDED INTO CONCRETE. ADJACENT PANELS AND REPAIRS WERE THEN EXTRUSION WELDED AFTER PROPER PREPARTION OF THE AREA. A CAP STRIP OF FLAT STOCK WAS USED OVER CAPS BETWEEN PANELS GREATER THAN 5/8".
2. THE SUMP WAS FABRICATED AND INSTALLED IN A 1 BY 1 FT RECESS IN CONCRETE FLOOR.
3. LOCATION OF REPAIRS ARE APPROXIMATE. SEE SEAM AND PANEL REPAIR LOCATION LOGS IN APPENDIX H OF THE CQA FINAL REPORT.
4. AROUND THE PERIMETER, OF THE PLAN VIEW, THE LOCATION OF THE SIDE PANELS HAVE BEEN INCLUDED TO ILLUSTRATE THE LAYOUT OF THE ELEVATION PANELS.

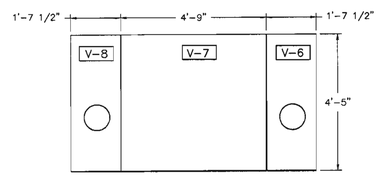

ELEVATION
EPLTS – CONTROL VALVE HOUSE NORTH WALL
SCALE: N.T.S.

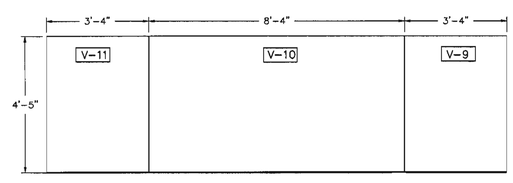

ELEVATION
EPLTS – CONTROL VALVE HOUSE WEST WALL
SCALE: N.T.S.

REV. NO.	DATE	DESCRIPTION	DESIGN	CADD	CHECK	REVIEW	APPROVED

OWNER/FACILITY:
UNITED STATES DEPARTMENT OF ENERGY
FERNALD ENVIRONMENTAL MANAGEMENT PROJECT

CLIENT:
FLUOR FERNALD, INC.

PROJECT:
ENHANCED PERMANENT LEACHATE TRANSMISSION SYSTEM

TITLE:
CONTROL VALVE HOUSE

THIS DRAWING MAY NOT BE ISSUED FOR PROJECT TENDER OR CONSTRUCTION, UNLESS SEALED.

SIGNATURE
DATE

STATE OF OHIO
KWASI BADU-TWENEBOAH
E-55354
REGISTERED
PROFESSIONAL ENGINEER
SEAL

GEO SYNTEC CONSULTANTS
1100 LAKE HEARN DRIVE
ATLANTA, GEORGIA 30342 USA

PROJECT NO.:	20111
CONTRACT NO.:	95PS005028
FEMP DRAWING NO.:	
GEOSYNTEC PROJECT NO.:	GO1342-04.2
GEOSYNTEC DOCUMENT NO.:	F01-007
SHEET NO.:	7 OF 7
REVISION NO.:	0

VALVE HOUSE NO. 5

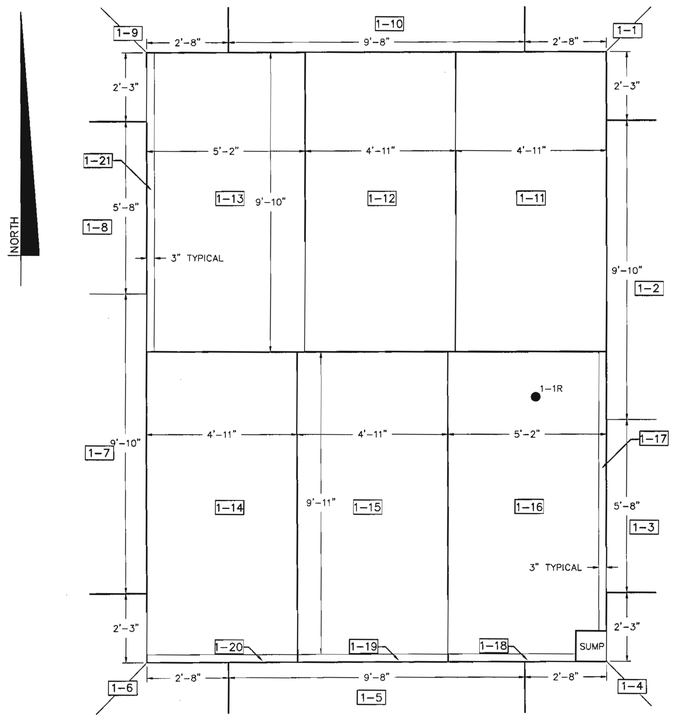

PLAN
EPLTS – VALVE HOUSE # 1
SCALE: N.T.S.

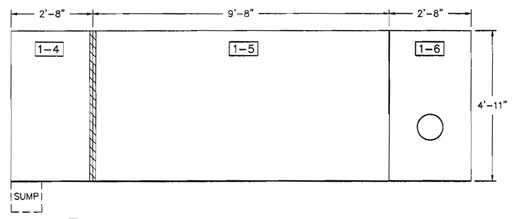

ELEVATION
EPLTS – VALVE HOUSE # 1 SOUTH WALL
SCALE: N.T.S.

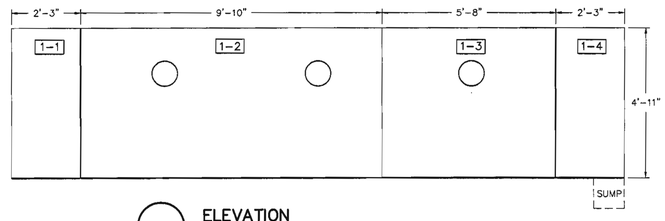

ELEVATION
EPLTS – VALVE HOUSE # 1 EAST WALL
SCALE: N.T.S.

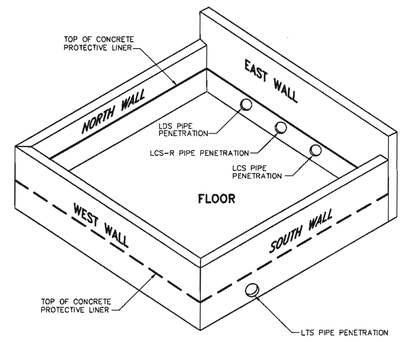

KEY MAP
N.T.S.

LEGEND

1-10	CONCRETE PROTECTIVE LINER PANEL NUMBER
	FACTORY FUSION WELDED SEAM
	CAPPED SEAM OR REPAIRED PANEL
	EXTRUDED SEAM
1-1R	EXTRUDED PANEL REPAIR

NOTES:

1. THE CONCRETE PROTECTIVE LINER PANELS, REFERRED TO AS "BEKAPLAST" CONSIST OF POLYETHYLENE FLAT STOK WTH ANCHORS WHICH WERE EMBEDDED INTO CONCRETE. ADJACENT PANELS AND REPAIRS WERE THEN EXTRUSION WELDED AFTER PROPER PREPARTION OF THE AREA. A CAP STRIP OF FLAT STOCK WAS USED OVER GAPS BETWEEN PANELS GREATER THAN 5/8".
2. THE SUMP WAS FABRICATED AND INSTALLED IN A 1 BY 1 FT RECESS IN CONCRETE FLOOR.
3. LOCATION OF REPAIRS ARE APPROXIMATE. SEE SEAM AND PANEL REPAIR LOCATION LOGS IN APPENDIX H OF THE CQA FINAL REPORT.
4. AROUND THE PERIMETER, OF THE PLAN VIEW, THE LOCATION OF THE SIDE PANELS HAVE BEEN INCLUDED TO ILLUSTRATE THE LAYOUT OF THE ELEVATION PANELS.

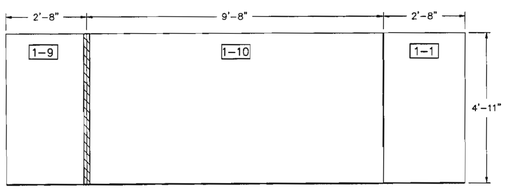

ELEVATION
EPLTS – VALVE HOUSE # 1 NORTH WALL
SCALE: N.T.S.

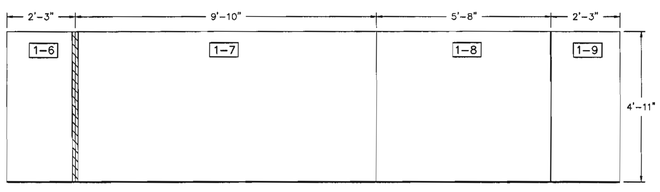

ELEVATION
EPLTS – VALVE HOUSE # 1 WEST WALL
SCALE: N.T.S.

REV. NO.	DATE	DESCRIPTION	DESIGN	CADD	CHECK	REVIEW	APPROVED

OWNER/FACILITY:
UNITED STATES DEPARTMENT OF ENERGY
FERNALD ENVIRONMENTAL MANAGEMENT PROJECT

CLIENT:
FLUOR FERNALD, INC.

PROJECT:
ENHANCED PERMANENT LEACHATE TRANSMISSION SYSTEM

TITLE:
VALVE HOUSE NO. 1

THIS DRAWING MAY NOT BE ISSUED FOR PROJECT TENDER OR CONSTRUCTION, UNLESS SEALED.

SIGNATURE
DATE 10/24/01

STATE OF OHIO
KWASI BADU-TWENEBOAH
E-65354
REGISTERED
PROFESSIONAL ENGINEER
SEAL

GEOSYNTEC CONSULTANTS
1100 LAKE HEARN DRIVE
ATLANTA, GEORGIA 30342 USA

PROJECT NO.:	20111
CONTRACT NO.:	95PS005028
FEMP DRAWING NO.:	
GEOSYNTEC PROJECT NO.:	GQ1342-04.2
GEOSYNTEC DOCUMENT NO.:	F01-001
SHEET NO.:	1 OF 7
REVISION NO.:	0

10/24/2001 2:31:41 PM

APPENDIX I

APPENDIX I

MECHANICAL EQUIPMENT SUBMITTALS AND TEST RESULTS

MANUFACTURER SUBMITTALS AND PRODUCT DATA

- **Process Piping**
- **Tanks and Pumps**
- **Valves**
- **Piping Insulation**
- **Heating**
- **Fans**

PROCESS PIPING

SUPPLIER DOCUMENT SUBMITTAL

FDF PROJECT	CONTRACT NO:	SUBMITTAL NO:	REV:	DATE:	PAGE
20111	FSC - 641	15060-002	0	07-Jul-00	F_1

FROM: The STAVER GROUP, Inc.
Ron Wood
SIGNATURE: Ron Wood

TO: FDF ENGINEERING/CONSTRUCTION DOCUMENT CONTROL (ECDC), MS 52-7
RECEIVED BY: Denise Wenzy DATE: 7/10/00

QTY	DOCUMENT NUMBER	REV	DOCUMENT FAMILY PRO	H&S	MED	TRG	CON	ENG	QAC	OPER	TITLE/DESCRIPTION	SUBMITTAL TYPE DRFT	CFC	INF	ASSOCIATED SPECIFICATION	SUBMITTAL ACTION A	B	C
8	641-15060-002	0						X			Carbon Steel Pipe		X		15060	X		
											Product Data							

REVIEW DISTRIBUTION

NAME	MS	NAME	MS	NAME	MS
Mike Griffin	52-5				
Tim Cherry	52-5				
Jim Jenkins	52-5				
Mike Godber	64				
Bob Kneip	52-5				
B. Scott Wheeler	52-5				
Kwasi Bau Tweneboah	64				

NO COMMENTS: COMMENTS: (PLEASE USE SPACE BELOW FOR COMMENTS OR INDICATE IF ATTACHMENTS)

Minor Comment on pg 1

RECEIVED BY: MW Griffin DATE 7/13/00
(SIGN/DATE AND RETURN A COPY TO ECDC, MS 52-7)

SUBMITTAL TYPE: (BY SUPPLIER)
CFC - CERTIFIED FOR CONSTRUCTION
INF - INFORMATION/RECORD
DRFT - DRAFT/PRELIMINARY

SUBMITTAL ACTION CODE: (BY FDF)
A - Conforms to Subcontract Requirements
B - Minor Comments - Incorporate and Resubmit
C - Revise and Resubmit (SEE COMMENTS)

ORIGINAL

ENTERED

ARMCO

SAWHILL TUBULAR DIVISION

Revision 2

Fluor Contract FSC-641
OSDF Enhanced Permanent Leachate
Transmission System Project
STAVER # 7052

Submittal # 641-15060-002
Reviewed By: RW
Date: 7/7/00

1/26/94

TO: ROBIN-DAYTON WINDUSTRIAL

This letter certifies that all 1/2" through 4" NPS black and hot dipped zinc-coated standard weight (schedule 40) and extra-strong weight (schedule 80) continuous weld pipe produced by Sawhill Tubular Division and stencilled "Sawhill USA MCW ASTM A-53 F" will meet the requirements of:

1. The latest editions of ASTM A-53 Type F and ASME SA-53 Type F.
2. ASTM A-120. (This specification has been replaced by A-53.)

All 1/2" through 4" NPS black and hot dipped zinc-coated standard weight (schedule 40) and extra-strong weight (schedule 80) continuous weld pipe produced by Sawhill Tubular Division and stencilled "Sawhill USA MCW API-5L A-25" will meet the requirements of:

1. The latest edition of API-5L A-25 specification.

All 3-1/2" O.D. through 8-5/8" O.D. black and hot dipped zinc-coated electric resistance welded pipe supplied by Sawhill Tubular Division and stencilled "Sawhill USA ASTM A-53 B E" will meet the requirements of:

1. The latest editions of ASTM A-53 Grade B Type E and ASME SA-53 Grade B Type E.

All 3-1/2" O.D. through 8-5/8" O.D black and hot dipped zinc-coated electric resistance welded pipe supplied by Sawhill Tubular Division and stencilled "Sawhill USA ASTM A-53 B/Spec. 5L B/X42 E" will meet the requirements of:

1. The latest edition of ASTM A-53 Grade B Type E.
2. The latest edition of API-5L Grade B and Grade X42 Type E specification.

All items described above:

1. Are produced in the United States.
2. Are manufactured from steel coils which are of United States manufacture.
3. Are free of mercury contamination.
4. Meet the requirements of Federal Specification WW-P-404D.
5. Meet the requirements of ASME/ANSI B36-10.

INFORMATION ONLY

Very truly yours,

Barry B. Teutschbein
Senior Metallurgical Supervisor

BBT/frb

ARMCO INC. • SAWHILL TUBULAR DIVISION • BOX 11 • SHARON, PA 16146 • 412-347-7771

Use weld neck flanges per 15060-2.01E

[✓] A - Conforms to the Subcontract Requirements
[ ] B - Minor Comment - Incorporate and Resubmit
[ ] C - Revise and Resubmit
Sig: [illegible] Date: 7/13/00

SAWHILL TUBULAR

STEEL PIPE SPECIFICATIONS

Designation	Tensile Requirements		
		Yield Point Min,PSI	Tensile Strength Min,PSI
ASTM A 53			
Continuous Welded (Type F)	Type F	25 000	45 000
Electric Resistance Welded (Type E)	Type E or Type S		
Seamless (Type S)	Grade A	30 000	48 000
	Grade B	35 000	60 000
ASTM A 106			
Seamless	Grade A	30 000	48 000
	Grade B	35 000	60 000
	Grade C	40 000	70 000
API 5L			
Continuous Welded	CW, ERW or SMLS Grade A25	25 000	45 000
Electric Resistance Welded	ERW or SMLS		
Seamless	Grade A	30 000	48 000
	Grade B	35 000	60 000
ASTM A 589			
Type I Drive Pipe	CW	25 000	45 000
Type II Water Well R&D Pipe Type III Driven Well Pipe Type IV Water Well Casing Pipe	ERW or SMLS		
Continuous Welded (Types II, III, & IV)	Grade A	30 000	48 000
	Grade B	35 000	60 000
Electric Resistance Welded and Seamless (Types I, II, III & IV)			

Steel Pipe Sizes

Sawhill manufactures standard steel pipe 1/2" through 8" black or galvanized, plain–end, grooved for victaulic, or threaded and coupled. Some sizes are available in electric welded or seamless. Not all sizes shown below are made by or available from Sawhill.

PIPE SCHEDULES – Including ANSI B36.10

Pipe Size	O.D. (inches)	5	10	20	30	40	Standard	60	80	Extra Strong
1/8	.405	.035 .14	.049 .19			.068 .24	.068 .24		.095 .31	.095 .31
1/4	.540	.049 .26	.065 .33			.088 .42	.088 .42		.119 .54	.119 .54
3/8	.675	.049 .33	.065 .42			.091 .57	.091 .57		.126 .74	.126 .74
1/2	.840	.065 .54	.083 .67			.109 .85	.109 .85		.147 1.09	.147 1.09
3/4	1.050	.065 .69	.083 .86			.113 1.13	.113 1.13		.154 1.47	.154 1.47
1	1.315	.065 .87	.109 1.40			.133 1.68	.133 1.68		.179 2.17	.179 2.17
1–1/4	1.660	.065 1.11	.109 1.81			.140 2.27	.140 2.27		.191 3.00	.191 3.00
1–1/2	1.900	.065 1.28	.109 2.09			.145 2.72	.145 2.72		.200 3.63	.200 3.63
2	2.375	.065 1.61	.109 2.64			.154 3.65	.154 3.65		.218 5.02	.218 5.02
2–1/2	2.875	.083 2.48	.120 3.53			.203 5.79	.203 5.79		.276 7.66	.276 7.66
3	3.500	.083 3.03	.120 4.33			.216 7.58	.216 7.58		.300 10.25	.300 10.25
3–1/2	4.000	.083 3.48	.120 4.97			.226 9.11	.226 9.11		.318 12.50	.318 12.50
4	4.500	.083 3.92	.120 5.61			.237 10.79	.237 10.79		.337 14.98	.337 14.98
4–1/2	5.000						.247 12.53			.355 17.61
5	5.563	.109 6.36	.134 7.77			.258 14.62	.258 14.62		.375 20.78	.375 20.78
6	6.625	.109 7.60	.134 9.29			.280 18.97	.280 18.97		.432 28.57	.432 28.57
7	7.625						.301 23.57			.500 38.05
8	8.625	.109 9.93	.148 13.40	.250 22.36	.277 24.70	.322 28.55	.322 28.55	.406 35.66	.500 43.39	.500 43.39
9	9.625						.342 33.90			.500 48.72
10	10.750	.134 15.19	.165 18.65	.250 28.04	.307 34.24	.365 40.48	.365 40.48	.500 54.74	.594 64.43	.500 54.74
12	12.750	.156 20.98	.180 24.17	.250 33.38	.330 43.77	.406 53.52	.375 49.56	.562 73.15	.688 88.63	.500 65.42
14	14.000	.156 23.07	.250 36.71	.312 45.61	.375 54.57	.438 63.44	.375 54.57	.594 85.05	.750 106.13	.500 72.09
16	16.000	.165 27.90	.250 42.05	.312 52.27	.375 62.58	.500 82.77	.375 62.58	.656 107.50	.844 136.61	.500 82.77

Bold Figures–Wall Thickness In Inches

Colored Figures –Weight Per Foot In Pounds (Plain End)

*A Guideline for Maximum Allowable Working Pressures (PSI) Based on ASME B31.1 Power Piping Code

Nominal Pipe Size	Continuous Weld Pipe API 5L Grade A25 ASTM A53 – Type F		ERW Pipe API 5L/ASTM A53 Plain–End		Seamless Pipe API 5L/ASTM A53, A106 Plain–End	
	Plain–End	Threaded	Grade A	Grade B	Grade A	Grade B
STANDARD WEIGHT						
1/4"	2160	860	3280	4120	3860	4830
3/8"	1750	750	2670	3350	3140	3930
1/2"	1670	630	2540	3180	2980	3730
3/4"	1370	550	2080	2610	2450	3060
1"	1270	480	1940	2430	2280	2850
1–1/4"	1050	430	1590	2000	1870	2340
1–1/2"	950	410	1440	1810	1690	2120
2"	800	380	1210	1520	1430	1790
2–1/2"	870	370	1330	1670	1560	1950
3"	760	350	1150	1440	1350	1690
3–1/2"	690	330	1050	1320	1240	1550
4"	640	320	970	1220	1150	1430
5"	–	–	860	1070	1010	1260
6"	–	–	780	980	910	1140
8"	–	–	680	860	810	1010
EXTRA STRONG						
1/4"	3040	1620	4620	5800	5440	6800
3/8"	2510	1420	3820	4800	4500	5620
1/2"	2350	1230	3570	4480	4200	5250
3/4"	1920	1060	2920	3670	3440	4300
1"	1770	940	2690	3380	3170	3960
1–1/4"	1470	820	2230	2800	2630	3280
1–1/2"	1330	780	2030	2540	2390	2980
2"	1150	710	1750	2200	2060	2580
2–1/2"	1210	690	1840	2310	2170	2710
3"	1070	640	1620	2040	1910	2390
3–1/2"	990	620	1500	1880	1770	2210
4"	930	600	1410	1770	1660	2070
5"	–	–	1260	1580	1480	1860
6"	–	–	1220	1530	1430	1790
8"	–	–	1070	1350	1270	1590

Often, a higher safety factor than the 4 to 1 used in the attached table is required by local codes, specific applications, or accepted industry practice. To determine the maximum safe working pressures at optional safety factors, multiply the values found in the table by the following:

Safety Factor	Multiplier
5	.80
6	.67
7	.57
8	.50
9	.44
10	.40

This safety factor would be appropriate for most applications ➡ 8

Notes:

1) The pressures listed are based on the Boardman Formula and incorporates:
   a) The minimum specified tensile strength.
   b) The minimum wall thickness.
   c) A joint efficiency factor of 0.60 for CW pipe and 0.85 for ERW pipe.
2) No provisions made for abnormal or unusual conditions.
3) No allowance made for coupling design or limitations.
4) No allowance made for thinning of walls due to bending or corrosion.
5) Good for temperatures from (–20) degrees to 400 degrees fahrenheit.
6) The pipe manufacturing method may limit its use for certain applications.

TERMS AND CONDITIONS OF SALES

Weldbend Fittings and Flanges are products of Weldbend Corporation. Weldbend Corporation is a domestic manufacturer of welding fittings and welding flanges located in Chicago, Illinois U.S.A.

All Weldbend products are sold only upon the following terms and conditions.

1. ACCEPTANCE: Once Weldbend Corporation ("Weldbend") accepts Customer's purchase order, the terms and conditions set forth herein shall constitute the entire agreement and understanding between Weldbend and Customer relating to the Weldbend products and merge all prior discussions, understandings, agreements and documents between them. Any variation to Weldbend's terms and conditions and any additional or different terms or conditions on any order form or other document submitted by Customer are expressly rejected unless and until accepted in writing by a duly authorized officer of Weldbend.

2. PRICE: All orders will be invoiced at Weldbend's current price schedule prevailing at the time of shipment and are subject to change without notice. C.O.D. charges may be added to the price of the products in Weldbend's sole discretion. All sales, use, excise and other applicable taxes shall be charged to Customer and remitted by Customer to Weldbend.

3. SHIPMENTS: All materials will be delivered f.o.b. point of shipment from Weldbend's plant. All risks of loss of materials will be assumed by Customer upon delivery to the carrier or on pickup by Customer at Weldbend's plant. The method of shipment and routing will be determined by Weldbend, absent special agreement between Weldbend and Customer. All shipping and delivery dates are approximate. Weldbend shall not be responsible for switching, spotting, handling, storage, demurrage or any other transportation or accessorial service, nor for any charges incurred therefor. Customer shall be responsible for filing and pursuing claims with carriers for loss or damage in transit. Railroad and other transportation permits as and when required shall be obtained by Customer. Weldbend reserves the right to deliver in more than one lot and to invoice each lot separately.

4. TERMS OF PAYMENT: Subject to the approval of Weldbend's credit department, terms of payment will be net cash thirty (30) days from the date of invoice and will be payable in Chicago, Illinois. Shipments, deliveries and performance of work shall at all times be subject to the approval of Weldbend's credit department.

Failure to receive timely payment of invoices covering work completed, and/or work in progress, shall be sufficient reason to withhold or delay subsequent shipments of materials, and/or performance of labor or to terminate all orders as set forth in Section 10. If pursuant to this provision Weldbend shall defer any shipment or services or cancel in whole or in part any order, Customer shall be liable for and reimburse Weldbend for all damage, including any and all direct and consequential damage incurred by Weldbend by reason of such deferment or cancellation. Unpaid invoices in excess of thirty (30) days shall be subject to an interest charge at the rate of 1% per month from the date past due (but in no event higher than the rate permitted by applicable law). In the event of Customer's default of any of the terms of the contract including but not limited to customer's failure to pay invoices timely, customer agrees to pay Weldbend all costs and expenses incurred as a result thereof, including but not limited to reasonable attorneys' fees, court costs and all costs of collection.

5. DELAYS: Weldbend shall not be responsible for any action or inaction of any carrier, including delays in delivery, nor, under any circumstances, shall Weldbend be liable for any delay in performance, or non-performance, due to acts of God, war, riots, civil disturbances, acts of civil or military authorities, governmental regulation, court orders, fires, strikes or other labor disputes, shortages of labor, materials, fuel or energy, or unavailability of transportation, equipment failure, failure of supplier, carrier or subcontractor to deliver on time, or due to any other cause or causes beyond the control of Weldbend.

6. LIMITED, EXCLUSIVE WARRANTY: Weldbend warrants to its ORIGINAL CUSTOMER ONLY that all Weldbend fittings and flanges meet all applicable ASTM specifications and that Weldbend is the unencumbered owner of all products shipped pursuant to these terms and conditions. This warranty does not apply to products which have been damaged during shipment or by abuse, misuse, misapplication, maintenance, alteration or improper installation, maintenance or repair and is conditioned upon Customer (a) advising Weldbend in writing, within 10 days of receipt of products, of its belief that said products do not conform to ASTM specifications and (b) providing Weldbend a reasonable time to inspect said products and investigate Customer's claim. If Weldbend determines, in its sole opinion, that the products fail to conform to ASTM specifications, it will, at its sole option, either refund all payments made by Customer with respect to such non-conforming products or, alternatively, replace such non-conforming products and pay any additional shipping charges incurred as a result thereof. Customer agrees to dispose of or return the non-conforming products in accordance with instructions provided by Weldbend. THE FOREGOING SHALL CONSTITUTE THE EXCLUSIVE REMEDY OF THE CUSTOMER AND THE EXCLUSIVE LIABILITY OF WELDBEND. THIS WARRANTY IS EXCLUSIVE AND IN LIEU OF ALL OTHER WARRANTIES, WHETHER ORAL OR WRITTEN, EXPRESSED OR IMPLIED. NO WARRANTY OF MERCHANTABILITY OR FITNESS FOR A PARTICULAR PURPOSE SHALL APPLY. No employee, agent or representative of Weldbend has authority to make modifications or additions to this warranty in any respect except pursuant to a written agreement signed by a duly authorized officer of Weldbend.

7. LIMITATION OF LIABILITY: UNDER NO CIRCUMSTANCES, WHETHER ALLEGED AS A RESULT OF BREACH OF CONTRACT OR WARRANTY, NEGLIGENCE, STRICT LIABILITY OR ANY OTHER LEGAL THEORY, WILL WELDBEND BE RESPONSIBLE TO CUSTOMER, OR TO ANY THIRD PARTY, FOR ANY SPECIAL, DIRECT, INDIRECT, CONSEQUENTIAL, INCIDENTAL OR OTHER DAMAGES OF ANY KIND, INCLUDING BUT NOT LIMITED TO LOST PROFITS, LOSS OF USE OF PROPERTY OR DAMAGES FOR PERSONAL INJURY, AND NO CLAIMS FOR ANY SUCH DAMAGES SHALL BE BROUGHT BY THE CUSTOMER. In no event shall Weldbend be liable to Customer for any amount in excess of the purchase price of the product for which a claim is made. Customer shall not back charge, countercialm or set-off its claims against payments due on its orders.

8. RETURN OF PRODUCTS AND/OR TERMINATION OF ORDERS: Customer shall not return any products shipped by Weldbend without receiving the prior written permission and/or consent of Weldbend. If Customer seeks to cancel any part of an order prior to delivery, such requests shall be made to Weldbend in writing at once. Except with respect to products which fail to conform to Customer's order or to Weldbend's limited warranty, all products returned shall be charged 15% of the value of the invoice and, in addition, freight charges both ways. Any orders shipped by Weldbend and refused by Customer will be handled as a return products shipment. Any fitting once welded into a pipe line and removed is not subject to return.

9. PATENT AND OTHER RIGHTS: The sale of the products and the publication of any information or technical data relating thereto does not imply freedom from infringement of patent, copyright, registered design or other industrial property rights in respect of any particular combination or application of the products.

10. TERMINATION: If Customer defaults in payment of any sum due Weldbend or commits any breach of any of these terms and conditions or any other contract with Weldbend or, if Customer's financial condition becomes unsatisfactory to Weldbend, then Weldbend may, without prejudice to any other rights which may have accrued or which may accrue to it, terminate all orders with that Customer by notice in writing or may defer shipment until the situation is remedied to Weldbend's satisfaction.

11. MANUFACTURE AND AVAILABILITY OF PRODUCTS: Weldbend reserves the right to change manufacturing methods and availability of products without previous notice. To augment its own manufacturing facilities, Weldbend Corporation reserves the right to sublet or contract work out to any company of its choice. All such products will be considered as of Weldbend manufacture, will be die-stamped with the copyrighted Weldbend name and/or Weldbend logo, and will be subject to the terms and conditions hereon.

12. ASSIGNMENT: Customer may not assign any right or duty arising under any order, in whole or in part, without Weldbend's prior written consent.

13. NO WAIVER OF RIGHTS; PARTIAL INVALIDITY: Any waiver by either party or any breach of any provision of these terms and conditions shall not be construed as a waiver of any other provision or of any continuing or succeeding breach of such provision. If any provision of the terms and conditions shall be deemed invalid, illegal or unenforceable in any respect, the legality and enforceability of all other provisions of the terms and conditions shall not be in any way impaired or affected thereby.

14. COMPLIANCE WITH LAW: Customer agrees that it is solely responsible for compliance with all applicable federal, state and local laws, ordinances, regulations, rules and standards relating to the installation, maintenance and use of the products purchased from Weldbend.

15. LAW: The terms and conditions and any agreed amendment thereto shall be governed in all respects by the internal laws of the State of Illinois.

NOTE: This catalog is for the exclusive use of the Jobber or Distributor of Welding Fittings. The Weldbend Corporation of Chicago restricts its sales to Jobbers and/or Distributors only.

90° ELBOWS

WELDBEND

LONG RADIUS STANDARD WEIGHT

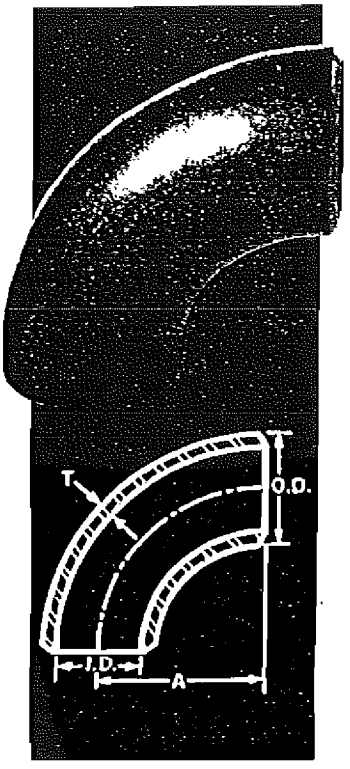

Pipe Size	O.D. Outside Diameter	I.D. Inside Diameter	T Wall Thickness	A Center to End	Pipe Schedule Number	Approx. Weight in Pounds
1/2	.840	.622	.109	1 1/2	40	.16
3/4	1.050	.824	.113	1 1/8	40	.17
1	1.315	1.049	.133	1 1/2	40	.40
1 1/4	1.660	1.380	.140	1 7/8	40	.55
1 1/2	1.900	1.610	.145	2 1/4	40	.80
2	2.375	2.067	.154	3	40	1.6
2 1/2	2.875	2.469	.203	3 3/4	40	3.2
3	3.500	3.068	.216	4 1/2	40	4.8
3 1/2	4.000	3.548	.226	5 1/4	40	6.6
4	4.500	4.026	.237	6	40	8.9
5	5.563	5.047	.258	7 1/2	40	15.1
6	6.625	6.065	.280	9	40	24.0
8	8.625	7.981	.322	12	40	47.8
10	10.750	10.020	.365	15	40	83.4
12	12.750	12.000	.375	18	*	123.0
14	14.000	13.250	.375	21	30	155.0
16	16.000	15.250	.375	24	30	206.0
18	18.000	17.250	.375	27	*	262.0
20	20.000	19.250	.375	30	20	324.0
24	24.000	23.250	.375	36	20	466.0

LONG RADIUS EXTRA STRONG

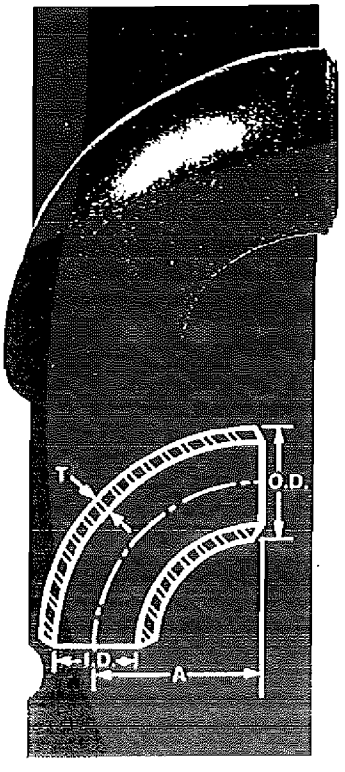

Pipe Size	O.D. Outside Diameter	I.D. Inside Diameter	T Wall Thickness	A Center to End	Pipe Schedule Number	Approx. Weight in Pounds
1/2	.840	.546	.147	1 1/2	80	.26
3/4	1.050	.742	.154	1 1/8	80	.29
1	1.315	.957	.179	1 1/2	80	.48
1 1/4	1.660	1.278	.191	1 7/8	80	.79
1 1/2	1.900	1.500	.200	2 1/4	80	1.2
2	2.375	1.939	.218	3	80	2.1
2 1/2	2.875	2.323	.276	3 3/4	80	3.8
3	3.500	2.900	.300	4 1/2	80	6.3
3 1/2	4.000	3.364	.318	5 1/4	80	8.6
4	4.500	3.826	.337	6	80	12.5
5	5.563	4.813	.375	7 1/2	80	21.2
6	6.625	5.761	.432	9	80	34.4
8	8.625	7.625	.500	12	80	71.3
10	10.750	9.750	.500	15	60	111.0
12	12.750	11.750	.500	18	*	158.0
14	14.000	13.000	.500	21	*	201.0
16	16.000	15.000	.500	24	40	270.0
18	18.000	17.000	.500	27	*	348.0
20	20.000	19.000	.500	30	30	422.0
24	24.000	23.000	.500	36	*	604.0

*This size and thickness does not correspond to any pipe schedule number.

1. Conforms to ASME/ANSI B16.9 & ASTM A-234.
2. All dimensions are in inches
3. For bevel detail see page 50.
4. For dimensional tolerances see page 51.

STRAIGHT TEES

WELDBEND

FITTINGS

STANDARD WEIGHT

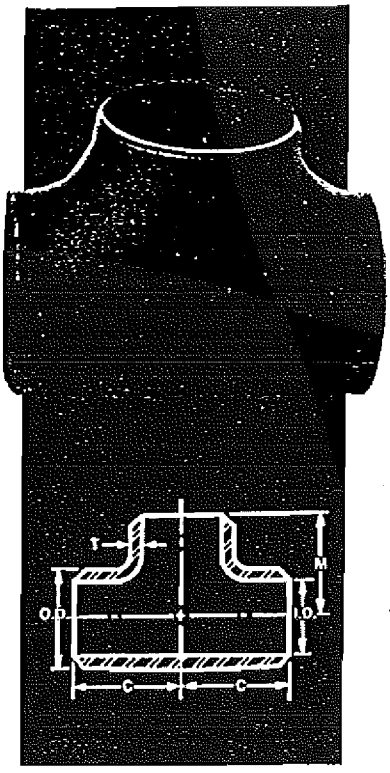

Pipe Size	O.D. Outside Diameter	I.D. Inside Diameter	T Wall Thickness	C Center to End	M Center to End	Pipe Schedule Number	Approx. Weight in Pounds
1/2	.840	.622	.109	1	1	40	.35
3/4	1.050	.824	.113	1 1/8	1 1/8	40	.50
1	1.315	1.049	.133	1 1/2	1 1/2	40	.75
1 1/4	1.660	1.380	.140	1 7/8	1 7/8	40	1.3
1 1/2	1.900	1.610	.145	2 1/4	2 1/4	40	1.9
2	2.375	2.067	.154	2 1/2	2 1/2	40	3.2
2 1/2	2.875	2.469	.203	3	3	40	5.8
3	3.500	3.068	.216	3 3/8	3 3/8	40	7.2
3 1/2	4.000	3.548	.226	3 3/4	3 3/4	40	9.5
4	4.500	4.026	.237	4 1/8	4 1/8	40	12.7
5	5.563	5.047	.258	4 7/8	4 7/8	40	20.8
6	6.625	6.065	.280	5 5/8	5 5/8	40	33.1
8	8.625	7.981	.322	7	7	40	56.5
10	10.750	10.020	.365	8 1/2	8 1/2	40	90.9
12	12.750	12.000	.375	10	10	*	136.0
14	14.000	13.250	.375	11	11	30	162.0
16	16.000	15.250	.375	12	12	30	206.0
18	18.000	17.250	.375	13 1/2	13 1/2	*	272.0
20	20.000	19.250	.375	15	15	20	350.0
24	24.000	23.250	.375	17	17	20	508.0

*This size and thickness does not correspond to any pipe schedule number.

1. Conforms to ASME/ANSI B16.9 & ASTM A-234.
2. All dimensions are in inches
3. For bevel detail see page 50.
4. For dimensional tolerances see page 51.

REDUCING TEES

WELDBEND

STANDARD WEIGHT

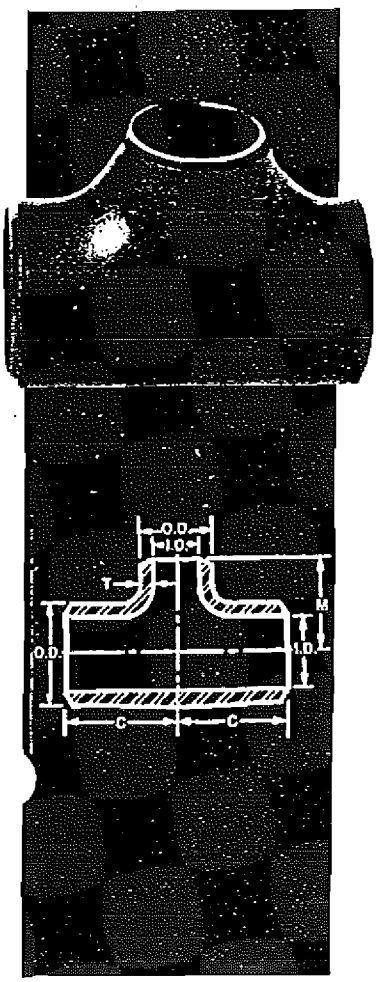

Pipe Size	DIMENSIONS OF RUN				DIMENSIONS OF BRANCH				Pipe Schedule Number	Approx. Weight in Pounds
	O.D. Outside Dia.	T Wall Thickness	I.D. Inside Dia.	C Center to End	O.D. Outside Dia.	T Wall Thickness	I.D. Inside Dia.	M Center to End		
3/4 x 3/4 x 1/2	1.050	.113	.824	1 1/8	.840	.109	.622	1 1/8	40	.41
1 x 1 x 1/2	1.315	.133	1.049	1 1/2	.840	.109	.622	1 1/2	40	.78
1 x 1 x 3/4	1.315	.133	1.049	1 1/2	1.050	.113	.824	1 1/2	40	.81
1 1/4 x 1 1/4 x 1/2	1.660	.140	1.380	1 7/8	.840	.109	.622	1 7/8	40	1.3
1 1/4 x 1 1/4 x 1 3/4	1.660	.140	1.380	1 7/8	1.050	.113	.824	1 7/8	40	1.3
1 1/4 x 1 1/4 x 1	1.660	.140	1.380	1 7/8	1.315	.133	1.049	1 7/8	40	1.3
1 1/2 x 1 1/2 x 1/2	1.900	.145	1.610	2 1/4	.840	.109	.622	2 1/4	40	1.8
1 1/2 x 1 1/2 x 3/4	1.900	.145	1.610	2 1/4	1.050	.113	.824	2 1/4	40	1.8
1 1/2 x 1 1/2 x 1	1.900	.145	1.610	2 1/4	1.315	.133	1.049	2 1/4	40	1.9
1 1/2 x 1 1/2 x 1 1/4	1.900	.145	1.610	2 1/4	1.660	.140	1.380	2 1/4	40	2.0
2 x 2 x 3/4	2.375	.154	2.067	2 1/2	1.050	.113	.824	1 3/4	40	2.5
2 x 2 x 1	2.375	.154	2.067	2 1/2	1.315	.133	1.049	2	40	2.8
2 x 2 x 1 1/4	2.375	.154	2.067	2 1/2	1.660	.140	1.380	2 1/4	40	3.0
2 x 2 x 1 1/2	2.375	.154	2.067	2 1/2	1.900	.145	1.610	2 3/8	40	3.1
2 1/2 x 2 1/2 x 1	2.875	.203	2.469	3	1.315	.133	1.049	2 1/4	40	4.6
2 1/2 x 2 1/2 x 1 1/4	2.875	.203	2.469	3	1.660	.140	1.380	2 1/2	40	4.8
2 1/2 x 2 1/2 x 1 1/2	2.875	.203	2.469	3	1.900	.145	1.610	2 5/8	40	5.1
2 1/2 x 2 1/2 x 2	2.875	.203	2.469	3	2.375	.154	2.067	2 3/4	40	5.4
3 x 3 x 1	3.500	.216	3.068	3 3/8	1.315	.133	1.049	2 5/8	40	6.5
3 x 3 x 1 1/4	3.500	.216	3.068	3 3/8	1.660	.140	1.380	2 3/4	40	6.6
3 x 3 x 1 1/2	3.500	.216	3.068	3 3/8	1.900	.145	1.610	2 7/8	40	6.8
3 x 3 x 2	3.500	.216	3.068	3 3/8	2.375	.154	2.067	3	40	7.0
3 x 3 x 2 1/2	3.500	.216	3.068	3 3/8	2.875	.203	2.469	3 1/4	40	7.2
3 1/2 x 3 1/2 x 1 1/2	4.000	.226	3.548	3 3/4	1.900	.145	1.610	3 1/8	40	8.9
3 1/2 x 3 1/2 x 2	4.000	.226	3.548	3 3/4	2.375	.154	2.067	3 1/4	40	9.2
3 1/2 x 3 1/2 x 2 1/2	4.000	.226	3.548	3 3/4	2.875	.203	2.469	3 1/2	40	9.4
3 1/2 x 3 1/2 x 3	4.000	.226	3.548	3 3/4	3.500	.216	3.068	3 5/8	40	9.8
4 x 4 x 1 1/2	4.500	.237	4.026	4 1/8	1.900	.145	1.610	3 3/8	40	11.2
4 x 4 x 2	4.500	.237	4.026	4 1/8	2.375	.154	2.067	3 1/2	40	11.2
4 x 4 x 2 1/2	4.500	.237	4.026	4 1/8	2.875	.203	2.469	3 3/4	40	11.4
4 x 4 x 3	4.500	.237	4.026	4 1/8	3.500	.216	3.068	3 7/8	40	11.6
4 x 4 x 3 1/2	4.500	.237	4.026	4 1/8	4.000	.226	3.548	4	40	11.9
5 x 5 x 2	5.563	.258	5.047	4 7/8	2.375	.154	2.067	4 1/8	40	18.8
5 x 5 x 2 1/2	5.563	.258	5.047	4 7/8	2.875	.203	2.469	4 1/4	40	19.0
5 x 5 x 3	5.563	.258	5.047	4 7/8	3.500	.216	3.068	4 3/8	40	19.4
5 x 5 x 3 1/2	5.563	.258	5.047	4 7/8	4.000	.226	3.548	4 1/2	40	20.0
5 x 5 x 4	5.563	.258	5.047	4 7/8	4.500	.237	4.026	4 5/8	40	20.5
6 x 6 x 2	6.625	.280	6.065	5 5/8	2.375	.154	2.067	4 3/4	40	29.0
6 x 6 x 2 1/2	6.625	.280	6.065	5 5/8	2.875	.203	2.469	4 3/4	40	29.7
6 x 6 x 3	6.625	.280	6.065	5 5/8	3.500	.216	3.068	4 7/8	40	30.0
6 x 6 x 3 1/2	6.625	.280	6.065	5 5/8	4.000	.226	3.548	5	40	30.0
6 x 6 x 4	6.625	.280	6.065	5 5/8	4.500	.237	4.026	5 1/8	40	30.5
6 x 6 x 5	6.625	.280	6.065	5 5/8	5.563	.258	5.047	5 3/8	40	32.0

1. Conforms to ASME/ANSI B16.9 & A53M A-234.
2. All dimensions are in inches
3. For bevel detail see page 50.
4. For dimensional tolerances see page 51.

REDUCERS

CONCENTRIC AND ECCENTRIC – STANDARD WEIGHT

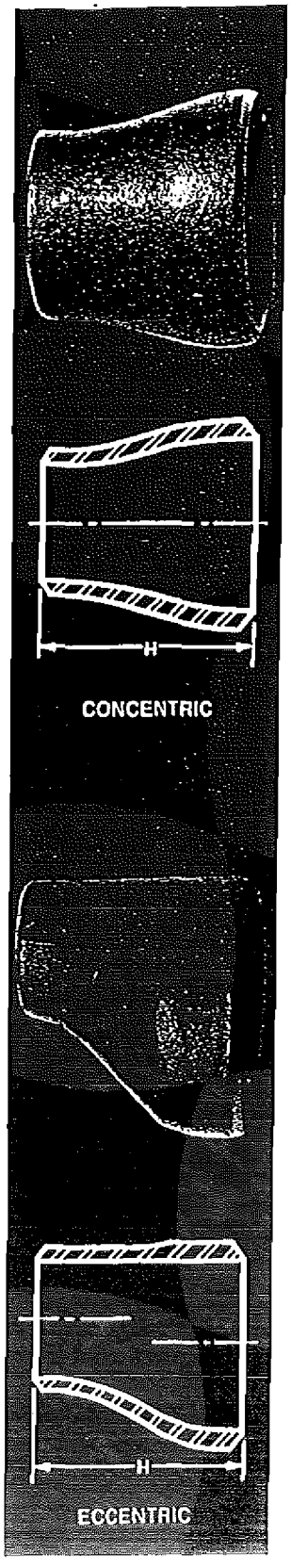

Pipe Size	H Length	Approx. Weight in Pounds
3/4 x 1 1/2	1 1/2	.21
1 x 1/2	2	.36
1 x 3/4	2	.36
1 1/4 x 1/2	2	.42
1 1/4 x 3/4	2	.42
1 1/4 x 1	2	.48
1 1/2 x 1/2	2 1/2	.56
1 1/2 x 3/4	2 1/2	.56
1 1/2 x 1	2 1/2	.57
1 1/2 x 1 1/4	2 1/2	.65
2 x 3/4	3	.74
2 x 1	3	.81
2 x 1 1/4	3	.88
2 x 1 1/2	3	.94
2 1/2 x 1	3 1/2	1.3
2 1/2 x 1 1/4	3 1/2	1.4
2 1/2 x 1 1/2	3 1/2	1.5
2 1/2 x 2	3 1/2	1.6
3 x 1	3 1/2	1.7
3 x 1 1/4	3 1/2	1.8
3 x 1 1/2	3 1/2	1.9
3 x 2	3 1/2	2.0
3 x 2 1/2	3 1/2	2.2
3 1/2 x 1 1/4	4	2.5
3 1/2 x 1 1/2	4	2.6
3 1/2 x 2	4	2.6
3 1/2 x 2 1/2	4	2.7
3 1/2 x 3	4	2.8
4 x 1	4	2.8
4 x 1 1/4	4	3.0
4 x 1 1/2	4	3.0
4 x 2	4	3.1
4 x 2 1/2	4	3.2
4 x 3	4	3.3
4 x 3 1/2	4	3.5
5 x 2	5	4.7
5 x 2 1/2	5	4.8
5 x 3	5	5.1
5 x 3 1/2	5	5.3
5 x 4	5	5.5

Pipe Size	H Length	Approx. Weight in Pounds
6 x 2	5 1/2	6.5
6 x 2 1/2	5 1/2	6.6
6 x 3	5 1/2	6.9
6 x 3 1/2	5 1/2	7.1
6 x 4	5 1/2	7.4
6 x 5	5 1/2	7.6
8 x 3	6	9.8
8 x 3 1/2	6	10.6
8 x 4	6	10.8
8 x 5	6	11.5
8 x 6	6	12.3
10 x 4	7	18.4
10 x 5	7	19.5
10 x 6	7	20.7
10 x 7	8	22.1
12 x 4	8	26.2
12 x 5	8	27.8
12 x 6	8	29.5
12 x 8	8	30.5
12 x 10	8	32.4
14 x 6	13	59.2
14 x 8	13	60.0
14 x 10	13	61.4
14 x 12	13	63.1
16 x 6	14	67.4
16 x 8	14	69.4
16 x 10	14	71.1
16 x 12	14	72.7
16 x 14	14	75.4
18 x 10	15	83.7
18 x 12	15	84.8
18 x 14	15	86.0
18 x 16	15	87.3
20 x 10	20	117.0
20 x 12	20	118.0
20 x 14	20	119.0
20 x 16	20	121.0
20 x 18	20	123.0
24 x 16	20	150.0
24 x 18	20	153.0
24 x 20	20	156.0

1. Conforms to ASME/ANSI B16.9 & ASTM A-234.
2. All dimensions are in inches
3. For bevel detail see page 50.
4. For dimensional tolerances see page 51

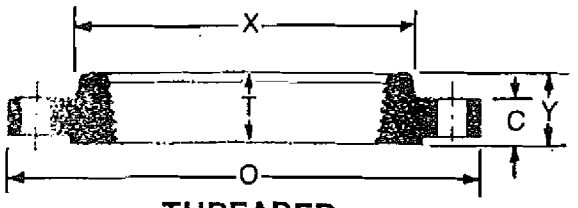

THREADED

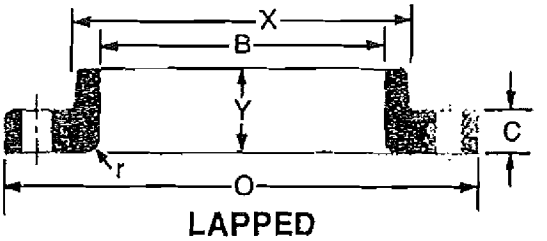

LAPPED

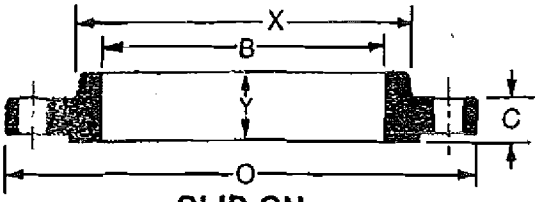

SLIP-ON

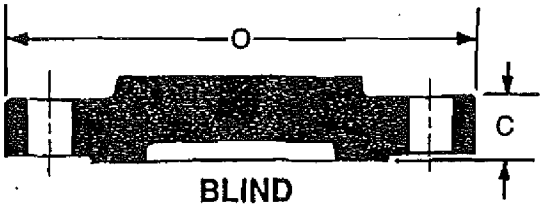

BLIND

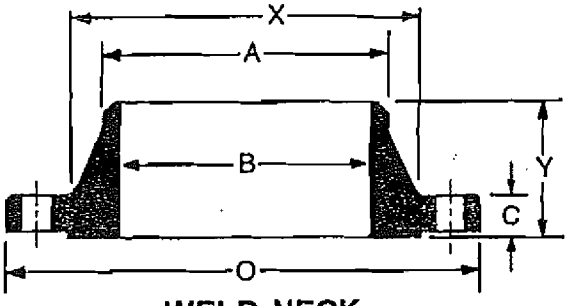

WELD NECK

Pipe Size	O Outside Diameter of Flange	C * Thickness of Flange, Minimum	X ** Diameter of Hub	A Diameter of Weld Neck	Y Threaded Slip-on	Y Lapped	Y Weld Neck	T Thread Length Threaded Flange, Minimum	B Slip-on, Minimum	B Lapped, Minimum	B Weld Neck	r Lapped Flange Radius	Pipe Size
½	3.50	0.44	1.19	0.84	0.62	0.62	1.88	0.62	0.88	0.90	0.62	0.12	½
¾	3.88	0.50	1.50	1.05	0.62	0.62	2.06	0.62	1.09	1.11	0.82	0.12	¾
1	4.25	0.56	1.94	1.32	0.69	0.69	2.19	0.69	1.36	1.38	1.05	0.12	1
1¼	4.62	0.62	2.31	1.66	0.81	0.81	2.25	0.81	1.70	1.72	1.38	0.19	1¼
1½	5.00	0.69	2.56	1.90	0.88	0.88	2.44	0.88	1.95	1.97	1.61	0.25	1½
2	6.00	0.75	3.06	2.38	1.00	1.00	2.50	1.00	2.44	2.46	2.07	0.31	2
2½	7.00	0.88	3.56	2.88	1.12	1.12	2.75	1.12	2.94	2.97	2.47	0.31	2½
3	7.50	0.94	4.25	3.50	1.19	1.19	2.75	1.19	3.57	3.60	3.07	0.38	3
3½	8.50	0.94	4.81	4.00	1.25	1.25	2.81	1.25	4.07	4.10	3.55	0.38	3½
4	9.00	0.94	5.31	4.50	1.31	1.31	3.00	1.31	4.57	4.60	4.03	0.44	4
5	10.00	0.94	6.44	5.56	1.44	1.44	3.50	1.44	5.66	5.69	5.05	0.44	5
6	11.00	1.00	7.56	6.63	1.56	1.56	3.50	1.56	6.72	6.75	6.07	0.50	6
8	13.50	1.12	9.69	8.63	1.75	1.75	4.00	1.75	8.72	8.75	7.98	0.50	8
10	16.00	1.19	12.00	10.75	1.94	1.94	4.00	1.94	10.88	10.92	10.02	0.50	10
12	19.00	1.25	14.38	12.75	2.19	2.19	4.50	2.19	12.88	12.92	12.00	0.50	12
14	21.00	1.38	15.75	14.00	2.25	3.12	5.00	2.25	14.14	14.18		0.50	14
16	23.50	1.44	18.00	16.00	2.50	3.44	5.00	2.50	16.16	16.19	WELDBEND	0.50	16
18	25.00	1.56	19.88	18.00	2.69	3.81	5.50	2.69	18.18	18.20	Specifi-	0.50	18
20	27.50	1.69	22.00	20.00	2.88	4.06	5.69	2.88	20.20	20.25	cations	0.50	20
24	32.00	1.88	26.12	24.00	3.25	4.38	6.00	3.25	24.25	24.25		0.50	24

* Should flanges be required with flat face, shipments may be either the full thickness, or a thickness with raised face removed. (Removal of the raised face produces a non-standard length through the hub.)

\ taper shall not exceed 7 degrees on threaded, slip-on, and lapped flanges.

WELDBEND NOTES

1. All dimensions are in inches.
2. Calculated flange weights on page 47.
3. Dimensional tolerances on page 70.
4. Standard flange facings on pages 72 and 73
5. Welding end bevel information on pages 74 and 75.
6. Thread standards on page 76 and 77.
7. Blind flanges may be produced with or without hubs.

SUPPLIER DOC NT SUBMITTAL

FDF PROJEC .O: 20111	CONTRACT NO: FSC - 641	SUBMITTAL NO: 15060-003	REV: 0	DATE: 28-Aug-00	PAGE 1 OF 1

FROM: The STAVER GROUP, Inc.
David R. Opalka
SIGNATURE: David R. Opalka

TO: FDF ENGINEERING/CONSTRUCTION DOCUMENT CONTROL (ECDC), MS 52-7
RECEIVED BY: Denise Wentz DATE: 8/29/00

QTY	DOCUMENT NUMBER	REV	DOCUMENT FAMILY PRO	H&S	MED	TRG	CON	ENG	QAC	OPER	TITLE/DESCRIPTION	SUBMITTAL TYPE DRFT	CFC	INF	ASSOCIATED SPECIFICATION	SUBMITTAL ACTION A	B	C
8	641-15060-003A	0						X			Piping supports		X		15060	X		
	part 2.02.B																	

REVIEW DISTRIBUTION

NAME	MS	NAME	MS	NAME	MS
Mike Griffin	~~52-5~~				
Tim Cherry	52-5				
Jim Jenkins	52-5				
Mike Gaber	64				
Rob Knepp	52-5				
B. Scott Wheeler	52-5				
Kwasi Bau-Tuenebaah	38				

NO COMMENTS: X

COMMENTS: (PLEASE USE SPACE BELOW FOR COMMENTS OR INDICATE IF ATTACHMENTS)

RECEIVED BY: MW Griffin DATE 9/6/00
(SIGN/DATE AND RETURN A COPY TO ECDC, MS 52-7)

SUBMITTAL TYPE: (BY SUPPLIER)
CFC - CERTIFIED FOR CONSTRUCTION
INF - INFORMATION/RECORD
DRFT - DRAFT/PRELIMINARY

SUBMITTAL ACTION CODE: (BY FDF)
A - Conforms to Subcontract Requirements
B - Minor Comments - Incorporate and Resubmit
C - Revise and Resubmit (SEE COMMENTS)

ORIGINAL

PIPE SUPPORTS, GUIDES, SHIELDS & SADDLES

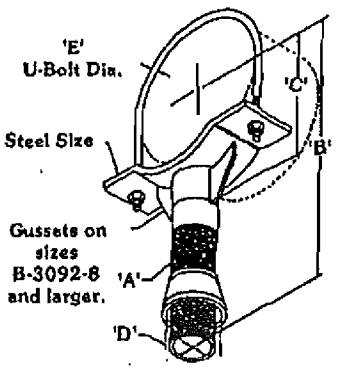

'A'
Schedule 40 Pipe Size

'B'
Center of pipe to bottom of pipe reducer.

'C'
Center of pipe to bottom lip of support.

'D'
Nominal pipe size of base stand - not included.

'E'
U-Bolt Dia.

Material: Steel

Standard Finish: Plain or Electro-Plated

Service: Designed for support of horizontal pipe from floor where vertical adjustment is required. U-Bolt and Hex Nuts are provided to hold pipe securely to the saddle. Use with B3088T Threaded Base Stud.

Ordering: Specify part number and finish.

Note:
4" (100) thru 12" (300) fits both steel and ductile iron pipe. For other ductile iron pipe sizes specify B3092 DI - size.

OSDF Enhanced Permanent Leachate Transmission System Project
STAVER # 7052
Submittal # 641- 15060-0034
Date: 8/31/00

Figure B3092 Adjustable Pipe Saddle Support with Yoke

Part No.	Nominal Pipe Size		Maximum O.D. Pipe		'A'		'B' Minimum		'B' Maximum	
B3092-2½	2½"	(65)	2⅞"	(73.0)	1½"	(40)	8⅜"	(212.7)	12⅞"	(327.0)
B3092-3	3"	(80)	3½"	(88.9)	1½"	(40)	8 11/16"	(220.7)	13 3/16"	(335.0)
B3092-3½	3½"	(90)	4"	(101.6)	1½"	(40)	8 15/16"	(227.0)	13 7/16"	(341.3)
B3092-4	4"	(100)	4⅞"	(123.8)	2½"	(65)	9 15/16"	(252.4)	14 7/16"	(366.7)
B3092-5	5"	(125)	5⅝"	(142.9)	2½"	(65)	10¼"	(260.3	14¾"	(374.6)
B3092-6	6"	(150)	6 29/32"	(175.4)	2½"	(65)	11 3/16"	(284.2)	15 11/16"	(398.5)
B3092-8	8"	(200)	9⅛"	(231.8)	2½"	(65)	12 11/16"	(322.3)	17 3/16"	(436.6)
B3092-10	10"	(250)	11 3/32"	(281.8)	2½"	(65)	13 11/16"	(347.7)	18 3/16"	(462.0)
B3092-12	12"	(300)	13 3/16"	(334.9)	2½"	(65)	14⅞"	(377.8)	19⅜"	(492.1)
B3092-14	14"	(350)	14"	(355.6)	3"	(80)	18"	(457.2)	22½"	(571.5)
B3092-16	16"	(400)	16"	(406.4)	3"	(80)	19"	(482.6)	23½"	(596.9)
B3092-18	18"	(450)	18"	(457.2)	4"	(100)	21 9/16"	(547.7)	26 1/16"	(662.0)
B3092-20	20"	(500)	20"	(508.0)	4"	(100)	22 9/16"	(573.1)	27 1/16"	(687.4)
B3092-24	24"	(600)	24"	(609.6)	4"	(100)	24 9/16"	(623.9)	29 1/16"	(738.2)
B3092-30	30"	(750)	30"	(762.0)	4"	(100)	28 11/16"	(728.7)	33 3/16"	(843.0)
B3092-36	36"	(900)	36"	(914.4)	4"	(100)	31 11/16"	(804.9)	36 3/16"	(919.2)

Part No.	'C'		'D' (Base Stand Not Supplied)		'E'		Saddle Steel Size		Wt./C Lbs.	Wt./C kg
B3092-2½	3 1/8"	(79.4)	2½	(65)	½"	(12.7)	¼" x 3"	(6.3 x 76.2)	651	(295.3)
B3092-3	3 7/16"	(87.3)	2½	(65)	½"	(12.7)	¼" x 3"	(6.3 x 76.2)	716	(324.8)
B3092-3½	3 11/16"	(93.7)	2½	(65)	½"	(12.7)	¼" x 3"	(6.3 x 76.2)	717	(325.2)
B3092-4	4¼"	(107.9)	3"	(80)	½"	(12.7)	⅜" x 3½"	(9.5 x 88.9)	1286	(583.3)
B3092-5	4 9/16"	(115.9)	3"	(80)	½"	(12.7)	⅜" x 3½"	(9.5 x 88.9)	1321	(599.2)
B3092-6	5½"	(139.7)	3"	(80)	⅝"	(15.9)	½" x 3½"	(12.7 x 88.9)	1595	(723.5)
B3092-8	7"	(177.8)	3"	(80)	⅝"	(15.9)	½" x 3½"	(12.7 x 88.9)	1815	(823.3)
B3092-10	8"	(203.2)	3"	(80)	¾"	(19.0)	½" x 3½"	(12.7 x 88.9)	2123	(963.0)
B3092-12	9 5/16"	(233.4)	3"	(80)	⅞"	(22.2)	½" x 3½"	(12.7 x 88.9)	2546	(1154.8)
B3092-14	10 9/16"	(268.3)	4"	(100)	⅞"	(22.2)	⅝" x 4"	(15.9 x 101.6)	3593	(1629.8)
B3092-16	11 9/16"	(293.7)	4"	(100)	⅞"	(22.2)	⅝" x 4"	(15.9 x 101.6)	3825	(1735.0)
B3092-18	13 9/16"	(344.5)	6"	(150)	1"	(25.4)	¾" x 5"	(19.0 x 127.0)	7043	(3194.7)
B3092-20	14 9/16"	(369.9)	6"	(150)	1"	(25.4)	¾" x 5"	(19.0 x 127.0)	7425	(3368.0)
B3092-24	16 9/16"	(420.7)	6"	(150)	1"	(25.4)	1" x 5"	(25.4 x 127.0)	9170	(4159.5)
B3092-30	20 11/16"	(525.5)	6"	(150)	1"	(25.4)	1" x 5"	(25.4 x 127.0)	10787	(4893.0)
B3092-36	23 11/16"	(601.7)	6"	(150)	1"	(25.4)	1" x 5"	(25.4 x 127.0)	12177	(5523.5)

Will be per contract drawings

All dimensions in charts and on drawings are in inches. Dimensions shown in parentheses or in shaded areas of the charts are in millimeters unless otherwise specified.

INFORMATION ONLY

[X] A - Conforms to the Subcontract Requirements
[ ] B - Minor Comment - Incorporate and Resubmit
[ ] C - Revise and Resubmit
Sig: [illegible] Date: 8/06/00

SUPPLIER DOCUMENT SUBMITTAL

FDF PROJECT NO: 20111	CONTRACT NO: FSC - 641	SUBMITTAL NO: 15060-004	REV: 3	27-Nov-00	PAGE 1 OF 1

FROM: The STAVER GROUP, Inc.
Ron Wood
SIGNATURE: R Wood

TO: FDF ENGINEERING/CONSTRUCTION DOCUMENT CONTROL (ECDC), MS 52-7
RECEIVED BY: Teresa Schwab DATE: 11-28-2000

			DOCUMENT FAMILY									SUBMITTAL TYPE				SUBMITTAL ACTION		
QTY	DOCUMENT NUMBER	REV	PRO	H&S	MED	TRG	CON	ENG	QAC	OPER	TITLE/DESCRIPTION	DRFT	CFC	INF	ASSOCIATED SPECIFICATION	A	B	C
8	641-15060-004C	0						X			Welder Qualifications		X		15060	X		
											Phil Thomas							

REVIEW DISTRIBUTION

NAME	MS	NAME	MS	NAME	MS
Mike Griffin	52-5				
Tim Cherry	52-5				
Jim Jenkin	52-5				
Mike Godber	60				
Rob Kneip	52-5				
Scott Wheeler	52-5				
Kwasi Baw Twenebiah	38				

NO COMMENTS:

COMMENTS: (PLEASE USE SPACE BELOW FOR COMMENTS OR INDICATE IF ATTACHMENTS)

RECEIVED BY: M W Gill DATE 11-30-00

(SIGN/DATE AND RETURN A COPY TO ECDC, MS 52-7)

SUBMITTAL TYPE: (BY SUPPLIER)
CFC - CERTIFIED FOR CONSTRUCTION
INF - INFORMATION/RECORD
DRFT - DRAFT/PRELIMINARY

SUBMITTAL ACTION CODE: (BY FDF)
A - Conforms to Subcontract Requirements
B - Minor Comments - Incorporate and Resubmit
C - Revise and Resubmit (SEE COMMENTS)

ORIGINAL

Plumbers, Pipe Fitters & Mechanical Equipment Service
Local Union No. 392

OF THE
UNITED ASSOCIATION OF JOURNEYMEN AND APPRENTICES OF THE PLUMBING AND PIPE FITTING INDUSTRY OF THE UNITED STATES AND CANADA A.F.L.-C.I.O.

78

November 17, 2000

To whom it may concern:

Dan Haft, Social Security [redacted] *and Phil Thomas, Social Security* [redacted] *elded at Madison Generating Plant, in Trenton, Ohio, January 2000-May 2000.*

Sincerely yours,

Richard Hurzelbrink
Business Agent

RH:sr

ECDC CONTROLLED COPY NO.
76896

Fluor Contract FSC-641
OSDF Enhanced Permanent Leachate
Transmission System Project
STAVER # 7052

Submittal # 641-15000-004C
Reviewed By: DW
Date: 11/27/00

[ ]A - Conforms to the Subcontract Requirements
[ ]B - Minor Comment - Incorporate and Resubmit
[ ]C - Revise and Resubmit
Sig: MW Date: 11-30-00

QW-484 RECORD OF WELDER QUALIFICATION TESTS (WPQ)

(SEE QW-301, SECTION IX, ASME BOILER & PRESSURE VESSEL CODE)

Welder: PHIL THOMAS S/S No.: [redacted] Stamp No.: F-8

Welding Process(es) used: SMAW Type: Manual

WPS followed by welder during welding of test coupon: 1.1.1, Rev 2

Base material(s) welded: SA-106 Thickness: 13/32 inch

VARIABLE	ACTUAL VALUE	RANGE QUALIFIED
Backing Type (QW-402)	None	With or without
ASME P-No. (QW-403)	P-1 to P-1	P-1 to P-1
Plate or Pipe (and diam.)	2" Sch. XXS Pipe	Plate Pipe 1 inch OD min.
Filler Metal Spec (QW-404)	SFA-5.1	NA
Filler Metal Class (QW-404)	E6010; E7018	NA
Filler Metal F-No.	3; 4	3; 4
Consumable Insert (GTAW)	NA	NA
Weld Deposit Thickness	3/16; 1/4 in.	13/16; 7/16 in. max.
Position (QW-405)	6G	All
Progression	Upwards	Upwards
Backing Gas	None	With or without
GMAW Transfer Mode (QW-409)	NA	NA
GTAW Current Type/Polarity	NA	NA

GUIDED BEND TEST RESULTS

Specimen Number	Type	Figure Number	Result (Openings)
PT1	Side	QW-462.2	None
PT2	Side	QW-462.2	(1) 1/64"
PT3	Side	QW-462.2	None
PT4	Side	QW-462.2	(1) 1/64, (1) 1/32"

Welding test conducted by: Fischer Engineering Company
Mechanical tests conducted by: Fischer Engineering Company
Laboratory Test Number: 020394-1

We certify that the statements in this record are correct and that the test coupons were prepared, welded and tested in accordance with the requirements of Section IX of the ASME Code.

Organization: DANIS HEAVY CONSTRUCTION COMPANY

Date: 2-14-91 By: Jean Ramsey

TANKS AND PUMPS

RECEIVED SEP 28 2000

7284 Vol. 4

SUPPLIER DOCUMENT SUBMITTAL

FDF PROJECT NO: 20111	CONTRACT NO: FSC - 641	SUBMITTAL NO: 15070-001	REV: 1	DATE: 21-Sep-00	PAGE 1 OF 1

FROM: The STAVER GROUP, Inc.
David R. Opalka
SIGNATURE:

TO: FDF ENGINEERING/CONSTRUCTION DOCUMENT CONTROL (ECDC), MS 52-7
RECEIVED BY: Melissa Coffey DATE: 9-22-00

			DOCUMENT FAMILY									SUBMITTAL TYPE				SUBMITTAL ACTION		
QTY	DOCUMENT NUMBER	REV	PRO	H&S	MED	TRG	CON	ENG	QAC	OPER	TITLE/DESCRIPTION	DRFT	CFC	INF	ASSOCIATED SPECIFICATION	A	B	C
8	641-15070-001	1						X			HDPE Tanks Product Data		X		15070	X		

REVIEW DISTRIBUTION

NAME	MS	NAME	MS	NAME	MS
Mike Griffin	52-5				
Jim Cherry	52-5				
Jim Jenkins	52-5				
Mike Godber	64				
Rob Kneip	52-5				
Scott Wheeler	52-5				
Gary Inter	38				

NO COMMENTS: COMMENTS: (PLEASE USE SPACE BELOW FOR COMMENTS OR INDICATE IF ATTACHMENTS)

Suggest placing tag on FTG (E) with dimension

RECEIVED BY: [signature] DATE 9-27-00

(SIGN/DATE AND RETURN A COPY TO ECDC, MS 52-7)

ORIGINAL

SUBMITTAL TYPE: (BY SUPPLIER)
CFC - CERTIFIED FOR CONSTRUCTION
INF - INFORMATION/RECORD
DRFT - DRAFT/PRELIMINARY

SUBMITTAL ACTION CODE: (BY FDF)
A - Conforms to Subcontract Requirements
B - Minor Comments - Incorporate and Resubmit
C - Revise and Resubmit (SEE COMMENTS)

ENTERED

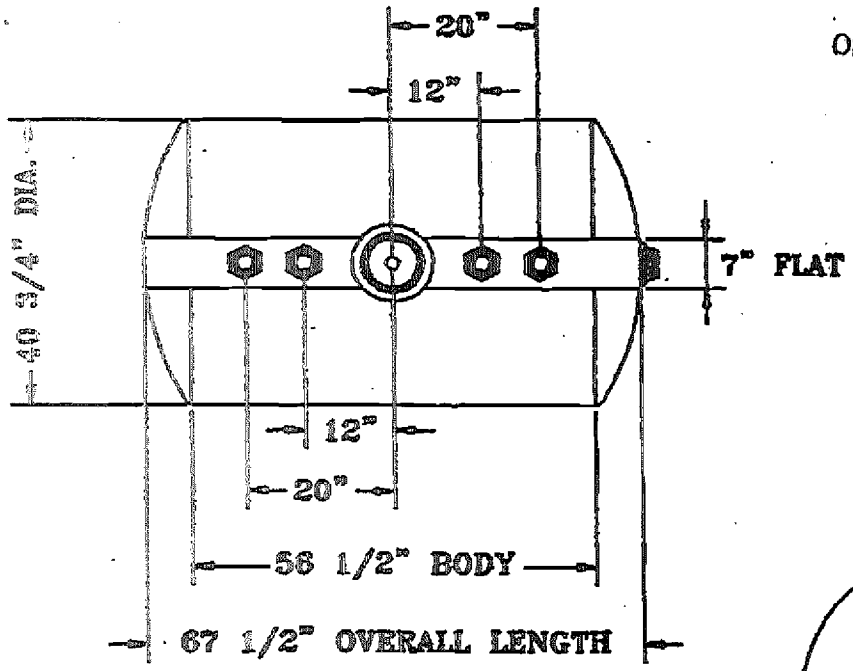

Fluor Contract FSC-641
OSDF Enhanced Permanent Leachate
Transmission System Project
STAVER # 7052

Submittal # 641-15070-8 (Revi
Reviewed By: DRO
Date: 9/21/00

ECDC CONTROLLED COPY NO. 76896

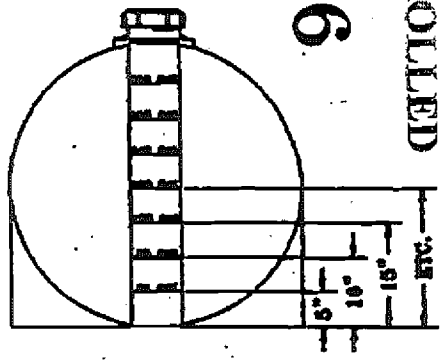

ACCESSORIES					
MK	SIZE		DEO	ELEV	DOME
M	6"	THREADED ACCESS OPENING	0		X
A	2"	PVC BULKHEAD FITTING WITH EPDM GASKET	SEE PRINT		X
B	2"	PVC BULKHEAD FITTING WITH EPDM GASKET	SEE PRINT		X
C	2"	PVC BULKHEAD FITTING WITH EPDM GASKET	SEE PRINT		X
D	2"	PVC U-VENT ASSEMBLY WITH EPDM GASKET	SEE PRINT		X
E	3"	PVC BULKHEAD FITTING WITH EPDM GASKET AND P/P MPT X MALE ADAPTER	SEE NOTE	33" 31"	
F	1"	TANKS TO BE STENCILED AS FOLLOWS (5" 34 GAL)(10" 83 GAL) (15" 136 GAL)(20" 190 GAL) (25" 243 GAL)(30" 293 GAL) (35" 336 GAL)	ONE END		

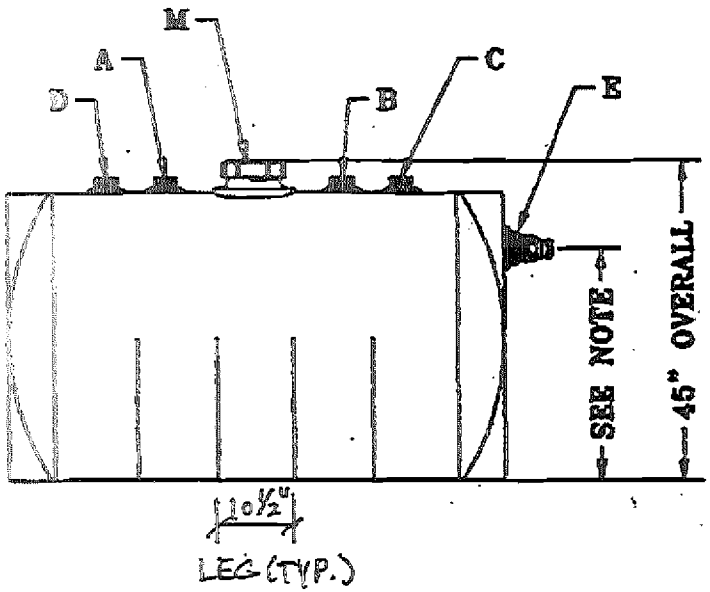

[X] A - Conforms to the Subcontract Requirements
[ ] B - Minor Comment - Incorporate and Resubmit
[ ] C - Revise and Resubmit
Sig: MWS Date: 9-27-00

NOTES:

1. RESIN USED:
   EXXON ESCORENE LINEAR POLYETHYLENE
   DENSITY: .938
2. SPECIFIC GRAVITY:
   TANK IS DESIGNED FOR MAXIMUM 1.9 SP.G.
3. TANK COLOR:
   NATURAL
4. TANK WEIGHT:
   110 LBS.
5. QUANTITY OF 12 TANKS
6. TANKS TO BE STENCILED
7. SIX TANK TO HAVE FTG (E) INSTALLED AT 33", SIX TANKS TO HAVE FTG (E) INSTALLED AT 31"

REVISION (A) 9/11/00
1. ADDED END VIEW FOR GALLONAGE STENCIL
2. ADDED HEIGHT NOTE FOR FTG. (E)

IHFS 300 GAL FREE STANDING CYLINDRICAL HORIZONTAL STORAGE TANK

MK	Assmann CORPORATION OF AMERICA	S.Rowlison
SCALE		16372 A

SUPPLIER DOC NT SUBMITTAL

FDF PROJECT NO: 20111	CONTRACT NO: FSC - 641	SUBMITTAL NO: 15070-001	REV: 0	DATE: 23-Aug-00	PAGE 1 OF 1

FROM: The STAVER GROUP, Inc.
David R. Opalka
SIGNATURE: David R. Opalka

TO: FDF ENGINEERING/CONSTRUCTION DOCUMENT CONTROL (ECDC), MS 52-7
RECEIVED BY: Jeanna Grant DATE: 08-24-2000

QTY	DOCUMENT NUMBER	REV	DOCUMENT FAMILY: PRO	H&S	MED	TRG	CON	ENG	QAC	OPER	TITLE/DESCRIPTION	SUBMITTAL TYPE: DRFT	CFC	INF	ASSOCIATED SPECIFICATION	SUBMITTAL ACTION: A	B	C
8	641-15070-001	0						X			HDPE Tanks Product Data		X		15070	X		

REVIEW DISTRIBUTION

NAME	MS	NAME	MS	NAME	MS
Mike Griffin (Approver)	525				
Jim Cherry	525				
Jim Jenkins	525				
Mike Bodber	64				
Rob Knoop	525				
Scott Wheeler	525				
Pierre Bauchwenbach (Architect)	64				

RECEIVED AUG 24 2000

NO COMMENTS: X COMMENTS: (PLEASE USE SPACE BELOW FOR COMMENTS OR INDICATE IF ATTACHMENTS)

RECEIVED BY: [signature] DATE 8/25/00
(SIGN/DATE AND RETURN A COPY TO ECDC, MS 52-7)

SUBMITTAL TYPE: (BY SUPPLIER)
CFC - CERTIFIED FOR CONSTRUCTION
INF - INFORMATION/RECORD
DRFT - DRAFT/PRELIMINARY

SUBMITTAL ACTION CODE: (BY FDF)
A - Conforms to Subcontract Requirements
B - Minor Comments - Incorporate and Resubmit
C - Revise and Resubmit (SEE COMMENTS)

ORIGINAL

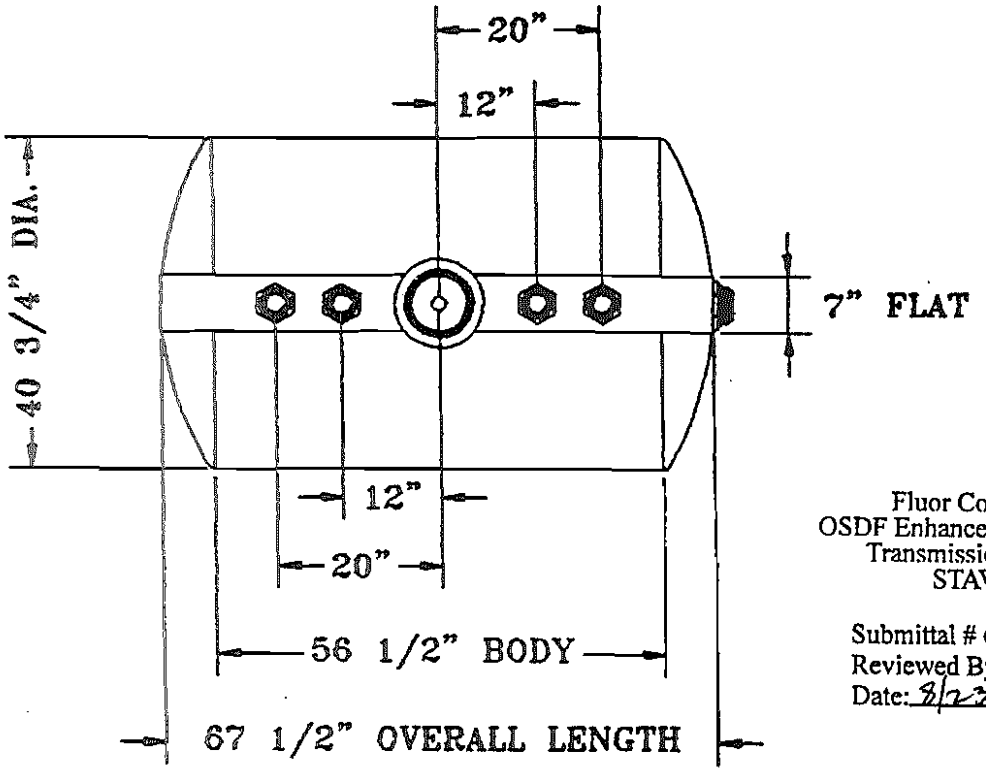

ACCESSORIES

REF.	SIZE		DEG	REV	DONE
M	6"	THREADED ACCESS OPENING	0		X
A	2"	PVC BULKHEAD FITTING WITH EPDM GASKET	SEE PRINT		X
B	2"	PVC BULKHEAD FITTING WITH EPDM GASKET	SEE PRINT		X
C	2"	PVC BULKHEAD FITTING WITH EPDM GASKET	SEE PRINT		X
D	2"	PVC U-VENT ASSEMBLY WITH EPDM GASKET	SEE PRINT		X
E	3"	PVC BULKHEAD FITTING WITH EPDM GASKET AND P/P MPT X MALE ADAPTER	33"		X

Fluor Contract FSC-641
OSDF Enhanced Permanent Leachate
Transmission System Project
STAVER # 7052

Submittal # 641-15070001
Reviewed By: DRO
Date: 8/23/00

Submission of product for review, acceptance, and comment prior to release of purchase order by
BECK MECHANICAL-ELECTRICAL SERVICES
Stanley Barber Date 8-9-00

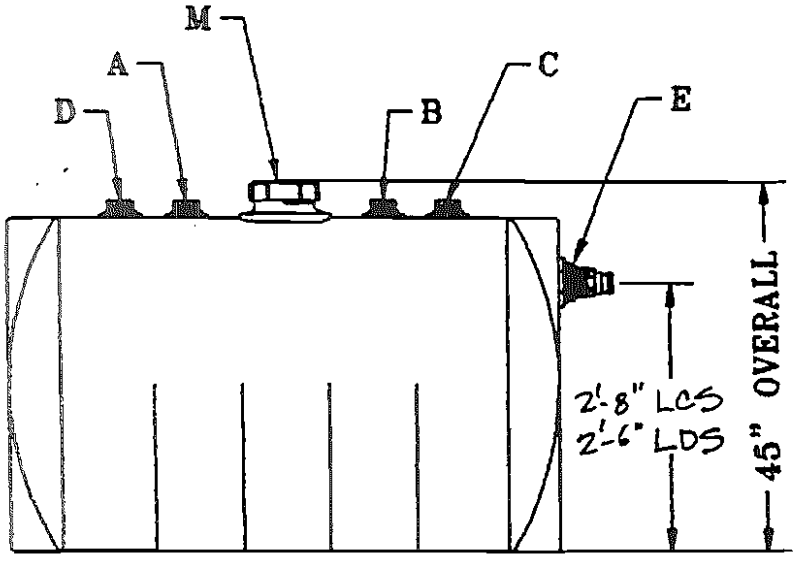

NOTES:

1. RESIN USED:
   EXXON ESCORENE LINEAR POLYETHYLENE
2. SPECIFIC GRAVITY:
   TANK IS DESIGNED FOR MAXIMUM 1.9 SP.G.
3. TANK COLOR:
   NATURAL
4. TANK WEIGHT:
   110 LBS.
5. QUANTITY OF 12 TANKS
6. TANKS TO HAVE INCH TAPE (SHIP LOOSE)

IHFS 300 GAL FREE STANDING CYLINDRICAL HORIZONTAL STORAGE TANK

NONE	Assmann (CORPORATION OF AMERICA)	S.Rowlinson
8/1/00		
		16372

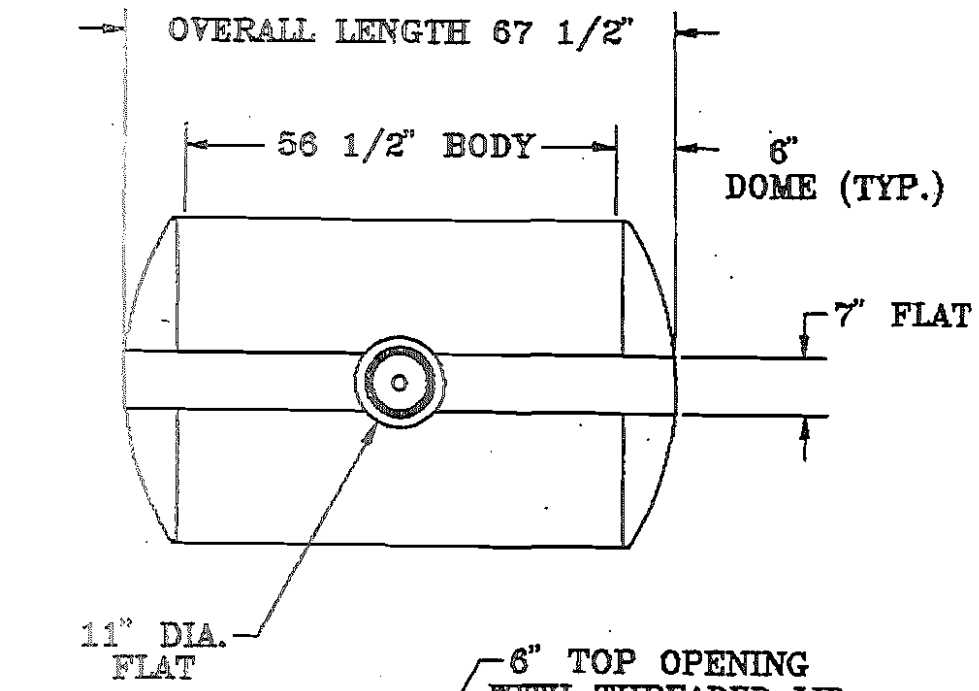

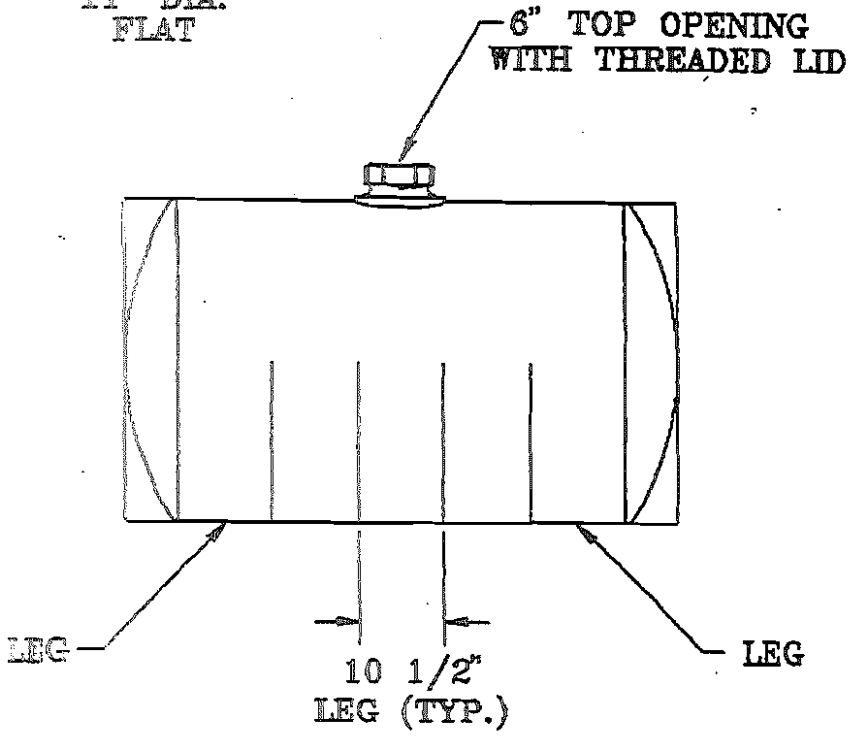

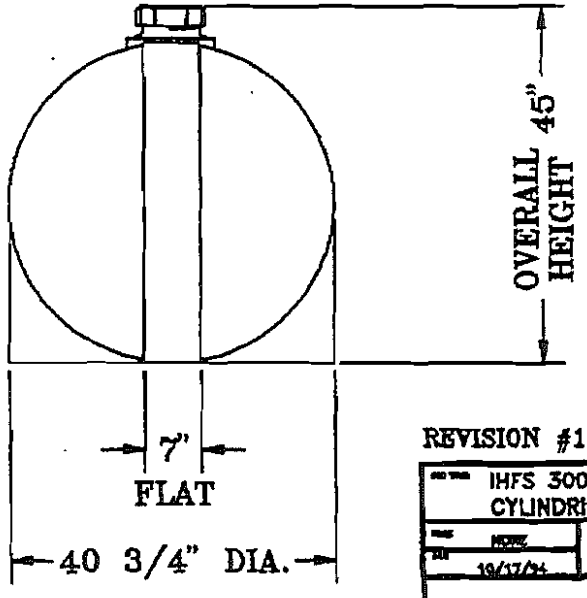

ACCESSORIES					
MK	SIZE		DEG	ELEV	DOME

REVISION #1 6/05/95

IHFS 300 gal. FREE STANDING
CYLINDRICAL HORIZONTAL STORAGE TANK

NONE	Assmann CORPORATION OF AMERICA	D. CRAGER
10/17/94		IHFS 300

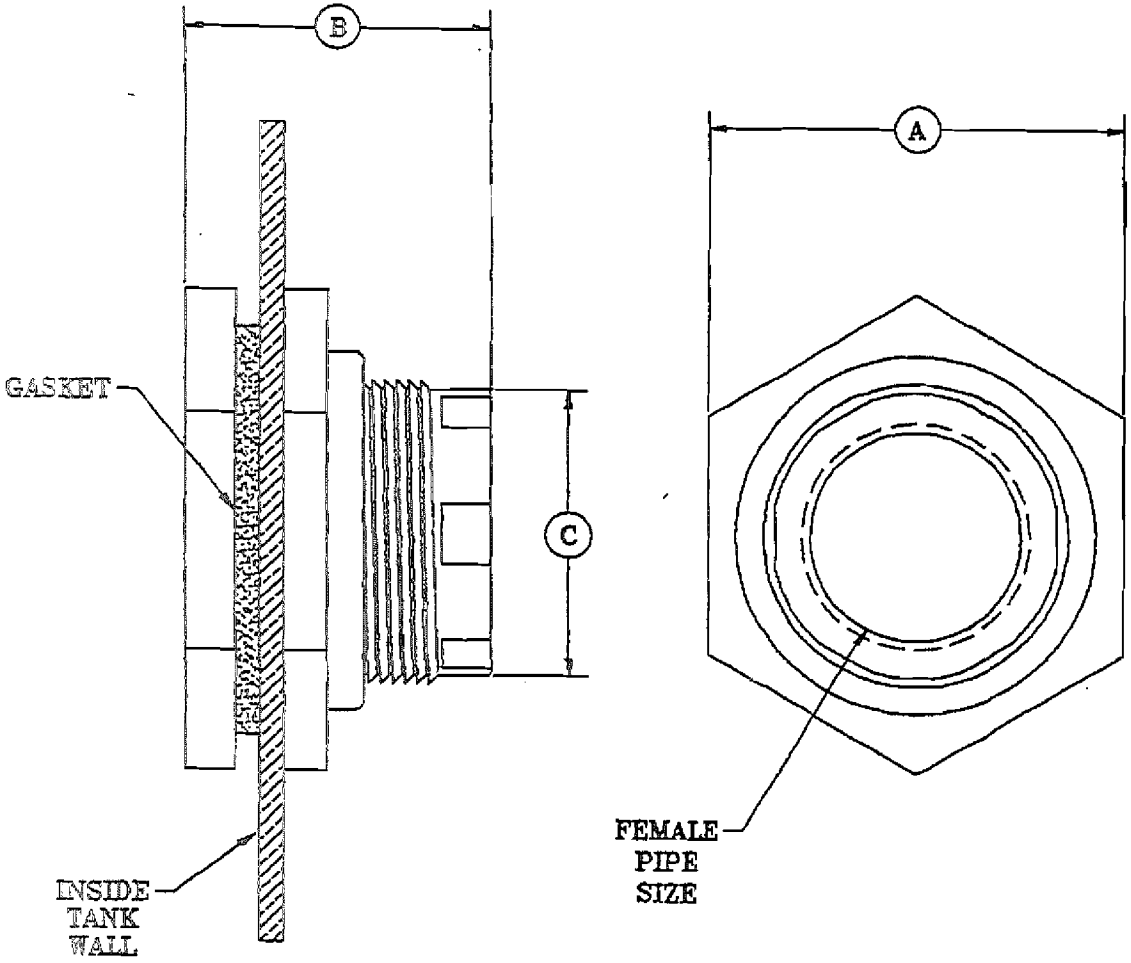

DESIGN DATA

FPT PIPE SIZE	DIM. A	DIM. B	TAP HOLE SIZE DIM. C
1/2"	2"	2 3/4"	1 3/8"
3/4"	2 3/8"	2 7/8"	1 5/8"
1"	2 9/16"	2 7/8"	1 7/8"
1 1/4"	3"	3"	2 3/8"
1 1/2"	3"	3"	2 3/8"
2"	4 3/8"	3 1/4"	3 1/4"
3"	6"	3 5/8"	4 1/2"
4"	8 3/4"	4 3/4"	5 3/4"

MATERIALS:

BULKHEAD FITTING:

PVC (Std.) CPVC & VIRGIN POLYPRO OPTIONAL

GASKET MATERIAL:

E.P.D.M. (Std.) VITON & XLPE OPTIONAL

BULKHEAD FITTING

NONE

4/09/93

Assmann CORPORATION OF AMERICA

BH001

SUPPLIER DOCUMENT SUBMITTAL

FDF PROJ. NO: 20111	CONTRACT NO: FSC - 641	SUBMITTAL NO: 15070-002	REV: 0	05-Dec-00	PAGE 1 OF 1

FROM: The STAVER GROUP, Inc.
Ron Wood
SIGNATURE: R Wood

TO: FDF ENGINEERING/CONSTRUCTION DOCUMENT CONTROL (ECDC), MS 52-7
RECEIVED BY: Erika Jarrett DATE: 12/5/00

QTY	DOCUMENT NUMBER	REV	DOCUMENT FAMILY: PRO	H&S	MED	TRG	CON	ENG	QAC	OPER	TITLE/DESCRIPTION	SUBMITTAL TYPE: DRFT	CFC	INF	ASSOCIATED SPECIFICATION	SUBMITTAL ACTION: A	B	C
8	641-15070-002	0						X			Teel Electric Drum Pump		X		15070	X		

REVIEW DISTRIBUTION

NAME	MS	NAME	MS	NAME	MS
Mike Griffin	525				
Jim Cherry	525				
Jim Jenkins	525				
Mike Godber	64				
Rob Kneip	525				
Scott Wheeler	525				
Kwasi Baa Tweneboah	38				

NO COMMENTS: X COMMENTS: (PLEASE USE SPACE BELOW FOR COMMENTS OR INDICATE IF ATTACHMENTS)

RECEIVED BY: [illegible] DATE 12-11-00
(SIGN/DATE AND RETURN A COPY TO ECDC, MS 52-7)

SUBMITTAL TYPE: (BY SUPPLIER)
CFC - CERTIFIED FOR CONSTRUCTION
INF - INFORMATION/RECORD
DRFT - DRAFT/PRELIMINARY

SUBMITTAL ACTION CODE: (BY FDF)
A - Conforms to Subcontract Requirements
B - Minor Comments - Incorporate and Resubmit
C - Revise and Resubmit (SEE COMMENTS)

ORIGINAL

Operating Instructions & Parts Manual — 3P652B and 3P680

Please read and save these instructions. Read carefully before attempting to assemble, install, operate or maintain the product described. Protect yourself and others by observing all safety information. Failure to comply with instructions could result in personal injury and/or property damage! Retain instructions for future reference.

Teel® Electric Drum Pumps

Description

Teel electric drum pumps are electrically driven and self-priming. They are designed to transfer clean, non-abrasive and nonflammable liquids that are compatible with pump materials. The motor is isolated from liquid by a mechanical seal made of Teflon with a Viton O-ring. The pump has an outer shell and inner shaft which are made of Type 316 stainless steel. Model 3P680 has a continuous-duty electric motor. This pump also available with an air motor model 3P658. The motor has shielded, prelubricated ball bearings that reduce maintenance requirements.

[X] A - Conforms to the Subcontract Requirements
[ ] B - Minor Comment - Incorporate and Resubmit
[ ] C - Revise and Resubmit
Sig: MW Date: 12-11-00

MODEL 3P652B MODEL 3P680

Figure 1 - Electric Drum Pumps

Performance

Model	GMPH Total Head (in feet) 0 ft.	5 ft.	10 ft.	15 ft.	20 ft.	Max. Head*	Max. Viscosity
3P652B	17	13	9	5	1	20.7ft	100 SSU
3P680	10	5.0	–	–		10.0ft	500 SSU

(†) Based on water at 72° F.
(*) Calculate equivalent PSI by dividing total head by 2.31.

Fluor Contract FS-041
OSDF Enhanced Permanent Leachate Transmission System Project
STAVER # 7052

Submittal # 641-15070-002
Reviewed By: RW
Date: 12/5/00

PUMP CHEMICAL COMPATIBILITY CHART

Acetic Acid	Formaldehyde (Aqueous solution)	Sodium aluminate
Alum (potassium sulfate)	Lactic acid	Sodium bicarbonate
Aluminum hydroxide	Nickel chloride	Sodium carbonate
Ammonia	Perchloroethylene	Sodium chloride
Amines	Phthalic anhydride	Sodium cyanide
Arsenic acid	Potassium bicarbonate	Sodium sulfate
Beer	Potassium bromide	Sodium sulfide
Beet sugar liquids	Potassium carbonate	Starch
Benzaldehyde	Potassium chloride	Sulfurous acid
Benzoic acid	Potassium nitrate	Tannic acid
Boric acid	Potassium sulfate	Tomato juice
Calcium hydroxide	Potassium sulfide	Trichlorethane
Calcium sulfate	Pyrogallic acid	Trichlorethylene
Chloroform	Silver nitrate	Vinegar
Citric acid	Soap solutions	Water
Copper sulfate	Soda ash (20%)	Zinc chloride
Ferric sulfate	Sodium acetate	Zinc sulfate

Form 552408

© 1996 W.W. Grainger
Printed in U.S.A.
01170
0696/172/VCPVP

INFORMATION ONLY

Post-It® Fax Note 7671 Date 12/4/00 # of pages ▶ 7
To [illegible] From [illegible]

Teel® Electric Drum Pumps

The pump chemical compatibility chart, on the previous page, is a guide to assist in determining chemical compatibility with this Teel® pump. Other factors such as: viscosity, pressure, specific gravity, temperature, concentration, chemical combinations, etc. should also be considered when determining compatibility. Always contact your chemical supplier for his compatibility recommendations. We have attempted to eliminate all dangerous and/or flammable liquids from the list. Dangerous and/or flammable liquids are not recommended for use with Teel® pumps. Final selection should be based on actual field testing under the conditions of intended use. Many variables are involved in determining chemical compatibility. For this reason, Dayton Electric Mfg. Co. cannot guarantee compatibility or assume responsibility for personal injury and/or property damage to persons using this list.

Specifications

	3P652B	3P680
Motor	Universal type AC/DC, intermittent duty(2M145)	Capacitor start type, continuous-duty (6K181C)
Motor Bearings	Ball, prelubricated & shielded	Ball, prelubricated & shielded
Volts	115VAC, 60Hz, single phase	115/230VAC, 60Hz, single phase
Cord	6 Foot, 16 ga.,3-cond. SJT, w/molded 3-prong plug for 115V	8 Foot, 16 ga.,3-cond. SJT w/feed thru ON-OFF switch, w/molded 3-prong plug for 115V
Amps	6.3A	7.6A
Horsepower	1/2	1/3
RPM	10,000	3,450
Seals, impeller and auger	Teflon	Teflon
Pump body shaft & discharge	Type 316 stainless steel	Type 316 stainless steel
Pump discharge	3/4" FPT	3/4" FPT
Discharge hose	5 ft, 1" I.D.	5 ft, 1" I.D.

EPDM (Ethylene Propylene Diene Monomer)

General Safety Information

1. Know the pump application, limitations, and potential hazards.

⚠WARNING ***Do not use to pump flammable or explosive fluids such as gasoline, fuel oil, kerosene, etc. Do not use in explosive atmospheres. Pump should only be used with liquids compatible with pump component materials. Failure to follow this warning can result in personal injury and/or property damage.***

2. Make certain that the power source (electric motor) conforms to the requirements of the equipment.
3. Provide adequate protection and guarding around moving parts.
4. Disconnect power before servicing.
5. Release all pressure within the system before servicing any component.
6. Drain all liquids from the system before servicing.
7. Secure the discharge line before starting the pump. An unsecured discharge line will whip, possible causing personal injury and/or property damage.
8. Check hoses for weak or worn condition before each use, making certain that all connections are secure.
9. Periodically inspect pump and system components. Perform routine maintenance as required. (see Maintenance section).
10. Provide a means of pressure relief for pumps whose discharge line can be shut off or obstructed.
11. **Personal Safety**
    a. Wear safety glasses at all times when working with pump.
    b. Wear a face shield, proper apparel when pumping hazardous chemicals.
12. When wiring an electrically-driven pump, follow all electrical and safety codes, as well as the most recent United States National Electrical Code (NEC) and the Occupational Safety and Health Act (OSHA).

Models 3P652B and 3P680

⚠ WARNING ***Risk of electrical shock! Never connect the Green (or Green and Yellow) wire to a live terminal!***

13. This equipment can be used for 120 volt (single phase) Models 3P652B and 3P680 (as shipped and wired from the factory). Model 3P680 can also be rewired for use with 230V (single phase). These units can be wired for portability, with flexible 3-wire cord (as supplied), or permanent installation using a power supply with a ground.

To reduce the risk of electrical shock, the motor must be securely and adequately grounded! This can be accomplished by either: 1) Inserting plug (portable) directly into a properly installed and grounded 3-prong grounding type receptacle (as shown in Figure 2A for 110-120V, or Figure 2B for 220-240V); 2) Permanently wiring the unit with a grounded, metal raceway system; 3) Using a separate ground wire connect to the bare metal of the motor frame; 4) Other suitable means. The green (or green and yellow) conductor in the cord is the grounding wire. The motor must be securely and adequately grounded for your protection against shock hazards! Where a 2-prong wall receptacle is encountered, it must be replaced a properly grounded 3-prong receptacle installed in accordance with the National Electrical Code and local codes and ordinances. To ensure a proper ground, the grounding means must be tested by a qualified electrician. Use only 3-wire extension cords that have a 3-prong, grounding-type plugs, and 3-pole receptacles that accept the equipment plug.

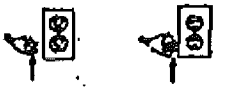

Grounding Blade A — Grounding Blade B

Figure 2 - Grounding methods

14. All wiring should be performed by a qualified electrician.
15. Protect electrical cord from sharp objects, hot surfaces, oil, and chemicals. Avoid kinking the cord. Replace or repair damaged or worn cords immediately.
16. Keep fingers and foreign objects away from ventilation and other openings. Do not insert any objects into the motor.
17. Use wire of adequate size to minimize voltage drop at the motor.
18. Disconnect power before servicing a motor or its load. If the power disconnect is out-of-sight, lock it in the open position and tag it to prevent unexpected application of power.
19. Do not touch an operating motor. Modern motors are designed to operate at high temperatures.

⚠ WARNING ***Do not handle a pump or pump motor with wet hands or when standing on a wet or damp surface, or in water.***

Installation/Operation

⚠ WARNING ***Do not use pump in explosive atmospheres. Do not pump flammable liquids. In order to safely use this product familiarize yourself with this pump and also with the liquid (chemical, etc.) that is going to be pumped through the unit. Even though this pump is suitable for many liquids, it is NOT suitable for all liquids!***

1. Place the pump into the liquid to be pumped.

⚠ CAUTION ***Do not pump liquids containing metal chips or shavings. Never operate the pump dry. These will damage the pump.***

2. Attach the pump to the drum with the bung adapter supplied.
3. Secure the discharge line of the pump to keep it from lashing about.
4. Plug the pump power cord into a properly installed receptacle.

NOTE: Both models as supplied from factory, are wired for 115V operation. Model 3P680 can be used for 230V if motor is rewired for this use and cord is replaced. Follow the instructions on the motor plate or inside cover of the connection box to change unit for 230V operation.

⚠ WARNING ***An incorrect connection may cause an electrical short, produce an electrical shock or burn out the pump motor, resulting in property damage and injury.***

5. It is strongly recommended that this unit be plugged into a G.F.I.C. (Ground Fault Interrupter Circuit). Consult your local electrician for installation and availability
6. Unplug the pump when the pumping operation is complete.

Teel® Electric Drum Pumps

Installation/Operation (Continued)

NOTE: The pump will drain down when it is unplugged.

7. This unit is not waterproof and is not intended to be used in showers, saunas, or other potentially wet locations. The motor is designed to be used in a clean, dry location with access to an adequate supply of cooling air. Ambient temperature around the motor should not exceed 104° F (40° C). For outdoor installations motor must be protected by a cover that does not block airflow to and around the motor. This unit is not weatherproof nor is it able to be submersed in water, or any other liquid.

104°F (40°C)

Maintenance

⚠ WARNING *Disconnect power before servicing.*

⚠ CAUTION *Do not stand the pump on its shaft.*

1. After each use, flush the pump with water or a suitable nonflammable solvent.
2. Store the pump in a clean, dry area; the preferred method of storage is hanging.
3. Motor bearing never needs to be lubricated, replace when necessary.
4. Pump should be checked daily, weekly, monthly, etc., for proper operation. If anything has changed since unit was new, unit should be removed and repaired or replaced. Replace any worn or damaged part immediately.
5. Only qualified electricians or servicemen should attempt to repair this unit.

⚠ WARNING *Improper repair and/or assembly can cause an electrical shock hazard.*

Troubleshooting Chart

Symptom	Possible Cause(s)	Corrective Action
Pump does not prime	1. Clogged impeller or augers	1. Clean impeller and augers
	2. Clogged discharge port	2. Clean discharge port and hose
	3. Broken shaft coupling	3. Replace shaft coupling
	4. Worn or damaged shaft seal	4. Replace shaft seal
Insufficient flow	1. Possible causes for "Pump does not prime" (above)	1. Check and repair as is necessary
	2. Clogged impeller or augers	2. Clean impeller or augers
	3. Clogged discharge hose	3. Clean discharge hose
	4. Pinched discharge hose	4. Replace discharge hose
	5. Pumped liquid is too viscous	5. Use only for liquids with viscosity within range of pump.(See Specifications) Model 3P652B to100 S.S.U. Model 3P680 to 500 S.S.U.

Models 3P652B and 3P680

Limited Warranty

Dayton one-year limited warranty. *Teel® Electric Drum Pumps, Models covered in this manual, are warranted by Dayton Electric Mfg. Co. (Dayton) to the original user against defects in workmanship or materials under normal use for one year after date of purchase. Any part which is determined to be defective in material or workmanship and returned to an authorized service location, as Dayton designates, shipping costs prepaid, will be, as the exclusive remedy, repaired or replaced at Dayton's option. For limited warranty claim procedures, see PROMPT DISPOSITION below. This limited warranty gives purchasers specific legal rights which vary from jurisdiction to jurisdiction.*

Limitation of liability. *To the extent allowable under applicable law, Dayton's liability for consequential and incidental damages is expressly disclaimed. Dayton's liability in all events is limited to and shall not exceed the purchase price paid.*

Warranty disclaimer. *Dayton has made a diligent effort to illustrate and describe the products in this literature accurately; however, such illustrations and descriptions are for the sole purpose of identification, and do not express or imply a warranty that the products are merchantable, or fit for a particular purpose, or that the products will necessarily conform to the illustrations or descriptions.*

Except as provided below, no warranty or affirmation of fact, expressed or implied, other than as stated in the "LIMITED WARRANTY" above is made or authorized by Dayton.

Product suitability. *Many jurisdictions have codes and regulations governing sales, construction, installation, and/or use of products for certain purposes, which may vary from those in neighboring areas. While Dayton attempts to assure that its products comply with such codes, it cannot guarantee compliance, and cannot be responsible for how the product is installed or used. Before purchase and use of a product, please review the product application, and national and local codes and regulations, and be sure that the product, installation, and use will comply with them.*

Certain aspects of disclaimers are not applicable to consumer products; e.g., (a) some jurisdictions do not allow the exclusion or limitation of incidental or consequential damages, so the above limitation or exclusion may not apply to you; (b) also, some jurisdictions do not allow a limitation on how long an implied warranty lasts, consequentially the above limitation may not apply to you; and (c) by law, during the period of this limited warranty, any implied warranty of implied merchantability or fitness for a particular purpose applicable to consumer products purchased by consumers, may not be excluded or otherwise disclaimed.

Prompt disposition. *Dayton will make a good faith effort for prompt correction or other adjustment with respect to any product which proves to be defective within limited warranty. For any product believed to be defective within limited warranty, first write or call dealer from whom the product was purchased. Dealer will give additional directions. If unable to resolve satisfactorily, write to Dayton at address below, giving dealer's name, address, date, and number of dealer's invoice, and describing the nature of the defect. Title and risk of loss pass to buyer on delivery to common carrier. If product was damaged in transit to you, file claim with carrier.*

Manufactured for Dayton Electric Mfg. Co., 5959 W. Howard St., Niles, Illinois 60714 U.S.A.

For Replacement Parts, call 1-800-323-0620

Please provide following information:
- Model number
- Serial number (if any)
- Part description and number as shown in parts list

Address parts correspondence to:
Grainger Parts Operations
P.O. Box 3074
1657 Shermer Road
Northbrook, IL 60065-3074 U.S.A.

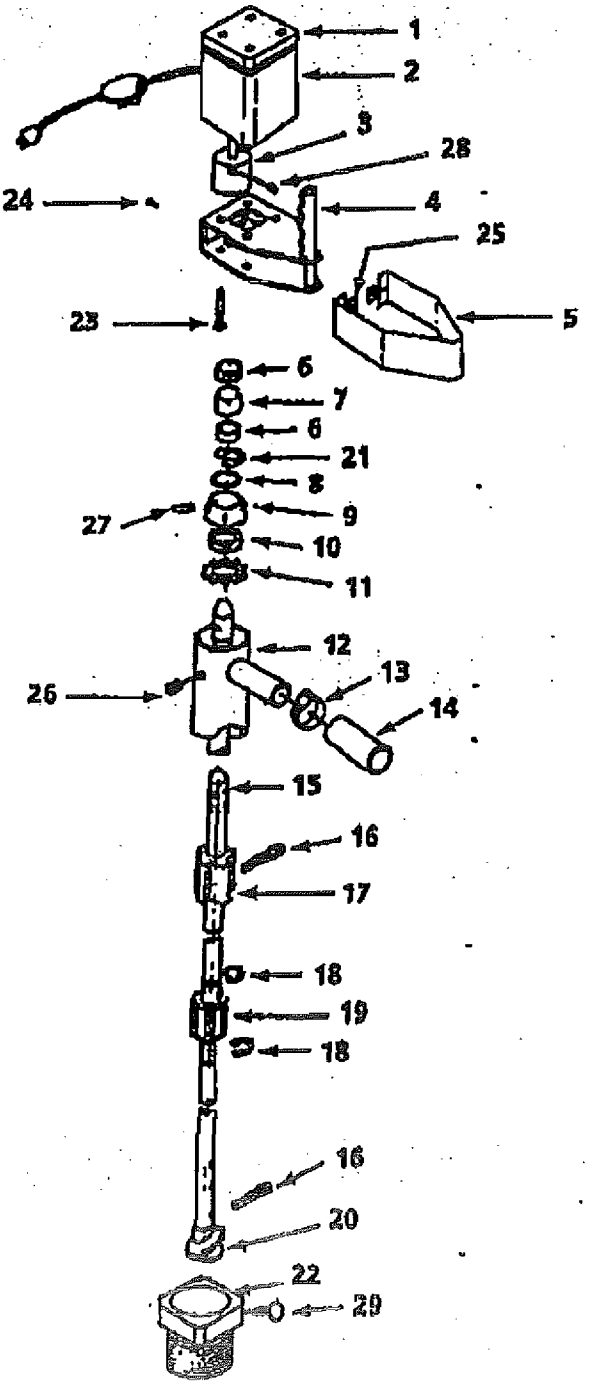

Figure 3 — Replacement Parts Illustration

Replacement Parts List

Reference Number	Description	Part Number	Quantity
1	Motor Guard	66101	1
2	1/2 HP Motor w/8 ft. Power Cord and Switch	66999	1
3	Pump Coupling	66896	1
4	Handle/Pump Mount Assembly	66285	1
5	Cover Plate	66407	1
6	Bearing	66108	2
7	Spacer	66189	1
8	O-Ring	66111	1
9	End Cap	66912	1
10	Seal	66413	1
11	Star Washer	66555	1
12	316SS Outer Column	66717	1
13	Hose Clamp	1P416	1
14	5 Foot EPMD Hose	66119	1
15	316SS Inner Shaft	66120	1
16	Cotter Pin	66921	2
17	Teflon Impeller	66722	1
18	SS "C" Ring Retainer	66123	6
19	Teflon Spacer	66825	3
20	Teflon Auger	66829	1
21	Retaining Ring	66130	1
22	Bung Adapter	6500	1
23	Motor Mount Screw	66011	4
24	Cover Plate Screw	66004	2
25	Speed Nut	66003	2
26	Column Set Screw	66017	2
27	Roll Pin	66005	1
28	Coupling Set Screw	66016	2
29	Thumb Screw	1650-19	1

SUPPLIER DO ENT SUBMITTAL

FDF PROJECT NO: 20111	CONTRACT NO: FSC - 641	SUBMITTAL NO: 15070-003	REV: 0	15-Feb-01	PAGE 1 OF 1

FROM: The STAVER GROUP, Inc.
Ron Wood
SIGNATURE: Ron Wood

TO: FDF ENGINEERING/CONSTRUCTION DOCUMENT CONTROL (ECDC), MS 52-7
RECEIVED BY: Erika Jarrett DATE: 2/20/01

QTY	DOCUMENT NUMBER	REV	DOCUMENT FAMILY: PRO	H&S	MED	TRG	CON	ENG	QAC	OPER	TITLE/DESCRIPTION	SUBMITTAL TYPE: DRFT	CFC	INF	ASSOCIATED SPECIFICATION	SUBMITTAL ACTION: A	B	C
4	641-15070-003	0						X			Teel Drum Pump O&M Manuals			X	15070	X		

REVIEW DISTRIBUTION

NAME	MS	NAME	MS	NAME	MS
(3) Mike Griffin (Approver)	52-5				

NO COMMENTS: COMMENTS: (PLEASE USE SPACE BELOW FOR COMMENTS OR INDICATE IF ATTACHMENTS)

RECEIVED BY: [signature] DATE 3/05/01
(SIGN/DATE AND RETURN A COPY TO ECDC, MS 52-7)

SUBMITTAL TYPE: (BY SUPPLIER)
CFC - CERTIFIED FOR CONSTRUCTION
INF - INFORMATION/RECORD
DRFT - DRAFT/PRELIMINARY

SUBMITTAL ACTION CODE: (BY FDF)
A - Conforms to Subcontract Requirements
B - Minor Comments - Incorporate and Resubmit
C - Revise and Resubmit (SEE COMMENTS)

ORIGINAL

Operating Instructions & Parts Manual **3P652B and 3P680**

Please read and save these instructions. Read carefully before attempting to assemble, install, operate or maintain the product described. Protect yourself and others by observing all safety information. Failure to comply with instructions could result in personal injury and/or property damage! Retain instructions for future reference.

Teel® Electric Drum Pumps

[X] A - Conforms to the Subcontract Requirements
[ ] B - Minor Comment - Incorporate and Resubmit
[ ] C - Revise and Resubmit
Sig: MWS Date: 3/05/01

3'

ORIGINAL MANUAL RETAINED — MWS 3/05/01

Description

Teel electric drum pumps are electrically driven and self-priming. They are designed to transfer clean, non-abrasive and nonflammable liquids that are compatible with pump materials. The motor is isolated from liquid by a mechanical seal made of Teflon with a Viton O-ring. The pump has an outer shell and inner shaft which are made of Type 316 stainless steel. Model 3P680 has a continuous-duty electric motor. This pump also available with an air motor model 3P658. The motor has shielded, prelubricated ball bearings that reduce maintenance requirements.

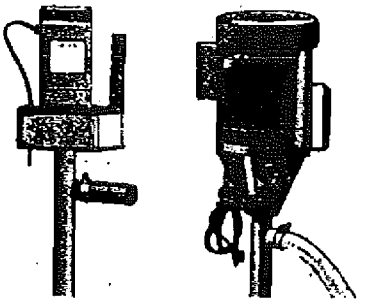

MODEL 3P652B **MODEL 3P680**

Figure 2 - Electric Drum Pumps

Performance

Model	GMP† Total Head (in Feet) 0 ft.	5 ft.	10 ft.	15 ft.	20 ft.	Max. Head*	Max. Viscosity
3P652B	17	13	9	5	1	20.7ft	100 SSU
3P680	10	5.0	–	–	–	10.0ft	500 SSU

(†) Based on water at 72° F.
(*) Calculate equivalent PSI by dividing total head by 2.31.

INFORMATION ONLY

PUMP CHEMICAL COMPATIBILITY CHART

Acetic Acid	Formaldehyde (Aqueous solution)	Sodium aluminate
Alum (potassium sulfate)	Lactic acid	Sodium bicarbonate
Aluminum hydroxide	Nickel chloride	Sodium carbonate
Ammonia	Perchloroethylene	Sodium chloride
Amines	Phthalic anhydride	Sodium cyanide
Arsenic acid	Potassium bicarbonate	Sodium sulfate
Beer	Potassium bromide	Sodium sulfide
Beet sugar liquids	Potassium carbonate	Starch
Benzaldehyde	Potassium chloride	Sulfurous acid
Benzoic acid	Potassium nitrate	Tannic acid
Boric acid	Potassium sulfate	Tomato juice
Calcium hydroxide	Potassium sulfide	Trichlorethane
Calcium sulfate	Pyrogallic acid	Trichlorethylene
Chloroform	Silver nitrate	Vinegar
Citric acid	Soap solutions	Water
Copper sulfate	Soda ash (20%)	Zinc chloride
Ferric sulfate	Sodium acetate	Zinc sulfate

© 1996 W.W. Grainger, Inc.
Printed in U.S.A.
01170

TEEL®

SUPPLIER DOCUMENT SUBMITTAL

FDF PROJECT NO: 20111	CONTRACT NO: FSC - 641	SUBMITTAL NO: 15070-004	REV: 0	Feb. 26, 2001	PAGE 1 OF 1

FROM: The STAVER GROUP, Inc.

Ron Wood

SIGNATURE: R Wood

TO: FDF ENGINEERING/CONSTRUCTION DOCUMENT CONTROL (ECDC), MS 52-7

RECEIVED BY: Denise Wentz DATE: 2/27/01

QTY	DOCUMENT NUMBER	REV	DOCUMENT FAMILY PRO	H&S	MED	TRG	CON	ENG	QAC	OPER	TITLE/DESCRIPTION	SUBMITTAL TYPE DRFT	CFC	INF	ASSOCIATED SPECIFICATION	SUBMITTAL ACTION A	B	C
8	641-15070-004	0						X			Tank & Hose Leak Test		X		15070	X		

REVIEW DISTRIBUTION

NAME	MS	NAME	MS	NAME	MS
Mike Griffin	52-5				
Tim Cherry	52-5				
Jim Jenkins	52-5				
Mike Godber	64				
Rob Knelp	52-5				
B. Scott Wheeler	52-5				
BeoSyntec Consultants	38				

NO COMMENTS: X COMMENTS: (PLEASE USE SPACE BELOW FOR COMMENTS OR INDICATE IF ATTACHMENTS)

RECEIVED BY: [signature] DATE 3/05/01

(SIGN/DATE AND RETURN A COPY TO ECDC, MS 52-7)

SUBMITTAL TYPE: (BY SUPPLIER)

CFC - CERTIFIED FOR CONSTRUCTION

INF - INFORMATION/RECORD

DRFT - DRAFT/PRELIMINARY

SUBMITTAL ACTION CODE: (BY FDF)

A - Conforms to Subcontract Requirements

B - Minor Comments - Incorporate and Resubmit

C - Revise and Resubmit (SEE COMMENTS)

ORIGINAL

staver

The Staver Group, Inc.
1271 East 2nd St.
Franklin, Ohio 45005

February 23, 2001

Willie Frazier
Fluor Fernald, Inc.
P.O. Box 538704
Cincinnati, Ohio 45253-8704

Re: Tank System Verification
Contract No. FSC – 641
OSDF Permanent Leachate
Transmission System Project

Dear Mr. Frazier:

As required by specification section 15070, this letter serves as written verification that all the EPLTS tank, flexible hose and tank transfer pumps installation is leak free and ready for operation.

Please call with any questions.

Sincerely,
The STAVER Group, Inc.

David R. Opalka
Project Manager

cc: file

[X] A - Conforms to the Subcontract Requirements
[ ] B - Minor Comment - Incorporate and Resubmit
[ ] C - Revise and Resubmit
Sig: [illegible] Date: 3/05/01

Fluor Contract FSC-641
OSDF Enhanced Permanent Leachate
Transmission System Project
STAVER # 7052

Submittal # 641-15070-004
Reviewed By: [illegible]
Date: 2/26/01

INFORMATION ONLY

Tel (513) 743-7995

Fax (513) 743-5873

VALVES

SUPPLIER DOCUMENT SUBMITTAL

FDF PROJECT: 20111	CONTRACT NO: FSC - 641	SUBMITTAL NO: 15080-001	REV: 0	DATE: 06-Jul-00	PAGE 1 OF 1

FROM: The S...VER GROUP, Inc.

Ron Wood

SIGNATURE: Ron Wood

TO: FDF ENGINEERING/CONSTRUCTION DOCUMENT CONTROL (ECDC), MS 52-7

RECEIVED BY: Denise Ulentz DATE: 7/6/00

QTY	DOCUMENT NUMBER	REV	DOCUMENT FAMILY: PRO	H&S	MED	TRG	CON	ENG	QAC	OPER	TITLE/DESCRIPTION	SUBMITTAL TYPE: DRFT	CFC	INF	ASSOCIATED SPECIFICATION	SUBMITTAL ACTION: A	B	C
2	641-15080-001	0						X			6" Red Valve Product Data		X		15080	X		

REVIEW DISTRIBUTION

NAME	MS	NAME	MS	NAME	MS
Mike Griffin	52-5				
Tim Cherry	52-5				
Jim Jenkins	52-5				
Mike Gedber	64				
Bob Kneup	52-5				
B. Scott Wheeler	52-5				
Kwasi Bau Tweneboah	64				

NO COMMENTS: COMMENTS: (PLEASE USE SPACE BELOW FOR COMMENTS OR INDICATE IF ATTACHMENTS)

Also submit info. per 1.04B + other valves

RECEIVED BY: [illegible] DATE 7/13/00

(SIGN/DATE AND RETURN A COPY TO ECDC, MS 52-7)

SUBMITTAL TYPE: (BY SUPPLIER)
CFC - CERTIFIED FOR CONSTRUCTION
INF - INFORMATION/RECORD
DRFT - DRAFT/PRELIMINARY

SUBMITTAL ACTION CODE: (BY FDF)
A - Conforms to Subcontract Requirements
B - Minor Comments - Incorporate and Resubmit
C - Revise and Resubmit (SEE COMMENTS)

ORIGINAL

ENTERED

Red Valve Company, Inc.®

FLEXGATE
SLURRY KNIFE GATE VALVE
Installation, Operation, and Maintenance Manual

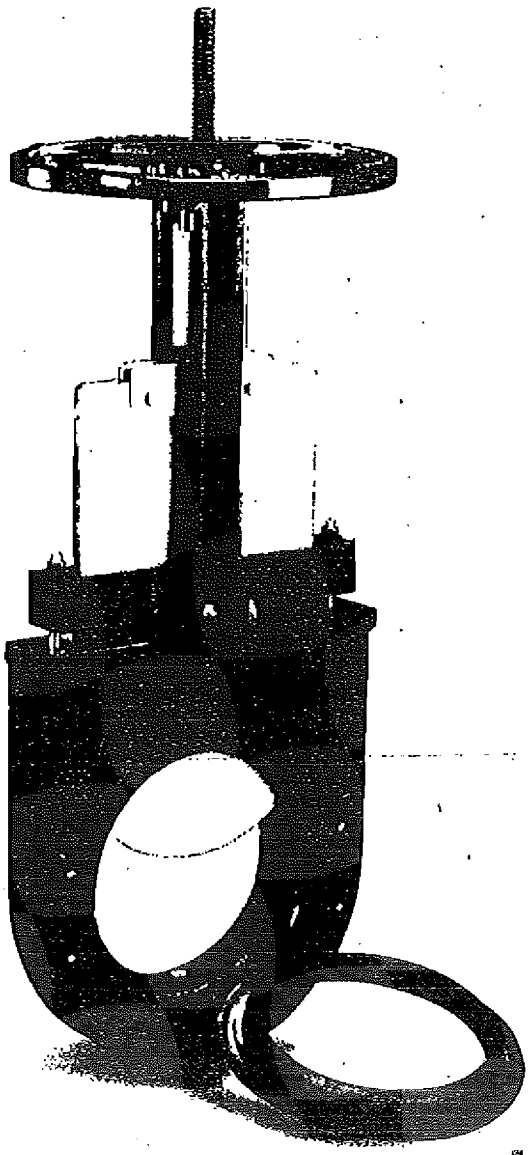

The Red Valve Flexgate Slurry Knife Gate Valve is a 100% full bore, truly bi-directional valve designed for tough slurry applications. The Flexgate features heavy-duty elastomer seat cartridges which provide droptight closure and are replaced **WITHOUT ANY VALVE DISASSEMBLY**, for ease of maintenance.

The Flexgate is designed to meet MSS-SP81 face-to-face dimensions, so that it can be readily placed in service replacing conventional knife-gate products.

Flush ports are provided to allow the valve to be flushed with water and/or air. With a variety of actuators available, limit switches, and other options, the Red Valve Flexgate can be built to fit your special applications.

[ ] A - Conforms to the Subcontract Requirements
[ ] B - Minor Comment - Incorporate and Resubmit
[ ] C - Revise and Resubmit
Sig: Date: 7/12/00

INFORMATION ONLY

IMPORTANT

Please take a moment to review this manual. Before performing any maintenance on the valve be sure the pipeline has been de-pressurized. The improper installation or use of this product may result in personal injury, product failure, or reduced product life. Red Valve Co., Inc. can accept NO liability resulting from the improper use or installation of this product. If you have any questions or problems, please call the customer service department at (412) 279-0044. We appreciate your comments. And thank you for choosing Red Valve.

INSTALLATION

*** When your Red Valve order arrives, check the contents carefully to assure no damage or loss occured in transit.**

1. Check flange faces of pipe for rough /damaged areas. Pipeline flanges must be flat, properly spaced, and parallel to achieve proper seal. DO NOT mate flexate valves directly to expansion joints or other flexible connections.

2. The rubber seats act as a gasket - separate flange gaskets are not required and must NOT be used.

3. Actuate valve to the full CLOSED position for installation. Lubricate seat cartridges and gate liberally with a grease compatible withthe seat material. Silicone grease is recommended for all seat materials.

4. Insert seat cartridges. Flange gaskets are not required. Make sure that cartridges are of the correct size and properly centered on valve flange.

5. Installing Flange Bolts
   CAUTION: Only use flange bolts of the correct length in such manner that the BOLTS DO NOT BOTTOM OUT IN TAPPED HOLES. The use of bolts which are too long and bottom out in tapped holes can distort body and cause permanent valve damage. Tighten all bolts uniformly on both sides so as to distribute compression evenly on seat rings. Improper or uneven torquing of flange bolts can cause premature seat cartridge failure !

5. Apply grease liberally to stem.

6. Some leakage may occur at packing when line is pressurized. The factory does not tighten packing to overcome such leakage, as this can shorten packing life when valve is in storage. Simply tighten the packing nuts until the leakage ends.

7. Fill out and attach the enclosed VALVE MAINTENANCE CARD to the valve. This has been provided for maintenance convenience.

   CAUTION: VALVES EQUIPPED WITH THE FLUSHPORT DESIGN CAN BE PLUGGED OR PIPED TO A SUITABLE DRAIN. REMOVAL OF PLUG(S) WILL CAUSE LEAKAGE OF LINE MATERIALS. CONSULT YOUR SYSTEMS ENGINEER FOR PROPER PLUMBING OF FLUSHPORT FOR YOUR INSTALLATION.

   NOTE: It is recommended that valves with actuators be installed in the vertical position. If actuated knife gates must be installed horizontally, it is recommended that the actuator be supported with a hanger or bracket.

NEVER...	NEVER...	DO...	DO...
Install with Gate up.	Use bolts which bottom out in body.	Lubricate Seats & Gate.	Tighten bolts evenly.

OPERATION

ACTUATORS All actuators are furnished completely assembled and fully operational. All valve accessories and instrumentation are properly set and calibrated at the Red Valve factory.

MANUAL ACTUATORS All handwheel, chainwheel, and bevel gear operators turn clockwise to close. The gate stops moving when the valve is fully opened or closed.

BEVEL GEAR Bevel gears operate the same as the standard handwheel. The handwheel is turned clockwise to close and counter clockwise to open.

CHAINWHEEL Chainwheels can be furnished on both standard valves and valves with bevel gears. The chain must be fed through the guides and over the spokes around the outside diameter of the rim. The ends of the chain are then joined with a connecting link.

ELECTRIC ACTUATORS Electric Actuators come completely operational, with limit and torque switches set. Please refer to the individual actuator manuals for additional operation or maintenance information.

CYLINDER ACTUATORS Red Valve Cylinder Actuators operate from clean lubricated plant air. Cylinder Actuators are available in three basic configurations. Air-To-Open / Air-To-Close, Fail-Safe Open, and Fail-Safe Closed.

ATO/ATC:
ngle 4-way valve is used to operate this standard cylinder style. ..e open air supply is connected to the lower cylinder head, and close air source is attached to the upper cylinder. Each side of the cylinder must be vented when the other side of the cylinder is pressurized, in order for the cylinder to function.

FAIL-SAFE CLOSED:
A large diameter spring on the top of the cylinder piston provides the force to close this type of cylinder configuration. Air is only supplied to the BOTTOM cylinder head for valve opening. The top cylinder head must remain vented at all times. When the bottom of the cylinder is pressurized with plant air, the valve opens. The valve will close automatically when the pressure is vented out of the bottom of the cylinder.

FAIL-SAFE OPEN:
A large diameter spring on the bottom of the cylinder piston provides the force to open this type of cylinder configuration. Air is only supplied to the top cylinder head for valve closing. The bottom cylinder head must remain vented at all times. When top of cylinder is pressurized with plant air, valve closes. Valve will open automatically when pressure is vented out through top of cylinder.

CAUTION: Fail Safe cylinders contain large diameter springs in a compressed state. To avoid risk of serious injury, never attempt to disassemble fail-safe cylinders, NEVER cut, bend, or alter the protruding threads at the top of the cylinder. Fail-safe cylinders will actuate AUTOMATICALLY with an interruption of supply air. To avoid risk of injury from unexpected actuation, always close cylinder supply air prior to inspecting, lubricating, or servicing valve.

WATER HAMMER EFFECT:
Too rapid of closure of any valve can create a forceful and potentially damaging water hammer effect. To minimize the risk of water hammer related damage, Red Valve Co., Inc. recommends that the closure rate of the valve be controlled by restricting the exhaust rate of cylinder pressure. The addition of a needle valve in cylinder head ports will enable you to control closure rate for your service condition.

MAINTENANCE

INSPECTION Valves should occasionally be inspected for damage and wear. The inspection period should be determined by the severity of the service and environment. Valves should be inspected every 90 days for normal applications, or more frequently for severe applications. If valves are periodically inspected and preventive maintenance done, the valve will last longer and operate better.

CAUTION: Do not remove any valve parts or bolting with pressure in the line. It is easy to inspect the valve for obvious problems. **Several items should be checked:**

• Check the stem for wear and any damaged threads. If threads are damaged, use a small file to remove small burrs on the thread.

• Check the stem bushing for small pieces of bronze which may have worn away. If excess material is noticed the stem bushing should be replaced.

• Check the exposed portion of the gate when it is in the full open position for excessive wear. If the gate is excessively worn, the gate should be replaced. Always keep the valve well lubricated and the gate free of excess buildup.

RESILIENT SEAT REPLACEMENT

1. Make sure there is no pressure in the pipeline.
2. Remove the valve or remove all bolting except one bolt nearest the horizontal centerline and swing the valve out of the line.
3. Replace the seat cartriges and install the valve as described under installation.

TROUBLESHOOTING GUIDE

SYMPTOM:

VALVE BINDS or DIFFICULTY TURNING HANDWHEEL

• Examine stem & bushing for burrs or wear.
• Clean build-up on gate, flush body
• Lubricate stem & gate
• Remove seat cartridges & inspect for damage
• Make certain no in-line obstructions exist

SYMPTOM:

VALVE LEAKS AT PACKING

• Tighten packing gland
• Replace packing as needed
• Inspect gate and seat cartridges for wear or damage

SYMPTOM:

VALVE DOES NOT CHECK FLOW WHEN CLOSED

• Check for obstruction in line
• Inspect gate and seat cartridges for build-up, wear, or damage

SYMPTOM:

RESILIENT SEAT CARTRIDGES ARE SOFTENED OR DETERIORATED

• Consult Red Valve for chemical compatability of resilient seat cartridges.

STORAGE

If your Flexgate Slurry Knife Gate Valve is to be stored for a period of time prior to installation, the following storage guidelines will help preserve your valve and assure a trouble free installation.

1. Store resilient seat cartridges in a clean, cool and dry location. Avoid exposure to light, electric motors, dirt or chemicals.
2. Store valve in a clean, dry location. Make certain that valve and actuator are well supported. Do not stack other items on valve.
3. Grease stem, gate, and flange holes liberally to inhibit corrosion.

RED VALVE WARRANTY

WARRANTIES - REMEDIES - DISCLAIMERS - LIMITATION OF LIABILITY
Unless otherwise agreed to in writing signed by Red Valve, all Products supplied by Red Valve will be described in the specifications set forth on the face hereof.

THE WARRANTIES SET FORTH IN THIS PROVISION ARE EXCLUSIVE AND IN LIEU OF ALL OTHER WARRANTIES WHETHER STATUTORY, EXPRESS OR IMPLIED (INCLUDING ALL WARRANTIES OF MERCHANTABILITY AND FITNESS FOR A PARTICULAR PURPOSE AND ALL WARRANTIES ARISING FROM COURSE OF DEALING OR USAGE OR TRADE).

Red Valve Products are guaranteed for a period of one year from date of shipment, against defective workmanship and material only, when properly installed, operated and serviced in accordance with Red Valve's recommendations. Replacement for items of Red Valve's manufacture will be made free of charge if proved to be defective within such year; but not claim for transportation, labor or consequential damages shall be allowed. We shall have the option of requiring the return of the defective product to our factory, with transportation charges prepaid, to establish the claim and our liability shall be limited to the repair or replacement of the defective product, F.O.B. our factory. Red Valve will not assume costs incurred to remove or install defective products nor shall we incur backcharges or liquidated damages as a result of warranty work. Red Valve does not guarantee resistance to corrosion erosion, abrasion or other sources of failure, nor does Red Valve guarantee a minimum length of service, or that the product shall be fit for any particular service. Failure of purchaser to give prompt written notice of any alleged defect under this guarantee forthwith upon its discovery, or use, and possession thereof after an attempt has been made and completed to remedy defects therein, or failure to return product or part for replacement as herein provided, or failure to install and operate said products and parts according to instructions furnished by Red Valve, or failure to pay entire contract price when due, shall be a waiver by purchaser of all rights under these representations. All orders accepted shall be deemed accepted subject to this warranty which shall be exclusive of any other or previous warranty, and shall be the only effective guarantee or warranty binding on Red Valve, anything on the contrary contained in purchaser's order, or represented by any agent or employee of Red Valve in writing or otherwise, not withstanding implied warranties. RED VALVE MAKES NO WARRANTY THAT THE PRODUCTS, AUXILIARIES AND PARTS ARE MERCHANTABLE OR FIT FOR ANY PARTICULAR PURPOSE.

ORDERING INFORMATION CHECKLIST

Flexgate Slurry Knife Gate Valve

VALVE SIZE_____ QTY._____

PACKING MATERIAL
- ☐ FLAX
- ☐ TEFLON
- ☐ KEVLAR

FLOW MEDIA_____
Operating Pressure_____psi
Operating Temperature_____

SEAT MATERIAL SELECTION
- ☐ PURE GUM RUBBER
- ☐ EPDM
- ☐ BUNA-N
- ☐ VITON

GATE MATERIAL SELECTION
- ☐ 316 STAINLESS STEEL
- ☐ 17-4 PH

ACTUATOR SELECTION

MANUAL ACTUATORS
- ☐ STANDARD HANDWHEEL
- ☐ 4:1 BEVEL GEAR (Recommended for
- ☐ 8:1 BEVEL GEAR sizes 14" and Over)

PNEUMATIC ACTUATORS
- ☐ AIR TO OPEN / AIR TO CLOSE
- ☐ AIR TO OPEN / FAIL CLOSE SPRING
- ☐ AIR TO CLOSE / FAIL OPEN SPRING

AVAILABLE AIR PRESSURE_____psi

ELECTRIC ACTUATORS
- ☐ AUMA
- ☐ LIMITORQUE
- ☐ ROTORK

VOLTAGE_____

ACCESSORIES
- ☐ Auto Purge Package
- ☐ Limit Switch
- ☐ 4-way Solenoid
- ☐ Bonnet
- ☐ Stem Cover
- ☐ Stem Material_____
- ☐ Stem Extension (length) _____

PART NOMENCLATURE FLEXGATE

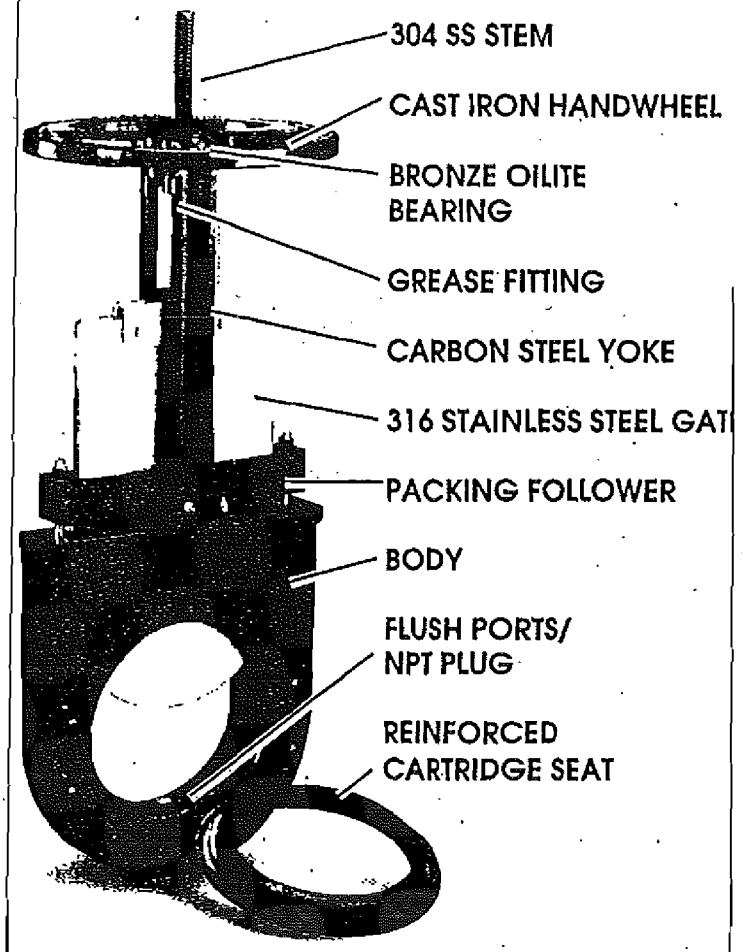

RED VALVE QUALITY PRODUCTS

- Pinch Valves
- Check Valves
- Pressure Sensors
- Control Valves
- Knife Gate Valves
- Redflex Products

Red Valve Company, Inc.
700 N. Bell Avenue, Carnegie, PA 15106
Phone 412 279-0044 • FAX 412 279-7878
email: valves@redvalve.com

DISK №:2629

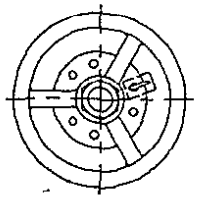

Submission of product for review, acceptance, and comment prior to release of purchase order by
RIECK MECHANICAL-ELECTRICAL SERVICES
Date 7-3-00

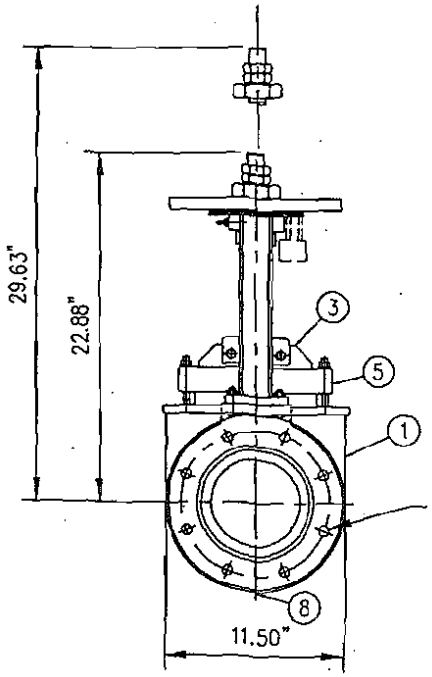

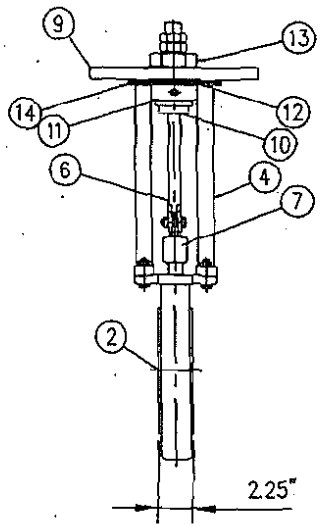

ITEM	QTY.	DESCRIPTION	MAT'L
1	1	FLEXGATE 6" VALVE BODY	CAST IRON
2	2	FLEXGATE 6" SEAT	EPDM
3	1	FLEXGATE 6" GATE	S/STEEL
4	1	FLEXGATE 6" YOKE ASSEMBLY	DUCTILE IRON
5	1	FLEXGATE 6" STUFFING BOX	CAST STEEL
6	1	FLEXGATE STEM ASSEMBLY	S/STEEL
7	4	PACKING	FLAX
8	1	PIPE PLUG, .25"-18NPT	S/STEEL
9	1	ø 11.00" HANDWHEEL	C/IRON
10	1	STEM BEARING	BRASS
11	1	OILITE BEARING, № TT-2400-1	BRONZE
12	1	OILITE BEARING, № TT-2008	BRONZE
13	1	JAM NUT 1.50"-6 UNC, STD	C/STEEL
14	2	LOCK-OUT PLATE	C/STEEL

Fluor Contract FSC-641
OSDF Enhanced Permanent Leachate.
Transmission System Project
STAVER # 7052

Submittal # 641-15080-001
Reviewed By: RMJ
Date: 7/6/00

CUSTOMER APPROVAL

SIGNED _____ DATE _____

SALES ORDER №: 00-3654-T

PROPRIETARY NOTICE

THIS DOCUMENT CONTAINS PROPRIETARY INFORMATION OF RED VALVE COMPANY, INC. IT IS LOANED BY RED VALVE COMPANY, INC. SUBJECT TO THE CONDITIONS THAT IT AND THE INFORMATION EMBODIED THEREIN SHALL BE USED ONLY FOR RECORD AND REFERENCE PURPOSES. IT SHALL NOT BE USED OR CAUSED TO BE USED IN ANY WAY PREJUDICIAL TO THE INTERESTS OF RED VALVE CO. IT SHALL NOT BE REPRODUCED OR COPIED IN WHOLE OR PART, OR DISCLOSED TO ANYONE WITHOUT THE DIRECT WRITTEN PERMISSION OF RED VALVE COMPANY, INC., AND SHALL BE RETURNED UPON REQUEST.

RED VALVE COMPANY, INC.
CARNEGIE, PA. 15106-0548

CUSTOMER: RIECK MECHANICAL
ORDER No: 16355

RV PRODUCT: 6" FLEXGATE
RV PART №: DC-060-0-6X10-001
DR. BY: W.K. DATE: 6/28/2000 | CHKD. BY: DATE:
CAD SCALE: FULL | FILE NAME: RS22424A
PLOT SCALE: .125 | DWG №: RVS-22424 | REV A

SUPPLIER DOCUMENT SUBMITTAL

MC 10-30-00

DF PROJECT NO: 2.	CONTRACT NO: FSC - 641	SUBMITTAL NO: 15080-002	REV: 1/2	26-Oct-00	PAGE 1 OF

FROM: The STAVER GROUP, Inc.

Ron Wood

SIGNATURE: [signature]

TO: FDF ENGINEERING/CONSTRUCTION DOCUMENT CONTROL (ECDC), MS 52-7

RECEIVED BY: Melissa Coffey DATE: 10-30-00

QTY	DOCUMENT NUMBER	REV	DOCUMENT FAMILY: PRO	H&S	MED	TRG	CON	ENG	QAC	OPER	TITLE/DESCRIPTION	SUBMITTAL TYPE: DRFT	CFC	INF	ASSOCIATED SPECIFICATION	SUBMITTAL ACTION: A	B	C
8	641-15080-002D	1						X			3/4" Ball Valves		X		15080	X		

REVIEW DISTRIBUTION

NAME	MS	NAME	MS	NAME	MS
Mike Griffin	525				
Tim Sherry	525				
Jim Jenkins	525				
Mike Godber	64				
Rob Kreip	525				
Scott Wheeler	525				
Bob Sunter	38				

COMMENTS: (PLEASE USE SPACE BELOW FOR COMMENTS OR INDICATE IF ATTACHMENTS)

RECEIVED BY: [signature] DATE 10/31/00

(SIGN/DATE AND RETURN A COPY TO ECDC, MS 52-7)

ORIGINAL

SUBMITTAL TYPE: (BY SUPPLIER)

CFC - CERTIFIED FOR CONSTRUCTION

INF - INFORMATION/RECORD

DRFT - DRAFT/PRELIMINARY

ENTERED

SUBMITTAL ACTION CODE: (BY FDF)

A - Conforms to Subcontract Requirements

B - Minor Comments - Incorporate and Resubmit

C - Revise and Resubmit (SEE COMMENTS)

BALL VALVES

OPTIONS

TWO-PIECE STEM AND HOUSING

For submerged or buried applications. PVC housing protects stem extensions from aggressive environments or functions as a valve box.

SINGLE STEM EXTENSIONS

Valve handle can be extended away from the valve for out-of-reach locations.

PANEL MOUNT EXTENSIONS

Valve handle can be extended to allow for panel mount and pipe insulation.

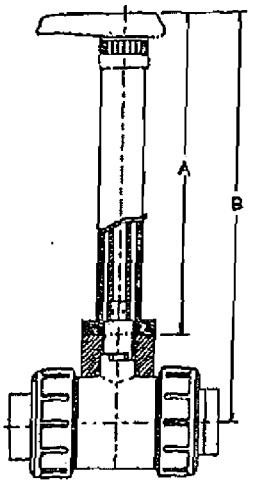

STYLE A
(TWO-PIECE STEM AND HOUSING)

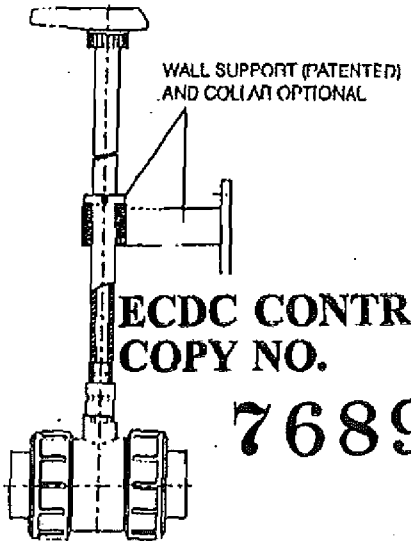

STYLE B
(ONE-PIECE, NON-SUPPORTED)

STYLE C
(PANEL MOUNT)

ECDC CONTROLLED COPY NO. 76896

X A - Conforms to the Subcontract Requirements
[ ] B - Minor Comment - Incorporate and Resubmit
[ ] C - Revise and Resubmit
Sig: Date: 10/31/00

SPECIAL HANDLES

LOCKING HANDLES

Prevents unauthorized cycling of a valve. Designed to be secured with a padlock.

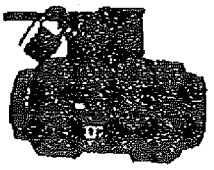

SPRING RETURN HANDLES

Allows for failsafe manual operation.

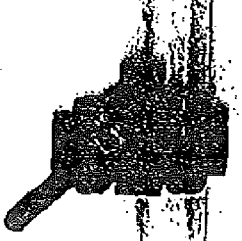

REMOTE OPERATING NUTS

Fluor Contract FSC-641
OSDF Enhanced Permanent Leachate
Transmission System Project
STAVER # 7052

Submittal # 641-15080-001D
Reviewed By:
Date: 10/26/00

REMOTE OPERATING NUTS

Available in 2" square or "T" configurations. They are used for remote operation of a valve by an extended wrench.

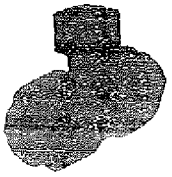

LIMIT SWITCHES

Manual valve with limit switches (SPDT) for sequencing with other equipment or for remote position indication with lights.

BALL VALVES

DUO-BLOC® 21

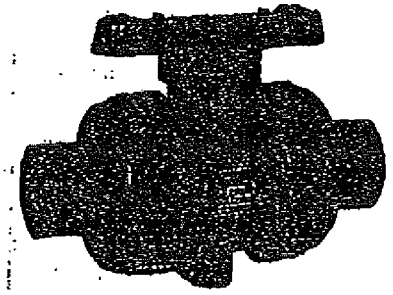

FEATURES

- Built-in spanner wrench handle for easy disassembly or maintenance
- Panel mounting pad
- Double O-ring seals on stem
- All sizes full bore
- Full vacuum rated
- Viton or EPDM O-ring
- Blocks in two directions, upstream and downstream, leaving full pressure on the opposite end of the valve
- ISO mounting pad for both manual and actuated operations
- Teflon seats with elastomeric backing cushions ensure bubble-tight shut-off and a low fixed torque, while at the same time compensating for wear
- True Union design eliminates the need for flanges and permits installation or repairs without expanding the pipe system

TYPE 21 SPECIFICATIONS *

SIZES: 1/2"–4" **
MODELS: Socket, Threaded, Flanged (ANSI), Butt
BODIES: PVC, CPVC, PP, PVDF
SEATS: Teflon backed with EPDM or Viton
SEALS: EPDM or Viton

OPTIONS

- Stem extensions
- Locking handle
- Spring return handle
- 2" square nut
- "T" nut

SAMPLE SPECIFICATION

All thermoplastic ball valves sizes 1/2" to 4" shall be of True Union design with two-way blocking capability. All True Union ball valves shall have a pressure rating of 230 psi for sizes 1/2" to 3" and 150 psi for 4" (150 psi for PP, all sizes) at 70° F. All True Union ball valves shall have Teflon seats with elastomeric backing cushions of the same material as the valve seals. Stem shall have a double O-ring design and be of blowout-proof design. Valve handle shall double as carrier nut removal tool. ISO mounting pad shall be integrally molded to valve body for actuation. All True Union ball valves must carry a two-year guarantee, as manufactured by Asahi/America, Inc.

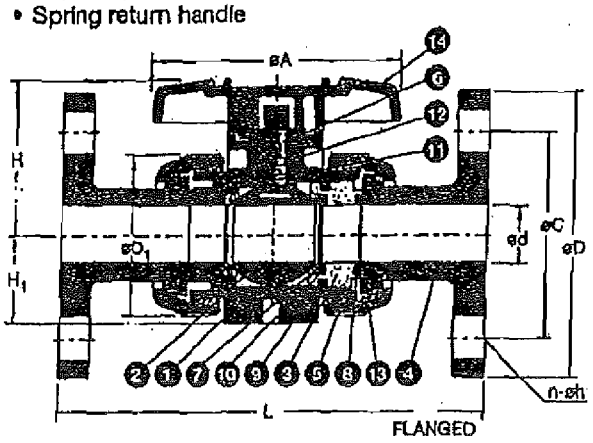

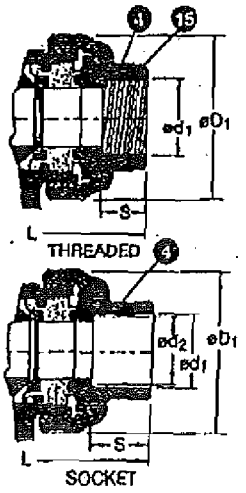

PARTS

No.	Parts	Pcs	Material
1	Body	1	PVC, CPVC, PP, PVDF
2	Ball	1	PVC, CPVC, PP, PVDF
3	Carrier	1	PVC, CPVC, PP, PVDF
4	End Connector	2	PVC, CPVC, PP, PVDF
5	Union Nut	2	PVC, CPVC, PP, PVDF
6	Stem	1	PVC, CPVC, PP, PVDF
7	Seat	2	PTFE
8	O-Ring	2	Viton or EPDM
9	O-Ring	1	Viton or EPDM
10	Seat Cushion	2	Viton or EPDM
11	O-Ring	1	Viton or EPDM
12	O-Ring	1	Viton or EPDM
13	Stop Ring	2	PVDF
14	Handle	1	ABS
15	Ring ***	1/2	Stainless Steel (SUS304)

*** Used for CPVC threaded sizes, 1/2"–1".

PRESSURE VS TEMPERATURE (PSI, WATER, NON-SHOCK)

Size (inches)	PVC			CPVC						PP			PVDF				
	30° F 70° F	71° F 105° F	106° F 120° F	30° F 70° F	71° F 105° F	106° F 120° F	121° F 140° F	141° F 175° F	176° F 195° F	30° F 85° F	86° F 140° F	141° F 175° F	30° F 70° F	71° F 105° F	106° F 120° F	141° F 175° F	176° F 210° F
1/2 – 2	230	165	150	230	165	150	120	75	55	150	85	55	230	165	150	110	85
2 1/2 – 3	230	165	150	230	165	150	120	75	55	150	70	40	230	165	150	110	85
4	150	150	150	150	150	150	120	75	55	150	70	40	150	150	150	110	85

DIMENSIONS (INCHES)

Size	d	Flanged ANSI/ASME B 16.5 Class 150 D	C	n	h	L	Socket ** PVC, CPVC d_1	d_2	S	L	PP, PVDF d_1	S	L	Threaded d_1	S	L	D_1	H_1	H_2	A	Cv
1/2	0.59	3.50	2.38	4	.62	5.83	0.848	0.836	0.875	4.45	0.831	0.87	4.45	1/2 – 14 NPT	0.59	4.02	1.69	[illegible]	[illegible]	3.62	14
3/4	0.79	3.88	2.75	4	.62	6.77	1.058	1.046	1.000	5.08	1.041	1.00	5.09	3/4 – 14 NPT	0.67	4.72	2.36	[illegible]	[illegible]	3.94	29
1	0.98	4.25	3.12	4	.62	7.38	1.325	1.310	1.125	5.75	1.305	1.13	5.75	1 – 11 1/2 NPT	0.79	5.16	2.76	[illegible]	[illegible]	4.53	47
1 1/4	1.26	4.62	3.50	4	.62	7.48	1.670	1.655	1.250	6.46	1.650	1.25	6.46	1 1/4 – 11 1/2 NPT	0.87	5.91	3.23	[illegible]	[illegible]	4.76	72
1 1/2	1.57	5.00	3.88	4	.62	8.35	1.972	1.694	1.375	7.24	1.969	1.37	7.24	1 1/2 – 11 1/2 NPT	0.98	6.42	3.94	[illegible]	[illegible]	5.16	166
2 **	2.01	6.00	4.75	4	.75	9.21	2.387	2.359	1.500	8.23	2.364	1.50	8.23	2 – 11 1/2 NPT	1.10	7.76	4.96	[illegible]	[illegible]	6.23	190

* Consult factory for availability and part number information. ** For sizes above 2" and metric socket dimensions consult factory.

P.O. Box 653 • 35 Green Street, Malden, MA 02148 • Tel: (800) 343-3616, (617) 321-5400

ASAHI/AMERICA

SUPPLIER DO[illegible]ENT SUBMITTAL

FDF PRO[illegible] NO: 20111	CONTRACT NO: FSC - 641[illegible]	SUBMITTAL NO: 15080-002	REV: 5	08-Nov-00	PAGE 1 OF 1

FROM: The STAVER GROUP, Inc.

Ron Wood

SIGNATURE: R. Wood

TO: FDF ENGINEERING/CONSTRUCTION DOCUMENT CONTROL (ECDC), MS 52-7

RECEIVED BY: Carla Barrett DATE: 11/8/00

QTY	DOCUMENT NUMBER	REV	DOCUMENT FAMILY PRO	H&S	MED	TRG	CON	ENG	QAC	OPER	TITLE/DESCRIPTION	SUBMITTAL TYPE DRFT	CFC	INF	ASSOCIATED SPECIFICATION	SUBMITTAL ACTION A	B	C
8	641-15080-002D	2						X			3/4" PVC Ball Valves-Chemtrol		X		15080	X		
											Replaces ASAHI Valve Submittal							

REVIEW DISTRIBUTION

NAME	MS	NAME	MS	NAME	MS
~~[illegible]~~	~~525~~				
Tim Cherry	525				
Jim Jenkins	525				
Mike Godber	64				
Rob Kneip	525				
Scott Wheeler	525				
GED Santee	38				

NO COMMENTS: X COMMENTS: (PLEASE USE SPACE BELOW FOR COMMENTS OR INDICATE IF ATTACHMENTS)

RECEIVED BY: MW Gipp DATE 11-16-00

(SIGN/DATE AND RETURN A COPY TO ECDC, MS 52-7)

SUBMITTAL TYPE: (BY SUPPLIER)

CFC - CERTIFIED FOR CONSTRUCTION

INF - INFORMATION/RECORD

DRFT - DRAFT/PRELIMINARY

SUBMITTAL ACTION CODE: (BY FDF)

A - Conforms to Subcontract Requirements

B - Minor Comments - Incorporate and Resubmit

C - Revise and Resubmit (SEE COMMENTS)

ORIGINAL

Chemtrol®
A DIVISION OF NIBCO INC.

NEW PRODUCT

Fluor Contract FSC-641
OSDF Enhanced Permanent Leachate
Transmission System Project
STAVER # 7052

[ ] A - Conforms to the Subcontract Requirements
[ ] B - Minor Comment - Incorporate and Resubmit
[ ] C - Revise and Resubmit

No. NP4-1293 Submittal # 641-15080-002D -MWS
Reviewed By: 11-16-00 Sig: MWS Date: 11-16-00

LOCKOUT RING KIT

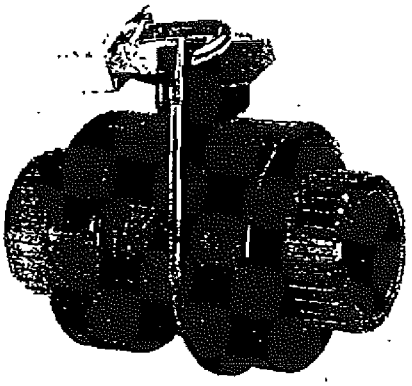

- Available for 1/2" - 2" SU and TB valves
- Corrosion resistant, lightweight PVC ring and handle
- Inexpensive
- Field mounted

LOCKOUT COVER

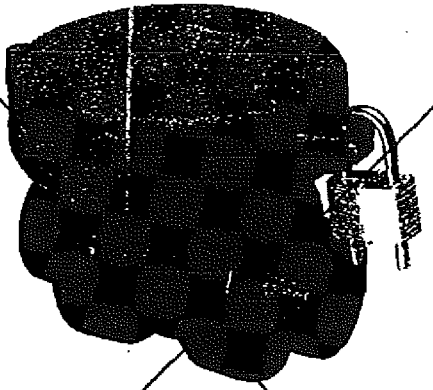

- Available for 1/2" - 3" ball valves
- Lightweight, corrosion resistant polypropylene
- Lockable in any position
- Field mounted with no downtime

LOCKOUT HANDLE KIT*

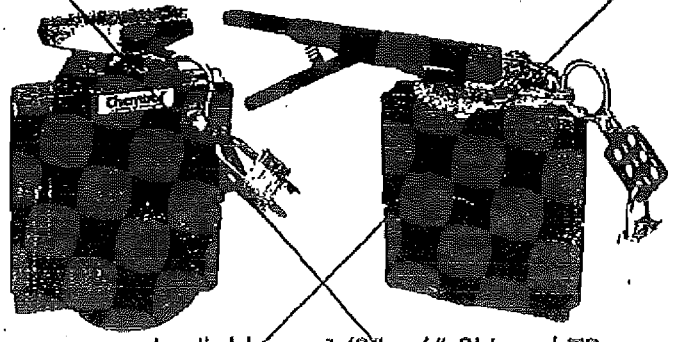

- Available on 1/2" - 6" SU and TB valves
- Corrosion resistant CPVC
- Lockable at close or open
- Available with locking lever handle and index plate
- Factory or field mounted

DEAD MAN HANDLE KIT*

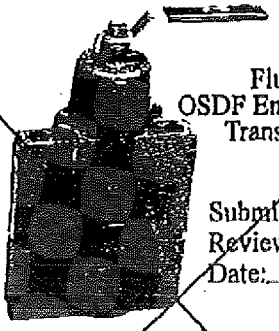

Fluor Contract FSC-641
OSDF Enhanced Permanent Leachate
Transmission System Project
STAVER # 7052

Submittal # 641-15080-002D
Reviewed By: RJ
Date: 11/8/00

- Available on 1/2" - 2" SU and TB valves
- Durable cast iron
- Spring to open or close
- Factory or field mounted

ECDC CONTROLLED
COPY NO.
76896

NOTE: Locks and Hasps not included with Lockout.

* Fabricated non-stock items. Please contact Customer Service for delivery.

TRU-BLOC/TRUE UNION

PVC/CPVC

Chemtrol®
A DIVISION OF NIBCO INC.

Tru-Bloc Ball Valves PVC/CPVC True Union and Single Union

150 psi at 73° water — non-shock — full port

Easy repair/replacement; interchangeability; distribution availability; technical service; reliable quality — the synergistic rationale many plants and original equipment manufacturers have embraced while standardizing on Chemtrol True Union Ball and Check Valves.

TRUE UNION

SINGLE UNION

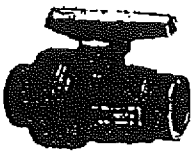

CONSTRUCTION

PART	MATERIAL
1. Handle — Lever‡	✓ PVC
2. Stem	✓ PVC or CPVC
3. Union Nut (2)	✓ PVC or CPVC
4. Seat* (2)	TFE (Teflon)
5. Ball	✓ PVC or CPVC
6. Body — TU	✓ PVC or CPVC
or SU, Socket	✓ PVC or CPVC
or SU, Thread	✓ PVC or CPVC
7. Seal Carrier	✓ PVC or CPVC
8. End Connector — Socket, (2) TU; (1) SU	✓ PVC or CPVC
or Thread, (2) TU; (1) SU	✓ PVC or CPVC
9. "O"-Ring — Carrier End (TU or SU)	FPM (Viton) or EPDM ✓
10. "O"-Ring — Carrier O.D. (TU or SU)	FPM (Viton) or EPDM ✓
11. "O"-Ring — Stem (TU or SU)	FPM (Viton) or EPDM ✓
12. "O"-Ring — Body End (TU only)	FPM (Viton) or EPDM ✓
13. Plain End Pipe Nipple — SPG x SPG (2)	✓ PVC or CPVC
14. Flange — Socket (2)	✓ PVC or CPVC
15. "O"-Ring — Carrier Seat Energizer (Model C)	FPM (Viton) or EPDM ✓
16. Stem Friction Washer (4" x 6")	TFE (Teflon)
17. Handle Bolt (4" x 6")	PVC

Round Safety Handle available as optional accessory in sizes ½" - 1½".
TFE Seats are packaged in pairs as a replacement kit.

Features:

- Double block design stops flow in either direction - - upstream or downstream — when the alternate union is removed for servicing piping system.
- Heavy duty slub-acme thread for seal carrier retaining ring provides more reliability than other designs.
- Full-port design, minimum flow restriction.
- For high purity applications, manufactured and assembled without hydrocarbon lubricants.
- All PVC or CPVC thermoplastic construction with self-lubricating Teflon seats and EPDM or FPM (Viton) "O"-Ring seals.
- Distinctive orange handle not only indicates open or closed at a glance, but molded-in arrows dictate rotational direction for easy operation within 90° stops.
- Actuator mountable versions are available for pneumatic or electrical operation.

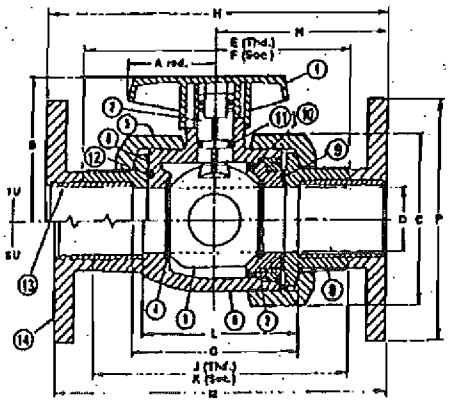

CHEMTROL FIGURE NUMBER

Valve Style	Elastomeric Trim	PVC Soc.	PVC Thd.‡	PVC Flgd.	CPVC Soc.	CPVC Thd.‡	CPVC Flgd.
TU	FPM	U45TB-V*	U45TB-V*	F45TB-V	U51TB-V*	U51TB-V*	F51TB-V
	EPDM	U45TB-E*	U45TB-E*	F45TB-E	U51TB-E*	U51TB-E*	F51TB-V
SU	FPM	S45SU-V	T45SU-V	F45SU-V	S51SU-V	T51SU-V	F51SU-V
	EPDM	S45SU-E	T45SU-E	F45SU-E	S51SU-E	T51SU-E	F51SU-E

* As original equipment, ½" - 2" True Union Tru-Bloc valve models are supplied with Universal connectors (i.e., a set of both socket and thread end connectors). For 3" - 6" sizes, replace U in the Fig. No. with 'S' or 'T' for Soc or Thd. models respectively, as required for all SU models.
‡ Thread end connections are not available for 6" valves.

DIMENSIONS — WEIGHTS

Valve Size	TU & SU Figures Profile A[1]	B	C	D	H	P	TU Figures End-to-End (½" thru 6") E Thd.	F Soc.	G Soc.	H Flgd.	Approx.[2] Wt. Lbs.	SU Figures End-to-End (½" thru 2") J Thd.	K Soc.	L Soc.	M Flgd.	Approx.[2] Wt. Lbs.	Fluid Flow Coefficient Cv3 TU	SU
½	1.70	2.00	2.00	.60	3.13	3.50	4.00	4.19	2.44	6.19	.50	3.38	3.75	2.00	5.75	.32	22	24
¾	2.12	2.50	2.44	.75	3.56	3.88	4.63	5.00	3.00	7.25	.88	3.88	4.50	2.50	6.75	.58	55	61
1	2.12	2.63	2.81	1.00	4.13	4.25	5.19	5.50	3.25	8.06	1.24	4.19	4.88	2.63	7.38	.80	112	125
1¼	2.56	3.50	4.06	1.25	4.81	4.63	6.19	6.63	4.06	9.50	2.69	5.31	5.94	3.44	8.69	1.74	178	194
1½	2.56	3.50	4.06	1.50	5.06	5.00	6.19	6.88	4.06	10.00	2.84	5.31	6.19	3.44	9.19	1.82	285	310
2	2.92	4.25	5.25	2.00	5.75	6.00	7.38	8.00	5.00	11.38	5.46	7.13	7.38	4.38	10.63	3.67	540	577
3	4.00	5.56	7.19	3.00	7.25	7.50	10.38	10.38	6.57	14.63	10.21						1348	
4	8.00	6.44	8.78	4.00	8.63	9.00	12.22	12.22	7.72	17.63	16.45						2602	
6	8.00	6.44	8.78	4.00	11.91	11.00	NA	30.22	7.72	24.09	28.21						2602	

[1] Handle is not symmetrical about stem centerline. It is shown in the correct position for Single Union and 4" & 6" True Unions, but the position must be rotated 180° for the ½" - 3" True Union (ref. open body end).
[2] Weight for ½" - 2" TU Figures include both sets of end connectors or soc. end connections only for 3" - 6" sizes. Weight for SU figures is for soc. end connections. The material presented is PVC in all cases.
[3] Values computed for basic Valve Laying lengths (G & L)
[4] The 6" valve is fabricated by solvent cementing either flanges or socket couplings onto the ends of a 4" TU valve with Plain-end concentric reducer pipe nipples. Threaded figure not available.

NOTES: A complete listing of optional accessories for ball valves begins on page 25. Installation and maintenance instructions for these valves appear on page 20.
For specific relationship of pressure/temperature ratings, refer to ENGINEERING DATA, page 6. And for CHEMTROL VALVE STANDARDS, see page 10.

Do not use or test the products in this catalog with compressed air or other gases. See Chemtrol Chem-Aire® literature for information about shatter-resistant thermoplastic piping systems specifically designed for compressed air and other gases.

SUPPLIER DOCUMENT SUBMITTAL

MC 10-30-00

FDF PROJECT NO:	CONTRACT NO: FSC - 641	SUBMITTAL NO: 15080-002	REV: 4/2	26-Oct-00	PAGE 1 OF 1

FROM: The STAVER GROUP, Inc.

Ron Wood

SIGNATURE: [signature]

TO: FDF ENGINEERING/CONSTRUCTION DOCUMENT CONTROL (ECDC), MS 52-7

RECEIVED BY: Melissa Coffey DATE: 10-30-00

QTY	DOCUMENT NUMBER	REV	DOCUMENT FAMILY: PRO	H&S	MED	TRG	CON	ENG	QAC	OPER	TITLE/DESCRIPTION	SUBMITTAL TYPE: DRFT	CFC	INF	ASSOCIATED SPECIFICATION	SUBMITTAL ACTION: A	B	C
8	641-15080-002D	1						X			3/4" Ball Valves		X		15080	X		

REVIEW DISTRIBUTION

NAME	MS	NAME	MS	NAME	MS
Mike Griffin	52-5				
Tim Cherry	52-5				
Jim Jenkins	52-5				
Mike Godber	64				
Rob Kreip	52-5				
Scott Wheeler	52-5				
Geo Sinter	38				

NO COMMENTS:

COMMENTS: (PLEASE USE SPACE BELOW FOR COMMENTS OR INDICATE IF ATTACHMENTS)

RECEIVED BY: [signature] DATE 10/31/00

(SIGN/DATE AND RETURN A COPY TO ECDC, MS 52-7)

ORIGINAL

SUBMITTAL TYPE: (BY SUPPLIER)

CFC - CERTIFIED FOR CONSTRUCTION

INF - INFORMATION/RECORD

DRFT - DRAFT/PRELIMINARY

ENTERED

SUBMITTAL ACTION CODE: (BY FDF)

A - Conforms to Subcontract Requirements

B - Minor Comments - Incorporate and Resubmit

C - Revise and Resubmit (SEE COMMENTS)

BALL VALVES

OPTIONS

TWO-PIECE STEM AND HOUSING

For submerged or buried applications. PVC housing protects stem extensions from aggressive environments or functions as a valve box.

SINGLE STEM EXTENSIONS

Valve handle can be extended away from the valve for out-of-reach locations.

PANEL MOUNT EXTENSIONS

Valve handle can be extended to allow for panel mount and pipe insulation.

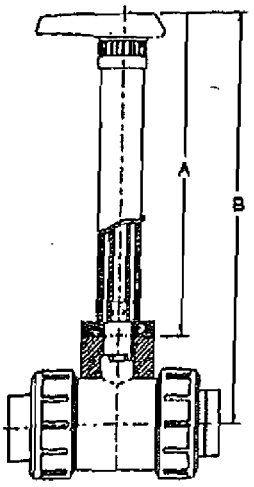

STYLE A
(TWO-PIECE STEM AND HOUSING)

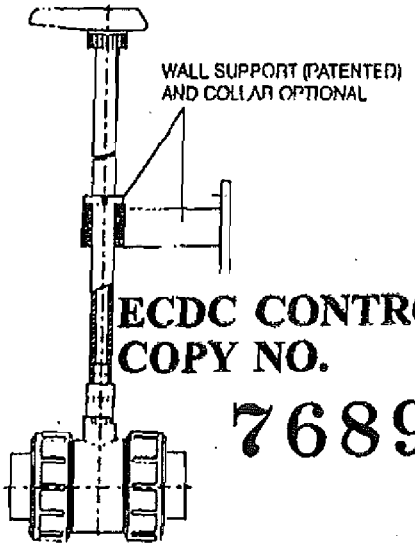

STYLE B
(ONE-PIECE, NON-SUPPORTED)

STYLE C
(PANEL MOUNT)

ECDC CONTROLLED COPY NO. 76896

XCA - Conforms to the Subcontract Requirements
[ ] B - Minor Comment - Incorporate and Resubmit
[ ] C - Revise and Resubmit
Sig: [illegible] Date: 10/31/00

SPECIAL HANDLES

LOCKING HANDLES

Prevents unauthorized cycling of a valve. Designed to be secured with a padlock.

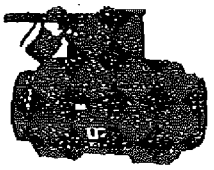

SPRING RETURN HANDLES

Allows for failsafe manual operation.

REMOTE OPERATING NUTS

Fluor Contract FSC-641
OSDF Enhanced Permanent Leachate
Transmission System Project
STAVER # 7052

Submittal # 641-15080-002D
Reviewed By: [illegible]
Date: 10/26/00

REMOTE OPERATING NUTS

Available in 2" square or "T" configurations. They are used for remote operation of a valve by an extended wrench.

LIMIT SWITCHES

Manual valve with limit switches (SPDT) for sequencing with other equipment or for remote position indication with lights.

BALL VALVES

DUO-BLOC® 21

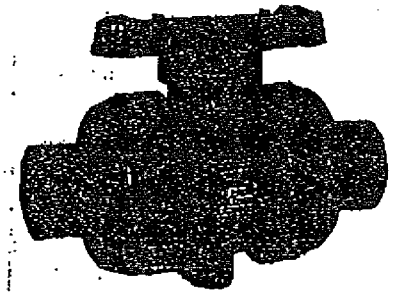

FEATURES

- Built-in spanner wrench handle for easy disassembly or maintenance
- Panel mounting pad
- Double O-ring seals on stem
- All sizes full bore
- Full vacuum rated
- Viton or EPDM O-ring
- Blocks in two directions, upstream and downstream, leaving full pressure on the opposite end of the valve
- ISO mounting pad for both manual and actuated operations
- Teflon seats with elastomeric backing cushions ensure bubble-tight shut-off and a low fixed torque, while at the same time compensating for wear
- True Union design eliminates the need for flanges and permits installation or repairs without expanding the pipe system

TYPE 21 SPECIFICATIONS *

SIZES: 1/2"–4" **
MODELS: Socket, Threaded, Flanged (ANSI), Butt
BODIES: PVC, CPVC, PP, PVDF
SEATS: Teflon backed with EPDM or Viton
SEALS: EPDM or Viton

OPTIONS

- Stem extensions
- Locking handle
- Spring return handle
- 2" square nut
- "T" nut

SAMPLE SPECIFICATION

All thermoplastic ball valves sizes 1/2" to 4" shall be of True Union design with two-way blocking capability. All True Union ball valves shall have a pressure rating of 230 psi for sizes 1/2" to 3" and 150 psi for 4" (150 psi for PP, all sizes) at 70° F. All True Union ball valves shall have Teflon seats with elastomeric backing cushions of the same material as the valve seals. Stem shall have a double O-ring design and be of blowout-proof design. Valve handle shall double as carrier nut removal tool. ISO mounting pad shall be integrally molded to valve body for actuation. All True Union ball valves must carry a two-year guarantee, as manufactured by Asahi/America, Inc.

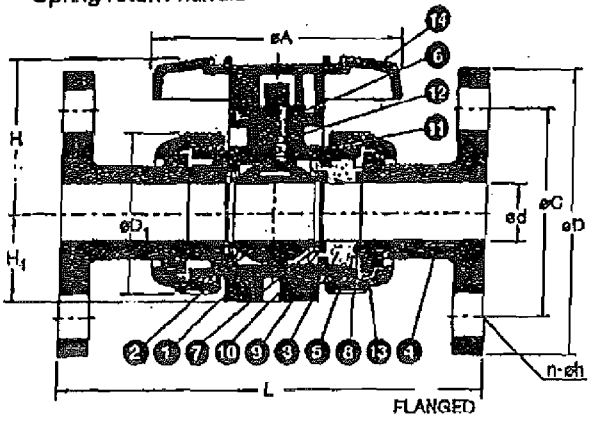

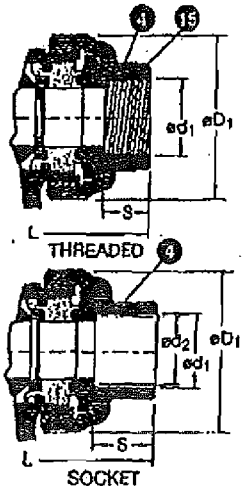

PARTS

No.	Parts	Pcs	Material
1	Body	2	PVC, CPVC, PP, PVDF
2	Ball	1	PVC, CPVC, PP, PVDF
3	Carrier	1	PVC, CPVC, PP, PVDF
4	End Connector	2	PVC, CPVC, PP, PVDF
5	Union Nut	2	PVC, CPVC, PP, PVDF
6	Stem	1	PVC, CPVC, PP, PVDF
7	Seat	2	PTFE
8	O-Ring	2	Viton or EPDM
9	O-Ring	1	Viton or EPDM
10	Seat Cushion	2	Viton or EPDM
11	O-Ring	1	Viton or EPDM
12	O-Ring	1	Viton or EPDM
13	Stop Ring	2	PVDF
14	Handle	1	ABS
15	Ring ***	2	Stainless Steel (SUS304)

*** Used for CPVC threaded sizes, 1/2"–1".

PRESSURE VS TEMPERATURE (PSI, WATER, NON-SHOCK)

Size (inches)	PVC 30° F / 70° F	PVC 71° F / 105° F	PVC 106° F / 120° F	CPVC 30° F / 70° F	CPVC 71° F / 105° F	CPVC 106° F / 120° F	CPVC 121° F / 140° F	CPVC 141° F / 175° F	CPVC 176° F / 195° F	PP 30° F / 85° F	PP 85° F / 140° F	PP 141° F / 175° F	PVDF 30° F / 70° F	PVDF 71° F / 105° F	PVDF 106° F / 120° F	PVDF 141° F / 175° F	PVDF 176° F / 210° F
1/2 – 2	230	165	150	230	165	150	120	75	55	150	85	65	230	165	150	110	85
2 1/2 – 3	230	165	150	230	165	150	120	75	65	150	70	40	230	165	150	110	85
4	150	150	150	150	150	150	120	75	55	150	70	40	150	150	150	110	85

DIMENSIONS (INCHES)

Size	d	Flanged ANSI/ASME B 16.5 Class 150 D	C	n	h	L	Socket ** PVC, CPVC d_1	d_2	S	L	PP, PVDF d_1	S	L	Threaded d_1	S	L	D_1	H	H_1	A	Cv
1/2	0.59	3.50	2.38	4	.62	5.83	0.848	0.838	0.875	4.45	0.831	0.87	4.45	1/2 – 14 NPT	0.69	4.02	1.89	[illegible]	[illegible]	3.62	14
3/4	0.79	3.88	2.75	4	.62	6.77	1.058	1.046	1.000	5.08	1.041	1.00	5.08	3/4 – 14 NPT	0.87	4.72	2.33	[illegible]	[illegible]	3.94	29
1	0.98	4.25	3.12	4	.62	7.36	1.325	1.310	1.125	5.76	1.305	1.13	5.75	1 – 11 1/2 NPT	0.79	5.16	2.70	[illegible]	[illegible]	4.33	47
1 1/4	1.26	4.62	3.50	4	.62	7.48	1.670	1.655	1.250	6.46	1.650	1.25	6.46	1 1/4–11 1/2 NPT	0.87	5.91	3.23	[illegible]	[illegible]	4.76	72
1 1/2	1.57	5.00	3.88	4	.62	8.35	1.972	1.894	1.375	7.24	1.969	1.37	7.24	1 1/2–11 1/2 NPT	0.98	6.42	3.94	[illegible]	[illegible]	5.16	155
2 **	2.01	6.00	4.75	4	.75	9.21	2.397	2.369	1.500	8.23	2.364	1.50	8.23	2 – 11 1/2 NPT	1.10	7.76	4.96	[illegible]	[illegible]	6.26	190

* Consult factory for availability and part number information. ** For sizes above 2" and metric socket dimensions consult factory.

P.O. Box 653 • 35 Green Street, Malden, MA 02148 • Tel: (800) 343-3610, (617) 321-5400

ASAHI/AMERICA

SUPPLIER DOC NT SUBMITTAL

FDF PROJEC NO: 20111	CONTRACT NO: FSC - 641	SUBMITTAL NO: 15080-002	REV: 32	16-Oct-00	PAGE 1 OF 1

FROM: The STAVER GROUP, Inc.
Ron Wood
SIGNATURE: R Wood

TO: FDF ENGINEERING/CONSTRUCTION DOCUMENT CONTROL (ECDC), MS 52-7
RECEIVED BY: Melissa Coffey DATE: 10-16-00

QTY	DOCUMENT NUMBER	REV	DOCUMENT FAMILY PRO	H&S	MED	TRG	CON	ENG	QAC	OPER	TITLE/DESCRIPTION	SUBMITTAL TYPE DRFT	CFC	INF	ASSOCIATED SPECIFICATION	SUBMITTAL ACTION A	B	C
8	641-15080-002A	2						X			Techno Check Valve-Replaces		X		15080	X		
											previously submitted Apco Valve							

REVIEW DISTRIBUTION

NAME	MS	NAME	MS	NAME	MS
Mike Griffin	52-5				
Jim Cherry	52-5				
Jim Jenkins	52-5				
Mike Godber	64				
Rob Kneip	52-5				
B. Scott Wheeler	52-5				
Geosyntec	38				

NO COMMENTS: COMMENTS: (PLEASE USE SPACE BELOW FOR COMMENTS OR INDICATE IF ATTACHMENTS)

Please provide literature referenced in Techno memo

RECEIVED BY: MW Griffin DATE 10-18-00
(SIGN/DATE AND RETURN A COPY TO ECDC, MS 52-7)

SUBMITTAL TYPE: (BY SUPPLIER)
CFC - CERTIFIED FOR CONSTRUCTION
INF - INFORMATION/RECORD
DRFT - DRAFT/PRELIMINARY

SUBMITTAL ACTION CODE: (BY FDF)
A - Conforms to Subcontract Requirements
B - Minor Comments - Incorporate and Resubmit
C - Revise and Resubmit (SEE COMMENTS)

ORIGINAL

TELEFAX

Date: October 12, 2000

From: Paul Renaud

Subject 3" 5051-316 Valve w/ EPDM sealing member

Per your request, the following is information on the subject valve as required by your customer.

Our literature states that the metal hinge valve will crack open (off the seat) at .2 psid and will be fully open at .5 psid. One-foot head of water is equal to .43 psi. A nine-inch water column is ¾ of a foot head of water or .32 psi. Therefore, the valve should crack open (off the seat) at nine inches water column. This is based on clean water. Water with "dirty" media could affect this adversely.

Please feel free to contact us should you have any questions of comments.

Best regards,

Paul Renaud
Techno Valve Engineer

ECDC CONTROLLED
COPY NO. 76896

STAVER Group
ATTN: RON WOOD

[X] A - Conforms to the Subcontract Requirements
[ ] B - Minor Comment - Incorporate and Resubmit
[ ] C - Revise and Resubmit
Sig: MWG Date: 10-18-00

Please provide literature referenced above
MWG 10-18-00

Fluor Contract FSC-641
OSDF Enhanced Permanent Leachate
Transmission System Project
STAVER # 7052

Submittal # 641-15080-002A
Reviewed By: RW
Date: 10/16/00

G3

7284 Vol. 4

OCT 10 2000

RIECK Mechanical Electrical Services, Inc.

5245 Wadsworth Rd., P.O. Box 13565 Dayton, OH Dayton, OH 45413-0565

Fax

Date: October 10, 2000

Pages: 5 **Including cover sheet**

To:	Mr. Ron Wood	**From:**	Stanley D. Garber
	The Staver Group		
Phone:	513-648-4101	**Phone:**	937-274-1987
Fax:	513-648-4187	**Fax:**	937-276-8634
Copy To:			

☐ **Urgent** ☒ **For Review** ☐ **Please Comment** ☒ **Please Reply** ☐ **Please Recycle**

Reference: Femald EPLTS

Please submit this check valve for approval. APCO told us yesterday that delivery is 13 - 14 weeks away. Techno can provide the specified valve in 2 - 3 weeks. The factory has confirmed the head pressure required to open this valve is less than 9 " w.c. with the use of a low torsion spring.

Respectfully,

Stanley D. Garber

Stanley D. Garber, Purchasing

10/10/00
okay - Have vendor submit info pertaining to low torsion spring.
J.C.J.

Ron - this is OK
Please provide written info from Techno on <9" w.c. opening
Thanks
Mike Griffin 10/10/00

NEW

TECHNO'S METAL HINGED DESIGN

The industry has long awaited the Dual Plate Metal Hinged Check Valve that offers the innovative features of the new TECHNO design. The ease of maintenance, the exceptional flow characteristics, and the insurance of safety by elimination of body leakage, allows this check valve to be the engineer's dream.

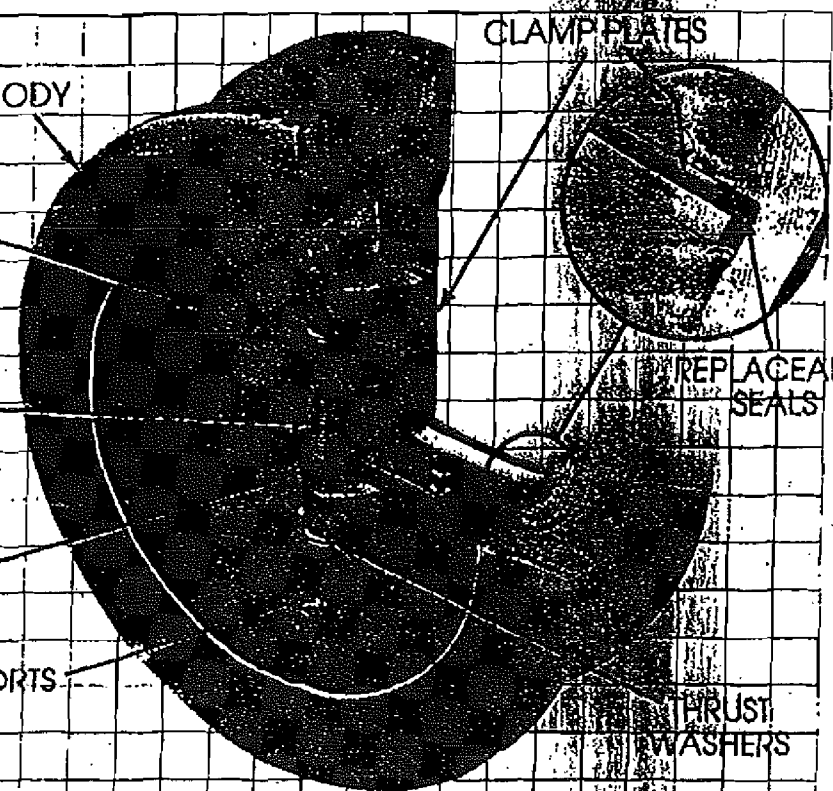

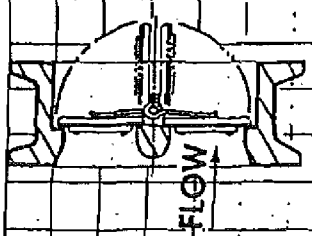

STANDARD MODELS AND MATERIALS OF CONSTRUCTION

STYLE	BODY	VALVE PLATES	SEALS	SPRINGS	TRIM*	ANSI CLASS
5050	CAST IRON	ALUMINUM-BRONZE	EPDM	316 STAINLESS	316 STAINLESS	125
5051	CARBON STEEL	CARBON STEEL	BUNA-N	316 STAINLESS	316 STAINLESS	150
5051-316	316 STAINLESS STEEL	316 STAINLESS STEEL	[redacted]	316 STAINLESS	316 STAINLESS	150
5053	CARBON STEEL	CARBON STEEL	BUNA-N	316 STAINLESS	316 STAINLESS	300
5053-316	316 STAINLESS STEEL	316 STAINLESS STEEL	BUNA-N	316 STAINLESS	316 STAINLESS	300
5056	CARBON STEEL	CARBON STEEL	BUNA-N	316 STAINLESS	316 STAINLESS	600
5056-316	316 STAINLESS STEEL	316 STAINLESS STEEL	BUNA-N	316 STAINLESS	316 STAINLESS	600

*Trim Items Include: Shaft, Shaft Supports, Clamp Plates and Fasteners. Teflon Thrust Washers are Standard.

OPTIONAL MATERIAL SELECTION

SPRING DATA	
MATERIALS	TEMPERATURE RANGE
• INCONEL	750°F
• INCONEL X	1000°F
SEAL DATA	
MATERIALS	*TEMPERATURE RANGE
• Buna-N	-60 to 250°F
• EPDM	-40 to 350°F
• Viton	-20 to 400°F
• Teflon	-20 to 450°F
• Silicone	-90 to 550°F
• FDA Approved White Neoprene	-40 to 250°F
• Metal to Metal+	-400 to 1000°F

*This temperature is for general guidance. The figures may vary with application and body/internal materials.

+316 Stainless Steel Thrust Washers are standard with Metal to Metal Seal Option.

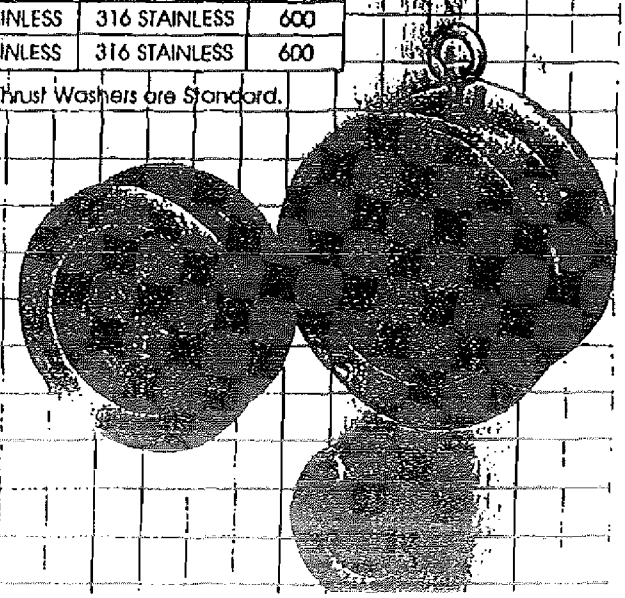

TECHNOLOGICALLY ADVANCED DESIGN WITH FIELD REPLACEABLE SEALS, ELIMINATION OF LEAKAGE TO ATMOSPHERE, AND LOW PRESSURE LOSS

STANDARD MODELS AND MATERIALS

Style N	ANSI Class	Body and Valve Plates	Seals	Trim* and Springs
5050	125	Cast Iron + Aluminum-Bronze	EPDM	316 Stainless
5051	150	Carbon Steel	BUNA-N	316 Stainless
5051-316	150	316 Stainless Steel	[illegible]	316 Stainless
5053	300	Carbon Steel	BUNA-N	316 Stainless
5053-316	300	316 Stainless Steel	BUNA-N	316 Stainless
5056	600	Carbon Steel	BUNA-N	316 Stainless
5056-316	600	316 Stainless Steel	BUNA-N	316 Stainless

Note + Style 5050 is Standard with Cast Iron Body and Aluminum Bronze Valve Plates. Consult factory for other materials of construction

*Trim Items include: Shaft, Shaft Supports, Clamp Plates and Fasteners. Teflon Thrust Washers are Standard.

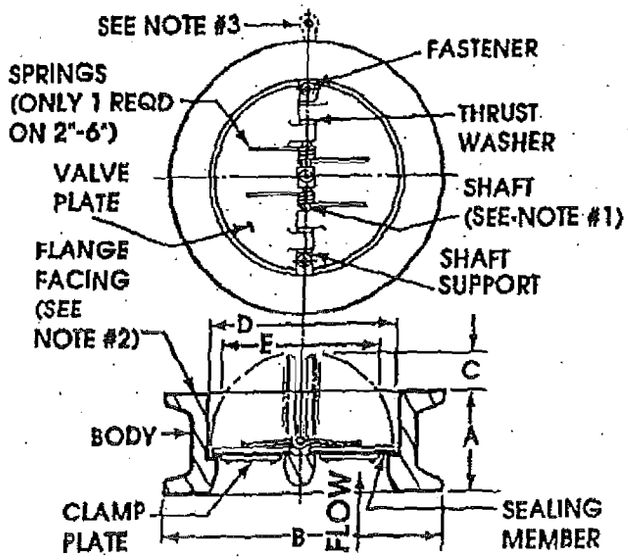

Note: 1. Shaft must be in vertical position for horizontal flow application.
2. Plain face (non serrated) for style 5050 only. Raised faces (serrated) for all other carbon and stainless steel sizes.
3. Lifting lug feature optional on 6"-30" sizes.

SEALING MEMBER DATA

Material	Temperature Range*	ASTM Specification
• Buna-N	- 60 to 250°F	ASTM D2000-BG
• EPDM	- 40 to 350°F	ASTM D2000-CA
• Viton	- 20 to 400°F	ASTM D2000-HK
• Teflon	- 20 to 450°F	TFE Fluorocarbon Resin
• Silicone	- 90 to 550°F	ASTM D2000-GE
DA Approved White Neoprene	- 40 to 250°F	ASTM D2000-BE
• 316 Stainless Steel (Metal to metal)	- 400 to 1000°F	ASTM A240-316

* This temperature is for general guidance and may vary with application and body/internal material selections.
- Consult factory for materials not shown
- Stainless Steel thrust washers are standard with metal to metal

GENERAL DIMENSIONS

All Dimensions in Inches

Valve Size	ANSI Class	A	B	C	D	E (1)
2"	125	2 1/8	4 1/8	-	2 1/8	-
	150	2 3/8	4 1/8	-	2 1/4	-
	300	2 3/8	4 3/8	-	2 1/4	-
	600	2 3/8	4 3/8	-	2 1/4	-
2 1/2"	125	2 1/8	4 7/8	1/8	2 5/8	1 3/8
	150	2 5/8	4 7/8	-	2 3/4	-
	300	2 5/8	5 1/8	-	2 3/4	-
	600	2 5/8	5 1/8	-	2 3/4	-
3"	125	2 1/4	5 3/8	3/8	3 1/8	2 1/8
	150	2 7/8	5 3/8	-	3 3/16	-
	300	2 7/8	5 7/8	-	3 3/16	-
	600	2 7/8	5 7/8	-	3 3/16	-
4"	125	2 1/2	6 7/8	7/8	4 1/8	3 1/2
	150	2 7/8	6 7/8	1/2	4 3/16	2 7/8
	300	2 7/8	7 1/8	3/4	4 5/16	3 1/2
	600	3 1/8	7 5/8	5/8	4 3/16	3 1/4
5"	125	2 3/4	7 3/4	1 1/4	5 1/8	4 1/2
	150	3 3/8	7 3/4	5/8	5 3/16	3 1/2
	300	3 3/8	8 1/2	13/16	5 3/16	4
	600	4 1/8	9 1/2	3/8	5 3/16	3
6"	125	3	8 3/4	1 7/8	6 1/8	5 3/4
	150	3 7/8	8 3/4	1	6 3/16	4 3/4
	300	3 7/8	9 7/8	1 3/8	6 3/16	5 1/2
	600	5 3/8	10 1/2	1/8	6 3/16	2 3/4
8"	125	3 3/4	11	2 3/4	8 1/4	7 7/8
	150	5	11	1 1/2	8 5/16	6 5/8
	300	5	12 1/8	1 3/4	8 1/2	7 1/4
	600	6 1/2	12 5/8	1	8 1/2	6
10"	125	4 1/4	13 3/8	3 7/8	10 1/8	9 7/8
	150	5 3/4	13 3/8	2 3/8	10 3/16	8 3/4
	300	5 3/4	14 1/4	2 1/2	10 1/2	9 1/4
	600	8 3/8	15 3/4	1 1/4	10 1/2	7 1/4
12"	125	5 5/8	16 1/8	4	12 1/8	11 1/2
	150	7 1/8	16 1/8	2 1/2	12 3/16	10
	300	7 1/8	16 5/8	2 3/4	12 1/2	10 1/2
	600	9	18	1 7/8	12 1/2	9 1/2
14"	125	7 1/4	17 3/4	3 1/2	14 1/8	12 1/2
	150	7 1/4	17 3/4	3	14 1/8	12
16"	125	7 1/2	20 1/4	4 3/4	16 1/8	15
	150	7 1/2	20 1/4	4 1/8	16 1/8	14 3/8
18"	125	8	21 5/8	5 5/8	18 1/8	16 7/8
	150	8	21 5/8	5	18 1/8	16 1/4
20"	125	8 3/8	23 7/8	6 1/2	20 1/8	18 13/16
	150	8 5/8	23 7/8	5 1/2	20 1/8	18 1/8
24"	125	8 3/4	28 1/4	8 1/4	24 1/8	22 5/8
	150	8 3/4	28 1/4	8	24 1/8	22 5/8
30"	125	12	34 3/4	10 1/4	30 1/8	28 5/8
	150	13	34 3/4	8 1/4	30 1/8	27

Note: (1) Minimum bore diameter of companion flanges.

STANDARD MODELS AND MATERIALS

Part Description	Quantity per Valve 2"-6"	Quantity per Valve 8"-30"	Style 5050 ANSI 125#	Styles 5051-5053 5056	Styles 5051-316 5053-316 5056-316
Body	1	1	Cast Iron	Carbon Steel	316 Stainless Steel
Valve Plate	2	2	Aluminum Bronze	Carbon Steel	316 Stainless Steel
Sealing Member	2	2	EPDM	BUNA-N	~~BUNA-N~~ EPDM
Clamp Plate	2	2	316 Stainless Steel		
Shaft Support	2	3	316 Stainless Steel		
Shaft	1	2	316 Stainless Steel		
Thrust Washer	4	4	Teflon		
Spring	1	2	316 Stainless Steel		
Fastener	2	3	316 Stainless Steel		

- Consult factory for materials, sizes and pressure ratings not shown.
- Stainless Steel thrust washers are standard with metal sealing option.

MATERIAL SPECIFICATIONS

Body Materials	Valve Materials
• Cast Iron - ASTM A126 Grade B • Carbon Steel - ASTM A216 Grade WCB • 316 Stainless Steel - ASTM A351 Grade CF8M	• Aluminum Bronze - ASTM B148 Alloy 952 • Carbon Steel - ASTM A216 Grade WCB • 316 Stainless Steel - ASTM A351 Grade CF8M
Trim Materials	**Spring Materials**
• 316 Stainless Steel - ASTM A276-316 For shaft and shaft supports • 316 Stainless Steel - ASTM A240-316 For clamp plates • 316 Stainless Steel - ASTM A193 For all threaded fasteners	• 316 Stainless Steel - ASTM A313 Standard in all valves. Max. temp. 500°F • Inconel - ASTM B166 Optional for temperatures to 750°F • Inconel X-ASTM B166 Optional for temperatures above 750°F

ANSI PRESSURE – TEMPERATURE RATING
Maximum Non-Shock Pressure - PSI

Temp °F	Class 125 Cast Iron 2"-12"	Class 125 Cast Iron 14"-24"	Class 125 Cast Iron 30"	Temp °F	Class 150 Carbon Steel	Class 150 316 Stainless	Class 300 Carbon Steel	Class 300 316 Stainless	Class 600 Carbon Steel	Class 600 316 Stainless
150°	200	150	150	100°	285	275	740	720	1480	1440
200°	190	135	115	200°	260	240	675	620	1350	1240
225°	180	130	100	300°	230	215	655	560	1315	1120
250°	175	125	85	400°	200	195	635	515	1270	1030
275°	170	120	65	500°	170	170	600	480	1200	955
300°	165	110	50	600°	140	140	550	450	1095	905
325°	155	105	-	700°	110	110	535	430	1065	865
350°	150	100	-	800°	80	80	410	415	825	830
400°	140	-	-	900°	50	50	170	395	345	790
450°	125	-	-	1000°	20	20	50	365	105	725
Hydrostatic Test PSI	350	265	265	Hydrostatic Test PSI	450	425	1125	1100	2225	2175

CAUTION: Maximum valve temperature rating is often limited by seal and spring materials.

PRESSURE DROP CHART FOR WATER SERVICE

(BASED ON HORIZONTAL FLOW APPLICATION)

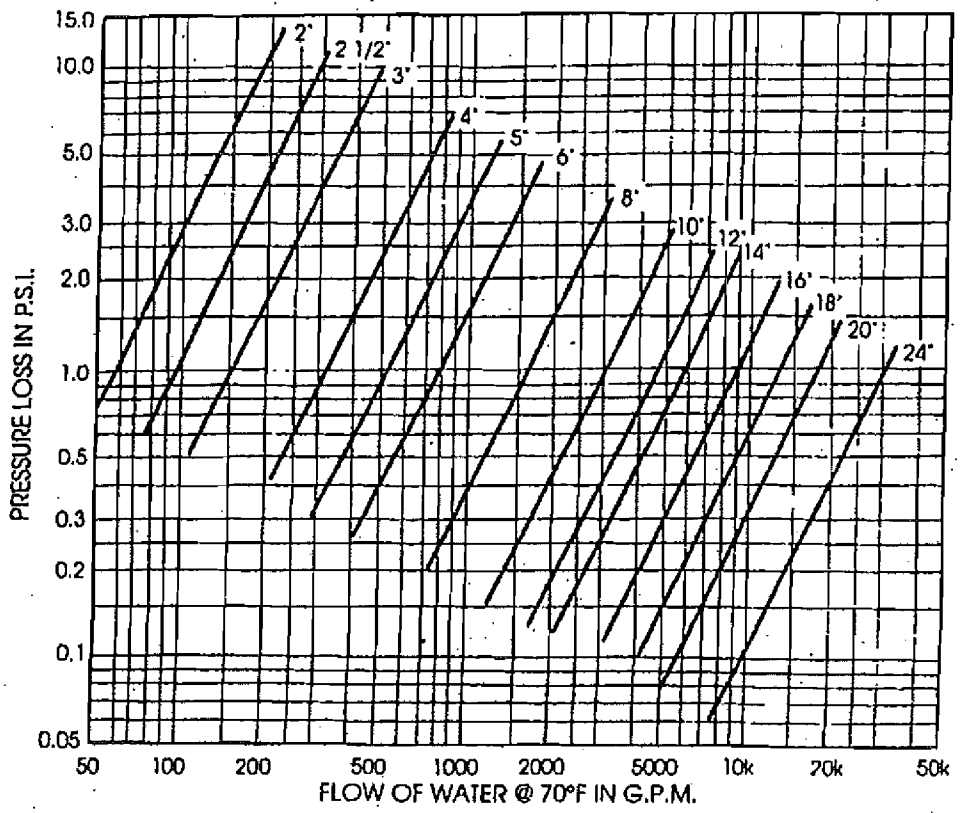

FLOW VS. PRESSURE LOSS FOR TECHNO'S METAL HINGE CHECK VALVES

FLOW COEFFICIENTS

Valve Size	"CV"*
2"	58
2 1/2"	92
3"	160
4"	320
5"	525
6"	800
8"	1700
10"	3000
12"	4700
14"	5950
16"	9000
18"	13,500
20"	18,000
24"	32,000

*CV = The number of U.S. gallons/minute that will result in 1 psi pressure loss across the valve at temp of 60°F

INDUSTRY STANDARDS

Techno's new Metal Hinged Dual Plate Wafer Check Valves are designed, rated and manufactured in accordance with the following Industry Standards:

- ANSI B16.1, ANSI B16.34 and ANSI B16.5
- ASME sections II and VIII
- Materials per ASTM and/or ASME
- API 594 except face to face dimensions of 2½"-12" Cast Iron Valve (Style 5050)

If required by your job needs, Techno can provide the requisite documentation to verify our valves meet the stringent design and material criteria set forth in the above standards. Also, we can perform and document the Hydrostatic and Leak Tests required by API 598, MSS-SP-61 or other such guides.

INSTALLATION INFORMATION

- Valve must be installed with shaft in vertical position for horizontal flow applications. Valve body is marked with flow direction arrow and "TOP" to assist with proper positioning.
- * Techno's Torsion Spring Design allows Valve Plates to open and close with minimum pressures in horizontal and vertical up flow. Consult factory for vertical down flow application. < 9" w.c.
- VALVES ARE NOT recommended on discharge of reciprocating compressors and pumps.

SUPPLIER DOCUMENT SUBMITTAL

FDF PROJ. NO: 20111	CONTRACT NO: FSC - 641	SUBMITTAL NO: 15080-002	REV: 2	Oct.4, 2000	PAGE 1 OF 1

FROM: The STAVER GROUP, Inc.
Ron Wood
SIGNATURE: Ron Wood

TO: FDF ENGINEERING/CONSTRUCTION DOCUMENT CONTROL (ECDC), MS 52-7
RECEIVED BY: Teresa Schwab DATE: 10-4-2000

QTY	DOCUMENT NUMBER	REV	DOCUMENT FAMILY: PRO	H&S	MED	TRG	CON	ENG	QAC	OPER	TITLE/DESCRIPTION	SUBMITTAL TYPE: DRFT	CFC	INF	ASSOCIATED SPECIFICATION	SUBMITTAL ACTION: A	B	C
8	641-15080-002A	1						X			Check Valves		X		15080	X		
8	641-15080-002B	1						X			3" Ball Valves		X		15080	X		
8	641-15080-002C	1						X			3/4" Ball Valves		X		15080	X		
											Supplemental Information					X		

REVIEW DISTRIBUTION

NAME	MS	NAME	MS	NAME	MS
Mike Griffin	52-5				
Tim Cherry	52-5				
Jim Jenkins	52-5				
Mike Gaber	L64				
Rob Kneip	52-5				
Scott Wheeler	52-5				
Kwasi Baw Tweneboah	38				

NO COMMENTS: COMMENTS: (PLEASE USE SPACE BELOW FOR COMMENTS OR INDICATE IF ATTACHMENTS)

Check value – Raised face flange
3/4 ball value – Supply with locking lever handle

RECEIVED BY: MW Gaff DATE 10-10-00
(SIGN/DATE AND RETURN A COPY TO ECDC, MS 52-7)

ORIGINAL

SUBMITTAL TYPE: (BY SUPPLIER)
CFC - CERTIFIED FOR CONSTRUCTION
INF - INFORMATION/RECORD
DRFT - DRAFT/PRELIMINARY

SUBMITTAL ACTION CODE: (BY FDF)
A - Conforms to Subcontract Requirements
B - Minor Comments - Incorporate and Resubmit
C - Revise and Resubmit (SEE COMMENTS)

[X] A - Conforms to the Subcontract Requirements
[ ] B - Minor Comment - Incorporate and Resubmit
[ ] C - Revise and Resubmit
Sig: MW Bill Date: 10-10-00

SERIES 9000
APCO DOUBLE DOOR CHECK VALVES

. . . EASILY IDENTIFIED OR SPECIFIED BY USING THE FOLLOWING INDEX:

Example Specification: * RAISED FACE - MWB 10-10-00

SERIES 9000 DDCV, 300 lb. raised face ends, 12" size, carbon steel body, T316 stainless steel doors, hinge pin and stop pin with viton seat, inconel spring

MB 10-10-00

9 3 12 E V 2 R

~~14 WEEKS~~ *

SERIES NUMBER

9 = Wafer style or Lug style (threaded)

PRESSURE CLASS

0 = 125# 3 = 300# 9 = 900#
1 = 150# 4 = 400# 5 = 1500#
2 = 250# 6 = 600# 7 = 2500#

SIZE

Nominal size of pipe in inches
~~2" thru 72"~~
3"

END CONNECTION

~~F = Flat faced~~ J = Ring joint (RTJ)
R = Raised face Z = To be specified

SPRING MATERIAL

0 = No spring 3 = Inconel X
1 = T316 SS ← 4 Low Torsion Spring 4 = Monel
2 = Inconel 5 = To be specified

SEAT

*B = Bronze E = EPDM *S = T316 SS
R = Buna-N *F = T410 SS N = Neoprene
*P = Stellite W = Silicone M = Same as body
V = Viton *C = Monel Z = To be specified
* Contact Factory

BASIC TRIM

TRIM	A	CAST IRON BODY, ALUMINUM BRONZE DOORS, T316 STAINLESS STEEL HINGE PIN AND STOP PIN. 30" & LARGER TO HAVE DUCTILE IRON DOORS WITH ALUMINUM BRONZE FACING.
TRIM	B	CAST IRON BODY, CAST STEEL DOORS, T316 STAINLESS STEEL HINGE PIN AND STOP PIN. 30" & LARGER TO HAVE DUCTILE IRON DOORS WITH NICKEL FACING.
TRIM	C	CARBON STEEL BODY AND DOORS, T316 STAINLESS STEEL HINGE PIN AND STOP PIN.
TRIM	D	CARBON STEEL BODY, T410 STAINLESS STEEL DOORS, T316 STAINLESS STEEL HINGE PIN AND STOP PIN. 30" & LARGER TO HAVE CAST STEEL DOORS WITH T410 STAINLESS STEEL FACING.
TRIM	E	CARBON STEEL BODY, T316 STAINLESS STEEL DOORS, HINGE PIN AND STOP PIN. 30" & LARGER TO HAVE CAST STEEL DOORS WITH T316 STAINLESS STEEL FACING.
TRIM	F	T410 STAINLESS STEEL BODY, DOORS, HINGE PIN AND STOP PIN.
TRIM	G	T316 STAINLESS STEEL BODY, DOORS, HINGE PIN AND STOP PIN.
TRIM	H	CAST IRON BODY, T316 STAINLESS STEEL DOORS, HINGE PIN AND STOP PIN. 30" & LARGER TO HAVE DUCTILE IRON DOORS WITH T316 STAINLESS STEEL FACING.
TRIM	I	DUCTILE IRON BODY, T316 STAINLESS STEEL DOORS, HINGE PIN AND STOP PIN. 30" & LARGER TO HAVE DUCTILE IRON DOORS WITH T316 STAINLESS STEEL FACING.
TRIM	J	DUCTILE IRON BODY, ALUMINUM BRONZE DOORS, T316 STAINLESS STEEL HINGE PIN AND STOP PIN. 30" & LARGER TO HAVE DUCTILE IRON DOORS WITH ALUMINUM BRONZE FACING.
TRIM	K	ALUMINUM BRONZE BODY AND DOORS, T316 STAINLESS STEEL HINGE PIN AND STOP PIN.
TRIM	L	ALUMINUM BODY AND DOORS, T316 STAINLESS STEEL HINGE PIN AND STOP PIN.
TRIM	M	CAST STEEL BODY, MONEL DOORS, HINGE PIN AND STOP PIN. 30" & LARGER TO HAVE CAST STEEL DOORS WITH MONEL FACING.
TRIM	N	5 CR 1/2 MO BODY, T410 STAINLESS STEEL DOORS, HINGE PIN AND STOP PIN.
TRIM	P	9CR 1 MO BODY, T410 STAINLESS STEEL DOORS, HINGE PIN AND STOP PIN.
TRIM	Z	TO BE SPECIFIED.

NOTE: Overlays for TRIM D & E
T410SS - T316SS - STELLITE HARD FACING - HASTELLOY HARD FACING - AVAILABLE.

INFORMATION ONLY

Fluor Contract FSC-641
OSDF Enhanced Permanent Leachate
Transmission System Project
STAVER # 7052

All Valves conform to A.P.I. 594 Dimensional Standards, designed for mounting between A.N.S.I. flanges.

Submittal # 641-15010-002A
Reviewer Initials:
Date: 10/11/00

TRIM MATERIAL SPECIFICATION

SERIES 9000
APCO DOUBLE DOOR CHECK VALVES

BODY AND DOOR (CAST PARTS)

CAST IRON	ASTM A126 GR.B	MONEL	ASTM A296 GR. M35
DUCTILE IRON	ASTM A536 GR. 65-45-12	ALUMINUM	ASTM B26 ALLOY 713.0
ALUMINUM BRONZE	ASTM B148 C95200 (CASTING) ASTM B169 C61400 (FACING)	5CR 1/2 MO	ASTM A217 GR. C5
CARBON STEEL/CAST STEEL	ASTM A216 GR. WCB*	9CR 1 MO	ASTM A217 GR. C12
T410 STAINLESS STEEL	ASTM A351 GR. CA-15	NICKEL	SHEET PER CUSTOMER REQUEST
T316 STAINLESS STEEL	ASTM A351 GR. CF8M (CASTING) ASTM A240 S31600 (FACING)		

HINGE AND STOP PINS, PIN RETAINERS (BAR STOCK PARTS)

T316 STAINLESS STEEL	ASTM A276 S31600
MONEL	ASTM B164 ALLOY 400

* STEEL TO ASTM A352 GR. LCB FOR LOW TEMPERATURE SERVICE IS AVAILABLE.
NOTE: FOR MATERIALS NOT LISTED ABOVE, USE TRIM DESIGNATION Z AND SPECIFY REQUIRED MATERIAL.

DOUBLE DOOR CHECK VALVE COMPONENTS

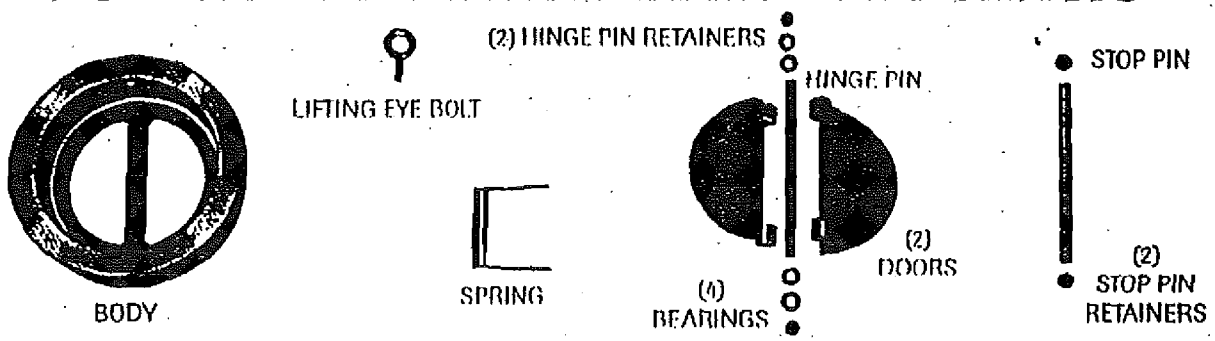

RECOMMENDED TEMPERATURE LIMITS FOR STANDARD SPRING MATERIALS

SPRING MATERIAL	MAXIMUM OPERATING TEMPERATURES °F	°C
STAINLESS STEEL T316	325	163
INCONEL	625	329
INCONEL X (HEAT TREATED)	1000	538
MONEL	225	107

OPERATING TEMPERATURE RANGES FOR STANDARD SEAT MATERIALS

SEAT MATERIAL	OPERATING TEMPERATURE RANGE °F	°C
BUNA-N	-70 TO 250	-57 TO 121
METAL TO METAL	-450 TO 1250	-268 TO 677
VITON A	-40 TO 425	-40 TO 218
NEOPRENE	-40 TO 250	-40 TO 121

For pressures of 25 psi or less, contact factory for soft seat recommendations.

CROSS SECTIONAL VIEWS BUNA-N SEALS

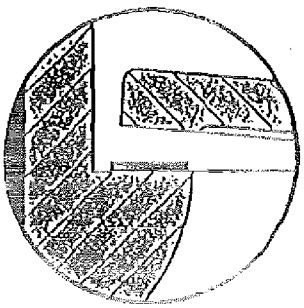

STANDARD SEAL OPEN

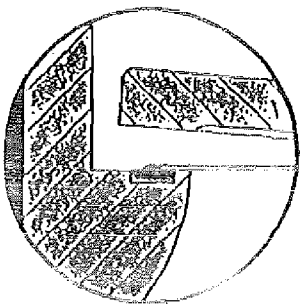

HIGH PRESSURE SEAL OPEN

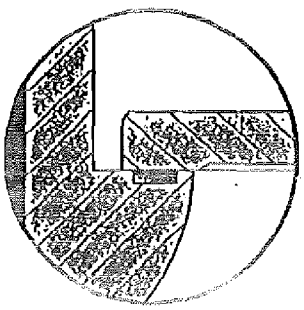

HIGH PRESSURE SEAL CLOSED

DOUBLE DOOR CHECK VALVE

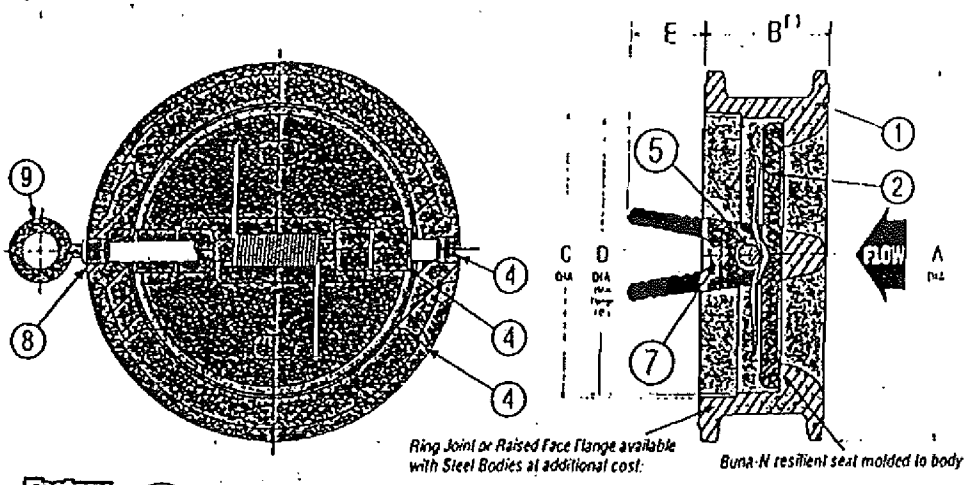

1	BODY
	CAST IRON ASTM A 126 GR. B[1]
2	DOOR
	AL. BRONZE ASTM B148 C95200[1]
3	DOOR LUG BEARING
	TEFLON/PHENOLIC
4	SPRING
	STAINLESS STEEL ASTM A313 T316
5	HINGE PIN.
	STAINLESS STEEL ASTM A276 T316
6	HINGE PIN RETAINER
	STEEL
7	STOP PIN
	STAINLESS STEEL ASTM A276 T316
8	STOP PIN RETAINER
	STEEL
9	LIFTING EYE BOLT
	STEEL

[1] 150-300 lb. class valves have cast steel ASTM A216 WCB bodies.

[2] Laying lengths for ductile iron and bronze bodies are same as 125 lb. and 250 lb. class valves.

Sizes 30" & larger have al. bronze ASTM B169 C81400 faced ductile iron ASTM A536 gr. 65-45-12 doors.

Factory Mutual System ✱APPROVED

UL LISTED

SERIES 9000

Size	Class	A	B	C	D	E	WT.
2"	125	4	2¼	2¹⁄₁₆	1¼	¹⁄₁₆	5
	150	4	2¼	2¹⁄₁₆	1	0	6
	250	4¼	2¼	2¹⁄₁₆	1¼	¹⁄₁₆	8
	300	4¼	2¼	2¹⁄₁₆	1	0	8
2½"	125	4¾	2¾	3¼	2¼	¼	8
	150	4¾	2¾	3¼	2	¼	9
	250	5	2¾	3¼	2¼	¼	11
	300	5	2¾	3¼	2	¼	12
3"	125	5¼	2¾	3¼	3	½	10
	150	5¼	2¾	3¼	2¼	¼	11
	250	5¾	2¾	3¼	3	½	15
	300	5¾	2¾	3¼	2¼	¼	16
* 4"	125	6¾	2¾	4½	4¼	1¼	12
	150	6¾	2¾	4½	4	¾	14
	250	7	2¾	4½	4¼	1¼	20
	300	7	2¾	4½	4	¾	22
5"	125-150	6¾	2¾	4½	4¼	1¼	12

Size	Class	A	B	C	D	E	WT.
5"	250-300	8¼	3¼	5¹⁄₁₆	5	1¼	33
* 6"	125	8½	3¼	6¾	6	1½	20
	150	8½	3¼	6¾	5¾	1½	22
	250	9¼	3¾	6¾	6	1¾	40
	300	9¼	3¼	6¾	5¾	1¾	44
** 8"	125-150	10¾	5	8¾	7¾	1½	52
	250-300	12	5	8¾	7¾	1½	70
** 10"	125	13¼	5¾	10¾	10	2¾	63
	150	13¼	5¾	10¾	9¾	2¾	100
	250	14¼	5¾	10¾	10	2¾	110
	300	14¼	5¾	10¾	9¾	2¾	115
** 12"	125-150	16	7¼	12¾	10¾	2¾	150
	250-300	16½	7¼	12¾	10¾	2¾	220
14"	125-150	17½	7¼	14	13	3½	220
	250-300	19	8¼	14	12	2	440
16"	125-150	20¼	7¼	16	15	4¼	275
	250-300	21½	9¼	16	14	2¾	550

Size	Class	A	B	C	D	E	WT.
18"	125-150	21¼	8	18	17	4¼	300
	250-300	23¼	10¼	18	18	2¼	665
20"	125	23¼	8¾	20	18	6¾	325
	150	23¼	8¾	20	18	6¾	490
	250	25¾	11¾	20	17	3¾	450
	300	25¾	11¾	20	17	3¾	800
24"	125-150	28½	8¾	24	22¾	6¾	700
	250-300	30¾	12¾	24	21	5¾	1135
30"	125-150	34¾	12	30	26¾	11¾	1100
	250-300	37¼	14¾	30	27¾	8¾	1400
36"	125-150	41¼	14¼	36	34	12¾	1520
	250-300	43¼	18¼	36	33	8	1900
42"	125-150	47¼	17	42	40¾	15¾	3000
	250-300	50¾	22¾	42	39	9¾	3500
48"	125-150	54¼	20¾	48	46¾	16¾	4500
	250-300	58¾	24¾	48	45¾	12¾	5500
54"	125-150	60¼	21¾	54	52¾	19¾	6700
60"	125	67¼	25	59¾	50	16	7500

* FM - VALVES ARE FACTORY MUTUAL APPROVED (125 & 250 LB.).

* THIS SIZE VALVE UNDERWRITERS LABORATORIES LISTED (125 LB.).

NOTE: Two or more springs used on sizes 14" & larger.

DESIGN ADVANTAGES

APCO DDCV's are excellent general purpose Check Valves. The Double Door Check combines compact design and heavy construction to permit low purchase price and lower cost of installation.

INSTALLATION

DDCV's are lightweight because they are extremely compact in laying length and have no flanges. Therefore sizes to 4" are easily installed by hand. Larger sizes come furnished with a lifting eye bolt for easier installation.

DDCV's can be installed horizontally or vertically (flow up) to conserve valuable piping space. Once installed between flanges, the DDCV has more rigidity than heavy steel walled pipe of the same length, therefore valve supports are not needed. Valve must be installed with hinge pin he vertical position for horizontal flow applications.

OPERATION

The DDCV is held closed by the legs of the torsion spring. Flow (head) from the pump causes the DDCV to open. Conversely, when the pump is stopped flow decay occurs and at a point near zero velocity, the force from the legs of the torsion spring instantly closes the DDCV for non-slam shut-off.

RESILIENT SEATING

Standard seal material in all APCO DDCV's is Buna-N. The sealing principle is similar to that of a static "O" ring, but once shut off is effected, the Buna-N is pressed flat giving a wide seating area for an effective low pressure seal. In high pressure valves (400# class and higher), the Buna-N seal is pressed into its cavity and protected from damage from compression and metal to metal contact develops between the double doors and the body seat. Buna-N has been successfully used for seals and seats in valves for many years. Buna-N has excellent water, oil and gas resistance and generally can be used in temperatures -70° to +250°F.

WATTS INDUSTRIAL PRODUCTS DIVISION

[✓] A - Conforms to the Subcontract Requirements
[ ] B - Minor Comment - Incorporate and Resubmit
[ ] C - Revise and Resubmit
By: MW/B Date: 10-10-00

WATTS SWVC SERIES FLANGED-END BALL VALVES

The Watts SWVC series flanged-end ball valve offers versatility, performance and reliability at a reasonable cost, as well as:

- *Field proven durability in demanding applications*
- *ANSI Class 150 or 300 rating*
- *Carbon or stainless steel standard*
- *Available from 1.5" - 10"*
- *Competitive pricing*
- *Full rated bi-directional shut-off*
- *Full rated dead end service*

The Watts SWVC series valve is available in a split body/full bore design, sizes ranging from 1.5" to 10", providing maximum flow with minimum pressure drop across the valve. Also available in unibody/reduced bore construction, sizes 1.5" to 6", with a threaded seat retainer for safety and performance. An 8" reduced bore is available in a split body construction. The two valves share premium quality features, as described in the diagrams below.

SWVC ball valves use FDA-approved non-silicone lubricant. All valves are of fire-safe construction. All mounting dimensions and parts are identical to the latest US manufactured design for interchangeability.

Standard features of Watts SWVC series flanged-end ball valves include:

- *Lockable handle*
- *4-bolt machined actuator mounting pad*
- *Stem-to-body grounded*
- *Adjustable packing gland*
- *Uniseal™ seats*
- *Graphite stem packing*
- *Firesafe API 607 4th Edition*

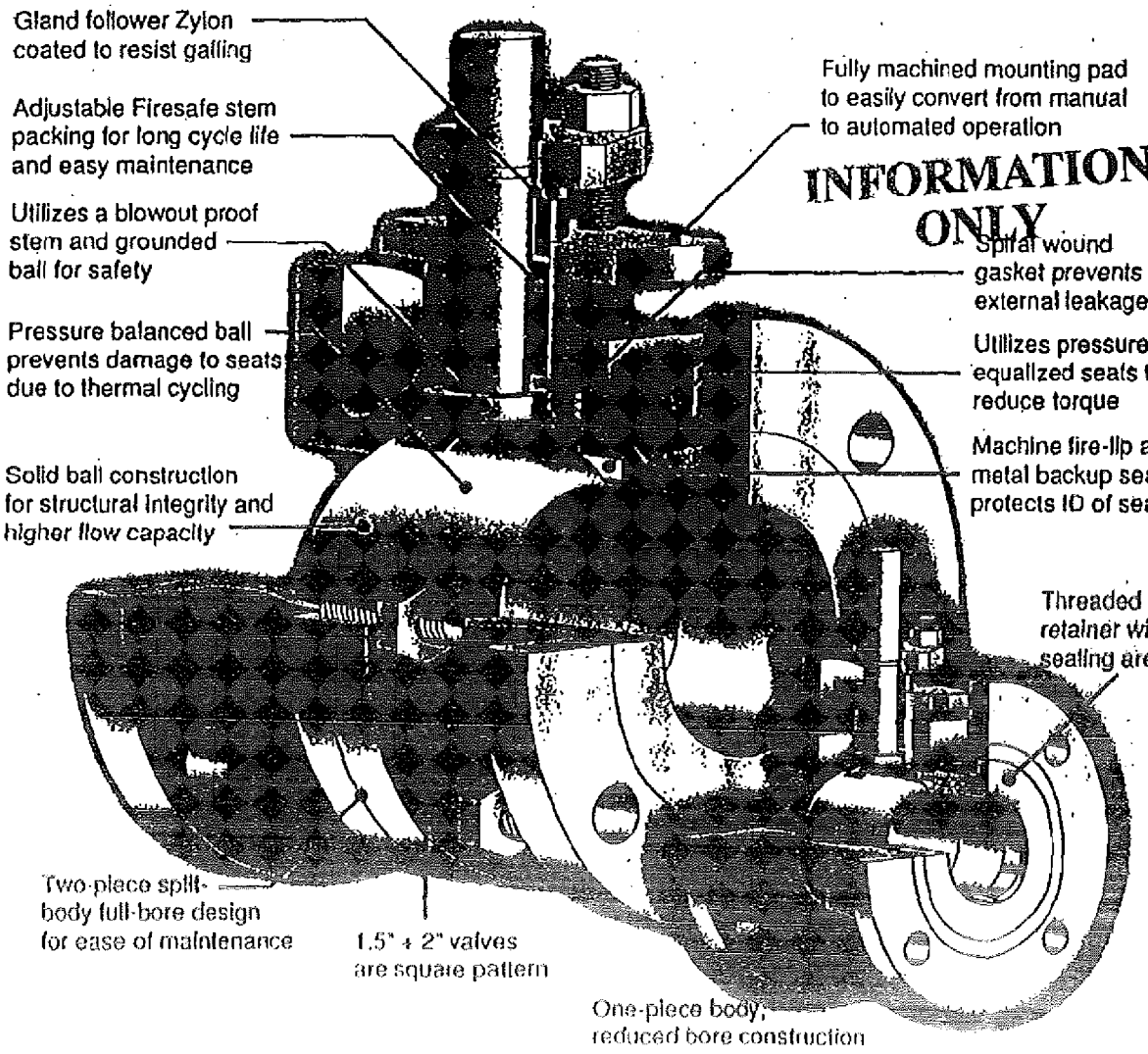

INFORMATION ONLY

8080-0013

Uniseal™ Seat Rating

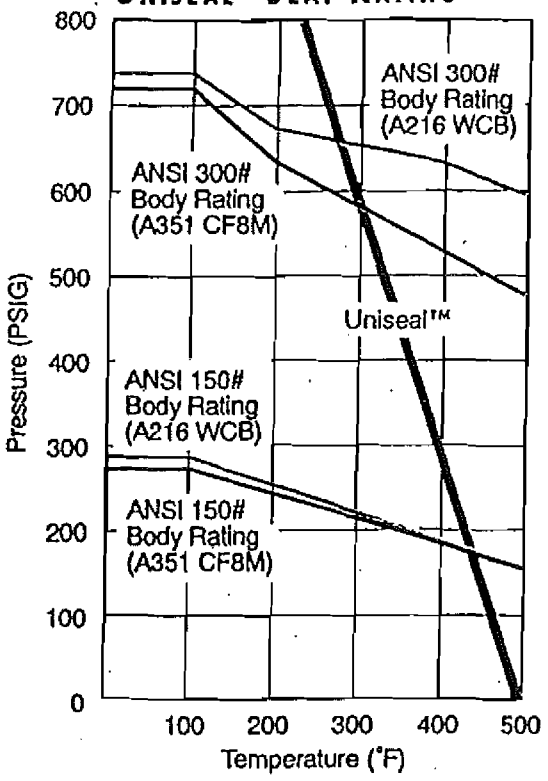

Temperature Rating
Maximum Temperature Rating for Seats and Seals @ (0) PSIG: 500°F

Steam Rating (saturated)
150 WSP

Vacuum Rating
10 Micron of HG

Pressure Rating (psig) @ 100°F

Material	ANSI 150 Class	ANSI 300 Class
Carbon Steel (WCB)	285	740
Stainless Steel (CF8M)	275	720

Flow Coefficients (C_V)

Valve Size	Reduced Bore	Full Bore
1.5"	90	265
2"	125	470
3"	430	1240
4"	600	2470
6"	1010	5249
8"	2500	10750
10"	N/A	17775

Operating Torque (in/lbs)

Valve Size	Reduced Bore Class 150/300	Full Bore Class 150	Full Bore Class 300
1.5"	180	280	280
2"	240	440	500
3"	520	600	1000
4"	600	1440	2500
6"	1440	5000	7000
8"*	5000	12000	27000
10"	N/A	30000	N/A

* Class 150 only

Torque values are established for clean wet-line media. Other service conditions may require slightly higher torque values. Please consult factory for common service factors to be applied to the above values.

All Watts SWVC valves meet the criteria for the following approvals, certifications and compliance requirements:

- *API 607 4th Edition*
- *API 6D*
- *API 598*
- *ANSI B16.5 (flange dimensions)*
- *ANSI B16.34 (design criteria and testing requirements)*
- *NACE MR-01-75 current revision requirements*

WATTS INDUSTRIAL PRODUCTS DIVISION

SPLIT BODY/FULL BORE

MATERIALS OF CONSTRUCTION

ITEM	DESCRIPTION	CARBON STEEL	STAINLESS STEEL
1	Body	ASTM A216 GR WCB (Painted)	ASTM A351 GR CF8M
2	Adapter	ASTM A216 GR WCB (Painted)	ASTM A351 GR CF8M
3	Stem	316 Stainless Steel	316 Stainless Steel
4	Ball	AISI 316 or ASTM A351 CF8M Stainless Steel	AISI 316 or ASTM A351 CF8M Stainless Steel
5	Body Gasket	Graphite/Stainless Steel	Graphite/Stainless Steel
7	Seat	Unisteel™	Unisteel™
8	Stop Plate Screw	300 Series Stainless Steel	300 Series Stainless Steel
10	Thrust Washer	Unisteel™	Unisteel™
13	Handle Pipe	Carbon Steel (Zinc Plated)	Carbon Steel (Zinc Plated)
14	Locking T Handle	ASTM A351 Grade CF8M	ASTM A351 Grade CF8M
16	Body Hex Nut	ASTM A194 GR 2H	ASTM A194 GR 8
17	Body Stud	ASTM A193 GR B7	ASTM A193 GR B8
18	Handle Screw	300 Series Stainless Steel	300 Series Stainless Steel
19	Locking Stop	300 Series Stainless Steel	300 Series Stainless Steel
20	Lock Plate	300 Series Stainless Steel	300 Series Stainless Steel
21	Ground Spring	316 Stainless Steel	316 Stainless Steel
22	Gland Packing	Graphite	Graphite
24	Gland Follower	316 Stainless Steel (Zylon Coated)	316 Stainless Steel (Zylon Coated)
25	Packing Gland Retainer	ASTM A351 GR CF8M	ASTM A351 GR CF8M
26	Packing Stud	ASTM A193 GR B7	ASTM A193 GR B8
28	Packing Gland Nut	ASTM A194 GR 2H	ASTM A194 GR 8
30	Stem Washer	316 Stainless Steel (3"-10" Only)	316 Stainless Steel (3"-10" Only)
31	Handle	Ductile Iron (Painted)	Ductile Iron (Painted)
32	Gear Operator Assembly (Optional)	Cast Iron	Cast Iron
33	Mounting Kit Assembly (Optional)	Steel Plated	Steel Plated

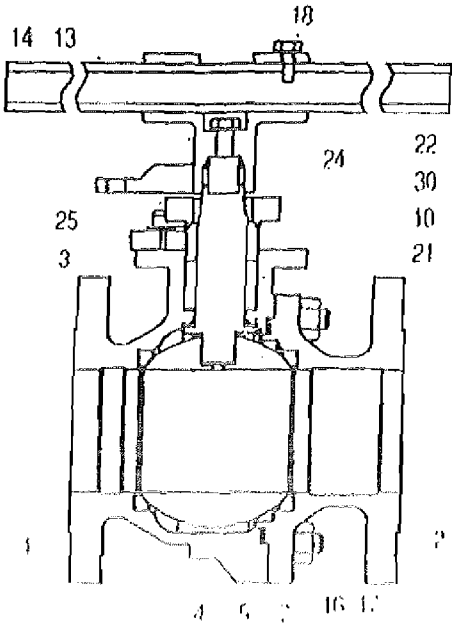

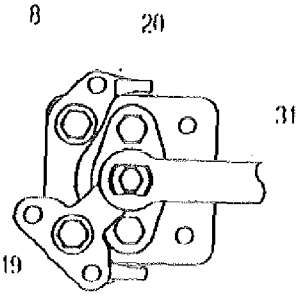

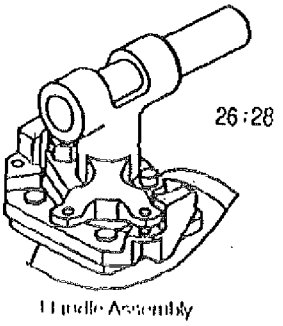

T Handle Assembly

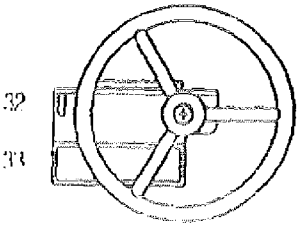

Gear Operator (Optional)

Materials of Construction

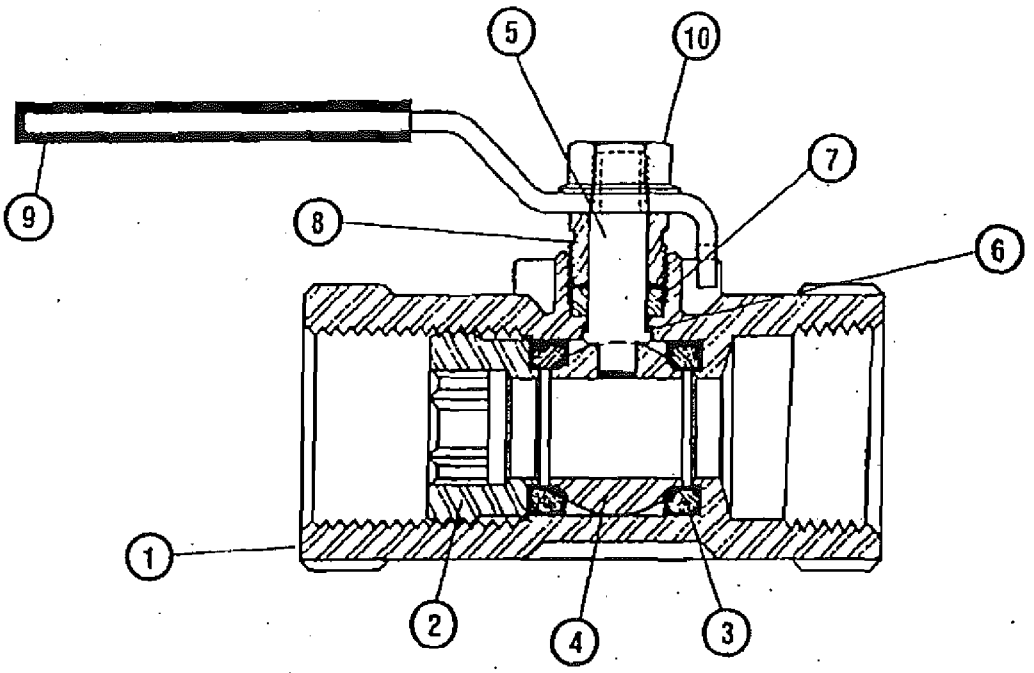

Part No.	Series 7100	Series 8100
1. Body	Carbon Steel,Grade WCB	Stainless Steel, Grade CF8M
2. Retainer	Carbon Steel, AISI 12L14	Stainless Steel, AISI 316
3. Seat	*See Optional Materials	
4. Ball	Carbon Steel, AISI 12L14, Hard Chrome Plated	Stainless Steel, AISI 316
5. Stem	Carbon Steel, AISI 12L14, Hard Chrome Plated	Stainless Steel, AISI 316
6. Thrust Washer	PTFE	
7. Packing Gland	Graphite	
8. Packing Nut	Carbon Steel, AISI 12L14	Stainless Steel, AISI 316
9. Handle	Carbon Steel Zinc Plated and Vinyl Dipped	
10. Handle Nut	Carbon Steel Zinc Plated	

*Optional seat materials:

(01) Virgin Teflon
(02) Durafill
(04) Mineral-filled PTFE**

**Requires stainless steel ball & stem

Technical Data

CV Ratings, Max. Operating Torques

Size	CV Rating
1/4", 3/8", 1/2"	4.0
3/4"	7.5
1"	14.0
1 1/4"	19.5
1 1/2"	33.0
2"	50.0

Valve Size	Max. Breakaway Torque (In.-Lbs.) 01 Seats	02 + 04 Seats
1/4", 3/8", 1/2"	40	45
3/4"	50	60
1"	130	150
1 1/4"	180	200
1 1/2"	230	250
2"	280	320

Pressure/Temperature Ratings

(01) Virgin PTFE

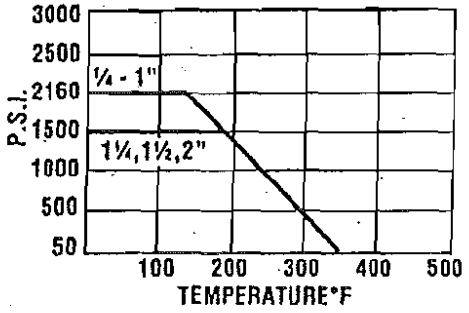

(02) Durafill

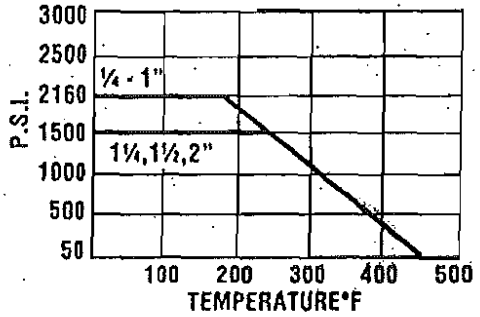

(04) 25% Mineral-Filled PTFE
(04 trim offers less cyclic life than 02 trim)

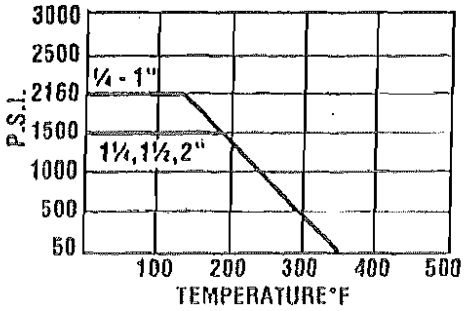

Pressure Rating

2160 WOG (¼" thru 1")

1500 WOG (1¼" thru 2")

Maximum Temperture Rating

(At 50 PSIG)

Virgin PTFE	400°F
Durafill	450°F
Mineral-filled PTFE	500°F

Vacuum Rating

10 Microns of Hg

A LEADER IN VALVE TECHNOLOGY
WATTS REGULATOR
Since 1874 — Watts Industries, Inc.
Industrial Products Division

Dimensions (Inches)

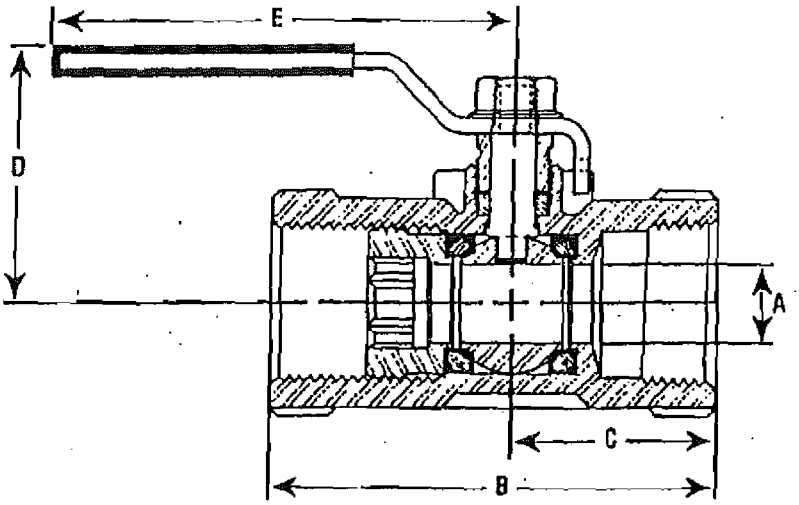

Size	A	B	C	D	E	Weight
¼", ⅜", ½"	.375	2.72	1.31	1.58	3.73	.6 lbs.
¾"	.500	3.12	1.46	1.68	3.73	1.0 lbs.
1"	.625	3.68	1.70	1.96	3.76	1.8 lbs.
1¼"	.812	4.06	1.94	2.31	4.50	3.0 lbs.
1½"	1.00	4.42	2.05	2.42	4.50	4.0 lbs.
2"	1.25	5.01	2.31	2.90	5.19	6.5 lbs.

OVAL HANDLE DIMENSIONS

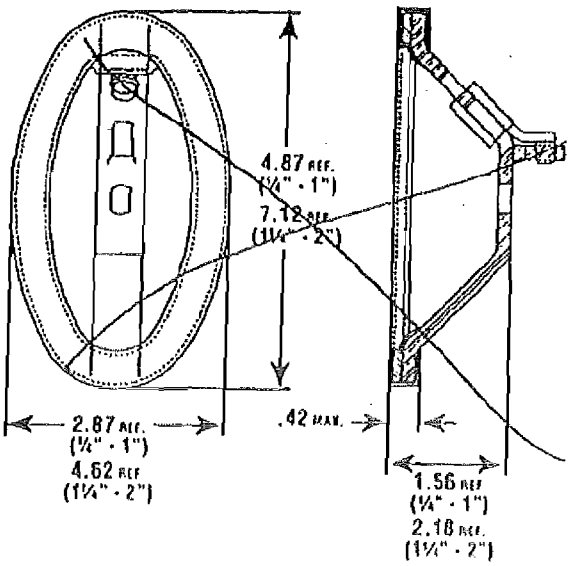

A LEADER IN VALVE TECHNOLOGY
WATTS REGULATOR
Since 1874 — Watts Industries, Inc.
Industrial Products Division

F-7100/8100 9416

How To Order

Example:

1", Carbon Steel Unibody, NPTF Threads, Durafill Seats, AISI 316 Stainless Steel Ball and Stem, Oval Handle

1" 7100 02 SS ~~OV~~ LH

MWG 10-10-00

SIZE:
~~¾" through 2"~~ 3/4"

MODEL:
7100 = Carbon Steel Unibody
8100 = Stainless Steel Unibody

SEAT MATERIAL:
01 = Virgin Teflon
02 = Durafill
04 = Mineral-Filled PTFE*

BALL/STEM:
SS = AISI 316 Stainless Steel (Std. on 8100)

HANDLE OPTIONS:
OV = Oval Handle
OVS = Stainless Steel Oval Handle
OVL = Oval Locking Handle
OVLS = Stainless Steel Oval Locking Handle
LH = Locking Lever Handle
SH = Stainless Lever Handle
XH = 3" Extended Lever Handle

*Requires stainless steel ball and stem

[✓] A - Conforms to the Subcontract Requirements
[ ] B - Minor Comment - Incorporate and Resubmit
[ ] C - Revise and Resubmit
Sig: MWG Date: 10-10-00

15080-002C

INFORMATION ONLY

Dimensional Data (In.)

		Valve Size 1.5"	2"	3"	4"	6"	8"	10"
A		1.50	2.00	3.00	4.00	6.00	8.00	10.00
B	150	6.50	7.00	8.00	9.00	15.50	18.00	21.00
	300	7.50	8.50	11.13	12.00	15.88	19.75	---
C	150	2.96	3.02	3.50	4.00	7.75	9.00	10.50
	300	3.53	4.25	5.82	6.00	7.94	9.88	---
D	150	5.00	6.00	7.50	9.00	11.00	13.50	16.00
	300	6.13	6.50	8.25	10.00	12.50	15.00	---
E	150	3.69	4.51	6.81	8.40	10.81	14.25	17.41
	300	3.69	4.51	6.81	8.40	12.75	16.00	---
F	150	5.75	6.56	10.25	11.00	11.12	15.50	---
	300	5.75	6.56	10.25	11.00	14.00	---	---
G	150	15.50	15.50	20.00	20.00	20.00	48.00	---
	300	15.50	15.50	20.00	20.00	48.00	---	---
H	150	0.64	0.64	1.28	1.28	1.45	2.27	3.06
	300	0.64	0.64	1.28	1.28	2.27	3.06	---
J	150	.746/.743	.746/.743	1.069/1.054	1.339/1.334	1.559/1.554	1.999/1.994	2.499/2.494
	300	.746/.743	.746/.743	1.069/1.054	1.339/1.334	1.999/1.994	2.499/2.494	---
K	150	.376/.373	.376/.373	.674/.670	.865/.861	1.065/1.061	1.249/1.245	1.749/1.745
	300	.376/.373	.376/.373	.674/.670	.865/.861	1.249/1.245	1.749/1.745	---
L	150	0.38	0.44	0.44	0.62	0.75	0.62	0.62
	300	0.38	0.44	0.44	0.62	0.62	0.62	---
M	150	6.50	6.50	6.50	9.00	9.50	9.50	11.50
	300	6.50	6.50	6.50	9.00	9.50	11.50	---
N	150	7.37	8.20	11.63	13.08	15.63	17.14	22.03
	300	7.37	8.20	11.63	13.08	15.63	20.64	---
P	150	3.25	3.25	4.13	4.41	5.13	5.13	6.75
	300	3.25	3.25	4.13	4.41	5.13	6.75	---
Q	150	3/8-16	3/8-16	3/8-16	1/2-13	5/8-11	5/8-11	3/4-10
	300	3/8-16	3/8-16	3/8-16	1/2-13	5/8-11	3/4-10	---
R	150	2.31	3.14	4.43	5.88	8.00	9.64	11.91
	300	2.31	3.14	4.43	5.88	8.12	10.52	---
S	150	6.00	6.00	6.00	8.00	8.00	12.00	16.00
	300	6.00	6.00	6.00	8.00	12.00	16.00	---

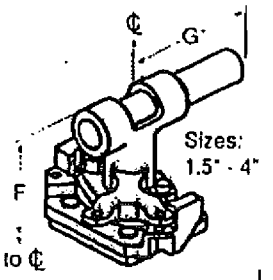

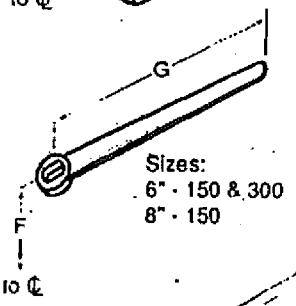

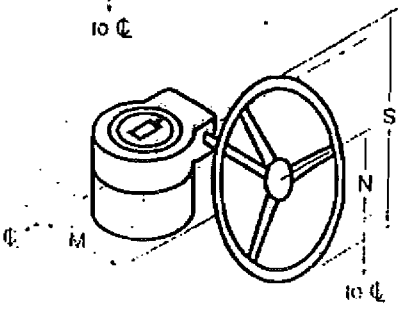

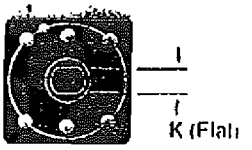

Packing Arrangement
Removed for Clarity

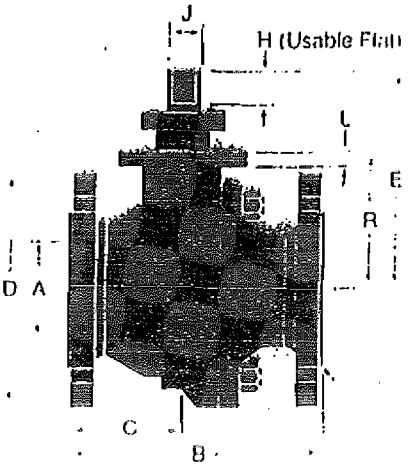

ANSI B16.5
Flange Drilling

ACTUATION

Watts Regulator offers a full line of Pneumatic and Electric Actuators that provide easy and cost-effective automation. Mounting kits are the same as those specified for the 1800/2800 series. Refer to chart S-MK to select appropriate mounting kits.

DISNEY-McLANE, INC.

Disney-McLane Inc.
428 McGregor Avenue
Cincinnati, OH 45206
Phone (513) 861-1682
Fax (513) 487-5337

Fax

To: STANLEY GARBER-RIECK MFG. From: David Evans

Fax: 937-276-8634 Pages: 3

Phone: Date: 9/21/00

Re: FERNALD VALVES CC: HARRY CULBERTSON - PICKREL BROS.

☐ Urgent ☐ For Review ☐ Please Comment ☐ Please Reply ☐ Please Recycle

• Comments:

ATTACHED IS INFORMATION ON SEATS FOR THE CONTROMATICS C-7100 (3/4") AND THE CF-1800 (3"). IF YOU NEED ANY ADDITIONAL INFORMATION, PLEASE GIVE A CALL.

9/22/00

(file w/ original submittal)

Ron/Dave

Good!

please put in revised submittal —

Thanks,

Mike Duff

9-26-00

DURAFILL – "02"
(REINFORCED PTFE)

- PTFE BASED MATERIAL WITH GLASS AND CARBON REINFORCEMENT FOR HIGHER STRENGTH AT TEMPERATURES.
- GOOD PERFORMANCE TO 450°F
- GOOD PERFORMANCE UP TO 150WSP

3/4" C-7100-02-SS-LI+

UNISEAL - "02"

- VIRGIN PTFE CLASS MATERIAL
  - COMPATIBLE WITH CAUSTICS
  - NO COLOR CONTAMINANTS
  - LOWER OPERATING TORQUE
- PERFORMANCE CAPABILITIES OF REINFORCED PTFE
  - FULL DURAFILL SEAT RATINGS
  - 150WSP STEAM RATINGS
- AVAILABLE IN FLANGED, ROUGHNECKS, B6000-M2, 3 PIECE 4 BOLT (AFTER 1/1/98)

3" CF-1800-150-T316-M1

SUPPLIER DOC :NT SUBMITTAL

FDF PROJECT NO: 20111	CONTRACT NO: FSC - 641	SUBMITTAL NO: 15080-003	REV: 0	15-Feb-01	PAGE 1 OF 1

FROM: The STAVER GROUP, Inc.
Ron Wood
SIGNATURE: R Wood

TO: FDF ENGINEERING/CONSTRUCTION DOCUMENT CONTROL (ECDC), MS 52-7
RECEIVED BY: Denise Wenk DATE: 2/15/01

QTY	DOCUMENT NUMBER	REV	DOCUMENT FAMILY PRO	H&S	MED	TRG	CON	ENG	QAC	OPER	TITLE/DESCRIPTION	SUBMITTAL TYPE DRFT	CFC	INF	ASSOCIATED SPECIFICATION	SUBMITTAL ACTION A	B	C
6	641-15080-003A	0						X			**Techno Check Valves O&M Manuals**			X	15080	X		
4	641-15080-003B	0						X			**Red Valve Knife Gate O&M Manuals**			X		X		

REVIEW DISTRIBUTION

NAME	MS	NAME	MS	NAME	MS
[illegible] Griffin	52-5				

NO COMMENTS: X COMMENTS: (PLEASE USE SPACE BELOW FOR COMMENTS OR INDICATE IF ATTACHMENTS)

RECEIVED BY: [illegible] DATE 2/16/01
(SIGN/DATE AND RETURN A COPY TO ECDC, MS 52-7)

SUBMITTAL TYPE: (BY SUPPLIER)
CFC - CERTIFIED FOR CONSTRUCTION
INF - INFORMATION/RECORD
DRFT - DRAFT/PRELIMINARY

SUBMITTAL ACTION CODE: (BY FDF)
A - Conforms to Subcontract Requirements
B - Minor Comments - Incorporate and Resubmit
C - Revise and Resubmit (SEE COMMENTS)

ORIGINAL

TECHNO CORPORATION

641-15080-003A

4.1 All Techno Check Valves

STORAGE:

Valves should be stored indoors and in their original containers to keep them clean and protected from damage. Avoid excessive exposure to sunlight, extreme temperatures, and other environmental extremes.

LOCATION:

A **minimum** of 5 pipe diameters should be maintained between the check valve and pipe fittings and valves, especially upstream of the valve. Techno check valves operate automatically via fluid flow. Relatively smooth laminar flow is required for the check valve to operate properly and to yield a long trouble free life. Locating the check valve near flow altering components directly affects the performance of the valve. **Poor valve location is the number one reason for poor valve operation and increased maintenance.**

ORIENTATION:

A. **Horizontal** – Valves installed in horizontal lines must be oriented with the internal Hinge Post in the vertical plumb position. The hinge post direction is known by either:

- Observing the hinge post directly inside the valve before installation,
- Observing the bolts protruding through the top and bottom of the installed valve which are in-line with the hinge post, or
- Observing the flow direction arrow or the word "TOP" marked on the valve body.

B. **Vertical** – In the downward or upward position, no special attention need be given to the Hinge Post position. One exception would be when the valve must be mounted directly downstream of an elbow. In this case, since the flow velocity will be higher at the outer circumference of the elbow, the hinge post must be mounted so that the higher velocity flow is split across the hinge post such that the valve plates equally share the load. See the illustration below.

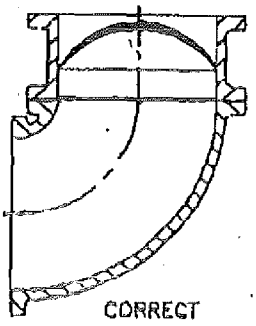

CORRECT

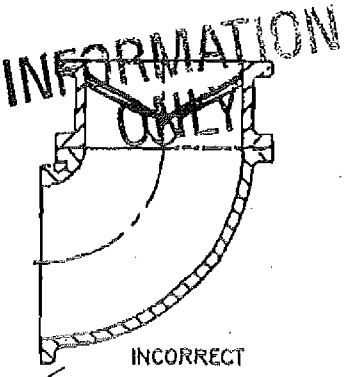

INCORRECT

INFORMATION ONLY

[X] A - Conforms to the Subcontract Requirements
[ ] B - Minor Comment - Incorporate and Resubmit
[ ] C - Revise and Resubmit
Sig: [illegible] Date: 2/16/01

2709 WEST 10th ST. P.O. BOX 1416 ERIE, PA 16512
PHONE: 814-838-4561 FAX: 814-838-6253

TECHNO CORPORATION

4.1 All Techno Check Valves (continued)

OPERATIONAL CHECK

The valve plates in the Techno check valve should freely move from the closed to open position and back without binding. Even in the larger valves, the valve plates should be able to be moved readily by hand. The Techno elastomer hinge valve may appear not to close tightly when new during these trial operational cycles. This is normal and simply means that the sealing member has not assumed its "set", and should not be interpreted as a failure of valve to close easily and seat tightly. This condition will quickly be rectified by a few cycles in service.

PRESSURE AND TEMPERATURE RATING:

The pressure and temperature rating of each valve is indicated on the nameplate. Note that the sealing member on the metal valves and the plastic material on the plastic valves may be the limiting temperature factor. Do not exceed the limiting temperature. If in doubt, consult the factory for verification.

INSTALLATION:

Care should be taken during installation so as not to place excessive forces on the valve to make up for system misalignments. Cast body construction is quite strong and rigid while other types are extremely sensitive to installation forces, and consequently seat distortion. Comprehensive installation techniques are beyond the scope of this technical section, however, the following reminders and common sense will avoid costly and time consuming errors:

- Do not use pipe wrenches or other force insensitive tools on the valve bodies. Any distortion to the body will destroy the valve. Instead, use adjacent components to tighten threaded valves with light tool pressure on the check valve to obtain desired orientation.
- Be sure to observe flange bolt tightening patterns in reasonable increments. This will not only maintain valve integrity, but will provide the gasket with the best opportunity to provide a leak tight seal.

MAINTENANCE:

Repair or replacement of most internal parts is straight forward, requiring no special skills or tools. Should maintenance be required, specific instructions are available from the factory for the metal hinge and elastomer hinged valves. Illustrations of valve construction/spare parts are provided at the end of this technical data section.

2704 WEST 16th ST. P.O. BOX 1416 ERIE, PA 16512
PHONE: 814-838-4651 FAX: 814-838-6983

TECHNO CORPORATION

6.1

VALVE CONSTRUCTION / SPARE PARTS
METAL HINGE DESIGN

ITEM NO.	DESCRIPTION
1	BODY
2	VALVE PLATE
3	CLAMP PLATE
4	SEALING MEMBER
5	SHAFT SUPPORT
6	HINGE SHAFT
7	THRUST WASHER
8	SPRING
9	VP FASTENERS
10	SUPPORT FASTENER
11	LOCKWASHER

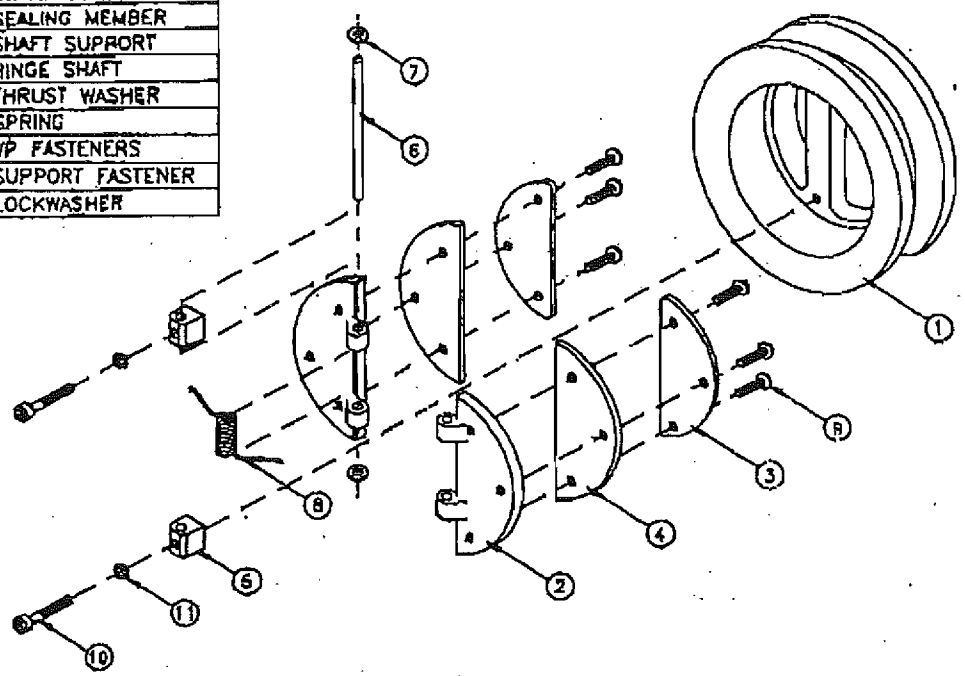

6.2

VALVE CONSTRUCTION / SPARE PARTS
ELASTOMER HINGE DESIGN

ITEM NO.	DESCRIPTION
1	BODY (WAFER STYLE SHOWN)
2	HINGE POST
3 *	HINGE CLAMP END
3 **	HINGE CLAMP
4	VALVE PLATE
5	CLAMP PLATE
6	SEALING MEMBER
7 *	SPRING
8 *	SPRING PIN
9	TRAVEL STOP
10	HP/TS FASTENER
11	HP/TS WASHER
12	INTERNAL FASTENERS

* OPTIONAL–SPRING LOADED VALVES ONLY

** STANDARD–NO SPRING

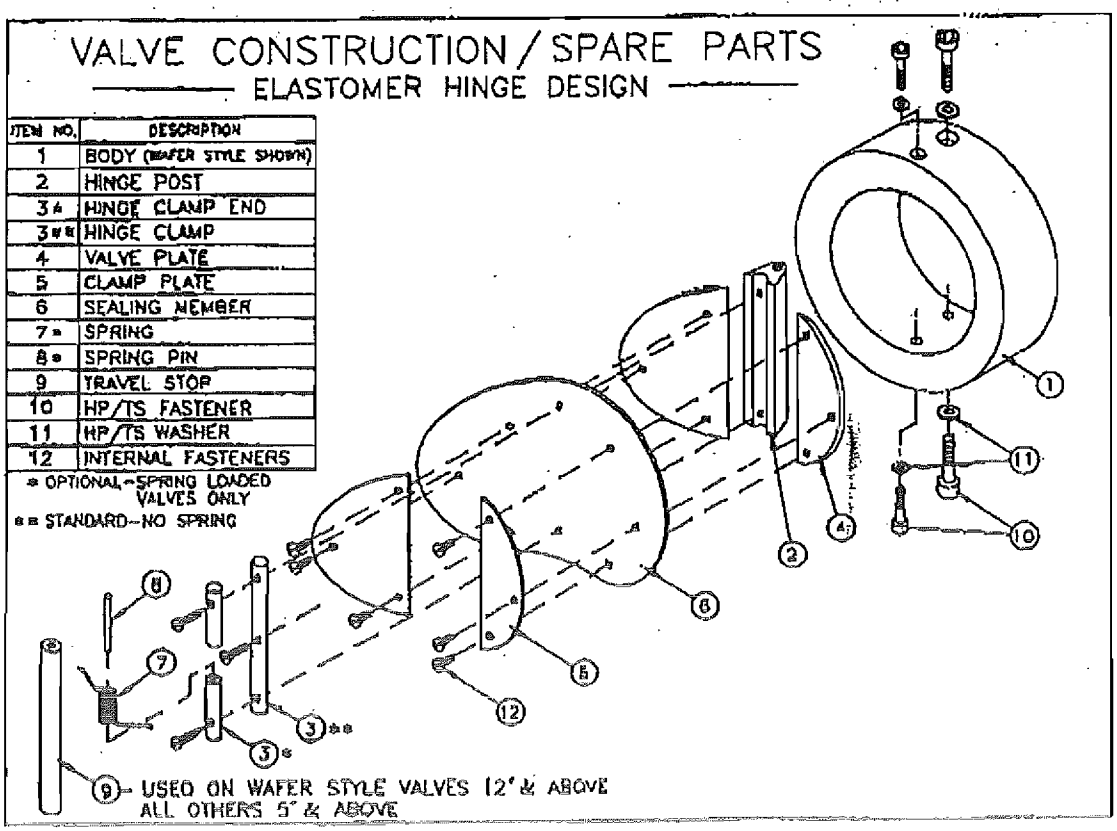

9 – USED ON WAFER STYLE VALVES 12" & ABOVE
ALL OTHERS 5" & ABOVE

ORDERING INFORMATION CHECKLIST

Flexgate Slurry Knife Gate Valve

VALVE SIZE_____ QTY._____

PACKING MATERIAL
- ☐ FLAX ☐ TEFLON
- ☐ KEVLAR

FLOW MEDIA_____
Operating Pressure_____psi
Operating Temperature_____

SEAT MATERIAL SELECTION
- ☐ PURE GUM RUBBER
- ☐ EPDM
- ☐ BUNA-N
- ☐ VITON

GATE MATERIAL SELECTION
- ☐ 316 STAINLESS STEEL
- ☐ 17-4 PH

ACTUATOR SELECTION

MANUAL ACTUATORS
- ☐ STANDARD HANDWHEEL
- ☐ 4:1 BEVEL GEAR (Recommended for
- ☐ 8:1 BEVEL GEAR sizes 14" and Over)

PNEUMATIC ACTUATORS
- ☐ AIR TO OPEN / AIR TO CLOSE
- ☐ AIR TO OPEN / FAIL CLOSE SPRING
- ☐ AIR TO CLOSE / FAIL OPEN SPRING

AVAILABLE AIR PRESSURE_____psi

ELECTRIC ACTUATORS
- ☐ AUMA ☐ LIMITORQUE
- ☐ ROTORK VOLTAGE_____

ACCESSORIES
- ☐ Auto Purge Package
- ☐ Limit Switch ☐ 4-way Solenoid
- ☐ Bonnet ☐ Stem Cover
- ☐ Stem Material_____
- ☐ Stem Extension (length)_____

PART NOMENCLATURE FLEXGATE

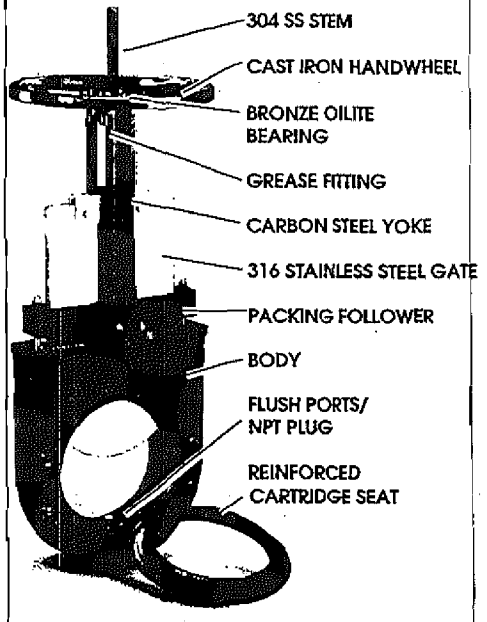

RED VALVE QUALITY PRODUCTS

- Pinch Valves
- Check Valves
- Pressure Sensors
- Control Valves
- Knife Gate Valves
- Redflex Products

Red Valve Company, Inc.
700 N. Bell Avenue, Carnegie, PA 15106
Phone 412 279-0044 • FAX 412 279-7878
email: valves@rodvalve.com

Red Valve Company, Inc.

FLEXGATE
SLURRY KNIFE GATE VALVE
Installation, Operation, and Maintenance Manual

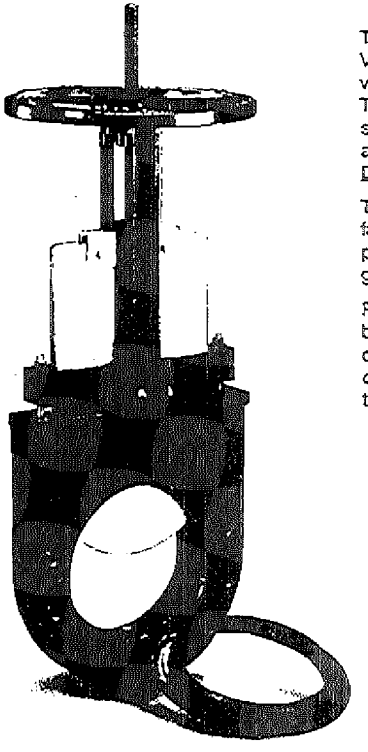

The Red Valve Flexgate Slurry Knife Gate Valve is a 100% full bore, truly bi-directional valve designed for tough slurry applications. The Flexgate features heavy-duty elastomer seat cartridges which provide droptight closure and are replaced WITHOUT ANY VALVE DISASSEMBLY, for ease of maintenance.

The Flexgate is designed to meet MSS-SP81 face-to-face dimensions, so that it can be readily placed in service replacing conventional knife-gate products.

Flush ports are provided to allow the valve to be flushed with water and/or air. With a variety of actuators available, limit switches, and other options, the Red Valve Flexgate can be built to fit your special applications.

[X] A - Conforms to the Subcontract Requirements
[ ] B - Minor Comment - Incorporate and Resubmit
[ ] C - Revise and Resubmit
Sig: _____ Date: 2/16/01

INFORMATION ONLY

IMPORTANT
Please take a moment to review this manual. **Before performing any maintenance on the valve be sure the pipeline has been de-pressurized.** The improper installation or use of this product may result in personal injury, product failure, or reduced product life. Red Valve Co., Inc. can accept NO liability resulting from the improper use or installation of this product. If you have any questions or problems, please call the customer service department at (412) 279-0044. We appreciate your comments. And thank you for choosing Red Valve.

INSTALLATION

1. Check flange faces of pipe for rough /damaged areas. Pipeline flanges must be flat, properly spaced, and parallel to achieve proper seal. DO NOT mate floxate valves directly to expansion joints or other flexible connections.
2. The rubber seats act as a gasket - separate flange gaskets are not required and must NOT be used.
3. Actuate valve to the full CLOSED position for installation. Lubricate seat cartridges and gate liberally with a grease compatible withthe seat material. Silicone grease is recommended for all seat materials.
4. Insert seat cartridges. Flange gaskets are not required. Make sure that cartridges are of the correct size and properly centered on valve flange.
5. Installing Flange Bolts
   CAUTION: Only use flange bolts of the correct length in such manner that the BOLTS DO NOT BOTTOM OUT IN TAPPED HOLES. The use of bolts which are too long and bottom out in tapped holes can distort body and cause permanent valve damage. Tighten all bolts uniformly on both sides so as to distribute compression evenly on seat rings. Improper or uneven torquing of flange bolts can cause premature seat cartridge failure.!
6. Apply grease liberally to stem.
6. Some leakage may occur at packing when line is pressurized. The factory does not tighten packing to overcome such leakage, as this can shorten packing life when valve is in storage. Simply tighten the packing nuts until the leakage ends.
7. Fill out and attach the enclosed VALVE MAINTENANCE CARD to the valve. This has been provided for maintenance convenience.

   CAUTION: VALVES EQUIPPED WITH THE FLUSHPORT DESIGN CAN BE PLUGGED OR PIPED TO A SUITABLE DRAIN. REMOVAL OF PLUG(S) WILL CAUSE LEAKAGE OF LINE MATERIALS. CONSULT YOUR SYSTEMS ENGINEER FOR PROPER PLUMBING OF FLUSHPORT FOR YOUR INSTALLATION.

   NOTE: It is recommended that valves with actuators be installed in the vertical position. If actuated knife gates must be installed horizontally, it is recommended that the actuator be supported with a hanger or bracket.

*** When your Red Valve order arrives, check the contents carefully to assure no damage or loss occured in transit.**

NEVER...	NEVER...	DO...	DO...
Install with Gate up.	Use bolts which bottom out in body.	Lubricate Seats & Gate.	Tighten bolts evenly.

OPERATION

ACTUATORS All actuators are furnished completely assembled and fully operational. All valve accessories and instrumentation are properly set and calibrated at the Red Valve factory.

MANUAL ACTUATORS All handwheel, chainwheel, and bevel gear operators turn clockwise to close. The gate stops moving when the valve is fully opened or closed.

BEVEL GEAR Bevel gears operate the same as the standard handwheel. The handwheel is turned clockwise to close and counter clockwise to open.

CHAINWHEEL Chainwheels can be furnished on both standard valves and valves with bevel gears. The chain must be fed through the guides and over the spokes around the outside diameter of the rim. The ends of the chain are then joined with a connecting link.

ELECTRIC ACTUATORS Electric Actuators come completely operational, with limit and torque switches set. Please refer to the individual actuator manuals for additional operation or maintenance information.

CYLINDER ACTUATORS Red Valve Cylinder Actuators operate from clean lubricated plant air. Cylinder Actuators are available in three basic configurations. Air-To-Open / Air-To-Close, Fail-Safe Open, and Fail-Safe Closed.

AUTOMATIC:
A single 4-way valve is used to operate this standard cylinder style. The open air supply is connected to the lower cylinder head, and close air source is attached to the upper cylinder. Each side of the cylinder must be vented when the other side of the cylinder is pressurized, in order for the cylinder to function.

FAIL-SAFE CLOSED:
A large diameter spring on the top of the cylinder piston provides the force to close this type of cylinder configuration. Air is only supplied to the BOTTOM cylinder head for valve opening. The top cylinder head must remain vented at all times. When the bottom cylinder is pressurized with plant air, the valve opens. The valve will close automatically when the pressure is vented out of the bottom of the cylinder.

FAIL-SAFE OPEN:
A large diameter spring on the bottom of the cylinder piston provides the force to open this type of cylinder configuration. Air is only supplied to the top cylinder head for valve closing. The bottom cylinder head must remain vented at all times. When top of cylinder is pressurized with plant air, valve closes. Valve will open automatically when pressure is vented out through top of cylinder.

CAUTION: Fail Safe cylinders contain large diameter springs in a compressed state. To avoid risk of serious injury, never attempt to disassemble fail-safe cylinders, NEVER cut, bend, or alter the protruding threads at the top of the cylinder. Fail-safe cylinders will actuate AUTOMATICALLY with an interruption of supply air. To avoid risk of injury from unexpected actuation, always close cylinder supply air prior to inspecting, lubricating, or servicing valve.

WATER HAMMER EFFECT:
Too rapid of closure of any valve can create a forceful and potentially damaging water hammer effect. To minimize the risk of water hammer related damage, Red Valve Co., Inc. recommends that the closure rate of the valve be controlled by restricting the exhaust rate of cylinder pressure. The addition of a needle valve in cylinder head ports will enable you to control closure rate for your service condition.

MAINTENANCE

INSPECTION Valves should occasionally be inspected for damage and wear. The inspection period should be determined by the severity of the service and environment. Valves should be inspected every 90 days for normal applications, or more frequently for severe applications. If valves are periodically inspected and preventive maintenance done, the valve will last longer and operate better.

CAUTION: Do not remove any valve parts or bolting with pressure in the line. It is easy to inspect the valve for obvious problems. **Several items should be checked:**

- Check the stem for wear and any damaged threads. If threads are damaged, use a small file to remove small burrs on the thread.
- Check the stem bushing for small pieces of bronze which may have worn away. If excess material is noticed the stem bushing should be replaced.
- Check the exposed portion of the gate when it is in the full open position for excessive wear. If the gate is excessively worn, the gate should be replaced. Always keep the valve well lubricated and the gate free of excess buildup.

RESILIENT SEAT REPLACEMENT

1. Make sure there is no pressure in the pipeline.
2. Remove the valve or remove all bolting except one bolt nearest the horizontal centerline and swing the valve out of the line.
3. Replace the seat cartriges and install the valve as described under installation.

TROUBLESHOOTING GUIDE

SYMPTOM:
VALVE BINDS or DIFFICULTY TURNING HANDWHEEL
- Examine stem & bushing for burrs or wear.
- Clean build-up on gate, flush body
- Lubricate stem & gate
- Remove seat cartridges & inspect for damage
- Make certain no in-line obstructions exist

SYMPTOM:
VALVE LEAKS AT PACKING
- Tighten packing gland
- Replace packing as needed
- Inspect gate and seat cartridges for wear or damage

SYMPTOM:
VALVE DOES NOT CHECK FLOW WHEN CLOSED
- Check for obstruction in line
- Inspect gate and seat cartridges for build-up, wear, or damage

SYMPTOM:
RESILIENT SEAT CARTRIDGES ARE SOFTENED OR DETERIORATED
- Consult Red Valve for chemical compatability of resilient seat cartridges.

STORAGE

If your Flexgate Slurry Knife Gate Valve is to be stored for a period of time prior to installation, the following storage guidelines will help preserve your valve and assure a trouble free installation.

1. Store resilient seat cartridges in a clean, cool and dry location. Avoid exposure to light, electric motors, dirt or chemicals.
2. Store valve in a clean, dry location. Make certain that valve and actuator are well supported. Do not stack other items on valve.
3. Grease stem, gate, and flange holes liberally to inhibit corrosion.

RED VALVE WARRANTY

WARRANTIES - REMEDIES - DISCLAIMERS - LIMITATION OF LIABILITY
Unless otherwise agreed to in writing signed by Red Valve, all Products supplied by Red Valve will be described in the specifications set forth on the face hereof.

THE WARRANTIES SET FORTH IN THIS PROVISION ARE EXCLUSIVE AND IN LIEU OF ALL OTHER WARRANTIES WHETHER STATUTORY, EXPRESS OR IMPLIED (INCLUDING ALL WARRANTIES OF MERCHANTABILITY AND FITNESS FOR A PARTICULAR PURPOSE AND ALL WARRANTIES ARISING FROM COURSE OF DEALING OR USAGE OR TRADE).

Red Valve Products are guaranteed for a period of one year from date of shipment, against defective workmanship and material only, when properly installed, operated and serviced in accordance with Red Valve's recommendations. Replacement for items of Red Valve's manufacture will be made free of charge if proved to be defective within such year; but not claim for transportation, labor or consequential damages shall be allowed. We shall have the option of requiring the return of the defective product to our factory, with transportation charges prepaid, to establish the claim and our liability shall be limited to the repair or replacement of the defective product, F.O.B. our factory. Red Valve will not assume costs incurred to remove or install defective products nor shall we incur backcharges or liquidated damages as a result of warranty work. Red Valve does not guarantee resistance to corrosion erosion, abrasion or other sources of failure, nor does Red Valve guarantee a minimum length of service, or that the product shall be fit for any particular service. Failure of purchaser to give prompt written notice of any alleged defect under this guarantee forthwith upon its discovery, or use, and possession thereof after an attempt has been made and completed to remedy defects therein, or failure to return product or part for replacement as herein provided, or failure to install and operate said products and parts according to instructions furnished by Red Valve, or failure to pay entire contract price when due, shall be a waiver by purchaser of all rights under these representations. All orders accepted shall be deemed accepted subject to this warranty which shall be exclusive of any other or previous warranty, and shall be the only effective guarantee or warranty binding on Red Valve, anything on the contrary contained in purchaser's order, or represented by any agent or employee of Red Valve in writing or otherwise, not withstanding implied warranties. RED VALVE MAKES NO WARRANTY THAT THE PRODUCTS, AUXILIARIES AND PARTS ARE MERCHANTABLE OR FIT FOR ANY PARTICULAR PURPOSE.

SUPPLIER DOCUMENT SUBMITTAL

FDF PROJECT NO: 20111	CONTRACT NO: FSC - 641	SUBMITTAL NO: 15080-003	REV: 0	29-Jan-01	PAGE 1 OF 1

FROM: The STAVER GROUP, Inc.
Ron Wood
SIGNATURE: R Wood

TO: FDF ENGINEERING/CONSTRUCTION DOCUMENT CONTROL (ECDC), MS 52-7
RECEIVED BY: Erika Sarrett DATE: 1/30/01

QTY	DOCUMENT NUMBER	REV	DOCUMENT FAMILY PRO	H&S	MED	TRG	CON	ENG	QAC	OPER	TITLE/DESCRIPTION	SUBMITTAL TYPE DRFT	CFC	INF	ASSOCIATED SPECIFICATION	SUBMITTAL ACTION A	B	C
4	641-15080-003	0						X			Flexgate Knifegate Valves		X		15080	X		
											O&M Manuals							

REVIEW DISTRIBUTION

NAME	MS	NAME	MS	NAME	MS
Mike Griffin	525				
Jim Cherry	525				
Jim Jenkins	525				
Mike Godber	64				
Bob Kneip	525				
Scott Wheeler	525				
Kwasi Badu-Tweneboah	38				

NO COMMENTS: X

COMMENTS: (PLEASE USE SPACE BELOW FOR COMMENTS OR INDICATE IF ATTACHMENTS)

RECEIVED BY: MW Gill DATE 2/2/01

(SIGN/DATE AND RETURN A COPY TO ECDC, MS 52-7)

SUBMITTAL TYPE: (BY SUPPLIER)
CFC - CERTIFIED FOR CONSTRUCTION
INF - INFORMATION/RECORD
DRFT - DRAFT/PRELIMINARY

SUBMITTAL ACTION CODE: (BY FDF)
A - Conforms to Subcontract Requirements
B - Minor Comments - Incorporate and Resubmit
C - Revise and Resubmit (SEE COMMENTS)

ORIGINAL

Red Valve Company, Inc.®

FLEXGATE
SLURRY KNIFE GATE VALVE
Installation, Operation, and Maintenance Manual

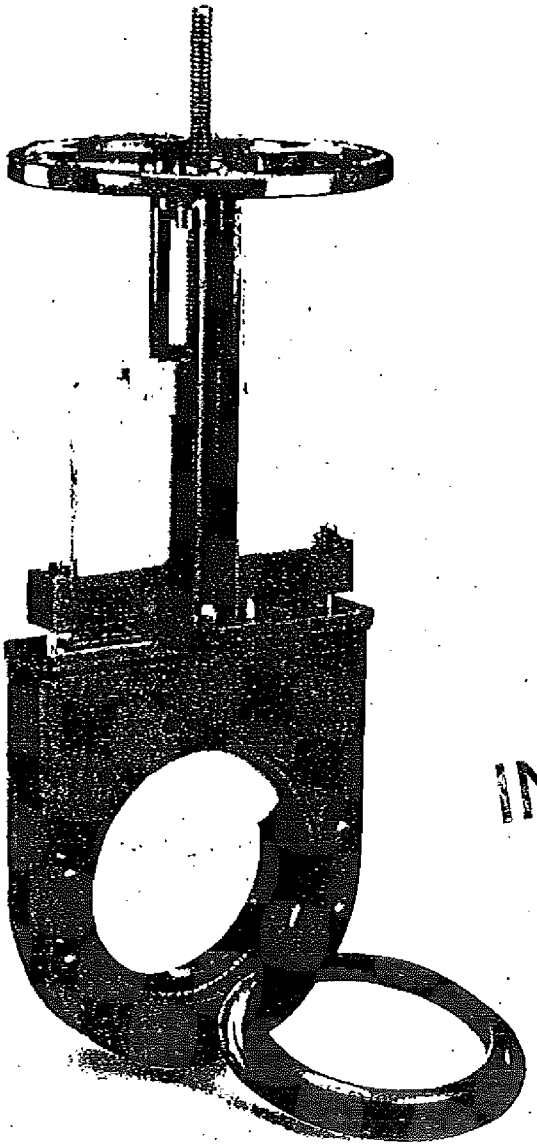

The Red Valve Flexgate Slurry Knife Gate Valve is a 100% full bore, truly bi-directional valve designed for tough slurry applications. The Flexgate features heavy-duty elastomer seat cartridges which provide droptight closure and are replaced **WITHOUT ANY VALVE DISASSEMBLY**, for ease of maintenance.

The Flexgate is designed to meet MSS-SP81 face-to-face dimensions, so that it can be readily placed in service replacing conventional knife-gate products.

Flush ports are provided to allow the valve to be flushed with water and/or air. With a variety of actuators available, limit switches, and other options. the Red Valve Flexgate can be built to fit your special applications.

INFORMATION ONLY

Note: Original document retained by Project Engineer To support Operations and Maintenance.

[X] A - Conforms to the Subcontract Requirements
[ ] B - Minor Comment - Incorporate and Resubmit
[ ] C - Revise and Resubmit
Sig: MW Date: 2/05/01

[X] A - Conforms to the Subcontract Requirements
[ ] B - Minor Comment - Incorporate and Resubmit
[ ] C - Revise and Resubmit
Sig: MW Date: 2/2/01

IMPORTANT

Please take a moment to review this manual. Before performing any maintenance on the valve be sure the pipeline has been de-pressurized. The improper installation or use of this product may result in personal injury, product failure, or reduced product life. Red Valve Co., Inc. can accept NO liability resulting from the improper use or installation of this product. If you have any questions or problems, please call the customer service department at (412) 279-0044. We appreciate your comments. And thank you for choosing Red Valve.

PIPING INSULATION

SUPPLIER DOCUMENT SUBMITTAL

FDF PROJECT NO: 20111	CONTRACT NO: FSC - 641	SUBMITTAL NO: 15250-001	REV: 1Ø	05-Mar-01	PAGE 1 OF 1

FROM: The STAVER GROUP, Inc.
Ron Wood
SIGNATURE: R. Wood

TO: FDF ENGINEERING/CONSTRUCTION DOCUMENT CONTROL (ECDC), MS 52-7
RECEIVED BY: Denisi Wertz DATE: 3/05/01

QTY	DOCUMENT NUMBER	REV	DOCUMENT FAMILY: PRO	H&S	MED	TRG	CON	ENG	QAC	OPER	TITLE/DESCRIPTION	SUBMITTAL TYPE: DRFT	CFC	INF	ASSOCIATED SPECIFICATION	SUBMITTAL ACTION: A	B	C
8	641-15250-001	1Ø						X			Pipe Insulation		X		15250	X		

REVIEW DISTRIBUTION

NAME	MS	NAME	MS	NAME	MS
Mike Griffin	525				
Tim Cherry	525				
Jim Jenkins	525				
Mike Godber	64				
Bob Kneup	525				
B. Scott Wheeler	525				
GeoSyntec Consultants	38				

NO COMMENTS: COMMENTS: (PLEASE USE SPACE BELOW FOR COMMENTS OR INDICATE IF ATTACHMENTS)

Need detailed Safe Work Plan
prior to product application
MW 3/12/01

RECEIVED BY: MW Griffin DATE 3/12/01
(SIGN/DATE AND RETURN A COPY TO ECDC, MS 52-7)

SUBMITTAL TYPE: (BY SUPPLIER)
CFC - CERTIFIED FOR CONSTRUCTION
INF - INFORMATION/RECORD
DRFT - DRAFT/PRELIMINARY

SUBMITTAL ACTION CODE: (BY FDF)
A - Conforms to Subcontract Requirements
B - Minor Comments - Incorporate and Resubmit
C - Revise and Resubmit (SEE COMMENTS)

ORIGINAL

Factory Mutual System Approved

Armstrong

ARMAFLEX INSULATION SYSTEMS

AP Armaflex®

SUBMITTAL SHEET

- Conforms to the Subcontract Requirements
- Minor Comment - Incorporate and Resubmit
- Revise and Resubmit

Date: 3/12/01

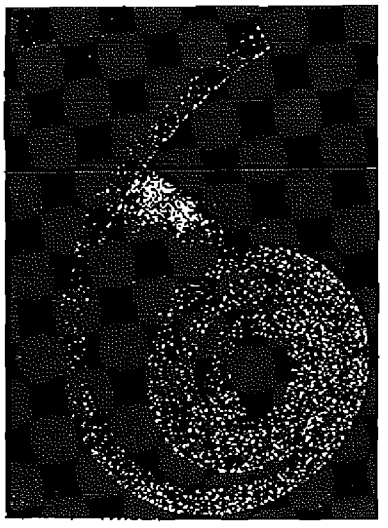

DESCRIPTION

AP Armaflex Sheet and Roll Insulation is a flexible, elastomeric thermal insulation, black in color. It is furnished with a smooth skin on one side which forms the outer exposed insulation surface. The expanded closed-cell structure of Armaflex makes it an efficient insulation.

AP Armaflex Sheet is supplied in flat sheets 36" x 48" (.915m x 1.220m), in thicknesses of 1/8", 1/4", 3/8", 1/2", 3/4", 1", 1-1/2", and 2" (3, 6, 10, 13, 19, 25, 38, and 50 mm). AP Armaflex Roll is supplied in 48" wide (1.220m) continuous rolls in 3/8", 1/2", 3/4", 1", and 1-1/2" (10, 13, 19, 25, and 38 mm).

AP Armaflex is approved through continuing supervision by Factory Mutual Research Corporation to consistently provide actual values on these key performance criteria for mechanical system insulation:

Thermal Conductivity: 0.27
Water Vapor Transmission: 0.08
Fire Rating: will not contribute significantly to fire (simulated end use testing)

As tested by ASTM E 84 "Method of Test for Surface Burning Characteristics for Building Materials" and CAN/ULC S-102, AP Armaflex Sheet Insulation in thicknesses of 1/8", 1/4", 3/8", 1/2", 3/4", and 1" (3, 6, 10, 13, 19, and 25 mm) has a flame-spread rating of 25 or less and a smoke-developed rating of 50 or less.

Note: Numerical flammability ratings alone may not define the performance of products under actual fire conditions. They are provided only for use in the selection of products to meet limits specified.

USES

AP Armaflex Sheet and Roll Insulation is used for all applications that cannot be accomplished by Armstrong Pipe Insulation. It is particularly adaptable for insulating ductwork, large piping and fittings, tanks, and vessels. Its flexibility allows application to curved and irregular surfaces. AP Armaflex Sheet is very adaptable to making all types of fitting cover insulations.

The recommended temperature usage range for AP Armaflex Sheet is -70°F to +220°F (-57°C to +105°C) according to method of application. With full adhesive coverage attachment, the surface to which it is applied may operate to a limit of 180°F (82°C). When used for pipe insulation with adhesive adhering seams and joints only, AP Armaflex Sheet can be applied to lines that will operate to a limit of 220°F (105°C).

For use on cold pipes, AP Armaflex thicknesses have been calculated to control condensation on the insulation outer surface, as shown in the table of thickness recommendations on the reverse side of this sheet.

RESISTANCE TO MOISTURE VAPOR FLOW

The closed-cell structure of Armaflex Insulations effectively retards the flow of moisture vapor, and Armaflex is considered a low-transmittance vapor retarder. For many applications, Armaflex needs no supplementary protection.

Additional vapor-retarder protection may be necessary for Armaflex when installed on very low-temperature surfaces or piping or where exposed to continually high humidity conditions.

APPLICATION

AP Armaflex Sheet is installed using Armstrong 520 Adhesive. For application to large, flat or curved metal surfaces such as ducts, very large pipes, tanks, and vessels, full adhesive coverage attachment is used. For application as pipe insulation and fitting covers, only the seams and joints are adhered with adhesive. 520 Adhesive is a contact adhesive; therefore, in all cases, both surfaces to be joined are coated with adhesive.

AP Armaflex Sheet is designed for installation above ground. Indoors, no protective finish is required but may be desirable. Outdoors, a weather-resistant protective finish is to be applied. The recommended protective finish is Armstrong WB Armaflex Finish; however, other compatible finish systems are not ruled out.

Armstrong Insulation products must be installed according to "Installation of Armaflex Insulations," (publication IP-2268). Proper installation is required to assure Armaflex insulation performance.

SPECIFICATION COMPLIANCE

AP Armaflex meets:

ASTM C 534, Type II—Sheet
ASTM D 1056, 2B1
MIL-C-3133C (MIL STD 670B), Grade SBE 3
MIL-P-15280J, FORM S
CGSB CAN 2-51.49-M80
ISO 9415 [illegible]
MEC 107-99 [illegible]
CAN/ULC S-102
NFPA 90A, 90B
ASTM E 84
UL 723
NFPA 255

Armstrong 15p 8/6 MECHANICAL SYSTEMS INSULATION

INFORMATION ONLY

Fluor Contract FSC-64
OSDF Enhanced Permanent Leachate Transmission System Project
STAVER # 7052

Submittal # 641-15240-001
Reviewed By: [illegible]
Date: 3/6/01

© 1999 Armstrong World Industries, Inc.

Armstrong

ARMSTRONG WORLD INDUSTRIES
CANADA, LTD.
6911 DECARIE BLVD.
MONTREAL, QUEBEC H3W 3E5
Tel: 514 733-9981
Fax: 514 343-8185
Website: www.armaflex.com
E-mail: moreinfo@armaflex.com

ARMSTRONG WORLD INDUSTRIES, INC.
ARMSTRONG INSULATION PRODUCTS,
NORTH AMERICA
P.O. BOX 3001, LANCASTER, PA 17604
Tel: 800 866-5638 OR 717 396-4127
Fax: 800 443-9386 OR 717 396-4265
Website: www.armaflex.com
E-mail: moreinfo@armaflex.com

AP Armaflex® Sheet and Roll Insulation

Physical Properties		Test Method
Thermal conductivity, Btu • in./h • ft² • °F (W/m•K) 75°F mean temp (24°C) 90°F mean temp (32°C)	 0.27 (0.039) 0.276 (0.040)	 ASTM C 177 or C 518
Water vapor permeability, perm•in. [Kg/(s•m•Pa)]	0.08 (1.16 x 10^{-10})	ASTM E 96 Procedure A
Water absorption, % by volume	0.2	ASTM C 209
Ozone resistance	GOOD	—
Upper use limit, °F (°C) (See note 1)	180/220 (82/105)	—
Lower use limit, °F (°C) (See note 2)	-40 to -70 (-40 to -57)	—
Sizes – Sheet Width and length Thickness	 36" x 48" (.915m x1.22m) 1/8", 1/4", 3/8", 1/2", 3/4", 1", 1-1/2" & 2" (3, 6, 10, 13, 19, 25, 38 & 50mm)	—
Sizes – Roll Thickness x Length	3/8" x 100' (10mm x 30.5m) 1/2" x 70' (13mm x 21.4m) 3/4" x 50' (19mm x 15.2m) 1" x 35' (25mm x 10.7m) 1-1/2" x 25' (38mm x 7.6m)	—
Density, typical range (See note 3)	3.0 to 6.0 lbs./ft³	ASTM D 1622 or D 1667

Notes

[1]When AP Armaflex Sheet is installed by adhering butt joints and seams only, the upper temperature limit is 220°F (105°C) using 520 Adhesive. AP Armaflex Sheet adhered with *complete adhesive coverage* on flat or curved metal surfaces may be applied to surfaces that will operate as high as 180°F (82°C) using 520 Adhesive.

[2]At -20°F (-29°C), flexible AP Armaflex insulation becomes hard and, as temperatures drop below -20°F (-29°C), will be increasingly brittle; however, this hardening characteristic does not affect thermal efficiency and resistance to water vapor permeability. For applications of -40°F to -70°F (-40°C to -57°C), contact Armstrong.

[3]Reference only.

Performance approved through continuing supervision by Factory Mutual Research Corporation.

THICKNESS RECOMMENDATIONS
For Controlling Outer Insulation Surface Condensation

	Ducts—Tanks—Vessels—Equipment Metal Surface Temperature		
	50°F (10°C)	35°F (2°C)	0°F (-18°C)
BASED ON NORMAL DESIGN CONDITIONS AP Armaflex in the thicknesses noted and within the specified temperature ranges will control outer insulation surface condensation indoors under normal design conditions, a maximum severity of 85°F (29°C) and 70% RH. Armstrong research and field experience indicate that indoor conditions anywhere in the United States seldom exceed this degree of severity.	3/8" (10mm)	3/4" (19mm)	1-1/2" (38mm)
BASED ON MILD DESIGN CONDITIONS AP Armaflex in the thicknesses noted and within the specified temperature ranges will control outer insulation surface condensation indoors under mild design conditions, a maximum severity of 80°F (27°C) and 50% RH. Typical of these conditions are most air-conditioned spaces and arid climates.	1/8" (3mm)	1/4" (6mm)	1/2" (13mm)
BASED ON SEVERE DESIGN CONDITIONS AP Armaflex in the thicknesses noted and within the specified temperature ranges will control outer insulation surface condensation indoors under severe design conditions, a maximum severity of 90°F (32°C) and 80% RH. Typical of these conditions are indoor areas in which excessive moisture is introduced or in poorly ventilated confined areas where the temperature may be depressed below ambient.	1" (25mm)	1-1/2" (38mm)	2" (50mm)

Armstrong

ARMAFLEX INSULATION SYSTEMS

AP Armaflex®

SUBMITTAL SHEET

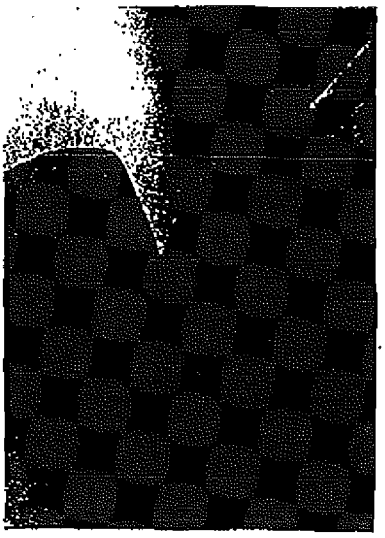

DESCRIPTION

AP Armaflex Pipe Insulation is a flexible elastomeric thermal insulation, black in color; supplied as unslit tubing, in nominal wall thicknesses of 3/8", 1/2", 3/4", and 1" (10, 13, 19 and 25 mm) in popular sizes up to 6" IPS. The expanded closed-cell structure of AP Armaflex Pipe Insulation makes it an efficient insulation.

AP Armaflex Pipe Insulation, in 3/8", 1/2", 3/4", and 1" (10, 13, 19 and 25 mm) thicknesses has a flame-spread rating of 25 or less and a smoke-developed rating of 50 or less as tested by ASTM E 84-91A and CAN/ULC-S102, "Methods of Test for Surface Burning Characteristics of Building Materials."

Numerical flammability ratings alone may not define the performance of products under actual fire conditions. They are provided only for use in the selection of products to meet limits specified.

USES

AP Armaflex Pipe Insulation is used to retard heat gain and control condensation drip from cold-water plumbing, chilled-water, and refrigeration lines. It also efficiently reduces heat flow for hot-water plumbing and liquid-heating and dual-temperature piping. The recommended temperature usage range for AP Armaflex Pipe Insulation is -70°F to +220°F (-57°C to 104°C).

For use on cold pipes, AP Armaflex Pipe Insulation thicknesses have been calculated to control condensation on the insulation outer surface, as shown in the table of thickness recommendations.

RESISTANCE TO MOISTURE VAPOR FLOW

The closed-cell structure of AP Armaflex Insulation effectively retards the flow of moisture vapor, and AP Armaflex is considered a low-transmittance vapor retarder. AP Armaflex normally requires no supplemental vapor-retarder protection. Additional vapor-retarder protection may be necessary for AP Armaflex when installed on very-low-temperature piping or where exposed to continually high humidity conditions.

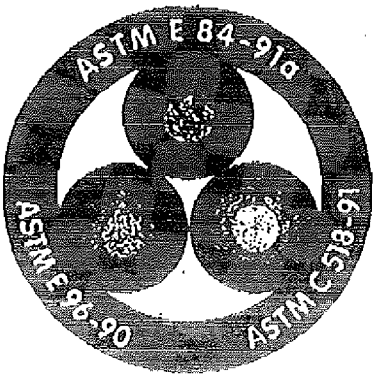

APPLICATION

AP Armaflex Pipe Insulation in unslit tubular form can be slipped onto piping before it is connected, or it can be slit lengthwise and snapped over piping already connected. Fitting covers are fabricated from miter-cut tubular form. In all cases, butt joints and seams are to be sealed with Armstrong 520 Adhesive. 520 Adhesive is a contact adhesive; therefore, in all cases, both surfaces to be joined are coated with adhesive.

AP Armaflex is designed for installation above ground. Indoors, no protective finish is required but may be desirable. Outdoors, a weather-resistant protective finish is to be applied. The recommended protective finish is Armstrong Armaflex Finish; however, other compatible finish systems are not ruled out.

Armstrong insulation products must be installed according to "Specifications—Installation of Armaflex Insulations," IP-2268. Installation defects and damages in products not installed according to these procedures are not the responsibility of Armstrong.

SPECIFICATION COMPLIANCE

AP Armaflex can be supplied upon request to meet:

ASTM C 534, Type I—Tubular
ASTM D 1056, 2B1
MIL-C-3133C (MIL STD 670B), Grade SBE 3
MIL-P-15280J, FORM T
CAN/ULC-S102
CGSB CAN 2-51.40-M80
UL 94 5V
MEA 96-85-M

Armstrong 4/94 15p MECHANICAL SYSTEMS INSULATION

© 1994 Armstrong World Industries, Inc.

Armstrong

ARMSTRONG WORLD INDUSTRIES, INC.
INSULATION PRODUCTS
P.O. BOX 3001
LANCASTER, PA 17604
Phone: 717 396-4127
Fax: 717 396-4265

ARMSTRONG WORLD INDUSTRIES
CANADA LTD.
6911 DECARIE BOULEVARD
MONTREAL, QUEBEC H3W 3E5
Phone: 514 733-9981
Fax: 514 343-8185

AP Armaflex® Pipe Insulation

Physical Properties		Test Method (See note 3)
Thermal conductivity, Btu • in./h • ft² • °F (W/m • K) 75°F mean temp (24°C) 90°F mean temp (32°C)	 0.27 (0.039) 0.276 (0.040)	 ASTM C 177 or C 518
Water vapor permeability, perm-in. [Kg/(s•m•Pa)]	0.10 (1.45 x 10^{-13})	ASTM E 96
Water absorption, % by weight	5	ASTM D 1056
Ozone resistance	GOOD	—
Upper use limit, °F (See note 1)	220 (104°C)	—
Lower use limit, °F (See note 2)	-40 (-70) -40°C (-57°C)	—
Sizes Wall thickness, (nominal) Inside diameter, tubular form Length of sections, feet, tubular form	 3/8", 1/2", 3/4", 1" (10, 13, 19, 25 mm) 3/8" ID to 6" IPS 6	 — — —

Notes

[1]On the heating cycle, AP Armaflex Pipe Insulation will withstand temperatures as high as 220°F (104°C). 520 Adhesive may be used with pipe insulation applications up to 220°F (104°C).

[2]At -20°F (-29°C), flexible AP Armaflex Insulation becomes hard and, as temperatures drop below -20°F (-29°C), will be increasingly brittle; however, this hardening characteristic does not affect thermal efficiency or water vapor permeability. For applications of -40°F to -70°F (-40°C to -57°C), contact Armstrong.

[3]ASTM method, in some cases, may be modified slightly to make results more meaningful for end-use application. If details are required, contact Armstrong.

ARMAFLEX PIPE INSULATION THICKNESS RECOMMENDATIONS

For Controlling Outer Insulation Surface Condensation (Based upon available manufactured thicknesses)

Pipe Size	Line Temperatures			
	50°F (10°C)	35°F (2°C)	0°F (-18°C)	-20°F (-29°C)
BASED ON NORMAL DESIGN CONDITIONS*				
3/8" ID through 1-1/8" ID	Nom 3/8" (10 mm)	Nom 1/2" (13 mm)	Nom 3/4" (19 mm)	Nom 1" (25 mm)
Over 1-1/8" ID through 2-1/8" ID	Nom 3/8" (10 mm)	Nom 1/2" (13 mm)	Nom 1" (25 mm)	Nom 1" (25 mm)
Over 2-1/8" ID through 2-5/8" ID	Nom 3/8" (10 mm)	Nom 1/2" (13 mm)	Nom 1" (25 mm)	Nom 1-1/4" (32 mm)
Over 2-5/8" ID through 5" IPS	Nom 1/2" (13 mm)	Nom 3/4" (19 mm)	Nom 1" (25 mm)	Nom 1-1/4" (32 mm)
BASED ON MILD DESIGN CONDITIONS**				
3/8" ID through 2-5/8" ID	Nom 3/8" (10 mm)	Nom 3/8" (10 mm)	Nom 1/2" (13 mm)	Nom 3/4" (19 mm)
Over 2-5/8" ID through 5" IPS	Nom 1/2" (13 mm)	Nom 1/2" (13 mm)	Nom 1/2" (13 mm)	Nom 3/4" (19 mm)
BASED ON SEVERE DESIGN CONDITIONS***				
3/8" ID through 1-5/8" ID	Nom 3/4" (19 mm)	Nom 1" (25 mm)	Nom 1-1/2" (38 mm)	Nom 1-1/2" (38 mm)
Over 1-5/8" ID through 3-5/8" ID	Nom 3/4" (19 mm)	Nom 1" (25 mm)	Nom 1-1/2" (38 mm)	Nom 1-3/4" (44 mm)
Over 3-5/8" ID through 5" IPS	Nom 3/4" (19 mm)	Nom 1" (25 mm)	Nom 1-1/2" (38 mm)	Nom 2" (50 mm)

NOTE: Thicknesses greater than 1" (25 mm) are multiple-layer applications.

*BASED ON NORMAL DESIGN CONDITIONS AP Armaflex in the thicknesses noted and within the specified temperature ranges will control outer insulation surface condensation indoors under normal design conditions, a maximum severity of 85°F (29°C) and 70% RH. Armstrong research and field experience indicate that indoor conditions anywhere in the United States seldom exceed this degree of severity.

**BASED ON MILD DESIGN CONDITIONS AP Armaflex in the thicknesses noted and within the specified temperature ranges will control outer insulation surface condensation indoors under mild design conditions, a maximum severity of 80°F (27°C) and 50% RH. Typical of these conditions are most air-conditioned spaces and arid climates.

***BASED ON SEVERE DESIGN CONDITIONS AP Armaflex in the thicknesses noted and within the specified temperature ranges will control outer insulation surface condensation indoors under severe design conditions, a maximum severity of 90°F (32°C) and 80% RH. Typical of these conditions are indoor areas in which excessive moisture is produced or in poorly ventilated confined areas where the temperature may be depressed below ambient.

Armstrong

ARMAFLEX INSULATION SYSTEMS

520 Adhesive

SUBMITTAL SHEET

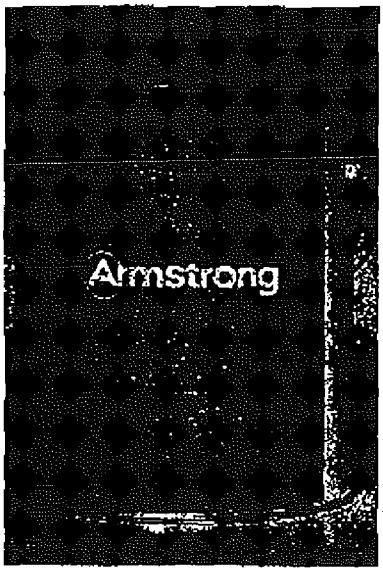

DESCRIPTION

Armstrong 520 Adhesive is an air-drying contact adhesive that is excellent for joining seams and butt joints of Armaflex® Pipe and Sheet Insulations for line temperatures up to 220°F (105°C). The adhesive may also be used to apply Armaflex Sheet Insulation to flat or curved metal surfaces that will operate at temperatures up to 180°F (82°C).

520 Adhesive meets Military Specification MIL-A-24179A and Amend-2 as Type II, Class 1. 520 Adhesive dried film also meets flammability classification requirements of codes and specifications not to exceed 25 for flame spread and 50 for smoke development when tested by ASTM E 84 Method.

OTHER USES

520 Adhesive may be used for bonding a variety of materials to many clean, dry surfaces. It will make a resilient and heat-resistant bond with many materials where the use of a solvent-base neoprene contact adhesive is suitable and desirable.

It will make a strong resilient bond for sealing laminated aluminum foil and kraft paper vapor-barrier jackets.

PROPERTIES

Color
Light tan

Net Weight
6.9 lb per gallon (828 g/l)

Composition
Synthetic rubber base with synthetic resins and fillers added; hydrocarbon- and ketone-type solvents. V.O.C. 618 g/l

Solids Content
Approximately 25% by weight

Coverage
200 sq ft (5m²/l) per gallon max, single coat (depending upon porosity of materials bonded and air temperature)

Shelf Life
1 year in original sealed container; storage temperature 60°F to 80°F (16°C to 27°C)

Minimum Drying Time
3–5 minutes under normal conditions

Temperature Limits
220°F (105°C)—Armaflex Pipe Insulation seams and joints

180°F (82°C)—full-bonding Armaflex Sheet Insulation*

Container Sizes
Half-pint and pint brush-top cans and pint, quart, and gallon containers

Fire Performance
Wet: Flash point below 20°F (-7°C) (TOC)
Dry: ASTM E 84 Method*
Applied on Asbestos—Cement Board
Flame Spread Classification 5
Smoke Developed. 15

DANGER—Extremely flammable mixture; vapors may cause flash fire; vapors may ignite explosively; prevent buildup of vapors—open all windows and doors—use only with cross ventilation; keep away from heat, sparks, and open flame; do not smoke; extinguish all flames and pilot lights; and turn off stoves, heaters, electric motors, and other sources of ignition during use and until all vapors are gone; close container after use; avoid prolonged breathing of vapor and prolonged contact with skin; do not take internally; keep away from children.

Not for consumer use. Sold only for professional or industrial application.

APPLICATION INSTRUCTIONS

Mix well contents of the container and apply only to clean, dry, oil-free surfaces. For best results, the adhesive should be brush-applied in a thin, uniform coat to both bonding surfaces. Open time of more than 10 minutes must be avoided. 520 Adhesive bonds instantly, so pieces must be positioned accurately as contact is made. Moderate pressure should then be applied to the entire bonding area to insure complete contact.

It is recommended that the adhesive be applied at temperatures above 40°F (4°C) and not on heated surfaces. Where application between 32°F and 40°F (0°C and 4°C) can not be avoided, exercise more care in applying the adhesive and closing the joint. Applications below 32°F (0°C) are not recommended.

Where lines and tanks that are insulated will operate at hot temperatures, 520 Adhesive must cure a minimum of 36 hours at room temperature to attain heat resistance for insulated pipe to 200°F (93°C) and insulated tanks and equipment to 180°F (82°C).

Adhesive-bonded seams and joints of Armaflex Pipe Insulation must cure before solvent-base finishes are applied. Where the insulation is installed by adhering seams and butt joints, the adhesive must cure 24 to 36 hours.

Adhesive-bonded seams and joints of Armaflex Sheet Insulation must cure before solvent-base finishes are applied. Where the insulation is installed by adhering seams and butt joints only, the adhesive must cure 24 to 36 hours. Where the insulation is installed against surfaces with full adhesive coverage, requiring wet adhesive at joints, the adhesive must cure seven days.

Thinning is not recommended to recover 520 Adhesive that has become thick due to solvent evaporation.

Either methyl ethyl ketone or most lacquer thinners can be used to clean fresh residue from tools and workpieces.

Armstrong 4-98 15p MECHANICAL SYSTEMS INSULATION

© 1998 Armstrong World Industries, Inc.

*Note—Numerical flammability ratings alone may not define the performance of products under actual fire conditions. They are provided only for use in the selection of products to meet the limits specified.

Armstrong World Industries, Inc.
Human Resources Department
313 W. Liberty Street, P. O. Box 3001
Lancaster, PA 17604
Telephone (717) 396-2328 or 396-2935
Division: Industry Products
Issued By: Safety, Health and
Industrial Hygiene Department

Date: 3/4/94 (replaces 4/16/93)

NFPA 704 (0 = no hazard; 4 = severe hazard)
Health = 0
Fire = 1
Reactivity = 0
Dept. of Transportation Information:
Shipping Name: Not classified
Hazard Class: N/A
N/A = Not Applicable or Not Available

N/K = None Known or Not Known
ID#: N/A

I. Product Information
   A. Product Name: AP Armaflex Products: including AP Armaflex Tube, AP Armaflex SS Tube,

      AP Armaflex Sheet and Rolls, AP Armaflex SA sheet, AP Armaflex Tape

   B. Chemical Name and Synonyms: N/A
   C. Chemical or Product Family: N/A
II. Ingredient Information
   A. Hazardous Components

      (Chemical Identity; Common Name) C.A.S. No. % OSHA PEL ACGIH TLV

      None

   B. This product is an expanded, closed-cell, sulfur-cured rubber type compound. It comes in various sizes and in several forms; e.g., pipe insulation, sheet insulation, and insulating tape.

      This product formulation does not contain asbestos.

   C. This product is classified as an "article" according to Title 29 of the Code of Federal Regulations, OSHA Part 1910.1200(c). They are formed to a specific shape or design during manufacture, has end use functions dependent upon their shape and design, and does not release any hazardous chemical under normal conditions of use.
III. Physical Data
   A. Appearance and Color: black

B. Boiling Point (degrees F): N/A
C. Vapor Pressure (mm Hg 20 degrees C): N/A
D. Vapor Density (Air = 1): N/A
E. Solubility in Water: N/A
F. Specific Gravity (HO = 1): N/A
G. Percent Volatile by Weight (30 min. @ 275 degrees F): N/A
H. Evaporation Rate (Butyl Acetate = 1): N/A
I. pH: N/A

IV. Fire and Explosion Data
A. Flash Point: N/A
B. Flammability Limits: LEL = N/A; UEL = N/A
C. Extinguishing Media: Water
D. Special Fire Fighting Procedures: Protect fire fighters from toxic products of combustion by wearing self-contained breathing apparatus.
E. Unusual Fire and Explosion Hazards: None

AP Armaflex Products: including AP Armaflex Tube, AP Armaflex SS Tube, AP Armaflex Sheet and Rolls,

AP Armaflex SA Sheet, AP Armaflex Tape (Cont'd.)

V. Health Data
A. Primary Route (s) of Entry, N/A
B. Target Organs: N/A
Effect of overexposure:. N/A
Skin and Eyes: N/A
Inhalation: N/A
C. Carcinogenic NTP: No IARC Monographs: No OSHA Regulated: No
D. Medical Conditions Generally Aggravated by Exposure: N/A
E. First Aid Procedures: N/A

Skin and Eyes: N/A

Inhalation: N/A

VI. Reactivity Data
A. Stability: N/A
B. Incompatibility: N/A
C. Hazardous Decomposition Products: N/A
D. Hazardous Polymerization: N/A

VII. Spill or Leak Procedures
A. Steps to be taken if material is released or spilled: N/A
B. Waste Disposal Method: Dispose of in accordance with federal, state, and local regulations.

VIII. Special Protection Information
A. Ventilation: N/A
B. Respiratory Protection: N/A
C. Skin and Eye Protection: N/A

IX. Special Precautions
A. Precautions to be taken in handling and storage: N/A
B. Other Precautions: N/A

Material Safety Data Sheet: 520 Adhesive

Armstrong

AP ARMAFLEX

The Basics
- News
- Who We Are
- Products
- Armaflex on the Job
- Rep Link
- Source Link

Contact Us

Help

Home

Search

Site Map

520 Adhesive

Material Safety Data Sheets are an integral part of every business. Armstrong offers a complete list of MSDS information.

Armstrong World Industries, Inc.
Human Resources Department
313 W. Liberty Street, P. O. Box 3001
Lancaster, PA 17604
Telephone (717) 396-2328 or 396-2935
Division: Industry Products
Issued By: Safety, Health and
Industrial Hygiene Department

Date: 3/19/93 (replaces 8/7/90)

NFPA 704 (0 = no hazard; 4 = severe hazard)
Health = 2
Fire = 3
Reactivity = 0

Dept. of Transportation Information:
Shipping Name: Adhesive (Hexane & Acetone)
Hazard Class: Flammable Liquid
N/A = Not Applicable or Not Available
N/K = None Known or Not Known
ID#: UN 1133
Reportable Quantity (RQ): 6667 lb.

Emergency Only Contact: CHEM-TEL-800-255-3924

© and ™
1997 Armstrong World Industries, Inc.

The content of this document is the property of Armstrong World Industries, Inc. This MSDS was published remotely. In exchange for Armstrong's providing this MSDS for remote publishing, it is agreed that the content of this document will not be varied. In case of variance, the current MSDS published by Armstrong is controlling.

I. Product Information
   A. Product Name: 520 Adhesive
   B. Chemical Name and Synonyms: N/A
   C. Chemical or Product Family: Solvent-dispersed synthetic rubber resin adhesive

II. Ingredient Information

Ingredients

(Chemical Identity; Common Name) C.A.S. No. % OSHA PEL ACGIH TLV

Acetone 67-64-1 25 750 ppm 750 ppm

Toluene 108-88-3 16 100 ppm 50 ppm
Hexane 110-54-3 34 50 ppm 50 ppm
Synthetic Rubber 9010-98-4 13 N/K N/K
Phenolic Resin N/A 9 N/K N/K
Rubber Curing Ingredients N/A 3 N/K N/K

This product formulation does not contain asbestos or polychlorinated biphenyls.

III. Physical Data
- A. Appearance and Color: Straw colored liquid with characteristic solvent odor
- B. Boiling Point (degrees F): greater than 152
- C. Vapor Pressure (mm Hg 20 degrees C): N/K
- D. Vapor Density (Air = 1): N/K
- E. Solubility in Water: negligible
- F. Specific Gravity (H_2O = 1): 0.83
- G. Percent Volatile by Weight (30 min. @ 275 degrees F): 75
- H. Evaporation Rate (Butyl Acetate = 1): N/K
- I. pH: N/A

IV. Fire and Explosion Data
- A. Flash Point: less than 20 degrees F (Pensky-Martens closed cup)
- B. Flammable Limits: LEL = N/K; UEL = N/K
- C. Extinguishing Media: Carbon dioxide, dry chemical, Halon
- D. Special Fire Fighting Procedures: Protect fire fighters from toxic products of combustion by wearing self-contained breathing apparatus.
- E. Unusual Fire and Explosion Hazards: Closed containers in a fire may rupture due to pressure build-up; use water to cool containers to prevent this.

V. Health Data
- A. Primary Route (s) of Entry: Skin, inhalation
- B. Target Organs: Skin, lungs

Effects of overexposure:

Skin and Eyes: Excessive skin contact may cause drying and cracking of the skin, and result in dermatitis. Contact with eyes will cause irritation.

Inhalation: Irritation of respiratory tract, coughing, headache, dizziness, drowsiness, nausea, uncoordinated movements.

- C. Carcinogenicity: NTP: No IARC Monographs: No OSHA Regulated: No
- D. Medical Conditions Generally Aggravated by Exposure: Any condition generally aggravated by solvents; preexisting upper respiratory and lung disease such as, but not limited to bronchitis, emphysema, and asthma.
- E. First Aid Procedures:

Skin and Eyes: Flush any skin or eye contact with plenty of water. Additionally with skin contact, wash with soap and water. Refer to physician if irritation or symptoms persist.

Inhalation: Remove to fresh air if exposed to excess concentrations of vapor. Seek medical attention if symptoms persist.

VI. Reactivity Data
- A. Stability: Stable
- B. Incompatibility: Strong oxidizing agents
- C. Hazardous Decomposition Products: Carbon monoxide, carbon dioxide, and other toxic vapors and gases that are common to thermal degradation of organic compounds.
- D. Hazardous Polymerization: Will not occur.

VII. Spill or Leak Procedures
- A. Steps to be taken if material is released or spilled: Remove all sources of ignition. Ventilate area of spill or leak; If using mechanical ventilation, make sure that it is explosion-proof or does not present an ignition source. For exposures above TLV, wear approved respiratory equipment. Contain spill, preventing it from entering sewer lines or waterways. Use absorbent to assist with the pick-up of material. Scrape up adhesive and place in container.
- B. Waste Disposal Method: Incineration or other method approved for ignitable wastes in accordance with federal, state, and local regulations.
- C. This product contains chemicals subject to the reporting requirements of 313 of Title III of the Superfund Amendment and Reauthorization Act of 1986 and 40 CFR Part 372.

VIII. Special Protection Information
- A. Ventilation: Use natural cross-ventilation, local (mechanical) pick-up, and/or general area (mechanical) ventilation to prevent an accumulation of solvent vapors, keeping in mind that the ventilation pattern must remove the heavier-than-air solvent vapors from the lower levels of the work spaces. The ventilation should be sufficient to keep the solvent vapor concentration below the TLV.
- B. Respiratory Protection: With adequate ventilation, respiratory equipment should not be needed. If adequate ventilation is not afforded, wear respiratory equipment approved for organic vapors.
- C. Skin and Eye Protection: During the manufacture and packaging of this product, impervious gloves, eye protection, and eye wash facilities may be appropriate. During normal end product use, cotton or loop-pile gloves and spectacle-type safety glasses are recommended to prevent contact with this mastic product.

IX. Special Precautions
- A. Precautions to be taken in handling and storage: Store in area suitable for flammable mixtures. Recommended storage temperature is below 90 degrees F.
- B. Other Precautions: Vapors are flammable and are heavier-than-air. Prohibit smoking and eliminate all other sources of ignition, such as regular electrical tools and appliances, making sure that pilots on gas-fired water heaters are extinguished.

WARNING: This product contains toluene, a chemical known to the state of California to cause birth defects or other reproductive harm.

The information presented herein is supplied as a guide to those who handle or use this product. Safe work practices must be employed when working with any materials. It is important that the end user makes a determination regarding the adequacy of the safety procedures employed during the use of this product.

SUPPLIER DOCUMENT SUBMITTAL

FDF PROJECT NO: 20111	CONTRACT NO: FSC - 641	SUBMITTAL NO: 15250-001	REV: 0	DATE: 06-Jul-00	PAGE 1 OF 1

FROM: The STAVER GROUP, Inc.
Ron Wood
SIGNATURE: Ron Wood

TO: FDF ENGINEERING/CONSTRUCTION DOCUMENT CONTROL (ECDC), MS 52-7
RECEIVED BY: Denise Wintz DATE: 7/6/00

QTY	DOCUMENT NUMBER	REV	DOCUMENT FAMILY PRO	H&S	MED	TRG	CON	ENG	QAC	OPER	TITLE/DESCRIPTION	SUBMITTAL TYPE DRFT	CFC	INF	ASSOCIATED SPECIFICATION	SUBMITTAL ACTION A	B	C
2	641-15250-001	0						X			Flexible Pipe Insulation		X		15250	X		

REVIEW DISTRIBUTION

NAME	MS	NAME	MS	NAME	MS
Mike Griffin	52-5				
Tim Cherry	52-5				
Jim Jenkins	52-5				
Mike Godbee	64				
Rob Kneup	52-5				
R. Scott Wheeler	52-5				
Kwasi Bain Tweneboah	64				

NO COMMENTS: COMMENTS: (PLEASE USE SPACE BELOW FOR COMMENTS OR INDICATE IF ATTACHMENTS)

MSDS + Proper Safe Work ~~Planning~~ Planning Required

RECEIVED BY: [illegible] DATE 7/13/00
(SIGN/DATE AND RETURN A COPY TO ECDC, MS 52-7)

SUBMITTAL TYPE: (BY SUPPLIER)
CFC - CERTIFIED FOR CONSTRUCTION
INF - INFORMATION/RECORD
DRFT - DRAFT/PRELIMINARY

SUBMITTAL ACTION CODE: (BY FDF)
A - Conforms to Subcontract Requirements
B - Minor Comments - Incorporate and Resubmit
C - Revise and Resubmit (SEE COMMENTS)

ORIGINAL

ENTERED

INFORMATION ONLY

THERMAL INSULATION SUBMITTALS

PERFORMANCE CONTRACTING INC.
11510 ENTERPRISE PARK DRIVE
CINCINNATI, OHIO 45241
CIN 771-9555/DAY 438-0011
P.C.I. PROJECT NUMBER: 01-01- 22-1259

PROJECT NAME: Fernald Leachate Transmission System
LOCATION: Ross, Ohio
CUSTOMER: Rieck Mechanical Services, Inc.
CONTRACT:
PREPARED BY: Raymond J. Levesque

SERVICE	LOCATION	MATERIAL	THICKNESS	JACKET	SECURED	FINISH	FITTINGS
[redacted]	ALL	FLEXIBLE ELASTOMERIC PIPE INSULATION OR SHEET	ALL- 1" THK	NONE	520 ADHESIVE	—	MITERED PIPE INSULATION GLUED WITH 520 ADHESIVE

NOTE: ATTACHED PLEASE FIND THE LITERATURE EXPLAINING THE PRODUCTS WE PROPOSE TO USE ON THIS PROJECT. DATA SHEETS (M.S.D.S.) FOR THESE PRODUCTS AND ACCESSORY ITEMS WHICH WILL BE ONSITE. PLEASE DISTRIBUTE OUR M.S.D.S. TO THE OTHER CONTRACTORS INVOLVED ON THIS PROJECT. SHOULD YOU HAVE ANY QUESTIONS REGARDING THIS SUBMITTAL, PLEASE DO NOT HESITATE TO CONTACT ME.

K VALUE @ 75 DEG MEAN TEMP.

SAFETY GEAR MUST BE WORN AT ALL TIMES

[X] A - Conforms to the Subcontract Requirements
[ ] B - Minor Comment - Incorporate and Resubmit
[ ] C - Revise and Resubmit
Sig: MW Gill Date: 7/13/00

Fluor Contract FSC-641
OSDF Enhanced Permanent Leachate
Transmission System Project
STAVER # 7052

Submittal # 641-15250-001
Reviewed By: [illegible]
Date: 7/6/00

Submission of product for review, acceptance, and comment prior to release of purchase order by RIECK MECHANICAL-ELECTRICAL SERVICES

Stanley Stasher Date 6-22-00

Armstrong

ARMAFLEX INSULATION SYSTEMS

AP Armaflex®

SUBMITTAL SHEET

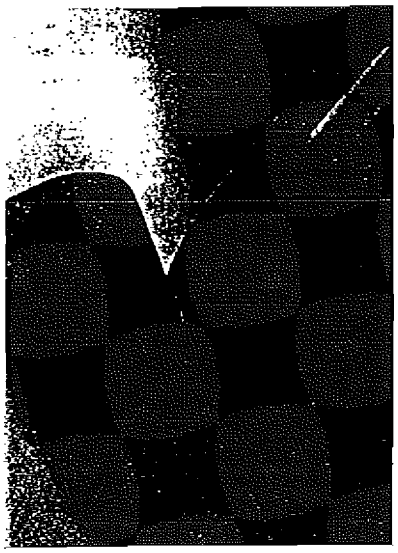

DESCRIPTION

AP Armaflex Pipe Insulation is a flexible elastomeric thermal insulation, black in color, supplied as unslit tubing, in nominal wall thicknesses of 3/8", 1/2", 3/4", and 1" (10, 13, 19 and 25 mm) in popular sizes up to 6" IPS. The expanded closed-cell structure of AP Armaflex Pipe Insulation makes it an efficient insulation.

AP Armaflex is approved through continuing supervision by Factory Mutual Research Corporation to consistently provide actual values on these key performance criteria for mechanical system insulation:

- Thermal Conductivity: 0.27
- Water Vapor Transmission: 0.10
- Fire Rating: will not contribute significantly to fire (simulated end-use testing).

AP Armaflex Pipe Insulation, in 3/8", 1/2", 3/4", and 1" (10, 13, 19 and 25 mm) thicknesses has a flame-spread rating of 25 or less and a smoke-developed rating of 50 or less as tested by ASTM E 84 and CAN/ULC S-102, "Method of Test for Surface Burning Characteristics of Building Materials."

Note: Numerical flammability ratings alone may not define the performance of products under actual fire conditions. They are provided only for use in the selection of products to meet limits specified.

USES

AP Armaflex Pipe Insulation is used to retard heat gain and control condensation drip from cold-water plumbing, chilled-water, and refrigeration lines. It also efficiently reduces heat flow for hot-water plumbing and liquid-heating and dual-temperature piping. The recommended temperature usage range for AP Armaflex Pipe Insulation is -70°F to +220°F (-57°C to 105°C).

For use on cold pipes, AP Armaflex Pipe Insulation thicknesses have been calculated to control condensation on the insulation outer surface, as shown in the table of thickness recommendations.

RESISTANCE TO MOISTURE VAPOR FLOW

The closed-cell structure of AP Armaflex Insulation effectively retards the flow of moisture vapor, and AP Armaflex is considered a low-transmittance vapor retarder. AP Armaflex normally requires no supplemental vapor-retarder protection. Additional vapor-retarder protection may be necessary for AP Armaflex when installed on very-low-temperature piping or where exposed to continually high humidity conditions.

Fire Rating — Factory Mutual System — Approved

Performance approved through continuing supervision by Factory Mutual Research Corporation.

APPLICATION

AP Armaflex Pipe Insulation in unslit tubular form can be slipped onto piping before it is connected, or it can be slit lengthwise and snapped over piping already connected. Fitting covers are fabricated from miter-cut tubular form. In all cases, butt joints and seams are to be sealed with Armstrong 520 Adhesive. 520 Adhesive is a contact adhesive; therefore, in all cases, both surfaces to be joined are coated with adhesive.

AP Armaflex is designed for installation above ground. Indoors, no protective finish is required but may be desirable. Outdoors, a weather-resistant protective finish is to be applied. The recommended protective finish is Armstrong Armaflex Finish; however, other compatible finish systems are not ruled out.

Armstrong insulation products must be installed according to "Installation of Armaflex Insulations," (publication IP-2268). Proper installation is required to assure Armaflex insulation performance.

SPECIFICATION COMPLIANCE

AP Armaflex can be supplied upon request to meet:

ASTM C 534, Type I—Tubular
ASTM D 1056, 2B1
MIL-C-3133C (MIL STD 670B), Grade SBE 3
MIL-P-15280J, FORM T
CAN/ULC S102
CGSB CAN 2-51.40-M80
UL 94 5V
MEA 96-85-M

© 1997 Armstrong World Industries, Inc.

Armstrong

ARMAFLEX INSULATION SYSTEMS

AP Armaflex®

SUBMITTAL SHEET

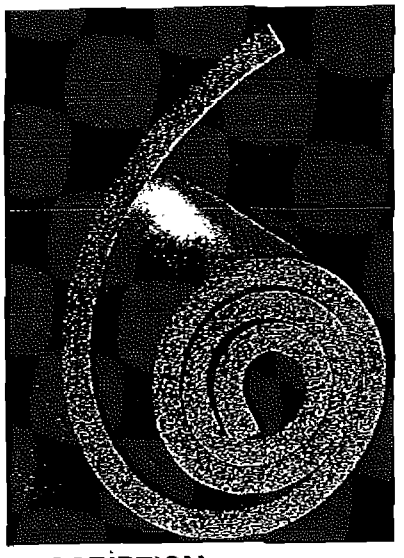

DESCRIPTION

AP Armaflex Sheet and Roll Insulation is a flexible, elastomeric thermal insulation, black in color. It is furnished with a smooth skin on one side which forms the outer exposed insulation surface. The expanded closed-cell structure of Armaflex makes it an efficient insulation.

AP Armaflex Sheet is supplied in flat sheets 36″ x 48″ (.915m x 1.220m), in thicknesses of 1/8″, 1/4″, 3/8″, 1/2″, 3/4″, 1″, 1-1/2″ and 2″ (3, 6, 10, 13, 19, 25, 38 and 50 mm). AP Armaflex Roll is supplied in 48″ wide (1.220m) continuous rolls in 3/8″, 1/2″, 3/4″, 1″, and 1-1/2″ (10, 13, 19, 25, 38 mm).

AP Armaflex is approved through continuing supervision by Factory Mutual Research Corporation to consistently provide actual values on these key performance criteria for mechanical system insulation:

Thermal Conductivity: 0.27
Water Vapor Transmission: 0.10
Fire Rating: will not contribute significantly to fire (simulated end use testing)

As tested by ASTM E 84 "Method of Test for Surface Burning Characteristics for Building Materials" and CAN/ULC S-102, AP Armaflex Sheet Insulation in thicknesses of 1/8″, 1/4″, 3/8″, 1/2″, and 3/4″ (3, 6, 10, 13, and 19 mm) has a flame-spread rating of 25 or less and a smoke-developed rating of 50 or less. 1″ (25mm) has a flame-spread rating of 25 or less and a smoke-developed rating of 100 or less.

Note: Numerical flammability ratings alone may not define the performance of products under actual fire conditions. They are provided only for use in the selection of products to meet limits specified.

USES

AP Armaflex Sheet and Roll Insulation is used for all applications that cannot be accomplished by Armstrong Pipe Insulation. It is particularly adaptable for insulating ductwork, large piping and fittings, tanks, and vessels. Its flexibility allows application to curved and irregular surfaces. AP Armaflex Sheet is very adaptable to making all types of fitting cover insulations.

The recommended temperature usage range for AP Armaflex Sheet is -70°F to +220°F (-57°C to 104°C) according to method of application. With full adhesive coverage attachment, the surface to which it is applied may operate to a limit of 180°F (82°C). When used for pipe insulation with adhesive adhering seams and joints only, AP Armaflex Sheet can be applied to lines that will operate to a limit of 220°F (104°C).

For use on cold pipes, AP Armaflex thicknesses have been calculated to control condensation on the insulation outer surface, as shown in the table of thickness recommendations on the reverse side of this sheet.

RESISTANCE TO MOISTURE VAPOR FLOW

The closed-cell structure of Armaflex Insulations effectively retards the flow of moisture vapor, and Armaflex is considered a low-transmittance vapor retarder. For many applications, Armaflex needs no supplementary protection.

Additional vapor-retarder protection may be necessary for Armaflex when installed on very low-temperature surfaces or piping or where exposed to continually high humidity conditions.

APPLICATION

AP Armaflex Sheet is installed using Armstrong 520 Adhesive. For application to large flat or curved metal surfaces such as ducts, very large pipes, tanks, and vessels, full adhesive coverage attachment is used. For application as pipe insulation and fitting covers, only the seams and joints are adhered with adhesive. 520 Adhesive is a contact adhesive; therefore, in all cases, both surfaces to be joined are coated with adhesive.

AP Armaflex Sheet is designed for installation above ground. Indoors, no protective finish is required but may be desirable. Outdoors, a weather-resistant protective finish is to be applied. The recommended protective finish is Armstrong WB Armaflex Finish; however, other compatible finish systems are not ruled out.

Armstrong insulation products must be installed according to "Installation of Armaflex Insulations," (publication IP-2268). Proper installation is required to assure Armaflex insulation performance.

SPECIFICATION COMPLIANCE

AP Armaflex can be supplied upon request to meet:

ASTM C 534, Type II—Sheet
ASTM D 1056, 2B1
MIL-C-3133C (MIL STD 670B), Grade SBE 3
MIL-P-15280J, FORM S
CGSB CAN 2-51.40-M80
UL 94 5V
MEA 107-89-M
CAN/ULC S-102

Armstrong 97 IP

© 1997 Armstrong World Industries, Inc.

Armstrong

ARMAFLEX INSULATION SYSTEMS

520 Adhesive

SUBMITTAL SHEET

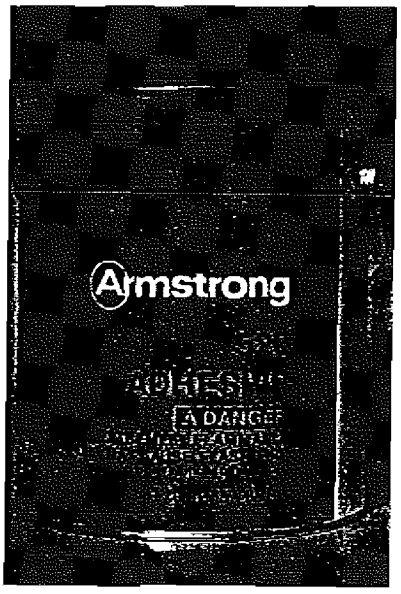

DESCRIPTION

Armstrong 520 Adhesive is an air-drying contact adhesive that is excellent for joining seams and butt joints of Armaflex® Pipe and Sheet Insulations for line temperatures up to 220°F (105°C). The adhesive may also be used to apply Armaflex Sheet Insulation to flat or curved metal surfaces that will operate at temperatures up to 180°F (82°C).

520 Adhesive meets Military Specification MIL-A-24179A and Amend-2 as Type II, Class 1. 520 Adhesive dried film also meets flammability classification requirements of codes and specifications not to exceed 25 for flame spread and 50 for smoke development when tested by ASTM E 84 Method.

OTHER USES

520 Adhesive may be used for bonding a variety of materials to many clean, dry surfaces. It will make a resilient and heat-resistant bond with many materials where the use of a solvent-base neoprene contact adhesive is suitable and desirable.

It will make a strong resilient bond for sealing laminated aluminum foil and kraft paper vapor-barrier jackets.

PROPERTIES

Color
Light tan

Net Weight
6.9 lb per gallon (828 g/l)

Composition
Synthetic rubber base with synthetic resins and fillers added; hydrocarbon- and ketone-type solvents. V.O.C. 618 g/l

Solids Content
Approximately 25% by weight

Coverage
200 sq ft (5m²/l) per gallon max, single coat (depending upon porosity of materials bonded and air temperature)

Shelf Life
1 year in original sealed container; storage temperature 60°F to 80°F (16°C to 27°C)

Minimum Drying Time
3–5 minutes under normal conditions

Temperature Limits
220°F (105°C)—Armaflex Pipe Insulation seams and joints

180°F (82°C)—full-bonding Armaflex Sheet Insulation

Container Sizes
Half-pint and pint brush-top cans and pint, quart, and gallon containers

Fire Performance
Wet: Flash point below 20°F (-7°C) (TOC)
Dry: ASTM E 84 Method*
Applied on Asbestos—Cement Board
Flame Spread Classification 5
Smoke Developed. 15

DANGER—Extremely flammable mixture; vapors may cause flash fire; vapors may ignite explosively; prevent buildup of vapors—open all windows and doors—use only with cross ventilation; keep away from heat, sparks, and open flame; do not smoke; extinguish all flames and pilot lights; and turn off stoves, heaters, electric motors, and other sources of ignition during use and until all vapors are gone; close container after use; avoid prolonged breathing of vapor and prolonged contact with skin; do not take internally; keep away from children.

Not for consumer use. Sold only for professional or industrial application.

APPLICATION INSTRUCTIONS

Mix well contents of the container and apply only to clean, dry, oil-free surfaces. For best results, the adhesive should be brush-applied in a thin, uniform coat to both bonding surfaces. Open time of more than 10 minutes must be avoided. 520 Adhesive bonds instantly, so pieces must be positioned accurately as contact is made. Moderate pressure should then be applied to the entire bonding area to insure complete contact.

It is recommended that the adhesive be applied at temperatures above 40°F (4°C) and not on heated surfaces. Where application between 32°F and 40°F (0°C and 4°C) can not be avoided, exercise more care in applying the adhesive and closing the joint. Applications below 32°F (0°C) are not recommended.

Where lines and tanks that are insulated will operate at hot temperatures, 520 Adhesive must cure a minimum of 36 hours at room temperature to attain heat resistance for insulated pipe to 200°F (93°C) and insulated tanks and equipment to 180°F (82°C).

Adhesive-bonded seams and joints of Armaflex Pipe Insulation must cure before solvent-base finishes are applied. Where the insulation is installed by adhering seams and butt joints, the adhesive must cure 24 to 36 hours.

Adhesive-bonded seams and joints of Armaflex Sheet Insulation must cure before solvent-base finishes are applied. Where the insulation is installed by adhering seams and butt joints only, the adhesive must cure 24 to 36 hours. Where the insulation is installed against surfaces with full adhesive coverage, requiring wet adhesive at joints, the adhesive must cure seven days.

Thinning is not recommended to recover 520 Adhesive that has become thick due to solvent evaporation.

Either methyl ethyl ketone or most lacquer thinners can be used to clean fresh residue from tools and workpieces.

© 1998 Armstrong World Industries, Inc.

*Note—Numerical flammability ratings alone may not define the performance of products under actual fire conditions. They are provided only for use in the selection of products to meet the limits specified

HEATING

SUPPLIER DOCUMENT SUBMITTAL

FDF PROJECT NO: 20111	CONTRACT NO: FSC - 641	SUBMITTAL NO: 15500-001	REV: 0	DATE: 20-Jul-00	PAGE 1 OF 1

FROM: The STAVER GROUP, Inc.
Ron Wood
SIGNATURE: Ron Wood

TO: FDF ENGINEERING/CONSTRUCTION DOCUMENT CONTROL (ECDC), MS 52-7
RECEIVED BY: Melissa Caffey DATE: 7-26-00

QTY	DOCUMENT NUMBER	REV	DOCUMENT FAMILY PRO	H&S	MED	TRG	CON	ENG	QAC	OPER	TITLE/DESCRIPTION	SUBMITTAL TYPE DRFT	CFC	INF	ASSOCIATED SPECIFICATION	SUBMITTAL ACTION A	B	C
8	641-15500-001	0						X			MUH-05 Unit Heater		X		15500	X		

REVIEW DISTRIBUTION

NAME	MS	NAME	MS	NAME	MS
Mike Griffin	525				
Jim Cherry	525				
Jim Jenkins	525				
Mike Godber	64				
Bob Kneip	525				
Scott Wheeler	525				
Kwasi Boa Twenboah	38				

RECEIVED
AUG 03 2000

NO COMMENTS: COMMENTS: (PLEASE USE SPACE BELOW FOR COMMENTS OR INDICATE IF ATTACHMENTS)

RECEIVED BY: [signature] DATE 8/3/00
(SIGN/DATE AND RETURN 1 COPY TO ECDC, MS 52-7)

ORIGINAL

SUBMITTAL TYPE: (BY SUPPLIER)
CFC - CERTIFIED FOR CONSTRUCTION
INF - INFORMATION/RECORD
DRFT - DRAFT/PRELIMINARY

SUBMITTAL ACTION CODE: (BY FDF)
A - Conforms to Subcontract Requirements
B - Minor Comments - Incorporate and Resubmit
C - Revise and Resubmit (SEE COMMENTS)

PROJECT: ENHANCED PERMANENT LEACHATE TRANSMISSION SYSTEM

CONTRACTOR: RIECK MECHANICAL

EQUIPMENT SUBMITTAL ON: Q-MARK ELECTRIC UNIT HEATERS

****

SHEET	CONTENTS
1	MODEL MUH 05-21 FEATURES AND PERFORMANCE
2	MODEL MUH ACCESSORIES
3	MODEL MUH INSTALLATION AND WIRING INSTRUCTIONS

SUBMITTED BY:

Andy Tepe

CONTROLLED AIR INCORPORATED
3491 MUSTAFA DRIVE
CINCINNATI, OHIO 45241

07/10/00

A3631

Submission of product for review, acceptance, and comment prior to release of purchase order by
RIECK MECHANICAL-ELECTRICAL SERVICES
Stanley Parke Date 7-18-00

[X] A - Conforms to the Subcontract Requirements
[ ] B - Minor Comment - Incorporate and Resubmit
[ ] C - Revise and Resubmit
Sig: [illegible] Date: 8/3/00

Fluor Contract FSC-641
OSDF Enhanced Permanent Leachate
Transmission System Project
STAVER # 7052

Submittal # 641-15500-001
Reviewed By: Pw
Date: 7/20/00

INFORMATION ONLY

QMARK®
A Division of Marley Electric Heating

TYPE MUH

UNIT HEATER

- **One unit mounts either horizontally or vertically.** Totally versatile. For factories, warehouses, garages, stores, shipping rooms, power stations, aircraft hangars. Can be used for primary, supplementary, spot, or dual-system heating.
- Wide range of optional control kits are field installable, increasing the MUH adaptability to the specification market.
- Forced air unit heater with 10 power ratings; from 3 Kw to 50 Kw heating output; 208, 240, 277 and 480V. 10,230 to 170,500 BTU/hr.
- 32 compatible models (no need to try to assemble a heating system from 70 to 80 models!).
- Heavy gauge die-formed steel housing. Two-toned, smartly styled.
- Advanced pull-through air flow design draws air across heating element for more even air distribution and cooler element operation.
- Specially designed venturi outlet to meet that added throw as required in vertical position.
- Branch circuit fusing (when required).
- Completely enclosed fan motor.
- 1- or 3-phase wiring on 5 through 10 Kw 208/240V and 15 Kw 208V units (field interchangeable).
- Aluminum-finned, copper clad steel sheath heating element has longer useful life, because of cooler sheath temperature and faster heat dissipation.
- 24V control transformer standard on most models, providing a safer and more accurate means of temperature control. 3 Kw and 5 Kw, 208-277V, have line voltage controls as standard. (24V control available on made-to-order basis.)
- Automatic reset linear thermal cut-out, capillary type, provides protection over entire length of element area. (Manual reset protection available on made-to-order basis.)
- 2-speed fan selector switch (25 to 50 Kw models).
- Fan delay feature eliminates cold drafts. Element heats up before fan cuts in, then fan continues to distribute heat after element shuts off.
- Ruggedly built, yet lighter weight for easier installation. No piping flues, valves, or traps.
- Meets all UL, NEC, and OSHA requirements. UL File No. E21609.
- Individually adjustable discharge louvers to control air flow.
- Choice of optional diffusers for variety of air patterns, maximizing heat concentration and coverage in the vertical position.

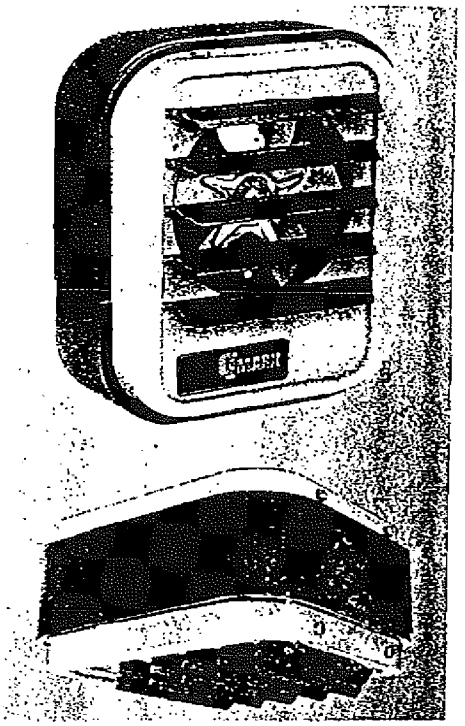

Specifications

Catalog Number	2 Stage Element Control (See Note)	ELECTRICAL DATA						AIR DELIVERY DATA			FAN MOTOR DATA			MAXIMUM EFFECTIVE MOUNTING HEIGHT		AIR THROW	Installed Weight (lbs.) with Bracket
		Kw	BTU/hr (000)	Voltage	Control Voltage (1)	Phase	Amps (3)	CFM (2)(4)	FPM (2)	Δt (°F)	Voltage	RPM (2)	HP	Horiz.	Vert.	Horiz. Air Throw	
MUH03-81	NA	3.0	10.2	208	208	1Ø	14.5	350	800	27°	208	1600	1/100	8	9	12	27
MUH03-21	NA	2.2/3.0	7.5/10.2	208/240	208/240	1Ø	11.0/12.5	350	800	27°	208/240	1600	1/100	8	9	12	27
MUH03-71	NA	3.0	10.2	277	277	1Ø	11.0	350	800	27°	277	1600	1/100	8	9	12	27
MUH03-41	NA	3.0	10.2	480	24	3Ø	3.6	350	800	27°	480	1600	1/100	8	9	12	27
MUH05-81	5A	5.0	17.0	208	208	1-3Ø	24.0	350	800	45°	208	1600	1/100	8	9	12	27
MUH05-21	5A	3.7/5.0	12.6/17.0	208/240	208/240	1-3Ø	18.0/21.0	350	800	45°	208/240	1600	1/100	8	9	12	27
MUH05-71	NA	5.0	17.0	277	277	1Ø	18.0	350	800	45°	277	1600	1/100	8	9	12	27
MUH05-41	NA	5.0	17.0	480	24	3Ø	6.0	350	800	45°	480	1600	1/100	8	9	12	27
MUH-07-8	5B	7.5	25.6	208	24	1-3Ø	36.0	650	970	37°	208	1600	1/30	9	14	18	38
MUH-07-2	5B	5.6/7.5	19.1/25.6	208/240	24	1-3Ø	27.0/31.3	650	970	37°	208/240	1600	1/30	9	14	18	38
MUH-07-7	5B	7.5	25.6	277	24	1Ø	27.0	650	970	37°	277	1600	1/30	9	14	18	38
MUH-07-4	5B	7.5	25.6	480	24	3Ø	9.0	650	970	37°	480	1600	1/30	9	14	18	38
MUH-10-8	5B	10.0	34.1	208	24	1-3Ø	48.0	650	970	49°	208	1600	1/30	9	14	18	38
MUH-10-2	5B	7.5/10.0	25.6/34.1	208/240	24	1-3Ø	36.0/42.0	650	970	49°	208/240	1600	1/30	9	14	18	38
MUH-10-7	5B	10.0	34.1	277	24	1Ø	36.0	650	970	49°	277	1600	1/30	9	14	18	38
MUH-10-4	5B	10.0	34.1	480	24	3Ø	12.0	650	970	49°	480	1600	1/30	9	14	18	38
MUH-15-8	5A	15.0	51.2	208	24	1-3Ø	72.0	910	1640	52°	208	1530	1/20	11	20	35	53
MUH-15-2	5C	11.2/15.0	38.2/51.2	208/240	24	3Ø	31.3/36.1	910	1640	52°	208/240	1530	1/20	11	20	35	53
MUH-15-4	5C	15.0	51.2	480	24	3Ø	18.0	910	1640	52°	480	1530	1/20	11	20	35	53
MUH-20-8	5A	20.0	68.2	208	24	3Ø	56.0	1320	2060	48°	208	1500	1/10	12	23	41	60
MUH-20-2	5C	15.0/20.0	51.2/68.2	208/240	24	3Ø	41.2/48.0	1320	2060	48°	208/240	1500	1/10	12	23	41	60
MUH-20-4	5C	20.0	68.2	480	24	3Ø	24.0	1320	2060	48°	480	1500	1/10	12	23	41	60
MUH-25-2	5A	18.7/25.0	63.8/85.2	208/240	24	3Ø	52.0/60.0	2100/1800	2100/2030	38°/44°	208/240	1600/1375	1/4	13	23	50	93
MUH-25-4	5C	25.0	85.2	480	24	3Ø	30.0	2100/1800	2100/2030	38°/44°	480	1600/1375	1/4	13	23	50	93
MUH-30-8	5A	30.0	102.3	208	24	3Ø	84.0	2100/1800	2100/2030	45°/53°	208	1600/1375	1/4	12	20	50	93
MUH-30-2	5A	22.5/30.0	76.7/102.3	208/240	24	3Ø	63.0/72.3	2100/1800	2100/2030	45°/53°	208/240	1600/1375	1/4	12	20	50	93
MUH-30-4	5C	30.0	102.3	480	24	3Ø	36.0	2100/1800	2100/2030	45°/53°	480	1600/1375	1/4	12	20	50	93
MUH-40-2	5A	30.0/40.0	102.3/136.4	208/240	24	3Ø	83.4/96.4	3000/2600	3260/2900	42°/49°	208/240	1525/1420	1/2	15	28	60	114
MUH-40-4	5A	40.0	136.4	480	24	3Ø	48.0	3000/2600	3260/2900	42°/49°	480	1525/1420	1/2	15	28	60	114
MUH-50-8	5A	50.0	170.5	208	24	3Ø	139.0	3000/2600	3260/2900	53°/61°	208	1525/1420	1/2	15	25	60	114
MUH-50-2	5A	37.5/50.0	127.3/170.5	208/240	24	3Ø	104.2/120.4	3000/2600	3260/2900	53°/61°	208/240	1525/1420	1/2	15	25	60	114
MUH-50-4	5A	50.0	170.5	480	24	3Ø	60.2	3000/2600	3260/2900	53°/61°	480	1525/1420	1/2	15	25	60	114

NOTE:

1. All standard units are supplied with a low voltage control transformer and contactor (24V) except MUH03 & 05, 208, 240 & 277 volt models. Low voltage control on these units is available on made-to-order. All units are also available on special order for 120 volt control, internal with transformer or external voltage transformer.
2. On dual voltage units, CFM, FPM, and RPM are shown at higher voltage.
3. On dual phase units, maximum amp draw is listed for respective voltage.
4. 25 thru 50 Kw models have two speed motors and dual CFM ratings.

5A. Standard.

5B. Optional - made-to-order - amp load unbalanced on 3 Phase.

5C. Optional - made-to-order - amp load balanced on 3 Phase.

SATELLITE CONTROL KITS INSTALL EASILY IN THE FIELD TO CLEARLY MARKED TERMINALS

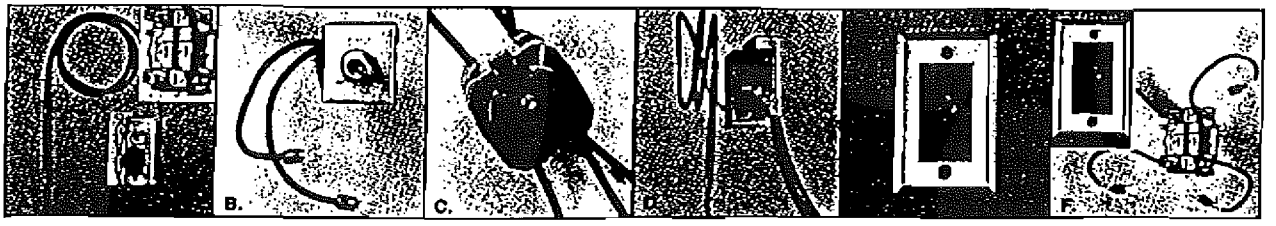

Heat recovery thermostat & low voltage relay | Summer fan switch | Power disconnect switch (25 or 63 amp) | One & two-stage thermostats | Remote manual fan switch (line voltage) | Remote manual fan switch (with relay) 24V

Specifications

Cat. No.	Accessory	Electrical Rating	Use with Heater No.
MT-1 * *	Single Pole Internal Thermostat Temp Range: 40°F—85°F	25A; 120, 240V. A.C. Res. 22A; 277V. A.C. Res.	All MUH Series Heaters (except MUH05-21 3Ø, and MUH05-81 3Ø, which use MT-2).
MT-2 * *	Two-Stage Internal Thermostat Temp Range: 40°F—85°F	25A; 120, 240V. A.C. Res. 22A; 227V. A.C. Res. 125V. A; Pilot Duty	MUH05-21 3Ø, MUH05-81 3Ø, MUH-15-8, MUH-20-8, MUH-25-2, MUH-30-2, MUH-30-8, MUH-40-2, MUH-40-4, MUH-50-2, MUH-50-4, MUH-50-8.
MCFS *	Internal Summer Fan Switch	6A; 600V. A.C. Res. 2HP; 250, 480, 600V. A.C. 1, 2, or 3Ø	All MUH Series Heaters.
MRFS-1	Remote Summer Fan Switch (Line Voltage)	2HP; 250-480V. A.C.	All MUH Series Heaters.
MRFS-2 *	Remote Summer Fan Switch with Relay (24V Coil-Single Pole Normally Open)	6 AFL, 35 ALR, 250V. A.C. 60 HZ 3 AFL, 18 ALR, 480V. A.C. 60 HZ	All MUH Series Heaters (except MUH03-21, MUH03-71, MUH03-81, MUH05-21, MUH05-71, MUH05-81 Units, unless optional control transformer is supplied).
MHRT *	Heat Recovery Thermostat with Relay (24V Coil-Single Pole Normally Open) Hi—120°F; Low—60°F	6 AFL, 35 ALR, 250V. A.C. 60 HZ 3 AFL, 18 ALR, 480V. A.C. 60 HZ	All MUH Series Heaters (except MUH03-21, MUH03-71, MUH03-81, MUH05-21, MUH05-71, MUH05-81 Units, unless optional control transformer is supplied).
MPDS-25	Power Disconnect Switch (3 Pole)	25A, 600V. A.C. Res.	MUH03-21, MUH03-41, MUH03-71, MUH03-81, MUH05-21, MUH05-41, MUH05-71, MUH05-81, MUH-07-4, MUH-10-4, MUH-15-4, MUH-20-4.
MPDS-60	Power Disconnect Switch (3 Pole)	63A, 600V. A.C. Res.	MUH-07-2, MUH-07-7, MUH-07-8, MUH-10-2, MUH-10-7, MUH-10-8, MUH-15-2, MUH-15-8 3Ø only. MUH-20-2, MUH-20-8, MUH-25-2, MUH-25-4, MUH-30-4, MUH-40-4, MUH-50-4.

NOTE: *Summer Fan Switch MCFS cannot be used with Remote Fan Switch/Relay MRFS-2 or with Heat Recovery Thermostat/Relay MHRT.
* *MHRT cannot be used with MT-1 or MT-2.

Dimension Data

Cat. No.	Height	Width	Depth
MUH-03 & 05	16"	14"	8 7/16"
MUH-07 & 10	21¾"	19"	8 7/16"
MUH-15 & 20	21¾"	19"	12¼"
MUH-25 & 30	30"	26¾"	13 1/2"
MUH-40 & 50	30"	26¾"	17½"

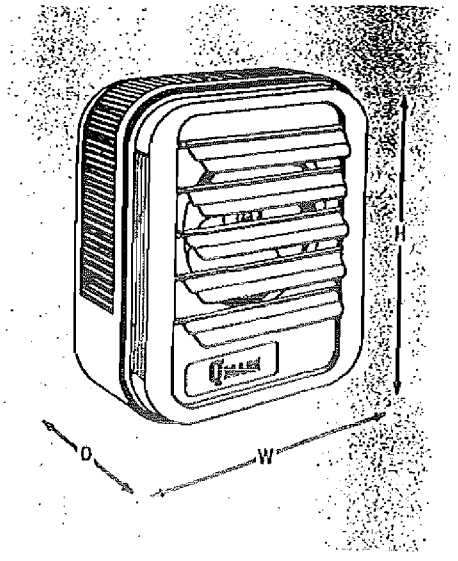

Universal Wall & Ceiling Mounting Bracket

Cat. No.	Used On
MMB-5	MUH-03 & 05
MMB-10	MUH-07 & 10
MMB-20	MUH-15 & 20
MMB-30	MUH-25 & 30
MMB-50	MUH-40 & 50

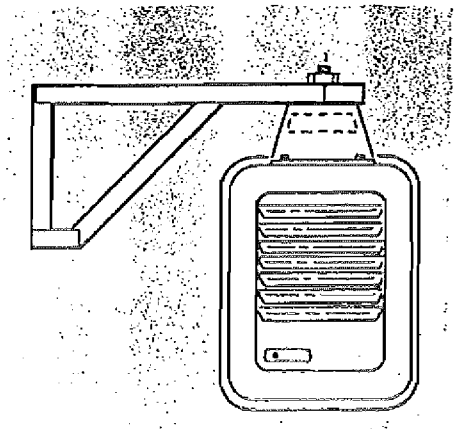

Bracket Size

DIM	3-5Kw	7.5-20Kw	25-50Kw
A	4 7/16"	7½"	9 7/16"
B	6¾"	9½"	14¼"
C	5"	7½"	12¼"
D	1 5/16"	1 11/16"	2 7/16"
E	2"	2½"	3"
L	14 11/16"	20½"	28¼"
M	6 11/16"	9 11/16"	14 11/16"
N	2½"	3½"	4½"

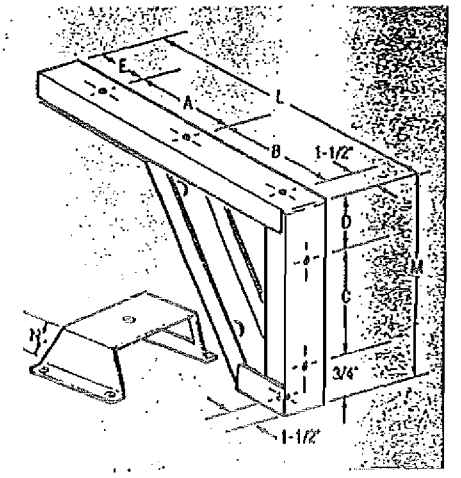

HOW TO ORDER

When ordering specify the following:
Basic Unit Heater
Qty ___ Cat. No. ___ Kw ___ Volts ___ Phase ___
Optional Control Kits
Qty ___ Cat. No. ___
Optional Mounting Bkt.
Qty ___ Cat. No. ___

IMPORTANT! !

FAILURE TO UNDERSTAND AND FOLLOW THESE INSTALLATION INSTRUCTIONS AND THE "CAUTION" NOTES THEREIN MAY RESULT IN SERIOUS PERSONAL INJURY FROM ELECTRICAL SHOCK, OR FROM THE HEATER FALLING DUE TO FAULTY MOUNTING INSTALLATION.

CAUTION

TO AVOID POSSIBLE ELECTRICAL SHOCK, BE SURE ELECTRICITY IS TURNED OFF AT MAIN SWITCH FIRST BEFORE WIRING. ALL WIRING MUST BE IN ACCORDANCE WITH LOCAL ELECTRICAL CODES AND THE HEATER MUST BE GROUNDED AS A PRECAUTION AGAINST POSSIBLE ELECTRICAL SHOCK.

DO NOT MOUNT MERCURY TYPE THERMOSTAT DIRECTLY ON UNIT. VIBRATION COULD CAUSE HEATER TO MALFUNCTION.

THE HEATER MUST BE MOUNTED AT LEAST 7' ABOVE THE FLOOR TO PREVENT ACCIDENTAL CONTACT WITH THE FAN BLADE WHICH COULD CAUSE INJURY.

THE CEILING MOUNTING STRUCTURE AND THE ANCHORING PROVISIONS MUST BE OF SUFFICIENT STRENGTH TO SUPPORT THE COMBINED WEIGHT OF THE HEATER AND MOUNTING BRACKET. (REFER TO TABLE 1 FOR WEIGHTS OF HEATER AND BRACKET.)

CAUTION—ALL BUILT-IN THERMOSTATS:

IF THE HEATER IS USED TO PREVENT PIPING OR LIQUIDS FROM FREEZING, AND IF THE THERMOSTAT IS SET BELOW 45° F., THE FAN MUST BE RUN CONTINUOUSLY.

SINGLE POLE THERMOSTATS (Available as a kit or factory installed option). Turn the knob clockwise to raise the temperature setting. The lowest temperature setting is 40° F., (full counterclockwise rotation).

TWO-STAGE THERMOSTAT (Available as a kit or factory installed option). Turn the knob clockwise to raise the temperature setting. The lowest temperature setting is 40° F., (full counterclockwise rotation). This thermostat has two live operating contacts. **Two-pole thermostats have only one live operating contact and a hazardous condition may exist if used in place of a two-stage thermostat.**

HEAT RECOVERY THERMOSTAT (Available as a kit or factory installed option). Turn the knob clockwise to raise the temperature for the fan turn on. Full counterclockwise rotation of the knob is approximately 60° F. Full clockwise rotation at the knob is approximately 120° F. The mid-point at the rotation should be approximately 90° F.

POWER DISCONNECT SWITCH (Available as a kit or factory installed option). This switch disconnects the power to the power terminal block when the handle is turned to its full counterclockwise position. The power is on when the switch handle is rotated clockwise. If for any reason the knob is removed, it should be aligned with the "OFF" mark when the switch is off (Full counterclockwise rotation).

1. Use copper conductor supply wire only when connecting to the power line. (See Figure 11.)
2. Connection to the switch pigtails should be made with compression connectors and the joint should be then well insulated.
3. Consult the local wiring code in your area.

SUMMER FAN SWITCH (MOUNTED ON BACK OF HEATER). When the switch handle is pointing toward the "FAN ON" position, the fan will run continuously. When the switch handle is pointing toward the "AUTO" position the fan will run only when the heating elements are hot.

REMOTE FAN SWITCH (MANUAL SWITCH-LINE VOLTAGE). The wall switch is packed in the wiring compartment. The remote fan switch is mounted external and remote from the MUH unit heater. The voltage of the remote fan switch is the same as the supply voltage to the MUH heater.

1. Use 14 gage copper, NEC Class 1, 600V rated insulated wire. Wiring must meet all Local and NEC requirements for 480-volt service.
2. Install the remote fan switch in standard wall box in any convenient location that is protected from traffic or other accidental damage.
3. Connect the 14 gage copper field wire to the switch lead wires with suitable connectors.
4. A ½-inch knockout is provided in the back of the heater adjacent to the control terminal board. Use a crimp-on terminal suitable for a No. 8 screw on the control terminal board. Connect one field wire terminated lead to terminal F1 and the other terminated lead to terminal F2. Refer to Figure 10 for connecting to heaters without built-in contactors. Refer to Figure 9 for connecting to heaters equipped with built-in contactors.

REMOTE FAN SWITCH (USED WITH 24-VOLT RELAY) (Available as a kit or factory installed option). The wall switch is packed in the wiring compartment.

1. Use 18 gage (min.) NEC Class 1 600V wiring that meets all Local and NEC requirements.
2. Install the wall switch in a standard wall box in any convenient location that is protected from traffic or other accidental damage.
3. Connect the field wire to the switch lead wires with suitable connectors.
4. A ½-inch knockout is provided in the back of the heater adjacent to the control terminal board. Use a crimp-on terminal suitable for a No. 8 screw on the control terminal board. Connect one field wire terminated lead to terminal "R" and the other terminated field wire lead to terminal "G". Refer to Figure 9.

MANUAL RESET LIMIT (Factory installed option only). The limit switch is located internally on the rear of the heater. On the MUH03 and MUH05 models, the access to the reset button is on the right side (when facing rear of heater); on all other models it is near the top rear of the heater.

The manual reset limit is in series with the automatic recycling protector (limit). The manual reset limit will not reset until the button is pushed in.

HEATER LOCATION INSTRUCTIONS

Arrange units so their discharge air streams:

a. are subjected to a minimum of interference from columns, machinery and partitions:
b. wipe exposed walls without blowing directly at them;
c. are directed away from room occupants in comfort heating;
d. are directed along the windward side when installed in a building exposed to a prevailing wind.

Locate thermostats on interior partition walls or posts away from cold drafts, internal heat sources and away from heater discharge air streams.

Small rooms can be heated by one unit heater. Where two walls are exposed, the heater should be mounted like this.

Large rooms require multi-unit installations. Number and capacity of units will be determined by volume of building and square feet of floor area to be heated. Arrange units to provide perimeter air circulation where each unit supports the air stream from another.

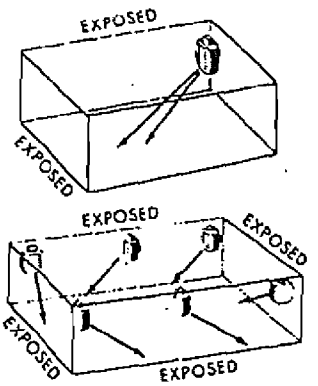

MOUNTING THE HEATER

CAUTION

TO PREVENT AN UNSAFE CONDITION, KEEP AT LEAST 5' CLEARANCE IN FRONT OF HEATER. REFER TO TABLE 2 FOR SIDE, TOP, AND BACK CLEARANCE REQUIREMENTS.

GENERAL

The heater may be mounted to discharge the heated air either horizontally or vertically. When the heater is mounted for vertical discharge, it is recommended that the heater be positioned so that the access door will open away from the wall to provide the greatest access to the wiring and control compartment. If the heater is to be mounted with the access door facing a wall, the heater must be mounted far enough from that wall to allow full opening of the access door (a distance approximately equal to the width of the heater . . . check clearance before installing). Refer to Table 2 and Figure 1 for wall and ceiling clearances before mounting the heater.

The heater may be mounted for either vertical or horizontal discharge by the use of threaded rods. (Refer to Table 3 for threaded rod sizes required.) Observe the detailed procedures in the following installation instructions.

The heater may also be suspended from the wall or ceiling by means of an optional mounting bracket (type MM8) which permits horizontal pivoting of the heater. The mounting brackets consist of two main components: the unit mounting bracket; and the wall-ceiling bracket. A pivot bolt with nut and washers is also included. Installation procedures for these mounting brackets are contained in Mechanical Accessories Installation Instructions, 5200-0707-001.

After the heater is installed, the louvers may be positioned to direct the heated air in the desired direction. When the heater is installed for horizontal discharge, the louvers should direct the air either straight ahead or downward. Directing the air upward may cause the heated air to remain in the ceiling area and waste energy.

HORIZONTAL DISCHARGE (Rod-Mount from Ceiling)

1. Remove four bolts from the threaded holes in flanges at the top of the heater.

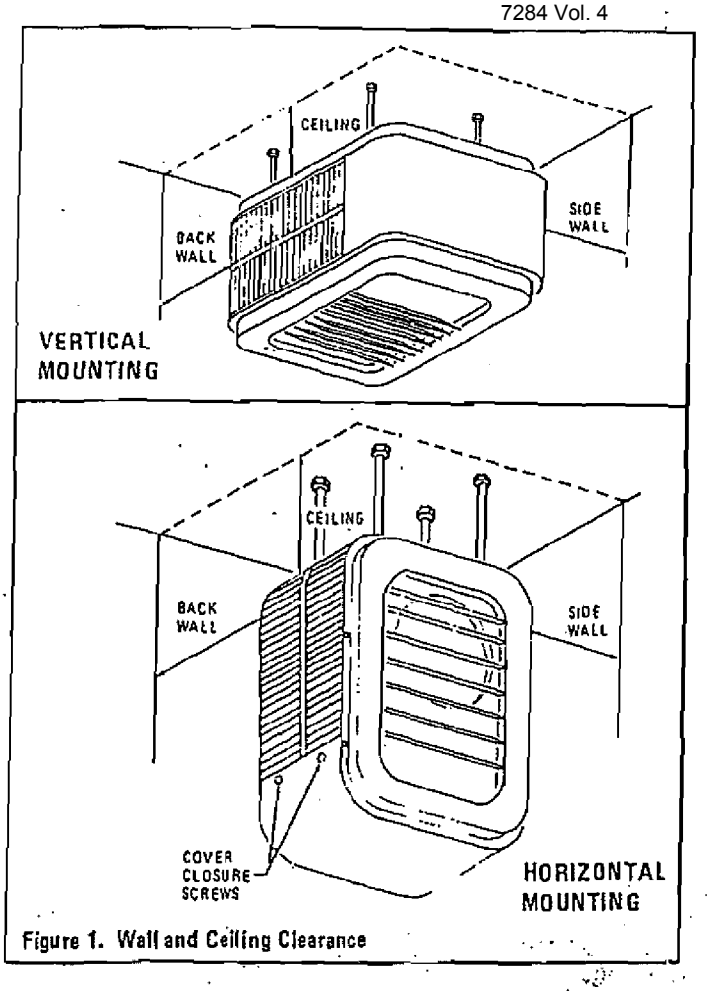

Figure 1. Wall and Ceiling Clearance

Table 2. Wall and Ceiling Clearance (Inches)

Unit	Discharge	Ceiling	Side Wall	Back Wall
3 & 5 KW	Horiz.	2	6	9
	Vert.	6	18	18
7.5-10 KW	Horiz.	6	6	13
	Vert.	6	24	24
15-20 KW	Horiz.	6	9	12-1/2
	Vert.	6	24	24
25-50 KW	Horiz.	16	12	18-1/2
	Vert.	12	36	36

2. Install four threaded mounting rods in the threaded holes and secure in place using lock nuts as shown in Figure 2. (Refer to Table 3 for mounting rod thread size).
3. Securely attach the four mounting rods to the ceiling. (Refer to Table 2 for wall and ceiling clearances, and Figure 3 for mounting spacing dimensions.)

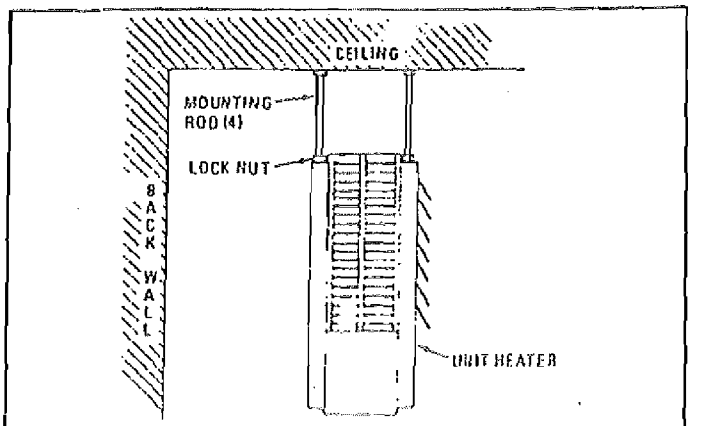

Figure 2. Horizontal Discharge Mounting

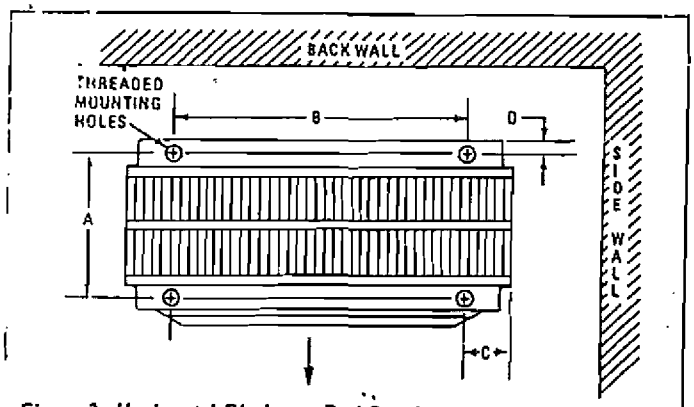

Figure 3. Horizontal Discharge Rod Spacing

Table 3. Rod Thread Type and Spacing Dimensions (inches) for Horizontal Discharge

Unit	Rod Thread Type	A	B	C	D
3-5 KW	5/16-18	6-1/16	6	4-1/16	3/4
7.5-10 KW			8-7/8	5-1/8	3/4
15-20 KW		11-3/8			
25-30 KW	3/8-16	10-9/16	14-1/2	6-3/16	5/8
40-50 KW		15-15/16	14-1/2	6-3/16	5/8

VERTICAL DISCHARGE (Rod-Mount from Ceiling)

1. Remove four bolts (if present) from the threaded holes in the back of the heater.
2. Install four threaded mounting rods in the threaded holes and secure in place using lock nuts as shown in Figure 4. (Refer to Table 3 for mounting rod thread size).
3. Securely attach the four mounting rods to the ceiling. (Refer to Table 2 for wall and ceiling clearances, and Figure 5 for mounting rod spacing dimensions.)

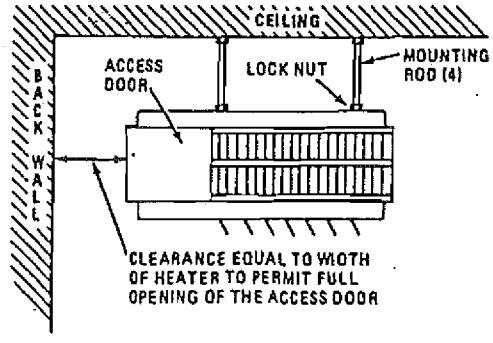

Figure 4. Vertical Discharge Mounting

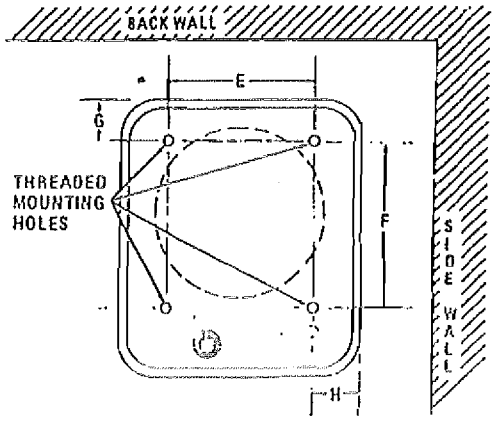

Figure 5. Vertical Discharge Rod Spacing

Table 4. Rod Thread Type and Spacing Dimensions (inches) for Vertical Discharge

Unit	Rod Thread Type	E	F	G	H
3-5 KW	5/16-18	6	9-3/4	2	4-1/16
7.5-20 KW		8-7/8	14-5/8	2	5-1/8
25-50 KW	3/8-16	14-1/2	21-1/4	2-3/16	6-3/16

WIRING

CAUTION

TO AVOID POSSIBLE ELECTRICAL SHOCK, BE SURE ELECTRICITY IS TURNED OFF AT MAIN SWITCH FIRST BEFORE WIRING. ALL WIRING MUST BE IN ACCORDANCE WITH LOCAL ELECTRICAL CODES AND THE HEATER MUST BE GROUNDED AS A PRECAUTION AGAINST POSSIBLE ELECTRICAL SHOCK.

BRANCH CIRCUIT (POWER)

1. CONNECT HEATER ONLY TO THE VOLTAGE AND FREQUENCY SPECIFIED ON THE NAMEPLATE.
2. ALL WIRING TO BE DONE IN ACCORDANCE WITH LOCAL AND NATIONAL ELECTRICAL CODES.
3. The access door is hinged. There are either one or two screws, accessible from the side, that must be loosened to gain access (Figure 7). These screws are the captive type; do not try to remove them.
4. A knockout (Figure 7) is provided in the back of the heater close to the power terminal block and the control terminal board. The control terminal board knockout is 1/2-inch conduit size. The power terminal block knockout is multiple diameter. Use the diameter that fits the required conduit size.
5. A ground terminal is provided near the power terminal board. The ground wire should be connected before other connections are made.
6. The power terminal board is equipped with box terminals sized to accept the correct size power supply wire. Wire rated at 600 V and 60°C. is satisfactory for the heater branch circuit. Either aluminum or copper wire is satisfactory for connection to the heater power terminal board box terminals. Copper wire is recommended.
7. Each heater has a wiring diagram fixed to the inside of the access door. Consult this diagram before making any field connections.
8. Single or three-phase power connections may be used with heater models MUH05-21, MUH05-81, MUH-07-2, MUH-07-8, MUH-10-2, MUH-10-8, and MUH-15-8. These heaters are factory-wired for single-phase power. To convert these heaters for use with three-phase power, reconnect the wires as indicated in the wiring diagram attached to the heater. Additional information can be found by looking at the wiring illustrations in Figures 6a and 6b.

   On models MUH05-21, MUH05-81, MUH-07-2, MUH-07-8, MUH-10-2, and MUH-10-8 (Figure 6a), move only the two wires marked "A1" and "B1"; do not move or change any other wiring. The element lead wire marked "B1", which is factory connected to the power terminal block (terminal located closest to the elements) must be moved to terminal "B" on the three-phase terminal block. The relay (contactor) lead wire "A1" must be moved from the end terminal of the power terminal block (terminal closest to the contactor or control terminal board) to the "A" terminal of the lower terminal block (center terminal).

   Model MUH-15-8 (Figure 6b) has two three-phase terminal blocks located adjacent to the relays (contactors). Move only the two wires marked "C1" and "D1" on each of

WIRIN[illegible]IAGRAMS*

*NOTE: The highest number [illegible]t is located at the rear of the heater ho[illegible]

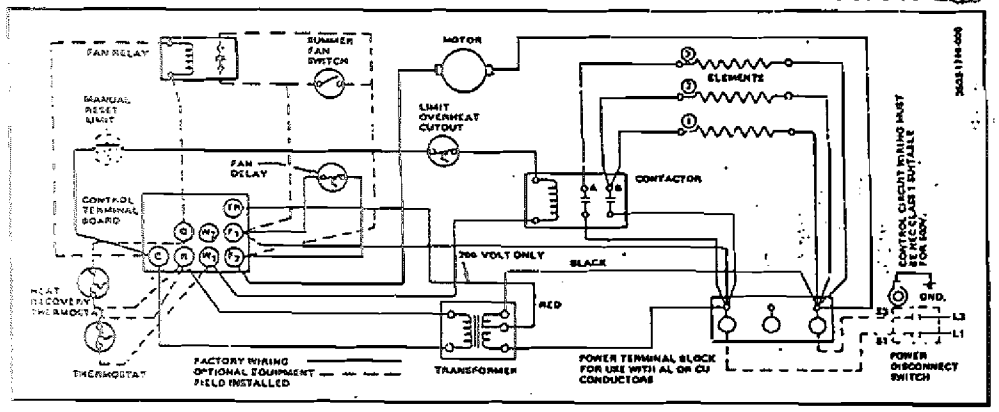

3 ELEMENT, SINGLE PHASE (Models MUH-07-7 and MUH-10-7)

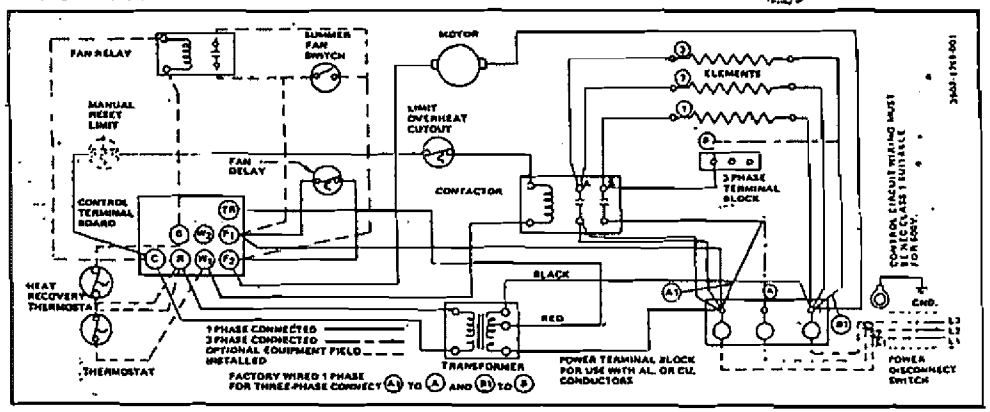

3 ELEMENT, SINGLE AND THREE PHASE (Models MUH-07-2 and MUH-10-2)

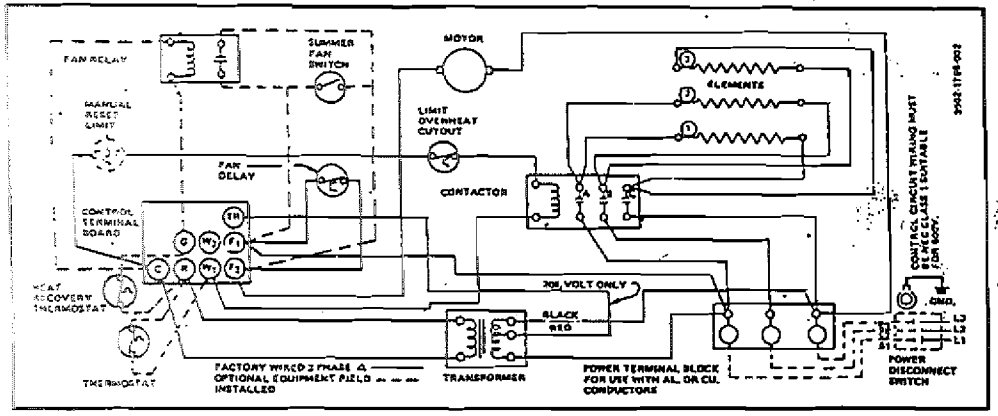

3 ELEMENT, THREE PHASE (Models MUH03-41, MUH05-41, MUH-07-4 and MUH-10-4)

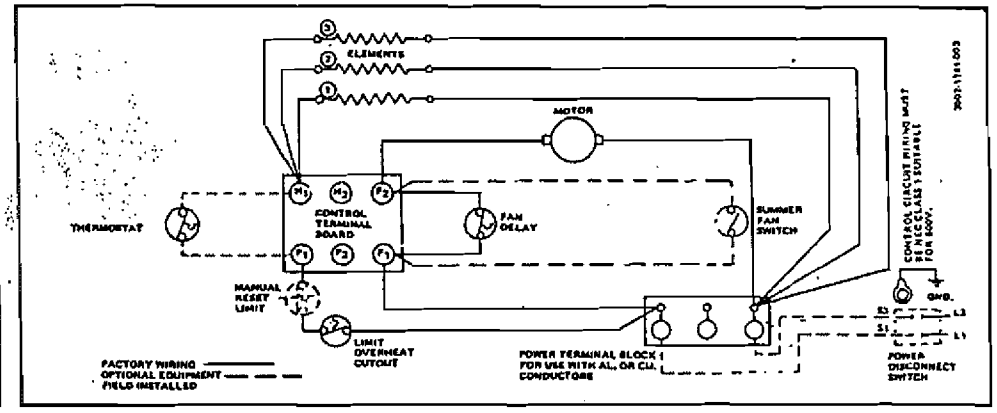

3 ELEMENT, SINGLE PHASE (Models MUH03-21, MUH03-71, MUH03-81, and MUH05-71)

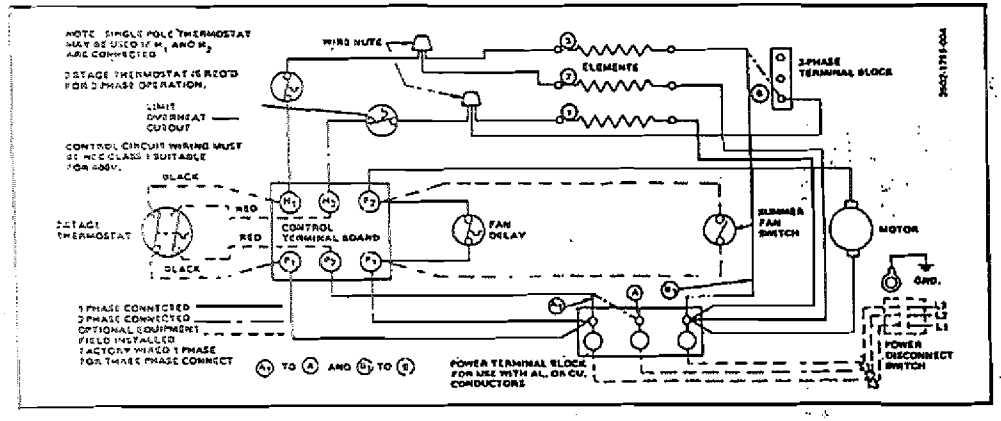

EE PHASE (Models MUH05-21 and MUH05-81)

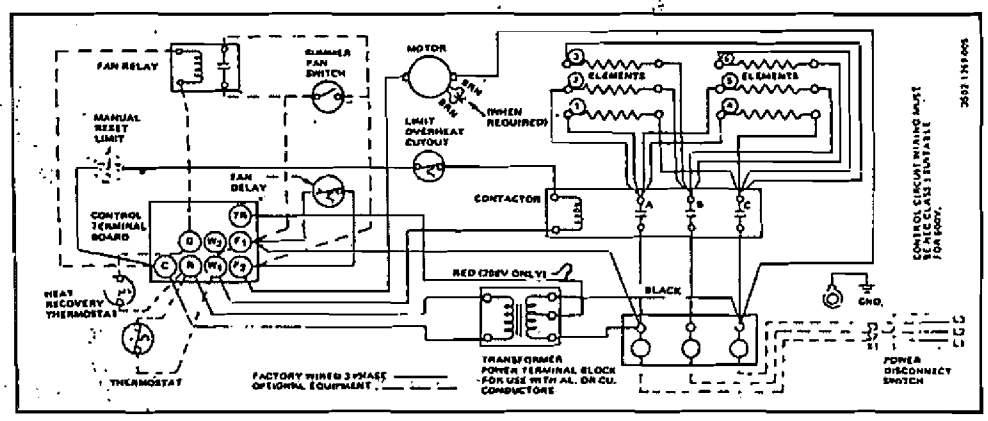

6 ELEMENT, THREE PHASE (Models MUH-15-2, MUH-15-4, MUH-20-2

SUPPLIER DOCUMENT SUBMITTAL

FDF PROJECT NO: 20111	CONTRACT NO: FSC - 64	SUBMITTAL NO: 15500-002	REV: 0	29-Jan-01	PAGE 1 OF 1

FROM: The STAVER GROUP, Inc.
Ron Wood
SIGNATURE: Ron Wood

TO: FDF ENGINEERING/CONSTRUCTION DOCUMENT CONTROL (ECDC), MS 52-7
RECEIVED BY: Erika Jones DATE: 1/29/01

QTY	DOCUMENT NUMBER	REV	DOCUMENT FAMILY PRO	H&S	MED	TRG	CON	ENG	QAC	OPER	TITLE/DESCRIPTION	SUBMITTAL TYPE DRFT	CFC	INF	ASSOCIATED SPECIFICATION	SUBMITTAL ACTION A	B	C
3	641-15500-002	0						X			Unit Heater O&M Manuals		X		15500			

REVIEW DISTRIBUTION

NAME	MS	NAME	MS	NAME	MS
Mike Griffin	52-5				
Jim Cherry	52-5				
Jim Jenkins	52-5				
Mike Godber	52-5				
Rob Kneip	52-5				
Scott Wheeler	52-5				
Kwasi Badu-Tweneboah	38				

RECEIVED
JAN 31 2001

NO COMMENTS: COMMENTS: (PLEASE USE SPACE BELOW FOR COMMENTS OR INDICATE IF ATTACHMENTS)

RECEIVED BY: Collin P. Jackson DATE 1 Feb 2001
(SIGN/DATE AND RETURN A COPY TO ECDC, MS 52-7)

SUBMITTAL TYPE: (BY SUPPLIER)
CFC - CERTIFIED FOR CONSTRUCTION
INF - INFORMATION/RECORD
DRFT - DRAFT/PRELIMINARY

SUBMITTAL ACTION CODE: (BY FDF)
A - Conforms to Subcontract Requirements
B - Minor Comments - Incorporate and Resubmit
C - Revise and Resubmit (SEE COMMENTS)

QMARK®
A Division of Marley Electric Heating

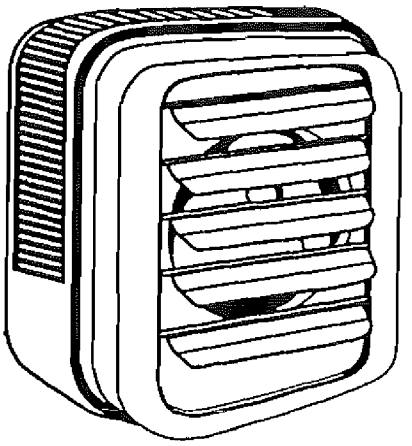

MUH Series
Modular Unit Heaters

LISTED
FILE #E21609

Installation & Maintenance Instructions

Dear Owner,

Congratulations! Thank you for purchasing this new heater manufactured by a division of Marley Electric Heating. You have made a wise investment selecting the highest quality product in the heating industry. Please carefully read and follow the installation and maintenance directions shown in this manual. You should enjoy years of efficient heating comfort with this product from Marley Electric Heating... the industry's leader in design, manufacturing, quality and service.

... The Employees of
Marley Electric Heating

⚠ WARNING ⚠

Read Carefully - These instructions are written to help you prevent difficulties that might arise during installation of heaters. Studying the instructions first may save you considerable time and money later. Observe the following procedures, and cut your mounting time to a minimum.

To reduce risk of fire or electric shock:

1. To prevent electrical shock, disconnect all power coming to heater at main service panel before wiring or servicing.
2. All wiring must be in accordance with the National and Local Electrical Codes and the heater must be grounded as a precaution against possible electric shock.
3. Verify the power supply voltage coming to heater matches the ratings printed on the heater name plate before energizing.
4. This heater is hot when in use. To avoid burns, do not let bare skin touch hot surfaces.
5. Do not insert or allow foreign objects to enter any ventilation or exhaust opening as this may cause an electric shock, fire,or damage to the heater.
6. To prevent a possible fire, do not block air intakes or exhaust in any manner. Keep combustible materials, such as crates, drapes, etc., away from heater. Do not install behind door, furniture, towels, or boxes.
7. A heater has hot and arcing or sparking parts inside. Do not use it in areas where gasoline, paint or flammable liquids are stored.
8. Use this heater only as described in this manual. Any other use not recommended by the manufacturer may cause fire, electric shock, or injury to persons.
9. This heater is not approved for use in corrosive atmospheres such as marine, green house or chemical storage areas.

SAVE THESE INSTRUCTIONS

IMPORTANT ⚠

CAUTION ⚠

THE HEATER MUST BE MOUNTED AT LEAST 7' (2134mm) ABOVE THE FLOOR TO PREVENT ACCIDENTAL CONTACT WITH THE FAN BLADE WHICH COULD CAUSE INJURY.

CAUTION ⚠

THE CEILING MOUNTING STRUCTURE AND THE ANCHORING PROVISIONS MUST BE OF SUFFICIENT STRENGTH TO SUPPORT THE COMBINED WEIGHT OF THE HEATER AND MOUNTING BRACKET. (SEE TABLE 4).

CAUTION ⚠

ALL BUILT-IN THERMOSTATS: IF THE HEATER IS USED TO PREVENT PIPING OR LIQUIDS FROM FREEZING, AND IF THE THERMOSTAT IS SET BELOW 45° F (7°C), THE FAN MUST RUN CONTINUOUSLY.

CAUTION ⚠

TO PREVENT POSSIBLE OVERHEATING OR DAMAGE DUE TO OVERHEATING, KEEP AT LEAST 5' (1524mm) CLEARANCE IN FRONT OF HEATER. REFER TO TABLE 1 FOR SIDE, TOP, AND BACK CLEARANCE REQUIREMENTS.

DO NOT MOUNT MERCURY TYPE THERMOSTAT DIRECTLY ON UNIT. VIBRATION COULD CAUSE HEATER TO MALFUNCTION.

MANUAL RESET LIMIT (FACTORY INSTALLED OPTION ONLY.) THE LIMIT SWITCH IS LOCATED INTERNALLY ON THE REAR OF THE HEATER. ON THE MUH03 AND MUH05 MODELS, THE ACCESS TO THE RESET BUTTON IS ON THE RIGHT SIDE (WHEN FACING REAR OF HEATER); ON ALL OTHER MODELS IT IS NEAR THE TOP REAR OF THE HEATER.

THE MANUAL RESET LIMIT IS IN SERIES WITH THE AUTOMATIC RECYCLING PROTECTOR (LIMIT). THE MANUAL RESET LIMIT WILL NOT RESET UNTIL THE HEATER HAS COOLED AND THE BUTTON IS PUSHED IN.

HEATER LOCATION INSTRUCTIONS

Arrange units so their discharge air streams:

a. are subjected to a minimum of interference from columns, machinery and partitions;
b. wipe exposed walls without blowing directly at them;
c. are directed away from room occupants in comfort heating;
d. are directed along the windward side when installed in a building exposed to a prevailing wind.

Locate thermostats approximately 5' (1524mm) above the floor on interior partition walls or post away from cold drafts, internal heat sources and away from heater discharge air streams.

Small rooms can be heated by one unit heater.

Large rooms require multi-unit installations. Number and capacity of units will be determined by volume of building and square feet of floor area to be heated. Arrange units to provide perimeter air circulation where each unit supports the air stream from another.

MOUNTING THE HEATER

GENERAL

The heater may be mounted to discharge the heated air either horizontally or vertically. When the heater is mounted for vertical discharge, it is recommended that the heater be positioned so that the access door will open away from the wall to provide greater access to the wiring and control compartment. If the heater is to be mounted with the access door facing a wall, the heater must be mounted far enough from that wall to allow full opening of the access door (a distance approximately equal to the width of the heater ... check clearance before installing). Refer to Table 1 for wall and ceiling clearances before mounting heater.

The heater may be mounted for either vertical or horizontal discharge by the use of threaded rods. (Refer to Table 2 for threaded rod sizes required.) Observe the detailed procedures in the following installation instructions.

The heater may also be suspended from the wall or ceiling by means of an optional mounting bracket (type MMB or MCMB) which permits horizontal pivoting of the heater.

After the heater is installed, the louvers may be positioned to

direct the heated air in the desired direction. When the heater is installed for horizontal discharge, the louvers should direct the air either straight ahead or downward. Directing the air upward may cause the heated air to remain in the ceiling area and waste energy.

HORIZONTAL DISCHARGE (Rod-mount from Ceiling)

1. Install four threaded mounting rods in the threaded holes and secure in place using lock nuts. (See Table 2).
2. Securely attach the four mounting rods to the ceiling. (Refer to Table 1 for wall and ceiling clearances, and Table 2 for mounting rod spacing).

Table 1. Wall and Ceiling Clearance, inches (mm)

Unit	Discharge	Ceiling	Side Wall	Back Wall
3 & 5 kW	Horiz.	2 (50.8)	6 (152.4)	9 (228.6)
	Vert.	6 (152.4)	18 (457.2)	18 (457.2)
7.5 to 10 kW	Horiz.	6 (152.4)	6 (152.4)	13 (330.2)
	Vert.	6 (152.4)	24 (609.6)	24 (609.6)
15 to 10 kW	Horiz.	6 (152.4)	9 (228.6)	12½ (317.5)
	Vert	6 (152.4)	24 (609.6)	24 (609.6)
25 to 50 kW	Horiz.	16 (406.4)	12 (304.8)	18½ (470.0)
	Vert.	12 (304.8)	39 (914.4)	39 (914.4)

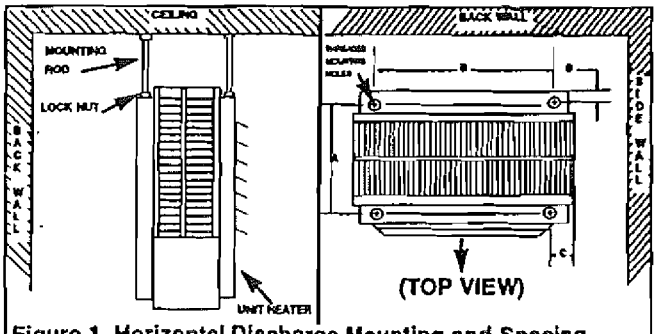

Figure 1. Horizontal Discharge Mounting and Spacing.

Table 2. Rod Thread and Spacing Dimensions, Inches (mm) for Horizontal Discharge

Unit	Rod Thread Type	A	B	C	D
3 - 5 kW	5/16 - 18	6 1/16 (153.9)	6 (152.4)	4 1/16 (103.1)	¾ (19.0)
7.5 - 10 kW			8⅞ (225.6)	5⅛ (130.3)	¾ (19.0)
15 - 20 kW		11⅜ (289.0)			
25 - 30 kW	⅝ - 16	10 9/16 (268.2)	14 - 12 (368.3)	6 3/16 (157.2)	⅝ (16.0)
40 - 50 kW		15 11/16 (404.9)	14 - 12 (368.3)	6 3/16 (157.2)	⅝ (16.0)

VERTICAL DISCHARGE (Rod-Mount from Celling)

1. Remove bolts, from the threaded holes in the back of the heater.
2. Install four threaded mounting rods in the threaded holes and and secure in place using lock nuts.
3. Securely attach the four mounting rods to the celling. (Refer to Table 1 for wall and celling clearances, and Table 3 for mounting rod spacing dimensions.)

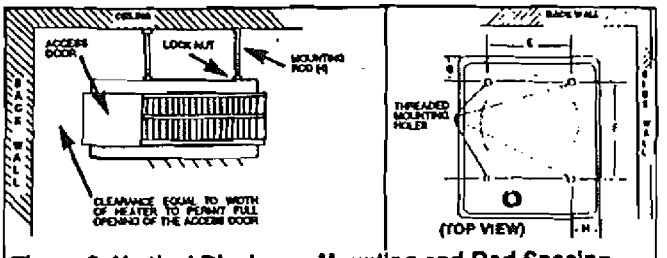

Figure 2. Vertical Discharge Mounting and Rod Spacing

Table 3. Rod Thread Type and Spacing Dimensions, Inches (mm) for Vertical Discharge

Unit	Rod Thread Type	E	F	G	H
3 - 5 kW	5/16 - 18	6 (152.4)	9¾ 247.7)	2 (50.8)	4 1/16 (103.1)
7.5 - 20 kW		8⅞ (225.6)	14⅝ (371.6)	2 (50.8)	5⅛ (130.3)
25 - 30 kW	⅝ - 16	14½ (368.3)	21¼ (539.8)	2 9/16 (56.0)	6 3/16 (157.2)

WIRING

BRANCH CIRCUIT (POWER)

1. Connect heater only to the voltage, amperage and frequency specified on the nameplate.
2. Field wiring must be properly sized to carry the amperage in accordance with the NEC.
3. The access door is hinged. There are either one or two screws accessible from the side that must be loosened to gain access. These screws are the captive type; do not try to remove them.
4. A knockout is provided in the back of the heater close to the power terminal block and the control terminal board. The control terminal board knockout is 1/2 inch (12.7 mm) conduit size. The power terminal block knockout is multiple diameter. Use the diameter that fits the required conduit size.
5. A ground terminal is provided near the power terminal board. The ground wire should be connected before other connections are made.
6. The power terminal board is equipped with box terminals sized to accept the correct size power supply wire. Wire rated at 600 V and 60° C is satisfactory for the heater branch circuit. Either aluminum or copper wire is satisfactory for connection to the heater power terminal board box terminal. Copper wire is recommended and must be used with built-in disconnect switch.

7. Each heater has a wiring diagram affixed to the inside of the access door. Consult this diagram before making any field connections.
8. Single or three-phase power connections may be used with heater models MUH0521, MUH07, MUH0581, MUH07, MUH078, MUH102, MUH108, and MUH158. These units are factory wired for single-phase operation. If these heaters are for use with three-phased power, reconnect the wires as indicated in the wiring diagram attached to the heater. Additional information can be found by looking at the wiring illustrations in Figures 3a and 3b and following the directions shown below.

On models MUH0521,MUH0581, MUH072, MUH078, MUH102, and MUH058 (Figure 3a), move only the two wires marked "A1" and marked "B1"; do not move or change any other wiring. The element lead wire marked "B1" which is factory connected to the power terminal block (terminal located closest to the elements) must be moved to terminal "B" on the three-phase terminal block.

The relay (contactor) lead wire "A1" must be moved from the end terminal of the power terminal block (terminal closest to the contactor or control terminal board) to the "A" terminal of the lower terminal block (center terminal).

Model MUH158 (Figure 3b) has two three-phase terminal blocks located adjacent to the relays (contactors). Move only the two wires marked "C1" and "D1" on each of these two three-phase terminal blocks to terminal "B". Do not move or change any other wires.

9. Electrical Accessories, either kits or factory-installed options, are shown connected by a dash line on the heater wiring diagram.
10. **208/240 VOLT HEATER.** Interchange transformer red and black primary leads (see wiring diagram) when the heater is to be connected to 208 volts supply.

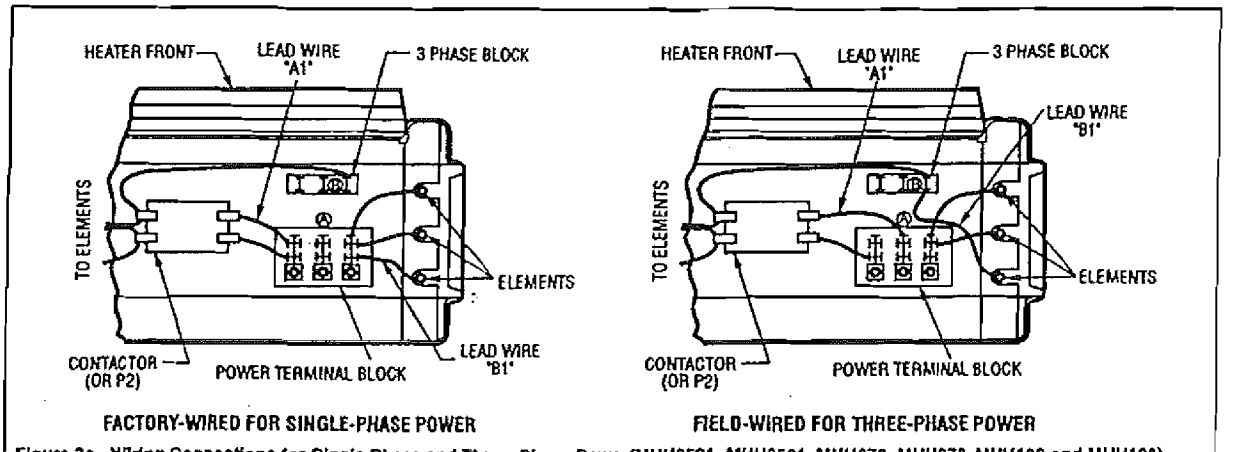

Figure 3a. Wiring Connections for Single-Phase and Three -Phase Power(MUH0521, MUH0581, MUH072, MUH078, MUH102 and MUH108)

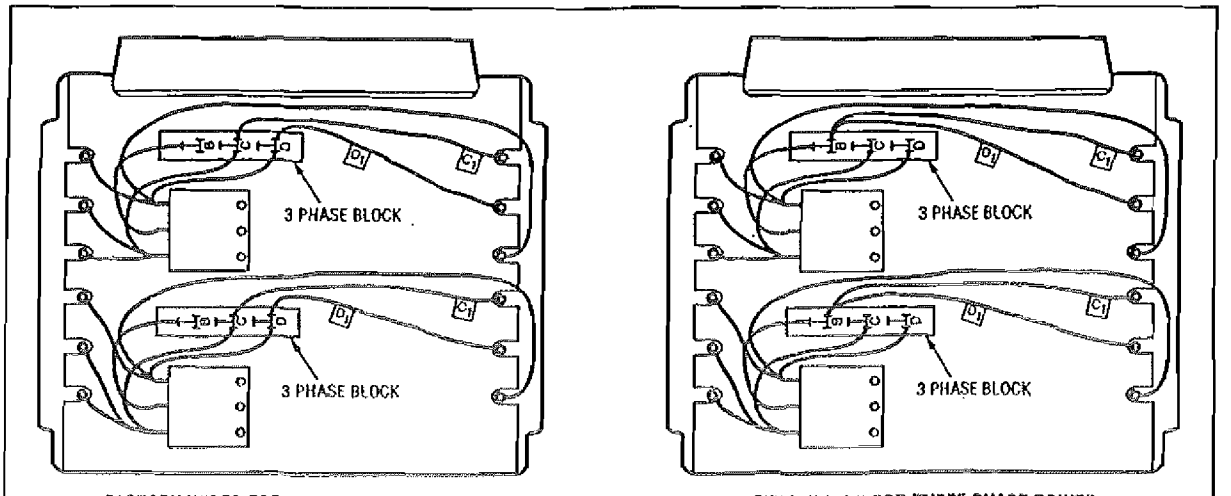

Figure 3b. Wiring Connections for Single-Phase and Three -Phase Power (MUH158)

CONTROL WIRING

WARNING

LINE VOLTAGE IS PRESENT ON SOME OF THE TERMINALS ON THE CONTROL TERMINAL BOARD. ALWAYS DISCONNECT THE POWER FROM THE HEATER BEFORE MAKING ANY CONNECTIONS TO THE CONTROL BOARD TO PREVENT ELECTRIC SHOCK HAZARD.

1. Use 600 volts, NEC Class 1 insulated wire with a minimum 18 gage for thermostats and a minimum 14 gage for line voltage motor switch (remote fan switch without relay).
2. Use a crimp-on type fork terminal on the wire end that attaches to the MUH control terminal board if more than one connection is to be made under the terminal screw.
3. Wire per Figure 4 for unit without contactors.
4. Wire per Figure 5 for unit with contactors.

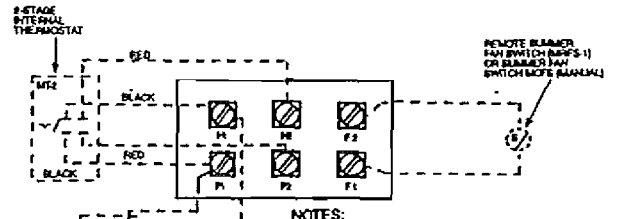

NOTES:
1. THIS STYLE CONTROL TERMINAL BOARD USED WITH MODELS MUH321, MUH371, MUH381, MUH521, MUH571, AND MUH581.
2. WHEN UNIT IS WIRED FOR SINGLE-PHASE, JUMPER H1 TO H2. IF SINGLE-POLE THERMOSTAT IS USED WITH SINGLE-PHASE UNIT, CONNECT THERMOSTAT LEADS TO P1 AND H1.
3. EXTERNAL LINE VOLTAGE THERMOSTATS SHOULD BE TREATED AS SINGLE STAGE ONLY.

Figure 4. Control Terminal Board (for Heaters Without Contactors)

Table 4. Specifications

Basic Model No.	Height in (mm)	Width in. (mm)	Depth in. (mm)	Mounting Weight lbs. (kg)	Wiring Compartment Volume
MUH0381	16 (406.4)	14 (355.6)	7½ (190.5)	27 (12.2)	90 in³ (14.70 cm³)
MUH0321				27 (12.2)	
MUH0371				27 (12.2)	
MUH0341				30 (13.6)	
MUH0581				27 (12.2)	
MUH0521				27 (12.2)	
MUH0571				27 (12.2)	
MUH0541				30 (13.6)	
MUH0331				30 (13.6)	
MUH0361				30 (13.6)	
MUH0531				30 (13.6)	
MUH0561				30 (13.6)	
MUH078	21¾ (552.5)	19 (482.6)	7½ (190.5)	38 (17.2)	100 in³ (1639 cm³)
MUH072				38 (17.2)	
MUH077				38 (17.2)	
MUH074				38 (17.2)	
MUH108				38 (17.2)	
MUH102				38 (17.2)	
MUH107				38 (17.2)	
MUH104				38 (17.2)	
MUH073				38 (17.2)	
MUH076				38 (17.2)	
MUH103				38 (17.2)	
MUH106				38 (17.2)	
MUH158	21¾ (552.5)	19 (482.6)	12¾ (323.9)	54 (24.5)	140 in³ (2295 cm³)
MUH152				50 (22.7)	
MUH154				50 (22.7)	
MUH208				60 (27.2)	
MUH202				55 (24.9)	
MUH204				55 (24.9)	
MUH156				55 (24.9)	
MUH206				55 (24.9)	
MUH252	30 (76.2)	26⅝ 676.4)	11¾ (298.5)	89 (40.4)	504 in³ (8260 cm³)
MUH254				89 (40.4)	
MUH308				89 (40.4)	
MUH302				89 (40.4)	
MUH304				89 (40.4)	
MUH256				89 (40.4)	
MUH306				89 (40.4)	
MUH402	30 (76.2)	26⅝ 676.4)	17¼ (435.1)	119 (54.0)	648 in³ (10620 cm³)
MUH404				119 (54.0)	
MUH508				119 (54.0)	
MUH502				119 (54.0)	
MUH504				119 (54.0)	
MUH406				119 (54.0)	
MUH506				119 (54.0)	

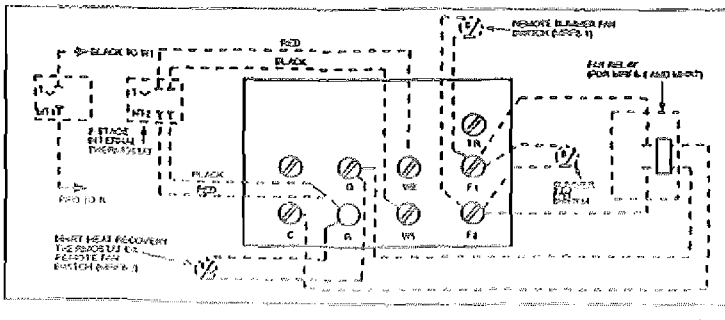

NOTES:
1. THIS STYLE CONTROL TERMINAL BOARD USED WITH MODELS EXCEPT MUH321, MUH371, MUH381, MUH521, MUH571, AND MUH581.
2. REMOVE JUMPER W1 TO W2 WHEN 2-STAGE THERMOSTAT IS USED.
3. *ONLY ONE OF THESE ACCESSORIES MAY BE INSTALLED IN A SINGLE HEATER.
4. EXTERNAL LINE VOLTAGE THERMOSTATS SHOULD BE TREATED AS SINGLE STAGE ONLY.

Figure 5. Control Terminal Board (for Heaters With Contactors)

IMPORTANT INFORMATION

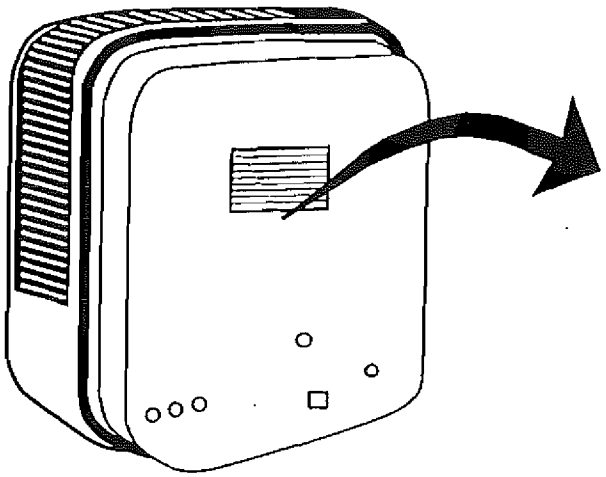

NAMEPLATE

MODEL NO. MUH321
MFG. NO.

DATE CODE 0395

VOLTS AC 60 HZ	KILOWATTS	PHASE	MIN. SUPPLY CIR. AMPACITY
208 / 240	2.2 /3	1	

MAX. FUSE	MOTOR		CONTROLS	CUSTOMER NO
	VAC	AMP	VAC	
	208/240	.25	208/240	

AIR FLOW	MINIMUM MOUNTING CLEARANCE SIDE	BACK	CEILING	FLOOR
HORIZ.	6"	9.5"	2"	7'
VERT.	18"	18"	6"	7'

WARNING: DO NOT TURN LOUVERS ABOVE LEVEL OF THE UNIT. DISCONNECT POWER BEFORE SERVICING. IF EXTERNAL CONTROL IS USED, ALSO DISCONNECT EXTERNAL POWER SUPPLY.

NE PAS RELEVER LES LAMES AU-DEL A DU NIVEAU PREVU DE L'APPAREIL. METTRE HORS TENSION AVANT DE PROCEDER A L'ENTRETIEN. SI UNE COMMANDE EXTERNE EST UTILISEE, COUPER AUSSE L'ALIMENTATION EXTERNE. ASSURER UN DEGAGEMENT D'AU MOINS 6 PI ENTRE L'APPAREIL DE CHAUFFAGE ET LEPLANCHER.

774G LISTED AIR HEATER

MARLEY ELCTRIC HEATING
BENNETTSVILLE, SC 29512

4104-0275-036

LIMITED WARRANTY

All products manufactured by Marley Electric Heating are warranted against defects in workmanship and materials for one year from date of installation, except heating elements which are warranted against defects in workmanship and materials for five years from date of installation. This warranty does not apply to damage from accident, misuse, or alteration; nor where the connected voltage is more than 5% above the nameplate voltage; nor to equipment improperly installed or wired or maintained in violation of the product's installation instructions. All claims for warranty work must be accompanied by proof of the date of installation.

The customer shall be responsible for all costs incurred in the removal or reinstallation of products, including labor costs, and shipping costs incurred to return products to Marley Electric Heating Service Center.Within the limitations of this warranty, inoperative units should be returned to the nearest Marley authorized service center or the Marley Electric Heating Service Center, and we will repair or replace, at our option, at no charge to you with return freight paid by Marley. It is agreed that such repair or replacement is the exclusive remedy available from Marley Electric Heating.

THE ABOVE WARRANTIES ARE IN LIEU OF ALL OTHER WARRANTIES EXPRESSED OR IMPLIED AND ALL IMPLIED WARRANTIES OF MERCHANTABILITY AND FITNESS FOR A PARTICULAR PURPOSE WHICH EXCEED THE AFORESAID EXPRESSED WARRANTIES ARE HEREBY DISCLAIMED AND EXCLUDED FROM THIS AGREEMENT. MARLEY ELECTRIC HEATING SHALL NOT BE LIABLE FOR CONSEQUENTIAL DAMAGES ARISING WITH RESPECT TO THE PRODUCT, WHETHER BASED UPON NEGLIGENCE, TORT, STRICT LIABILITY, OR CONTRACT.

Some states do not allow the exclusion or limitation of incidental or consequential damages, so the above exclusion or limitation may not apply to you. This warranty gives you specific legal rights, and you may also have other rights which vary from state to state.

For the address of your nearest authorized service center, contact Marley Electric Heating in Bennettsville, SC, at 1-800-642-4328. Merchandise returned to the factory must be accompanied by a return authorization and service identification tag, both available from Marley Electric Heating. When requesting return authorization, include all catalog numbers shown on the products.

HOW TO ORDER REPAIR PARTS

In order to obtain any needed repair or replacement parts, warranty service or technical information, please contact Marley Electric Heating Service Center toll-free by calling 1-800-642-HEAT.

When ordering repair parts, always give the information listed as follows:

1. The Part Number
2. The Model Number
3. The Part Description
4. Date of Manufacture

Marley Electric Heating
A United Dominion Company
470 Beauty Spot Rd. East
Bennettsville, SC 29512 USA

Part No. 5200-0722-009

ECR 33386
2/97

MUH REPLACEMENT PARTS

MUH

Built-in Controls

Key No.	Description	Part Number
1	Thermostat, One Pole (MT-1)	5813-0036-000
	Thermostat, Two Stage (MT-2)	5813-0035-000
2	Knob, Thermostat	3301-0060-000
3	Label, Thermostat	3502-1781-000
4	Screws, Fl. Hd., 6-32 x 1/4	5202-7009-021
5	Clip, Thermostat	1403-0041-000
6	Switch, 25A, OEM	5216-0132-000
	Switch, 25A, K & N	5216-0204-000
	Switch, 63A, OEM	5216-0131-000
	Switch, 63A, K & N	5216-0203-000
	Switch 25A, Electro	5216-0200-000
7	Screw, M4 x 10, Rd. Hd., (25A)	—
	Screw, 63A, M5 x 16, Rd. Hd.	—
8	Knob, 25A, OEM "T1"	OEM "T1"
	Knob, 25A, K & N	K & N S1B 6001
	Knob, 63A, OEM	OEM "S4"
	Knob, 63A, K & N	K & N S2B G001
	Knob, Electro	EI 141747
9	Switch, Toggle, 600V	5216-0130-000
10	Relay, Fan, 24V Coil	5018-0008-000
11	Switch Assembly	5216-0199-000
12	Manual Reset Limit	4520-0012-000

Heater Replacement Parts

Key No.	Description	Part Number
1	Spring, Element (used on MUH03 thru MUH-20 only)	5208-0073-000
	Spring, Element (used on MUH-25 thru MUH-50 only)	5208-0073-001
2	Spring, Capillary Tube	5208-0072-000
3	Spring, Element Retainer	5208-0074-000
4	Switch (used on MUH-25 thru MUH-50 only)	5216-7076-001
5	Insulator (used on MUH-25 thru MUH-50 only)	2900-0031-000
6	Bracket Extension (used on MUH-15, MUH-20, MUH-40 and MUH-50 only)	1215-0282-000
7	Switch Bracket	1215-0256-000
8	Fan Delay Protector	4520-0010-000
14	Speed Nut	4100-7036-026
15	Bracket, Captive Screw (used on MUH-03 thru MUH-20 only)	1215-0291-000
	Bracket, Captive Screw (used on MUH-25 thru MUH-50 only)	1215-0289-000
17	Protector, Linear Limit (used on MUH03 thru MUH05 only)	4520-0011-000
	Protector, Linear Limit (used on MUH-07 thru MUH-20 only)	4520-0011-001
	Protector, Linear Limit (used on MUH-25 thru MUH-50 only)	4520-0011-002
20	Clamp (used on MUH-20 thru MUH-50 only)	1417-5004-000
	Bracket, Mounting Capacitor (used on MUH-20-8 only)	1215-0314-000
22	Terminal Lug (used on MUH-07 thru MUH-50 only)	3504-7002-001
25	Bushing (used on MUH-20 thru MUH-50 only)	25221-60131
26	Washer, Ground (used on MUH03 thru MUH05 only)	6401-0084-000
27	Screw, Ground (used on MUH03 thru MUH05 only)	5202-0290-002
28	Louver (used on MUH03 thru MUH05 only)	3503-0036-000
	Louver (used on MUH-07 thru MUH-20 only)	3503-0036-001
	Louver (used on MUH-25 thru MUH-50 only)	3503-0036-002
29	Spring, Louver	5208-7005-001
32	Terminal Block, 3-Phase (used on MUH05-21, MUH-07-02, and MUH-10-2 only)	5823-0003-000
	Terminal Block, 3-Phase (used on MUH05-81, MUH-07-8, and MUH-15-8 only)	5823-0003-000
33	Terminal Doublers (used where required)	5819-7012-005

BUILT-IN CONTROLS — Made-to-Order Units Only

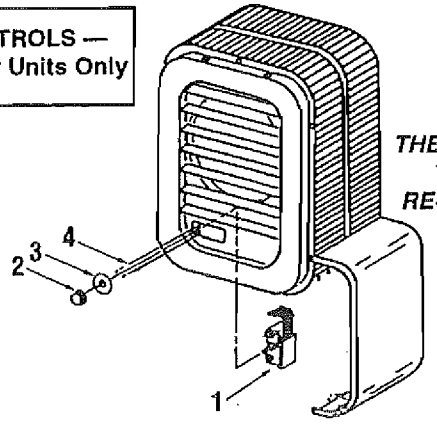

SINGLE-POLE THERMOSTAT, TWO-STAGE THERMOSTAT, HEAT RECOVERY THERMOSTAT

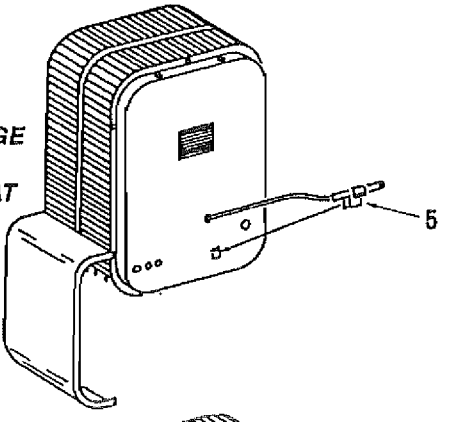

POWER DISCONNECT SWITCH

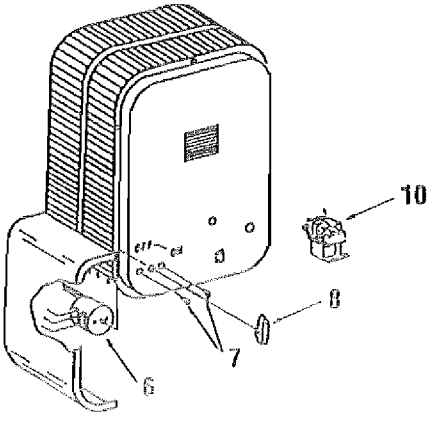

SUMMER FAN SWITCH

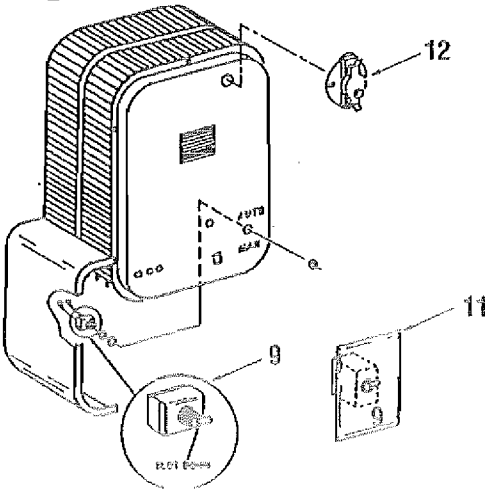

MUH (Con't.)

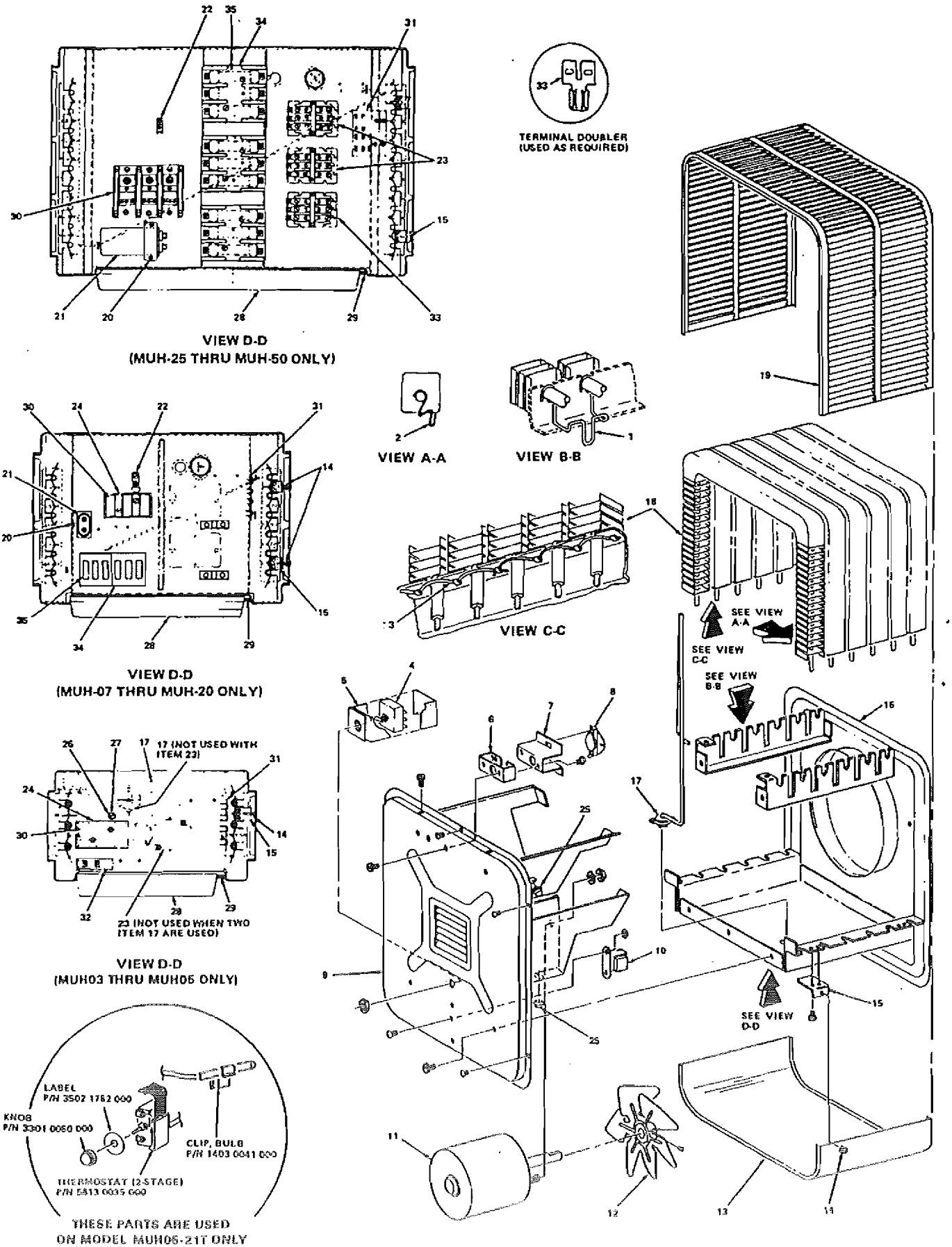
VIEW D-D
(MUH-25 THRU MUH-50 ONLY)
TERMINAL DOUBLER
(USED AS REQUIRED)
VIEW A-A
VIEW B-B
VIEW C-C
VIEW D-D
(MUH-07 THRU MUH-20 ONLY)
17 (NOT USED WITH ITEM 23)
23 (NOT USED WHEN TWO ITEM 17 ARE USED)
VIEW D-D
(MUH03 THRU MUH05 ONLY)
SEE VIEW A-A
SEE VIEW C-C
SEE VIEW B-B
SEE VIEW D-D
LABEL
P/N 3502 1762 000
KNOB
P/N 3301 0060 000
CLIP, BULB
P/N 1403 0041 000
THERMOSTAT (2-STAGE)
P/N 5813 0035 000
THESE PARTS ARE USED
ON MODEL MUH05-21T ONLY

MUH (Con't.)

Model No.	⑨ Back Case	⑩ Transformer**	⑪ Motor	⑫ Fan Blade	⑬ Cover	⑯ Front Case	⑱ Element Assy.	⑲ Element Guard	㉑ Capacitor
MUH03-21	1425-2004-000	–	3900-2002-006	1210-2000-000	1402-0336-001	1425-0009-005	1802-0087-000	2504-0011-000	–
MUH03-41	1425-2004-000	5814-0003-002	3900-2005-000	1210-2000-000	1402-0336-001	1425-0009-005	1802-0087-002	2504-0011-000	–
MUH03-71	1425-2004-000	–	3900-2002-007	1210-2000-000	1402-0336-001	1425-0009-005	1802-0087-001	2504-0011-000	–
MUH03-81	1425-2004-000	–	3900-2002-006	1210-2000-000	1402-0336-001	1425-0009-005	1802-0087-024	2504-0011-000	–
MUH05-21	1425-2004-000	–	3900-2002-006	1210-2000-000	1402-0336-001	1425-0009-005	1802-0087-003	2504-0011-000	–
MUH05-41	1425-2004-000	5814-0003-002	3900-2005-000	1210-2000-000	1402-0336-001	1425-0009-005	1802-0087-005	2504-0011-000	–
MUH05-71	1425-2004-000	–	3900-2002-007	1210-2000-000	1402-0336-001	1425-0009-005	1802-0087-004	2504-0011-000	–
MUH05-81	1425-2004-000	–	3900-2002-006	1210-2000-000	1402-0336-001	1425-0009-005	1802-0087-025	2504-0011-000	–
MUH-07-2	1425-0010-004	5814-0003-000	3900-2014-002	1210-0090-000	1402-0339-002	1425-0009-006	1802-0087-006	2504-0013-001	–
MUH-07-4	1425-0010-004	5814-0003-002	3900-0347-005	1210-0090-000	1402-0339-002	1425-0009-006	1802-0087-008	2504-0013-001	–
MUH-07-7	1425-0010-004	5814-0003-001	3900-2014-003	1210-0090-000	1402-0339-002	1425-0009-006	1802-0087-007	2504-0013-001	–
MUH-07-8	1425-0010-004	5814-0003-000	3900-2014-001	1210-0090-000	1402-0339-002	1425-0009-006	1802-0087-031	2504-0013-001	–
MUH-10-2	1425-0010-004	5814-0003-000	3900-2014-002	1210-0090-000	1402-0339-002	1425-0009-006	1802-0087-031	2504-0013-001	–
MUH-10-4	1425-0010-004	5814-0003-002	3900-0347-005	1210-0090-000	1402-0339-002	1425-0009-006	1802-0087-011	2504-0013-001	–
MUH-10-7	1425-0010-004	5814-0003-001	3900-2014-003	1210-0090-000	1402-0339-002	1425-0009-006	1802-0087-010	2504-0013-001	–
MUH-10-8	1425-0010-004	5814-0003-000	3900-2014-001	1210-0090-000	1402-0339-002	1425-0009-006	1802-0087-036	2504-0013-001	–
MUH-15-2	1425-0014-000	5814-0003-000	3900-0361-000	1210-0090-001	1402-0339-003	1425-0009-007	1802-0087-012	2504-0012-001	–
MUH-15-4	1425-0014-000	5814-0003-002	3900-0361-001	1210-0090-001	1402-0339-003	1425-0009-007	1802-0087-013	2504-0012-001	–
MUH-15-8	1425-0014-000	5814-0003-000	3900-0361-002	1210-0090-001	1402-0339-003	1425-0009-009	1802-0087-031	2504-0012-001	–
MUH-20-2	1425-0013-000	5814-0003-000	3900-0362-000	1210-0096-000	1402-0339-003	1425-0009-007	1802-0087-014	2504-0012-001	1432-0002-003
MUH-20-4	1425-0013-000	5814-0003-002	3900-0362-001	1210-0096-000	1402-0339-003	1425-0009-007	1802-0087-015	2504-0012-001	1432-0002-003
MUH-20-8	1425-0013-000	5814-0003-000	3900-0362-002	1210-0096-000	1402-0339-003	1425-0009-011	1802-0087-026	2504-0012-001	1432-0002-003
MUH-25-2	1425-0011-003	5814-0003-000	3900-0364-000	1210-0098-000	1402-0340-002	1425-0012-003	1802-0087-016	2504-0014-001	1432-0002-001
MUH-25-4	1425-0011-003	5814-0003-002	3900-0363-001	1210-0098-000	1402-0340-002	1425-0012-003	1802-0087-017	2504-0014-001	1432-0002-003
MUH-30-2	1425-0011-003	5814-0003-000	3900-0364-000	1210-0098-000	1402-0340-002	1425-0012-003	1802-0087-018	2504-0014-001	1432-0002-001
MUH-30-4	1425-0011-003	5814-0003-002	3900-0363-000	1210-0098-000	1402-0340-002	1425-0012-003	1802-0087-019	2504-0014-001	1432-0002-003
MUH-30-8	1425-0011-003	5814-0003-000	3900-0364-000	1210-0098-000	1402-0340-002	1425-0009-009	1802-0087-028	2504-0014-001	1432-0002-001
MUH-40-2	1425-0011-001	5814-0003-000	3900-0350-000	1210-0097-000	1402-0340-003	1425-0012-002	1802-0087-020	2504-0015-001	1432-0002-004
MUH-40-4	1425-0011-001	5814-0003-002	3900-0350-001	1210-0097-000	1402-0340-003	1425-0012-002	1802-0087-021	2504-0015-001	1432-0002-004
MUH-50-2	1425-0011-001	5814-0003-000	3900-0350-000	1210-0097-000	1402-0340-003	1425-0012-002	1802-0087-022	2504-0015-001	1432-0002-004
MUH-50-4	1425-0011-001	5814-0003-002	3900-0350-001	1210-0097-000	1402-0340-003	1425-0012-002	1802-0087-023	2504-0015-001	1432-0002-004
MUH-50-8	1425-0011-001	5814-0003-000	3900-0350-002	1210-0097-000	1402-0340-003	1425-0012-002	1802-0087-030	2504-0015-001	1432-0002-004

Model No.	㉓ Relay***	㉔ Insulator	㉚ Terminal Block, Power	㉛ Terminal Block, Control	㉞ Fuse Block	㉟ Fuse
MUH03-21	–	–	5823-0004-000	5823-0001-000	–	–
MUH03-41	5018-0004-100	2900-0030-000	5823-0004-000	5823-0002-000	–	–
MUH03-71	–	2900-0030-000	5823-0004-000	5823-0001-000	–	–
MUH03-81	–	–	5823-0004-000	5823-0001-000	–	–
MUH05-21	–	–	5823-0004-000	5823-0001-000	–	–
MUH05-41	5018-0004-100	2900-0030-000	5823-0004-000	5823-0002-000	–	–
MUH05-71	–	2900-0030-000	5823-0004-000	5823-0001-000	–	–
MUH05-81	–	–	5823-0004-000	5823-0001-000	–	–
MUH-07-2	5018-0003-000	–	5823-0004-000	5823-0002-000	–	–
MUH-07-4	5018-0004-100	2900-0030-000	5823-0004-000	5823-0002-000	–	–
MUH-07-7	5018-0004-100	2900-0030-000	5823-0004-000	5823-0002-000	–	–
MUH-07-8	5018-0003-000	–	5823-0004-000	5823-0002-000	–	–
MUH-10-2	5018-0003-000	–	5823-0004-000	5823-0002-000	–	–
MUH-10-4	5018-0004-100	2900-0030-000	5823-0004-000	5823-0002-000	–	–
MUH-10-7	5018-0003-000	2900-0030-000	5823-0004-000	5823-0002-000	–	–
MUH-10-8	5018-0004-100	–	5823-0004-000	5823-0002-000	–	–
MUH-15-2	5018-0005-004	–	5823-0004-001	5823-0002-000	–	–
MUH-15-4	5018-0004-100	2900-0030-000	5823-0004-000	5823-0002-000	–	–
MUH-15-8	5018-0005-008	–	5823-0004-003	5823-0002-000	2025-0002-000	2019-0007-010
MUH-20-2	5018-0006-000	–	5823-0004-002	5823-0002-000	–	–
MUH-20-4	5018-0004-100	2900-0030-000	5823-0004-000	5823-0002-000	–	–
MUH-20-8	5018-0005-000	–	5823-0004-002	5823-0002-000	2025-0002-000	2019-0007-008
MUH-25-2	5018-0005-004	–	5823-0004-002	5823-0002-000	2025-7002-000	2019-7008-077
MUH-25-4	5018-0005-004	2900-0030-000	5823-0004-001	5823-0002-000	–	–
MUH-30-2	5018-0005-004	–	5823-0004-003	5823-0002-000	2025-7002-000	2019-7008-079
MUH-30-4	5018-0005-004	2900-0030-000	5823-0004-001	5823-0002-000	–	–
MUH-30-8	5018-0006-000	–	5823-0005-000	5823-0002-000	2025-7002-000	2019-7008-080
MUH-40-2	5018-0005-004	–	5823-0005-000	5823-0002-000	2025-7002-000	2019-7008-079
MUH-40-4	*	2900-0030-000	5823-0004-002	5823-0002-000	2025-7002-000	2019-7008-079
MUH-50-2	5018-0005-004	–	5823-0005-000	5823-0002-000	2025-7002-000	2019-7008-080
MUH-50-4	*	2900-0030-000	5823-0004-002	5823-0002-000	–	–
MUH-50-8	5018-0006-000	–	5823-0005-000	5823-0002-000	2025-7002-000	2019-7008-078

* Two relays are used: 35A relay P/N 5018-0004-000 and 40A relay P/N 5018-0005-12.
** 24V secondary shown. For 120V secondary, increase last digit by 3. (i.e. for MUH03-41, 24V secondary use 5814-0003-002; for 120V secondary use 5814-0003-005.)
*** 24V H.C. shown. For 120 H.C., increase last digit by 1. (i.e.: for MUH03-41, 24V H.C. use 5018-0004-000; for 120V H.C. use 5018-0004-001.)

FANS

SUPPLIER DOCU .. SUBMITTAL

FDF PROJECT NO: 20111	CONTRACT NO: FSC - 641	SUBMITTAL NO: 15865-001	REV: 1	01-Nov-00	PAGE 1 OF 1

FROM: The STAVER GROUP, Inc.
Ron Wood
SIGNATURE: Ron Wood

TO: FDF ENGINEERING/CONSTRUCTION DOCUMENT CONTROL (ECDC), MS 52-7
RECEIVED BY: Denise Wentz DATE: 11/1/00

			DOCUMENT FAMILY									SUBMITTAL TYPE				SUBMITTAL ACTION		
QTY	DOCUMENT NUMBER	REV	PRO	H&S	MED	TRG	CON	ENG	QAC	OPER	TITLE/DESCRIPTION	DRFT	CFC	INF	ASSOCIATED SPECIFICATION	A	B	C
8	641-15865-001	1						X			Ceiling Fans		X		15865	X		

REVIEW DISTRIBUTION

NAME	MS	NAME	MS	NAME	MS
Mike Griffin	525				
Jim Cherry	525				
Jim Jenkins	525				
Mike Godber	604				
Bob Knepp	525				
B. Scott Wheeler	525				
Lucas Van Tuyneboas	38				

NO COMMENTS: X

COMMENTS: (PLEASE USE SPACE BELOW FOR COMMENTS OR INDICATE IF ATTACHMENTS)

RECEIVED BY: [signature] DATE 11-08-00
(SIGN/DATE AND RETURN A COPY TO ECDC, MS 52-7)

SUBMITTAL TYPE: (BY SUPPLIER)
CFC - CERTIFIED FOR CONSTRUCTION
INF - INFORMATION/RECORD
DRFT - DRAFT/PRELIMINARY

ENTERED

SUBMITTAL ACTION CODE: (BY FDF)
A - Conforms to Subcontract Requirements
B - Minor Comments - Incorporate and Resubmit
C - Revise and Resubmit (SEE COMMENTS)

ORIGINAL

COOLS WARMS
COOLS WARMS
COOLS WARMS
IN SUMMER IN WINTER

IN SUMMER

Breezes are the oldest form of cooling. Air circulation increases the rate of perspiration-evaporation from the body. Envirofan provides that "cooling breeze effect" to aid perspiration-evaporation — natures own method of cooling.

When used with air conditioners, Envirofan increases the efficiency of air conditioning to a point where it can operate at 8 to 10 degrees higher temperature, while delivering the same comfort at a 30 to 50% energy saving. IT IS ACCOMPLISHED BY CONTINUOUS ENVIROFAN AIR CIRCULATION.

An Envirofan will move 43,500 cubic feet of air per minute or 2,610,000 cubic feet of air each hour. Continuous operation [illegible] at the ceiling and eliminates the hot and cold areas common to air conditioning, to create a uniform comfortable temperature environment.

IN WINTER

Because heat rises, up to 30% of a building's heat goes through the ceiling. Ceiling heat can be over 90°F when the thermostat reads only 68°F.

Envirofan Systems recirculate the stratified ceiling heat down to people level, reducing the demand on the heating system. Fuel bills can drop as much as 30%. Fans mounted above shipping doors create a protective curtain of warm air that shuts out cold air, for additional savings.

Aerodynamically designed blades achieve maximum air movement with a cone-shaped air flow. Easy plug-in installation, Envirofan Systems are effective up to 60 ft. ceiling height. UL and CSA approved.

Fluor Contract FSC-641
OSDF Enhanced Permanent Leachate
Transmission System Project
STAVER # 7052

INFORMATION ONLY

ENVIROFAN SYSTEMS, THE SIMPLEST, MOST LOGICAL AND ECONOMICAL ENERGY SAVER AVAILABLE

[X] A - Conforms to the Subcontract Requirements
[ ] B - Minor Comment - Incorporate and Resubmit
[ ] C - Revise and Resubmit

Submittal # 641-15265-001
Reviewed By: [illegible]
Date: 11/1/00

Sig: [illegible] Date: 11-08-00

Always specify . . .

Envirofan

Overhead Ceiling Fans

Nothing but the best.

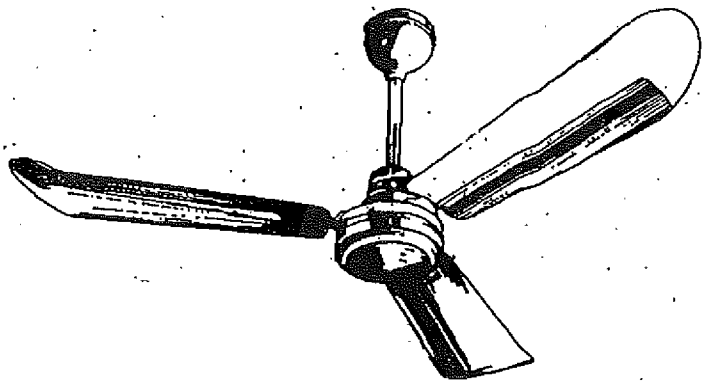

PRODUCT SPECIFICATIONS:

Fan Model	Type	Air Delivery	Area Coverage	Air Velocity	Volts	Amps	Watts	RPM	Weight
Platinum Line 190A-7	60 inch Downblowing	43,500 cfm	2,400 sq. ft.	740 ft/m	110 v	0.71	86	330	26.8 Lbs.
* Gold Line 160F-7	56 inch Downblowing	34,500 cfm	2,100 sq. ft.	650 ft/m	110 v	0.64	80	350	26.4 Lbs.
Gold Line 160C-7	56 inch Reversing	34,500 cfm	2,100 sq. ft.	650 ft/m	110 v	0.64	80	350	26.4 Lbs.
* Gold Line 136F-7	36 inch Downblowing	12,000 cfm	800 sq. ft.	650 ft/m	110 v	0.70	55	400	17.4 Lbs.
Silver Line 60F-9	56 inch Downblowing	27,500 cfm	1,800 sq. ft.	600 ft/m	110 v	0.61	76	320	24.2 Lbs.
Silver Line 60C-9	56 inch Reversing	27,500 cfm	1,800 sq. ft.	600 ft/m	110 v	0.61	76	320	24.2 Lbs.
Silver Line 48F-9	48 inch Downblowing	21,500 cfm	1,600 sq. ft.	600 ft/m	110 v	0.61	76	320	24.0 Lbs.
Bronze Line FP56	56 inch Downblowing	22,000 cfm	1,700 sq. ft.	600 ft/m	110 v	0.70	55	300	21.0 Lbs.
Bronze Line FP48	48 inch Reversing	18,000 cfm	1,400 sq. ft.	600 ft/m	110 v	0.70	55	300	21.0 Lbs.
Bronze Line FP36	36 inch Reversing	10,500 cfm	700 sq. ft.	600 ft/m	110 v	0.35	44	360	17.0 Lbs.

* WITH 18" ROD

- RE-USES, RE-CYCLES & RE-CLAIMS HEAT
- UL LISTED
- CSA APPROVED

Control Model	Amps	Application
100F	2.5	2 Fan Control
105F	6	5 Fan Control
150F	8	8 Fan Control
200F	12	12 Fan Control
215F	15	15 Fan Control
108C	15	15 Fan Reversing Switch
TF5	1	1 Fan Transformer
277V-1	5	8 Fan Control (277V)

ENVIROFAN

PLATINUM LINE - SEVERE SERVICE GOLD LINE - INDUSTRIAL SILVER AND BRONZE LINES - COMMERCIAL

Envirofans are made from the best materials available with curved blades that are aerodynamically designed to achieve maximum air delivery while consuming very little power. The sealed, chrome steel ball bearings ensure long life and continuous quiet operation. The fan is controlled by a full-range motor speed regulator which allows you to adjust the fan to the speed and air delivery desired. The totally enclosed motor provides dependable service even in extreme working conditions. Envirofans are of all metal construction, attractively designed and finished in a baked white enamel.

For more information, or for the distributor nearest you call: 1-800-236-7080.

The Ceiling Fan Specialists

Northwest Environmental Systems, Inc.
P.O. BOX 2944 • OSHKOSH, WI 54903 • (414) 235-7808

SUPPLIER DOCUMENT SUBMITTAL

FDF PROJECT NO: 20111	CONTRACT NO: FSC - 641	SUBMITTAL NO: 16900-001	REV: 2	01-Nov-00	PAGE 1 OF 1

FROM: The STAVER GROUP, Inc.

Ron Wood

SIGNATURE: Ron Wood

TO: FDF ENGINEERING/CONSTRUCTION DOCUMENT CONTROL (ECDC), MS 52-7

RECEIVED BY: Denise Wentz DATE: 11/1/00

QTY	DOCUMENT NUMBER	REV	DOCUMENT FAMILY: PRO	H&S	MED	TRG	CON	ENG	QAC	OPER	TITLE/DESCRIPTION	SUBMITTAL TYPE: DRFT	CFC	INF	ASSOCIATED SPECIFICATION	SUBMITTAL ACTION: A	B	C
7	641-16900-001E	1						X			Control Panel		X		16900	X		

REVIEW DISTRIBUTION

NAME	MS	NAME	MS	NAME	MS
Mike Griffin	52-5				
Tim Cherry	52-5				
Jim Jenkins	52-5				
Mike Godber	104				
Rob Kneup	52-5				
B. Scott Wheeler	525				
Ernest Ben Trenholm	38				

NO COMMENTS: X

COMMENTS: (PLEASE USE SPACE BELOW FOR COMMENTS OR INDICATE IF ATTACHMENTS)

RECEIVED BY: MW Griffin DATE 11-08-00

(SIGN/DATE AND RETURN A COPY TO ECDC, MS 52-7)

SUBMITTAL TYPE: (BY SUPPLIER)

CFC - CERTIFIED FOR CONSTRUCTION

INF - INFORMATION/RECORD

DRFT - DRAFT/PRELIMINARY

SUBMITTAL ACTION CODE: (BY FDF)

A - Conforms to Subcontract Requirements

B - Minor Comments - Incorporate and Resubmit

C - Revise and Resubmit (SEE COMMENTS)

ENTERED

ORIGINAL

NATIONWIDE CONTROL SERVICES, INC. (NCSI)

INSTRUMENT ENGINEERING & SYSTEMS INTEGRATION

CINCINNATI, OHIO
800-252-6760

Fluor Daniel Fernald (FDF)
Enhanced Permanent Leachate
Transmission Control Panels

RE-SUBMITTAL
PURSUANT TO RCI/DCN #20111-25
OCTOBER 2000

[✓] A - Conforms to the Subcontract Requirements
[ ] B - Minor Comment - Incorporate and Resubmit
[ ] C - Revise and Resubmit
Sig: [illegible] Date: 11-08-00

INFORMATION ONLY

Fluor Contract FSC-641
OSDF Enhanced Permanent Leachate
Transmission System Project
STAVER # 7052

Submittal # 641-16900-001E
Reviewed By: [illegible]
Date: 11/1/00

CONTRACTOR: The Staver Group, Inc.

INDEX

DRAWINGS

* GQ1030-07-01
  FEMP EPLTS Valve House Control Panel
  Component Layout and Bill of Materials

* GQ1030-07-02
  FEMP EPLTS Valve House Control Panel
  Electrical Schematic

* GQ1030-07-03
  FEMP EPLTS Control Valve House Control Panel
  Component Layout and Bill of Materials

* GQ1030-07-04
  FEMP EPLTS Control Valve House Control Panel
  Electrical Schematic

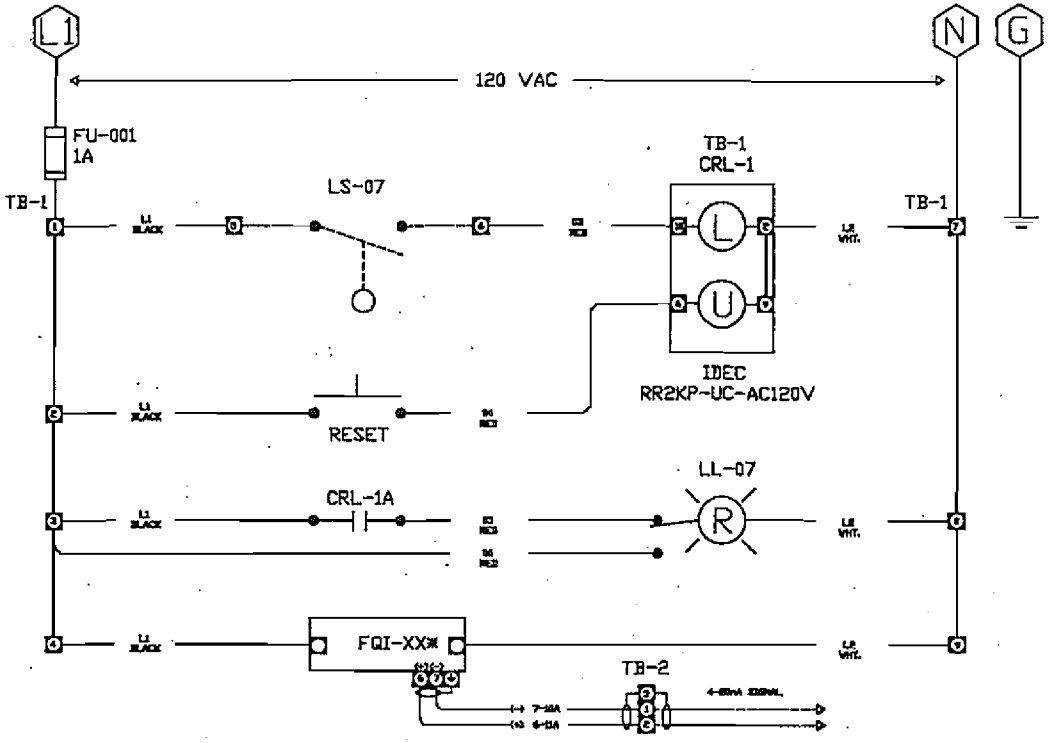

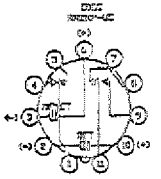

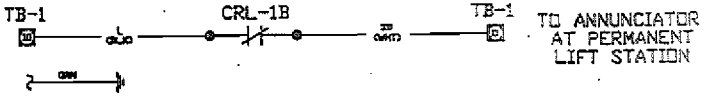

Nationwide Control Services Inc.
Instrument Engineering & Technical Assistance
1-800-262-6760

DESIGN	JIM TONS		
DRAWN	JIM TONS		
CHECKED	L. MAXWELL		
APPROVED	L. MAXWELL		

NO.	DATE	REVISION	BY	APPD

DRAWING TITLE
FEMP EPLTS
CONTROL VALVE HOUSE CONTROL PANEL
ELECTRICAL SCHEMATIC

SHEET 04 OF 04
DRAWING NO. GQ1030-07-04
DATE 09/13/00
PROJECT NO. 00-091300

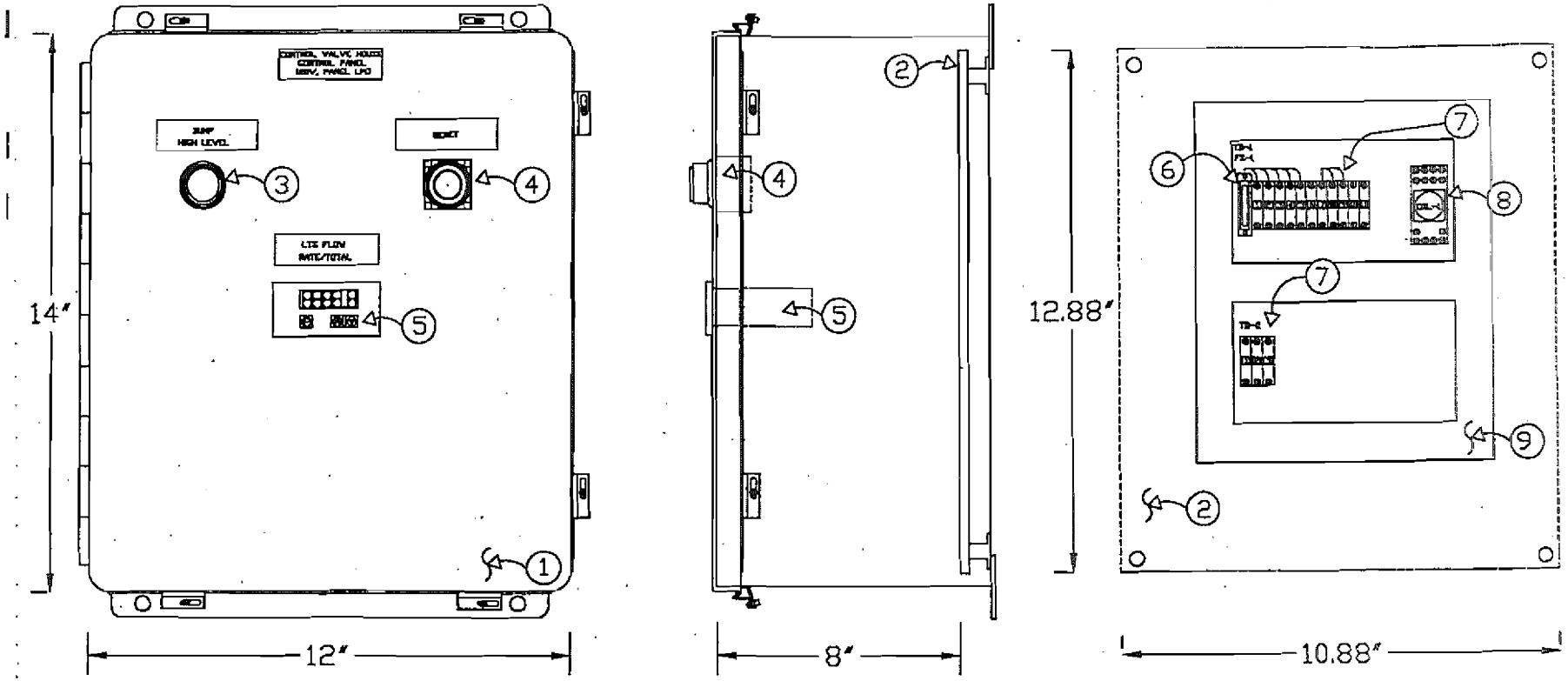

BILL OF MATERIALS				
ITEM	QTY.	DESCRIPTION	MANUFACTURER	MODEL NO.
1	1	NEMA 12 CONTINUOUS HINGE ENCLOSURE	WIEGMANN	B141208CH
2	1	PANEL	WIEGMANN	P1412
3	1	PUSH TO TEST PILOT LIGHT	CUTLER/HAMMER	10250T75R
4	1	PUSH BUTTON	CUTLER/HAMMER	10250T2411-2
5	2	FLOW INDICATOR/TOTALIZER	APOLLO	IMP23160
6	1	FUSE TERMINAL BLOCK FINGER SAFE	CUTLER/HAMMER	C383TKGSTG
7	14	TERMINAL BLOCKS	CUTLER/HAMMER	C383RK610
8	1	LATCHING CONTROL RELAY	IDEC	RR2KP-UC-AC120V
9	6'	WIRE DUCT	PANDUIT	TYPE-F

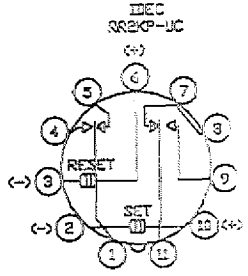

Nationwide Control Services Inc.
Instrument Engineering & Technical Assistance
1-800-262-6760

DESIGN	JIM TONS				
DRAWN	JIM TONS				
CHECKED	MAXWELL	B	10/23/98	RESUBMITTALS	JT LM
APPROVED	MAXWELL	A	09/24/98	ISSUE FOR REVIEW	JT LM
		NO.	DATE	REVISION	BY APPD

DRAWING TITLE
FEMP EPLTS
CONTROL VALVE HOUSE CONTROL PANEL
COMPONENT LAYOUT
AND BILL OF MATERIALS

SHEET 03 OF 04
DRAWING 3101C30-07-03
DATE 09/13/99
PROJECT 98-051300

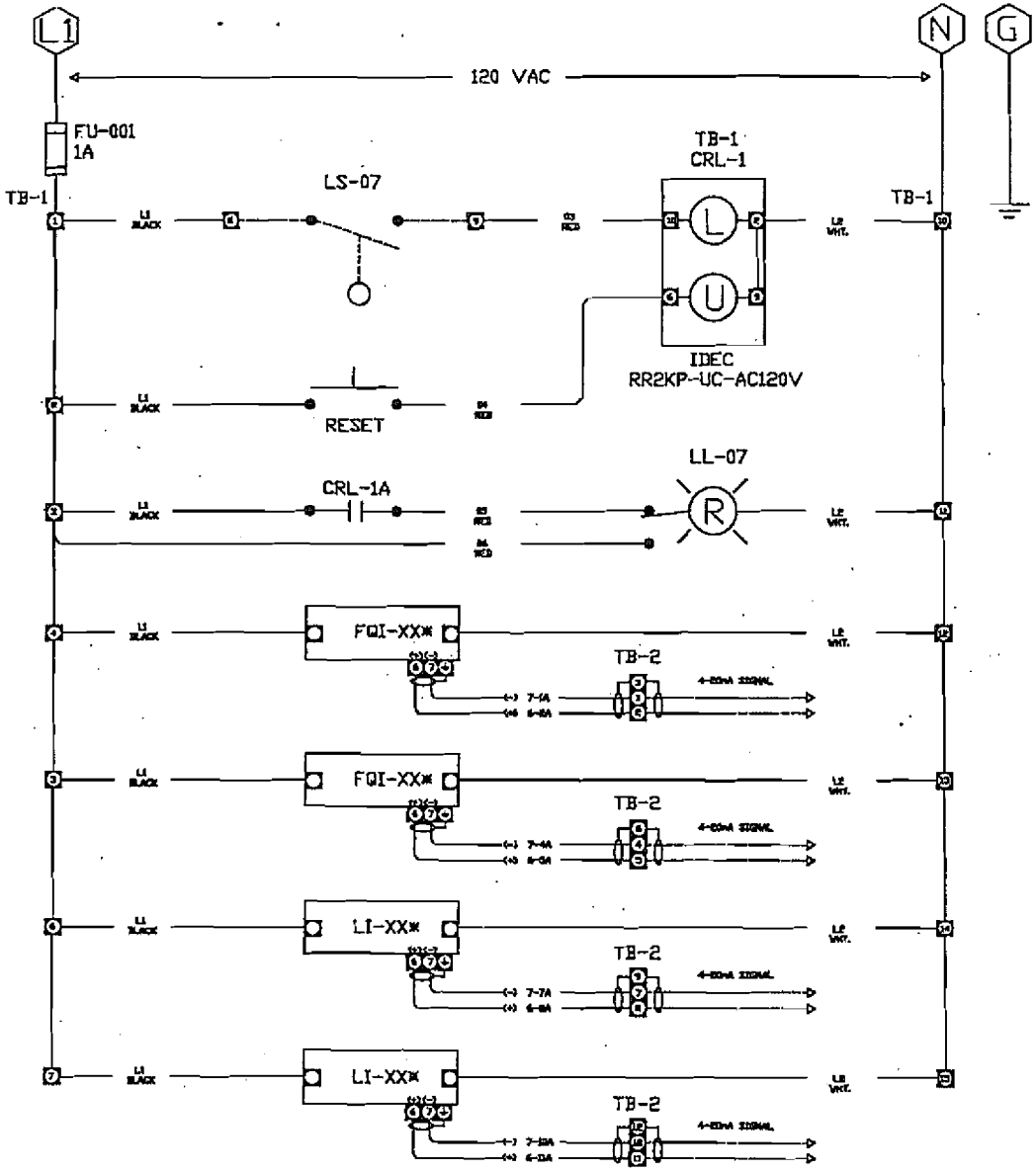

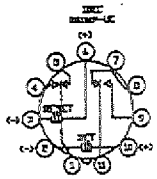

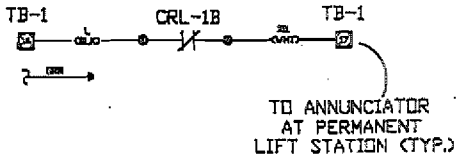

SIG=>

VALVE HOUSE #1 = S1
VALVE HOUSE #2 = S2
VALVE HOUSE #3 = S3
VALVE HOUSE #4 = S4
VALVE HOUSE #5 = S5
VALVE HOUSE #6 = S6

1. TYPICAL OF SIX ELECTRICAL CONTROL SCHEMATIC
2. NOT TO SCALE

Nationwide Control Services Inc.
Instrument Engineering & Technical Assistance
1-800-262-6760

DRAWN	JIM TONS			
CHECKED	JIM TONS			
APPROVED	L. MAXWELL	NO.	DATE	REVISION

DRAWING TITLE
FEMP EPLTS
VALVE HOUSE CONTROL PANEL
ELECTRICAL SCHEMATIC

SHEET 02 OF 04
DRAWING NO. 001030-07-02
DATE 09/13/00
PROJECT NO. 05-001300

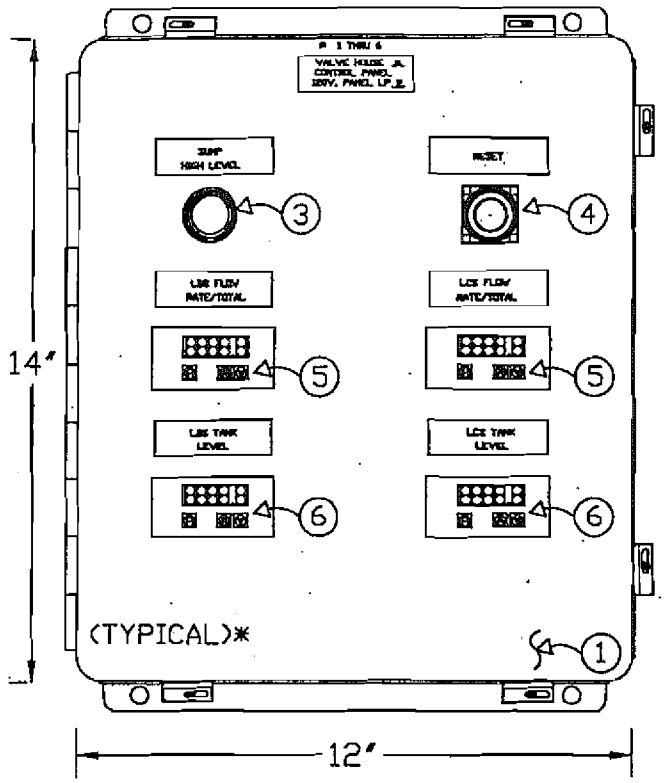

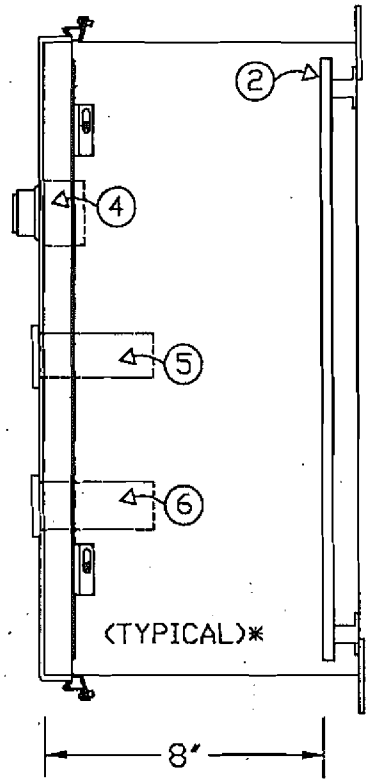

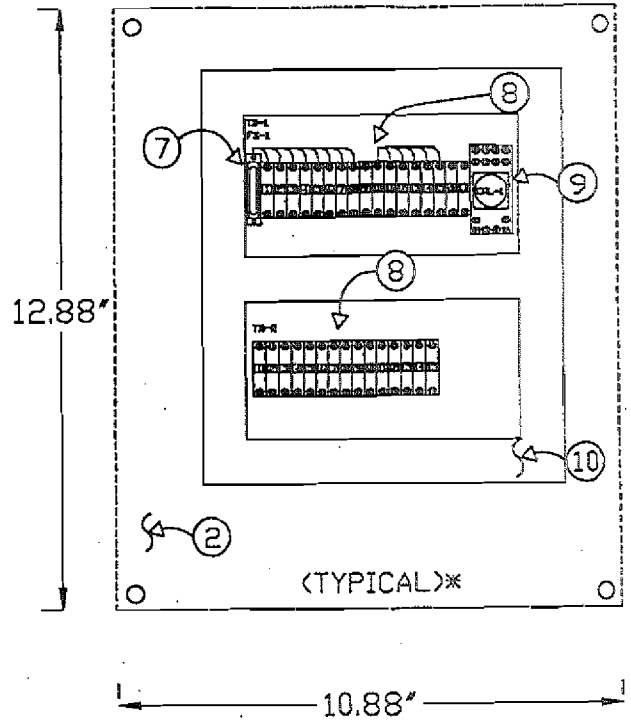

BILL OF MATERIALS				
ITEM	QTY.	DESCRIPTION	MANUFACTURER	MODEL NO.
1	1	NEMA 12 CONTINUOUS HINGE ENCLOSURE	WIEGMANN	B141208CH
2	1	PANEL	WIEGMANN	P1412
3	1	PUSH TO TEST PILOT LIGHT	CUTLER/HAMMER	10250T75R
4	1	PUSH BUTTON	CUTLER/HAMMER	10250T2411-2
5	2	FLOW INDICATOR/TOTALIZER	APOLLO	IMP23160
6	2	LEVEL INDICATOR	APOLLO	IMP20162
7	1	FUSE TERMINAL BLOCK FINGER SAFE	CUTLER/HAMMER	C383TKGSTG
8	32	TERMINAL BLOCKS	CUTLER/HAMMER	C383RK610
9	1	LATCHING CONTROL RELAY	IDEC	RR2KP-UC-AC120V
10	6'	WIRE DUCT	PANDUIT	TYPE-F

1. TYPICAL OF THE REQUIRED SIX CONTROL PANELS COMPLETE
2. NOT TO SCALE

Nationwide Control Services Inc.
Instrument Engineering & Technical Assistance
1-800-252-6760

DESIGN JIM TONS
DRAWN JIM TONS
CHECKED C. MAXWELL
APPROVED L. MAXWELL

NO.	DATE	REVISION	BY	APPD

DRAWING TITLE
FEMP EPLTS
VALVE HOUSE CONTROL PANEL
COMPONENT LAYOUT
AND BILL OF MATERIALS

SHEET 01 OF 04
DRAWING 991030-07-5
DATE 09/13/99
JOB NO. 00-091300

SUPPLIER DO[illegible]T SUBMITTAL

FDF PROJECT NO: 20111	CONTRACT NO: FSC - 641	SUBMITTAL NO: 15865-001	REV: 0	DATE: 18-Jul-00	PAGE 1 OF 1

FROM: The STAVER GROUP, Inc.
Ron Wood
SIGNATURE: Ron Wood

TO: FDF ENGINEERING/CONSTRUCTION DOCUMENT CONTROL (ECDC), MS 52-7
RECEIVED BY: Jelena Krauss DATE: 7/18/2000

			DOCUMENT FAMILY									SUBMITTAL TYPE				SUBMITTAL ACTION		
QTY	DOCUMENT NUMBER	REV	PRO	H&S	MED	TRG	CON	ENG	QAC	OPER	TITLE/DESCRIPTION	DRFT	CFC	INF	ASSOCIATED SPECIFICATION	A	B	C
8	641-15865-001	0						X			Ceiling Fans		X		15865		X	

REVIEW DISTRIBUTION

NAME	MS	NAME	MS	NAME	MS
Mike Giffin	525				
Jim Cherry	525				
Jim Gokiko	525				
Mike Godber	64				
Bob Krup	525				
Scott Wheeler	525				
Kurt Bru Ineeboat	64				

NO COMMENTS: COMMENTS: (PLEASE USE SPACE BELOW FOR COMMENTS OR INDICATE IF ATTACHMENTS)

1- This application is INDUSTRIAL - provide industrial fans for both applications
2- 18" extension Rod

RECEIVED BY: Mike Giffin DATE 7/25/00
(SIGN/DATE AND RETURN A COPY TO ECDC, MS 52-7)

SUBMITTAL TYPE: (BY SUPPLIER)
CFC - CERTIFIED FOR CONSTRUCTION
INF - INFORMATION/RECORD
DRFT - DRAFT/PRELIMINARY

SUBMITTAL ACTION CODE: (BY FDF)
A - Conforms to Subcontract Requirements
B - Minor Comments - Incorporate and Resubmit
C - Revise and Resubmit (SEE COMMENTS)

ORIGINAL

COOLS WARMS
COOLS WARMS
COOLS WARMS
IN SUMMER IN WINTER

ENVIRO FAN®

ECDC CONTROLLED
COPY NO. 76896

IN SUMMER IN WINTER

Breezes are the oldest form of cooling. Air circulation increases the rate of perspiration-evaporation from the body. Envirofan provides that "cooling breeze effect" to aid perspiration-evaporation — natures own method of cooling.

When used with air conditioners, Envirofan increases the efficiency of air conditioning to a point where it can operate at 8 to 10 degrees higher temperature, while delivering the same comfort at a 30 to 50% energy saving. IT IS ACCOMPLISHED BY CONTINUOUS AIR CIRCULATION.

An Envirofan will move 43,500 cubic feet of air per minute for a 210,000 cubic foot area. Continuous operation eliminates stratified hot air at the ceiling and eliminates the hot and cold areas common to air conditioning, to create a uniformly comfortable temperature environment.

Because heat rises, up to 30% of a building's heat goes through the ceiling. Ceiling heat can be over 90°F when the thermostat reads only 68°F.

Envirofan Systems recirculate the stratified ceiling heat down to people level, reducing the demand on the heating system. Fuel bills can drop as much as 30%. Fans mounted above shipping doors create a protective curtain of warm air that shuts out cold air, for additional savings.

Aerodynamically designed blades achieve maximum air movement with a cone-shaped air flow. Easy installation. Envirofan Systems are effective up to 60 ft. ceiling heights. UL and CSA approved.

[ ] A - Conforms to the Subcontract Requirements
[ ] B - Minor Comment - Incorporate and Resubmit
[ ] C - Revise and Resubmit

Sig: [illegible] Date: 7/25/00

DJOO Enhanced Permanent Easy alpa manual cachate Transmission System Project
STAVER # 7052

Submittal # 641-15865-001
Reviewed By: [illegible]
Date: 7/13/00

ENVIROFAN SYSTEMS, THE SIMPLEST, MOST LOGICAL AND ECONOMICAL ENERGY SAVER AVAILABLE

Always specify . . .

Envirofan

Overhead Ceiling Fans

Nothing but the best.

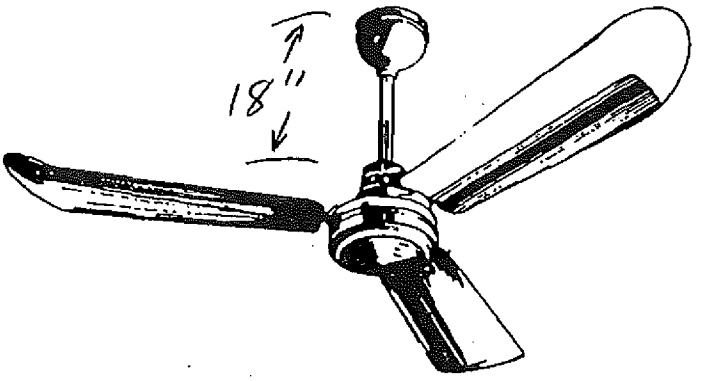

PRODUCT SPECIFICATIONS:

Fan Model	Type	Air Delivery	Area Coverage	Air Velocity	Volts	Amps	Watts	R.P.M.	Weight
Platinum Line 190A-7	60 inch Downblowing	43,500 cfm	2,400 sq. ft.	740 ft/m	110 v	0.71	86	330	26.8 Lbs.
Gold Line 160F-7	56 inch Downblowing	34,500 cfm	2,100 sq. ft.	650 ft/m	110 v	0.64	80	350	26.4 Lbs.
Gold Line 160C-7	56 inch Reversing	34,500 cfm	2,100 sq. ft.	650 ft/m	110 v	0.64	80	350	26.4 Lbs.
Gold Line 136F-7	36 inch Downblowing	12,000 cfm	800 sq. ft.	650 ft/m	110 v	0.70	55	400	17.4 Lbs.
Silver Line 60F-9	56 inch Downblowing	27,500 cfm	1,800 sq. ft.	600 ft/m	110 v	0.61	76	320	24.2 Lbs.
Silver Line 60C-9	56 inch Reversing	27,500 cfm	1,800 sq. ft.	600 ft/m	110 v	0.61	76	320	24.2 Lbs.
Silver Line 48F-9	48 inch Downblowing	21,500 cfm	1,600 sq. ft.	600 ft/m	110 v	0.61	76	320	24.0 Lbs.
Bronze Line FP56	56 inch Downblowing	22,000 cfm	1,700 sq. ft.	600 ft/m	110 v	0.70	55	300	21.0 Lbs.
Bronze Line FP48	48 inch Reversing	18,000 cfm	1,400 sq. ft.	600 ft/m	110 v	0.70	55	300	21.0 Lbs.
Bronze Line FP36	36 inch Reversing	10,500 cfm	700 sq. ft.	600 ft/m	110 v	0.35	44	360	17.0 Lbs.

- **RE-USES, RE-CYCLES & RE-CLAIMS HEAT**
- **UL LISTED**
- **CSA APPROVED**

Control Model	Amps	Application
100F	2.5	2 Fan Control
105F	6	5 Fan Control
150F	8	8 Fan Control
200F	12	12 Fan Control
215F	15	15 Fan Control
108C	15	15 Fan Reversing Switch
TF5	1	1 Fan Transformer
277V-1	5	8 Fan Control (277V)

ENVIROFAN

PLATINUM LINE - SEVERE SERVICE GOLD LINE - INDUSTRIAL SILVER AND BRONZE LINES - COMMERCIAL

Envirofans are made from the best materials available with curved blades that are aerodynamically designed to achieve maximum air delivery while consuming very little power. The sealed, chrome steel ball bearings ensure long life and continuous quiet operation. The fan is controlled by a full-range motor speed regulator which allows you to adjust the fan to the speed and air delivery desired. The totally enclosed motor provides dependable service even in extreme working conditions. Envirofans are of all metal construction, attractively designed and finished in a baked white enamel.

For more information, or for the distributor nearest you call: 1-800-236-7080.

The Ceiling Fan Specialists

Northwest Environmental Systems, Inc.
P.O. BOX 2944 • OSHKOSH, WI 54903 • (414) 235-7808

1/95

SUPPLIER DOCUMENT SUBMITTAL

FDF PROJECT NO: 20111	CONTRACT NO: FSC - 641	SUBMITTAL NO: 15865-002	REV: 0	DATE: 23-Aug-00	PAGE 1 OF 1

FROM: The STAVER GROUP, Inc.
David R. Opalka
SIGNATURE: David R. Opalka

TO: FDF ENGINEERING/CONSTRUCTION DOCUMENT CONTROL (ECDC), MS 52-7
RECEIVED BY: Glenna Kraus DATE: 08-23-2000

QTY	DOCUMENT NUMBER	REV	DOCUMENT FAMILY: PRO	H&S	MED	TRG	CON	ENG	QAC	OPER	TITLE/DESCRIPTION	SUBMITTAL TYPE: DRFT	CFC	INF	ASSOCIATED SPECIFICATION	SUBMITTAL ACTION: A	B	C
3	641-15865-002	0						X			Inline Fan Product Data		X		15865	X		

REVIEW DISTRIBUTION

NAME	MS	NAME	MS	NAME	MS
Mike Miller (Approver)	525				
Jim Cherry	525				
Jim Atkins	525				
Mike Godber	64				
Bob Krip	525				
Scott Wheeler	525				
Susan Lou Swanbeck (Originator)	64				

NO COMMENTS

COMMENTS: (PLEASE USE SPACE BELOW FOR COMMENTS OR INDICATE IF ATTACHMENTS)

ORIGINAL

RECEIVED BY: New Gill DATE 8/30/00
(SIGN/DATE AND RETURN A COPY TO ECDC, MS 52-7)

SUBMITTAL TYPE: (BY SUPPLIER)
CFC - CERTIFIED FOR CONSTRUCTION
INF - INFORMATION/RECORD
DRFT - DRAFT/PRELIMINARY

SUBMITTAL ACTION CODE: (BY FDF)
A - Conforms to Subcontract Requirements
B - Minor Comments - Incorporate and Resubmit
C - Revise and Resubmit (SEE COMMENTS)

PROJECT: ENHANCED PERMANENT LEACHATE TRANSMISSION SYSTEM

CONTRACTOR: RIECK MECHANICAL

EQUIPMENT SUBMITTAL ON: LOREN COOK FANS
LEADING EDGE PADDLE FANS

****

SHEET	CONTENTS
1	LOREN COOK MODEL 10CV17D ALUMINUM INLINE FAN
2 & 3	LOREN COOK MODEL CVD GENERAL INFORMATION
4	LOREN COOK MODEL CVD DIRECT DRIVE
5	LOREN COOK MODEL CVD SOUND DATA

INFORMATION ONLY

SUBMITTED BY:

Andy Tepe

CONTROLLED AIR INCORPORATED
3491 MUSTAFA DRIVE
CINCINNATI, OHIO 45241

07/10/00

A3631

Submission of product for review, acceptance, and comment prior to release of purchase order by RIECK MECHANICAL-ELECTRICAL SERVICES

_____ Date_____

Fluor Contract FSC-641
OSDF Enhanced Permanent Leachate
Transmission System Project
STAVER # 7052

Submittal # 641-15865-002
Reviewed By: DPO
Date: 8/22/00

[✓] A - Conforms to the Subcontract Requirements
[ ] B - Minor Comment - Incorporate and Resubmit
[ ] C - Revise and Resubmit
Sig: [signature] Date: 8/30/00

COOK

MARK: EF
PROJECT: ENHANCED PERMANENT LEACHATE
DATE: 07-10-2000

CVD

Centri-Vane All Aluminum
Inline Centrifugal Blower
Direct Drive

STANDARD CONSTRUCTION FEATURES:

All aluminum construction - All angle operation - Straightening vanes - Prewired twist lock disconnect - Aluminum support bracket with extruded rubber isolator - Five year warranty.

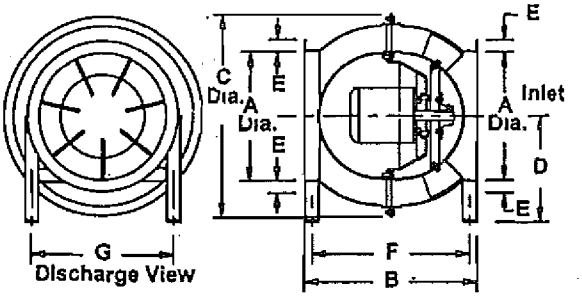

Performance

Qty	Catalog Number	Flow (CFM)	SP (inwc)	Fan RPM	Bhp (HP)
7	10CV17D	625	.500	1725	.146

Altitude (ft): 0 Temperature (F): 70

Motor Information

HP	RPM	Volts/Ph/Hz	Enclosure
1/6	1725	115/1/60	ODP

Sound Data 8 Octave Bands dB (10^{-12} Watts)

1	2	3	4	5	6	7	8	LwA	dBA	Sones
69	69	72	72	64	61	56	52	72	60	9.7

Dimensions (inches)

A	10
B	15
C	16-3/16
D	8-11/16
E	1-5/16
F	13
G	12-1/4
Wheel Dia.	12-15/16
Unit Wt(lbs)***	66

***Includes fan, motor & accessories.

Accessories:

OUTLT SFTY SCRN STL
EXTENDED LUBE LINES

Fan Curve

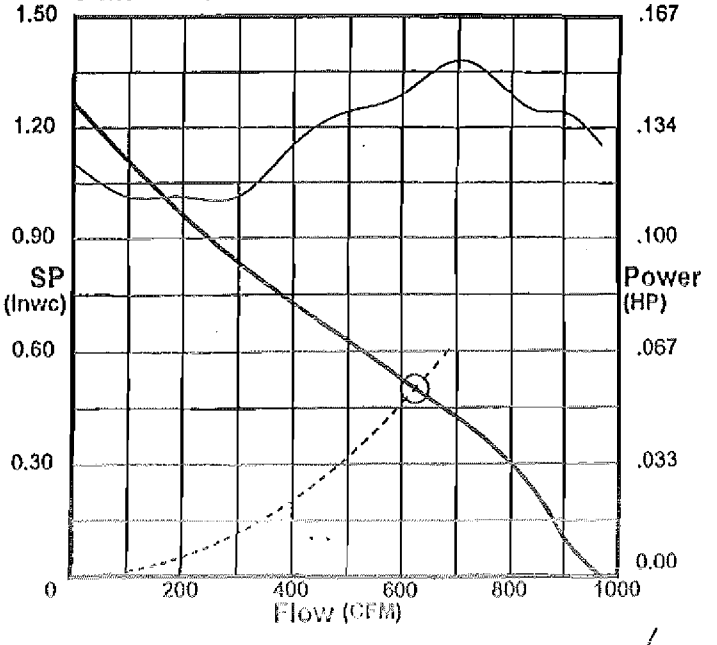

Fan Curve Legend

CFM vs SP	
CFM vs HP	
System Curve	
Point of Operation	○

GENERAL INFORMATION

ENGINEERED FOR STRAIGHT AIR FLOW

The Loren Cook Centri-Vane and Centri-Vane Stretch are all aluminum construction, and designed for straight air flow. The units have been engineered to operate in a duct system. The impeller design is time proven in many installations, assuring the selection of any size unit to operate efficiently at the various pressures. The Centri-Vane is available in either direct or belt drive featuring a complete range of capacities. The Centri-Vane is licensed to bear the AMCA Certified Rating Seal for both air and sound. The Centri-Vane Stretch is available only in belt drive with a complete range of capacities available. The Centri-Vane Stretch is licensed to bear the AMCA Certified Rating Seal for air. All Centri-Vane units feature the quality and reliability that you get in all Loren Cook Products.

FEATURES

LIGHTWEIGHT-ALL ALUMINUM CONSTRUCTION:
The entire unit, both inside and outside, is of aluminum construction giving a lightweight unit and reducing installation cost.

ALL ANGLE OPERATION:
The compact, self-contained unit permits universal mounting in any desired position.

The CV-S self-contained unit can be mounted at various degree increments depending on unit size. Sizes 12-16 may be rotated every 36°, sizes 18-20 every 24° and sizes 24-36 every 18°.

NON-OVERLOADING CENTRIFUGAL WHEEL:
The specially designed impeller with its true airfoil blades has a non-overloading horsepower characteristic.

SPACE SAVER:
While the capacity characteristics of the Centri-Vane are similiar to those of a conventional scroll type blower, the compact construction, lightweight and straight-through design save valuable floor space.

STRAIGHTENING VANES:
Straightening vanes on the discharge side of the Centri-Vane have been scientifically designed to insure a linear movement of air through the unit.

TEMPERATURE RANGE:
The Centri-Vane blowers are not recommended where duct temperatures exceed 200F°. For higher temperatures, consult the factory.

LUBRICATION:
Pre-lubricated ball bearing motors require no lubrication under normal running conditions. Flange mounted bearings on belt drive units have lubricating tubes.

LOW INSTALLATION COST:
The straight flow feature in the Centri-Vane eliminates the need for elbows and large transitional sections, thereby reducing duct cost and simplifying installation.

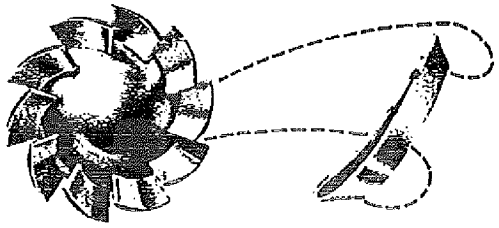

IMPELLER DESIGN

The Centri-Vane impeller consists of a spun aluminum hub with true airfoil blades heliarc welded to the hub, statically and dynamically balanced. The airfoil blades are aluminum, aerodynamically shaped giving high performance, minimum noise level, and using less horsepower than other types of wheels. The airfoil blades produce a smooth air flow pattern, taking full advantage of the entire surface of the blade with minimum amount of turbulence. The exclusive design of the wheel and the hub gives a positive directional flow of air and a uniform air delivery through the unit.

INSTALLATION

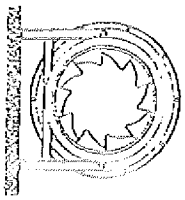

SIDE WALL MOUNTING

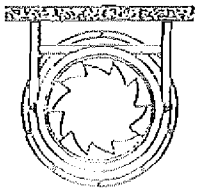

CEILING MOUNTING

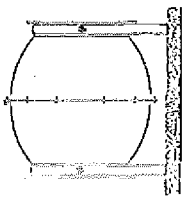

VERTICAL MOUNTING

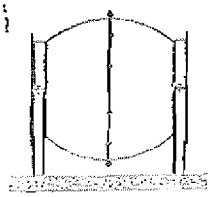

FLOOR MOUNTING

GENERAL INFORMATION

MOTOR DATA

SINGLE PHASE-DIRECT DRIVE UNITS

Standard single-speed motors are open type, 1725 or 1140 RPM, single voltage 115 or 230 volt, 1/8 through 1/2 HP
Standard two-speed, two-winding motors are open type,115 or 230 volt. 1/6 through 1/3 HP, 1725/1140 RPM, 1/4 HP, 1140/860 RPM, 115 volt only.
Explosion Proof Motors - Not Available.

THREE PHASE-DIRECT DRIVE UNITS

Standard single-speed motors are open type, 1725 or 1140 RPM, 1/8 through 1-1/2 HP, 208 or 230/460 volt. Standard two-speed, two winding motors are open type 1/3 through 1 HP, 1725/1140 RPM, 208,230 or 460 volt.
Explosion Proof Motors - Not Available.

Maximum Motor Frame Sizes Are Based On ODP Motors

SINGLE AND THREE PHASE MOTORS-Belt Drive Units

All motors are 1725 RPM
Single phase, single-speed 1/6 through 1-1/2 HP, 115 or 230 volt.
Three phase, single-speed 1/6 through 10 HP, 208 or 230/460 volt. **(APPLIES TO CVB UNITS)**
Three phase, single-speed 1/6 through 20 HP, 208 or 230/460 volt. **(APPLIES TO CV-S UNITS)**
Single phase, two-speed, two-winding, 1725/1140 RPM, 1/6 through 1 HP, 115 or 230 volt.
Three phase, two-speed, two-winding, 1725/1140 RPM, 1/6 through 5 HP, 208, 230 or 460 volt.
Single phase, explosion proof, Class I, Group D, 1/6 through 1 HP, 115 or 230 volt.
Three phase explosion proof, Class I, Group D, 1/6 through 7-1/2 HP, 208, 230 or 460 volt.

ENGINEERING DATA

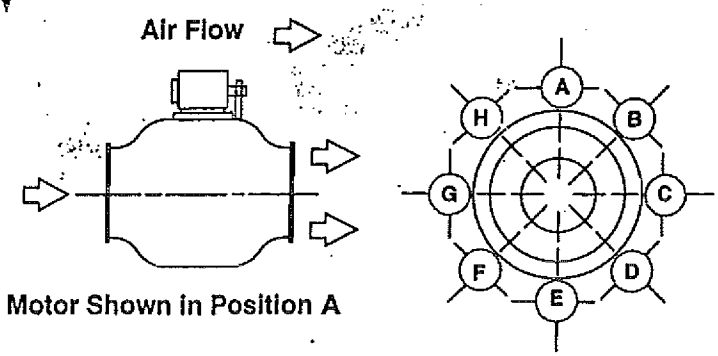

Motor Shown in Position A

View Facing Outlet

DRIVE ARRANGEMENTS FOR CV UNITS

The impeller is overhung on a shaft supported by bearings mounted within casing. When design for mounting of motor is on outside of casing one of the standard locations shown is recommended.

Rotation of fans is determined by viewing from the fan outlet end.
The locations of motors, supports, etc. are determined by viewing the outlet of the fan and resting location **E** on the floor as shown at left.
These units can be furnished with supports for floor, wall or ceiling mounting. The position of these supports determines which motor locations are available for motor placement. Generally motor locations **D**, **E**, and **F** are not available on floor, wall or inverted ceiling, mounted fans and motor locations, **B**, **C**, **G**, and **H** may not be available for ceiling-hung fans.

ACCESSORIES DATA

Available Accessories Include:

Companion Flange • Safety Screen • Protective Coatings
Flexible Duct Connector • Volume Control Damper
Belt Guard • Vibration Isolator Mounting Pads
Weather Cover

CENTRI-VANE®

TYPE CVD DIRECT DRIVE

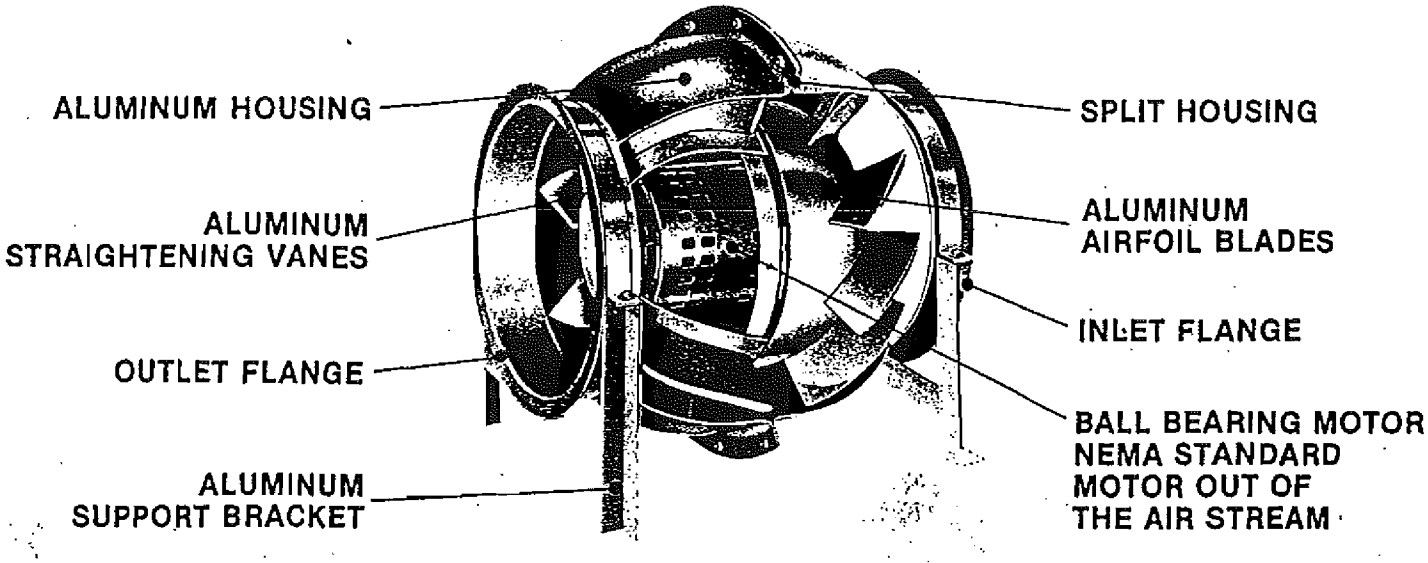

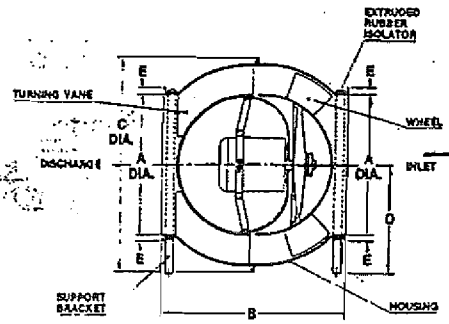

CVD DIMENSION DATA

UNIT SIZE	A	B	C	D	E	WHEEL DIA.	GAUGE OF ALUMINUM	APPROX. SHIP'G. WT.
8CVD	8	13-1/4	13-1/2	6-3/4	1-1/4	10-1/4	.090	35
10CVD	10	15	16-3/8	8-11/16	1-1/4	12-15/16		65
12CVD	12	17-1/8	19-1/4	10	1-1/4	15-9/16		82
14CVD	14	19-1/8	22	11-1/2	1-1/4	18-1/4		93
16CVD	16	21-9/16	24-7/8	12-3/4	1-1/4	20-15/16	.100	120
18CVD	18	24-1/2	27-3/4	14-7/16	1-1/4	23-9/16		166
20CVD	20	26-3/8	30-1/2	15-7/8	1-1/4	26-1/4		206

SIZES: 8CVD to 20CVD series.
CAPACITIES: 350 to 5652 CFM.
STATIC PRESSURE: 1/8 to 3 S.P.
MOTORS: Open type-face mounted are standard.
WIRING: All motors are pre-wired to an external disconnect for ease of wiring.
SUPPORT BRACKET: All Centri-Vanes are shipped complete with support brackets for mounting unit.
EXTRUDED RUBBER ISOLATOR: Furnished with all support brackets to reduce noise transmission.

SPECIFICATIONS:
Furnish and install direct drive Cook Centri-Vane inline centrifugal fan, having inlet and discharge diameter not less than shown on the fan schedule.

Motor will be out of the air stream. Each direct drive unit shall be prewired to an external twist lock disconnect.
Fan housing, fan wheel and other parts used in the fabrication of the unit shall be aluminum of design and gauge standard with the Loren Cook Company.
All units will have aluminum support brackets standard with the manufacturer for mounting the unit.
Fan wheel shall be aluminum having aluminum true airfoil blades hellarc welded to the hub with non-overloading characteristics.
Straightening vanes shall be hellarc welded at the discharge side of the units to eliminate turbulance.

8 CVD SOUND DATA

RPM	SP	SOUND POWER re 10-12 WATTS OCTAVE BANDS 1	2	3	4	5	6	7	8	Sones
1550	0.13	59	60	64	62	56	52	47	44	5.7
	0.25	60	60	63	61	54	51	46	42	5.3
	0.38	61	61	62	60	53	49	44	39	4.9
	0.50	63	60	59	58	51	48	43	34	4.4

10 CVD SOUND DATA

RPM	SP	SOUND POWER re 10-12 WATTS OCTAVE BANDS 1	2	3	4	5	6	7	8	Sones
1140	0.13	59	62	63	59	54	50	46	42	5.1
	0.25	60	62	63	58	52	48	43	39	4.8
	0.38	61	61	61	55	50	47	41	33	4.2
	0.50	63	58	57	52	48	46	38	26	3.3
1725	0.13	68	68	73	72	65	63	58	54	10.4
	0.25	68	68	73	72	65	62	57	54	10.2
	0.38	68	69	72	72	65	61	56	53	10.1
	0.50	69	69	72	72	64	60	55	51	9.8
	0.63	70	69	71	71	63	60	55	50	9.5
	0.75	70	70	71	70	62	59	54	48	9.0
	0.88	72	70	69	69	61	58	54	46	8.6
	1.00	73	70	68	68	60	57	54	44	8.2

12 CVD SOUND DATA

RPM	SP	SOUND POWER re 10-12 WATTS OCTAVE BANDS 1	2	3	4	5	6	7	8	Sones
1140	0.13	65	68	69	64	60	56	52	48	7.5
	0.25	65	68	69	64	59	55	50	47	7.3
	0.38	66	67	68	63	58	53	49	44	6.8
	0.50	67	66	67	62	56	53	47	40	6.3
	0.63	68	65	65	60	55	52	45	35	5.7
	0.75	67	65	65	59	54	51	44	35	5.3
1725	0.13	74	73	78	77	71	68	64	60	14.4
	0.25	74	74	78	77	71	68	63	60	14.4
	0.38	74	74	78	78	71	67	63	59	14.6
	0.50	74	74	78	78	70	67	62	58	14.4
	0.63	74	75	78	77	70	66	61	58	13.9
	0.75	74	75	78	77	69	66	61	57	13.7
	0.88	75	75	77	77	69	65	60	56	13.5
	1.00	76	75	76	76	68	65	60	55	13.0
	1.25	77	75	75	75	67	64	60	52	12.3
	1.50	79	75	73	73	65	62	59	49	11.3
	1.75	79	75	73	73	65	62	59	49	11.3

14 CVD SOUND DATA

RPM	SP	SOUND POWER re 10-12 WATTS OCTAVE BANDS 1	2	3	4	5	6	7	8	Sones
1140	0.13	66	71	72	71	76	68	65	60	14.2
	0.25	67	71	72	71	76	67	64	59	14.0
	0.38	68	72	73	71	74	65	62	57	12.9
	0.50	70	72	73	70	71	62	58	53	11.2
	0.63	73	74	76	69	67	58	53	48	9.6
	0.75	74	74	73	68	64	56	51	47	9.1
	0.88	76	75	73	68	64	55	50	46	9.0
	1.00	78	76	74	66	60	52	48	44	8.7
1725	0.13	73	77	80	80	83	82	75	72	25
	0.25	73	77	80	80	83	82	76	72	25
	0.38	73	77	80	81	82	82	76	72	25
	0.50	74	77	81	81	82	82	75	71	25
	0.63	74	78	81	81	82	81	75	71	24
	0.75	75	78	81	81	81	80	74	70	23
	0.88	76	79	81	81	81	79	73	69	23
	1.00	76	79	82	81	80	78	71	67	22
	1.25	79	81	82	81	79	75	68	63	19.9
	1.50	81	83	83	81	77	71	63	58	18.5
	1.75	83	85	83	81	75	71	63	58	18.3
	2.00	85	84	84	81	75	69	63	58	18.0

16 CVD SOUND DATA

RPM	SP	SOUND POWER re 10-12 WATTS OCTAVE BANDS 1	2	3	4	5	6	7	8	Sones
1140	0.13	70	75	75	76	80	72	69	64	18.0
	0.25	70	75	76	75	80	72	68	64	17.9
	0.38	71	75	77	75	79	71	67	63	17.2
	0.50	72	76	77	75	78	69	66	61	16.5
	0.63	74	76	77	74	76	67	63	58	15.0
	0.75	76	77	78	74	73	64	59	54	13.4
	0.88	78	78	77	73	69	60	55	50	12.0
	1.00	79	78	77	72	68	60	55	50	11.6
	1.25	82	80	78	71	65	57	53	48	11.3

16 CVD SOUND DATA

RPM	SP	SOUND POWER re 10-12 WATTS OCTAVE BANDS 1	2	3	4	5	6	7	8	Sones
1725	0.13	77	81	84	84	87	86	79	76	32
	0.25	77	81	84	84	87	86	80	76	32
	0.38	77	81	84	85	87	86	80	76	32
	0.50	77	81	84	85	86	86	80	76	32
	0.63	78	81	85	85	86	86	79	76	32
	0.75	78	82	85	85	86	85	79	75	31
	0.88	78	82	85	85	86	85	78	75	31
	1.00	79	82	85	85	85	84	78	74	30
	1.25	80	83	85	85	85	83	76	72	28
	1.50	82	84	86	85	83	80	74	69	26
	1.75	84	86	86	85	82	78	71	66	24
	2.00	86	87	87	85	81	76	69	65	23
	2.50	89	88	88	85	79	74	57	63	23
	3.00	92	90	88	85	76	71	65	61	23

18 CVD SOUND DATA

RPM	SP	SOUND POWER re 10-12 WATTS OCTAVE BANDS 1	2	3	4	5	6	7	8	Sones
1140	0.13	74	76	78	81	84	78	73	69	22
	0.25	77	76	77	81	83	78	73	69	22
	0.38	79	76	77	81	83	77	73	69	22
	0.50	81	75	76	81	83	77	73	68	22
	0.63	81	75	76	81	83	77	73	68	22
	0.75	80	75	76	80	83	77	73	68	21
	0.88	80	76	77	80	82	77	73	68	21
	1.00	80	76	77	80	82	76	73	67	21
	1.25	83	78	78	80	81	75	70	66	20
	1.50	86	80	80	80	80	74	68	65	19.5
	1.75	88	81	81	80	79	72	65	63	19.1

20 CVD SOUND DATA

RPM	SP	SOUND POWER re 10-12 WATTS OCTAVE BANDS 1	2	3	4	5	6	7	8	Sones
1140	0.13	79	76	80	81	79	78	82	80	28
	0.25	78	76	79	81	78	78	82	80	28
	0.38	77	76	79	81	78	77	82	80	28
	0.50	76	76	79	80	78	77	81	80	27
	0.63	75	76	79	80	78	76	81	80	27
	0.75	74	76	79	80	77	76	81	80	27
	0.88	75	77	79	80	77	76	81	80	27
	1.00	77	77	79	79	77	75	80	79	26
	1.25	79	78	79	79	76	75	79	79	26
	1.50	84	79	81	80	77	74	75	74	23
	1.75	88	81	82	81	77	72	71	70	21
	2.00	93	82	83	82	78	71	67	66	21

12 CVB SOUND DATA

RPM	SP	SOUND POWER re 10-12 WATTS OCTAVE BANDS 1	2	3	4	5	6	7	8	Sones
800	0.00	59	63	60	62	61	54	51	47	6.2
	0.25	54	65	60	56	52	46	40	34	3.9
1000	0.00	62	66	65	67	67	61	57	53	8.6
	0.25	64	67	66	64	61	56	50	45	6.8
	0.50	60	66	66	61	56	51	45	39	5.6
1200	0.00	65	69	70	70	71	67	61	58	11.2
	0.25	69	71	71	69	68	64	58	53	10.1
	0.50	68	68	71	67	64	59	53	47	8.4
	0.75	68	66	71	66	61	56	50	44	7.7
1400	0.00	68	72	74	72	74	72	66	62	14.5
	0.25	72	74	75	72	73	70	63	59	13.1
	0.50	73	72	76	72	70	66	60	55	11.6
	0.75	74	69	76	71	68	63	57	51	10.5
	1.00	75	66	76	71	66	60	55	49	10.1
1600	0.00	70	74	78	75	78	76	69	66	17.7
	0.25	74	76	79	75	76	74	67	63	16.6
	0.50	76	76	79	75	75	72	66	61	15.5
	0.75	77	72	80	75	73	69	64	57	14.0
	1.00	79	69	80	75	71	67	61	55	13.2
	1.25	80	67	80	75	70	65	59	53	12.7
	1.50	81	65	80	74	68	63	57	52	12.6

The second power level ratings shown are in decibels, referred to 10-12 watts calculated per AMCA Standard 301. Values are for L_{wi} sound power levels for free inlet, ducted outlet. Ratings do not include the effects of duct end correction. The sound ratings shown are loudness values in fan sones at 5 ft. (1.5m) in a hemispherical free field calculated per AMCA Standard 301.

SUPPLIER DOCUMENT SUBMITTAL

FDF PROJECT NO: 20111	CONTRACT NO: FSC - 641	SUBMITTAL NO: 15865-003	REV: 0	15-Feb-01	PAGE 1 OF 1

FROM: The STAVER GROUP, Inc.
Ron Wood
SIGNATURE: Ron Wood

TO: FDF ENGINEERING/CONSTRUCTION DOCUMENT CONTROL (ECDC), MS 52-7
RECEIVED BY: Denise Wentz DATE: 2/15/01

			DOCUMENT FAMILY									SUBMITTAL TYPE				SUBMITTAL ACTION		
QTY	DOCUMENT NUMBER	REV	PRO	H&S	MED	TRG	CON	ENG	QAC	OPER	TITLE/DESCRIPTION	DRFT	CFC	INF	ASSOCIATED SPECIFICATION	A	B	C
4	641-15865-003	0						X			Cook Inline Fans 0&M Manuals			X	15865	X		

REVIEW DISTRIBUTION

NAME	MS	NAME	MS	NAME	MS
Mike Griffin	52-5				

NO COMMENTS: X COMMENTS: (PLEASE USE SPACE BELOW FOR COMMENTS OR INDICATE IF ATTACHMENTS)

RECEIVED BY: [signature] DATE 2/16/01
(SIGN/DATE AND RETURN A COPY TO ECDC, MS 52-7)

SUBMITTAL TYPE: (BY SUPPLIER)
CFC - CERTIFIED FOR CONSTRUCTION
INF - INFORMATION/RECORD
DRFT - DRAFT/PRELIMINARY

SUBMITTAL ACTION CODE: (BY FDF)
A - Conforms to Subcontract Requirements
B - Minor Comments, Incorporate and Resubmit
C - Revise and Resubmit (SEE COMMENTS)

ORIGINAL

641-15865-003

COOK

CV

Centri-Vane Aluminum Inline and Roof Fans

INSTALLATION, OPERATION, AND MAINTENANCE MANUAL

This publication contains the installation, operation and maintenance instructions for standard units of the *CV - Centri-Vane Aluminum Inline and Roof Fans.*

- **CVD/CVB**
- **CVS**
- **CVR/CVR-S**
- **UCV/UCV-S**

Carefully read this publication prior to any installation or maintenance procedure.

Loren Cook catalog, *CV*, provides additional information describing the equipment, fan performance, available accessories, and specification data.

For additional safety information, refer to AMCA publication 410-96, *Safety Practices for Users and Installers of Industrial and Commercial Fans.*

All of the publications listed above can be obtained from Loren Cook Company by phoning 417/869-6474, extension 166; by FAX at 417/862-0968; or by e-mail at info@lorencook.com.

For information on special equipment, contact Loren Cook Company Customer Service Department at 417/869-6474.

Receiving and Inspection

Carefully inspect the fan and accessories for any damage and shortage immediately upon receipt of the fan.

- Turn the wheel by hand to ensure it turns freely and does not bind.
- Inspect dampers for free operation of all moving parts.
- Record on the *Delivery Receipt* any visible sign of damage.

Handling

Lift the fan by the outside housing (box) and support bracket. Never lift by the shaft or motor.

Storage

If the fan is stored for any length of time prior to installation, store it in its original shipping crate and protect it from dust, debris and the weather.

WARNING

This unit has rotating parts. Safety precautions should be exercised at all times during installation, operation and maintenance.

ALWAYS disconnect power prior to working on fan.

Installation

To prevent damage to the fan during shipping, motors 5 HP and larger, and extremely heavy motors (cast iron or severe duty) are shipped loose and must be field mounted by bolting the motor on the motor mounting plate in the exisiting mounting slots.

UCV Fan Installation

The fan support (roof curb) should provide a level surface for installation. If the roof is pitched more than 1/2:12, a sloped curb must be used to correct for the incline. If the unit is installed on a non-level surface, the damper door pivot should be positioned perpendicular to the peak of the roof.

Place fan over roof opening. Secure the fan with lag screws, anchor bolts, or other suitable fasteners.

Wiring Installation

All wiring should be in accordance with local ordinances and the National Electrical Code, NFPA 70. Ensure the power supply (voltage, frequency, and current carrying capacity of wires) is in accordance with the motor nameplate. Refer to the *Wiring Diagrams*, on page 3.

Lock off all power sources before unit is wired to power source.

Direct drive - Wire the electrical box on the blower housing.

Belt drive - The motor can be wired directly since the motor is external to the fan.

Leave enough slack in the wiring to allow for motor movement when adjusting belt tension. Some fractional motors have to be removed in order to make the connection with the terminal box at the end of the motor. To remove motor, remove bolts securing motor base to power assembly. Do not remove motor mounting bolts.

Personal Safety

Disconnect switches are recommended. Place the disconnect switch near the fan in order that the power can be swiftly cut-off in case of an emergency and in order that maintenance personal are provided complete control of the power source.

INFORMATION ONLY

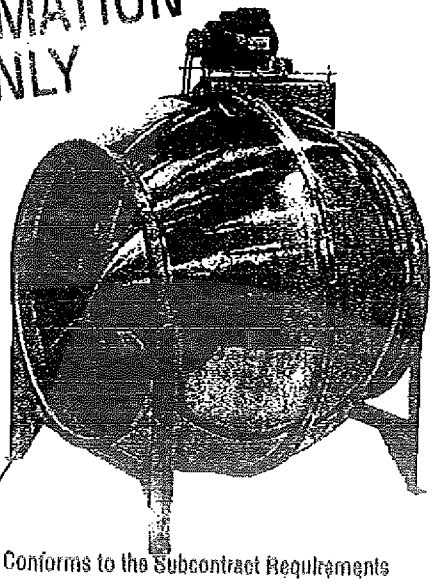

CVB

[ ] A - Conforms to the Subcontract Requirements
[ ] B - Minor Comment - Incorporate and Resubmit
[ ] C - Revise and Resubmit
Sig: MW/B Date: 2/16/01

Wiring Installation continued

Follow the wiring diagram in the disconnect switch and the wiring diagram provided with the motor. Correctly label the circuit on the main power box and identify the closed switch to promote safety (i.e., red tape over a closed switch).

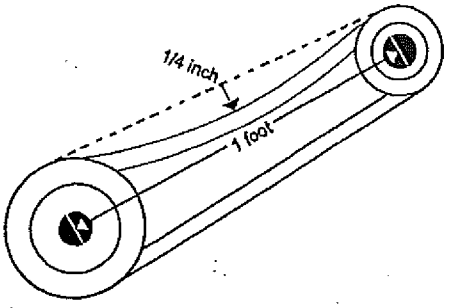

Figure 1

Belt and Pulley Installation

Belt tension is determined by the sound the belts make when the fan is first started. Belts will produce a loud squeal which dissipates after the fan is operating at full capacity. If the belt tension is too tight or too loose, lost efficiency and possible damage can occur.

Do not change the pulley pitch diameter to change tension. This will result in a different fan speed.

a. Loosen motor plate adjustment bolts and slide motor plate so that the belts can easily slip into the grooves on the pulleys. Never pry, roll, or force the belts over the rim of the pulley.
b. Slide motor plate back until proper tension is reached. For proper tension, a deflection of approximately 1/4" per foot of center distance should be obtained by firmly pressing the belt. Refer to Figure1.
c. Lock the motor plate adjustment bolts in place.
d. Ensure pulleys are properly aligned. Refer to Figure 2.

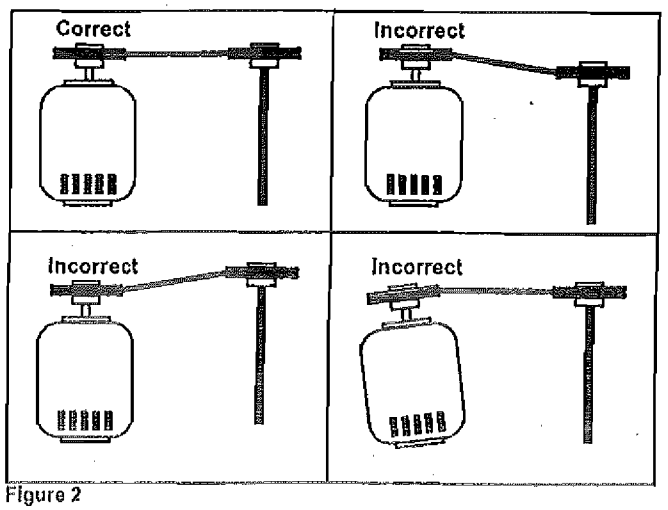

Figure 2

Pulley Alignment

Pulley alignment is adjusted by loosening the motor pulley setscrew and by moving the motor pulley on the motor shaft or by moving the entire motor along the motor mounting bracket.

Figure 2 illustrates correct and incorrect pulley alignment. A recommended method of inspecting the pulley alignment is shown in *Figure 3*. With the shorter leg of a carpenter's square or other straight edge lying along the case of the motor, adjust the position of the motor pulley (or the motor until the longer leg of the square is parallel to the belt.

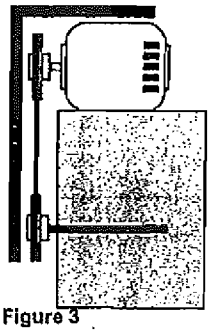

Figure 3

Final Installation Steps

a. Ensure that all accessories are installed.
b. Ensure that the blower is secured to ductwork.
c. Inspect wheel-to-inlet clearance. Ensure wheel does not rub against the inlet.
d. Test the fan to ensure the rotation of the wheel is the same as indicated by the rotation label.
e. Inspect for correct amperage with an ammeter and correct voltage with a voltmeter.

Do not allow the fan to run in the wrong direction. This will overheat the motor and cause serious damage. For 3-phase motors, if the fan is running in the wrong direction, check the control switch. It is possible to interchange two leads at this location so that the fan is operating in the correct direction.

Operation

Pre-Start Checks

a. Lock out all the primary and secondary power sources.
b. Inspect and tighten fasteners and setscrews, particularly fan mounting and bearing fasteners. Refer to *Torque chart.*
c. Inspect belt tension and pulley alignment.
d. Inspect motor wiring.
e. Ensure fan and ductwork are clean and free of debris.
f. Close and secure all access doors.
g. Restore power to the fan.

Start Up

Turn the fan on. In variable speed units, set the fan to its lowest speed and inspect for the following:

- Direction of rotation.
- Excessive vibration.
- Unusual noise.
- Bearing noise.
- Improper belt alignment or tension (listen for squealing).
- Improper motor amperage or voltage.

If a problem is discovered, immediately shut the fan off. Lock out all electrical power and check for the cause of the trouble. See Troubleshooting.

Inspection

Inspection of the fan should be conducted at the first **30 minute, 8 hour** and **24 hour** intervals of satisfactory operation. During the inspections, stop the fan and inspect as per the chart below.

Wiring Diagrams

Single Speed, Single Phase Motor

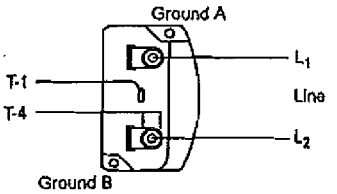

When ground is required, attach to ground A or B with no. 6 thread forming screw. To reverse, interchange T-1 and T-4.

2 Speed, 2 Winding, Single Phase Motor

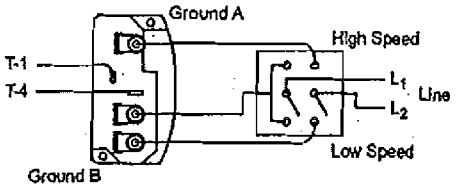

When ground required, attach to ground A or B with No. 6 thread forming screw. To reverse, interchange T-1 and T-4 leads.

Single Speed, Single Phase, Dual Voltage

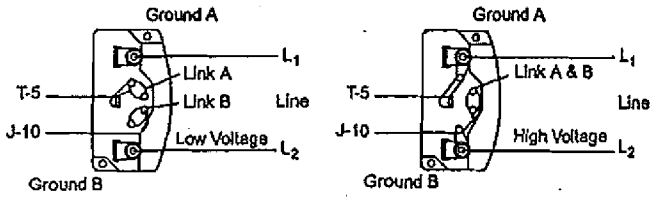

When ground required, attach to ground A or B with No. 6 thread forming screw. To reverse, interchange T-5 and J-10 leads.

Typical Damper Motor Schematic

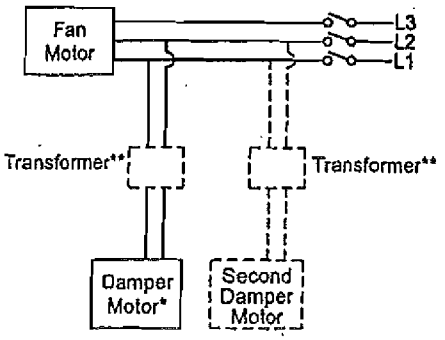

For 3 phase, damper motor voltage should be the same between L_1 and L_2. For single phase application, disregard L_3. *Damper motors may be available in 115, 230 and 460 volt models. The damper motor nameplate voltage should be verified prior to connection. **A transformer may be provided in some installations to correct the damper motor voltage to the specified voltage.

Wiring Diagrams

3 Phase, 9 Lead Motor

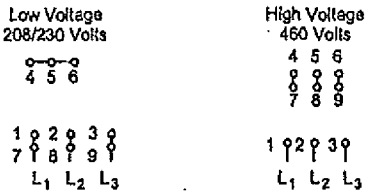

To reverse, interchange any 2 line leads.

2 Speed, 1 Winding, 3 Phase Motor

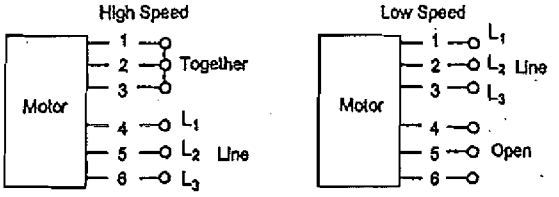

To reverse, interchange any 2 line leads. Motors require magnetic control.

2 Speed, 2 Winding, 3 Phase

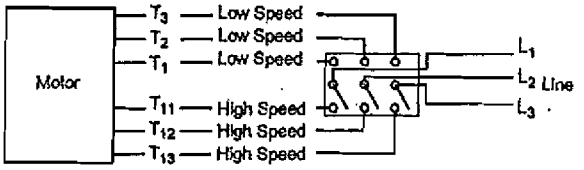

To reverse: High Speed-interchange leads T_{11} and T_{12}.
Low Speed-interchange leads T_1 and T_2. Both Speeds-interchange any 2 line leads.

30 Minute Interval

Inspect bolts, setscrews, and motor mounting bolts. Adjust and tighten as necessary.

8 Hour Interval

Inspect belt alignment and tension. Adjust and tighten as necessary.

24 Hour Interval

Inspect belt tension. Adjust and tighten as necessary.

Maintenance

Establish a schedule for inspecting all parts of the fan. The frequency of inspection depends on the operating conditions and location of the fan.

Inspect fans exhausting corrosive or contaminated air within the first month of operation. Fans exhausting contaminated air (airborne abrasives) should be inspected every three months.

Regular inspections are recommended for fans exhausting non-contaminated air.

Maintenance continued

It is recommended the following inspections be conducted twice per year.

- Inspect bolts and setscrews for tightness. Tighten as necessary. Refer to *Torque chart.*
- Inspect belt wear and alignment. Replace worn belts with new belts and adjust alignment as needed. Refer to *Belt and Pulley Installation.*
- Bearings should be inspected as recommended in the *Conditions Chart.*
- Inspect for cleanliness. Clean exterior surfaces only. Removing dust and grease on motor housing assures proper motor cooling.

Lubricants

Loren Cook Company uses petroleum lubricant in a lithium base. Other types of grease should not be used unless the bearings and lines have been flushed clean. If another type of grease is used, it should be a lithium-based grease conforming to NLGI grade 2 consistency.

A NLGI grade 2 grease is a light viscosity, low-torque, rust-inhibiting lubricant that is water resistant. Its temperature range is from -30°F to +200°F and capable of intermittent highs of +250°F.

Motor Bearings

Motor bearings are pre-lubricated and sealed. Under normal conditions they will not require further maintenance for a period of ten years. However, it is advisable to have your maintenance department remove and disassemble the motor, and lubricate the bearings after three years of operation in excessive heat and or in a contaminated airstream consisting of airborne abrasives.

Fan Bearings

Fan bearings are lubricated through a grease connector and should be lubricated by the schedule, *Conditions Chart.*

For best results, lubricate the bearing while the fan is in operation. Pump grease in slowly until a slight bead forms around the bearing seals. Excessive grease can burst seals thus reducing bearing life.

In the event the bearing cannot be seen, use no more than three injections with a hand-operated grease gun.

Conditions Chart

RPM	Temperature	Fan Status	Greasing Interval
100	Up to 120°F	Clean	6 to 12 months
500	Up to 150°F	Clean	2 to 6 months
1000	Up to 210°F	Clean	2 weeks to 2 months
1500	Over 210°F	Clean	Weekly
Any Speed	Up to 150°F	Dirty	1 week to 1 month
Any Speed	Over 150°F	Dirty	Daily to 2 weeks
Any Speed	Any Temperature	Very Dirty	Daily to 2 weeks
Any Speed	Any Temperature	Extreme Conditions	Daily to 2 weeks

Motor Services

Should the motor prove defective within a one-year period, contact your local Loren Cook representative or your nearest authorized electric motor service representative.

Changing Fan Speed

All belt driven fans with motors up to and including 5 HP are equipped with variable pitch pulleys.

a. Loosen setscrew on motor pulley.

b. Open or close the groove facing to change the pitch diameter.

Speed Reduction - Open the pulley in order that the belt rests deeper in the groove.

Speed Increase - Close the pulley in order that the belt rests higher in the groove. Ensure RPM limits of the fan and the horsepower limits of the motor are maintained.

c. Retighten pulley setscrew on one of the flat areas of the motor shaft.

d. After the adjustment is made, check for proper belt tension. See the *Belt and Pulley Installation* section.

Recommended Torque for Setscrews/Bolts (IN/LB.)

Setscrews				Hold Down Bolts	
Size	Key Hex Across Flats	Recommended Torque		Size	Wrench Torque
		Min.	Max.		
No.10	3/32"	28	33	3/8"-16	240
1/4"	1/8"	66	80	1/2"-13	600
5/16"	5/32"	126	156	5/8"-11	1200
3/8"	3/16"	228	275	3/4"-10	2100
7/16"	7/32"	348	384	7/8"-9	2040
1/2"	1/4"	504	600	1"-8	3000
5/8"	5/16"	1104	1200	1-1/8"-7	4200
3/4"	3/8"	1440	1800	1-1/4"-7	6000

Pulley and Belt Replacement

a. Remove pulleys from their respective shafts.

b. Clean the motor and fan shafts.

c. Clean bores of pulleys and coat the bores with heavy oil.

d. Remove grease, rust, or burrs from the pulleys.

e. Remove burrs from shaft by sanding.

f. Place fan pulley on fan shaft and motor pulley on its shaft.

Do not hammer the pulleys onto the shafts because this may damage the bearings.

g. Tighten in place.

h. Install belts on pulleys and align as described in the *Belt and Pulley Installation* section.

Bearing Replacement

The fan bearings are flange ball bearings.

a. Loosen the motor plate adjustment bolts, then slide the motor plate so the belt will easily slip off.
b. Remove the driven pulley by loosening the setscrew.
c. Separate the outer housing halves.
d. Remove wheel, then loosen the setscrews on the hub that holds the shaft and remove the hub plate. (Refer to hub removal instructions below.)
e. Remove the bolts next to the straightening vanes and pull the inner housing out.
f. Loosen the bearing setscrews and hold-down bolts, then slide shaft out.
g. Sand the burrs on the shaft where the setscrews were located.
h. Slide new bearings onto the shaft to the desired location and loosely mount bearings onto the bearing support. Bearing bolts and setscrews should be loose enough to allow shaft positioning.
i. Replace the hub plate and wheel, align properly and then tighten bearing hold-down bolts securely to the bearing supports.
j. Align setscrews bearing to bearing and secure tightly to the shaft.
   Never tighten both pairs of setscrews before securing bearing mounting bolts. This may damage the shaft.
k. Reassemble the unit.
l. Inspect the wheel position again. If necessary, readjust by loosening the bearing bolts and setscrews and repeat from step e.

Hub Removal

a. Drill two 1/4" diameter holes, 180° apart centered approximately between the shaft and the outside diameter of the hub, 3/8" to 1/2" in depth.
b. Tap 1/4" holes to 5/16" thread with a 5/16" hole tap. Do not drill or tap greater than recommended.
c. Screw the puller arms to the full depth of the threads into the tapped holes. Align center of the puller with the center of the shaft. Ensure all setscrews in the hub, normally two, are fully removed.
d. Slowly remove wheel from the shaft.

Recommended Puller

Lisle No. 45000 Sterling Wheel Puller. This puller is available at most automotive parts retail outlets.

Troubleshooting

Problem and Potential Cause
Low Capacity or Pressure •Incorrect direction of rotation. Make sure the fan rotates in same direction as the arrows on the motor or belt drive assembly. •Poor fan inlet conditions. There should be a straight clear duct at the inlet. •Improper wheel alignment.
Excessive Vibration and Noise •Damaged or unbalanced wheel. •Belts too loose; worn or oily belts. •Speed too high. •Incorrect direction of rotation. Make sure the fan rotates in same direction as the arrows on the motor or belt drive assembly. •Bearings need lubrication or replacement.
Overheated Motor •Motor improperly wired. •Incorrect direction of rotation. Make sure the fan rotates in same direction as the arrows on the motor or belt drive assembly. •Cooling air diverted or blocked. •Improper inlet clearance. •Incorrect fan RPMs.
Overheated Bearings •Improper bearing lubrication •Excessive belt tension.

CVD Parts List

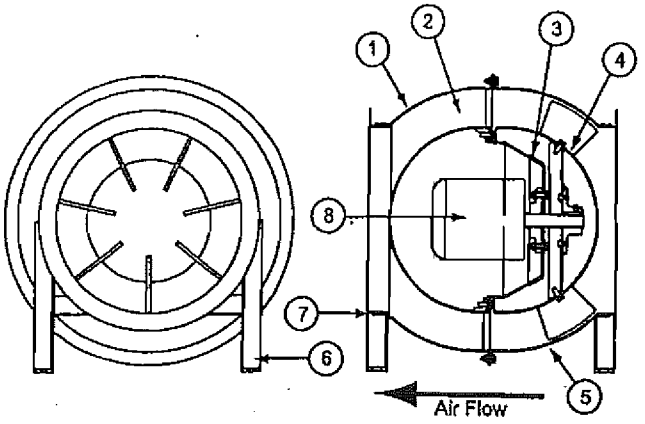

Part No.	Part Description
	Sizes 70-180
1	Outer Discharge Housing
2	Straightening Vanes
3	Motor Plate
4	Wheel Assembly
5	Outer Inlet Housing
6	Support Leg
7	Rubber Channel Isolator
8	Motor

CVB Parts List

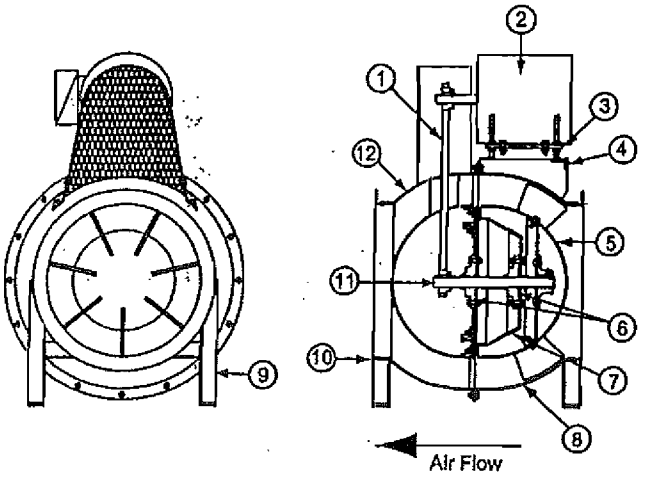

Parts No.	Description
	Sizes 12-36
1	Belt Set
2	Motor
3	Motor Plate
4	Motor Plate Saddle
5	Wheel Assembly
6	Bearings
7	Bearing Plate
8	Outer Inlet Housing
9	Support Legs
10	Rubber Channel Isolator
11	Shaft
12	Outer Discharge Housing

CVS Parts List

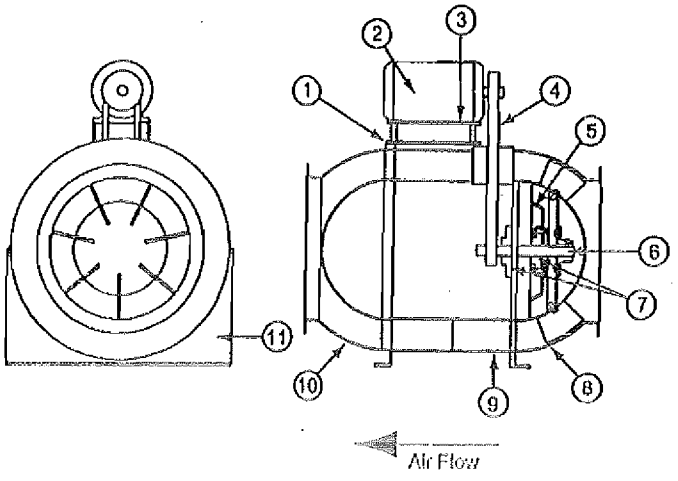

Parts No.	Description
	Sizes 12-36
1	Motor Plate Mount
2	Motor
3	Motor Plate
4	Belt Set
5	Bearing Plate
6	Shaft
7	Bearings
8	Outer Housing Inlet
9	Straightening Vanes
10	Outer Discharge Housing
11	Mounting Brackets

PROCESS PIPING WELDING AND PRESSURE TEST RESULTS

- Welder Qualifications
- Pressure Test Results

WELDER QUALIFICATIONS

SUPPLIER DOCUMENT SUBMITTAL

FDF PROJECT NO: 20111	CONTRACT NO: FSC - 641	SUBMITTAL NO: 15060-004	REV: 2	21-Nov-00	PAGE 1 OF 1

FROM: The STAVER GROUP, Inc.
Ron Wood
SIGNATURE: Ron Wood

TO: FDF ENGINEERING/CONSTRUCTION DOCUMENT CONTROL (ECDC), MS 52-7
RECEIVED BY: Denise Wertz DATE: 11/21/00

			DOCUMENT FAMILY									SUBMITTAL TYPE				SUBMITTAL ACTION		
QTY	DOCUMENT NUMBER	REV	PRO	H&S	MED	TRG	CON	ENG	QAC	OPER	TITLE/DESCRIPTION	DRFT	CFC	INF	ASSOCIATED SPECIFICATION	A	B	C
8	641-15060-004B	0						X			Welder Qualifications		X		15060	X		
											Dan Haft							

REVIEW DISTRIBUTION

NAME	MS	NAME	MS	NAME	MS
Mike Griffin	52-5				
Jim Cherry	52-5				
Jim Jenkins	52-5				
Mike Godbey	64				
Rob Kreps	52-5				
R. Scott Wheeler	52-5				
Kurt Dan Twerebogh	38				

NO COMMENTS: COMMENTS: (PLEASE USE SPACE BELOW FOR COMMENTS OR INDICATE IF ATTACHMENTS)

RECEIVED BY: RW Gill DATE 11-30-00
(SIGN/DATE AND RETURN A COPY TO ECDC, MS 52-7)

SUBMITTAL TYPE: (BY SUPPLIER)
CFC - CERTIFIED FOR CONSTRUCTION
INF - INFORMATION/RECORD
DRFT - DRAFT/PRELIMINARY

SUBMITTAL ACTION CODE: (BY FDF)
A - Conforms to Subcontract Requirements
B - Minor Comments - Incorporate and Resubmit
C - Revise and Resubmit (SEE COMMENTS)

ORIGINAL

Plumbers, Pipe Fitters & Mechanical Equipment Service
Local Union No. 392

OF THE
UNITED ASSOCIATION OF JOURNEYMEN AND APPRENTICES OF THE PLUMBING AND PIPE FITTING INDUSTRY OF THE UNITED STATES AND CANADA A.F.L.-C.I.O.

78

November 17, 2000

To whom it may concern:

Dan Haft, Social Security [redacted] *and Phil Thomas, Social Security* [redacted] *welded at Madison Generating Plant, in Trenton, Ohio, January 2000-May 2000.*

Sincerely yours,

Richard Hurrelbrink
Business Agent

RJH:sr

ECDC CONTROLLED
COPY NO.
76896

[✓] A - Conforms to the Sub-contract Requirements
[ ] B - Minor Comment - Incorporate and Resubmit
[ ] C - Revise and Resubmit
Sig: [illegible] Date: 11-30-00

Fluor Contract FSC-641
OSDF Enhanced Permanent Leachate
Transmission System Project
STAVER # 7052

Submittal # 641-16060-004B
Reviewed By: [illegible]
Date: 11/21/00

UNITED ASSOCIATION
WELDER QUALIFICATION RECORD

WELDER NAME: HAFT, DANIEL J S.S. NUMBER: [redacted]

LOCAL UNION: 392 CITY: CINCINNATI STATE: OH

U.A. WELDING PROCEDURE FOLLOWED: UA-2

WELDING PROCESS: SMAW

TEST LOCATION: CINCINNATI, OHIO-392
TEST DATE: 11/04/95 SESSION #690

VARIABLES OF TEST	RANGE QUALIFIED
PIPE MATERIAL: (P-NO.1 to P-NO.1)	P1 thru P11
PIPE DIAMETER WELDED: 6" Nominal	2 7/8" and over
WALL THICKNESS: 0.280" (SCH 40)	Up to 0.560"(inclusive)
FILLER METAL F-NO. USED : F3 and F4	F1,F2,F3, and F4
WELD DEPOSIT THICKNESS FOR SMAW: 0.280"	Up to 0.560"(inclusive)
WELDING PROGRESSION: Uphill	Uphill
WELDING POSITION OF TEST PIPE: 6G	All Positions

VISUAL INSPECTION

QUALITY? (G/P/N) G TACKS OK? (Y/N) Y STAMPED? (Y/N) Y

ROOT PASS - SATISFACTORY CAP PASS - SATISFACTORY

RADIOGRAPHIC EXAMINATION

RADIOGRAPHIC RESULTS - ACCEPTABLE

We certify that the statements made in this record are correct and that the coupons were prepared, welded, and radiographed in accordance with the requirements of Section IX of the ASME Code.

11-4-95
DATE

U.A. AUTHORIZED TESTING REPRESENTATIVE

11.7.95
DATE

RADIOGRAPHIC TECHNICIAN - LEVEL II

orig. rev. 01

11-8-95
DATE

Paul R. Payne
PECK-HANNAFORD & BRIGGS

[✓] A - Conforms to the Subcontract Requirements
[ ] B - Minor Comment - Incorporate and Resubmit
[ ] C - Revise and Resubmit
Sig: [illegible] Date: 11-30-00

Record of Welder/Operator Qualification Test

Last Name: HAFT First Name: DANIEL Initial: J. SS Number: [redacted] Stamp:

Welding Process(es) used: SMAW followed by SMAW Type: Manual WPS followed: 1-12-1 and UA-2 Test Date: 11/4/95

Specifications of Base Metal Welded: SA106 Grade B or SA53 Grade B Base Metal Thickness: 0.280 in.

Manual or Semi-Automatic Welding Variables (QW-360)	Actual Values	Range Qualified
P or S-Number of Base Metal Welded: 1 to P or S-Number:	1	P/S-1 thru 11
Root Backing (Metal, weld metal, welded both sides, flux, etc.):	None	Opt. for F-3, req'd. for others
[ ] Plate [X] Pipe (enter diameter if pipe):	6 NPS Schedule 40	2-7/8" OD and over
Filler Metal Specification (SFA): 5.1 Classification:	E6010/E7018	
Filler Metal F-Number:	F-3/F-4	F-1 through 3/4
Consumable Insert for GTAW and PAW:	Not Applicable	Not Applicable
Deposited Weld Metal Thickness for each Process or Electrode Type:	0.094/0.186"	0.560/0.372"
Welding Position (1G, 6G, 3F, etc.):	6G	All
Progression (uphill/downhill):	Uphill	Uphill
Backing for Gas for GTAW, GMAW, or PAW; Flux Gas for OFW:	Not Applicable	Not Applicable
GMAW Transfer Mode (Short-circuiting, Spray, etc.):	Not Applicable	Not Applicable
Welding Current Type and Polarity for GTAW:	Not Applicable	Not Applicable

Machine or Automatic Welding Variables (QW-360)	Actual Values	Range Qualified
Direct or Remote Visual Controls:	Not Applicable	Not Applicable
Automatic Voltage Control for GTAW:	Not Applicable	Not Applicable
Automatic Joint Tracking:	Not Applicable	Not Applicable
Welding Position (1G, 6G, 3F, etc.):	Not Applicable	Not Applicable
Consumable Insert for GTAW and PAW:	Not Applicable	Not Applicable
Backing (Metal, weld Metal, welded both sides, flux, etc.):	Not Applicable	Not Applicable
Single or Multiple Passes Per Side:	Not Applicable	Not Applicable

Bend Tests [ ] Trans. Side (QW462.2) [ ] Trans. Root and Face (QW462.3a) [ ] Long. Root and Face (QW462.3b)

Type	Results	Type	Results	Type	Results

Visual Examination (QW-302.4): Acceptable Radiographic Examination (QW-304, QW-305): Acceptable

Fillet Weld - Fracture Test _____ Length and Percent of Defects: _____

Macro Examination: _____ Fillet Leg Size (in): ____ x ____ Concavity/Convexity (in) _____

Other Tests: _____ Lab Test Number: _____

Welding Witnessed by: Paul R. Ayres Title: Q.C. Company: PECK-HANNAFORD & BRIGGS

Specimens Evaluated by: Thomas C. Sisson Title: RADIOGRAPHIC TECHNICIAN LEVEL II Company: MQS INC.

Certify that the statements in this record are correct and that the test coupons were prepared, welded and tested in accordance with the requirements of Section IX of the ASME Code.

National Certified Pipe Welding Bureau
By: RW Thomas
Secretary: Chapter No.: 02

Contractor:
By:
Title:

THIS DOCUMENT IS THE PROPERTY OF

SUPPLIER DC .ENT SUBMITTAL

FDF PRC NO: 20111	CONTRACT NO: FSC - 641	SUBMITTAL NO: 15060-004	REV: 1	Oct. 10, 2000	PAGE 1 OF 1

FROM: The STAVER GROUP, Inc.
Ron Wood
SIGNATURE: Ron Wood

TO: FDF ENGINEERING/CONSTRUCTION DOCUMENT CONTROL (ECDC), MS 52-7
RECEIVED BY: Jeanne Kreuk DATE: 10-16-2000

QTY	DOCUMENT NUMBER	REV	DOCUMENT FAMILY PRO	H&S	MED	TRG	CON	ENG	QAC	OPER	TITLE/DESCRIPTION	SUBMITTAL TYPE DRFT	CFC	INF	ASSOCIATED SPECIFICATION	SUBMITTAL ACTION A	B	C
8	641-15060-004A	0						X			Welder Qualifications		X		15060	X		
											Mike Winget							

REVIEW DISTRIBUTION

NAME	MS	NAME	MS	NAME	MS
Mike Griffin (approver)	52-5				
Jim Cherry	52-5				
Jim Jenkins	52-5				
Mike Hodder	64				
Rob Kreip	52-5				
B. Scott Wheeler	52-5				
Stephytic (Kurt-Ben Swenkosh)	38				

OCT 16 8:00 AM '00

NO COMMENTS: COMMENTS: (PLEASE USE SPACE BELOW FOR COMMENTS OR INDICATE IF ATTACHMENTS)

ORIGINAL

RECEIVED BY: Mike Griffin DATE 10-18-00
(SIGN/DATE AND RETURN A COPY TO ECDC, MS 52-7)

SUBMITTAL TYPE: (BY SUPPLIER)
CFC - CERTIFIED FOR CONSTRUCTION
INF - INFORMATION/RECORD
DRFT - DRAFT/PRELIMINARY

SUBMITTAL ACTION CODE: (BY FDF)
A - Conforms to Subcontract Requirements
B - Minor Comments - Incorporate and Resubmit
C - Revise and Resubmit (SEE COMMENTS)

RIECK Mechanical Electrical Services, Inc.

5245 Wadsworth Rd., P.O. Box 13565 Dayton, OH Dayton, OH 45413-0565

ECDC CONTROLLED COPY NO.

76896

Fax

Date: October 10, 2000

Pages: 2 **Including cover sheet**

To:	Mr. Ron Wood	**From:**	Stanley D. Garber
	The Staver Group		
Phone:	513-648-4101	**Phone:**	937-274-1987
Fax:	513-648-4187	**Fax:**	937-276-8634
Copy To:			

☐ **Urgent** ☒ **For Review** ☐ **Please Comment** ☐ **Please Reply** ☐ **Please Recycle**

Reference: Fernald EPLTS

This is to confirm that Mike Winget has welded per the attached qualification within the last six months.

Respectfully,

Stanley D. Garber

Stanley D. Garber, Purchasing

Fluor Contract FSC-641
OSDF Enhanced Permanent Leachate
Transmission System Project
STAVER # 7052

Submittal # 641-15060-004A
Reviewed By: RW
Date: 10/10/00

[✓] A - Conforms to the Subcontract Requirements
[ ] B - Minor Comment - Incorporate and Resubmit
[ ] C - Revise and Resubmit
Sig: MWO Date: 10-19-00

517 28

QW-484 RECORD OF WELDER QUALIFICATION TESTS (WPQ)

(SEE QW-301, SECTION IX, ASME BOILER & PRESSURE VESSEL CODE)

Welder: MIKE WINGET S/S No.: [redacted] Stamp No.: DP-422

Welding Process(es) used: SMAW Type: Manual

WPS followed by welder during welding of test coupon: 1.1.1, Rev 3

Base material(s) welded: SA-106-B Thickness: 13/32 inch

VARIABLE	ACTUAL VALUE	RANGE QUALIFIED
Backing Type (QW-402)	None	With or without
ASME P-No. (QW-403)	P-1 to P-1	P-1 to P-1
Plate or Pipe (Diam.)	2" Sch. XXS Pipe	Plate Pipe: 1 inch OD min.
Filler Metal Spec (QW-404)	SFA-5.1	NA
Filler Metal Class (QW-404)	E6010; E7018	NA
Filler Metal F-No.	3; 4	3; 4
Consumable Insert (GTAW)	NA	NA
Weld Deposit Thickness	3/16; 1/4 in.	13/16; 7/16 in. max.
Position (QW-405)	3G	All
Progression	Upward	Upward
Backing Gas (QW-408)	None	With or without
GMAW Transfer Mode (QW-409)	NA	NA
GTAW Current Type/Polarity	NA	NA

STATE OF OHIO "APPROVED" PRESSURE PIPING IN ACCORDANCE WITH SECTION IX WELDING AND BRAZING STANDARDS AND OHIO PRESSURE PIPING SYSTEMS RULES, CHAPTER 4101:8-15 (O.A.C.)

Pressure Piping

MW 5-19-97

GUIDED BEND TEST RESULTS

Specimen Number	Examiner Type	Figure Number	Result (Openings)
MW1	Side	QW-462.2	None
MW2	Side	QW-462.2	None
MW3	Side	QW-462.2	None
MW4	Side	QW-462.2	None

Date

PRESSURE PIPING

Visual examination results (QW-302.4): Conforms to QW-302.4

Welding test conducted by: Fischer Engineering Company
Mechanical tests conducted by: Fischer Engineering Company
Dayton, Ohio, (513) 845-8337
Laboratory Test Number: 040897-1

We certify that the statements in this record are correct and that the test coupons were prepared, welded and tested in accordance with the requirements of Section IX of the ASME Code.

Organization: RIECK MECHANICAL SERVICES

Date: 4/24/97 By: [signature]

DAYTON AREA PIPING INDUSTRY WELDING GROUP

SUPPLIER DOCUMENT SUBMITTAL

FDF PROJECT NO: 20111	CONTRACT NO: FSC - 641	SUBMITTAL NO: 15060-004	REV: 0	05-Sep-00	PAGE 1 OF 1

FROM: The STAVER GROUP, Inc.
Ron Wood
SIGNATURE: Ron Wood

TO: FDF ENGINEERING/CONSTRUCTION DOCUMENT CONTROL (ECDC), MS 52-7
RECEIVED BY: Penny Drogos DATE: 9-6-2000

			DOCUMENT FAMILY									SUBMITTAL TYPE				SUBMITTAL ACTION		
QTY	DOCUMENT NUMBER	REV	PRO	H&S	MED	TRG	CON	ENG	QAC	OPER	TITLE/DESCRIPTION	DRFT	CFC	INF	ASSOCIATED SPECIFICATION	A	B	C
8	641-15060-004	0						X			Welder's Certification		X		15060	X		

REVIEW DISTRIBUTION

NAME	MS	NAME	MS	NAME	MS
Mike Griffin	52-5				
Tim Cherry	52-5				
Jim Jenkins	52-5				
Mike Godber	64				
Bob Kneip	52-5				
B. Scott Wheeler	52-5				
Kwasi Baw Yuwonbosh (Geo Synt)	64				

NO COMMENTS:

COMMENTS: (PLEASE USE SPACE BELOW FOR COMMENTS OR INDICATE IF ATTACHMENTS)

RECEIVED BY: MW Gipp DATE 9/13/00
(SIGN/DATE AND RETURN A COPY TO ECDC, MS 52-7)

SUBMITTAL TYPE: (BY SUPPLIER)
CFC - CERTIFIED FOR CONSTRUCTION
INF - INFORMATION/RECORD
DRFT - DRAFT/PRELIMINARY

SUBMITTAL ACTION CODE: (BY FDF)
A - Conforms to Subcontract Requirements
B - Minor Comments - Incorporate and Resubmit
C - Revise and Resubmit (SEE COMMENTS)

ENTERED

ORIGINAL

RIECK Mechanical Electrical Services, Inc.

5245 Wadsworth Rd., P.O. Box 13565 Dayton, OH Dayton, OH 45413-0565

Fax

Date: August 25, 2000

Pages: 3 **Including cover sheet**

To:	Ron Wood	**From:**	Stanley D. Garber
	Staver		
Phone:	513-648-4118	**Phone:**	937-274-1987
Fax:	513-648-4187	**Fax:**	937-276-8634
Copy To:			

☐ **Urgent** ☒ **For Review** ☐ **Please Comment** ☐ **Please Reply** ☐ **Please Recycle**

Reference: Fernald EPLT6

This is to confirm that Greg Atkins and Jason Strickle have both welded per the attached qualifications within the last six months.

Respectfully,

Stanley D. Garber

Stanley D. Garber, Purchasing

INFORMATION ONLY

Fluor Contract FSC-641
OSDF Enhanced Permanent Leachate
Transmission System Project
STAVER # 7052

Submittal # 641-15060-004
Reviewed By: [illegible]
Date: 8/30/00

[X] A - Conforms to the Subcontract Requirements
[ ] B - Minor Comment - Incorporate and Resubmit
[ ] C - Revise and Resubmit
Sig: [illegible] Date: 8-13-00

58100

QW-484 RECORD OF WELDER QUALIFICATION TESTS (WPQ)

(SEE QW-301, SECTION IX, ASME BOILER & PRESSURE VESSEL CODE)

Welder: JASON STRICKLE S/S No.: [redacted] Stamp No.: 440

Welding Process(es) used: SMAW Type: Manual

WPS followed by welder during welding of test coupon: 1.1.1, Rev 3

Base material(s) welded: SA-106-B Thickness: 13/32 inch

VARIABLE	ACTUAL VALUE	RANGE QUALIFIED
Backing Type (QW-402)	None	With (F-No. 3 or 4) Or Without (F-No. 3)
ASME P-No. (QW-403)	P-1 to P-1	P-1 to P-1
Plate or Pipe (and diam.)	2" Sch. XXS Pipe	Plate Pipe: 1 inch OD min.
Filler Metal Spec (QW-404)	SFA-5.1	NA
Filler Metal Class (QW-404)	E6010; E7018	NA
Filler Metal F-No.	3; 4	3; 4
Consumable Insert (GTAW)	NA	NA
Weld Deposit Thickness	3/16; 1/4 in.	13/16; 7/16 in. max.
Position (QW-405)	6G	All
Progression	Upward	Upward
Backing Gas	None	With or without
GMAW Transfer Mode (QW-409)	NA	NA
GTAW Current Type/Polarity	NA	NA

STATE OF OHIO "APPROVED" PRESSURE PIPING IN ACCORDANCE WITH SECTION IX, WELDING AND BRAZING STANDARDS AND OHIO PRESSURE PIPING SYSTEMS RULES, CHAPTER 4101:3-15 (O.A.C.)

GUIDED BEND TEST RESULTS

Specimen No.	Type	Figure Number	Results (openings)
JS1	Side	QW-462.2	None
JS2	Side	QW-462.2	None
JS3	Side	QW-462.2	None
JS4	Side	QW-462.2	(1) 1/64"

Pressure Piping Examiner

Visual examination results (QW-302.4): Conforms to QW-302.4

Welding test conducted by: Fischer Engineering Company MW 6/15/99 Date

Mechanical tests conducted by: Fischer Engineering Company
Dayton, Ohio, (937) 754-1750

Laboratory Test Number: 030899-1

We certify that the statements in this record are correct and that the test coupons were prepared, welded and tested in accordance with the requirements of Section IX of the ASME Code.

Organization: RIECK MECHANICAL SERVICES

Date: 3/8/99 By: Howard M Spears

DAYTON AREA PIPING INDUSTRY WELDING GROUP

7284 Vol. 4

59272

QW-484 RECORD OF WELDER QUALIFICATION TESTS (WPQ)

(SEE QW-301, SECTION IX, ASME BOILER & PRESSURE VESSEL CODE)

Welder: GREG ATKINS S/S No.: [redacted] Stamp No.: 275

Welding Process(es) used: SMAW Type: Manual

WPS followed by welder during welding of test coupon: 1.1.1, Rev 3

Base material(s) welded: SA-106-B Thickness: 13/32 inch

VARIABLE	ACTUAL VALUE	RANGE QUALIFIED
Backing Type (QW-402)	None	With (F-No. 3 or 4) Or Without (F-No. 3)
ASME P-No. (QW-403)	P-1 to P-1	P-1 to P-1
Plate or Pipe (and diam.)	2" Sch. XXS Pipe	Plate Pipe: 1 inch OD min.
Filler Metal Spec (QW-404)	SFA-5.1	NA
Filler Metal Class (QW-404)	E6010; E7018	NA
Filler Metal F-No.	3; 4	3; 4
Consumable Insert (GTAW)	NA	NA
Weld Deposit Thickness	3/16; 1/4 in.	13/16; 7/16 in. max.
Position (QW-405)	6G	All
Progression	Upward	Upward
Backing Gas	None	With or Without
GMAW Transfer Mode (QW-409)	NA	NA
GTAW Current Type/Polarity	NA	NA

STATE OF OHIO
"APPROVED"
PRESSURE PIPING IN ACCORDANCE WITH SECTION IX, ASME AND BY ZING STANDARD AND OHIO PRESSURE PIPING SYSTEMS RULES, CHAPTER 4101:6-15 (O.A.C.)
Pressure Piping
11/8/99
Date
Examiner

GUIDED BEND TEST RESULTS

Specimen No.	Type	Figure Number	Result (Openings)
GA1	Side	QW-462.2	None
GA2	Side	QW-462.2	(2) 1/64"
GA3	Side	QW-462.2	(1) 1/32"
GA4	Side	QW-462.2	None

Visual examination results (QW-302.4): Conforms to QW-302.4

Welding test conducted by: Fischer Engineering Company
Mechanical tests conducted by: Fischer Engineering Company
Dayton, Ohio, (937) 754-1750
Laboratory Test Number: 100699-1

We certify that the statements in this record are correct and that the test coupons were prepared, welded and tested in accordance with the requirements of Section IX of the ASME Code.

Organization: RIECK MECHANICAL SERVICES

Date: 10/30/99 By: Howard M Spears

DAYTON AREA PIPING INDUSTRY WELDING GROUP

61116

QW-484 RECORD OF WELDER QUALIFICATION TESTS (WPQ)

(SEE QW-301, SECTION IX, ASME BOILER & PRESSURE VESSEL CODE)

Welder: DON SANDERSON S/S No.: [redacted] Stamp No.: 464

Welding Process(es) used: SMAW Type: Manual

WPS followed by welder during welding of test coupon: 1.1.1, Rev 3

Base material(s) welded: SA-106-B Thickness: 13/32 inch

VARIABLE	ACTUAL VALUE	RANGE QUALIFIED
Backing Type (QW-402)	None	With (F-No. 3 or 4) Or Without (F-No. 3)
ASME P-No. (QW-403)	P-1 to P-1	P-1 to P-1
Plate or Pipe (and diam.)	2" Sch. XXS Pipe	Plate Pipe: 1 inch OD min.
Filler Metal Spec (QW-404)	SFA-5.1	NA
Filler Metal Class (QW-404)	E6010; E7018	NA
Filler Metal F-No.	3; 4	3; 4
Consumable Insert (GTAW)	NA	NA
Weld Deposit Thickness	3/16; 1/4 in.	13/16; 7/16 in. max.
Position (QW-405)	6G	All
Progression	Upward	Upward
Backing Gas	None	With or without
GMAW Transfer Mode (QW-409)	NA	NA
GTAW Current Type/Polarity	NA	NA

GUIDED BEND TEST RESULTS

STATE OF OHIO "APPROVED" PRESSURE PIPING IN ACCORDANCE WITH SECTION IX, WELDING AND BRAZING STANDARDS AND OHIO PRESSURE PIPING RULES, CHAPTER 4101:4-5 (O.A.C.)

Specimen No.	Type	Figure Number	Result (Openings)
DS1	Side	QW-462.2	(1) 1/64"
DS2	Side	QW-462.2	None
DS3	Side	QW-462.2	(1) 3/64", (1) 1/32"
DS4	Side	QW-462.2	(3) 3/64", (3) 1/32"

Visual examination results (QW-302.4): Conforms to QW-302.4

Welding test conducted by: Fischer Engineering Company Pressure Piping

Mechanical tests conducted by: Fischer Engineering Company

Dayton, Ohio, (937) 754-1750 6/15/00

Laboratory Test Number: 050100-1 Examiner Date

We certify that the statements in this record are correct and that the test coupons were prepared, welded and tested in accordance with the requirements of Section IX of the ASME Code.

Organization: RIECK MECHANICAL SERVICES

Date: 5/10/00 By:

DAYTON AREA PIPING INDUSTRY WELDING GROUP

QW-482 WELDING PROCEDURE SPECIFICATION (WPS)

(See QW-201.1, Section IX, ASME Boiler & Pressure Vessel Code)

Company Name: Rieck Mechanical Services By: Howard M. Spears
Howard M. Spears, Trades Manager

WPS Number: RM 1.1.1 Date: 7-09-85 Supporting PQR No(s).: RM 1.1.1-0
Rev. No: 0 Date: 7-09-85
Welding Process(es): SMAW Type(s): Manual

JOINTS (QW-402)

Joint Design: Vee, single-bevel, fillet
Backing: No
Backing Material (Type): Steel may be used
Root Spacing: 3/32 to 1/8 in.

BASE METALS (QW-403)*

P-No.: 1 Gr. No.: 1 to P-No.: 1 Gr. No.: 1
OR
Specification type and grade: SA-105
to Specification type and grade: SA-105
OR
Chem. Analysis and Mech. Prop.: NA
to Chem. Analysis and Mech. Prop.: NA
Thickness Range:
Base Metal: Groove - 3/16 to 13/16 in. Fillet - All
Deposited Weld Metal: E6010 - 3/8 in. max., E7018 - 7/16 in. max.
Pipe Diameter Range: Groove - Over 1 in. O.D. Fillet - All
Other: No weld pass may be greater than 3/8 in. thick.

FILLER METALS (QW-404)*

F-No.: 3; 4 Other:
A-No.: 1 Other:
Spec. No. (SFA): 5.1
AWS No. (Class): E6010; E7018
Size of filler metals: 3/32, 1/8, 5/32 in.
Electrode, Cold Wire, Hot Wire, Etc.: NA
Electrode-Flux (Class): NA
Flux Trade Name: NA
Consumable Insert: Not allowed

* Each base metal-filler metal combination should be recorded individually.

QW-482 (Back) WPS No. RM 1.1.1 Rev. 0

POSITIONS (QW-405)

Position(s) of Groove: All
Welding Progression: Up
Position(s) of Fillet: All

PREHEAT (QW-406)

Preheat Temp. Min.: 60 deg. F
Interpass Temp. Max.: NA
Preheat Maintenance: None Required
(Continuous or special heating, if used)

POSTWELD HEAT TREATMENT (QW-407)

Temperature Range: None
Time Range: NA

GAS (QW-408)

Type(s): NA
Composition (%): NA

Flow Rate: NA
Gas Backing: NA
Trailing Gas: NA

ELECTRICAL CHARACTERISTICS (QW-409)

Current AC or DC: DC Polarity: Reverse
Ampere Range: Table Voltage Range: Table
(Ranges should be recorded for each electrode size, position, and thickness, etc. This information may be listed in the table below.)
Tungsten Electrode Size and Type: NA
Mode of Metal Transfer for GMAW: NA
Electrode Wire Feed Speed Range: NA

TECHNIQUE (QW-410)

String or Weave Bead: String (and weave for 1G and 5G positions)
Orifice or Gas Cup Size: NA
Initial and Interpass Cleaning: Grinding and/or chipping and wire brushing.*
Method of Back Gouging: None
Oscillation: NA
Contact Tube to Work Distance: NA
Multiple or Single Pass (per side): Multiple
Multiple or Single Electrodes: Single
Travel Speed Range: Manual
Peening: None
*Other: The surfaces to be welded shall be free of scale, rust, oil, grease and other deletereous foreign material for a distance of at least 1/2 inch from the joint preparation.

		Filler Metal		Current				
Weld Layer	Process	Class	Dia.	Type Pol.	Amp Range	Volt Range	Travel Speed Range	Other
Root	SMAW	E6010	3/32	Rev.	60-70	--	--	
Fill	SMAW	E7018	3/32	Rev.	90-100	--	--	
Root	SMAW	E6010	1/8	Rev.	75-85	--	--	
Fill	SMAW	E7018	1/8	Rev.	115-150	--	--	
Fillet	SMAW	E7018	1/8	Rev.	115-150	--	--	
Fillet	SMAW	E7018	5/32	Rev.	150-200	--	--	

QW-483 PROCEDURE QUALIFICATION RECORD (PQR)

(See QW-201.2, Section IX, ASME Boiler & Pressure Vessel Code)
Record Actual Conditions Used to Weld Test Coupon

Company Name: Rieck Mechanical Services

Procedure Qualification Record No.: RM 1.1.1-0 Date: 7-09-85
WPS Number: RM 1.1.1
Welding Process(es): SMAW
Type(s): Manual

JOINTS (QW-402)

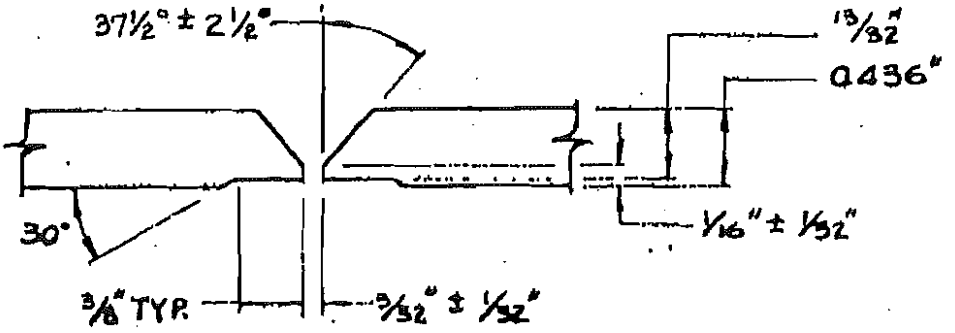

Groove Design of Test Coupon

BASE METALS (QW-403)
Material Spec.: SA-106
Type or Grade: Grade B
P-No.: 1 to P-No.: 1
Thickness: 0.436" (13/32" at weld)
Diameter: 2" Schedule XXS Pipe
Other: No weld pass was greater than 3/8 in. thick.

FILLER METALS (QW-404)
Weld Metal Analysis A-No.: 1
Size of Filler Metal: 3/32 in.
Filler Metal F-No.: 3; 4
SFA Specification: 5.1
AWS Classification: E6010; E7018
Other: E6010 used for root pass (3/16 in. thick)

POSITION (QW-405)
Position of Groove: 6G
Weld Progression: Uphill
Other:

PREHEAT (QW-406)
Preheat Temp.: 70 deg. F
Interpass Temp.: Not measured
Other:

POSTWELD HEAT TREATMENT (QW-407)
Temperature: None
Time: NA
Other:

GAS (QW-408)
Type(s): NA
Composition (%): NA
Other:

ELECTRICAL CHARACTERISTICS (QW-409)
Current: Direct
Polarity: Reverse
Amps: NA Volts: NA
Tungsten Electrode Size: NA
Other:

TECHNIQUE (QW-410)
Travel Speed: NA
String or Weave Bead: String
Osillation: NA
Multipass or Single Pass (per Side): Multipass
Single or Multiple Electrodes: Single
Other:

PQR No.: RM 1.1.1-0

QW-483 (Back)

Tensile Tests (QW-150)

Specimen No.	Width	Thickness	Area	Ultimate Load lb.	Ultimate Stress psi	Type of Failure & Location
CM5	0.756	0.256	0.194	15,430	79,500	Ductile; Base Metal
CM6	0.756	0.252	0.191	15,220	79,700	Ductile; Base Metal

Guided Bend Tests (QW-160)

Specimen No.	Type	Figure Number	Result
CM1	Side	QW-462.2	No openings
CM2	Side	QW-462.2	No openings
CM3	Side	QW-462.2	No openings
CM4	Side	QW-462.2	(1) 1/64" opening

Welder: Craig Murdock S/S No.: [redacted] Stamp No.: RM1
Tests conducted by: Fischer Engineering Company
Laboratory Test Number: 062885-5

We certify that the statements in this record are correct and that the test welds were prepared, welded and tested in accordance with the requirements of Section IX of the ASME Code.

Manufacturer: Rieck Mechanical Services

Date: 7-9-85

By: Howard M. Spears
Howard M. Spears, Trades Manager

RECEIVED

7284 Vol. 4

SUPPLIER DOCUMENT SUBMITTAL

FDF PROJECT NO: 20111	CONTRACT NO: FSC - 641	SUBMITTAL NO: 15060-005	REV: 0	SEP 28 2000 24-Sep-00	PAGE 1 OF 1

FROM: The STAVER GROUP, Inc.

Ron Wood

SIGNATURE: Ron Wood

TO: FDF ENGINEERING/CONSTRUCTION DOCUMENT CONTROL (ECDC), MS 52-7

RECEIVED BY: Jelma Kraus DATE: 9-25-2000

QTY	DOCUMENT NUMBER	REV	DOCUMENT FAMILY PRO	H&S	MED	TRG	CON	ENG	QAC	OPER	TITLE/DESCRIPTION	SUBMITTAL TYPE DRFT	CFC	INF	ASSOCIATED SPECIFICATION	SUBMITTAL ACTION A	B	C
8	641-15060-005	0						X			Welding Inspectors Qualifications		X		15060-005	✓		

REVIEW DISTRIBUTION

NAME	MS	NAME	MS	NAME	MS
Mike Griffin (Approver)	525				
Jim Cheray	525				
Jim Jenkins	525				
Mike Godber	64				
Bob Krip	525				
Scott Wheeler	525				
Kwari-Bau-Juneborn (Hydrotec)	38				

Sep 25 8 50 AM '00

NO COMMENTS:

COMMENTS: (PLEASE USE SPACE BELOW FOR COMMENTS OR INDICATE IF ATTACHMENTS)

ORIGINAL

RECEIVED BY: M W Griffin DATE 9-27-00

(SIGN/DATE AND RETURN A COPY TO ECDC, MS 52-7)

SUBMITTAL TYPE: (BY SUPPLIER)

CFC - CERTIFIED FOR CONSTRUCTION

INF - INFORMATION/RECORD

DRFT - DRAFT/PRELIMINARY

SUBMITTAL ACTION CODE: (BY FDF)

A - Conforms to Subcontract Requirements

B - Minor Comments - Incorporate and Resubmit

C - Revise and Resubmit (SEE COMMENTS)

American Welding Society

AWS

INFORMATION ONLY

Certifies that Welding Inspector

Glenn N. Fischer

has complied with the requirements of Section 6.1 of the AWS Standard for Qualification and Certification of Welding Inspectors QCI-88

85060961
CERTIFICATE NUMBER

June 1997
VALID DATE

REFER TO WALLET CARD FOR EXPIRATION DATE
EXPIRATION DATE

June 2000

James F Key
PRESIDENT AWS

Glenn E. Lyon
CHAIRMAN Q & C COMMITTEE

©1994 American Welding Society

☐ A - Conforms to the Subcontract Requirements
☐ B - Minor Comment - Incorporate and Resubmit
☐ C - Revise and Resubmit
Date: 9-27-00

THE AMERICAN WELDING SOCIETY

certifies that

WELDING INSPECTOR

Glenn N. Fischer

has complied with the requirements of Section 6.1 of the AWS Standard for Qualification and Certification of Welding Inspectors, QC1-88

with ___, without ___ eye correction, ___ color blind

Signed ___

Signature

Signature

Expires

85060961

Certification Number

June 2000

Date

American Welding Society

Certifies That
WELDING INSPECTOR
Ricky L. Gross

Has complied with the requirements of Section 6.3 of the AWS Standard for Qualification and Certification of Welding Inspectors, QC1-96

with [illegible] years experience and is qualified

[illegible] Certificate Number 90110361

[illegible] Expiration November 2001

Ricky Gross

November 2001

American Welding Society

AWS

INFORMATION ONLY

Certifies that Welding Inspector

William T Carty

has complied with the requirements of Section 6.1 of the AWS Standard for Qualification and Certification of Welding Inspectors QC1-96

93110781

CERTIFICATE NUMBER

November 1999

VALID DATE

EMPLOYER: REFER TO WALLET CARD FOR VALIDITY AND EXPIRATION DATE

PRESIDENT AWS

CHAIRMAN QUALIFICATION COMMITTEE

CHAIRMAN CERTIFICATION COMMITTEE

[] B - Minor Comments - Incorporate and Resubmit

[] C - Revise and Resubmit

Sig: MWG Date: 9-27-00

©1994 American Welding Society

American Welding Society

Certifies That
WELDING INSPECTOR
William T Carty

Has complied with the requirements of Section 6.1 of the AWS Standard for Qualification and Certification of Welding Inspectors, QC1-96

with _____, without X eye correction, _____ color blind

AWS President

AWS Certification Chair

93110781
Certificate Number

November 2002
Recertify by

FDF PROJECT NO: 20111	CONTRACT NO: FSC - 641	SUBMITTAL NO: 15060-006	REV: 0	07-Dec-00	PAGE 1 OF 1

7284 Vol. 4

FROM: The CLAYVER GROUP, Inc.
Ron Wood
SIGNATURE: Ron Wood

TO: FDF ENGINEERING/CONSTRUCTION DOCUMENT CONTROL (ECDC), MS 52-7
RECEIVED BY: Glenna Gaul DATE: 12-11-2000

QTY	DOCUMENT NUMBER	REV	DOCUMENT FAMILY: PRO	H&S	MED	TRG	CON	ENG	QAC	OPER	TITLE/DESCRIPTION	SUBMITTAL TYPE: DRFT	CFC	INF	ASSOCIATED SPECIFICATION	SUBMITTAL ACTION: A	B	C
8	641-15060-006A	0						X			Weld Inspections		X		15060	✓		

REVIEW DISTRIBUTION

NAME	MS	NAME	MS	NAME	MS
[illegible] (Corporate)	525				
Jim Cherry	525				
Jim Jackins	525				
Mike Godber	64				
Bob Krim	525				
B. Scott Wheeler	525				
Kwasi-Bau Twumbah	38				

DEC 11 6 42 AM '00

NO COMMENTS: COMMENTS: (PLEASE USE SPACE BELOW FOR COMMENTS OR INDICATE IF ATTACHMENTS)

Acceptable per NCR FY2000-1423 resolution.
MWG

RECEIVED BY: MW Gip DATE 1/30/01
(SIGN/DATE AND RETURN A COPY TO ECDC, MS 52-7)

SUBMITTAL TYPE: (BY SUPPLIER)
CFC - CERTIFIED FOR CONSTRUCTION
INF - INFORMATION/RECORD
DRFT - DRAFT/PRELIMINARY

SUBMITTAL ACTION CODE: (BY FDF)
A - Conforms to Subcontract Requirements
B - Minor Comments - Incorporate and Resubmit
C - Revise and Resubmit (SEE COMMENTS)

ORIGINAL

Fischer Engineering Company

8220 Expansion Way • Dayton, Ohio 45424 • (937) 754-1750
FAX: (937) 754-1754

Where Inspected:
Rieck Mechanical
5245 Wadsworth Rd.
Dayton, OH 45414

Date: 11-30-00
J/N: 0315
PO: Stan Garber

Customer Contact: Ron Woods (Staver)

REPORT ON: Inspection of Fernald VHI

IDENTIFICATION: Drawing No.: 90X-6000-00263,4,5 (Sheets M-1, M-2, M-3)

Material: A-53 Pipe, ANSI Flanges.

Markings:

STANDARD: ASME B31.3, Category D Fluid Service

PROCEDURE: FECo VE-1, Rev. 1
Inspect 20% of all joints

ACCEPT/REJECT CRITERIA: Table 341.3.2A, Cat. D

INSPECTOR: William Carty, CWI No. 93110781

RESULTS:

Quan.	Detail	Matl.	Date	Findings	A/R
Witnessed	2	3"	in process, setup, Tack & Root Pass		
1	Done By	Phil Thomas	of Rieck Mech.	Badge # 71485	
1	"	"	Dan Hoft	" " " " "	75651

INFORMATION ONLY

Fluor Contract FSC-641
OSDF Enhanced Permanent Leachate Transmission System Project
STAVER # 7052

Submittal # 641-15060-00
Reviewed By: RW
Date: 12/7/00

CERTIFICATION:

I certify that the above work was performed as stated.

Inspector: William T. Carty

AWS QC 1 WILLIAM T. CARTY 93110781 CWI

Date: 11-30-00

Ndt.doc

[X] A - Conforms to the Subcontract Requirements
[ ] B - Minor Comment - Incorporate and Resubmit
[ ] C - Revise and Resubmit
Sig: MWD Date: 1/30/01
Ref: NCR FY2000-1923

Fischer Engineering Company

8220 Expansion Way • Dayton, Ohio 45424 • (937) 754-1750
FAX: (937) 754-1754

Page 1

Where Inspected:
Rieck Mechanical
5245 Wadsworth Rd.
Dayton, OH 45414

Date: 09-28-00
J/N: 0315
PO: Stan Garber

Customer Contact: Greg Atkins

REPORT ON: Inspection of Fernald VH #1 Components.

IDENTIFICATION: Drawing No.: 90X-6000-00263,4,5 (Sheets M-1, M-2, M-3)

Material: A-53 Pipe, ANSI Flanges.

Markings:

STANDARD: ASME B31.3, Category D Fluid Service

PROCEDURE: FECo VE-1, Rev. 1
Inspect 20% of all joints

ACCEPT/REJECT CRITERIA: Table 341.3.2A, Cat. D

INSPECTOR: Glenn N. Fischer, CWI No. 85060961

RESULTS:

INFORMATION ONLY

	Quan.	Detail	Matl.	Date	Findings	A/R
1	1	6" LTS Line	A53	9-28-00	None	A
2	1	3" LFS Line	"	"	None	A
3	1	3" LTS Line	"	"	Excess Reinf - Repaired	A
4	1	6" LTS Line	"	"	None	A
5	1	3" LTS Line	"	"	Excess Reinf. - Repaired	A
6	1	3" LCS Line	"	"	Porosity - Repaired	A
7	1	3" LCS Line	"	"	None	A

CERTIFICATION:

I certify that the above work was performed as stated.

Inspector: Glenn N. Fischer

AWS QC1 GLENN N. FISCHER 85060961 CWI

Date: 9-28-00

Ndt.doc

Fischer Engineering Company

8220 Expansion Way • Dayton, Ohio 45424 • (937) 754-1750
FAX: (937) 754-1754

Page 2

Where Inspected:
Rieck Mechanical
5245 Wadsworth Rd.
Dayton, OH 45414

Date: 9-28-00
J/N: 0315
PO: Stan Garber

Customer Contact: Greg Atkins

REPORT ON: Inspection of Fernald VH #1 Components

IDENTIFICATION: Drawing No.: 90x-6000-00263,4,5 (Sheets M-1, M-2, M-3)

Material: A-53 Pipe, ANSI Flanges.

Markings:

STANDARD: ASME B31.3, Category D Fluid Service

PROCEDURE: FECo VE-1, Rev. 1
Inspect 20% of all joints

ACCEPT/REJECT CRITERIA: Table 341.3.2A, Cat. D

INSPECTOR: Glenn N. Fischer, CWI No. 85060961

RESULTS:

	Quan.	Detail	Matl.	Date	Findings	A/R
8	1	3" LCS Line	A53	9-28-00	Porosity - Repaired	A
9	1	3" LCS Line	"	"	None	A
10	1	6" RLCS Line	"	"	None	A
11	1	3" RLCS Line	"	"	None	A
12	1	3" LDS Line	"	"	Porosity - Repaired	A

CERTIFICATION:

I certify that the above work was performed as stated.

Inspector: [signature] Date: 9-28-00

AWS QC 1 GLENN N. FISCHER 85060961 CWI

Ndt.doc

Fischer Engineering Company

8220 Expansion Way • Dayton, Ohio 45424 • (937) 754-1750
FAX: (937) 754-1754

Page 3

Where Inspected:
Rieck Mechanical
5245 Wadsworth Rd.
Dayton, OH 45414

Date: 9-28-00
J/N: 0315
PO: Stan Garber

Customer Contact: Greg Atkins

REPORT ON: Inspection of Fernald VH #2 Components

IDENTIFICATION: Drawing No.: 90x-6000-00263,4,5 (Sheets M-1, M-2, M-3)

Material: A-53 Pipe, ANSI Flanges.

Markings:

STANDARD: ASME B31.3, Category D Fluid Service

PROCEDURE: FECo VE-1, Rev. 1
Inspect 20% of all joints

ACCEPT/REJECT CRITERIA: Table 341.3.2A, Cat. D

INSPECTOR: Glenn N. Fischer, CWI No. 85060961

RESULTS:

	Quan.	Detail	Matl.	Date	Findings	A/R
1	1	6" LTS Line	A53	9-28-00	LOP* - Repaired	A
2	1	3" LTS Line	"	"	None	A
3	1	3" LTS Line	"	"	None	A
4	1	6" LTS Line	"	"	LOP - Repaired	A
5	1	3" LTS Line	"	"	None	A
6	1	6" LDS Line	"	"	None	A
7	1	3" LDS Line	"	"	None	A

CERTIFICATION: LOP* = Lack of Penetration

I certify that the above work was performed as stated.

Inspector: Glenn N. Fischer

AWS QC1 GLENN N. FISCHER 85060961 CWI

Date: 9-28-00

Ndt.doc

Fischer Engineering Company

8220 Expansion Way • Dayton, Ohio 45424 • (937) 754-1750
FAX: (937) 754-1754

Page 4

Where Inspected:
Rieck Mechanical
5245 Wadsworth Rd.
Dayton, OH 45414

Date: 9-28-00
J/N: 0315
PO: Stan Garber

Customer Contact: Greg Atkins

REPORT ON: Inspection of Fernald VH #2 Components

IDENTIFICATION: Drawing No.: 90X-6000-00263,4,5 (Sheets M-1, M-2, M-3)

Material: A-53 Pipe, ANSI Flanges.

Markings:

STANDARD: ASME B31.3, Category D Fluid Service

PROCEDURE: FECo VE-1, Rev. 1
Inspect 20% of all joints

ACCEPT/REJECT CRITERIA: Table 341.3.2A, Cat. D

INSPECTOR: Glenn N. Fischer, CWI No. 85060961

RESULTS:

	Quan.	Detail	Matl.	Date	Findings	A/R
8	1	3" LDS Line	A53	9-28-00	Excess Reinf. - Repaired	A
9	1	6" LCS Line	"	"	None	A
10	1	3" LCS Line	"	"	Porosity - Repaired	A
11	1	3" LCS Line	"	"	None	A
12	1	3" LCS Line	"	"	None	A

CERTIFICATION:

I certify that the above work was performed as stated.

Inspector: Glenn N. Fischer

AWS QC1 GLENN N. FISCHER 85060961 CWI

Date: 9-28-00

NdI.doc

Fischer Engineering Company

8220 Expansion Way • Dayton, Ohio 45424 • (937) 754-1750
FAX: (937) 754-1754

Where Inspected:
Rieck Mechanical
5245 Wadsworth Rd.
Dayton, OH 45414

Date: 11-30-00
J/N: 0315-0367
PO: Stan Garber

Customer Contact: Ron Woods (STAVER)

REPORT ON: Inspection of Fernald VH #3 components

IDENTIFICATION: Drawing No.: 90X-6000-00263,4,5 (Sheets M-1, M-2, M-3)

Material: A-53 Pipe, ANSI Flanges.

Markings:

STANDARD: ASME B31.3, Category D Fluid Service

PROCEDURE: FECo VE-1, Rev. 1
Inspect 20% of all joints

ACCEPT/REJECT CRITERIA: Table 341.3.2A, Cat. D

INSPECTOR: William T. Corty, CWI No. 93110781

RESULTS:

Quan.	Detail	Matl.	Date	Findings	A/R
9	3"	A53	11-30-00	None.	A
3	6"	"	"	None	A

CERTIFICATION:

I certify that the above work was performed as stated.

Inspector: William T. Corty

Date: 11-30-00

NWS
EG 1
WILLIAM T. CORTY
CWI

Ndt.doc

Fischer Engineering Company

8220 Expansion Way • Dayton, Ohio 45424 • (937) 754-1750
FAX: (937) 754-1754

Where Inspected:
Rieck Mechanical
5245 Wadsworth Rd.
Dayton, OH 45414

Date: 11-30-00
J/N: 0315-0367
PO: Stan Garber

Customer Contact: Ron Woods (SMAver)

REPORT ON: Inspection of Fernald VHH

IDENTIFICATION: Drawing No.: 90X-6000-00263,4,5 (Sheets M-1, M-2, M-3)

Material: A-53 Pipe, ANSI Flanges.

Markings:

STANDARD: ASME B31.3, Category D Fluid Service

PROCEDURE: FECo VE-1, Rev. 1
Inspect 20% of all joints

ACCEPT/REJECT CRITERIA: Table 341.3.2A, Cat. D

INSPECTOR: William T. Carty, CWI No. 93110781

RESULTS:

Quan.	Detail	Matl.	Date	Findings	A/R
9	3"	A53	11-30-00	(1) Porosity-Repaired	A
3	4"	"	"	None	A

CERTIFICATION:

I certify that the above work was performed as stated.

Inspector: William T. Carty

AWS QC 1 WILLIAM T. CARTY 93110781 CWI

Date: 11-30-00

Ndt.doc

FISCHER ENGINEERING COMPANY

8220 Expansion Way • Dayton, Ohio 45424 • (937) 754-1750
FAX: (937) 754-1754

Where Inspected:
Rieck Mechanical
5245 Wadsworth Rd.
Dayton, OH 45414

Date: 11-30-00
J/N: 0315-0367
PO: Stan Garber

Customer Contact: Ron Woods (Stover)

REPORT ON: Inspection of Fernald VM5

IDENTIFICATION: Drawing No.: 90X-6000-00263,4,5 (Sheets M-1, M-2, M-3)

Material: A-53 Pipe, ANSI Flanges.

Markings:

STANDARD: ASME B31.3, Category D Fluid Service

PROCEDURE: FECo VE-1, Rev. 1
Inspect 20% of all joints

ACCEPT/REJECT CRITERIA: Table 341.3.2A, Cat. D

INSPECTOR: William T. Carty, CWI No. 93110781

RESULTS:

Quan.	Detail	Matl.	Date	Findings	A/R
9	3"	A-53	11-30-00	(2) porosity - Repaired	A
3	6"	"	"	None	A

CERTIFICATION:

I certify that the above work was performed as stated.

Inspector: William T. Carty

AWS QC 1 WILLIAM T. CARTY CWI

Date: 11-30-00

Ndt.doc

Fischer Engineering Company

8220 Expansion Way • Dayton, Ohio 45424 • (937) 754-1750
FAX: (937) 754-1754

Where Inspected:
Rieck Mechanical
5245 Wadsworth Rd.
Dayton, OH 45414

Date: 11-30-00
J/N: 0315-0367
PO: Stan Garber

Customer Contact: Ron Woods (Stover)

REPORT ON: Inspection of Fernald VH-6

IDENTIFICATION: Drawing No.: 90X-6000-00263,4,5 (Sheets M-1, M-2, M-3)

Material: A-53 Pipe, ANSI Flanges.

Markings:

STANDARD: ASME B31.3, Category D Fluid Service

PROCEDURE: FECo VE-1, Rev. 1
Inspect 20% of all joints

ACCEPT/REJECT CRITERIA: Table 341.3.2A, Cat. D

INSPECTOR: William T. Carty, CWI No. 93110781

RESULTS:

Quan.	Detail	Matl.	Date	Findings	A/R
9	3"	A-53	11-30-00	(1) Porosity-Repaired	A
3	6"	"	"	NONE	A

CERTIFICATION:

I certify that the above work was performed as stated.

Inspector: William T Carty

AWS QC 1 WILLIAM T. CARTY 93110781 CWI

Date: 11-30-00

Ndt.doc

Fischer Engineering Company

8220 Expansion Way • Dayton, Ohio 45424 • (937) 754-1750
FAX: (937) 754-1754

Where Inspected:
Rieck Mechanical
5245 Wadsworth Rd.
Dayton, OH 45414

Date: 11-30-00
J/N: 0315-0367
PO: Stan Garber

Customer Contact: Ron Woods

REPORT ON: Inspection of Fernald CVII control valve

IDENTIFICATION: Drawing No.: 90X-6000-00263,4,5 (Sheets M-1, M-2, M-3)

Material: A-53 Pipe, ANSI Flanges.

Markings:

STANDARD: ASME B31.3, Category D Fluid Service

PROCEDURE: FECo VE-1, Rev. 1
Inspect 20% of all joints

ACCEPT/REJECT CRITERIA: Table 341.3.2A, Cat. D

INSPECTOR: William T. Carty, CWI No. 93110781

RESULTS:

Quan.	Detail	Matl.	Date	Findings	A/R
5	6"	A53	11-30-00	None	A

CERTIFICATION:

I certify that the above work was performed as stated.

Inspector: William T. Carty

RWS QC I WILLIAM T. CARTY 93110781 CWI

Date: 11-30-00

Ndt.doc

PRESSURE TEST RESULTS

GEOSYNTEC CONSULTANTS

FLUOR FERNALD, INC.

PRESSURE TEST LOG

PROJECT: ON-SITE DISPOSAL FACILITY (OSDF)

LOCATION: FERNALD, OHIO PROJECT NO.: GQ1029 TASK NO.: 4.2

DESCRIPTION: EPLTS YEAR: 2000

CONTRACTOR: STAVER/Rick

TEST DESCRIPTION: HYDROSTATIC: ☑ PNEUMATIC (ATTACH WRITTEN AUTHORIZATION): ☐

PASS/FAIL CRITERION: No leaks or drop in pressure.

MATERIAL DESCRIPTION: FORCEMAIN: ☐ CONTAINMENT: ☐ CARRIER ☑ OTHER: ☐

TARGET PRESSURE: 60 TEST DURATION: 3 hours GAUGE NO.: BB-3 GAUGE LOCATION:

TEST LOCATION: VH-1 Steel pipe TO

FOR CONTAINMENT PIPE TESTING, CARRIER PIPE PRESSURIZED FIRST: ☐ YES ☐ NO N/A

READING NO.	STABILIZATION TEST PERIOD	DATE (day/mo)	TIME	READING	CHANGE IN READING	QA ID
1	–	25 Jan 01	1030	60	60	CL
2	–	↓	1330	60	–	CL

PASS: ☑

FAIL: ☐

VISUAL MONITORING: R Wood 25/Jan/01 — CONTRACTOR'S REPRESENTATIVE day/mo/yr; Collins P. Lathers 25 Jan 01 — CQA REPRESENTATIVE day/mo/yr

FINAL APPROVAL: R Wood 25/Jan/01 — CONTRACTOR'S REPRESENTATIVE day/mo/yr; Collins P. Lathers 22 Feb 01 — SITE CQA MANAGER day/mo/yr

COPY TO:

GEOSYNTEC CONSULTANTS

FLUOR DANIEL FERNALD

PRESSURE TEST LOG

PROJECT: ON-SITE DISPOSAL FACILITY (OSDF)

LOCATION: FERNALD, OHIO PROJECT NO.: ~~GQ00409~~ 1029 TASK NO.: 42

DESCRIPTION: EPLTS YEAR: 2001

CONTRACTOR: STAVER / RIECK

TEST DESCRIPTION: HYDROSTATIC: ☑ PNEUMATIC (ATTACH WRITTEN AUTHORIZATION): ☐

PASS/FAIL CRITERION: NO LEAKS - NO DROP IN PRESSURE

MATERIAL DESCRIPTION: FORCEMAIN: ☐ CONTAINMENT: ☐ CARRIER ☑ OTHER: ☐

TARGET PRESSURE: 60 TEST DURATION: 3hr GAUGE NO.: B8-3 GAUGE LOCATION:

TEST LOCATION: VH 2 STeel Pipe TO

FOR CONTAINMENT PIPE TESTING, CARRIER PIPE PRESSURIZED FIRST: ☐ YES ☐ NO N/A

READING NO.	STABILIZATION TEST PERIOD	DATE (day/mo)	TIME	READING	CHANGE IN READING	QA ID
1	Pressurize	6 Feb	0829	60	60	TO
2	Test		1130	60	0	TO

PASS: ☑

FAIL: ☐

VISUAL MONITORING: [signature] 22/Feb/01 — CONTRACTOR'S REPRESENTATIVE day/mo/yr; [signature] 6 Feb 01 — CQA REPRESENTATIVE day/mo/yr

FINAL APPROVAL: [signature] 22/Feb/01 — CONTRACTOR'S REPRESENTATIVE day/mo/yr; [signature] 21 Feb 01 — CQA REPRESENTATIVE day/mo/yr

COPY TO:

GEOSYNTEC CONSULTANTS

FLUOR DANIEL FERNALD

PRESSURE TEST LOG

PROJECT: ON-SITE DISPOSAL FACILITY (OSDF)

LOCATION: FERNALD, OHIO PROJECT NO.: GO~~0409~~ 1029 TASK NO.: 4.1

DESCRIPTION: EPLTS YEAR: 2001

CONTRACTOR: STAVER/Riech

TEST DESCRIPTION: HYDROSTATIC: ☐ PNEUMATIC (ATTACH WRITTEN AUTHORIZATION): ☐

PASS/FAIL CRITERION: No Visible leaks - No Drop in Pressure Greater Than 5% of Start

MATERIAL DESCRIPTION: FORCEMAIN: ☐ CONTAINMENT: ☐ CARRIER ☑ OTHER: ☐

TARGET PRESSURE: 60 TEST DURATION: 3hr GAUGE NO.: B8-3 GAUGE LOCATION:

TEST LOCATION: Steel Pipe Vh 3 TO

FOR CONTAINMENT PIPE TESTING. CARRIER PIPE PRESSURIZED FIRST: ☐ YES ☐ NO N/A

READING NO.	STABILIZATION TEST PERIOD	DATE (day/mo)	TIME	READING	CHANGE IN READING	QA ID
1	Pressurize	15 Feb	0803	50	—	TD
2	Stabilize & Test		0804	60	+10	TD
3	End Test		1104	60	—	TD
Ambient Temp 40°F						
Water Temp 47°F						

PASS: ☑

FAIL: ☐

VISUAL MONITORING: R Wood — CONTRACTOR'S REPRESENTATIVE — 22/Feb/01 day/mo/yr — CQA REPRESENTATIVE — 15 Feb 01 day/mo/yr

FINAL APPROVAL: R Wood — CONTRACTOR'S REPRESENTATIVE — 22/Feb/01 day/mo/yr — CQA REPRESENTATIVE — 21 Feb 01 day/mo/yr

COPY TO:

GEOSYNTEC CONSULTANTS

FLUOR DANIEL FERNALD

PRESSURE TEST LOG

PROJECT: ON-SITE DISPOSAL FACILITY (OSDF)

LOCATION: FERNALD, OHIO PROJECT NO.: GQ0409 TASK NO.: 42

DESCRIPTION: EPLTS YEAR: 2001

CONTRACTOR: STAVER

TEST DESCRIPTION: HYDROSTATIC: ☑ PNEUMATIC (ATTACH WRITTEN AUTHORIZATION): ☐

PASS/FAIL CRITERION: No Visible Leaks No Drop in Pressure Greater Than 5%

MATERIAL DESCRIPTION: FORCEMAIN: ☐ CONTAINMENT: ☐ CARRIER ☑ OTHER: ☐

TARGET PRESSURE: 60 TEST DURATION: 3hr GAUGE NO.: B8-3 GAUGE LOCATION:

TEST LOCATION: Steel Pipe in VH4 TO

FOR CONTAINMENT PIPE TESTING, CARRIER PIPE PRESSURIZED FIRST: ☐ YES ☐ NO N/A

READING NO.	STABILIZATION TEST PERIOD	DATE (day/mo)	TIME	READING	CHANGE IN READING	QA ID
1	Pressurize	13 Feb	0814	50	—	TD
2	Stabilize/Test		0814	60	+10	TD
3	End Test		1115	60	0	TD

Ambient Temp 47°F
Water Temp 45°F

PASS: ☑
FAIL: ☐

VISUAL MONITORING: [signature] 2/13/01 — CONTRACTOR'S REPRESENTATIVE day/mo/yr; [signature] 13/2/01 — CQA REPRESENTATIVE day/mo/yr

FINAL APPROVAL: [signature] 21/Feb/01 — CONTRACTOR'S REPRESENTATIVE day/mo/yr; [signature] 21 Feb 01 — CQA REPRESENTATIVE day/mo/yr

COPY TO:

GEOSYNTEC CONSULTANTS

FLUOR FERNALD, INC.

PRESSURE TEST LOG

PROJECT: ON-SITE DISPOSAL FACILITY (OSDF)

LOCATION: FERNALD, OHIO PROJECT NO.: GQ1029 TASK NO.: 4.2

DESCRIPTION: EPLTS YEAR: ~~2000~~ KS 2001

CONTRACTOR: Staver / Rieck

TEST DESCRIPTION: HYDROSTATIC: ☒ PNEUMATIC (ATTACH WRITTEN AUTHORIZATION): ☐

PASS/FAIL CRITERION:

MATERIAL DESCRIPTION: FORCEMAIN: ☒ CONTAINMENT: ☐ CARRIER ☐ OTHER: ☐

TARGET PRESSURE: 60 psi TEST DURATION: 3 hrs. GAUGE NO.: B8-3 GAUGE LOCATION: VH-5

TEST LOCATION: VH-5 Steel pipe TO

FOR CONTAINMENT PIPE TESTING, CARRIER PIPE PRESSURIZED FIRST: ☐ YES ☐ NO

READING NO.	STABILIZATION TEST PERIOD	DATE (day/mo)	TIME	READING	CHANGE IN READING	QA ID
1	Start test	31 Jan	1120	62	—	KS
2			1220	62	Ø	KS
3	End test		1420	62		KS
		Ambient temp - 35°				
		Water temp. - 54°				

PASS: ☒

FAIL: ☐

VISUAL MONITORING: R Wood — 31 JAN 2001 — CONTRACTOR'S REPRESENTATIVE — day/mo/yr

Ken Schn — 31 Jan 2001 — CQA REPRESENTATIVE — day/mo/yr

FINAL APPROVAL: R Wood — 31 JAN 2001 — CONTRACTOR'S REPRESENTATIVE — day/mo/yr

Collin P. Sullivan — 1 Feb 01 — SITE CQA MANAGER — day/mo/yr

COPY TO:

GEOSYNTEC CONSULTANTS

FLUOR FERNALD, INC.

PRESSURE TEST LOG

PROJECT: ON-SITE DISPOSAL FACILITY (OSDF)

LOCATION: FERNALD, OHIO PROJECT NO.: GQ1029 TASK NO.: 4.2

DESCRIPTION: EPLTS YEAR: ~~2000 KS~~ 2001

CONTRACTOR: Staver / Rieck

TEST DESCRIPTION: HYDROSTATIC: ☒ PNEUMATIC (ATTACH WRITTEN AUTHORIZATION): ☐

PASS/FAIL CRITERION:

MATERIAL DESCRIPTION: FORCEMAIN: ☒ CONTAINMENT: ☐ CARRIER ☐ OTHER: ☐

TARGET PRESSURE: 60 PSI TEST DURATION: 3 hrs GAUGE NO.: B8-3 GAUGE LOCATION: VH-6

TEST LOCATION: VH-6 Steel pipe TO

FOR CONTAINMENT PIPE TESTING, CARRIER PIPE PRESSURIZED FIRST: ☐ YES ☐ NO

READING NO.	STABILIZATION TEST PERIOD	DATE (day/mo)	TIME	READING	CHANGE IN READING	QA ID
1	Start test	1 Feb	1035	60	—	KS
2	End test	"	1335	60	—	KS
		Ambient temp - 37°				
		Water temp - 42°				

PASS: ☒

FAIL: ☐

VISUAL MONITORING: R Wood — CONTRACTOR'S REPRESENTATIVE — 1 Feb 2001 day/mo/yr — Ken Sylo — CQA REPRESENTATIVE — 1 Feb 2001 day/mo/yr

FINAL APPROVAL: R Wood — CONTRACTOR'S REPRESENTATIVE — 1 Feb 2001 day/mo/yr — Collin P. Sullivan — SITE CQA MANAGER — 1 Feb 01 day/mo/yr

COPY TO:

GEOSYNTEC CONSULTANTS

FLUOR DANIEL FERNALD

PRESSURE TEST LOG

PROJECT: ON-SITE DISPOSAL FACILITY (OSDF)

LOCATION: FERNALD, OHIO PROJECT NO.: G00409 TASK NO.: 42

DESCRIPTION: CPLTS YEAR: 2001

CONTRACTOR: STAUER/RIECK

TEST DESCRIPTION: HYDROSTATIC: ☑ PNEUMATIC (ATTACH WRITTEN AUTHORIZATION): ☐

PASS/FAIL CRITERION: No Visible Leaks - No Drop in Pressure

MATERIAL DESCRIPTION: FORCEMAIN: ☐ CONTAINMENT: ☐ CARRIER ☑ OTHER: ☐

TARGET PRESSURE: 60 PSI TEST DURATION: 3 hr GAUGE NO.: 88-3 GAUGE LOCATION:

TEST LOCATION: 6" Steel inside Control Valve house TO

FOR CONTAINMENT PIPE TESTING, CARRIER PIPE PRESSURIZED FIRST: ☐ YES ☐ NO N/A

READING NO.	STABILIZATION TEST PERIOD	DATE (day/mo)	TIME	READING	CHANGE IN READING	QA ID
1	Pressurize/Test Start	25 JAN	1006	60	60	TD
2	End Test		1306	60	0	TD

PASS: ☑

FAIL: ☐

VISUAL MONITORING: [signature] 22/Feb/01 [signature]
CONTRACTOR'S REPRESENTATIVE day/mo/yr CQA REPRESENTATIVE day/mo/yr

FINAL APPROVAL: [signature] 22/Feb/01 [signature] 1 Feb 01
CONTRACTOR'S REPRESENTATIVE day/mo/yr CQA REPRESENTATIVE day/mo/yr

COPY TO: