DEVELOPMENT AND DEPLOYMENT OF THE EXCAVATION MONITORING SYSTEM (EMS)

FERNALD ENVIRONMENTAL MANAGEMENT PROJECT
FERNALD, OHIO

APRIL 9, 2002

U.S. DEPARTMENT OF ENERGY
FERNALD AREA OFFICE

20310-RP-0007
REVISION 0
FINAL

DISCLAIMER

The mention of specific products in this document does not constitute an endorsement by the U.S. Department of Energy.

TABLE OF CONTENTS

1.0 Introduction 1-1
1.1 Purpose 1-1
1.2 Background 1-1
1.3 Overview 1-3

2.0 Description of the EMS 2-1
2.1 Physical Description 2-1
2.2 Functional Description and Data Processing 2-2
2.3 Summary of Significant Capabilities 2-5

3.0 EMS Development and Acceptance Testing 3-1
3.1 Background 3-1
3.2 Acceptance Testing 3-2

4.0 Calibration of the NaI Detector Used in the EMS 4-1

5.0 Use of the EMS at the FEMP 5-1
5.1 Introduction 5-1
5.2 EMS Applications 5-1
5.2.1 Mobile Surveys Using the NaI Detector 5-3
5.2.2 Stationary Measurements with the HPGe Detector 5-4
5.3 Use of the EMS in Excavation Areas 5-5
5.3.1 Use of EMS in Large Excavations 5-5
5.3.2 Use of EMS in Utility Trench Excavations 5-6
5.3.3 Application of Geometric Corrections for Non-Flat Terrain 5-7
5.4 Operational Considerations 5-10

References R-1

LIST OF TABLES

Table 4-1 Efficiencies Determined by Direct Calibration
Table 4-2 Direct Calibration Interference Coefficients
Table 4-3 Calibration Factors
Table 5-1 Examples of Implementing Geometric Corrections

LIST OF FIGURES

Figure 2-1 The Excavator Mounted Portion of the EMS with an HPGe Detector Attached
Figure 2-2 EMS Computers and Data Communications
Figure 2-3 System Block Diagram for EMS Electronics
Figure 2-4 Example Excavator Cab Display
Figure 2-5 Example EMS Van Display
Figure 2-6 Software Logic for EMS Data Acquisition and Processing
Figure 5-1 Use of EMS in Large Excavations
Figure 5-2 Use of EMS in Utility Trench Excavations
Figure 5-3 Procedure for Application of Geometric Corrections for Non-Flat Terrain
Figure 5-4 General Excavation Geometry
Figure 5-5 Correction Factors as a Function of Wall Height
Figure 5-6 Correction Factors as a Function of Width to Height Ratio
Figure 5-7 Correction Factors in the Deepest Excavation

LIST OF ACRONYMS AND ABBREVIATIONS

ALARA	as low as reasonably achievable
ASTD	Accelerated Site Technology Deployment
CERCLA	Comprehensive Environmental Response, Compensation, and Liability Act
cps	counts per second
DOE	U.S. Department of Energy
EGAS	Environmental Gamma Analysis Software
EML	Environmental Measurements Laboratory
EMS	Excavation Monitoring System
ET	excavator tool
FEMP	Fernald Environmental Management Project
FRL	final remediation level
GPS	global positioning system
GUI	graphical user interface
HPGe	high-purity germanium (detector)
INEEL	Idaho National Engineering and Environmental Laboratory
keV	kilovolt
LAN	Local Area Network
MCA	multi-channel analyzer
MEMP	Miamisburg Environmental Management Project
NaI	sodium iodide
OMTA	OSDF Material Transfer Area
OSDF	On-Site Disposal Facility
PCI	peripherical component interconnect
pCi/g	picoCuries per gram
ppm	parts per million
PSP	Project Specific Plan
QC	Quality Control
RMS	Radiation Monitoring System
RSS	Radiation Scanning System
RTIMP	Real Time Instrumentation Measurements Program
RTRAK	Real Time Radiation Tracking System
SED	Sitewide Environmental Database
SEP	Sitewide Excavation Plan
WAC	waste acceptance criteria

1.0 INTRODUCTION

1.1 PURPOSE

This report describes the Excavation Monitoring System (EMS) and the types of measurements that can be made with it, its uses and applications, and its strengths and limitations. In this way, it provides an overview and general guidance for the device. Other guidance associated with its use includes the User Guidelines, Measurement Strategies, and Operational Factors for Deployment of *In Situ* Gamma Spectrometry at the Fernald Site (User's Manual, DOE 1998a) and Calibration of NaI *In Situ* Gamma Spectroscopy Systems (DOE 2001a).

1.2 BACKGROUND

The EMS is a second-generation device that has been fabricated specifically to support the characterization of soils in the deep and complex excavations that will be necessary during remediation of the former Production Area at the Fernald Environmental Management Project (FEMP). The design and construction of the EMS were supported by the U.S. Department of Energy's (DOE) Accelerated Site Technology Deployment (ASTD) program. The device was built by the Environmental Remediation Technologies Department at Idaho National Engineering and Environmental Laboratory (INEEL). INEEL is a partner in an ASTD team whose members also include Fluor Fernald, Argonne National Laboratory, DOE's Environmental Measurements Laboratory (EML), and DOE-Fernald, who directs the team. The ASTD program, as its name suggests, fosters the rapid deployment of existing technologies to aid DOE cleanups.

So, while the device is new, the technology on which it is based was established with the first-generation system, which was demonstrated at the Miamisburg Environmental Management Project (MEMP) and at the FEMP. The EMS will be used in the FEMP soils program along with a suite of other real-time *in situ* gamma spectrometer platforms including the Real-Time Radiation Tracking System (RTRAK), Radiation Scanning System (RSS), GATOR, and high-purity germanium (HPGe) detector systems. The EMS uses the same sodium iodide (NaI) and HPGe spectrometers as used on these other platforms. The real-time data management system that integrates various EMS functions is also utilized in the other platforms in the suite. This real-time feature ensures a consistent, compatible methodology throughout the FEMP's soils characterization program.

The EMS is a self-contained gamma detection system. As noted, it is capable of deploying the NaI and HPGe gamma spectrometry systems that have long been in routine use at the FEMP. It is attached to a standard excavator and includes a self-righting vertical arm, which attaches to a detector mount and detector. The vertical arm is suspended from a horizontal platform that is coupled to the arm of the excavator and holds an onboard computer, global positioning system (GPS) and laser-based location measurement systems, and data transmission equipment. The GPS and laser-based position measurement systems provide redundant means of measuring the location at which each gamma spectral measurement is performed. Other major components of the system include excavator cab and support van computers, data processing software, and display screen. If needed, a 2-foot or 4-foot extension can be added to the vertical arm of the unit to extend the reach of the system into deeper excavations.

The EMS is intended to be applied to non-standard survey situations that cannot be handled by the other platforms, for example, surveys of pits, trenches, mounds, vertical surfaces, soft or wet ground, or locations where access is difficult or unsafe. In the latter situations, the EMS protects workers and reduces their potential exposure, and therefore, advances the objectives of as low as reasonably achievable (ALARA) and worker health and safety. The EMS provides a substantial improvement in meeting ALARA objectives compared to what could be accomplished with other available methods.

Real-time gamma measurements can be made in several modes, including stationary measurements at a prescribed detector height or offset and mobile scanning measurements with either detector at a prescribed detector height and scanning speed. Either gross activity or spectrometric measurements can be collected in any of these modes. All stationary or mobile measurements are tagged with detector location as determined by the onboard GPS or laser-based systems. The movement of the EMS-mounted detector over the survey area is tracked using either the GPS or a laser-based tracking system that traces detector location on display screens in the excavator cab and in the support van.

The EMS is intended for use in same phases of the FEMP soil remediation program as the other real-time platforms, namely in excavation predesign, excavation support, and precertification. The main survey activities associated with these program phases are delineation of excavation boundaries, identification of soil with concentrations of uranium above the waste acceptance criteria (WAC) for the On-Site Disposal Facility (OSDF), identification of hotspots, and checking residual contaminant levels to confirm the effectiveness of cleanup actions.

1.3 OVERVIEW

Section 2.0 presents a physical description of the EMS and associated technologies. It also presents a functional description of the system, including an outline of data acquisition and processing of EMS measurements, as well as a summary of the system's significant capabilities.

Section 3.0 describes acceptance testing performed at the FEMP upon receipt of the current EMS unit. The main testing was carried out in June 2001, with follow-up testing of system modifications carried out in December 2001. Acceptance testing was concerned mainly with the functional aspects of the system as defined in the design objectives, which, in turn, were defined in terms of the primary objectives of the soil project.

Section 4.0 presents the calibration results for the NaI detector used in the EMS. Any of the Real Time Instrumentation Measurements Program's (RTIMP) HPGe detectors that are operational and currently calibrated may be deployed on the EMS. Calibration of HPGe detectors is performed in accordance with approved RTIMP procedures (RTIMP-M-02).

Section 5.0 outlines the uses of the EMS in the FEMP soils remediation project. As mentioned above, the technology supports all phases of the project except final certification, as do the other real-time platforms. The scope of applications is outlined and general methods for performing mobile scans and direct measurements are presented. Specific application of the EMS in large excavations and in trench excavations is discussed using flowcharts. Finally, the application of corrections to gamma measurements in non-flat terrain is covered. This section outlines when and how such corrections should be made.

2.0 DESCRIPTION OF THE EMS

2.1 PHYSICAL DESCRIPTION

The main component of the EMS, which is mounted on the arm of a standard excavator, is called the excavator tool (ET). A drawing of the ET is shown in Figure 2-1, which identifies the major components of the device. The ET stands approximately 72 inches tall, by 32 inches wide, by 50 inches deep, with HPGe detector mounted, but excluding the available 2-foot or 4-foot detector mount extensions. The entire unit weighs roughly 200 pounds, while the removable detector assembly weighs roughly 46 pounds. Other major components of the EMS include computers and displays located in the excavator cab and in the support van.

The mechanical components of the ET include an excavator adapter, which allows fast and simple attachment to a hydraulic coupler mounted on the arm of an excavator. While the excavator is not considered part of the EMS, it is a crucial component of the overall system. Most any standard, mid-sized, excavator would suffice, as long as its coupler fits the adapter. For the current application, a dedicated excavator is used that can be easily fitted with the cab-mounted display panel described below.

The excavator adapter is attached to the main platform of the unit on which are mounted the system computer and other system communications and GPS components. The horizontal unit is articulated and can pivot about a swing damper that provides half of the freedom of movement that allows the mast assembly to maintain a vertical orientation. A similar damper, mounted at right angles to the first affords the other half of the freedom of movement, and connects the mast assembly to the horizontal platform.

A gamma-sensitive detector is suspended from the excavator arm at the end of the mast assembly. The signal processing modules, antennae and other electronic equipment are housed on the horizontal platform, referred to as the boom assembly, located at the top of the mast assembly. A 2-foot or 4-foot extension rod may be attached between the lower end of the mast assembly and the detector to enable the detector to reach the bottom of deeper excavations. Each detector assembly is equipped with four ultrasonic proximity sensors, which provide collision warning signals when the detector approaches an excavation wall or other nearby object. Each detector assembly is also equipped with a look-down laser range finder capable of measuring the distance to the surface being surveyed. The laser range finder functions as a collision warning system, but more importantly, it allows positioning of the detector at the appropriate height above the surface being surveyed in accordance with standard procedures.

As mentioned above, GPS components, including antenna and receiver, are mounted on the horizontal platform. The GPS system allows the determination of three-dimensional coordinates of every survey measurement. The output of the GPS system is transmitted to computers in the support van, where scan coverage is displayed and the output is appended to the data file of the corresponding detector readings.

The EMS can also use a laser-based system produced by ArcSecond, Inc., to determine detector position. The system employs two or more tripod-mounted laser transmitters positioned in the work area in line-of-sight of a receiver mounted on the top of the ET. The position of the receiver is determined by triangulation using the signals from the transmitters, which are in known fixed positions. The laser-based system can be used in locations for which reception problems limit the use of GPS.

Three computers are used in the EMS, one mounted on the ET, one in the excavator cab, and one in the support van situated near the excavator. Figure 2-2 describes the three computers and essential connections. The ET-mounted computer performs important signal processing and data transmission functions associated with the collection of measurement and position data from sensors and detectors on the ET. The integrated data are transmitted via a wireless Ethernet connection to the other two computers, which display and record the data as needed. Display panels on the excavator cab and support van computers provide the information to the excavator operator and EMS operators needed to position the device and interpret gamma readings as they are made.

2.2 FUNCTIONAL DESCRIPTION AND DATA PROCESSING

Two main types of data result from EMS operations, namely measurement location data and gamma spectral data. A number of sensors, receivers, and detectors generate the data. As mentioned above, the EMS uses three major computer-based systems for data collection, processing, and display. Data are ultimately transferred to the Sitewide Environmental Database (SED), the FEMP's main environmental database, for further use and archiving.

Figure 2-3 shows a general schematic diagram that addresses signal collection, processing, and transmission for the EMS. The ET computer is at the heart of the EMS. Mounted on the excavator tool, and powered by the excavator's 24-volt battery, it handles inputs from the following devices:

- DART multi channel analyzer, which converts gamma detector signals into spectrometric data,

- Trimble GPS System, which provides location data in three dimensions,
- ArcSecond laser-based positioning system receiver, which also provides 3-D data,
- Banner ultrasonic sensors (4), which provide distance to lateral surfaces or objects, and
- Riegl laser range finder, which detects vertical offset from detector to ground.

These inputs are routed through a peripheral component interconnect (PCI) bus to a Cisco Wireless Ethernet Adaptor, which transmits the data to the excavator- and van-mounted computers, which have corresponding wireless Ethernet receivers. The excavator cab computer and display serve as the excavator operator's main interface with the system, in addition to his visual view of the ET or of someone who is spotting for him.

An example excavator display screen is shown in Figure 2-4. The main portion of the screen is dedicated to a two-dimensional detector position graph, which records a trace of movement of the ET over the course of a data collection run. This graphical user interface (GUI) display is very similar to those in other RMS systems (e.g., RTRAK). Displays are intended to help guide the movement of the ET, while recording the areas scanned, so that complete areal coverage can be effectively attained. The display screen is mounted in a convenient location in the excavator cab, and features a touch screen display. Touching the "Draw Scaled Coverage" button on the screen will pull up a scaled coverage plot similar to that available on other RMS systems.

Other information on the excavator cab display includes a numerical reading of latitude and longitude readings from the GPS or ArcSecond laser-based positioning systems, and of detector-to-ground offset as determined by the detector-mounted laser range finder. Also displayed are four lateral hazard warning lights activated when the ET approaches a lateral object within a preset limit as determined from readings from the four laterally mounted ultrasonic sensors on the ET. This information is used primarily to protect the detectors from collisions during scanning.

The support van computer is used to control data acquisition functions of the devices mounted on the excavator tool, mainly the gamma detectors and positioning systems. The GUI, shown in Figure 2-5, is a combination of current RTRAK and HPGe displays. System software is capable of controlling and acquiring data from both NaI and HPGe detectors. The system can be operated in either static or mobile

scanning modes. Data acquisition time can be defined as either actual time or live time. The latter accounts for periods of time when the detector cannot record another gamma detection event because it is processing a prior event.

Setup and control functions in the van can select between static and repeated scanning measurements and allow setting measurement duration in either live time or real (actual) time. The menu-driven system also allows recording the physical tool configuration and orientation with respect to the excavator.

The van display can be toggled between plan view and spectrum view. Gamma spectra are displayed as they accumulate over time in terms of counts recorded per MCA channel. The Environmental Gamma Analysis Software (EGAS), when loaded can analyze spectral data from either NaI or HPGe detectors to produce a calibrated energy spectrum. The software can further analyze such spectra to determine the identities and activities of the radionuclides corresponding to the recorded spectral peaks. Worksheet and log-file functions can also be loaded into the system.

The van display allows control of the ArcSecond laser positioning system gain, which permits convenient adjustments to the system gain in times of changing conditions of ambient light, which affects system function. Continuous ArcSecond position readouts are also part of this screen, as are system status indicators. The operator has the option to display a scaled coverage plot, similar to that shown on the excavator cab display screen.

EMS and other RMS system computers use NAI.exe, a program written in Labview, to collect and analyze NaI data. This program controls the detector system, acquires spectra, and records sample descriptors, including GPS coordinates and soil moisture. Spectra are analyzed using EGAS and results are written to a log file. Figure 2-6 shows the software logic used for acquiring and analyzing spectra. Labview also supports the detector tracking function, which generates coverage maps. Processed spectra are imported into Excel, which is accessed by Surfer mapping software, which is used to prepare area maps showing the gamma spectrometry results.

Quality control (QC) checks are performed on the data using validation checklists in the mapping van immediately after collection in accordance with the *In Situ* Gamma Spectrometry Addendum to the Sitewide Comprehensive Environmental Response, Compensation, and Liability Act (CERCLA) Quality Assurance Project Plan (DOE 1998b). Fully processed and reviewed measurements collected on a given

day, or portion of a day, are transferred to the Real-Time Directory of the FEMP Local Area Network (LAN) via a Wireless Ethernet connection, or computer diskettes on a daily basis. After QC checks are performed on the data on the LAN, approved data are sent to the SED for storage and archiving.

2.3 SUMMARY OF SIGNIFICANT CAPABILITIES

The EMS was designed to provide a flexible system suitable for use in excavated areas. Major capabilities of the EMS are summarized below.

Structural Components

- Both HPGe and NaI detector assemblies are available
- All modules use quick-clip couplings, except the boom assembly and computer modules, which are attached with allen-head machine screws
- Detector assemblies can be rotated though 360 degrees and locked at 90-degree intervals; proximity sensor connections must be changed accordingly to show the proper orientation on display screens
- System electronics mounted on the excavator tool are housed under a weather-resistant enclosure equipped with two ventilation fans
- The HPGe detector assembly can be locked at 0, 45, and 90 degrees from vertical. The NaI carriage cannot be tilted
- The structure is capable of suspending a 100-pound collimator
- No protection of the HPGe detector endcaps or detector can was included in the design to minimize detector shielding and resultant calibration issues; NaI detectors are protected by a PVC pipe enclosure as used in the other RMS platforms
- Two-foot and 4-foot detector extensions that can be combined to 6 feet are included with the system.

Position Tracking Systems

- The system can utilize either GPS or laser-based methods for determining detector position
- The GPS method has a specified uncertainty of less than 1 cm in the x and y directions, and less than 2 cm in the z (vertical) direction; the ArcSecond laser system has an uncertainty of less than 1 cm in the x, y, and z directions.

Ground Sensing Systems

- The laser range finders attached to the HPGe and NaI detector assemblies are accurate to less than 1 inch
- Four ultrasonic sensors are used in the lateral proximity alarm system. Alarm distances can be independently set between 6 inches and 3 feet; sensor readouts in inches are displayed on computer screens.

EMS Software

- EMS system software is an enhanced version of software used in other RMS platforms and includes additional provisions for switching between NaI and HPGe detectors and between GPS and ArcSecond systems for determining the position of the detector
- The software can support static and mobile measurements with both NaI and HPGe detectors
- In the excavator cab, all readouts can be shown on a single display screen
- Data quality indicators used in previous versions of Radiation Monitoring System (RMS) software are also available in the EMS version.

Miscellaneous

- Motions of the EMS are damped and dampers maintain the mast assembly in a vertical orientation.

Excavator 24-volt DC power is tapped and inverted to power electrical components. Separate feed lines supply the boom and cab.

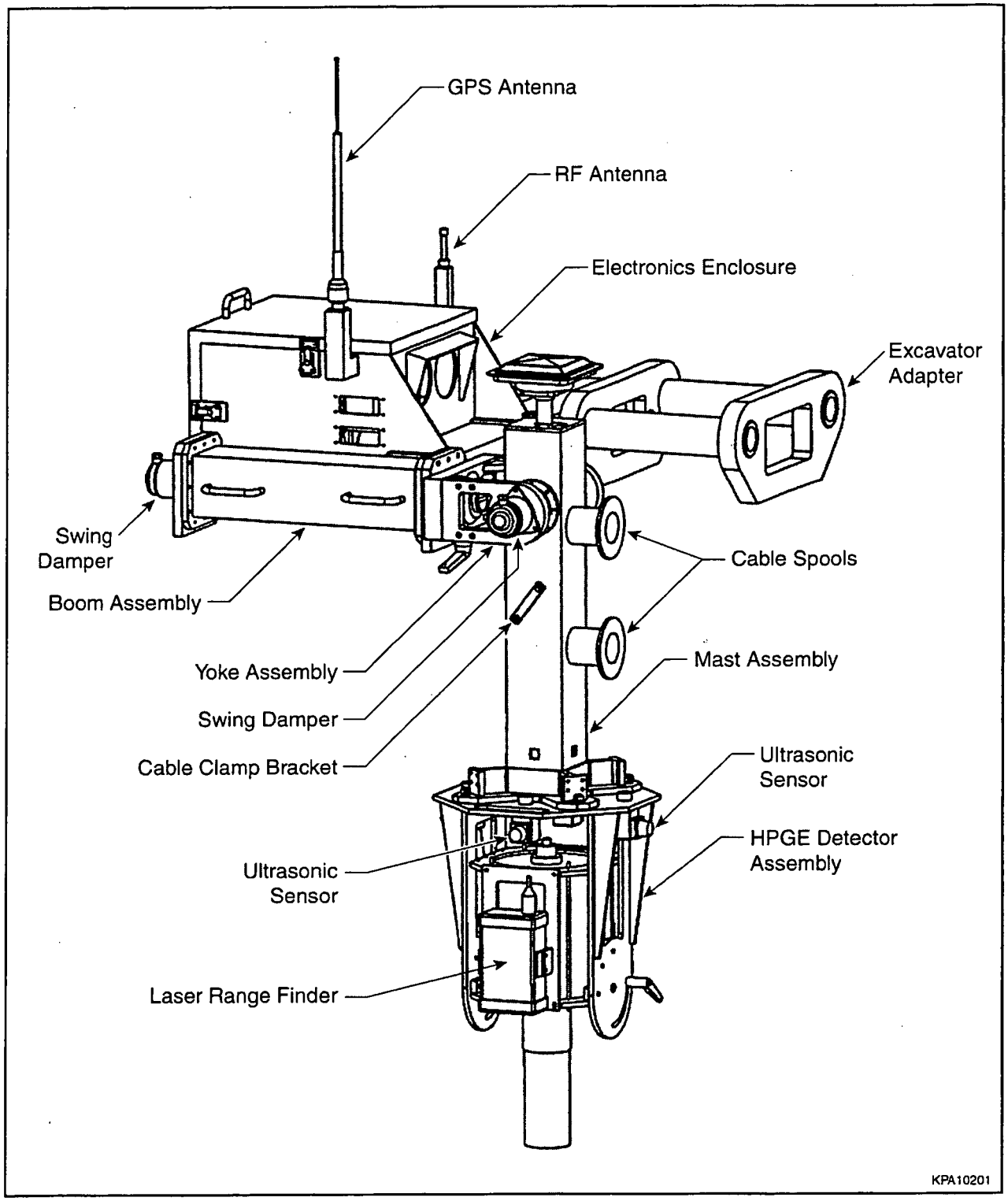

FIGURE 2-1 THE EXCAVATOR MOUNTED PORTION OF THE EMS WITH AN HPGe DETECTOR ATTACHED

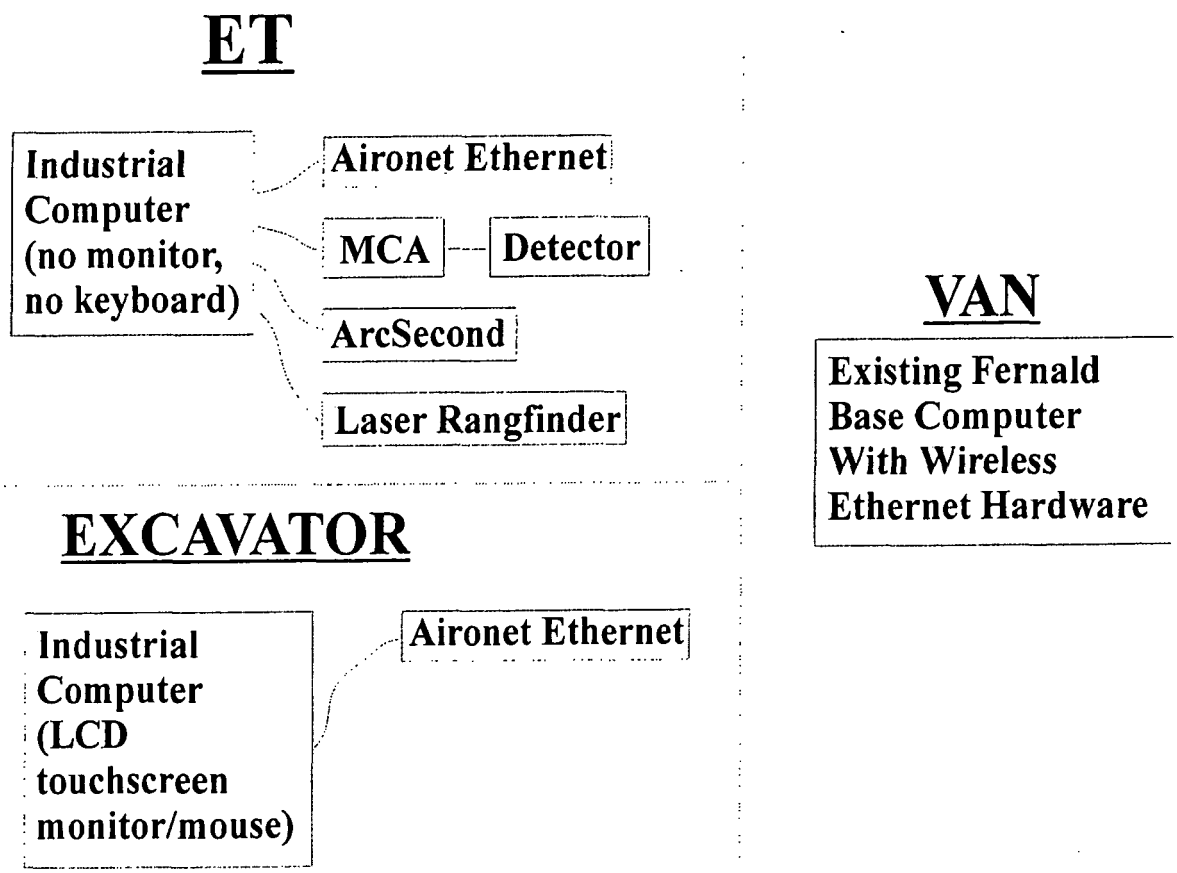

FIGURE 2-2 EMS COMPUTERS AND DATA COMMUNICATIONS (MCA = MULTI CHANNEL ANALYZER)

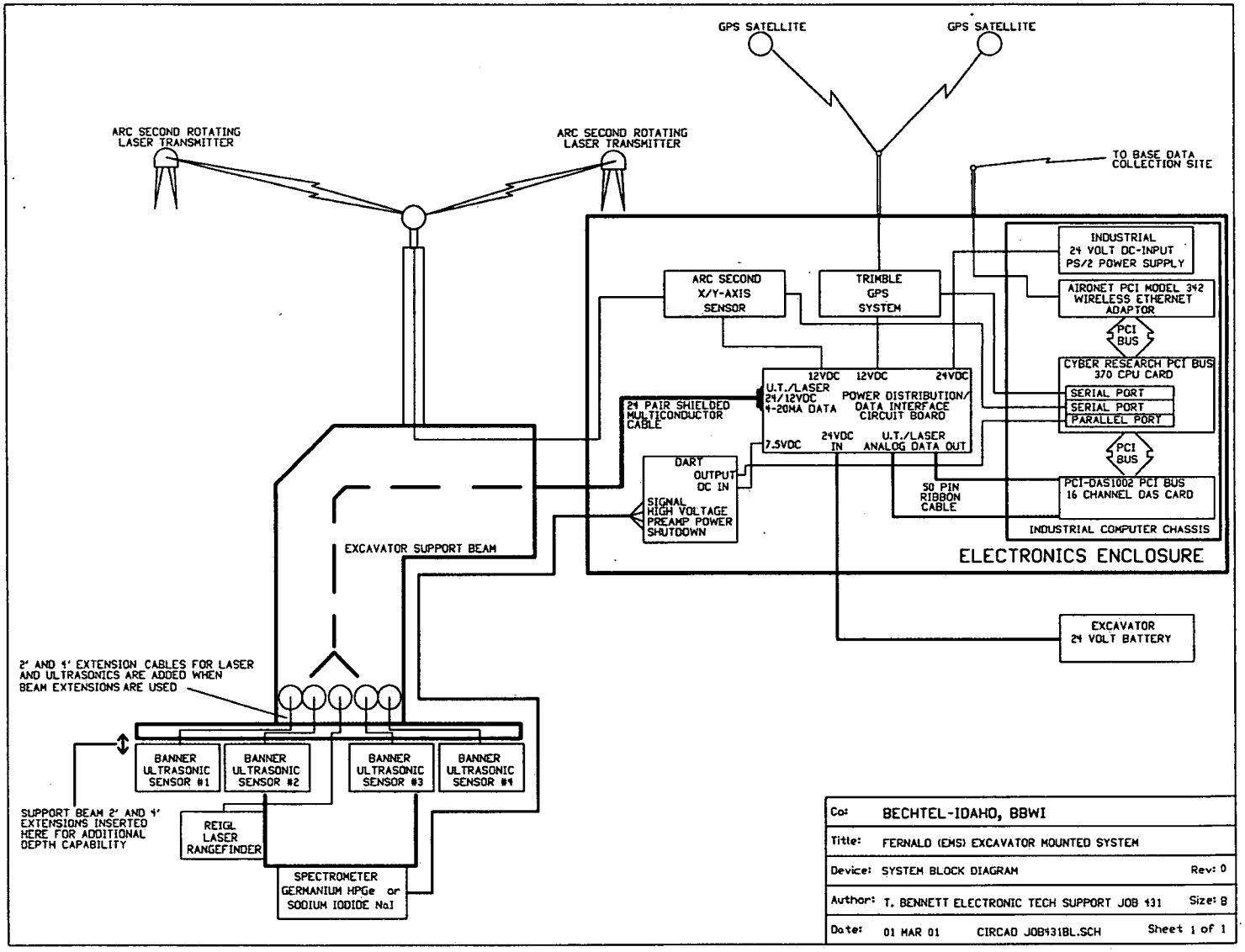

FIGURE 2-3 SYSTEM BLOCK DIAGRAM FOR EMS ELECTRONICS

000017
4228

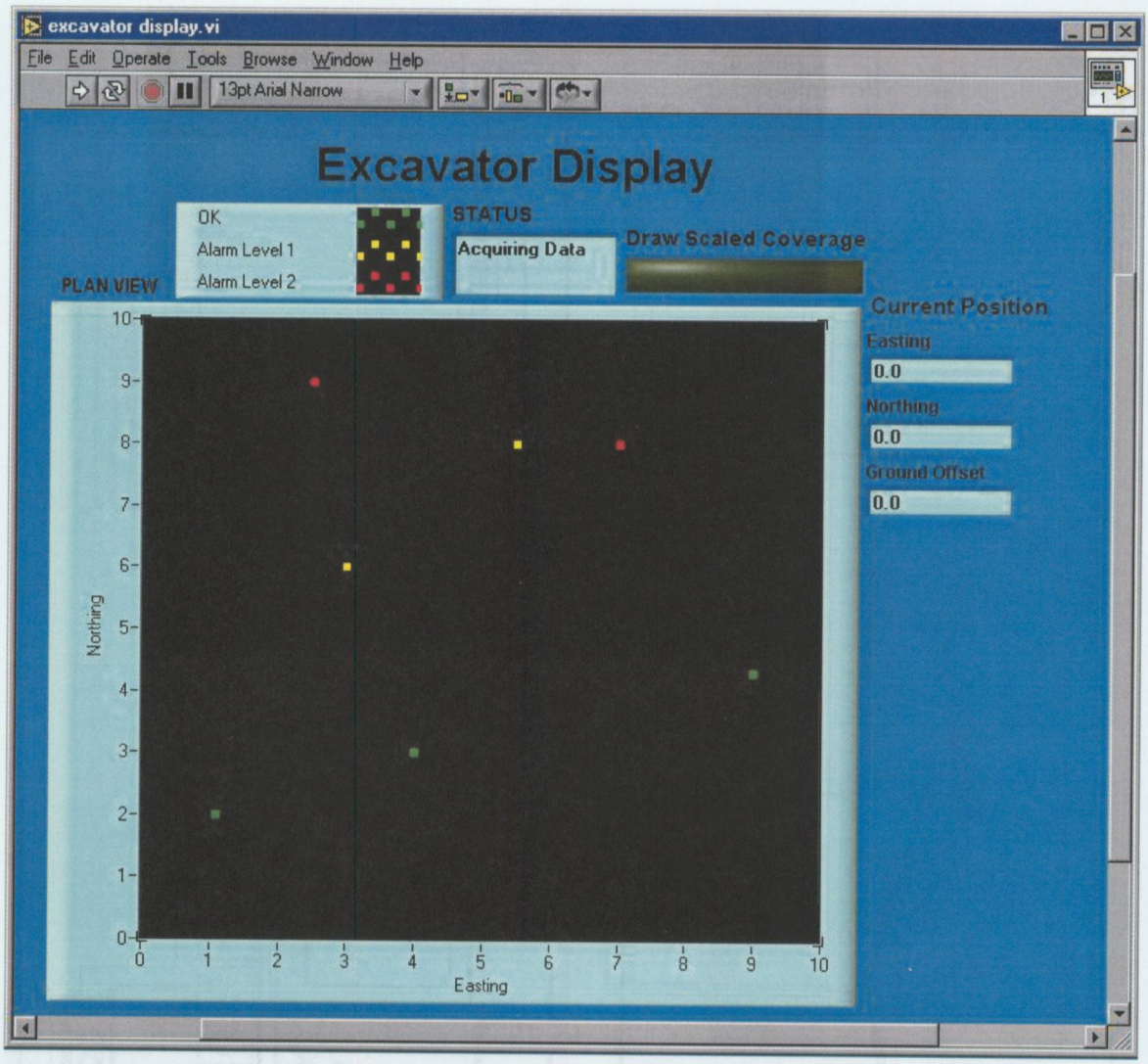

FIGURE 2-4 EXAMPLE EXCAVATOR CAB DISPLAY

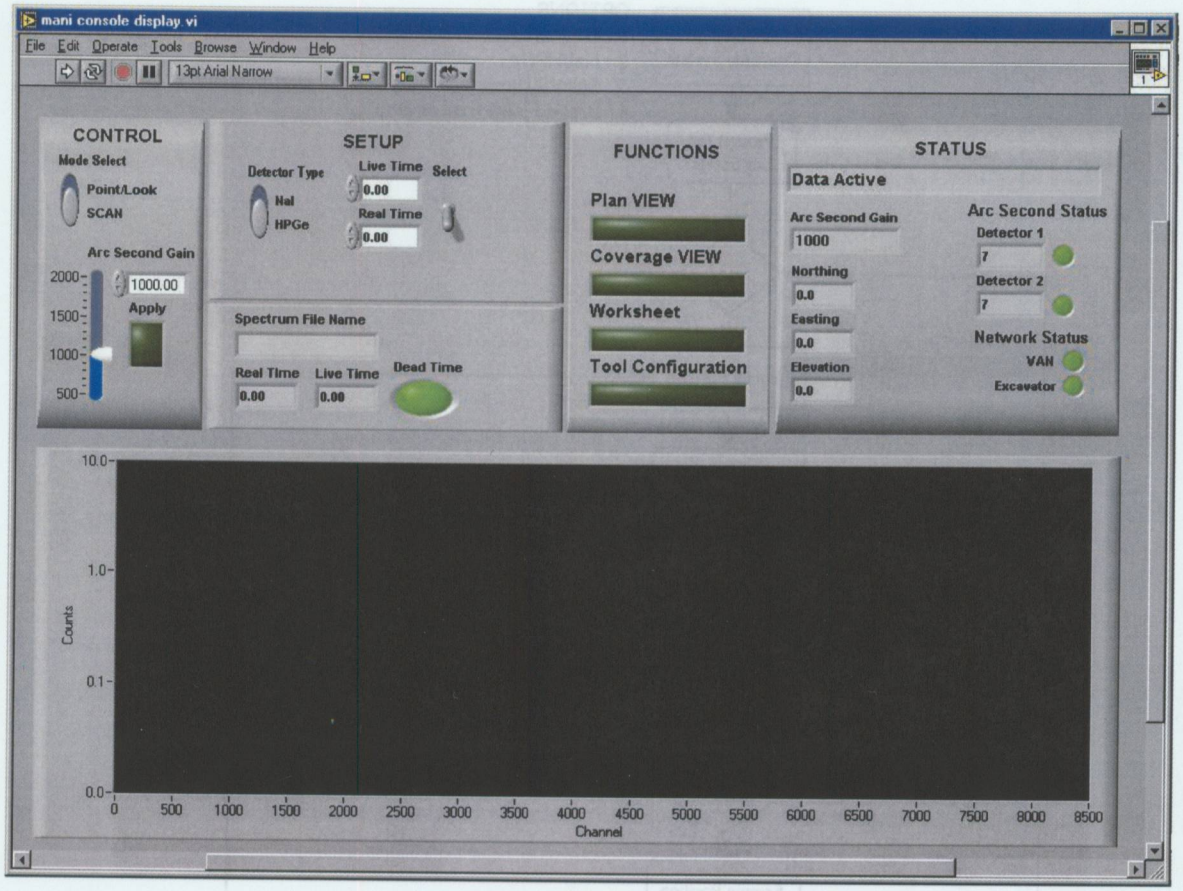

FIGURE 2-5 EXAMPLE EMS VAN DISPLAY

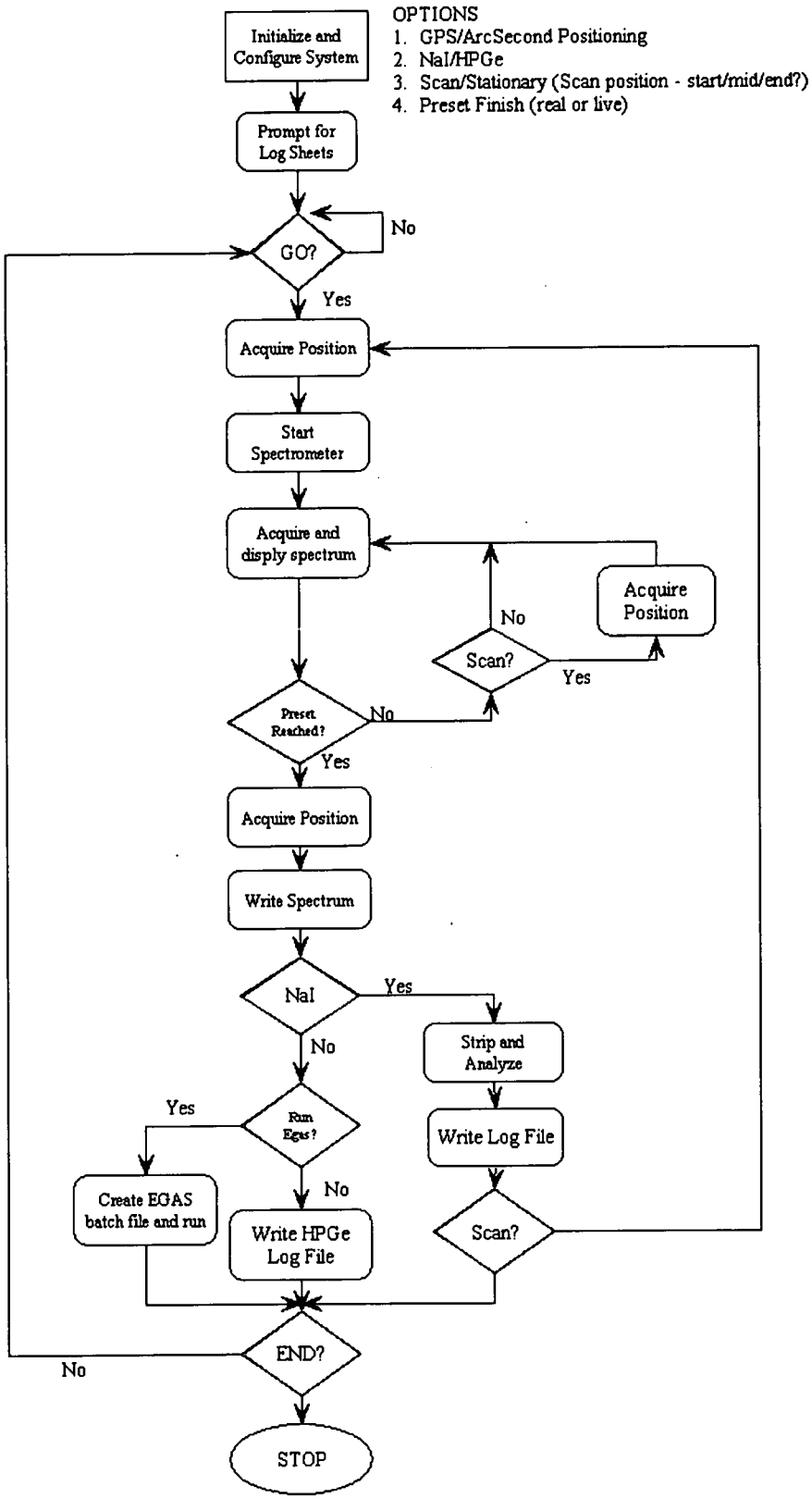

FIGURE 2-6 SOFTWARE LOGIC FOR EMS DATA ACQUISITION AND PROCESSING

3.0 EMS DEVELOPMENT AND ACCEPTANCE TESTING

3.1 BACKGROUND

The current version of the EMS is a second-generation technology. It is an improved version of a system known as the Warthog, that was previously demonstrated at the FEMP and at the MEMP. This section describes the improvements made to the system and acceptance testing performed at the FEMP.

The same INEEL group that built the original Warthog constructed the EMS. The system was designed to meet performance specifications developed by the ASTD partners. These specifications were defined by the anticipated needs of the excavations to be performed in the Former Production Area, including the need to excavate building foundations and utility trenches. The EMS was developed as follows:

- November - December 2000 — Develop performance requirements by the ASTD partners
- January - February 2001 — Design of the EMS at INEEL
- March - April 2001 — Fabrication of the EMS at INEEL
- May 2001 — Test system at INEEL
- June 2001 — Delivery of EMS to the FEMP
- June 24-29, 2001 — Acceptance testing performed at the FEMP
- July - December 2001 — System modifications
- December 3-7, 2001 — Final acceptance testing at the FEMP.

Performance requirements for the EMS were developed in November-December 2000, through a series of conference calls and white papers shared among the ASTD partners. Discussions centered on the anticipated needs of the soils program in the upcoming excavations in the Former Production Area and throughout the remaining cleanup. The basic capabilities of the technology were known from a demonstration of the Warthog at the FEMP in September 2000. Needed improvements to the system for FEMP applications were identified from that demonstration.

The final set of requirements developed for the EMS were quite detailed and included the following categories:

- Structural Components
- Position tracking system
- Ground sensing systems
- EMS software
- Miscellaneous.

A formal acceptance plan was developed for the EMS (DOE 2002a). The plan also documents the detailed requirements developed for the system.

The EMS was shipped from INEEL and delivered to the FEMP in mid-June 2001. Acceptance testing was performed the week of June 25, 2001. Tests were designed to demonstrate that the EMS met the established performance requirements. Tests evaluated both specific system functions as well as the overall ability of the system to perform actual surveys in the field.

The acceptance tests performed in June of 2001 were generally successful, demonstrating the ability of the delivered system to perform its basic functions as designed. The tests revealed a number of minor problems in the system as delivered. Further, the tests afforded the opportunity to identify a number of enhancements to the system. The necessary modifications were completed during the period of July to December 2001. Final testing and acceptance of the system was completed during the week of December 3, 2001.

3.2 ACCEPTANCE TESTING

Acceptance tests were carried out in the OSDF Material Transfer Area (OMTA) area north of the Plant One Pad. The test area was a narrow strip of land that lies between a recently constructed gravel parking lot to the north and a row of warehouses to the south. It includes a fenced-off Contamination Area that contains a tree, surrounded by tall grass with flags indicating previously identified contamination locations. The area to the east and west of the Contamination Area is an open, smoothly graded shallow depression with little or no vegetation.

Initial tests of the EMS were conducted with an HPGe detector mounted in the standard vertical configuration on the excavator tool, which was attached to the arm of a John Deere Model 690 Excavator. The first measurement was made at a flagged contamination location using a five minute live time duration. Due to the high radiation levels present, the detector exhibited a high level of dead time, requiring roughly 30 minutes to collect the measurement. GPS was used to determine the position of the detector. Next, the remaining portions of the fenced Contamination Area were successfully scanned in mobile mode with the HPGe detector.

A NaI detector was then installed to survey a 144-foot by 22-foot graded strip to the east of the fenced contamination area. The area was scanned in two passes with the detector 1 foot above the ground while

the excavator moved laterally along the paved lot at about 1 foot/second. The entire area was surveyed in roughly 12 minutes while the detector position was monitored by GPS and plotted on excavator cab and support van displays. No problems were experienced.

HPGe detector Serial No. 30687 was used in the tests. It was calibrated prior to operations. The NaI detector used was borrowed from the GATOR. The existing field calibration was used; no calibration pad calibration had been performed. A John Deere Model 690 Excavator with a reach of 22 feet was used in the tests.

Significant findings of the June tests are summarized below:

- GPS experienced intermittent lack of differential correction due to local interferences
- Detector change-outs could be performed in approximately 30 minutes; detector assembly removal and storage in a cargo van required 15 minutes
- The excavator operator was able to control and maneuver the system by line of sight. The scan coverage function was not yet operational on his display screen
- Signal processing from all EMS hardware pieces, e.g., the GPS, range finder, proximity detectors, was successfully achieved
- HPGe and NaI data collection, communication, and processing were successfully achieved in the tests
- Mobile scanning could be performed successfully with both HPGe and NaI detectors installed.

On the basis of the June tests and a review of the original performance objectives for the systems, a number of modifications to the system were identified and implemented between July and December of 2001. Modifications included revision of the software for the laser-based positioning system and recalibration of the laser range finders. A dedicated excavator for the system was procured in October. Final acceptance testing was carried out in early December 2001 in the calibration pad area of the FEMP. Both the GPS and laser-based positioning systems were successfully demonstrated at that time. Some software enhancements continue to be developed to improve system efficiency.

The June and December 2001 acceptance testing have established that the EMS can carry out all its essential functions and provide the measurements for which it was designed. Continuous improvement of the system will be carried out as experience with the system is gained.

4.0 CALIBRATION OF THE NAI DETECTOR USED IN THE EMS

The NaI detector used in the EMS was calibrated on the FEMP calibration pad following the approach used for the other platforms, as discussed in the NaI Calibration Report (DOE 2001a). Table 4-1 lists the efficiencies determined for the detector.

Table 4-2 provides the direct calibration interference coefficients determined for the detector. Multiplying uncorrected net count rates by these coefficients, as shown in the following equations, provides interference-corrected net count rates.

$$U_c = F1 \times U_r + F2 \times Ra_r + F3 \times Th_r$$

$$Ra_c = F4 \times U_r + F5 \times Ra_r + F6 \times Th_r$$

$$Th_c = F7 \times U_r + F8 \times Ra_r + F9 \times Th_r$$

$$K_c = F10 \times K_r + F11 \times U_r + F12 \times Ra_r + F13 \times Th_r$$

In the equations the subscript "r" refers to the raw (uncorrected) net count rate for a particular isotope. The subscript "c" refers to the interference-corrected net count rate.

Dividing the corrected net count rates for an isotope by the detector's efficiency for that isotope gives the isotope's concentration in picoCuries per gram (pCi/g). Equivalently, dividing the interference coefficients given in Table 4-2 by the appropriate efficiencies in Table 4-1 gives the calibration factors for the detector, as used in the following equations:

$$U = F1' \times U_r + F2' \times Ra_r + F3' \times Th_r$$

$$Ra = F4' \times U_r + F5' \times Ra_r + F6' \times Th_r$$

$$Th = F7' \times U_r + F8' \times Ra_r + F9' \times Th_r$$

$$K = F10' \times K_r + F11' \times U_r + F12' \times Ra_r + F13' \times Th_r$$

In the equations, U, Th, etc., are soil concentrations in pCi/g. F1′, etc., are calibration factors. Table 4-3 provides the calibration factors for the detector.

TABLE 4-1
EFFICIENCIES DETERMINED BY DIRECT CALIBRATION

Isotope	Energy (keV)	Efficiency (net cps per pCi/g)
U-238	1001	0.223 ± 0.004
Ra-226	1765	7.637 ± 0.109
Th-232	2614	11.144 ± 0.131
K-40	1460	4.943 ± 0.084

The uncertainties shown in the table are one standard deviation values resulting from counting errors. cps = counts per second.

TABLE 4-2
DIRECT CALIBRATION INTERFERENCE COEFFICIENTS

Equation	Coefficient	Value	Uncertainty in Value
U	F1	0.997	0.002
	F2	0.057	0.009
	F3	-0.226	0.015
Ra	F4	-0.092	0.014
	F5	1.008	0.003
	F6	0.573	0.021
Th	F7	-0.012	0.007
	F8	0.023	0.005
	F9	1.016	0.003
K	F10	1.000	0.000
	F11	-0.005	0.020
	F12	-0.335	0.018
	F13	0.006	0.018

The uncertainties shown are one standard deviation values resulting from counting errors.

TABLE 4-3
CALIBRATION FACTORS

Equation	Factor	Value (pCi/g per net cps)	Uncertainty in Value (pCi/g per net cps)
U	F1′	4.468	0.071
	F2′	0.254	0.042
	F3′	-1.013	0.069
Ra	F4′	-0.012	0.002
	F5′	0.132	0.002
	F6′	0.075	0.003
Th	F7′	-0.001	0.001
	F8′	0.002	0.000
	F9′	0.091	0.001
K	F10′	0.202	0.003
	F11′	-0.001	0.004
	F12′	-0.068	0.004
	F13′	0.001	0.004

The uncertainties shown are one standard deviation values resulting from counting errors. cps = counts per second.

5.0 USE OF THE EMS AT THE FEMP

5.1 INTRODUCTION

The EMS will be used by the FEMP's RTIMP. It is designed to meet the same overall objectives as the other *in situ* gamma spectrometry platforms (the RTRAK, RSS I and II, and the GATOR) used by RTIMP. These objectives are to provide real-time gamma spectrometry measurements to support remediation at the FEMP. Four characterization phases support cleanup, namely predesign, excavation support, precertification, and final certification of remedial actions. Real-time platforms support the first three phases, while final certification is performed using laboratory analysis of physical samples.

The EMS was designed with unique capabilities to meet the particular challenges of performing excavations in the Former Production Area of the FEMP. These challenges include making reach-in measurements in inaccessible areas and in below-grade, mainly non-flat terrain.

Specific applications of the EMS include performing measurements in areas where other RTIMP platforms cannot be used because of soft or uneven ground and areas of elevated contamination where worker dose is to be minimized. The main purpose for the EMS, however, is to address deep excavations, in particular those with relatively steep walls or sharp changes in grade. Examples include the excavation of foundations, underground facilities, and utility lines. The *in situ* geometry of measurements in such situations often deviates from the flat-ground, 2 π, geometry assumed for standard measurements due to the presence of excavation walls or side slopes. In such cases corrections for non-flat geometry may be necessary when measurement readings are near action levels.

The following sections describe the various expected applications of the EMS in support of FEMP soil excavations. The use of the EMS in two main types of excavations is detailed, large excavations and utility trench excavations. A procedure for identifying measurements that require corrections for non-flat geometry and the methods for applying the corrections is also presented. Finally, operational considerations and requirements for the field implementation of the EMS in support of soil excavation activities are discussed for the benefit of field managers and system operators.

5.2 EMS APPLICATIONS

The EMS with either an NaI or HPGe detector mounted is intended for use in situations that are unsuitable for the other RTIMP platforms using the same detectors. By deploying the detectors at the end

of the long arm of an excavator, the EMS has the distinct advantage that the surface being scanned does not have to support the detector platform or stand, nor does a person have to access the measurement location to deploy the detector system. Any measurement situation that benefits from these advantages is a candidate for application of the EMS.

Expected applications of the EMS in the former Production Area include use in elevated contamination areas and in difficult-to-access areas where use of other available platforms would pose a physical and/or contamination hazard to workers. A broad class of such situations is use in deep excavations, particularly those with steep walls such as utility trenches. The use of the EMS would always be preferred in these areas. However, its use is limited to areas that are accessible to the rather large excavator on which the system is mounted.

The use of *in situ* measurements in support of excavation activities is described in the Sitewide Excavation Plan (SEP, DOE 1998c), and the methods for performing these measurements using the available *in situ* gamma detector platforms is detailed in the User's Manual. The principles and procedures given in the User's Manual for performing these functions will be followed for all EMS measurements.

Because of the ability of the EMS to deploy both NaI and HPGe detectors for either fixed position or mobile measurements, it can be used to make all the measurements made by the currently used platforms. In situations where either the EMS or current systems could be used, the choice will depend on the suitability of the platform to the area, including the size of the area and the time required for performing surveys. The EMS is not best suited for rapid surveys of large areas, but such surveys are possible, as demonstrated in the acceptance testing of the system.

In situ gamma measurements are influenced by measurement geometry. Detectors calibrated to measure radionuclide concentrations in surface soils on flat ground will give a higher or lower result for the same soil concentration when the measurement geometry (i.e., the soil surface contributing to the reading) is not flat. Such changes in the results are completely predictable from geometric considerations and correction factors for various non-flat geometries have been computed and are presented in the EML-603 Report (Miller 1999). The application of these correction factors to EMS detector readings is discussed further in Section 5.3.3.

For nearly all cases that will be encountered in FEMP excavations, the effects due to non-flat terrain are such that results will be biased high. That is, measurements are conservative. In cases where such a conservative bias leads to unnecessary excavation, corrections for non-flat geometry may be applied to obtain more accurate measurements.

5.2.1 Mobile Surveys Using the NaI Detector

The EMS with a NaI detector mounted can be used to perform surveys of soil surfaces to detect either uranium at above-WAC levels or any of the three primary radiological contaminants (U, Ra, or Th) at hotspot levels, just as can be done with any of the current systems. With the detector mounted in the EMS, the excavator operator adjusts the height of the detector above the scanned surface to the desired level, typically 1 foot (31 cm). To perform this adjustment, the operator refers to the laser range finder readout on the EMS display monitor mounted in the excavator cab. The EMS operator in the support van begins a data collection run and the excavator operator moves the NaI detector over the survey area in one of two ways, by driving the excavator back and forth over large areas, or by swinging the excavator arm over small areas.

The speed of the movement of the detector is held as constant as possible at 1 mph (0.447 m/s), while NaI spectra are collected in sequential four-second scans. This scanning mode is the same as that used for the other mobile NaI platforms. The detector speed is displayed on the excavator cab monitor and is based on the system's GPS position data for consecutive scans.

A coverage display on the excavator monitor shows a trace of the area scanned from the beginning of data acquisition. The operator can ensure complete coverage by filling in the display. A base map with topography and landmarks is created in the mapping van prior to leaving an area to ensure complete coverage, as required by the Project Specific Plan (PSP) for the activity.

Use of the EMS in large excavations may require the EMS excavator to enter the excavation area to reach all areas that need to be scanned. Entry into excavations will be allowed only after the stability of the soils in the area has been evaluated. The excavator has been designed for use in soft soils and can function in areas that are not suitable for other real-time platforms. In other cases, it may be possible to perform surveys in deep excavations with the excavator adjacent to, but outside, the excavation footprint. Such use would be preferred in soft or unstable soils or where contamination of equipment is of concern.

In either case, the detector on the end of the excavator arm will be lowered to a height of 1 foot above the excavation floor. A mobile scan will then be performed by driving the excavator repeatedly along the perimeter of the excavated area with the arm extended at right angles to the path of the excavator. When the excavator is to remain outside the pit, the excavator arm will be extended further into the pit on each pass until it is fully extended. This provides a working range of approximately 24 feet. When the EMS excavator is used inside the excavation area, larger areas can be surveyed in a single effort.

Measurements in excavations will be influenced by the presence of any contamination in the walls of the excavation. The wall effect increases as the wall becomes increasingly steep and as the detector approaches the wall. If necessary, as discussed below, corrections for non-flat terrain can be applied to either NaI or HPGe measurements.

Surveys of utility trenches will typically require only a single pass with the NaI detector. The detector will be moved along the center of the trench at a height of 1 foot (31 cm). Measurements made in trenches, as any below-grade measurement, may require corrections for non-flat terrain, as discussed below. Survey readings close to action levels will be corrected for geometry as needed. Survey measurements will each be tagged with x,y,z coordinates from the onboard GPS or laser systems. Measurements exceeding WAC or hotspot criteria will be further investigated using the HPGe detector.

5.2.2 Stationary Measurements with the HPGe Detector

Measurements of primary radiological contaminants at fixed locations are needed for several purposes as established in the ongoing real-time gamma spectrometry program at the FEMP. The purposes include confirming any NaI detection of above-WAC material or hotspots, delineating the extent of the affected materials, and confirming their removal. As mentioned above, procedures and requirements given in the FEMP's User's Manual will be followed for all measurement functions. The established methods will be adapted to the particular conditions of below-grade measurements as necessary, including the use of geometric corrections.

The use of an HPGe detector mounted on the EMS ("EMS-HPGe") will be necessary at several junctures in the excavation process. Working in tandem with the NaI equipped system, EMS-HPGe is used is to confirm earlier EMS-NaI detections of above-WAC material or hotspots. It is then used to delineate and confirm the removal of such materials. In the final stages of soil remediation, it is used to make

precertification measurements at final remediation levels (FRLs). These measurements are used to determine when remediation in an area is complete.

Operationally, EMS-HPGe measurements use much the same procedure as described above for NaI measurements. In this instance, however, stationary measurements are made. The position of each such measurement is indicated on both the excavator cab and support van monitoring screens, as provided by the onboard GPS or laser systems. The support van monitor also displays the accumulating raw spectrum as well as the elapsed time and live time of the measurement. Each scan is terminated automatically when the live time meets the desired value.

EMS-HPGe measurements, likewise, will be made either with the excavator inside the pit, or by reaching into the excavation pit from the outside. Driving the excavator from point to point would be done for location-to-location movements. Multiple readings to delineate a contaminated area would be made by fine movements of the excavator arm. Readings would be taken at a prescribed detector height, usually 1 meter or 1 foot, depending on use and as indicated in the User's Manual. A readout in the excavator-cab from the laser range finder mounted on the detector indicates detector height. The excavator operator would similarly refer to the readouts from the laterally mounted ultrasonic sensors to avoid collisions with the walls of the excavation. The ultrasonic sensor readouts would also be used to center the detector in trenches when desired.

5.3 USE OF THE EMS IN EXCAVATION AREAS

Remediation of soils in the Former Production Area will involve a wide array of excavation types, sizes and shapes, which will all require some degree of radiological characterization support. It is expected that the EMS will provide the necessary characterization support to a large extent. The myriad non-flat geometries presented by these excavations will present some challenges to making *in situ* gamma measurements. The detection systems are currently calibrated for flat terrain. Readings in pit-like geometries where the viewed soil more directly surrounds the detector results in readings that are biased high for uniformly distributed contamination. A strategy for performing corrections for non-flat geometry has been developed and is discussed in Section 5.3.3.

5.3.1 Use of EMS in Large Excavations

A number of large excavations involving the removal of multiple lifts of soil and the use of 2:1 horizontal-to-vertical sloped side-walls are planned for the Former Production Area. Each lift surface

will require a survey for above-WAC soil. The excavation floor will also require a survey for hotspots as part of a precertification process to ensure the adequacy of the excavation. A flowchart for the overall decision process and the use of the EMS to support this process is shown in Figure 5-1. Should the excavation surface be suitable for survey by other real-time platforms, they may be substituted for the EMS. The process shown in Figure 5-1 would be unchanged.

The process shown in Figure 5-1 implies close coordination between excavation and survey activities. This type of coordination has been successfully carried out in previous FEMP excavations such as the Southern Waste Units. In this process, on a given lift in a large excavation area, both activities can occur in different portions of the lift at the same time. For example, the floor of a just removed lift could be surveyed for above-WAC material and/or hotspots while the excavation of the lift continues in an adjacent area.

The excavation approach for the Production Area is detailed in the Area 3A/4A Implementation Plan (DOE 2001b). The use of *in situ* gamma spectrometry in support of the excavation process is outlined in the SEP, while procedures for detecting and delineating above-WAC material and hotspots are presented in the User's Manual. The PSP for the Area 3A/4A Excavation Characterization and Precertification (DOE 2002b) follows the Implementation Plan and applies the use of *in situ* gamma systems in accordance with the User's Manual and this report.

5.3.2 Use of EMS in Utility Trench Excavations

Trench excavations will be extensive in the former Production Area and represent an important use of the EMS. The excavation process is detailed in the Area 3A/4A Implementation Plan. The use of the EMS begins after the removal of piping, pipe bedding, and an additional 6 inches of soil, as shown in Figure 5-2.

As in applications of the EMS in other situations, the system equipped alternately with the NaI and HPGe detectors is used to detect, delineate, and confirm the removal of above-WAC and hotspot material. Once a trench floor has been confirmed to be free of hotspots, the trench can proceed to precertification of FRLs using the EMS-HPGe at regular intervals.

Because of the steep walls and narrow width of trenches, *in situ* gamma measurements made with the detector lowered into the trench will be biased high. This bias approaches a factor of two in severe cases.

If readings are within a factor of two of action levels, then, a correction for non-flat terrain may be required to avoid unnecessary excavation of material. This topic is covered in more detail in the next section.

In both Figures 5-1 and 5-2, the use of *in situ* gamma measurements in the excavation process is indicated by listing in parentheses the appropriate EMS-detector combination to be used. There are six such occasions indicated in each of the figures. Each of these *in situ* measurements may be subject to a geometry correction as detailed in Section 5.3.3, depending on the level of contamination present.

5.3.3 Application of Geometric Corrections for Non-Flat Terrain

As described above, many of the measurement situations expected in the Former Production Area may warrant corrections for non-flat terrain. The procedure for identifying when corrections may be appropriate and the method for making them are detailed on Figure 5-3.

Figure 5-3 indicates that readings below the action levels will not require correction because any such correction would only reduce the reading further, assuming a positive bias for all below-grade readings. Conversely, all readings in excess of twice action levels would indicate an above-action level condition, because the maximum correction for geometry is a factor of two. Readings between the action level and twice the action level are thus inconclusive and warrant an examination of contaminant homogeneity prior to applying a correction for geometry.

A simple illustration of the application of the procedure shown in Figure 5-3 is provided in Table 5-1. The illustration considers measurements of total uranium concentrations made using an HPGe detector. Trigger levels for HPGe measurements are provided in Table 4.5-1 of the FEMP's User's Manual for application to FRL and potentially above-WAC soil. The measurements are made in excavations for which the total solid angle is 3π. Results from a series of measurements are shown [50, 160, 1200, and 1500 parts per million (ppm)]. The first two apply to cases in which a determination is being made concerning whether the soil concentration of uranium exceeds the FRL. The last two apply to cases related to determining whether WAC is exceeded. Because 50 is below the action level (a trigger of 75 ppm), no correction for geometry is necessary and the soil concentration is determined to be below the FRL for uranium. Because 160 is more than twice the 75 ppm trigger, no correction is needed and the soil concentration is above the FRL. The two WAC measurements exceed the trigger for WAC but are less than twice the trigger. Therefore, corrections for geometry are needed. The table shows the

corrected values. In one case, the result is below the WAC trigger; in the other, it is above the trigger. In any case where the uncorrected concentration is above an action level and the corrected concentration is below it, the affected area will be investigated further to determine if contamination is uniformly distributed. If it is not, the geometry correction will not be applied.

For the above and following reasons, corrections for geometry will not be made for every measurement in non-flat terrain:

- Uncorrected measurements are conservative relative to cleanup goals in most situations,
- Decisions regarding above-WAC material, hotspots, or FRLs can be made using uncorrected measurements except when readings are within a factor of two of the respective action levels,
- Corrections may require additional data collection to define the geometry of the measurement,
- Correcting only those measurements that affect decisions reduces greatly the data processing load.

Because of the relatively small fraction of measurements that are expected to warrant geometry corrections (i.e., those between 1 and 2 times the action level), such corrections will be handled manually on a case-by-case basis. Routine measurements will be recorded in the SED without corrections for geometry. When geometry corrections are warranted, the corrections will be computed offline, and the results entered into the SED. An indicator will be added to the data in the SED to indicate that the data are corrected for geometry.

A detailed study of the effects of non-flat terrain on *in situ* gamma measurements was conducted by EML and is detailed in EML-603. This report serves as the basis of geometry corrections that will be applied to *in situ* gamma measurements made at the FEMP, including those made with the EMS. EML is a partner in the deployment of the EMS under DOE's ASTD program.

Under EML-603, corrections for non-flat terrain require the determination of the total solid angle subtended by the surface contributing to the reading. For flat geometry, the solid angle is 2π sterradians. To correct readings calibrated to 2π geometry, the solid angle subtended by the non-flat reading, Ω, is divided by 2π to yield a correction factor, generally between 1 and 2. Non-flat readings are then corrected by dividing by this factor.

To determine the solid angle subtended by the non-flat measurement, some simple information on the geometry is needed. The information includes H, the depth of the excavation; h, the height of the detector from the floor of the excavation; and X, the horizontal distance from detector to the wall of the excavation, as shown on Figure 5-4. In the figure, P is the location of the detector. The values of H, h, and X are used to determine the angle from the detector to the excavation top edge, known as the horizon angle, θ. The solid angle, Ω, can then be determined using equations in EML-603 for various pit shapes. An interesting outcome of the theory developed in EML-603 is that the solid angle subtended by soil in trench geometry is independent of the slope of the trench wall. That is, the geometric correction factor for a trench with sloped walls will be the same as that for a vertical-walled trench provided that the horizon angle and the depth of the two trenches are the same (Miller 1999). Examples of configurations expected to be encountered in active excavation areas are provided below, and a geometry more complex than the examples can be addressed using the approach presented in EML-603.

Two examples for a trench geometry are given on Figure 5-5. Consider a 3-foot wide trench that varies from 4 to 10 feet deep (wall height) and a scan conducted down the middle of the trench with the NaI detector 1 foot off the floor of the trench. Using variables defined above, H is equal to 4 feet and 10 feet, h is equal to 1 foot, and X is equal to 1.5 feet. The solid angle subtended for a depth of 4 and 10 feet is 3.41 and 3.79, respectively, which corresponds to correction factors of 1.7 and 1.89. Results obtained from the reduction of the spectra generated by the NaI or HPGe detector would be divided by these correction factors to yield the corrected results. A trench geometry may apply to the removal of utilities or building footers.

In a large excavation, the distance between the detector and the wall of the excavation (X) will increase to values that exceed hundreds of feet. This is essential equivalent to a one-wall geometry and, under these conditions, the correction factors decrease and begin to approach 1 (i.e., flat 2 π geometry) as the ratio of excavation width to excavation depth increases (Figure 5-6). If the deepest excavation is considered (40 feet) at a width of 400 feet (Figure 5-7), then the correction factor is less than 1.2 when the detector is placed in a configuration that maximizes the value for the given geometry. The correction factor reaches a maximum at the greatest depth (Figure 5-5) and least distance to the edge of the excavation. For excavations with 2:1 slopes, this geometry will be given by a distance to wall/wall height ratio of 2. Note that the correction factor decreases as the distance to wall/wall height ratio rises above 2 (lower portion of Figure 5-7).

For nearly all cases that will be encountered in FEMP excavations, uncorrected *in situ* measurements will be biased high. That is, uncorrected measurements are conservative and must be divided by a number larger than one to obtain the corrected result. As a conservative bias could lead to unnecessary excavation, corrections for trench geometry will be applied to obtain more accurate measurements.

When corrections are needed, H, h and X can be obtained using the onboard GPS, and the correction factor is readily calculated using a simple computer program (output from this program is shown on Figures 5-5, 5-6 and 5-7). Once the corrections are applied to the *in situ* measurements, decisions concerning action levels can be made for the affected area. Additional excavation of the area can then proceed if so indicated.

5.4 OPERATIONAL CONSIDERATIONS

Excavation characterization support with the EMS will be carried out in a rapid turnaround fashion as is currently done with the other *in situ* gamma spectrometry systems. The EMS support van will also serve as the mapping van for data reduction, review, and mapping. Every effort will be made to produce excavation maps based on EMS data within 24 hours of data collection. In this way, excavation activities can proceed with minimal interruption. It may be possible for characterization and excavation activities to be conducted at the same time in different parts of an excavation area. Close coordination of the two activities will be required by the respective field leaders.

Interpretation of data with respect to WAC, hotspot, or FRL criteria will be based on data uncorrected for geometry to a large extent. As shown on Figure 5-3, when readings are between 1 and 2 times the action level, the affected area will be flagged for further analysis, including a check to determine whether contaminant distribution is homogenous, prior to applying a correction for geometry. In this regard, HPGe measurements at varying detector heights will be most useful in determining the uniformity of the radionuclide distribution. To be conservative, if it appears that the contaminants are not uniformly distributed, geometric correction factors will not be applied to the measurement until the area covered by the measurement can be shown to be homogenous. No excavation would take place in the flagged area until the corrected results were available. It is expected that the necessary geometric measurements needed to perform the corrections could be performed shortly after the generation of measurements that are in the inconclusive range.

In time sequence, real-time EMS data will be processed in the mapping van to generate uncorrected measurements within an hour or two of data collection. In many cases it will be possible to collect the required pit dimensions for corrections on the same day. Corrections will be computed in short order using simple calculations. Corrected data and excavation maps generated from the data are expected to be available by the end of the following workday in most cases.

TABLE 5-1
EXAMPLES OF IMPLEMENTING GEOMETRIC CORRECTIONS*

Requirement	Regulatory Limit (ppm)	Trigger Level (ppm)	Uncorrected Concentration (ppm)	Corrected Concentration (ppm)	Comment
FRL	82	75	50	–	No correction needed, measured value less than trigger
FRL	82	75	160	–	No correction needed, greater than twice trigger
WAC	1030	947	1200	800	Corrected concentration below trigger
WAC	1030	947	1500	1000	Corrected concentration above trigger

* Assumes an HPGe detector with a 15-minute count time. Requirements apply to total uranium. The geometric correction factor ($\Omega/2\pi$) is 1.5. The trigger levels are from Table 4.5-1 of the User's Manual.

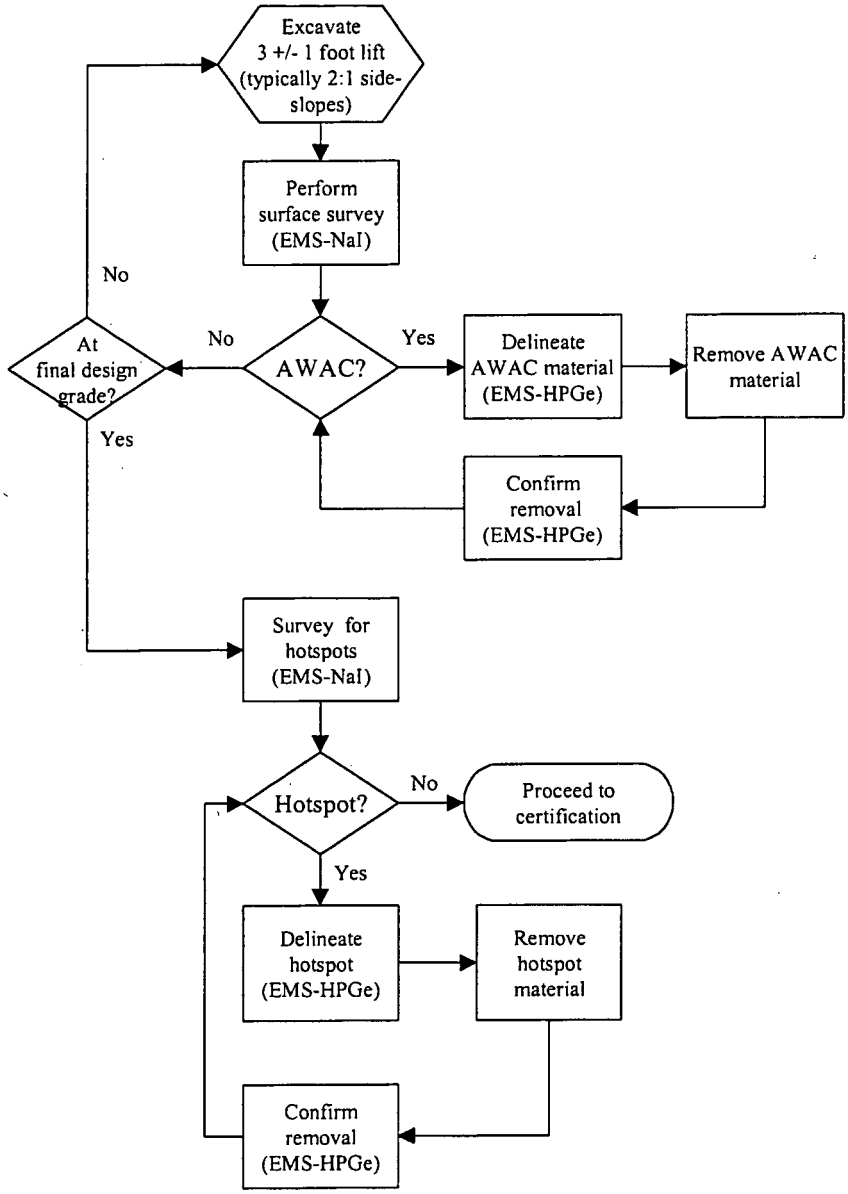

FIGURE 5-1 USE OF EMS IN LARGE EXCAVATIONS

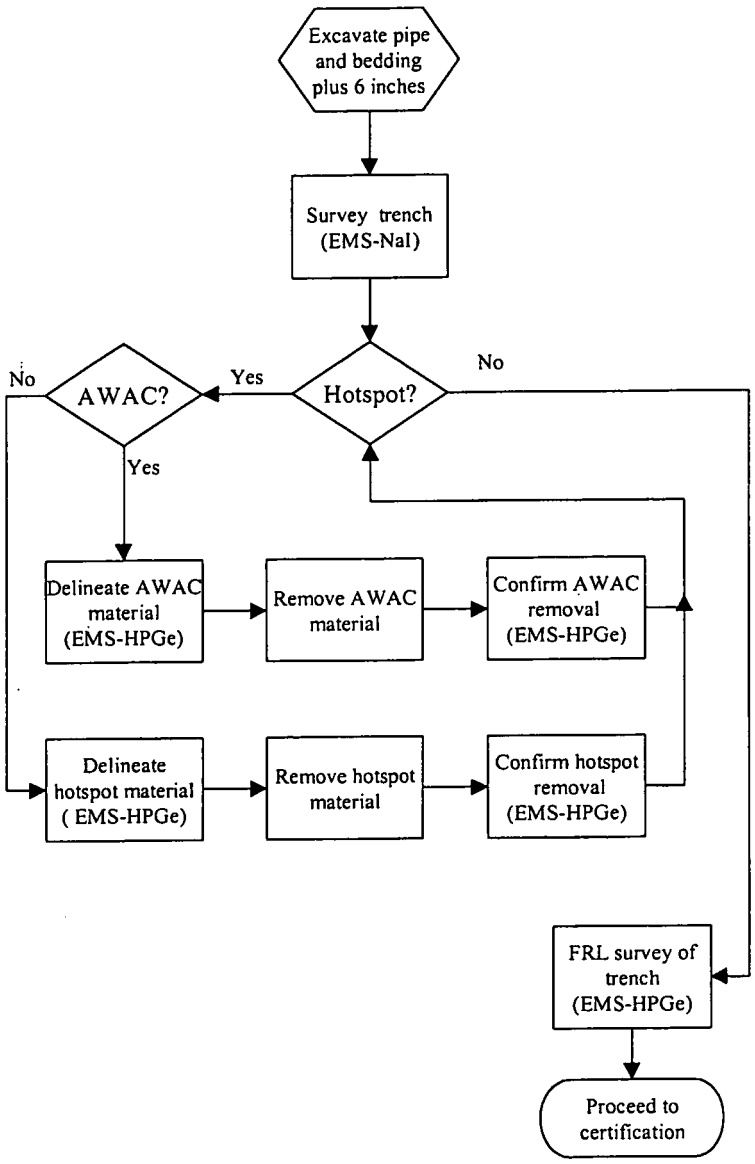

FIGURE 5-2 USE OF EMS IN UTILITY TRENCH EXCAVATIONS

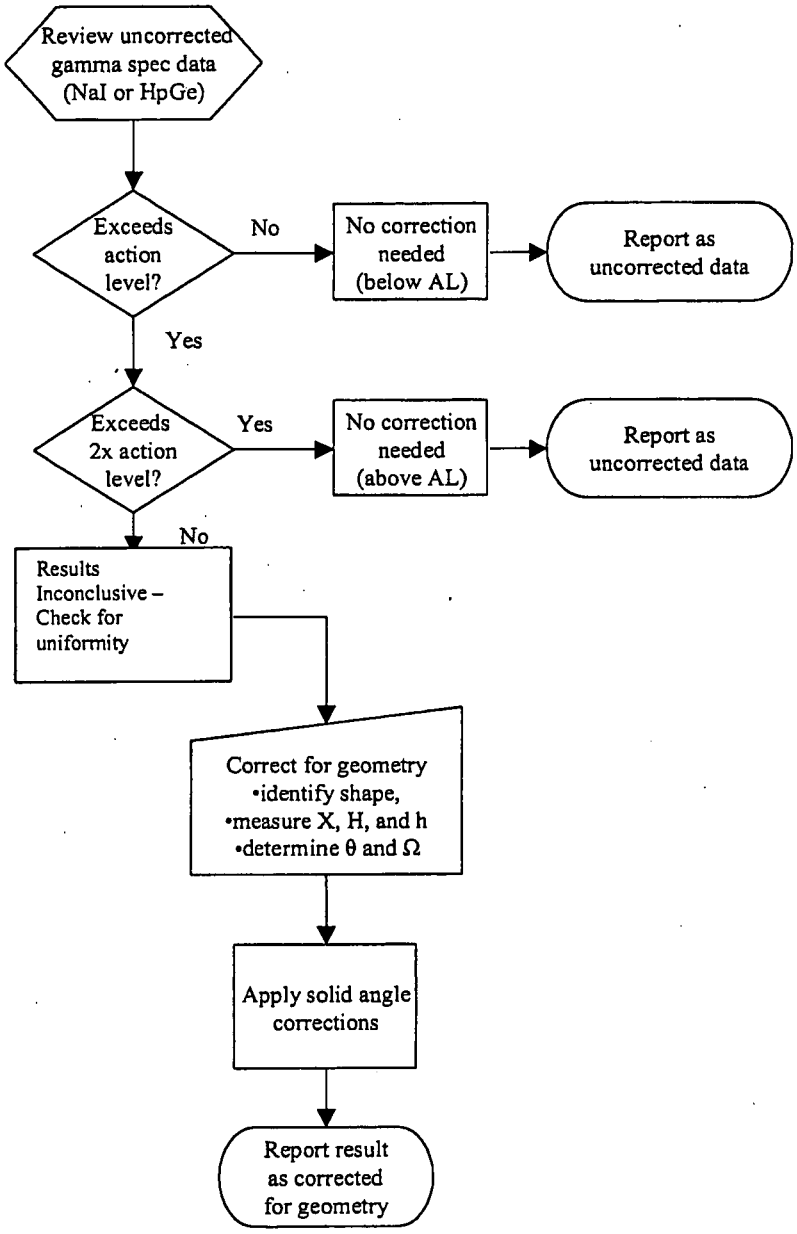

FIGURE 5-3 PROCEDURE FOR APPLICATION OF GEOMETRIC CORRECTIONS FOR NON-FLAT TERRAIN

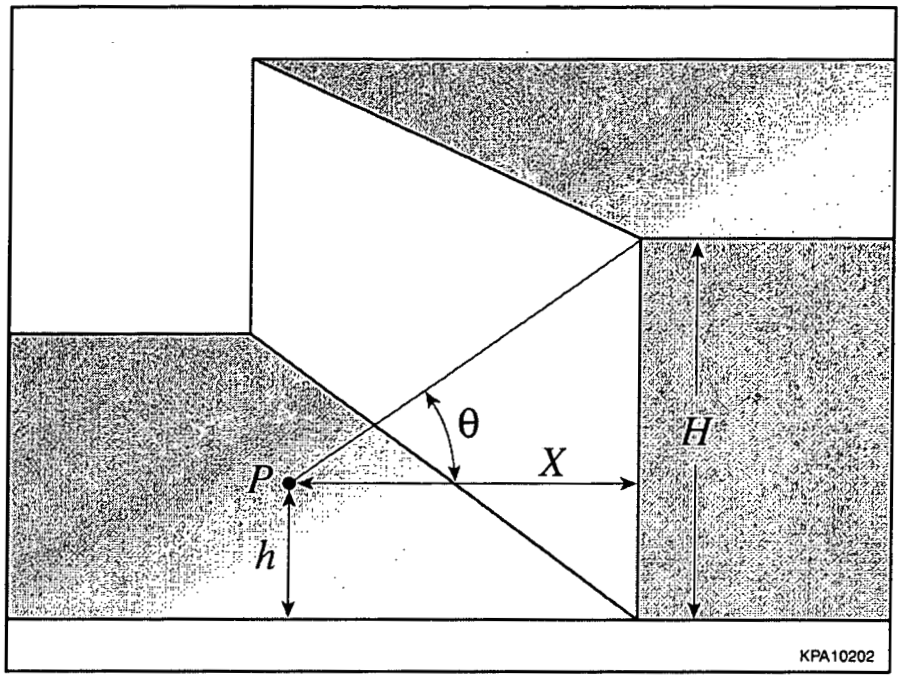

FIGURE 5-4 GENERAL EXCAVATION GEOMETRY

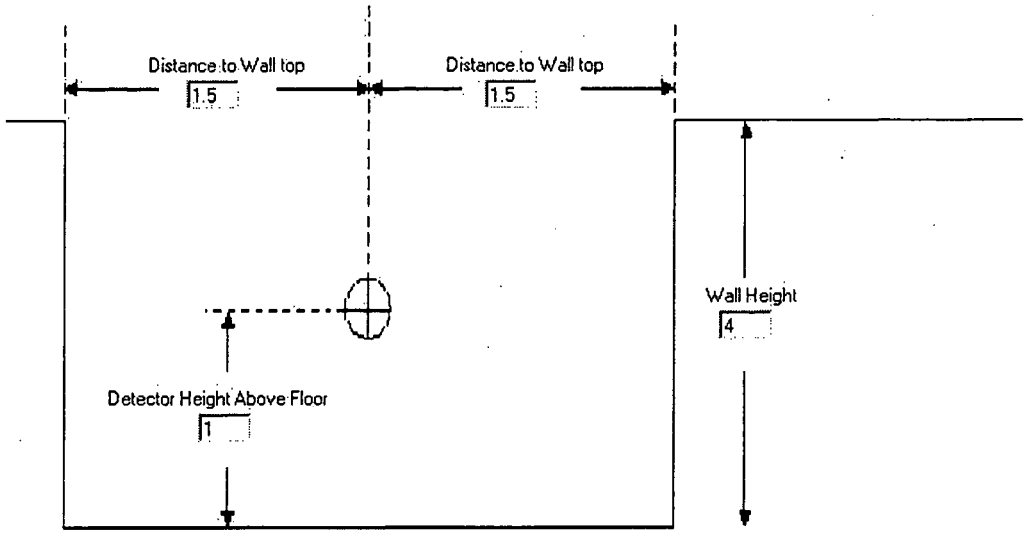

Solid Angle (units of pi) = 3.41

Concentration Correction Factor = 1.7

All Units in Feet

Change to Meters

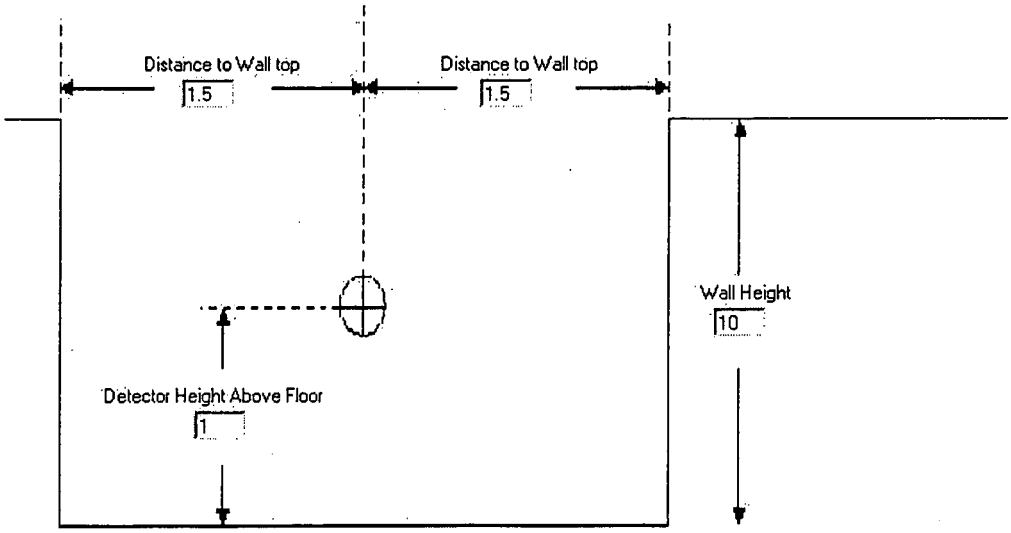

Solid Angle (units of pi) = 3.79

Concentration Correction Factor = 1.89

All Units in Feet

Change to Meters

FIGURE 5-5 CORRECTION FACTORS AS A FUNCTION OF WALL HEIGHT

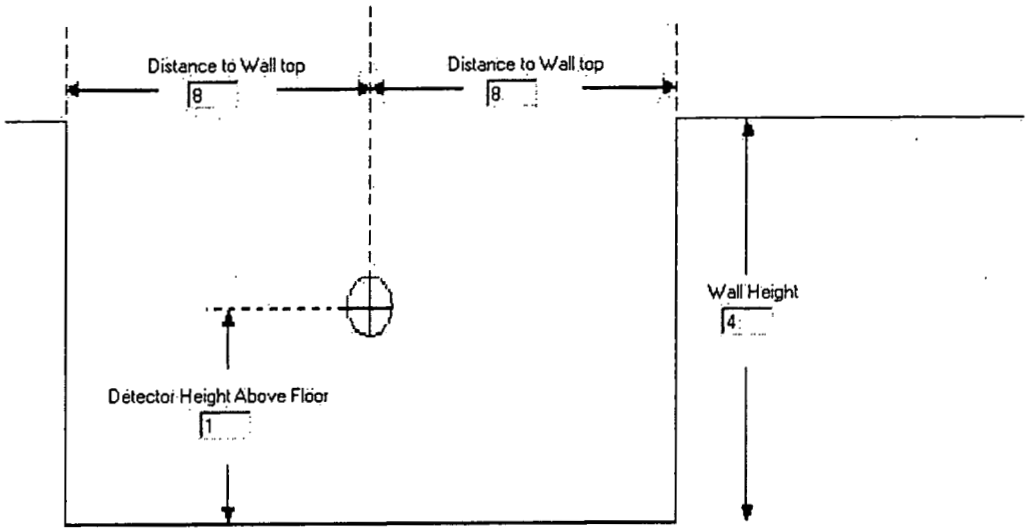

Solid Angle (units of pi) = 2.46

Concentration Correction Factor = 1.23

All Units in Feet

Change to Meters

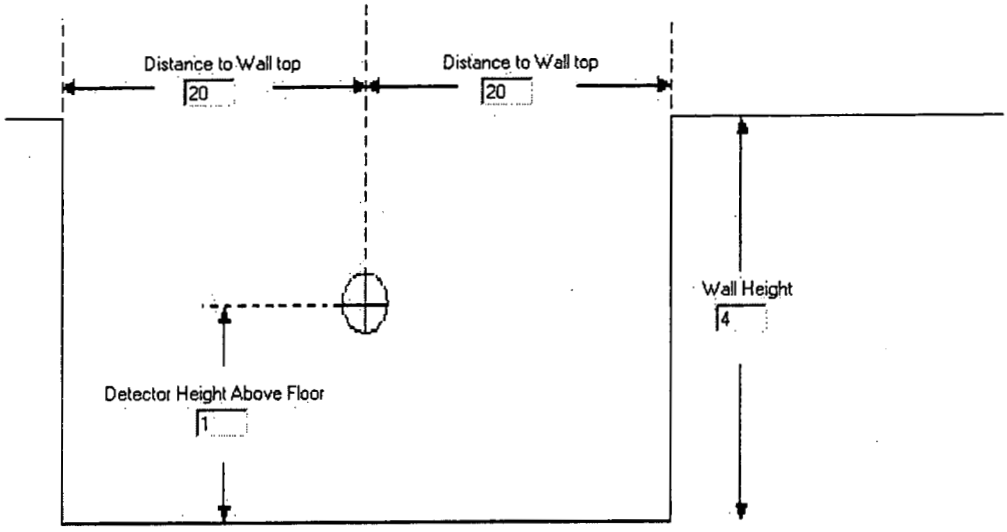

Solid Angle (units of pi) = 2.19

Concentration Correction Factor = 1.09

All Units in Feet

Change to Meters

FIGURE 5-6 CORRECTION FACTORS AS A FUNCTION OF WIDTH TO HEIGHT RATIO

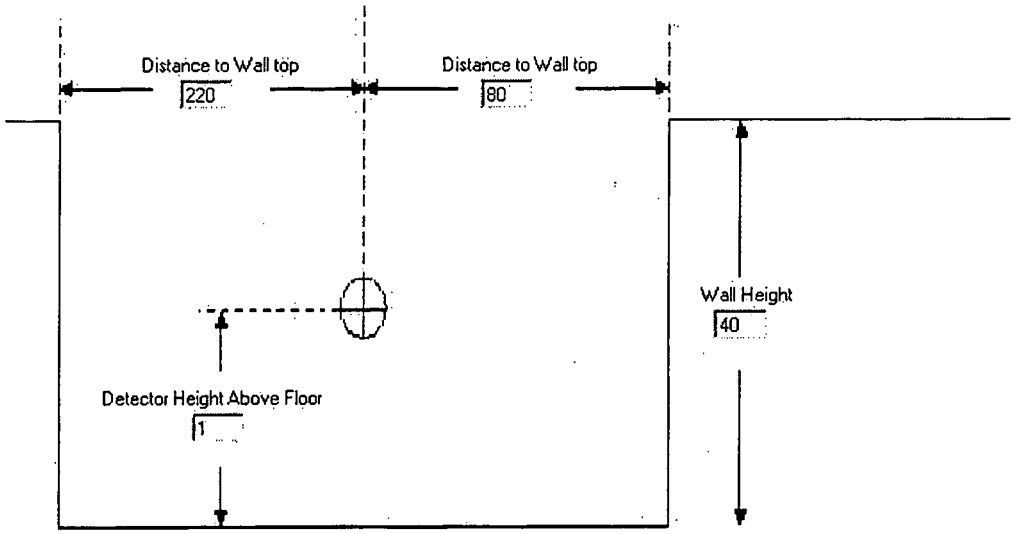

Solid Angle (units of pi) = 2.4

Concentration Correction Factor = 1.2

All Units in Feet

Change to Meters

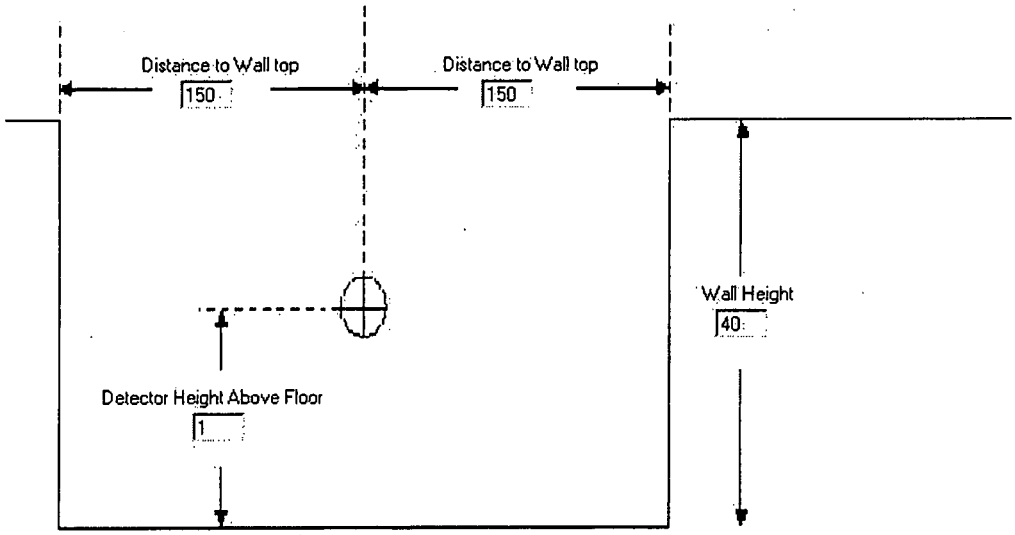

Solid Angle (units of pi) = 2.32

Concentration Correction Factor = 1.16

All Units in Feet

Change to Meters

FIGURE 5-7 CORRECTION FACTORS IN THE DEEPEST EXCAVATION

REFERENCES

Miller, K.M., 1999, "Fluence Evaluations for the Applications of *In Situ* Gamma-Ray Spectrometry in Non-Flat Terrain," EML-603, Environmental Measurements Laboratory, U.S. Department of Energy, New York.

U.S. Department of Energy, 1998a, "User Guidelines, Measurement Strategies, and Operational Factors for the Deployment of *In Situ* Gamma Spectrometry at the Fernald Site," Draft, Revision B, Fernald Environmental Management Project, DOE, Fernald Area Office, Cincinnati, Ohio.

U.S. Department of Energy, 1998b, "*In Situ* Gamma Spectrometry Addendum to the Sitewide CERCLA Quality Assurance Project Plan," Procedure FD-1000 Draft Appendix H, Fernald Environmental Management Project, DOE, Fernald Area Office, Cincinnati, Ohio.

U.S. Department of Energy, 1998c, "Sitewide Excavation Plan," Final, Fernald Environmental Management Project, DOE, Fernald Area Office, Cincinnati, Ohio.

U.S. Department of Energy, 2001a, "Calibration of NaI *In Situ* Gamma Spectroscopy Systems," Final, Fernald Environmental Management Project, DOE, Fernald Area Office, Cincinnati, Ohio.

U.S. Department of Energy, 2001b, "Implementation Plan for Area 3A/4A," Final, Fernald Environmental Management Project, DOE, Fernald Area Office, Cincinnati, Ohio.

U.S. Department of Energy, 2002a, "Excavation Monitoring System II (EMSII) Acceptance Testing Plan," Revision 1, PCN 1, Fernald Environmental Management Project, DOE, Fernald Area Office, Cincinnati, Ohio.

U.S. Department of Energy, 2002b, "Project Specific Plan for Area 3A/4A Excavation Characterization and Precertification," Revision 0, Fernald Environmental Management Project, DOE, Fernald Area Office, Cincinnati, Ohio.