FLUOR FERNALD
SILOS PROJECT

Accelerated Waste Retrieval (AWR) Nuclear Health and Safety Plan

40710-PL-0015
Rev. 1

DOE Submission: 04-30-04

Approved by:

Robert Fellman Bob Fellman, AWR Project Manager	1/27/04 Date
Dennis Carr Dennis Carr, Silos Sr. Project Director	1/29/04 Date
Tulanda Brown, Silos Project Safety & Health Manager	1/27/04 Date
Louis C. Boger Louis C. Boger, Safety Review Committee (SRC) Co-Chair	01.27.04 Date
For Jamie Jameson, Closure Project Director	1/29/04 Date

Fluor Fernald, Inc.
P. O. Box 538704
Cincinnati, Ohio 45253-8704

THIS PAGE INTENTIONALLY BLANK

Accelerated Waste Retrieval (AWR) Nuclear Health and Safety Plan

Prepared by:

- Tulanda Brown, Silos Project Safety & Health Manager
- Pat Fisk, Silos Safety Analysis
- Jim Barber, Silos Nuclear Systems and Radiological Safety
- Scott Manley, CSP, Silos Occupational Safety and Health
- Barry Ko, CIH, Silos Project Industrial Hygiene
- William Klein, Technical Writer/Editor, ATL Intl.

- Dr. Ken Eger et al, Jacobs Engineering

THIS PAGE INTENTIONALLY BLANK

RECORD OF ISSUE/REVISION

NOTE: The main body of the AWR N-HASP (prepared by Fluor Fernald staff) determines the operable effective date for the entire N-HASP package. The appendices provided by Jacobs Engineering are stand-alone components with their own revision numbers. Outside the annual revision process, a change in an appendix does not increase the revision number for the entire document; it is considered an N-HASP PCN.

EFFECTIVE DATE	PCN NO.	REV. NO.	DESCRIPTION
10-11-02		0	Initial issue of N-HASP to identify hazards, controls, and mitigators for Phase 1 of the Radon Control System. Document issued as *Radon Control System (RCS) Nuclear Health and Safety Plan*.
10-25-02	1	0	Changes to Table 10-1 to modify text for SBR-1, SBR-2, and PR-2, and to add PR-9. Revision 2 of Appendix C incorporates RCS start-up testing experience and guidance from procedures and manuals.
11-01-02	2	0	Page changes include: (1) changes to requirements for completing a Safety Basis Impact Screen [Section 6.0]; (2) a change to SBR-1 to specify silo pressure safety basis between −5 in. and +5 in. [Section 10.2]; (3) addition of PR-10 to specify a silo pressure range during RCS operation between −2.5 in. and +2.5 in. [Section 10.2]; (4) the addition of I-Tab for SBR-1 and PRs -2, -3, -4A, and -4B [Section 10.2]; (5) the addition of TabWare for PR-6 [Section 10.2]; (6) a change to PR-4B to 6000 pci/l [Section 10.2]; (7) changes to the Emergency Response Plan to specify Rally Point 4 as the primary and Rally Point 6 as the back-up [Section 16.0]; (8) changes to the limits for long-lived radon progeny for Personnel Monitoring [App. H, Section 5.1] and Airborne Radioactivity [App. H, Section 5.2].
11-25-02	3	0	Change to Table 10-1 to modify the text concerning PCV operability in PR-9.
03-24-03	4	0	Change to Table 10-1 to modify the silo pressure range limits in PR-10 to +4.5" and -3.5" wg.
04-30-03	5	0	Change to Appendix F, AWR Fire Hazard Analysis, pages F-4, F-5 to revise occupancy class from H-4 to F-2, and to revise Ohio Building Code reference from 2002 to 1998.

EFFECTIVE DATE	PCN NO.	REV. NO.	DESCRIPTION
10-09-03	6	0	Change to: (1) Table 10-1, PR4A, to clarify how stack concentration can be monitored; (2) Table 10-2, TSR, to reflect Revision 2 of the TSR document, 40000-H&S-0001.
DOE Submission 04-30-04		1	Document title changed from Radon Control System (RCS) N-HASP (Rev. 0) to Accelerated Waste Retrieval (AWR) N-HASP (Rev. 1). RCS is Phase 1 of AWR. Revision 1 incorporates AWR Phase 2 activities into this document (i.e., Waste Retrieval and Storage Systems [WR&SS]). As part of the AWR Phase 2 changes, PR numbering in Table 10-1 changed from Rev. 0 of this N-HASP, as follows: • Old PR-1 and PR-5 were removed. They related to flexible ductwork that no longer exists. • Old PR-7 and PR-8 were removed as unnecessary. • Old PR-2 and PR-3 were combined and became the new PR-1. • Old PR-4a and PR-4b were combined and became the new PR-2. • Old PR-6 (calibration of PCVs) became the new PR-3. • Old PR-9 became the new PR-4. • Old PR-10 became the new PR-5. • New PR-6 is the only new requirement for Rev. 1 of this N-HASP.

VOLUME ONE: AWR N-HASP TOPICS

Table of Contents

1.0 INTRODUCTION 1
1.1 Purpose and Scope 1
1.2 FCP Site History and Description 2
1.3 Silos 1 and 2 History 3
1.4 AWR Operations 5
1.5 Management Responsibility for a Safe Work Environment 22
1.6 AWR Project Organization 26
1.7 AWR Workplace Hazards Analysis 30

2.0 INTEGRATED SAFETY MANAGEMENT (ISM) SYSTEM 31

3.0 WORK CONTROLS 35

4.0 CONDUCT OF OPERATIONS 36

5.0 SAFETY BASIS 36

6.0 MANAGEMENT OF CHANGE 38

7.0 HAZARDS ASSESSMENT 41

8.0 HAZARDS DESCRIPTION 43
8.1 Slip, Trip, and Fall Hazards 43
8.2 Noise Hazards 43
8.3 Housekeeping Hazards 45
8.4 Illumination Hazards 45
8.5 Ergonomic Hazards 46
8.6 Head Impact Hazards 47
8.7 Pinch Point, Puncture/Cut Hazards 48
8.8 Elevated Work Hazards 49
8.9 Hand and Power Tool Hazards 50
8.10 Electrical Hazards 51
8.11 Hazardous Energy 53
8.12 Hoisting and Rigging Hazards 53
8.13 Confined Space Hazards 55
8.14 Flammable Material Hazards 56
8.15 Hot Work Hazards 57
8.16 Compressed Gas Hazards 57
8.17 Biological Hazards 59
8.18 Environmental Hazards 59
8.19 Heat and Cold Stress Hazards 60

8.20 Radiological Hazards 62
8.21 Chemical Hazards 76

9.0 AWR HAZARDS CONTROL MATRICES 82
9.1 RCS Hazards Control Matrix 83
9.2 WR&SS Hazards Control Matrix 99

10.0 SYSTEM SAFETY REQUIREMENTS 116
10.1 AWR System Safety Requirements 118
10.2 Silos Project Technical Safety Requirement (TSR) 120

11.0 TRAINING REQUIREMENTS 122

12.0 PERSONAL PROTECTIVE EQUIPMENT (PPE) 124

13.0 MEDICAL SURVEILLANCE 127

14.0 AIR MONITORING 129
14.1 RCS and WR&SS Air Monitoring 129
14.2 Silos Project Air Monitoring Requirements 129

15.0 DECONTAMINATION PLAN 132

16.0 EMERGENCY RESPONSE PLAN 133

17.0 OCCURRENCE REPORTING 140

18.0 MAINTENANCE MANAGEMENT 142

19.0 QUALITY ASSURANCE PROGRAM 143

20.0 REFERENCES 145

VOLUME TWO: AWR BASIS OF DECISION DOCUMENT

Appendix A: Integrated Hazard Analysis
Appendix B: Hazard Category Calculation
Appendix C: Human Factors Evaluation
Appendix D: ALARA Analysis
Appendix E: Environmental ALARA Report
Appendix F: Fire Hazard Analysis
Appendix G: Accident Analysis
Appendix H: Health Physics Plan

LIST OF FIGURES

1-1: RCS BUILDING: 1ST FLOOR 7
1-2: RCS BUILDING: 2ND FLOOR 9
1-3: RCS SITE MAP 11
1-4: AERIAL VIEW OF AWR PROJECT (SILOS 1 & 2, RCS, AND TTA) 17
1-5: BASIC AWR PROCESS FLOW 18
1-6: SWRS OPERATING MODE 19
1-7: TWRS OPERATING MODE 20
1-8: CONCURRENT SWRS AND TWRS OPERATING MODE 21
1-9: SILOS AWR PROJECT ORGANIZATION CHART 27

6-1: AWR SAFETY BASIS IMPACT SCREEN (SBIS) 40

8-1: RCS OPERATIONS FLOW DIAGRAM 65

LIST OF TABLES

TABLE 8-1: SLIP, TRIP, AND FALL HAZARD CONTROLS (SPR 2-1) 43
TABLE 8-2: NOISE HAZARD CONTROLS (SPR 12-14) 44
TABLE 8-3: HOUSEKEEPING HAZARD CONTROLS (SPR 2-1) 45
TABLE 8-4: ILLUMINATION HAZARD CONTROLS 45
TABLE 8-5: ERGONOMIC HAZARD CONTROLS (SPR 2-6) 46
TABLE 8-6: HEAD IMPACT HAZARD CONTROLS (SPR 2-2) 47
TABLE 8-7: PINCH POINT, PUNCTURE/CUT HAZARD CONTROLS (SPR 2-1, 4-1, 4-2) 48
TABLE 8-8: ELEVATED WORK HAZARD CONTROLS (SPR 3-6, 3-4, 2-16) 49
TABLE 8-9: HAND AND POWER TOOL HAZARD CONTROLS (SPR 4-1) 51
TABLE 8-10: ELECTRICAL HAZARD CONTROLS (SPR 5-1) 52
TABLE 8-11: HAZARDOUS ENERGY CONTROLS (SPR 2-11) 53
TABLE 8-12: HOISTING AND RIGGING HAZARD CONTROLS (SPR 7-9) 54
TABLE 8-13: CONFINED SPACE HAZARD CONTROLS (SPR 12-3) 55
TABLE 8-14: FLAMMABLE MATERIAL HAZARD CONTROLS (SPR 11-10) 56
TABLE 8-15: HOT WORK HAZARD CONTROLS (SPR 11-7) 57
TABLE 8-16: COMPRESSED GAS HAZARD CONTROLS (SPR 8-3) 57
TABLE 8-17: BIOLOGICAL HAZARD CONTROLS (SPR 10-1) 59
TABLE 8-18: ENVIRONMENTAL HAZARD CONTROLS (SPR 2-14) 60
TABLE 8-19: HEAT AND COLD STRESS HAZARD CONTROLS (SPR 12-9/10) 61
TABLE 8-20: RCS OPERATIONAL PHASES 63
TABLE 8-21: ALARA ANALYSIS COLLECTIVE DOSE 68
TABLE 8-22: AWR RADIOLOGICAL HAZARD CONTROLS 69
TABLE 8-23: INVENTORY OF ORGANIC CHEMICALS IN SILOS 1 AND 2 WASTE 78
TABLE 8-24: INVENTORY OF INORGANIC CHEMICALS IN SILOS 1 AND 2 WASTE 79
TABLE 8-25: AWR CHEMICAL HAZARD CONTROLS 80

TABLE 9-1: AWR PROJECT - RCS HAZARDS CONTROL MATRIX 83
TABLE 9-2: AWR PROJECT - WR&SS HAZARDS CONTROL MATRIX 99

TABLE 10-1: AWR PROJECT SYSTEM SAFETY REQUIREMENTS 119
TABLE 10-2: SILOS PROJECT TECHNICAL SAFETY REQUIREMENT (TSR) 121

TABLE 12-1: PERSONAL PROTECTIVE EQUIPMENT (PPE).....125

TABLE 14-1: REAL-TIME AIR MONITORING EQUIPMENT, ACTION LEVELS, AND RESPONSES..130

TABLE 16-1: FCP EMERGENCY NUMBERS.....134

ACRONYMS

AC: Alternating current
ACGIH: American Conference of Governmental Industrial Hygienists
AEDO: Assistant Emergency Duty Officer
ALARA: As Low As Reasonably Achievable
ANSI: American National Standards Institute
APR: Air Purifying Respirator
ASR: Auditable Safety Record
AWR: Accelerated Waste Retrieval
AWWT: Advanced Waste Water Treatment Facility
BIO: Basis for Interim Operations
CAM: Cost Account Manager
CDL: Commercial Driver's License
CFR: Code of Federal Regulations
CGI: Combustible Gas Indicator
CM: Configuration Management functional area
CM: Construction Manager
CONOPS: Conduct of Operations
CPC: Constituents of Potential Concern
D&D: Decommissioning and Deactivation
DAC: Derived Air Concentration
dBA: decibel
DC: Direct current
DCN: Design Change Notice
DOE: U. S. Department of Energy
DOT: Department of Transportation
DSA: Documented Safety Analysis
EBA: Evaluation Basis Accident
ECL: Effective Concentration Limit
ECDC: Fluor Fernald Project Document Control
ED: Engineering Design functional area
EIP: Energy Isolation Plan
EMS: Emergency Message System
EMT: Emergency Medical Technician
EPA: Environmental Protection Agency
ERT: Emergency Response Team
ES&H: Environment, Safety, and Health
FAT&LC: Fernald Atomic Trades and Labor Council
FCP: Fernald Closure Project
FEMP: Fernald Environmental Management Project
FHA: Fire Hazard Analysis
FMPC: Feed Materials Production Center
GFCI: Ground Fault Circuit Interrupter
HAR: Hazard Analysis Report
HASP: Health and Safety Plan
HAZWOPER: Hazardous Waste Operations and Emergency Response
HC: Hazard Category
HCC: Hazard Category Calculation
HCC: Hazardous Chemical Classification
HEPA: High Efficiency Particulate Air (filter)
HFE: Human Factors Evaluation
HFM: Hand and Foot Monitor
HPP: Health Physics Plan
HVAC: High Volume Air Conditioning
IES: Illuminating Engineering Society of North America
IHA: Integrated Hazard Analysis
ISM: Integrated Safety Management
K-65 material: Uranium ore residue
LEL: Lower Explosive Limit
LLRW: Low-level radioactive waste
MIP: Maintenance Implementation Plan
MSDS: Material Safety Data Sheet
N-HASP: Nuclear Health and Safety Plan
N&SS: Nuclear and System Safety functional area
NIOSH: National Institute of Occupational Safety and Health
O&M: Operations and Maintenance
ORPS: Occurrence Reporting Processing System
ORT: Occurrence Reporting Team
OSHA: Occupational Safety and Health Administration
OU-4: Operable Unit 4 (Silos area)
PAPR: Powered Air Purifying Respirator
PAT: Proficiency Analytical Test (program)
pCi/L: Picocuries per liter
PCM: Personal Contamination Monitor
PEL-TWA: Permissable Exposure Level/Time-Weighted Average
PHAR; Preliminary Hazard Analysis Report
PID: Photo Ionization Detector
PLC: Programmable Logic Control
PM: Project Manager
PPE: Personal Protective Equipment
PR: Process Requirement
QA: Quality Assurance
QAJSP: Quality Assurance Job-Specific Plan
QAP: Quality Assurance Program
QC: Quality Control
RAD: Radiological (facility)
RCS: Radon Control System
RCT: Radiological Control Technician
RQ: Reportable Quantities
RTS: Radon Treatment System
RWP: Radiation Work Permit
S&H: Safety and Health (department)
SAR: Safety Analysis Report
SBD: Safety Basis Documentation
SBDR: Safety Basis Documentation Review
SBIS: Safety Basis Impact Screen
SBR: Safety Basis Requirement
SCBA: Self Contained Breathing Apparatus
SCQ: Sitewide CERCLA Quality Assurance Project Plan
SE: Safety Evaluation
SER: Safety Evaluation Report

ACRONYMS

SH&Q: Safety, Health, and Quality (division)
SMSD: Safety Management System Description
SOP: Standard Operating Procedure
SPR: Safety Performance Requirement
SRC: Safety Review Committee
SSA: System safety Analyst
SSC: Systems, Structures, and Components
SSR: Standard Startup Review
STD: Standard
SWRS: Silos Waste Retrieval System
TLD: Thermoluminescent dosimeter
TLV-TWA: Threshold Limit Value/ Time-Weighted Average
TQP: Training and Qualification Program
TSR: Technical Safety Requirement
TTA: Transfer Tank Area
TWRS: Transfer Tank Area Waste Retrieval System
TWA: Time-weighted average
UL: Underwriter's Laboratory
USQ: Unreviewed Safety Question
USQD/SE: Unreviewed Safety Question/Safety Evaluation
VitPP: Vitrification Pilot Plant
WSA: Waste Storage Area
WR&SS: Waste Retrieval and Storage Systems

1.0 INTRODUCTION

1.1 Purpose and Scope

This Silos project-specific Nuclear Health and Safety Plan (N-HASP) was developed to ensure that hazards have been identified and analyzed and that controls or mitigators will be in place to support the safe operation of Phases 1 and 2 of the Accelerated Waste Retrieval (AWR) project. AWR Phase 1 consists of silos headspace radon reduction via the Radon Control System (RCS). AWR Phase 2 consists of silos Waste Retrieval and Storage. Waste Retrieval and Storage (WR&SS) includes Silo 1 and 2 Retrieval, Silo 1 and 2 Headspace Radon Reduction during retrieval, and Transfer Tank Area (TTA) Ventilation. AWR Phase 1 was approved by the Department of Energy (DOE) on 10-11-02 based on Revision 0 of this document under the title *Radon Control System (RCS) Nuclear Health and Safety Plan*. The current document title was adopted for Revision 1 to reflect incorporation of AWR Phase 2 activities. AWR Phase 3 (TTA ventilation and future waste treatment in the Silos 1 and 2 Remediation Facility) is not within the AWR Project scope.

The AWR N-HASP is being submitted to satisfy a commitment in the DOE-approved *Decision Basis Document Implementation of 10 CFR 830 Safe Harbor Requirements for the Silos Projects,* 40000-RP-0034 [Ref. 1]. This N-HASP meets the requirements of Title 10 Code of Federal Regulations (CFR) 830.204, *Documented Safety Analysis* (DSA) [Ref. 2]; 29 CFR 1910.120 (b)(4), *Site Specific Health and Safety Plan* [Ref. 3]; and follows the general rules for HASP development as outlined in NS-0005, *Initiating, Reviewing, and Approving DOE-Approved SBDs* [Ref. 4].

AWR Phases 1 and 2 have been determined to qualify as Radiological (RAD) based on the analyses discussed in Appendix B, *Hazard Category Calculation*. Although Silos 1 and 2 storage qualifies as nuclear Hazard Category 3 (HC-3) based on inventory, the radon reduction, waste retrieval, and interim storage in the TTA qualify as RAD based on analytical consequences. Per DOE-STD-1120-98, *Integration of Environment, Safety and Health into Facility Disposition Activities* [Ref. 5], NSTP-2002-2 [Ref. 7], a RAD categorization/classification based on analytical consequences requires DOE approval. A more detailed discussion of the safety basis is provided in Section 5.0. AWR Project System Safety Requirements are listed in Section 10.0.

This N-HASP is divided into two volumes. Volume One contains the standard requirements of a 29 CFR 1910.120 HASP, into which have been inserted sections addressing AWR System Safety Requirements and the Work Control Processes related to AWR operation. Volume Two includes the analyses that support the DOE decision basis [i.e., Integrated Hazard Analysis (IHA), Hazard Category Calculations (HCC), Human Factors Evaluation (HFE), ALARA (As Low As Reasonably Achievable) Analysis, Environmental ALARA Analysis, Fire Hazards Analysis (FHA), Accident Analysis, and Health Physics Plan (HPP)]. These analyses were used to develop the AWR System Safety Requirements that provide defense-in-depth. Together, Volumes One and Two comprise a DSA that meets the requirements of 10 CFR 830.204, *Nuclear Safety Management* [Ref. 6].

1.2 FCP Site History and Description

From 1952 until 1989, the Fernald Closure Project (FCP) site (formerly the Fernald Environmental Management Project [FEMP]) provided high-purity uranium metal products to support U.S. defense programs. Note: From 1952 until 1992, the site was called the Feed Materials Production Center (FMPC). Starting in 1992, the site was called the Fernald Environmental Management Project (FEMP). Recently, the site name was changed to the Fernald Closure Project (FCP). The FCP is operated by Fluor Fernald, Inc. (previously called Fluor Daniel Fernald, Inc.)

Uranium production halted in 1989 because of declining demand and a recognized need to commit available resources to environmental remediation. Former uranium operations at the FMPC site were limited to a fenced 136-acre tract near the center of the site known as the (former) Production Area. Large quantities of liquid and solid wastes were generated by the various FMPC production operations. Before 1984, solid and slurried wastes from FMPC processes were stored or disposed of in the Waste Storage Area (WSA). This area, located west of the production facilities, includes: six low-level radioactive waste (LLRW) storage pits; two concrete silos with earthen berms containing K-65 material (uranium ore residues); one concrete silo containing metal oxides; one unused concrete silo; two lime-sludge ponds; a burn pit; a clearwell; and a solid-waste landfill. The WSA is part of Operable Units 1, 2, and 4. The former Production Area and WSA are fenced and closed to the general public. The remaining 914 acres of the FCP site consist of forest, fields, wetlands, and pasture lands.

Operable Unit 4 (OU4) is a 5.8-acre area located on the western side of the site containing the following FCP facilities and associated environmental media:

- Silos 1 and 2 and their contents (formerly called K-65 Silos)
- Silo 3 and its contents (also called Cold Metal Oxide Silo)
- Silo 4 (empty)
- The decant sump (an underground tank and its contents)
- A portion of a concrete pipe trench and other concrete structures (currently being decommissioned)
- An earthen berm surrounding Silos 1 and 2
- Soils beneath and immediately surrounding the silos
- Perched groundwater in the vicinity of the silos
- Silos Operations & Maintenance [SOM] building (formerly the Vitrification Pilot Plant [VitPP]) and associated operations pad
- Associated abandoned underground utilities and foundations

Silos 1 and 2 contain 240,000 cubic feet of residues generated from the processing of high-grade uranium ores. The silos are large, cylindrical, above-grade, concrete tanks with post-tensioned steel reinforcing. Each of the domed silos is 80 feet in diameter and 36 feet high to the center of the dome. Silos residues contain high-activity concentrations of naturally-occurring radionuclides, including radium and thorium. These radionuclides contribute to: (1) an elevated direct-penetrating radiation field in the vicinity of the silos; and (2) the chronic emission of radioactive radon gas to the atmosphere.

1.3 Silos 1 and 2 History

1952: Silos 1 and 2 constructed. Approximately 10,000 tons of radium-bearing residues placed in storage. Radon-222 is continually released from these residues into the headspace of the silos at a rate in secular equilibrium with the radium-226 parent. The actual quantity of headspace radon is determined by the production rate and the loss rate. The three primary loss mechanisms are natural decay, cracks and openings in the concrete, and diffusion of radon through the concrete.

1963-4: Berms constructed around Silos 1 and 2 to provide lateral support to the silos walls and, as a secondary benefit, to provide radiation shielding.

1983: A report evaluating options for interim management of K-65 residues was submitted. The report recommended an external seal as the preferred interim management strategy. After nondestructive tests and structural analysis, a protective coating was applied to the silos to minimize concrete deterioration and reduce radon emissions.

1985: A structural assessment found that the center 20-foot section of both silo domes was structurally unsound for a load greater than the existing static load. A remedial action placed protective covers, constructed of steel and plywood, over the center of the domes. A subsequent assessment determined that these protective covers were unnecessary.

1987: A radon treatment system (RTS) was constructed to reduce the radiation levels generated by the radon gas progeny in the headspaces in order to apply a protective coating to the silo domes. This system was subsequently operated when access to the silo domes was required for sampling or maintenance.

1987: Three inches of rigid polyurethane foam topped by a 45-mil, waterproof, ultraviolet-resistant, urethane finish coating was placed over the silo domes.

1991: The radon emissions from Silos 1 and 2 were reduced by applying a surface barrier of bentonite (trade name Bentogrout™) slurry to the silos residues. Bentonite provided an inert sealing layer over the residue, increasing the diffusion time required for radon-222 to enter the headspace. Since radon-222 has a short half-life in comparison to the diffusion time across the bentonite, the amount of radon that entered the headspace was reduced.

1993: Foam removed from several areas in support of nondestructive testing.

1998: Radon concentrations measured near Silos 1 and 2 started to trend upward at an unexpected rate. An investigation of the dome surfaces revealed several localized leak points. Most of the identified areas were engineered penetrations that were not covered with the foam insulation used over the majority of the silo surfaces. Foam removed from several areas in 1993 had either not been adequately repaired or had since degraded.

1999: An alternative to foam was identified to protect exposed surfaces and achieve a reduction of radon emissions. The existing foam covering over both silos was repaired by: (1) applying epoxy sealer to all identified leak points; (2) covering the epoxy with a spray-on polyurethane foam; and (3) covering the foam with a weather-proofing topcoat. Follow-up trend analysis of radon concentration data showed a subsequent decrease in the radon concentrations within the immediate vicinity of the silos.

2002: RCS facility construction completed. RCS N-HASP (now renamed AWR N-HASP) completed. RCS start-up performed in December.

FCP's N-HASP approach to graded safety basis for the AWR Project is further justified by issuance of technical position NSTP-2002-2, *Methodology for Final Categorization for Nuclear Facilities from Category 3 to Radiological* [Ref. 7]. This paper, issued by DOE-EH-53, Office of Nuclear Safety, clarifies DOE-STD-1027 final hazard categorization and applies the methodology to classification below HC-3.

2003: The protective silo dome covers added in 1985, and the foam added in 1987, were removed in preparation for installation of waste retrieval equipment.

The risers for the sluicers and slurry pumps for Silos 1 and 2 were installed as well as camera ports.

RCS testing for AWR Phase 1 began in January; operations began in May.

1.4 AWR Operations

The AWR Project is one of three sub-projects comprising the Silos Project. The purpose of the AWR Project is to retrieve, and store Silos 1 and 2 waste material prior to off-site disposal. The AWR Project consists of the following major components:

- Radon Control System (RCS) (see **SECTION 1.4.1**)
- Waste Retrieval and Storage Systems (WR&SS) (see **SECTION 1.4.2**)

The waste material will eventually be treated for off-site shipment at Silos 1 & 2 Waste Remediation Facility that is not part of the AWR Project scope.

1.4.1 AWR Phase 1: Radon Control System (RCS) Operations

The first major component of the AWR Project was the construction, start-up, and operation of the RCS. The RCS removes radon-laden air from the various system components (listed below), reduces radon releases to the atmosphere, detects and measures releases to the atmosphere (see Appendix E), and mitigates system upsets.

Eventually, the RCS will receive gas streams from the following sources:

- Silos 1 and 2 (headspace and waste retrieval radon reduction)
- Silo Waste Retrieval Systems (SWRS)
- Transfer Tank Area (TTA) System (ventilation)
- Transfer Tank Area Waste Retrieval System (TWRS)
- Waste Remediation Facility (not part of the AWR Project)

In the discussion below, refer to the following three fold-out pages. These graphics are provided for information only.

FIGURE 1-1: RCS BUILDING: 1ST FLOOR
FIGURE 1-2: RCS BUILDING: 2ND FLOOR
FIGURE 1-3: RCS SITE MAP

Figure 1-3 shows the layout of the RCS facility within the Silos area, including monitor locations. It also shows the badge-in stations and rally points.

The RCS is housed in a structure approximately 28-ft. by 130-ft. There is also a 28-ft. by 42-ft. exterior pad that supports the carbon beds. The building layout provides space for four carbon bed vaults, and two chilling/condensing vaults (which contain the desiccant drying units, hold-up tanks, and condensate transfer pumps). The HEPA filtration units, fans for the RCS, and fans for RCS building ventilation are mounted in an area over the air-handling vaults. Redundant centrifugal fans ventilate the interior space of the RCS building. The fans and ducting system are designed to maintain the RCS building at a negative pressure. The ducting system allows outside air to enter the building through a high-efficiency filter, reducing the amount of particulate loading in the intake

stream. The refrigeration chilling units are located outside the RCS building on an adjacent concrete pad. A 150-foot stack is also mounted on a concrete pad on the west side of the building.

Contaminated gases are drawn through the RCS by redundant centrifugal fans. The fans and ducting system are designed to prevent over- or under-pressurization of the silos and transfer tanks. The ducting system is designed to recycle process air through the system while maintaining the required silo and tank pressures. The ducting system is balanced using a redundant programmable logic control (PLC) system that monitors the prevailing pressure and volumetric air flow conditions.

The gas stream is chilled by cooling coils and dried with a desiccant dryer. Redundant chilling/desiccant systems are provided to increase capacity and to facilitate system maintenance. The gas stream is cooled and dehumidified to reduce the potential for operational problems in the carbon beds (e.g., plugging and channeling), and more importantly, to enhance the dynamic adsorption capacity of the activated carbon. Condensed liquids from the gas stream are transferred to redundant shielded hold-up tanks. The liquid is held until it can be transferred to the transfer storage tanks or to the Bio-surge Lagoon for treatment by the Phase 2 (400 gpm) Advanced Waste Water Treatment (AWWT) Facility.

The chilled air stream flows from the chilling/condensing system through the carbon adsorption units. The carbon adsorption system consists of four beds, each containing about 45,000 pounds of carbon (90 tons total). The carbon reduces the radon gas concentrations to less than 2% of the original inlet levels. Shielding is provided to meet the acceptable radiation dose rate levels specified by the design criteria.

The two to four carbon beds generally are operated in parallel for maximum radon removal efficiency and system performance. Each bed is aligned with a dedicated inlet and outlet damper for flow control and isolation. Modulating dampers and flow elements are provided on the inlet of each bed so that flow to each bed can be reduced or increased on the basis of on-going operations.

Each carbon bed is in a separate vault to accommodate individual start-up. The duct distribution system for each bed can be isolated. The radon concentration from the effluent in each bed is monitored. In the event that a bed suffers a degradation of efficiency (e.g., excess temperature or humidity), the radon monitors register the event and actions are taken to isolate that bed and determine the mode of degradation.

The treated gas stream flows from the carbon adsorption units through a redundant high-efficiency particulate air (HEPA) filtration unit before entering the recirculation fans for redistribution or exhaust through the stack. The HEPA filtration system employs bag-in/bag-out features to minimize the potential of releases during filter changes. The system is provided with an isokinetic sampling system and all discharges are continuously monitored for radioactivity.

In the event an out-of-parameter condition is detected, the system will automatically respond to put the system in a safe configuration. Refer to Section 10.1 for Safety Basis Requirements and Process Requirements for AWR operations.

NOTES:

1. FOR CLARITY SYSTEM 20 RCS AND SYSTEM 77 MISCELLANEOUS HVAC FACILITIES HVAC SYSTEM ARE PRESENTED ON SYSTEM 20 DRAWINGS.
2. SHIELDING CANOPY ABOVE FILTERS FLT-20-001A/B IS NOT SHOWN FOR CLARITY.
3. PLATFORM, LADDER AND DOOR WERE REMOVED BY TITLE III ENGINEERING PER DCN 40710-DCN-086.

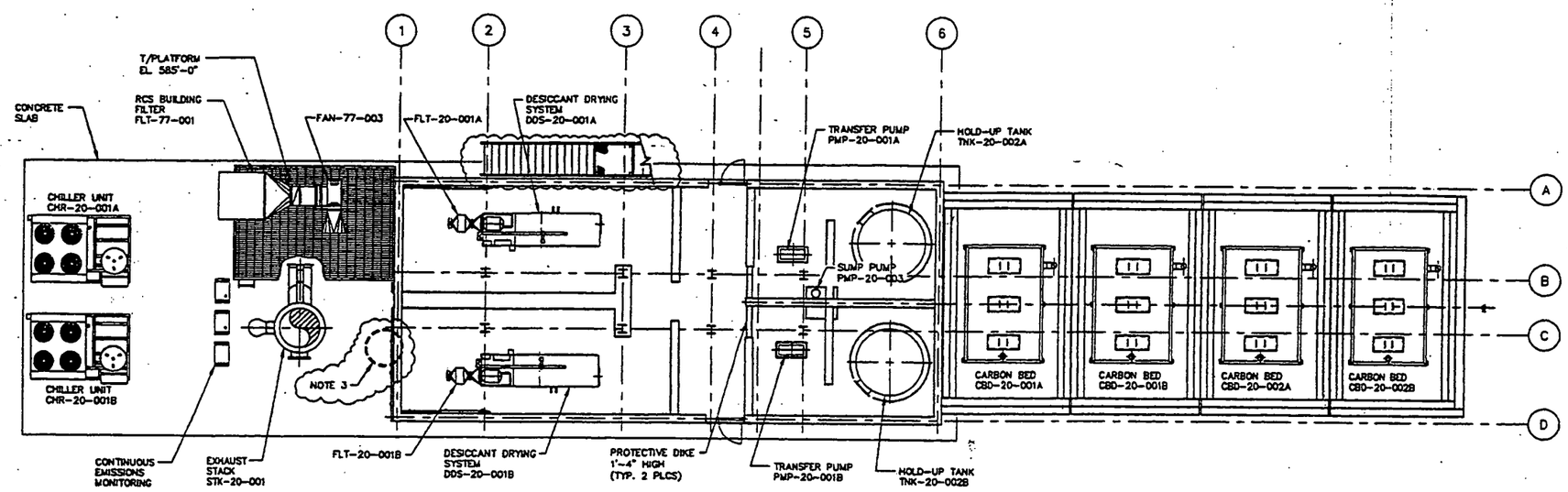

CARBON BUILDING (94D)
AIR HANDLING BUILDING (94E)
FIRST FLOOR PLAN (@EL 585'-0")
SCALE: 1/8"=1'-0"

Pages 7/8: Figure 1-1: RCS BLDG. FIRST FLOOR

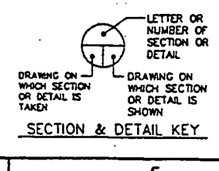

SECTION & DETAIL KEY

REV	DATE	BY	CHK'D	APPR'VD	DESCRIPTION/ISSUE
4	[illegible]	[illegible]	[illegible]	[illegible]	REVISED PER DCNS 40710-JEG-085 AND 086
3	12/04/00	RS	BSM	SWH	REVISED PER DCNS 40710-JEG-029, 40710-JEG-035, AND AMR-DCN-M-0010
2	05/15/00	JG	GCH	KDR	REVISED PER CHANGE PROPOSAL CP-DC-004
1	01/07/00	WCB	SWH	KDR	CERTIFIED FOR CONSTRUCTION
0	11/01/99	WCB	MBF		PRELIMINARY DESIGN SUBMITTAL

RPE SEAL NOT REQUIRED FOR JACOBS GENERATED REVISIONS

		DATE
DRAWN BY	W C BLUME	01/07/00
DESIGNED BY	W C BLUME	01/07/00
CHECKED BY	S W HUNGATE	01/07/00
APPROVED BY	KENNETH RICKETT	01/07/00
APPROVED BY	JOHN LAWSON	01/07/00

JACOBS PROJECT NO. 35H19606
FERNALD PROJECT NO. 40710
FIRST JACOBS REVISION NO. 3

JE JACOBS

DEPARTMENT OF ENERGY
FERNALD ENVIRONMENTAL MANAGEMENT PROJECT
SILOS 1 AND 2 ACCELERATED WASTE RETRIEVAL PROJECT
FERNALD, OHIO
FDF CONTRACT NO. FSC 624

FOSTER WHEELER
FOSTER WHEELER ENVIRONMENTAL CORPORATION

TITLE
RADON CONTROL SYSTEM
GENERAL ARRANGEMENT
1ST FLOOR

SIZE D | SCALE 1/8"=1'-0" | DWG. NO. 20FMD027 | REV 4

000019

FILENAME: 20FMD027.D

NOTES:
1. FOR CLARITY SYSTEM 20 RCS AND SYSTEM 77 MISCELLANEOUS HVAC FACILITIES HVAC SYSTEM ARE PRESENTED ON SYSTEM 20 DRAWINGS.
2. PLATFORM, LADDER AND DOOR WERE REMOVED BY TITLE III ENGINEERING PER DCN 40710-JEG-086.

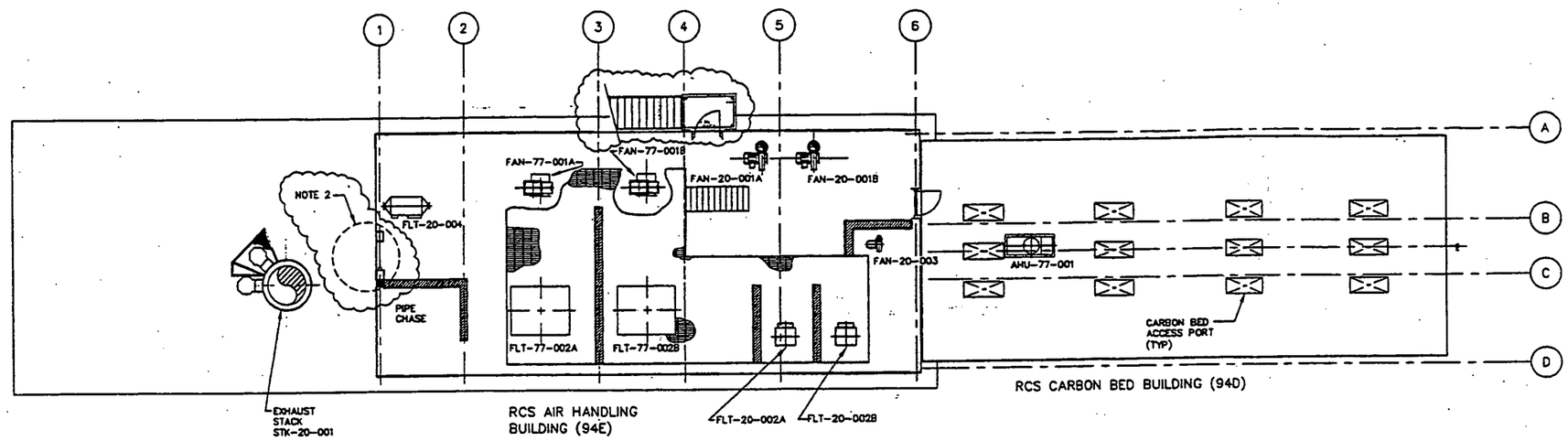

CARBON BED BUILDING (94D)
AIR HANDLING BUILDING (94E)
SECOND FLOOR PLAN (@ EL 601'-0")
SCALE: 1/8"=1'-0"

Pages 9/10: Figure 1-2: RCS BLDG. 2ND FLOOR

LETTER OR NUMBER OF SECTION OR DETAIL
DRAWING ON WHICH SECTION OR DETAIL IS TAKEN
DRAWING ON WHICH SECTION OR DETAIL IS SHOWN
SECTION & DETAIL KEY

REV	DATE	BY	CHK'D	APRV'D	DESCRIPTION/ISSUE
4	05/02/01	JP	JA	JW	REVISED PER DCN 40710-JEG-085 AND 086
3	12/04/00	RS	BSM	SWH	REVISED PER DCN NO. 40710-JEG-029
2	05/15/00	JG	GCH	KDR	REVISED PER CHANGE PROPOSAL CP-00-004
1	01/07/00	WCB	SWH	KDR	CERTIFIED FOR CONSTRUCTION
0	01/01/99	WCB	MBF		PRELIMINARY DESIGN SUBMITTAL

RPE SEAL NOT REQUIRED FOR JACOBS GENERATED REVISIONS

		DATE
DRAWN BY	W C BLUME	01/07/00
DESIGNED BY	W C BLUME	01/07/00
CHECKED BY	S W MUNGATE	01/07/00
APPROVED BY	KENNETH RICKETT	01/07/00
APPROVED BY	JOHN LAWSON	01/07/00

JACOBS PROJECT NO. 35H19508
FERNALD PROJECT NO. 40710
PREV. JACOBS REVISION NO. 3

JE JACOBS

DEPARTMENT OF ENERGY
FERNALD ENVIRONMENTAL MANAGEMENT PROJECT
SILOS 1 AND 2 ACCELERATED WASTE RETRIEVAL PROJECT
FERNALD, OHIO
FDF CONTRACT NO. FSC 624

FOSTER WHEELER
FOSTER WHEELER ENVIRONMENTAL CORPORATION

TITLE
RADON CONTROL SYSTEM
GENERAL ARRANGEMENT
2ND FLOOR

SIZE: D | SCALE: 1/8"=1'-0" | DWG. NO. 20FMD028 | REV 4

FILENAME: 20FMD028.DW

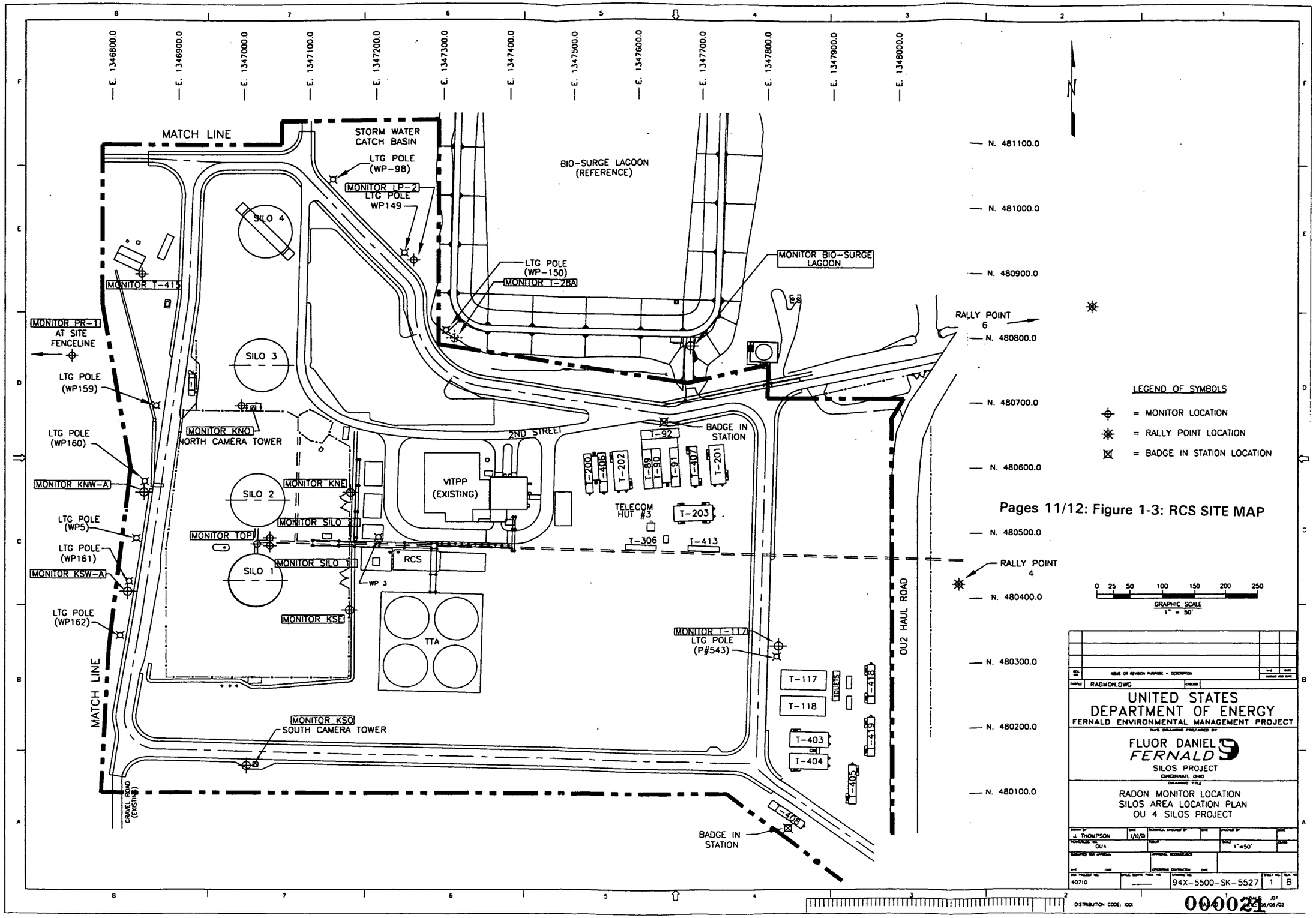

Pages 11/12: Figure 1-3: RCS SITE MAP

1.4.2 AWR Phase 2: Waste Retrieval and Storage Systems (WR&SS) Operations

During the WR&SS phase of AWR, waste material will be removed from Silos 1 and 2 and staged in a shielded and ventilated storage tank system, the Transfer Tank Area (TTA) (See **FIGURE 1-4** and **FIGURE 1-5**). Later, this waste will be transferred from the TTA to the Silos 1 and 2 Remediation Facility for processing prior to off-site disposal. During the WR&SS process, the RCS will control and reduce radon concentrations in the silos and the TTA. The WR&SS process is limited to bulk waste retrieval and does not address heel material or discrete object removal, although some heel material is expected to remain. Heel removal and D&D will require new hazard analysis and revision of this document (see SBR-3, Section 10.1).

The current FCP baseline schedule calls for the Remediation Facility to be constructed concurrently with the waste retrieval phase of AWR. There will likely be some operational overlap between the WR&SS operation and the Silos 1 and 2 Remediation Facility process. However, the Silos 1 and 2 Remediation Facility Project is not within the AWR Project scope. The remediation phase will have its own N-HASP.

Interim Lab

An interim lab will be set up in the Old Lab Building, a small concrete structure behind the Silos Operations & Maintenance [SOM] building (formerly the Vitrification Pilot Plant [VitPP]). Initially, the lab will support AWR Phase 2 sluicing and pumping tests (using surrogate material). The test results will be used to assess process and component performance. Later, the lab will support Silos 1 and 2 Remediation treatability studies (also using surrogate material). These studies will define the parameters and practical conditions the waste stabilization formulation must meet to allow shipping. The Lab will operate to the *Silos Process Control Laboratory QA Plan*, 40710-PL-0022 [Ref. 8]. Interim Lab support of Silos 1 and 2 Remediation is beyond the scope of this N-HASP; it will addressed in a later N-HASP specific to Silos 1 and 2 Remediation.

Waste Retrieval and Storage Components

Silos 1 and 2 contain two distinct layers of material that must be retrieved. The project intent is simultaneous retrieval. The top layer is bentonite (trade name BentoGrout™) that was placed in the silos to prevent radon migration into the dome space and out of the silos. The bentonite layer varies in depth. It is approximately 6 inches deep in the center of the silo and 3 feet deep near the silo walls. The material may have dried out on the surface and may still be wet near the bottom of the bentonite layer. The depth of the underlying waste material exceeds 20 feet and is a heterogeneous mix of ore residues and debris.

Waste retrieval and storage is accomplished through the following three major components:

- Silo Waste Retrieval System: The SWRS will use a technique referred to as "past practice sluicing" to remotely retrieve and transfer silos material. (Past practice sluicing refers to the original process used to move waste material into the silos.) A medium-pressure (200 psi), high-volume (300 gpm) liquid stream will dislodge, slurry, and convey waste material to the intake of a slurry pump. The slurry pump will convey the slurried material to the TTA. AWR will use two sluicing nozzles and one 350-gpm centrifugal slurry pump in each silo. Each sluice nozzle is capable of supplying 300 gpm; however, no more than 300 gpm total will be used at any one time for sluicing operations. The sluice nozzles and the slurry pumps are housed in sealed steel structures located on fixed bridge structures over each silo. The nozzles and pumps enter the top of the silos through engineered penetrations. The sluicers are capable of rotating 340° horizontally and 105° vertically and are designed to allow their placement through the entire vertical profile of the silos. The slurry pump also has a high-pressure water jet ring at the pump suction that can assist in breaking up hard material into pumpable slurry. Three video cameras with lights will provide the operators with a global view for remote operation.

- Transfer Tank Area: The TTA system consists of four 750,000-gal American Petroleum Institute (API) 650 carbon steel storage tanks located in a shielded concrete vault. Each of the tanks is ventilated to the RCS for radon emission control. The tank vault is provided with leak detection and a means to remove liquid wastes. The slurry transport pipeline is a pipe-in-pipe design that provides secondary containment. It is insulated and heat-traced. The pressures within the pipelines are monitored and the pipeline design allows for the observation of leaks and the removal of blockages. The waste will be stored in the TTA until it is transferred to the Silos 1 and 2 Remediation Facility.

- Transfer Tank Area Waste Retrieval System: The TWRS retrieves waste from the TTA and transfers it to the Silos 1 and 2 Remediation Facility by means of past practice sluicing. The design of the TWRS is identical to the SWRS. During SWRS operation, the TWRS slurry pumps will be used to provide sluicing water to the silo sluicing nozzles. Supernatant resulting from the settling of solids within the transfer storage tanks will be used as sluice water.

Modes of Operation

The AWR Project valve configuration is designed for multiple modes of operation as the waste material is transferred from the silos to the TTA and ultimately to the Remediation Facility. In addition, it is possible to transfer waste from one transfer storage tank to another. The three possible operating configurations are:

Note: In the figures referenced below, a solid black valve symbol means "normally closed."

- SWRS Operating Mode: Supernatant (sluice water) is pumped from any one of three transfer storage tanks to the sluice nozzle(s) in one silo, while slurry retrieved from that silo is pumped to a different transfer storage tank and allowed to settle. In this configuration, one silo and two transfer storage tanks are operating, while the other silo and two transfer storage tanks are idle. See **FIGURE 1-6**.

- TWRS Operating Mode: Supernatant is pumped from the Remediation Facility to the sluice nozzle(s) in any one of four transfer storage tanks, and slurry retrieved from that tank is pumped to the Remediation Facility. In this configuration, one transfer storage tank is operating and both silos and three transfer storage tanks are idle. See **FIGURE 1-7**.

- Concurrent SWRS and TWRS Operating Mode: Supernatant is pumped from a transfer storage tank to the sluice nozzle(s) in one silo, while slurry retrieved from that silo is pumped to a different transfer storage tank. Simultaneously, supernatant is pumped from the Remediation Facility to the sluice nozzle(s) in a third transfer storage tank, and slurry retrieved from that tank is pumped to the Remediation Facility. This operation allows one transfer storage tank to operate in the decant mode, in which slurry water and slurry solids separate to generate supernatant. See **FIGURE 1-8**.

THIS PAGE INTENTIONALLY BLANK

FIGURE 1-4: AERIAL VIEW OF AWR PROJECT (SILOS 1 & 2, RCS, AND TTA)

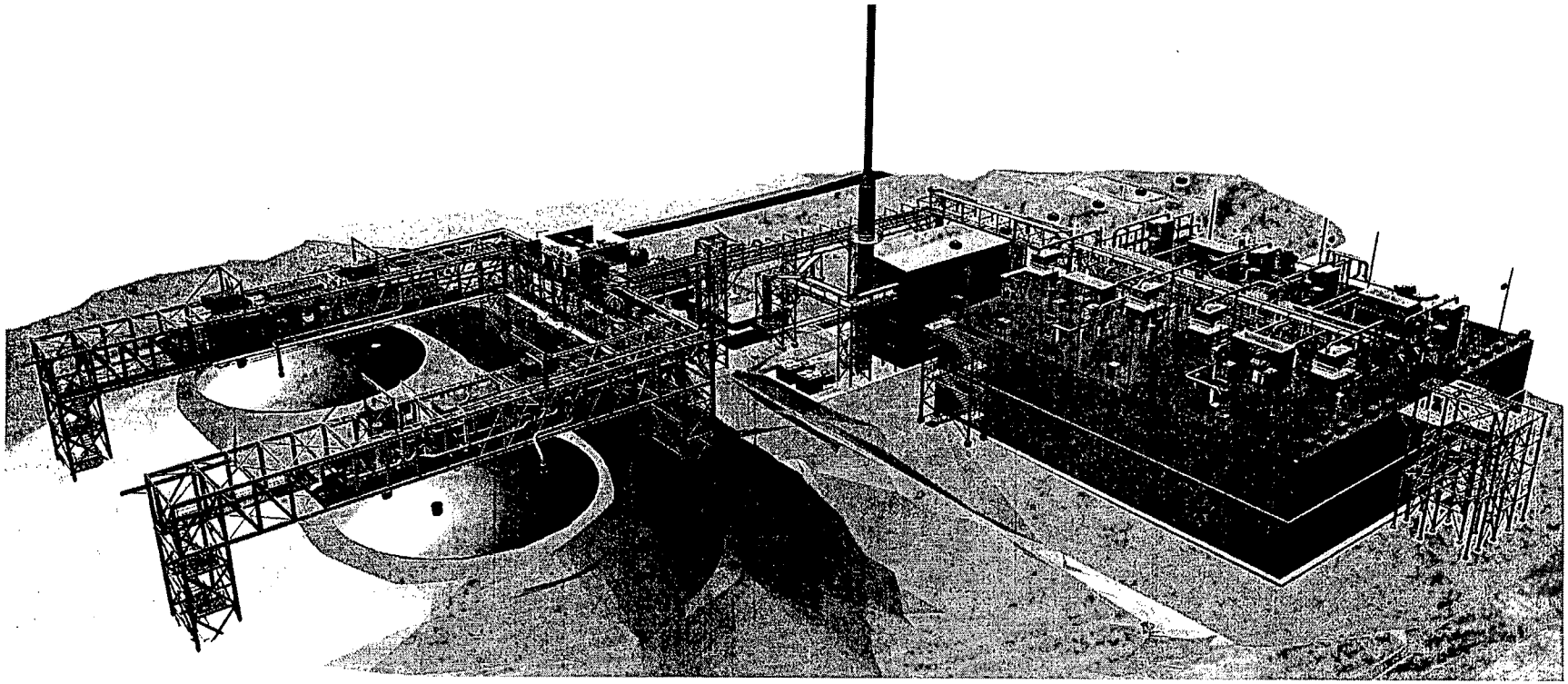

000026

FIGURE 1-5: BASIC AWR PROCESS FLOW

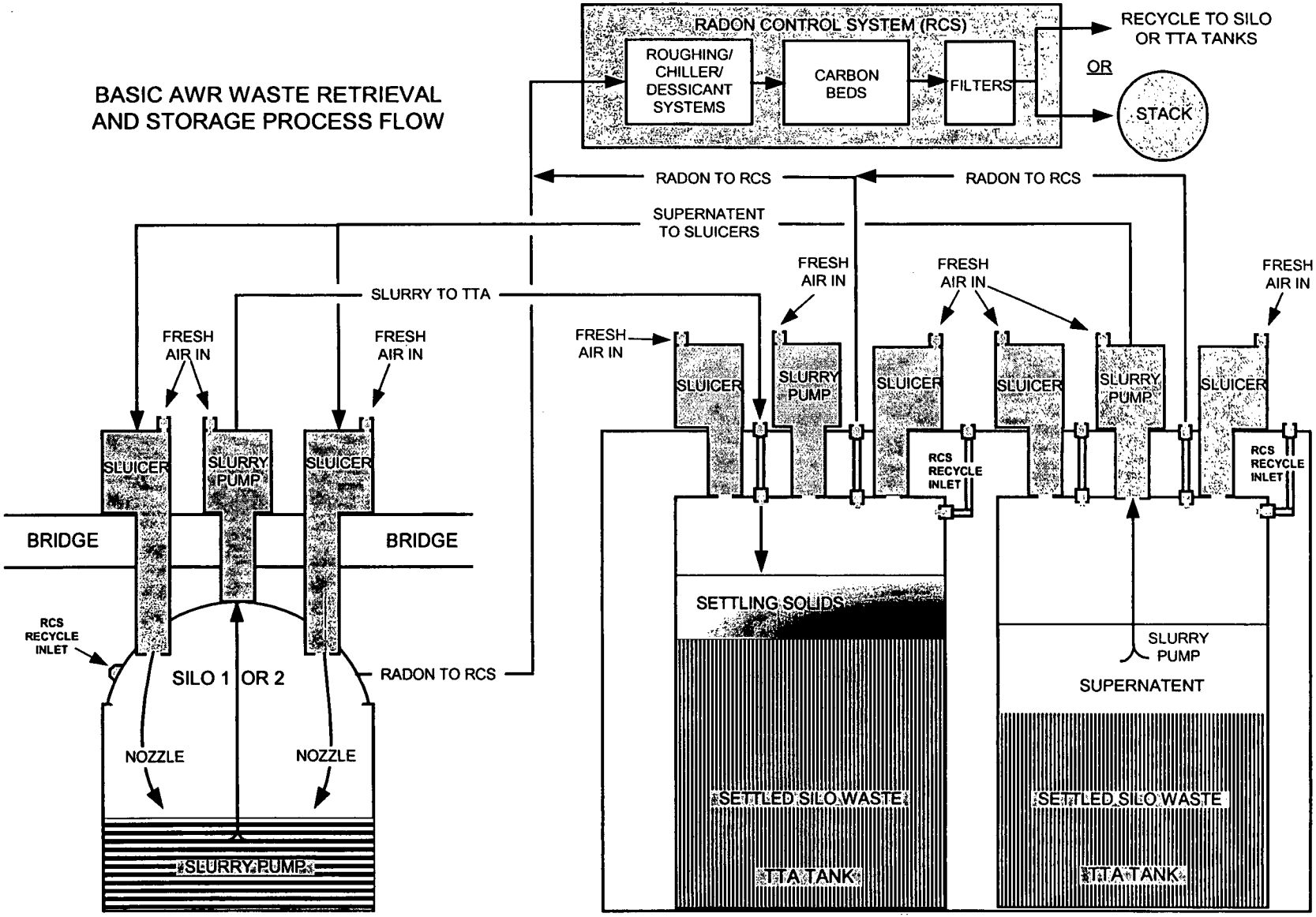

000027

5470

FIGURE 1-6: SWRS OPERATING MODE

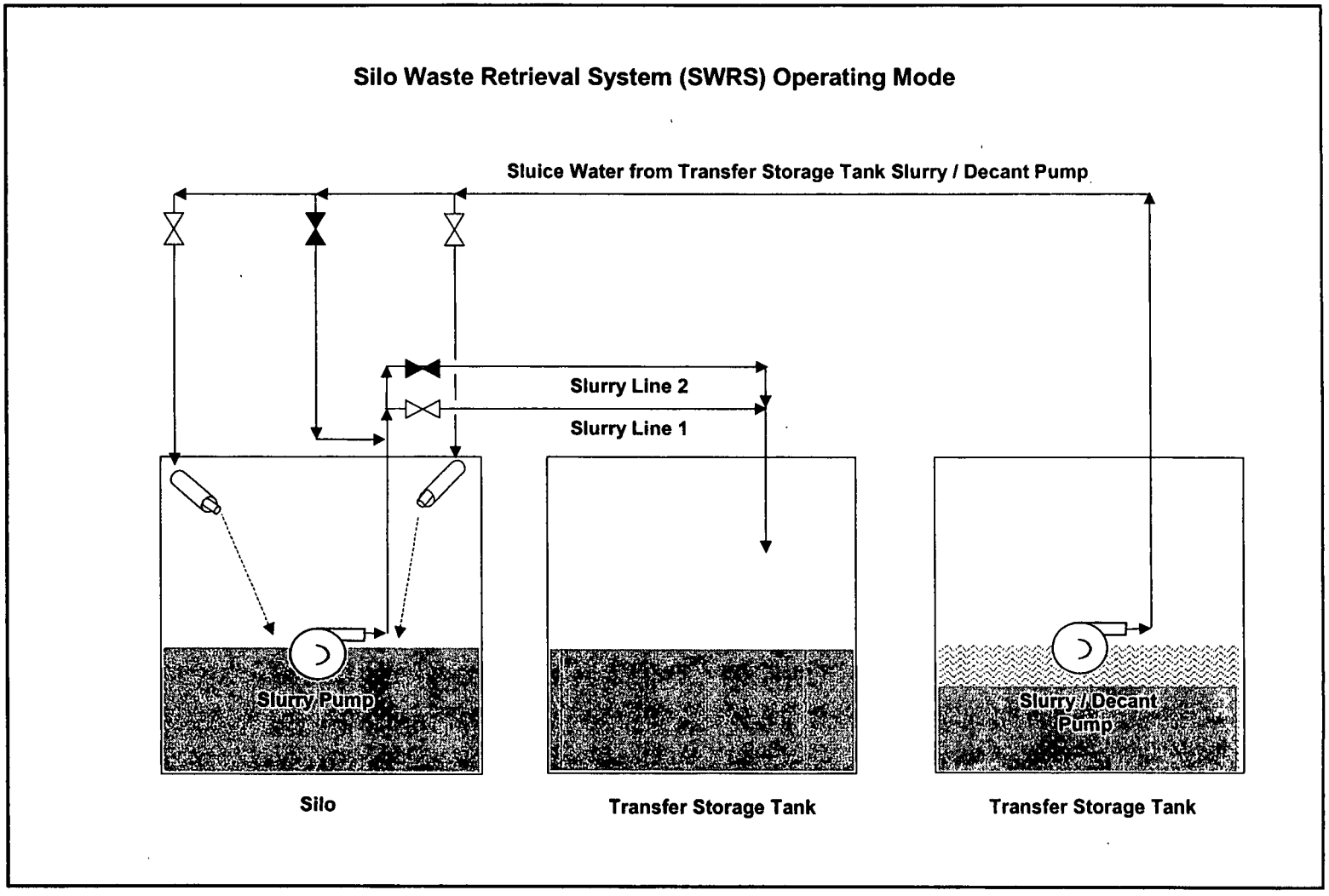

000028

5470

FIGURE 1-7: TWRS OPERATING MODE

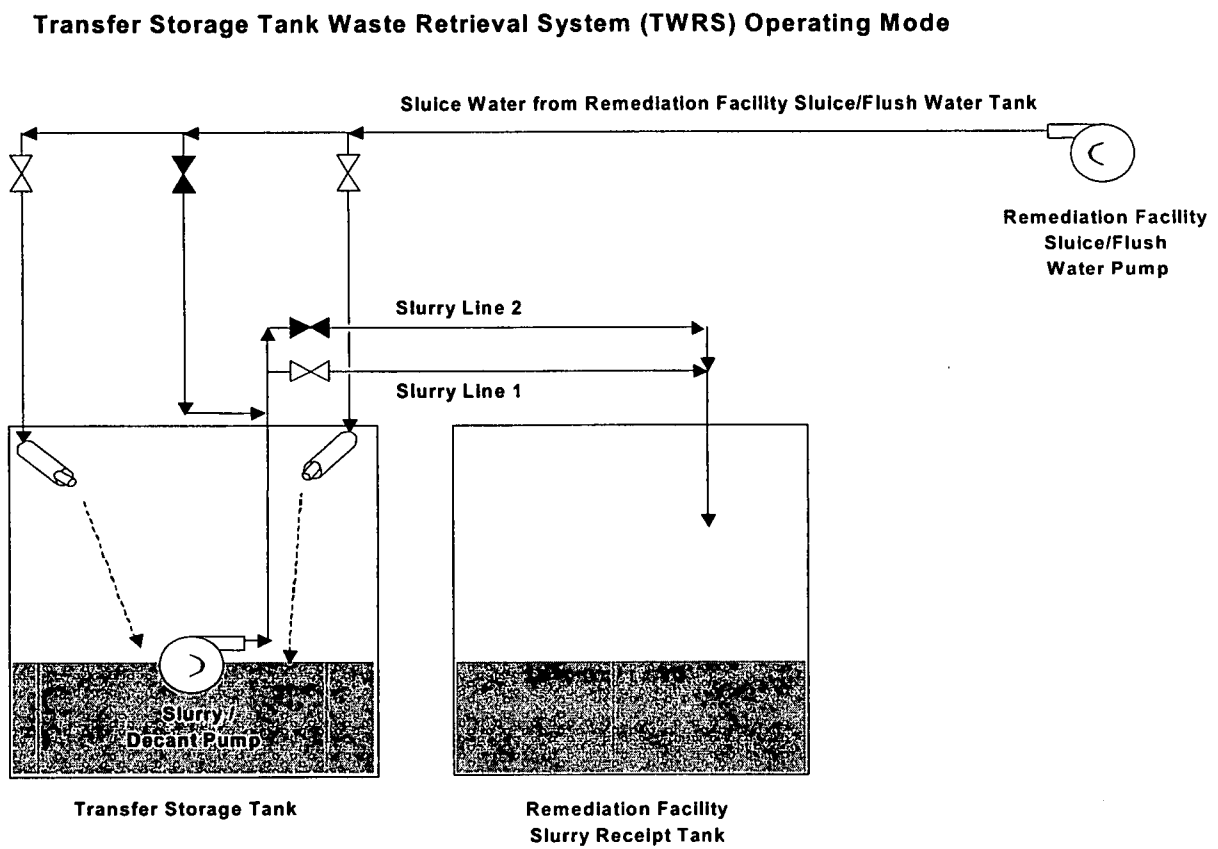

000029

5470

FIGURE 1-8: CONCURRENT SWRS AND TWRS OPERATING MODE

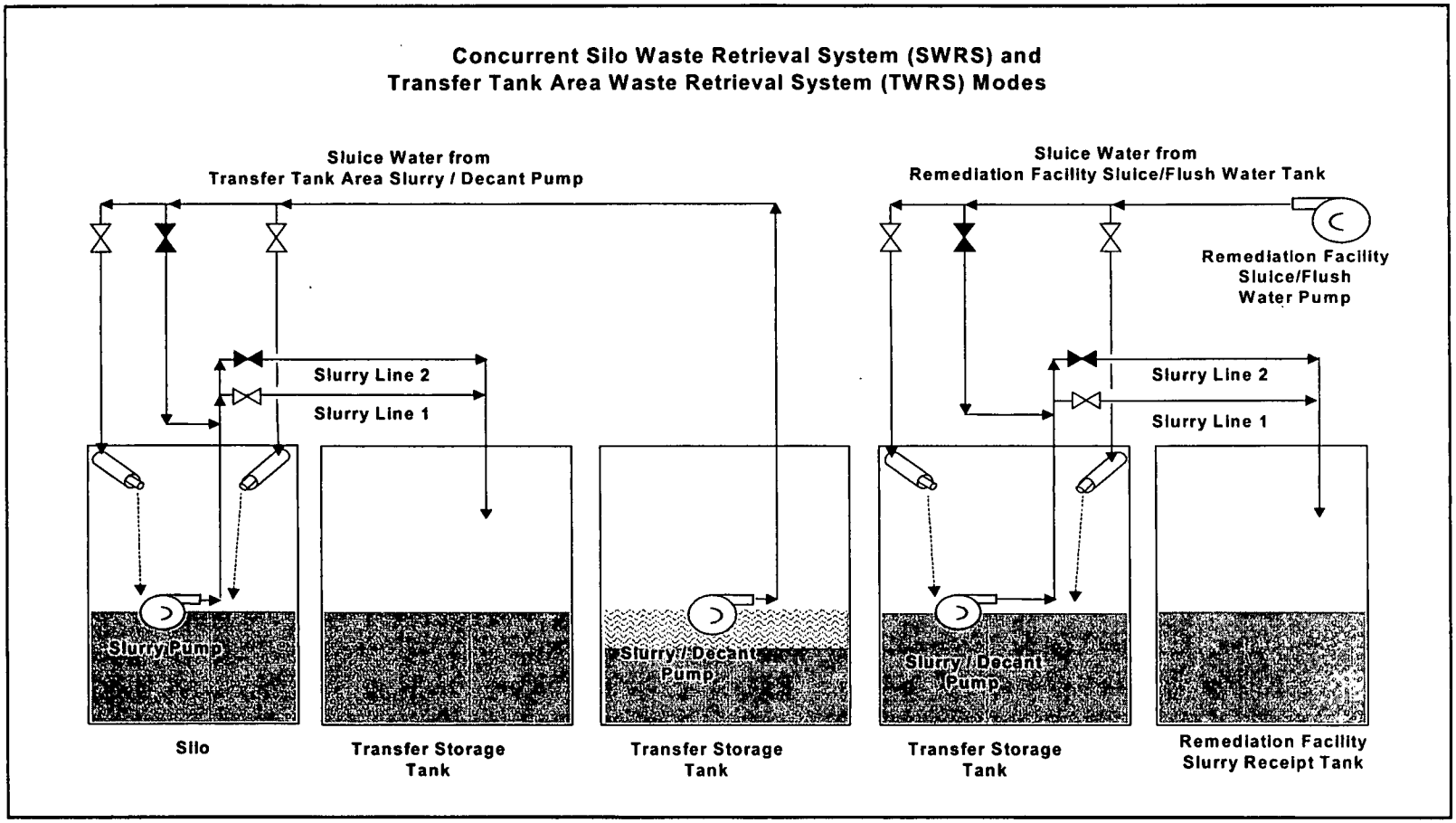

000030

1.5 Management Responsibility for a Safe Work Environment

Providing a safe work environment is the direct responsibility of Fluor Fernald management. Everyone must share a concern for their own safety, the safety of their co-workers, and the protection of the environment. It must be fully understood by all employees that safety shall take precedence over expediency. It is a condition of employment that all employees work safely and follow established safety rules and procedures.

It is the responsibility and policy of Fluor Fernald to provide a safe work environment for all employees. Fluor Fernald management is committed to the belief that all accidents, injuries and occupational illnesses can be prevented and if an activity cannot be performed safely, it will not be performed. Management fully supports this commitment by ensuring that every employee receives the appropriate training, personal protective equipment, and other resources necessary to execute assigned work activities in a safe and efficient manner.

Management responsibilities for safety are further discussed in Section 2.0, *Integrated Safety Management (ISM) System.*

As part of its commitment to safety, Fluor Fernald maintains a Lessons Learned Program per SH-0025, *Fluor Fernald Lessons Learned Program* [Ref. 9]. Through this program, different projects share information to implements ISM Core Function No. 5, Provide Feedback and Continuous Improvement. The program promotes the recurrence of desirable activities, precludes the recurrence of undesirable activities, highlights best practices, and helps develop innovative ways to solve problems or enhance work safety, efficiency, and cost-effectiveness. The following two subsections list lessons learned from the Waste Pits Remedial Action Project (WPRAP) and the AWR Phase 1 Radon Control System project.

1.5.1 Lessons Learned from WPRAP Applicable to AWR Phase 2

The following lessons from WPRAP Lessons Learned 2003-0013 and a WPRAP/Silos shared meeting are applicable to Phase 2 of the AWR Project:

- As a result of WPRAP's experience with procedure-based training, AWR Phase 2 has developed process-based training based on the process technical description. Initial training provides operations personnel with a basic understanding of all Silos projects. This is followed by project-specific training on the procedures. This progression of training allows for timely hiring of personnel and for initial training to begin prior to the completion of procedures.

- One area of concern that created potential problems at WPRAP was insufficient radiological baseline data from all areas around the facility at the onset of the project. Phase 2 of the AWR Project has developed a project-specific air-sampling plan that will include baseline data at start-up prior to operations (see Appendix H).

- Some of WPRAP's maintenance costs were relatively high. In some cases, equipment service life fell far short of design life (e.g., conveyors). Because unanticipated equipment failures are costly, it is important that design reliability is high. Because silo waste material is abrasive, waste transfer will be hard on pumps and valves. AWR Phase 2 designs have been made robust to deal with this anticipated problem, thus minimizing corrective maintenance.

- WPRAP determined that initial radiological boundaries did not provide sufficient buffer area around the facility footprint, and thus, did not allow sufficient flexibility for variations in airborne radioactivity levels. New radiological boundaries and controls were established, along with additional area monitoring, data collection and evaluation, and reporting. AWR Phase 2 has developed a project-specific air-sampling plan to address airborne radioactivity variations (see Appendix H).

1.5.2 Lessons Learned from Radon Control System Applicable to AWR Phase 2

The following lessons from AWR Phase 1 RCS Lessons Learned 2003-0003 are applicable to Phase 2 of the AWR Project:

- For RCS, the lack of a well-defined and executed design review process resulted in the generation of a significant number of Design Change Notices (DCN's) that adversely impacted the construction schedule and subsequent turnover to operations. The design review process for AWR Phase 2 has been revised to provide further details, including: package description, types and sequence of reviews, and roles and responsibilities of participants.

- The RCS red-line/as-built process provided too much flexibility and lacked sufficient discipline, thereby affecting construction turnover to operations and subsequent testing. For example, red-line changes not based on actual field observation resulted in inaccuracies. The red-line/as-built process for AWR Phase 2 is under revision. A dedicated team will be assigned to gather all red-line changes and coordinate their processing.

- Document control requirements for execution of Silos Projects were underestimated. RCS Phase I activities were the first project area requiring substantial support from project document control, and delays were encountered in reproduction of drawings and documents. The number of personnel on the document control staff was insufficient to support multiple shift and weekend work activities. Space allocation and staffing for maintenance of Silos documentation and drawings has since been increased.

- Improvements were needed in the RCS Project's definition of submittal requirements in design documents, the development and approval of submittal registers, and the document descriptions contained in submittal registers and the document manager system. Deficiencies resulted in additional workload and nonconformance reports. A visit to a vendor site early in the procurement process was found to be an effective method of improving the quality of vendor submittals. AWR personnel have been going to vendor sites to mitigate these problems for Phase 2 of the project.

- RCS Construction Acceptance Tests (CAT) were well planned, tracked, and completed in a highly efficient and organized manner. Early alignment among construction, maintenance, operations, engineering, project readiness, and quality control resulted in a highly successful CAT program. The detailed listing of system components with individual requirements for construction acceptance tests, maintenance actions, loop tests, and quality control inspections enabled the project to maintain an accurate status of all systems during the turnover and startup program. This approach is being carried over to the Phase 2 of the project.

- RCS Project management elected to accelerate the completion of construction and start-up through turnover of specific construction packages and subsystems. This process, for the most part, worked well. In early applications however, there were some difficulties in commencing startup testing as the requirements for electrical and control systems associated with each package were not fully defined or did not accommodate the overlap of some systems in the same control panels. Better coordination between construction and operations is necessary to determine system boundaries early in the project to efficiently facilitate the turnover from construction to operations.

  Like RCS, AWR Phase 2 construction turnover and start-up is organized by identification of system turnover packages. Electrical and control systems are centralized and the controls of the numerous systems overlap or interface with other systems. The project will focus first on completion of electrical systems, control systems, and utility support systems in support of turnover and start-up of the other systems. AWR Phase 2 turnover/start-up is not expected to be free of difficulties; however, the project has been organized for implementation of a disciplined, efficient process.

- RCS encountered operability issues regarding right-sizing motor-operated valves associated with louvers and dampers, under-sized condensate traps without adequate means for draining and collection, and use of manually-operated valves instead of motor-operated valves for installations requiring frequent operation or those with limited accessibility. Rework of valve configurations above the silo domes resulted in increased occupational exposure to personnel. The existence of these types of deficiencies is related to the very aggressive RCS project schedule and the shortcomings in the RCS design review process.

  AWR Phase 2 design was also developed and reviewed under a very aggressive schedule. Since issuance of the design/construction documents and drawings, operations and engineering personnel have continued to review the project design against actual construction/installation, resulting in numerous design changes to address technical, operational, and maintenance issues. The AWR Phase 2 sluicing system has been tested off-site. The test stands have since been moved to the Silos Project for further on-site testing prior to start-up. On-site testing is designed for operations training and will involve pumping surrogate material into a TTA tank and then sluicing out the TTA.

- The RCS Project was the first on site to undergo detailed review of software development projects for application in process control systems. Project knowledge of software system management requirements associated with programmable logic controllers was insufficient to demonstrate full compliance with DOE requirements. Deficiencies existed in management controls, testing, and documentation. Site computer software management directives provided limited guidance with respect to development of software systems at the project level. The project software management procedure was revised and some software verification and validation was required to be performed prior to completion of the independent readiness review. Additionally, project engineering specifications did not fully allow for software interface communications between some control systems. The AWR Project is using the new software verification and validation process.

- The use of mockups and demonstrations contributed to the successful startup of the RCS. The RCS system was fully tested using two large sea-land containers to simulate the two silos. This testing enabled the project to better evaluate system performance and correct deficiencies in design and control systems prior to conduct of hot test (radiological) operations. Process engineers, supervisors, and operators demonstrated a high level of knowledge and proficiency during readiness reviews as a result of hands-on training with the mockup system. For AWR Phase 2, a successful demonstration of the sluicing system (using surrogate material) was conducted off-site. This surrogate demonstration will be repeated on-site for operations training.

- A number of last-minute changes to RCS procedures and other documentation impacted operations training and readiness as the aggressive schedule afforded limited time for implementation. As a result of these changes, both the project's management assessment team and the independent readiness review team had difficulty in understanding the procedures and processes being utilized by the project. A second issue with last-minute changes was the potential for not fully evaluating the impact on other related documents. This second factor produced a snowballing effect that was only resolved by making more last-minute changes. It was also important to note that the reason for changes, including comments and resolution, should be carefully documented. Too many situations repetitively arose as to why a specific design condition, standard, set point, or limit existed without the project being able to easily defend (and document) a previously accepted position.

  The AWR Project has attempted to minimize last-minute changes by continuing to review project design against actual construction/installation in an organized by-system-turnover-package manner. Even so, there may still be last-minute changes; however, current efforts are expected to keep last-minute changes and project impacts to a minimum.

- RCS personnel could not make necessary and timely handwritten changes to procedures while on shift due to the very conservative site administrative process for handwritten changes. The current process is not responsive to the needs of around the clock operational type activities. A streamlined procedure has now been outlined in the FCP Document Program. However, in order for this process to be implemented in Silos, DOE approval is required on changes to the FCP Conduct of Operations (CONOPS) Program. These changes are currently under DOE review.

- Project staffing for RCS operation was barely adequate to perform start-up testing and initial systems operations. Continuous RCS operation in support of AWR construction activities could not be demonstrated. Start-up engineers, supervisors, and operators exhibited signs of stress and fatigue due to many weeks of excessive overtime in support of start-up. The commitment of Operations and Maintenance to RCS start-up allowed little participation in design reviews of other upcoming silos projects. While some compensatory measures were taken to perform an operations review from external site resources, the lack of input from personnel knowledgeable of the Fernald site and responsible for operations management and performance could result in less-than-optimum designs for other silos projects.

1.6 AWR Project Organization

The Silos Project has organized a team with the extensive technical and administrative experience necessary to successfully complete the three Silos sub-projects: (1) the Advanced Waste Retrieval (AWR) Project (which includes the Radon Control System); (2) the Silos I & 2 Remediation Project; and (3) the Silo 3 Project. To support these sub-projects, the Silos Project uses common technical experts. As the Silos sub-projects continue to develop through normal execution phases, the roles and responsibilities will be appropriately transitioned to efficiently provide the required support. The Silos Project organization chart is periodically updated and maintained on the Fernald Intranet. The AWR organization chart is shown **FIGURE 1-9**. Future activities not currently represented are Safe Shutdown, Decontamination and Demolition, and Soils Remediation.

Silos Senior Project Director (SPD)

The Silos Senior Project Director (SPD) is responsible for all aspects of the Silos Project (AWR, Silos 1 and 2 Remediation, and Silo 3). The SPD is the primary interface for the Fluor Fernald Leadership Team, the DOE, as well as the numerous regulatory agencies and community groups interested in Silos Project activities. The SPD is the Executive Account Approval Manager for all Silos Project accounts and the staffing manager for the Silos Project. In keeping with the principles of Integrated Safety Management (ISM), the SPD is responsible for the safety of the worker, the public, and the environment throughout the Silos Project.

AWR Project Manager (PM)

The AWR Project Manager (PM) reports to the Silos SPD and is responsible for the execution of all aspects of the AWR Project, including baseline development and management, design engineering, procurement activities, technical contractor oversight and compliance management, and safe shutdown. The PM is responsible for the safe, cost-effective, and timely implementation of the work scope and functional area requirements contained in the applicable sections of 40000-PEP-0001, *Silos Project Execution Plan* [Ref. 10]. The PM is also responsible for the development and negotiation of key project milestones and for being responsive to applicable regulatory agencies and stakeholders. The AWR PM coordinates project activities with the Silos Functional Area Managers. Additionally, the PM is the delegated Cost Account Manager (CAM) authority for the AWR Project.

FIGURE 1-9: SILOS AWR PROJECT ORGANIZATION CHART

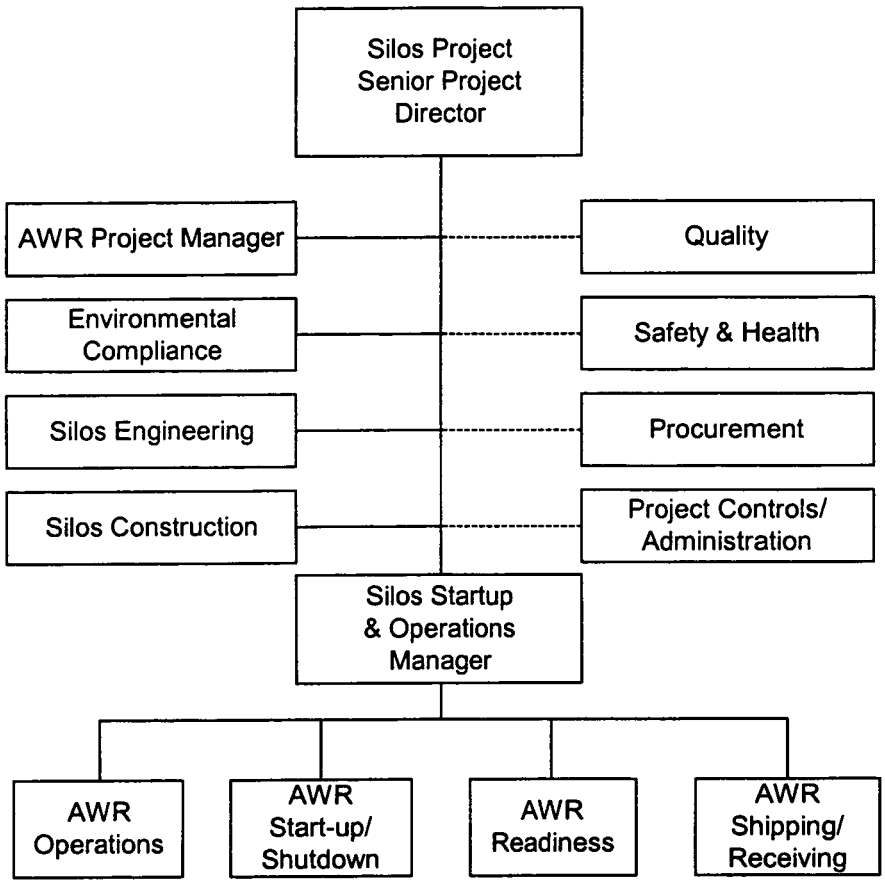

Silos Safety and Health (S&H) Manager

The Safety and Health Manager (S&H) is matrixed to the Silos Project from the Environmental Safety, Health and Quality (ESH&Q) Division. The S&H Manager reports to the Silos SPD and is responsible for identification and resolution of safety and health issues, and for coordination of Silos Project safety and health resources with other Fluor Fernald projects, divisions, and programs. The S&H Manager supports the AWR Project with regard to Occupational Safety and Health (OS&H), Radiological Engineering, Emergency Preparedness, Nuclear and Systems Safety (NSS), Fire Protection, and Security functional areas.

- For OS&H, the S&H Manager will ensure that the AWR Project implements a program compliant with applicable regulatory guidelines to provide a safe working environment for team members.

- For Radiological Engineering, the S&H Manager will ensure that the AWR Project maintains a program compliant with applicable regulatory guidelines and provides a radiologically safe working environment for all team members.

- For Emergency Preparedness, the S&H Manager will ensure that the AWR Project maintains plans, coordination, and programs compliant with applicable regulatory guidelines to provide a safe working environment for all team members.

- For NSS, the S&H Manager will ensure that the AWR Project provides the administrative support and technical activities required for protecting the environment and health and safety of the public in the event of an accident. The S&H staff is responsible for providing guidance on required safety basis documentation, reviewing configuration management issues, and supporting hazard analyses. The analyses include the Integrated Hazard Analysis (IHA), Human Factors Evaluation (HFE), and As Low As Reasonably Achievable (ALARA) analysis.

- For Security, the S&H Manager will maintain a liaison with Fluor Fernald Security to ensure that the AWR Project maintains a program compliant with applicable regulatory guidelines for personnel access and control of property.

Silos Construction Manager (CM)

The Silos Construction Manager (CM) reports to the Silos SPD and is responsible for coordination of all construction activities performed in support of the Silos Project (including AWR). The CM will coordinate all planning, documenting, and oversight activities associated with the construction of AWR systems and facilities. The CM will coordinate with the Silos EM to ensure integration of engineering deliverables to support AWR construction and overall project schedules. The CM is responsible for providing constructability reviews for AWR based on submittals. The CM will drive completion of the Construction Acceptance Testing (CAT) as part of the process of turnover to operations. The CM will direct the activities of procurement and contracts administration to meet the field needs, as well as other support areas such as field safety, quality control, and radiological support. The CM will interface with SH&Q for assurance of proper work authorization, safety, and quality in all construction activities. The CM will interface with Startup, Readiness, Operations, and Maintenance functions to ensure timely and effective turnover of constructed systems and facilities to Operations.

Silos Engineering Manager (EM)

The Silos Engineering Manager (EM) reports to the Silos SPD and is responsible for ensuring that all design tasks are completed in a manner compliant with the programs and procedures of the Fluor Fernald Site Engineering Group. The Silos EM is responsible for design configuration management and design change control work processes. The Silos EM will support the AWR Project Engineering Lead's efforts to appropriately document and coordinate the engineering activities. The Silos EM is also responsible for all technical studies performed for the AWR Project, for overall engineering documentation, and for all support provided by Title 3 (construction support) and home office technical personnel.

Silos Startup and Operations (S&O) Manager

The Silos Startup and Operations (S&O) Manager reports to the Silos SPD and is responsible for overall coordination and integration of all Silos startup, readiness, operations, and maintenance functions (including AWR). This includes integration of the Waste Management function in Silos.

Silos Operations Manager (OM)

The Silos Project Operations Manager (OM) reports to the Silos S&O Manager and is responsible for ensuring operation and maintenance of all facilities required for the remediation of the silos and the material currently stored in the silos. The OM is responsible to each of the individual projects (including AWR) with regard to operation and maintenance of the facilities to meet the safety, schedule, quality, and regulatory goals. The OM will be responsible for project interface with FAT&LC for labor coordination and any industrial relations processes. The OM will be responsible for development and administration of all training support required to assure that all operations and support staff training requirements are identified and fulfilled.

Silos Startup/Shutdown Manager (SSM)

The Silos Startup/Shutdown Manager (SSM) reports to the Silos S&O Manager and is responsible for the startup of all facilities required for silos remediation (including AWR), and for validation of completion of all safety, regulatory, contractual, design, and quality requirements. The SSM plans and coordinates the transition from AWR construction completion to turnover to Operations, including completion of all component and systems operational testing in accordance with a startup and test program. The completion of the AWR facility startup and test program will transition the operable facility to the Silos Project O&M Manager. The SSM will ensure that lessons learned from each Silo Project startup are shared with the project functional managers for future improvement. The SSM is also responsible for operations planning in support of post-operations and safe shutdown activities.

Silos Readiness Manager (SRM)

The Silos Readiness Manager (SRM) reports to the Silos S&O Manager and is responsible for verifying that facility safety documentation is in place and that procedures, personnel, equipment, and systems support the necessary requirements for the start of operations. The SRM will develop a readiness plan of action consistent with a graded approach to minimum core requirements and ISM principles to bring the facilities to a state of readiness to safely commence operations. The SRM will coordinate self-assessment activities with all functional area leads in preparation for independent startup verification reviews and also will coordinate with any site and DOE teams involved in these processes.

Silos Quality Manager (QM)

The Quality Manager (QM) is matrixed to the Silos SPD for coordination of all quality functional areas within the division. The QM reports to the Quality Control (QC) Manager and is responsible for performing tasks in a manner compliant with the requirements of Fluor Fernald quality programs and procedures. The QM will supervise and support the efforts to appropriately document and coordinate AWR Project QA/QC activities. The QM is also responsible for special quality control functions associated with packaging and shipping hazardous waste materials. The QM will ensure that lessons learned from all on-going Silos Project activities are shared with the project functional managers for future improvement.

Silos Procurement Manager

The Procurement Manager is matrixed to the Silos SPD and is responsible for supporting the Silos Project with regard to management of contracts, preparation of solicitations, evaluation of offers, contract negotiation, contract award, procurement of materials and services, and administration of contract performance and change orders.

Silos Project Controls/Administration Manager (PCM)

The Project Controls/Administration Manager (PCM) is matrixed to the Silos SPD and is responsible for establishment of a work breakdown structure, budgeting and funding the baseline scope, cost control and invoicing, baseline change management, schedule control, and resource management for the Silos Project. The PCM will develop and communicate appropriate project metrics to indicate status and performance against key project goals and requirements.

Silos Environmental Compliance Manager (ECM)

The Environmental Compliance Manager (ECM) reports directly to the Silos SPD and is responsible for compliance with all regulatory requirements for Silos as well as other site activities. The ECM will also serve as the relationship manager with the agencies.

Silos Shipping and Receiving Manager (SRM)

The Silos Shipping and Receiving Manager (SRM) reports to the S&O Manager and is responsible for receiving bulk materials, consumables, trailers, and empty containers. The SRM is also responsible for characterization of waste scheduled for shipment, and for container loading and shipping.

1.7 AWR Workplace Hazards Analysis

A quantitative analysis of the hazards associated with the construction, operations, and maintenance tasks for AWR was performed per Fluor Fernald requirements. Guidance was taken from 10 CFR 830 [Ref. 6], DOE Order 5480.23 (then in effect) [Ref. 11], DOE-STD-1027-92 [Ref. 12], Occupational Safety and Health Administration (OSHA) 29 CFR 1910.119 [Ref. 13] and 29 CFR 1910.120 [Ref. 3]. The objectives of the analysis were to:

- identify and evaluate hazards contained in the facility/process to establish a sound technical basis for their control.
- establish worker safety controls to reduce and mitigate hazards.
- establish Process Requirements (PRs) to ensure that the activities remain safe in accordance with good management practices, routine conditions, and anticipated operating modes.
- establish Safety Basis Requirements (SBRs), which limit the activities based on a direct association with its analyzed safety envelope and current Hazard Categorization or classification.

The analysis was performed by a diverse team integrating all safety functional areas (radiation protection, industrial hygiene, industrial safety, nuclear safety, fire protection, and emergency preparedness) along with operations, maintenance, quality assurance, engineering, and a facility owner.

The methods used by the team to determine the safety envelope included:

- Integrated Hazard Analysis (IHA)
- Hazard Category Calculations (HCC)
- Human Factors Evaluation (HFE)
- Occupational ALARA Analysis
- Environmental ALARA Report
- Fire Hazards Analysis (FHA)
- Accident Analysis

Complete descriptions and details of these analyses can be found in Volume II of this N-HASP.

2.0 INTEGRATED SAFETY MANAGEMENT (ISM) SYSTEM

The purpose of the Integrated Safety Management (ISM) system is to ensure the integration of safety into all facets of Silos work planning and execution. Specific responsibilities for implementation of ISM are assigned to both DOE and Fluor Fernald line management. The objective is to systematically integrate safety into management and work practices at all levels so that missions are accomplished while protecting the public, the workers, and the environment. The ISM program is described in PL-3081, *Safety Management System Description (SMSD)* [Ref. 14].

ISM is incorporated into the Silos Project and will be incorporated into any contracts awarded to support this work scope - thus assuring that the precepts of ISM flow down to all subcontractors. All subcontractors are fully expected to meet the contract requirements pertaining to the integration of environmental, safety, and health requirements into work planning and execution. Contractors are expected to work safely without accident, injury, or insult to the environment. Any contracts associated with this project will specifically state that the contractor shall ensure that management of environment, safety, health, pollution prevention, and waste minimization (ES&H) functions and activities become an integral yet visible part of their work planning and execution process. This will assure that ISM program requirements flow down to subcontractors.

The Seven Guiding Principles of ISM

1. Line Management Responsibility for Safety - All levels of management are responsible for safety. Line management is directly responsible for the protection of the public, the workers, and the environment. The term line management means all levels of leadership in the organization responsible for accomplishing a particular mission, either project or programmatic.

2. Clear Roles and Responsibilities - Clear lines of authority and responsibility for ensuring safety are established and maintained at all organizational levels. The leadership responsible for accomplishing project or programmatic work is also responsible for ES&H.

3. Competence Commensurate with Responsibilities - Personnel must possess the experience, knowledge, skills, and abilities that are necessary to perform their responsibilities.

4. Balanced Priorities - Resources are effectively used. Safety costs are an integral part of the total cost of accomplishing the work scope. Another aspect of integration is the fusion of safety planning with the business process, such as budget and resource allocation. A first step is to translate missions into work requirements in conjunction with the prioritization of budget and resources.

5. Identification of Safety Standards and Requirements - Before work is performed, the identified hazards are evaluated and an agreed-upon set of safety standards and requirements is established that will provide adequate assurance that the public, the workers, and the environment are protected from adverse consequences.

6. Hazard Controls Tailored to Work Being Performed - Administrative and engineering controls to reduce and mitigate hazards are tailored to the work being performed and identified hazards.

7. Operations Authorization - The conditions and requirements for operations to be initiated and conducted are clearly established, agreed upon, and addressed. This process is further defined in the Contractors' Work Plans and is accomplished through preparation of appropriate safety documentation and demonstrations of readiness. In addition, work control documents (e.g., Work Plans and permits) may include conditions that must be satisfied for work to proceed.

   Readiness documentation will be published separately as a part of the AWR Start-up and Turnover Plan of Action. This documentation will be reviewed and approved separately by the DOE.

The Five Core Functions of ISM

1. Define the Scope of Work - Missions are translated into work, expectations are set, tasks are identified and prioritized, and resources are allocated.

2. Analyze the Hazards - Hazards associated with the work are identified, analyzed and categorized.

3. Develop and Implement Hazard Controls - The overall safety envelope is established and controls are implemented. Applicable standards and requirements are identified and agreed-upon, controls to prevent or mitigate hazards are identified, the safety envelope is established, and controls are implemented.

4. Perform Work within Controls - Documentation is to be followed to perform the work, readiness is confirmed, and work is performed safely.

5. Provide Feedback and Continuous Improvement - Feedback information from inspections, assessments and appraisals. Feedback information on the adequacy of controls is gathered, opportunities for improving the definition and planning of work are identified and implemented, and line and independent oversight is conducted. Feedback and continuous improvement is documented in the activity specific work management system.

ISM Work Authorization Flowdown for the AWR Project

The following list presents the ISM flowdown of work authorization documents for the AWR Project. This flowdown moves from sitewide authorization to general Silos Project authorization to AWR operations authorization.

Sitewide Work Authorization Flowdown

- DOE Policy 450.4, *Safety Management System Policy* [Ref. 15], and the Department of Energy Acquisition Regulation (DEAR) Clause, 48 CFR 970.5204-2 [Ref. 16], requires that a safety management system shall be used to integrate safety into management and work practices at all levels.

- DE-AC24-010H20115 [Ref. 17] is the contract between FCP and DOE which specifically identifies which standards and requirements that FCP needs to follow, as well as requiring FCP to work safely.

- RM-0016, *Management Plan* [Ref. 18], describes how FCP maintains the standards and requirements identified in Contract No. DE-AC24-010H20115. The Management Plan also lists the key site documents that serve to flow down the ISM requirements at the site.

- The *Safety Management System Description (SMSD)*, PL-3081 [Ref. 14], provides an overview of the programs, policies, and procedures used by FCP to ensure that work is performed safely.

Silos Project Work Authorization Flowdown

To facilitate the mission of "Safely restoring the Fernald site to an end state which serves the community's needs," FCP establishes projects, managed by project directors, to accomplish the required remediation activities. The Silos Project is one of the critical site projects. It is divided into three sub-projects: the Advanced Waste Retrieval (AWR) Project (including the Radon Control System), the Silos I & 2 Remediation Project, and the Silo 3 Project.

Construction activities for these three sub-projects are governed by the same work authorization process:

- The *Silos Project Execution Plan*, 40000-PEP-0001 [Ref. 10], provides an overview of the Silos Project and references documents that outline how project-specific and program-specific requirements are implemented. This plan describes the project scope, requirements, roles and responsibilities, and systems for executing work in a safe manner consistent with ISM.

- CT-2.1.1, *Construction Project Planning and Construction Invitation for Bid/Request for Proposal (IFB/RFP) Preparation* [Ref. 19] governs the development of construction work packages. Once a contract is awarded, a Notice to Proceed and an Authorization to Mobilize are sent to the subcontractor. A construction kick-off meeting is held during which FCP safety and health expectations are reiterated.

- 40000-PL-0013, *Silos Construction Health and Safety Plan* [Ref. 20] governs construction activities for the AWR, Silos I & 2 Remediation, and Silo 3 Projects. The Silos Construction HASP identifies applicable OSHA, DOE, and FCP safety requirements related to construction.

- Based on the Silos Construction HASP and the corresponding contract (which contains a safety and health section known as "Part 8"), each subcontractor develops a work plan discussing how activities will be performed safely. The work plan is reviewed and approved by Construction and Safety & Health personnel. The Wise Services subcontractor uses work plans called "Construction Work Control Traveler Packages" to outline how they will perform work safely. Each Traveler Package is reviewed and approved by the Construction Contracts Manager, Construction Engineer, Quality Assurance, and Safety & Health personnel.

- Work permits are generated to ensure that appropriate hazards associated with construction activities are analyzed and appropriate controls are developed. The work permit also identifies other required permits (e.g., flame permit, chemical hazardous permit, penetration permit). The supervisor-in-charge and Safety & Health personnel approve each work permit.

AWR Project Operations Work Authorization Flowdown

- 40710-PL-0015, *Accelerated Waste Retrieval (AWR) Nuclear Health and Safety Plan* (this document), identifies applicable OSHA, DOE, and FCP safety requirements. Upon DOE approval, this AWR N-HASP will ensure that hazards have been identified, and that controls/mitigators will be in place, to support the safe operation of the AWR waste retrieval and storage process.

- AWR Project develops a hierarchy of documents to identify hazards and inform Operations personnel how to work safely. M-156, *Standing Orders for Advanced Waste Retrieval and Silos 1 and 2 Operations*, Fluor Fernald [Ref. 21] provides the standards for operation and administration of AWR Project. Flowing down from the standing orders are start-up and turnover plans, system operability test procedures, operating procedures, and maintenance procedures. Work is initiated in accordance with procedures.

- The System Safety Requirements (SBRs and PRs) in Section 10.0 provide the minimum requirements for ensuring the maintenance of the safety basis and the Radiological hazard classification. The SBRs, PRs, and other requirements specified in this N-HASP are implemented in the project/activity/task-specific documents that govern the day-to-day work of the project. These documents are part of the project's ISM implementation, and include:

  - project procedures
  - training plans
  - safety plans
  - permits
  - work orders
  - job safety analyses
  - job briefings
  - self-assessments
  - implementation plans

- Readiness documentation will be published separately as a part of the AWR Start-up and Turnover Plan of Action. This documentation will be reviewed and approved separately by the DOE.

3.0 WORK CONTROLS

Hazards and their control mechanisms are communicated to the Fluor Fernald workforce through standard policies, plans, and procedures. This Health & Safety Plan defines and communicates Silos project hazards and the controls required to mitigate those hazards.

At the task level, job planners are required to consider the level of competency required for each job. This includes consideration for training, experience, use of walkdowns, and pre-job briefings. Proper work planning ensures that the workers have all the materials, training, equipment, supervision, and technical support necessary to perform the assigned task successfully, safely, and efficiently.

Individual tasks also rely on job briefings, radiological and industrial work permits, and other hazard-specific mechanisms used to protect the worker. Employees are responsible for understanding the scope of the work, including hazards and controls, prior to initiating a task. Job planners are required to consult S&H personnel in the areas of industrial, radiological, and chemical hazards to ensure that the strategy for mitigation of one hazard does not increase the risk or change the mitigation strategy for another.

All employees, including subcontractors, are involved in providing feedback through the safety work groups and/or safety representatives. This approach ensures that employees with the greatest knowledge of the work evaluate the work planning and execution processes. Safety First work groups identify and resolve issues pertaining to work process safety.

The AWR Project will involve RCS operations, Waste Retrieval and Storage System (WR&SS) operations, preventive maintenance, repair maintenance, and shift-by-shift surveillance activities. See Section 7.0 for a list of specific tasks for both RCS and WR&SS operations. See Section 8.0 for hazard types and their general controls. See Tables 9-1 and 9-2 for the Hazards Control Matrices that correspond directly to the RCS and WR&SS tasks listed in Section 7.0.

4.0 CONDUCT OF OPERATIONS

Operations activities will be organized, staffed, and administered to ensure a disciplined approach to performance of work consistent with site operations and maintenance requirements. Integrated Safety Management (ISM) core functions and guiding principles (see Section 2.0) will be integrated into management and work practices at all levels so that the workers, the public, and the environment will be protected.

The site policies and requirements established for Conduct of Operations (CONOPS) will be implemented through the Silos Project Standing Orders [Ref. 21] using a graded approach. Site policies will be consistent with DOE Order 5480.19, *Conduct of Operations Requirements for DOE Facilities* [Ref. 22]. Operations management will develop standards of performance to serve as benchmarks for accountability. Operating procedures and other definitive documentation (e.g., Work Authorization Packages, Radiation Work Permits) will define requirements and the types of controls necessary for the safe and successful conduct of work. Silos Project personnel will be cognizant of safety and health requirements, including knowledge of expected hazards and the controls governing the safe operation of facilities and activities.

The operations and maintenance organizations will be adequately staffed and trained to perform operations and work activities in a safe, professional manner consistent with administrative processes, site and project operating procedures, and work control documents. The Silos Operations and Maintenance Group will provide management, first-line managers and supervisors, and operations and maintenance personnel. Fernald Atomic Trades and Labor Council operators and maintenance personnel will perform operations and maintenance functions.

5.0 SAFETY BASIS

The Safety Basis for AWR is based on the safe harbor provision in 10 CFR 830, *Nuclear Safety Management* [Ref. 6], for an environmental restoration activity. This approach satisfies a commitment in the DOE-approved *Decision Basis Document Implementation of 10 CFR 830 Safe Harbor Requirements for the Silos Projects,* 40000-RP-0034 [Ref. 1]. Per DOE's *Safety Evaluation Report* [SER] *for Implementation of 10 CFR 830 Safe Harbor Requirements for the Silos Project, 40000-RP-0034* [Ref. 23], Fluor Fernald will bring all three Silos into compliance with the environmental restoration safe harbor provision and its requirements.

The 10 CFR 830 safe harbor method for environmental restoration activities relies on the use of DOE-STD-1120-98, *Integration of Environment, Safety and Health into Facility Disposition Activities* [Ref. 5]. DOE-STD-1120-98 allows certain nuclear facility remediation activities to be

conducted using 29 CFR 1910.120 and 29 CFR 1926.65 requirements in lieu of the safety management requirements in the nuclear safety orders. DOE-STD-1120-98 further requires continuation of the QA rule (10 CFR 830.120 Subpart A) and the DOE Occurrence Reporting Processing System (ORPS). The contractor is required to submit to DOE documents generated under the alternative regulations for review and approval prior to work (in this case, Health and Safety Plans [HASPs]).

DOE-STD-1120-98 specifies that the DOE safety management orders applicable to the "in lieu of" alternative process include: Safety Analysis Report (SAR), Unreviewed Safety Question (USQ), Technical Safety Requirement (TSR), Training and Certification, Conduct of Operations, and Maintenance. It further states that the Health and Safety Program and HASPs, which include elements for emergency response, training, conduct of operations, and maintenance, may be used in lieu of the nuclear safety orders.

This AWR Nuclear HASP (N-HASP) meets the requirements of 10 CFR 830.204, *Documented Safety Analysis* (DSA), 29 CFR 1910.120 (b)(4), *Project Specific Health and Safety Plan,* and follows the general rules for HASP development as outlined in NS-0005, *Initiating, Reviewing, and Approving DOE-Approved SBDs* [Ref. 4]. The term "Nuclear HASP" does not derive from the categorization of the AWR Project, but rather, from the integration of nuclear system safety functions into a standard OSHA HASP.

AWR N-HASP development is consistent with the technical position NSTP-2002-2, *Methodology for Final Categorization for Nuclear Facilities from Category 3 to Radiological* [Ref. 7], issued in 2002 by DOE-EH-53, Office of Nuclear Safety. This paper clarifies DOE-STD-1027 final hazard categorization and applies the methodology to classification below HC-3. It states:

> *The HC-3 threshold values for radionuclides for which the food pathway or the inhalation pathway are limiting may be revised if, based on the physical and chemical form and available dispersive energy source for the facility and its hazardous materials, the credible release fractions (airborne release fractions) can be shown to be significantly different than the values used in the EPA Technical Background Document.*

The AWR Project activities have been determined to qualify as a Radiological (RAD) based on the analyses discussed in Appendix B, *Hazard Category Calculation*. Although Silos 1 and 2 qualify as nuclear Hazard Category 3 (HC-3) based on inventory, the radon reduction and waste retrieval and storage activities qualify as RAD based on analytical consequences. Per DOE-STD-1120-98, *Integration of Environment, Safety and Health into Facility Disposition Activities* [Ref. 24], a RAD categorization/classification based on analytical consequences requires DOE approval. This N-HASP specifies (in Section 10.0) System Safety Requirements that provide defense-in-depth.

Volume One of this N-HASP contains the standard requirements of a 29 CFR 1910.120 HASP, into which have been inserted sections addressing the AWR System Safety Requirements and the Work Control Processes related to AWR operation. Volume Two includes the supporting analyses performed to develop the AWR System Safety Requirements (i.e., IHA, HCC, HFE, ALARA Analysis, Environmental ALARA, HFE, Accident Analysis, and Health Physics Plan). Together, Volumes One and Two comprise a DSA that meets the requirements of 10 CFR 830.204, *Nuclear Safety Management*.

With DOE's approval of 40000-RP-0034, *Decision Basis Document Implementation of 10 CFR 830 Safe Harbor Requirements for the Silos Projects*, the following commitments have been identified:

- Proceed with development of the DSA[s] (i.e., HASP[s]), using the methodology specified in 10 CFR 830, Subpart B, Appendix A, Table 2, Item 6. Item 6 allows the use of a HASP in lieu of the SAR, USQ, TSR, Training and Certification, Conduct of Operations, and Maintenance requirements specified in DOE Orders.

- Continue with implementation of the QA rule (10 CFR 830.120 Subpart A) and the DOE ORPS. These requirements can be met by following the site requirements documented in RM-0012, *Quality Assurance Program* [Ref. 25], and SH-0028, *Occurrence Reporting* [Ref. 26].

- Continue to analyze future activities, using the *Silos Project Safety Basis Impact Screen*, to ensure they are within the current safety envelope. If a change leads to a positive screen indicating the change could exceed the defined envelope, develop the appropriate analysis. If analysis indicates the change will be outside of the safety envelope, prepare an Unreviewed Safety Question Determination/Safety Evaluation (USQD/SE) and submit it to DOE for approval prior to implementation of the planned activity.

- Annually review and update the HASP[s], as necessary. If there are no significant changes required to the HASP[s], meet the annual update requirement via a letter to DOE stating there have been no significant changes.

The following commitment from the DOE SER 40000-RP-0034 has been identified by the AWR Project as applicable to AWR activities.

- Fluor Fernald, Inc., must maintain the safety programs as described in the site Integrated Safety Management program description documented in PL-3081, *Safety Management System Description (SMSD)* [Ref. 14].

6.0 MANAGEMENT OF CHANGE

NOTE: With the approval of this AWR N-HASP, AWR personnel will no longer use the Silos Project Safety Basis Impact Screen (SBIS) or the RCS SBIS for AWR Project change issues. For AWR changes (i.e., those involving RCS or WR&SS as specified below), AWR personnel will use the AWR SBIS documented in this section. Changes to approved AWR operating procedures, and approval of new AWR operating procedures, must go through the review process specified in the site document control procedure, MS-2001 [Ref. 27]. The Silos Project SBIS is still valid for Silos change issues outside the scope of this N-HASP (e.g, a design change to the Silos 1 and 2 Remediation Project that may impact AWR).

Since the Preliminary DSA (i.e., AWR Preliminary Hazard Analysis Report (PHAR) [Ref. 28]) was approved, changes to the design or variations in construction from the design have been screened using the *Silos Project Safety Basis Impact Screen* (SBIS). During Phase 1 of AWR, RCS-related

changes were screened using the RCS SBIS. Starting with the WR&SS phase of AWR, the RCS SBIS is superceded by the *AWR Safety Basis Impact Screen* (SBIS). An AWR SBIS must be completed: (1) for changes in design requiring a Design Change Notice (DCN) per an engineering procedure; (2) for new activities; (3) for maintenance alterations; (4) for changes to this N-HASP. The AWR Screen is shown in **FIGURE 6-1**.

A System Safety Analyst [SSA] must approve the impact screen. After DOE approval of this N-HASP, any change that results in a YES to any of the five questions on the AWR SBIS will require further evaluation. Question 1 focuses on both nuclear safety and occupational safety (e.g., the Hazards Analysis could be affected by the introduction of a new chemical in the maintenance process, requiring further evaluation). Question 1 allows the screen originator to take an ISM approach to a potential hazard not previously identified. The evaluation will then provide input to the work plan or work permit used for the activity. Question 2 ensures that the System Safety Requirements are not affected by the change. Questions 3, 4, and 5 evaluate potential inadequacies, effects to nearby or adjacent facilities or activities, and changes in inventory of hazardous material.

When a change or deviation requires further evaluation, either the change will not be implemented or work on the affected portion of the facility will remain suspended until an evaluation has been completed and attached to the impact screen. This screen package will then go to the AWR PM for review and approval.

Because the silos themselves are HC-3 facilities, when proposed changes have the potential to affect the Silos, positive impact screens will be evaluated using the Unreviewed Safety Question (USQ) process per NS-0002, *Unreviewed Safety Question (USQ) Determination and Safety Evaluation System* (USQD/SE System) [Ref. 29]. Potential SBR/PR violations that affect the Silos will be evaluated using the Safety Analysis Evaluation Process listed in NS-0002.

All completed Safety Basis Impact Screens or USQD/SEs will be evaluated annually by Nuclear and System Safety (N&SS) staff for inclusion of applicable information into this N-HASP to ensure that this document is kept up-to-date.

Surveillances will be performed by N&SS staff and approved by the N&SS Manager to ensure that the project Safety Requirements are being implemented and the safety basis is being kept up-to-date.

Readiness activities will include a review of the SBIS process to ensure that the DCNs that were performed against the PHAR were properly incorporated into this N-HASP.

Software Management of Change

The AWR Project uses the process outlined in MS-1040, *Software Quality Assurance* [Ref. 30], to classify, develop, verify, and validate software that may have an impact on nuclear safety. This process applies to software currently in use, proposed for use as well as software that is purchased, developed in-house, licensed from a commercial vendor for customized use, obtained from another site, or developed or customized by a vendor or subcontractor.

FIGURE 6-1: AWR SAFETY BASIS IMPACT SCREEN (SBIS)

(Use this form for changes related to RCS (AWR Phase 1) or to Waste Retrieval and Storage Systems (AWR Phase 2)

Description of Activity/Design Change:

Work Plan/ Design Doc. No.:	**Change Originator:**
SBIS Originator:	**SBIS Date:**

1	Will the proposed change affect any parameters used in calculations supporting the Hazard Analysis as documented in the AWR N-HASP? ☐ **YES** ☐ **NO** / **EXPLAIN:**
2	Will the proposed change affect any of the System Safety Requirements in the AWR N-HASP? • Safety Basis Requirements (SBRs)? • Process Requirements (PRs)? ☐ **YES** ☐ **NO** / **EXPLAIN:**
3	Does the proposed change identify a potential inadequacy (e.g., new accident, hazard) in the AWR N-HASP or any potential reduction in any SBR? ☐ **YES** ☐ **NO** / **EXPLAIN:**
4	Does the proposed change affect the activities or requirements of a nearby or adjacent facility or activity operating under a different safety basis (e.g., Silos 1 & 2, Silo 3, TTA)? **NOTE: IF** a proposed change can potentially affect the Silos, **THEN** a USQD/safety evaluation must be completed per NS-0002 (Unreviewed Safety Question (USQ) Determination. ☐ **YES** ☐ **NO** / **EXPLAIN:**
5	Does the proposed change result in a change in the inventory or amount of hazardous material? ☐ **YES** ☐ **NO** / **EXPLAIN:**

IF the answer to ANY of these questions is **YES, THEN:** (1) update the analysis; (2) determine whether the change will put the project or affected project outside the safety envelope; (3) incorporate any mitigators or controls into the work plan/permit; (4) attach the updated analysis to this impact screen. **IF** the change will result in a higher hazard categorization, **THEN** a USQ must be performed per NS-0002 and submitted to the SRC, the Fluor Fernald President, and the DOE for concurrence.

6	Per this SBIS, the proposed change ☐ **DOES** ☐ **DOES NOT** impact the AWR safety basis.

Signature: _____ **Date:**
System Safety Analyst

SSA: Are there descriptive changes not requiring analysis, but requiring inclusion in the annual update? ☐ **Y** ☐ **N**

NOTE: IF there is an impact to the safety basis, **THEN** the Project Manager's signature is required.

Signature: _____ **Date:**
AWR Project Manager

FS-F-5867 AWR SBIS

7.0 HAZARDS ASSESSMENT

The hazards assessment associated with this N-HASP will focus on the activities necessary to support AWR operations and maintenance.

RCS Operations Tasks

To date, eight (8) RCS operations tasks have been identified for routine performance by Fluor Fernald maintenance and operations personnel:

1. Preventive maintenance of the chillers/dessicant dryers
2. Maintenance of the condensate transfer pump
3. Cleaning of the chiller coils within the dessicant dryers
4. Preventive maintenance of the variable speed fans and motors
5. Replacement of the roughing filters
6. Replacement of the HEPA filters
7. Shift-by-shift surveillance of RCS operations
8. Sampling and transfer of condensate to AWWT

WR&SS Operations Tasks

There will be two operators on each shift for Waste Retrieval and Storage Systems. Work is completely automated; most of the operators' time will be in the Control Room. To date, seven (7) WR&SS operations tasks have been identified for routine performance by Fluor Fernald maintenance and operations personnel:

1. Addition of sluice hose/mast sections
2. Clearance of sluice and slurry pipe clean-out ports
3. Maintenance of the transfer pumps
4. Preventive maintenance of the variable speed fans and motors
5. Replacement of the HEPA filters
6. Shift-by-shift operations surveillance

AWR Identified Hazards

The identified hazards listed below are based on the potential exposure of personnel to the Standard Industrial Hazards, chemical hazards, and radiological hazards posed during AWR operations and maintenance activities. A brief description of the expected hazards and their associated controls are provided in Section 8.0. A Hazards Control Matrix is presented in Section 9.0. This matrix identifies the above tasks in conjunction with their hazards and their controls/mitigators. The matrix forms the basis for employee briefings.

1. Slips, trips, and falls
2. Noise
3. Housekeeping
4. Illumination
5. Ergonomics
6. Head impact
7. Pinch Point, Puncture/Cut
8. Elevated Work
9. Hand and power tools
10. Electrical
11. Hazardous energy
12. Hoisting and rigging
13. Confined space
14. Flammable material
15. Hot work
16. Compressed gas
17. Biological
18. Environmental
19. Heat and cold stress
20. Radiological
21. Chemical

8.0 HAZARDS DESCRIPTION

There are numerous physical hazards associated with the performance of AWR operations and maintenance activities. Similar hazards may be encountered throughout the site. The following sub-sections provide examples of the more prevalent physical hazards and the mitigating actions for protecting personnel, the public, and the environment.

8.1 Slip, Trip, and Fall Hazards

Uneven terrain, adverse weather conditions and inattention to Housekeeping may present slip, trip, and fall hazards.

NOTE: The safety performance requirements (SPRs) in Table 8-1 do not comprise the complete list of relevant SPRs for this hazard topic. The items below have been identified as key elements for the AWR Project. For a complete list of applicable SPRs, see the designated SPR section in RM-0021, *Safety Performance Requirements Manual* [Ref. 31].

TABLE 8-1: SLIP, TRIP, AND FALL HAZARD CONTROLS (SPR 2-1)	
1	Maintain the floor or ground surface of work areas flat, even, and free of ice, snow, debris, and if possible, in a dry condition.
2	Keep aisles, passageways, platforms, and stairways free of materials and debris.
3	Ensure that exits, approaches to exits, and hallways are unobstructed and accessible at all times.
4	Obtain Silo Dome Access Permit before performing work on the dome surface.

8.2 Noise Hazards

Operation of AWR includes running fans and pumps that can produce loud excessive noise. The effects of excessive noise can include:

- Workers being startled, annoyed, or distracted.
- Physical damage to the ear, excessive pain, and temporary or permanent hearing loss.
- Communication interference that might increase potential hazards due to the inability to warn of danger and the proper safety precautions to be taken.

Noise monitoring surveys may be performed during AWR maintenance and operations activities. Noise monitoring will be conducted per OSHA 29 CFR 1910.95 [Ref. 32]. Workers utilizing equipment capable of generating hazardous noise levels and/or working in areas with potential hazardous noise levels will be evaluated to determine exposure levels and the necessary controls. Also, areas with suspected high noise levels shall be evaluated to identify high noise sources and to aid in determining engineering and administrative controls.

NOTE: The SPRs in Table 8-2 do not comprise the complete list of relevant SPRs for this hazard topic. The items below have been identified as key elements for the AWR Project. For a complete list of applicable SPRs, see the designated SPR section in RM-0021, *Safety Performance Requirements Manual.*

TABLE 8-2: NOISE HAZARD CONTROLS (SPR 12-14)	
1	Fluor Fernald monitors for excessive noise levels using sound level meters and/or personal noise dosimeters. Areas with consistently high (>85 decibel [dBA]) noise levels shall be posted with signs notifying personnel that hearing protection is required.
2	All Silos Project personnel (including visitors) must wear hearing protection in areas where noise levels are known to exceed, or are expected to exceed, an 8-hour time-weighted average (TWA) of 85 dBA.
3	All on-site personnel must comply with the Fluor Fernald Hearing Conservation Program (available for review from the Silos S&H representative).
4	In some cases, the use of hearing protection may impede workers' ability to hear messages broadcast over the Emergency Message System (EMS). When EMS messages cannot be heard, use alternative methods of communication to ensure that personnel are made aware of these messages in a timely manner. Alternatives: the radios; visual indicators such as flashing lights or waving arms; direct conversation.

8.3 Housekeeping Hazards

Failure to maintain personnel access-ways free of obstructions and failure to maintain the work area free of debris are potential housekeeping hazards.

NOTE: The SPRs in Table 8-3 do not comprise the complete list of relevant SPRs for this hazard topic. The items below have been identified as key elements for the AWR Project. For a complete list of applicable SPRs, see the designated SPR section in RM-0021, *Safety Performance Requirements Manual*.

TABLE 8-3: HOUSEKEEPING HAZARD CONTROLS (SPR 2-1)

1	Maintain work areas in a clean, orderly, and sanitary condition.
2	Maintain floor and work surfaces free of walking and tripping hazards.
3	All tools shall be put away and debris cleaned-up at the completion of assigned work.
4	Use appropriate containers for waste disposal.
5	Keep stairways, passageways, access ways free of materials, supplies, and obstructions at all times.

8.4 Illumination Hazards

The Illumination standards from 29 CFR 1926.56 [Ref. 33] specified in the following table will be observed. In areas of suspected insufficient lighting, Industrial Hygiene will be contacted prior to implementation of field activities and temporary lighting will be provided.

TABLE 8-4: ILLUMINATION HAZARD CONTROLS

Item No.	Foot-Candles	Area or Operation
1	5	General site area
2	3	General construction areas, concrete placement, excavation and waste areas, access ways, active storage areas, loading platforms, refueling, and fuel maintenance areas.
3	5	Indoors: warehouses, corridors, hallways, and exit ways.

TABLE 8-4: ILLUMINATION HAZARD CONTROLS		
Item No.	**Foot-Candles**	**Area or Operation**
4	5	Tunnels, shafts, and general underground work areas: (exception: minimum of 10 foot-candles is required at tunnel and shaft heading during drilling, mucking, and scaling. Bureau of Mines approved cap lights will be acceptable for use in the tunnel heading.)
5	10	General construction plant and shops (e.g., batch plants, screening plants, mechanical and electrical equipment rooms, carpenter shops, rigging lofts and active storerooms, barracks, or living quarters, locker or dressing rooms, mess halls, and indoor toilets and workrooms.)
6	30	First aid stations, infirmaries and offices.

8.5 Ergonomic Hazards

The requirements of the ergonomics program is to reduce or eliminate personnel exposures that could result in occupational injuries and illnesses. The focus of the program is to make the job fit the person, not the person fit the job, and thereby eliminate or reduce musculoskeletal disorders in the workplace. The FCP designs work methods to reduce static, extreme and awkward postures, repetitive motions, and excessive force. Engineering techniques, where feasible, are the preferred method of control.

NOTE: The SPRs in Table 8-5 do not comprise the complete list of relevant SPRs for this hazard topic. The items below have been identified as key elements for the AWR Project. For a complete list of applicable SPRs, see the designated SPR section in RM-0021, *Safety Performance Requirements Manual*.

TABLE 8-5: ERGONOMIC HAZARD CONTROLS (SPR 2-6)	
1	Enhance the workplace by implementing, evaluating, and assessing wellness, fitness, and Video Display Terminal (VDT) ergonomics.
2	Present a VDT ergonomics training session to VDT users when requested.
3	Provide training on ergonomics and other hazards associated with a job or process, their prevention or control, and their medical consequences.

TABLE 8-5: ERGONOMIC HAZARD CONTROLS (SPR 2-6)	
4	Perform workstation assessments upon employee requests or as a result of employee injury.
5	Perform workstation analysis to identify existing hazards and conditions, operations that create hazards, and areas where hazards may develop. • Conduct an analysis of injury and illness records. • Conduct comprehensive, qualitative baseline screening surveys. • Analyze all planned new and altered equipment. • Perform a routine ergonomics job-factor analysis.
6	Recommend how to improve or eliminate hazards.
7	Conduct regular safety audits with emphasis on ergonomics.
8	Support acquisitions as necessary.

8.6 Head Impact Hazards

During the performance of work in the AWR facility, opportunities exist for personnel to impact their heads on piping, structural supports, etc. Therefore, head protection must be worn, as required by the work control documents.

NOTE: The SPRs in Table 8-6 do not comprise the complete list of relevant SPRs for this hazard topic. The items below have been identified as key elements for the AWR Project. For a complete list of applicable SPRs, see the designated SPR section in RM-0021, *Safety Performance Requirements Manual.*

TABLE 8-6: HEAD IMPACT HAZARD CONTROLS (SPR 2-2)	
1	Wear hard hats when: • designated on the FCP Work Permit or any other applicable document. • in posted area such as construction and crane operation areas. • operating a powered mobile lift platform. • working under personnel in elevated locations (6 feet or higher) or where overhead hazards exist. • within the swing radius of a mobile crane or aerial lift. • in (or under) the basket of an aerial platform. • in or near an excavation. • in manholes or other confined spaces where overhead hazards exist.

TABLE 8-6: HEAD IMPACT HAZARD CONTROLS (SPR 2-2)	
2	Wear hard hats that are in good condition.
3	Throw away damaged hard hats (i.e., cracked, ragged, worn, or defective).
4	Do not alter hard hats.
5	Wear hard hats brim to the front. • Welder hats may have to be reversed to accommodate welding face shields. • When not welding, wear hats brim to front. • Surveyors hats have to be reversed to accommodate use of transit.
6	Cowboy-style hard hats are not approved for use at the FCP.

8.7 Pinch Point, Puncture/Cut Hazards

Workers are provided, and required to wear, leather work gloves or other styles of gloves appropriate for the type of work they are performing. Work area walkdowns are used to develop measures to prevent injuries by identifying potential pinch points and sharp edges so that incidental contact is avoided.

NOTE: The SPRs in Table 8-7 do not comprise the complete list of relevant SPRs for this hazard topic. The items below have been identified as key elements for the AWR Project. For a complete list of applicable SPRs, see the designated SPR section in RM-0021, *Safety Performance Requirements Manual*.

TABLE 8-7: PINCH POINT, PUNCTURE/CUT HAZARD CONTROLS (SPR 2-1, 4-1, 4-2)	
1	Workers will be trained to perform tasks safely.
2	Workers will be trained to perform tasks in accordance with standard operating procedures.
3	Workers will wear proper PPE.
4	Workers will be briefed on the hazards of their work area prior to initiating work.

8.8 Elevated Work Hazards

Elevated work hazards relevant to AWR operations include ladders, power lift platforms, and roof/elevated surface access. Portable ladders and power lift platforms may be used to access equipment components for maintenance and repairs. Ladders may be used as a means of temporary entry and exit from an elevated work location. Power lift platforms may be used to access a roof or elevated structure.

NOTE: The SPRs in Table 8-8 do not comprise the complete list of relevant SPRs for this hazard topic. The items below have been identified as key elements for the AWR Project. For a complete list of applicable SPRs, see the designated SPR section in RM-0021, *Safety Performance Requirements Manual.*

TABLE 8-8: ELEVATED WORK HAZARD CONTROLS (SPR 3-6, 3-4, 2-16)	
Ladders (SPR 3-6)	
1	Ladders must be inspected before use.
2	Tie off straight ladders or extension ladders when setting them up for use.
3	Portable ladders are inspected at least once each quarter by an individual designated by Fluor Fernald Management as a competent person. An inspection tag identifying the inspector must be affixed to the ladder.
4	Personnel shall not use any ladder that does not have an inspection tag attached.
5	Immediately tag defective ladders DANGER-UNSAFE-DO NOT USE and remove them from service.
6	Do not use ladders where there is a possibility of contact with electrical wiring or energized equipment.
7	Implement fall protection when working at heights of 6 feet or more.
8	Ladders shall not be positioned in front of doorways.
Power Lift Platforms (SPR 3-4)	
1	Only permit-qualified personnel shall operate power lift equipment.
2	Personnel shall establish barricades around the area of operation.

TABLE 8-8: ELEVATED WORK HAZARD CONTROLS (SPR 3-6, 3-4, 2-16)	
3	The operator's manual shall be kept with the equipment and the manufacturer's specifications shall be observed.
4	Equipment inspection shall be conducted per FCP requirements.
5	Hoisting and rigging requirements and electrical safety work practices shall be followed when operating lifts around electrical distribution or transmission lines.
6	Personnel shall not climb out of a lift platform to an elevated work location without a documented evaluation and approval performed by Safety and Health.
Roof/Elevated Surface Access (SPR 2-16)	
1	Before roof or elevated structure access is granted, ensure that an inspection was completed by an Engineer in the past 12 months.
2	After an inspection is performed, or the roof/structure is verified to be on the current inspection list, complete an FCP Work Permit.
3	After all conditions of the Work Permit are met, employees shall be briefed on requirements for access.

8.9 Hand and Power Tool Hazards

The use of hand and portable power tools present such hazards as cuts and abrasions from unguarded points of operation, eye hazard from flying debris, ergonomic hazard from poor design or improper use, and electrical shock from defective components. Some examples of defective tools are:

- wrenches with sprung jaws that will permit slippage
- mushroomed heads on impact tools such as hammers and chisels
- wooden handles that are loose, cracked, or splintered
- electrical cords that are frayed, cut, or have the ground pin removed
- tools with guards removed
- hydraulic tools with leaking cylinders

NOTE: The SPRs in Table 8-9 do not comprise the complete list of relevant SPRs for this hazard topic. The items below have been identified as key elements for the AWR Project. For a complete list of applicable SPRs, see the designated SPR section in RM-0021, *Safety Performance Requirements Manual*.

TABLE 8-9: HAND AND POWER TOOL HAZARD CONTROLS (SPR 4-1)	
1	All hand and power tools shall be maintained in a safe condition.
2	Personnel unfamiliar with power tool operation must be instructed on its operation or read the manufacturer's instructions prior to its use. Manufacturers' operations manuals for power tools can be obtained by contacting the Fluor Fernald supervisor assigning the work.
3	Users shall inspect tools prior to use.
4	Use the equipment as directed in the manufacturer's/owner's safety manual unless an approved plan or procedure specifies using an alternate acceptable method.
5	Ensure guards are in-place and used properly.
6	Tag unsafe or defective equipment with a DANGER-UNSAFE-DO NOT USE tag, remove from service, and notify Leadership/Supervision of its condition.
7	Workers shall not wear loose-fitting clothing, neckties, or jewelry when working with power tools. Watches and wedding rings are acceptable.
8	Power tools shall be stored at assigned locations.
9	Disconnect the power tool from the power source when not being used.
10	Keep electrical cords off the floor and away from possible snagging hazards.

8.10 Electrical Hazards

The use of electrical power is essential to AWR operations. Maintenance and repairs on electrical circuits and other components are AWR maintenance activities that present the highest potential for worker exposure to electrical hazards.

NOTE: The SPRs in Table 8-10 do not comprise the complete list of relevant SPRs for this hazard topic. The items below have been identified as key elements for the AWR Project. For a complete list of applicable SPRs, see the designated SPR section in RM-0021, *Safety Performance Requirements Manual.*

TABLE 8-10: ELECTRICAL HAZARD CONTROLS (SPR 5-1)	
1	Only electrically-qualified persons will verify that electrical equipment is suitable for its intended purpose as evidenced by listing, labeling, or certification for that purpose.
2	All electrical equipment shall be operated in accordance with the manufacturer's instructions.
3	Unless specifically exempted by OSHA, a Ground Fault Circuit Interrupter (GFCI) shall be used on each 15- and 20-ampere, 120-volt circuit at the Silos. The GFCI shall be placed at the source of the electrical services to protect both the cord and the devices connected.
4	All electrical appliances shall be Underwriter's Laboratory (UL)-listed for the potential hazards of the atmospheres in which they will be used. Electric tools and equipment (saws, drills, compressors, etc.) will be double-insulated or grounded. All electrical connections shall be made through a GFCI.
5	Fire extinguishers consistent with OSHA 1926.150 [Ref. 34] shall be maintained in sufficient number to allow on-site personnel to extinguish incipient fires.
6	Prior to use, electrical equipment shall be inspected for proper insulation, damage, defects, and operability.
7	Electrical equipment operating at 50 volts or more shall be guarded against accidental contact.
8	On-site electrical equipment shall be bonded and grounded, spark-proof, and explosion-resistant, as appropriate.
9	Electrical equipment shall be de-energized before inspection or maintenance.
10	All electrical tools shall be inspected frequently. Defective tools or questionable tools shall be removed from service and a warning tag applied.
11	Personnel using equipment such as ladders and cranes shall maintain a minimum safe distance of 10 feet from energized overhead lines.
12	Personnel shall wear proper protective equipment in accordance with work permits, safe work plans, or other applicable documents.

8.11 Hazardous Energy

Sources of hazardous energy are present throughout the Silos. Some examples of energy sources include:

- Electrical (throughout the site)
- Thermal (the dryers)
- Stored (batteries)
- Mechanical (fans and pumps)
- Hydraulic (heavy equipment)
- Chemical (to be used in the future Waste Treatment Facility)
- High-pressure water

NOTE: The SPRs in Table 8-11 do not comprise the complete list of relevant SPRs for this hazard topic. The items below have been identified as key elements for the AWR Project. For a complete list of applicable SPRs, see the designated SPR section in RM-0021, *Safety Performance Requirements Manual.*

TABLE 8-11: HAZARDOUS ENERGY CONTROLS (SPR 2-11)	
1	Whenever it is necessary to perform maintenance or emergency repairs on hazardous energy systems such as those described above, the hazardous energy system shall be isolated per the OP-0004, *Fluor Fernald Lockout Tagout* [Ref. 35].
2	Personnel who perform hazardous energy isolation shall be trained per the Lockout/Tagout procedure.

8.12 Hoisting and Rigging Hazards

Hoists and rigging may be necessary to repair or replace system components.

NOTE: The SPRs in Table 8-12 do not comprise the complete list of relevant SPRs for this hazard topic. The items below have been identified as key elements for the AWR Project. For a complete list of applicable SPRs, see the designated SPR section in RM-0021, *Safety Performance Requirements Manual.*

TABLE 8-12: HOISTING AND RIGGING HAZARD CONTROLS (SPR 7-9)	
1	The rated capacity shall be permanently marked on the hoist or load block.
2	Hoists shall have labels affixed that display the word "Warning" or other legend to bring the label to the attention of the operator. The label shall contain the cautionary language specified in RM-0045, *Fluor Fernald Hoisting & Rigging Manual* [Ref. 36]
3	Manual-lever-operated hoists shall be equipped with a load-controlling mechanism capable of functioning under normal conditions with test loads up to 125% of rated capacity.
4	Hand chains shall be capable of withstanding, without permanent distortion, a force of three times the pull required to lift the rated load.
5	Web straps shall be made of nylon, polyester, or similar synthetic material.
6	Nylon and polyester web straps shall not be exposed to an ambient temperature >200° F.
7	Electric-powered hoists shall be marked with the voltage of the alternating current (AC) or direct current (DC) power supply and the circuit capacity.
8	Air-powered hoists shall be marked with the rated air pressure.
9	Positive-type safety latches that prevent the hook from opening shall be used.
10	The lift shall be barricaded in a manner that prevents workers from being struck by falling objects.
11	The operator shall inspect hoists and rigging at the beginning of each shift or prior to first use. Inspections shall be performed per RM-0045, *Fluor Fernald Hoisting & Rigging Manual.*
12	All loads shall be centered.
13	Softeners shall be used to prevent cutting nylon and polyester web straps.
14	If more than 1,000 pounds is supported from a structural steel beam, calculations shall be performed to verify the structural adequacy of the beam.
15	If any load is supported from a concrete beam, calculations shall be performed to verify the structural adequacy of the beam.

8.13 Confined Space Hazards

Confined spaces are evaluated and appropriately posted by Industrial Health & Safety Representatives. The RCS exhaust stack, the TTA tanks, and the TTA sump are identified and labeled confined spaces at the Silos Project.

NOTE: The SPRs in Table 8-13 do not comprise the complete list of relevant SPRs for this hazard topic. The items below have been identified as key elements for the AWR Project. For a complete list of applicable SPRs, see the designated SPR section in RM-0021, *Safety Performance Requirements Manual*.

TABLE 8-13: CONFINED SPACE HAZARD CONTROLS (SPR 12-3)	
1	The Industrial Health & Safety Representatives will evaluate the workplace to determine if spaces are permit-required. If permit-required spaces exist, affected personnel shall be informed of their location and their specific dangers. Appropriate signage is shown above.
2	All confined space entry permits shall be performed per the Fluor Fernald Confined Space Entry Program, which can be reviewed by contacting the Silos Industrial Health and Safety Representatives.
3	All workers entering confined spaces shall receive training on confined space entry procedures before performing work.
4	A person who meets the criteria for designation as a Qualified Person shall evaluate the space. The Qualified Person shall have been trained in confined space entry procedures, supervised field training in the evaluation of confined spaces, and experience in conducting confined space evaluations.
5	An initial hazard assessment will be conducted that includes atmospheric testing for oxygen deficiency, flammable gas concentrations, and toxic gases. No entry shall be permitted if the flammable gas concentration exceeds 10% of the Lower Explosive Limit (LEL).
6	A confined space entry permit will be completed by the Qualified Person and posted at the entrance to the space. Required personal protective equipment and safety equipment shall be specified on this permit.

TABLE 8-13: CONFINED SPACE HAZARD CONTROLS (SPR 12-3)	
7	Before entry, a communication protocol shall be established and reviewed between the persons entering the space and the outside standby personnel.
8	Before entry, a safety meeting will be conducted with all personnel involved with the entry to review all of the hazards and precautions associated with entry.
9	Any person who is to enter a permit-required confined space shall wear a harness and lifeline. A standby person provided with equivalent protection and training for entry in case of an emergency shall man the lifeline.

8.14 Flammable Material Hazards

Flammable materials (e.g., diesel fuel used for heavy equipment, paints used for protective coatings, solvents and thinners) are in use throughout the Silos Project.

NOTE: The SPRs in Table 8-14 do not comprise the complete list of relevant SPRs for this hazard topic. The items below have been identified as key elements for the AWR Project. For a complete list of applicable SPRs, see the designated SPR section in RM-0021, *Safety Performance Requirements Manual*.

TABLE 8-14: FLAMMABLE MATERIAL HAZARD CONTROLS (SPR 11-10)	
1	Sources of ignition are prohibited in areas where flammable materials are present.
2	Flammable material storage locations shall be posted with warning signs Flammable Liquid and No Smoking.
3	On-site equipment shall be bonded and grounded, spark-proof and explosion-resistant, as appropriate. Particular attention to bonding and grounding is given to the transfer of flammable/combustible liquids.
4	For the purposes of fire protection and prevention, persons shall only smoke in designated areas.
5	Portable fire extinguishers are provided in sufficient numbers to allow on-site personnel to extinguish fires. Only personnel trained in the proper use of these fire extinguishers shall use them.

8.15 Hot Work Hazards

Hot work activities (e.g., welding and thermal cutting, grinding) will normally be performed only during maintenance of AWR components, and will not be conducted on a routine basis.

NOTE: The SPRs in Table 8-15 do not comprise the complete list of relevant SPRs for this hazard topic. The items below have been identified as key elements for the AWR Project. For a complete list of applicable SPRs, see the designated SPR section in RM-0021, *Safety Performance Requirements Manual.*

TABLE 8-15: HOT WORK HAZARD CONTROLS (SPR 11-7)	
1	Hot work activities will be performed in a manner that provides for the protection of the workers, the public, and the environment. This is accomplished using only trained/qualified persons in the performance of hot work and obtaining an approved Hot Work Permit from Fluor Fernald Fire Protection.

8.16 Compressed Gas Hazards

Compressed gases may be used at the Silos to support maintenance activities. These typically include the oxygen and acetylene cylinders used for hot-work activities.

NOTE: The SPRs in Table 8-16 do not comprise the complete list of relevant SPRs for this hazard topic. The items below have been identified as key elements for the AWR Project. For a complete list of applicable SPRs, see the designated SPR section in RM-0021, *Safety Performance Requirements Manual.*

TABLE 8-16: COMPRESSED GAS HAZARD CONTROLS (SPR 8-3)	
1	Prior to handling or using compressed gases, the handler or user shall review the appropriate Material Safety Data Sheet (MSDS) to become knowledgeable of the hazardous properties so that a safe, controlled operation can be maintained.
2	Unless otherwise labeled, compressed gas cylinders shall be considered full and handled accordingly.
3	Cylinders shall be moved by tilting and rolling them on their bottom edges when manually relocating them.
4	Valve protectors shall not be used to lift cylinders from one vertical position to another.

TABLE 8-16: COMPRESSED GAS HAZARD CONTROLS (SPR 8-3)	
5	When work is finished, when cylinders are empty, or when cylinders are moved at any time, the cylinder valve shall be closed and the cylinder cap installed.
6	Compressed gas cylinders, whether full or empty, shall not be used as rollers, supports, or for any purpose other than the purpose for which they were designed.
7	Suitable cylinder truck, chain, or other steadying device shall be used to prevent cylinders from falling while in use or in storage.
8	Cylinder markings, such as labels and serial numbers, shall not be removed or altered in any way.
9	All empty cylinders must be labeled "Empty."
10	Precautions must be taken to prevent sparks, molten metal, electrical currents, excessive heat, or flames from coming in contact with compressed gas cylinders
11	Compressed gas cylinders shall be stored in areas approved for that purpose. Storage areas must be well ventilated and protected from extreme weather conditions to minimize rusting, freezing, continuous exposure to direct sunlight, and contact with the ground. This does not preclude exterior storage.
12	Oxygen cylinders shall be stored a minimum distance of 20 feet from any other fuel gas cylinders or combustible materials (especially oil and grease), or be separated by a non-combustible barrier at least 5 feet high with a fire resistance rating of at least 30 minutes.
13	Compressed gas cylinders shall be secured and stored in an upright position.
14	Never use oil and grease as lubricating agent on valves or attachments to oxygen cylinders.
15	Never locate compressed gas cylinders in an unventilated area.
16	Never attempt to mix gases in a cylinder or use a cylinder for any purpose other than that for which it was intended.
17	Never use oxygen for a substitute for compressed air.
18	Never use an open flame or any other source of ignition to test for cylinder leaks.
19	Cylinders containing oxygen or acetylene or other fuel gases shall not be taken into confined spaces.

8.17 Biological Hazards

Fluor Fernald uses the following controls to protect on-site personnel from the biological hazards associated with Silos project operations.

NOTE: The SPRs in Table 8-17 do not comprise the complete list of relevant SPRs for this hazard topic. The items below have been identified as key elements for the AWR Project. For a complete list of applicable SPRs, see the designated SPR section in RM-0021, *Safety Performance Requirements Manual.*

TABLE 8-17: BIOLOGICAL HAZARD CONTROLS (SPR 10-1)	
1	Wild animals (e.g., stray dogs, cats, raccoons, snakes, and mice) may be encountered at the Silos. On-site personnel are instructed to use discretion and avoid all contact with wild animals. Should these animals present a problem, efforts will be made to trap them and remove them from the site.
2	Insects (e.g., mosquitoes, bees, and wasps) may be found at the site during the warmer months of the year. If insects present a problem, insect sprays will be used to remove them.
3	Poisonous plants (e.g., poison ivy and poison oak) may be encountered at the Silos. Workers will be instructed on how to recognize these plants and to avoid contact with them. When found, these hazards will be removed.

8.18 Environmental Hazards

Extreme ambient temperatures and adverse weather (i.e., high winds, heavy rains, extreme heat or cold, poor visibility, and hail/ice/snow storms) are hazards that may be encountered at the Silos. Since some of the Silos activities occur outdoors or outside of temperature-controlled environments, control measures must be put in place to protect the workers.

NOTE: The SPRs in Table 8-18 do not comprise the complete list of relevant SPRs for this hazard topic. The items below have been identified as key elements for the AWR Project. For a complete list of applicable SPRs, see the designated SPR section in RM-0021, *Safety Performance Requirements Manual.*

TABLE 8-18: ENVIRONMENTAL HAZARD CONTROLS (SPR 2-14)	
1	In the event of adverse weather conditions, the Fluor Fernald S&H Representative will determine if operations may continue without the potential for injury to personnel, or if evacuation is necessary.
2	Weather-affected work (e.g., work in open locations) shall be stopped if lightning, heavy persistent rain, limited visibility, heavy snow, or other adverse weather conditions are observed in the area of the Silos.
3	Any operation involving the use of cranes, man lifts, or personnel working at heights shall be suspended when wind velocity reaches 25 mph.

8.19 Heat and Cold Stress Hazards

Because maintenance and operations activities are conducted year round, there is the potential for worker exposure to extreme temperatures and the associated heat and cold stress hazards.

Heat stress can present a major hazard at the Silos Project, especially for workers wearing protective clothing. The same protective materials that shield the body from chemical or radiological exposure also limit the dissipation of body heat and moisture. Therefore, personal protective clothing can create a hazardous condition. Depending on the ambient conditions and the work being performed, heat stress can occur very rapidly (within as little as 15 minutes). Heat stress can pose as great a danger to worker health and safety as chemical exposure.

Cold stress is an important consideration when planning and conducting silo activities during the winter months. Low ambient temperatures can result in health effects ranging from reduced mental alertness and reduction of the ability to make rational decisions to loss of consciousness with the threat of fatal consequences.

NOTE: The SPRs in Table 8-19 do not comprise the complete list of relevant SPRs for this hazard topic. The items below have been identified as key elements for the AWR Project. For a complete list of applicable SPRs, see the designated SPR section in RM-0021, *Safety Performance Requirements Manual*.

TABLE 8-19: HEAT AND COLD STRESS HAZARD CONTROLS (SPR 12-9/10)	
1	Fluor Fernald has developed a Heat Stress Program to ensure that on-site personnel are made aware of the signs and symptoms of heat stress and are provided with the appropriate protection against the heat stress hazards. When conditions exist that may present a heat stress hazard, the Industrial Health & Safety Representatives will monitor the work environment and provide controls to protect the work force, such as: • Specified stay times • Access to cool-down areas
2	Fluor Fernald has developed a Cold Stress Program to ensure that on-site personnel are made aware of the signs and symptoms of cold stress. When conditions exist that may present a cold stress hazard, the Silos Industrial Health & Safety Representatives will monitor the work environment and provide controls to protect the work force, such as: • Specified stay times • Heaters • Access to a heated environment

8.20 Radiological Hazards

Potential general occupational radiological hazards could include the following:

- Exposure to external radiation
- Inhalation of radioactive material
- Skin contamination
- Absorption through contact with radioactive material
- Injection of radioactive material
- Spread of contamination to previously-uncontaminated areas
- Clothing contamination

Fluor Fernald Line Management is responsible for ensuring the radiological protection of the workers and environment. The Radiological Control organization provides support personnel, air monitoring, personal sampling, internal and external dosimetry, radiological surveys/monitoring, and job oversight. These activities are implemented through site radiological procedures, Radiation Work Permits (RWPs), and the HPP in Appendix H of this N-HASP.

The AWR Project radiological hazards are discussed in the following subsections:

- Radon Control System (RCS): **SECTION 8.20.1**
- Waste Retrieval and Storage Systems (WR&SS): **SECTION 8.20.2**
- AWR Radiological Hazard Controls: **SECTION 8.20.3**

8.20.1 RCS Radiological Hazards

The primary radiological hazard associated with the RCS is whole-body gamma penetrating radiation. Contamination and airborne radioactivity hazards would also exist if the RCS were breached or if a system failure were to occur. The design of the RCS is such that these hazards are minimized to levels that are As Low As Reasonably Achievable (ALARA). Several engineering controls are in place to mitigate these hazards. Although this section of the N-HASP discusses the primary radiological hazards and some controls to mitigate the hazards, Appendix D (ALARA Analysis) and Appendix H (Health Physics Plan) provide more detail.

Basic RCS Operation

To understand RCS radiological hazards, one must first understand basic RCS operation and the behavior of radon within the system (see the flow diagram in **FIGURE 8-1**). When the RCS was initially operated in December, 2002, the headspaces of Silos 1 and 2 contained substantial concentrations of radon gas (approximately 16-20 million pCi/L in each silo headspace). The radon in the headspaces was initially assumed to be in equilibrium with its short-lived decay products (radon progeny). These short-lived decay products are polonium-218, lead-214, bismuth-214, and polonium-214. Lead-214 and bismuth-214 emit energetic gamma rays and provide the primary whole-body penetrating radiation hazard of concern.

RCS operations will occur in five phases, as shown in **TABLE 8-20**:

TABLE 8-20: RCS OPERATIONAL PHASES		
Phase 1	• Silos headspace radon reduction	Scope of this AWR N-HASP
Phase 2	• Silos headspace radon reduction during waste retrieval from the silos and transfer to TTA • TTA ventilation	
Phase 3	• Silos headspace radon reduction during waste retrieval from the silos and transfer to TTA as well as transfer from TTA to remediation • Silos headspace radon reduction during heel removal • TTA ventilation • Ventilation of Remediation Facility vessel vent system • Remediation Building operations	
Phase 4	• TTA ventilation • Ventilation during D&D • Remediation Building operations • Silos Decontamination and Dismantlement (D&D)	
Phase 5	• Facility D&D	

During RCS Phase I, radon and radon progeny were drawn into the RCS from the Silos 1 and 2 headspaces and routed to the RCS via both flexible and rigid ducting. After the radon-laden air passed through the ducting and entered the RCS, it first entered the roughing filters. The roughing filters are designed to remove approximately 95% of the radon progeny arriving in the air stream. In less than one day of RCS operation, the roughing filters trapped a majority of the radon decay products from the silos headspaces. Extensive shielding, locked gates, warning lights, radiological postings, and local displays were in place to ensure that exposures were minimized to ALARA levels.

After passing through the roughing filters, any remaining radon decay products in the air stream were removed when the gas stream was chilled with cooling coils and dried by a desiccant dryer. The chilled and dried air stream, containing radon gas, then flowed directly to the carbon beds. The radon-laden air stream entered the carbon beds where adsorption by activated charcoal reduced radon concentrations to less than 2% of the arriving air stream levels. The radon adsorbed on the charcoal continued to decay, generating gamma-emitting decay products. The carbon beds are entombed within shielded vaults and are inaccessible to personnel entry.

RCS Phase 1 testing began in January, 2003. Operations began in May, 2003, and the RCS has since been removing and treating radon gas from the Silos 1 and 2 headspaces. **FIGURE 8-1** shows the increase in headspace radon concentrations in the silos from December, 1991, to May 2003, and then the decreasing concentrations from the Phase 1 testing period of January, 2003, through July, 2003. Since RCS Phase 1 testing and operations commenced, headspace concentrations for both silos have declined and stabilized around 500,000 pCi/L.

RCS Phase I operations helped reduce worker exposure during preparations for bulk waste retrieval operations and activities in the immediate vicinity of the silos, such as bridge erection and construction over the top of the silos. Reduction of the headspace radon concentration achieved both a reduction of direct penetrating radiation and effectively negated radon leakage from the silos. These two factors have resulted in a reduction in ambient airborne radon and radiation dose rates around the silos area, allowing for a size reduction of the Controlled Area. These changes have afforded certain advantages to radiological configurations during Phase 1 operations. However, prior to starting Phase 2 operations, the Controlled Area will be expanded to encompass areas where conditions are expected to require radiological posting and control.

FIGURE 8-1: EFFECTS OF RCS OPERATIONS ON HEADSPACE RADON

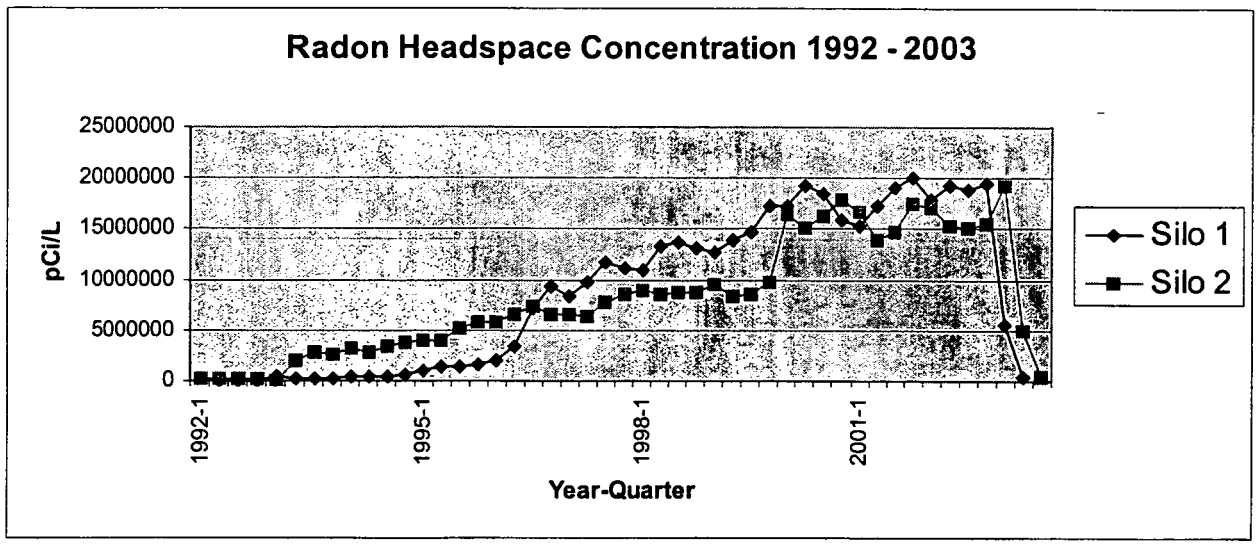

RCS Phase 2 operations will help reduce worker exposure during bulk waste retrieval operations, specifically residue retrieval and transport and staging in the TTA. Reduction of the headspace radon concentration will achieve both a reduction of direct penetrating radiation and radon leakage from the TTA.

FIGURE 8-2 shows the RCS ventilation system for Phase 1 and Phase 2 operations. It shows the flow of air from the silos and the TTA tanks through the desiccant dryers, through the carbon beds, and through the HEPA filter banks to the fans. Exhaust from the fans is recycled to the silos or the TTA tanks and/or released via the stack.

FIGURE 8-2: RCS OPERATIONS FLOW DIAGRAM

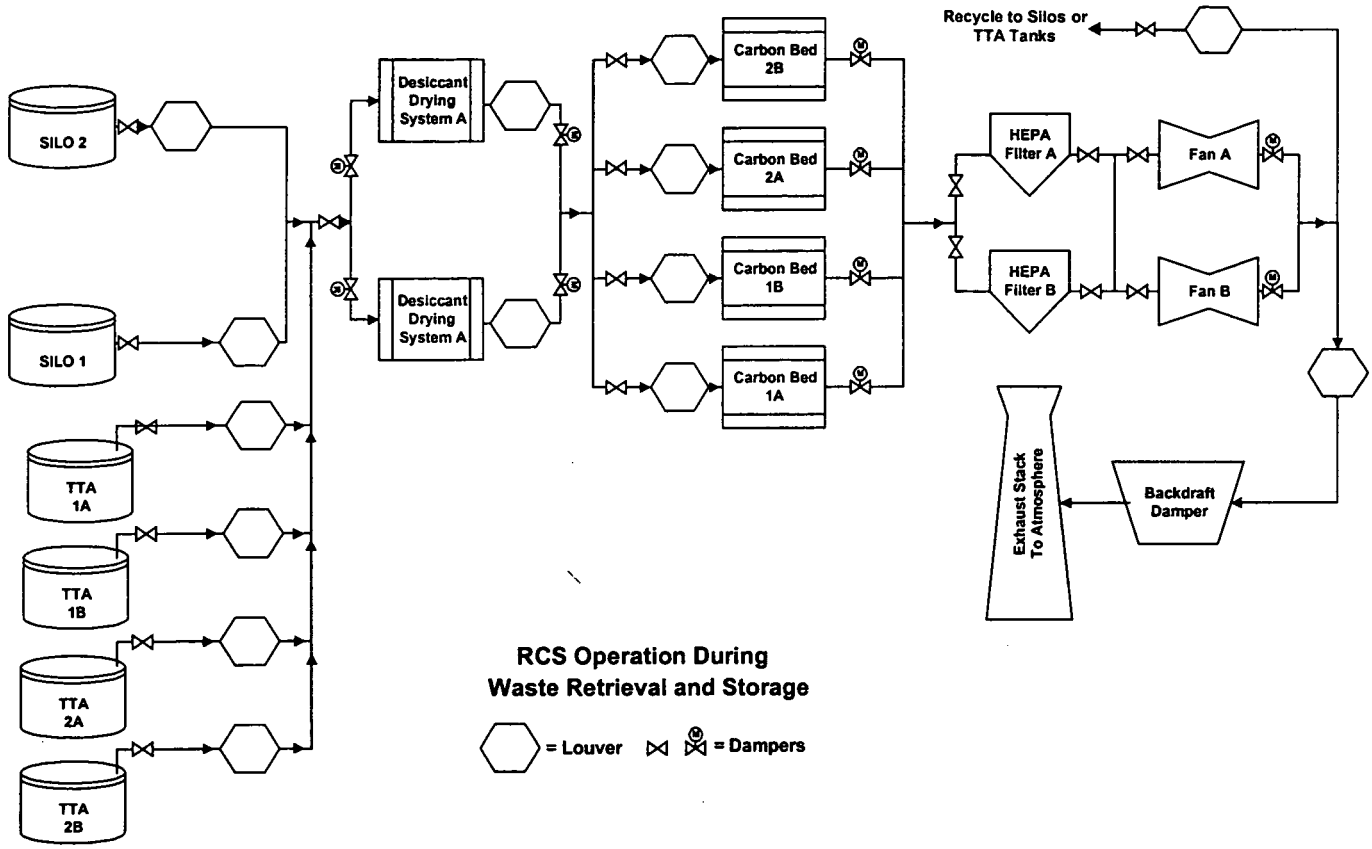

RCS Radiation Exposure

RCS radiation exposures are primarily from the roughing filters and the carbon beds. The radiation is a whole-body penetrating gamma radiation hazard resulting from the in-growth of radon daughters.

Radiation exposure of personnel is reduced significantly by the extensive use of shielding. Two feet of concrete shielding (or equivalent) surround the carbon beds, and up to two feet of concrete shields the roughing filters. One foot of concrete shields the condensate tanks, and separates the pairs of RCS and RCS Building HVAC HEPA filtration assemblies. Areas of higher dose rate within the structure are isolated and access is controlled by Operations and Radiological Control.

The RCS will continue to operate as it did during Phase 1. The dose rates outside the shield walls of the RCS and TTA will be less than 1.0 mrem/hr except for short periods where dose rates have the potential to exceed 5.0 mrem/hr. Routine health physics surveys will confirm the radiation levels in and around the RCS, TTA, and silos. RCS collective dose values are shown in TABLE 8-21. RCS radiological hazard controls are shown in TABLE 8-22.

RCS Radioactive Contamination

Radioactive contamination in the RCS is expected to be contained internally within the RCS ducting and components. For normal operations, no Contamination Areas are expected in the RCS. However, during system breaches of RCS piping and components, Contamination Areas will be established and a RWP will be required to implement the radiological controls and required Personal Protective Equipment (PPE).

For system breaches, the contamination hazard will be due to radon-222 and radon daughters. The RCS is not expected to have any carry-over of K-65 residue from the silos or support systems. If there were carry-over of K-65 material, most of it would be trapped in the roughing filters or the desiccant dryers. If carry-over is suspected during waste retrieval, radioisotopic analysis may be used to determine whether there are contaminants other than radon daughters.

8.20.2 Waste Retrieval and Storage Systems (WR&SS) Radiological Hazards

The primary radiological hazard associated with WR&SS is whole-body gamma penetrating radiation. Contamination and airborne radioactivity hazards also exist if the WR&SS are breached or if a system failure were to occur. The design of the WR&SS is such that these hazards are minimized to levels that are As Low As Reasonably Achievable (ALARA). Several engineering controls are in place to mitigate these hazards. Although this section of the N-HASP discusses the primary radiological hazards and some controls to mitigate the hazards, Appendix D (ALARA Analysis) and Appendix H (Health Physics Plan for the AWR Project) provide more detail.

Basic Waste Retrieval and Storage Systems Operation

To understand basic AWR waste retrieval and storage operations, see the flow diagrams in **FIGURES 1-5, 1-6, 1-7,** and **1-8.**

During waste retrieval operations, the majority of the waste material and the bentonite are removed from Silos 1 and 2 using past practice sluicing techniques. Bulk retrieval is accomplished using sluicing nozzles and a slurry pump. Initially, the sluice nozzle stream(s) is directed as close as possible to the slurry pump inlet to create a slurry pool and form a cavity for slurry to flow into. The slurry pump is continuously lowered into the cavity and turned on when sufficient submergence has been achieved. The sluice nozzle is used to create a sluice stream, which pushes material toward the slurry pump. Upon removal, the material is temporarily stored in the TTA until it is transferred (using the same sluicing/slurry process) to the Silos 1 and 2 Remediation Facility for treatment for off-site shipment.

Waste Retrieval Operations Radiation Exposure

The radiation exposures from Silo 1 and Silo 2 Waste Retrieval operations are primarily from Silos 1 and 2, the slurry nozzles, the slurry pump modules, and the associated piping. The radiation is a whole-body penetrating gamma radiation hazard resulting from the ingrowth of radon progeny. The area radiation dose rates above the Silos will be measured and documented on the survey appended to the RWP for entry onto the Silos Bridge.

Radiation exposure of personnel is managed by the installation of shielding. The shielding on the top of the Silos is concrete 4 – 6 inches thick, depending on location. The shielding on the floor of the Silos Bridge is steel 0 – 2.5 inches thick, depending on location.

Storage Systems Operations Radiation Exposure

AWR Storage Systems radiation exposures are primarily from the TTA tanks, the slurry nozzles, the slurry pump modules, and the associated piping. The radiation is a whole-body penetrating gamma radiation hazard resulting from the ingrowth of radon progeny. The area radiation dose rates in the TTA will be measured and documented on the survey appended to the RWP for entry into the TTA.

Engineering controls for radiation exposure of personnel is provided by shielding. The walls of the TTA building are concrete shielding two feet thick for the first 20 feet of the TTA building, and 16 inches thick for the remainder of the TTA building. The operating deck of the TTA building is concrete shielding 9 inches thick. Administrative controls are listed in the **TABLE 8-22**.

WR&SS Radioactive Contamination

Radioactive contamination in WR&SS is expected to be contained internally within the TTA piping and components. For normal operations, no Contamination Areas are expected in the TTA. However, during system breaches of TTA piping and components, Contamination Areas will be established and an RWP will be required to implement the radiological controls and required PPE. Personnel entry into these areas will be limited to the minimum required by operational, maintenance, and oversight demands. Entries will be made only by trained Radiation Workers, or as required by job-specific RWPs. Most entry will be supported by at least one FCP RCT. The Contamination Areas will be established so that the area is minimized and provisions are made for a step-off pad and an area for doffing contaminated PPE. Herculite, plastic, and glovebags may be used to help prevent the spread of contamination.

For system breaches, contamination control will be based on Ac-227, Ra-226, and/or subsequent daughters.

To exit the Contamination Area, the potentially-contaminated outer layer of PPE will be doffed at the Contamination Area exit (Control Point). Workers will perform (at a minimum) hand and foot monitoring with the instrumentation provided by the RCT. Once workers determine they are not contaminated, they will proceed directly to the Control Point to perform whole-body monitoring. The specific monitoring protocol will be determined by the Radiological Engineer and stated on the RWP. If contamination is detected at either Control Point, the worker will be required to notify an RCT for a response.

Collective Radiation Dose Rate

Appendix D (ALARA Analysis) develops a specific array of radiation dose rates relative to specific tasks/activities within each of the operations. **TABLE 8-21** summarizes the collective doses forecast for the indicated operations.

TABLE 8-21: ALARA ANALYSIS COLLECTIVE DOSE
(Data summarized from Appendix D)

Operation	Collective Dose (person-rem)
• **Radon Control System:**	
Operation	1.479
Maintenance	2.699
Subtotal	**4.178**
• **Transfer Tank Area:**	
Operation	5.905
Maintenance	2.670
Subtotal	**8.575**
• **Silo Waste Retrieval System:**	
Operation	3.345
Maintenance	3.381
Subtotal	**6.726**
• **Radiological Support:**	
Radon Control System	3.243
Transfer Tank Area	3.840
Silos Waste Retrieval System	2.880
Subtotal	**9.963**
TOTAL	**19.442**

8.20.3 AWR Radiological Hazard Controls

The controls for AWR radiological hazards are presented in **TABLE 8-22**. The controls are designated as RCS controls, WR&SS controls, or AWR (common) controls.

NOTE: The Radiological Control Requirements in Table 8-22 do not comprise the complete list of relevant controls for this hazard topic. The items below have been identified as key elements for the AWR Project. For a complete list of applicable radiological controls, see RM-0020, *Radiological Controls Requirements Manual.*

TABLE 8-22: AWR RADIOLOGICAL HAZARD CONTROLS	
1.0 RCS Engineering Controls	
1.1	The RCS was designed and built with the extensive use of shielding to minimize exposures to personnel outside and inside the RCS. Appendix H of this N-HASP provides an overview of the RCS shielding.
1.2	As anticipated, radiation exposure rates in the immediate vicinity of the roughing filters have at times been >1 R/hr (the 10 CFR 835.502 [Ref. 37] threshold for action). Exposure rates have been ≤327 R/hr (significantly below the 500 R/hr 10 CFR 835.502 criterion for further action). Therefore, personnel access is controlled using lockable gates to restrict access to the desiccant dryer area (which contains the roughing filters).
1.3	A local digital radiation display will visually show the radiation exposure rates near the roughing filters for personnel inside the RCS Building. The local radiation level display is mounted near the access gate, so that personnel can see real-time radiation readings in the vicinity of the roughing filters.
1.4	A yellow flashing light in the desiccant dryer vault will provide a visual indication when radiation levels near the detector (mounted on the center wall) is greater than 2 mrem/hr.
1.5	The carbon beds will have significant gamma radiation being emitted from them as radon progeny grow. As a result, in addition to the extensive shielding mentioned in Item 1, the carbon bed vaults are designed to be inaccessible to personnel.
1.6	The RCS will be equipped with video cameras to allow for remote viewing of personnel, equipment, etc. This should help to reduce the number of individuals required to enter the RCS Building and to limit their time inside.

TABLE 8-22: AWR RADIOLOGICAL HAZARD CONTROLS	
2.0	**RCS Administrative Controls**
2.1	Prior to performing maintenance on RCS system components, the particular component will be placed out of service to allow for the decay of the short-lived radon daughters to ALARA levels. After about 4 hours, the radon daughters that significantly contribute to the radiation exposure rates will have decayed to 0.2 percent of their initial activity. Consequently, radiation exposure rates will be significantly reduced. Planned entries of the RCS will be based on actual survey data and as determined by the Radiological Engineer. Example 1: If maintenance is required on a roughing filter or desiccant dryer, then the desiccant dryer/roughing filter will be placed out of service to allow the short-lived radon progeny to decay to acceptable levels. During some phases of the project, both of the desiccant dryers may be operated at the same time. In this case, some activities that provide the source of radon-laden air will be shut down. Then, the affected dessicant dryer can be shut down long enough for radiation levels to reduce to ALARA levels. Example 2: The condensate being removed in the RCS system may initially contain significant quantities of radon. The condensate will be sent to a condensate hold-up tank and then sent to the AWWT or the Tank Transfer Area. Samples will be analyzed to assure that the condensate meets AWWT criteria. Example 3: For HEPA filter maintenance, the filter to be serviced will be shut down and allowed to decay to ALARA levels. The filters are located on the second floor and are separated by concrete shields.
2.2	Removal of filters from ventilation systems (i.e., roughing filters, RCS filter baghouses, and RCS Building baghouses) will use bagout procedures to minimize the potential for spread of contamination and generation of airborne radioactivity.
2.3	A limited number of Contamination Areas are expected on the AWR Project. Contamination is expected to be contained within the RCS duct system. Therefore, there is a potential for contact with this contamination whenever the system is breached, such as during filter changes. Small, local Contamination Areas may be established in the RCS, as necessary, whenever contamination is encountered.
2.4	Temporary Airborne Radioactivity Areas, with radon concentrations in excess of 0.03 working levels, are expected in any location where radon is not completely contained by the RCS and its ductwork. Air sampling and/or radon working level surveys shall be conducted in any area where release of radon is suspected or anticipated.

TABLE 8-22: AWR RADIOLOGICAL HAZARD CONTROLS	
3.0 WR&SS Engineering Controls	
3.1	The TTA was designed and built with the extensive use of shielding to minimize exposures to personnel outside and inside the TTA. Appendix H of this N-HASP provides an overview of the TTA shielding.
3.2	The design allows sluicing and slurry pumping operations to be done remotely.
3.3	The slurry pump and sluicer modules are secondary containments designed to drain into the Silos or TTA Tanks.
3.4	Decontamination equipment is provided in the slurry pump and sluicer modules.
3.5	The slurry transport piping is a pipe-in-pipe design that provides secondary containment. The slurry transport piping is equipped with systems to monitor line pressures and clear blockages. The slurry transport piping is sloped toward the silos or the TTA tanks from the diverter valve enclosure to allow gravity draining.
3.6	Glove-ports and windows are provided in the slurry pump and sluicer modules to allow equipment maintenance.
3.7	Radiation monitors are provided in the slurry pump and sluicer modules to provide radiation monitoring of equipment removed.
3.8	Since radiation exposure rates in the immediate vicinity of the transfer lines and service modules may approach or exceed 1 R/hr, personnel access will be controlled using lockable gates to restrict access to the transfer lines and service modules areas.
3.9	A local digital radiation display will visually show the radiation exposure rates near the service modules for personnel inside the TTA Building. The local radiation level display is mounted near the access door, so that personnel can see real-time radiation readings in the vicinity of the service modules.
3.10	Radiological Control has evaluated areas of potential radon leakage into the second floor of the TTA Building. A local Continuous Radon Monitor (CRM) will visually show the radon concentration in pCi/l for the second floor. Radiological Control plans to use WLx monitors to evaluate personnel exposure, posting, and/or area access controls. In addition, this area is not normally occupied, and will have minimal access by personnel.
3.11	The Silos and TTA Tanks will be equipped with video cameras to allow for remote viewing of equipment.

TABLE 8-22: AWR RADIOLOGICAL HAZARD CONTROLS	
3.12	The concrete floor and 8 feet of the walls of the TTA Building are sealed to provide secondary containment.
3.13	Sump pumps are provided to transfer collected liquids to the Silos or TTA tanks.
4.0 WR&SS Administrative Controls	
4.1	Prior to performing maintenance on TTA system components, the particular component will be placed out of service to allow for the decay of the short-lived radon daughters to ALARA levels. After about 4 hours, the radon daughters that significantly contribute to the radiation exposure rates will have decayed to 0.2 percent of their initial activity. Consequently, radiation exposure rates will be significantly reduced. In addition to radon, material within the TTA system components may contain radium-226 (half-life: 1600 years). Maintenance activities involving radium-226 will be governed by Radiological Control standard operating procedures. Planned entries of the TTA Building will be based on actual survey data, and as determined by the Radiological Engineer. Example 1: For sluicer or slurry pump module maintenance/operational activities, the sluicer or slurry pump module to be serviced will be shut down and allowed to decay to ALARA levels. Maintenance activities will be governed by Radiological Control. Temporary shielding can be used to reduce the dose rate from below the floor.
4.2	A limited number of Contamination Areas are expected on the AWR Project. Contamination is expected to be contained within the RCS duct system. Therefore, there is a potential for contact with this contamination whenever the system is breached, such as during filter changes or sluice pipe repair. Small, local Contamination Areas may be established within the AWR Project, as necessary, whenever contamination is encountered.
4.3	Temporary Airborne Radioactivity Areas, with radon concentrations in excess of 0.03 working levels, are expected in any location where radon is not completely contained by the RCS and its ductwork. Air sampling and/or radon working-level surveys shall be conducted in any area where release of radon is suspected or anticipated.
5.0 AWR (common) Radiological Access Controls: Access to Controlled Areas	
5.1	Unescorted access to Silos Project Controlled Areas or Radiological Areas requires a minimum of Radiological Worker training.

TABLE 8-22: AWR RADIOLOGICAL HAZARD CONTROLS	
5.2	All workers shall be briefed on the contents of each RWP or Safe Work Plan. Workers shall sign an acknowledgment form to signify their understanding of RWP or Safe Work Plan requirements.
5.3	Before passing the access control point (access point from the uncontrolled area to the controlled area), workers shall check their HAZWOPER Mod 2 training qualification by reviewing their pink card. If their training qualification has expired, they shall contact their supervisor or training coordinator. Radiological Control Dosimetry will provide Exclusion Lists to supervisors of personnel delinquent in bioassay submission.
5.4	Access into the Controlled Area for the AWR Project is at the RCS PPE Room in the RCS Operations and Maintenance Building (Building 94A), which is the primary thermoluminescent dosimeter (TLD) storage location.
5.5	Workers shall obtain their TLDs before reaching the Controlled Area.
5.6	TLDs must be worn while workers are in the Controlled Area.
5.7	TLDs shall be worn on the outside of the workers' clothing (non-PPE), facing forward, between their waist and shoulders.
5.8	Visitors may be allowed to enter the Controlled Area upon approval of Radiological Control with a properly trained and cognizant escort.
5.9	Unescorted access to the Controlled Area requires that a worker's training and bioassay are sufficient and up-to-date.
5.10	When exiting a Category I Controlled Area, workers shall perform whole body monitoring, preferably with a personal contamination monitor (PCM), and monitor personal items with a hand-held frisker.
5.11	Personnel and material monitoring will not be required if the area is posted as a Category II Controlled Area. The radiological sign posted at the Controlled Area exit will identify whether personnel and material monitoring is required.
5.12	After successful personnel and material monitoring, workers shall then place their TLDs in the appropriate slot in the assigned TLD storage rack in the RCS PPE Room in the RCS Operations and Maintenance Building (Building 94A).
6.0 AWR (common) Radiological Access Controls: Access to Contamination Area	
6.1	Workers shall sign the appropriate RWP for entry into a contaminated work area.

TABLE 8-22: AWR RADIOLOGICAL HAZARD CONTROLS	
6.2	Workers shall obtain the prescribed PPE clothing and respiratory protection equipment, show evidence of being respirator-fit to the respirator issuer, go to the dressing area, and don the prescribed PPE.
6.3	When wearing protective clothing so that no skin is exposed (i.e., full anti-Cs and a respirator), the worker's TLD must be worn underneath the protective clothing.
6.4	When protective clothing requirements are such that skin is exposed (e.g., no respirator), the TLD must be worn on the outside of the anti-Cs.
6.5	Before entering the Contamination Area, workers shall contact a Radiological Control Technician (RCT) for assignment of personal air samplers and testing of the airflow of powered air-purifying respirators (if worn). The following conditions apply to persons wearing personal air samplers: • When changing work areas, workers must sign in on the appropriate RWP and verify that they are wearing PPE in compliance with the RWP for the new area. If the worker must change PPE before moving to the new job area, the worker must exit the Contamination Area and go through the appropriate steps for re-entry, wearing the correct PPE for the new area. The worker will be assigned a different personal air sampler. • Personal entry into Contamination Areas must be through the established control point.
7.0	**Exiting AWR Contamination Areas**
7.1	Workers shall always leave a Contamination Area and doff anti-Cs at the appropriate control point whenever their protective clothing is compromised or when non-water-resistant anti-Cs get wet or workers sweat through their protective clothing.
7.2	Workers shall sign out on the RWP upon exiting through the access control point.
7.3	To exit a Contamination Area inside the AWR Project, the potentially-contaminated outer layer of PPE will be doffed at the Contamination Area exit (control point). The workers will then perform (at a minimum) hand and foot monitoring with the instrumentation provided by the RCT. Workers must ensure that, when performing monitoring with hand-held alpha friskers, the proper detector distance and frisk rate are used. The proper distance is within one-fourth inch. The proper frisk rate is less than two inches-per-second. The specific monitoring protocol will be determined by the Radiological Engineer and stated on the RWP. If contamination is detected at either control point, the worker will be required to notify an RCT for a response. All equipment and materials to be removed from the Contamination Areas must be surveyed and released by an RCT.

TABLE 8-22: AWR RADIOLOGICAL HAZARD CONTROLS	
7.4	After workers exit the AWR Project; doff anti-Cs, and perform hand and foot monitoring, they perform whole-body monitoring with a PCM in the RCS PPR Room (Building 94A), or other location designated by the RWP, before they proceed to a different work area or leave the Controlled Area.
7.5	Access to Radiological Areas is controlled by Fluor Fernald Radiological Control. Workers requiring access to Radiological Areas receive a briefing from Fluor Fernald RCTs on the area radiological hazards (e.g., contamination levels) and the precautionary measures taken to ensure worker safety (e.g., PPE requirements).
8.0 RCS Building Radiological Posting	
8.1	The RCS Building is normally an unoccupied area. The doors are locked and access is controlled by Operations and Radiological Control. The RCS Building will be controlled as a Radiological Area. The specific posting will vary as conditions change within the RCS, based on the activities to be performed. The initial anticipated postings for RCS operations are Radiation Area, High Radiation Area (desiccant dryer vault), Airborne Radioactivity Area, and RWP Required for Entry. If maintenance will be performed and system breaches are required, the area will be up-posted to the appropriate area control designation and a temporary control point will be established (location to be determined by the Radiological Engineer).
9.0 WR&SS Radiological Posting	
9.1	The TTA Building is normally an unoccupied area. The doors are locked and access is controlled by Operations and Radiological Control. The TTA Building will be controlled as a Radiological Area. The specific posting will vary as conditions change within the TTA, based on the activities to be performed. The initial anticipated postings for TTA operations are Radiation Area, High Radiation Area, Airborne Radioactivity Area, and RWP Required for Entry. If maintenance will be performed and system breaches are required, the area will be up-posted to the appropriate area control designation and a temporary control point will be established (location to be determined by the Radiological Engineer).
10.0 AWR (common) General Radiological Rules	
10.1	Eating, drinking, smoking, chewing tobacco or gum, dipping tobacco, and applying makeup are permitted only in areas designated by Fluor Fernald Radiological Engineering. At no time are these activities permitted within Contaminated Areas, High Contamination Areas, or Airborne Radioactivity Areas.

TABLE 8-22: AWR RADIOLOGICAL HAZARD CONTROLS	
10.2	Silos Project personnel receiving medical treatment with radio-pharmaceuticals will be restricted from entering Controlled Areas until the radio-pharmaceutical has cleared sufficiently from his or her system that frisking with a PCM at the control point does not trigger the alarm. Silos Project personnel who have received treatment with radio-pharmaceuticals must report to Fluor Fernald Medical immediately upon returning to work.
10.3	Silos Project personnel who are pregnant may "Declare Pregnancy" per 10 CFR 835, *Occupational Radiation Protection* [Ref. 37]. The pregnant person should report to Fluor Fernald Medical. She will be informed of the pregnancy-related risks of working at the Silos Project site.

8.21 Chemical Hazards

Potential general occupational chemical hazards include:

- Inhalation, ingestion, and absorption of chemical materials
- Clothing contamination
- Chemical burns to eyes and skin

Fluor Fernald H&S personnel are responsible for providing chemical protection support through the use of general area air monitoring, personal sampling, and prescribing PPE. Activities with the potential for chemical exposure of personnel will be governed by work permits, procedures, or task-specific plans, which will also prescribe the level and type of protection to be afforded personnel.

Silos 1 and 2 Waste Profile

The inventories of organic and inorganic chemicals present in Silos 1 and 2 are listed in **TABLES 8-23** and **8-24**. The inventories are based on analyses of core samples taken from the silos in 1991 and reported in *Remedial Investigation Report for Operable Unit 4* [Ref. 38].

Top Chemical Constituent of Concern

The predominant hazardous constituent existing within the Silos 1 and 2 matrix is lead, as documented the *Silos 1 and 2 Material Airborne Control Limit Calculation* [Ref. 39]. This lead is primarily in the form of lead sulfate as a result of the processing techniques used during the production era. Lead can cause headaches, irritability, reduced memory, disturbed sleep, and mood and personality changes. Repeated exposure can lead to lead poisoning. Symptoms include a metallic taste in the mouth, poor appetite, weight loss, colic, upset stomach, nausea, vomiting, and muscle cramps. High or repeated exposure can result in nerve damage, a 'pins and needles' sensation and poor arm and leg coordination. There can be muscle and joint pains and high blood pressure. Lead can cause kidney and brain damage. Lead can damage blood cells, which can lead

to anemia. It can take years for the human body to get rid of excess lead. Lead can irritate the eyes, nose, and throat. Lead has been shown to damage animal fetuses, and thus, may also affect human fetuses. Lead may also decrease fertility in men and women.

For Phase 1 of RCS operations, personnel will not come into contact with K-65 material, and the production of lead isotopes from the decay of radon in the RCS system will not provide a significant source of concern. During future phases of AWR operation, carry-over of K-65 material may occur. In this situation, lead will become the chemical hazard of concern. Lead products will deposit in the roughing filters, carbon beds, and HEPA filters (as discussed in the Radiological Hazards section). By protecting personnel against radiological exposures, personnel will also be protected against any lead exposures.

There is a significant amount of activated carbon in the RCS carbon beds. However, there is little chance that the carbon can become airborne. Short-term exposures to carbon may irritate the nose and throat causing coughing, and may irritate the skin. Long-term repeated exposures may cause bronchitis, accompanied by coughing, phlegm and/or shortness of breath.

There are no hazardous process additives or maintenance chemicals involved in the AWR process. Any new chemicals that are introduced will be evaluated.

TABLE 8-23: INVENTORY OF ORGANIC CHEMICALS IN SILOS 1 AND 2 WASTE

Organic Chemicals	Concentration (mg/kg)		Quantity (kg)		
	Silo 1 [a]	Silo 2 [a]	Silo 1 [b]	Silo 2 [c]	Total
2-Butanone	0.022	0.01	0.148	0.058	0.206
2-Hexanone	0.017	–	0.114	–	0.114
4,4-DDE	0.12	–	0.806	–	0.806
4,4-DDT	0.07	–	0.47	–	0.47
4-Methyl-2-pentanone	0.003	–	0.02	–	0.02
Acetone	0.15	0.07	1.01	0.407	1.42
Aldrin	0.056	–	0.376	–	0.376
Aroclor 1248	2.	–	13.4	–	13.4
Aroclor 1254	10.	15.	67.2	87.3	155.
Aroclor 1260	3.5	0.034	23.5	0.20	23.7
Benzoic acid	0.12	0.39	0.806	2.27	3.08
Bis (2-Ethylhexyl) Phthalate	1.5	1.2	10.1	6.98	17.1
Carbon tetrachloride	–	0.17	–	0.99	0.99
Di-n-butylphthalate	0.057	–	0.383	–	0.383
Di-n-octylphthalate	0.97	–	6.52	–	6.52
Dieldrin	0.093	–	0.625	–	0.625
Diethyl phthalate	–	0.41	–	2.39	2.39
Dimethyl phthalate	0.16	–	1.08	–	1.08
Endosulfan-I	0.092	–	0.618	–	0.618
Endosulfan-II	0.26	–	1.75	–	1.75
Endrin	0.089	–	0.598	–	0.598
Fluoranthene	–	0.064	–	0.373	0.373
Heptachlor epoxide	0.2	–	1.34	–	1.34
Methylene chloride	0.19	0.047	1.28	0.274	1.55
N-nitroso-di-n-propylamine	0.059	0.26	0.397	1.51	1.91
Phenol	0.4	–	2.69	–	2.69
Pyrene	–	0.047	–	0.274	0.274
Tetrachloroethene	–	0.14	–	0.815	0.815
Total xylenes	–	0.003	–	0.018	0.018
Toluene	0.05	0.01	0.336	0.058	0.394
Tributyl phosphate	51.	73.	343.	425.	768.

[a] Upper 95% confidence interval values from *Remedial Investigation Report for OU4*.
[b] Based on estimated material mass in Silo 1 of 6.72 E+09 grams.
[c] Based on estimated material mass in Silo 2 of 5.82 E+09 grams.

TABLE 8-24: INVENTORY OF INORGANIC CHEMICALS IN SILOS 1 AND 2 WASTE						
Inorganic Chemicals	Concentration (mg/kg)		Quantity (kg)			IH Standards for Continuous Exposure
	Silo 1 [a]	Silo 2 [a]	Silo 1 [b]	Silo 2 [c]	Total	
Ammonia	8.9	–	59.8	–	59.8	25 ppm
Chloride	1340.	141.	9000.	821.	9820.	NA
Fluoride	394.	–	2650.	–	2650.	2.5 mg/m3
Nitrate	4760.	8900.	32000.	51800.	83800.	NA
Oil and Grease	27000.	541.	181000.	3150.	184000.	5 mg/m3
Phosphorus	3290.	1400.	22100.	8150.	30300.	NA
Sulfate	3460.	19300.	23300.	112000.	135000.	NA
Total Kjeldahl Nitrgen	676.	220.	4540.	1280.	5820.	NA
Total organic carbon	26200.	24400.	176000.	142000.	318000.	NA
Total organic nitrogen	623.	289.	4190.	1680.	5870.	NA
Aluminum	1320.	1110.	8870.	6460.	15300.	10 mg/m3
Antimony	26.	44.	175.	256.	431.	0.5 mg/m3
Arsenic	55.	1550.	370.	9020.	9390.	0.01 mg/m3
Barium	14200.	19900.	95400.	116000.	211000.	0.5 mg/m3
Beryllium	1.	3.	6.7	17.5	24.2	0.0002 mg/m3
Boron	50.	51.	336.	297.	633.	10 mg/m3
Cadmium	4.	7.	26.9	40.7	67.6	0.01 mg/m3
Calcium	3650.	301000.	24500.	1750000.	1770000.	2 mg/m3
Chromium	55.	51.	370.	297.	667.	0.5 mg/m3
Cobalt	1100.	2430.	7390.	14100.	21500.	0.02 mg/m3
Copper	331.	818.	2220.	4760.	6980.	1 mg/m3
Cyanide	3.	5.	20.2	29.1	49.3	NA
Iron	21100.	28900.	142000.	168000.	310000.	5 mg/m3
Lead	95500.	299000.	642000.	1740000.	2380000.	0.05 mg/m3
Magnesium	3380.	6410.	22700.	37300.	60000.	10 mg/m3
Manganese	97.	259.	652.	1510.	2160.	0.2 mg/m3
Mercury	0.9	1.2	6.0	7.0	13.0	0.025 mg/m3
Molybdenum	6290.	440.	42300.	2560.	44900.	10 mg/m3
Nickel	2290.	1720.	15400.	10000.	25400.	1.5 mg/m3
Potassium	493.	337.	3310.	1960.	5270.	NA
Selenium	340.	124.	2280.	722.	3000.	0.2 mg/m3
Silicon	853.	1150.	5730.	6690.	12400.	10 mg/m3
Silver	13.	22.	87.4	128.	215.	0.1 mg/m3
Sodium	10700.	3200.	71900.	18600.	90500.	NA
Thallium	1.4	2.	9.4	11.6	21.0	0.1 mg/m3
Vanadium	161.	298.	1080.	1730.	2810.	NA
Zinc	37.	91.	249.	530.	779.	2 mg/m3

[a] Upper 95% confidence interval values from *Remedial Investigation Report for OU4.*
[b] Based on estimated material mass in Silo 1 of 6.72 E+09 grams.
[c] Based on estimated material mass in Silo 2 of 5.82 E+09 grams.

AWR Chemical Hazard Controls

The controls for AWR chemical hazards are presented in **TABLE 8-25**. The controls are designated as RCS controls or AWR (common) controls (i.e., both RCS and WR&SS).

TABLE 8-25: AWR CHEMICAL HAZARD CONTROLS	
RCS Chemical Hazard Controls	
1	The RCS was designed and built to minimize exposures to personnel outside and inside the RCS.
2	Personnel access will be controlled using lockable gates to restrict access to the desiccant dryer area.
3	The carbon bed vaults are designed to be inaccessible to personnel due to radiological concerns.
4	The RCS will be equipped with video cameras to allow for remote viewing of personnel and equipment. This should help to reduce the number of individuals inside the RCS and their time inside.
5	Removal of filters from ventilation systems (i.e., roughing filters, RCS filter baghouses, and RCS Building baghouses) will use bagout procedures to minimize the potential for chemical exposure.
6	A limited number of Contamination Areas are expected on the AWR Project. Contamination is expected to be contained within the RCS duct system. Therefore, there is a potential for contact with this contamination whenever the system is breached, such as during filter changes. Small, local Contamination Areas may be established in the RCS, as necessary, whenever contamination is encountered.
AWR Chemical Hazard Controls (common controls)	
1	Unescorted access to Silos Project Controlled Areas or Radiological Areas requires a minimum of OSHA Hazardous Waste Operations and Emergency Response (HAZWOPER) training.
2	All on-site personnel are required to comply with applicable Fluor Fernald Work Permits, approved work plans, and operational procedures.
3	All workers are briefed on the contents of each work permit, work plan, or operational procedure.

TABLE 8-25: AWR CHEMICAL HAZARD CONTROLS	
4	When exiting a Category I Controlled Area, workers shall perform whole body monitoring, preferably with a personal contamination monitor (PCM), and monitor personal material with a hand-held frisker. This procedure will identify any potential chemical contamination by the presence of any radiological contamination.
5	Workers shall obtain the prescribed PPE clothing and respiratory protection equipment, show evidence of being respirator-fit, go to the dressing area, and don the prescribed PPE.
6	Workers shall always leave a Contamination Area and doff anti-Cs at the appropriate control point whenever their protective clothing is compromised or when non-water-resistant anti-Cs get wet or workers sweat through their protective clothing. This procedure will prevent contact with, or the spread of, chemical contamination.
7	Eating, drinking, smoking, chewing tobacco or gum, dipping tobacco, and applying makeup are permitted only in areas designated by Fluor Fernald Radiological Engineering. Except for approved medical exceptions, at no time are these activities permitted within Contaminated Areas, High Contamination Areas, or Airborne Radioactivity Areas. This practice will prevent the ingestion of chemical materials.
Lead Controls	
1	The following chemical-specific controls shall be followed in addition to the RCS and AWR common controls listed above. NOTE: It should be understood that the radiological component of the waste material dominates the hazard controls for AWR operations. Radiological controls will also control exposures to hazardous constituents, including lead.
2	Areas where lead is handled will be regulated.
3	Operations involving lead will comply with the following controls: • Operations will be enclosed as much as possible. • Respirators shall also be worn, as necessary, to ensure that personnel are not exposed to airborne levels that exceed exposure criteria (see Item #4 below). • Personnel handling these constituents shall wear protective gloves and clothing. • If there is skin contact, the area shall be washed. • If vacuuming these materials, a HEPA vacuum shall be used. • Eating, drinking, and smoking shall be prohibited in areas where these constituents are handled.

TABLE 8-25: AWR CHEMICAL HAZARD CONTROLS	
4	Exposure to lead will be routinely evaluated by collecting personal air samples. Concentrations equaling or exceeding the lead action level of 30 micrograms per cubic meter will trigger follow-up actions per OSHA regulations.

9.0 AWR HAZARDS CONTROL MATRICES

A hazards assessment was performed for the tasks assigned to the Fluor maintenance and operations personnel associated with AWR operations. The Hazards Control Matrix is the method of documenting this assessment. It identifies the tasks to be performed in conjunction with their hazards, hazard controls, and mitigators. Such a matrix forms the basis for employee briefings prior to working on the AWR Project. AWR Project matrices are in the following subsections:

- Radon Control System (RCS) matrix: **SECTION 9.1**
- Waste Retrieval and Storage Systems (WR&SS) matrix: **SECTION 9.2**

9.1 RCS Hazards Control Matrix

The matrix in **TABLE 9-1** identifies Radon Control System tasks, their hazards, and their controls/mitigators.

TABLE 9-1: AWR PROJECT - RCS HAZARDS CONTROL MATRIX

Task	Hazard	Mitigators/Controls	Permits/ Guid. Docs
RCS Task 1: Preventive maintenance of the chillers/ desiccant dryers	Radiological: Skin and/or internal contamination	• Shut down RCS system and allow for decay of short-lived radionuclides (i.e., radon daughters) • Workers will be trained as 40-hr HAZWOPER/Rad Worker • Radiological contamination training • Workers will use good radiological work practices to prevent the spread of radioactive material and use containments when practical • Protective clothing and equipment will be used as prescribed by Radiological Controls • Work area contamination levels will be kept to a minimum • RCTs will perform contamination surveys to determine work area control levels • RCT oversight • Radon monitoring • Workers will doff potentially contaminated PPE per posted instructions	• RWP

TABLE 9-1: AWR PROJECT - RCS HAZARDS CONTROL MATRIX			
Task	**Hazard**	**Mitigators/Controls**	**Permits/ Guid. Docs**
Task 1 (cont.): Preventive maintenance of the chillers/ desiccant dryers	Radiological: Radiation exposure	• Shut down RCS system and allow for decay of short-lived radionuclides (i.e., radon daughters) • Workers will be trained as 40-hr HAZWOPER/Rad Worker • Locked gates/warning lights/local radiation level display • Perform mockups when practical • Radiological postings • Concrete walls and steel plates provide shielding to reduce the dose rates in the work area • Temporary/portable shielding • Workers will practice ALARA while performing assigned tasks • Workers will perform assigned task as described in the pre-job briefing to minimize time spent in radiation area • Administrative guidelines will be followed to prevent inadvertent exposure to employees • Radiological Control personnel will monitor worker stay times • RCT oversight • Task will be performed per maintenance procedure(s)/instructions • Minimize number of personnel in area • Use of remotely-operated cameras	• RWP
	Hazardous Energy: Electrical Shock/ Inadvertent Equipment Start-up	• Energy isolation will be performed per site procedures • Lockout/tagout training	• EIP/SOP

TABLE 9-1: AWR PROJECT - RCS HAZARDS CONTROL MATRIX			
Task	**Hazard**	**Mitigators/Controls**	**Permits/ Guid. Docs**
Task 1 (cont.): Preventive maintenance of the chillers/ desiccant dryers	Slips, Trips, and Falls	• Good housekeeping practices will be followed by all personnel • Area lighting will be adequate for the type of work to be performed • If possible, avoid walking on uneven surfaces • Observe work area tripping hazards when coming to and leaving the area • Carefully place feet on stairs when ascending or descending stairway to the second floor of the RCS • Always use handrails when ascending or descending stairway to the second floor of the RCS • Always maintain 3-points of contact when ascending/descending stairways	• Briefings • Walk-throughs • Eng. design
	Noise	• Wear hearing protection if required by area posting	• Work Permit
	Housekeeping	• Maintain work areas and personnel access-ways free of obstructions and debris	• SPR 2-1
	Head Impact	• Workers will be trained to perform tasks safely • Workers will perform tasks in accordance with standard operating procedures • Head protection will be worn by personnel when the potential for falling objects or head injuries due to impact exist.	• SOP • Standing Orders • FCP Work Permit • Pre-job Briefing
	Chemical	• Follow the directions outlined in the MSDS for handling cleaners, lubricants, etc. • Supervision must ensure that workers have been briefed, as necessary, on MSDS's	• MSDS

TABLE 9-1: AWR PROJECT - RCS HAZARDS CONTROL MATRIX			
Task	**Hazard**	**Mitigators/Controls**	**Permits/ Guid. Docs**
Task 1 (cont.): Preventive maintenance of the chillers/ desiccant dryers	Pinch Point, Puncture/Cut	• Workers will be trained to perform tasks safely • Workers will perform tasks in accordance with standard operating procedures • Workers will wear proper PPE	• SOP • Standing Orders • FCP Work Permit • Pre-job Briefing
	Illumination	• Measure illumination levels to ensure lighting is adequate	• IH Procs.
RCS Task 2: Maintenance of the condensate transfer pump	Radiological: Skin and/or internal contamination	• Mitigators/Controls are the same as for the task "Preventive maintenance of the chillers/desiccant dryers"	• RWP
	Radiological: Radiation exposure	• Mitigators/Controls are the same as for the task "Preventive maintenance of the chillers/desiccant dryers"	• RWP
	Hazardous Energy: Electrical Shock/ Inadvertent Equipment Start-up	• Energy isolation will be performed per site procedures • Lockout/tagout training	• EIP/SOP
	Slips, Trips, and Falls	• Good housekeeping practices will be followed by all personnel • Area lighting will be adequate for the type of work to be performed • If possible, avoid walking on uneven surfaces • Observe work area tripping hazards when coming to and leaving the area • Carefully place feet on stairs when ascending or descending stairway to the second floor of the RCS • Always use handrails when ascending or descending stairway to the second floor of the RCS • Always maintain 3-points of contact when ascending/descending stairways	• Briefings • Walk-throughs • Eng. design

TABLE 9-1: AWR PROJECT - RCS HAZARDS CONTROL MATRIX			
Task	**Hazard**	**Mitigators/Controls**	**Permits/ Guid. Docs**
Task 2 (cont.): Maintenance of the condensate transfer pump	Noise	• Wear hearing protection if required by area posting • Noise protection training	• Work Permit
	Housekeeping	• Maintain work areas and personnel access-ways free of obstructions and debris	• SPR 2-1
	Illumination	• Measure illumination levels to ensure lighting is adequate	• IH Procs.
	Head Impact	• Workers will be trained to perform tasks safely • Workers will perform tasks in accordance with standard operating procedures • Head protection will be worn by personnel when the potential for falling objects or head injuries due to impact exist.	• SOP • Standing Orders • FCP Work Permit • Pre-job Briefing
	Pinch Point, Puncture/Cut	• Workers will be trained to perform tasks safely • Workers will perform tasks in accordance with standard operating procedures • Workers will wear proper PPE	• SOP • Standing Orders • FCP Work Permit • Pre-job Briefing
	Chemical	• Follow the directions outlined in the MSDS for handling cleaners, lubricants, etc. • Supervision must ensure that workers have been briefed, as necessary, on MSDS's	• MSDS
RCS Task 3: Cleaning of the chiller coils within the desiccant dryers	Radiological: Skin and/or internal contamination	• Mitigators/Controls are the same as for the task "Preventive maintenance of the chillers/desiccant dryers"	• RWP
	Radiological: Radiation exposure	• Mitigators/Controls are the same as for the task "Preventive maintenance of the chillers/desiccant dryers"	• RWP

TABLE 9-1: AWR PROJECT - RCS HAZARDS CONTROL MATRIX			
Task	**Hazard**	**Mitigators/Controls**	**Permits/ Guid. Docs**
Task 3 (cont.): Cleaning of the chiller coils within the desiccant dryers	Hazardous Energy: Electrical Shock/ Inadvertent Equipment Start-up	• Energy isolation will be performed in accordance with site procedures • Lockout/tagout training	• EIP/SOP
	Slips, Trips, and Falls	• Good housekeeping practices will be followed by all personnel • Area lighting will be adequate for the type of work to be performed • If possible, avoid walking on uneven surfaces • Observe work area tripping hazards when coming to and leaving the area • Carefully place feet on stairs when ascending or descending stairway to the second floor of the RCS • Always use handrails when ascending or descending stairway to the second floor of the RCS • Always maintain 3-points of contact when ascending/descending stairways	• Briefings • Walk-throughs • Eng. design
	Housekeeping	• Maintain work areas and personnel access-ways free of obstructions and debris	• SPR 2-1
	Noise	• Wear hearing protection if required by area posting • Noise protection training	• Work Permit
	Illumination	• Measure illumination levels to ensure lighting is adequate	• IH Procs.
	Head Impact	• Workers will be trained to perform tasks safely • Workers will perform tasks in accordance with standard operating procedures • Head protection will be worn by personnel when the potential for falling objects or head injuries due to impact exist.	• SOP • Standing Orders • FCP Work Permit • Pre-job Briefing

TABLE 9-1: AWR PROJECT - RCS HAZARDS CONTROL MATRIX			
Task	**Hazard**	**Mitigators/Controls**	**Permits/ Guid. Docs**
Task 3 (cont.): Cleaning of the chiller coils within the desiccant dryers	Pinch Point, Puncture/Cut	• Workers will be trained to perform tasks safely • Workers will perform tasks in accordance with standard operating procedures • Workers will wear proper PPE	• SOP • Standing Orders • FCP Work Permit • Pre-job Briefing
	Chemical	• Follow the directions outlined in the MSDS for handling cleaners, lubricants, etc. • Supervision must ensure that workers have been briefed, as necessary, on MSDS's	• MSDS
RCS Task 4: Preventive maintenance of the variable speed fans and motors	Radiological: Skin and/or internal contamination	• Mitigators/Controls are the same as for the task "Preventive maintenance of the chillers/desiccant dryers"	• RWP
	Radiological: Radiation exposure	• Mitigators/Controls are the same as for the task "Preventive maintenance of the chillers/desiccant dryers"	• RWP
	Hazardous Energy: Electrical Shock/ Inadvertent start-up of equipment	• Energy isolation will be performed in accordance with site procedures • Lockout/tagout training	• EIP/SOP

TABLE 9-1: AWR PROJECT - RCS HAZARDS CONTROL MATRIX			
Task	**Hazard**	**Mitigators/Controls**	**Permits/ Guid. Docs**
Task 4 (cont.): Preventive maintenance of the variable speed fans and motors	Slips, Trips, and Falls	• Good housekeeping practices will be followed by all personnel • Area lighting will be adequate for the type of work to be performed • If possible, avoid walking on uneven surfaces • Observe work area tripping hazards when coming to and leaving the area • Carefully place feet on stairs when ascending or descending stairway to the second floor of the RCS • Always use handrails when ascending or descending stairway to the second floor of the RCS • Always maintain 3-points of contact when ascending/descending stairways	• Briefings • Walk-throughs • Eng. design
	Noise	• Wear hearing protection if required by area posting • Noise protection training	• Work Permit
	Housekeeping	• Maintain work areas and personnel access-ways free of obstructions and debris	• SPR 2-1
	Illumination	• Measure illumination levels to ensure lighting is adequate	• IH Procs.
	Head Impact	• Workers will be trained to perform tasks safely • Workers will perform tasks in accordance with standard operating procedures • Head protection will be worn by personnel when the potential for falling objects or head injuries due to impact exist.	• SOP • Standing Orders • FCP Work Permit • Pre-job Briefing
	Pinch Point, Puncture/Cut	• Workers will be trained to perform tasks safely • Workers will perform tasks in accordance with standard operating procedures • Workers will wear proper PPE	• SOP • Standing Orders • FCP Work Permit • Pre-job Briefing

TABLE 9-1: AWR PROJECT - RCS HAZARDS CONTROL MATRIX			
Task	**Hazard**	**Mitigators/Controls**	**Permits/ Guid. Docs**
Task 4 (cont.): Preventive maintenance of the variable speed fans and motors	Chemical	• Follow the directions outlined in the MSDS for handling cleaners, lubricants, etc. • Supervision must ensure that workers have been briefed, as necessary, on MSDSs	• MSDS
RCS Task 5: Replacement of the roughing filters	Radiological: Skin and/or internal contamination	• Mitigators/Controls are the same as for the task "Preventive maintenance of the chillers/desiccant dryers" • Workers will be trained on how to perform this task safely to prevent the spread of contamination	• RWP/SOP
	Radiological: Radiation exposure	• Mitigators/Controls are the same as for the task "Preventive maintenance of the chillers/desiccant dryers" • Administrative guidelines will be followed to prevent inadvertent exposure to employees (source material decays for allotted time) • Workers will be trained on how to perform this task in order to minimize personnel exposure during performance	• RWP/SOP

TABLE 9-1: AWR PROJECT - RCS HAZARDS CONTROL MATRIX			
Task	**Hazard**	**Mitigators/Controls**	**Permits/ Guid. Docs**
Task 5 (cont.): Replacement of the roughing filters	Slips, Trips, and Falls	• Good housekeeping practices will be followed by all personnel • Area lighting will be adequate for the type of work to be performed • If possible, avoid walking on uneven surfaces • Observe work area tripping hazards when coming to and leaving the area • Carefully place feet on stairs when ascending or descending stairway to the second floor of the RCS • Always use handrails when ascending or descending stairway to the second floor of the RCS • Always maintain 3-points of contact when ascending/descending stairways	• Briefings • Walk-throughs • Eng. design
	Noise	• Wear hearing protection if required by area posting • Noise protection training	• Work Permit
	Housekeeping	• Maintain work areas and personnel access-ways free of obstructions and debris	• SPR 2-1
	Illumination	• Measure illumination levels to ensure lighting is adequate	• IH Procs.
	Pinch Point, Puncture/Cut	• Workers will be trained to perform tasks safely • Workers will perform tasks in accordance with standard operating procedures • Workers will wear proper PPE	• SOP • Standing Orders • FCP Work Permit • Pre-job Briefing
	Head Impact	• Workers will be trained to perform tasks safely • Workers will perform tasks in accordance with standard operating procedures • Head protection will be worn by personnel when the potential for falling objects or head injuries due to impact exist.	• SOP • Standing Orders • FCP Work Permit • Pre-job Briefing

TABLE 9-1: AWR PROJECT - RCS HAZARDS CONTROL MATRIX			
Task	**Hazard**	**Mitigators/Controls**	**Permits/ Guid. Docs**
RCS Task 6: Replacement of the HEPA filters	Radiological: Skin and/or internal contamination	• Mitigators/Controls are the same as for the task "Preventive maintenance of the chillers/desiccant dryers" • Workers will be trained on how to perform this task safely to prevent the spread of contamination	• RWP/SOP
	Radiological: Radiation exposure	• Mitigators/Controls are the same as for the task "Preventive maintenance of the chillers/desiccant dryers" • Administrative guidelines will be followed to prevent inadvertent exposure to employees (source material decays for allotted time) • Workers will be trained on how to perform this task in order to minimize personnel exposure during performance	• RWP/SOP
	Slips, Trips, and Falls	• Good housekeeping practices will be followed by all personnel • Area lighting will be adequate for the type of work to be performed • If possible, avoid walking on uneven surfaces • Observe work area tripping hazards when coming to and leaving the area • Carefully place feet on stairs when ascending or descending stairway to the second floor of the RCS • Always use handrails when ascending or descending stairway to the second floor of the RCS • Always maintain 3-points of contact when ascending/descending stairways	• Briefings • Walk-throughs • Eng. design

TABLE 9-1: AWR PROJECT - RCS HAZARDS CONTROL MATRIX			
Task	**Hazard**	**Mitigators/Controls**	**Permits/ Guid. Docs**
Task 6 (cont.): Replacement of the HEPA filters	Pinch Point, Puncture/Cut	• Workers will be trained to perform tasks safely • Workers will perform tasks in accordance with standard operating procedures • Workers will wear proper PPE	• SOP • Standing Orders • FCP Work Permit • Pre-job Briefing
	Noise	• Wear hearing protection if required by area posting • Noise protection training	• Work Permit
	Housekeeping	• Maintain work areas and personnel access-ways free of obstructions and debris	• SPR 2-1
	Illumination	• Measure illumination levels to ensure lighting is adequate	• IH Procs.
	Hoisting and Rigging: Falling Objects	• Method for raising and lowering tools, filters, equipment to and from the second floor of the RCS should be established	• Briefings • Walk-throughs
	Head Impact: Falling objects	• Workers will be trained to perform tasks safely • Workers will perform tasks in accordance with standard operating procedures • Workers are never to position their bodies under a load • Only Qualified personnel will operate the hoist • Head protection will be worn by personnel when the potential for falling objects or head injuries due to impact exist.	• SOP • Standing Orders • FCP Work Permit • Pre-job Briefing

TABLE 9-1: AWR PROJECT - RCS HAZARDS CONTROL MATRIX			
Task	**Hazard**	**Mitigators/Controls**	**Permits/ Guid. Docs**
RCS Task 7: Shift-by-shift surveillance of RCS operations	Radiological: Skin and/or internal contamination	• Workers will be trained as 40-hr HAZWOPER/Rad Worker • Radiological contamination training • Workers will use good radiological work practices to prevent the spread of radioactive material and use containments when practical • Protective clothing and equipment will be used as prescribed by Radiological Controls • Workers will doff potentially contaminated PPE per posted instructions	• RWP
	Radiological: Radiation exposure	• Workers will be trained as 40-hr HAZWOPER/Rad Worker • Workers will practice ALARA while performing assigned tasks • Workers will perform assigned task as described in the pre-job briefing to minimize time spent in radiation area • Administrative guidelines will be followed to prevent inadvertent exposure to employees • Use of remotely-operated cameras	• RWP

TABLE 9-1: AWR PROJECT - RCS HAZARDS CONTROL MATRIX			
Task	**Hazard**	**Mitigators/Controls**	**Permits/ Guid. Docs**
Task 7 (cont.): Shift-by-shift surveillance of RCS operations	Slips, Trips, and Falls	• Good housekeeping practices will be followed by all personnel • Area lighting will be adequate for the type of work to be performed • If possible, avoid walking on uneven surfaces • Observe work area tripping hazards when coming to and leaving the area • Carefully place feet on stairs when ascending or descending stairway to the second floor of the RCS • Always use handrails when ascending or descending stairway to the second floor of the RCS • Always maintain 3-points of contact when ascending/descending stairways	• Briefings • Walk-throughs • Eng. design
	Noise	• Wear hearing protection if required by area posting • Noise protection training	• Work Permit
	Housekeeping	• Maintain work areas and personnel access-ways free of obstructions and debris	• SPR 2-1
	Illumination	• Measure illumination levels to ensure lighting is adequate	• IH Procs.
	Head Impact	• Workers will be trained to perform tasks safely • Workers will perform tasks in accordance with standard operating procedures • Head protection will be worn by personnel when the potential for falling objects or head injuries due to impact exist.	• SOP • Standing Orders • FCP Work Permit • Pre-job Briefing
	Elevated Work: Falls from ladders	• Ensure ladder is properly inspected prior to use • Ensure ladders are secured during use and used per manufacturer's guidelines	• Briefings • Walk-throughs • Eng. design

TABLE 9-1: AWR PROJECT - RCS HAZARDS CONTROL MATRIX			
Task	**Hazard**	**Mitigators/Controls**	**Permits/ Guid. Docs**
RCS Task 8: Sampling and transfer of condensate to AWWT	Radiological: Skin and/or internal contamination	• Workers will be trained as 40-hr HAZWOPER/Rad Worker • Radiological contamination training • Workers will use good radiological work practices to prevent the spread of radioactive material and use containments when practical • Protective clothing and equipment will be used as prescribed by Radiological Controls • Work area contamination levels will be kept to a minimum • RCTs will perform contamination surveys to determine work area control levels • Radon monitoring • Workers will doff potentially contaminated PPE per posted instructions • Administrative guidelines will be followed to prevent inadvertent exposure to employees (source material decays for allotted time) • Workers will be trained on how to perform this task in order to minimize personnel exposure during performance	• RWP • Oper. Procs.

TABLE 9-1: AWR PROJECT - RCS HAZARDS CONTROL MATRIX			
Task	**Hazard**	**Mitigators/Controls**	**Permits/ Guid. Docs**
Task 8 (cont.): Sampling and transfer of condensate to AWWT	Radiological: Radiation exposure	• Workers will be trained as 40-hr HAZWOPER/Rad Worker • Locked gates/warning lights/local radiation level display • Radiological postings • Workers will practice ALARA while performing assigned tasks • Workers will perform assigned task as described in the pre-job briefing to minimize time spent in radiation area • Administrative guidelines will be followed to prevent inadvertent exposure to employees • Task will be performed per maintenance procedure(s)/instructions • Minimize number of personnel in area • Workers will be trained on how to perform this task in order to minimize personnel exposure during performance	• FF RWP • Oper. Procs.
	Housekeeping	• Maintain work areas and personnel access-ways free of obstructions and debris	• SPR 2-1
	Head Impact	• Workers will be trained to perform tasks safely • Workers will perform tasks in accordance with standard operating procedures • Head protection will be worn by personnel when the potential for falling objects or head injuries due to impact exist.	• SOP • Standing Orders • FCP Work Permit • Pre-job Briefing
	Illumination	• Measure illumination levels to ensure lighting is adequate	• IH Procs.

9.2 WR&SS Hazards Control Matrix

The matrix in **TABLE 9-2** identifies Waste Retrieval and Storage Systems tasks, their hazards, and their controls/mitigators.

TABLE 9-2: AWR PROJECT - WR&SS HAZARDS CONTROL MATRIX

Task	Hazard	Mitigators/Controls	Permits/ Guid. Docs
WR&SS Task 1: Addition of sluice hose/mast sections	Heat Stress	• Measure temperatures and establish stay times as necessary • Heat stress training	• SPR 12-10
	Illumination	• Measure illumination levels to ensure lighting is adequate	• IH Procs.
	Environmental	• An S&H Representative will determine if operations must cease due to imminent severe weather. • Weather-affected work shall be stopped if lightning is detected within 10 miles of the site. • Weather-affected work shall be stopped if heavy persistent rain, limited visibility, heavy snow, or other adverse weather conditions are observed. • Any operation involving the use of cranes, man lifts, or personnel working at heights shall be suspended when wind velocity reaches 25 mph.	• SPR 2-14
	Housekeeping	• Maintain work areas and personnel access-ways free of obstructions and debris	• SPR 2-1
	Hoisting and Rigging	• Only trained and qualified personnel are to perform these activities • The Fluor Fernald Hoisting and Rigging Manual shall be followed for hoisting activities • All hoisting equipment shall be maintained in accordance with site requirements	• SPR 7-9 • SOP

TABLE 9-2: AWR PROJECT - WR&SS HAZARDS CONTROL MATRIX			
Task	**Hazard**	**Mitigators/Controls**	**Permits/ Guid. Docs**
Task 1 (cont.): Addition of sluice hose/mast sections	Ergonomics: Manual Lifting	• Use of correct lifting techniques • One individual may not exceed 35 pounds for repetitive lifts • One individual may not exceed 50 pounds for occasional lifts • All lifts greater than 50 pounds must be accomplished using mechanical means or with more than one person	• SPR 2-5
	Head Impact	• Workers will be trained to perform tasks safely • Workers will perform tasks in accordance with standard operating procedures • Head protection will be worn by personnel when the potential for falling objects or head injuries due to impact exist.	• SOP • Standing Orders • FCP Work Permit • Pre-job Briefing
	Pinch Point, Puncture/Cut	• Only trained and qualified persons are to perform these tasks • Persons will perform work in accordance with procedures • Procedures shall identify pinch and crush points and provide the appropriate cautionary notes • Equipment shall be locked-out, as necessary, to prevent inadvertent start-up	• Briefings • SOPs • EIPs
	Elevated Work	• Ensure ladders are properly inspected prior to use • Ensure ladders are secured during use and used per manufacturer's guidelines • Fall protection training	• Briefings • Walk-throughs • Eng. design

TABLE 9-2: AWR PROJECT - WR&SS HAZARDS CONTROL MATRIX			
Task	**Hazard**	**Mitigators/Controls**	**Permits/ Guid. Docs**
Task 1 (cont.): Addition of sluice hose/mast sections	Slips, Trips, and Falls	• Good housekeeping practices will be followed by all personnel • Area lighting will be adequate for the type of work to be performed • If possible, avoid walking on uneven surfaces • Observe work area tripping hazards when coming to and leaving the area • Carefully place feet on stairs when ascending or descending stairway to the second floor of the RCS • Always use handrails when ascending or descending stairway to the second floor of the RCS • Always maintain 3-points of contact when ascending/descending stairways	• Briefings • Walk-throughs • Eng. design

TABLE 9-2: AWR PROJECT - WR&SS HAZARDS CONTROL MATRIX			
Task	**Hazard**	**Mitigators/Controls**	**Permits/ Guid. Docs**
Task 1 (cont.): Addition of sluice hose/mast sections	Radiological: Skin and/or internal contamination	• Shut down transfer system and allow for decay of short-lived radionuclides (i.e., radon daughters) • Adjust operation of the RCS through dampers to regulate pressure • Workers will be trained as 40-hr HAZWOPER/Rad Worker • Radiological contamination training • Workers will use good radiological work practices to prevent the spread of radioactive material and use containments when practical • Protective clothing and equipment will be used as prescribed by Radiological Controls • Work area contamination levels will be kept to a minimum • RCTs will perform contamination surveys to determine work area control levels • RCT oversight • Radon and working level (WL) monitoring • Workers will doff potentially contaminated PPE per posted instructions	• RWP/SOP

TABLE 9-2: AWR PROJECT - WR&SS HAZARDS CONTROL MATRIX			
Task	**Hazard**	**Mitigators/Controls**	**Permits/ Guid. Docs**
Task 1 (cont.): Addition of sluice hose/mast sections	Radiological: Radiation exposure	• Shut down transfer system and allow for decay of short-lived radionuclides (i.e., radon daughters) • Adjust operation of the RCS through dampers to regulate pressure • Workers will be trained as 40-hr HAZWOPER/Rad Worker • Perform mockups when practical • Radiological postings • Steel plates provide shielding to reduce the dose rates in the work area • Temporary/portable shielding • Workers will practice ALARA while performing assigned tasks • Workers will perform assigned task as described in the pre-job briefing to minimize time spent in radiation area • Administrative guidelines will be followed to prevent inadvertent exposure to employees • Radiological Control personnel will monitor worker stay times • RCT oversight • Task will be performed per maintenance procedure(s)/instructions • Minimize number of personnel in area	• RWP/SOP
WR&SS Task 2: Clearance of sluice and slurry pipe clean-out ports	Elevated Work	• Ensure ladders are properly inspected prior to use • Ensure ladders are secured during use and used per manufacturer's guidelines • Observe work area tripping hazards when coming to and leaving the area • Inspect and use fall protection as designed.	• Briefings • Walk-throughs • Eng. Design • SPR 3-6 • SPR 3-1

TABLE 9-2: AWR PROJECT - WR&SS HAZARDS CONTROL MATRIX			
Task	**Hazard**	**Mitigators/Controls**	**Permits/ Guid. Docs**
Task 2 (cont.): Clearance of sluice and slurry pipe clean-out ports	Housekeeping	• Maintain work areas and personnel access-ways free of obstructions and debris	• SPR 2-1
	Slips, Trips, and Falls	• Good housekeeping practices will be followed by all personnel • Area lighting will be adequate for the type of work to be performed • If possible, avoid walking on uneven surfaces • Observe work area tripping hazards when coming to and leaving the area • Carefully place feet on stairs when ascending or descending stairways • Always use handrails when ascending or descending stairways • Always maintain 3-points of contact when ascending or descending stairways and ladders	• Briefings • Walk-throughs • Eng. design
	Radiological: Skin and/or internal contamination	• Workers will be trained as 40-hr HAZWOPER/Rad Worker • Radiological contamination training • Workers will use good radiological work practices to prevent the spread of radioactive material and use containments when practical • Protective clothing and equipment will be used as prescribed by Radiological Controls • Work area contamination levels will be kept to a minimum • RCTs will perform contamination surveys to determine work area control levels • RCT oversight • Radon monitoring • Workers will doff potentially contaminated PPE per posted instructions	• RWP/SOP

TABLE 9-2: AWR PROJECT - WR&SS HAZARDS CONTROL MATRIX			
Task	**Hazard**	**Mitigators/Controls**	**Permits/ Guid. Docs**
Task 2 (cont.): Clearance of sluice and slurry pipe clean-out ports	Radiological: Radiation exposure	• Workers will be trained as 40-hr HAZWOPER/Rad Worker • Perform mockups when practical • Radiological postings • Steel plates provide shielding to reduce the dose rates in the work area • Temporary/portable shielding • Workers will practice ALARA while performing assigned tasks • Workers will perform assigned task as described in the pre-job briefing to minimize time spent in radiation area • Administrative guidelines will be followed to prevent inadvertent exposure to employees • Radiological Control personnel will monitor worker stay times • RCT oversight • Task will be performed per maintenance procedure(s)/instructions • Minimize number of personnel in area	• RWP/SOP
	Pinch Point, Puncture/Cut	• Workers will be trained to perform tasks safely • Workers will perform tasks in accordance with standard operating procedures • Workers will wear proper PPE	• SOP • Standing Orders • FCP Work Permit • Pre-job Briefing
	Head Impact	• Workers will be trained to perform tasks safely • Workers will perform tasks in accordance with standard operating procedures • Head protection will be worn by personnel when the potential for falling objects or head injuries due to impact exist.	• SOP • Standing Orders • FCP Work Permit • Pre-job Briefing

TABLE 9-2: AWR PROJECT - WR&SS HAZARDS CONTROL MATRIX			
Task	**Hazard**	**Mitigators/Controls**	**Permits/ Guid. Docs**
Task 2 (cont.): Clearance of sluice and slurry pipe clean-out ports	Illumination	• Measure illumination levels to ensure lighting is adequate	• IH Procs.
	Hazardous Energy: Electrical Shock/ Inadvertent Equipment Start-up	• Energy isolation will be performed per site procedures • Lockout/tagout training	• EIP/SOP
WR&SS Task 3: Maintenance of the transfer pumps	Hazardous Energy: Electrical Shock/ Inadvertent Equipment Start-up	• Energy isolation will be performed per site procedures • Lockout/tagout training	• EIP/SOP
	Radiological: Skin and/or internal contamination	• Shut down transfer system and allow for decay of short-lived radionuclides (i.e., radon daughters) • Workers will be trained as 40-hr HAZWOPER/Rad Worker • Radiological contamination training • Workers will use good radiological work practices to prevent the spread of radioactive material and use containments when practical • Protective clothing and equipment will be used as prescribed by Radiological Controls • Work area contamination levels will be kept to a minimum • RCTs will perform contamination surveys to determine work area control levels • RCT oversight • Radon monitoring • Workers will doff potentially contaminated PPE per posted instructions	• RWP/SOP

TABLE 9-2: AWR PROJECT - WR&SS HAZARDS CONTROL MATRIX			
Task	**Hazard**	**Mitigators/Controls**	**Permits/ Guid. Docs**
Task 3 (cont.): Maintenance of the transfer pumps	Radiological: Radiation exposure	• Shut down transfer system and allow for decay of short-lived radionuclides (i.e., radon daughters) • Workers will be trained as 40-hr HAZWOPER/Rad Worker • Perform mockups when practical • Radiological postings • Steel plates provide shielding to reduce the dose rates in the work area • Temporary/portable shielding • Workers will practice ALARA while performing assigned tasks • Workers will perform assigned task as described in the pre-job briefing to minimize time spent in radiation area • Administrative guidelines will be followed to prevent inadvertent exposure to employees • Radiological Control personnel will monitor worker stay times • RCT oversight • Task will be performed per maintenance procedure(s)/instructions • Minimize number of personnel in area	• RWP/SOP

TABLE 9-2: AWR PROJECT - WR&SS HAZARDS CONTROL MATRIX			
Task	**Hazard**	**Mitigators/Controls**	**Permits/ Guid. Docs**
Task 3 (cont.): Maintenance of the transfer pumps	Slips, Trips, and Falls	• Good housekeeping practices will be followed by all personnel • Area lighting will be adequate for the type of work to be performed • If possible, avoid walking on uneven surfaces • Observe work area tripping hazards when coming to and leaving the area • Carefully place feet on stairs when ascending or descending stairway to the second floor of the RCS • Always use handrails when ascending or descending stairway to the second floor of the RCS • Always maintain 3-points of contact when ascending/descending stairways	• Briefings • Walk-throughs • Eng. design
	Noise	• Wear hearing protection if required by area posting • Noise protection training	• Work Permit
	Housekeeping	• Maintain work areas and personnel access-ways free of obstructions and debris	• SPR 2-1
	Pinch Point, Puncture/Cut	• Workers will be trained to perform tasks safely • Workers will perform tasks in accordance with standard operating procedures • Workers will wear proper PPE	• SOP • Standing Orders • FCP Work Permit • Pre-job Briefing
	Head Impact	• Workers will be trained to perform tasks safely • Workers will perform tasks in accordance with standard operating procedures • Head protection will be worn by personnel when the potential for falling objects or head injuries due to impact exist.	• SOP • Standing Orders • FCP Work Permit • Pre-job Briefing

TABLE 9-2: AWR PROJECT - WR&SS HAZARDS CONTROL MATRIX			
Task	**Hazard**	**Mitigators/Controls**	**Permits/ Guid. Docs**
Task 3 (cont.): Maintenance of the transfer pumps	Chemical	• Follow the directions outlined in the MSDS for handling cleaners, lubricants, etc. • Supervision must ensure that workers have been briefed, as necessary, on MSDS's	• MSDS
WR&SS Task 4: Preventive maintenance of the variable speed fans and motors	Hazardous Energy: Electrical Shock/ Inadvertent Equipment Start-up	• Energy isolation will be performed per site procedures • Lockout/tagout training	• EIP/SOP
	Radiological: radiation exposure	• Shut down RCS and/or transfer system and allow for decay of short-lived radionuclides (i.e., radon daughters), as necessary • Workers will be trained as 40-hr HAZWOPER/Rad Worker • Perform mockups when practical • Radiological postings • Steel plates provide shielding to reduce the dose rates in the work area • Temporary/portable shielding • Workers will practice ALARA while performing assigned tasks • Workers will perform assigned task as described in the pre-job briefing to minimize time spent in radiation area • Administrative guidelines will be followed to prevent inadvertent exposure to employees • Radiological Control personnel will monitor worker stay times • RCT oversight • Task will be performed per maintenance procedure(s)/instructions • Minimize number of personnel in area	• RWP/SOP

TABLE 9-2: AWR PROJECT - WR&SS HAZARDS CONTROL MATRIX			
Task	**Hazard**	**Mitigators/Controls**	**Permits/ Guid. Docs**
Task 4 (cont.): Preventive maintenance of the variable speed fans and motors	Slips, Trips, and Falls	• Good housekeeping practices will be followed by all personnel • Area lighting will be adequate for the type of work to be performed • If possible, avoid walking on uneven surfaces • Observe work area tripping hazards when coming to and leaving the area • Carefully place feet on stairs when ascending or descending stairway to the second floor of the RCS • Always use handrails when ascending or descending stairway to the second floor of the RCS • Always maintain 3-points of contact when ascending/descending stairways	• Briefings • walk-throughs • Eng. design
	Noise	• Wear hearing protection if required by area posting • Noise protection training	• Work Permit
	Illumination	• Measure illumination levels to ensure lighting is adequate	• IH Procs.
	Housekeeping	• Maintain work areas and personnel access-ways free of obstructions and debris	• SPR 2-1
	Pinch Point, Puncture/Cut	• Workers will be trained to perform tasks safely • Workers will perform tasks in accordance with standard operating procedures • Workers will wear proper PPE	• SOP • Standing Orders • FCP Work Permit • Pre-job Briefing
	Head Impact	• Workers will be trained to perform tasks safely • Workers will perform tasks in accordance with standard operating procedures • Head protection will be worn by personnel when the potential for falling objects or head injuries due to impact exist.	• SOP • Standing Orders • FCP Work Permit • Pre-job Briefing

TABLE 9-2: AWR PROJECT - WR&SS HAZARDS CONTROL MATRIX			
Task	**Hazard**	**Mitigators/Controls**	**Permits/ Guid. Docs**
Task 4 (cont.): Preventive maintenance of the variable speed fans and motors	Elevated Work	• Ensure ladders are properly inspected prior to use • Ensure ladders are secured during use and used per manufacturer's guidelines • Observe work area tripping hazards when coming to and leaving the area	• Briefings • Walk-throughs • Eng. design
WR&SS Task 5: Replacement of the HEPA filters	Ergonomics: Manual lifting	• Use of correct lifting techniques • One individual may not exceed 35 pounds for repetitive lifts • One individual may not exceed 50 pounds for occasional lifts • All lifts greater than 50 pounds must be accomplished using mechanical means or with more than one person	• SPR 2-5 • SOP
	Radiological: Skin and/or internal contamination	• Shut down RCS system and allow for decay of short-lived radionuclides (i.e., radon daughters), as necessary • Workers will be trained as 40-hr HAZWOPER/Rad Worker • Radiological contamination training • Workers will use good radiological work practices to prevent the spread of radioactive material and use containments when practical • Protective clothing and equipment will be used as prescribed by Radiological Controls • Work area contamination levels will be kept to a minimum • RCTs will perform contamination surveys to determine work area control levels • RCT oversight • Radon and working level (WL) monitoring • Workers will doff potentially contaminated PPE per posted instructions	• RWP/SOP

TABLE 9-2: AWR PROJECT - WR&SS HAZARDS CONTROL MATRIX			
Task	**Hazard**	**Mitigators/Controls**	**Permits/ Guid. Docs**
Task 5 (cont.): Replacement of the HEPA filters	Radiological: Radiation exposure	• Shut down RCS system and allow for decay of short-lived radionuclides (i.e., radon daughters), as necessary • Workers will be trained as 40-hr HAZWOPER/Rad Worker • Perform mockups when practical • Radiological postings • Steel plates provide shielding to reduce the dose rates in the work area • Temporary/portable shielding • Workers will practice ALARA while performing assigned tasks • Workers will perform assigned task as described in the pre-job briefing to minimize time spent in radiation area • Administrative guidelines will be followed to prevent inadvertent exposure to employees • Radiological Control personnel will monitor worker stay times • RCT oversight • Task will be performed per maintenance procedure(s)/instructions • Minimize number of personnel in area	• RWP/SOP

TABLE 9-2: AWR PROJECT - WR&SS HAZARDS CONTROL MATRIX			
Task	**Hazard**	**Mitigators/Controls**	**Permits/ Guid. Docs**
Task 5 (cont.): Replacement of the HEPA filters	Slips, Trips, and Falls	• Good housekeeping practices will be followed by all personnel • Area lighting will be adequate for the type of work to be performed • If possible, avoid walking on uneven surfaces • Observe work area tripping hazards when coming to and leaving the area • Carefully place feet on stairs when ascending or descending stairway to the second floor of the RCS • Always use handrails when ascending or descending stairway to the second floor of the RCS • Always maintain 3-points of contact when ascending/descending stairways	• Briefings • Walk-throughs • Eng. design
	Heat Stress	• Measure temperatures and establish stay times as necessary • Heat stress training	• SPR 12-10
	Housekeeping	• Maintain work areas and personnel access-ways free of obstructions and debris	• SPR 2-1
	Pinch Point, Puncture/Cut	• Workers will be trained to perform tasks safely • Workers will perform tasks in accordance with standard operating procedures • Workers will wear proper PPE	• SOP • Standing Orders • FCP Work Permit • Pre-job Briefing
	Head Impact	• Workers will be trained to perform tasks safely • Workers will perform tasks in accordance with standard operating procedures • Head protection will be worn by personnel when the potential for falling objects or head injuries due to impact exist.	• SOP • Standing Orders • FCP Work Permit • Pre-job Briefing
	Illumination	• Measure illumination levels to ensure lighting is adequate	• IH Procs.

TABLE 9-2: AWR PROJECT - WR&SS HAZARDS CONTROL MATRIX			
Task	**Hazard**	**Mitigators/Controls**	**Permits/ Guid. Docs**
WR&SS Task 6: Shift-by-shift operations surveillance	Elevated Work	• Ensure ladders are properly inspected prior to use • Ensure ladders are secured during use and used per manufacturer's guidelines • Observe work area tripping hazards when coming to and leaving the area	• Briefings • Walk-throughs • Eng. design
	Slips, trips, and falls	• Good housekeeping practices will be followed by all personnel • Area lighting will be adequate for the type of work to be performed • If possible, avoid walking on uneven surfaces • Observe work area tripping hazards when coming to and leaving the area • Carefully place feet on stairs when ascending or descending stairway to the second floor of the RCS • Always use handrails when ascending or descending stairway to the second floor of the RCS • Always maintain 3-points of contact when ascending/descending stairways	• Briefings • Walk-throughs, • Eng. design
	Noise	• Wear hearing protection if required by area posting • Noise protection training	• Work Permit
	Radiological: Radiation exposure	• Workers will be trained as 40-hr HAZWOPER/Rad Worker • Radiological postings • Workers will practice ALARA while performing assigned tasks • Workers will perform assigned task as described in the pre-job briefing to minimize time spent in radiation area • Administrative guidelines will be followed to prevent inadvertent exposure to employees	• RWP/SOP

TABLE 9-2: AWR PROJECT - WR&SS HAZARDS CONTROL MATRIX			
Task	**Hazard**	**Mitigators/Controls**	**Permits/ Guid. Docs**
Task 6 (cont.): Shift-by-shift operations surveillance	Housekeeping	• Maintain work areas and personnel access-ways free of obstructions and debris	• SPR 2-1
	Head Impact	• Workers will be trained to perform tasks safely • Workers will perform tasks in accordance with standard operating procedures • Head protection will be worn by personnel when the potential for falling objects or head injuries due to impact exist.	• SOP • Standing Orders • FCP Work Permit • Pre-job Briefing
	Illumination	• Measure illumination levels to ensure lighting is adequate	• IH Procs.

10.0 SYSTEM SAFETY REQUIREMENTS

System Safety Requirements are used to ensure project activities are maintained within the current safety envelope. The System Safety Requirements may be Safety Basis Requirements (SBRs) or Process Requirements (PRs), depending on the relative risk associated with each requirement. SBRs and PRs establish a two-tiered system of requirements or controls on the activities at the FCP. The higher-tier requirements are the SBRs, which are derived from specific parameters used in the safety evaluations. The lower-tier PRs are requirements that either decrease the likelihood of a potential accident scenario or act as accident mitigators to decrease the severity of the consequences of that event, but were not used as parameters in the applicable safety evaluations. The following definitions apply:

- **SBRs** – A limitation for a facility, operation, or activity which is directly associated with its analyzed safety envelope and current hazard categorization or classification. Examples of SBRs include:

  - In nuclear facilities with a Safety Analysis Report (SAR) or a Hazard Analysis Report (HAR), the SBRs may be termed Technical Safety Requirements (TSRs) and are subject to 10 CFR 830 Subpart B.

  - Limitations on material types, characteristics, and unique properties, such as, pyrophoricity, corrosiveness, toxicity, reactivity, flammability, etc., as specified in the analysis.

- **PRs** – PRs are developed and implemented to help ensure that SBRs are not exceeded or otherwise violated. Both SBRs and PRs establish requirements that the project must implement to ensure adequate defense-in-depth.

The AWR Project activities have been determined to qualify as Radiological (RAD) based on the analyses discussed in Appendix B, *Hazard Category Calculation*. Although Silos 1 and 2 qualify as nuclear Hazard Category 3 (HC-3) based on inventory, radon reduction and waste retrieval and storage activities qualify as RAD based on analytical consequences. Per DOE-STD-1120-98, *Integration of Environment, Safety and Health into Facility Disposition Activities* [Ref. 5], a RAD categorization/classification based on analytical consequences requires DOE approval.

Derivation of System Safety Requirements

The safety requirements derived in this section are applicable to the RCS and AWR Facilities and result from assessment of the integrated hazard analysis (IHA) discussed in Appendix A. Pre-existing safety basis requirements for the AWR Project were reviewed and then integrated with the IHA, which provided in-depth analysis of the operational tasks identified for the project. This integration of the IHA with previous documentation resulted in a comprehensive list of Evaluation Basis Accidents (EBAs) most likely to be encountered during construction, operation, and maintenance of the AWR Project. These EBAs were then evaluated for consequences. The evaluation results and their associated assumptions were used to identify SBRs and PRs.

Identification of the required SBRs and PRs was completed by a team of Silos personnel representing Operations, Quality Assurance, Engineering, Project Safety, and Nuclear and System Safety. The five EBAs described in Appendix G, as well as environmental and operational ALARA considerations, were evaluated as potential requirements for protecting the hazard categorization. Consequence analyses determined the worst EBA to be EBA-3, Silo Failure Due to Over- or Under-pressurization. The two EBAs involving RCS (EBA-1 and EBA–2) were close in consequence to the pressurization scenario. EBA-4 and EBA–5 had relatively low consequences.

SBR-1 was designed to protect the Silos from failure due to over- or under-pressurization (EBA-3). SBR-2 was developed during Phase I operation of the RCS, and is based on the number of curies in the carbon beds that could challenge the Radiological categorization, based on radiological dose consequences. SBR-3 is an administrative control to ensure that Heel Removal activities, still under development, would not proceed without a thorough review from Safety Analysis personnel.

PR-1 is simply a combination of two operational PRs from the RCS N-HASP (revision 0 of this AWR N-HASP). PR-2 is also a combination of two RCS PRs that address the need for airborne-release monitoring. PR-3 documents the manufacturer's requirements for the Silos relief valve. PR-4 and PR-5 are a defense-in-depth for SBR-1. PR-6 protects the TTA from failure due to over- or under-pressurization. PRs from the RCS N-HASP that were removed include protection for flexible ductwork that will be removed before AWR startup, functionality testing that is now complete, and wastewater requirements that exist elsewhere.

Violation of System Safety Requirements

The requirements established by the FCP Safety Programs are relied upon to ensure that AWR operations are conducted safely. Several support programs, such as the Quality Assurance Program and the Conduct of Operations Program, are relied upon to ensure that the elements of the FCP Safety Program are met. The maintenance of each of the safety programs is addressed within the associated program requirements manuals. In general, violations of FCP Safety Program requirements are addressed using QA-0001, *Fluor Fernald Nonconformance Identification and Tracking System* [Ref. 40]. The remaining discussion within this section establishes the actions to be taken following a violation of the specific requirements (i.e., SBRs and PRs).

Both SBRs and PRs establish requirements which ensure adequate defense-in-depth. Violation of an SBR or PR is subject to the requirements of SH-1006, *Event Investigation and Reporting* [Ref. 41], because a violation has a potential to degrade the Safety Basis. In the case of PRs, the requirement shall be evaluated to determine the impact to the defined SBR(s). In all cases, discovery of a violation results in appropriate notifications and an evaluation of impacts to the Safety Basis.

NOTE: Because the silos themselves are HC-3 facilities, when a potential SBR/PR violation could affect the Silos, the potential violation will be evaluated using the Safety Analysis Evaluation Process in Addendum 2 of PL-3049, *Implementation Plan for SARs and TSRs at the FEMP* [Ref. 42]. SBR/PR violations that affect the Silos are subject to the Unreviewed Safety Question (USQ) process per NS-0002, *Unreviewed Safety Question (USQ) Determination and Safety Evaluation System* (USQD/SE System) [Ref. 29]. See also Section 10.2, Silos Project TSR.

Overview of the Potential Violation Response

An AWR system safety SBR or PR violation occurs when there is a noncompliance with the requirement(s) listed in Section 10.1. If there is a deviation from a system safety SBR or PR, activities will be placed in a safe configuration and the AEDO contacted. No further actions shall be taken until Nuclear and System Safety (N&SS) has evaluated the deviation to determine whether a violation has occurred.

Following notification of a potential violation, project management may determine to temporarily limit the affected activities until the evaluation is completed. This limitation is defined as the "restricted" mode of operations and allows time to adequately evaluate the impact of violating the requirements and to initiate corrective actions. If an incident occurs, the Silos Start-up and Operations Manager would issue a Long Term Order or equivalent document that defines the restricted operations. A restricted operating mode does not constitute a facility shutdown resulting from operations outside the approved Safety Basis and will not automatically require re-start authority per QA-0021, *Administration and Conduct of Standard Startup Review SSR Activities* [Ref. 43], to resume operations.

Once activities have been halted, N&SS personnel shall make a determination if operations have been conducted outside the Safety Basis. Operations determined to be outside the Safety Basis require a formal facility shutdown, corrective action, and restart approval. DOE-FCP has delegated to Fluor Fernald the approval authority for safety documentation and the startup and restart of Radiological and Other Industrial Facilities at the FCP [Ref. 44]. If the violation results in exceeding the delegated authority granted by DOE- FCP (e.g., hazard category greater than RAD), then the USQD/SE process shall be initiated.

10.1 AWR System Safety Requirements

The matrix in **TABLE 10-1** has been developed to identify RCS and WR&SS System Safety Requirements, reference the origin of the requirements, and identify the method(s) of control and implementing document(s), as appropriate. These System Safety Requirements are provided for Defense-in-Depth. Table 10-1 is the requirements matrix pursuant to the DOE-approved *Decision Basis Document Implementation of 10 CFR 830 Safe Harbor Requirements for the Silos Projects,* 40000-RP-0034 [Ref. 1]. Table 10.1 identifies the requirements of the written site safety and health program and project specific requirements that relate to system safety and are relied upon for maintaining the safety envelope.

As identified in Appendix G, *AWR Accident Analysis*, there are no safety class or safety-significant components associated with the RCS or WR&SS systems. This is based on the fact that RCS- and WR&SS-initiated accident scenarios do not yield consequences that would exceed on-site dose limits, nor was any mitigation credit taken for these systems, structures, and components in the consequence analysis. However, SBRs and PRs were developed around these components to provide defense-in-depth.

TABLE 10-1: AWR PROJECT SYSTEM SAFETY REQUIREMENTS

SBR, PR	REQUIREMENT	BASIS/SOURCE	IMPLEMENTATION
RADON CONTROL SYSTEM			
SBR-1	When the RCS is operating, maintain silo pressure between −4 in. and +6 in.	Silo failure from over- or under-pressurization (N-HASP Vol. 2 App. G, EBA-3). *Evaluation of Naturally Occurring Pressures for Silos 1 & 2*[1]	Engineering controls: • Pressure reliefs • Process controls and Interlocks • I-Tab
SBR-2	Maintain radon inventories within the carbon beds below 1458 curies.	Worker and public Protection (N-HASP, Vol. 2, App. G, EBA-2)	• Operating procedure
SBR-3	Heel removal activity and D&D work, which will occur later, will require further analysis, and must be authorized by updating documentation including, but not limited to, this N-HASP.	Exact details for these activities are still evolving.	• Safety Basis Impact Screen (SBIS) for N-HASP revision (see Section 6.0) • NS-0003, *Obtaining Safety Analysis Support* [Ref. 45]
PR-1	When pulling radon-laden air from the Silo(s) headspace, keep at least one chiller, desiccant/dryer, and carbon bed operational within design parameters.	Protect continued operations of the beds. Public and worker protection (N-HASP, Vol. 2, App. G)	• I-Tab • DCN process • Operations procedures
PR-2	The RCS stack monitoring capability will be maintained within defined operability parameters, with established action level thresholds and operating limits. Operating data from the particulate filtering system (i.e., ΔP) can be relied upon during maintenance events on the stack sampler.	Public and worker protection (N-HASP, Vol. 2, App. E)	• Operating procedure for stack monitors

[1] Calculation 40710-CA-0015, Rev. 0; 10-23-02. Attached to Memo M:SP:2002-0078; same title; Tom Shiner to Jack Hughes, 10-23-02

TABLE 10-1: AWR PROJECT SYSTEM SAFETY REQUIREMENTS			
SBR, PR	**REQUIREMENT**	**BASIS/SOURCE**	**IMPLEMENTATION**
PR-3	The Silos relief valves must be calibrated within the required periodicity.	Worker protection (N-HASP Vol. 2, App. G, EBA-1) Silo failure from over- or under-pressurization (N-HASP Vol. 2 App. G, EBA-3)	• Tabware
PR-4	Prior to establishing the RCS Silos headspace flow path, at least one PCV shall be operable for the affected silo.	Silo failure from over- or under-pressurization (N-HASP Vol. 2 App. G, EBA-3)	• Operations procedure
PR-5	When the RCS is operating, maintain silo pressure between −3.5 in. and +4.5 in.	Silo failure from over- or under-pressurization (N-HASP Vol. 2 App. G, EBA-3).	Engineering controls: • Pressure reliefs • Process controls and Interlocks
WASTE RETRIEVAL AND STORAGE SYSTEMS			
PR-6	When the RCS is operating, maintain TTA pressure between −3.5 in. and +4.5 in.	TTA failure from over- or under-pressurization (N-HASP Vol. 2 App. G, EBA-5)	Engineering controls: • Pressure reliefs • Process controls and Interlocks

10.2 Silos Project Technical Safety Requirement (TSR)

Technical Safety Requirements (TSRs) are the limits, controls, and related requirements necessary for the safe operation of a nuclear facility and, as appropriate for the work and the hazards identified in the documented safety analysis for the facility, includes management controls, use and application provisions, and design features, as well as a basis appendix. TSRs are subject to 10 CFR 830, Subpart B [Ref. 6].

The Silos Project (including AWR) has one TSR (see **TABLE 10-2**). There are no additional TSRs specific to the AWR Project. Planned AWR operations and activities will be conducted within the umbrella of the Silos safety basis (i.e., the Silos TSR).

SBR/PR violations that affect the Silos are subject to the Unreviewed Safety Question (USQ) process per NS-0002, *Unreviewed Safety Question (USQ) Determination and Safety Evaluation System* (USQD/SE System) [Ref. 29]. When a proposed activity could violate the Silos TSR (or potentially affect some other aspect of the Silos safety basis), the activity will be evaluated using the Safety Analysis Evaluation Process listed in NS-0002.

TABLE 10-2: SILOS PROJECT TECHNICAL SAFETY REQUIREMENT (TSR)			
TSR	**Requirement**	**Basis/Source**	**Implementation**
TSR-1	ZONE A (within the center 40-ft diameter of the dome): • AREA LIVE LOADS: No loads greater than 1000 pounds, each spread over an area of at least 20 square feet. Loads may be applied simultaneously at not more than two different locations, which are separated by a distance of at least 10 feet within Zone A. • ANNULAR LIVE LOADS: Maximum of 1000 lbs. total, at 30 pounds per square foot, around the openings within Zone A. ZONE B (outside the center 40-ft diameter of the dome): • AREA LIVE LOADS: maximum of 2000 lbs., each spread over an area of at least 20 square feet. Loads may be applied simultaneously at not more than four different locations, which are separated by a distance of at least 20 feet within Zone B. For a dome zone map and further details on limiting conditions on loads and equipment operation, see the OU4 TSR document [Ref. 46].	Worker and co-located worker protection-Technical Safety Requirements Document [Ref. 46]	• Silo Dome Access Permit • Critical Lift Plans • Silos Design Change Notice procedure

11.0 TRAINING REQUIREMENTS

The *Silos Project Training and Qualification Program Description*, TQP-067, [Ref. 47] establishes the training and qualification requirements for Silos personnel. The program's objectives are to:

- ensure that workers understand the potential hazards they may encounter.
- ensure that workers possess the knowledge and skills necessary to perform their work with minimal risk to their health and safety.
- ensure that workers are aware of the safety requirements, including the purpose and limitations of safety equipment.
- ensure that workers can safely avoid or escape from emergencies.

The program ensures that workers meet the minimum requirements of 29 CFR 1910.120, DOE Order 5480.20A [Ref. 48] (applicability as described in RM-0043, *FEMP Training Implementation Matrix* [Ref. 49]), 40 CFR 264.16 [Ref. 50] and other relevant regulations, as applicable.

Health and Safety Training

Workers will receive the appropriate training based on their scope of work. Workers performing activities which fall under 29 CFR 1910.120 [Ref. 51] will receive a required number of hours of initial and annual-refresher health and safety training for hazardous waste site operations. In addition to the initial health and safety training, workers will receive one to three days of directly-supervised field experience.

All personnel performing work under 29 CFR 1910.120 are required to be trained per RM-0055, *FEMP Access* [Ref. 52], in one of the following categories:

- Occasional Site Worker
- General Site Worker

Workers whose work scope does not require hazardous waste site operations training will receive a level of training that is specific to the type of activities to be performed and the hazards to be encountered. Personnel may not participate in field activities until they have been appropriately trained.

Job and Safety Briefings (all hazards)

Before commencement of field activities, all personnel performing fieldwork will participate in a briefing that will specifically address the activities, procedures, monitoring, and equipment used in the work. The briefing will include a description of the work to be accomplished, known hazards (all types), administrative controls, and PPE requirements. This briefing will also allow field workers to receive clarification of anything they do not understand and to confirm their responsibilities regarding safety and operations for their particular activity.

Project personnel will attend periodic safety briefings/meetings. Briefings will be conducted at the start of the day, and at the start of any new task to assist site personnel in safely conducting their work. The briefings will include information on new operations to be conducted, changes in work practices, changes in the project's environmental conditions, and periodic reinforcement of previously-discussed topics. The briefings will also provide a forum to facilitate conformance with safety requirements and to identify safety-related performance deficiencies during daily activities or as a result of safety inspections. The meetings will also be an opportunity for safety personnel to periodically update the crews on monitoring results. Before starting any new activity, an analysis of hazards will be performed and used to inform workers of the potential hazards. There will be an emphasis on particular hazards involved with each job. For example, radiological, chemical, and electrical hazards may be emphasized if pertinent for the operational work that is scheduled to be performed. Written documentation of the briefings and attendance sheets will be maintained as part of the project safety files.

Hazard Communication (chemical hazards)

Hazard communication training will be provided per the OSHA 29 CFR 1910.1200 [Ref. 53] requirements. The training shall provide workers with information on chemicals used on the Silos Project and their potential hazards. The training will be incorporated in formal instruction and/or pre-job briefings. Material Safety Data Sheets (MSDSs), labeling, and other forms of warnings will be used in conjunction with the training to foster worker awareness.

Classes of Silos Personnel and their Training and Qualification Requirements

Management qualifies personnel for a position based on the individual's education, experience, training, and performance. The term "qualification" has a different meaning for each position and may be executed in different ways. There are four primary classes of personnel associated with the Silos Project:

- Fluor Fernald, Inc., Employees: Position descriptions list the applicable selection criteria, including the education and experience requirements, for these Fluor Fernald Employees. TQP-067, *Silos Projects Training and Qualification Program Description* [Ref. 47], identifies training requirements. TQP-067 may identify additional training and requirements, for some personnel, by referring to other Training and Qualification Program Descriptions. The applicable Description will identify the method used to qualify an individual for each position. Methods range from formal qualification to being considered qualified by meeting the hiring criteria.

- Staff Augmentation Personnel: The applicable position requisition and justification documents identify the selection criteria for Staff Augmentation Personnel. TQP-067 identifies training requirements. TQP-067 may identify additional training and requirements, for some personnel, by referring to other Training and Qualification Program Descriptions. The applicable Description will identify the method used to qualify an individual for each position. Methods range from formal qualification to being considered qualified by meeting the hiring criteria.

- Construction/Maintenance Subcontract: Each subcontract identifies the personnel selection criteria (if applicable). The criteria may include education and experience requirements. The subcontract identifies the training requirements for Subcontract Personnel. These requirements are based on the hazards of the work. If qualification is necessary, the subcontract will identify who should be qualified and what qualification method should be used.

- Support Personnel Assigned for Tasks: Support Personnel will support the project periodically for short periods to provide distinct services. Those personnel shall be selected, trained, and qualified per the applicable Training and Qualification Program Description(s) for the services they provide. The supervisor who assigns the individual to work with the Silos Project must ensure that the individual is current in the applicable training requirements identified in RM-0055, *FEMP Access*, [Ref. 52] and all applicable work permits. Personnel will be briefed on the N-HASP and the Construction Safety HASP, if applicable. Personnel shall receive the applicable Pre-Job and Rad Work Permit briefings, as required. Prior to the start of work, Silos Project Management will ensure that personnel have been trained as specified in the work permits.

Silos Vendors and Visitors

Silos vendors and visitors will not have unescorted access to the Silos Project site. Vendors and visitors will be briefed per this N-HASP commensurate with their planned activities.

12.0 PERSONAL PROTECTIVE EQUIPMENT (PPE)

Fluor Fernald provides Personal Protective Equipment (PPE) to the Fluor work force in order to protect them from the various hazards present in the work place. **TABLE 12-1** lists most of the PPE issued to workers at the Silos. Other types of PPE may be required and issued for certain tasks. Levels of protection are subject to change based on air monitoring data, radiological data, and other types of work-area monitoring data. For more information on what PPE to use for a work activity, consult the current RWP, Work Permits, Work Plans, and procedures. Radiological Control Technicians (RCTs) and Fluor Fernald H&S Representatives will provide guidance when needed.

TABLE 12-1: PERSONAL PROTECTIVE EQUIPMENT (PPE)		
Type of Protection	**PPE Name**	**PPE Use**
Respiratory Protection (See Fluor Fernald Respiratory Protection Program [Ref. 54])	Air Purifying Respirator (APR)	For potential airborne contamination less than 50 times the PEL (see Note 1)
	Powered Air Purifying Respirator (PAPR) (full-face, tightly-sealed)	For potential airborne contamination less than 50 times the PEL (see Notes 1 and 2)
	Self Contained Breathing Apparatus (SCBA)	For potential airborne contamination less than 10,000 times the PEL
Eye Protection	Safety Glasses with side shields (ANSI Z-87 approved)	Required for site access and all site activities
	Face shield	Where splash hazard exists
	Cutting goggles (or equivalent cutting shield for use with respiratory protection)	For torch cutting operations.
Eye Protection (Cont.)	Welding Helmet (or equivalent welding shield for use with respiratory protection)	For welding operations
Hand Protection	Nitrile gloves Leather Palm Gloves Long Leather Gloves (Gauntlets)	Concrete work Sharp edges
Head Protection	Hard Hat (American National Standards Institute [ANSI] Z-89 approved)	Required where posted
Foot Protection	Steel-toed boots	Required for all site activities
	Latex overboots	For protection against contamination
	Rubber overshoes	For secure footing in contamination area

TABLE 12-1: PERSONAL PROTECTIVE EQUIPMENT (PPE)		
Type of Protection	**PPE Name**	**PPE Use**
	Polyethylene booties	Inner liners. Do not use as outer foot ware.
	Cloth Anti-C Booties	Inner liners. Do not use as outer foot ware.
Skin Contact Protection	Cloth Anti C Coveralls with Hood	For contamination protection
	Tyvek Coveralls with Hood	For contamination protection
	Poly-Coated (Yellow) Tyvek with Hood	For splash protection
	Saranex Coated Tyvek with hood	For heavier splash protection
	PVC Coveralls (or overalls with jacket)	For use with acid(s) and caustic solutions
Hearing Protection (See Fluor Fernald Hearing Protection Program [Ref. 55])	Ear Plugs	Use for noises greater than 85 dB (do not exceed rating)
	Ear Muffs (head phones)	For use in conjunction with ear plugs (see Note 3)
Fall Protection (See Fluor Fernald Fall Protection Program [Ref. 56])	5-point body harness and lanyard	For use where installed fall protection (i.e., railings) is inadequate
	Beam strap	To create a secure tie-off point at a secure location such as a steel beam.

Note 1: In order to be effective, the cartridge used must be able to filter, absorb, or adsorb the contaminant of concern. Consult RWP, Permits, Plans, MSDS(s), and/or with H&S Representative for more information.

Note 2: PAPR protection is recognized to be as high as 1000 times the DAC for some radionuclides (i.e., particulates, which would include Thorium-230). Consult the RWP or Radiological Control for more information.

Note 3: Headphones have a lower noise-reduction rating than earplugs, plus wearing hoods and other anti-contamination clothing can further reduce their effective noise rating.

13.0 MEDICAL SURVEILLANCE

Per 29 CFR 1910.120, *Hazardous Waste Operations and Emergency Response*, all personnel assigned to an FCP project and performing actual tasks are required to participate in the Fluor Fernald medical monitoring program.

Medical approval must be received prior to performing work. If an outside medical resource is used to provide any portion of the monitoring program, the individual must receive prior written authorization from Fluor Fernald, which has final approval authority for external medical monitoring programs. Fluor Fernald will provide a list of pre-approved outside medical resources upon request. Fluor Fernald Medical Services will provide minimum requirement protocols for their employees. Medical documentation showing that personnel meet minimum requirements shall be submitted in a sealed envelope marked "SENSITIVE" to the Fluor Fernald Medical Director, Mail Stop 30, with a copy of the transmittal sheet to FCP Document Control.

General Programs

Workers identified as hazardous waste site workers will be required to undergo medical examinations. Supervisors should make employees available for such examinations.

Special medical (health hazard) monitoring requirements as prescribed by 29 CFR 1910, *Occupational Safety and Health Standards*; 29 CFR 1910.120, *Hazardous Waste Operations and Emergency Response*; other federal, state, or local statutes; and specific site HASPs, may be fulfilled by sources outside of Fluor Fernald (e.g., lead and associated tests). Documentation (e.g., copies of medical examinations, laboratory tests, biologic monitoring reports) shall be provided to the Fluor Fernald Medical Director, as specified above. Biological monitoring requirements will be based on the hazardous chemical identified through monitoring.

No food or drink shall be consumed after 11PM prior to scheduled medical pre-assignment monitoring.

Workers shall report any open wounds prior to entry into a Controlled Area. Workers with wounds that cannot be covered are restricted from working in Radiological Areas.

Use of Prescription Medicine

- Non-prescription medicine shall not be taken into Controlled Areas with the single exception of Glucose Tablets which may be taken by diabetics. Employees needing Glucose Tablets shall register with the Fluor Fernald Medical Department.

- Prescription medicine will only be recognized as legitimate for on-site use after the employee to whom the medicine is prescribed registers the medicine with the Fluor Fernald Medical Department.

- In the event of an emergency, an employee may take prescription medicine on the spot, regardless of the area in which he or she is standing. If medicine has been taken under these conditions, the employee should contact Fluor Fernald to determine what action, if any, will be required of the employee in regard to dosimetry.

Employees receiving medical treatment with radio-pharmaceuticals will be restricted from entering Controlled Areas until such time as the radio-pharmaceutical has cleared sufficiently from his/her system so that frisking with a Personal Contamination Monitor (PCM) at the control point does not trigger the alarms. Employees receiving such treatment shall report to Fluor Fernald Medical Services beforehand so appropriate precautions can be taken. Employees who have received treatment with radio-pharmaceuticals shall report to Medical immediately upon returning to work.

Pregnant employees should report to Fluor Fernald Medical. The employee will be informed of risks related to her pregnancy as a result of working on the Contract. The employee may "Declare Pregnancy" per 10 CFR 835 [Ref. 37]. If declared, Fluor Fernald will ensure that the employee's thermoluminescent dosimeter (TLD) is read monthly (as opposed to quarterly). Fluor Fernald's administrative control limit is 50 mrem/month or 400 mrem/gestation period.

Medical Services

The project N-HASP, Work Plans, Work Permits, and RWPs contain information on project-specific hazards to which workers may be exposed.

The Fluor Fernald Medical Department has the following Medical Monitoring Programs in place for workers with potential exposures (including all of the laboratory, x-ray, and other testing ordinarily included in the Biologic Monitoring Program):

- Asbestos Worker
- Hazardous Waste Worker (including radiation)
- Lead Worker (and other heavy metals)
- Hearing Conservation

Other hazardous constituents exist within the K-65 material matrix. In addition, a calculation and evaluation was performed that ranked the radiological and chemical constituents as to their hazard significance (*Silos 1 and 2 Material Airborne Control Limit Calculation* [Ref. 39]). The highest chemical hazard was from lead and arsenic. Both of these are ranked below the radiological hazard

of Th-230. In addition, the controls for Th-230 and other radiological constituents will control the chemical constituents.

Some workers are required by regulation to be entered into a long-term Health Surveillance Process Program. Other standards of care/practice in Industrial Hygiene, Occupational Medicine, or Health Physics may also dictate special testing or programs for some workers. Air sampling for various AWR constituents may identify additional medical monitoring if airborne concentrations indicate high airborne levels.

The Fluor Fernald Medical Director will be the final authority to determine the fitness of any worker or his/her suitability to perform work and be exposed to any of the various hazards at the FCP.

14.0 AIR MONITORING

NOTE: This discussion excludes radiological contamination monitoring, which is discussed in Appendix H, *Health Physics Plan*.

A comprehensive air sampling program is essential for evaluating the hazards of work situations with the potential for worker exposure to hazardous substances. In many instances, air sampling data can also provide the basis for development and evaluation of control procedures, and can indicate whether or not operational changes are necessary to provide adequate protection of affected personnel. Air sampling data will be used to define airborne concentrations so that, if necessary, timely additional engineering or administrative controls can be implemented, and to verify that appropriate PPE has been assigned.

14.1 RCS and WR&SS Air Monitoring

Air-contaminant exposures may be created when the closed parts of the RCS or WR&SS systems are opened and the system internals are exposed during maintenance activities. Air-contaminant exposure monitoring will be performed when there is a potential for exposure at or above ½ the American Conference of Governmental Industrial Hygienists (ACGIH) Threshold Limit Values-Time Weighted Average (TLV-TWA) [Ref. 57] or OSHA Permissible Exposure Level-Time Weighted Average (PEL-TWA) (action level) [Ref. 58], whichever is most restrictive. Personal sampling shall be conducted on the personnel involved in the task with emphasis on those employees with the greatest risk of exposure. Samples will be collected in the workers' breathing zone.

14.2 Silos Project Air Monitoring Requirements

The Silos Project follows established air monitoring requirements as prescribed in the Fluor Fernald site procedures, the National Institute of Occupational Safety and Health (NIOSH) Analytical Methods, and the OSHA and ACGIH Exposure Criteria. Proper implementation of these requirements is necessary to assess the levels of hazardous contaminants in the atmosphere of the working environment.

The approach used is an integrated one that uses real-time air monitoring equipment in conjunction with personal and general area air sampling:

- Real-time Instruments can give immediate data on the levels of contaminants (without specifying which contaminants are being monitored), volatile chemicals (without specifying individual chemicals), oxygen, and carbon monoxide. Additional qualitative and quantitative information on specific chemicals can be obtained through the use of colormetric (Draeger™) tubes, but they have limited accuracy.

- Personal and General Area air sampling can give more specific and accurate data on the levels of individual components of the atmosphere. However, the samples must be sent to a lab for analysis and the results are not immediately known. See Section 8.21 for further discussion of personal air sampling and the chemical of concern.

TABLE 14-1 lists the various types of real-time air monitoring equipment used at the Silos, the associated action levels along with the response action(s), the various PELs and TLVs and the response actions if the PELs or TLVs are exceeded. The response to a detection by a colormetric (Draeger) tube will vary based on the chemical. Ordinarily, the use of a colormetric tube will be integrated with another real-time method such as a Photo Ionization Detector (PID).

TABLE 14-1: REAL-TIME AIR MONITORING EQUIPMENT, ACTION LEVELS, AND RESPONSES

Monitor	Action Level	Action to be taken	PEL or TLV	Response
Oxygen	Greater than 23.5% or less than 19.5%	• Evacuate area • Investigate remotely • Upgrade to level B protection for re-entry	NA	NA
Combustible Gas Indicator (CGI)	> 10 % LEL	• Immediately stop all hot work activity • Evacuate area • Investigate remotely	NA	NA
Carbon Monoxide	> 25 PPM	• Investigate source • Suppress (vent or shut off)	> 50 PPM	• Evacuate area • Upgrade to level B protection before re-entry
Photo Ionization Detector (PID)	> 10 PPM	• Initiate vapor suppression techniques (enclose source or vent)	NA	NA

TABLE 14-1: REAL-TIME AIR MONITORING EQUIPMENT, ACTION LEVELS, AND RESPONSES				
Monitor	**Action Level**	**Action to be taken**	**PEL or TLV**	**Response**
Colormetric (Draeger) tubes	> ½ PEL	Various. Typically: • Attempt to suppress airborne chemical • Investigate source	> PEL	Various. Typically: • Evacuate area • Upgrade level of protection, as appropriate

Data Quality Assurance

All instruments (air, noise, heat/cold, and illumination) shall be calibrated as specified by the manufacturer. Duplicate readings may be taken to confirm individual instrument response. Also, all instruments will be maintained in good working order as specified by the manufacturer. Air-sampling pumps used to collect worker-exposure samples shall be calibrated before and after sample collection. Calibrations shall be accomplished using a primary standard calibration system. Results of the calibrations shall be included on air-sampling data sheets. Calibration of noise-monitoring equipment will be performed per manufacturers' guidelines. Results of the calibrations shall be included on noise-survey data sheets.

Data Review

S&H personnel shall review the analytical results to evaluate the potential for worker exposure, upgrade/downgrade of protection limits, and changes in sampling/monitoring strategy. Reports and correspondence will be generated per procedure 602-5024, *Industrial Hygiene Air Sampling Program* [Ref. 59].

Laboratory Analysis

Chemical analysis of samples collected for assessment of employee exposures shall be performed only by analytical laboratories accredited by the American Industrial Hygiene Association. The laboratory analysis will include field blanks, as required by the individual method or laboratory. Duplicate samples or splits with other laboratories may be used during the project. The laboratory shall also be a successful participant in the Proficiency Analytical Test (PAT) program for the category of material they are analyzing.

15.0 DECONTAMINATION PLAN

The Silos Project is a hazardous waste remediation project. Any person working in an area where the potential for exposure to project contaminants exists will only be allowed access after providing evidence of proper training and proper medical documentation.

During the conduct of AWR activities, various work areas will be established. Entrances to, and perimeters of, Radiological Areas will be defined by yellow snow fencing and/or yellow-and-magenta rope. All radiological areas will be identified by signs having the standard radiation symbol (the tri-foil) on a yellow background and inserts describing the reason for the boundary and the controls necessary for entry.

Contamination Control

Decontamination of radiological and some chemical contaminants may be required during the conduct of AWR operations. This will be accomplished by the use of or a combination of HEPA-filtered vacuum units, wet-wiping techniques, approved detergents or soaps, or the use of sealants or fixatives when immediate decontamination is not feasible or practical. Decontamination areas will be established for personnel decontamination and equipment decontamination.

Personnel Decontamination

If radioactive contamination is detected on the skin or clothing, contact a Radiological Control Technician (RCT) immediately. When performing personnel contamination monitoring with automated instrumentation such as a Personnel Contamination Monitor (PCM) or a Hand and Foot Monitor (HFM), all alarms must be reported to an RCT for an evaluation before proceeding from the area. When performing manual personnel surveys with portable instruments (friskers), detection of a net count rate exceeding Fluor Fernald limits specified in the RWP should alert personnel of possible contamination.

Depending on the nature, location, and extent of the personnel contamination, Radiological Control may direct the contaminated personnel to initiate a bioassay analysis to assess a potential internal radiation dose from possible inhalation, ingestion, absorption, or injection of radioactive materials.

Any circumstance that could have resulted in an intake of radioactive materials by inhalation, ingestion, absorption, or injection shall be immediately reported to a supervisor. The supervisor shall immediately report the circumstance of possible radioactive materials intake to an RCT for evaluation. Radiological Control/Medical will determine further actions.

In the unlikely case of body contact with an acid or caustic agent, non-permeable PPE should be doffed with extreme caution to prevent contact with the skin. Contaminated inner clothing shall be removed. The affected body area shall be washed thoroughly (15 minutes minimum) in a safety shower or eye bubbler in the case of a splash into the eye(s). Involved personnel shall report immediately to their supervisor and Medical.

In many cases, chemical contamination can be removed by physical means involving rinsing, wiping off, or vacuuming. Additional efforts to decontaminate may include the use of mild soap and/or soft-bristle brushes. Efforts shall be made to prevent loose chemical contamination from entering body openings and to prevent breaking the skin barrier. If the skin barrier is removed or breached during decontamination, medical assistance will be sought. Sensitive areas such as eyes, body cavities, or wounds are more difficult to decontaminate and will be dealt with by Medical.

If immediate medical treatment is required to save a life, decontamination will be delayed until the victim is stabilized.

Equipment Decontamination

If equipment becomes contaminated during an AWR operation or maintenance activity, Radiological Control personnel will establish an area to perform the necessary decontamination. The area configuration will be based on the actual size of the equipment, levels of contamination, dispersability of the contamination, and the methods for performing the decontamination.

For chemical decontamination, efforts will be made to avoid coming into contact with the contaminated equipment. Standing or walking through pools of liquid will be discouraged. Objects may be encapsulated with plastic sheeting or other material to prevent contact with contaminated items. Physical removal methods for chemical contamination may include using water with a mild soap, vacuuming, scraping, brushing, and wiping. Surfactants, such as detergents, may be used to augment physical cleaning methods by reducing adhesion forces between chemical contaminants and the surface being cleaned, and by preventing redeposit of the contaminants.

16.0 EMERGENCY RESPONSE PLAN

The Silos Emergency Plan has been developed to cover extraordinary conditions that might occur at the Silos and is to be used in conjunction with Fluor Fernald Site Emergency Action Plan.

Silos project personnel have the responsibility to be aware of the actions required of them under all site emergency procedures. However, there are two emergency procedures that require particular emphasis:

- EM-0020, *Building Emergency Procedure* [Ref. 60]
- EM-0030, *Silos Area Emergency Procedure* [Ref. 61]

EM-0020 provides details for standard emergencies (e.g., Fire, Severe Weather, Bomb Threat). EM-0030 provides detail for actions to be taken in the event of a potential significant release of radon from Silos 1 or 2.

Reporting

TABLE 16-1 lists the emergency numbers that shall be used to report emergencies at the Silos:

NOTE: In addition to the EP emergency notification requirements specified in this section, there is an AWR Project Management requirement to report any emergencies to the RCS Control Room at x5492. AWR emergency policies are discussed in the AWR Standing Orders [Ref. 21].

TABLE 16-1: FCP EMERGENCY NUMBERS

EMERGENCY RESOURCE	FROM FCP PHONE (911 is routed to 6511)	FROM CELL OR NON-FCP PHONE	BY RADIO
Ambulance	911	513-648-6511	Control Channel 2
Hospital	911	513-648-6511	Control Channel 2
Fire	911	513-648-6511	Control Channel 2
Security	911	513-648-6511	Control Channel 2
Emergency Response	911	513-648-6511	Control Channel 2
Assistant Emergency Duty Officer (AEDO)	4749 4444	513-648-4749 513-648-4444	202/ Control Channel 2

Site Notification Procedures

All emergencies shall be reported to the Fluor Fernald Communication Center to ensure rapid response. Whenever personnel are working, a means to report emergencies shall be available at all work locations. This may be accomplished by one or more of the following methods:

- Dial 911 on any site phone
- Dial 513-648-6511 on cell phones or any non- FCP phone
- Activate any fire alarm station
- Radio to Control Channel 2

Any injury, no matter how minor, shall be reported to FCP Medical Department for evaluation or treatment. The injured party shall be accompanied by the supervisor in charge or his designee. The Silos S&H Representative shall be notified as soon as possible after the injury/accident has occurred.

Personnel will be notified of emergency or abnormal conditions by the plant-wide alarm system and radio announcements. Announcements follow the sounding of the site alarm horn signal. Emergencies may also be announced by fire-alarm pull stations which are programmed to alarm locally and at the Emergency Operations Center.

What to Report

The following are examples of emergencies that justify calling and reporting:

- Serious Injury
- Injury Complicated by Contamination
- Hazardous Waste or Hazardous Substance Emergency
- Radiation/Contamination Release
- Chemical Splash (Eye and Skin)
- Chemical Spill
- Any Fire
- Property Damage
- Adverse Weather Conditions
- Atypical Events
- Loss of Containment
- Loss of Utilities

When an emergency or abnormal condition is observed, personnel shall contact the Communications Center at extension 911 or via radio (Control Channel 2). Stay on the phone line until the dispatcher hangs up. The following information must be given to the Communications Center Operator:

- Name
- Badge Number
- Location of emergency
- Nature of emergency
- Number of personnel with injuries
- Unusual conditions (odors, symptoms, vapors, smoke)
- Current status of the emergency

Evacuation Routes

Should a situation require an emergency evacuation of the work areas, all equipment should be shut off (if possible) and left in place. Personnel should immediately proceed to primary Rally Point 4 (on the west side of the 30/45 parking lot). The back-up rally point is Rally Point 6 (at the corner of 2nd St. and "A" St.).

Emergency Response

Any request for emergency help should be requested by telephone (911 by site phone or 513-648-6511 by cell or non-site phone) or on any FCP radio frequency by calling Control Channel 2.

Medical Emergencies

For a medical emergency at the FCP, call 911 (by site phone) or 513-648-6511 (by cell or non-site phone) or on any FCP radio frequency by calling Control Channel 2. The FCP Communications Center will contact the off-site Subcontracted Response Team regarding the emergency. The Subcontracted Response Team will initially treat the individual at the scene and then transport him/her to a local hospital emergency room.

Fire Emergencies

All work sites shall maintain effective communication to summon fire-fighting assistance. Access to work areas shall be maintained at all times to permit fire trucks and fire-fighting crews to safely approach the fire emergency.

Only trained personnel shall attempt to operate any fire-fighting equipment and only when the fire is clearly within the capability of the fire-fighting equipment.

The Subcontracted Response Forces will respond to all on-site fire emergencies. For any fire at the FCP, call 911 (by site phone) or 513-648-6511 (by cell or non-site phone) or on any FCP radio frequency by calling Control Channel 2.

Explosion Emergencies

When an explosion has occurred, the following actions are to be taken:

1. Activate the closest fire alarm, if possible. If a fire alarm is not available, notify other employees by an alternate method (call the RCS Control Room, x5492).

2. Evacuate the work area.

3. Proceed to the appointed rally point

   NOTE: The primary rally point is Rally Point 4 (on the west side of the 30/45 parking lot).
   The back-up rally point is Rally Point 6 (at the corner of 2nd St. and "A" St.).

4. If qualified, render first-aid to any injured personnel.

5. Instruct all persons in transit to avoid the work area and surrounding area.

6. Contact Control Channel 2 by radio or by phone at 911 (by site phone) or 513-648-6511 (by cell or non-site phone).

7. Call for medical assistance, if necessary.

8. Report to your supervisor for accountability.

Bomb Threat Emergencies

Anyone receiving a bomb threat shall immediately notify Control Channel 2 by radio or by phone at 911 (by site phone) or 513-648-6511 (by cell or non-site phone). Refer to the Bomb Threat Checklist on the back of the Fernald Telephone Directory. Details about responding to various types of bomb threats are discussed in EM-0020, *Building Emergency Procedure* [Ref. 60].

Chemical Emergencies

Splashes

Flush the affected area for 15 minutes and report to Medical Services. Remember to always follow the MSDS guideline.

Personal Contamination (Chemical)

When contaminated with a corrosive or caustic material, flush the affected area with clean water for 15 minutes. Report to Medical Services. The injured party shall be accompanied by the supervisor in charge or his designee. The Silos S&H Representative shall be notified as soon as possible after the injury/accident has occurred.

All instances of personal chemical contamination shall be reported to Silos S&H Representative and the Assistant Emergency Duty Officer (AEDO).

Any situation which could have resulted in the inhalation, ingestion, or absorption of a hazardous material shall immediately be reported to supervision and the Silos S&H Representative and the AEDO, who will report the circumstances to Medical Services. The involved personnel shall be directed by the AEDO or Supervision as to when and where to report for medical evaluation, completion of an Incident Investigation Report, and submission of bioassay samples (e.g., blood, urine).

Radiological Emergencies

Releases

For all releases, the release area shall be evacuated. The Supervisor in charge, AEDO, RCTs, and a Silos S&H Representative shall be notified of the release.

If a silo dome failure occurs on one of the domes, all work shall be stopped in the Silos area, and the actions of EM-0030, *Silos Area Emergency Procedure* [Ref. 61], shall be followed.

The significance of this event will be greatly reduced with the RCS in operation. However, if this event occurs, the critical action is to get personnel working around the domes evacuated out of the immediate area. The evacuation route should take into account the wind direction. Do not evacuate in the direction of the wind. For specifics on radon exposure, see Appendix H, *Health Physics Plan*.

Personal Contamination (Radiological)

Contamination should be avoided where possible by making minimum contact with the contaminant. All instances of personal radiological contamination must be reported to Radiological Control, the Supervisor, and the AEDO.

Any circumstance which could have resulted in an intake of radioactive materials by inhalation, ingestion, absorption, or injection shall be immediately reported to a supervisor. The supervisor shall immediately report the circumstance of possible radioactive materials intake to Radiological Control for evaluation. When the suspect isotope is uranium, the involved person shall report to the Urine Sampling Station at the end of their respective shift to complete an Incident Investigation Report, available at the urine sampling station, and submit an incident urine sample. The involved person shall also report to the Urine Sampling Station at the start of their next shift to submit a follow-up urine sample. When the suspect isotope is other than uranium, the involved person shall report to Radiological Control for determination of further actions. Personnel are responsible for complying with additional requirements specified by Radiological Control. Personnel decontamination will be performed per Fluor Fernald Radiological Control requirements.

Uncontrolled Hazardous Waste or Hazardous Substance Release

Under 29 CFR 1910.120, *Hazardous Waste Operations and Emergency Response,* an emergency exists when a site experiences an occurrence that results in, or is likely to result in, an uncontrolled hazardous waste or hazardous substance release, causing a potential health or safety hazard that cannot be mitigated by personnel in the immediate work area where the release occurs. In the case of an emergency, trained responders from the Fluor Fernald Emergency Response Organization will be relied upon for response.

Silos Project personnel will assist Fluor Fernald Emergency Response by providing detailed information regarding the emergency and any technical input needed to ensure the safety of the responders, the public, and the environment.

Incidental Release of Hazardous Substances

Under 29 CFR 1910.120 (a) (3), responses to incidental releases of hazardous substances where the substance can be absorbed, neutralized, or otherwise controlled at the time of release by employees in the immediate release area, or by maintenance personnel, are not considered to be emergency responses within the scope of HAZWOPER. Responses to releases of hazardous substances where a potential health or safety hazard (i.e., fire, explosion, or chemical exposure) does not exist are considered to be non-emergency responses.

Management will ensure that only qualified personnel, trained in incidental release clean-up under the Hazard Communication Standard, will respond to incidental releases. These personnel are not considered emergency responders.

Spill Response

In order to prevent the spread of contamination from spills of hazardous chemicals, Fluor Fernald has provided the following controls for the Silos. In most instances, spills should be cleaned up quickly before they become larger or contaminate larger areas. Large spills should only be handled with the assistance of the FCP Emergency Response Team and Subcontracted Response Forces.

- Engineering Spill Controls: Secondary containment will be provided for any acid and caustic storage tanks determined to be necessary. Fuel cells are double-walled for containment of leaks. Floor areas are sloped to allow spilled materials to be collected in containment sumps.

- Administrative Spill Controls: Spill control kits will be placed in strategic areas. Specific spill-response steps are provided in the appropriate Fluor Fernald procedures. Only personnel trained in performing spill response should attempt to implement these procedures.

General Spill Guidelines

The following guidelines are provide as basic information on spill response. These guidelines would apply to any spill potentials envisioned for the AWR Project. Consult the applicable procedure, MSDS, or Work Plan for detailed spill response guidelines.

1. Before the task begins, review and be familiar with the MSDS or appropriate document for the chemical to be used.

2. Before the task begins, note the location(s) of the nearest spill kit(s) and ensure they are adequately stocked.

3. In the event of a spill, remove personnel from the area, as appropriate

4. Contact your supervisor.

5. If the spill is large enough, it may require the assistance of the FCP Emergency Response Team. The supervisor shall contact them.

6. Barricade the spill area by the use of caution tape or another appropriate method.

7. Before entering the spill area, assure that the appropriate air monitoring has been performed.

8. Before entering the spill area, upgrade the level of protection, as necessary.

9. Prevent the spill from spreading any further by containing it with absorbent "socks," pads, or any compatible material.

10. Clean the spill by moving from the less-contaminated areas to the more-contaminated areas.

11. After cleaning the area, ensure that the area is safe for entry by use of air monitoring or other appropriate method before removing the barricade.

12. After cleaning the area, contain and dispose of the spilled material and PPE appropriately.

Post-Emergency Response

Post-emergency response is defined under HAZWOPER as that portion of an emergency response performed after the immediate threat of a release has been stabilized or eliminated and cleanup of the site has begun. Making this distinction is critical because, among other things, different training requirements and different exposure levels may apply depending on the phase of response. If post-emergency response is performed by personnel who were part of initial emergency response, it is considered to be part of the initial response and not post-emergency response.

Weather Limitations/Adverse Conditions

Any outside work will be suspended if warnings for high winds, lightning, or tornadoes are sounded. Any operations utilizing cranes or personnel working on elevated steel will be suspended if wind velocity reaches 25 mph.

Personnel will assemble in the Silos Operations & Maintenance [SOM] building (formerly the Vitrification Pilot Plant [VitPP]) when severe weather approaches and/or signaled to do so via the Emergency Message System.

17.0 OCCURRENCE REPORTING

DOE's Occurrence Reporting Program provides timely notification to the DOE Complex of events that could adversely affect: public or DOE worker health and safety, the environment, national security, DOE's safeguards and security interests, functioning of DOE facilities, or the Department's reputation. DOE analyzes aggregate occurrence information for generic implications and operational improvements. The Program and its data system, the Occurrence Reporting and Processing System (ORPS) are described in DOE Order 231.1A [Ref. 62] and its associated manual, DOE M 231.1-2 [Ref. 63].

DOE Order 231.1A arranges occurrences into ten groups that relate to DOE operations. These ten groupings are used solely for ease of reference and do not represent program requirements. The categories of occurrences are designed to be generic. The ten groups of categorized occurrences are:

1. Operational Emergencies
2. Personnel Safety
3. Nuclear Safety Basis
4. Facility Status
5. Environmental

6. Contamination/Radiation Control
7. Nuclear Explosive Safety (not applicable at the FCP)
8. Transportation
9. Noncompliance Notifications
10. Management Concerns/Issues

Implementation of ORPS at the FCP is performed by the Occurrence Reporting Team (ORT) of the Safety & Health Department, SH&Q Division, per SH-0028, *Occurrence Reporting* [Ref. 26] and SH-1006, *Event Investigation and Reporting* [Ref. 41].

Price-Anderson Amendments Act (PAAA) Background and Implementation

The Price-Anderson Amendments Act (PAAA) of 1988 provides indemnification (i.e., "nuclear insurance") to DOE contractors who manage and operate nuclear facilities in the DOE complex. Under this act, DOE contractors, subcontractors, and suppliers are subject to criminal and civil penalties for violations of nuclear safety requirements. Civil penalties (fines) are assessed against companies (not individuals). Criminal penalties include incarceration for individuals at all levels where egregious violations are committed.

DOE's complex-wide Noncompliance Tracking System (NTS) database is provided for contractors to report PAAA NTS reportable noncompliances. When PAAA noncompliances are identified as NTS reportable, the contractor must post the initial report on NTS within 20 calendar days of the event discovery. The established system is used to identify, report, track, trend, and develop corrective actions for noncompliance issues covered by PAAA and its implementing regulations ("nuclear safety requirements"). Current DOE nuclear safety requirements include the following rules, or sections thereof:

- 10 CFR 707, *Workplace Substance Abuse Programs at DOE Sites* [Ref. 64]
- 10 CFR 708, *DOE Contractor Employee Protection Program* [Ref. 65]
- 10 CFR 820.11, *Information Requirements* [Ref. 66]
- 10 CFR 830, *Nuclear Safety Requirements* [Ref. 6]
  - Subpart A: *Quality Assurance Requirements*
  - Subpart B: *Safety Basis Requirements*
- 10 CFR 835, *Occupational Radiation Protection* [Ref. 37]
- 15 CFR 280, *Fastener Quality Act* [Ref. 67]

In 1993, 10 CFR 820, *Procedural Rules for DOE Nuclear Activities* [Ref. 68], and 10 CFR 820 Appendix A, *General Statement of DOE Enforcement Policy*, were promulgated to promote and protect the radiological health and safety of the public and workers at DOE facilities by ensuring compliance with nuclear safety requirements, providing positive incentives for specific actions, deterring future violations, and encouraging continuous overall improvement of operations. The enforcement policy applies to all indemnified DOE contractors, subcontractors, and other suppliers who are responsible for performing activities or supplying services or products subject to DOE nuclear safety requirements.

FCP implementation of PAAA is performed by assigned individuals within the SH&Q Division and involves process owners in any organization. MS-1008, *Identifying, Reporting, and Tracking Price-Anderson Amendments Act Noncompliances* [Ref. 69] is Fluor Fernald's site-level procedure on noncompliance screening and reporting classification. MS-1008 provides direction, guidance information, definitions, clarifications, and/or interpretations of specific terms and requirements contained in applicable documents. Fluor Fernald has also implemented a program for reporting noncompliances with PAAA rules. Per DOE guidance, Fluor Fernald uses DOE's complex-wide NTS for "NTS reportable" noncompliances and also maintains an internal system (PAAA Database) for reporting and tracking "non-NTS reportable" noncompliances.

18.0 MAINTENANCE MANAGEMENT

The Fluor Fernald *Maintenance Implementation Plan (MIP)*, PL-3080, constitutes an agreement among the DOE Ohio Field Office, DOE-FCP, FCP (formerly the Fernald Environmental Management Project [FEMP]), and Fluor Fernald, Inc., on the implementation of the requirements of DOE Order 4330.4B, *Maintenance Management Program* [Ref. 70]. The MIP defines the programs and procedures in place to address the elements of the order at the FCP. The seven guiding principles and five core functions of Integrated Safety Management are incorporated in maintenance planning and execution.

The MIP addresses implementation of programmatic requirements and provides a listing of implementing documents and procedures. A graded approach, consistent with DOE Order 4330.4B guidance for nonreactor nuclear facilities, is used to define the depth of detail required, and magnitude of resources expended for, Fluor Fernald maintenance management elements commensurate with each element's relative importance to safety, environmental protection and compliance, safeguards and security, property preservation, fulfillment of the programmatic mission, and/or other facility-specific requirements. The Fluor Fernald maintenance management program policy states that all DOE property must be maintained in a manner which promotes operational safety, worker health, environmental protection and compliance, property preservation, and cost-effectiveness while meeting the programmatic mission. Structures, systems, and components that are important to safe operation will be subject to a maintenance program in order to meet or exceed their design requirements throughout their life.

A master equipment list of structures, systems, and components identified for tracking at the FCP is maintained in a computerized maintenance management database called the TabWare System. This listing has been graded in accordance with site engineering procedure ED-12-4015, *Performance Grading* [Ref. 71], which provides guidance for applying a performance grade to all components on the equipment list. The performance grade then establishes the basis for applying a graded approach to the level of review and documentation necessary for implementing maintenance and safety requirements. The TabWare System, used in conjunction with the Automated Work Package (AWP) System, is the management system used to plan, schedule, track, store, review, and analyze data for work requests/orders.

The Silos Project will follow the MIP and MT-0003, *FEMP Work Request/Order Procedure* [Ref. 72], for the conduct of maintenance. The Silos Operations and Maintenance Group will provide oversight, first-line supervision, and utilize FAT&LC personnel to perform maintenance activities.

The maintenance organization will use maintenance reference guides to provide a systematic approach in analyzing maintenance requirements for planning, scheduling, coordination, and overseeing the completion of maintenance activities for the project. The Silos Project will develop preventive maintenance and standard repair maintenance procedures that will be incorporated in the TabWare System. In addition, the project will establish a spare parts list and inventory and will be responsible for the performance of required calibrations.

19.0 QUALITY ASSURANCE PROGRAM

Fluor Fernald's *Quality Assurance Program (QAP),* RM-0012 [Ref. 73], is based on the appropriate criteria and requirements specified in 10 CFR Part 830 Subpart A, *Quality Assurance Requirements* [Ref. 74]. This QAP, approved by DOE Letter DOE-0359-03 [Ref. 75] dated May 5, 2003, establishes quality assurance requirements for the conduct of activities, including items or services, that affect or may affect nuclear safety of DOE nuclear facilities. The QAP establishes the QA requirements for Fluor Fernald and all other contractor and subcontractor organizations performing work at the FCP. The QAP identifies and describes the integral elements of the QA activities that apply to the broad spectrum of work performed at the FCP.

The QAP, along with its associated policies and procedures, establishes a system for achieving or exceeding the required quality levels for FCP activities. Where, and to the extent that, activities must be controlled and performed in specific manners or steps, procedures and work instructions will be used with a level of specificity appropriate to the importance or hazard of the activity. Personnel will be trained to these procedures and instructions and will be expected to follow them exactly. In the event that personnel believe that procedural compliance is unwise or unsafe, they will stop work at a position of process safety and stability and resolve the concerns with appropriate supervision. Procedural changes will then be made, as appropriate, to continue work.

Major Silos work activities include remedial actions, construction, decontamination and decommissioning, program management, and support activities. Project planning, design, and execution are performed in compliance with applicable QA and safety and health regulations, and Fluor Fernald, Inc. policies and procedures using a balanced approach. Silos Quality Assurance management coordinates independent QA assessments and QC inspections and surveillances including review and approval of document submittals and Title III inspection of construction activities. QA personnel are certified/qualified/trained to perform assigned activities, as required.

A special QA program plan has been developed for the Silos Project. The *Quality Assurance Job Specific Plan for the Silos Project*, 40000-QA-0001 [Ref. 76], describes the programs and procedures needed to achieve and verify quality for the Silos Project. These programs and procedures implement the applicable broad requirements of the QAP and define specific implementation strategy, tailored to achieve and verify quality in design, construction, closure, monitoring, and documentation.

For record purposes, the basic requirements of DOE Order 414.1A, *Quality Assurance* [Ref. 77], and 10 CFR Part 830 Subpart A are identical. 10 CFR Part 830 Subpart A is intended to supersede the existing requirements in DOE Order 414.1A. Approved management programs based on DOE Order 414.1A will meet the requirements of 10 CFR Part 830 Subpart A.

THIS PAGE INTENTIONALLY BLANK

20.0 REFERENCES

1. 40000-RP-0034, *Decision Basis Document Implementation of 10 CFR 830 Safe Harbor Requirements for the Silos Projects*, Fluor Fernald; March 2002

2. 10 CFR 830.204, *Documented Safety Analysis,* Title 10 Code of Federal Regulations, Part 830, Subpart 204, U.S. Department of Energy; January 10, 2001

3. 29 CFR 1910.120(b)(4), *Site Specific Safety and Health Plan,* Title 29 Code of Federal Regulations, Part 1910, Subpart 120, Section (b)(4), Occupational Safety and Health Administration; July, 2001

4. NS-0005, *Initiating, Reviewing, and Approving DOE-Approved Safety Basis Documents;* Fluor Fernald

5. DOE-STD-1120-98, *Integration of Environment, Safety, and Health into Facility Disposition Activities*, U.S. Department of Energy; May, 1998

6. 10 CFR 830, *Nuclear Safety Management,* Title 10 Code of Federal Regulations, Part 830, U.S. Department of Energy; January 10, 2001

7. NSTP-2002-2, *Methodology for Final Categorization for Nuclear Facilities from Category 3 to Radiological*, DOE-EH-53, Office of Nuclear Safety, 11-13-02.

8. 40710-PL-0022, *Silos Process Control Laboratory QA Plan*, Fluor Fernald

9. SH-0025, *Fluor Fernald Lessons Learned Program*, Fluor Fernald

10. 40000-PEP-0001, *Silos Project Execution Plan*; Fluor Fernald

11. DOE Order 5480.23, CH-1, *Nuclear Safety Analysis Reports*, U.S. Department of Energy; March, 1994

12. DOE-STD-1027-92, *Hazard Categorization and Accident Analysis Techniques for Compliance with DOE Order 5480.23, Nuclear Safety Analysis Reports*, U.S. Department of Energy; September, 1997

13. 29 CFR 1910.119, *Process Safety Management of Highly Hazardous Chemicals; Explosives and Blasting Agents;* Final Rule, Code of Federal Regulations, Occupational Safety and Health Administration; February, 1992

14. PL-3081, *Safety Management System Description (SMSD);* Fluor Fernald

15. DOE Policy 450.4, *Safety Management System Policy*, U.S. Department of Energy; October 15, 1996

16. 48 CFR 970.5204-2, *Department of Energy Acquisition Regulation (DEAR) Clause*, Department of Energy; June, 1997

17. Fernald Closure Contract DE-AC24-010H20115; November, 2000; Conformed: June 11, 2003

18. RM-0016, *Management Plan*, Fluor Fernald

19. CT-2.1.1, *Construction Project Planning and Construction Invitation for Bid/Request for Proposal (IFB/RFP) Preparation*, Fluor Fernald

20. 40000-PL-0013, *Silos Construction Health and Safety Plan*, Fluor Fernald; December 11, 2001

21. M-156, *Standing Orders for Advanced Waste Retrieval and Silos 1 and 2 Operations*, Fluor Fernald

22. DOE Order 5480.19, *Conduct of Operations Requirements for DOE Facilities*, U.S. Department of Energy; May 18, 1992

23. *Safety Evaluation Report* [SER] *for Implementation of 10 CFR 830 Safe Harbor Requirements for the Silos Project, 40000-RP-0034*, U.S. Department of Energy; July 2, 2002

24. DOE-STD-1120-98, *Integration of Environment, Safety, and Health into Facility Disposition Activities*, U.S. Department of Energy; May, 1998

25. RM-0012, *Quality Assurance Program*, Fluor Fernald

26. SH-0028, *Occurrence Reporting*, Fluor Fernald

27. MS-2001, *FCP Document Program*, Fluor Fernald

28. 624-P622-50, *Preliminary Hazards Analysis Report for the Silo 1 and 2 Accelerated waste Retrieval Project*, Foster Wheeler Environmental Corporation; January, 2000

29. NS-0002, *Unreviewed Safety Question (USQ) Determination and Safety Evaluation Systems;* Fluor Fernald

30. MS-1040, *Software Quality Assurance*, Fluor Fernald

31. RM-0021, *Safety Performance Requirements Manual,* Fluor Fernald

32. OSHA 29 CFR 1910.95, *Occupational Noise Exposure*, Title 29 Code of Federal Regulations, Part 1910, Subpart 95, Occupational Safety and Health Administration; July, 2001

33. 29 CFR 1926.56, *Illumination*, Title 29, Code of Federal Regulations, Part 1926, Subpart 56, Occupational Safety and Health Administration; July 1, 2002

34. 29 CFR 1926.150, *Fire Protection*, Title 29 Code of Federal Regulations, Part 1926, Subpart 150, Occupational Safety and Health Administration; July, 2001

35. OP-0004, *Fluor Fernald Lockout Tagout Program,* Fluor Fernald

36. RM-0045, *Fluor Fernald Hoisting and Rigging Manual,* Fluor Fernald

37. 10 CFR 835, *Occupational Radiation Protection*, Title 10 Code of Federal Regulations, Part 835, U.S. Department of Energy; July, 2001

38. *Remedial Investigation Report for Operable Unit 4,* Final, Volumes 1 through 3, Fernald Environmental Management Project; November, 1993

39. 40700-RAD-0003, *Silos 1 and 2 Material Airborne Control Limit Calculation*, Fluor Fernald; January, 2000

40. QA-0001, *Fluor Fernald Nonconformance Identification and Tracking System,* Fluor Fernald

41. SH-1006, *Event Investigation and Reporting*, Fluor Fernald

42. PL-3049, Rev. 5, *Implementation Plan for Safety Analysis Reports and Technical Safety Requirements at the Fernald Environmental Management Project*; Fluor Fernald; December 3, 2002

43. QA-0021, *Administration and Conduct of Standard Startup Review SSR Activities,* Fluor Fernald

44. DOE-1411-96, *Authority and Responsibilities for Safety Documentation and Startup Authority of Operations, Facilities, and Activities, at the Fernald Environmental Management Project*, Letter Jack R. Craig to John Bradburne, DOE; October, 1996

45. NS-0003, *Obtaining Safety Analysis Support,* Fluor Fernald

46. 40000-H&S-0001, Rev. 2, Technical Safety Requirements Document for the Operable Unit 4 (OU4) Silos, Foster Wheeler Environmental Corporation; July, 2003

47. TQP-067, *Silos Project Training and Qualification Program Description*, Fluor Fernald

48. DOE Order 5480.20A, *Life-Cycle Training Requirements for DOE Nuclear Facilities*, U.S. Department of Energy, February, 1997

49. RM-0043, *FEMP Training Implementation Matrix*, Fluor Fernald

50. 40 CFR 264.16, *Standards for Owners and Operators of Hazardous Waste Treatment, Storage, and Disposal Facilities: Personnel Training*, Title 40 Code of Federal Regulations, Part 264, Subpart 16, Environmental Protection Agency, July 1, 2003

51. 29 CFR 1910.120, *Hazardous Waste Operations and Emergency Response (HAZWOPER),* Title 29 Code of Federal Regulations, Part 1910, Subpart 120, Occupational Safety and Health Administration; July, 2001

52. RM-0055, *FEMP (Fernald Environmental Management Project) Access,* Fluor Fernald

53. OSHA 29 CFR 1910.1200, *Hazard Communication* (Chemicals) Title 29 Code of Federal Regulations, Part 1910, Subpart 1200, Occupational Safety and Health Administration; July 1, 2001

54. RPR 1-1, *Respiratory Protection Program,* Fluor Fernald

55. SPR 12-14, *Hazardous Noise Exposure*, Fluor Fernald

56. SPR 3-1, *Fall Protection and Prevention,* Fluor Fernald

57. *Threshold Limit Values for Chemical Substances and Physical Agents and Biological Exposure Indices,* American Conference of Governmental Industrial Hygienists (ACGIH) (most recent annual edition)

58. 29 CFR 1910, *Occupational Safety and Health Standards,* Title 29 Code of Federal Regulations, Part 1910, Occupational Safety and Health Administration; current edition

59. 602-5024, *Industrial Hygiene Air Sampling Program,* Fluor Fernald

60. EM-0020, *Building Emergency Procedure,* Fluor Fernald

61. EM-0030, *Silos Area Emergency Procedure,* Fluor Fernald

62. DOE Order 231.1A, *Environment, Safety and Health Reporting*, U.S. Department of Energy; August 19, 2003

63. DOE M 231.1-2 *Occurrence Reporting and Processing of Operations Information,* DOE Manual; U.S. Department of Energy; August 19, 2003

64. 10 CFR 707, *Workplace Substance Abuse Programs at DOE Sites,* Title 10, Code of Federal Regulations, Part 707; U.S. Department of Energy; January 1, 2004

65. 10 CFR 708, *DOE Contractor Employee Protection Program,* Title 10, Code of Federal Regulations, Part 708; U.S. Department of Energy; January 1, 2004

66. 10 CFR 820.11, *Information Requirements,* Title 10, Code of Federal Regulations, Part 820, Section 11; U.S. Department of Energy; January 1, 2004

67. 10 CFR 280, *Fastener Quality Act,* Title 15, Code of Federal Regulations, Part 280; U.S. Department of Commerce; January 1, 2004

68. 10 CFR 820, *Procedural Rules for DOE Nuclear Activities* , Title 10, Code of Federal Regulations, Part 820; U.S. Department of Energy; January 1, 2004

69. MS-1008, *Identifying, Reporting, and Tracking Price-Anderson Amendments Act Noncompliances*, Fluor Fernald

70. DOE Order 4330.4B, *Maintenance Management Program*, U.S. Department of Energy; February 10, 1994

71. ED-12-4015, *Performance Grading*, Fluor Fernald

72. MT-0003, *FEMP Work Request/Order Procedure*, Fluor Fernald

73. RM-0012, *Quality Assurance Program (QAP)*, Fluor Fernald

74. 10 CFR Part 830, *Nuclear Safety Management*; Subpart A, *Quality Assurance Requirements,* Title 10 Code of Federal Regulations, Part 830, U.S. Department of Energy; January 10, 2001

75. DOE Letter DOE-567-00, *FEMP Quality Assurance Program*, U.S. Department of Energy; April 5, 2000

76. 40000-QA-0001, *Quality Assurance Job Specific Plan for the Silos Project*; Fluor Fernald; October 9, 2002

77. DOE Order 414.1A, *Quality Assurance*, U.S. Department of Energy; July 12, 2001

AWR BDD

Appendix A

APPENDIX A
INTEGRATED HAZARD ANALYSIS (IHA)

THIS PAGE INTENTIONALLY BLANK

TABLE OF CONTENTS

EXECUTIVE SUMMARY 5

A-1.0 INTRODUCTION 7
A-1.1 Purpose 7
A-1.2 Scope 7

A-2.0 BACKGROUND INFORMATION 8
A-2.1 Silos 1 And 2 9
A-2.2 Silo Structural Integrity 9

A-3.0 METHODOLOGY 11

A-4.0 AWR PROJECT DESCRIPTION 13

A-5.0 AWR TASKS AND SUBTASKS 14

A-6.0 FINAL HAZARD ASSESSMENT TABLES 16
A-6.1 Analysis Of Final Hazard Assessment Table 28

A-7.0 CONCLUSIONS OF FINAL HAZARD ASSESSMENT 29
A-7.1 Concerns 29
A-7.2 Resolution Of Concerns 30

A-8.0 REFERENCES 31

TABLES

A.3-1 CRITERIA FOR SIGNIFICANT HAZARDS 12
A.3-2 CONSEQUENCE CLASSIFICATION 12

A.5-1 MATRIX OF TASKS / SUBTASKS VERSUS HAZARDS FOR AWR PROJECT 15

A.6-1 HAZARD IDENTIFICATION CHECKLIST 17
A.6-2 FINAL HAZARD ASSESSMENT TABLE FOR AWR PROJECT 20

ACRONYMS

ACGIH = American Conference of Governmental Industrial Hygienists
AIChE = American Institute of Chemical Engineers
AWR = Accelerated Waste Retrieval
BIO = Basis for Interim Operations
DOE = U.S. Department of Energy
DSA = Documented Safety Analysis
DWRS = Decant Waste Retrieval System
EPA = U.S. Environmental Protection Agency
ERPG = Emergency Response Planning Guidelines
FAT&LC = Fernald Atomic Trades and Labor Council
FDSA = Final Documented Safety Analysis
FCP = Fernald Closure Project
FWENC = Foster Wheeler Environmental Corporation
HASP = Health and Safety Plan
HAR = Hazard Analysis Report
HEPA = High-efficiency particulate air
IHA = Integrated Hazard Analysis
Jacobs = Jacobs Engineering Group Inc.
NDT = Nondestructive testing
NLO = National Lead of Ohio, Inc.
OU4 = Operable Unit 4
PHA = Preliminary Hazard Assessment
PPE = Personal Protective Equipment
RCS = Radon Control System
RTS = Radon Treatment System
RWP = Radiological Work Permit
SAR = Safety Analysis Report
SER = Safety Evaluation Report
SIH = Standard Industrial Hazards
SWRS = Silos Waste Retrieval System
TTA = Transfer Tank Area
TWRS = TTA Waste Retrieval System
WSA = Waste Storage Area

EXECUTIVE SUMMARY

This Integrated Hazard Analysis (IHA) report forms the basis for the development of the Health and Safety Plan (HASP), which contains hazard analyses and facility hazard categorization in accordance with DOE-EM-STD-5502-94 [Ref. 1]. The IHA is a qualitative analytical tool usually performed early in the life of a project to systematically identify, collect, and integrate information on health and safety issues concerning:

- identification of hazards (materials in quantity, form, and location)
- energy sources, potential initiating events, causes of hazardous conditions
- consequences of hazardous events without preventive/mitigative measures
- preventive/mitigative measures
- frequency of occurrence of events (credibility of consequences)
- severity of consequences of events
- significance of hazards (risk, real and perceived)

This IHA contains tables that summarize the hazards of various tasks and subtasks within the Accelerated Waste Retrieval (AWR) Project. TABLE A.6.2 is labeled as Final Hazard Assessments because it was assessed while the project and activities were in their final stages of design. To ensure that the hazards considered are all inclusive, an IHA workshop was held in August 1999 with staff from Fluor Fernald, Inc., and Foster Wheeler Environmental Corporation – representing engineering, project management, and all health and safety disciplines, as well as union technicians. The health and safety hazards were reevaluated at this workshop to identify all possible hazards that may be encountered within the AWR Project. Additional hazards were added to the Final Hazard Assessment Tables and analyzed for this submittal.

All types of hazards were considered and documented, including standard industrial hazards, human capability limitations, health hazards, electrical hazards, energy-release hazards, radiological hazards, biological hazards, toxic and hazardous materials, and natural phenomena. The results of the analysis are presented in the tables in this IHA. All of the activities were analyzed against a master list of hazards to decide which were potentially applicable.

The identified hazards were entered into the Final Hazard Assessment Tables along with possible causes, potential consequences, and estimated frequency and severity on the basis of experience and judgment. Controls and mitigators for all hazards were identified. This information was then used to identify safety hazards that require special attention and/or additional analysis. The methodology described in SECTION A-3.0 was used to assess the project hazards.

All of the potential hazards assessed in the Final Hazard Assessment Tables were (1) anticipated accidents with very low consequences or (2) unlikely accidents with very low or low consequences with the following exceptions:

Anticipated Frequency ($\geq 10^{-2}$ /yr) with Moderate Severity:

- Silo dome collapse with radiation and hazardous material exposure consequences

Unlikely Frequency ($\geq 10^{-4}$ /yr but $< 10^{-2}$ /yr) with Moderate Severity:

- Silo dome collapse because of over- or under-pressurization
- Failure of the Radon Control System (RCS) during waste retrieval operations
- Failure of the carbon beds (elution of adsorbed radon)
- Transfer line break
- Catastrophic failure of a tank in the Transfer Tank Area (TTA)

Extremely Unlikely Frequency ($\geq 10^{-6}$ /yr but $< 10^{-4}$ /yr) with Low Severity:

- Fire in the carbon beds with radon exposure consequences.

A fire in the carbon beds was analyzed in the Fire Hazards Analysis (APPENDIX F) as a "Maximum Possible Fire Loss." Based on final design, Jacobs Engineering Group (Engineer of Record) has concluded that a fire in the carbon beds is an "extremely unlikely" event. This is because of the remote possibility of an available ignition source due to the removal of the drying heater from the design.

The frequency and severity of the standard industrial hazards are not specified in the Final Hazard Assessment Tables, which is consistent with the Hazard Analysis Report for Operable Unit 4, Appendix B, Attachment C [Ref. 2]. However, some standard industrial hazards with unlikely frequency may have more significant consequences and these hazards warrant some additional consideration.

Unlikely Frequency with Moderate Severity:

- Electrical energy hazards with electrocution consequences
- Confined-space hazards with asphyxiation consequences
- Potential energy or elevation hazards with fall consequences

Minor accidents may be expected to occur during the life of the AWR Project. A strong, comprehensive health and safety program has been established on the AWR Project to minimize the actual frequency of such accidents.

A-1.0 INTRODUCTION

A-1.1 Purpose

The purpose of this Integrated Hazard Analysis (IHA) is to provide an integrated identification and qualitative analysis of the hazards associated with the AWR Project. This IHA forms the basis for the development of the HASP, which contains hazard analyses and facility hazard categorization in accordance with DOE-EM-STD-5502-94 [Ref. 1].

The initial activity required by procedure NS-0005, *Initiating, Reviewing, and Approving DOE-Approved SBDs* [Ref. 3], is an IHA Workshop, which was conducted on August 17-18, 1999. This IHA incorporates the results of the IHA Workshop as well as design and scope changes that have occurred since then.

The IHA is a qualitative analytical tool usually performed early in the life of a project to systematically identify, collect, and integrate information on health and safety issues concerning:

- identification of hazards (materials in quantity, form, and location)
- energy sources, potential initiating events, causes of hazardous conditions
- consequences of hazardous events without preventive/mitigative measures
- preventive/mitigative measures
- frequency of occurrence of events (credibility of consequences)
- severity of consequences of events
- significance of hazards (risk, real and perceived)

The IHA Workshop was led by Foster Wheeler Environmental Corporation (FWENC) and subcontractor representatives who were directly involved in the Accelerated Waste Retrieval (AWR) Project, including the Project Manager, Construction Manager, Operations Manager, Quality Assurance Manager, Radiation Safety Officer, Health and Safety Officer, and the Manager of Environment, Safety, Health, and Quality. A multidisciplined team that consisted of approximately 30 Fluor Fernald, Inc., staff representing: (1) the Silos Project, (2) Engineering, (3) Safety and Health, (4) Radiological Control, (5) Industrial Hygiene, (6) Quality Assurance, (7) Hazardous Waste, and (8) Waste Management disciplines were selected to participate in the IHA workshop. The Fernald Atomic Trades and Labor Council (FAT&LC) was represented by millwright, carpenter, electrician, and instrumentation crafts.

A-1.2 Scope

The scope of activities included within this IHA is the entire AWR Project. The activities and functions include the construction and operation of the RCS, the Silo Waste Retrieval System, the Bridge Support System, the Transfer Tank Area (TTA), and the TTA Waste Retrieval System (TWRS). However, the scope of this N-HASP is limited to operation and maintenance of the RCS and retrieval systems. The AWR Project will involve Silos 1 and 2, but not Silos 3 and 4. Radon from Silos 1 and 2 will be vented through the RCS. K-65

materials will be moved from Silos 1 and 2 to the TTA tanks, which will also be vented through the RCS. Hazards associated with all operations and activities in these AWR Project facilities are included and analyzed in this IHA.

A-2.0 BACKGROUND INFORMATION

From 1952 until 1989, the Fernald Closure Project (FCP) provided high-purity uranium metal products to support U.S. defense programs. Uranium production halted in 1989 because of declining demand and a recognized need to commit available resources to environmental remediation. Former uranium operations at the FCP site were limited to a fenced 136-acre tract of land known as the former Production Area located near the center of the site. Large quantities of liquid and solid wastes were generated by the various production operations at the FCP site. Before 1984, solid and slurried wastes from FCP processes were stored or disposed of in the Waste Storage Area (WSA). This area, located west of the production facilities, includes six low-level, radioactive waste storage pits, two concrete silos with earthen berms containing K-65 residues, one concrete silo containing metal oxides, one unused concrete silo, two lime sludge ponds, a burn pit, a clearwell, and a solid waste landfill. The WSA is addressed under FCP Operable Units 1, 2, and 4. The former Production Area and WSA are fenced and closed to the public. The remaining FCP site areas consist of forest and pasture lands [Ref. 4].

Operable Unit 4 is a 5.8-acre area located on the western side of the site containing the following FCP facilities and associated environmental media:

- Silos 1 and 2 and their contents (also termed K-65 Silos)
- Silo 3 and its contents (also termed Cold Metal Oxide Silo)
- Silo 4 (empty)
- The decant sump (an underground tank and its contents)
- A radon treatment system (abandoned)
- A vitrification pilot plant (abandoned)
- A portion of a concrete pipe trench (K-65 trench) and other concrete structures
- An earthen berm surrounding Silos 1 and 2
- Soils beneath and immediately surrounding Silos 1, 2, 3, and 4
- Perched groundwater in the vicinity of the silos

Silos 1 and 2, known as the K-65 Silos, contain approximately 240,000 ft^3 of residues generated from the processing of high-grade uranium ores [Ref. 2]. The silos are large, cylindrical, above-grade, concrete tanks with post tensioned steel reinforcing. Each of the domed silos is 80 ft in diameter and 36 ft high to the center of the dome.

The K-65 residues contain high activity concentrations of naturally occurring radionuclides, including radium and thorium. These radionuclides contribute (1) to an elevated direct penetrating radiation field in the vicinity of the silos and (2) to the chronic emission of significant quantities of radon gas to the atmosphere.

A-2.1 Silos 1 And 2

Approximately 10,000 tons of radium-bearing residues (K-65 residues) have been stored in Silos 1 and 2 since 1952 when the silos were constructed. Berms around Silos 1 and 2 were constructed in 1963–64 to provide lateral support to the silo walls and, as a secondary benefit, to provide radiation shielding [Ref. 2]. In 1983, a report evaluating options for interim management of the K-65 residues was submitted (R. M. Spenceley, National Lead of Ohio, to M. R. Theisen, U.S. Department of Energy (DOE), November 8, 1983) [Ref. 5]. The report recommended that an external seal be used as the preferred interim management strategy. After nondestructive tests and structural analysis were completed [Refs. 6 and 7], a protective coating was applied to the silos to minimize concrete deterioration and to reduce radon emissions. Radon-222 (3.8-day half-life) is generated at a rate in secular equilibrium with its radium-226 parent. The nature of radon, being an inert radioactive gas, results in the continual release of the radionuclide from the K-65 residues into the headspace of the silos. The actual quantity of radon present within the silo headspace is determined by the production rate (secular equilibrium) and the loss rate. The two primary loss mechanisms are: (1) the natural decay of the radon gas and (2) the escape of the gas from cracks and openings in the concrete silo structure. After a period of time, the quantity of radon within the silo headspace reaches steady state. A Radon Treatment System (RTS) was added in 1987 to reduce the level of radon gas in the headspace above the residues. This system was only operated when access to the silo domes was required for sampling or maintenance [Ref. 2].

A probabilistic risk assessment for Silos 1 and 2 was performed, and the results were published in 1990 [Ref. 8]. The objective of this study was to evaluate the risk associated with the K-65 residues in terms of the potential for human exposure from environmental radioactive contamination. Severe weather, seismic activity, and long-term weathering and wear were considered as failure initiators. The basis of this study was centered on the existing conditions of the silos. The assessment required a 5-year time framework for the analysis. Chronic radon emissions and the potential for acute release of radon contained in the headspace were determined to be the most important contributors to risk. Acute releases of residue have a somewhat smaller probability of occurrence so the risk was considered small but not insignificant [Ref. 2].

A-2.2 Silo Structural Integrity

An acute release of the entire headspace inventory of radon, as a result of catastrophic failure of a silo dome, was determined by previous hazard analyses [Ref. 9] to be the bounding accident for the current configuration. Consequently, the integrity of the silo structures is reviewed in this section.

In November, 1991, the structural engineering office of Parsons completed a review of all the reports and analyses to date on Silos 1 and 2 as part of the Safety Analysis Report [Ref. 10]. In 1993, Parsons completed an independent structural evaluation of Silos 1, 2, 3, and 4 using silo material properties and data from nondestructive testing (NDT) performed by Muneow & Associates. On the basis of these NDT results and the Parsons results from a general-purpose, finite-element analysis (SAP90), it was concluded that Silos 1, 2, 3, and 4 are structurally sound for the loads and load combinations described in

Subsections 4.3 and 4.4 of the report *Silos 1 through 4 Structural Integrity Determination* [Ref. 11].

NDT results by Muneow & Associates demonstrated that no significant additional deterioration adversely affected the structural integrity of the silos after the weather protection actions in 1987–1990 [Ref. 2]. These studies provided a basis for determining a silo dome safe load limit. Load limits for the Silos are documented in 40000-H&S-0001, Technical Safety Requirements Document for the Operable Unit 4 (OU4) Silos [Ref. 12], and are summarized in SECTION 10.3 of this N-HASP.

Evaluation of the AWR Project activities design in the Silos 1 & 2 PHAR [Ref. 13] concluded that there were no safety class (SC) or safety significant (SS) structures, systems, or components (SSCs) outside of the silos themselves. Therefore, a Performance Category 2 (PC-2) was assigned, and the new facility was designed and built to uniform building code. Design and building of PC-2 SSCs to uniform building code will result in only limited structural damage from design basis natural phenomena hazards.

A-2.3 Safety Basis History and Update

Hazard and accident analyses are performed to identify specific controls and improvements that feed back into overall safety management. Consequence estimates form the bases for grading the level of detail and control needed in specific programs. The result is safety basis documentation that emphasizes controls needed to maintain safe operation of a facility.

Fluor Fernald, Inc. has been responsible for maintaining a single integrated safety basis for all activities in OU4 [Ref. 14]. Safety programs addressing DOE-STD-3009-94 [Ref. 15], Chapters 6–17, were established and implemented accordingly.

For the final phases of AWR, specifically retrieval and disposition of the waste, Fluor Fernald, Inc. has directed the preparation of the AWR N-HASP to document hazards identification, hazard categorization, and accident analysis, as defined in 10 CFR 830 [Ref. 16]. The AWR N-HASP is consistent with the technical position NTSP-2002, *Methodology for Final Characterization for Nuclear Facilities from Category 3 to Radiological* [Ref. 17], issued in 2002 by DOE-EH-53, Office of Nuclear Safety. NTSP-2002 clarifies DOE-STD-1027 final hazard categorization and applies the methodology to classification below HC-3. This IHA has been prepared to support the NHASP for the operation and maintenance of the AWR retrieval and disposition activities.

A-3.0 METHODOLOGY

This IHA contains tables that summarize the hazards of various tasks and subtasks within the AWR Project. The health and safety hazards were evaluated at an IHA workshop to identify all possible hazards that may be encountered within the AWR Project. Additional hazards were added to the Final Hazard Assessment Tables and analyzed for this submittal. The Final Hazard Assessment Table has been based on those submitted with the Conceptual and Preliminary Design and supplemented by the hazards identified in the IHA Workshop and the final design review.

The Final Hazard Assessment processes contained herein are in compliance with the recommended process in NS-0005, *Initiating, Reviewing, and Approving DOE-Approved SBD* [Ref. 3]. Further information on the Final Hazard Assessment process and many other hazard evaluation procedures can be found in *Guidelines for Hazard Evaluation Procedures* [Ref. 18].

All types of hazards were considered and documented, including standard industrial hazards (SIH), human capability limitations, health hazards, electrical hazards, energy-release hazards, radiological hazards, biological hazards, toxic and hazardous materials, and natural phenomena. The results of the analysis are presented in the following tables in this IHA. All of the activities were analyzed against a master list of hazards to decide which were applicable.

The identified hazards were entered into the Final Hazard Assessment Tables along with possible causes, potential consequences, and estimated frequency and severity based on experience and judgment. Controls and mitigators for all hazards were identified. This information was then used to identify safety hazards that require special attention and/or additional analysis. **TABLE A.3-1** contains the criteria for significant hazards as defined in NS-0005 [Ref. 3]. **TABLE A.3-2** provides the consequence ratings employed for this Final Hazard Assessment. These consequence classifications were selected for inclusion in the Final Hazard Assessment Tables under the heading of "Severity."

TABLE A.3-1 CRITERIA FOR SIGNIFICANT HAZARDS

Frequency	Hazard Consequence			
	Very Low	Low	Moderate	High
Anticipated $\geq 10^{-2}$ / yr				
Unlikely $\geq 10^{-4}$ / yr but $< 10^{-2}$ / yr				
Extremely Unlikely $\geq 10^{-6}$ / yr but $< 10^{-4}$ / yr				
Incredible $< 10^{-6}$ / yr				

The shaded areas of TABLE A.3-1 indicate frequencies and hazard consequences that are considered significant and require control and/or mitigation.

TABLE A.3-2 CONSEQUENCE CLASSIFICATION

Hazard Consequence	Worker Safety[1]	Worker Radiation Exposure	Worker Chemical Exposure[2]	Public Radiation Exposure	Public Chemical Exposure[2,3]	Public Safety
High	Fatalities and/or numerous serious injuries	> 250 rem	ERPG-3	>25 rem	ERPG-2	> 5 serious injuries
Moderate	1 fatality or > 5 serious injuries	> 5 but < 250 rem	ERPG-2	> 0.5 but < 25 rem	ERPG-1	> 1 but < 5 serious injuries
Low	> 1 but < 5 serious injuries	> 0.5 but < 5 rem	ERPG-1	> 0.01 but < 0.5 rem	PEL-TWA[4]	Minor injury
Very Low	Minor injuries	< 0.5 rem	< ERPG-1	< 0.01 rem and other legal limits on normal emissions	EPA and other legal limits on normal emissions	

Notes:
1 For the purposes of this table, a serious injury is defined as one that results in a lost-time injury.
2 Emergency Response Planning Guidelines (ERPG) [Ref. 19].
3 Threshold Limit Values for Chemical and Physical Agents and Biological Exposure Indices, American Conference of Governmental Industrial Hygienists [Ref. 20].
4 Permissible Exposure Level – Time-Weighted Average

A-4.0 AWR PROJECT DESCRIPTION

The Jacobs approach to the AWR Project employs demonstrated technology to safely and effectively remove radioactive decay gases, K-65 waste residues, bentonite (commercially known as BentoGrout™), and debris from Silos 1 and 2. During the first phase of operations, the accumulated concentration of radon gas in the silo headspaces is reduced by approximately 98% during the operation of the RCS.

The AWR Project systems are briefly described as follows:

1. The SWRS retrieves K-65 waste material from the silos; transfers residues, BentoGrout™, and heel material to the transfer tanks; retrieves and packages discrete objects; and performs gross decontamination of the silos.
2. The TTA System consists of transfer tanks to be used as a storage area for residues and combined BentoGrout™ pending transfer to the future waste treatment facility. Provisions are planned for sampling and sample storage.
3. The TWRS will retrieve the residues and BentoGrout™ from the TTA and transfer them for processing at a future waste treatment facility.
4. The RCS Phase 1 controls and reduces radon concentration in the silos headspace. RCS Phase 2 ensures radon control during retrieval, transfer, and storage of the K-65 waste materials.

The AWR Project is described in detail in the Process Description Document (Document No. 40710-RP-0015) that is incorporated here by reference [Ref. 21].

A-5.0 AWR TASKS AND SUBTASKS

The AWR Project tasks and subtasks were redefined following the IHA Workshop to provide a more logical organization as a function of time and to eliminate excessive redundancy in the Final Hazard Assessment Tables. The revised tasks now include construction, operation and maintenance, decontamination, and demobilization. The major change was to separate the construction tasks from the operation and maintenance tasks. The construction tasks were divided into subtasks according to crafts and sequential steps during construction. The operation and maintenance tasks were divided into subtasks for each major system or function of the AWR Project. A general subtask was established for both the construction as well as the operation and maintenance tasks, and it is used to address the hazards that are common to all the subtasks under the task. This feature in the organization eliminated most of the redundancy in the Final Hazard Assessment Tables.

TABLE A.5-1 is a matrix of tasks and subtasks versus hazard types for the AWR Project. The tasks and subtasks described above comprise one axis of the matrix, while the hazard types comprise the other axis. Numbers and letters are entered into the matrix to designate specific hazards that are addressed in the Final Hazard Assessment Tables (**TABLE A.6-2**). The matrix assists in ensuring that each hazard type is correctly recognized and addressed in the Final Hazard Assessment Tables.

TABLE A.5-1 MATRIX OF TASKS / SUBTASKS VERSUS HAZARDS FOR AWR PROJECT

HAZARD TYPE	CONSTRUCTION										OPERATION and MAINTENANCE						DECONTAMINATION	DEMOBILIZATION
	General (all construction)	Foundations	Steel Work	Concrete Work	Electrical Work	Install Equipment	Assembly of Tanks	Assembly of Bridge	Pipe Work	Ventilation Work	General (all systems/areas)	Radon Control System	Transfer Tank Area	Enclosures on Bridge	Transfer of K-65 Waste	Removal of Debris/Cleanup		
External Exposure	1a	1a						1a				1b,d	1c, e,f	1c	1c, e,f	1c,d	1c	
Internal Exposure	2a										2c	2d	2b	2b	2b	2b	2c	2c
Release of Radon	3a							3a		3c		3b,d, e,g	3f					
Contamination											4c	4a,d,e	4a	4b,e	4c	4b,e	4c	
Electrical Energy	5a				5b	5b		5b			5b	5c	5c	5c				5b
Human Capabilities	6*					6e					6#							6*
Mechanical Energy	7a,c	7a	7b	7b		7b	7b	7b	7b		7a		7d	7d				7a
Welding Hazards	8a		8a				8a	8a	8a		8b							8b
Confined Space	9										9						9	
Industrial Hazards	10										10						10	
Potential Energy	11a										11b							
Pressure											12						12	
Toxic Materials	13										13						13	
Biohazards	14										14							14
Natural Phenomena	15										15							15

Note: The numbers and letters designate specific hazards that are addressed in Table 6-2. 6* applies to 6a, 6b, and 6c. 6# applies to 6d, 6e, and 6f.

0001473

5470

A-6.0 FINAL HAZARD ASSESSMENT TABLES

The hazard selection criteria for the Final Hazard Assessment Tables have an emphasis on radiological hazards because of the nature of the K-65 waste materials. The criteria include:

- Worker exposure to physical, chemical, or radiological hazards while performing the identified task or subtask.
- Spread of radioactive contamination because of inadequate administrative controls.
- Release of toxic or radiological materials to the atmosphere, ground, or groundwater because of catastrophic failure of a system, structure, or component.
- Health and safety hazards to workers during commercial construction.
- Standard industrial hygiene and safety hazards in an industrial facility.

The revised Final Hazard Assessment Tables were derived from the Hazard Identification Checklist, **TABLE 6-1**, which defines 21 types of hazards according to physical, chemical, and biological properties [Ref. 2]. Each of these hazard types was addressed with respect to the AWR Project to determine applicability. Emphasis was given to the hazards of external and internal exposure to radiation, radioactive contamination, and release of radon gas, because these hazards are a major concern to DOE and the public. Some hazard types were not specifically included, or were included with a different type, in Table A.5-1 for the following reasons:

- Acceleration/Impact: Included within the Potential Energy and Mechanical Energy hazard types.
- Chemical Energy/Reactivity: Not included because the K-65 waste has no potential for fire, explosion, exothermic reactions, or production of toxic or flammable gases.
- Interface Interaction: Not included because the K-65 waste has no potential for incompatible material reactions or interfacing reactions.
- Human Hazards: Included within the Human Capabilities hazard type.
- Kinetic Energy: Included within the Potential Energy and Mechanical Energy hazard types.
- Material Deformation: Included within the Potential Energy and Mechanical Energy hazard types.
- Radiation: Included within the External Exposure, Internal Exposure, Release of Radon, and Contamination hazard types.
- Thermal: Included within the Welding Hazards type.
- Toxicants: Included within the Toxic Materials hazard type.

- Vibration/Sound: Included within the Human Capabilities hazard type.
- Caustic/Acidic: Included within the Toxicants hazard type.
- Spill or Loss of Containment: Included within the Contamination hazard type.
- Industrial/Construction Hazards: Included within the Industrial Hazards type.

TABLE A.6-1 HAZARD IDENTIFICATION CHECKLIST

Item	Hazard	Definition	Potential Accident/Effect
1	Acceleration/ Impact	Change in velocity, impact energy of vehicles, components or fluids	1. Structural deformation 2. Breakage by impact 3. Displacement of part or piping 4. Seating or unseating of valves or electrical contacts 5. Loss of fluid pressure head (cavitation) 6. Pressure surges 7. Explosions or detonations
2	Potential energy/ Elevation	Potential to fall	1. Falling of individuals from elevated locations 2. Falling of elevated objects, striking and injuring people, or damaging structures or equipment 3. Falling attributable to lack of handrails/ladder enclosures that could prevent falls
3	Chemical energy/ Reactivity	Chemical reactions	1. Fire 2. Explosion/detonation 3. Exothermic reactions 4. Production of toxic/flammable gases
4	Contamination	Introduction of contamination	1. Clogging of mechanical components 2. Friction between moving parts 3. Component degradation 4. Making equipment/structures/ components unusable because of contamination
5	Electrical energy	Electrical component release or failure, shock	1. Electrocution 2. Involuntary personnel reaction 3. Personnel burns 4. Ignition of combustibles 5. Inadvertent activation of equipment 6. Disabling of electric emergency/safety equipment 7. Interruption of communications
6	Human capability	Human factors	1. Personnel injury due to lifting too much or improper lifting 2. Personnel injury because of: a. Restricted/excessive hours b. Hazardous location c. Inadequate visual/audible warnings 3. Equipment damage by improper operation: a. Inadequate training b. Inaccessible control c. Inadequate control display/identification d. Inadequate procedures

TABLE A.6-1 HAZARD IDENTIFICATION CHECKLIST (Cont.)

Item	Hazard	Definition	Potential Accident/Effect
7	Interface interaction	Compatibility between systems/ subsystems	1. Incompatible materials reaction 2. Interfacing reactions 3. Unintended operations caused by software
8	Human hazards	Conditions that can cause human injury	1. Personnel injury because of: a. Sharp edges/corners b. Limited work area 2. Damaged walking/working surfaces that can cause tripping injuries 3. Unguarded equipment
9	Kinetic energy	System/ component motion	1. Linear impact 2. Disintegration of rotating components
10	Material deformation	Degradation of material by corrosion, aging, embrittlement, or oxidation	1. Change in physical or chemical properties 2. Structural failure 3. Electrical insulation breakdown 4. Erosion of lines or components 5. Component failures 6. Collapse/loss of containment
11	Mechanical energy	System/ components energy	1. Personnel injury/equipment damage from energy release of component such as a spring 2. Personnel injury from being caught/crushed by moving parts
12	Natural phenomena	Lightning, high winds, projectiles, earthquakes, floods, and tornadoes	1. Structural damage from wind/tornadoes 2. Collapse and loss of containment from earthquakes, wind, and tornadoes 3. Electrical discharge 4. Dimensional changes from solar heating 5. Personnel injury/death from projectiles 6. Equipment/structural damage from projectiles 7. Personnel injuries/death from flooding/high water 8. Equipment/structural damage from flooding 9. Damage and injuries because of lightning
13	Pressure	System/ component energized by high, low, or changing pressure	1. Fragments/noise and pressure pulse from overpressurized container rupture 2. Line/hose whipping 3. Container implosion 4. System leaks 5. Aeroembolism, bends, choking, or shock 6. Deformation because of stress failure
14	Radiation	Radiation exposure and conditions including electro-magnetic, ionizing, thermal, or ultraviolet radiation	1. Criticality 2. Radiation exposures, both internal and external 3. Charring of organic materials 4. Decomposition of chlorinated hydrocarbons into toxic gases 6. Ozone or nitrogen oxide generation 7. Contamination of personnel, equipment, and/or facilities

TABLE A.6-1 HAZARD IDENTIFICATION CHECKLIST (Cont.)

Item	Hazard	Definition	Potential Accident/Effect
15	Thermal	High and low and changing temperature	1. Ignition of combustibles 2. Initiation of other reactions 3. Distortion of parts 4. Expansion/contraction of fluids and solids 5. Liquid compound stratification 6. Personnel injury/stress
16	Toxicants	Adverse human effects of inhalants or ingesta, and adverse effects on biota	1. Respiratory system damage 2. Blood system damage 3. Body organ damage 4. Skin irritation or damage 5. Nervous system effects
17	Biohazards	Adverse human effects	1. Insect sting/bites 2. Histoplasmosis 3. Snake bites
18	Vibration/ sound	System/ component-produced energy	1. Material fatigue 2. Personnel fatigue or injury 3. Pressure/shock wave effects 4. Loosening of parts 5. Chattering of valves or contacts 6. Communication interference 7. Impairment or failure of displays 8. Hearing loss, both acute and long-term
19	Caustic/acidic	Chemical reactions because of chemical energy	1. Burns 2. Chemical reactions
20	Spill/loss of containment	Release of hazardous materials	1. Personnel injury 2. Costly cleanup 3. Damage to components/property 4. Off-site transport of contaminant 5. Environmental or ecosystem damage
21	Industrial/ construction hazards	Hazards encountered in industrial work environments	1. Personnel injury/death 2. Loss of work/production

The Final Hazard Assessment Table for each task and subtask, **TABLE A.6-2**, is organized as described in Section 5.0. The hazard types are the applicable hazards taken from Preliminary Hazard Assessment (PHA) Table 1, in Appendix B, *Integrated Hazard Analysis for Operable Unit 4 (OU4) Silos,* of the OU4 Hazard Analysis Report [Ref. 2]. The hazard types and specific hazards in the Final Hazard Assessment Table have been expanded to include additional hazards that were identified during the IHA Workshop August 17–18, 1999.

TABLE A.6-2 FINAL HAZARD ASSESSMENT TABLE FOR AWR PROJECT

ID No.	Location of Hazard	Hazard Type	Initiating Event	Consequence (Unmitigated)	SIH Y or N	Frequency	Severity	Significant Hazard	Comments, Mitigators Controls, Actions, and/or Justification
1a	Silos 1 and 2	External radiation exposure	Work near silo domes; exposure to gamma radiation	Potential to exceed external dose limits and controls	N	Anticipated	Very Low	No	TLDs and RWP required for personnel working near silo domes. Radiation surveys and exposure monitoring.
1b	Carbon beds, roughing filters, HEPA filters	External radiation exposure	Work near carbon beds, roughing filters, HEPA filters	Potential to exceed external dose limits and controls	N	Anticipated	Very Low	No	TLDs, RWP, and PPE required for personnel working near carbon beds, roughing filters, HEPAs, and prefilters; buddy system
1c	TTA tanks, transfer lines	External radiation exposure	Work near TTA tanks, transfer lines, sample collection and storage	Potential to exceed external dose limits and controls	N	Anticipated	Very Low	No	TLDs, RWP, and PPE required for personnel working near TTA tanks, transfer lines, sample collection and storage; radiation shielding; remote handling tools; limited stay time; buddy system
1d	RCS and ducts	External radiation exposure	"Hot spots" from radioactive particulates	Potential to exceed external dose limits and controls	N	Anticipated	Very Low	No	Radiation surveys to detect "hot spots"; apply temporary, portable shielding as necessary
1e	AWR Project	Criticality	Criticality not credible	Not credible	N	Not credible	—	No	Enrichment not high enough to support criticality

0001178

5470

TABLE A.6-2 FINAL HAZARD ASSESSMENT (Cont.)

ID No.	Location of Hazard	Hazard Type	Initiating Event	Consequence (Unmitigated)	SIH Y or N	Frequency	Severity	Significant Hazard	Comments, Mitigators Controls, Actions, and/or Justification
1f	TTA tanks, transfer lines	External radiation exposure	Transfer line break; failure of a TTA tank	Potential to exceed external dose limits and controls	N	Unlikely	Moderate	Yes	Design and build to withstand accidents
2a	Silos 1 and 2	Internal exposure to radon	Work near silos; continuous release of radon from silos	Potential to exceed internal dose limits and controls	N	Anticipated	Very Low	No	Worker exposures maintained below 500 mrem per year from all sources of radon, by measurement of radon concentrations and limits on time of exposure
2b	Ventilation ducts, pipes, and transfer lines	Internal expósure to radon	Potential release of radon from ventilation ducts and pipes; slurry spills	Potential to exceed internal dose limits and controls	N	Anticipated	Very Low	No	Radon monitors located in occupied spaces and on carbon bed outlets; preset alarms; spill detection/alarms; freeze protection
2c	RCS stack	Internal exposure to radon	Routine releases of radon from RCS stack	Potential to exceed internal dose limits and controls	N	Anticipated	Very Low	No	Radon monitor on stack effluent; preset alarm and shutdown controls
2d	RCS stack	Internal exposure to radon	Mechanical failure of stack	Potential to exceed internal dose limits and controls	N	Unlikely	Low	No	Radon monitors downstream of carbon beds, preset alarms and shutdown controls
2e	RCS ducts	Internal exposure to radon	Corrosion in RCS ductwork; release of radon inside RCS	Potential to exceed internal dose limits and controls	N	Unlikely	Very Low	No	Corrosion-resistant ductwork; monitoring for radon leaks; repair leaks

000179
5470

TABLE A.6-2 FINAL HAZARD ASSESSMENT (Cont.)

ID No.	Location of Hazard	Hazard Type	Initiating Event	Consequence (Unmitigated)	SIH Y or N	Frequency	Severity	Significant Hazard	Comments, Mitigators Controls, Actions, and/or Justification
3a	Silos 1 and 2	Release of radon	Silo dome collapse; major release of radon and hazardous materials from silos	Potential to exceed worker and public dose limits	N	Anticipated	Moderate	Yes	Technical safety requirements to avoid impact on silo domes The silo domes' life expectancy cannot be determined with certainty. Therefore, the frequency of silo dome failure resulting from natural degradation is conservatively assumed as "anticipated." Consequences were analyzed in the Silo 1 and 2 PHAR [Ref. 13]
3b	RCS	Release of radon	Major release of radon from RCS; failure of carbon beds; overpressuriz-ation of RCS	Potential to exceed worker and public dose limits	N	Unlikely	Moderate	Yes	Numerous precautions to optimize operation of RCS and prevent component failure; redundant cooling system, automatic sensors and controls
3c	Silos 1 and 2	Release of radon	Radon release when RCS is connected to silos	Potential to exceed internal dose limits and controls	N	Unlikely	Very Low	No	Connection to silos domes inside containment; RWP and PPE required for connection work
3d	RCS	Release of radon	Failure of RCS fans	High radon concentrations inside the RCS	N	Unlikely	Moderate	Yes	Automatic shutdown devices, back-flow preventers

TABLE A.6-2 FINAL HAZARD ASSESSMENT (Cont.)

ID No.	Location of Hazard	Hazard Type	Initiating Event	Consequence (Unmitigated)	SIH Y or N	Frequency	Severity	Significant Hazard	Comments, Mitigators Controls, Actions, and/or Justification
3e	RCS	Release of radon	Fire in carbon beds	Potential to exceed worker and public dose limits	N	Extremely Unlikely	Low	No	A fire in the carbon beds is extremely unlikely; thermo-couple temperature elements and transmitters to prevent over-heating the carbon beds; heating drier removed from design
3f	RCS, TTA, bridge enclosures	Release of radon	Loss of power, disabling of safety-related systems	Potential to exceed worker and public dose limits	N	Unlikely	Low	No	Controls designed to fail-safe; manual overrides on automatic systems
3g	Silos 1 and 2	Release of radon	Silo dome collapse from over- or under-pressurization	Potential to exceed worker and public dose limits	N	Unlikely	Moderate	Yes	Engineering controls to avoid over- or under-pressurization of silo domes. RCS; over- and underpressurization sensors and damper controls
4a	Roughing filters, HEPAs and prefilters	Contami-nation	Contact with particulate filters	Spread of contamination to clean areas	N	Anticipated	Very Low	No	RWP and PPE required for personnel working on roughing filters, HEPA and prefilters
4b	Bridge enclosures and decant sump	Contami-nation	Contact with contaminated AWR equipment	Spread of contamination to personnel	N	Anticipated	Very Low	No	RWP and PPE required for personnel working in bridge enclosures and on decant sump
4c	Slurry spills near transfer lines, tanks	Contami-nation	Contact with spilled K-65 material	Spread of contamination to personnel	N	Anticipated	Very Low	No	Spill detection/alarm equipment; containment and decontamination; RWP and PPE required for cleanup; freeze protection

TABLE A.6-2 FINAL HAZARD ASSESSMENT (Cont.)

ID No.	Location of Hazard	Hazard Type	Initiating Event	Consequence (Unmitigated)	SIH Y or N	Frequency	Severity	Significant Hazard	Comments, Mitigators Controls, Actions, and/or Justification
4d	Condensate spill during trucking	Contami-nation	Accident in route, loading, unloading	Spread of contamination to clean areas	N	Anticipated	Very Low	No	Containment RWP surveillance during loading, unloading, and transfer
4e	AWR Project	Contami-nation	Failure of PPE	Spread of contamination to personnel	N	Anticipated	Very Low	No	Contamination monitoring; decontamination
5a	Const. site	Electric shock	Striking power lines with vehicle/ equipment	Electrocution, shock, burns	Y	—	—	SIH	Maintain safe distances, locate utilities, disconnect or provide safety monitor for proximity operations
5b	Const. site	Electric shock	Installing utilities, connecting power	Electrocution, shock, burns	Y	—	—	SIH	Qualified electrical workers, isolate/lockout power, PPE, work "cold" systems, proper tools for required "hot" work
5c	RCS, TTA, bridge	Electric shock	Maintenance on energized systems	Electrocution, shock, burns	Y	—	—	SIH	Qualified electrical workers, isolate/lockout power, PPE, work "cold" systems, proper tools for required "hot" work
6a	Const. site	Back injury	Improper lifting	Strains, sprains, disabling injuries	Y	—	—	SIH	Training, mechanical lifting devices, team lifting
6b	Const. site	Heat/cold stress	Hot weather Cold weather	Heat/cold fatigue; stress-related injuries	Y	—	—	SIH	Monitoring of hot weather conditions, liquids, rest; warm clothing for cold
6c	Const. site	Noise	Construction work	Hearing loss	Y	—	—	SIH	Noise monitoring, hearing protection
6d	Operating facilities	Human errors	Misunderstand -ing, confusion	Personnel injuries	Y	—	—	SIH	Procedures, training, standard labeling

000182
5470

TABLE A.6-2 FINAL HAZARD ASSESSMENT (Cont.)

ID No.	Location of Hazard	Hazard Type	Initiating Event	Consequence (Unmitigated)	SIH Y or N	Frequency	Severity	Significant Hazard	Comments, Mitigators Controls, Actions, and/or Justification
6e	Operating facilities	Restricted movement	Equipment inaccessible, cramped space	Personnel injuries	Y	—	—	SIH	Human factors review of design, adequate space, accessibility, reach, egress, evacuation
6f	Operating facilities	Impaired vision	Inadequate lighting	Personnel injuries	Y	—	—	SIH	Human factors review of design, adequate lighting
7a	Const. site, operating facilities	Slips, trips, and falls	Slip/trip hazards; personnel working at heights	Falls, struck-against injuries	Y	—	—	SIH	Competent personnel, good housekeeping; 100% fall protection >6 ft, training, hand rails, ladder enclosures
7b	Const. site	Hoisting and rigging	Crane lifts	Struck-against/ struck-by injuries, damage to equipment and materials	Y	—	—	SIH	Critical lift plans, qualified crane operator and riggers, training, inspections of rigging
7c	Const. site	Falling hazards	Dropped items, overhead work	Struck-by injuries	Y	—	—	SIH	Critical lift plans, qualified crane operator and riggers, training, inspections of rigging; safety net, as necessary
7d	Silos, TTA	Falling hazards	Falling through openings	Personnel injuries	Y	—	—	SIH	100% fall protection > 6 ft, limit size of openings to prevent falls into silos or TTA tanks
7e	AWR Project	Large falling objects	High winds, structural failure	Impact on adjacent facilities	N	Unlikely	Low	No	Adequate structural design for 90 mph winds; performance grade 3 on critical components

TABLE A.6-2 FINAL HAZARD ASSESSMENT (Cont.)

ID No.	Location of Hazard	Hazard Type	Initiating Event	Consequence (Unmitigated)	SIH Y or N	Frequency	Severity	Significant Hazard	Comments, Mitigators Controls, Actions, and/or Justification
8a	Const. site	Welding	Exposure to welding components	Eye injuries, burns, respiratory effects	Y	—	—	SIH	Qualified welders, review of materials and processes, appropriate PPE, exhaust ventilation, fire watch
8b	Const. site, operating facilities	Fire	Ignition of combustibles	Personnel injuries, burns, damage to equipment and facilities	Y	—	—	SIH	Fire protection systems, minimize combustibles, fire protection program
9	Const. site, TTA, RCS, bridge enclosures	Confined-space entries	Lack of oxygen	Asphyxiation, injury or illness requiring removal of person	Y	—	—	SIH	Planned entries, training, practice, competent person, PPE, ventilation, retrieval provisions
10	Const. site, operating facilities	Industrial hazards	Hand and power tools, abrasives, unguarded equipment	Lacerations, abrasions	Y	—	—	SIH	Trained construction workers, PPE, tool inspections
11a	Const. site	Exposure to mechanical energy	Work near vehicles, heavy equipment	Struck-by/ caught-between injuries, impacts	Y	—	—	SIH	Qualified equipment operators, training, work sequencing, traffic control
11b	Operating facilities	Rotational energy	Exposure to rotating equipment, motors	Caught-by injuries, impacts	Y	—	—	SIH	Qualified equipment operators, training, guards over equipment
12	Silos	Pressure	High-pressure spray effects on silo integrity, and personnel	Spallation of concrete; personnel injuries	Y	—	—	SIH	Controls on high-pressure sprays to prevent effect on silos; prevention of exposure to personnel

0001184
5470

TABLE A.6-2 FINAL HAZARD ASSESSMENT (Cont.)

ID No.	Location of Hazard	Hazard Type	Initiating Event	Consequence (Unmitigated)	SIH Y or N	Frequency	Severity	Significant Hazard	Comments, Mitigators Controls, Actions, and/or Justification
13	Const. site, operating facilities	Toxic materials	Exposure to toxic materials	Adverse health effects	Y	—	—	SIH	Work in containment, maintain containment, PPE
14	Silos 1 and 2	Biohazards	Exposure to insects, snakes	Stings and bites	Y	—	—	SIH	PPE, repellants
15	Const. site, operating facilities	Natural phenomena	High winds, ice, earthquake, lightning	Personnel injuries from falls, debris, lightning	Y	—	—	SIH	Monitoring of weather, take cover when weather threatens. Silo failure is addressed in ID No. 3a. The AWR Facility was designed and built to uniform building code.

SIH = standard industrial hazards, Y = yes, N = no
HEPA = high efficiency particulate air
TTA = Transfer Tank Area
TLD = thermoluminescent dosimeter
RWP = radiological work permit
PPE = personal protective equipment
RCS = Radon Control System
AWR = Accelerated Waste Retrieval

000185
5470
0542

A-6.1 Analysis Of Final Hazard Assessment Table

The methodology described in Section 3 and represented in Table A.3-1 was used to assess the hazards in the Final Hazard Assessment Table. All the potential hazards assessed in the Table A.6-2 were (1) anticipated accidents with very low consequences or (2) unlikely accidents with very low or low consequences with the following exceptions:

Anticipated Frequency ($\geq 10^{-2}$ /yr) with Moderate Severity:

- Silo dome collapse prior to RCS starting operation

Unlikely Frequency ($\geq 10^{-4}$ /yr but $< 10^{-2}$ /yr) with Moderate Severity:

- Silo dome collapse because of over- or underpressurization with RCS operating
- Failure of the RCS during retrieval operations
- Failure of the carbon beds (elution of adsorbed radon)
- Transfer line break
- Catastrophic failure of a TTA tank

Extremely Unlikely Frequency ($\geq 10^{-6}$ /yr but $< 10^{-4}$ /yr) with Moderate Severity:

- Fire in the carbon beds with radon exposure consequences.

A fire in the carbon beds was analyzed in the Fire Hazards Analysis (Appendix F) as a "Maximum Possible Fire Loss." Based on final design, it was concluded that a fire in the carbon beds is an "extremely unlikely" event. This is due to the improbability of an available ignition source.

The frequency and severity of the SIH are not specified in the Final Hazard Assessment Table, which is consistent with the OU4 Hazard Analysis Report (HAR), Appendix B, Attachment C [Ref. 2]. However, some SIH with unlikely frequency may have more significant consequences and these hazards warrant some additional consideration.

Unlikely Frequency with Moderate Severity:

- Electrical energy hazards with electrocution consequences,
- Confined-space hazards with asphyxiation consequences, and
- Potential energy or elevation hazards with fall consequences.

These SIH with more severe consequences are discussed further in Section 7.

A-7.0 CONCLUSIONS OF FINAL HAZARD ASSESSMENT

The Final Hazard Assessment Table was analyzed to identify any significant concerns that require further analysis. Most of the potential hazards were found to be anticipated accidents with very low consequences. However, a few potential hazards were found to have moderate consequences and they are discussed in the following sections.

A-7.1 Concerns

Most of the potential hazards associated with the AWR Project were assessed to be (1) anticipated hazards with very low consequences or (2) unlikely accidents with very low or low consequences. Although the severity of such hazards is quite low, the anticipated frequency is such that minor accidents may be expected to occur during the life of the Project. A strong, comprehensive health and safety program has been established on the AWR Project to minimize the actual frequency of such accidents.

Electrical energy, confined-space, and potential energy or elevation hazards were assessed to have an unlikely frequency and moderately severe consequences, including the possibility of fatality. The consequence of contact with electrical sources may be a fatal electrocution. The consequence of working in a confined space may be a fatal asphyxiation. The consequence of working at elevated heights may be a fatal fall.

The hazard of working with energized electrical power sources is rigorously controlled with energy isolation plans, service interruption permits, and formal lock-out/tag-out procedures [Refs. 22 and 23]. Entry into confined spaces is rigorously controlled by formal evaluations by FCP Industrial Hygiene staff and confined space entry permits [Ref. 24]. Working at elevated heights (higher than 6 ft) is rigorously controlled by the FCP fall protection program, which requires harnesses, lanyards, and anchor points in accordance with Occupational Safety and Health Administration standards [Ref. 25].

The initiating events for a collapse of a silo dome include (1) loss of containment due to natural phenomena and structural failure due to degradation, (2) a person on top of a silo penetrates the dome and falls into a silo, (3) over- or under-pressurization of a silo, and 4) a load drop or crane failure. Numerous precautions shall be taken during the AWR Project to avoid the possibility of breaching the silo domes in a way that would release significant quantities of radon gas to the workplace and the environment. Protective measures for the domes and silos is addressed in 40000-H&S-0001, Technical Safety Requirement Document fro the OU4 Silos, and summarized in SECTION 10.2.

The output of the carbon beds will be continuously monitored to detect any reduction in the radon adsorption efficiency. If the performance of a carbon bed is degraded, it can be reactivated by drying and/or allowing the adsorbed radon to decay. The RCS has the capability to isolate a degraded bed. A take-off air stream can be passed through the isolated carbon bed by using an induced draft fan. The drying air stream is then transferred to the carbon beds that remain on line. Alternatively, the radon on the isolated bed can be allowed to decay before the drying process is started [Ref. 21].

A break in the transfer line would result in a spill of slurry. Cleanup of the spill would involve external and potentially internal radiation exposures to workers. This hazard is a concern and is addressed in Appendix G.

A catastrophic failure of one of the TTA tanks would be contained by the TTA Building, but the effectiveness of the TTA shielding would be affected somewhat. This accident scenario is analyzed in Appendix G.

A fire in the carbon beds was assessed to be an extremely unlikely hazard with moderate consequences, because the carbon beds are enclosed in steel vessels that will not sustain a fire and there is no credible ignition source (*Preliminary Hazard Analysis for Silos 1 and 2*, January 22, 1998) [Ref. 2]. Therefore, this hazard is not analyzed any further.

A-7.2 Resolution Of Concerns

The need for a comprehensive health and safety program for the AWR Project was clearly recognized, and it was an integral part of final planning and design. Health and safety specialists were assigned to review each step in the design process, and they evaluated the potential hazards assessed in this Final Hazard Assessment. The health and safety specialists worked directly with the designers, and they were active participants in design review meetings and formal design review processes. Fluor Fernald is committed to a rigorous environmental, health, and safety program for the AWR Project. This commitment is carried forward into the AWR Project-Specific Health and Safety Plan that satisfies the requirements of 29 CFR 1910.120 [Ref. 26].

A-8.0 REFERENCES

1. DOE-EM-STD-5502-94, *Hazard Baseline Documentation*, U.S. Department of Energy; August, 1994

2. HAR-97-0028, *Hazard Analysis Report for Operable Unit 4 (OU4) Silos*, Fluor Daniel Fernald; 1997

3. NS-0005, *Initiating, Reviewing, and Approving DOE-Approved SBDs*, Fluor Fernald

4. *Remedial Investigation Report for Operable Unit 4, Final, Volume 1 of 3*, Fernald Environmental Management Project; November 1993

5. Letter Report: R. M. Spenceley, National Lead of Ohio, Inc., to M. R. Theisen, U.S. Department of Energy; November 8, 1983

6. *K-65 Silos Study & Evaluation*, Carmago Associates, Limited; Cincinnati; February, 1986

7. *Study and Evaluation of K-65 Silos for the Feed Materials Production Facility of Fernald, Ohio*, Bechtel National; Oak Ridge, Tennessee; 1990

8. FMPC/SUB-02A, UC-702, *A Probablistic Risk Assessment for the K-65 Silos at the FMPC*, University of Cincinnati; November, 1990

9. FEMP-2337, *Preliminary Safety Analysis Report for Operable Unit 4*, Parsons, Inc.; April, 1994

10. *Facility Safety Analysis Report, Silos 1 and 2*, Parsons, Inc.; September, 1991

11. *Silos 1 through 4 Structural Integrity Determination*, Parsons, Inc.; February 1994

12. 40000-H&S-0001, Rev. 1, *Technical Safety Requirements Document for the Operable Unit 4 (OU4) Silos*, Foster Wheeler Environmental Corporation; April 10, 2000

13. 624-P622-50, *Preliminary Hazards Analysis Report for the Silo 1 and 2 Accelerated Waste Retrieval Project*, Foster Wheeler Environmental Corporation; January, 2000

14. PL-3049, *Implementation Plan for SARs and TSRs at the FEMP*; Appendix K: OU4 Silos Basis for Interim Operations, Fluor Fernald

15. DOE-STD-3009-94, *Preparation Guide for U.S. Department of Energy Nonreactor Nuclear Facility Safety Analysis Reports*; U.S. Department of Energy; Change 1: January, 2000

16. 10 CFR 830, *Nuclear Safety Management*, Title 10 Code of Federal Regulations, Part 830; DOE; January 10, 2001

17. NSTP-2002-2, *Methodology for Final Categorization for Nuclear Facilities from Category 3 to Radiological*, DOE-EH-53, Office of Nuclear Safety; November 13, 2002

18. *Guidelines for Hazard Evaluation Procedures, Second Edition with Worked Examples*, American Institute of Chemical Engineers (AIChE); 1992

19. *Emergency Response Planning Guidelines (ERPG)*, American Industrial Hygiene Association, ERPG Committee, American Industrial Hygiene Association (AIHA) 1993

20. *Threshold Limit Values for Chemical and Physical Agents and Biological Exposure Indices*, American Conference of Governmental Industrial Hygienists (ACGIH), 1992–1993

21. 40710-RP-0015, *Process Description Document for the Accelerated Waste Retrieval Project*, Jacobs Engineering Group; January 28, 2003

22. RM-0021, *Safety Performance Requirements*; SPR5-1: *Electrical Equipment*, Fluor Fernald, Inc.; September 15, 1997

23. RM-0021, *Safety Performance Requirements*; SPR5-2: *Electrical Safety Work Practices*, Fluor Daniel Fernald; February 15, 2000

24. RM-0021, *Safety Performance Requirements*; SPR12-1: *Permit-Required Confined Space Entry*, Fluor Daniel Fernald; February 7, 2000

25. RM-0021, *Safety Performance Requirements*; SPR3-1: *Fall Protection and Prevention*, Fluor Daniel Fernald; September 14, 1998

26. 29 CFR 1910.120, *Hazardous Waste Operations and Emergency Response*, Code of Federal Regulations, Title 29, Part 1910

Appendix B

APPENDIX B
HAZARD CATEGORY CALCULATION

THIS PAGE INTENTIONALLY BLANK

TABLE OF CONTENTS

EXECUTIVE SUMMARY 7

B-1.0 INTRODUCTION 8

B-2.0 SEGMENTATION 9

B-3.0 DESCRIPTION OF HAZARDS 10

- B-3.1 Radioactive Materials Inventory 10
- B-3.2 Chemical Inventories 12

B-4.0 CALCULATIONS 15

- B-4.1 Accident Scenarios 15
- B-4.2 Hazard Classification Based on Radiological Inventory 16
  - B-4.2.1 Material at Risk and Potentially Releasable Inventory 16
  - B-4.2.2 Threshold Quantity Limits 19
  - B-4.2.3 Potentially Releasable Inventory Comparison Results 20
- B-4.3 Hazard Classification Based on Radiological Dose Criteria 21
  - B-4.3.1 RCS Accidents 22
  - B-4.3.2 TTA Accidents 23
- B-4.4 Hazard Classification Based on Chemical Constituents 23
  - B-4.4.1 Comparison of Hazardous Chemicals to Thresholds Limits 24
  - B-4.4.2 Evaluation of Chemical Consequence Severity 24

B-5.0 FINAL HAZARD CATEGORY 28

B-6.0 REFERENCES 29

000193

THIS PAGE INTENTIONALLY BLANK

TABLES

B.1-1: BOUNDING HAZARDS FROM THE IHA 9

B.3-1: INVENTORY OF RADIOACTIVE MATERIALS IN SILOS 1 AND 2 10
B.3-2: INVENTORY OF RADIOACTIVE MATERIAL IN TRANSFER TANK AREA 11
B.3-3: RCS CARBON BED INVENTORIES 11
B.3-4: SILOS 1 AND 2 MATERIAL DOSE CONVERSION 12
B.3-5: INVENTORY OF ORGANIC CHEMICALS IN SILOS 1 AND 2 RESIDUES 13
B.3-6: INVENTORY OF INORGANIC CHEMICALS IN SILOS 1 AND 2 RESIDUES 14

B.4-1: RADON CONTROL SYSTEM OPERATING PARAMETERS 17
B.4-2: RCS CARBON BED INVENTORIES 18
B.4-3: ADJUSTED THRESHOLD QUANTITIES 19
B.4-4: RCS ACCIDENTS–PRI COMPARISON TO ADJUSTED DOE-STD-1027-92 THRESHOLDS 20
B.4-5: TTA ACCIDENTS – PRI COMPARISON TO ADJUSTED DOE-STD-1027-92 THRESHOLDS 21
B.4-6: CHEMICAL HAZARD CLASSIFICATION GUIDELINES 24
B.4-7: ORGANIC CHEMICAL INVENTORY AND CONCENTRATIONS 25
B.4-8: INORGANIC CHEMICAL INVENTORY AND CONCENTRATIONS 26
B.4-9: CHEMICAL CONCENTRATION COMPARISON TO ERPG THRESHOLDS 28

ACRONYMS

ARF = Airborne release fraction
AWR = Accelerated Waste Retrieval
CEDE = Committed effective dose equivalent
CFR = Code of Federal Regulations
DAC = Derived air concentration
DCF = Dose conversion factor
DOE = U.S. Department of Energy
DSA = Documented Safety Analysis
ERPG = Emergency Response Planning Guide
HASP = Health and Safety Plan
HAR = Hazard Analysis Report
HC = Hazard Category
HAR = Hazard Analysis Report
IHA = Integrated Hazard Analysis
Jacobs = Jacobs Engineering Group, Inc.
MAR = Material at risk
NHASP = Nuclear Health and Safety Plan
OU = Operable unit
PRI = Potentially releasable inventory
RCS = Radon Control System
RF = Respirable fraction
RQ = Reportable Quantity
TPQ = Threshold planning quantity
TA = Transfer Tank Area
TQ = Threshold quantity
WL = Working level

EXECUTIVE SUMMARY

The Accelerated Waste Retrieval (AWR) project is classified as a Radiological (RAD) facility with Low chemical hazards because the largest potentially releasable inventory does not result in significant localized consequences.

The most severe radiological and chemical hazards for the AWR project, from the Integrated Hazards Analysis (IHA), APPENDIX A, were selected for modeling to determine the hazard category. Several scenarios were analyzed for consequences, and the most significant potentially releasable inventory is a result of a silo dome failure before retrieval activities begin.

The RAD hazard classification was determined after analyzing both radiological and chemical hazards. This is shown in SECTION B-4.0.

The radiological analysis considered three parameters, total activity of the various radionuclides, total activity that could be reasonably released via bounding scenario, and dose to onsite and offsite personnel.

The chemical analysis considered two parameters, the quantities of the various hazardous chemicals present, and the concentrations that would be generated during the bounding accident. Five hazardous chemicals could be released in quantities exceeding the corresponding Threshold Planning Quantities, however, the airborne concentrations that would result are lower than the applicable Emergency Response Planning Guides. Therefore a "Low" chemical hazard category is specified.

B-1.0 INTRODUCTION

The purpose of hazard categorization is to ensure that the appropriate level of hazard baseline documentation and approval authority is assigned to the project based on the severity of hazards that may be encountered.

This document establishes the hazard category (HC) designation in accordance with Department of Energy (DOE) - Standard (STD) -1027-92 [Ref. 1] for the following Accelerated Waste Retrieval (AWR) Project activities:

- Operation and maintenance of the Radon Control System (RCS)
- Operation and maintenance of the Transfer Tank Area (TTA)
- Silos 1 and 2 waste retrieval

The hazard baseline for the activities preceding retrieval has been documented separately in 624-P622-50, the Silo 1 and 2 Accelerated Waste Retrieval Project PHAR [Ref. 2]. These pre-retrieval activities are:

- continued storage of material in Silos 1 and 2
- routine maintenance and upkeep of Silos 1 and 2, support equipment, and surrounding grounds
- chronic radon releases from the Silos 1 and 2
- maintenance on and around the Silos 1 and 2
- continued design, procurement, construction, and system operability testing of new facilities and/or existing facilities in support of Silos 1 and 2 final remediation

The general methods are to compare the inventories of potentially releasable materials to radiological threshold values prescribed in DOE-STD-1027-92 [Ref. 1], 40 CFR 302, Appendix B, Table 302.4 [Ref. 3], and hazardous chemical threshold values prescribed in Table 302.4 (40 CFR 302), 29 CFR 1910.119 [Ref. 4], and 40 CFR 355 [Ref. 5]. This calculation draws on calculations previously performed for the existing hazard categorization of Silos 1 and 2 as found in Appendix C of the Operable Unit (OU) 4 Hazard Analysis Report (HAR) [Ref. 6].

The most severe radiological and chemical hazards from an Integrated Hazard Analysis (IHA) [Ref. 7] were selected for modeling to determine the HC and are presented in **TABLE B.1-1**. These hazards were identified as either having an "Anticipated," "Unlikely," or "Extremely Unlikely" frequency of occurrence with "Moderate" consequences.

TABLE B.1-1: BOUNDING HAZARDS FROM THE IHA				
Segment Item[a]	IHA Table A.6-2 ID No.	Notes	Potential Releasable Inventory Description	Event Selected for Further Evaluation in App. B and G
B1	3d	Failure of the RCS during retrieval operations.	Radon emanating from a silo over a 24-hr period.	Yes, modeled as EBA-1 in Appendix G
B2	3b	Failure of the RCS carbon beds and loss of radon inventory.	Loss of carbon bed radon inventory. The pure radon is released via the stack.	Yes, modeled as EBA-2 in Appendix G
B3	3g	Over- or under-pressurization of silo during RCS operation and subsequent silo failure.	Radon inventory from silo headspace, 1 percent of silo solids, radon from spilled solids, and radon emanating from the open silo.	Yes, modeled as EBA-3 in Appendix G
C1	1f	Catastrophic failure of a TTA tank resulting in a release of radon inventory to the environment.	Radon is released from the spilled inventory of the tank. Secondary confinement holds the entire inventory from one tank; only the radon inventory is considered potentially releasable.	Yes, modeled as EBA-5 in Appendix G
C2	1f	Retrieval transfer line failure during transfer operations from silo to TTA.	Silo material released assumes 15 minutes of continued pumping operations without operator intervention at a rate of 400 gpm.	Yes, modeled as EBA-4 in Appendix G

B-2.0 SEGMENTATION

To facilitate the hazard analysis, the activities within the AWR Project have been segmented. The AWR Project consists of Waste Retrieval from Silos 1 and 2, TTA, and the RCS.

The segmentation guidelines presented in DOE-STD-1027-92, Attachment 1, state that an analysis is to be performed on processes, operations, or activities and not necessarily whole facilities. Segmentation of the AWR facilities is justified because facility features preclude bringing hazardous materials together or causing harmful interaction from a common event. The failure mechanisms for the segments are independent.

The Hazard Category Calculation documented here establishes that the AWR project consists of two segments with respect to safety analysis. Both segments are analyzed and authorized in this N-HASP:

- RCS Operation
- Waste Retrieval and TTA Operation

B-3.0 DESCRIPTION OF HAZARDS

B-3.1 Radioactive Materials Inventory

The concentrations (pCi/g) of radionuclides found in K-65 material are shown in **TABLE B.3-1**, Inventory of Radioactive Materials in Silos 1 and 2. The radionuclide inventories are derived from the specific activity results obtained from the core sampling of Silos 1 and 2, which are tabulated in Table B.4-2 of the *Remedial Investigation Report for OU4* [Ref. 8]. The inventory of TTA radioactive materials, as shown in **TABLE B.3-2**, assumes that all material was transferred from the silos and is stored in the TTA.

TABLE B.3-1: INVENTORY OF RADIOACTIVE MATERIALS IN SILOS 1 AND 2

Nuclide	Silo 1 Activity		Silo 2 Activity		Total Activity (Ci)
	pCi/g [a]	Ci [b]	pCi/g [a]	Ci [c]	
Actinium-227	7,670.	51.7	6,640.	38.8	90.5
Protactinium-231			4,040.	23.6	23.6
Lead-210	202,000.	1,361.6	190,000.	1,108.9	2,470.4
Polonium-210	281,000.	1,894.1	231,000.	1,348.2	3,242.2
Radium-226	477,000.	3,215.2	263,000.	1,534.9	4,750.1
Thorium-228	2,280.	15.4	7,360.	43.0	58.3
Thorium-230	68,900.	464.4	76,200.	444.7	909.1
Thorium-232	1,110.	7.5	985.	6.6	14.1
Uranium-234	932.	6.3	1,160.	6.8	13.1
Uranium-235	54.	0.4	94.	0.5	0.9
Uranium-238	693.	4.7	1,120.	6.5	11.2
TOTAL					11,583.5

a Upper 95 percent confidence interval values from samples obtained in 1991 and reported in *Remedial Investigation Report for OU4* [Ref. 8].
b Based on a density of 2.055 g/cm^3 and a waste volume of 3,280 m^3.
c Based on a density of 2.055 g/cm^3 and a waste volume of 2,840 m^3.

TABLE B.3-2: INVENTORY OF RADIOACTIVE MATERIAL IN TRANSFER TANK AREA					
Nuclide	Tank No. 1 (Ci)	Tank No. 2 (Ci)	Tank No. 3 (Ci)	Tank No. 4 (Ci)	Total Activity (Ci)
Actinium-227	25.8	25.8	19.4	19.4	90.5
Protactinium-231	0.0	0.0	11.8	11.8	23.6
Lead-210	680.8	680.8	554.4	554.4	2,470.4
Polonium-210	947.0	947.0	674.1	674.1	3,242.2
Radium-226	1607.6	1607.6	767.5	767.5	4,750.1
Thorium-228	7.7	7.7	21.5	21.5	58.3
Thorium-230	232.2	232.2	222.4	222.4	909.1
Thorium-232	3.7	3.7	3.3	3.3	14.1
Uranium-234	3.1	3.1	3.4	3.4	13.1
Uranium-235	0.2	0.2	0.3	0.3	0.9
Uranium-238	2.3	2.3	3.3	3.3	11.2
TOTAL	3,511	3,511	2,281	2,281	11,583.5

The inventory of radon adsorbed on the carbon beds changes with each phase of the project. The inventory is calculated in SECTION B-4.0 and is summarized in **TABLE B.3-3**.

TABLE B.3-3: RCS CARBON BED INVENTORIES		
	Phase 1 – Silo Storage	Phase 2 – Silo 1 Mining
Maximum Radon Inventory (Ci)	146	345
Minimum Radon Inventory (Ci)	0.0	146

The relative hazard of each radionuclide can be represented by the committed effective dose equivalent (CEDE). The dose conversion factors (DCFs) provided by Federal Guidance Report No. 11, *Limiting Values of Radionuclide Intake and Air Concentration and Dose Conversion Factors for Inhalation, Submersion, and Ingestion* [Ref. 9], and ICRP 72 (for Radium-226) result in a material-specific DCF of 41.0 rem/g and 43.6 rem/g inhaled (without radon and progeny) for Silos 1 and 2 material, respectively [Ref. 10]. The primary dose contributor is ^{230}Th. The results are shown in **TABLE B.3-4**.

TABLE B.3-4: SILOS 1 AND 2 MATERIAL DOSE CONVERSION					
Nuclides	**Silo 1 Specific Activity[a] (pCi/g)**	**Silo 2 Specific Activity[a] (pCi/g)**	**Fed Guide 11 Inhalation DCF[b] (mrem/pCi)**	**Silo 1 DCF Without Radon (mrem/g)**	**Silo 2 DCF Without Radon (mrem/g)**
Ac-227	7,670	6,640	1.29	9,904	8,574
Pa-231	0	4,040	0.858	0	3,468
Pb-210	202,000	190,000	0.0136	2,743	2,580
Po-210	281,000	231,000	0.00858	2,412	1,983
Ra-226	477,000	263,000	0.0118[c]	5629	3013
Th-228	2,280	7,360	0.342	779	2,514
Th-230	68,900	76,200	0.262	18,024	19,933
Th-232	1,110	985	1.15	1,277	1,133
U-234	932	1,160	0.132	123	154
U-235/236	54	94	0.123	7	12
U-238	693	1,120	0.118	82	133
			Total	40,980	43,586

a. Measured values obtained from Reference 8, Tables 4-2 and 4-19, and are based on the upper 95 percent confidence interval on the mean of sample data. Radon and its short-lived progeny are omitted.
b The DCF lung clearance class for oxides was selected.
c. The DCF for radium is from ICRP 72, lung clearance class Y, because the radium in the silos is incorporated into very insoluble barium sulfate.

B-3.2 Chemical Inventories

The inventories of organic and inorganic chemicals in Silos 1 and 2 are listed in **TABLES B.3-5 and B.3-6**. The inventories are based on analyses of core samples taken from the silos in 1991 and reported in *Remedial Investigation Report for Operable Unit 4* [Ref. 8].

TABLE B.3-5: INVENTORY OF ORGANIC CHEMICALS IN SILOS 1 AND 2 RESIDUES

Organic Chemicals	Concentration (mg/kg)		Quantity (kg)		
	Silo 1 [a]	Silo 2 [a]	Silo 1 [b]	Silo 2 [c]	Total
2-Butanone	0.022	0.01	0.148	0.058	0.206
2-Hexanone	0.017	–	0.114	–	0.114
4,4-DDE	0.12	–	0.806	–	0.806
4,4-DDT	0.07	–	0.47	–	0.47
4-Methyl-2-pentanone	0.003	–	0.02	–	0.02
Acetone	0.15	0.07	1.01	0.407	1.42
Aldrin	0.056	–	0.376	–	0.376
Aroclor 1248	2.	–	13.4	–	13.4
Aroclor 1254	10.	15.	67.2	87.3	155.
Aroclor 1260	3.5	0.034	23.5	0.20	23.7
Benzoic acid	0.12	0.39	0.806	2.27	3.08
bis (2-Ethylhexyl) phthalate	1.5	1.2	10.1	6.98	17.1
Carbon tetrachloride	–	0.17	–	0.99	0.99
Di-n-butylphthalate	0.057	–	0.383	–	0.383
Di-n-octylphthalate	0.97	–	6.52	–	6.52
Dieldrin	0.093	–	0.625	–	0.625
Diethyl phthalate	–	0.41	–	2.39	2.39
Dimethyl phthalate	0.16	–	1.08	–	1.08
Endosulfan-I	0.092	–	0.618	–	0.618
Endosulfan-II	0.26	–	1.75	–	1.75
Endrin	0.089	–	0.598	–	0.598
Fluoranthene	–	0.064	–	0.373	0.373
Heptachlor epoxide	0.2	–	1.34	–	1.34
Methylene chloride	0.19	0.047	1.28	0.274	1.55
N-nitroso-di-n-propylamine	0.059	0.26	0.397	1.51	1.91
Phenol	0.4	–	2.69	–	2.69
Pyrene	–	0.047	–	0.274	0.274
Tetrachloroethene	–	0.14	–	0.815	0.815
Total xylenes	–	0.003	–	0.018	0.018
Toluene	0.05	0.01	0.336	0.058	0.394
Tributyl phosphate	51.	73.	343.	425.	768.

a Upper 95 percent confidence interval from *Remedial Investigation Report for OU4* [Ref. 8].
b Based on estimated material mass in Silo 1 of 6.72×10^9 grams.
c Based on estimated material mass in Silo 2 of 5.82×10^9 grams.

TABLE B.3-6: INVENTORY OF INORGANIC CHEMICALS IN SILOS 1 AND 2 RESIDUES

Inorganic Chemicals	Concentration (mg/kg)		Quantity (kg)		
	Silo 1 [a]	Silo 2 [a]	Silo 1 [b]	Silo 2 [c]	Total
General Chemicals					
Ammonia	8.9	–	59.8	–	59.8
Chloride	1340.	141.	9000.	821.	9820.
Fluoride	394.	–	2650.	–	2650.
Nitrate	4760.	8900.	32000.	51800.	83800.
Oil and grease	27000.	541.	181000.	3150.	184000.
Phosphorus	3290.	1400.	22100.	8150.	30300.
Sulfate	3460.	19300.	23300.	112000.	135000.
Total Kjeldahl nitrogen	676.	220.	4540.	1280.	5820.
Total organic carbon	26200.	24400.	176000.	142000.	318000.
Total organic nitrogen	623.	289.	4190.	1680.	5870.
Metals					
Aluminum	1320.	1110.	8870.	6460.	15300.
Antimony	26.	44.	175.	256.	431.
Arsenic	55.	1550.	370.	9020.	9390.
Barium	14200.	19900.	95400.	116000.	211000.
Beryllium	1.	3.	6.7	17.5	24.2
Boron	50.	51.	336.	297.	633.
Cadmium	4.	7.	26.9	40.7	67.6
Calcium	3650.	301000.	24500.	1750000.	1770000.
Chromium	55.	51.	370.	297.	667.
Cobalt	1100.	2430.	7390.	14100.	21500.
Copper	331.	818.	2220.	4760.	6980.
Cyanide	3.	5.	20.2	29.1	49.3
Iron	21100.	28900.	142000.	168000.	310000.
Lead (lead sulfate)	95500.	299000.	642000.	1740000.	2380000.
Magnesium	3380.	6410.	22700.	37300.	60000.
Manganese	97.	259.	652.	1510.	2160.
Mercury	0.9	1.2	6.0	7.0	13.0
Molybdenum	6290.	440.	42300.	2560.	44900.
Nickel	2290.	1720.	15400.	10000.	25400.
Potassium	493.	337.	3310.	1960.	5270.
Selenium	340.	124.	2280.	722.	3000.
Silicon	853.	1150.	5730.	6690.	12400.
Silver	13.	22.	87.4	128.	215.
Sodium	10700.	3200.	71900.	18600.	90500.
Thallium	1.4	2.	9.4	11.6	21.0
Vanadium	161.	298.	1080.	1730.	2810.
Zinc	37.	91.	249.	530.	779.

a Upper 95 percent confidence interval from *Remedial Investigation Report for OU4* [Ref. 8].
b Based on estimated material mass in Silo 1 of 6.72×10^9 grams.
c Based on estimated material mass in Silo 2 of 5.82×10^9 grams.

B-4.0 CALCULATIONS

Hazard categorization is dependent upon non-standard hazards (such as chemical or radionuclide release) and the short-term exposure of a nearby human receptor.

The methodology used in this section is to calculate, for the selected accident scenarios, the potentially releasable radiological material inventory and the CEDE from the potentially releasable materials. The inventory and CEDE results are compared to the threshold values in DOE-STD-1027-92 [Ref. 1]. The category 3 threshold criterion is based on an exposure of 10 rem at 30 m in 24 hr. The category 2 threshold criterion is based on an exposure of 1 rem at an on-site location at 100 m in 2 hr. Therefore, in addition to comparing potentially releasable inventories (PRIs) to threshold values for each scenario, exposures will also be calculated using site-specific parameters for comparison to dose criteria.

For chemical hazards, the chemical PRI is compared to the 40 CFR 302 reportable quantity (RQ) values and the 40 CFR 355 threshold planning quantity (TPQ) values. The consequence severity is determined by evaluating each hazardous chemical if the PRI exceeds the TPQ.

B-4.1 Accident Scenarios

The accidents shown in TABLE B.1-1 were identified during the IHA (see APPENDIX A) as having significant unmitigated risk (consequence times frequency). Therefore, a bounding accident for hazard categorization of the facilities covered by this N-HASP (RCS and TTA) can be derived from analysis of accident scenarios B1, B2, B3, C1, and C2.

- B1 Scenario-RCS Operation, Failure of RCS during retrieval: During retrieval the RCS fails and cannot be restored for an indefinite period (at least 24 hours). The Bentonite cap is mostly removed and radon continues to emanate from the waste. Containment features are not effective.

- B2 Scenario-RCS Operation, Failure of the carbon beds: An internal event (physical shock, thermal, etc.) causes the RCS to release a portion of the absorbed radon inventory during maximum loading conditions. The stack and ventilation system are intact; therefore, the radon release is via the stack.

- B3 Scenario-RCS Operation, Dome failure due to over or under-pressurization: A transient in the RCS results in an over- or underpressurization of a silo. The dome and a portion of the sidewall catastrophically fail, releasing the silo surface wastes (assumed to be 1 percent of the total). Radon then continues to be released via diffusion for 24 hr.

- C1 Scenario-TTA Operation, Tank failure in TTA: One of the four TTA tanks ruptures catastrophically, releasing all of its contents to the floor of the TTA. Slurry rises to a level of approximately 9 ft. throughout the TTA building. All the radon emanated from the slurry is assumed to leak to the environment. No solids are released from the TTA building.

- C2 Scenario-TTA Operation, Transfer line failure: The most vulnerable portion of the transfer line, which is single walled and runs approximately seven feet off the ground between the slurry module on the bridge and the TTA facility, is sheared during transfer. The pump runs for 15 minutes, ejecting slurry to the environment, before being shutoff manually.

B-4.2 Hazard Classification Based on Radiological Inventory

The PRI, as referred to by DOE-EM-STD-5502-94 [Ref. 11], is the amount of radioactive or hazardous material that can be released and present a respirable hazard. The PRI is compared to the applicable threshold quantities (TQs) for constituents listed in DOE-STD-1027-92 [Ref. 1] Table A-1 for HC-3 facilities. The PRI is that portion of the material at risk (MAR) source term released external to the facility. It is a function of the accident, the release fraction or rate, and the facility leakpath factor.

B-4.2.1 Material at Risk and Potentially Releasable Inventory

B1 Scenario-RCS Operation, Failure of RCS during retrieval

Essentially, radon that was being moved to the carbon beds is released to the environment. The rate of release is assumed to be the same as the transfer rate from the bulk material to the headspace. The transfer rate before retrieval operations begins was found to be 46.2 μCi/sec (see APPENDIX G, SECTION 2.1). During retrieval the bulk material is covered with sluice water, which impedes the transfer of radon to the headspace by an assumed factor of 2. Therefore the transfer rate for this scenario is 23.1 μCi/sec, with a resulting PRI of 2.03 Ci.

Since the average residence time for air is a silo is about 2 hours, radon there is assumed to be in equilibrium with its daughters. Therefore, the equilibrium factor for the scenario is 1.

B2 Scenario-RCS Operation, Failure of the carbon beds

The inventory of radon adsorbed on the carbon beds changes with time and flowrates. Radon control system parameters for determining maximum carbon bed inventories are provided in **TABLE B.4-1**.

TABLE B.4-1: RADON CONTROL SYSTEM OPERATING PARAMETERS		
Location	**Phase 1**	**Phase 2**
	Radon Conc. (pCi/L)	**Radon Conc. (pCi/L)**
Silo 1	1.0×10^6	2.0×10^6
Silo 2	1.0×10^6	1.0×10^6
Tank 01A	0	5.0×10^5
Tank 01B	0	5.0×10^5
Tank 02A	0	5.0×10^5
Tank 02B	0	5.0×10^5
Remediation Facility	0	0
	Gas Flow Rate (cfm)	**Gas Flow Rate (cfm)**
Silo 1	325	500
Silo 2	325	500
Tank 01A	0	125
Tank 01B	0	125
Tank 02A	0	125
Tank 02B	0	125

Calculation of maximum carbon bed inventory based on **TABLE B.4-1** values is done in six steps:

1. The input to the carbon beds is calculated by multiplying the individual flow rates and the respective concentrations, adjusting the units and summing. This results in a total of 1.84E10 pCi/min.

2. The fraction of the radon that passes through the bed at steady state is calculated using the following equation:

   $$\text{Fraction} = C_{out}/C_{in} = e^{-\lambda km/l}$$

   Where:

   C = concentration entering (in) or exiting (out) the beds
   λ = decay constant for radon (1.26E-4 min^{-1})
   k = dynamic absorption coefficient (l/g), use 13
   m = mass in four beds (g), use 40,000 x 454 x 4
   l = flow (l/min), use total flow (cfm) x 28.3 l/ft^3

3. The bed storage rate is the difference between the input and the output.

4. Take the storage rate calculated in step 3 above and convert it to atoms/min (multiply by 1.76E4 atoms Rn-222/pCi) to get activity, dN/dt.

5. Since $dN/dt = -\lambda N$, solve for N

6. Convert N from atoms to curies (1.76E16 atoms Rn-222/Ci) ??LB–B1

TABLE B.4-2 displays the results.

TABLE B.4-2: RCS CARBON BED INVENTORIES

	Total Flow cfm	Bed Input Rate pCi/min	Bed Output Rate pCi/min	Bed Storage Rate pCi/min	Inventory Ci
Phase 1	650	1.84E10	2.9E7	1.84E10	146
Phase 2	1500	4.95E10	3.02E9	4.65E10	369

The maximum inventory occurs in phase 2, and therefore the MAR for this accident is 369 Ci. The PRI for this scenario is 125 Ci, as shown in APPENDIX G, SECTION 3.3.

B3 Scenario-RCS Operation, Dome failure due to over or under-pressurization

The PRI for the silo over- or under-pressurization and silo failure is 1 percent of the silo K-65 solids, 0.45 Ci headspace radon, 11.2 Ci pure radon instantaneous release from the spilled solids, and 2.0 Ci pure radon flux from the silo contents as shown in APPENDIX G. Although the solids and radon release are from the silos segment, the analysis shows the effects of an RCS-initiated accident.

C1 Scenario-TTA Operation, Tank failure in TTA

The PRI for the TTA tank failure is limited to the radon release. At a radon emanation rate of 91 μCi/sec for 24 hours was used, as shown in APPENDIX G.

C2 Scenario-TTA Operation, Transfer line failure

This scenario assumes a bounding flow rate of 400 gpm, a concentration of 15 wt % solids, and a 15 min. release duration. The 6000 gal of slurry contains 2.57 Ci ^{226}Ra. The radon release is comprised of 0.9 Ci instantaneously, and 2.2 μCi/sec over the next 24 hours, as shown in APPENDIX G.

B-4.2.2 Threshold Quantity Limits

A number of assumptions were used to determine the TQs listed in DOE-STD-1027-92. They are derived from Nuclear Regulatory Commission guidance documents and Environmental Protection Agency methods used in 40 CFR 261 Comprehensive Environmental Response, Compensation, and Recovery Act technical basis documents [Ref. 12]. The requirements in DOE-STD-1027-92 allow for modification of TQs if credible release fractions can be shown to be significantly different than the default values based on physical and chemical forms of the material and dispersive energy sources. For example, the default airborne release fraction for solid materials is based on dry powders. If the hazardous material is actually slurry, the amount of material that becomes airborne is less because the slurry is less dispersible than the dry powder. Therefore, hazard categorization is performed by comparing the PRI to an adjusted HC-3 TQ.

For the releases in this calculation, the airborne release fraction (ARF) is different from the default ARF for solid materials, which is based on dry powders. This is primarily because the solid material release occurs during hydraulic transport and storage activities. The solid material is expected to physically behave as a slurry during the release and not as a dry powder as assumed for the TQs. The bounding combined ARF and RF for a free fall spill of slurry is 4.0×10^{-5} as found in DOE-HDBK-3010-94, *Airborne Release Fractions/Rates and Respirable Fractions for Nonreactor Nuclear Facilities,* page 3-4 [Ref. 13]. The default ARF for dry powders is 1.0×10^{-3}.

Therefore, the adjusted TQ per radionuclide is equal to 25 times the value listed in DOE-STD-1027-92. Adjusted TQs are summarized in **TABLE B.4-3**. The radon threshold is not adjusted, since the ARF for gases is 1.0, which is the same as the default. Note that the diffusion of radon is highly dependent upon moisture content. Therefore, an adjustment for diffusive release from a slurry could have been made.

TABLE B.4-3: ADJUSTED THRESHOLD QUANTITIES

Nuclide	HC-3 Threshold (Curies)	Adjusted HC-3 Threshold (Curies)
Ac-227	0.042	1.05
Pa-231	0.2	5.0
Pb-210	0.36	9.0
Po-210	1.9	47.5
Ra-226	12	300
Th-228	1.0	25
Th-230	0.62	15.5
Th-232	0.1	2.5
U-234	4.2	105
U-235	4.2	105
U-238	4.2	105
Rn-222	10	10

B-4.2.3 Potentially Releasable Inventory Comparison Results

Potentially releasable inventories for the selected accident scenarios are compared to the adjusted HC thresholds in **TABLE B.4-4** (RCS Operations) and **TABLE B.4-5** (TTA Operations). If the sum of fractions exceeds 1, the respective hazard categorization applies. Based on PRI comparisons to threshold criteria, the two of the RCS scenarios warrant a preliminary categorization of HC-3. However, CEDEs are determined in the next section for final hazard categorization, to demonstrate that operation of this facility will not result in significant localized consequences.

TABLE B.4-4: RCS ACCIDENTS–PRI COMPARISON TO ADJUSTED DOE-STD-1027-92 THRESHOLDS

Nuclide	Total Segment Inventories (MAR)[1] (Curies)			Potential Releasable Inventory[2] (PRI) (Curies)			Adjusted 1027 HC-3	Ratio[4] of Inventory to Adjusted HC-3 Threshold		
	B1	B2	B3	B1	B2	B3[3]	Curies	B1	B2	B3
Ac-227	N/A	N/A	52	N/A	N/A	0.52	1.05	N/A	N/A	4.92×10^{-1}
Pa-231	N/A	N/A	0	N/A	N/A	0	5.0	N/A	N/A	0
Pb-210	N/A	N/A	1,400	N/A	N/A	14	9.0	N/A	N/A	1.51×10^{0}
Po-210	N/A	N/A	1,900	N/A	N/A	19	47.5	N/A	N/A	3.99×10^{-1}
Ra-226	N/A	N/A	3,200	N/A	N/A	32	300	N/A	N/A	1.07×10^{-1}
Th-228	N/A	N/A	15	N/A	N/A	0.15	25	N/A	N/A	6.15×10^{-3}
Th-230	N/A	N/A	460	N/A	N/A	4.6	15.5	N/A	N/A	3.00×10^{-1}
Th-232	N/A	N/A	7.5	N/A	N/A	.075	2.5	N/A	N/A	2.99×10^{-2}
U-234	N/A	N/A	6.3	N/A	N/A	.063	105	N/A	N/A	5.98×10^{-4}
U-235	N/A	N/A	0.4	N/A	N/A	.0036	105	N/A	N/A	3.47×10^{-5}
U-238	N/A	N/A	4.7	N/A	N/A	.047	105	N/A	N/A	4.45×10^{-4}
Rn-222	3,200	345	3,200	2.03	101	13.7	10	0.2	10.1	1.39×10^{0}
Sum of the Fractions								**0.2**	**10.1**	**4.3**
Disturbed Rn				0		11.2				
Headspace Rn				0		0.45				
Rn Flux				2.0		2.0				
Mass (g)	n/a	n/a	6.7×10^{9}	n/a	n/a	6.7×10^{7}				

Notes:

1 Curies = Concentration (pCi/g) x Mass (g) x 10^{-12} (Ci/pCi). The MAR for ^{222}Rn is in secular equilibrium with ^{226}Ra.

2 The B1 and B2 solid release fractions are zero. The B3 solid release fraction is 0.01.

3 The PRI for ^{222}Rn is the Sum of the Disturbed, Headspace, and Flux Releases

4 Ratio of the PRI (Ci) / Adjusted DOE-STD-1027-92 Threshold (Ci).

TABLE B.4-5: TTA ACCIDENTS – PRI COMPARISON TO ADJUSTED DOE-STD-1027-92 THRESHOLDS

Nuclide	Total Segment Inventories (MAR)[1] (Curies)		Potential Releasable Inventory[2, 3] (PRI) (Curies)		Adjusted 1027 HC-3	Ratio[4] of Inventory to Adjusted HC-3 Threshold	
	C1 Tank Failure	C2 Transfer Line Failure	C1 Tank Failure	C2 Transfer Line Failure	Curies	C1 Tank Failure	C2 Transfer Line Failure
Ac-227	25.8	52	N/A	0.041	1.05	N/A	3.93E-02
Pa-231	0.0	0	N/A	0.022	5.0	N/A	4.35E-03
Pb-210	680.8	1,400	N/A	1.087	9.0	N/A	1.21E-01
Po-210	947.0	1,900	N/A	1.513	47.5	N/A	3.18E-02
Ra-226	1607.6	3,200	N/A	2.568	300	N/A	8.56E-03
Th-228	7.7	15	N/A	0.040	25	N/A	1.58E-03
Th-230	232.2	460	N/A	0.371	15.5	N/A	2.39E-02
Th-232	3.7	7.5	N/A	0.006	2.5	N/A	2.39E-03
U-234	3.1	6.3	N/A	0.006	105	N/A	5.95E-05
U-235	0.2	0.4	N/A	0.001	105	N/A	4.82E-06
U-238	2.3	4.7	N/A	0.006	105	N/A	5.74E-05
Rn-222	1608	3,200	7.87	1.09	10	0.79	0.109
Sum of the Fractions						**0.79**	**0.34**
Disturbed Rn			0	0.90			
Rn Flux			7.87	0.19			

Notes:

1 Curies = Concentration (pCi/g) x Mass (g) x 10^{-12} (Ci/pCi). The MAR for ^{222}Rn is in secular equilibrium with ^{226}Ra.

2 The Segment C1 solid release fraction is zero. The Segment C2 solid release fraction is a function of the slurry pump rate and release duration.

3 The PRI for ^{222}Rn is the Sum of the Disturbed and Flux Releases

4 Ratio of the PRI (Ci) / Adjusted DOE-STD-1027-92 Threshold (Ci).

B-4.3 Hazard Classification Based on Radiological Dose Criteria

Dose consequences were determined to demonstrate that operation of this facility will not result in significant localized consequences. Consequences were determined for workers at 30 m and at 100 m, for comparison to the dose threshold criteria of DOE HC-3 (10 rem over 24 hours).

The methods used to determine the dose consequence or CEDE for each accident scenario utilize variations of the following general equation [Ref.13]:

$$CEDE = \sum(MAR * DCF * DR * BR * ARF * LPF * RF * (X/Q) * T)_i$$

Where:

MAR = amount of a radionuclide available to be acted upon by a physical stress (pCi)
DCF = dose conversion factor in millirem/pCi
DR = damage ratio or the fraction of the MAR actually impacted by accident conditions

BR = breathing rate of a reference person considered 3.33 x 10^{-4} m^3/sec
ARF = airborne release fraction per hour
LPF = leak path factor or the fraction of material transported through some confinement
RF = respirable fraction
X/Q = long-term dispersion factor in sec/m^3
T = exposure time in hours
I = each radionuclide

The dispersion factor (X/Q) for a straight line, ground level release is determined from a Gaussian plume model for continuous point source emission in accordance with Nuclear Regulatory Commission's *Regulatory Guide 1.145* [Ref. 14]. A wind speed of 1.0 m/sec and D stability class was used at 30 m, and a wind speed of 4.5 m/sec and D stability class was used at 100 m, which is consistent with the recommendations of DOE-STD-1027-92 for HC calculations. A wind speed of 1 m/s and F stability class was used at 330 m, which is consistent with the requirements of DOE Guide 151.1 [Ref. 15].

Fluor Fernald, Inc., developed a predictive tool, The Fernald Radon Model, to estimate radon air concentrations at different site locations for various release scenarios. The model, which reasonably fits existing site monitoring data, is described in the *Radon Modeling Report for the OU4 Safety Analysis Plan* [Ref. 16]. A wind speed of 1.8 m/sec is used for ground level releases, since this speed is a basic assumption of the model and is based on the F Class stability. A wind speed of 2.0 m/sec was used to bound the concentration from a stack release under fumigation conditions. Once the radon air concentrations are determined at different receptor locations, the dose consequence can be determined. For the purpose of comparison with thresholds and limits, the dose equivalence of working levels (WLs) must be determined. As shown in 10 CFR 835 [Ref. 17], the derived air concentration (DAC) for ^{222}Rn is 30 pCi/L, corresponding to 5 rem in 1 yr, which is equivalent to 2.5 mrem in 1 hr. Therefore, an individual exposed to 100 pCi/L ^{222}Rn (or 1 WL) for 1 hr would receive a dose of 7.5 mrem, assuming 100 percent progeny equilibrium.

B-4.3.1 RCS Accidents

Three RCS-initiated accidents were analyzed in APPENDIX G. The consequences from the RCS carbon bed warming were insignificant since the release is pure radon. The time duration from the release point to the receptor does not allow appreciable ingrowth of radon progeny. Nevertheless, fractional ingrowths ranging up to twice the expected values were assumed in the calculation of dose.

The most significant RCS accident is an RCS malfunction that allows radon to diffuse out to the environment. The CEDE at 30 m over a 24-hr exposure period due to this accident is approximately 1720 mrem. The CEDE at 100 m over a 2-hr exposure is 11 mrem.

Of the three RCS-initiated accidents, none resulted in significant localized consequences.

B-4.3.2 TTA Accidents

None of the analyzed TTA accidents resulted in significant localized consequences. As shown in APPENDIX G, the CEDE at 30 m over a 24-hr exposure due to the transfer line breach is approximately 83 mrem. The CEDE at 30 m over a 24-hr exposure due to a tank failure is 50 mrem.

B-4.4 Hazard Classification Based on Chemical Constituents

According to DOE-STD-5502-94 [Ref. 11], facilities with inventories of hazardous materials at or above the levels specified in 40 CFR 355, *Emergency Planning and Notification,* and 29 CFR 1910.119 shall develop the same safety documentation as required for "non-nuclear" facilities. In addition, if the PRI exceeds the Table 302.4 Reportable Quantity (RQ) value, the facility is categorized as "non-nuclear." If the hazardous material PRI is less than the RQ value, then the facility is categorized as an "other industrial facility."

Once it is determined that the RQ values have been exceeded, an evaluation of the consequence severity is conducted to properly classify the hazard as high, medium, or low. Non-nuclear facilities are classified as either having high, moderate, or low hazards, based on the following guidelines and those provided in TABLE B.4-6.

- High: hazards with a potential for major impacts to on-site and off-site persons or the environment.
- Moderate: hazards that present considerable potential on-site impacts to people or the environment, but only minor off-site impacts.
- Low: hazards that present minor on-site and negligible off-site impacts to people and the environment.

The high, moderate, and low health consequences may be related to an Emergency Response Planning Guide (ERPG) system, where ERPGs are the only well-documented parameters developed to date specifically for use in evaluating the health consequence of the public to accidental releases of hazardous chemicals. Within the ERPG system, three biological reference values are defined as follows:

- ERPG-1: The maximum concentration in air below which it is believed nearly all individuals could be exposed for up to 1 hr without experiencing other than mild transient adverse health effects or perceiving a clearly defined objectionable odor;
- ERPG-2: The maximum concentration in air below which it is believed nearly all individuals could be exposed for up to 1 hr without experiencing or developing irreversible or other serious health effects or symptoms that could impair their abilities to take protective action;

- ERPG-3: The maximum concentration in air below which it is believed nearly all individuals could be exposed for up to 1 hr without experiencing or developing life-threatening health effects.

TABLE B.4-6 classifies hazard consequences as a function of ERPGs.

TABLE B.4-6: CHEMICAL HAZARD CLASSIFICATION GUIDELINES		
Hazard	**On-Site Concentration**	**Off-Site Concentration**
High	N/A	Greater than ERPG-3
Moderate	Greater than ERPG-3	From ERPG-2 to ERPG-3
Low	From ERPG-2 to ERPG-3	From ERPG-1 to ERPG-2
General Industry	Less than ERPG-2	Less than ERPG-1

B-4.4.1 Comparison of Hazardous Chemicals to Thresholds Limits

TABLES B.4-7 and **B.4-8** provide the chemical concentrations in the silos waste [Ref. 8], the PRI of hazardous chemicals for Segment B3 (silo failure due to over or underpressurization), and the comparison to 40 CFR 302 RQ limits and 40 CFR 355 threshold planning quantity (TPQ) limits. Lead is primarily in the form of lead sulfate, as a result of the processing techniques used during the production era.

B-4.4.2 Evaluation of Chemical Consequence Severity

The evaluation guidelines used for determining toxic chemical hazard classification are provided by *Toxic Chemical Hazard Classification and Risk Acceptance Guidelines for Use in DOE Facilities* [Ref. 18]. The consequence severity is determined by evaluating each hazardous chemical in which the PRI exceeds the RQ.

The 15-min peak airborne concentration available to on-site and off-site receptors is estimated by a straight-line Gaussian dispersion model for each hazardous chemical [Ref. 19] in which the PRI exceeds the RQ. The dispersion model uses stability class D and a 4.5 m/sec wind speed. The on-site receptor location is assumed to be downwind at a centerline plume distance of 100 m, while the off-site receptor is located at 330 m (site boundary). Both receptors assume ground level concentrations in accordance with NUREG/CR-3332 [Ref. 20].

TABLE B.4-7: ORGANIC CHEMICAL INVENTORY AND CONCENTRATIONS

Organic Chemicals	95th Percentile Concentrations			PRI[1] (lb)	40CFR302 Table 302.4[2] RQ (lb)	40CFR355 TPQ[3] (lb)	PRI exceeds RQ? (Yes or No)	PRI exceeds TPQ? (Yes or No)
	Silo 1 (mg/kg)	Silo 2 (mg/kg)	Worst-case (mg/kg)					
2-Butanone	0.022	0.01	0.022	0.003	5000	n.l. [4]	No	No
2-Hexanone	0.017		0.017	0.003	n.l.	n.l.	No	No
4,4-DDE	0.12		0.12	0.02	1	n.l.	No	No
4,4-DDT	0.070		0.070	0.01	1	n.l.	No	No
4-Methyl-2-pentanone	0.003		0.00	0.0004	5000	n.l.	No	No
Acetone	0.15	0.07	0.15	0.02	5000	n.l.	No	No
Aldrin	0.06		0.06	0.01	1	500	No	No
Aroclor 1248	2.0		2.00	0.30	1	n.l.	No	No
Aroclor 1254	10.0	15.0	15.00	2.21	1	n.l.	**Yes**	No
Aroclor 1260	3.5	0.03	3.50	0.52	1	n.l.	No	No
Benzoic acid	0.12	0.39	0.39	0.06	5000	n.l.	No	No
bis(2-ethylhexyl) phthalate	1.5	1.20	1.50	0.22	100	n.l.	No	No
Carbon tetrachloride		0.17	0.17	0.03	10	n.l.	No	No
Di-n-butyl phthalate	0.06		0.06	0.01	10	n.l.	No	No
Di-n-octylphthalate	0.97		0.97	0.14	5000	n.l.	No	No
Dieldrin	0.09		0.09	0.01	1	n.l.	No	No
Diethyl phthalate		0.41	0.41	0.06	1000	n.l.	No	No
Dimethyl phthalate	0.16		0.16	0.02	5000	n.l.	No	No
Endosulfan-I	0.09		0.09	0.01	1	10	No	No
Endosulfan-II	0.26		0.26	0.04	1	10	No	No
Endrin	0.09		0.09	0.01	1	500	No	No
Fluoranthene		0.06	0.06	0.01	100	n.l.	No	No
Heptachlor epoxide	0.20		0.20	0.03	1	n.l.	No	No
Methylene chloride	0.19	0.05	0.19	0.03	1000	n.l.	No	No
N-nitroso-di-n-propylamine	0.06	0.26	0.26	0.04	n.l.	n.l.	No	No
Phenol	0.40		0.40	0.06	1000	500	No	No
Pyrene		0.05	0.05	0.01	5000	1000	No	No
Tetrachloroethene		0.14	0.14	0.02	100	n.l.	No	No
Total xylenes		0.003	0.003	0.00	100	n.l.	No	No
Toluene	0.05	0.01	0.05	0.01	1000	n.l.	No	No
Tributyl phosphate	51.0	73.0	73.00	10.77	n.l.	n.l.	No	No
Mass (g) =	6.7×10^9	5.8×10^9		1.3×10^{10}				

1 Segment Inventory (lbs) = [Concentration (mg/kg) x Mass (g) / 1000 (g/kg)]. One pound = 453.592 grams
2 40 CFR 302.4 – List of Hazardous Substances and Reportable Quantities.
3 40 CFR 355 Appendix A – The List of Extremely Hazardous Substances and their Threshold Planning Quantities.
4 n.l. is "not listed"

TABLE B.4-8: INORGANIC CHEMICAL INVENTORY AND CONCENTRATIONS

Inorganic Chemicals	95th Percentile Concentrations			PRI[1] (lbs)	40CFR302 Table 302.4[2] RQ (lbs)	40CFR355 TPQ[3] (lbs)	PRI exceeds RQ? (Yes or No)	PRI exceeds TPQ? (Yes or No)
	Silo 1 (mg/kg)	Silo 2 (mg/kg)	Worst-case (mg/kg)					
Aluminum	1,320	1,110	1,300	191.9	n.l. [4]	n.l.	No	No
Antimony	26	44	44	6.5	5000	n.l.	No	No
Arsenic	55	1,550	1,550	229	1.0	n.l.	**Yes**	No
Barium	14,200	19,900	19,900	2,937	n.l.	n.l.	No	No
Beryllium	1	3	3	0.4	10	n.l.	No	No
Boron	50	51	51	7.5	n.l.	n.l.	No	No
Cadmium	4	7	7	1.0	10	n.l.	No	No
Calcium	3,650	301,000	301,000	44,421	n.l.	n.l.	No	No
Chromium compounds	55	51	55	8.1	n.l.	n.l.	No	No
Cobalt	1,100	2,430	2,430	358.6	n.l.	n.l.	No	No
Copper compounds	331	818	818	120.7	n.l.	n.l.	No	No
Cyanide	3	5	5	0.7	10	n.l.	No	No
Iron	21,100	28,900	28,900	4,265	n.l.	n.l.	No	No
Lead(lead sulfate)	95,500	299,000	299,000	44,126	10	n.l.	**Yes**	No
Magnesium	3,380	6,410	6,410	946	n.l.	n.l.	No	No
Manganese	97	259	259	38.2	n.l.	n.l.	No	No
Mercury	1	1	1	0.2	1.0	500	No	No
Molybdenum	6,290	440	6,290	928.3	n.l.	n.l.	No	No
Nickel	2,290	1,720	2,290	338	100	n.l.	**Yes**	No
Potassium	493	337	493	72.8	n.l.	n.l.	No	No
Selenium	340	124	340	50.2	10	n.l.	**Yes**	No
Silicon	853	1,150	1,150	169.7	n.l.	n.l.	No	No
Silver compounds	13	22	22	3.2	n.l.	n.l.	No	No
Sodium	10,700	3,200	10,700	1,579	n.l. [5]	n.l.	No	No
Thallium compounds	1	2	2	0.3	n.l.	n.l.	No	No
Vanadium	161	298	298	44.0	n.l.	n.l.	No	No
Zinc	37	91	91	13.4	n.l.	n.l.	No	No
Mass (g) =	6.7×10^9	5.8×10^9		1.3×10^{10}				

1 Segment Inventory (lbs) = [Concentration (mg/kg) x Mass (g) / 1000 (g/kg)]. One pound = 453.592 grams
2 40 CFR 302.4 – List of Hazardous Substances and Reportable Quantities.
3 40 CFR 355 Appendix A – The List of Extremely Hazardous Substances and their Threshold Planning Quantities.
4 n.l. is "not listed."
5 The RQ for sodium metal is 10 lb but the silos contain only sodium compounds.

The 15-min peak chemical concentrations are then compared to the primary concentration guidelines to determine the appropriate hazard rating (high, moderate, or low).

Chemical Dispersion Model

Using Equation 3.1 from Ref. 19, we have:

$$\frac{\chi}{Q} = \frac{1}{2 \cdot \pi \cdot sig_y \cdot sig_z \cdot u} \cdot e^{-\frac{1}{2}\left(\frac{y}{sig_y}\right)^2} \cdot e^{-\frac{1}{2}\left(\frac{z-H}{sig_z}\right)^2}$$

Where:

χ/Q = dispersion parameter [s/m^3]
u = wind speed is 4.5 [m/s] [Ref. 18]
y = crosswind distance [m] (0 = centerline)
z = elevation [m] (0 = ground level)
H = stack height, m

$$sig_z(x) = \frac{1}{2.15} \cdot e^{\left(b_1 + b_2 \cdot \ln x + b_3 \cdot \ln^2 x\right)}$$

$$sig_y(x) = \left(a_1 \cdot \ln x + a_2\right) \cdot x$$

sig_y, sig_z are dispersion coefficients that are calculated using the Pasquill-Gifford equations from the downward distance (Equations 2.22 and 2.23 respectively from Ref. 20). Diffusion coefficients are taken from Table 2-8 of Ref. 20. X equals the distance from the release in meters.

For stability class D, a wind speed of 4.5 m/sec, and a stack height of 0 m, the dispersion parameter (χ/Q) is 1.83 x 10^{-3} s/m^3 at x = 100 m, and for stability class F, wind speed of 1 m/sec, and a stack height of 0 m, the dispersion parameter (χ/Q) is 9.00 x 10^{-4} at x = 350 m. The χ/Q value is then used to determine the 15-min peak chemical concentrations © by the following equation:

$$C_i = \frac{MAR_i \cdot ARF \cdot RF \cdot LPF \cdot DR \cdot \frac{\chi}{Q}}{t}$$

Where:

C_i = concentration (mg/m^3) of the chemical constituent at the receptor
T = time over which the release is integrated over (15 min)

TABLE B.4-9 identifies the dispersion estimates and a compares the ERPG values for those PRI chemicals in excess of the RQ, as noted in TABLES B.4-7 and B.4-8.

TABLE B.4-9: CHEMICAL CONCENTRATION COMPARISON TO ERPG THRESHOLDS

Chemicals	Concentration		ERPG-1 (mg/m^3)	ERPG-2 (mg/m^3)	ERPG-3 (mg/m^3)
	Onsite (mg/m^3)	Offsite (mg/m^3)			
Aroclor 1254	9.0×10^{-5}	4.40×10^{-5}	3.0	5.0	5.0
Arsenic	9.32×10^{-3}	4.60×10^{-3}	0.03	1.4	5
Lead (as lead sulfate)	1.8×10^{0}	8.84×10^{-1}	3	20	100
Nickel	1.38×10^{-2}	6.76×10^{-3}	3.0	10	10
Selenium	2.05×10^{-3}	1.00×10^{-4}	0.6	1.0	10

The off-site concentration for lead meets the ERPG criteria for a Low chemical hazard classification. The ERPG values are obtained from Ref. 21.

B-5.0 FINAL HAZARD CATEGORY

The results of these analyses demonstrate that the AWR Facility (RCS and TTA) may be reasonably categorized as a Radiological (RAD) Facility with a Low chemical hazard. Anticipated localized dose consequences are not significant, and anticipated chemical concentrations do not exceed the corresponding ERPG concentrations.

These analyses are appropriate for the development of graded safety analysis required by 10 CFR 830, Appendix A, Table 2 [Ref. 22]. Detailed accident analyses are provided in APPENDIX G of the AWR Nuclear Health and Safety Plan, although not required for RAD facilities, to give a better understanding of the material that can be physically released from the facility and the associated risks to workers, the public, and the environment.

B-6.0 REFERENCES

1. DOE-STD-1027-92, *Hazard Categorization and Accident Analysis Techniques for Compliance with DOE Order 5480.23, Nuclear Safety Analysis Reports*, U.S. Department of Energy

2. 624-P622-50, *Preliminary Hazard Analysis Report for the Accelerated Waste Retrieval Project*; 624-P622-48, Appendix A, *Integrated Hazards Analysis Report*; Foster Wheeler Environmental Corporation; January, 2000

3. 40 CFR 302, *Designation, Reportable Quantities, and Notification*, Code of Federal Regulations, Title 40, Part 302

4. 29 CFR 1910.119, *Process Safety Management of Highly Hazardous Chemicals*, Code of Federal Regulations, Title 29, Part 1910.119

5. 40 CFR 355, *Emergency Planning and Notification*, Code of Federal Regulations, Title 40, Part 355; current edition

6. 40000-RP-0028, *Hazards Analysis Report for Operable Unit 4 (OU4) Silos*, Fluor Fernald; May, 1998

7. 624-P622-48, *Preliminary Hazard Analysis Report*; Appendix A, *Integrated Hazards Analysis Report*; Foster Wheeler Environmental Corporation; January, 2

8. FEMP-04RI-6, *Remedial Investigation Report for OU 4*, Volume 1 of 3, Fernald Environmental Management Project; November, 1993

9. Federal Guidance Report No. 11, EPA-520/1-88-020, *Limiting Values of Radionuclide Intake and Air Concentration and Dose Conversion Factors for Inhalation, Submersion, and Ingestion*, Environmental Protection Agency; September, 1988

10. CA-FSC-624-FM-001, Rev. 3, *RCS Performance Calculations*, Foster Wheeler Environmental Corporation; November 28, 2000

11. DOE-EM-STD-5502-94, *Hazard Baseline Documentation*, U.S. Department of Energy

12. 40 CFR 261, *Identification and Listing of Hazardous Waste*, Code of Federal Regulations, Title 40, Part 261; current edition

13. DOE-HDBK-3010-94, *Airborne Release Fractions/Rates and Respirable Fractions for Nonreactor Nuclear Facilities*, U.S. Department of Energy; December, 1994

14. Regulatory Guide 1.145, *Atmospheric Dispersion Models for Potential Accident Consequence Assessments at Nuclear Power Plants*, U.S. Nuclear Regulatory Commission; February, 1983

15. DOE G 151.1, *Emergency Management Guide for the Implementation of DOE O 151.1*, U.S. Department of Energy; August 21, 1997

16. 40000-RP-0030, *Radon Modeling Report for OU4 Safety Analysis Plan,* Parsons; February, 1998

17. 10 CFR 835, *Occupational Radiation Protection*, Code of Federal Regulations, Title 10, Part 835; current edition

18. WSRC-MS-92-206, Revision 2, *Toxic Chemical Hazard Classification and Risk Acceptance Guidelines for Use in DOE Facilities*; March 24, 1995

19. *Workbook of Atmospheric Dispersion Estimates*, Environmental Protection Agency; January, 1974

20. NUREG/CR-3332, *Radiological Assessment: A Textbook on Environmental Dose Analysis*, U.S. Nuclear Regulatory Commission; 1983

21. WSMS-SAE-99-0001, Rev. 15, *ERPGs and TEELs for Chemicals of Concern*, January 4, 1999

22. 10 CFR 830, *Nuclear Safety Management*, Title 10, Code of Federal Regulations Part 830, U. S. Department of Energy, January 10, 2000

Appendix C

APPENDIX C
HUMAN FACTORS EVALUATION

THIS PAGE INTENTIONALLY BLANK

TABLE OF CONTENTS

EXECUTIVE SUMMARY 5

C-1.0 INTRODUCTION 5

- C-1.1 AWR Project 6
- C-1.2 Human Factors Evaluation 7
- C-1.3 Evaluation Methodology 8

C-2.0 AWR TASK DESCRIPTIONS 8

- C-2.1 AWR Phase 1 (RCS) Control System 9
- C-2.2 AWR Phase 2 (WR&SS) Control System 11
- C-2.3 RCS and WR&SS Operators 12
- C-2.4 RCS and WR&SS Maintenance 12
- C-2.5 Results 13

C-3.0 CONCLUSIONS 14

C-4.0 REFERENCES 15

ATTACHMENTS

1: HUMAN FACTORS EVALUATION CHECKLIST 17

2: RCS OPERATIONS/MAINTENANCE TASK LIST AND HUMAN FACTORS HAZARDS MATRIX 27

3: WR&SS OPERATIONS/MAINTENANCE TASK LIST AND HUMAN FACTORS HAZARDS MATRIX 31

4: AWR PROJECT INDUSTRIAL SAFETY AND HUMAN FACTORS 37

ACRONYMS

AWR = Accelerated Waste Retrieval
CAT = Construction Acceptance Testing
DOE = U.S. Department of Energy
FCP = Fernald Closure Project
HFE = Human Factors Evaluation
MWI = Maintenance Work Instructions
N-HASP = Nuclear Health and Safety Plan
OJT = On-the-job-training
OSHA = Occupational Safety and Health Administration
OU = Operable Unit
PLC = Programmable Logic Controller
PC = Personal computer
P&ID = Piping and Instrumentation Diagrams
PPE = Personal Protective Equipment
RCS = Radon Control System (AWR Phase 1)
RWP = Radiological Work Permit
SSC = Structure, Systems, and Components
STD = Standard
TTA = Transfer Tank Area
WR&SS = Waste Retrieval and Storage Systems (AWR Phase 2)

EXECUTIVE SUMMARY

At the beginning of final design for the Accelerated Waste Retrieval (AWR) Project, the design engineers were provided with a Human Factors Engineering Design Checklist and design criteria. Design engineers used the checklist to ensure that constraints and recommendations of human factors engineering were included in their design of components and systems. The checklist and criteria assisted design engineers in designing equipment in accordance with human capabilities and limitations.

This Human Factors Evaluation is an appendix in the Nuclear Health and Safety Plan (N-HASP) that requests approval to start up AWR Phase 1 (Radon Control System [RCS]) and operate while AWR Phase 2 (Waste Retrieval and Storage Systems [WR&SS]) facilities were being planned and constructed. However, a complete and final Human Factors Evaluation requires a thorough review of the human/machine interfaces of all systems within the AWR Project, which is what this documents provides.

As AWR Phase 2 construction progresses, the manufacturer's manuals will become available. A System Safety Analyst will evaluate the operating and maintenance manuals to provide procedure guidance regarding human factors concerns. Additional evaluations will be performed following dry-runs, walk-downs, and startup testing, to revise the procedures as necessary. Further refinements can be performed as lessons learned arise from the actual implementation.

C-1.0 INTRODUCTION

This Human Factors Evaluation (HFE) is an assessment of a number of factors important to the safe operation of the AWR Project, including the RCS. The goal of this evaluation is to address stress, ergonomic, procedural, design, and training issues, with a resulting reduction of risk to workers, the public, and the environment caused by operator errors. The adequacy of controls has been evaluated based on specific engineering design details. The HFE focus is on the new facility designs and pays particular attention to remote operations and control room layout. The purpose of this HFE is to demonstrate that human factors were adequately considered for the operation of AWR Phases 1 and 2.

According to DOE-STD-3009-94 [Ref. 1], the primary emphasis of human factors engineering "is on human-machine interfaces required for ensuring safety function of safety structures, systems, and components (SSC's) that are important to safety." Hazard Category 2 facilities may have several human-machine interfaces with safety-class SSCs and safety-significant SSCs. Hazard Category 3 facilities may have human-machine interfaces with safety-significant SSCs. The RCS is a "Radiological Facility" and the Silos are a Hazard Category 3 facility. The emphasis of this evaluation is on activities that could cause unnecessarily high exposures to hazardous/radioactive materials, but still less than those necessary to cause significant local effects (consistent with the concept of ALARA). In addition, emphasis is placed on minimizing physical dangers to personnel (i.e., strains or falls) in the course of performing project activities.

The purpose of including this HFE within the N-HASP is to demonstrate that an adequate process is in place to evaluate the human/machine interfaces throughout the design and construction of the AWR Project.

C-1.1 AWR Project

The Fernald Closure Project (FCP) Operable Unit (OU) 4 includes four silos: Silos 1 and 2 (also known as the K-65 Silos), Silo 3, and Silo 4. Silos 1 and 2 contain radium-bearing residues from pitchblende ore processes. Silo 3 contains dry uranium oxide and other metal oxides. Silo 4 is empty and has never been used. The AWR Project involves Silos 1 and 2, but not Silos 3 and 4. Radon from Silos 1 and 2 will be vented through the new RCS. AWR Phase 1 activities consist of the RCS construction/start up, and Silos 1 and 2 headspace radon reduction. AWR Phase 2 construction will be performed in parallel with Phase 1 RCS activities. Silo waste retrieval and storage is the primary objective of the AWR Phase 2. K-65 waste materials in Silos 1 and 2 will be moved to the Transfer Tank Area (TTA) tanks, which will also be vented through the RCS. The existing and new facilities for which operations and maintenance activities will be performed include:

- Silos 1 and 2
- RCS
- Control room (Building 94A)
- Silos 1 and 2 Bridge and Transfer System
- TTA Facility

K-65 waste materials will be staged and maintained in the TTA tanks. Waste from the TTA tanks will be transferred to the Remediation Facility for processing prior to final off-site disposal.

Silo Waste Retrieval System (SWRS) and TTA Waste Retrieval System (TWRS) utilize a technique referred to as "past practice sluicing" to retrieve and pump material from the two silos and four Transfer Storage Tanks. Past practice sluicing uses medium-pressure (150 psi), high volume (300 gpm) liquid streams to dislodge, slurry, and convey waste material to the intake of a centrifugal slurry pump. Silo sluice water for retrieval of Silo 1 and 2 waste is provided from the TTA; the sluice water for retrieval of waste for processing is supplied from the Remediation Facility.

Initially, the sluicing stream(s) is directed toward the slurry pump to create a slurry pool and form a cavity into which slurry will flow. The sluice stream direction is controlled from the control room. The slurry pump has a high-pressure water jet ring at the pump suction that assists in creating the slurry pool. The slurry pump is remotely lowered into the slurry pool and energized when the interface has been detected. The sluice nozzle discharge then begins cutting a stream into the waste, pushing it toward the pump suction inlet.

Discharge slurry lines are equipped with pressure, volumetric flow, and density sensors. The flow signal is totalized to convert instrument measurements into a total mass of solids transferred through the slurry line. If the solids' weight percentage changes rapidly or indicates an abnormal trend, the control room operator may make adjustments as needed

to maintain the required solids content. As the waste level periodically decreases in a silo or transfer tank, the slurry pump is lowered into the waste until the desired quantity of bulk waste is retrieved.

A slurry line diverter valve system directs the silo retrieved waste slurry to one of the four transfer storage tanks. A similar valve manifold within the TTA facilitates control of the transfer of slurry from one tank to another or from a transfer storage tank to the Remediation Facility for processing.

C-1.2 Human Factors Evaluation

The primary objective of human factors engineering is to improve human performance through enhancements in the work environment and human-machine interfaces [Ref. 2]. Enhancements to the work environment and human-machine interfaces reduce human errors and their consequences and lead to the following:

- Increased productivity
- Lower costs
- Better product quality
- Decreased equipment and property damage
- Improved program schedules
- Personal job satisfaction
- Further improvements in the safe operation and maintenance of project facilities

Human factors safety guidance provided in DOE-STD-3009, Chapter 13 [Ref. 1] refers to the following:

- Allocation of control functions to personnel versus automatic devices
- Staffing and qualification of operating crews
- Personnel training
- Preparation, validation, and use of written procedures to guide operations
- Surveillance and maintenance
- Design of the human-machine interfaces to build on strengths and protect against the susceptibility to human error in operating crews

HFEs are performed on project designs, operations, activities, procedures, plans, training programs, and other applicable documents and activities with a graded approach. The extent of graded approach is determined by the following criteria:

- Requirements of the applicable DOE Orders and implementation guidance documents,
- Magnitude of the risk being addressed,
- Relative importance of the subject matter to the assurance of safety, and
- Risk and cost evaluation.

C-1.3 Evaluation Methodology

A generalized checklist of human factors requirements and criteria was used to evaluate whether the applicable human factors requirements were being met. This checklist (based upon an HFE performed for the OU4 Hazard Analysis Report [Ref. 3]) was developed and applied to the AWR Operational Phase (see Attachment 1).

These checklists were provided to appropriate design engineering personnel for review and completion. These individuals reviewed the project against the checklists, indicating whether the design incorporated each requirement. A comment column was provided to allow for further explanation. The checklists are based on final design information, information gained during construction, procedure development, acceptance testing, and training, as these activities are completed. The results are shown in Attachment 1.

Following receipt of the manufacturer's manuals, a System Safety Analyst evaluates the manuals to perform a task evaluation and provide procedure and training guidance regarding human factors concerns. Additional evaluations are performed following dry runs and walk-downs, and prior to startup, to revise the procedures as necessary. Further refinements can be performed as lessons learned arise from the actual implementation.

Task description lists detailing human-machine interfaces were constructed for the following AWR Project elements:

- RCS
- SWRS
- TWRS

Primary human-machine interfaces occur during operation and involve direct contact with equipment and control panels. Secondary interfaces entail the interaction of maintenance personnel and equipment. These lists (Attachments 2 and 3) were analyzed to ensure that human factor features were appropriately considered and are complete relative to the evaluation criteria set forth in C-1.2.

C-2.0 AWR TASK DESCRIPTIONS

The primary human-machine interface involved in the operation of the AWR Project is between the operators and their respective control panels. The second human-machine interface is between maintenance personnel and equipment. Task lists for the AWR activities are provided in Attachments 2 and 3.

During AWR operations, the Central Control Systems (CCS) are located in the Silos Maintenance and Control Facility. The CCS provides the means for the operators to interface with the Programmable Logic Controller (PLC), which controls all electrical and mechanical functions. The PLC is programmed to automatically and remotely operate all systems. The PLC display on the computer monitor is designed to provide the operator with a logical representation of all systems and components, instrument readouts, and control functions. The operator has the ability to override PLC control functions.

The hardware for the RCS computer terminal is described on Drawings 90FID042 and 90FID086. The software for the RCS Control System and Human-Machine Interface is defined in JS-FE-HMI-90-001 [Ref. 4]. Drawings 94X-3900-N-03041 and 500PID306 through 500PID311 depict the control room layout and workstations for the WR&SS terminal. The software required for the WR&SS Control System and Human-Machine Interface is specified in ES-JN-HMI-90-001 [Ref. 5].

The principal means of control for the AWR CCS are microprocessor-based PLCs. The PLC – combined with the human-machine interface, which includes video display, personal computer (PC), keyboard, and printer – will provide the RCS and WR&SS operators, each operating a separate PLC system, with the ability to override the PLC control of all vital RCS and WR&SS functions. The system video-displayed graphics will indicate a real-time and continuously updated set of all RCS and WR&SS parameters, which possibly require operator intervention. The individual control system PCs also serves as data acquisition and storage devices for RCS and WR&SS system parameters, which provide the RCS and WR&SS operator or maintenance personnel a method and a system for recording historical equipment data.

Some general programming guidelines include:

1. All alarm conditions shall be visibly displayed
2. All digital alarms or interlock signals shall be failsafe (i.e., contact opens for alarm or shutdown
3. Operational status display of the equipment shall be provided on the PC graphics
4. Equipment and valves shall be displayed green if running or open
5. Equipment and valves shall be displayed red if stopped or closed

C-2.1 AWR Phase 1 (RCS) Control System

Each qualified RCS operator must log on to the RCS control system by means of a password. Password protection consists of two levels – operator and supervisor. The operator password verifies the identity of the qualified operator, verifies the operator's training, and verifies any other system protection requirements. The qualified RCS operator is then authorized to access all graphic screens, to switch from automatic to manual control, and to manually control equipment. The qualified supervisor has additional authority to access alarm and/or interlock set points generated from analog signals, to process set points for the controller, to exit from run-time operations of process control system software, and to access all software programming functions.

When properly accessed, the main process screen appears whenever the system starts. The main screen gives a graphic overview of the RCS processes and gives the operator the ability to go to any other screen. The main screen shows the status of the main RCS equipment (e.g., the chiller is running) and provides a continuous display of alarm status. The main screen also provides the operator log-in/log-out template. The main screen will indicate the phase of RCS operation (Phase 1, 2A, 2B, 2C, or 3).

The RCS phases are defined as follows:

- Phase 1 – Radon control (reduction) in the Silos 1 and 2 headspaces
- Phase 2 – Silos 1 and 2 headspace radon reduction, waste retrieval, TTA storage, and ventilation
- Phase 3 – Ventilation during final waste treatment

Process screens will provide the operator the ability to control the RCS operation and view all critical parameters and alarms. The graphics displayed on the process screen are based on Piping and Instrument Diagram (P&ID) drawings. Process screens will be provided for the following systems:

- Silos 1 and 2;
- TTA storage tanks;
- Carbon bed system;
- Hold-up tanks and condensate tanks;
- Desiccant dryers and chillers;
- Exhaust and recirculation fans and the stack; and
- RCS Building ventilation.

Additional process screens include the analog input set-point screen, the alarm system screen, the event summary screen, the data-logging screen, and the trending screen. The analog input set-point screen allows the supervisor level to change set points of all analog inputs with passwords. The alarm system screen annunciates alarms at the computer and logs them to the alarm printer. The event summary screen provides a record of the time and date of each event and the identification of the event. The data logging screen records all analog process data points to the hard disk of the computer. The trending screen allows historical and real-time trend analysis of selected analog data points.

All of the computer screens described above were designed in accordance with the criteria of the *Handbook for Human Factors* [Ref. 6]. The equipment layout and design of controls and instrumentation are consistent with the P&ID drawings and the software specifications [Ref. 5]. The principles of human factors engineering and ergonomics have been applied to nomenclature and labeling on the computer screens. For example, a common graphic page template is used for every process graphic. The graphical template defines the locations and formats of features common to all process graphics. The top two rows of the display are dedicated to the graphic header, which contains the common Windows-based drop-down menus used to navigate to other screens and functions. The header shall also contain the title of the graphic, the file name of the graphic source code, and common visible target buttons.

C-2.2 AWR Phase 2 (WR&SS) Control System

The WR&SS Control System is structured and operated in a manner similar to those developed for the RCS Control System. System access is affected through training, certification and authorization. Consequently, only authorized personnel that are trained in the system operation will be permitted to control the WR&SS PLC system.

Process screens are developed to provide the WR&SS operator the ability to control the WR&SS operations, view/change all critical parameters, be notified and be able to respond to all critical alarms and warnings, and to interface with the RCS. The graphics displayed on the control computer terminal are based on the (P&ID) drawings. WR&SS process screens considered are:

- Sluicer modules
- Slurry pumping modules
- High pressure pumps
- Slurry routing
- Sluice water requirements and management
- WR&SS functions and status
- Interlocks screen
- Permissives screen

Additional process screens include the analog input set-point screen, the alarm system screen, the event summary screen, the data-logging screen, and the trending screen. The analog input set-point screen allows the supervisor level to change set points of all analog inputs with passwords. The alarm system screen annunciates alarms at the computer and logs them to the alarm printer. The event summary screen provides a record of the time and date of each event and the identification of the event. The data logging screen records all analog process data points to the hard disk of the computer. The trending screen allows historical and real-time trend analysis of selected analog data points.

All of the computer screens described above were designed in accordance with the criteria of the *Handbook of Human Factors* [Ref. 6]. The equipment layout and design of controls and instrumentation are consistent with the P&ID drawings and the software specifications [Ref. 5]. The principles of human factors engineering and ergonomics have been applied to nomenclature and labeling on the computer screens. For example, the interactive graphic displays show major pieces of equipment with their associated pumps, motors, valves, and instruments. The configured process variables are displayed near the associated instruments and/or equipment. Graphic "Targets" enable the operator to scroll to the next screen in the process or to another related process graphic.

C-2.3 RCS and WR&SS Operators

The RCS and WR&SS operators will consist of a staff of at least two operators per control function per shift. Four of the two-person crews will be scheduled for rotating coverage when continuous operations are necessary. The tasks were evaluated to determine that 2 persons per shift are adequate for the separate RCS and WR&SS operations. The 168-hours in a week will be covered by four 44-hour shifts that allow approximately 1-hour per day of overlap for shift turnovers. The operators will have undergone extensive training prior to initiating operation.

Operator training is designed to meet the requirements of DOE Order 5480.20A [Ref. 7] that apply to the operation of nuclear facilities. The Fluor Fernald AWR Project Training and Qualification Program (TQP-067) [Ref. 8] incorporates the training and qualification requirements for RCS activities. Training specific to startup engineers, supervisors, and other personnel is delineated in TQP-067. Continuing training and operator requalification requirements are described in TQP-067.

The RCS and WR&SS training program includes training on systems overview, facility operations, and field training. Field training consists of system walkdowns, on-the-job (OJT) training, training evaluation standards, completion of operator qualification cards, and assisting in the RCS Construction Acceptance Test, where possible. Operators, who were not able to participate in the Construction Acceptance Test, received OJT where they worked side-by-side with experienced, qualified operators.

The RCS and WR&SS operations and field training courses provide training on the respective RCS and WR&SS computer terminals and each of the PC screens. Nomenclature and labels on the screens will be coordinated with training materials and procedures to ensure that ergonomic and human factors engineering are implemented as designed and specified in JS-FE-HMI-90-001 [Ref. 4] for the RCS and ES-JN-HMI-90-001 [Ref. 5] for WR&SS. Operator aids are also built into the PC screens as appropriate to assist the operators in their timely, reliable performance of safety functions.

C-2.4 RCS and WR&SS Maintenance

Human factors engineering principles (see Attachment 1) have been incorporated into the design of RCS and WR&SS equipment and its maintenance. The final design of the RCS and WR&SS has been reviewed to examine the provisions for maintenance of RCS and WR&SS equipment. Adequate space for accessing and performing maintenance on each piece of equipment has been verified. For example, in the case of the RCS, the wall configuration between the dryers was revised to allow adequate space for removal of the desiccant wheel. In addition, adequate space is available to implement radiation protection practices developed pursuant to the Radiological Work Permit (RWP) process, for example, containments, step-off pads, and temporary shielding. In the case of WR&SS, the slurry and sluicer module HEPA filters were relocated from the upper level (633 ft elevation) of the bridge to the lower level (618 ft) for easy access. In one case where the HEPA filters could not be lowered, a work platform with railings and ladder was provided, as well as lifting hardware to move new and used filters from the work area to the ground. For the

HEPA filters on the lower level of the bridge and others in the TTA, a clear work area was reserved for filter changes.

Maintenance personnel are qualified in accordance with their craft Training and Qualification Program Description that includes practical evaluation. Maintenance personnel receive pre-job and radiation work permit briefings as required. Where possible, maintenance personnel receive orientations from vendors on unique equipment. Because of the decay time needed to perform some maintenance tasks, the work will be planned and the maintenance personnel scheduled and briefed on a case by case basis. Vendor personnel will perform maintenance on the dryers, chillers, and emergency power generator.

The manuals for each piece of RCS and WR&SS equipment requiring maintenance will serve as the starting point for development of RCS and WR&SS maintenance procedures. Maintenance Work Instructions (MWI) are then prepared and approved. MWI will be validated and verified by a systematic walk through with as-built equipment. Maintenance personnel will be briefed for each maintenance task, including equipment specifications, maintenance requirements, maintenance instructions, the need for special tools, and safety precautions. Radiation dose rates and potential radioactive contamination will be considered in preparing the MWI for each task to ensure that the work can be done while wearing the needed personal protective equipment (PPE). Specific requirements for dosimetry, shielding, and stay time limitations will be provided through the RWP process.

Physical stress factors in the work environment for maintenance personnel are not expected to be unusual. Noise, temperature, and humidity within the RCS Building should not cause any discomfort to workers that could affect their ability to perform maintenance work. Personal protective equipment, such as protective clothing and respirators, will be provided as necessary and as specified by Radiation Work Permits.

C-2.5 Results

A systematic and thorough evaluation of the human-machine interface related to the construction, operation, and maintenance of equipment and facilities associated with the RCS was performed based on the final design details. Each of the following four important elements are incorporated into the design, with the requirements proportional to their importance to safety:

- provisions for communication and operator aids to support timely, reliable performance of safety functions

- layout and design of controls and instrumentation, and provisions for labeling that apply the principles of ergonomics and human engineering

- work environments including physical stress, need for protective clothing and equipment, noise levels, temperature, humidity, distractions, and other factors bearing upon the physical comfort, alertness, and fitness of workers

- staffing considerations (e.g., minimum staffing levels, overtime restrictions, facility status turnover between shifts, procedures, and training).

C-3.0 CONCLUSIONS

A HFE has been performed on the RCS and WR&SS operations and maintenance. This HFE demonstrates that the essential elements are in place to ensure that the important human factors issues have been addressed for the operation and maintenance of the AWR Project.

By the incorporation of these concepts into the project design, plans, procedures, and training, the potential for human error resulting in adverse safety consequences is minimized. Attachment 4 lists the industrial safety and human factors requirements applicable to the AWR Project.

C-4.0 REFERENCES

1. DOE-STD-3009-94, *Evaluation Guidelines for Accident Analysis and Safety Structures, Systems, and Components,* Change Notice No. 1; DOE; January, 2000

2. *Human Factors Design Handbook*, Woodson, Wesley E., Barry Tillman, and Peggy Tillman, 1992, McGraw-Hill, Inc., New York

3. *Hazard Analysis Report for Operable Unit 4 (OU4) Silos*, HAR-97-0028, Appendix D, Fluor Fernald; 1997

4. 624-P622-55L, Rev. 3, Specification Number JS-FE-HMI-90-001, *Specification for RCS Control System and Human-Machine Interface*, Foster Wheeler; May 21, 2002

5. 40710-TS-0007, Draft, Specification ES-JN-HMI-90-001, *Specification for Control System Software and Human Machine Interface*, Jacobs; May, 2003

6. *Handbook of Human Factors*, edited by G. Salvendy, 1987, John Wiley & Sons, Inc., New York

7. DOE Order 5480.20A, *Personnel Selection, Qualification, and Training, Requirements for DOE Nuclear Facilities*, DOE; November 15, 1994

8. *AWR Project Training and Qualification Program (TQP-067),* Fluor Fernald; 2000

THIS PAGE INTENTIONALLY BLANK

ATTACHMENT 1 – HUMAN FACTORS EVALUATION CHECKLIST			
AWR PROJECT OPERATIONAL PHASE (SYSTEMS OPERABILITY TESTING, READINESS ASSESSMENT, RETRIEVAL)			
ITEM	QUESTION	RESPONSE	COMMENT/GOVERNING DOCUMENT
A. Housekeeping and General Work Environment			
1	Are adequate signs posted near maintenance, cleanup, or staging areas to warn workers of special or unique hazards associated with the areas?	Yes	Project-Specific Health and Safety Plan; additional posting requirements will be identified through routine health and safety inspections
2	Are adequate barriers erected to limit access to maintenance, cleanup, or staging areas?	Yes	Project-Specific Health and Safety Plan; additional barrier requirements will be identified through routine health and safety inspections
3	Are working areas generally clean?	Yes	Project-Specific Health and Safety; routine health and safety inspections
4	Are provisions in place to limit the time a worker spends in an extremely hot or cold area?	Yes	Project-Specific Health and Safety Plan
5	Is noise maintained at a tolerable level?	Yes	Project-Specific Health and Safety Plan; noise surveys conducted in out-of-tolerance cases; site noise limit of 85 dB is enforced
6	Are alarms audible above background noise both inside the control room and in the process area?	Yes	System testing; Contingency Plan and Emergency Response
7	Are normal and emergency lighting sufficient for all area operations?	Yes	Final design documents/reports and drawings; System testing
8	Is there adequate backup power for emergency lighting?	Yes	Emergency diesel generator; UPS system; Battery powered emergency lighting
9	Is the general environment conducive to safe job performance?	Yes	Operations and Maintenance Safe Work Plans; Project-Specific Health and Safety Plan

000237
5470

ATTACHMENT 1 – HUMAN FACTORS EVALUATION CHECKLIST			
AWR PROJECT OPERATIONAL PHASE (SYSTEMS OPERABILITY TESTING, READINESS ASSESSMENT, RETRIEVAL)			
ITEM	QUESTION	RESPONSE	COMMENT/GOVERNING DOCUMENT
B. Accessibility/Availability of Controls and Equipment			
1	Are adequate supplies of protective gear readily available for routine and emergency use?	Yes	Project-Specific Health and Safety Plan; Contingency Plan and Emergency Response
2	Are workers able to perform both routine and emergency tasks safely while wearing protective equipment?	Yes	Project-Specific Health and Safety Plan; Contingency Plan and Emergency Response
3	Is emergency equipment accessible without presenting further hazards to personnel?	Yes	Operations and Maintenance Safe Work Plans; Project-Specific Health and Safety Plan; Contingency Plan and Emergency Response; operator training
4	Is communications equipment adequate and easily accessible?	Yes	Project-Specific Health and Safety Plan; Contingency Plan and Emergency Response; Final design documents/reports
5	Would others quickly know if a worker is incapacitated in a process area?	Yes	Project-Specific Health and Safety Plan; Final design documents/reports; buddy system
6	Are the right tools (including special tools) available and used when needed?	Yes	Operations and Maintenance Safe Work Plans; Final design documents/reports; Maintenance and operating procedures
7	Is the workplace arranged so that workers can maintain a good working posture while performing necessary movements to conduct routine tasks?	Yes	Project-Specific Health and Safety Plan; Final design documents/reports
8	Is access to all controls adequate?	Yes	Final design documents/reports

000238
5470

ATTACHMENT 1 – HUMAN FACTORS EVALUATION CHECKLIST			
AWR PROJECT OPERATIONAL PHASE (SYSTEMS OPERABILITY TESTING, READINESS ASSESSMENT, RETRIEVAL)			
ITEM	**QUESTION**	**RESPONSE**	**COMMENT/GOVERNING DOCUMENT**
9	Can operators and maintenance workers safely perform all required routine and emergency actions, considering the physical arrangement of equipment (e.g., access to the equipment, or proximity of required tasks to rotating equipment, hot surfaces, or points where hazardous material can be vented or discharged to the atmosphere)?	Yes	Final design documents/reports
10	Are valves that require urgent manual adjustments (e.g., emergency shutdown) easily identifiable and readily accessible?	Yes	Final design documents/reports
C. Labeling			
1	Is all important equipment (e.g., vessels, pipes, valves, instruments, controls) legibly, accurately, and unambiguously labeled?	Yes	Final design documents/reports; Spec. Numbers. JS-FE-HMI-90-001 and ES-JN-HMI-90-001
2	Does the labeling program include components (e.g., small valves) that are mentioned in the procedures even if they are not assigned an equipment number?	Yes	Labeled per the final design requirements; Final design documents/reports; Spec. Numbers. JS-FE-HMI-90-001 and ES-JN-HMI-90-001
3	Has responsibility for maintaining and updating labels been assigned?	Yes	Configuration Management
4	Are emergency exit and response signs adequately visible and easily understood?	Yes	Project-Specific Health and Safety Plan; Contingency Plan and Emergency Response; Final design documents/reports; worker training
5	Are signs that warn workers of hazardous materials or conditions adequately visible and easily understood?	Yes	Project-Specific Health and Safety Plan; Final design documents/reports; worker training

000239
5470

ATTACHMENT 1 – HUMAN FACTORS EVALUATION CHECKLIST			
AWR PROJECT OPERATIONAL PHASE (SYSTEMS OPERABILITY TESTING, READINESS ASSESSMENT, RETRIEVAL)			
ITEM	QUESTION	RESPONSE	COMMENT/GOVERNING DOCUMENT
D. Feedback/Displays			
1	Is adequate information about normal and upset process conditions clearly displayed in the control room?	Yes	Final design documents/reports; Spec. Numbers. JS-FE-HMI-90-001 and ES-JN-HMI-90-001
2	Are the controls and displays arranged logically to match operators' expectations?	Yes	Final design documents/reports; Spec. Numbers. JS-FE-HMI-90-001 and ES-JN-HMI-90-001
3	Are the displays adequately visible from all relevant working positions?	Yes	Final design documents/reports; Spec. Numbers. JS-FE-HMI-90-001 and ES-JN-HMI-90-001
4	Do separate displays present similar information in a consistent manner?	Yes	Final design documents/reports; Spec. Numbers. JS-FE-HMI-90-001 and ES-JN-HMI-90-001
5	Are automatic safety features provided when a process upset requires rapid response?	Yes	Final design documents/reports; Spec. Numbers. JS-FE-HMI-90-001 and ES-JN-HMI-90-001
6	Are automatic safety features provided when a process upset may be difficult to diagnose because of complicated processing of various information?	Yes	Final design documents/reports; Spec. Numbers. JS-FE-HMI-90-001 and ES-JN-HMI-90-001
7	Are the alarms displayed by priority?	Yes	Final design documents/reports; Spec. Numbers. JS-FE-HMI-90-001 and ES-JN-HMI-90-001
8	Are critical safety alarms easily distinguishable from control alarms?	Yes	Final design documents/reports; distinctive site alarms; worker training; Spec. Numbers. JS-FE-HMI-90-001 and ES-JN-HMI-90-001
9	Is an alarm summary permanently on display?	Yes	Final design documents/reports; Spec. Numbers. JS-FE-HMI-90-001 and ES-JN-HMI-90-001
10	Are nuisance alarms corrected and redundant alarms eliminated as soon as practical to help prevent complacency toward alarms?	Yes	Final design documents/reports; Spec. Numbers. JS-FE-HMI-90-001 and ES-JN-HMI-90-001

000240
5470

ATTACHMENT 1 – HUMAN FACTORS EVALUATION CHECKLIST			
AWR PROJECT OPERATIONAL PHASE (SYSTEMS OPERABILITY TESTING, READINESS ASSESSMENT, RETRIEVAL)			
ITEM	QUESTION	RESPONSE	COMMENT/GOVERNING DOCUMENT
11	Have charts, tables, or graphs been provided (or programmed into the computer) to reduce the need for operators to perform calculations as part of the operation?	Yes	Operating procedures; Final design documents/ reports; Spec. Numbers. JS-FE-HMI-90-001 and ES-JN-HMI-90-001
12	If operators are required to perform calculations, are critical calculations independently checked?	Yes	Operating procedures; Final design documents/ reports
13	Does the computer check that values entered by operators are within a valid range?	Yes	Operating procedures; Final design documents/ reports; Spec. Numbers. JS-FE-HMI-90-001 and ES-JN-HMI-90-001
14	Do the displays provide an adequate view of the entire process as well as essential details of individual systems?	Yes	Final design documents/reports; Spec. Numbers. JS-FE-HMI-90-001 and ES-JN-HMI-90-001
15	Do the displays give adequate feedback for all operational actions?	Yes	Operating procedures; Final design documents/ reports; Spec. Numbers. JS-FE-HMI-90-001 and ES-JN-HMI-90-001
16	Are instruments, displays, and controls promptly repaired after a malfunction?	Yes	Operating procedures; Final design documents/ reports; Maintenance procedures
17	Do administrative features exist that govern when instruments, displays, or controls are deliberately disabled or bypassed and that govern their return to normal service at the appropriate time?	Yes	Operating procedures; Final design documents/ reports
18	Does a formal mechanism exist for correcting human factors deficiencies identified by the operators (e.g., modifications to the displays, controls, or equipment to better meet operators' needs)?	Yes	Operating procedures; Project Quality Control procedures; daily safety briefings

000241
5470

ATTACHMENT 1 – HUMAN FACTORS EVALUATION CHECKLIST			
AWR PROJECT OPERATIONAL PHASE (SYSTEMS OPERABILITY TESTING, READINESS ASSESSMENT, RETRIEVAL)			
ITEM	QUESTION	RESPONSE	COMMENT/GOVERNING DOCUMENT
E. Controls			
1	Is the layout of the consoles logical, consistent, and effective?	Yes	Final design documents/reports; Spec. Numbers. JS-FE-HMI-90-001 and ES-JN-HMI-90-001
2	Are the controls distinguishable, accessible, and easy to use?	Yes	Final design documents/reports; Spec. Numbers. JS-FE-HMI-90-001 and ES-JN-HMI-90-001
3	Do all controls meet standard expectations (e.g., color, direction of movement)?	Yes	Final design documents/reports; Spec. Numbers. JS-FE-HMI-90-001 and ES-JN-HMI-90-001
4	Do the control panel layouts reflect the functional aspects of the process or equipment?	Yes	Final design documents/reports; Operating procedures; Spec. Numbers. JS-FE-HMI-90-001 and ES-JN-HMI-90-001
5	Does the control arrangement logically follow the normal sequence of operation?	Yes	Final design documents/reports; Spec. Numbers. JS-FE-HMI-90-001 and ES-JN-HMI-90-001
6	Can operators safely intervene in computer-controlled processes?	Yes	Final design documents/reports; Operating procedures; Spec. Numbers. JS-FE-HMI-90-001 and ES-JN-HMI-90-001
7	Can process variables be adequately controlled with the existing processes?	Yes	Final design documents/reports; Operating procedures; Spec. Numbers. JS-FE-HMI-90-001 and ES-JN-HMI-90-001
8	Do operators believe that the control logic and interlocks are adequate?	Yes	Final design documents/reports; Operating procedures; operator training/feedback
9	Does a dedicated emergency shutdown panel exist? If so, is it in an appropriate location?	Yes	Final design documents/reports; Spec. Numbers. JS-FE-HMI-90-001 and ES-JN-HMI-90-001

000242
5470

ATTACHMENT 1 – HUMAN FACTORS EVALUATION CHECKLIST			
AWR PROJECT OPERATIONAL PHASE (SYSTEMS OPERABILITY TESTING, READINESS ASSESSMENT, RETRIEVAL)			
ITEM	QUESTION	RESPONSE	COMMENT/GOVERNING DOCUMENT
F. Workload and Stress Factors			
1	Is the control room always occupied (i.e., assigned duties do not require the control room operator to be absent from the control room)?	Yes	Operating procedures; two operators are assigned to each shift
2	Are the number and frequency of manual adjustments required during normal and emergency operations limited so that operators can make the adjustments without a significant chance of mistakes as a result of overwork or stress?	Yes	Operating procedures; operator training; Spec. Numbers. JS-FE-HMI-90-001 and ES-JN-HMI-90-001
3	Is the number of manual adjustments during normal operations sufficient to avoid mistakes as a result of boredom?	Yes	Operating procedures; operator training; Spec. Numbers. JS-FE-HMI-90-001 and ES-JN-HMI-90-001
4	Have the effects of shift duration and rotation been considered in establishing workloads?	Yes	Operating procedures; Labor agreements
5	Is the number of extra hours an operator must work if his or her relief fails to show up sufficiently limited so that worker safety is not adversely affected?	Yes	Operating procedures; Labor agreements
6	Is the number of hours an operator or maintenance worker must work during startup or turnarounds sufficiently limited so that worker safety is not adversely affected?	Yes	Operating procedures; Labor agreements
7	Can additional operators (e.g., from other areas or from off- site) be called in quickly to help during an emergency?	Yes	Contingency Plan and Emergency Response; Labor agreements; Labor utilization planning; operator training
8	Is the staffing level appropriate for all modes of operation (e.g., normal, emergency)?	Yes	Labor agreements; Labor utilization planning; operator training

000243
5470

ATTACHMENT 1 – HUMAN FACTORS EVALUATION CHECKLIST			
AWR PROJECT OPERATIONAL PHASE (SYSTEMS OPERABILITY TESTING, READINESS ASSESSMENT, RETRIEVAL)			
ITEM	QUESTION	RESPONSE	COMMENT/GOVERNING DOCUMENT
G. Procedures			
1	Do written procedures exist for all operating phases (i.e., normal operations, temporary operations, emergency shutdown, emergency operation, normal shutdown, and startup following a turnaround or after an emergency shutdown)?	Yes	Comprehensive operating and maintenance procedures
2	Are safe operating limits documented providing consequences of deviating from limits and actions to take when deviations occur?	Yes	Comprehensive operating and maintenance procedures; Operator and maintenance training; Spec. Numbers. JS-FE-HMI-90-001 and ES-JN-HMI-90-001
3	Are procedures current (i.e., are they revised when changes occur)?	Yes	Document Control Plan
4	Do operators believe that the procedure format and language are easy to follow and understand?	Yes	Operator training; daily safety meetings; feedback
5	Are the procedures accurate (i.e., do they reflect the way in which the work is actually performed)?	Yes	Start-up tests; Operator training; daily safety meetings; feedback; Document Control Plan
6	Is responsibility assigned for updating the procedures, distributing revisions of the procedures, and ensuring that workers are using current revisions of the procedures?	Yes	Document Control Plan
7	Are temporary notes or instructions incorporated into revisions of written operating procedures as soon as practical?	Yes	Document Control Plan
8	Do procedures address the personal protective equipment required when performing routine and/or nonroutine tasks?	Yes	Conduct of Operations; Radiological Work Permits

000244

5470

ATTACHMENT 1 – HUMAN FACTORS EVALUATION CHECKLIST			
AWR PROJECT OPERATIONAL PHASE (SYSTEMS OPERABILITY TESTING, READINESS ASSESSMENT, RETRIEVAL)			
ITEM	QUESTION	RESPONSE	COMMENT/GOVERNING DOCUMENT
H. Training (Subcontractor)			
1	Are new employees trained in the hazards of the processes?	Yes	Project-Specific Health and Safety Plan; Operations and Maintenance Safe Work Plans; site training; Quality Assurance Program Plan.
2	Do operators and maintenance workers receive adequate training in safely performing their assigned tasks before they are allowed to work without direct supervision?	Yes	Project-Specific Health and Safety Plan; Operations and Maintenance Safe Work Plans; Operations and maintenance training; site training
3	Does operator and maintenance worker training include training in appropriate emergency response?	Yes	Operations and maintenance worker training; site training
4	Do operators practice emergency response while wearing emergency protective equipment?	Yes	Performed by Emergency Response Teams
5	Do operators practice emergency response during extreme environmental conditions (e.g., at night or when it is very cold)?	N/A	Operators are normally indoors in a controlled environment. Performed by Emergency Response Teams
6	Are periodic emergency drills conducted?	Yes	Contingency Plan and Emergency Response; Operator training
7	Are emergency drills witnessed by observers and critiqued?	Yes	Contingency Plan and Emergency Response
8	Does a periodic refresher training program exist?	Yes	Project-Specific Health and Safety Plans; Operations and Maintenance Safe Work Plans; Operations and maintenance training; site training; daily safety meetings; Quality Assurance Program Plan.

0002245
5470

ATTACHMENT 1 – HUMAN FACTORS EVALUATION CHECKLIST			
AWR PROJECT OPERATIONAL PHASE (SYSTEMS OPERABILITY TESTING, READINESS ASSESSMENT, RETRIEVAL)			
ITEM	QUESTION	RESPONSE	COMMENT/GOVERNING DOCUMENT
9	Is special or refresher training provided in preparation for an infrequently performed operation?	Yes	Project-Specific Health and Safety Plans; Operations and Maintenance Safe Work Plans; Operations and maintenance training; site training; daily safety meetings; Quality Assurance Program Plan.
10	When changes are made, are workers trained in the new operation, including an explanation of why the change was made and how worker safety can be affected by the change?	Yes	Project-Specific Health and Safety Plans; Operations and Maintenance Safe Work Plans; Operations procedures; Operations training; Quality Assurance Program Plan
11	Are operators and maintenance workers trained to request assistance when they believe they need it so safely perform a task	Yes	Operations and maintenance training; Quality Assurance Program Plan
12	Are operators and maintenance workers trained to report near misses as part of the incident investigation program?	Yes	Operations and maintenance training; Safety Incident Report Program
13	Are operators trained to shut down the process when in doubt about whether it can continue to operate safely?	Yes	Operations training; Quality Assurance Program Plan, stop work authority

000246

5470

ATTACHMENT 2 – RCS OPERATIONS/MAINTENANCE TASK LIST AND HUMAN FACTORS HAZARDS MATRIX					
TASK	**LOCATION**	**HAZARDS[1,2]**	**PPE[3]**	**FREQUENCY**	**HUMAN FACTORS FEATURES**
Routine Operations					
Startup	Control Room	Human error impacts on RCS operational safety	None	<Monthly	Remote cameras, alarms, indicators, computer monitors, procedures, training, controls layout, displays, labeling, staffing, work environment (noise, distraction, temperature, etc.)
System Monitoring	Control Room	Human error impacts on RCS operational safety	None	Daily	Remote cameras, alarms, indicators, computer monitors, procedures, training, controls layout, displays, labeling, staffing, work environment (noise, distraction, temperature, etc.)
Rounds	Outside RA	RBA	HH, SS, SG	Daily	Site housekeeping
Shutdown	Control Room	Human error impacts on RCS operational safety	None	<Monthly	Remote cameras, alarms, indicators, computer monitors, procedures, training, controls layout, displays, labeling, staffing, work environment (noise, distraction, temperature, etc.)
Emergency Operations					
Manual valve ops	Silo dome	RA	HH, SS, SG	Not expected	Access at edge of silo, valve labeling Valve ops on ½ turn, training, procedures
Manual valve ops	RCS Bldg. 1st Fl.	RBA/RA	HH, SS, SG	Not expected	Access from floor Valve ops on ½ turn

000247
5470

ATTACHMENT 2 – RCS OPERATIONS/MAINTENANCE TASK LIST AND HUMAN FACTORS HAZARDS MATRIX					
TASK	**LOCATION**	**HAZARDS[1,2]**	**PPE[3]**	**FREQUENCY**	**HUMAN FACTORS FEATURES**
Manual valve ops	RCS Bldg. 2nd Fl.	RBA	HH, SS, SG	Not expected	Access from floor Valve ops on ½ turn
Manual valve ops	2nd Fl. Platform	RBA	HH, SS, SG	Not expected	Access from platform Ladder for HEPA unit upstream cutoff only. Valve ops on ½ turn
Maintenance					
Roughing filter change	Desiccant dryer vault, 1st Fl.	RA/ARA/CA	Anti-Cs, RP	Monthly	Access Control, alarm, access forbidden without time for decay, monitor, space, pre-job brief
RCS or HVAC prefilters change	RCS Bldg. 2nd Fl. Platform	RA/CA	Anti-Cs, RP, HP	Semiannually	Access via stairway and platform, space on north to pull filters
RCS or HVAC HEPA filter change	RCS Bldg. 2nd Fl. Platform	RA/ARA/CA	HP, Anti-Cs, RP	Not expected	Access via stairway and platform, space on north to pull filters
Duplex inst. air compressor	Equipment pad.	RBA	HH, SS, SG, HP, WG	Bimonthly	Access outdoors, from ground
Air handling unit	Carbon Bed Bldg. 2nd Floor	RA	HH, SS, SG, WG	Annually	Access from floor, adequate space
Chiller skid packages	Equipment pad	RBA	HH, SS, SG, HP, WG	Monthly	Access from ground, adequate space
Chiller coil cleaning	Equipment pad	RBA	HH, SS, SG, HP, WG	Semiannually	Access from ground, adequate space

000248
5470

ATTACHMENT 2 – RCS OPERATIONS/MAINTENANCE TASK LIST AND HUMAN FACTORS HAZARDS MATRIX					
TASK	**LOCATION**	**HAZARDS[1,2]**	**PPE[3]**	**FREQUENCY**	**HUMAN FACTORS FEATURES**
Desiccant dryers	Desiccant dryer vault	RA/ARA/CA	Anti-Cs, WG	Monthly	Access control, alarm, monitor, space to work, shielding, access forbidden without time for decay
Duct heater/drying fan	RCS Bldg. 2nd Fl.	RBA	HH, SS, SG, HP, WG	Annually	Accessible from 2nd floor, adequate space
Exhaust recirculation fans	RCS Bldg. 2nd Fl. Platform	RBA/CA	Anti-Cs, WG, HP	Monthly	Accessible from 2nd floor, adequate space, redundant fans
Bldg. vent exhaust fans	RCS Bldg. 2nd Fl. Platform	RBA/CA	Anti-Cs, WG, HP	Monthly	Accessible from 2nd floor, adequate space, redundant fans
Bldg. vent supply fan	Equipment pad platform	RBA	HH, SS, SG, WG, HP	Bimonthly	Accessible by ladder and platform
Bldg. vent supply fan air filter	Equipment pad platform	RBA	HH, SS, SG, WG, HP	Bimonthly	Accessible by ladder and platform
HVAC duct heaters	RCS Bldg. 1st and 2nd Floors	RBA	HH, SS, SG, WG, HP	Semiannually	Accessible from 2nd floor, limited space
Make-up air filter	RCS Bldg. 2nd Floor	RBA	HH, SS, SG, WG, HP	Bimonthly	Accessible from 2nd floor, adequate space,
Repairs					
Miscellaneous	Any equipment location	Same as for equipment	Anti-Cs, RP as determined by RWP	Infrequent	Planning on a case-by-case basis

000249
5470

ATTACHMENT 2 – RCS OPERATIONS/MAINTENANCE TASK LIST AND HUMAN FACTORS HAZARDS MATRIX					
TASK	**LOCATION**	**HAZARDS[1,2]**	**PPE[3]**	**FREQUENCY**	**HUMAN FACTORS FEATURES**
Routine Health Physics					
Surveys	Outside RA	RBA	HH, SS, SG, G, HP	Daily	Site housekeeping
CEM filter exchange	Equipment pad	RBA	HH, SS, SG, G, HP	Weekly or bi-weekly	Access from ground, protection from weather
Condensate Sampling	Condensate pump room	RA/CA	HP, Anti-Cs, FS	Monthly	Shielding from condensate tank and desiccant dryer, access control, time for decay
Health Physics Coverage					
Miscellaneous	Any equipment location	Same as for equipment maintenance	Same as for equipment	Same as maintenance activities	Same as for equipment maintenance

[1]Standard industrial hazards not listed

[2]RA = Radiation Area (5 to 100 mrem/hr), HRA = High Radiation Area (>100 mrem/hr), CA = Contamination Area (20 to 2000 dpm/100 cm^2 alpha); RBA = Radiological Buffer Area; ARA = Airborne Radioactivity Area

[3]Abbreviations: HH=hard hat, SS=safety shoes; SG=safety glasses, WG = leather work gloves, G = surgeon gloves, FS=face shield, RP = respiratory protection, HP = hearing protection, Anti-Cs includes coveralls, shoe covers and rubber gloves.

0002250

5470

ATTACHMENT 3 – WR&SS OPERATIONS/MAINTENANCE TASK LIST AND HUMAN FACTORS HAZARDS MATRIX					
TASK	**LOCATION**	**HAZARDS[1,2]**	**PPE[3]**	**FREQUENCY**	**HUMAN FACTORS FEATURES**
Routine Operations					
Startup	Control Room	Human error impacts on WR&SS operational safety	None	<Monthly	Remote cameras, alarms, indicators, computer monitors, procedures, training, controls layout, displays, labeling, staffing, work environment (noise, distraction, temperature, etc.)
System Monitoring	Control Room	Human error impacts on WR&SS operational safety	None	Daily	Remote cameras, alarms, indicators, computer monitors, procedures, training, controls layout, displays, labeling, staffing, work environment (noise, distraction, temperature, etc.)
Rounds and Inspections	Outside, Bridge, and TTA	RBA and RA	HH, SS, SG	Daily	Site housekeeping
Shutdown	Control Room	Human error impacts on WR&SS operational safety	None	<Monthly	Remote cameras, alarms, indicators, computer monitors, procedures, training, controls layout, displays, labeling, staffing, work environment (noise, distraction, temperature, etc.)
Emergency Operations					
Manual Silo 1 and 2 sluicer pump shut off	Silo 1 or 2 bridge	RA	HH, SS, SG	Not expected	Access from bridge. Located on local sluicer pump control panel. Application of training and procedures.

0000251
5470

ATTACHMENT 3 – WR&SS OPERATIONS/MAINTENANCE TASK LIST AND HUMAN FACTORS HAZARDS MATRIX					
TASK	**LOCATION**	**HAZARDS[1,2]**	**PPE[3]**	**FREQUENCY**	**HUMAN FACTORS FEATURES**
Manual Silo 1 and 2 slurry pump shut off	Silo 1 or 2 bridge	RA	HH, SS, SG	Not expected	Access from bridge. Located on local slurry pump control panel. Application of training and procedures.
Manual Silo 1 and 2 slurry diverter valve ops	Silo 1 and 2 bridge	RA	HH, SS, SG	Not expected	Access from bridge. Located in diverter valve box. Application of training and procedures.
Manual TTA tank sluicer pump shut off	TTA deck	RA	HH, SS, SG	Not expected	Access from TTA deck. Located on local sluicer pump control panel. Application of training and procedures.
Manual TTA tank slurry pump shut off	TTA deck	RA	HH, SS, SG	Not expected	Access from TTA deck. Located on local slurry pump control panel. Application of training and procedures.
Manual TTA tank slurry diverter valve operation	TTA deck	RA	HH, SS, SG	Not expected	Access from TTA deck. Located in diverter valve box. Application of training and procedures.
Makeup water control operation	Makeup water pad	RA	HH, SS, SG	Not expected	Access from makeup water pad. Located in makeup water control panel. Application of training and procedures
Maintenance					
Silo 1 and 2 sluicer module-pumps and positioning mechanisms	Silo 1 or 2 bridge	RA	HH, SS, SG, WG	Monthly	Access on bridge inside modules.

000252
5470

ATTACHMENT 3 – WR&SS OPERATIONS/MAINTENANCE TASK LIST AND HUMAN FACTORS HAZARDS MATRIX					
TASK	**LOCATION**	**HAZARDS[1,2]**	**PPE[3]**	**FREQUENCY**	**HUMAN FACTORS FEATURES**
Silo 1 and 2 slurry module-pumps and positioning mechanisms	Silo 1 or 2 bridge	RA	HH, SS, SG, WG	Monthly	Access on bridge inside modules.
High pressure pumps 1 & 2	Makeup water pad	RBA	HH, SS, SG, WG	Monthly	Access inside HPP/BA building on pad.
Makeup water pump	Makeup water pad	RBA	HH, SS, SG, WG	Quarterly	Located outside on pad.
Containment Areas A & B sump pumps	TTA equipment deck	RA	HH, SS, SG, WG	Quarterly	Access from TTA deck.
Leak detection sump pump	TTA building 1st floor	RA	HH, SS, SG, WG	Quarterly	Access through TTA deck. Pump access through hatch.
Silo 1 and 2 inlet/outlet louvers	Silo 1 and 2 bridges	RA	HH, SS, SG, WG	Semiannually	Access by ladder. Located on pipe rack outdoors.
TTA tank inlet/outlet louvers	TTA building tanks	RA, CA	HH, SS, SG, WG	Semiannually	Access in TTA building from floor level. May use ladder or scaffold if required.
TTA building inlet louvers, backdraft and inlet dampers	TTA building upper level	RA	HH, SS, SG, WG	Semiannually	Access level TTA equipment deck. Administrative controls used to limit access to contaminated areas.
TTA building exhaust fans	TTA building	RA	HH, SS, SG, WG	Semiannually	Access by ladder or scaffold from TTA equipment deck.
TTA building inlet air filters	TTA building	RA	HH, SS, SG, WG	Quarterly	Access from TTA equipment deck. Administrative controls used to limit access to contaminated areas.

0002253
5470

ATTACHMENT 3 – WR&SS OPERATIONS/MAINTENANCE TASK LIST AND HUMAN FACTORS HAZARDS MATRIX					
TASK	**LOCATION**	**HAZARDS[1,2]**	**PPE[3]**	**FREQUENCY**	**HUMAN FACTORS FEATURES**
Makeup air filters	TTA equipment deck	RA	HH, SS, SG, WG	Quarterly	Access at floor level from inside TTA building. Administrative controls used to limit access to contaminated areas.
Silo 1 and 2 monorail hoist	Silo 1 and 2 bridge	RA	HH, SS, SG, WG	Semiannually	Access from bridge loading platform. Located outdoors.
Loading platform hoist	TTA upper level loading platform	RA	HH, SS, SG, WG	Semiannually	Access from TTA building loading platform. Located outdoors.
Repairs					
Miscellaneous	Any equipment location	Same as for equipment	Anti-Cs, RP as determined by RWP	Infrequent	Planning on a case-by-case basis
Routine Health Physics					
Surveys	Outside RA	RBA	HH, SS, SG, G, HP	Daily	Site housekeeping
Silo 1 and 2 area	Silo 1 and 2 bridge	RA	HH, SS, SG, G, HP	Daily	Access from ground and bridge, protection from weather, shielding from berm and bridge structure
Slurry pipeline	Silo 1 and 2 to TTA building	RA	HH, SS, SG, G,HP	Daily	Access from bridge and TTA deck
TTA tanks and facility	TTA building	RA/CA	HH, SS, SG, G,HP	Daily	Shielding from tanks, access control

000254
5470

ATTACHMENT 3 – WR&SS OPERATIONS/MAINTENANCE TASK LIST AND HUMAN FACTORS HAZARDS MATRIX					
TASK	**LOCATION**	**HAZARDS[1,2]**	**PPE[3]**	**FREQUENCY**	**HUMAN FACTORS FEATURES**
Health Physics Coverage					
Miscellaneous	Any equipment location	Same as for equipment maintenance	Same as for equipment	Same as maintenance activities	Same as for equipment maintenance

[1]Standard industrial hazards not listed

[2]RA = Radiation Area (5 to 100 mrem/hr), HRA = High Radiation Area (>100 mrem/hr), CA = Contamination Area (20 to 2000 dpm/100 cm^2 alpha); RBA = Radiological Buffer Area; ARA = Airborne Radioactivity Area

[3]Abbreviations: HH = hard hat, SS = safety shoes; SG = safety glasses, WG = leather work gloves, G = surgeon gloves, FS = face shield, RP = respiratory protection, HP = hearing protection, Anti-Cs includes coveralls, shoe covers and rubber gloves.

000255
5470
0142

THIS PAGE INTENTIONALLY BLANK

000256

5470

ATTACHMENT 4 – INDUSTRIAL SAFETY AND HUMAN FACTORS REQUIREMENTS

The following industrial safety and human factors concerns are standard for industrial operations. AWR Project personnel from multiple disciplines evaluated AWR activities in terms of these concerns, and used a graded approach to determine the appropriate implementation.

ATTACHMENT 4 - AWR PROJECT INDUSTRIAL SAFETY AND HUMAN FACTORS		
Item	**Requirements**	**Implementation**
Procedures/Safe Work Plans		
1	Written procedures are developed, reviewed by all applicable disciplines including operations and safety, and issued for all operating phases (i.e., normal operations, temporary operations, emergency shutdown, emergency operation, normal shutdown, and startup following a significant change/modification shutdown or after an emergency shutdown).	The procedures were developed, reviewed, and approved per Fluor Fernald site requirements documented in MS-2001.
2	Safe operating limits are determined and documented providing consequences of deviating from limits and actions to take when deviations occur.	Safe operating limits are established. Automatic action is taken by the PLC when parameters start to go outside those limits. In order to change a setpoint, an engineering evaluation, including safety impact, is required.
3	A procedure change control process/system is implemented to ensure that all procedures remain current and accurate (i.e., they reflect the way in which the work is actually performed).	Procedures are maintained per Fluor Fernald site requirements documented in MS-2001.
4	A formal mechanism is implemented for correcting human factors deficiencies identified by the operators (e.g., modifications to controls or equipment to better meet operators' needs).	Design changes are completed per the DCN/RCI process.

ATTACHMENT 4 - AWR PROJECT INDUSTRIAL SAFETY AND HUMAN FACTORS		
Item	**Requirements**	**Implementation**
5	Procedure format and language is reviewed and revised to ensure that they are easy to follow and understand.	Procedures were drafted by the subject matter expert, and formatted and edited by a technical writer to ensure clarity. Procedure development included walkthroughs with affected personnel.
6	A process/system for document control, updating procedures, distributing revisions of procedures, and ensuring that workers are using current revisions of procedures is implemented.	Procedure maintenance is done per site requirements documented in MS-2001. A training program and required reading program have been established.
7	Procedures and/or work permits will prescribe the personal protective equipment (PPE) required when performing routine and/or non-routine tasks.	FCP Work Permits and Radiation Work Permits, which include a PPE sheet, are established for routine activities and developed prior to any new activity.
8	Before initial implementation and any subsequent significant revision of the project procedures, they are evaluated by a qualified System Safety Analyst for human factors concerns and modified as necessary to ensure accordance with the requirements of this HFE.	The project uses a multi-disciplined team to review and evaluate procedures. This includes a qualified System Safety Analyst who evaluates for human factors concerns and ensures implementation of human factors requirements.
Training (Employees and Subcontractors)		
1	Training is developed, implemented, and evaluated according to the applicable requirements of DOE Order 5480.20A and implemented in training policies, requirements, and procedures.	The training is developed, implemented, and evaluated per site training requirements.
2	Pre-job briefings, safety meetings, and tool box discussions are conducted in addition to, not in lieu of, the required training.	In addition to training, pre-job briefings, safety meetings, and tool box discussions have been conducted and documented with rosters.
3	To qualify as training, an activity requires a method of evaluation and/or performance demonstration to be successfully completed by the trainee(s).	All training has been conducted per site training requirements.

ATTACHMENT 4 - AWR PROJECT INDUSTRIAL SAFETY AND HUMAN FACTORS		
Item	**Requirements**	**Implementation**
4	Employees and subcontractors are trained in the hazards of the processes, conditions, and equipment used in the work they are to perform.	All workers have trained per site training requirements. In addition, briefings have been performed addressing project-specific hazards.
5	Operators and maintenance workers receive adequate training in safely performing their assigned tasks before they are allowed to work without direct supervision, including requesting assistance when they believe they need it and reporting near misses or accidents.	All workers have trained per site training requirements, which include direct supervision during the qualification process.
6	Operator and maintenance worker training includes training in appropriate emergency response.	The emergency response briefing is conducted during the briefing on this AWR N-HASP.
7	Where applicable, operators practice emergency response while wearing emergency protective equipment.	When drills are scheduled, some operators will wear the prescribed protective clothing.
8	Periodic emergency drills are conducted, witnessed by observers, and critiqued.	The project will plan and conduct periodic emergency drills per site requirements.
9	Special or refresher training is provided in preparation for an infrequently performed operation.	When infrequent operations are performed, dry runs or mock-ups will be conducted, as necessary.
10	When changes are made, workers are trained in the new operation, including an explanation of why the change was made and how worker safety can be affected by the change.	Workers will be trained in procedure changes and new operations. The workers will be trained in the basis of changes and new hazards.
11	Before initial implementation and any subsequent significant revision of the project training units, they are evaluated by a qualified System Safety Analyst for human factors concerns and are modified as necessary to ensure accordance with the requirements of this HFE.	The training is developed, implemented, and evaluated per site training requirements. Training is reviewed by a qualified System Safety Analyst for human factors concerns.

ATTACHMENT 4 - AWR PROJECT INDUSTRIAL SAFETY AND HUMAN FACTORS		
Item	**Requirements**	**Implementation**
Controls and Equipment		
1	Adequate supplies of personal protective clothing and equipment are readily available for routine and emergency use.	Radiological and hazardous material PPE is staged and readily available.
2	Workers are able to perform both routine and emergency tasks safely while wearing the required protective equipment.	Workers are trained and experienced in wearing PPE and are able to perform tasks in PPE.
3	Emergency equipment is accessible without presenting further hazards to personnel.	Emergency equipment is located in areas that are accessible during emergencies.
4	Communications equipment is adequate and easily accessible. For situations where workers are wearing anti-contamination clothing and respirators, and especially where noise levels make clear communication difficult, it is recommended that the information concerning equipment available for communications in high-noise environments and communications while wearing respiratory protective equipment be evaluated for implementation.	A means of communication is available in all work areas. Radio communications will be utilized as necessary.
5	Means or methods are provided so that others can quickly know if a worker is incapacitated in a process/activity area.	The buddy system will be maintained for work activities in areas presenting hazards. When the situation for workers is not ALARA, a combination of radios for communication and cameras will be deployed.
6	The right tools (including special tools) are available and used when needed.	Routine and special tools are staged for all anticipated maintenance activities.
7	The workplace is arranged so that workers can maintain a good working posture while performing necessary movements to conduct routine tasks.	The facility configuration is conducive to minimizing injuries due to uncomfortable body positions.

ATTACHMENT 4 - AWR PROJECT INDUSTRIAL SAFETY AND HUMAN FACTORS		
Item	**Requirements**	**Implementation**
8	The workplace is arranged so that equipment and workers will not tread on nor interfere with the free movement of airlines.	No temporary airlines will be present on the floor or ground areas.
9	Controls, including such things as manual valves, power sources, and controls on portable equipment, are easily identified, readily accessible, and conform to cultural norms (e.g., right is tight, left is loose; up is on, down is off).	All manual valves, circuit breakers, switches, etc. are accessible and labeled in accordance with standard industrial norms.
10	Operators and maintenance workers are able to safely perform all required routine and emergency actions, considering the physical arrangement of equipment (e.g., access to the equipment, or proximity of required tasks to rotating equipment, hot surfaces, sharp corners, or points where hazardous material can be vented or discharged to the atmosphere).	All equipment can be safely accessed. No routine or emergency actions are required in high radiation areas.
11	The layout of the consoles and control panels, whether automated or manual equipment is logical, consistent, and effective.	The control room layout is in accordance with specifications JS-FE-HMI-90-001 and ES-JN-HMI-90-001
12	Controls, whether automated or manual, are distinguishable, accessible, and easy to use.	The controls are in accordance with specifications JS-FE-HMI-90-001 and ES-JN-HMI-90-001.
13	Controls meet standard expectations (e.g., color, direction of movement).	The controls are in accordance with specifications JS-FE-HMI-90-001 and ES-JN-HMI-90-001.
14	Control panel layouts reflect the functional aspects of the process or equipment and, as applicable, logically follow the normal sequence of operation.	The controls are in accordance with specifications JS-FE-HMI-90-001 and ES-JN-HMI-90-001.

ATTACHMENT 4 - AWR PROJECT INDUSTRIAL SAFETY AND HUMAN FACTORS		
Item	**Requirements**	**Implementation**
15	Where applicable, such as for electrical systems and equipment, a dedicated emergency shutdown panel or equivalent grouped emergency shutdown arrangement is provided and appropriately located for ease of access and use in an emergency response situation.	All work on electrical systems will be conducted per site electrical requirements.
Labeling		
1	Important equipment (e.g., vessels, pipes, valves, instruments, controls) is legibly, accurately, and unambiguously labeled.	The labeling is in accordance with specifications JS-FE-HMI-90-001 and ES-JN-HMI-90-001.
2	Equipment labels are maintained and updated, as necessary, and are referenced in the applicable operating and emergency procedures as written.	Operator and management surveillances will identify label deficiencies. Equipment labels are identified in operating and emergency procedures.
3	Emergency exit and response signs are adequately visible and easily understood.	Signs are in compliance with OSHA requirements.
4	Signs that warn workers of hazardous materials or conditions are adequately visible and easily understood.	Signs are posted in compliance with OSHA and 10 CFR 835 requirements.
5	Safety features, automatic where feasible, are provided when a process/activity upset requires rapid response or when a process upset may be difficult to diagnose because complicated processing of various information.	Automatic safety features are provided (e.g., automatic shutdown for under- and over-pressure).
6	Charts, tables, or graphs are provided (or programmed into a computer) to reduce the need for operators to perform calculations as part of the operation.	Operator aids are provided to minimize the need to perform calculations. For example, aids are provided for determination of carbon bed inventory.
7	Instruments, equipment, and controls are promptly repaired after a malfunction and are tested as appropriate to ensure normal function is restored before being restored to service.	The established maintenance procedures require malfunctioning items to be repaired and tested.

ATTACHMENT 4 - AWR PROJECT INDUSTRIAL SAFETY AND HUMAN FACTORS		
Item	**Requirements**	**Implementation**
8	Archive samples are characterized and labeled in accordance with Fluor Fernald requirements.	Archive samples are properly labeled and stored per RCRA requirements.
Housekeeping and General Work Environment		
1	Signs are posted near maintenance, cleanup, or staging areas to warn workers of special or unique hazards associated with the areas.	Signs are posted in compliance with OSHA and 10 CFR 835 requirements.
2	Barriers are erected to limit inappropriate access to controlled areas as well as maintenance, cleanup, or staging areas.	Barriers are posted in compliance with OSHA and 10 CFR 835 requirements.
3	Measures are implemented to ensure that working areas are generally clean, and slip, trip, and fall hazards are minimized.	Routine health and safety inspections, as well as worker training, will ensure the areas are clean and free of debris.
4	Provisions are implemented to limit the time a worker spends in an extremely hot or cold area, with adequate break facilities provided.	Safety and Health oversight, safe work plans, the Health and Safety Plan, and worker training will support stay time limits to prevent heat and cold stress.
5	If noise levels exceed Occupational Safety and Health Administration (OSHA) limits (85 dB) or a tolerable level (as determined by the Health and Safety Officer), adequate hearing protection will be provided.	Safety and Health oversight, postings, safe work plans, and worker training will ensure hearing protection is utilized.
6	Alarms are audible above background noise both inside and outside of working areas.	System testing ensures alarms are audible.

ATTACHMENT 4 - AWR PROJECT INDUSTRIAL SAFETY AND HUMAN FACTORS		
Item	**Requirements**	**Implementation**
7	Normal and emergency lighting are sufficient for all area operations, with special attention given to the conditions inside structures, maintaining at least the following levels: • 5 foot-candles: General site/indoor corridors, hallways and exitways, • 10 foot-candles: General shop, when work is being performed, and • 1 foot-candle: Emergency lighting egress paths.	System testing, Safety and Health inspections, and routine surveillances will identify lighting deficiencies and areas requiring corrective action.
8	Backup power for emergency lighting is provided for outdoor work areas and will be provided for indoor work areas when natural daylight is or can be expected to be unavailable.	Back-up power is provided indoors, and is provided outdoors as necessary.
9	Tripping hazard areas, with special concern inside structures, where air lines, electrical cables, and uneven footing could lead to frequent incidents and near misses, are identified.	No tripping hazard areas are currently present.
10	For potentially high-tripping hazard areas (as applicable): On level, but uneven, ground, spread small gravel on the walking surface for proper footing; no large rocks to cause a stumbling point for limited vision operators. An Occupational Safety and Health specialist is consulted and concurs with the acceptability of the walking surface before work is begun.	Safety and Health oversight is available on all work activities to ensure walking surface hazards are eliminated.
11	For potentially high-tripping hazard areas (as applicable): Airlines and electrical cables are protected from inadvertent interference by personnel (i.e., tripping hazard) and by vehicles (i.e., running over or parking on); mats, overhead rails, and highly visible conduits are used.	In the event airlines, hoses, or extension cords are temporarily run on the floor or ground for maintenance activities, precautions are taken to minimize the hazards.

ATTACHMENT 4 - AWR PROJECT INDUSTRIAL SAFETY AND HUMAN FACTORS		
Item	**Requirements**	**Implementation**
12	For potentially high-tripping hazard areas (as applicable): Spread out equipment and activities to the extent possible to decrease noise intensity levels, to provide adequate, uncluttered work areas, to reduce tripping hazards, and to reduce potential for interfering with airlines.	Work activities will be spread out, as practicable with other priorities, to minimize hazards.
13	For potentially high-tripping hazard areas (as applicable): Include in all work plans awareness of and ways to avoid contact with the over-head power line behind Silo 3 near the fence line.	Caution statements will be included in work plans if the hazard is present. A safe working distance will be maintained from power lines in accordance with OSHA.
Workload and Stress Factors		
1	The number and frequency of manual adjustments required during normal and emergency operations are limited so that operators can make the adjustments without a significant chance of mistakes as a result of overwork or stress.	The controls are in accordance with specifications JS-FE-HMI-90-001 and ES-JN-HMI-90-001. The facility operation requires a low frequency of manual adjustments. Operator training minimizes the potential for mistakes.
2	The effects of shift duration and rotation is considered and evaluated before establishing workloads.	The shift duration is limited, crew rotation is utilized, and labor agreements require limited workloads.
3	Staffing levels are appropriate for all modes of operation (e.g., normal, emergency).	Sufficient personnel have been trained and staffed to facilitate all modes of operation.

Appendix D

APPENDIX D
ALARA ANALYSIS

THIS PAGE INTENTIONALLY BLANK

TABLE OF CONTENTS

EXECUTIVE SUMMARY 7

D-1.0 INTRODUCTION 8

D-2.0 BACKGROUND INFORMATION 10

D-3.0 GENERAL REQUIREMENTS 17
- D-3.1 DESIGN CRITERIA 18
- D-3.2 RADIATION PROTECTION 20

D-4.0 EXISTING RADIOLOGICAL CONDITIONS 21
- D-4.1 RADON 24
- D-4.2 SILOS 1 AND 2 GENERAL AREA DOSE RATES 25
- D-4.3 DECANT SUMP TANK 27
- D-4.4 OTHER INFORMATION 28

D-5.0 ALARA ANALYSIS AND REVIEW PROCESSES 28
- D-5.1 ALARA REVIEW CRITERIA 29
- D-5.2 ALARA COMMITTEE REVIEW 30

D-6.0 ALARA ANALYSIS RESULTS 31
- D-6.1 DURATION OF AWR PROJECT TASKS 31
- D-6.2 INTERNAL EXPOSURE TO RADON AND OTHER RADIONUCLIDES 31
- D-6.3 CHANGING RADIOLOGICAL CONDITIONS 32
- D-6.4 BEHAVIOR OF RADON 33
- D-6.5 EXTERNAL RADIATION EXPOSURES 36
- D-6.6 ALARA ANALYSIS RESULTS 44

D-7.0 REFERENCES 49

LIST OF FIGURES

FIGURE D.2-1: RADON CONTROL SYSTEM AIR FLOW PATTERN: 1st FL. PLAN 13
FIGURE D.2-2: RADON CONTROL SYSTEM AIR FLOW PATTERN: 2nd FL. PLAN.....14
FIGURE D.2-3: CONCURRENT SWRS AND TWRS OPERATING MODE.....15

FIGURE D.4-1: SILO HEADSPACE RADON CONCENTRATIONS.....25

LIST OF TABLES

TABLE D.1-1: PERIODS OF PERFORMANCE FOR AWR ACTIVITIES 9

TABLE D.4-1: SILOS 1 AND 2 SPECIFIC ACTIVITIES.....21
TABLE D.4-2: SILO 1 AND 2 RELATIVE DOSE FRACTIONS.....23
TABLE D.4-3: 2002 RADON INVENTORIES AND EMISSIONS 24
TABLE D.4-4: HISTORICAL RADIATION DOSE RATES AT SILOS 1 AND 2 26
TABLE D.4-5: K-65 SILO DECANT SUMP RADIONUCLIDE CPC.....28

TABLE D.6-1: AWR ALARA ANALYSIS RESULTS MATRIX.....45

ACRONYMS

ACL = Administrative control level
ALARA = As Low As Reasonably Achievable
AWR = Accelerated Waste Retrieval
CEDE = Committed effective dose equivalent
CFR = Code of Federal Regulations
CPC = Constituent of primary concern
DAC = Derived air concentration
DCF = Dose conversion factors
DOE = U.S. Department of Energy
EDE = Effective dose equivalent
FCP = Fernald Closure Project
HASP = Health and Safety Plan
HEPA = High-efficiency particulate air
HVAC = Heating, ventilation, and air conditioning
mWL = Milli working level
N-HASP = Nuclear Health and Safety Plan
OU = Operable unit
PHAR = Preliminary Hazards Analysis Report
PPE = Personal protective equipment
RCS = Radon Control System
RCT = Radiological Control Technician
RTS = Radon Treatment System
RWP = Radiological Work Permit
SMAC = Silo Maintenance and Control Facility
SWRS = Silo Waste Retrieval System
TEDE = Total effective dose equivalent
TTA = Transfer Tank Area
TWRS = TTA Waste Retrieval System
UCL = Upper confidence level
WL = Working level
WSA = Waste Storage Area

5470

THIS PAGE INTENTIONALLY BLANK

EXECUTIVE SUMMARY

This appendix reflects the results of extensive analyses performed to ensure that the design and operation of the Radon Control System (RCS) and Accelerated Waste Retrieval (AWR) have been evaluated and optimized so as to maintain personnel exposure As Low As Reasonably Achievable (ALARA).

The AWR project consists of operation and maintenance of the RCS, waste retrieval from the silos and Transfer Tank Area (TTA), silos heel removal, and decontamination and decommissioning (D&D) of the silos and retrieval facilities.

This appendix addresses RCS operation through heel removal; however, it does not address the personnel exposure associated with heel removal, treatment and disposal, or D&D activities. These issues will be addressed in other project-specific documentation.

Each task where significant radiation exposure is expected has been described and analyzed to determine or estimate the number of workers involved, whether personal protective equipment and clothing is required, the time required to complete the task, the total number of times the task will be performed during the AWR Project (frequency), and the total person-hours of exposure in areas with radiation dose rates above background. The dose rate estimates were made on the basis of the final design of the RCS and AWR. Collective dose estimates were calculated for each task based on current data, and these estimates were summed for operations, maintenance, and other routine tasks. However, whenever there was uncertainty in estimates, assumptions were made that would conservatively overestimate the radiation doses. Finally, the total collective dose estimate for the AWR Project was calculated to be approximately 29.442 person-rem. The results of this ALARA analysis can be summarized as follows:

- The RCS and Transfer Tank Area (TTA) buildings have concrete walls providing shielding to reduce general area dose rates.
- The RCS is operational and dose rates above the silo domes and in the process system ventilation lines for AWR are lowered as the radon laden air is drawn to the RCS.
- The collective dose projected for the approximate three-year operations and maintenance period of the RCS is conservatively estimated to be 4.178 person-rem (14.2 percent of the project).
- The collective dose projected for the approximate 16-month Silo Waste Retrieval System operations and maintenance period is conservatively estimated to be 6.726 person-rem (22.8 percent of the project). This includes the exposures from all AWR Project operations above the silos.
- The collective dose projected for the approximate 16-month operations and maintenance of the TTA is conservatively estimated to be 8.575 person-rem (29.1 percent of the project).

- The collective dose for radiological support activities for the entire 3-year AWR project is conservatively estimated at 9.963 person-rem (33.9 percent of the project).

If during operational phases, results of radiation surveys are determined to remain relatively constant and the potential for change is understood, the frequency of surveys may be reduced, thus reducing the overall collective dose. If localized dose rates in areas of operational and radiological control support functions can be reduced below baseline projections, through the use of administrative and/or engineering controls such as temporary shielding, additional collective dose will be avoided.

Because the estimated total collective dose for the AWR Project exceeds 2 person-rem, the ALARA trigger level used at Fernald, a formal ALARA Committee Review will be required. Previously, the ALARA Committee reviewed the AWR Preliminary Hazard Analysis Report (PHAR) [Ref. 1] in January, 2000. The ALARA Committee also reviewed the RCS N-HASP ALARA Analysis [Ref. 2] in July, 2002. This analysis shows that expected radiation doses are large enough that engineering and operational controls are needed to keep radiation doses to workers ALARA.

For this ALARA analysis, the PHAR analysis was expanded to include equipment installation and other operations and maintenance functions generated as the designs changed and matured. Details of the final design have been incorporated as much as possible into this ALARA Analysis. Further detail required to clearly define operation and maintenance of equipment is generally contained in vendor's operating and maintenance manuals, and operating procedures, which are not yet available. Thus, conservative assumptions about the frequency, duration, complexity of operations and maintenance have been and used in this analysis.

D-1.0 INTRODUCTION

The scope of this As Low As Reasonably Achievable (ALARA) Analysis document is limited to the Accelerated Waste Retrieval (AWR) Project area within Operable Unit (OU) 4. The radiation protection requirements discussed herein apply to all operations at the Fernald Closure Project (FCP) site, including the AWR Project. The scope of existing and expected radiological conditions is also limited to the AWR Project area. The scope of the ALARA analysis is limited to occupational exposures of AWR Project workers and co-located workers to ionizing radiation. Environmental releases of radon and any other radiation exposure to the off-site population are addressed in the Environmental ALARA Report, Appendix E.

This ALARA Analysis addresses activities associated with the AWR Project start-up in early CY-2004 until the completion of the bulk slurry operations scheduled for late CY-2005. Additionally, this analysis addresses Radon Control System (RCS) and Transfer Tank Area (TTA) operation, including operations during silos heel removal, and Silos 1 and 2 Remediation Facility operations, as well as RCS operations during final decommissioning in 2006. The current accelerated schedule assumes the Remediation Facility operation will be completed in parallel with heel removals and TTA operation.

TABLE D.1-1 identifies these activities and lists their periods of performance. The duration of an activity divided by the frequency of any included task defines number of times that task will be performed. For example, a quarterly task will be performed eight times during an activity lasting 26 months.

The purpose of this analysis is to ensure that the AWR Project tasks have been designed and specified in a manner that will keep worker and co-located worker radiation doses ALARA. Each task has been described and analyzed to determine or estimate the number of workers involved, the required personal protective equipment (PPE), the time required to complete the task, the total number of times the task will be performed during the AWR Project (frequency), and the total person-hours of exposure in areas with radiation dose rates above background levels. Refinements to the dose rate estimates were based on AWR final design information. From these data, collective dose estimates were calculated for each task, and these estimates were summed for construction, operations, maintenance, and other routine tasks. Finally, the total collective dose estimate or the collective dose budget for the AWR Project was calculated to be 29.442 person-rem.

TABLE D.1-1: PERIODS OF PERFORMANCE FOR AWR ACTIVITIES

Activity	Start	End	Duration (months)
RCS Operations and maintenance	May 2003	May 2006	36
SWRS Operations and maintenance	June 2004	October 2005	16
TTA Operations and maintenance	June 2004	October 2005	16

SWRS = Silo Waste Retrieval System

D-2.0 BACKGROUND INFORMATION

From 1952 until 1989, the site provided high-purity uranium metal products to support U.S. defense programs. Uranium production halted in 1989 because of declining demand and a recognized need to commit available resources to environmental remediation. Former uranium operations at the site were limited to a fenced, 136-acre tract of land known as the former Production Area located near the center of the site. Large quantities of liquid and solid wastes were generated by the various production operations at the presently referred to FCP site.

Before 1984, solid and slurried wastes from site processes were stored or disposed of in the Waste Storage Area (WSA). This area, located west of the production facilities, includes: six low-level radioactive waste storage pits, two concrete silos surrounded by an earthen berm, containing uranium processing residues in the form of sludge, one concrete silo containing metal oxides, one unused concrete silo, two lime sludge ponds, a burn pit, a clearwell, and a solid waste landfill. The WSA is addressed under Operating Units (OUs) 1, 2, and 4. The former Production Area and WSA are fenced and closed to the public. The remaining site areas consist of forest and pasture lands.

OU4 is a 5.8-acre area located on the western side of the site and contains the following existing facilities and associated environmental media:

- Silos 1 and 2 and their contents (also termed K-65 Silos);
- Silo 3 and its contents (also termed Cold Metal Oxide Silo);
- Silo 4 (empty);
- The decant sump (an underground tank and its contents);
- A radon treatment system (abandoned);
- A vitrification pilot plant structure (abandoned);
- A portion of a concrete pipe trench and other concrete structures;
- An earthen berm surrounding Silos 1 and 2;
- Soils beneath and immediately surrounding Silos 1, 2, 3, and 4; and
- Perched groundwater in the vicinity of the silos.

Silos 1 and 2 (known as the K-65 Silos) contain approximately 240,000 ft^3 of residues, including water, discrete materials generated from the processing of high-grade uranium ores, and bentonite added to suppress radon emanation. The silos are large, cylindrical, above-grade concrete tanks with steel reinforcement. Each of the domed silos is 80 ft in diameter and 36 ft high to the center of the dome.

The K-65 residues contain elevated concentrations of radionuclides, including radium, thorium and associated decay products (radionulide daughters). These radionuclides contribute to an elevated, direct-penetrating gamma radiation field in the vicinity of the silos and to the chronic emission of radon gas and progeny to the atmosphere.

The RCS (AWR Phase 1) operation began in May, 2003, and has since been removing and treating radon gas from the Silos 1 and 2 headspaces. Since RCS operations began, there has been a reduction in the gamma ray dose rates on top of and around the silos areas, resulting in a an overall reduction in direct and collocated worker collective exposure in facilities and the silos vicinities. **FIGURES D.2-1** and **D.2-2** show the airflow patterns through the RCS, e.g., the roughing filter, the desiccant dryer, the carbon beds, the high efficiency particulate air (HEPA) filters, the fans, and then to recycle or to the stack. This pattern draws radon-laden gas from the silos through the roughing filters for initial particulate daughter removal, and is then passed through the carbon beds, thus reducing the radon concentrations whereupon the carbon bed outlet air is recycled to the silos or exhausted through the 150-ft high stack. Shielding is utilized at both the roughing filter and carbon bed stages to attenuate resulting concentrated gamma rays.

RCS Phase 2 operations will continue to control radon concentrations in the silos headspaces, as well as the Transfer Tank Area (TTA) systems during Silo Waste Retrieval System (SWRS) operations. The SWRS will use a technique referred to as "past practice sluicing" to remotely retrieve and transfer silos material. A medium-pressure (200 psi), high-volume (300 gpm) liquid stream will dislodge, slurry, and convey waste material to the intake of a slurry pump that will convey the slurried material to the TTA. AWR will use two sluicing nozzles and one 350-gpm centrifugal slurry pump in each silo. The nozzles and pumps enter the top of the silos through engineered penetrations. The sluicers are capable of rotating. Supernatant (sluice water) is pumped from any one of three transfer storage tanks to the sluice nozzle(s) in one silo, while slurry retrieved from that silo is pumped to a different transfer storage tank and allowed to settle. SWRS operations are discussed in more detail in Section 1.4.2, Volume 1 of this N-HASP.

RCS Phase 3 operations will then also include control of radon concentrations in the vessel vent system within the Silos 1 and 2 Remediation Facility, during TTA Waste Retrieval System (TWRS) operations.

The AWR Project encompasses multiple modes and system configurations as the K-65 material is transferred from the silos to the TTA and subsequently through the Silos 1 and 2 Remediation Facility. The Transfer Storage Tank System, and Remediation Facility are designed to operate in three general configurations consisting of the SWRS, TWRS or a combination of both. Piping and valve configurations have been designed to allow this flexibility, as well as the ability to transfer or move waste between storage tanks. Potential concurrent operations are shown in **FIGURE D.2-3**.

THIS PAGE INTENTIONALLY BLANK

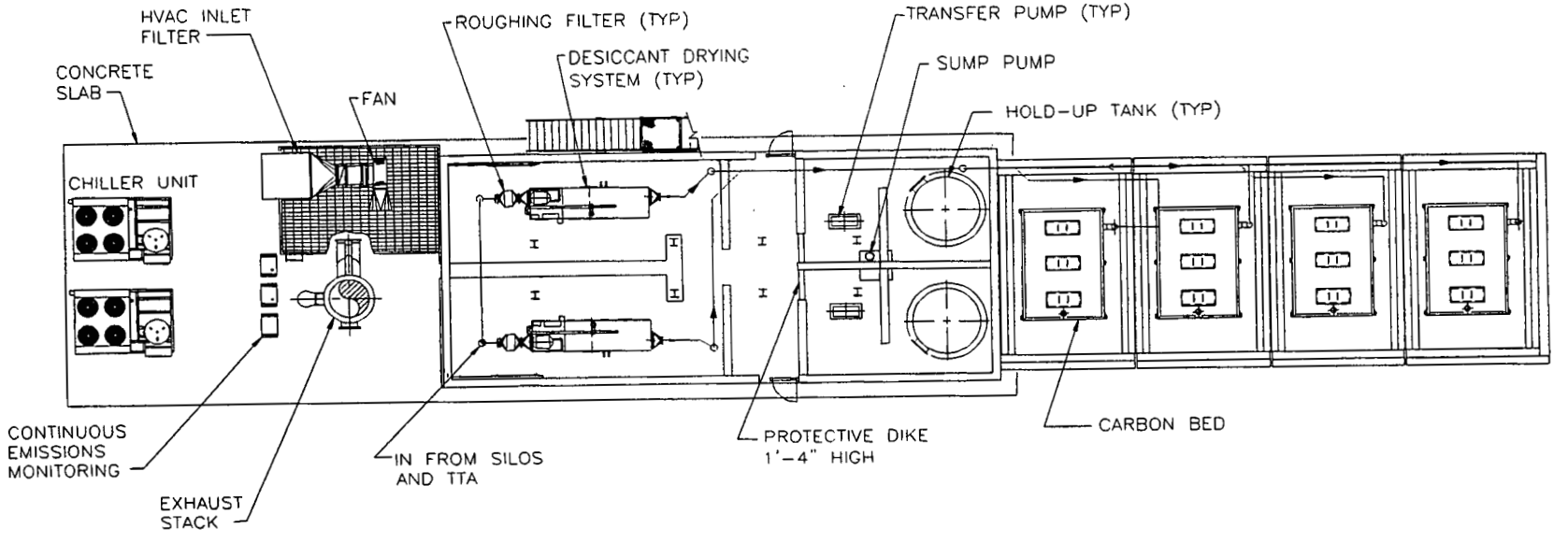

FIGURE D.2-1: RADON CONTROL SYSTEM AIR FLOW PATTERN: 1st FL. PLAN

000278
54 70

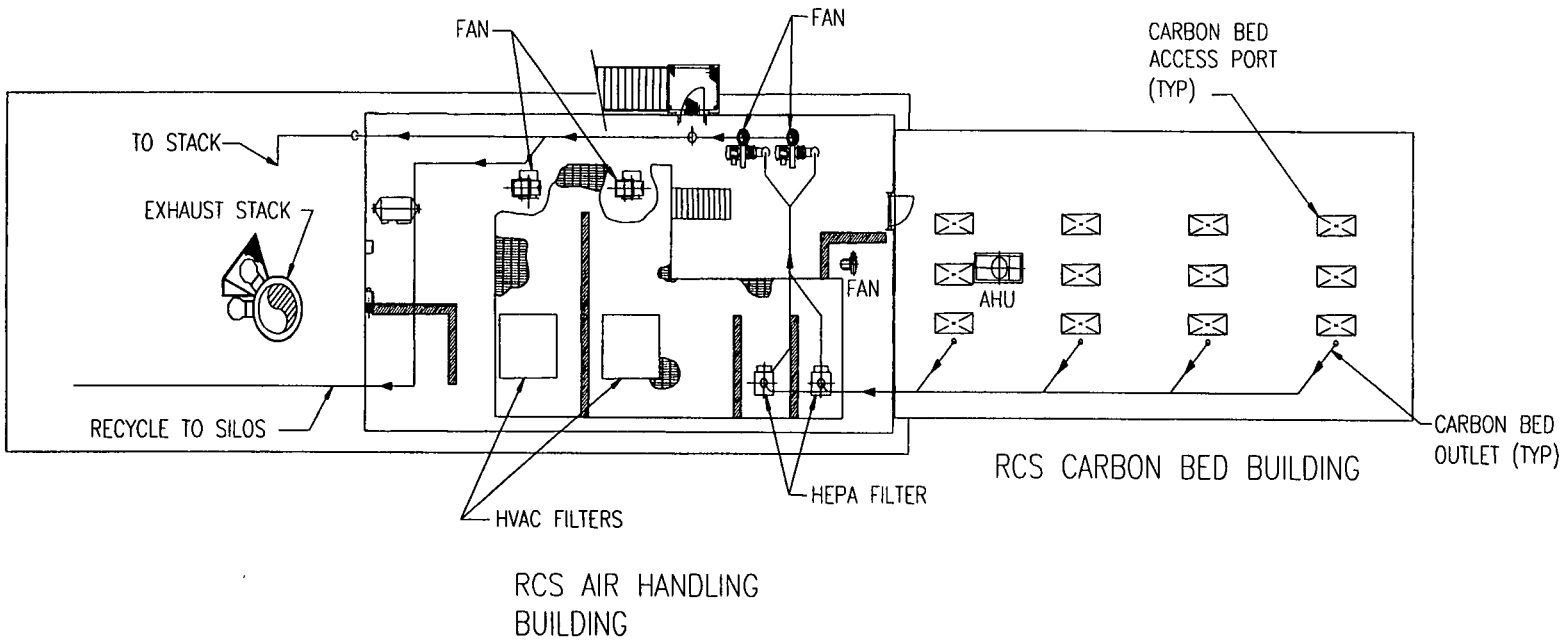

FIGURE D.2-2: RADON CONTROL SYSTEM AIR FLOW PATTERN: 2nd FL. PLAN

0002279

5470

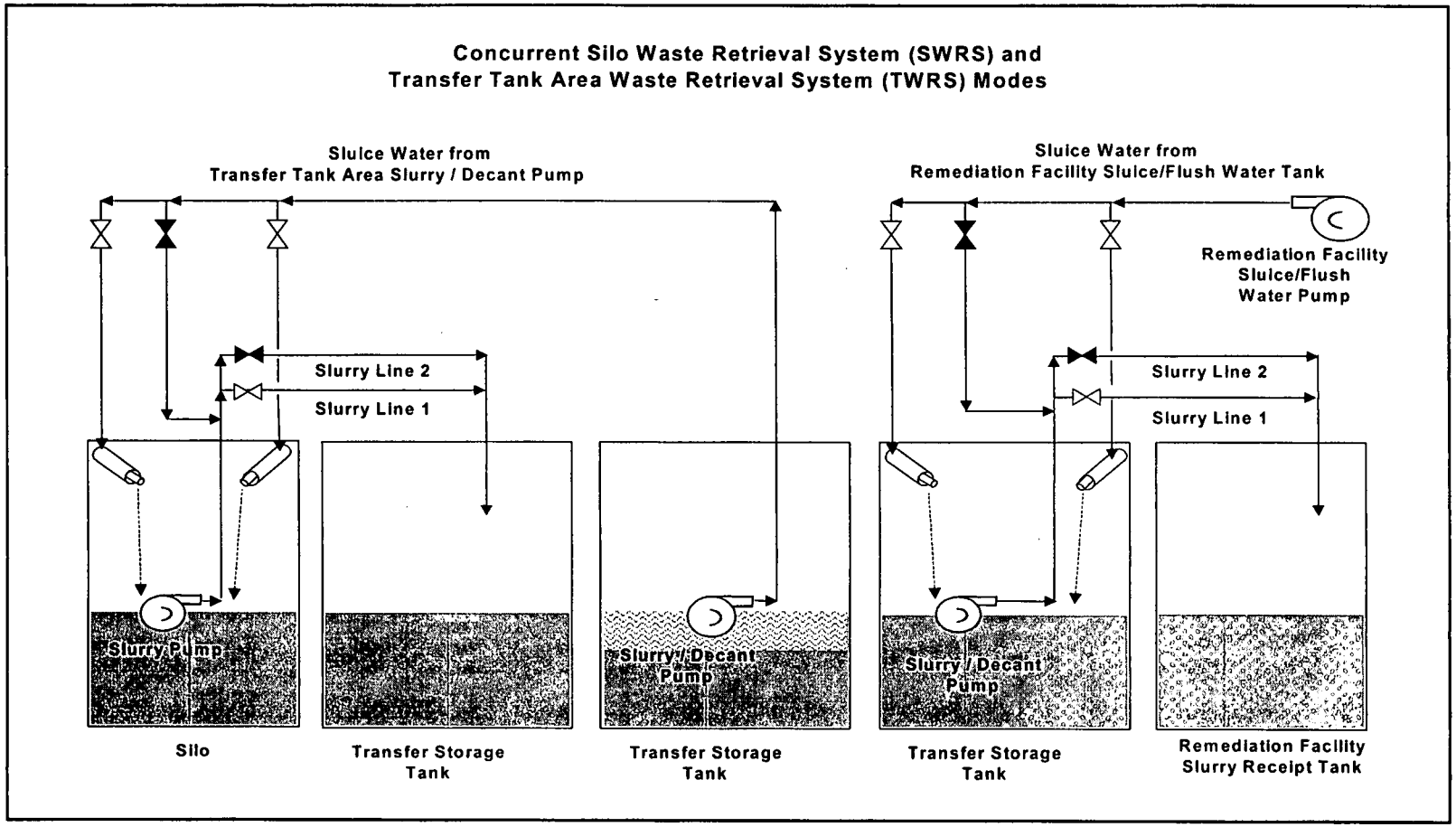

FIGURE D.2-3: CONCURRENT SWRS AND TWRS OPERATING MODE

000280
5470

THIS PAGE INTENTIONALLY BLANK

D-3.0 GENERAL REQUIREMENTS

Radiological design requirements ensure, all functions and activities are managed to maintain exposures to ionizing radiation As Low As Reasonably Achievable (ALARA). The ALARA philosophy requires any exposure to ionizing radiation received by general employees or the public be minimized to the extent that social, technical, economic, practical, and public policy considerations allow. AWR Project management is committed to keeping exposure ALARA through engineering (design), management (administrative controls), and supervision (procedures). This principle is affected by six key dose reduction methods, which are:

- Reduce the time spent within radiological areas;
- Reduce the source(s) of radioactive material;
- Increase the distance from radiation sources;
- Provide containment or isolation of, and shielding from, radiation sources;
- Minimize internal exposures to radioactive materials through the use of confinement, ventilation, and respiratory protection; and
- Reduce labor requirements for operations.

These key elements are weighed against economic factors, technical feasibility, practicality, public policy, and social needs to affect the best design.

Three approaches are incorporated in the designing, commissioning, operating, maintenance, and decommissioning phases of all AWR Project facilities:

- Facility designs or modifications and radiation exposure-causing activities are systematically evaluated, with radiological and other safety considerations as the highest priorities, to keep exposures to individuals and releases to the environment ALARA.

- Personnel are trained in ALARA principles and practices. Additionally, personnel shall adhere to radiological control requirements during operations, maintenance, and support activities to minimize radiation exposures.

- Personnel and facilities at the AWR Project are monitored for radiation hazards. Radiological monitoring of personnel and areas is documented to verify the effectiveness of engineering and process controls, detect changes in conditions and ensure that personnel exposures are ALARA.

D-3.1 Design Criteria

ALARA reviews and analyses of new facility designs or new activities are performed in support of the AWR Project. ALARA design criteria are specified in this section.

D-3.1.1 External Exposure and Shielding Criteria

The criteria for new facility design shall be in accordance with the requirements of 10 CFR 835, *Occupational Radiation Protection* [Ref. 3], Section 835.1002(b), *Facility Design and Modifications*. Specifically, "The design objective for controlling personnel exposure from external sources of radiation in areas of continuous occupancy (2,000 hours per year) shall be to maintain exposure levels below an average of 0.5 mrem/hour and as far below this limit as is reasonably achievable." Therefore, the continuous occupancy design limit for the gamma radiation exposure rate in air outside a shield wall is established at 0.5 mR/hour). The AWR Project has adopted the more restrictive administrative exposure rate limit of 0.4 mR/hour.

For monitoring individual exposures to external radiation, personnel dosimetry is required to be used by radiological workers who, under typical conditions, are likely to receive an effective dose equivalent (EDE) to the whole body of 100 mrem or more in a year [10 CFR 835.402(a)(1)(i)]. For continuous work occupancy (2,000 hours/year), this equates to a dose rate of 0.05 mrem/hour. Therefore, the secondary boundary criterion for personnel monitoring is a gamma radiation exposure rate in air outside a shield wall of 0.05 mR/hour. An exposure rate of 0.05 mR/hour is assumed equivalent to a dose rate of 0.05 mrem/hour.

D-3.1.2 Control of Airborne Radioactive Material

The criteria for new facility design shall be in accordance with the requirements of 10 CFR 835.1002(c), *Facility Design and Modifications* [Ref. 3]. Specifically, the design objective of confinement and ventilation for the control of airborne radioactive material shall be, under normal conditions, to avoid releases to the workplace atmosphere and in any situation, to control the inhalation of such material by workers to levels that are ALARA.

The final design has been reviewed to ensure that concentrations of radioactive materials, especially radon, in occupied areas during normal operating conditions are ALARA. The airborne concentrations are not expected to exceed the derived air concentration (DAC) listed in 10 CFR 835, Appendix A. Therefore, the expected use of respiratory protection should not be required, except as a precautionary measure. To meet this requirement the silo material is confined within the AWR system as a functional requirement of the Design Basis.

Design features for the RCS and AWR have been incorporated to prevent the buildup and spread of contamination. Surfaces from which radioactive material can be resuspended are minimized (e.g., scaffolding, open rafters, hanging light fixtures, cable runs). The ventilation system and facility layout is designed in accordance with the following radiological control practices [Ref. 4].

- There exists a pressure differential between areas of higher contamination to that of outer areas to prevent the spread of contamination.
- The potentially contaminated airflow is directed away from the worker's breathing zone and is designed to minimize resuspension of contamination, as required by the design basis.
- The velocity of a hood, hose, or plenum used to capture and redirect suspended contamination is adequate.
- Potentially radioactive effluent discharges are minimized using HEPA filtration. The discharge from ventilation systems is directed away from potential sources of contamination to prevent resuspension.
- The ventilation system capacity for occupied work areas is sized to provide adequate air exchanges per hour.

D-3.1.3 Design Development

The AWR Project Radiological Engineering Group reviews and ensures that radiological control requirements are incorporated during the design of new AWR Project facilities. The normal design process involves the following major steps, each of which requires an appropriate level of radiological review, input, and concurrence:

- functional design criteria,
- pre-conceptual design,
- conceptual design,
- preliminary design [preliminary hazard analysis report or safety assessment],
- final design [final hazard analysis report or safety assessment],
- documented technical safety requirements, and
- operational readiness assessment or review.

The radiological engineering review focuses on the applicable design criteria contained within DOE Order 420.1, *Facility Safety* [Ref. 5], Section 4.1, *Nuclear and Explosives Safety Design Criteria,* and those listed in this ALARA Analysis.

D-3.2 Radiation Protection

The essential features of the FCP Radiological Protection Program (RPP) used to protect AWR Project workers and the public from exposure to radiation addresses the following issues:

- The requirements for radiation protection;
- Description of the design features, programs, and procedures to control radiation sources;
- The radiation protection organization and how the AWR Project is integrated with the site-wide programs for maintaining exposures ALARA, training, dosimetry, record-keeping; and
- Description of how radiological conditions and releases are monitored and controlled.

D-4.0 EXISTING RADIOLOGICAL CONDITIONS

Silo 1 contains 115,900 ft^3 of pitchblende ore byproduct material (K-65) that is covered with 12,600 ft^3 of bentonite to limit the diffusion of radon gas generated by the material. Silo 2 contains 100,400 ft^3 of pitchblende ore byproduct material covered by 11,100 ft^3 of bentonite. The specific activities of the individual constituents of primary concern (CPCs) found in K-65 material are shown in **TABLE D.4-1**. The radionuclide inventories are derived from the specific activity results obtained from sampling of Silos 1 and 2 as reported in Table 4-2 of the *Remedial Investigation Report for Operable Unit 4* [Ref. 6]. The data used in health physics calculations are based on the 95 percent upper confidence level (UCL) on the mean of sample data results. The arithmetic mean values of the sample data are also shown for comparison. Radionuclides and values double-lined and in bold print indicate actual measured concentrations. The remaining radionuclides are decay products assumed to be in secular equilibrium with their parent. It is obvious from the data that the measurement results do not demonstrate that those radionuclides are necessarily in equilibrium; possible explanations for this include measurement errors or the silos' contents being heterogeneous. As shown by TABLE D.4-1, Radium-226 and its shorter-lived decay products Rn-222, Po-218, Pb-214, Bi-214, Po-214, Pb-210, Bi-210 and Po-210 (shaded) provide approximately 90 percent of the activity in K-65 material.

TABLE D.4-1: SILOS 1 AND 2 SPECIFIC ACTIVITIES

Radionuclide CPC	Silo 1 Activity Fraction	Silo 2 Activity Fraction	Silo 1 RI Table 4-2		Silo 2 RI Table 4-2	
			Arithmetic Mean (pCi/g)	95% UCL on A-Mean (pCi/g)	Arithmetic Mean (pCi/g)	95% UCL on A-Mean (pCi/g)
Ac-227	**0.0021**	**0.0028**	**5,960**	**7,670**	**5,100**	**6,640**
Ac-228	0.0003	0.0004		1,110		985
Bi-210	0.0546	0.0796		202,000		190,000
Bi-211	0.0021	0.0028		7,670		6,640
Bi-212	0.0006	0.0031		2,280		7,360
Bi-214	0.1289	0.1102		477,000		263,000
Fr-223	0.0000	0.0000		106		92
Pa-231	**0.0000**	**0.0017**		**0**	**2,350**	**4,040**
Pa-234	0.0000	0.0000		1		2
Pa-234m	0.0002	0.0005		693		1,120
Pb-210	**0.0546**	**0.0796**	**165,000**	**202,000**	**145,000**	**190,000**
Pb-211	0.0021	0.0028		7,670		6,640
Pb-212	0.0006	0.0031		2,280		7,360
Pb-214	0.1289	0.1102		477,000		263,000
Po-210	**0.0759**	**0.0968**	**242,000**	**281,000**	**139,000**	**231,000**
Po-211	0.0000	0.0000		21		18
Po-212	0.0004	0.0020		1,460		4,720
Po-214	0.1289	0.1102		477,000		263,000
Po-215	0.0021	0.0028		7,670		6,640

TABLE D.4-1: SILOS 1 AND 2 SPECIFIC ACTIVITIES						
Radionuclide CPC	Silo 1 Activity Fraction	Silo 2 Activity Fraction	Silo 1 RI Table 4-2		Silo 2 RI Table 4-2	
			Arithmetic Mean (pCi/g)	95% UCL on A-Mean (pCi/g)	Arithmetic Mean (pCi/g)	95% UCL on A-Mean (pCi/g)
Po-216	0.0006	0.0031		2,280		7,360
Po-218	0.1289	0.1102		477,000		263,000
Ra-223	0.0021	0.0028		7,670		6,640
Ra-224	0.0006	0.0031		2,280		7,360
Ra-226	**0.1289**	**0.1102**	**391,000**	**477,000**	**195,000**	**263,000**
Ra-228	0.0003	0.0004		1,110		985
Rn-219	0.0021	0.0028		7,670		6,640
Rn-220	0.0006	0.0031		2,280		7,360
Rn-222	0.1289	0.1102		477,000		263,000
Th-227	0.0021	0.0028		7,560		6,550
Th-228	**0.0006**	**0.0031**	**422**	**2,280**	**645**	**7,360**
Th-230	**0.0186**	**0.0319**	**60,000**	**68,900**	**48,400**	**76,200**
Th-231	0.0000	0.0000		54		94
Th-232	**0.0003**	**0.0004**	**424**	**1,110**	**402**	**985**
Th-234	0.0002	0.0005		693		1,120
Tl-207	0.0021	0.0028		7,650		6,620
Tl-208	0.0006	0.0031		819		2,640
U-234	**0.0003**	**0.0005**	**800**	**932**	**961**	**1,160**
U-235/236	**0.0000**	**0.0000**	**38**	**54**	**73**	**94**
U-238	**0.0002**	**0.0005**	**642**	**693**	**912**	**1,120**
Total Activity (pCi/g)				**3,699,666**		**2,381,545**

These radionuclide concentrations are the result of the analysis of a relatively low number of samples of K-65 material. Analyzing a greater number of samples to reduce the variance was not done because of the personnel exposure required and ALARA considerations. Therefore the 95% upper confidence level (UCL) for the population of concentrations was used as the reference point for design. The 95% UCL is also the basis of this document. It is used with full cognizance of the potential variation. Statistically, 5% of the silos material is expected to exceed these 95% UCL concentrations. Further, still higher concentrations may be seen because of the non-homogeneous nature of the residues and the limited number of samples.

Approximately 2 percent of the total activity is thorium-230; although small by activity comparison, the relative internal dose fraction is significant because of the greater risk per unit intake. **TABLE D.4-2** identifies the nuclides for Silos 1 and 2 and their respective activity fractions and dose conversion factors (DCF's) drawn from Federal Guidance Report 11 (FGR 11), which are used to derive the relative dose conversion fractions per isotope. The dose fractions are based on committed effective dose equivalent (CEDE) values, where CEDE is the sum of the committed dose equivalents to various tissues in the body,

each multiplied by the appropriate weighting factor. A committed dose equivalent means the dose equivalent calculated to be received by a tissue or organ over a 50-year period after the intake of the radionuclide into the body. From a controls standpoint, it is important to note that some of the Silos 1 and 2 CPC including Th-230 are more limited by the control levels set for the dose equivalent to a particular organ (bone) than by the control level based on CEDE. Thorium is the most limiting CPC for Silos 1 and 2 material [Ref. 7].

TABLE D.4-2: SILO 1 AND 2 RELATIVE DOSE FRACTIONS

Radionuclide CPC	Silo 1 Activity (pCi/g)	Silo 2 Activity (pCi/g)	Inh. Class	Fed Guide 11 DCF (mrem/pCi)	Silo 1 DCF (mrem/g)	Silo 2 DCF (mrem/g)	Silo 1 Relative Dose Fraction	Silo 2 Relative Dose Fraction
Ac-227	7,670	6640	Y	1.29E00	9894.30	8565.60	.239	.195
Ac-228	1,110	985	Y	1.25E-04	.14	.12	.000	.000
Bi-210	202,000	190,000	W	1.96E-04	39.59	37.24	.001	.001
Bi-212	2,280	7,360	W	1.91E-05	.04	.14	.000	.000
Bi-214	477,000	263,000	W	6.22E-06	2.97	1.64	.000	.000
Fr-223	106	92	D	6.22E-06	.00	.00	.000	.000
Pa-231	0	4,040	Y	8.58E-01	.00	3466.30	.000	.079
Pa-234	1	2	Y	8.14E-07	.00	.00	.000	.000
Pa-234m	693	1,120	Y	8.14E-07	.00	.00	.000	.000
Pb-210	202,000	190,000	D	1.36E-02	2747	2584	.067	.059
Pb-211	7,670	6,640	D	8.7E-06	.07	.05	.000	.000
Pb-212	2,280	7,360	D	1.69E-04	.38	1.24	.000	.000
Pb-214	477,000	263,000	D	7.81E-06	3.73	2.05	.000	.000
Po-210	281,000	231,000	D	8.58E-03	2411	1982	.058	.045
Ra-223	7,670	6,640	D	7.84E-03	60.13	52.05	.001	.000
Ra-224	2,280	7,360	D	3.16E-03	7.20	23.26	.000	.000
Ra-226*	477,000	263,000	Y	1.18E-02	5628.60	3103.40	.136	.071
Ra-228	1,110	985	D	4.77E-03	5.29	4.70	.000	.000
Th-227	7,560	6,550	Y	1.62E-02	122.47	106.11	.003	.002
Th-228	2,280	7,360	Y	3.42E-01	779.76	2517.10	.019	.057
Th-230	68,900	76,200	Y	2.62E-01	18,052	19964	.438	.455
Th-231	54	94	Y	8.77E-07	.00	.00	.000	.000
Th-232	1,110	985	Y	1.15E+00	1276.50	1132.75	.031	.026
Th-234	693	1,120	Y	3.50E-05	.02	.04	.000	.000
U-234	932	1,160	W	1.32E-01	123.02	153.12	.003	.003
U-235/236	54	94	W	1.23E-01	6.64	11.56	.000	.000
U-238	693	1,120	W	1.18E-01	81.77	132.16	.002	.003
TOTALS	2,231,146	1,543,907			41,242.6	43,840.6	99.8	99.6

Variance in pCi/g values between Table D.4-1 and Table D.4-2 is due to discounting nuclides Bi-211, Po-211, Po-212, Po-214, Po-215, Po-216, Po-218, Rn-219, Rn-220, Rn-222, Tl-207 and Tl-208, which have no assigned DCF values.
*ICRP 72

D-4.1 RADON

Radon-222 (3.8-day half-life) is generated at a rate in secular equilibrium with its radium-226 parent. The nature of radon, being an inert radioactive gas, results in the continual release of the radionuclide from the residues into the headspace of the silos (Silos 1 and 2). The actual quantity of radon present within the silo headspace is determined by the production rate (secular equilibrium) and the loss rate provided by RCS operations.

TABLE D.4-3 shows the radon inventory of the silo headspaces as of October, 2002. The predicted silo emissions were based on the calculated ventilation rates found in the *Remedial Investigative Report for Operable Unit 4* [Ref. 6]. The silo domes were re-foamed in June, 1999, to reduce the leakage of radon. However, the ventilation rates were not re-measured; therefore, the ventilation rates in TABLE D.4-3 were not adjusted and are believed to have been conservative.

TABLE D.4-3: 2002 RADON INVENTORIES AND EMISSIONS

Parameter	Silo 1	Silo 2
Concentration (pCi/L)	2.0×10^7	1.7×10^7
Ventilation Rate (m^3/yr)	2900	5000
Headspace Volume (L)	7.9×10^5	1.3×10^6
Headspace Radon Inventory (Ci)	15.8	21.6
Flux from source (Ci/yr)	686	841
Emission Rate (Ci/yr)	58	84

A bentonite seal was added to each of the K-65 Silos in November, 1991, to lower radon emissions. The objective for the bentonite seals was to reduce radon emissions from the silos to an ALARA level, and the performance goal was an ambient radon concentration of no greater than 0.015 pCi/L above background at the location of the maximally exposed individual at a non-FCP location [Ref. 8]. The effectiveness of the seals declined after installation because of the drying and subsequent cracking of the bentonite. Radon within the headspace of both silos increased because of the degradation of the seals. **FIGURE D.4-1** shows the increase in headspace radon concentrations in the silos from December, 1991, to May, 2003.

The RCS Phase 1 testing began in January, 2003. Operations began in May, 2003, and have since been removing and treating radon gas from the Silos 1 and 2 headspaces. FIGURE D.4-1 also includes the measured concentrations from the testing period of January, 2003, through the end of July, 2003. Since RCS Phase 1 testing and operations

commenced, headspace concentrations for both silos have declined and stabilized in or around 500,000 pCi/L.

The RCS Phase 1 operations has significantly reduced the headspace radon concentration and effectively negated radon leakage to the environment. These two factors have resulted in a change (reduction) in ambient airborne radon and radiation dose rates around the silos area, allowing for a size reduction of the Controlled Area. While these changes have afforded certain advantages to radiological configurations during Phase 1 operations, prior to commencement of Phase 2 operations, the Controlled Area will once again be expanded to encompass areas where conditions are expected to exceed those requiring radiological posting and control.

FIGURE D.4-1: SILO HEADSPACE RADON CONCENTRATIONS

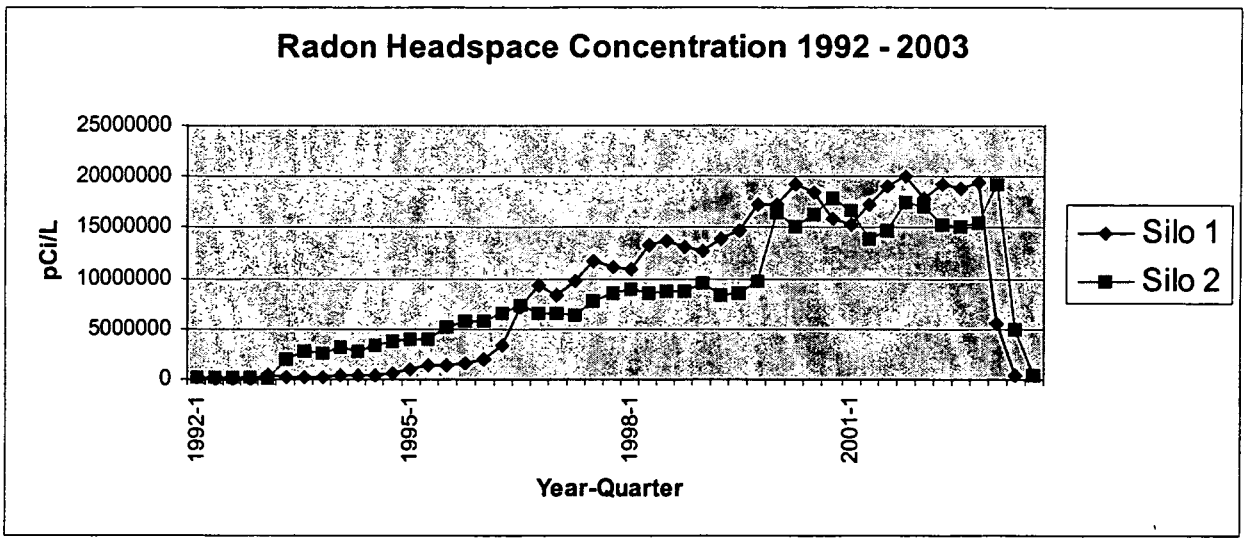

D-4.2 Silos 1 and 2 General Area Dose Rates

Radon decay products [primarily bismuth-214 (Bi-214) and lead-214 (Pb-214)] contained within the headspaces of Silos 1 and 2 emit gamma radiation, historically resulting in elevated dose rates on or near the Silo domes. As of February 17, 1999, the exposure rates found on contact with the silo manway covers were as high as 105 mR/hour. Before the installation of the bentonite covering, e.g., November 1987, dome exposure rates as high as 250 mR/hour were recorded. In August 1978, dose rate measurements were taken inside Silos 1 and 2 using thermoluminescent dosimeters. The dose rates near the surface of the wastes were in excess of 600 mrem/hour. **TABLE D.4-4** provides historical radiation dose rate information.

Subsequent to RCS Phase 1 operations, dose rate measurements on both the Silo 1 and 2 domes and surrounding general areas have shown a significant decline. Radiological survey results performed in September 2003 are included in TABLE D.4-4.

TABLE D.4-4: HISTORICAL RADIATION DOSE RATES AT SILOS 1 AND 2		
Historical Radiation Dose Rates	**Silo 1 Dose Rates (mrem/hr)**	**Silo 2 Dose Rates (mrem/hr)**
PRE-BENTONITE:		
Maximum on silo dome (11/30/87)	208[a]	250[a]
Maximum on silo dome (11/91)	175[b]	215[b]
Maximum on K-65 surface (8/78)	>600[c]	>600[c]
Maximum at exclusion fence line	0.239[d]	0.326[d]
POST-BENTONITE:		
Maximum on silo dome (3/92)	5.7[b]	4.6[b]
Maximum on silo dome (2/17/99)	90[e]	80[e]
Maximum at exclusion fence line (1992)	0.019[d]	0.025[d]
Maximum at exclusion fence line (8/25/99)	0.14[f]	0.16[f]
POST-RCS PHASE 1 OPERATIONS:		
Maximum on silo dome (09/05/03)	4.0[g]	3.5[g]
Maximum at bottom of the earthen berm (Controlled Area boundary) (09/05/03)	.025[g]	.025[g]

[a]*Revised Completion Report for the Exterior Foam Application/Radon Treatment System Operation of the K-65 Interim Stabilization Project* [Ref. 9].
[b]Remedial Investigation Report for OU4, Nov. 1993, Vol. 1 of 3, p. 4-50 [Ref. 6].
[c]OU4 Hazard Analysis Report (HAR), Appendix E, p. 26 [Ref. 10].
[d]Remedial Investigation Report for OU4, Nov. 1993, Vol. 1 of 3, p. 4-48 [Ref. 6].
[e]Radiation survey conducted 2/17/99 prior to the foam repair [Ref. 11].
[f]Radiation survey conducted 8/25/99 after the foam repair [Ref. 12].
[g]Radiation survey conducted 9/05/03

D-4.3 Decant Sump Tank

Beneath the floor of Silos 1 and 2 is an under-drain system. The under-drain system is connected to the 9000-gallon decant sump tank that is set below grade between the silos to collect any potential leakage. Access to the sump tank is provided through a 30-in.-diameter corrugated steel pipe extending upward 33 ft from the tank to the top of the berm. The access hatch is located between Silos 1 and 2 and near the western edge of the berm top.

Before silo waste retrieval is initiated, a submersible pump and liquid level monitoring instrument will be deployed, to control tank levels. The level monitoring system is designed to monitor both the level of the liquid in the tank and the rate of level change in the tank. If the level set points are exceeded, the level monitoring system alarms. At that point, the operator will decide whether to start the silo decant sump tank pump, reduce or stop water flow to the silo, or both. The pump transfers liquids to the transfer storage tanks. The sump pump automatically shuts down on low level in the silo decant sump tank. The decant sump tank is filling at a rate of approximately 3,800 gallons per year. Therefore, the decant sump is usually emptied once every 12 to 18 months [Ref. 10]. **TABLE D.4-5** shows the K-65 Decant Sump Tank Radiological CPC resulting from four samples taken in April, 1991 [Ref. 6].

TABLE D.4-5: K-65 SILO DECANT SUMP RADIONUCLIDE CPC			
Radionuclide	**Frequency of Detection**	**Mean Concentration in Decant Sump Liquid (pCi/L)**	**Range of Detects (A = analyte detected in a single sample)**
Pb-210	1/1	8660	A
Np-237	1/2	1.2	A
Po-210	1/1	7080	A
Ra-226	4/4	1098	797 - 1640
Ra-228	2/4	6.80	4.81 - 8.8
Sr-90	1/3	6.47	A
Tc-99	1/3	43.8	A
Th-228	1/2	2.72	A
Th-230	1/2	197	A
U-235	2/2	1190	1074 - 1310
U-238	2/2	23200	20390 - 26000

The radium within the decant sump tank sludge and liquid generates radon gas. Radon is soluble in water; therefore, significant concentrations exist in the decant sump liquid. During pumping operations, agitation forces the radon from the solution, resulting in high, localized radon concentrations around the sump hatch and the tanker truck fill port. Working level concentrations as high as 11.7 were measured directly above the fill port during the decant sump pumping performed in September, 1997 [Ref. 10]. Proper respiratory protection is required during pumping operations to minimize worker exposures.

D-4.4 Other Information

As previously discussed, after RCS Phase 1 testing and operations commenced in 2003, dose rate measurements on both the Silo 1 and 2 domes and surrounding general areas were significantly reduced. After evaluation of the radiological conditions for both ambient gamma dose rates and radon concentrations, the silos project Controlled Area boundary was reconfigured to encompass a smaller area.

Prior to RCS Phase 2 operations beginning in conjunction with AWR material retrieval, the Controlled Area will be expanded to include a larger area of the Silos Project.

D-5.0 ALARA ANALYSIS AND REVIEW PROCESSES

The ALARA Analysis presents estimates of the radiation dose rates, the concentrations of radon in the air, and the duration of exposures. Each AWR Project task was reviewed relative to individual as well as collective doses. Shielding requirements were considered for all the higher dose rate tasks, and ventilation requirements were considered for all tasks where radon concentrations greater than 0.01 WL are expected in the air in occupied spaces, such as the TTA and RCS buildings. Other factors were considered in the ALARA analyses to determine the duration of exposures, such as the frequency of maintenance

tasks, access to equipment that requires maintenance, the path taken to reach the equipment, the complexity and duration of maintenance tasks, local ventilation, and PPE requirements.

For example, consider the preventive maintenance required on a condensate pump in the RCS as a means of describing the methodology of ALARA analyses. The manufacturer's specifications and instructions for the pump will give the recommended maintenance frequency, the maintenance procedure, and any special tool or material requirements. The procedure will lead to an estimate of the time, personnel, skills, training, and tools required for a maintenance cycle. Radiological conditions in the vicinity of the pump, including dose rates at various distances, decay time, and radon concentrations, will be estimated. Other factors (such as access to the pump, stay time limits, temporary shielding, remote tools, PPE, and other) provide the basis for initial individual and collective dose estimates. Consideration will then be given to ways to reduce exposure times, add shielding, improve tools, or other means to reduce the estimated exposures. A collective dose will be calculated for the condensate pump maintenance task, and all task collective doses will be summed for an overall AWR Project collective dose estimate.

The tasks with the highest collective dose estimates and tasks in the highest dose rate areas will be given the most rigorous technical reviews.

D-5.1 ALARA Review Criteria

The safety envelope has been defined to include AWR Project operations and maintenance activities that are described in SECTION D-6.5.1 and tabulated in TABLE D.6-1. The radiological controls necessary for the activities listed in TABLE D.6-1 will be specified in RWPs that will be developed in accordance with FCP site procedure RP-0020, *Radiological Work Permitting and Authorization* [Ref. 13]. The RWP system ensures that the ALARA process is used in work planning.

RM-0020 establishes occupational ALARA trigger levels intended to provide an intervention point at which the application of occupational ALARA is included in planning and/or evaluating a project. The occupational ALARA trigger levels are:

- Exposure rates greater than 0.5 mR/hour on average AND an individual is likely to exceed 200 mrem in a year.
- Exposure rates greater than 0.5 mR/hour on average AND the collective dose is likely to exceed 2 person-rem in a year.
- An individual is likely to accumulate more than 4 DAC-hours in a week (applying the appropriate respiratory protection factor).
- Entry into areas where dose rates exceed 1 rem/hour.

- Reasonable potential for the release of radioactive material (e.g., liquid, airborne) from a system or container to an uncontrolled area in the absence of a release permit or transfer from a controlled or radiological area to an uncontrolled area.

The first two trigger levels will clearly be exceeded in the AWR Project; thus an occupational ALARA plan and health physics plan must be developed and submitted to the ALARA committee for review and approval.

D-5.2 ALARA Committee Review

Each of the routine operation, and maintenance tasks in the AWR Project have been evaluated for exposure time, potential dose rates, and estimated collective dose. To accurately estimate exposure times, it was necessary to evaluate each operation, and maintenance task to determine the number of workers necessary, whether they will be wearing PPE, the time required for the task, and the frequency of the task. However, detailed operations and maintenance manuals that would provide these data are not yet available from the manufacturers of each piece of equipment. Therefore, the data provided in this ALARA analysis are based on conservative estimates and general knowledge of comparable operations and equipment. The potential dose rates are "conservative estimates" based on the shielding design and allowances for radioactive decay that will occur before tasks are undertaken.

The collective dose estimates in TABLE D.6-1 have been summed to give a projection of the AWR Project total projected collective dose. An assessment of these projected collective doses gives the relative impact of each task and suggests the level of analysis necessary to ensure that the collective and individual doses are maintained ALARA.

The ALARA Committee, made up of a variety of specialists from operations, maintenance, health physics, industrial hygiene and industrial safety critically reviews this analysis. Committee comments are reviewed and responses developed and incorporated to create a well-established starting point for the initiation of physical work.

ALARA analysis is a continuous process that is repeated whenever new data becomes available enabling refinements in estimates and calculations. As the AWR Project goes forward and operations and maintenance manuals are received, specific procedures will be developed that will better define tasks to be conducted in radiological areas. In addition, during the project, actual doses will be compared to the corresponding estimates to measure performance against ALARA goals. This additional information will be used to refine individual and collective dose estimates and generally reduce the degree of conservatism in the ALARA analysis.

D-6.0 ALARA ANALYSIS RESULTS

This section presents the results of updated ALARA analyses. Each AWR Project task that involves elevated radiation exposure has been reviewed and analyzed to calculate collective doses, with an emphasis on those that pertain to the final design. The descriptions of each task are provided in SECTION D-6.4, and the data from the analysis are summarized and tabulated in SECTION D-6.5.

D-6.1 Duration Of AWR Project Tasks

The duration of the AWR Project operations was determined from the AWR-Baseline Current Schedule. RCS construction was completed in 2002, TTA construction is scheduled to be completed in early 2004. Construction of the bridge and SWRS is scheduled to end in early 2004. Bulk slurry operations are scheduled to begin in July, 2004, and conclude in March, 2005.

RCS operations began in early 2003 and are scheduled to conclude in 2006. March, 2005, corresponds to the completion of the transfer of the bulk K-65 material to the TTA, and the specified period addressed by this document. The RCS will need to be operated after this time to accommodate operation of the Silos 1 and 2 Remediation Facility.

D-6.2 Internal Exposure To Radon And Other Radionuclides

Design and engineering controls are expected to maintain conditions below that requiring posting and control as Airborne Radioactivity Areas. However, until radiological monitoring data collected during operations verifies conditions, AWR Project operations will be conducted in areas posted and controlled as Airborne Radioactivity Areas. For these operations, the selection and use of respiratory protection equipment will be designed to prevent internal exposure to radon and its decay products. In cases where radon concentrations are measured above 0.03 Working Levels (WLs), but less than 0.3 WLs, stay-times and use of respiratory protection will be evaluated, allowing for estimates of worker internal exposure. In all cases where workers are exposed to K-65 materials in slurry form, they will be required (by RWP) to wear full PPE and respirators to prevent skin contamination and inhalation of airborne radioactive materials. Thus, the probability of AWR Project workers being internally contaminated is very low. Nevertheless, all AWR Project radiological workers will participate in the FCP bioassay program as required.

The RCS has been designed to prevent uncontrolled releases of radon. Two ambient radon monitors will monitor areas inside the RCS where radon can leak or otherwise be released from process equipment. Radiological Control Technicians (RCTs) will also measure radon concentrations and determine the requirements for respiratory protection for anyone planning to access the areas. The objective of monitoring and respiratory protection is to prevent unnecessary exposures to radon concentrations resulting in internal exposures and to ensure personnel exposures are maintained ALARA.

D-6.3 Changing Radiological Conditions

Presently, the RCS (Phase 1) operation has significantly reduced the radon concentrations in the silo headspaces and surrounding areas (including the site perimeter) and lowered the gamma dose rates on the silo domes and in the area near the silos. With the RCS operating, the gamma exposure rates decreased rapidly with distance so that exposure rates greater than 0.05 mR/hour do not extend beyond the lower berm area of the silos. Radon concentrations exceeding 10 percent of a DAC have been limited to the head spaces of the silo domes. Thus, construction of the bridge has been accomplished where the exposure rates are in the range of 0.2 mR/hour and there has been no measurable exposure to radon working levels.

These reduced radiological conditions will prevail from the time the RCS began operation, through the remainder of construction, throughout the testing and training period, and even during the initial parts of Phase 2. Radiological conditions will not change significantly until bentonite is physically removed from Silo 1 and 2.

During Phase 2A, when the removal of K-65 material from Silo 1 begins, there will be major changes in the radiological conditions, with the RCS operating and while retrieving waste from Silo 1. As the bentonite material on the top of the K-65 waste in Silo 1 is removed the dose rate on the Silo 1 dome will increase to levels greater than 5 mrem/hr but less than 100 mrem/hr. The dose rates on the dome of Silo 2 should remain greater than 2 mrem/hr but less than 5 mrem/hr.

During slurry transfer from Silo 1 to the TTA, the transfer line is expected to have dose rates up to 12 mrem/hr on contact. Areas immediately surrounding the transfer line will be surveyed and posted accordingly.

As K-65 material is placed in Tank 1A and 1B, the upper floor of the TTA structure has the potential to become a High Radiation Area with dose rates exceeding 100 mrem/hr but less than 1 R/hr. Entry into the lower TTA tank area is prevented by the design of the facility. However, there is an entry port from the upper floor that will be a controlled access that will be appropriately posted.

The RCS will continue to operate as it did during Phase 1. The dose rates outside the shield walls of the RCS and TTA will be less than 1.0 mrem/hr. Routine health physics surveys will confirm the radiation levels in and around the RCS, TTA, and silos.

During Phase 2B, radiological conditions are expected to be similar to those of Phase 2A, with one major exception. During Phase 2B, Silo 1 will be empty and radiation dose rates around Silo 1 will be reduced to that associated with minimal residual contamination and radon buildup. When the removal of K-65 material from Silo 2 begins, there will be major changes in the radiological conditions, with the RCS operating and while retrieving waste from Silo 2. As the bentonite material on the top of the K-65 waste in Silo 2 is removed the dose rate on the Silo 2 dome will increase to levels greater than 5 mrem/hr but less than 100 mrem/hr. The dose rates on the dome of Silo 1 should remain greater than 2 mrem/hr but less than 5 mrem/hr.

During the time K-65 slurry is transferred from Silo 2 to the TTA, the transfer line will become a line source with a radiation area surrounding it. Areas immediately surrounding the transfer line will be surveyed and posted accordingly.

As K-65 material is placed in Tank 2A and 2B, the upper level of the TTA structure has the potential to become a High Radiation Area with dose rates exceeding 100 mrem/hr but less than 1 R/hr. Entry into the lower TTA tank area is again prevented by the design of the facility. However, there is an entry port from the upper floor that will be a controlled access that will be appropriately posted.

The RCS will continue to operate as it did during Phase 1. The dose rates outside the shield walls of the RCS and TTA will be less than 0.4 mrem/hr. Routine health physics surveys will confirm the radiation levels in and around the RCS, TTA, and silos.

During Phase 2, the dose rates on the TTA deck are expected to be greater than 2.0 mrem/hr but less than 5.0 mrem/hr. The dose rate inside the TTA tank area will exceed 100 mrem/hr and the area will be designated as a High Radiation Area. The area outside the shield walls of the TTA will be less than 0.4 mrem/hr. Routine health physics surveys will confirm the radiation levels in and around the TTA.

D-6.4 Behavior Of Radon

The headspaces of Silos 1 and 2 contain substantial concentrations of radon gas (both Rn-222 and Rn-220) and its decay products. However, the concentration of Rn-220 is less than 0.5 percent of the concentration of Rn-222. The half-life of Rn-222 is 3.8 days and the half-lives of its short-lived decay products are 3.05 minutes for Po-218, 26.8 minutes for Pb-214, 19.9 minutes for Bi-214, and 164 microseconds for Po-214. Lead-214 and Bi-214 emit energetic gamma rays, which is the primary external radiation hazard of concern.

Radon concentrations in the headspaces of Silos 1 and 2 were greatly reduced during RCS Phase 1 operations, as previously discussed, but will again rise during Phase 2 operations as the bentonite cover layer is removed during sluicing and material extraction. This will in effect expose material and increase available radon inventory for removal to the RCS. The concentrations of particulate radon decay products deposited in the ducts between the silos and the RCS will increase during these operations to a peak level (with corresponding external gamma radiation dose rates) and then decrease within a few hours to an equilibrium level.

D-6.4.1 Section from the Silos to the RCS

Radon-laden air is moved from the headspace out of the silos, through existing risers installed in Silos 1 and 2 domes. Two 12-inch outer diameter, rigid ducts, transport the radon laden air through pipe racks located on the bridges above the silos, and join into a single 12-in. rigid line which connects to the RCS.

As the moving air contacts solid surfaces (existing risers, flexible ducts, bends in the ducts, etc.), particulate radon decay products will start to plate out (attach to) surfaces and be removed from the air stream. At each location where radon decay products plate out, higher radiation dose rates will be found. The relative increase in dose rates will depend on the specific geometry and features of the solid surfaces. In addition, as the air moves downstream and more radon decay products are plated out, the relative increase in dose rates at subsequent locations will tend to diminish (because fewer radon decay products remain in the air stream to be plated out). Given the uncertainties in specific geometries, inner duct surface features, and time parameters, it is impossible to calculate with any reliability what the elevated dose rates will be. However, based on past experience, the dose rates from plated-out radon decay products in ducts are not expected to exceed 10 mR/hour at contact.

During Phase 2 operations this ducting will be routinely monitored and the areas will be posted and access controlled through use of a RWP, as appropriate. Additionally temporary shielding in the form of lead wool blankets can be installed, as necessary, to reduce radiation dose rates to acceptable levels. The ducts will be monitored on a routine basis to detect any significant changes in radiation levels. Proper radiation area posting will be installed and maintained as required.

D-6.4.2 Section from the TTA to the RCS

Radon laden air will be moved out of each temporary storage tank through a 12-inch duct which is connected to a common 12 inch duct (header) located in overhead pipe racks, transporting the air out of the building to the RCS.

The ducts described in the above paragraph are located within the second floor of the TTA building. Given the uncertainty in specific geometries and potential variability in operational conditions it is impossible to calculate with any reliability what the elevated dose rates from plated-out radon decay products will be. Radiation dose rates in areas that are accessible and can be occupied will be surveyed to measure actual dose rates and determine the need for additional, temporary shielding. The areas will be resurveyed at regular frequencies, or upon entry, to detect any significant changes in radiation levels. Proper radiation area posting will be installed and maintained as required.

D-6.4.3 Section Within the RCS to the Roughing Filters

At the point where the pipe rack reaches the RCS Building, the 12-in. rigid duct makes a 90-degree bend and enters the RCS Air Handling Building. Ducting then makes a 90-degree bend downward and contracts to a 10-in. duct. At a point upstream of the roughing filters, the 10-in. duct splits. When the damper on the southern roughing filter (FLT-20-001B) is closed, the air stream continues through duct to the northern side of the air handling system. When the damper on the northern roughing filter (FLT-20-001A) is closed, the air stream is diverted to the southern side of the air handling system.

All of the ducts, bends, expansions, and dampers described in the above paragraph are located within the RCS Air Handling Building. Again, given the uncertainties in specific geometries, inner duct surface features, and time parameters, it is impossible to calculate with any reliability what the elevated dose rates from plated-out radon decay products will be. Radiation dose rates in areas that can be occupied will be surveyed to measure actual dose rates and determine the need for additional, temporary shielding. The areas will be resurveyed at regular frequencies, or upon entry, to detect any significant changes in radiation levels. Proper radiation area posting will be installed and maintained as required.

Ducts RCS-20020-10"-893 and RCS-20032-10"-893 make 90-degree bends immediately before entering roughing filters (FLT-20-001A and FLT-20-001B) on the northern and southern sides of the RCS Air Handling Building, respectively (Dwg. 20FMD126). Within the roughing filters, nearly all (approximately 95 percent) of the remaining radon decay products will be removed from the air stream. Elevated exposure rates (possibly in excess of 1000 mR/hour) are expected at the bend immediately upstream of the roughing filters and near the roughing filters themselves. This area is provided with concrete outer walls that are 12 in. thick, concrete inner walls that are 24 in. thick, and 3 in. thick steel plate shielding. The active side of the air handling system will not be occupied at any time during operations. Entrance doors will be locked during operations to control access.

After airflow on one side of the air handling system is switched to the other side, any residual radon in the first side will be exhausted and remaining radon daughters will be allowed to decay for at least 4 hours. The maximum half-life of any of the radon daughters is 26.8 minutes; therefore, 4 hours equates to approximately 9 half-lives, and the decay will reduce the radioactivity to less than 0.2 percent of its initial value.

D-6.4.4 Section from Roughing Filters to Carbon Beds and Beyond

After passing through the roughing filter, remaining radon decay products in the air stream are removed by the desiccant drying system. The chilled and dried air stream, containing "pure" radon gas, then flows directly to the carbon beds. Technically, the "pure" radon will immediately begin to decay, but in the few seconds it takes to flow to the carbon beds, the ingrowth of radon decay products will be negligible. The radon-laden air stream will enter the carbon beds where adsorption on activated charcoal will remove at least 98 percent of the radon from the air stream. The radon absorbed on the charcoal will continue to decay to its gamma-emitting decay products; thus, the carbon beds area will become a high radiation area (probably in excess of 1 R/hour), which will not be occupied at any time.

Radiation levels outside the concrete and steel shielding, which surrounds the carbon beds, is monitored on a routine basis to detect any changes in conditions. If radiation dose rates in areas that can be occupied are greater than the design level of 0.4 mrem/hour, additional concrete shielding, in the form of solid concrete blocks, can be installed as necessary. As an alternative, any areas where dose rates exceed 0.4 mrem/hour will be administratively controlled by radiological postings and RWP, as appropriate.

Radon gas that exits the carbon beds is essentially "pure" radon because the carbon beds will effectively remove all radon decay products. Again, the "pure" radon will immediately begin to decay, but in the short time it takes to flow from the carbon beds to the stack or back to the silos or TTA (in re-circulation mode), the ingrowth of radon decay products will be negligible. Thus, there should be no significant radiation levels near any of the ducts in the return part of the RCS (from the carbon beds, through the re-circulation fans, back to the silos or TTA). Radiation surveys are routinely conducted during RCS operations to confirm these expected conditions.

D-6.5 External Radiation Exposures

The individual and collective dose estimates are detailed in this section. The collective dose estimates in TABLE D.6-1 have been summed to give a projection of the AWR Project total collective dose. An assessment of these projected collective doses gives the relative impact of each task and suggests the level of analysis necessary to ensure that the collective and individual doses are maintained ALARA. These estimates will also provide input to the development of AWR Project ALARA goals. The dose rate estimates were determined from a combination of calculations, existing survey data, and qualitative approximations, as detailed in SD-2082 [Ref. 14]. During AWR Project operations, actual doses will be compared to estimated doses to analyze trends and measure performance against ALARA goals. Actual dose data will be used to refine dose estimates and make adjustment where necessary.

The scope of this revision of the ALARA Analysis is focused on support of Phases 1 and 2 of the AWR. Details of the RCS and AWR final design have been incorporated as much as possible into this ALARA Analysis. Further detail required to clearly define operation and maintenance of equipment is generally contained in vendor's operating and maintenance manuals, which are not yet available. Thus, conservative assumptions about the frequency, duration, and complexity of operations and maintenance have been made by the design engineers and used in this analysis. As vendor manuals become available, additional ALARA analysis will be performed and documented in Radiological Control Self-Assessments. Dose projections will be refined, as appropriate.

As work plans are developed and more details are specified, more complete and accurate exposure estimates and controls will be identified. These updated estimates and controls will be identified and included in project documentation. For example, major activities like "Connection to Silos" and "Containments for Connection" involve installing valve assemblies to the K-65 Silos which require breaching the K-65 Silos. Major activities such as this receive updated dose estimates and controls that will be appended to the Radiological Work Permit and/or Work Plan and become a project record.

The number of workers involved in AWR Project tasks is generally limited to only those workers who actually enter radiological areas to perform work. The "buddy system" of using two workers on a task will be used only when absolutely necessary for safety or efficiency. Supervisors, engineers, trainers, and trainees may be exposed to lower radiation levels than the primary workers. Furthermore, the estimated exposure times for workers performing radiological work are limited to the actual time spent in the radiation

areas. It is assumed that workers will perform efficiently and minimize the time spent in these areas because of their skills and training and because the tasks will have been practiced on "cold" systems.

The remainder of this section is focused on external radiation exposures to AWR Project workers. The calculations reflect the dose rates expected on the bridges over the silos after some of the bentonite layer is removed, and on the TTA deck after the tanks have been filled (to design level) with the K-65 slurry material. Radiation dose rates estimated in this section are taken from Key Calculations [Ref. 14]. Radiation exposures to workers will be controlled and maintained ALARA through RWPs, including stay-time limits and local, temporary shielding requirements. Actual radiation exposures to workers will be measured and tracked by dosimeters, records will maintained documenting individual worker exposures.

D-6.5.1 Operations and Maintenance

RCS Operation

Initial operation of the RCS is controlled from the Silo Maintenance and Control Facility (SMAC). During the first year of RCS operation the SMAC will be staffed as needed. The dose rate in this area has been approximately 0.02 mrem/hour and was removed from the Controlled area in mid 2003. Up to four additional workers may be in the SMAC on the day shift during Phase 2.

Rounds requiring chemical operators to be in the RCS building, which is still within the Controlled Area, are being minimized and only planned if there is a need. The time involved is estimated to be one person, 3 hours per week where the dose rate is 0.5 mrem/hour.

A chemical operator collects condensate water samples for analysis, requiring one operator 1 hour per week at a dose rate of 0.5 mrem/hr. Condensate water is then transported to the Advanced Waste Water Treatment (AWWT) system via hose connections between the condensate tank and the K-65 storm-water trench, requiring two operators 1 hour per week at a dose rate of 0.5 mrem/hr.

RCS Maintenance

Each item on the RCS Equipment List was reviewed to determine maintenance requirements, location of equipment items, and radiation dose rates at specific maintenance locations. The period of operation was also considered in the descriptions that follow. All of the RCS equipment items will operate throughout Phases 1, 2, and 3, unless otherwise noted.

The RCS equipment is comprised of several major components that make up the entire ventilation system for the AWR Project. Thus, the paragraphs that follow address some equipment that is not located in the RCS, but rather in the TTA and elsewhere. Each of these components includes equipment that may require preventive maintenance, and these requirements are considered in the following paragraphs.

The Duplex Instrument Air Compressor Skid (ACP-40-001) and the Air Dryer Skid (ADY-40-001)(Dwg. 40FMD001) provide compressed air to the RCS for maintenance functions and are located on the Miscellaneous Equipment Pad. Their maintenance will take two workers approximately 2 hours every 2 months, and the dose rate in this area is estimated to be approximately 0.4 mrem/hour.

The Air Handling Unit (AHU-77-001), located on the second floor above the carbon beds (Dwg. 77FMD006), provides cooling to the carbon bed vaults and will require annual maintenance. The maintenance will take two workers approximately 4 hours per year, and the dose rate in this area is estimated to be approximately 2 mrem/hour.

The Carbon Beds (CBD-20-001A/B and CBD-20–002A/B) and the rooms in which they are located (Dwg. 20FMD132) are designed to be unoccupied and require absolutely no maintenance. The dose rate near the carbon beds during operation will probably exceed 5 R/hr and the area will be designated a High Radiation Area where access is not allowed. The shielding around the carbon beds is designed to reduce the dose rate outside the shielding to less than 0.4 mrem/hour, and the area near the shielding walls is not expected to be occupied.

Bimonthly preventive maintenance is planned for the Chiller Skid Packages (CRH-20-001A/B) (Dwg. 20FMD027) (i.e., one side of the redundant system in the first month and the other side in the next month). Maintenance will take two workers approximately 2 hours per month. The dose rate near the chillers is estimated to be approximately 0.4 mR/hour. In addition, annual cleaning of the chiller coils is planned. Cleaning will take two workers approximately 4 hours per year for each of two chillers. The dose rate near the chillers is estimated to be approximately 0.4 mrem/hour.

The Desiccant Drying Systems (DDS-20-001A/B) (Dwg. 20FMD120) will also receive monthly preventive maintenance (i.e., one side of the redundant system in the first month and the other side in the next month). Maintenance will take two workers in PPE approximately 2 hours per month. The dose rate near the desiccant drying system after a minimum of 4 hours of decay is estimated to be approximately 2 mrem/hour.

The Drying Fan (FAN-20-003) (Dwg. 20FMD016) is used only during regeneration of a carbon bed. An annual inspection will be required that will take two workers in PPE approximately 1 hour per year. The drying fan is located on the second floor of the RCS Air Handling Building where the dose rate is estimated to be approximately 2 mrem/hour.

The Exhaust Recirculation Fans (FAN-20-001A/B) (Dwg. 20FMD019) are the main fans that draw air from the silos through the RCS, and they are located on the second floor of the RCS Air Handling Building. The fans will receive bimonthly maintenance (i.e., one fan

in the redundant system in the first month and the other fan in the next month). Maintenance will take two workers in PPE approximately 2 hours per month to service one of the fans, and the dose rate in the area is estimated to be approximately 2 mrem/hour.

The Building Vent Exhaust Fans (FAN-77-001A/B) (Dwg. 77FMD008) are the main fans that withdraw air from the RCS building and exhaust it up the stack. These fans, located on the second floor of the RCS Air Handling Building, provide 12 air changes per hour for the RCS building. Maintenance will take two workers in PPE approximately 2 hours per month, and the dose rate in the area is expected to be approximately 2 mrem/hour.

The RCS Building Vent Supply Fan (FAN-77-003) (Dwg. 77FMD006) supplies outside air to the RCS building, and it is located on the second floor of the RCS Air Handling Building. Maintenance will take two workers in PPE approximately 1 hour every 2 months, and the dose rate in the area is expected to be approximately 2 mrem/hour.

The Heating Fan Intake Air Filter (FLT-12-003) (Dwg. 11FMD013) and the heating, ventilation, and air conditioning (HVAC) Duct Heaters (HTR-77-012A/B) (Dwg. 77FMD006) provide heated building air during the winter months (less than 6 months per year) and are located on the second floor of the RCS Air Handling Building. The HEPA filters are expected to function for the duration of the AWR Project without a change, but the prefilter on the heating fan intake air HEPA filter will require a monthly change during the heating period. Maintenance will take two workers 1 hour every month, and the dose rate in the area is expected to be approximately 2 mrem/hr.

The Roughing Filters (FLT-20-001A/B) (Dwg. 20FMD120) are located on the first floor of the RCS Air Handling Building, immediately upstream of the desiccant drying system. The roughing filters will require changes every 4 months during Phases 1 and 3 (when relatively clean air is processed) and bimonthly changes during Phase 2 (when K-65 waste is being moved from the silos to the TTA). These filter changes will be done in alternate months (i.e., one side of the redundant system in the first month and the other side in the next month). The task will take three workers in PPE approximately 2 hours per month, and the dose rate in the area (after a minimum of 4 hours of decay) is expected to be approximately 5 mrem/hour.

The main RCS HEPA filters (FLT-20-002A/B)(Dwg. 20FMD019) filter the air exhausted from the carbon beds and assure that no radioactive particulates are exhausted up the stack in excess of allowable limits. The HEPA filters and their prefilters are located on the second floor of the RCS Air Handling Building. The prefilters will be changed annually, but the HEPA filters are expected to function for the duration of the AWR Project without a change. Changing the prefilters will take four workers in PPE approximately 2 hours per year and the dose rate in the area of the non-operating side of the system is expected to be approximately 2 mrem/hour.

The Make-Up Air Filter (FLT-20-004)(Dwg. 20FMD019) system is a prefilter and HEPA filter on the outside air intake duct that provides make-up air to the RCS. The filter system is located on the second floor of the RCS Air Handling Building, and the prefilter will

require an annual change. This task will take two workers in PPE approximately 1 hour, and the dose rate in the area is expected to be approximately 2 mrem/hour.

The RCS Building Air Filter (FLT-77-001) (Dwg. 77FMD006) is located upstream of the RCS Building Vent Supply Fan (FAN-77-003) on the second floor deck above the RCS Equipment Pad. The prefilter will be changed semiannually, but the 95 percent filter is expected to function for the duration of the AWR Project without a change. Changing the prefilter will take two workers in PPE approximately 1 hour per month, and the dose rate in the area is expected to be approximately 0.2 mrem/hour.

The HVAC HEPA filters (FLT-77-002A/B)(Dwg. 77FMD008) are located upstream of the RCS Building Vent Exhaust Fans (FAN-77-001A/B) on the second floor of the RCS Air Handling Building. The prefilters ahead of the HEPA filters will be changed annually, but the HEPAs are expected to function for the duration of the AWR Project without a change. Changing the prefilters will take 2 workers in PPE approximately 8 hours each time, and the dose rate in the area is expected to be approximately 2 mrem/hour.

The Condensate Transfer Pumps (PMP-20-001A/B) (Dwg. 20FMD120) are located on the first floor of the RCS Air Handling Building behind a 12-in. shielding wall that separates the pumps from the condensate tanks. The transfer pumps will only operate for a few hours per month, thus they require maintenance only semiannually. Maintenance on the pumps will take two workers in PPE approximately 2 hours. The dose rate near the transfer pump, after a minimum of 4 hours of decay, is expected to be approximately 0.5 mrem/hr.

The remaining RCS equipment items include the Stack (STK-20-001) (Dwg. 20FMD120), the Condensate Hold-Up Tanks (TNK-20-002A/B) (Dwg. 29FMD120), and the Make-Up Water Tank (TNK-51-001) (Dwg. 51FMD003). None of these items require any maintenance.

RCS equipment has been designed and selected so that repair or replacement should not be required during the life of the AWR Project. However, an assumption is made that two repair tasks per year may be required that involve two workers in PPE and take 16 hours each. An objective for these activities will be a time delay where possible, allowing for decay, and thus reducing average dose rates to 1.0 mrem/hr or less.

TTA Operation

The control room will be staffed with 2 operators, with a dose rate of 0.02 mrem/hr. SWRS operations are expected to last 12 months and TWRS operations are expected to last 12 months. The SWRS and TWRS operations will be performed concurrently for an assumed duration of 16 months.

Daily inspections of equipment and line adjustments are planned on the TTA deck. These operations will take two workers in PPE approximately 1 hour each, per day. The average dose rate on the TTA deck is estimated to be 5 mrem/hour.

Thirty-two evolutions are planned for adding extensions to the sluicer masts. There are two sluicers per TTA with four extensions to be added to each (4 TTAs, two masts, four extensions = 32 evolutions). This activity will require two workers in PPE located outside the module for each mast extension attachment. This operation is estimated to take up to 2 hours per extension. The dose rate is estimated to be approximately 5 mrem/hr.

TTA Equipment Maintenance

Each item on the TTA Equipment List was reviewed to determine maintenance requirements, location of equipment items, and radiation dose rates at specific maintenance locations. The period of operation was also considered in the descriptions that follow. Preventive maintenance will be required on TTA equipment during RCS Phase 2 and 3 operating period.

The TTA equipment is comprised of several major equipment modules, including the slurry/decant modules, and sluicer modules. Each of these modules includes equipment that may require preventive maintenance, and these requirements are considered in the following paragraphs.

The eight sluicer modules each include a mast hoist, a cable reel, a pitch drive, and a yaw drive. This equipment is located within the sluicer modules on the TTA deck. Maintenance is estimated to require 2 workers 8 hours per month, in a dose rate of 5 mrem/hr, during the sixteen months of operation.

The four slurry/decant modules each include a pump, motor, lift table, hoists, and a hose reel. This equipment is located on the TTA deck and is used during waste retrieval operations. Maintenance is estimated to require 2 workers 4 hours per month, in a dose rate of 5 mrem/hr, for the sixteen months of operation.

Numerous other pieces of equipment located on the TTA deck, includes cameras, space heaters, wall exhauster fans, A and B sump pumps, a TTA sump pump, and one monorail hoist. This equipment has been designed to operate without maintenance. The TTA foundation sump pump has a very low duty cycle and is retrievable for maintenance but is otherwise inaccessible. Quarterly maintenance of the Containment Area sump pumps will take two workers in PPE 1 hour, and the dose rate is approximately 5 mrem/hour. Semiannual maintenance of the hoist will take two workers 2 hours, and the dose rate is approximately 5 mrem/hour.

TTA equipment has been designed and selected so that repair or replacement should not be required during the life of the AWR Project. However, a conservative assumption is made that 1 minor repair tasks (e.g., leaking valves and connections) may be required per month that involves two workers in PPE and takes 4 hours each. The dose rate is estimated to be approximately 5 mrem/hour.

SWRS Operation

The control room will be staffed with 2 operators, with a dose rate of 0.02 mrem/hr. SWRS operations are expected to last 12 months.

Daily inspections of equipment and line adjustments are planned on the bridges during Phase 2. These operations will take two workers in PPE approximately 30 minutes per day. The average dose rate on the bridge is estimated to be 5 mrem/hour.

Each silo has 2 sluicers housed in modules, requiring four mast extensions each. Two workers in PPE will be involved. One worker will have to enter the module for a period of up to 2 hours to attach each mast extension. The average dose rate is estimated to be approximately 15 mrem/hour.

SWRS Maintenance

The double-walled slurry transfer lines are designed with manual clean-out openings located every 80 ft along the line. If a blockage occurs in the transfer line, the slurry flow can be switched from one transfer line to the other. Back-flush and rinse capabilities are also provided for unplugging a transfer line. If manual unplugging of a transfer line is required, two workers in PPE will move a work platform to the clean-out flange, connect a temporary containment (glove bag) to the flange, remove the flange cover, insert a "snake" to clear the plugged line, reestablish flow in the line, rinse and remove the "snake," install the flange cover, and remove the glove bag. Contamination from the slurry will be contained, and the workers will be protected from the risk of skin contamination. The clean-out operation is expected to be performed in approximately 2 hours (after practice on a "cold" system), and the dose rate near the transfer line is estimated to be approximately 20 mrem/hour. The number of times manual clean-out operations will be required is conservatively estimated at once per month during SWRS operations.

SWRS equipment has been designed and selected so that repair or replacement should not be required during the life of the AWR Project. However, a conservative assumption is made that 1 minor repair task (e.g., leaking valves and connections) may be required per month that involves two workers in PPE and takes 4 hours each. The dose rate is estimated to be approximately 5 mrem/hour.

Sluicer modules (2) and slurry modules (1) are located on top of the bridge over each of the silos. Maintenance is estimated to require 2 workers 1 hour per month per module, in a dose rate of 5 mrem/hr.

Numerous other pieces of equipment are located on the bridges, including cameras, louvers, dampers, and filters. This equipment has been designed to operate without maintenance. Nevertheless, it is assumed that maintenance of some of this equipment will be required. Two persons will be required for an estimated 2 hours per month. The dose rate is approximately 5 mrem/hour.

Other Routine and/or Non-Routine Functions

Before silo waste is initiated, a submersible pump and liquid level monitoring instruments are installed into the TTA's for tank level control. The level monitoring system is designed to monitor both the level of liquid in the tank and the rate of level change in the tank. If level set points are exceeded, the system annunciates alarms and cause the operator actions such as starting the decant sump tank pump, reducing or stopping sluice water flow, or both. Installation and operation of this equipment will take four workers in PPE approximately 40 hours total, and the dose rate in the area is expected to be approximately 1 mrem/hour.

Slurry sampling will be performed periodically through glove-bag operations with workers positioned outside of the modules, located above the TTA's and/or Silos. Each time a slurry sample is required, one worker will be needed to remove the slurry sample for analysis. This operation is estimated to take up to 5 minutes per slurry sample. It is estimated that there will be approximately 50 slurry samples taken. The whole body dose rate is estimated to be approximately 5 mrem/hour with an extremity dose rate estimated to be 18 mRem/hour.

D-6.5.2 Radiological Support Activities

RCS

Routine general area survey in the RCS building require one RCT approximately 0.5 hours per shift (1 hours per day) at a dose rate of 1.0 mrem/hr

The Stack Monitoring and Sampling System is located at the base of the stack, and it will require weekly service/sample changes. This task will take one RCT in PPE approximately 15 minutes per week, and the dose rate in the area is expected to be approximately 0.1 mrem/hour.

Routine and maintenance coverage is expected to require one RCT approximately 1 hour per shift (2 hours per day) at a dose rate of 1.0 mrem/hr.

TTA

Routine general area surveys of the TTA building will take one RCT approximately 1 hour per shift (2 hours per day) with an average dose rate expected to be 1.0 mrem/hr.

Routine and maintenance coverage is expected to require one RCT approximately 3 hours per shift (6 hours per day) with an average dose rate expected to be 1.0 mrem/hr.

SWRS

Routine general area surveys of the Silos dome and associated equipment will take one RCT approximately 1 hour per shift (2 hours per day) with an average dose rate expected to be 1.0 mrem/hr.

Routine and maintenance coverage is expected to require one RCT approximately 2 hours per shift (4 hours per day) with an average dose rate expected to be 1.0 mrem/hr.

D-6.6 ALARA Analysis Results

The ALARA Analysis Results Matrix (TABLE D.6-1) presents data on the AWR Project tasks where significant radiation exposure is expected. The order of presentation is: RCS operations and maintenance, TTA operations and maintenance, SWRS operations and maintenance, decant sump removal, other AWR Project functions, and radiological support activities. Subtotals of collective dose are provided at the end of each of these parts of TABLE D.6-1. At the end of the table, the total collective dose is provided and following the table, notes are provided to more fully explain the column headings and assumptions.

The collective dose during the entire 3-year operation and maintenance of the RCS is conservatively estimated to be 4.178 person-rem. The collective dose for SWRS and TTA operations and maintenance activities has been conservatively estimated at 15.301 person-rem. The collective dose for radiological support activities for the entire 3-year AWR project is conservatively estimated at 9.963 person-rem. These collective doses include the exposures from all AWR Project operations above the silos.

Additional ALARA analysis will be performed during operations to identify tasks where; exposure times can be reduced, temporary shielding and/or remote tools can be used, or work processes or methods can be improved.

The total collective dose for the AWR Project is conservatively estimated at 29.422 person-rem.

TABLE D.6-1: AWR ALARA ANALYSIS RESULTS MATRIX							
AWR Project Operations	**No. of Workers**	**PPE Req'd**	**Time Duration (hr)**	**Frequency Of Tasks**	**Person-Hours**	**Dose Rate (mrem/hr)**	**Collective Dose (person-rem)**
RCS OPERATIONS:							
Control Room	2	No	727/mo	36	52,344	0.02	1.047
Rounds	1	No	12/mo	36	432	0.5	.216
Sample Condensate	1	Yes	4/ mo	36	144	0.5	.072
Transport Condensate	2	No	4/mo	36	288	0.5	.144
RCS MAINTENANCE:							
Maintain duplex instrument air compressor and air dryer skids	2	No	2/bi-mo	18	72	0.4	0.028
Maintain air handling unit	2	No	4/yr	3	24	2	0.048
Maintain chiller skid packages	2	No	2/mo	36	144	0.4	0.057
Annual cleaning of chiller coils	2	No	8/yr	3	48	0.4	0.020
Maintain desiccant drying systems	2	Yes	2/mo	36	144	2	0.288
Maintain drying fan	2	Yes	1/yr	3	6	2	0.012
Maintain exhaust recirculation fans	2	Yes	2/mo	36	144	2	0.288
Maintain building vent exhaust fans	2	Yes	2/mo	36	144	2	0.288
Maintain RCS Building vent supply fan	2	Yes	1/mo	18	36	2	0.072
Maintain heating fan intake air filter	2	Yes	1/mo	18	36	2	0.072
Change roughing filters	3	Yes	2/mo	36	216	5	1.08
Maintain RCS HEPA pre-filters	4	Yes	2/yr	3	24	5	0.120
Maintain make-up air filter	2	Yes	1/yr	3	6	2	0.012
Maintain RCS Building air filter	2	Yes	1/mo	36	72	.2	0.014
Maintain HVAC HEPA filters	2	Yes	8/yr	3	48	2	0.096

TABLE D.6-1: AWR ALARA ANALYSIS RESULTS MATRIX							
AWR Project Operations	**No. of Workers**	**PPE Req'd**	**Time Duration (hr)**	**Frequency Of Tasks**	**Person-Hours**	**Dose Rate (mrem/hr)**	**Collective Dose (person-rem)**
Maintain condensate transfer pumps	2	Yes	2/bi-mo	6	24	.5	0.012
Repair/replace RCS equipment	2	Yes	16/bi-mo	6	192	1	0.192
						RCS O&M Subtotal	**4.178**
TTA OPERATIONS:							
Control room operations	2	No	727/mo	16	23,264	0.02	0.465
Inspections and line adjustments	2	Yes	30/mo	16	960	5	4.800
Mast extensions	2	Yes	2/evol	32 evol	128	5	0.640
TTA MAINTENANCE:							
Maintain Sluicer module equip.	2	Yes	8/mo	16	256	5	1.280
Maintain slurry/decat module equip.	2	Yes	4/mo	16	128	5	0.640
Maintain Containment Area sump pump	2	Yes	1/qtr	5	10	5	0.050
Maintain monorail hoists	2	Yes	2/evol	3	12	5	0.060
Repairs (e.g., leaking valves/ connections)	2	Yes	4/mo	16	128	5	0.640
						TTA O&M Subtotal	**8.575**
SWRS OPERATIONS:							
Control room operations	2	No	727/mo	16	23,264	.020	0.465
Inspections and line adjustments	2	Yes	15/mo	16	480	5	2.400
Mast Extensions in sluicer modules	2	Yes	2/evol	8 evol	32	15	0.480
SWRS MAINTENANCE:							
Repair transfer line clogs	2	Yes	2/mo	16	64	20	1.280
Repairs (e.g., leaking valves/ connections)	2	Yes	4	16	128	5	0.640
Maintain modules	2	Yes	6	16	192	5	0.960

TABLE D.6-1: AWR ALARA ANALYSIS RESULTS MATRIX

AWR Project Operations	No. of Workers	PPE Req'd	Time Duration (hr)	Frequency Of Tasks	Person-Hours	Dose Rate (mrem/hr)	Collective Dose (person-rem)
Miscellaneous SWRS equipment	2	Yes	2/mo	16	64	5	0.320
Other routine and/or non-routine functions (decant)	4	Yes	40	1	160	1	0.160
Other routine and/or non-routine functions (samples)	1	Yes	.083	50	4.15	5	0.021
						SWRS O&M Subtotal	6.726
RADIOLOGICAL SUPPORT ACTIVITIES:							
RCS surveys	1	No	30/mo	36	1080	1.0	1.080
RCS stack service/sampling	1	No	1/mo	36	36	.1	.003
RCS routine coverage	1	Yes/No	60/mo	36	2160	1.0	2.160
TTA surveys	1	Yes/No	60/mo	16	960	1.0	0.960
TTA routine coverage	1	Yes/No	180/mo	16	2880	1.0	2.880
SWRS surveys	1	Yes/No	60/mo	16	960	1.0	0.960
SWRS coverage	1	Yes/No	120/mo	16	1920	1.0	1.920
						Radiological Support Activities Subtotal	**9.963**
						OVERALL TOTAL	**29.442**

THIS PAGE INTENTIONALLY BLANK

D-7.0 REFERENCES

1. 624-P622-50, *Preliminary Hazards Analysis Report for the Silo 1 and 2 Accelerated Waste Retrieval Project*, Foster Wheeler Environmental Corporation; January, 2000

2. 40710-PL-0015, Rev. 0, *Radon Control System (RCS) Nuclear Health and Safety Plan*, Fluor Fernald; August, 2002

3. 10 CFR 835, *Occupational Radiation Protection*, Code of Federal Regulations, Title 10, Part 835

4. *Health Physics Manual of Good Practices For Reducing Radiation Exposure To Levels That Are As Low As Reasonably Achievable*, Pacific Northwest Laboratory; Richland, WA; DOE; June, 1988

5. DOE Order 420.1, *Facility Safety* DOE, U.S. Department of Energy, 1996

6. *Remedial Investigation Report for Operable Unit 4,* Final, Volumes 1 through 3, Fernald Environmental Management Project; November, 1993

7. Federal Guidance Report No. 11, *Limiting Values of Radionuclide Intake and Air Concentration and Dose Conversion Factors for Inhalation, Submersion, and Ingestion*, EPA-520/1-88-020; September, 1988

8. *Final Report for the Silos 1 & 2 (K-65) Removal Action*, Fernald Environment Management Project; May, 1994

9. WMCO:SR (WR) 88:134, *Revised Completion Report for the Exterior Foam Application/Radon Treatment System Operation of the K-65 Interim Stabilization* Project, Fluor Daniel Fernald; April 18, 1988

10. HAR-97-0028, *Hazard Analysis Report for Operable Unit 4 (OU4) Silos*, Fluor Daniel Fernald; 1997

11. M:SP:00-0042, *Radiological Survey of the Dome Surfaces for Silos 1 and 2*, Fluor Daniel Fernald; Feb. 18, 1999

12. 99-08-12-48, *Radiation Survey (μR Survey) of OU4 Silos Area*, Fluor Daniel Fernald, August 25, 1999

13. RP-0020, *Radiological Work Permitting and Authorization*, Fluor Fernald

14. SD-2082, Radiological Control Technical Basis Document: *Advanced Waste Retrieval General Area and Process System Dose Rate Calculations*, Fluor Fernald; December, 2003

Appendix E

APPENDIX E
ENVIRONMENTAL ALARA REPORT

THIS PAGE INTENTIONALLY BLANK

TABLE OF CONTENTS

E-1.0 INTRODUCTION 5

E-2.0 ENVIRONMENTAL ALARA EVALUATION DATA-GATHERING 5
E-2.1 Description Of Activity 5
E-2.2 Control Of Radioactive Material Releases 8

E-3.0 ENVIRONMENTAL ALARA EVALUATION 9

E-4.0 REFERENCES 11

ACRONYMS

ALARA = As Low As Reasonably Achievable
ANSI = American National Standards Institute
ARAR = Applicable, relevant and appropriate requirements
AWR = Accelerated Waste Retrieval
AWWT = Advanced Wastewater Treatment
CFR = Code of Federal Regulations
DCG = Derived concentration guide
DOE = U.S. Department of Energy
FCP = Fernald Closure Project
HEPA = High-efficiency particulate air
NEPA = National Environmental Policy Act of 1969
OSDF = On-site Disposal Facility
OU = Operable unit
PHAR = Preliminary Hazard Analysis Report
PPE = Personal Protective Equipment
RCRA = Resource Conservation and Recovery Act
RCS = Radon Control System
RCT = Radiological Control Technician
TTA = Transfer Tank Area
WAC = Waste acceptance criteria

E-1.0 INTRODUCTION

The as low as reasonably achievable (ALARA) philosophy adopted by the Fernald Closure Project (FCP) requires that any exposure to ionizing radiation to general employees, the public, or the environment shall be minimized to the extent that social, technical, economic, practical, and public policy considerations allow.

An Environmental ALARA Review and Evaluation for Silos 1 and 2 Advanced Waste Retrieval (AWR) was conducted by Jacobs Engineering Group, Inc. (the Engineer of Record). This evaluation covers Silos 1 and 2, the RCS stack, and the TTA during construction and operation. The information in this appendix is from that evaluation. It has been reformatted and edited for readability. The original signed evaluation forms are on file with FCP Environmental Compliance as Environmental ALARA Log Number 03-005.

E-2.0 ENVIRONMENTAL ALARA EVALUATION DATA-GATHERING

E-2.1 Description Of Activity

Q1: *What is the objective and scope of the issue to be analyzed?*

A1: The objective and scope of the AWR Project includes:

- extracting the waste material from Silos 1 and 2.
- transferring the waste material to transfer tanks for staging prior to final remediation.
- transferring the waste material to the Remediation Facility for treatment.
- reducing the radon concentration in the silos.
- providing radon control during retrieval and material storage and subsequent transport.
- cleaning the silos and equipment for system closure.
- handling secondary waste.

To accomplish the above tasks, the following tasks must be completed:

- Construction of a Radon Control System (RCS) to reduce radon emissions from Silos 1 and 2
- Construction of a Transfer Tank Area (TTA) to receive the waste currently in Silos 1 and 2
- Construction of a system to sluice and pump the waste currently in Silos 1 and 2 into the tanks in the TTA
- Removal of the berm around Silos 1 and 2
- Removal the decant sump tank
- Cleaning and painting/fixing the contamination on the interior of Silos 1 and 2

AWR Project activities will be conducted in accordance with 40710-PL-0007, *Environmental Control Plan, Accelerated Waste Retrieval Project* [Ref. 1].

Q2: *Does the activity have the potential for a routine or non-routine release of radionuclides (e.g., stack emissions, spills, etc.; include potential releases during construction)?*

A2: Yes, the activities involved in the construction and operation of AWR Phase 1 (RCS) and Phase 2 (Waste Retrieval and Storage Systems) have the potential for routine and non-routine release of radionuclides. During construction, particulate contamination in site soils could become airborne in dust or be released with stormwater run-off. Good construction management practices for fugitive dust control, stormwater run-off, and erosion control will be put in place to mitigate these potential concerns. Excavation during construction may encounter contaminated soil. Any contaminated soil encountered in construction will be removed and properly managed for transport and disposal in the On-Site Disposal Facility (OSDF).

Routine releases of radon will occur from the RCS at the controlled rates and concentrations. Non-routine particulate and radon releases may occur from material spills generated by equipment/operation failures.

Chilled water-cooling streams for the RCS desiccant dryers are provided by two closed-loop chillers. Condensate generated by the RCS during the dehumidification and cooling of the silo headspace ventilation air is collected and stored up to 40 days in two condensate storage tanks to allow for decay of radon and radon progeny. After sampling and analysis, the tank contents are either transferred to the Advanced Waste Water Treatment (AWWT) or, during retrieval operations, to the TTA for re-use in AWR sluicing operations. If there is excess sluicing water, treatment options will be developed.

Q3: *Where is the material released or to be released for a future activity (e.g., air, water, soil, waste)?*

A3: Material will be released indoors and into the environment. Potential airborne and liquid releases indoors may occur from the tanks, piping, or sampling activities in the RCS and TTA. As noted above, liquid releases on site will occur from the RCS to the AWWT. Potential non-routine liquid and solid releases to the on-site environment may occur in the event of leakage from the double-walled transfer lines between Silos 1 or 2 and the TTA.

The RCS collects and treats radon gas from the TTA tanks, as well as the Silo 1 and 2 headspaces. All RCS process exhaust is either re-circulated to the silos or discharged via the RCS stack.

Q4: *What radionuclides will potentially be released?*

A4: Primary releases from the K-65 waste material in Silos 1 and 2 will be Rn-222 and Rn-220. Potential releases may include Ac-227, Ac-228, Bi-210, Bi-211, Bi-212, Bi-214, Fr-223, Pa-231, Pa-234, Pa-234m, Pb-210, Pb-211, Pb-212, Pb-214,

Po-210, Po-211, Po-212, Po-214, Po-215, Po-216, Po-218, Ra-223, Ra-224, Ra-226, Ra-228, Rn-219, Th-227, Th-228, Th-230, Th-231, Th-232, Th-234, Tl-207, Tl-208, U-234, U-235/236, and U-238.

The Primary release will be a gas. The potential release is a liquid with some particulate material (slurry) from accidental spills.

Q5: *What amount is anticipated to be released (lbs., gallons, curies, etc.) and the source?*

A5: To air: Radon released to air equals 2.05 x 10^{-6} Ci/hr. Refer to Calculation 35H19606-00-PR-003, *RCS Phase 2 Material Balance* [Ref. 2].

To water: Based on 2080 lbs/hr air at 70° saturated, wastewater generated is 39 lbs/hour. Decay before discharge to the AWWT reduces the contained radionuclides to less than 2.44X10^{-6} Ci radon, plus daughters per hour. Refer to the *RCS Phase 2 Material Balance* calculation [Ref. 2].

To soil: Accidental spills from slurry transfer lines to surface soils could result in the release of 6000 gal. of slurry containing 2.57 Ci Ra-226.

To waste: Filters, filter media, and PPE.

To controlled and/or free release of material: Materials and equipment released will meet 10 CFR 835, Appendix D, release standards [Ref. 3].

Q6: *How was the amount determined (estimated, weighed, or otherwise measured)?*

A6: The amount was estimated on the basis of the *RCS Phase 2 Material Balance* calculation [Ref. 2].

Estimates of potential spill quantities are presented in Appendix G, *Accident Analysis*, of this AWR N-HASP.

Q7: *Will there be an off-site release (storm water, air release, other)?*

A7: Primarily, there will be controlled airborne release of radon via the RCS stack, and permitted discharges of stormwater by the AWWT (treated, if necessary). Particulate releases from non-routine, accidental spills would be negligible since the released material would be in a moist slurry form and immediately cleaned up.

Q8: *Is a hazardous/mixed waste involved? List any special factors as a result.*

A8: No mixed wastes are involved in the AWR Project. The wastes are 11e(2) by-product material and are exempt from regulation as a hazardous waste under the Resource Conservation and Recovery Act (RCRA) [Ref. 4].

E-2.2 Control Of Radioactive Material Releases

Q1: *Describe or reference any protection options considered. Describe air emissions and water discharge control equipment, fugitive dust suppression, material lockdown, handling of waste, secondary containment, spill control equipment, controls on release of material, clean-up of spill material, administrative controls, etc.*

A1: The AWR system's design utilizes the best available technology. The air emissions will be pre-filtered and passed through four parallel carbon beds to adsorb over 95% of the radon; the effluent from the carbon beds will be high-efficiency particulate air (HEPA) filtered before discharge from the RCS stack. The effluent from each carbon bed and the RCS stack will be monitored in real time for radon and particulate airborne releases. Double-walled slurry piping shall be used to minimize leaks to the environment and a leak detection system shall be used to monitor leaks in double-walled piping. The water will be sampled and analyzed. Sufficient time will be provided for decay, as necessary to meet the AWWT waste acceptance criteria (WAC). Any spills will be immediately cleaned up to meet FCP radiological control requirements.

Q2: *How will waste be packaged/labeled/stored (location)/handled? What procedures will be used?*

A2: Silos 1 and 2 material will be transferred and stored in the four TTA tanks. Other waste, such as silo debris, contaminated PPE, decontamination waste, and contaminated filters will be packaged and labeled for disposal in accordance with FCP waste management procedures.

Q3: *Release of materials and equipment - surface contamination levels. Prior to being released, will property be surveyed to determine whether both removable and total surface contamination (including contamination present on and under any coating) are in compliance with the levels given in Figure IV-1 in DOE Order 450.1* [Ref. 5] *and that the contamination has been subjected to the ALARA process? Describe or reference documentation of the ALARA process.*

A3: Before release from the controlled area, all material and equipment will be surveyed by FCP Radiological Control Technicians (RCTs) per FCP site radiological control procedures to ensure compliance with the Figure IV-1 in DOE Order 450.1 release criteria [Ref. 5] and/or 10 CFR 835, Appendix D [Ref. 3].

E-3.0 ENVIRONMENTAL ALARA EVALUATION

Q1: *Estimated performance of the control options. How much material will be controlled/removed (%, pounds, etc.)? Identify advantages/disadvantages of each factor and control option. (Note: Use quantitative and qualitative methods when each is appropriate.)*

A1: The air control systems were designed using the best available technology. The carbon beds will remove over 95% of the radon from the silos before release from the RCS stack, as described in the *RCS Phase 2 Material Balance* calculation [Ref. 2]. The HEPA filters will remove >99.97% of the particulates >0.3 micrometers in size from the stack effluent. Only trace concentrations of particulate radionuclides will be present in the RCS discharges. The off-site exposure from RCS particulate releases would be less than 0.1 mrem/yr.

Q2: *Identify cost information for control options (as relevant to the decision).*

A2: The cost impact is considered in the definition of Best Available Technology control. See E3.0 A1.

Q3: *Applicable dose limits and Derived Concentration Guides (DCGs) from DOE Order 450.1* [Ref. 5]. *Dose impacts, if determined (e.g., dose to the maximally exposed individual, population dose, etc.). Are dose limits or DCGs exceeded?*

A3: No dose limits or DCGs are exceeded. Refer to the *RCS Phase 2 Material Balance* calculation [Ref. 2].

Q4: *Analytical Solution. Present the results of quantitative analysis, if one is performed. (Note: Per DOE Order 450.1* [Ref. 5]*, qualitative analyses are acceptable, in most instances, for ALARA judgements, especially where potential doses are well below the dose limit.)*

A4: Refer to the *RCS Phase 2 Material Balance* calculation [Ref. 2].

For potential impacts from slurry spills, see Appendix G, *Accident Analysis*, of this AWR N-HASP.

Q5: *What are the preferred control options and what is the basis for their selection. Present results of optimization, as appropriate (e.g., weighting factors, environmental impacts, associated risks, costs and changes in cost, sensitivity analysis, changes in societal impact (doses), etc. for options). (Note: The primary methods used to control exposure shall be physical design features, such as filtration, confinement, etc. Administrative controls and procedural requirements shall be employed only as supplemental methods to control radiation exposure, unless physical design features are demonstrated to be impractical. For control of airborne radioactive material, the design shall be, under normal conditions, to avoid releases to the workplace atmosphere, the surrounding environment, and in any situation, to control the*

inhalation of such material by workers to levels that are ALARA; confinement and ventilation shall normally be used.

A5: Refer to the *RCS Phase 2 Material Balance* calculation [Ref. 2].

Q6: *Environmental ALARA Decision. State the controls that constitute Environmental ALARA for the activity.*

A6: The controls are RCS, AWWT for wastewater, RM-0047 [Ref. 6] for fugitive dust control , PL-3083 [Ref. 7] for storm water pollution prevention during construction, facility design (i.e., operations are conducted under cover and are not exposed to rainfall), double-walled pipe, TTA spill control dikes, ventilation filters, louver systems, and stack monitoring. Refer to 40710-PL-0007, *Environmental Control Plan, Accelerated Waste Retrieval Project* [Ref. 1].

Q7: *Implementation and monitoring. Describe the methods to be used to monitor achieved performance against desired targets (e.g., ambient air monitoring, stack monitoring, water monitoring, surveillance, reporting, etc.).*

A7: Continuous monitoring of radon as it exits the carbon beds and at the RCS stack will be used to ensure compliance with radon emission limits (10 mrem/yr to the public). Wastewater in the RCS Condensate Storage Tanks will be sampled and analyzed to ensure it meets the AWWT WAC. Routine survey and radiation area monitoring will be performed.

Q8: *Recommended actions (advise consideration of additional factors, control options, develop additional information, etc.).*

A8: Monitoring programs will be implemented as described in 40710-PL-0007, *Environmental Control Plan, Accelerated Waste Retrieval Project* [Ref. 1].

Q9: *Justification for recommendations.*

A9: Monitoring is consistent with the Applicable or Relevant and Appropriate Requirements (ARARs).

E-4.0 REFERENCES

1. 40710-PL-0007, Rev. 0, *Environmental Control Plan, Accelerated Waste Retrieval Project*, Fluor Fernald; August 29, 2002

2. Calculation 35H19606-00-PR-003, Rev B, *RCS Phase 2 Material Balance*, Fluor Fernald; August 29, 2002

3. 10 CFR 835, *Occupational Radiation Protection*, Title 10 Code of Federal Regulations, Part 835, DOE; July, 2001

4. Resource Conservation and Recovery Act (RCRA), Title 40, Code of Federal Regulations, Part 261

5. DOE Order 450.1, *Environmental Protection Program*; DOE; January 15, 2003

6. RM-0047, *Fugitive Dust Control Requirements*, Fluor Fernald

7. PL-3083, *Storm Water Pollution Prevention Plan*, Fluor Fernald

Appendix F

APPENDIX F
AWR FIRE HAZARD ANALYSIS

THIS PAGE INTENTIONALLY BLANK

TABLE OF CONTENTS

EXECUTIVE SUMMARY 5

F-1.0 INTRODUCTION 5
- F-1.1 Purpose 5
- F-1.2 Approach And Assumptions 5
- F-1.3 Facility Use, Function, and Occupancy 6
- F-1.4 General Site Fire Protection 6

F-2.0 Construction 6
- F-2.1 Type of Construction 6
- F-2.2 Fire Barrier Separation 7
- F-2.3 Interior Finishes 7

F-3.0 Life Safety 7
- F-3.1 Occupancy Classification 7
- F-3.2 Means of Egress 8
- F-3.3 Emergency Lighting and Exit Lights 8
- F-3.4 Security Interaction 8
- F-3.5 Radiation and Contamination Control 8

F-4.0 Fire Hazards 8
- F-4.1 Waste Characterization 8
- F-4.2 Auxiliary Systems 9
- F-4.3 Analysis Of Potential Fire Scenarios 10
- F-4.4 Explosives 11
- F-4.5 Potential for Radiological, Biological, or Toxic Incident 11
- F-4.6 Fire Protection Water Runoff 11
- F-4.7 Natural Hazards (Earthquake, Flood, And Wind) 11

F-5.0 Fire Protection 12
- F-5.1 Water Supply 12
- F-5.2 Fire Suppression 12
- F-5.3 Protective Signaling System 13
- F-5.4 Fire Department Response 13

F-6.0 Facilities, Equipment, and Program Preservation 14
- F-6.1 Essential Safety Class Systems 14
- F-6.2 Vital And Critical Program 14
- F-6.3 High-Value Equipment 14
- F-6.4 Facility Fire Loss Potential 14
- F-6.5 Emergency Planning 16

F-7.0 Conclusion 16

F-8.0 References 17

ACRONYMS

AWR = Accelerated Waste Retrieval
DOE = U.S. Department of Energy
ERT = Emergency Response Team
F = Fahrenheit
FCP = Fernald Closure Project
HASP = Health and Safety Plan
HPP/BA = High-pressure pumps/breathing air
IBC = International Building Code
MCC = Motor control center
MCFL = Maximum credible fire loss
MPFL = Maximum possible fire loss
NFPA = National Fire Protection Association
OBC = Ohio Building Codes
RCS = Radon Control System
SMAC = Silo Maintenance and Control Facility
SWRS = Silo Waste Retrieval System
TTA = Transfer Tank Area

EXECUTIVE SUMMARY

The purpose of this document is to establish the design and operating features necessary to manage the risks of fire associated with operation of the AWR Phase 1 (RCS) and Phase 2 (Waste Retrieval and Storage Systems) with removal and storage of radioactive waste from Silos 1 and 2. The descriptions and conclusions are based on the final design documentation. The AWR Project is supported by the Fernald Closure Project (FCP) infrastructure services including water supply for fire protection and contracted emergency response.

Potential fire scenarios were analyzed for five fire areas of the AWR Project. The maximum credible fire loss and the maximum possible fire loss were also determined for each of the five fire areas. It was determined that fire suppression systems were not required for the AWR Project facilities. Adequate fire detection and fire alarm systems will be provided. Primary fire protection is provided by the Crosby Township Fire Department.

The conclusion of this Fire Hazard Analysis is that the fire risks of the AWR Project facilities are low and are adequately controlled by the design and operating features provided. The objective of protecting the public and the environment from fire-induced releases is met. The objective of protecting employees from fire is accomplished with detection, notification, and means of egress. The property damage and project downtime risks are acceptable for the duration of this project.

F-1.0 INTRODUCTION

F-1.1 Purpose

The purpose of this document is to establish the design and operating features necessary to manage the risks of fire associated with operation of AWR Phase 1 (RCS) and Phase 2 (Waste Retrieval and Storage Systems). The potential fire hazards associated with the structures, facilities, equipment, and processes are identified, and the fire prevention and protection strategies are outlined.

F-1.2 Approach And Assumptions

The descriptions and conclusions are based on the final design documentation. The AWR Project is supported by the FCP infrastructure services including fire protection and contracted emergency response.

F-1.3 Facility Use, Function, and Occupancy

The AWR Project comprises Silos 1 and 2, the Transfer Tank Area, and the RCS Building. Radon from Silos 1 and 2 and the TTA is vented through the RCS. The TTA will receive K-65 waste materials from Silos 1 and 2 via a slurry transfer line. The existing and new facilities include:

- Silos 1 and 2
- Bridge and Transfer System
- RCS
- TTA
- Silo Maintenance and Control Facility (SMAC)

A more detailed description of the processes and equipment is contained in the *Process Description Document* [Ref. 1].

The RCS has been operating continuously since April, 2003, and is capable of operating 24 hrs per day, 7 days per week, as necessary to support construction and operation. The RCS may be placed in standby operation to allow system maintenance or modifications affecting the ductwork. The AWR project facilities will be occupied by up to 20 personnel and will normally operate during two 12-hr shifts per day, 4 days per week. The maximum number of project personnel on site at any one time will be approximately 20.

F-1.4 General Site Fire Protection

The AWR Project facilities are located on the western side of the FCP Site. Water for fire protection will be available from the FCP site and will be capable of at least 1000 gallons per minute to support fire suppression activities. The Crosby Township Fire Department will provide fire emergency response.

F-2.0 CONSTRUCTION

F-2.1 Type of Construction

The facility will be considered as five separate fire areas:

- Fire Area 1 – Silos 1 and 2: Silos 1 and 2 are concrete structures that are protected by an earthen berm. The bridge and sluice and slurry transfer modules are structural steel. These structures are noncombustible construction. The combustibles associated with the retrieval equipment are discussed in Section 4.

- Fire Area 2 – Transfer Tank Area/Radon Control System: The four 750,000-gallon tanks are enclosed in the reinforced concrete TTA building, which is approximately 40-feet tall with shield walls. The lower 20 feet of the shield walls are 24 inches thick; the upper shield walls are 16 inches thick. An operating deck above the tanks is

constructed of 9-inches-thick reinforced concrete. The TTA is fire-resistant construction, except for the metal building covering the operating deck and the unprotected steel supporting the operating deck.

The RCS Building is located north of the TTA and is constructed of reinforced concrete. The RCS is fire-resistant construction, except for the metal building covering the second floor operating deck and the unprotected steel. The four precast carbon bed vaults are separated from the air-handling units by reinforced concrete barriers.

- Fire Area 3 – Silo Maintenance and Control Facility: The AWR project control room will be used to support all of the Silos 1 and 2 waste removal and transfer operations. It is located in the former Vitrification Pilot Plant, which is approximately 230 ft. from the silos.

- Fire Area 4 – HPP/BA Building: The High-Pressure Pumps/Breathing Air (HPP/BA) Building is a metal structure containing equipment for providing breathing air and high-pressure water. Except for the electrical equipment and lubricating oils, there are no combustibles.

- Fire Area 5 – Administrative/Support Area: These are light hazard occupancies such as offices or breakrooms that are of frame construction.

F-2.2 Fire Barrier Separation

The only fire barrier separation provided is in Fire Area 2. The RCS Building contains fire-resistive walls with fire dampers. The RCS ductwork that penetrates the barriers will not be equipped.

F-2.3 Interior Finishes

Interior finishes for all occupied facilities meet the requirements of the Ohio Building Code (OBC) 2002 [Ref. 2]. OBC 2002 is based on the International Building Code (IBC) [Ref. 3].

F-3.0 LIFE SAFETY

An architectural code review has been prepared for this facility that evaluated the life safety issues discussed in the subsections below.

F-3.1 Occupancy Classification

The Silos, TTA, and RCS have an occupancy classification of Hazardous Occupancy F-2 (Factory Industrial Low). The SMAC have an occupancy classification of Hazardous Occupancy F-1 (Factory Industrial Moderate).

F-3.2 Means of Egress

The number of exits, the exit width, travel distance, and exit locations are in accordance with the OBC 2002 and Occupational Safety and Health Administration (OSHA) 29 CFR 1910, Subpart E [Ref. 4].

Because of the requirements for containment walls, shielding walls, and necessary rapid evacuation in the case of uncontrolled material releases, only the SMAC has been made handicapped accessible in the Control Room areas.

F-3.3 Emergency Lighting and Exit Lights

Emergency lighting has been provided in accordance with the OBC and the IBC. Exit lights marking the means of egress have been provided in accordance with the OBC.

F-3.4 Security Interaction

Security provisions for these facilities do not impede safe evacuation of the facilities or emergency response.

F-3.5 Radiation and Contamination Control

Health physics and radiation protection features do not impede safe emergency evacuation.

F-4.0 FIRE HAZARDS

F-4.1 Waste Characterization

The material in Silos 1 and 2 is primarily pitchblende ore by-product material. Organic carbon is present in the material. Only traces of organic materials are included in this waste stream (less than 100 parts per million), the majority of which is tributylphosphate. Only four volatile organics (2-butanone, acetone, carbon tetrachloride, and methylene chloride) have boiling points below 100°C. The total mass of these four volatile organics in both Silos 1 and 2 is approximately 9.3 lb. Approximately 10 lb of volatile organics dispersed within 160,000 lb of carbon constitutes an insignificant concern. There are no strong oxidizing agents in the waste stream. The waste materials currently present no flammability hazard. The retrieval process uses water as a sluicing agent and creates no potential fire hazards.

F-4.2 Auxiliary Systems

Utilities

Electrical power has been provided from an existing substation inside the Vitrification Pilot Plant. Motor Control Centers (MCCs) are located northwest of the TTA.

An emergency backup generator is also located near the MCCs. These systems are installed outdoors. The diesel engine and its day tank are surrounded by a curb to prevent the spread of a potential fuel spill fire.

The electrical system has been designed to meet National Fire Protection Association (NFPA) 70 [Ref. 5].

No fuel-fired equipment (e.g., boilers, kilns) is used for the AWR Project.

Process Equipment

A detailed description of the processes and process equipment is contained in the *Process Description Document for the AWR Project* [Ref. 1]. From a fire protection standpoint, none of the processes or equipment use or contain large quantities of combustible materials, with the exception of the carbon filters used in the RCS.

The Silos Waste Retrieval System (SWRS) contains hydraulic and electrical systems creating a small potential for localized fires. The hydraulic oil to be used is a combustible liquid with a flash point of 350°F. An electric motor could fail and become an ignition source for other combustibles including hydraulic fluids. However, the likelihood of an ignition of hydraulic oil is low because of the high ignition energy and the need for a second failure (motor failure). No other significant ignition sources (e.g., heated surfaces) are in proximity of the hydraulic systems. Electrical or hydraulic fluid fires could render the SWRS inoperative until repairs could be made. The amount of combustible materials is not adequate to create a fire capable of causing structural damage to the bridge or tower or a breach of the silos.

The RCS contains air handlers, carbon bed filters, and chillers and dryers to cool the air and remove water vapor. The four carbon beds contain a total of 20 tons of carbon. Although the carbon is difficult to ignite, it will burn if ignited. A provision is available to reverse circulation through any one of the four beds to recondition the beds should they become damp. Administrative controls will be implemented so that only one carbon bed will be reconditioned at a time. Thermocouples are included downstream of each carbon bed to detect heat generated should spontaneous heating of the carbon or a carbon bed fire occur. If a carbon bed fire should occur, it can be isolated and smothered by cutting off the air supply.

Other process equipment includes various pumps and motors. Each of these presents a low risk of localized fire.

Administrative and Support Area

Office areas, breakrooms, and locker rooms are standard light hazard occupancies and present no significant fire risk. This area (Fire Area 5) is well separated from any process areas.

F-4.3 Analysis Of Potential Fire Scenarios

- Fire Area 1 - Silos 1 and 2: Any fires in this fire area would be limited to grass fires on the berm and localized electrical or hydraulic oil fires. None of the fire potentials are capable of causing structural damage to the bridge, modules, or Silos 1 or 2.

- Fire Area 2 - TTA/RCS: There is a very limited amount of combustible materials in the RCS structure or the TTA structure housing the four tanks, and therefore, no fire risk of structure damage to the unprotected steel supporting the operating decks. The emergency generator is a potential fire source because of the combustible liquids (fuel and lubricant) and hot surface ignition sources. Spill containment will prevent an engine fire from propagating to adjacent equipment such as the RCS chillers. An extremely unlikely scenario is a carbon bed fire. Although difficult to ignite, the carbon will burn and is prone to spontaneous heating if wetted (e.g., if the chillers failed and water was carried over into the filter beds). The beds are normally operated below room temperature, well below the 480°C ignition temperature of carbon. If a bed ignited, it would burn slowly and not propagate to an adjacent filter but would release its radon to the stack (Section 4.5). Such a fire could be isolated and smothered by cutting off its air supply.

- Fire Area 3 – SMAC: There is a very limited amount of combustible materials in the SMAC, since this structure is the former Vitrification Pilot Plant. Therefore, there is no risk of structure damage from fire. Any fires in this area would be limited to localized electrical fires.

- Fire Area 4 – HPP/BA Building: The HPP/BA Building contains motors, compressors, pumps, and piping to provide breathing air and high-pressure water. The building is of metal constructions and contains no significant combustibles. Fires would be limited to electrical fires associated with motors and wiring. Therefore, there is no risk of fire-related structural damage.

- Fire Area 5 – Administrative/Support Area: The fire scenario in this area involves support trailers. These are light hazard occupancies such as offices or breakrooms. A fire could do significant damage to a trailer because of its frame construction. Separation distances between trailers are addressed by an approved variance. Building materials for stairs and decks that meet applicable codes are used to minimize the potential for a fire to propagate from one trailer to an adjacent one.

F-4.4 Explosives

None of the materials handled or used in the AWR Project in any measurable quantities create an explosive hazard.

F-4.5 Potential for Radiological, Biological, or Toxic Incident

Radiological Hazards

The major radiological hazard from a fire would be the potential release of radon from the RCS. The calculation of the worst-case dose to a worker or a member of the public in the event of a carbon bed fire is based on the assumed complete release of adsorbed radon. The calculated dose to a member of the public at the site boundary is less than 100 mrem, which is low because of the thermal plume rise and significant dispersion. Therefore, a fire in the carbon beds is not considered "safety-significant." Because no other fire scenarios involve radioactive materials or cause a breach in the waste containment, they create no radiological incidents.

Biological Hazards

There are no biological hazards created by any fire scenario.

Chemical and Toxic Hazards

Chemical hazards in the processing area are minimal. None of the fire scenarios would involve the release of hazardous or toxic chemicals. However, a fire involving a trailer would release toxic fumes and gas decomposition byproducts.

F-4.6 Fire Protection Water Runoff

Water for fire fighting would only be used in the non-contaminated areas of the facility and should not create a contaminated water runoff problem greater than normal storm water runoff since no breach of contaminated areas would occur.

F-4.7 Natural Hazards (Earthquake, Flood, And Wind)

Wind is the only natural hazard that could exacerbate a fire by allowing a fire to propagate between adjacent trailers (see Section 6.4.2). Earthquake and flood potentials do not affect the fire risks.

F-5.0 FIRE PROTECTION

F-5.1 Water Supply

An adequate, fire-protection water supply is available from the FCP site. The use of water for fire suppression would be limited to outside waste containment areas. Fires in areas that cannot be handled with portable fire extinguishers will be suppressed manually by the subcontracted fire department. No fire should require more than 500 gallons per minute from hose streams to control.

F-5.2 Fire Suppression

The Implementation Guide for U.S. Department of Energy (DOE) Order 420.1 and 440.1 (paragraph 9.7) [Ref. 6] states that DOE has an obligation to provide protection for its facilities so that a fire will not result in an unacceptable program delay or property loss. Consequently, DOE considers any facility in excess of 5000 square feet in ground floor area and any facility with a Maximum Possible Fire Loss (MPFL) of $1 million ($10 million at FCP) as warranting protection by an automatic fire suppression system [Ref. 7].

This Fire Hazard Analysis concludes that this threshold is not exceeded and automatic suppression systems are not necessary, because the limited occupancy and the limited amount of combustible materials in the structures, equipment, and processes do not create a significant fire risk to the public, plant personnel, or the AWR Project. Normally-occupied areas have been provided with fire detection and alarm systems to ensure occupant notification of emergencies. Specifically, most areas of the TTA and RCS are not occupied or even accessible to personnel during operations. Because of the limited amount of combustibles (except the large mass of carbon in steel housings in the RCS) and the lack of continuity of combustibles created by the structure and equipment in the buildings, credible fires will be limited to a small-localized fire, easily controlled with portable extinguishers. The lack of significant combustibles in the TTA Upper Level and the HPP/BA Building, and the separation between modules, skids and/or equipment would limit fires to individual pieces of equipment, precluding losses above the MPFL threshold. This line of defense will be backed up by hose streams operated by the subcontracted fire department.

Fire suppression for the administrative trailer facilities emphasizes manual fire fighting. Normally occupied areas have been provided with fire detection and alarm systems to assure both occupants and emergency responders of prompt notification of emergencies. Portable fire extinguishers will be provided in accordance with NFPA 10 [Ref. 8]. Because of the lack of continuity of combustibles and the provisions of early warning fire detection (see Section 5.3), credible fires will be incipient in nature and can be suppressed using portable extinguishers. Because of the limited size, low hazard use, and programmatic unimportance of the administrative trailers, no automatic sprinkler protection is required. Trailer fires that are not controlled with portable extinguishers will require hose lines operated by the subcontracted fire department.

Fire suppression for the carbon beds will be accomplished by isolating the bed, thus reducing the supply of oxygen to the fire and allowing the carbon to burn itself out.

A variance from the requirement for a specified separation distance between relocatable structures was approved by the FCP Site Fire Protection Safety Committee.

F-5.3 Protective Signaling System

Fire Detection

Normally occupied areas have been provided with fire detection and alarm systems to assure building occupants and emergency responders of prompt notification of fire emergencies. Smoke detectors have been installed in each relocatable building. Four thermocouples have been installed downstream of the carbon beds, one after each carbon bed to detect a fire in a carbon bed or spontaneous heating of the carbon, as well as determine which carbon bed is affected. Although this capability exists, the only credible carbon bed fire can occur in the carbon bed being regenerated. Heat detectors have been installed on the emergency generator. Detectors have been installed in accordance with NFPA 72 [Ref. 9] and have been connected to the FCP site evacuation system.

Fire Alarm System

The fire alarm system is a direct-current loop, zone-addressable type with a central Fire Alarm Control Panel and remote annunciation. A fire or trouble alarm will be sent to the Savannah River Facility, which will relay the alarm to the FCP site. Manual pull boxes have been installed in accordance with NFPA 72 and the IBC. Notification devices (speakers and strobes) have been installed in all areas in accordance with NFPA 72.

F-5.4 Fire Department Response

Fire preplans have been developed for each fire area to outline the fire-fighting strategies and precautions required for the AWR Project. These preplans have been developed and reviewed with the Crosby Township Fire Department. Selected AWR Project employees will receive incipient fire training with regard to portable extinguishers and the alarm system.

F-6.0 FACILITIES, EQUIPMENT, AND PROGRAM PRESERVATION

F-6.1 Essential Safety Class Systems

No systems are considered essential safety class systems for this project.

F-6.2 Vital And Critical Program

Vital Program Impact

A major fire in a local slurry pump module would impact the AWR Project schedule, but because redundant components are available, the delay in the Project would not be catastrophic.

Critical Process Equipment

The control room, the modules, and the RCS are critical to this project. Sufficient component redundancy reduces the significance of a fire involving any of these components. The RCS facility is provided with back-up power from the uninterruptible power supply and diesel generator located at the AWR Electrical Building.

F-6.3 High-Value Equipment

The waste retrieval modules are valued at $6 million and are unique. A fire involving one of the waste retrieval modules would be localized in nature but could still cause significant damage to one of the retrieval modules. The local control room and equipment housed therein are valued at $500 thousand and are considered high-value equipment. The desiccant dryers are also considered high-value equipment.

F-6.4 Facility Fire Loss Potential

The following sections address Maximum Credible Fire Loss (MCFL) and MPFL potentials in each fire area. The cost of a fire loss includes property loss, recovery, cleanup, replacement, etc.

Maximum Credible Fire Loss

- Fire Area 1 – Silos 1 and 2: The MCFL for this area would be a fire involving the waste retrieval modules. This localized fire could damage the electrical and mechanical systems. The property damage would be approximately $1 million. The downtime would be 2 months until redundant components could be installed and repairs completed.

- Fire Area 2 – TTA/RCS: The MCFL for this area would be a fire involving the emergency generator. The property damage would be approximately $25 thousand. The downtime would be minimal because the emergency generator is only required for backup power.

- Fire Area 3 – SMAC: The MCFL for this area would be the control room. Unless extinguished early, the smoke and fire damage to the electrical equipment would cause damage beyond repair. The property damage would not exceed $500 thousand. The downtime would be 1 month to make repairs.

- Fire Area 4 – HPP/BA Building: The MCFL for this area would be a fire involving a motor and/or controls for the high-pressure water skid, or one of the compressors. The property damage could reach $100 thousand if all the equipment on the high-pressure water skid had to be replaced. About a month's downtime would be required for procurement, installation, and testing of the replacement parts.

- Fire Area 5 – Administrative/Support Area: The MCFL for this area is a trailer fire, which results in the loss of a single office trailer. The property damage would be approximately $50 thousand for the trailer and contents. This MCFL would have no programmatic impact on the project.

Maximum Possible Fire Loss

- Fire Area 1 – Silos 1 and 2: The MPFL involves an uncontrolled hydraulic oil or electrical fire in a retrieval module, destroying equipment. Although this scenario is a very low probability, the resulting property damage could approach $2 million, and require a downtime of 2 months to effect repairs using the redundant components. This scenario would not cause a breach of the silos or a structural collapse of the bridge or tower.

- Fire Area 2 – TTA/RCS: The MPFL involves a carbon bed filter fire that goes undetected and unisolated and damages the filter bed and the downstream high-efficiency particulate air (HEPA) filters and fans. The resulting property damage would be approximately $600 thousand. The downtime would be 1 to 2 months to make repairs to the damaged components.

- Fire Area 3 – SMAC: The MPFL for this area would be the control room. Fire damage, due to an uncontrolled fire, would cause damage beyond repair to the control room. The property damage would not exceed $1 million. The downtime would be 2 months to make repairs.

- Fire Area 4 – HPP/BA Building: The MPFL for this area would be a fire involving all of the electrical components in the building (e.g., motors and controls for the high-pressure water skid and the two air compressors). Because of the lack of other combustibles in the building, the structure itself would not be affected. In such a case, the property damage could reach $160 thousand if all the electrical equipment had to be replaced. The downtime for procurement, installation, and testing would only be about a month because work on the compressors and high-pressure water skid could be done in parallel.

- Fire Area 5 – Administrative/Support Area: The MPFL is a fire in one of the trailers during high wind conditions that allow propagation to adjacent trailers. The resulting damage would include several support trailers, with property damage of $500 thousand. Downtime would be from 1 to 2 months to replace the trailers.

F-6.5 Emergency Planning

The AWR Project emergency planning will be integrated with PL-3020, the FCP Emergency Plan [Ref. 10], EM-0030, *Silos Area Emergency Procedure* [Ref. 11], and EM-0020, *Building Emergency Procedure* [Ref. 12]

F-7.0 CONCLUSION

The conclusion of this Fire Hazard Analysis is that the fire risks of the AWR Project facilities are low and are adequately controlled by the design and operating features provided. The objective of protecting the public and the environment from fire-induced releases is met. The objective of protecting employees from fire is accomplished with detection, notification, and means of egress. The property damage and Project downtime risks are acceptable for the duration of this Project.

Credible fire damage could result from small, localized fires involving motors in the RCS Building, the HPP/BA Building, on the TTA deck, or in one of the modules. Such a fire would be controllable using portable extinguishers. Costs would consist of the replacement of the damaged equipment and a scheduled downtime from four weeks (involving the HPP/BA Building) to two months (involving the RCS chillers or TTA modules). RCS operation would not be affected by a fire in the HPP/BA Building or the TTA. Furthermore, because most of the RCS equipment is redundant, the system could continue to operate following damage to a major component, albeit at 50% of its maximum capacity.

F-8.0 REFERENCES

1. 40710-RP-0015, Rev. 0, *Process Description Document for the Accelerated Waste Retrieval Project,* Jacobs; May, 2000

2. Ohio Building Code, 2002; BOCA, Delmar Publishers

3. International Building Code, 2000; BOCA, Delmar Publishers

4. 29 CFR 1910, Occupational Safety and Health Standards, Subpart E, Means of Egress, Title 29 Code of Federal Regulations Part 1910; Occupational Safety and Health Administration; 2002

5. NFPA 70, *National Electric Code*, National Fire Protection Association, 1999

6. G-420.1/B-0, G440.1/E-0, *Implementation Guide for use with DOE Orders 420.1 and 440.1, Fire Safety Program*, DOE; September, 1995

7. 624-P622-50, Rev. 0, *Preliminary Hazard Analysis Report (PHAR) for the Accelerated Waste Retrieval Project*; Appendix F (624-P622-45, Rev. 0), *Preliminary Fire Hazards Analysis*; January 14, 2000

8. NFPA 10, *Standard for Portable Fire Exstinguishers*, National Fire Protection Association, 1998

9. NFPA 72, *National Fire Alarm Code*, National Fire Protection Association, 1999

10. PL-3020, *FEMP Emergency Plan*, Fluor Fernald

11. EM-0030, *Silos Area Emergency Procedure*, Fluor Fernald

12. EM-0020, *Building Emergency Procedure*, Fluor Fernald

Appendix G

APPENDIX G
ACCIDENT ANALYSIS

THIS PAGE INTENTIONALLY BLANK

TABLE OF CONTENTS

EXECUTIVE SUMMARY 7

G-1.0 INTRODUCTION 7

G-2.0 ACCIDENT ANALYSIS METHODOLOGY 8

G-2.1 Common Assumptions 8
G-2.2 Basic Calculation Method For Solids Release 10
G-2.3 Basic Calculation Method For Radon Release 11
G.2.3.1 Fernald Radon Model 11
G.2.3.2 Fumigation Model 12
G-2.3.3 Ingrowth and Dose Conversion 12
G.2.4 Methodology Summary 13

G-3.0 ACCIDENT ANALYSIS 13

G-3.1 EBA-1: Failure of the RCS during Retrieval Operations Scenario 13
G-3.2 EBA-2: Carbon Bed Failure (Elution of Adsorbed Radon) Scenario 14
G-3.3 EBA-3: Over-pressurization or Under-pressurization of a Silo Scenario 17
G-3.3.1 Solids by Impact 17
G-3.3.2 Solids by Resuspension 17
G-3.3.3 Headspace Radon 17
G-3.3.4 Radon from Impact 18
G-3.3.5 Radon Flux 18
G-3.3.6 Results 18
G-3.4 EBA-4: Breach of Transfer Line 19
G-3.4.1 Solids by Impact 19
G-3.4.2 Solids by Resuspension 19
G-3.4.3 Radon from Impact 19
G-3.4.4 Radon Flux 20
G-3.5 EBA-5: Failure of TTA Tank 20

G-4.0 CONCLUSIONS 21

G-5.0 REFERENCES 23

TABLES

G.2-1: SILOS 1 AND 2 MATERIAL INHALATION DOSE CONVERSION FACTOR.....10
G.2-2: METHODOLOGY SUMMARY.....13

G.3-1: RCS FAILURE WITH SILO EMISSIONS SCENARIO RESULTS.....14
G.3-2: RCS CARBON BED RADON INVENTORY.....15
G.3-3: RCS ELUTION MODEL SCENARIO RESULTS.....16
G.3-4: SILO PRESSURIZATION SCENARIO RESULTS.....19
G.3-5: TRANSFER LINE BREACH SCENARIO RESULTS.....20
G.3-6 TTA TANK FAILURE SCENARIO RESULTS.....21

G.4-1: COMPARISON OF DOSE TO EMERGENCY GUIDELINES.....21

ACRONYMS

ALI = Annual limit of intake
ARF = Airborne release fraction
ARR = Airborne release rate
AWR = Accelerated Waste Retrieval
BR = Breathing rate
C = Centigrade
CEDE = Committed effective dose equivalent
CFR = Code of Federal Regulations
Ci = Curie
DAC = Derived air concentration
DCF = Dose conversion factor
DOE = U.S. Department of Energy
DR = Damage ratio
DSA = Documented Safety Analysis
EBA = Evaluation Basis Accident
EG = Evaluation Guideline
F = Fahrenheit
FCP = Fernald Closure Project
HASP = Health and Safety Plan
HC = Hazard Category
HEPA = High-efficiency particulate air
K_a = Absorption coefficient
LPF = Leak path factor
MAR = Material-at-risk
MOI = Maximally exposed off-site individual
mph = Miles per hour
mrem = Millirem
N-HASP = Nuclear Health and Safety Plan
OU = Operable Unit
pCi = Picocurie
PRI = Potentially releasable inventory
RCS = Radon Control System
RF = Respirable fraction
SA = Specific Activity
SSC = Structures, systems, and components
TTA = Transfer Tank Area
UCL = Upper Confidence Level
WL = Working level
WL-h = Working Level-Hour
WLM = Working Level-Month

THIS PAGE INTENTIONALLY BLANK

EXECUTIVE SUMMARY

The purpose of this Accident Analysis is to determine if the Accelerated Waste Retrieval (AWR) Project needs any safety-class structures, systems, and components or technical safety requirements for protection of the public. This document also quantifies the consequences of the bounding accidents associated with the operation of the Waste Retrieval and Transfer Tank Area (TTA), and Radon Control System (RCS). The dose consequence calculations in this accident analysis also support final hazard categorization.

Analysis of five accident scenarios described in APPENDIX B produced the radiological dose estimates for workers and off-site populations. The nearest off-site point on the Fernald Environmental Management Project site boundary is approximately 330 meters (m) west of the silos. The maximally exposed off-site individual (MOI) is assumed to be located 330 m downwind of the accident location. The committed effective dose equivalent is estimated for individuals located at 30, 100, and 330 m from the point of the release. The estimated values at 330 m are compared to the Evaluation Guidelines (EGs) established by DOE-STD-3009-94, Appendix A.

The conclusion that can be drawn from the analyses is that none of the accident scenarios analyzed yield consequences that would require "safety-class" structures, systems, and components or controls according to DOE-STD-3009-94.

G-1.0 INTRODUCTION

The purpose of this Accident Analysis is to support the final hazard categorization and to determine if any safety-class structures, systems, and components (SSC) or technical safety requirements are needed for protection of the public. Safety-class SSCs will not normally be associated with Hazard Category 2 or 3 facilities due to their limited potential for off-site impact. The analysis quantifies the consequences of potential hazards associated with the activities supporting the Accelerated Waste Retrieval (AWR) Project, including operation of Waste Retrieval and Transfer Tank Area (TTA) and Radon Control System (RCS), for comparison to DOE-STD-3009-94 [Ref. 1], Appendix A Evaluation Guideline (EG). Safety-class SSCs are required for consequences exceeding an EG of 25 rem total effective dose equivalent to a maximally exposed off-site individual (MOI).

Safety-significant SSCs are those important to defense in depth or on-site worker safety. Although EGs are not used for designating safety-significant SSCs, the on-site impacts are determined in this analysis.

Within this analysis, consequences are determined for the following:

- Workers at 30 m, which represents the distance for determining the dose threshold criteria of U.S. Department of Energy (DOE) Hazard Category (HC) 3 facilities;

- Workers at 100 m, which represents the distance for determining the dose threshold criteria of DOE HC-2 facilities. Note: Co-located workers are at 70 m or 120 m. These distances represent the distance from either of two release points (silo or stack) to the control room;

- Public at 330 m, which is defined as the distance to the MOI. This distance corresponds to the nearest site boundary. The MOI dose consequence is compared with the off-site EG.

The scope of the analysis is focused on the accidents most likely to be encountered during AWR operation and maintenance.

G-2.0 ACCIDENT ANALYSIS METHODOLOGY

This section presents the major assumptions for the analysis of five Evaluation Basis Accidents (EBA) scenarios associated with the silos and RCS. As determined by the hazard category calculations in APPENDIX B, the AWR Project activities constitute, at most, a Radiological (RAD) facility, and accident analyses are not essential. However, these analyses are presented to: (1) demonstrate that consequences of accidents would not result in significant localized consequences; and (2) help in determining defense-in-depth controls. The accident scenarios considered are:

- EBA-1, Failure of the RCS during retrieval operations

- EBA-2, Carbon bed failure (elution of adsorbed radon)

- EBA-3, Failure of silo containment due to over-pressurization or under-pressurization of a silo with RCS in operation

- EBA-4, Breach of Transfer Line

- EBA-5, Failure of a TTA tank

G-2.1 COMMON ASSUMPTIONS

The accident scenarios were analyzed using several common assumptions:

- The K-65 solids material is assumed to contain a concentration at the upper 95 percent confidence limit on the mean value for each Silo 1 radionuclide. The K-65 material contains 477,000 pCi/g, and its progeny are in complete equilibrium unless otherwise noted in the scenario. No decay corrections have been applied to account for the time since samples were analyzed (approximately 10 years decay).

- Potential contributors to the total committed effective dose equivalent (CEDE) include the direct external exposure from the spilled material, inhalation exposure from the fraction of radioactive solids and gases that become airborne, and external exposure from immersion in a plume of contaminated air. For these accident scenarios, the primary contributor is the inhalation exposure pathway.

- All K-65 material is in wet slurry form when released from containment. The airborne release fraction (ARF) of the solid material due to impact from a spill is conservatively assumed to be the bounding value of 5×10^{-5} (for a free-fall spill of slurry) per DOE-HDBK-3010-94, *Airborne Release Fractions/Rates and Respirable Fractions for Nonreactor Nuclear Facilities* [pg. 3-4 of Ref. 2]. This ARF is conservative since Ref. 2 specifies a lower ARF for viscous solutions. The respirable fraction (RF) is assumed as the bounding value of 0.8 as given in DOE-HDBK-3010-94. The airborne release rate (ARR) for aerodynamic entrainment and resuspension of the spilled solids is assumed to be the bounding value of 4×10^{-7}/hr, which is the value given on pg. 3-5 of Ref. 2 for pooled slurry with low wind speeds.

- The summation of material specific dose conversion factors (DCF) for each radionuclide results in a Silo 1 material DCF of 41.0 rem/g inhaled (without radon) and a Silo 2 material DCF of 43.6 rem/g inhaled (without radon). This is shown in **TABLE G.2-1**. The inhalation DCFs were obtained from Federal Guidance Report No. 11, *Limiting Values of Radionuclide Intake and Air Concentration and Dose Conversion Factors for Inhalation, Submersion, and Ingestion* [Ref. 3]. The selected lung clearance class was based on the presence of oxides, except Ra-226, which was based on the insoluble barium sulfate, which co-precipitated the radium.

- Calculations of airborne radionuclide concentrations at the location of the MOI are performed at the fence line closest to the silos, which is a distance of 1083 ft or 330 m.

- The radon emanation rate from the K-65 material is estimated from measurements of silo headspace radon concentrations of 19 μCi per liter that were common before operation of the RCS. With an 1150 m^3 headspace, the equilibrium headspace activity is calculated to be 22 Ci. The radon emanation rate into the headspace equals headspace radon decay rate, assuming no significant diffusion out of the silo. Therefore, the emanation rate is equal to headspace activity times the decay constant, which is 22 Ci x 0.693/5500min = 46.2 μCi/second.

TABLE G.2-1: SILOS 1 AND 2 MATERIAL INHALATION DOSE CONVERSION FACTOR					
Nuclides	Silo 1 Specific Activity* (pCi/g)	Silo 2 Specific Activity* (pCi/g)	Fed Guide 11 Inhalation DCF (mrem/pCi)	Silo 1 DCF Without Radon (mrem/g)	Silo 2 DCF Without Radon (mrem/g)
Actinium-227	7,670	6,640	1.29	9,904	8,574
Protactinium-231	0	4,040	0.858	0	3,468
Lead-210	202,000	190,000	0.0136	2,743	2,580
Polonium-210	281,000	231,000	0.00858	2,412	1,983
Radium-226	477,000	263,000	0.0118**	5,629	3,103
Thorium-228	2,280	7,360	0.342	779	2,514
Thorium-230	68,900	76,200	0.262	18,024	19,933
Thorium-232	1,110	985	1.15	1,277	1,133
Uranium-234	932	1,160	0.132	123	154
Uranium-235	54	94	0.123	7	12
Uranium-238	693	1,120	0.118	82	133
			Total	40,980	43,586

*Measured values obtained from the *Remedial Investigation Report for OU4 Silos* [Ref. 4], Tables 4-2 and 4-19, are based on the upper 95 percent confidence interval on the mean of sample data. Radon and its short-lived progeny are omitted.
**This value from ICRP72, lung clearance class Y, because the radium in the silos is incorporated into very insoluble barium sulfate
DCF = dose conversion factor

G-2.2 BASIC CALCULATION METHOD FOR SOLIDS RELEASE

The methods used to determine the dose consequence or CEDE for each accident scenario utilize variations of the following general equation [Ref. 2]:

$$CEDE = \sum (MAR * DCF * DR * BR * ARR * LPF * RF * (X/Q) * T)_i$$

Where:

- MAR = radionuclide amount available to be acted upon by a physical stress (pCi)
- DCF = dose conversion factor in mrem/pCi
- DR = damage ratio or the fraction of the MAR actually impacted by accident conditions
- BR = breathing rate of a reference person, which is considered 3.33×10^{-4} meters^3/second (m^3/sec)
- ARR = airborne release rate (for instantaneous releases, the ARR is assumed to equal the ARF/1 hr)
- LPF = leak path factor or the fraction of material transported through some confinement
- RF = respirable fraction
- X/Q = long-term dispersion factor in sec/m^3

T = exposure time in hours (for instantaneous releases, the exposure time is assumed to equal 1 hr)
I = each radionuclide

The dispersion factor (X/Q) for a straight line, ground level release is determined from a Gaussian Plume model for continuous point source emission, according to the U.S. Nuclear Regulatory Commission's Regulatory Guide 1.145 [Ref. 5]. A wind speed of 1.0 m/sec and D stability class was used at 30 m, which is consistent with the recommendations of DOE-STD-1027-92 [Ref. 6] for HC-3 calculations. A wind speed of 4.5 m/sec and D stability class was used at 100 m, which is consistent with the recommendations of DOE-STD-1027-92 for HC-2 calculations. A wind speed of 1.0 m/second and F stability class was used at 330 m, which is consistent with the requirements of DOE G 151.1-1, DOE Emergency Management Guide, *Hazards Surveys and Hazards Assessments* [Ref. 7].

For a continuous release, the receptor is assumed to be exposed for 24 hrs at 30 m and 2 hrs at 100 m and 330 m [Refs. 6 and 7]. For an instantaneous release, the material is assumed to be completely released within 1 hour. The receptor is exposed during this hour to the instantaneous release, and for the entire exposure period to resuspended solids that are emitted continuously.

G-2.3 BASIC CALCULATION METHOD FOR RADON RELEASE

The radon dispersion is modeled with the Fernald Radon Model, as described below. Ingrowth of radon daughters and dose conversion is also described in this section.

G.2.3.1 Fernald Radon Model

Fluor Fernald, Inc., developed a predictive tool, the Fernald Radon Model, to estimate radon air concentrations at different site locations for various release scenarios. The model, which reasonably fits existing site monitoring data, is described in the *Radon Modeling Report for the OU4 Safety Analysis Plan* [Ref. 8]. The model predicts the radon concentrations downwind from a release and allows inclusion of a "lag" term. The "lag" model is more complex and provides a more accurate depiction of radon transport when compared to existing monitoring data. This is because the model accounts for the persistence of radon in the vicinity closest to the release point. The non-lag model is used for the accident analyses. The model, embodied in Equation 16 of Reference 7, is based on F Class meteorological stability. A wind speed of 1.8 m/sec is used at 30 m and 330 m, which is a basic assumption of the model. A wind speed of 4.5 m/sec is used at 100 m, which is consistent with guidance in DOE-STD-1027-92 for HC-2 calculations. Exceptions to these values are used for EBA 2, as described in SECTION 2.3.3. Once the radon air concentrations are determined at different receptor locations, the dose consequence can be determined.

G.2.3.2 Fumigation Model

For EBA-3, radon is released to the environment via the 150-ft stack. To estimate the upper bound of the effect of such releases, a "fumigation" condition was considered. The upper bound for the fumigation condition is defined in Reg. Guide 1.145, Section 1.3.2, which states that the concentrations "cannot be higher than those produced by non-fumigation, stable atmospheric conditions with $h_e = 0$, for the fumigation case that assumes F stability and a windspeed of 2 meters per second." Therefore, to bound the fumigation condition, the radon release by way of the stack, was modeled as a ground level release with a windspeed of 2 meters per second, using the Fernald Radon Model.

G-2.3.3 Ingrowth and Dose Conversion

The concentrations of radon progeny are calculated in working levels (WL) in the manner specified by Evans [Ref. 9]. Exposures to these radionuclides are expressed in WL months, that is, the time integrated concentration at the point of interest.

Pure ^{222}Rn by itself is not a great hazard; however, the radon quickly produces a chain of radionuclides, each the progeny of the previous parent. The conservative data provided by Fluor Fernald, Inc., in Figure 8 of *An Evaluation of the Need for Personnel Radon Monitoring at the FEMP* [Ref. 10] show that in a matter of a few hours, 100 pCi/liter of ^{222}Rn will produce approximately 1 WL. For releases of pure radon, the ingrowth time for radon progeny is a function of wind speed and receptor distance.

To compare thresholds and limits, the dose equivalence of working levels must be determined. As shown in 10 CFR 835 [Ref. 11], the Derived Air Concentration for ^{222}Rn is 30 pCi/L, corresponding to 5 rem in 1 year, which is equivalent to 2.5 mrem in 1 hour. Therefore, an individual exposed to 100 pCi/L ^{222}Rn (or 1 WL) for 1 hour would receive a dose of 7.5 mrem, assuming 100 percent progeny equilibrium.

For a continuous release, the receptor is assumed to be exposed for 24 hrs at 30 m and 2 hrs at 100 m and 330 m. For an instantaneous release, the material is assumed to be completely released within 1 hour. The receptor is exposed during this hour to the instantaneous release, and for the entire exposure period to radon that is emitted continuously.

G.2.4 METHODOLOGY SUMMARY

TABLE G.2-2 summarizes methodology and inputs.

TABLE G.2-2: METHODOLOGY SUMMARY

Release Mode or Type	Distance (m)	Wind Speed (m/sec)	Stability Class	ARF (Airborne Release Fraction)	RF (Respirable Fraction)
Gaussian Ground Level - Solids	30	1	D	$5x10^{-5}$ - impact $4x10^{-7}$/hr - resuspension	0.8 - impact 1.0- resuspension
	100	4.5	D		
	330	1	F		
Fumigation - Radon Release	30	2.0	F	1	1
	100	2.0			
	330	2.0			
Fernald Radon Model	30	1.8	F	1	1
	100	4.5			
	330	1.8			

G-3.0 ACCIDENT ANALYSIS

The five accidents analyzed include: (1) failure of the RCS during retrieval operations; (2) carbon bed failure [elution of adsorbed radon]; (3) failure of silo containment due to over-pressurization or under-pressurization during waste retrieval; (4) breach of a transfer line; and (5) failure of a TTA tank. These accident scenarios and analysis results are described in the following sections.

The consequences of a mechanical failure of the stack are similar to and less than the effects of a failure of the RCS during retrieval operations and hence have not been singled out for analysis. This accident and the five accidents analyzed are considered to be independent because the initiating mechanisms are independent of each other, i.e., dropped load, total electrical failure, flow control/lower failure, getting water in the carbon beds, fire in the carbon beds, and mechanical failure of the stack.

G-3.1 EBA-1: FAILURE OF THE RCS DURING RETRIEVAL OPERATIONS SCENARIO

During retrieval of Silo 1 contents, the RCS fails and cannot be restored for an indefinite period (at least 24 hours). The Bentonite cap has been mostly removed and radon continues to emanate from the K-65 waste. The containment of radon within the silo headspace is poor. The motor-controlled dampers on the air inlet ports for the enclosures above the silo have not closed properly and the silo pressure relief valve is stuck open. Radon diffuses out through various cracks and openings in the silo containment.

Essentially, radon that was being moved to the carbon beds is released to the environment. The rate of release is assumed to be the same as the transfer rate from the bulk material to the headspace. The transfer rate before retrieval operations begins was found to be 46.2 μCi/sec (see SECTION 2.1). During retrieval the bulk material is covered

with sluice water, which impedes the transfer of radon by dissolution to the headspace by an assumed factor of 2. Therefore the transfer rate for this scenario is 23.1 μCi/sec, with a resulting PRI of 2.03 Ci.

Since the average residence time for air in a silo is about 2 hours , radon there is assumed to be in equilibrium with its daughters. Therefore the equilibrium factor for the scenario is 1.

This scenario uses the Fernald Radon Model. The receptors are assumed to be in the plume for 24 hrs at 30 m and 2 hrs at 100 m and 330 m.

A spreadsheet (EBA-1) was used to determine the CEDE results for comparison to the thresholds. The results of the spreadsheet are summarized in **TABLE G.3-1**.

TABLE G.3-1: RCS FAILURE WITH SILO EMISSIONS SCENARIO RESULTS

Receptor Downwind (Distance)	Concentration (pCi/L)	Equilibrium Factor	Total CEDE (mrem)
30 m	516	1	1030
100 m	38	1	6
330 m	22	1	4

CEDE = committed effective dose equivalent

G-3.2 EBA-2: CARBON BED FAILURE (ELUTION OF ADSORBED RADON) SCENARIO

In this accident scenario, a portion of the accumulated radon in the carbon beds is released to the stack. The temperature-dependent radon elution from the carbon beds is a result of the catastrophic loss of the operating redundant chilling systems or a sudden large-scale air infiltration. The temperature will rise slowly, and the fans will remain on with dampers in unfavorable positions. The room temperature air will sweep some of the radon out of the bed and up the stack.

The consequences are addressed in terms of releasable ^{222}Rn inventory by determining the maximum carbon bed radon inventory available for release per each phase of operation (see SECTION B-4.2.1). As shown by **TABLE G.3-2**, the maximum carbon bed inventory occurs in Phase 2. Phase 2 operations involve the hydraulic mining of silo wastes and placement into the TTA Tanks. As the beds warm up from normal operating temperature (5°C) to room temperature (25°C), the equilibrium radon inventory on the beds will decrease.

TABLE G.3-2: RCS CARBON BED RADON INVENTORY		
	Phase 1 (Silo headspace reduction)	**Phase 2 (Silo 1 mining)**
Maximum Radon Inventory (Ci)	146	369

The radon release for the carbon bed elution scenario is determined by comparing the maximum carbon bed radon inventory at 5°C to that at 25°C during Phase 2. The difference is the radon loss due to elution. The carbon bed radon inventory available during Phase 2 at 5°C, with a $K_a = 13$, is 369 Ci stored on the carbon beds. The radon inventory at 25°C, based in an adsorption coefficient, $K_a = 6$, is 244 Ci. Therefore, warming of the carbon beds results in the loss of 125 Ci of initially pure ^{222}Rn up the 150-ft stack at normal exit velocity (≅ 7.5 m/sec).

The dose to a receptor from this release depends on the atmospheric dispersion and the ingrowth of daughters during the time that it takes for the radon to reach that receptor. The worst case for atmospheric dispersion occurs during fumigation conditions. As discussed in SECTION G-2.3.2, the atmospheric dispersion is conservatively modeled as a ground-level release using the Fernald Radon Model.

The release of radon could take about a week, because of the slow rate that radon travels through the beds, even at 25°C. Nevertheless, it was assumed for the analysis that all 125 Ci of the available radon is released in the first 24 hours. During the time that it takes for the plume to reach the receptor, i.e. the distance divided by the windspeed, the ingrowth of the daughters begins. This increases the doses, and is accounted for by using an equilibrium factor. This factor is a ratio of the potential inhalation dose when the plume reaches the receptor, to the potential inhalation dose that would occur if ingrowth were complete.

The receptors are assumed to be in the plume for 24 hrs at 30 m and 2 hrs at 100 m and 330 m.

Based on these factors, spreadsheet EBA-2 was used to determine the CEDE results for comparison to the thresholds. The results are summarized in **TABLE G.3-3**. The CEDE is relatively low because of the limited time for radon progeny ingrowth.

TABLE G.3-3: RCS ELUTION MODEL SCENARIO RESULTS

Downwind Distance (m)	X/Q (s/m^3)	Radon Concen-tration (pCi/liter)	Travel or Ingrowth time* (min)	Equilibrium Factor	CEDE Dose (mrem)
30	2.11×10^{-2}	3.05×10^{4}	0.25	0.012	733
100	4.38×10^{-3}	6.33×10^{3}	0.83	0.03	31.6
330	9.19×10^{-4}	1.33×10^{3}	2.75	0.07	15.5

* Ingrowth time = distance/wind speed
CEDE = committed effective dose equivalent
X/Q = dispersion factor

Other factors that could enhance elution, i.e., exposure to humid air and shock, have smaller effects because of the long radon-transit times designed into the beds to allow radioactive decay. While either shock or exposure to humid air could displace radon beyond that eluted by heating, the effects are small and occur over a long period of time. The conservatism, introduced by the assumption that all the radon released by heating is released in 24 hrs, bounds the effects of displacements due to shock or exposure to humid air. The transition time effects were reported by Langner and Kendrick [Ref. 12], who eliminated radon input to their experimental bed while maintaining airflow. They observed no change in output for 8 days. In addition, Strong and Levins [Ref. 13] reported that passing radon-laden humid air through a dry bed has little effect on the radon adsorption. They concluded that this was because the water vapor travels more slowly through the bed than the radon and, therefore, the radon only sees the dry bed ahead of it. Hence, a sudden exposure to humid air would be expected to displace only the radon in the upstream end of the bed, and the effects would not be seen until this displaced gas traversed the remaining length of bed.

G-3.3 EBA-3: OVER-PRESSURIZATION OR UNDER-PRESSURIZATION OF A SILO SCENARIO

A breach in silo confinement occurs during RCS operations. The RCS was in use prior to the accident, thus the headspace radon concentration is less than 4E5 pCi/l. The dome catastrophically fails because of significant over- or under pressurization in the silo, causing the dome and a portion of the sidewall to catastrophically fail.

G-3.3.1 Solids by Impact

The dome collapse disturbs and releases 32.8 m^3 of silo surface waste that is assumed to be 1 percent [leakpath factor (LPF) = 0.01)] of the total silo contents. This volume is considered conservative since the spilled source material may also contain some bentonite. The bentonite will contain large concentrations of 22y Pb-210 and its progeny, Bi-210 and Po-210, so its presence is not trivial. At the beginning of transfer operations bentonite will cover much of the K-65 material. As removal progresses, quantities of both K-65 and bentonite will decrease. The calculation does not take credit for the presence of bentonite nor the decrease in K-65 material that occurs. Therefore, the potentially releasable inventory (PRI) of solids is assumed to be 32.8 m^3 or 6.7×10^7 g [Ref. 4]. The ARF*RF for the disturbed solids is conservatively assumed as 4.0×10^{-5}. The solids dispersion is modeled using a Gaussian plume model. Events associated with the impact are assumed to occur over 1-hr duration.

G-3.3.2 Solids by Resuspension

The spilled solids are exposed to weather conditions for the remainder of the post-accident time frame. During this time, the material is subject to wind erosion and re-suspension. The ARF*RF for re-suspension of the spilled solids is 4.0×10^{-7}. The ARF value is valid for the wind speeds of 1.0 to 4.5 m/sec used in the dispersion calculations. This ARF value equates to an air concentration at 30 m of 1.3×10^{-4} g/m^3. This correlates well with the air mass loading value provided by the RESRAD Users Manual [Ref. 14], which is 1×10^{-4} g/m^3 in the vicinity of a spill and represents short periods of high mass loading of dust and sustained periods of normal activity on a typical farm. The receptor at 30 m is exposed to K-65 material for 24 hours. Receptors at 100 m and 330 m are exposed for 2 hours.

G-3.3.3 Headspace Radon

The accident results in an instantaneous release of approximately 0.45 Ci of headspace radon. This value was based on data from Phase I operation. The receptors are assumed to be within the plume for the entire duration, which for modeling purposes is assumed to last 1 hour. The dispersion is modeled using the Fernald Radon Model [Ref. 8].

G-3.3.4 Radon from Impact

The impact will instantaneously release radon from the spilled solids. The radon emanation from the impact is assumed to be 35 percent. The pure radon released instantaneously from the spilled solids is:

$$(PRI)(ARF)(RF)(SA_{Ra}) = (6.72E+07\ g)(0.35)(1)(4.77E+05\ pCi/g) = 11.2\ Ci$$

The ARF assumption of 35 percent is based upon an evaluation of water as a diffusion barrier [Ref. 15].

G-3.3.5 Radon Flux

Radon also continues to be released via diffusion from the silo contents. The radon flux rate was calculated in EBA-1, indicating a 24-hr release of 2.00 Ci or a release rate of 23.1 μCi/sec. The receptors are assumed to be in the plume for 24 hrs at 30 m and 2 hrs at 100 m and 330 m. Radon dispersion is modeled using the Fernald Radon Model. It is assumed that this calculated release rate includes the radon flux released from the spilled solids.

This accident is low probability because the silos are protected from an out-of-parameter pressure condition. Over-pressurization is not expected and is addressed by the master/slave operation of the supply and exhaust dampers on each silo. In the event that a positive pressure spike remains unmitigated before attaining the desired condition, the supply is terminated and the system briefly goes into return-only or exhaust mode to dampen the spike. Subsequently, the supply is bled back online and the desired condition is restored. Additionally, a pressure/vacuum relief device protects the silos by providing relief from over- and under-pressurization. Such events are considered upset conditions and are not intended for normal operation. Subsequent to such an event, the prevailing system conditions will be analyzed to determine the cause so that operational adjustments can be identified and implemented.

G-3.3.6 Results

Spreadsheets labeled EBA-3 were used to determine the CEDE results (see Attachment). The total CEDE is provided for comparison to the thresholds. The results of the spreadsheet are summarized in **TABLE G.3-4**.

TABLE G.3-4: SILO PRESSURIZATION SCENARIO RESULTS

Receptor Distance	Instantaneous Radon Release		Continuous Radon Flux	Spilled Solids from Impact	Spilled Solids Resuspension	Total CEDE (mrem)
	Headspace	Spilled Solids	Silo Solids			
	Dose (mrem)	Dose (mrem)	Dose (mrem)	Dose (mrem)	Dose (mrem)	
30 m (HC-3)	238	75	12.4	769	185	1,279
100 m (HC-2)	17.6	6	0.1	46	0.9	71
330 m (MOI)	10.4	33	0.2	43	0.9	88

CEDE = committed effective dose equivalent HC= Hazard Category
MOI = maximally exposed off-site individual

G-3.4 EBA-4: BREACH OF TRANSFER LINE

The single-walled transfer line on the TTA deck is sheared. The pump runs for 15 minutes before being shut off manually. Slurry is discharged at a conservative rate of 400 gpm. This analyzed rate bounds the normal operating capacity of 350 gpm. The 6000 gal of released slurry is assumed to contain 15 wt% solids. The spill contains 2.57 Ci of ^{226}Ra. Since the TTA deck is open to the outside, radon and solids are assumed to be released.

G-3.4.1 Solids by Impact

The potentially releasable inventory (PRI) of solids is assumed to be 6000 gal of slurry containing 15 wt% solids. The ARF*RF for the free-fall of slurry is assumed as 4.0×10^{-5}. The solids dispersion is modeled using a Gaussian plume model. Events associated with the impact are assumed to occur over 1-hr duration.

G-3.4.2 Solids by Resuspension

The spilled solids are exposed to weather conditions for the remainder of the post-accident time frame. During this time, the material is subject to re-suspension. The ARF*RF for re-suspension of the spilled solids is 4.0×10^{-7}. The ARF value is valid for the wind speeds of 1.0 to 4.5 m/sec used in the dispersion calculations. The receptor at 30 m is exposed to K-65 material for 24 hours. Receptors at 100 m and 330 m are exposed for 2 hours.

G-3.4.3 Radon from Impact

The impact will instantaneously release radon from the spilled slurry. The radon emanation from the impact is assumed to be 35 percent. The pure radon released instantaneously from the spilled solids is:

$$(\text{Activity of } ^{226}\text{Ra})(\text{ARF})(\text{RF}) = (2.57 \text{ Ci})(0.35)(1) = 0.90 \text{ Ci}$$

The radon release has a greater impact at 330 m than at 100 m because, although the radon concentration is less at 330m, the increased time for ingrowth results in a higher daughter concentration.

G-3.4.4 Radon Flux

Radon also continues to be released via diffusion from the slurry. The radon flux rate was calculated using the RESRAD code, assuming the 6000 gal spill covers an area of approximately 3,600 ft^2. The flux rate is calculated to be 6,100 pCi/m^2sec or 2.2 μCi/sec. The receptors are assumed to be in the plume for 24 hrs at 30 m and 2 hrs at 100 m and 330 m. Radon dispersion is modeled using the Fernald Radon Model. Results are summarized in **TABLE G.3-5**.

TABLE G.3-5: TRANSFER LINE BREACH SCENARIO RESULTS

Receptor Distance	Instantaneous Radon Release	Continuous Radon Flux	Spilled Solids Impact	Spilled Solids Resuspension	Total CEDE (mrem)
	Dose (mrem)	Dose (mrem)	Dose (mrem)	Dose (mrem)	
30 m (HC-3)	5.8	1.1	61.3	14.7	82.9
100 m (HC-2)	0.4	<0.1	3.7	0.1	4.2
330 m (MOI)	2.5	<0.1	3.5	0.1	6.1

CEDE = committed effective dose equivalent HC= Hazard Category
MOI = maximally exposed off-site individual

G-3.5 EBA-5: FAILURE OF TTA TANK

One of the four TTA tanks ruptures catastrophically, releasing all of its contents to the floor of the TTA. Slurry rises to a level of approximately 9 ft throughout the TTA building. The surface area occupied by the material is the footprint of the TTA building minus the area of the 3 remaining tanks. This area equals $(150 \times 150) - (3\pi\ 33^2) = 12{,}240\ ft^2$. The concentration of solids in the slurry is 15 wt% or 102,316 pCi ^{226}Ra per gram slurry (477,000 pCi/g silo material x 1.43 g silo material/g solids x 0.15 g solids/g slurry = 102,316 pCi/g).

No solids are released from the TTA building based on the secondary confinement of the TTA structure. Radon is released via diffusion from the slurry and all the radon released from the slurry is assumed to leak to the environment. The radon flux rate was calculated using the RESRAD code, assuming the 750,000 gal spill covers an area of approximately 12,240 ft^2. The flux rate is calculated to be 80,000 pCi/m^2sec or 91 μCi/sec. The receptors are assumed to be in the plume for 24 hrs at 30 m and 2 hrs at 100 m and 330 m. Radon dispersion is modeled using the Fernald Radon Model. Results are summarized in **TABLE G.3-6**.

TABLE G.3-6 TTA TANK FAILURE SCENARIO RESULTS

Downwind Distance (m)	X/Q (s/m³)	Radon Concen-tration (pCi/liter)	Travel or Ingrowth time* (min)	Equilibrium Factor	CEDE Dose (mrem)
30	2.28E-02	2,070	0.28	0.012	49.8
100	1.68E-03	153	0.37	0.012	0.3
330	9.90E-04	90.2	3.06	0.12	1.8

* Ingrowth time = distance/wind speed
CEDE = committed effective dose equivalent X/Q = dispersion factor

G-4.0 CONCLUSIONS

Analysis of five accident scenarios produced the radiological dose estimates for workers, co-located workers, and off-site populations, which are presented in **TABLE G.4-1**. Workers are defined as any personnel performing work on the AWR Project within the boundaries of the Fernald Closure Project (FCP) site (30-m receptor). Co-located workers are defined as other workers located within the boundaries of the FCP site, but not performing work on the AWR Project (100 m receptor). The off-site population is defined as all non-workers who reside or are otherwise located outside the FCP site boundaries. The nearest off-site point for the MOI is approximately 330 m west of the silos. **TABLE G.4-1** provides calculated internal dose estimates for individuals located at 30, 100, and 330 m from the point of the release. The off-site dose estimate is compared to the 25 rem EG established by DOE-STD-3009-94 [Ref. 1].

TABLE G.4-1: COMPARISON OF DOSE TO EMERGENCY GUIDELINES

Evaluation Basis Accident	Radiological Dose (CEDE) in mrem		
	Distance to Receptor Point		
	30 m	100 m	330 m*
EBA-1: Failure of RCS during retrieval	1,030	6.3	3.7
EBA-2: Carbon bed failure (elution)	733	31.6	15.5
EBA-3: Silo over- or under-pressurization	1,279	71	88
EBA-4: Breach of transfer line	83	4.2	6.1
EBA-5: Failure of TTA tank	50	0.3	1.8

* DOE-STD-3009-94 public EG is 25 rem at the nearest off-site receptor, which is 330 m.
CEDE = = committed effective dose equivalent
EBA = evaluation basis accident

The conclusions that can be drawn from the analyses are:

- None of the analyzed RCS accident scenarios yield results that are inconsistent with designating the AWR as a Radiological Facility.
- None of the accident scenarios analyzed yield consequences that would require "safety-class" controls as defined in DOE-STD-3009-94.
- None of the RCS initiated accident scenarios would yield consequences that would require "safety-significant" controls, as defined in DOE-STD-3000-94.

G-5.0 REFERENCES

1. DOE-STD-3009-94, *Evaluation Guidelines for Accident Analysis and Safety Structures, Systems, and Components*, U.S. Department of Energy, Change Notice No. 2: April, 2002

2. DOE-HDBK-3010-94, *Airborne Release Fractions/Rates and Respirable Fractions for Nonreactor Nuclear Facilities*, U.S. Department of Energy, December, 1994

3. Federal Guidance Report No. 11, *Limiting Values of Radionuclide Intake and Air Concentration and Dose Conversion Factors for Inhalation, Submersion, and Ingestion*, EPA-520/1-88-020, September, 1988

4. *Remedial Investigation Report for Operable Unit 4,* Volume 1 of 3, Fernald Environmental Management Project; November, 1993

5. Regulatory Guide 1.145, *Atmospheric Dispersion Models for Potential Accident Consequence Assessments at Nuclear Power Plants*; U.S. Nuclear Regulatory Commission, February, 1983

6. DOE-STD-1027-92, *Hazard Categorization and Accident Analysis Techniques for Compliance with DOE Order 5480.23, Nuclear Safety Analysis Reports*, U.S. Department of Energy

7. DOE G 151.1-1, Emergency Management Guide, *Hazards Surveys and Hazards Assessments*, U.S. Department of Energy; August, 1997

8. 40000-RP-0030, *Radon Modeling Report for OU4 Safety Analysis Plan,* Parsons; Cincinnati, Ohio; February, 1998

9. *Engineers' Guide to the Elementary Behavior of Radon Daughters*, Evans, Robley D., 1980 Health Physics, Vol. 38, No. 6, pp. 1173-1197

10. *An Evaluation of the Need for Personnel Radon Monitoring at the FEMP*, Fluor Fernald; February, 1999

11. 10 CFR 835, *Occupational Radiation Protection*, Code of Federal Regulations, Title 10, Part 835, U.S. Department of Energy

12. 40710-RP-001, *Controlling Radon Emissions with Activated Carbon Columns: Preliminary Investigations,* Technical Requirements Document, Attachment D-1, Langner, G.H., and D.T. Kendrick; December 1, 1994

13. *Dynamic Adsorption of Radon on Activated Carbon*, Strong, Kaye P., and Desmond M. Levins, 15th DOE Nuclear Air Cleaning Conference, Vol. 15, No. 5; 1978

14. ANL/EAD-4, *Users Manual for RESRAD Version 6*, Argonne National Laboratory; July 2001.

15. 40710-RP-0005, Rev. 1, *Evaluation of Water as a Fluid Diffusion Barrier to Reduce Radon Emanation from Radium-Bearing Materials*, Fluor Fernald; February 25, 1999

ATTACHMENT

EBA-1 through EBA-5 SPREADSHEETS

THIS PAGE INTENTIONALLY BLANK

AWR Project RCS Failure - Continuous Flux from Silo Contents

Spreadsheet EBA-1 Radon

FERNALD RADON MODEL

$\ln C = A_0 + A_1\ln(Q) + A_2DW + A_3XW + A_4\ln(u_s) + A_5\ln(C_{lag})$

Where:
- C = concentration (pCi/L)
- Q = uniform emissions rate (uCi/sec)
- DW = $\ln(x^2)$ = downwind dilution term
- XW = $(y/x)^2$ = crosswind dilution term
- u_s = the mean wind speed (m/s)
- x = the downwind distance (m)
- y = the crosswind distance (m)

Coefficients		Inputs			
A0	8.1624	Q =	2.31E+01	uCi/sec	2 Ci/ 24 hr
A1	1.0158	Wind Speed	1.8	m/s	
A2	-0.6537	y (m) =	0		
A3	-0.9789	x (m)	30		
A4	-1.1262	C lag =	0	pCi/L	
A5	N/A				

Result: C = 5.16E+02 pCi/L

Dose Conversion:

The ^{222}Rn DAC = 3×10^{-8} uCi/mL, resulting in 5 rem, for 2000 hrs exposure (Ref. 10 CFR 835, Appendix A)

The ALI for ^{222}Rn is 4 WLM. 4 WLM = 5 rem, 1 WLM = 1.25 rem.

Approach 1

WLM =	CFT / KN	C =	5.16E+02	pCi/L
		Equilibrium Factor (F) =	1	
		Time =	24	hr
WLM =	7.28E-01	K =	17000	pCi/L /WL hr/mo
Dose =	9.10E-01 rem	N =	1	
		1 WLM =	1.25	rem

Approach 2

# of DAC =	C/DAC	C =	5.16E+02	pCi/L
# of DAC	1.72E+01	1 DAC =	3.00E-08	uCi/mL
Dose =	# DAC*F*DF*T	1 DAC =	30	pCi/L
Dose =	1.03E+00 rem	Equilibrium Fm Factor (F) =	1	
		DAC DF =	2.5	mrem/hr
		Time =	24	hr

x (m)	Wind Speed (m/s)	C (pCi/L)	X/Q	#DAC	F equil	Time (hr)	Dose (mrem)
30	1.8	5.16E+02	2.23E-02	1.72E+01	1	24	1.03E+03
100	4.5	3.81E+01	1.64E-03	1.27E+00	1	2	6.34E+00
330	1.8	2.24E+01	9.69E-04	7.48E-01	1	2	3.74E+00

AWR
Carbon Bed Failure (Elution)

Spreadsheet EBA 2 Radon

FERNALD RADON MODEL

$\ln C = A_0 + A_1\ln(Q) + A_2DW + A_3XW + A_4\ln(u_s) + A_5\ln(C_{lag})$

Where:
- C = concentration (pCi/L)
- Q = uniform emissions rate (uCi/sec)
- DW = $\ln(x^2)$ = downwind dilution term
- XW = $(y/x)^2$ = crosswind dilution term
- u_s = the mean wind speed (m/s)
- x = the downwind distance
- y = the crosswind distance (m)=0

Coefficients	
A0	8.1624
A1	1.0158
A2	-0.6537
A3	-0.9789
A4	-1.1262
A5	N/A

Inputs				
Q =	1.45E+03	uCi/sec	125	Ci/ 24 hr
Wind Speed	2.0	m/s		
y (m) =	0			
x (m)	30			
C lag =	0	pCi/L		

Result: C = 3.05E+04 pCi/L

Dose Conversion:

The ^{222}Rn DAC = 3×10^{-8} uCi/mL, resulting in 5 rem, for 2000 hrs exposure (Ref. 10 CFR 835, Appendix A)

The ALI for ^{222}Rn is 4 WLM. 4 WLM = 5 rem, 1 WLM = 1.25 rem.

Approach 1

WLM =	CFT	C =	3.05E+04	pCi/L
	KN	Equilibrium Factor (F) =	0.012	
		Time =	24	hr
WLM =	5.18E-01	K =	17000	pCi/L /WL hr/mo
Dose =	6.47E-01 rem	N =	1	
		1 WLM =	1.25	rem

Approach 2

# of DAC =	C/DAC	C =	3.05E+04	pCi/L
# of DAC	1.02E+03	1 DAC =	3.00E-08	uCi/mL
Dose =	# DAC*F*DF*T	1 DAC =	30	pCi/L
Dose =	7.33E-01 rem	Equilibrium Factor (F) =	0.012	
		DAC DF =	2.5	mrem/hr
		Time =	24	hr

x (m)	Wind Speed (m/s)	C (pCi/L)	X/Q	#DAC	Ingrowth Time (min)	F equil	Time (hr)	Dose (mrem)
30	2	3.05E+04	2.11E-02	1.02E+03	0.25	0.012	24	7.33E+02
100	2	6.33E+03	4.38E-03	2.11E+02	0.83	0.03	2	3.16E+01
330	2	1.33E+03	9.19E-04	4.43E+01	2.75	0.07	2	1.55E+01

Accident Dose Calculations for AWR Project - Over/Underpressurize Silo - SOLIDS RELEASE

References: Spreadsheet EBA 3

Sludge activity concentration data are from OU4 RI/FS, Table 4-2 and Table 4-19.
The sludge density is 2.055 g/cc from OU4 RI/FS.
Dose conversion factors for inhalation are from Table 2.1, EPA-520/1-88-020 (Federal Guidance Report 11), except radium
The DCF lung clearance class was selected for oxides, except radium
The values for ARF and RF from DOE-HDBK-3010, pg 3-4.
Atmospheric stability D: Ref. DOE-STD-1027-92, Attachment 1, pages A-6 and A-7, for hazard categorization.

Dose Methodology:

DOSE = Q * X/Q * BR * DCF * t

where:

BR =	3.33E-04 m^3/s	Breathing Rate (a constant)
DCF =	rem/Ci	Dose Conversion Factor (varies)
t =	exposure time	
Q =	Airborne Source Term	

Q = MAR * DR * LPF * ARF * RF

where:

MAR =	material at risk of release	
DR =	1	damage ratio
LPF =	1	leak path factor
ARF*RF=		airborne release fraction x respirable fraction

X/Q Methodology:

A Gaussian dispersion model is used to determine the dispersion loss between the release and receptor.
The methodology allows a comparison of the effects of plume meander and wake effects. (Ref. NRC Reg Guide 1.145)

Equation 1 X/Q = 1/(U *(pi * sig-y * sig-z +(A/2)))
Equation 2 X/Q = 1/(U * (3 * pi * sig-y * sig-z))
Equation 3 X/Q = 1/(U * pi * E-y * sig-z)

The higher value from equation 1 and 2 is selected. This value is compared with the value from equation 3 and the lower value is selected as the appropriate X/Q value.

A =		cross-sectional area of structure, m^2	
d =		downwind distance to evaluation point, m	User Input
		Atmospheric stability class (D, E, F, G)	
sig-y =		lateral plume spread, m	Constant
sig-z =		vertical plume spread, m	
E-y =		lateral plume spread with wake effects, m	Calculated
U =		10 meter above grade wind speed, m/sec	

Dispersion Calculations:

A =	100	m^2	A =	100		A =	100	
pi =	3.14159		pi =	3.14159		pi =	3.14159	
d =	30	m	d =	100		d =	330	
	D			D			F	
sig-y =	3.67	m	sig-y =	10.34		sig-y =	13.26	
sig-z =	1.63	m	sig-z =	4.95		sig-z =	6.01	
E-y =	7.35	m	E-y =	12.39		E-y =	53.05	
U =	1	m/s	U =	4.5		U =	1	

Accident Dose Calculations for Over/Underpressurize Silo - SOLIDS RELEASE IMPACT

Spreadsheet EBA 3

Dose Calculation:

Sludge Activity (pCi/cc) equals sludge activity (pCi/g) x sludge density
Source Term (MAR) equals sludge activity (pCi/cc) x sludge volume
Airborne Source Term (Q) equals the MAR x ARF x RF x DR x LPF
The DCF is listed for each isotope.
DOSE = Q * X/Q * BR * DCF * t

Sludge Density = 2.055 g/cm^3
Sludge Volume = 32.8 m^3 (1 percent of Silo 1 volume)

ARF =	5.00E-05	
RF =	0.8	
DR =	1.0	
LPF =	1.0	
BR =	3.33E-04	m^3/s

Distance (m)	Stability Class	Wind Spd (m/s)	X/Q (s/m3)	Time (hours)
30	D	1	1.77E-02	1
100	D	4.5	1.05E-03	1
330	F	1	9.98E-04	1

Radionuclide	Sludge activity pCi/g	Sludge activity pCi/cc	Source Term (MAR) pCi	Airborne Source Term (Q) pCi/s	DCF (mrem/pCi)	Dose @ 30 (mrem)	Dose @ 100 (mrem)	Dose @ 330 (mrem)
Actinium-227	7670	1.58E+04	5.17E+11	5.74E+03	1.29E+00	1.57E+02	9.37E+00	8.86E+00
Actinium-228	1110	2.28E+03	7.48E+10	8.31E+02	1.25E-04	2.20E-03	1.31E-04	1.24E-04
Bismuth-210	202000	4.15E+05	1.36E+13	1.51E+05	1.96E-04	6.28E-01	3.75E-02	3.55E-02
Francium-223	110	2.26E+02	7.41E+09	8.24E+01	6.22E-06	1.09E-05	6.48E-07	6.13E-07
Protactinium-231	4040	8.30E+03	2.72E+11	3.03E+03	8.58E-01	5.50E+01	3.28E+00	3.10E+00
Protactinium-234	2	3.68E+00	1.21E+08	1.34E+00	8.14E-07	2.31E-08	1.38E-09	1.31E-09
Lead-210	202000	4.15E+05	1.36E+13	1.51E+05	1.36E-02	4.36E+01	2.60E+00	2.46E+00
Polonium-210	281000	5.77E+05	1.89E+13	2.10E+05	8.58E-03	3.82E+01	2.28E+00	2.16E+00
Radium-223	7670	1.58E+04	5.17E+11	5.74E+03	7.84E-03	9.54E-01	5.69E-02	5.39E-02
Radium-224	7360	1.51E+04	4.96E+11	5.51E+03	3.16E-03	3.69E-01	2.20E-02	2.08E-02
Radium-226	477000	9.80E+05	3.22E+13	3.57E+05	1.18E-02	8.93E+01	5.33E+00	5.04E+00
Radium-228	1110	2.28E+03	7.48E+10	8.31E+02	4.77E-03	8.40E-02	5.01E-03	4.74E-03
Thorium-227	7560	1.55E+04	5.10E+11	5.66E+03	1.62E-02	1.94E+00	1.16E-01	1.10E-01
Thorium-228	7360	1.51E+04	4.96E+11	5.51E+03	3.42E-01	3.99E+01	2.38E+00	2.25E+00
Thorium-230	76200	1.57E+05	5.14E+12	5.71E+04	2.62E-01	3.17E+02	1.89E+01	1.79E+01
Thorium-231	94	1.93E+02	6.34E+09	7.04E+01	8.77E-07	1.31E-06	7.80E-08	7.38E-08
Thorium-232	1110	2.28E+03	7.48E+10	8.31E+02	1.15E+00	2.02E+01	1.21E+00	1.14E+00
Thorium-234	1120	2.30E+03	7.55E+10	8.39E+02	3.50E-05	6.22E-04	3.71E-05	3.51E-05
Uranium-234	1160	2.38E+03	7.82E+10	8.69E+02	1.32E-01	2.43E+00	1.45E-01	1.37E-01
Uranium-235	94	1.93E+02	6.34E+09	7.04E+01	1.23E-01	1.83E-01	1.09E-02	1.04E-02
Uranium-238	1120	2.30E+03	7.55E+10	8.39E+02	1.18E-01	2.10E+00	1.25E-01	1.18E-01
TOTAL	1.29E+06	2.64E+06	8.67E+13	9.64E+05	4.34E+00	**7.69E+02**	**4.59E+01**	**4.34E+01**

Accident Dose Calculations for Over/Underpressurize Silo - SOLIDS RELEASE – RESUSPENSION EBA 3

Dose Calculation:

Sludge Activity (pCi/cc) equals sludge activity (pCi/g) x sludge density
Source Term (MAR) equals sludge activity (pCi/cc) x sludge volume
Airborne Source Term (Q) equals the MAR x ARF x RF x DR x LPF
The DCF is listed for each isotope.
DOSE = Q * X/Q * BR * DCF * t

Sludge Density = 2.055 g/cm^3
Sludge Volume = 32.8 m^3 (1 percent of Silo 1 volume)

ARR =	4.00E-07	per hour
RF =	1.0	
DR =	1.0	
LPF =	1.0	
BR =	3.33E-04	m^3/s

Distance (m)	Stability Class	Wind Spd (m/s)	X/Q (s/m3)	Time (hours)
30	D	1	1.77E-02	24
100	D	4.5	1.05E-03	2
330	F	1	9.98E-04	2

Radionuclide	Sludge activity pCi/g	Sludge activity pCi/cc	Source Term (MAR) pCi	Airborne Source Term (Q) pCi/s	DCF (mrem/pCi)	Dose @ 30 (mrem)	Dose @ 100 (mrem)	Dose @ 330 (mrem)
Actinium-227	7670	1.58E+04	5.17E+11	5.74E+01	1.29E+00	3.77E+01	1.87E-01	1.77E-01
Actinium-228	1110	2.28E+03	7.48E+10	8.31E+00	1.25E-04	5.28E-04	2.63E-06	2.49E-06
Bismuth-210	202000	4.15E+05	1.36E+13	1.51E+03	1.96E-04	1.51E-01	7.50E-04	7.09E-04
Francium-223	110	2.26E+02	7.41E+09	8.24E-01	6.22E-06	2.60E-06	1.30E-08	1.23E-08
Protactinium-231	4040	8.30E+03	2.72E+11	3.03E+01	8.58E-01	1.32E+01	6.56E-02	6.21E-02
Protactinium-234	2	3.68E+00	1.21E+08	1.34E-02	8.14E-07	5.55E-09	2.76E-11	2.61E-11
Lead-210	202000	4.15E+05	1.36E+13	1.51E+03	1.36E-02	1.05E+01	5.20E-02	4.92E-02
Polonium-210	281000	5.77E+05	1.89E+13	2.10E+03	8.58E-03	9.18E+00	4.56E-02	4.32E-02
Radium-223	7670	1.58E+04	5.17E+11	5.74E+01	7.84E-03	2.29E-01	1.14E-03	1.08E-03
Radium-224	7360	1.51E+04	4.96E+11	5.51E+01	3.16E-03	8.85E-02	4.40E-04	4.17E-04
Radium-226	477000	9.80E+05	3.22E+13	3.57E+03	1.18E-02	2.15E+01	1.07E-01	1.01E-01
Radium-228	1110	2.28E+03	7.48E+10	8.31E+00	4.77E-03	2.02E-02	1.00E-04	9.48E-05
Thorium-227	7560	1.55E+04	5.10E+11	5.66E+01	1.62E-02	4.66E-01	2.32E-03	2.19E-03
Thorium-228	7360	1.51E+04	4.96E+11	5.51E+01	3.42E-01	9.58E+00	4.77E-02	4.51E-02
Thorium-230	76200	1.57E+05	5.14E+12	5.71E+02	2.62E-01	7.60E+01	3.78E-01	3.58E-01
Thorium-231	94	1.93E+02	6.34E+09	7.04E-01	8.77E-07	3.14E-07	1.56E-09	1.48E-09
Thorium-232	1110	2.28E+03	7.48E+10	8.31E+00	1.15E+00	4.86E+00	2.42E-02	2.29E-02
Thorium-234	1120	2.30E+03	7.55E+10	8.39E+00	3.50E-05	1.49E-04	7.42E-07	7.02E-07
Uranium-234	1160	2.38E+03	7.82E+10	8.69E+00	1.32E-01	5.83E-01	2.90E-03	2.74E-03
Uranium-235	94	1.93E+02	6.34E+09	7.04E-01	1.23E-01	4.40E-02	2.19E-04	2.07E-04
Uranium-238	1120	2.30E+03	7.55E+10	8.39E+00	1.18E-01	5.03E-01	2.50E-03	2.37E-03
TOTAL	1.29E+06	2.64E+06	8.67E+13	9.64E+03	4.34E+00	**1.85E+02**	**9.17E-01**	**8.68E-01**

AWR Project
Over/Underpressurization - Instantaneous Headspace

Spreadsheet EBA 3 Rn Headspace

FERNALD RADON MODEL

$\ln C = A_0 + A_1\ln(Q) + A_2DW + A_3XW + A_4\ln(u_s) + A_5\ln(C_{lag})$

Where:
- C = concentration (pCi/L)
- Q = uniform emissions rate (uCi/sec)
- DW = $\ln(x^2)$ = downwind dilution term
- XW = $(y/x)^2$ = crosswind dilution term
- u_s = the mean wind speed (m/s)
- x = the downwind distance (m)
- y = the crosswind distance (m)

Coefficients	
A0	8.1624
A1	1.0158
A2	-0.6537
A3	-0.9789
A4	-1.1262
A5	N/A

Inputs			
Q =	1.25E+02	uCi/sec	0.45 Ci/hr
Wind Speed	1.8	m/s	
y (m) =	0		
x (m)	30		
C lag =	0	pCi/L	

Result: C = 2.86E+03 pCi/L

Dose Conversion:

The ^{222}Rn DAC = 3x10^{-8} uCi/mL, resulting in 5 rem, for 2000 hrs exposure (Ref. 10 CFR 835, Appendix A)

The ALI for ^{222}Rn is 4 WLM. 4 WLM = 5 rem, 1 WLM = 1.25 rem.

Approach 1

WLM =	CFT	C =	4.22E+03	pCi/L
	KN	Equilibrium Factor (F) =	1	
		Time =	1	hr
WLM =	1.68E-01	K =	17000	pCi/L /WL hr/mo
Dose =	2.10E-01 rem	N =	1	
		1 WLM =	1.25	rem

Approach 2

# of DAC =	C/DAC	C =	4.22E+03	pCi/L
# of DAC	9.53E+01	1 DAC =	3.00E-08	uCi/mL
Dose =	# DAC*F*DF*T	1 DAC =	30	pCi/L
Dose =	2.38E-01 rem	Equilibrium Factor (F) =	1	
		DAC DF =	2.5	mrem/hr
		Time =	1	hr

x (m)	Wind Speed (m/s)	C (pCi/L)	X/Q	#DAC	Ingrowth Time (min)	F equil	Time (hr)	Dose (mrem)
30	1.8	42.86E+03	2.30E-02	9.53E+01	N/A	1	1	2.38E+02
100	4.5	2.11E+02	1.70E-03	7.04E+00	N/A	1	1	1.76E+01
330	1.8	1.24E+02	1.00E-03	4.15E+00	N/A	1	1	1.04E+01

AWR Project Over/Underpressurization - Continuous Flux from Silo Contents

Spreadsheet EBA-3 Radon

FERNALD RADON MODEL

$\ln C = A_0 + A_1\ln(Q) + A_2DW + A_3XW + A_4\ln(u_s) + A_5\ln(C_{lag})$

Where:
- C = concentration (pCi/L)
- Q = uniform emissions rate (uCi/sec)
- DW = $\ln(x^2)$ = downwind dilution term
- XW = $(y/x)^2$ = crosswind dilution term
- u_s = the mean wind speed (m/s)
- x = the downwind distance (m)
- y = the crosswind distance (m)

Coefficients		Inputs		
A0	8.1624	Q =	2.31E+01 uCi/sec	2 Ci/ 24 hr
A1	1.0158	Wind Speed	1.8 m/s	
A2	-0.6537	y (m) =	0	
A3	-0.9789	x (m)	30	
A4	-1.1262	C lag =	0 pCi/L	
A5	N/A			

Result: C = 5.16E+02 pCi/L

Dose Conversion:

The ^{222}Rn DAC = 3×10^{-8} uCi/mL, resulting in 5 rem, for 2000 hrs exposure (Ref. 10 CFR 835, Appendix A)

The ALI for ^{222}Rn is 4 WLM. 4 WLM = 5 rem, 1 WLM = 1.25 rem.

Approach 1

WLM =	CFT / KN	C =	5.16E+02 pCi/L	
		Equilibrium Factor (F) =	0.012	
		Time =	24 hr	
WLM =	8.73E-03	K =	17000 pCi/L /WL	hr/mo
Dose =	1.09E-02 rem	N =	1	
		1 WLM =	1.25 rem	

Approach 2

# of DAC =	C/DAC	C =	5.16E+02 pCi/L	
# of DAC	1.72E+01	1 DAC =	3.00E-08 uCi/mL	
Dose =	# DAC*F*DF*T	1 DAC =	30 pCi/L	
Dose =	1.24E-02 rem	Equilibrium Factor (F) =	0.012	
		DAC DF =	2.5 mrem/hr	
		Time =	24 hr	

x (m)	Wind Speed (m/s)	C (pCi/L)	X/Q	#DAC	F equil	Time (hr)	Ingrowth Time (min)	Dose (mrem)
30	1.8	5.16E+02	2.23E-02	1.72E+01	0.012	24	0.28	1.24E+01
100	4.5	3.81E+01	1.64E-03	1.27E+00	0.012	2	0.37	7.61E-02
330	1.8	2.24E+01	9.69E-04	7.48E-01	0.07	2	3.06	2.62E-01

AWR Project Over/Underpressurization - Instantaneous Rn Release, Spilled Solids

Spreadsheet EBA 3 Rn Inst Solids

FERNALD RADON MODEL

$\ln C = A_0 + A_1\ln(Q) + A_2DW + A_3XW + A_4\ln(u_s) + A_5\ln(C_{lag})$

Where:
- C = concentration (pCi/L)
- Q = uniform emissions rate (uCi/sec)
- DW = $\ln(x^2)$ = downwind dilution term
- XW = $(y/x)^2$ = crosswind dilution term
- u_s = the mean wind speed (m/s)
- x = the downwind distance (m)
- y = the crosswind distance (m)

Coefficients		Inputs			
A0	8.1624	Q =	3.11E+03	uCi/sec	11.2 Ci/hr
A1	1.0158	Wind Speed	1.8	m/s	
A2	-0.6537	y (m) =	0		
A3	-0.9789	x (m)	30		
A4	-1.1262	C lag =	0	pCi/L	
A5	N/A				

Result: C = 7.49E+04 pCi/L

Dose Conversion:

The ^{222}Rn DAC = 3×10^{-8} uCi/mL, resulting in 5 rem, for 2000 hrs exposure (Ref. 10 CFR 835, Appendix A)
The ALI for ^{222}Rn is 4 WLM. 4 WLM = 5 rem, 1 WLM = 1.25 rem.

Approach 1

WLM =	CFT	C =	7.49E+04	pCi/L
	KN	Equilibrium Fa Factor (F) =	0.01	
		Time =	1	hr
WLM =	5.28E-02	K =	17000	pCi/L /WL hr/mo
Dose =	6.61E-02 rem	N =	1	
		1 WLM =	1.25	rem

Approach 2

# of DAC =	C/DAC	C =	7.49E+04	pCi/L
# of DAC	2.50E+03	1 DAC =	3.00E-08	uCi/mL
Dose =	# DAC*F*DF*T	1 DAC =	30	pCi/L
Dose =	7.49E-02 rem	Equilibrium Fa Factor (F) =	0.012	
		DAC DF =	2.5	mrem/hr
		Time =	1	hr

x (m)	Wind Speed (m/s)	C (pCi/L)	X/Q	#DAC	Ingrowth Time (min)	F equil	Time (hr)	Dose (mrem)
30	1.8	7.49E+04	2.41E-02	2.50E+03	0.28	0.012	1	7.49E+01
100	4.5	5.53E+03	1.78E-03	1.84E+02	0.37	0.012	1	5.53E+00
330	1.8	3.26E+03	1.05E-03	1.09E+02	3.06	0.12	1	3.26E+01

Accident Dose Calculations for Transfer Line Breach - SOLIDS RELEASE IMPACT

Spreadsheet EBA 4

Dose Calculation:

Slurry Activity (pCi/cc) equals sludge activity (pCi/g) x sludge density (g/cc) x wt % solids x 1.43 g sludge/g solids
Source Term (MAR) equals slurry activity (pCi/cc) x slurry volume
Airborne Source Term (Q) equals the MAR x ARF x RF x DR x LPF
The DCF is listed for each isotope.
DOSE = Q * X/Q * BR * DCF * t

wt % solids =	15	
slurry density =	68.90 lb/ft3	
Slurry Volume =	22.7 m^3	(400 gpm x 15 min = 6000 gal)

ARF =	5.00E-05	
RF =	0.8	
DR =	1.0	
LPF =	1.0	
BR =	3.33E-04	m^3/s

Distance (m)	Stability Class	Wind Spd (m/s)	X/Q (s/m3)	Time (hours)
30	D	1	1.77E-02	1
100	D	4.5	1.05E-03	1
330	F	1	9.98E-04	1

Radionuclide	Sludge activity pCi/g	Slurry activity pCi/cc	Source Term (MAR) pCi	Airborne Source Term (Q) pCi/s	DCF (mrem/pCi)	Dose @ 30 (mrem)	Dose @ 100 (mrem)	Dose @ 330 (mrem)
Actinium-227	7670	1.82E+03	4.13E+10	4.58E+02	1.29E+00	1.25E+01	7.47E-01	7.07E-01
Actinium-228	1110	2.63E+02	5.97E+09	6.63E+01	1.25E-04	1.76E-04	1.05E-05	9.92E-06
Bismuth-210	202000	4.78E+04	1.09E+12	1.21E+04	1.96E-04	5.01E-02	2.99E-03	2.83E-03
Francium-223	110	2.61E+01	5.92E+08	6.57E+00	6.22E-06	8.66E-07	5.17E-08	4.89E-08
Protactinium-231	4040	9.57E+02	2.17E+10	2.41E+02	8.58E-01	4.39E+00	2.62E-01	2.48E-01
Protactinium-234	2	4.24E-01	9.63E+06	1.07E-01	8.14E-07	1.84E-09	1.10E-10	1.04E-10
Lead-210	202000	4.78E+04	1.09E+12	1.21E+04	1.36E-02	3.48E+00	2.08E-01	1.96E-01
Polonium-210	281000	6.65E+04	1.51E+12	1.68E+04	8.58E-03	3.05E+00	1.82E-01	1.72E-01
Radium-223	7670	1.82E+03	4.13E+10	4.58E+02	7.84E-03	7.61E-02	4.54E-03	4.30E-03
Radium-224	7360	1.74E+03	3.96E+10	4.40E+02	3.16E-03	2.94E-02	1.76E-03	1.66E-03
Radium-226	477000	1.13E+05	2.57E+12	2.85E+04	1.18E-02	7.12E+00	4.25E-01	4.02E-01
Radium-228	1110	2.63E+02	5.97E+09	6.63E+01	4.77E-03	6.70E-03	4.00E-04	3.78E-04
Thorium-227	7560	1.79E+03	4.07E+10	4.52E+02	1.62E-02	1.55E-01	9.25E-03	8.75E-03
Thorium-228	7360	1.74E+03	3.96E+10	4.40E+02	3.42E-01	3.19E+00	1.90E-01	1.80E-01
Thorium-230	76200	1.80E+04	4.10E+11	4.55E+03	2.62E-01	2.53E+01	1.51E+00	1.43E+00
Thorium-231	94	2.23E+01	5.06E+08	5.62E+00	8.77E-07	1.04E-07	6.23E-09	5.89E-09
Thorium-232	1110	2.63E+02	5.97E+09	6.63E+01	1.15E+00	1.62E+00	9.64E-02	9.12E-02
Thorium-234	1120	2.65E+02	6.02E+09	6.69E+01	3.50E-05	4.96E-05	2.96E-06	2.80E-06
Uranium-234	1160	2.75E+02	6.24E+09	6.93E+01	1.32E-01	1.94E-01	1.16E-02	1.09E-02
Uranium-235	94	2.23E+01	5.06E+08	5.62E+00	1.23E-01	1.46E-02	8.73E-04	8.26E-04
Uranium-238	1120	2.65E+02	6.02E+09	6.69E+01	1.18E-01	1.67E-01	9.98E-03	9.45E-03
TOTAL	1.29E+06	3.05E+05	6.92E+12	7.69E+04	4.34E+00	**6.13E+01**	**3.66E+00**	**3.46E+00**

Accident Dose Calculations for Transfer Line Breach - SOLIDS RELEASE RESUSPENSION

Spreadsheet EBA 4

Dose Calculation:

Slurry Activity (pCi/cc) equals sludge activity (pCi/g) x sludge density (g/cc) x wt % solids x 1.43 g sludge/g solids
Source Term (MAR) equals slurry activity (pCi/cc) x slurry volume
Airborne Source Term (Q) equals the MAR x ARF x RF x DR x LPF
The DCF is listed for each isotope.
DOSE = Q * X/Q * BR * DCF * t

wt % solids = 15
slurry density = 68.90 lb/ft3
Slurry Volume = 22.7 m^3 (400 gpm x 15 min = 6000 gal)

ARF =	4.00E-07	
RF =	1.0	
DR =	1.0	
LPF =	1.0	
BR =	3.33E-04	m^3/s

Distance (m)	Stability Class	Wind Spd (m/s)	X/Q (s/m3)	Time (hours)
30	D	1	1.77E-02	24
100	D	4.5	1.05E-03	2
330	F	1	9.98E-04	2

Radionuclide	Sludge activity pCi/g	Slurry activity pCi/cc	Source Term (MAR) pCi	Airborne Source Term (Q) pCi/s	DCF (mrem/pCi)	Dose @ 30 (mrem)	Dose @ 100 (mrem)	Dose @ 330 (mrem)
Actinium-227	7670	1.82E+03	4.13E+10	4.58E+00	1.29E+00	3.01E+00	1.49E-02	1.41E-02
Actinium-228	1110	2.63E+02	5.97E+09	6.63E-01	1.25E-04	4.22E-05	2.10E-07	1.98E-07
Bismuth-210	202000	4.78E+04	1.09E+12	1.21E+02	1.96E-04	1.20E-02	5.98E-05	5.66E-05
Francium-223	110	2.61E+01	5.92E+08	6.57E-02	6.22E-06	2.08E-07	1.03E-09	9.78E-10
Protactinium-231	4040	9.57E+02	2.17E+10	2.41E+00	8.58E-01	1.05E+00	5.24E-03	4.95E-03
Protactinium-234	2	4.24E-01	9.63E+06	1.07E-03	8.14E-07	4.43E-10	2.20E-12	2.08E-12
Lead-210	202000	4.78E+04	1.09E+12	1.21E+02	1.36E-02	8.35E-01	4.15E-03	3.93E-03
Polonium-210	281000	6.65E+04	1.51E+12	1.68E+02	8.58E-03	7.32E-01	3.64E-03	3.45E-03
Radium-223	7670	1.82E+03	4.13E+10	4.58E+00	7.84E-03	1.83E-02	9.08E-05	8.60E-05
Radium-224	7360	1.74E+03	3.96E+10	4.40E+00	3.16E-03	7.07E-03	3.51E-05	3.32E-05
Radium-226	477000	1.13E+05	2.57E+12	2.85E+02	1.18E-02	1.71E+00	8.50E-03	8.05E-03
Radium-228	1110	2.63E+02	5.97E+09	6.63E-01	4.77E-03	1.61E-03	8.00E-06	7.57E-06
Thorium-227	7560	1.79E+03	4.07E+10	4.52E+00	1.62E-02	3.72E-02	1.85E-04	1.75E-04
Thorium-228	7360	1.74E+03	3.96E+10	4.40E+00	3.42E-01	7.65E-01	3.80E-03	3.60E-03
Thorium-230	76200	1.80E+04	4.10E+11	4.55E+01	2.62E-01	6.06E+00	3.02E-02	2.85E-02
Thorium-231	94	2.23E+01	5.06E+08	5.62E-02	8.77E-07	2.50E-08	1.25E-10	1.18E-10
Thorium-232	1110	2.63E+02	5.97E+09	6.63E-01	1.15E+00	3.88E-01	1.93E-03	1.82E-03
Thorium-234	1120	2.65E+02	6.02E+09	6.69E-01	3.50E-05	1.19E-05	5.92E-08	5.60E-08
Uranium-234	1160	2.75E+02	6.24E+09	6.93E-01	1.32E-01	4.65E-02	2.31E-04	2.19E-04
Uranium-235	94	2.23E+01	5.06E+08	5.62E-02	1.23E-01	3.51E-03	1.75E-05	1.65E-05
Uranium-238	1120	2.65E+02	6.02E+09	6.69E-01	1.18E-01	4.01E-02	2.00E-04	1.89E-04
TOTAL	1.29E+06	3.05E+05	6.92E+12	7.69E+02	4.34E+00	**1.47E+01**	**7.32E-02**	**6.93E-02**

AWR Projcet Transfer Line Breach - Radon Release

Spreadsheet EBA 4 Rn Instantaneous

FERNALD RADON MODEL

$\ln C = A_0 + A_1\ln(Q) + A_2DW + A_3XW + A_4\ln(u_s) + A_5\ln(C_{lag})$

Where:
- C = concentration (pCi/L)
- Q = uniform emissions rate (uCi/sec)
- DW = $\ln(x^2)$ = downwind dilution term
- XW = $(y/x)^2$ = crosswind dilution term
- u_s = the mean wind speed (m/s)
- x = the downwind distance (m)
- y = the crosswind distance (m)

Coefficients		Inputs			
A0	8.1624	Q =	2.50E+02	uCi/sec	0.9 Ci/hr
A1	1.0158	Wind Speed	1.8	m/s	
A2	-0.6537	y (m) =	0		
A3	-0.9789	x (m)	30		
A4	-1.1262	C lag =	0	pCi/L	
A5	N/A				

Result: C = 5.78E+03 pCi/L

Dose Conversion:

The ^{222}Rn DAC = 3×10^{-8} uCi/mL, resulting in 5 rem, for 2000 hrs exposure (Ref. 10 CFR 835, Appendix A)

The ALI for ^{222}Rn is 4 WLM. 4 WLM = 5 rem, 1 WLM = 1.25 rem.

Approach 1

WLM =	CFT	C =	5.78E+03	pCi/L
	KN	Equilibrium Fa Factor (F) =	0.01	
		Time =	1	hr
WLM =	4.08E-03	K =	17000	pCi/L /WL hr/mo
Dose =	5.10E-03 rem	N =	1	
		1 WLM =	1.25	rem

Approach 2

# of DAC =	C/DAC	C =	5.78E+03	pCi/L
# of DAC	1.93E+02	1 DAC =	3.00E-08	uCi/mL
Dose =	# DAC*F*DF*T	1 DAC =	30	pCi/L
Dose =	5.78E-03 rem	Equilibrium Fa Factor (F) =	0.012	
		DAC DF =	2.5	mrem/hr
		Time =	1	hr

x (m)	Wind Speed (m/s)	C (pCi/L)	X/Q	#DAC	Ingrowth Time (min)	F equil	Time (hr)	Dose (mrem)
30	1.8	5.78E+03	2.31E-02	1.93E+02	0.28	0.012	1	5.78E+00
100	4.5	4.27E+02	1.71E-03	1.42E+01	0.37	0.012	1	4.27E-01
330	1.8	2.51E+02	1.01E-03	8.38E+00	3.06	0.12	1	2.51E+00

AWR Project Transfer Line Breach - Radon Release

Spreadsheet EBA 4 Rn Flux

FERNALD RADON MODEL

$\ln C = A_0 + A_1\ln(Q) + A_2DW + A_3XW + A_4\ln(u_s) + A_5\ln(C_{lag})$

Where:
- C = concentration (pCi/L)
- Q = uniform emissions rate (uCi/sec)
- DW = $\ln(x^2)$ = downwind dilution term
- XW = $(y/x)^2$ = crosswind dilution term
- u_s = the mean wind speed (m/s)
- x = the downwind distance (m)
- y = the crosswind distance (m)

Coefficients	
A0	8.1624
A1	1.0158
A2	-0.6537
A3	-0.9789
A4	-1.1262
A5	N/A

Inputs			
Q =	2.22E+00	uCi/sec	0.008 Ci/hr
Wind Speed	1.8	m/s	
y (m) =	0		
x (m)	30		
C lag =	0	pCi/L	

Result: C = 4.77E+01 pCi/L

Dose Conversion:

The ^{222}Rn DAC = 3×10^{-8} uCi/mL, resulting in 5 rem, for 2000 hrs exposure (Ref. 10 CFR 835, Appendix A)

The ALI for ^{222}Rn is 4 WLM. 4 WLM = 5 rem, 1 WLM = 1.25 rem.

Approach 1

WLM =	CFT	C =	4.77E+01	pCi/L
	KN	Equilibrium Fn Factor (F) =	0.01	
		Time =	1	hr
WLM =	3.37E-05	K =	17000	pCi/L /WL hr/mo
Dose =	4.21E-05 rem	N =	1	
		1 WLM =	1.25	rem

Approach 2

# of DAC =	C/DAC	C =	4.77E+01	pCi/L
# of DAC	1.59E+00	1 DAC =	3.00E-08	uCi/mL
Dose =	# DAC*F*DF*T	1 DAC =	30	pCi/L
Dose =	4.77E-05 rem	Equilibrium Fn Factor (F) =	0.012	
		DAC DF =	2.5	mrem/hr
		Time =	1	hr

x (m)	Wind Speed (m/s)	C (pCi/L)	X/Q	#DAC	Ingrowth Time (min)	F equil	Time (hr)	Dose (mrem)
30	1.8	4.77E+01	2.15E-02	1.59E+00	0.28	0.012	24	1.14E+00
100	4.5	3.52E+00	1.58E-03	1.17E-01	0.37	0.012	2	7.04E-03
330	1.8	2.07E+00	9.34E-04	6.92E-02	3.06	0.12	2	4.15E-02

AWR Project TTA Tank Failure - Radon Release

Spreadsheet EBA 5 Rn Flux

FERNALD RADON MODEL

$\ln C = A_0 + A_1\ln(Q) + A_2DW + A_3XW + A_4\ln(u_s) + A_5\ln(C_{lag})$

Where:
- C = concentration (pCi/L)
- Q = uniform emissions rate (uCi/sec)
- DW = $\ln(x^2)$ = downwind dilution term
- XW = $(y/x)^2$ = crosswind dilution term
- u_s = the mean wind speed (m/s)
- x = the downwind distance (m)
- y = the crosswind distance (m)

Coefficients	
A0	8.1624
A1	1.0158
A2	-0.6537
A3	-0.9789
A4	-1.1262
A5	N/A

Inputs			
Q =	9.11E+01	uCi/sec	0.328 Ci/hr
Wind Speed	1.8	m/s	
y (m) =	0		
x (m)	30		
C lag =	0	pCi/L	

Result: C = 2.07E+03 pCi/L

Dose Conversion:

The ^{222}Rn DAC = 3×10^{-8} uCi/mL, resulting in 5 rem, for 2000 hrs exposure (Ref. 10 CFR 835, Appendix A)
The ALI for ^{222}Rn is 4 WLM. 4 WLM = 5 rem, 1 WLM = 1.25 rem.

Approach 1

WLM =	CFT / KN	C =	2.07E+03	pCi/L
		Equilibrium Factor (F) =	0.01	
		Time =	1	hr
WLM =	1.46E-03	K =	17000	pCi/L /WL hr/mo
Dose =	1.83E-03 rem	N =	1	
		1 WLM =	1.25	rem

Approach 2

# of DAC =	C/DAC	C =	2.07E+03	pCi/L
# of DAC	6.91E+01	1 DAC =	3.00E-08	uCi/mL
Dose =	# DAC*F*DF*T	1 DAC =	30	pCi/L
Dose =	2.07E-03 rem	Equilibrium Factor (F) =	0.012	
		DAC DF =	2.5	mrem/hr
		Time =	1	hr

x (m)	Wind Speed (m/s)	C (pCi/L)	X/Q	#DAC	Ingrowth Time (min)	F equil	Time (hr)	Dose (mrem)
30	1.8	2.07E+03	2.28E-02	6.91E+01	0.28	0.012	24	4.98E+01
100	4.5	1.53E+02	1.68E-03	5.10E+00	0.37	0.012	2	3.06E-01
330	1.8	9.02E+01	9.90E-04	3.01E+00	3.06	0.12	2	1.80E+00

Appendix H

APPENDIX H
HEALTH PHYSICS PLAN

THIS PAGE INTENTIONALLY BLANK

TABLE OF CONTENTS

H-1.0 INTRODUCTION 6
H-1.1 AWR PROJECT OPERATIONS DESCRIPTION 7
H-1.1.1 AWR Phase 1 – Radon Control System (RCS) 7
H-1.1.2 AWR Phase 2 – Waste Retrieval 11

H-2.0 PROJECT RADIOLOGICAL CONTROLS 12
H-2.1 Radiological Work Permits 12
H-2.2 Radiological Control Technician Coverage 13
H-2.3 Internal Dosimetry 13
H-2.4 Environmental Radon Monitoring 13
H-2.5 Radioisotopes of Concern 14
H-2.6 Exposure Control 14
H-2.7 Contamination Control 17
H-2.7.1 AWR Phase 1 – Radon Control System (RCS) 17
H-2.7.2 AWR Phase 2 – Waste Retrieval 17
H-2.8 Airborne Radioactivity Areas and Area Air Monitoring 18
H-2.8.1 Radon 19
H-2.8.2 Particulate (K-65 Material) 19

H-3.0 RESPONSIBILITIES 20
H-3.1 Personnel Responsibilities 20
H-3.2 Radiological Incidents and Reporting 21

H-4.0 PERSONNEL ENTRY AND EXIT PROTOCOLS 21
H-4.1 Access to Controlled Areas 21
H-4.2 Entry at the Access Control Point 22
H-4.3 Exiting Controlled Areas 22
H-4.4 Access to Contamination Areas 22
H-4.5 Exiting Contamination Areas 23

H-5.0 RADIOLOGICAL LIMITS AND RESPIRATORY PROTECTION 24
H-5.1 Personnel Monitoring Limits 24
H-5.2 Airborne Radioactivity Limits 24
H-5.3 External Radiation Limits 26

H-6.0 REFERENCES 27

FIGURES

H.1-1: RCS FLOW DIAGRAM FOR AWR PHASE 2 OPERATIONS 8
H.1-2: RADON CONTROL SYSTEM AIR FLOW PATTERN – FIRST FLOOR PLAN 10
H.1-3: RADON CONTROL SYSTEM AIR FLOW PATTERN – SECOND FLOOR PLAN 10
H-1-4: POTENTIAL CURRENT WASTE RETRIEVAL MODES 11

TABLES

H.1-1: AWR PROJECT PHASES AND RCS ACTIVITIES 7

H.5-1: FIXED + REMOVABLE RADIOISOTOPE LIMITS 24
H.5-2: AWR PROJECT DAC LEVELS 25

ACRONYMS

ACL = Administrative control level
ALARA = As low as reasonably achievable
ALI = Annual limit on intake
ANSI = American National Standards Institute
Anti-C = anti-contamination
AWR = Accelerated Waste Retrieval
AWWT = Advanced Wastewater Treatment System
CFR = Code of Federal Regulations
ccpm = Corrected counts per minute
CEDE = Committed effective dose equivalent
cm^2 = Square centimeters
CPC = Constituents of primary concern
DAC = Derived air concentration
DAC eff = Effective derived air concentration
D&D = Decontamination and dismantlement
DOE = U.S. Department of Energy
dpm = Disintegrations per minute
EDE = Effective dose equivalent
FCP = Fernald Closure Project
HEPA = High-efficiency particulate air
HPP = Health Physics Plan
MeV = Million electron volts
mg = Milligram
µCi/mL = Microcuries per milliliter
µR/hr = Microroentgens per hour
mrem = Millirem
mR/hr = Milliroentgens per hour
pCi/L = Picocuries per liter
PCM = Personal contamination monitor
PF = Protection factor
PPE = Personal protective equipment
RCS = Radon Control System
RCT = Radiological Control Technician
RDR = Radiological Deficiency Reports
RPP = Radiation Protection Plan
RWP = Radiological Work Permit
TEDE = Total effective dose equivalent
TLD = Thermoluminescent dosimeter
TTA = Transfer Tank Area
W = Week
WL = Working level

H-1.0 INTRODUCTION

This Health Physics Plan (HPP) describes the radiological controls specifically planned for the Accelerated Waste Retrieval (AWR) Project. The main body of this HPP addresses the radiological controls for the AWR Project as a whole. The AWR HPP is a living document and will be updated prior to performing each phase of the project.

This HPP documents the U.S. Department of Energy (DOE) and Fluor Fernald requirements that apply to radiological protection on the AWR Project. This HPP documents the radiological protection program elements and services provided to the AWR Project by Fluor Fernald. The principal requirements for radiological protection at DOE facilities are specified in 10 CFR 835, *Occupational Radiation Protection* [Ref. 1]. The specific radiological protection requirements implemented at the Fernald Closure Project (FCP) site are established in PL-3062, *Implementation Plan and Radiological Protection Program (RPP) for 10 CFR Part 835* [Ref. 2]. RM-0020, *Radiological Control Requirements Manual* [Ref. 3], specifies the radiological control requirements for all FCP activities.

This HPP identifies radiological hazards and controls specific to AWR Phase 2 Operations and meets the requirements stated in RM-0020 for an Occupational ALARA Plan. The following elements are addressed;

- Project Operations
- Radiological hazards associated with the RCS
- Radiological hazards associated with bulk waste retrieval from the silos and transfer to the TTA
- Engineering controls, administrative controls, and PPE implemented to mitigate radiological hazards
- Estimated radiological dose rates and personnel exposure
- RCT coverage requirements
- ALARA goals

H-1.1 AWR PROJECT OPERATIONS DESCRIPTION

H-1.1.1 AWR Phase 1 – Radon Control System (RCS)

The RCS is a recently-constructed facility housed in a structure with a footprint comprised of a 28-foot by 130-foot interior area and a 28-foot by 42-foot exterior pad. RCS operation began in May of 2003, and has since been removing and treating radon gas from the headspaces of Silos 1 and 2. Since RCS operations began, there has been a reduction in the gamma ray dose rates on top of and around the silos areas, resulting in an overall reduction in direct and collocated worker collective exposure in facilities and the silos vicinities.

FIGURES H.1-2 and **H.1-3** show the airflow patterns through the RCS, e.g., the roughing filter, the desiccant dryer, the carbon beds, the high efficiency particulate air (HEPA) filters, the fans, and then to recycle or to the stack. This pattern draws radon laden gas from the silos through the roughing filters for initial particulate daughter removal, and is then passed through the carbon beds, thus reducing the radon concentrations whereupon the carbon bed outlet air is recycled to the silos or exhausted through the 150-ft high stack. Shielding is utilized at both the roughing filter and carbon bed stages to attenuate resulting concentrated gamma rays.

The AWR Project will occur in the five phases listed in **TABLE H.1-1**. During AWR Phases 2-4, the RCS will continue to control radon concentrations in the silos headspaces, as well as the Transfer Tank Area (TTA) systems during operation of the Silo Waste Retrieval System (SWRS) operations. Airflow configuration for the RCS during AWR Phase 2 is shown in **FIGURE H.1-1**.

TABLE H.1-1: AWR PROJECT PHASES AND RCS ACTIVITIES

AWR Phase	Planned RCS Activities
Phase 1	• RCS: Silos Headspace Radon Reduction
Phase 2	• RCS: Silos Headspace Radon Reduction During Silo Waste Retrieval • RCS: Temporary Tank Area (TTA) Ventilation
Phase 3	• RCS: Silos Headspace Radon Reduction During Silo Waste Retrieval • RCS: TTA Ventilation • RCS: Remediation Building Operations
Phase 4	• RCS: TTA Ventilation • RCS: Remediation Building Operations • RCS: Silos Decontamination and Dismantlement (D&D) Heel Removal
Phase 5	• Final Facility D&D

AWR N-HASP SCOPE

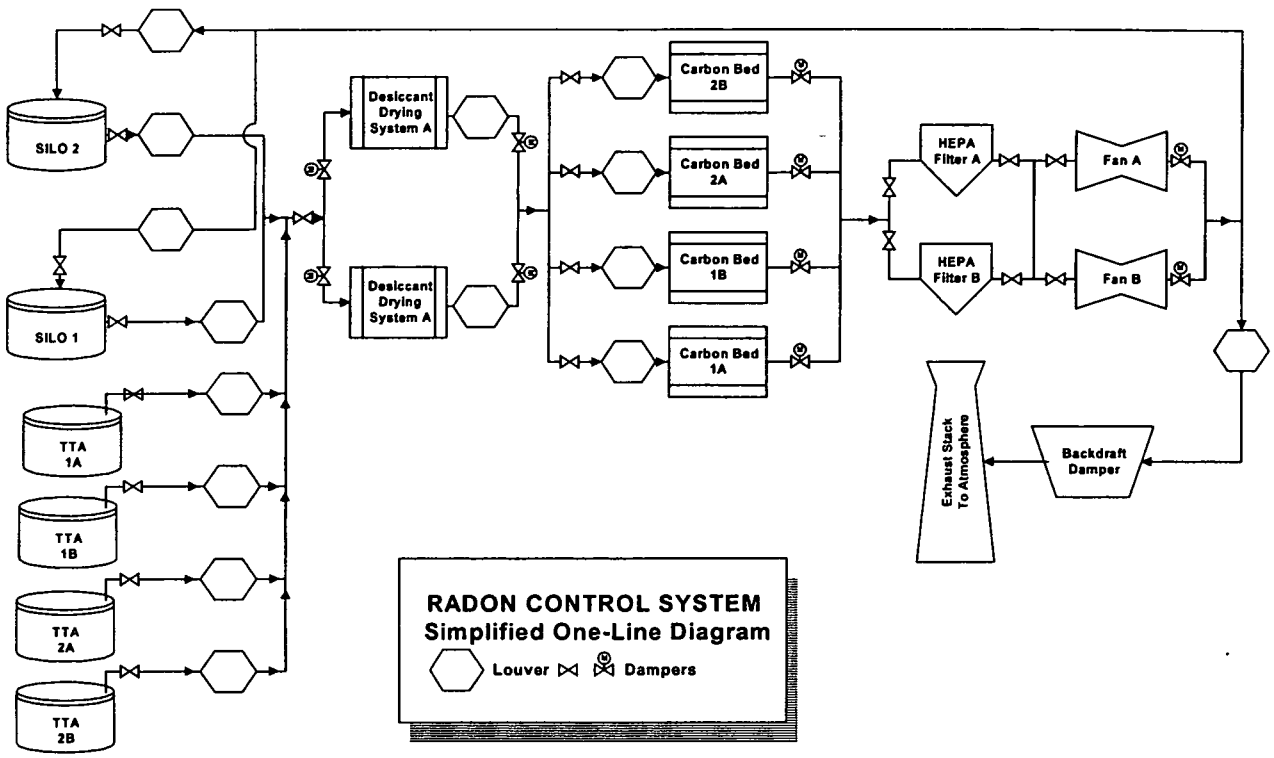

FIGURE H.1-1: RCS FLOW DIAGRAM FOR AWR PHASE 2 OPERATIONS

During operation of the RCS, radon and radon decay products (often referred to as radon progeny) are drawn into the RCS by one of the two redundant centrifugal fans. The air stream is filtered, dried, and chilled as it is pulled through a roughing filter, desiccant dryer, and chiller. The air is conditioned in this manner to enhance the dynamic adsorption capacity of the activated carbon, because the adsorption capacity is a strong function of temperature and relative humidity. Water condensed from the air stream is transferred to one of the two redundant shielded hold-up tanks and held for decay and later disposition. [**FIGURES H.1-2** and **H.1-3**.]

The cool dry air flows from the chilling/condensing system through one or more of the four available carbon adsorption units each containing approximately 160,000 total pounds of carbon. Carbon adsorption delays the flow of radon so that more than 95% of it undergoes radioactive decay in the beds.

The treated air flows from the carbon adsorption units through one of the two redundant high-efficiency particulate air (HEPA) filtration units before reaching the fans.

Finally, it is exhausted through the 150-foot stack and/or recycled back to the K-65 silos. The refrigeration chilling units are located outside the RCS Building on the adjacent concrete pad and the 150-foot tall stack is also mounted outside the west side of the RCS on the same concrete pad as the chillers.

To understand the radiological hazards associated with the RCS, one must first understand the basic operation of the RCS and the behavior of radon within the system. When the RCS system was initially operated, the headspace of both Silos 1 and 2 contained substantial concentrations of radon gas (approximately 16-20 million pCi/L in both Silos 1 and 2). The radon in the headspace was initially assumed to be in equilibrium with its short-lived decay products (radon progeny). These short-lived decay products are polonium-218, lead-214, bismuth-214, and polonium-214. Lead-214 and bismuth-214 emit energetic gamma rays and provide the primary whole-body penetrating radiation hazard of concern.

In AWR Phase I operations, radon and radon progeny has been drawn into the RCS from the K-65 silo headspace and routed to the RCS via both flexible and rigid ducting. The piping used for the transition from the silos to the RCS contains bends, expansions, and dampers. As the moving air contacted any solid surface, some portion of the particulate radon progeny plated out (attach to) on surfaces and was removed from the air stream. Locations where this plate out occurred yielded elevated radiation exposure rates. Several areas of the piping and inline louvers/valves, were found to have dose rates that initially exceeded 1,000 mr/hr however, as the concentrations in the headspace were reduced the lines found an equilibrium state producing dose rates in these same areas not exceeding 5 mR/hr on contact.

As the radon-laden air passes through the ducting and enters the RCS, it first enters the roughing filters. The roughing filters remove the particulates, including approximately 95% of the remaining radon progeny in the air stream that didn't plate out on the ductwork. Within the first couple hours of operating the RCS, the roughing filters trapped a majority of the radon decay products. As a result, the radon progeny trapped in the roughing filter caused dose rates (one foot from the roughing filter) >1 R/hr (the 10 CFR 835.502 [Ref. 1] threshold for action). Exposure rates have been $\leq$ 327 R/hr (significantly below the 500 R/hr 10 CFR 835.502 criterion for further action).

After passing through the roughing filter, remaining radon decay products in the air stream are removed by the desiccant drying system. The gas stream is chilled and dried by using cooling coils along with a desiccant dryer. The chilled and dried air stream, containing "pure" radon gas, then flows directly to the carbon beds. Technically, the "pure" radon immediately begins to decay, but in the few seconds it takes to flow to the carbon beds, the ingrowth of radon decay products is negligible. The radon-laden air stream enters the carbon beds where adsorption of activated charcoal will remove more than 95% of the radon from the air stream. The radon adsorbed on the charcoal continues to decay, generating gamma emitting decay products. The carbon bed vaults are High Radiation Areas and are not physically accessible.

FIGURE H.1-2: RADON CONTROL SYSTEM AIR FLOW PATTERN – FIRST FLOOR PLAN

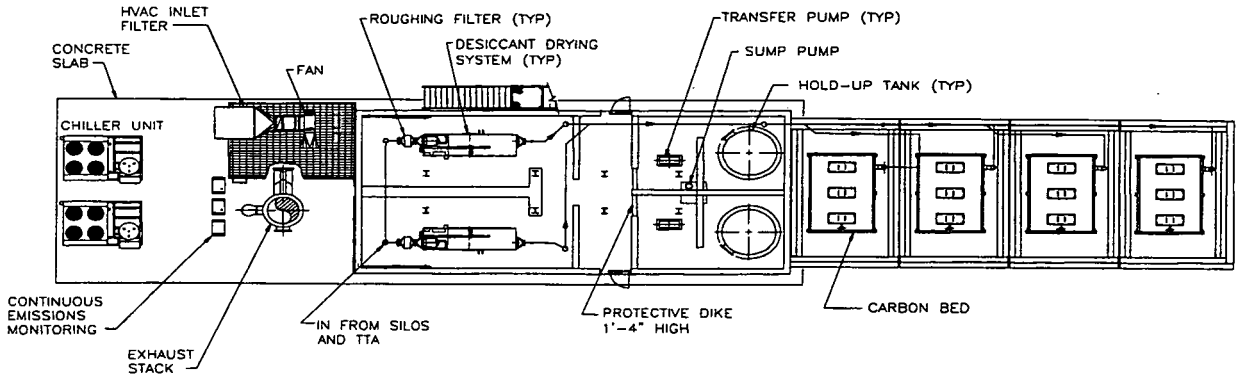

FIGURE H.1-3: RADON CONTROL SYSTEM AIR FLOW PATTERN – SECOND FLOOR PLAN

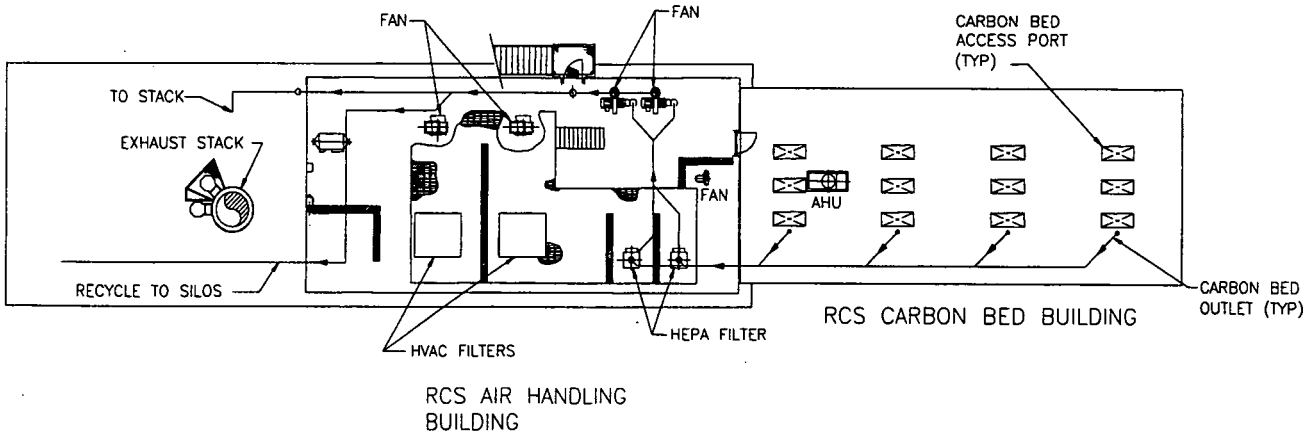

H-1.1.2 AWR Phase 2 – Waste Retrieval

The AWR Project encompasses multiple modes and system configurations as the K-65 material is transferred from the silos to the TTA and subsequently through the Silos 1 and 2 Remediation Facility. The Transfer Storage Tank System, and Remediation Facility are designed to operate in three general configurations consisting of the SWRS, TWRS or a combination of both. Piping and valve configurations have been designed to allow this flexibility, as well as the ability to transfer or move waste between storage tanks.

Silos 1 and 2 material and Bentogrout® will be removed from the silos during AWR Phase 2. Past practice sluicing techniques are used to recover the majority of the waste from the silos. Bulk retrieval of the Silo waste material is accomplished using sluicing nozzles and a slurry pump.

Initially, the sluice nozzle stream(s) is directed as close as possible to the slurry pump inlet to create a slurry pool and form a cavity for slurry to flow into. The slurry pump is lowered into the cavity and turned on when sufficient submergence has been achieved. The sluice nozzle is used to create a sluice stream, which pushes material toward the slurry pump. Upon removal, the material is transferred to and temporarily stored in the TTA until processing in the Remediation Facility. Potential concurrent operations are shown in **FIGURE H.1-4**

FIGURE H-1-4: POTENTIAL CURRENT WASTE RETRIEVAL MODES

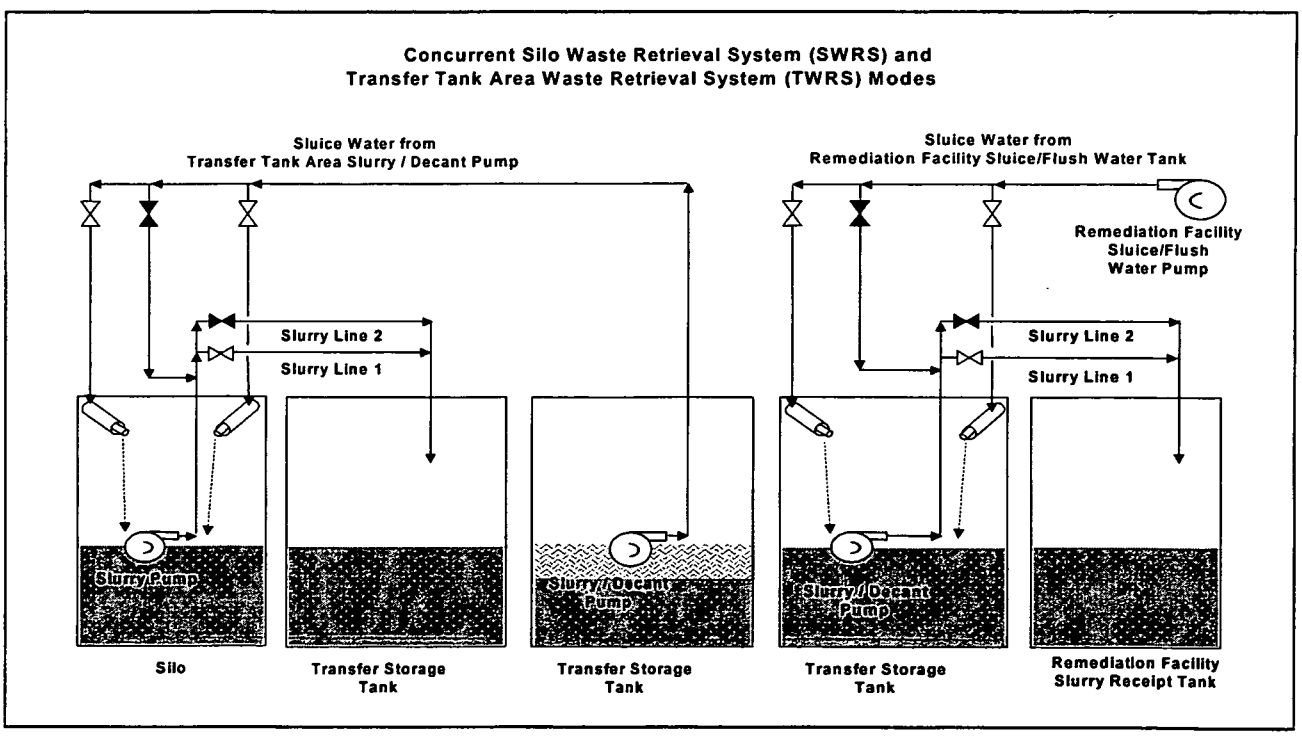

H-2.0 PROJECT RADIOLOGICAL CONTROLS

The control of radiological work is managed by the Fluor Fernald RWP program. The RWP program is used to designate the specific radiological controls, precautions, surveillance, and/or instructions to personnel. Training requirements, personal protective equipment (PPE), exposure limitations, dosimeter requirements, steps to minimize the spread of contamination, steps to limit radiation exposure to adjacent personnel, and provisions for augmented monitoring and surveillance, are all specified by Radiological Control on the RWP. In addition, the RWP system provides a means to trend job exposures by inclusion of an area log and dose record sheet. Team members performing radiological work are required to read, understand, sign, and abide by the requirements prescribed on the RWP.

Radiological monitoring is performed in the AWR Project areas to assess changes in radiological conditions, assess release levels of radon and particulates, prevent the spread of radioactive contamination, and limit personnel exposure. Radiological monitoring for the AWR Project will be performed in the following ways: personnel contamination monitoring, area radiation and contamination monitoring, air sampling (boundary, general area and breathing zone), in vivo, and in vitro.

H-2.1 Radiological Work Permits

RWPs will be generated by the cognizant Radiological Engineer. Work may not begin until the appropriate RWP is in place. The RWP informs workers of area radiological conditions, work controls, PPE, and entry/exit requirements. RWPs are required for activities at FCP that include, but are not limited to:

- Entry into any radiological area;
- Breaching of any process line, tank, vessel, or enclosure containing radioactive material that may become loose or airborne during the work;
- Any work within the Controlled Area on contaminated or potentially contaminated equipment where safety precautions are not adequately discussed in technical work documents approved by Fluor Fernald Radiological Control;
- Digging or disturbing soil in a Soil Contamination Area; and
- Breaking the barrier of a Fixed Contamination Area.

Workers will be briefed on the content, requirements and radiological conditions of a RWP, by a Supervisor or Radiological Control Technician (RCT), under which the workers shall perform work. Workers shall sign the acknowledgment sheet one time (per revision to the RWP) to indicate an understanding of the requirements of the RWP.

Workers shall sign the daily sign-in sheet on the RWP applicable to the work they are going to perform before entering the work areas, and shall sign out upon exiting these areas. With reference to the daily sign-in sheet, a worker shall only be signed in on one RWP at any one time.

H-2.2 Radiological Control Technician Coverage

RCT coverage will be provided as deemed appropriate by the Silos Project Radiological Engineer and prescribed on the RWP. Full RCT coverage is likely for all activities involving breaching contaminated systems. The RCT will perform frequent and timely surveys to ensure detection and characterization of contamination, if present. A RCT will periodically monitor radon concentrations in the TTA and RCS Buildings when personnel are inside.

H-2.3 Internal Dosimetry

Internal radiation monitoring is required for all radiation workers potentially exposed to surface or airborne radioactive contamination that could result in 100 mrem CEDE from intakes of all radionuclides (excluding radon, thoron, and their short-lived progeny) from occupational sources, or if any organ or tissue dose equivalent could exceed 5 rem CEDE.

Internal dose assessments are performed as necessary to determine significant intakes of radioactive material. Internal radiation monitoring at the FCP is routinely accomplished by performing in vitro bioassay measurements and airborne radioactivity sampling. Radiological Control defines the internal dose monitoring program for all personnel at the FCP.

Fecal monitoring is not performed routinely, but may be required when it would be helpful in determining the magnitude and nature of a suspected intake of radioactive material.

In circumstances where bioassay data are not available or not appropriate, air sampling results may be used to estimate internal exposure. Dose assessments from exposure to radon and its decay products will generally be based on air sampling results.

Radon Dosimetry

In addition to the site bioassay, personal air sampling, and external dosimetry programs, a radon dosimetry program consisting of personal radon dosimeters and representative area monitoring may be used to assess individual exposures to radon. This may be required if an individual is likely to receive a dose because of radon exposure in excess of 500 mrem in a year from all sources including background.

H-2.4 Environmental Radon Monitoring

Fluor Fernald Environmental Monitoring currently maintains several continuous radon monitors both on site and at locations off site. There are four monitors located along the perimeter of the silo exclusion fence and one monitor at the top of the berm between the silos. Additionally, there are environmental radon monitors located north and south of the

exclusion zone. These monitors run continuously, 24 hours a day, 7 days a week. Data is transmitted from the monitors to various locations, including the Communications Center, so that increases in environmental radon concentrations are identified in a timely manner. Additionally, the silo headspace radon concentrations are continually monitored in much the same way for reporting purposes.

The continuous monitoring project is supplemented by alpha track-etch radon detectors around the fenceline, selected locations on site, and at several off-site locations.

H-2.5 Radioisotopes of Concern

The most limiting radioisotopes (for radiological control purposes) for AWR Operations shall be determined and applied as the radioisotopes of concern. This is determined on the basis of a combination of sampling data, calculations, and process knowledge.

On the basis of current data, the radioisotopes of concern for the AWR Project are:

- Radium-226 for contamination control and unrestricted releases involving K-65 residues.
- Radon-222, and progeny, when breaching systems contaminated with radon-laden air, such as the RCS. For contamination control purposes, Pb-210 will conservatively considered the isotope of concern.
- Thorium-230 for particulate airborne radioactivity concentrations (DACs).
- Uranium-238 for digging and disturbing soil unless other radiological data become available.

H-2.6 Exposure Control

As part of the FCP's Radiological Controls Program, Radiological Control Technicians perform routine and special surveys to assess radiation levels in work areas, detect changes and/or ensure the appropriateness of access controls. These surveys are used to preclude the possibility of exceeding established radiation dose limits and to minimize personnel exposure. Surveys are used to define the boundaries for posting Radiation and High Radiation Areas and advise individual radiological workers of conditions.

Area radiation monitoring will be performed extensively once AWR Phase 2 begins. Survey locations will be identified and be used to establish baseline radiation levels in all areas to include the Silos domes, bridges, and TTA and RCS Building. The radiation surveys will be performed periodically to track and trend specific locations and component behavior and shielding performance.

Shielding verification surveys will be performed for the purpose of checking for radiation streaming from improperly shielded areas due to shielding design or construction flaws. The Silos Project has available temporary shielding, such as lead blankets, to be used as temporary shielding, as appropriate.

Radiation dose rates in the RCS are primarily from the roughing filter and the carbon beds. The roughing filter/dessicant dryer vault will be locked and posted as a High Radiation Area as the dose rates will be > 1,000 mr/hr. The carbon beds are not accessible by design. General areas in and around the RCS Building are expected to be <0.5 mr/hr to 2 mr/hr but may at times be > 5.0 mr/hr. The radiation is a whole-body penetrating gamma radiation hazard resulting from the ingrowth of radon progeny. The area radiation dose rates inside and outside the RCS will be measured and documented on surveys appended to the RWP for entry into the RCS. The perimeter of the RCS Building will be posted as a Radiation Area and entry will be with RCT coverage, as specified by the RWP.

Radiation exposure of personnel is managed by the installation of shielding, and provision for decay time. Two feet of concrete shielding (or equivalent) surround the carbon beds, and up to two feet of concrete shields the roughing filters. One foot of concrete shields the condensate tanks, and separates the pairs of RCS and RCS Building HVAC HEPA filtration assemblies.

Redundant roughing filters, desiccant dryers, and HEPA assemblies and fans are provided for use in Phase 2. One of each pair can be shut down to allow for the decay of the short-lived radon progeny. Prior to performing maintenance, the other of the paired components is used to achieve continuous operation of the RCS.

During AWR Phase 2A, when the removal of K-65 material from Silo 1 begins, there will be major changes in the radiological conditions, with the RCS operating and while retrieving waste from Silo 1. As the Bentonite® material on the top of the K-65 waste in Silo 1 is removed the dose rate on the Silo 1 dome will increase to levels greater than 5 mR/hr but less than 100 mR/hr. The dose rates on the dome of Silo 2 should remain greater than 2 mR/hr but less than 5 mR/hr.

During the time K-65 slurry is transferred from Silo 1 to the TTA, the transfer lines will become a line source with a radiation area surrounding it. Areas immediately surrounding the transfer lines will be surveyed and posted accordingly.

As K-65 material is placed in Tank 1A and 1B, the upper floor of the TTA structure has the potential to become a High Radiation Area with dose rates exceeding 100 mR/hr but less than 1 R/hr. Entry into the lower TTA tank area is prevented by the design of the facility. The dose rates outside the shield walls of the TTA will be less than 0.5 mR/hr. Routine health physics surveys will confirm the radiation levels in and around the TTA structure, and Silos.

During Phase 2B, radiological conditions are expected to be similar to those of Phase 2A, with one major exception. During Phase 2B, Silo 1 will be empty and radiation dose rates around Silo 1 will be reduced to that associated with minimal residual contamination and radon buildup. When the removal of K-65 material from Silo 2 begins, there will be major changes in the radiological conditions, with the RCS operating and while retrieving waste from Silo 2. As the Bentonite® material on the top of the K-65 waste in Silo 2 is removed the dose rate on the Silo 2 dome will increase to levels greater than 5 mR/hr but less than 100 mR/hr. The dose rates on the dome of Silo 1 should remain greater than 2 mR/hr but less than 5 mR/hr.

During the time K-65 slurry is transferred from Silo 2 to the TTA, the transfer lines will become a line source with a radiation area surrounding it. Areas immediately surrounding the transfer lines will be surveyed and posted accordingly.

As K-65 material is placed in Tank 2A and 2B, the upper level of the TTA structure has the potential to become a High Radiation Area with dose rates exceeding 100 mR/hr but less than 1 R/hr. Entry into the lower TTA tank area is again prevented by the design of the facility.

The dose rates outside the shield walls of the TTA will be less than 0.5 mR/hr. Routine health physics surveys will confirm the radiation levels in and around the TTA structure.

During Phase 2, the dose rates on the TTA deck are expected to be greater than 2.0 mR/hr but less than 5.0 mR/hr. The dose rate inside the TTA tank area will exceed 100 mR/hr and the area will be designated as a High Radiation Area. The area outside the shield walls of the TTA will be less than 0.5 mR/hr. Routine health physics surveys will confirm the radiation levels in and around the TTA. Based on the potential for change, the upper TTA area will be posted as a High Radiation Area. During material transfer activities, access will be controlled by Radiological Control.

There is a significant potential for general area dose rates to temporarily rise and settle between 27.5 and 500 mr/hr during material transfer activities due to postulated higher radon emanation rates out of water into airspace within the tanks and RCS lines. [Ref. 7]

H-2.7 Contamination Control

H-2.7.1 AWR Phase 1 – Radon Control System (RCS)

Contamination in the RCS during AWR Phase 1 was contained internally within the RCS ducting and components as expected. For normal operations during AWR Phase 2, no Contamination Areas are expected in the RCS. However, during system breaches of the RCS piping and components, Contamination Areas will be established and a RWP will be required to implement the radiological controls and required PPE. Personnel entry into these areas will be limited to the minimum required by operational, maintenance, and oversight demands. Entries will be made only by trained Radiological Workers or as specified by the requirements of job-specific RWPs. Most entries will be supported by at least one FCP RCT. Contamination Areas will be established such that the area is minimized and provisions are made for a step-off pad and an area for doffing contaminated PPE. Herculite, plastic, and glove-bags may be used to help prevent the spread of contamination.

For system breaches, the contamination hazard will be due to radon-222 and radon progeny including lead-210, bismuth-210 and polonium-210. For contamination control purposes the radionuclide of concern will conservatively be Pb-210. The RCS is not expected to have any carry over of K-65 material from the K-65 silos or support systems. If there were carry over of K-65 material, most of it would be trapped in the roughing filters or the desiccant dryers. During AWR Phase 2 operations, radioisotopic analysis may be used to determine whether contaminants exist other than radon and radon progeny.

To exit the Contamination Area, the potentially contaminated outer layer of PPE will be doffed at the Contamination Area exit (Control Point), and the workers will perform a minimum of a hand and foot monitoring with the instrumentation provided by the RCT. Once workers determine they are not contaminated, they will proceed directly to the control point to perform whole-body monitoring. The specific monitoring protocol will be determined by the Radiological Engineer and stated on the RWP. If contamination is detected at either control point, the worker will be required to notify an RCT for response.

H-2.7.2 AWR Phase 2 – Waste Retrieval

K-65 contamination is expected to be contained internally within the TTA piping and components. For normal operations, no Contamination Areas are expected in the TTA. However, during system breaches of the TTA piping and components, Contamination Areas will be established and a RWP will be required to implement the radiological controls and required PPE. Personnel entry into these areas will be limited to the minimum required by operational, maintenance, and oversight demands. Entries will be made only by trained Radiation Workers or as required by the requirements of job-specific RWPs. Most entries will be supported by at least one FCP RCT. The Contamination Areas will be established such that the area is minimized and provisions are made for a step-off pad and an area for doffing contaminated PPE. Herculite, plastic, and glove-bags may be used to help prevent the spread of contamination.

For system breaches, the contamination hazard will be due to Ac-227, Pa-231, Pb-210, Po-210, Ra-226, Th-228, Th-230, Th-232, U-234, U-235/236, and U-238. For contamination control purposes the radionuclide of concern will be conservatively assigned as Ra-226.

To exit the Contamination Area, the potentially contaminated outer layer of PPE will be doffed at the Contamination Area exit (Control Point), and the workers will perform a minimum of a hand and foot monitoring with the instrumentation provided by the RCT. Once workers determine they are not contaminated, they will proceed directly to the control point to perform whole-body monitoring. The specific monitoring protocol will be determined by the Radiological Engineer and stated on the RWP. If contamination is detected at either control point, the worker will be required to notify an RCT for response.

Small, local Contamination Areas are expected inside the Silo Waste Retrieval System modules located on the bridge. The Contamination Areas on the bridge will be established and managed in the same manner as those described above.

Additional small, local Contamination Areas are expected on the Transfer Tank Area (TTA) deck. Contamination in this area would result from small quantities of K-65 slurry encountered during some operations activities and equipment maintenance. The Contamination Areas on the TTA deck will be established and managed in a similar manner as in the RCS Building.

A Contamination Area will be established in the event of any accidental spill of K-65 slurry material. Containment and clean up of the spill will be conducted within the Contamination Area. Such a Contamination Area will be established and managed in a similar manner as in the RCS Building.

H-2.8 Airborne Radioactivity Areas and Area Air Monitoring

Area air samples are collected to monitor trends of airborne radioactive particulate levels and to ensure compliance with good work practices for control of radionuclides. Occupational air monitoring for radionuclides will be performed in accordance with RM-0020 and the *Air Sampling Plan for AWR and RCS Operations* [Ref. 4].

The Air Sampling Plan contains the following information:

- Likely sources of airborne radioactivity
- Engineering controls or administrative controls to control the airborne radioactivity
- Proposed boundary configuration
- General description of air monitoring equipment to be used
- Description of air monitoring in occupied areas adjacent to the airborne areas
- Methods of bioassay evaluation to be implemented
- Contingency to be employed if air monitoring results are above expected values

H-2.8.1 Radon

Temporary Airborne Radioactivity Areas, due to elevated radon concentrations, are expected in locations where radon is not completely contained by the RCS and its ductwork. Air sampling and/or radon working level surveys will be conducted in any area where release of radon is suspected or anticipated. If sustained average radon concentrations approach posting threshold values, an Airborne Radioactivity Area will be established and appropriate respiratory protection equipment or stay times will be established as prescribed in the RWP for the area or task. Air sampling and/or radon monitoring will continue as necessary to determine the extent and duration of the Airborne Radioactivity Area. When radon concentrations no longer exceed posting threshold values and the potential for higher radon concentrations and particulate contamination on surfaces no longer exists, the Airborne Radioactivity Area will be down-posted (removed).

Some permanent (or long-term) Airborne Radioactivity Areas will be established inside the equipment modules on the bridge where there is a direct pathway from the silo headspace to the module. Although the air stream through the modules is designed to flow from outside, through the modules, into the silo headspace, there is a significant potential for radon to flow into the modules if equipment movement occurs that disrupts the designed airflow direction. Radon concentrations inside the modules will be monitored periodically and generally prior to all planned entries into the modules. Respiratory protection equipment will be required for all entries into the modules as prescribed in the applicable RWPs.

RCTs will perform additional radon working level monitoring for system breaches and depending upon the scope of work, as dictated by the RWP. Airborne hazards may exist when there is maintenance performed or if there is a system breach. The primary airborne hazard will be radon and radon progeny.

Very few AWR Project operations will be conducted in airborne radioactivity areas where the radon concentrations will exceed 10% of the DAC without the use of respiratory protection. In these cases, the selection and use of respiratory protection equipment will be designed to prevent internal exposure to radon and its decay products. In cases where the radon concentration is greater than 10% of the DAC and respiratory protection is not required, the concentrations of radon will be monitored, stay-times will be established, and estimates of worker internal exposure will be made where applicable.

H-2.8.2 Particulate (K-65 Material)

The RCS is not expected to have any carryover of K-65 material from the K-65 silos or support systems. If there is any carry over of K-65 material, it will be trapped in the RCS roughing filters or the desiccant dryers. Radioisotopic analysis of air samples may be used to determine if airborne contaminants exist other than radon or radon progeny.

In all cases, when workers breach systems and there is potential to be exposed to contamination from K-65 materials, they will be required (by RWP) to wear full PPE and respiratory protection. Thus, the probability of AWR Project workers being internally contaminated is very low. Nevertheless, AWR Project radiological workers will participate

in the FCP bioassay program as required. Adequate precautions will be taken to maintain internal exposure to workers ALARA. Air monitoring will be performed for system breaches and as dictated per the RWP.

Airborne Radioactivity Areas may also exist in any area where K-65 slurry material is spilled. If the spill occurs outdoors, it will be impossible to contain the radon released from the slurry material and an uncontrolled release of radon will be reported and documented. If the spill occurs inside an AWR Project facility, primarily the upper TTA structure, the 36,000 CFM building ventilation system will be used to clear the area air concentrations by directing the air outside the building. During the period of the spill and its subsequent cleanup, the immediate area will be designated as an Airborne Radioactivity Area, until air sampling results demonstrate radon and particulate concentrations are below posting thresholds. Respiratory protection equipment will be required for all entries to the area as prescribed in the applicable RWPs.

H-3.0 RESPONSIBILITIES

H-3.1 Personnel Responsibilities

- Silos Project Director: Overall responsibility to implement the requirements of this plan and corrective actions as necessary.

- Operations Manager: Ensures operations personnel implement the requirements contained within this HPP. Interfaces with Silos Project Radiological Control Lead regarding design changes and radiological issues.

- Operations Supervisors: Interfaces with Silos Project Radiological Control on radiological issues identified through radiological and other monitoring conducted according to this HPP.

Note: Personnel assigned as Radiological Engineer, or Radiological Control Technician Supervisor may fulfill the responsibilities of any of these positions as needed to ensure effective implementation of Radiological Control requirements.

- Silos Project Radiological Engineering / Control Manager - Ensures radiological control personnel assigned to the Silos Project are implementing required monitoring specified in this HPP. Interfaces with Operations Manager on radiological issues encountered during operations. Provides guidance to Project Management for corrective actions. Ensures doses on the Silos Project are maintained ALARA.

- Radiological Engineer - Reviews radiological data generated by radiological monitoring to identify trends and compare against the limits in this HPP. Makes recommendations to the Silos Project Radiological Engineering / Control Manager and Operations Manager on modifications to the monitoring program or operations activities, in efforts to enhance performance or implement ALARA principles. Notifies the Silos Project

Radiological Engineering / Controls Manager and Operations Management if contamination and airborne radioactivity limits are exceeded.

The Radiological Engineer will develop RWPs required for AWR Project tasks and continue to monitor AWR Project tasks to detect any changes that would require revisions to RWPs.

- Radiological Control Technician Supervisor - Interfaces daily with Silos Project Operations Supervisors regarding radiological issues. Ensures that monitoring is being conducted in accordance with this plan. Coordinates RCT coverage to ensure qualified RCTs are available to support operations and maintenance activities.

H-3.2 Radiological Incidents and Reporting

All radiological incidents or abnormal events shall be immediately reported to the Silos Radiological Supervision, Engineering and/or Management. Examples include, but are not limited to, skin or personal clothing contamination, situations where radioactive material uptake is suspected, and situations where contamination is spread to or discovered in a non-radiological area.

Silos Project Radiological Engineering or Supervision will facilitate the documentation and proper notification of the event or condition as required by site procedures and ensure corrective actions are taken as necessary.

As required, Radiological Deficiency Reports (RDRs) or Event Discovery Reports (EDRs) will be written to document deficiencies. Examples include, but are not limited to, poor performance of radiological control practices, violations of procedures or policies, and personnel contamination. The responsible supervisor and/or manager will be responsible for correcting deficiencies and providing a written response summarizing action(s) taken and/or planned to prevent recurrences.

H-4.0 PERSONNEL ENTRY AND EXIT PROTOCOLS

H-4.1 Access to Controlled Areas

Access into the Controlled Area for the AWR Project will be managed through a designated access control point(s) serving as the primary TLD storage location.

Workers shall obtain their TLD at this control point(s) prior to entering the Controlled Area. TLDs must be worn while the worker is in the Controlled Area and must be stored on the storage rack assigned when not in the Controlled Area. TLDs shall be worn on the outside of the worker's clothing (non- PPE), facing forward, between their waist and shoulders. Visitors may be allowed to enter the Controlled Area upon approval of Radiological Control with a properly trained and cognizant escort.

The TTA and RCS Building will be controlled as a Radiological Area. The specific posting will vary as conditions change within the areas based upon the activities to be performed within the specific facility. The initial anticipated postings for operations of the RCS are Radiation Area, High Radiation Area (desiccant dryer vault), Airborne Radioactivity Area, and RWP Required for Entry. The initial anticipated postings for the TTA building when material transfer begins are Radiation Area, High Radiation Area (around RCS ductwork), Airborne Radioactivity Area, and RWP Required for Entry. During certain maintenance activities areas such as system breaches, the areas will be up-posted to a Contamination Area and a temporary control point will be established (location to be determined by the Radiological Engineer).

H-4.2 Entry at the Access Control Point

At the Controlled Area access control point (access point from the uncontrolled area to the controlled area), workers will verify that their training and qualifications are current. If a worker's training is insufficient or out-of-date, access to the controlled area will not be made.

Upon leaving the Controlled Area, workers shall place their TLD in the appropriate slot in the TLD storage rack (slots as well as TLDs are labeled with identifying numbers).

H-4.3 Exiting Controlled Areas

Personnel and material monitoring is required when exiting Category I Controlled Areas. To exit a Category I Controlled Area, workers shall perform whole body monitoring, preferably with a personal contamination monitor (PCM), and monitor personal material with a hand held frisker.

If the area is posted as a Category II Controlled Area, personnel and material monitoring will not be required. The radiological sign posted at the Controlled Area exit will identify whether personnel and material monitoring is required.

After successful monitoring through the PCM (as applicable), the workers shall then place their TLD in the appropriate slot in the TLD storage rack.

H-4.4 Access to Contamination Areas

Access to a Contamination Area requires the following:

- Workers shall sign the appropriate RWP for entry into a contaminated work area. Workers shall obtain the prescribed PPE clothing and respiratory protection equipment, enter their badge number and the respirator serial number into the access control computer, show evidence of being respirator fit, go to the dressing area, and don the prescribed PPE.

- If a worker's training or bioassay is insufficient or out-of-date, their access to the contamination area shall be denied.

- When wearing protective clothing such that no skin is exposed (e.g., full anti-Cs and a respirator), the worker's TLD must be worn underneath the protective clothing. When protective clothing requirements are such that skin is exposed (e.g., no respirator), the TLD must be worn on the outside of the anti-Cs.

- Before entering the contaminated work area, workers shall contact a RCT for assignment of a personal air sampler and testing of the airflow of powered air purifying respirators (if worn). The following conditions apply to persons wearing personal air samplers:

- In areas where uranium is the isotope of concern, the Radiological Engineer will determine if anyone will be required to wear a belt-mounted, personal air sampler. If a personal air sampler is issued, all other workers in the work crew must be signed-in on the RWP under which the crew-partner received their personal air sampler. Workers in the work crew shall work in the general proximity of the other workers such that the assigned personal air sampler is representative of the air breathed by all parties in the work crew.

- When changing work areas, the worker must sign-in on the appropriate RWP and verify that they are wearing PPE that is in compliance with the RWP for the new area. If the worker must change PPE before moving to the new job area, the worker must exit the contamination area and go through the appropriate steps for re-entry, wearing the correct PPE for the new area. The worker will be reassigned to a different personal air sampler.

- Personal entry into Contamination Areas must be through the established control point.

H-4.5 Exiting Contamination Areas

All material exiting a Contamination Area shall be surveyed by a RCT. Workers shall always leave a Contamination Area and doff anti-Cs at the appropriate control point whenever their protective clothing is compromised or when non-water-resistant anti-Cs get wet or workers sweat through their protective clothing.

Workers must recognize and allow additional time for monitoring when exiting radium contamination areas because of the lower contamination limits for radium. Before leaving any of these areas, workers shall doff their anti-C clothing at the work area boundary and perform hand/foot monitoring at the Contamination Area Control Point exit. If contamination in excess of the values specified for the AWR Project Surface Contamination Limits is found, personnel shall stay in the area and notify a Silos Project RCT. If the personnel exiting the Contamination Area control point find no contamination in excess of the limits, the worker shall proceed directly to the Controlled Area access control point as specified by the RWP and conduct a whole-body survey with a PCM.

Personal items and tools, lapel samplers, and other equipment (in the case of radium and thorium contamination areas) may only be surveyed out of a Contamination Area by a RCT. Workers requiring items of this nature to be removed from the Contamination Area shall give the RCT notice of such in advance.

Workers shall sign out on the RWP upon exiting through the area access control point.

H-5.0 RADIOLOGICAL LIMITS AND RESPIRATORY PROTECTION

H-5.1 Personnel Monitoring Limits

Personnel exiting Contamination or Category I Controlled Areas shall be surveyed using instrumentation capable of detecting radioactive contamination at the Fixed + Removable limits for the radioisotope of concern. The limits in **TABLE H.5-1** shall be applied:

TABLE H.5-1: FIXED + REMOVABLE RADIOISOTOPE LIMITS

Type of Contamination Area	Contamination Limit
Radium-226/Thorium-230 Contamination Area	500 dpm/100 cm^2 alpha
Uranium Contamination/Controlled Areas	5,000 dpm/100 cm^2 beta/gamma
Long-Lived Radon Progeny Contamination Areas[1,2]	1000 dpm/100 cm^2 alpha

1 Long-lived Radon Progeny for the purpose of this project includes Pb-210, Bi-210 and Po-210. [Ref. 5]
2 Determination of long-lived radon progeny contamination will be determined using decay times or specific instrumentation capable of distinguishing short-lived radon progeny from long-lived alpha emitters.

If a personnel monitoring instrument alarms, then the worker shall notify the RCT. The RCT will investigate to determine if there is long-lived contamination (e.g., radium, thorium, uranium) on the worker's clothing or skin. If this is confirmed, the RCT will proceed as prescribed by procedure for personal decontamination.

H-5.2 Airborne Radioactivity Limits

Airborne Radioactivity Areas shall be posted around locations that exceed, or are likely to exceed, the DAC values for the applicable radioisotope(s). Engineering and/or administrative controls shall be implemented for these areas to control the impact on personnel and other project areas. The DAC levels that apply to the AWR Project are presented **TABLE H.5-2.**

TABLE H.5-2: AWR PROJECT DAC LEVELS	
Applicable Radioisotope	**Derived Air Concentration (DAC)**
Effective DAC for K-65 Material[1]	2 E-11 µCi/mL
DAC for Th-230	3.0E-12 µCi/mL
DAC for Ra-226	3.0E-10 µCi/mL
DAC for Uranium	2.0E-11 µCi/mL
DAC for Long-Lived Radon Progeny (Particulate sampling for Pb-210[2])	7.5 E-11 µCi/mL
DAC for Radon Progeny (Working Level Monitoring)	0.33 WL

1 The effective DAC for Silos 1 and 2 materials is conservatively based on the expected isotopic mixture. [Ref. 6].
2 Long-lived Radon Progeny for the purpose of this project is the radon progeny in the Pb-210 decay chain which includes Pb-210, Bi-210 and Po-210. [Ref. 4]
3 Using conservative DAC for Pb-210. Note the DAC value listed in 10 CFR 835, Appendix C, for Radon-222 is 3E-08 µCi/ml. This value assumes 100% equilibrium of the radon daughters with the parent.

One WL equals any combination of short-lived radon daughters, in 1 liter of air without regard to the degree of equilibrium, that will result in the ultimate emission of 1.3E+5 million electron volts (MeV) of alpha energy.

The respiratory protection factors (PFs) that shall apply to the AWR Project particulate concentrations include the following:

- 1,000 for atmosphere supplying, airline, hood, continuous flow;
- 1,000 for powered, air-purifying respirators;
- 50 for full-face, air-purifying respirators; and
- 1 for no respirator or half-mask respirators.

If general area airborne radioactivity concentrations exceed 30% of the appropriate DAC (given the appropriate respiratory protection factor), then immediate radiological controls shall be implemented at the source of generation to reduce airborne concentrations.

In all cases, with the exception of radon, airborne emissions at the AWR Project boundaries will be controlled such that contributions of all radioisotopes shall not exceed 2% DAC-equivalent, taken in unison (on the basis of a weekly average).

H-5.3 External Radiation Limits

A radiological administrative control levels (ACLs) will be used by the AWR Project to keep exposures as low as reasonably achievable (ALARA). RM-0020, Fernald Closure Project Radiological Control Requirements Manual, [Ref. 3] establishes an annual facility administrative control level (ACL) of 1,000 mrem total effective dose equivalent (TEDE) to an individual in a year. As Silos Project activities continue it is likely the facility specific ACL will be exceeded, but individual exposures are expected to remain below the DOE administrative control level for individuals of 2,000 mrem per year TEDE.

Workers shall be restricted from working in radiologically-controlled areas if total (external and internal) exposures, in any one calendar year, nears 1,000 mrem TEDE without prior approval of the President, Fernald Closure Project.

An evaluation will be initiated by Radiological Control when a worker reaches 80% of the administrative control level. The evaluation will determine whether the worker requires limitations on work in a radiological area to ensure that the annual limit (1,000 mrem TEDE) is not exceeded or if critical skills are involved, and approval to exceed the ACL is warranted.

The collective external dose from activities associated with the AWR Project operations and maintenance is conservatively estimated to be 29.442 person-rem. The AWR ALARA Analysis in Appendix D of this N-HASP provides a complete evaluation of radiological exposure associated with the entire AWR Project. Silos Project Maintenance and Operations involvement was key in the development of the external exposure estimates.

H-6.0 REFERENCES

1. 10 CFR 835, *Occupational Radiation Protection*, Title 10, Code of Federal Regulations, Part 835, U.S. Department of Energy

2. PL-3062, Rev. 1, *Implementation Plan and Radiological Protection Program for 10 CFR Part 835,* Fluor Fernald; June 2, 1999

3. RM-0020, *Radiological Control Requirements Manual*, Fluor Fernald

4. SD-2073, Rev. 2, *Air Sampling Plan For AWR and RCS Operations*, Fluor Fernald January 1, 2003

5. SD-2072, Rev. 0, *Surface Contamination Values for the Silos Project During Initial Radon Control System Operations*, Fluor Fernald; October 14, 2002

6. 40700-RAD-0004, *Silos 1 and 2 Material Effective Derived Air Concentration*, Fluor Fernald; March, 2000

7. SD-2082, Rev. 0, *Advanced Waste Retrieval (AWR) General Area and Process System Dose Rate Calculations*, Fluor Fernald; December 11, 2003