[redacted]

2209100101-1110110001

Environmental Restoration Program

B BUILDING SOLVENT STORAGE SHED INTERIM REMEDIAL ACTION HEALTH AND SAFETY PLAN

MOUND PLANT
MIAMISBURG, OHIO

March 1995

FINAL

(Revision 1)

Department of Energy
Ohio Field Office

Environmental Restoration Program
EG&G Mound Applied Technologies

ENVIRONMENTAL RESTORATION PROGRAM
EG&G MOUND APPLIED TECHNOLOGIES

B BUILDING SOLVENT STORAGE SHED
INTERIM REMEDIAL ACTION

ICF KAISER ENGINEERS, INC.

HEALTH AND SAFETY PLAN

MOUND PLANT

MIAMISBURG, OHIO

MARCH 1995

CONTENTS

Section — Page

DISCLAIMER iii

1. INTRODUCTION 1-1
   1.1. BACKGROUND 1-3

2. POLICY AND STANDARDS 2-1

3. PROJECT ORGANIZATION AND RESPONSIBILITIES 3-1
   3.1. CHAIN OF COMMAND 3-1
   3.2. SUBCONTRACTOR RESPONSIBILITIES 3-3
   3.3. VISITORS 3-3

4. HAZARD ANALYSIS 4-1
   4.1. IDENTIFICATION AND ASSESSMENT OF POTENTIAL HAZARDS 4-1
      4.1.1. Physical Hazards 4-4
         4.1.1.1. Severe Weather 4-4
         4.1.1.2. Confined Space 4-4
         4.1.1.3. Manual Lifting 4-4
         4.1.1.4. Drilling Operations 4-5
         4.1.1.5. Hearing Conservation 4-6
         4.1.1.6. Electrical Utilities 4-6
         4.1.1.7. Heat Stress 4-8
         4.1.1.8. Cold Stress 4-9
         4.1.1.9. Storage of Flammable and Combustible Materials 4-11
         4.1.1.10. Sanitation 4-11
      4.1.2. Chemical Hazards 4-11
      4.1.3. Radiological Hazards 4-13
      4.1.4. Biological Hazards 4-14
      4.1.5. Task-By-Task Risk Analysis 4-14

5. WORKER TRAINING 5-1

6. PERSONAL PROTECTIVE EQUIPMENT 6-1
   6.1. JUSTIFICATION FOR PROPOSED LEVELS OF PROTECTION 6-2
   6.2. RESPIRATORY PROTECTION (GENERAL) 6-4

7. AIR MONITORING REQUIREMENTS 7-1
   7.1. PRE-WORK AREA SURVEY 7-2

8. MEDICAL SURVEILLANCE 8-1
   8.1. ROUTINE EXAMINATION 8-1
   8.2. NON-ROUTINE MEDICAL EXAMINATION 8-1
   8.3. MEDICAL RECORDS 8-2
   8.4. ADDITIONAL REQUIREMENTS 8-2

9. SITE CONTROL ZONES 9-1
   9.1. WORK ZONE DELINEATION 9-1
   9.2. SITE ENTRY/EGRESS 9-1
   9.3. COMMUNICATION 9-3
   9.4. SITE SECURITY 9-3

CONTENTS (Continued)

Section	Page
10. DECONTAMINATION AND DISPOSAL	10-1
10.1. PERSONNEL DECONTAMINATION	10-1
10.2. EQUIPMENT DECONTAMINATION	10-1
10.2.1. Sampling and Monitoring Equipment	10-1
10.2.2. Respiratory and Personal Protective Equipment	10-3
10.2.3. Heavy Equipment	10-3
10.2.4. Audits	10-3
10.3. DISPOSAL OF INVESTIGATION DERIVED MATERIALS	10-3
11. STANDARD OPERATING PROCEDURES	11-1
12. CONTINGENCY PLANNING	12-1
12.1. EMERGENCY CONTACTS	12-1
12.2. SITE EMERGENCIES	12-1
12.2.1. Basic Emergency Equipment	12-1
12.2.2. First Aid and CPR	12-1
12.2.3. Adverse Weather Conditions	12-4
12.3. SPILLS	12-4
12.4. EMERGENCY RESPONSE PLANS	12-5
12.4.1. Evacuations	12-5
12.4.2. Fire/Explosion	12-5
12.4.3. Personal Injuries	12-5
13. REPORTING	13-1
13.1. HEALTH AND SAFETY LOG BOOK	13-1
13.2. EMPLOYEE EXPOSURE/INJURY INCIDENT REPORTING	13-1
14. REFERENCES	14-1

APPENDIX A ICF KE AND ER PROGRAM STANDARD OPERATING PROCEDURES
APPENDIX B HEALTH AND SAFETY PLAN ADDENDUM/REVISION FORM
APPENDIX C MATERIAL SAFETY DATA SHEETS (MSDS)
APPENDIX D HEALTH AND SAFETY PLAN SIGNATURE FORM
APPENDIX E EMPLOYEE EXPOSURE/INJURY INCIDENT REPORT

FIGURES

1.1.	Site Location Map	1-2
3.1.	Project Chain of Command	3-2
9.1.	Control Zones	9-2
12.1.	Hospital Map	12-3

TABLES

VI.1.	Protection and Action Levels	6-3
X.1.	Surface Radioactivity Guides	10-2
XII.1.	Emergency Contacts	12-2

DISCLAIMER

This Health and Safety Plan (Plan) was prepared to be used by ICF Kaiser Engineers employees, performing a specific, limited scope of work. It was prepared based on the best available information regarding the physical and chemical hazards known, or suspected, to be present on the project site. It is not possible in advance, to discover, evaluate, and protect against all possible hazards which may be encountered during the duration of this project. Adherence to the requirements of this HASP will significantly reduce, but not eliminate, the potential for occupational injury and illness at the project site. The guidelines contained in this HASP were developed specifically for the project site and scope of work described herein, and should not be used at any other site without the review and approval of a qualified health and safety professional.

1. INTRODUCTION

As part of ICF Kaiser Engineers's compliance with the Occupational Safety and Health Administration's health and safety standards for construction and general industry, this Health and Safety Plan (HASP) has been prepared in accordance with, and complies with, the OSHA Safety and Health Standards 29 CFR 1910 and 29 CFR 1926. This HASP prescribes safe procedures and practices for ICF Kaiser Engineers, Inc., and subcontractor personnel engaged in field activities associated with the EG&G Mound Applied Technologies Site in Miamisburg, Ohio (see Figure 1.1).

Activities at this site require a high level of safety planning. Adequate planning is the first and most critical element in controlling employee exposure to hazardous materials and situations. Accordingly, proper safety techniques and safety equipment are an integral part of each specified task of the project. This HASP addresses and references those applicable ICF KE and ER Program safety procedures (Appendix A) and equipment which shall be utilized to minimize the probability of employee injury or chemical exposure during on-site investigation activities.

This HASP provides information on the following topics:

- policy and standards
- project organization and responsibilities,
- hazard analysis,
- worker training,
- personal protective equipment,
- air monitoring requirements
- medical surveillance,
- site control zones,
- decontamination and disposal,
- standard operating procedures,
- contingency planing, and
- reporting.

This HASP provides general information applicable to the B Building Solvent Storage Shed work, at Mound Plant under the Environmental Restoration (ER) Program. This HASP is structured so that field personnel will be able to identify specific hazards and the monitoring requirements for each activity.

Figure 1.1. Site Location Map

The HASP is based on limited information available concerning the possible chemical and physical hazards found on the site. As more data concerning the nature and concentrations of contaminants becomes available, the HASP will be modified accordingly. The form for completing the Health and Safety Plan Addendum/Revision is presented in Appendix B.

1.1. BACKGROUND

EG&G Mound Applied Technologies operates the Mound Plant under contract with the DOE. Historical production and general material handling activities at the Mound Plant have contributed radiological and non-radiological chemical contaminants to the environment within plant property. As a result of past contaminant releases, the Mound Plant was placed on the National Priorities List in November 1989. In response to this listing, the DOE and the U.S. Environmental Protection Agency (EPA) entered into a Federal Facility Agreement (FFA) that became effective October 12, 1990. Under the terms of the FFA, the DOE is required to develop and implement a Remedial Investigation/Feasibility Study (RI/FS) and perform interim actions to protect public health and the environment. In order to manage the RI/FS more effectively, the plant site was divided into several distinct operable units.

More specifically, the B Building Solvent Storage Shed is suspect for releasing contaminants which may impact the public and the environment. The migration pathways will be evaluated. The investigation activities are designed to establish the current level of contamination in the soils and groundwater that surround the plant.

2. POLICY AND STANDARDS

DOE is responsible for health, safety, and environmental protection programs at DOE-owned, contractor-operated facilities. The agency is mandated to conduct the ER Program in a manner that will limit risks to the health and safety of employees and the general public and that will provide adequate protection for property and the environment. Specific procedures may include engineering controls, administrative controls, and the use of equipment for personal protection.

DOE has contractually passed applicable health, safety and environmental protection responsibilities to EG&G for operation of the Mound Site. EG&G, likewise, has passed similar responsibilities to ICF KE for performing remedial investigation tasks at the site. This HASP provides basis for ICF KE to meet its obligations for protecting the health and safety of its employees while performing RI/FS tasks at the Mound Site.

One of the main tenets of this HASP is that exposures of workers to radiation and toxic materials must be kept to levels as low as reasonably achievable (ALARA). EG&G health physicists and industrial hygienists aid in meeting this goal by ensuring that all reasonable efforts have been made to minimize exposures to workers and the general public. Specifically, this will be accomplished by participating in the planning of tasks, providing ALARA reviews of all project work plans and participating in, as appropriate, field activities.

The environmental, health, and safety protection requirements that apply to remedial investigations under the ER Program are described in DOE and DOE Albuquerque Field Office orders. This site-specific plan is based on these orders and follows applicable federal, state (Ohio), and local standards.

3. PROJECT ORGANIZATION AND RESPONSIBILITIES

3.1. CHAIN OF COMMAND

As presented in Figure 3.1., the safety organization of this project is integrated into the existing ICF KE corporate and project management structure. Each element of the ICF KE project organization is discussed below.

- Health and Safety Director, Gerald J. Joy, C.I.H., C.S.P, 412/497-2056 - The Group Health and Safety Director (GHSD) is responsible for establishing, implementing, monitoring and administering the corporate health and safety program and ensuring that the corporate program is in compliance with federal, state, and contract-specific health and safety requirements.

- Project Manager, Keith Egan, 513/745-2769 - The Project Manager (PM) will have overall responsibility for the project. The Project Manager, along with the Project Health and Safety Officer, can require corrective action for work not performed in accordance with the Health and Safety Plan.

- Project Health and Safety Officer, Daniel J. Welshons, 412/497-2329 - The Project Health and Safety Officer (PHSO) is responsible for aiding the Health and Safety Director in the performance of his normal duties. The duties include maintaining health and safety records; providing guidance for on-site health and safety developments; approving health and safety plan addendum/revisions; and communication between on-site and corporate health and safety personnel. The Project Health and Safety Officer reports directly to the Health and Safety Director.

- Site Health and Safety and Officer, Jamie Olberding 513/745-2764 - The Site Health and Safety Officer (SHSO), who will be identified prior to initiating on-site investigation activities, is responsible for on-site enforcement of the policies and provisions contained in this HASP and has the authority to stop work if he/she feels an imminent danger to site workers exist. He/she is responsible for communicating with the EG&G health physics representative to ensure radioactive soil and air monitoring procedures are performed and necessary adjustments to this HASP or the level of protection are made. He/she will function as the communications liaison between project management and corporate health and safety and as such reports directly to the Project Health and Safety Officer. In addition, he/she will conduct safety briefings before on-site activities begin. The briefings will include such topics as on-site hazards, site-specific safety, air monitoring requirements, decontamination procedures, and emergency procedures.

- Health and Safety Technician, Chris Amidon, 513/745-2763 - The Health and Safety Technician will act as the Site Health and Safety Officer's representative and will be present during all operations. The Health and Safety Technician's primary responsibilities include ensuring air monitoring procedures are followed and all aspects of the Health and Safety Plan are appropriately enforced. The technicians have the authority to stop operations if unsafe activities are performed or conditions exist. The Health and Safety Technician will report to the Site Health and Safety Officer.

Figure 3.1. Project Chain of Command

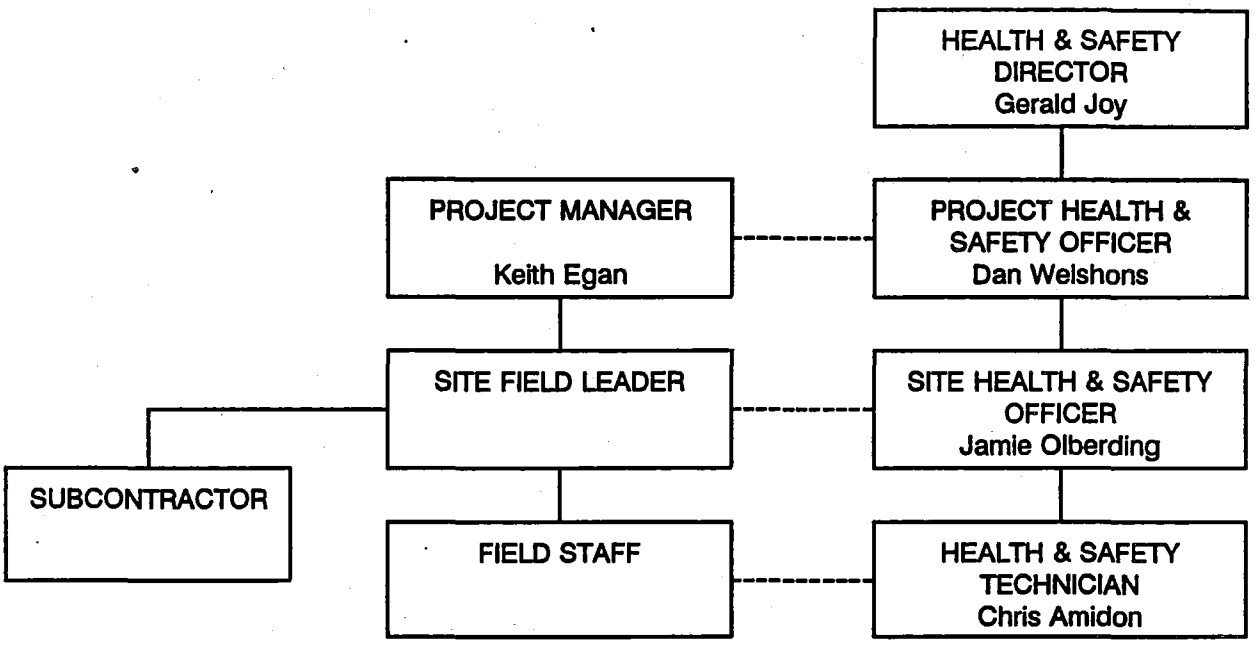

- Site Field Leader - The Site Field Leader is responsible for reporting on-site health and safety issues to the Site Health and Safety Officer. Health and safety issues must be discussed between the Site Field Leader and the Site Health and Safety Officer until a mutually agreed upon remedy is developed. In the event an agreement is not obtainable, the decision will be made by the Project Health and Safety Officer and the Project Manager.

- Field Staff - The field staff is responsible for their own health and safety to include other members of the work crew. Recognition of work area hazardous conditions and the awareness of the physical condition of work staff is extremely important.

3.2. SUBCONTRACTOR RESPONSIBILITIES

Subcontractors performing work during hazardous waste site investigations are responsible for compliance with all applicable federal, state and local statutes, ordinances, and regulations regarding health and safety. Each subcontractor shall conform to a Health and Safety Plan which provides a safety program at least as stringent as this HASP. It must identify a lead individual responsible for the health and safety compliance of their employees, lower-tier subcontractors and consultants. This person will be responsible for reporting to the Site Health and Safety Officer (SHSO), and for demonstrating compliance with the health and safety procedures.

In conformance with the Department of Labor, OSHA Hazardous Waste Site Operations (29 CFR 1910.120), each subcontractor employee proposed for on-site activities must participate in a medical monitoring program, must be certified for hazardous waste field work by a licensed physician, and must have successfully completed the required health and safety training.

3.3. VISITORS

Unauthorized visitors, for example personnel without the proper training and medical monitoring will not be permitted within established work site control zones.

The SHSO will brief authorized visitors to any work location on the site about the hazards present at that location. Visitors will be escorted at all times while visiting the work location and will be responsible for compliance with the requirements specified in this HASP.

4. HAZARD ANALYSIS

4.1. IDENTIFICATION AND ASSESSMENT OF POTENTIAL HAZARDS

This section presents chemical, physical, radiological and biological hazard information to be used for the development of health and safety protocols for on-site activities. The goals of the hazard evaluation are two-fold: 1) to summarize available chemical and radiological information and the corresponding impacts on worker health and safety; and 2) to adequately describe the physical hazards associated with the site. This information is important in the development of action levels to be used for the determination of levels of respiratory and dermal protection. Industrial hygiene air sampling and the use of real-time monitoring instruments, used in conjunction with the judgement of the SHSO, will provide the basis for upgrading or downgrading levels of protection. The likelihood of encountering the various hazardous materials found at the site during environmental investigations is dependent on the location of the investigation.

Job Safety and Hazard Analysis (JSHA) forms will be completed by the ICF KE SHSO prior to initiating tasks specified in Section 4.1.5 of this plan.

The ICF KE SHSO will monitor, visually and real-time, exposure of field personnel to physical and chemical hazards described in this HASP. EG&G Mound health physics, safety and industrial hygiene staff will monitor, visually and real-time, radiological hazards. Radiological findings will be communicated to the ICF KE SHSO.

The employee Health and Safety Rules listed here must be followed at all times:

- At least one copy of this HASP shall be available at each job work site.
- Horseplay, practical joking, or any other actions that jeopardize safety will not be tolerated.
- Running is not permitted.
- Alcoholic beverages and non-medicinal drugs are not permitted at the project site. Employees suspected of being under the influence of alcohol or drugs may be terminated.
- Radios (excepting two-way radios), tape players, or other forms of entertainment devices are prohibited in the authorized zone.
- All activities will be performed in such a manner to minimize or prevent the disbursement or release of contaminants.

- Contaminated protective equipment, such as respirators, hoses, and boots, shall not be removed from the regulated area until it has been cleaned, or properly packaged and labeled.

- Legible and understandable precautionary labels shall be affixed prominently to containers of contaminated scrap, waste, debris, and clothing.

- Removal of contaminated soil from protective clothing or equipment by blowing, shaking, or any other means that disperse contaminants into the air is prohibited.

- No food or beverages shall be present or consumed in the regulated area. No tobacco products shall be present or used and cosmetics shall not be applied in the regulated area.

- Transportation and disposal of contaminated materials shall comply with all applicable local, state, and federal regulations. These items will be addressed by the transporter and disposer.

- Contaminated materials shall be stored in tightly closed containers in well-ventilated areas.

- Containers shall be moved only with the proper equipment and shall be secured to prevent dropping or loss of control during transport.

- Emergency equipment shall be located outside the storage areas in readily accessible locations that will remain minimally contaminated with materials in an emergency.

- All trenching, shoring, and excavation work must comply with all federal OSHA rules.

- During the operation, all employees shall be required to wash their hands and face before eating, drinking, smoking, or applying cosmetics.

- Portable or fixed emergency shower/eyewash stations will be located in the regulated area near work activities.

- All personnel shall be required to field wash, as a minimum, at the end of their shift before leaving the job site if they are contaminated. Hands and face shall be washed during breaks. Wash water from wash facilities is assumed to be contaminated and will be collected for treatment and/or disposal.

- All personnel shall avoid contact with potentially contaminated substances. Walking through the lagoons, puddles or mud, kneeling on the ground, or leaning against drums should be avoided whenever possible.

- Monitoring equipment shall not be placed on potentially contaminated surfaces.

- Field personnel must observe each other for signs of toxic exposure. Indications of adverse effects include, but are not limited to:

  -- changes in complexion and skin discoloration,
  -- changes in coordination,

- changed in demeanor,
- excessive salivation and pupillary response, and
- changes in speech pattern.

- Field personnel shall be cautioned to inform each other of non-visual effects of toxic exposure such as:

  - headaches,
  - dizziness,
  - nausea,
  - blurred vision,
  - cramps, and
  - irritation of eyes, skin, or respiratory tract.

- Prompt remedial action shall be taken whenever an inadvertent release of a hazardous material occurs.

- Appropriate action to provide secure footing shall be taken at all locations where personnel will be working.

- Portable sanitary facilities will be provided, and the leasing agent will provide periodic water and solids removal services.

- Provision must be made for cleaning gross contamination from boots and suits in the Contamination Reduction Zone.

- Whenever solvents, cleaners, or other chemical substances are used for decontamination, a Material Safety Data Sheet for the chemicals shall be available at the work site.

- Whenever flammable or combustible solvents are used for decontamination, specific procedures for the control of flammable gases and vapors may be necessary. When concentrations of flammable vapors cannot be controlled by ventilation, the following preventative measures shall be performed:

  - Tests shall be made by a qualified person to ensure that concentrations of flammable vapors in the work area do not exceed 20% of the lower explosive limit.

  - As appropriate, equipment on-site shall be bonded and grounded, spark proof, and explosion resistant.

  - An adequate supply of fire extinguishes with a minimum rating of 10 B:C, shall be strategically located throughout the work area to limit the travel distance required by any worker to reach the extinguisher to less than 75 linear feet.

  - The SHSO supported by the site supervisor shall take positive steps to ensure that employees are protected from physical hazards which would include, but are not limited to, the following:

    - Discharge of steam, high pressure air, water or oil;
    - Tools or other objects dropping from overhead;
    - Falls from scaffolds, stairs, or ladders;
    - Tripping over hoses, pipes, tools or equipment;
    - Slipping on wet, oily surfaces;

- Insufficient or faulty personal protective equipment;
- Insufficient or faulty operations equipment and tools; and
- Noise in excess of acceptable levels.

Real-time air monitoring data will be recorded on the appropriate Mound Plant ER Program SOP forms (DOE 1992). The SHSO will keep a supply of the appropriate forms at the work site. Completed forms will be filed in the ER Program subcontractor document control files. Copies of these forms will be transmitted to Mound Plant.

4.1.1. Physical Hazards

The physical hazards associated with these activities are more severe than at most sites. Prior to beginning field operations, site-specific safety procedure training will be obtained from Mound Plant personnel.

4.1.1.1. Severe Weather

Tornados are possible at Mound Plant during spring, summer, and fall field operations. The Mound Plant indoctrination pamphlet will be consulted for the appropriate signal for tornadoes. This pamphlet is posted in the office trailer and a copy will be kept by the SHSO at each work location. Thunderstorms are also a likely possibility during field activities. If lightning is spotted nearby, field personnel will cease all operations until such time as the SHSO has declared the area safe to reenter.

4.1.1.2. Confined Space

Confined space entry is not anticipated as part of the on-site activities. No one is permitted to initiate an activity requiring confined space entry until the Project Health and Safety Officer is contacted and this HASP is modified to reflect ICF KE Procedure S&H-5.

4.1.1.3. Manual Lifting

Lifting of heavy objects is required of personnel from time to time. Personnel are encouraged to obtain the aid of other field team members when lifting objects. Personnel are to use the following lifting techniques when lifting any object:

- Get a good footing,
- Place feet about one shoulder width apart,
- Bend at knees to grasp weight,
- Keep the back straight,

- Get a firm hold,
- Lift gradually by straightening the legs,
- If weight is uncomfortable to lift, get help.

4.1.1.4. Drilling Operations

Safety requires the attention and cooperation of every worker and site visitor during the use of drilling equipment.

- Do not move the drill rig off the hole with the mast (derrick) in the raised position.

- Before raising the mast (derrick), check for overhead obstructions.

- Before raising the mast (derrick), ensure that all drill rig personnel (with exception of the operator) and visitors are cleared from the areas immediately to the rear and the sides of the mast. All drill rig personnel and visitors should be informed that the mast is being raised prior to raising it.

- Before the mast (derrick) of a drill rig is raised and drilling is commenced, level and stabilize the drill rig with leveling jacks and/or solid cribbing. The drill rig should be re-leveled if it settles after initial set-up. Lower the mast (derrick) only when the leveling jacks are in place, and do not raise the leveling jack pods until the mast (derrick) is lowered completely.

- Before starting drilling operations, secure and/or lock the mast (derrick) if required according to the drill manufacturer's recommendations.

- The operator of a drill rig will only operate a drill rig from the controls. If the operator of the drill rig must leave the area of the controls, the operator will shift the transmission controlling the rotary drive into neutral and place the feed control lever in neutral. The operator will shut down the drill engine before leaving the vicinity of the drill.

- Throwing or dropping tools is not permitted. All tools should be carefully passed by hand between personnel, or a hoist line should be used.

- Replace all caps, filler plugs, protective guards or panels, and high pressure hose clamps, chains or cables that have been removed for maintenance before returning the drill rig to service.

- If it is necessary to drill within an enclosed area, make certain that exhaust fumes are conducted out of the area. Exhaust fumes can be toxic, and some fumes cannot be detected by smell.

- Clean mud and grease from your boots before mounting a drill platform, and use hand holds and railings. Watch for slippery ground when dismounting from the platform.

- During freezing weather, do not touch any metal parts of the drill rig with exposed flesh. Freezing of moist skin to metal can occur almost instantaneously.

- Drain all air and water lines and pumps when not in use if freezing weather is expected.

- Cover all unattended boreholes or otherwise protect to prevent drill rig, and site personnel from stepping or falling into the hole. All open boreholes shall be covered, protected or backfilled adequately on completion of the drilling project.

- Do not "horse around" within the vicinity of the drill rig and tool and supply storage areas, even when the drill rig is shut down.

- When using a ladder on a drill rig, face the ladder and grasp either the side rails or the rungs with both hands while ascending or descending. Do not attempt to use one or both hands to carry a tool while on a ladder. Use a hoist line and a tool "bucket" or a safety hook to raise or lower hand tools. The ladder will be tied to the rig or steadied by a worker.

4.1.1.5. Hearing Conservation

During the use of heavy equipment, hearing protection will be required to be worn by all exclusion zone team members. Various types of protection will be available for employees to choose from. ICF KE Procedure S&H-14, Hearing Conservation Program, provides a system for the protection of employees by ensuring noise is maintained at acceptable levels not exceeding established values. Training on this procedure and the proper use of hearing protection will be conducted as a part of the pre-investigation briefing prior to on-site work.

4.1.1.6. Electrical Utilities

The use of a drill rig near electrical power lines and other utilities requires that special precautions be taken by both supervisors and members of the exploration crew. Electricity can shock, burn, and cause death. The following precautions will be taken:

- Locate, note, and emphasize all overhead and buried utilities on all boring location plans and boring assignments sheets.

- When overhead electrical power lines exist at or near a drilling site or project, consider all wires to be alive and dangerous.

- Ensure the minimum clearance requirement is ten feet, plus 0.4 inches for every kilovolt over 50KV, following OSHA requirements in 29 CFR 1910.67.

- Watch for sagging power lines before entering a site. Do not lift power lines to gain entrance. Call the utility and ask them to lift or raise the lines or de-energize (turn off) the power.

- Before raising the drill rig mast (derrick) on a site in the vicinity of power lines, walk completely around the drill rig. Determine what the minimum distance from any point on the drill rig to the nearest power line will be when the mast is raised

and/or being raised. Do not raise the mast or operate the drill rig if this distance is less than 10 ft.

- Keep in mind that both hoist lines and overhead power lines can be moved toward each other by the wind.

- Move the drill rig with the mast (derrick) down to avoid contact with power lines.

- If there are any questions concerning the safety of drilling on sites in the vicinity of overhead power lines, call the power company. The power company will provide expert advice at the drilling site as a public service and at no cost.

Underground electricity is as dangerous as overhead electricity. Be aware and always suspect the existence of underground utilities such as electrical power, gas, petroleum, telephone, sewer and water. Additional electrical precautions include:

- Obey warning signs of underground utilities if located on a site boundary. Do not assume that underground utilities are located on or near the boundary or property line under the sign; call the utility and check it out. The underground utilities may be considerable distance away from the warning sign.

- Always contact the owners of utility lines or the nearest underground utility location service before drilling. Determine jointly with utility personnel the precise location of underground utility lines; mark and flag the locations; and determine jointly with utility personnel what specific precautions must be taken to ensure safety.

- Before working on an electrical power or lighting system, lock out the main panel box with your own lock and keep the key on your person at all times (ICF KE Procedure S&H-10, Lock and Tag Program).

- Install all wiring using high quality connections, fixtures, and wire, insulated and protected with consideration of the drilling environment. Makeshift wiring and equipment is not permitted.

- All lights positioned directly above working areas should be enclosed in cages or similar enclosures to prevent loose or detached lamps or vapor tight enclosures from falling on workers.

- Install all lights to produce the least possible glare or "blind spots" on tools, ladders, walkways, platforms, and the complete working area.

- Locate and guard all electrical cables to prevent damage by drill operations or by the movement of personnel, tools, or supplies.

- Ensure that all plug receptacles are the three-prong, U-blade, grounded type and have adequate current carrying capacity for the electrical tools that may be used.

- Ensure that all electric tools have three-prong, U-blade, ground wire plugs and cords.

- Do not use electrical tools with lock-on devices.

- Ensure that all electrical welders, generators, control panels, and similar devices are adequately grounded.

- Avoid attaching electrical lighting cables to the derrick or other components of the drill rig. If this must be done, use only approved fasteners. Do not "string" wire through the derrick.

- Do not use poles used to hold wiring and lights for any other purpose.

- Power should be turned off before changing fuses or light bulbs.

- Ensure that all electrical equipment is operated by trained, designated personnel.

- If you are not qualified to work on electrical devices or on electric lines, do not go near them.

- Temporary wiring will be equipped with GFCI protection.

During this field program, heat/cold-related hazards may occur. Appendix A presents ICF KE procedures S&H-4, Cold Stress, and S&H-15, Heat Stress, to be used along with the following guidance to help prevent temperature extreme-related illness.

4.1.1.7. Heat Stress

In the summer months, adverse climatic conditions are important considerations in planning and conducting site operations. High ambient temperature can result in health effects ranging from transient heat fatigue, physical discomfort, reduced efficiency, personal injury, increased accident probability, to serious illness or death. If Level C protection becomes necessary, heat stress becomes more of a concern due to the impervious protective clothing.

Heat stress is caused by a number of interacting factors, including environmental conditions, clothing, workload, and the individual characteristics of the worker. Because heat stress is probably one of the most common (and potentially serious) illnesses at sites, regular monitoring and other preventive measures are vital.

Note: Chemical protective clothing is defined as, but not limited to

- clothing constructed of Tyvek (or equivalent),
- PVC rainsuits or coveralls, and
- CPF Series Coveralls.

Heat stress manifests in progressive stages, increasing in severity. The initial stage is commonly termed heat fatigue, which is usually transient, and subsides with rest and replenishment of fluids. Heat fatigue

is characterized by discomfort, and reduced mental awareness, with a greater effect in unacclimated workers. Medical treatment is usually not needed.

Heat exhaustion results from sustained exertion in heat, combined with failure to replace water and salts lost in sweat. Symptoms include fatigue, nausea, headache, and clammy, moist skin, which may be flushed or pale. Replacement of water and salts is required to recover, and victims may faint upon standing. Electrolyte replacement fluids should be taken until urine volume increases.

Heat syncope results in fainting and is caused by standing immobile in heat. It is caused by pooling of venous blood in the dilated vessels of the skin and lower body. Recovery is complete and rapid following rest in a recumbent position at a cool location.

The most serious heat illness is heat stroke. Heat stroke is a **medical emergency**; treatment must be immediate; and professional medical attention must be obtained. Heat stroke is caused by a combination of factors including heavy exertion in heat, inadequate replacement of fluids, poor physical condition, and individual susceptibility. Failure of the sweat response occurs, leading to a rapidly accelerated increase in core temperature. The victim usually has hot, dry red skin, and if conscious, is confused; convulsions may be present. The victim must be cooled immediately, heat stroke is fatal if treatment is incomplete or delayed.

As with any illness, the best cure is prevention. Heat stress is most likely early in the summer, prior to acclimatization. Full acclimatization takes from five to seven consecutive days of controlled exertion in heat. Individual physical conditioning, pre-existing illnesses, and use of alcohol contribute significantly to the potential for heat stress. Elevated core temperatures are associated with fetal developmental abnormalities.

4.1.1.8. Cold Stress

In the winter months, cold stress could be an occupational hazard which must be addressed. As with high temperatures, outdoor work in low temperatures can result in risks to the health of employees exposed without adequate preparation. To minimize impacts from cold stress, the information and precautions given herein shall be observed.

Cold-related worker fatalities have resulted from failure to escape low environmental air temperatures or from immersion in low temperature water. Most hypothermia cases develop in air temperatures between 30°F - 50°F. The single most important aspect of life-threatening hypothermia is a fall in the deep core temperature of the body.

Employees shall be protected from exposure to cold so that the deep core temperature does not fall below 38°C (100.4°F). Lower body temperature will very likely result in reduced mental alertness, reduction in rational decision making, or loss of consciousness with the threat of fatal consequences.

Persons working outdoors in temperatures at or below freezing may be frostbitten. Extreme cold for a short time may cause severe injury to the surface of the body, or result in profound generalized cooing, causing death. Areas of the body that have high surface-area-to-volume ratio such as fingers, toes, and ears, are the most susceptible.

Local injury resulting from cold is included in the generic term frostbite. There are several degrees of damage. Frostbite of the extremities can be categorized into:

- Frost nip or initial frostbite: characterized by sudden blanching or whitening of skin.
- Superficial frostbite: skin has a waxy or white appearance and is firm to the touch, but tissue beneath is resilient.
- Deep frostbite: tissues are cold, pale, and solid; extremely serious injury.
- Systemic hypothermia is caused by exposure to freezing or rapidly dropping temperature. Its symptoms are usually exhibited in five stages: 1) shivering; 2) apathy, listlessness, sleepiness, and sometimes rapid cooling of the body to less then 95°F; 3) unconsciousness, glassy stare, slow pulse, and slow respiratory rate; 4) freezing of the extremities; and finally 5) death.

Proper dress is critical to the prevention of hypothermia. The following operational guidance provides a useful starting point for monitoring and controlling hypothermia:

- If the clothing of an employee may become wet on a job site, the outer layer of protective clothing must be impermeable to water.
- Employees should layer their clothing, i.e., wear thinner, lighter clothing next to the body with heavier clothing layered outside the inner clothing.
- Avoid overdressing when going into warm areas or when performing activities that are strenuous. This could lead to heat stress problems.
- Auxiliary heated versions of handwear, footwear, etc., can be used in lieu of mittens, insulated socks, etc., if extremely cold conditions exist, and if hazard classification permits.
- Employees handling evaporative liquids (gasoline, hexane, alcohol, etc.) shall take special precautions to avoid soaking of clothing or gloves with the liquids because of the added danger of cold injury due to evaporative cooling.
- Work shall be arranged in such a way that sitting still or standing for long periods is minimized.

- Thermal socks, long cotton or thermal underwear, hard hat liners, and other cold weather gear can aid in preventing hypothermia.
- Blankets, warm drinks (other than caffeinated coffee), and warm break areas are essential.
- An overall goal is to keep from getting wet. If one does get wet, dry off and change clothes.
- All eyewash/shower units shall be winterized for flow in cold weather.
- Because of temperature and wind, operations may be suspended by the field operations leader as advised by the SHSO.

Clothing for warmth, which is worn under chemical protective clothing, can be laundered in normal fashion, without the wash water being collected as contaminated water. If there is a rip or tear in the chemical protective clothing in a contaminated area, the clothing for warmth must be handled as potentially contaminated, and the water in which it is washed must be collected as potentially contaminated water. More rigorous steps may be required if materials handled are extremely toxic (dioxin, etc.).

4.1.1.9. Storage of Flammable and Combustible Materials

Flammable and combustible materials are not as great a concern as site contaminants. However, there is a moderate risk caused by the use of gasoline for compressors that drive the submersible pumps in the monitoring wells. Gasoline will be stored in OSHA-approved safety cans. Combustible materials will be cleared around the sampling locations to prevent accidental ignition by the combustion engines. Engines will be shut off during refueling.

4.1.1.10. Sanitation

Potable drinking water will be available on-site in containers able to be tightly closed and equipped with a tap. A similar container will be used as a hand and face wash as site workers exit the contamination reduction zone. These water containers will be clearly marked as to their use and only used for that specific purpose. Toilet facilities will be in a designated area close to the work area for use. This toilet will be a chemical type and serviced at least weekly.

4.1.2. Chemical Hazards

Chemical hazards possible from the contaminants present during investigations include inhalation, ingestion, or dermal absorption. Ambient concentrations of these chemicals will probably be negligible

in most areas and therefore of minimal consequence to site workers, according to the information obtained from Mound Plant records and from past analytical results from existing monitoring wells.

Soil gas data showed initial concentrations of volatile organics (VOCs) in the area of the solvent storage shed. Some of the volatile compounds expected and their maximum detected concentrations are freon 113 (131,000 ppb), trichloroethylene (34,780 ppb), 1,1,1,-trichloroethane (33 ppb), Tran-1,2-trans-dichloroethene (247 ppb), Cis-1,2-trans-dichloroethene (40,800 ppb), and toluene (192 ppb).

Estimates of the cumulative yield of contaminants due to volatilization to date is 40.60 pounds. These estimates were based on average offgas concentrations of the target compounds. The estimated yield of contaminants by biodegradation is 114.40 pounds and is based on the increase in CO_2 over ambient conditions. It should be noted that this estimate is prone to bias inherent to the assumptions (every CO_2 molecule over ambient conditions is considered equal to one molecule of CH_2 biodegraded) used in the calculations. Other physical and environmental sources of CO_2 are present in the area of the SVE system that may be contributing to the CO_2 concentrations (i.e., two sewer lines, a sewer ejector, a sewage lift station, and the limestone rock).

Using present offgas concentrations, the current soil concentrations for 1,2-DCE and TCE in the area of SVE well no. 10 are estimated at 0.001 and 0.2 mg/kg, respectively. Comparing the estimated pre-SVE system concentrations of 1,2-DCE and TCE to the current estimated concentrations yields an estimated reduction for 1,2-DCE and TCE of 99.9 and 99 percent, respectively.

Additionally, chemicals used on-site as part of day-to-day operations (i.e. calibration gases, solvents and preservatives) present hazards while in use . These compounds will be accompanied by a MSDS. Appendix C presents MSDSs for the anticipated chemicals to be used on-site.

Chemical and radiological hazards occur when drilling disturbs or penetrates a contaminated pocket of soil. The rig may create dust and generate heat that will volatilize organics in the soil. These factors combine to greatly enhance the possibility of exposure to field personnel. The low concentrations of chemical and radiological contaminants expected in the work areas, however, minimize the potential for generation of measurable levels of concern.

Chemical and radiological hazards may exist when cuttings (containing low levels of VOCs and tritium) are brought to the ground surface.

4.1.3 Radiological Hazards

Because of past activities at the Mound Plant, radiological hazards are associated with potential release sites. The soil samples that were collected from the solvent storage area. Samples results showed maximum levels of plutonium-238 of 0.64 pCi/g. Thorium isotopes have been found in Area B below the detection limit of 2.0 pCi/g and may be encountered during the soil boring program; however, no soil excavation is anticipated, and airborne alpha contamination is not anticipated. The Mound Plant health physicist, safety manager, and construction survey and monitoring group will be notified when intrusive activities are required.

Tritium may be encountered during sampling activities, but the levels in ground and surface water are below those established in the EPA drinking water standards. Those concentrations are not believed to be harmful to field employees. Standard groundwater sampling protective equipment (nitrile gloves) will be sufficient to protect personnel.

The overall occupational radiation exposure limiting values for site workers will be consistent with the following requirements:

Stochastic Effects	5 rem (annual effective dose equivalent)
Non-Stochastic Effects	
Lens of the eye	15 rem (annual dose equivalent)
Extremity	50 rem (annual dose equivalent)
Skin of the whole body	50 rem (annual dose equivalent)
Organ or tissue	50 rem (annual dose equivalent)
Unborn Child	
Entire gestation period	0.5 rem (annual dose equivalent)

With these limits in mind, the EG&G Mound occupational exposure limits to be utilized on-site during the investigation activities will be consistent with maintaining worker exposure to As Low As Reasonably Achievable (ALARA). The ALARA exposure limits will provide workers with an increased degree of protection against potential exposure to radiation.

4.1.4. Biological Hazards

Potential biological hazards include poison ivy, chiggers, mosquitos, and bites from poisonous and non-poisonous animals received while surveying the flora and fauna of the site. In general, surveys for reptiles and amphibians present the greatest danger because of the potential for encountering poisonous snakes, which may require handling for positive species identification. Live trapping of small animals may also require handling of the captured specimen for species identification. Only qualified and experienced personnel are permitted to capture wildlife, thereby preventing unexpected attacks to untrained personnel. First aid treatment and prevention measures, such as the use of insect repellent, will be available to prevent and treat exposure to the remaining biological hazards.

The incidence of Lyme disease has increased, particularly in the eastern United States. Lyme disease is carried by very small ticks that are likely to be encountered in high grass and wooded areas. Use of repellents and coveralls (taped cuffs) in these areas, along with careful inspection while showering, will greatly reduce the risk of contracting Lyme disease. Symptoms of Lyme disease mimic those of less serious illnesses. In the early stages, the symptoms are achy muscles and joints, similar to the flu. Often, but not always, there will be a rash at the point of the bite. Later stages involve symptoms similar to arthritis, and the disease may be fatal. The key to the cure is early detection and treatment. If there is a reasonable suspicion of a bite, a blood test will be needed to confirm the disease.

No personnel assigned to this project have been identified as being allergic to stings. However, personnel visiting or working at the site who are known to be allergic to insect stings must notify the SHSO and make available their prescribed treatment to first aid-trained personnel. All stings and bites should be taken seriously. Personnel should report all insect stings or bites and should be observed for severe swelling of the affected area, shortness of breath, nausea, or shock. If these signs and symptoms are noted, personnel should seek immediate medical attention.

4.1.5. Task-By-Task Risk Analysis

The preceding subsections identify the physical, chemical, radiological, and biological hazards known or suspected to be present at OU-2. This subsection lists each proposed task and discusses the hazards that may apply.

- Drilling - In drilling, there is a great possibility for physical injuries ranging from bruised and cut fingers to death. A drill rig allows for entanglement and pinch points in many parts of the rig. These injuries are generally minor, but may be as severe as death. Other severe injuries may occur from failure of wire rope under extreme stress. If the rope breaks under high tension, it can act as a whip and severely injure workers in the area. The rig may stir some dust and generate

heat that will volatilize organics in the soil. These factors combine to greatly enhance the possibility of exposure to field personnel. The low concentrations of contaminants expected in the work areas, however, minimize the potential for generation of measurable levels of contaminants.

- Decontamination - The potential exists for direct contact with contaminants that may be taken up by dermal absorption. Therefore, care must be exercised during decontamination activities to prevent contact with decontamination solution runoff.

- Soil Vapor Extraction (SVE) O&M - Extraction and monitoring wells will be installed and developed in order to extract vapors and monitor groundwater in the area of the storage shed. Wells are expected to be less than ten feet or until bedrock is encountered. Static water level measurements will be collected. The SVE unit will measure the amount of vapor which flows through the inlet lines from the extraction wells. These extraction lines may be sampled intermittently. A pilot test of the SVE unit will be conducted for 30-days in order to determine optimal operational performance. A pilot test extraction data will identify compounds within the soils and also delineate the perimeter of the contaminated soil. Operation and maintenance for a six month period will be the primary concern after a successful pilot test has been conducted.

- Soil Gas Sampling - Vapors within the soil in the area of the B solvent storage shed will be sampled. Samples will be drawn from the soil through sampling probes which are driven into the soil to desired depths. The vapor samples will be collected in an air-tight container. The trapped vapors will be analyzed to determine the specific compounds present.

- Subsurface Soil Samples - Subsurface soil samples may be collected during the drilling of the monitoring/extraction wells for borehole logging and geotechnical purposes. Split spoon samplers will be used for collecting the sample.

- Surface Soil Samples - Surface soil samples may be collected for chemical analysis. The samples will be collected using a bucket auger. The samples will be conformational.

- Well Abandonment - The SVE extraction wells will be removed. The wells will be pulled from the ground after the concrete seal at the surface is removed. Care will be taken during the removal of the concrete seal and during the extraction of the well from the subsurface.

- Hauling/Dumping - The clay cap covering the B Building Solvent Storage Shed area will be removed with a rubber tire backhoe and placed in dump trucks for disposal onsite. During hauling, care will be taken when backing the dump truck. The dump truck will be equipped with a backup signal or be escorted at all times while backing up. During dumping, the driver will insure that no one is within 20 feet of the rear of the dump truck while dumping.

5. WORKER TRAINING

As in all field activities at hazardous waste sites, site personnel must meet certain criteria before entering a potentially hazardous area. The criteria outlined in OSHA regulations (29 CFR 1910.120) state that general site workers, to include EG&G exclusion zone workers, must receive:

- 40 hours of health and safety indoctrination training;
- three 8-hour days of supervised on-the-job training; and
- participation in a medical monitoring program.
- Supervisors must receive an additional 8 hours of training.
- Workers that may require the use of respiratory protective equipment must participate in an annual quantitative respirator fit-test program.
- Everyone must have 8 hours of annual refresher training and DOE/EH-0227P visitor training requirements.

As part of the pre-investigation briefing session, information in this HASP will be presented to the field team members by the SHSO. Information to be discussed will include, but is not limited to, task specific issues, organizational responsibilities, personal protective equipment, emergency procedures, and air monitoring protocol. Following the training, all personnel will be required to signify that they have read and understood the contents of this HASP by signing the Health and Safety Plan Signature Record (see Appendix D).

At the beginning of each day and prior to beginning work, or as needed due to changing work tasks, the Site Health and Safety Officer will briefly review the safety requirements for the specific tasks to be performed with each field team. These requirements include the day's activities, required levels of protection, condition changes, potential hazards and mitigation measures, and problems previously experienced.

In addition, the Mound Plant health physics orientation required by Mound Procedure 8019 will be conducted by Mound Plant personnel. During field sampling activities, at least one on-site member of the field team will have current Red Cross or equivalent certification in first aid and cardiopulmonary resuscitation.

Those personnel (including workers, supervisors, and contractor employees) potentially exposed to heat stress conditions shall have been trained in the following:

1. Sources of heat stress, influence of protective clothing, and importance of acclimatization;
2. How the body handles heat;
3. Heat related illnesses;
4. Preventative/Corrective measures; and
5. First Aid procedures.

All employees who may work in cold areas shall be trained in:

1. Proper first aid treatment,
2. Proper clothing practices,
3. Proper eating and drinking habits,
4. Recognition of impending adverse health effects, and
5. Safe work practices.

6. PERSONNEL PROTECTION REQUIREMENTS

Personal protective equipment is provided to ICF KE site workers when a barrier is necessary to protect against dangerous objects, substances, processes, etc. ICF KE Procedure S&H-20 establishes the requirements of this program.

The standard level of protection for general site work on this project is Level D, consisting of hard hat, safety shoes, safety glasses, long pants and long-sleeve shirts, and canvas or leather work gloves.

Modified Level D protection, Level D1, will be used to initiate activities on the basis of the soil gas data collected and the expectation that little contamination will liberate into the breathing zone. However, breathing zone organic vapor and dust concentrations compared to established action levels will determine the appropriate personal protective equipment and control measures to be implemented. Level D1 protective equipment will include:

- Tyvek or another type of disposable coverall, when dusty or dirty operations are being performed;
- nitrile inner gloves
- nitrile outer gloves;
- steel-toed safety boots;
- disposable PVC boot covers;
- hard hat;
- safety glasses; and
- hearing protection (during heavy equipment work)

Level C protective equipment will include:

- MSA full-face, air-purifying, cartridge-equipped (GMC-H) respirators;
- CPF II coverall
- nitrile inner gloves;
- nitrile outer gloves;
- steel-toed safety boots;
- PVC boot covers;
- hard hat; and
- hearing protection (during heavy equipment work)

The radionuclide concentrations may exceed background levels during the investigation. Plutonium and thorium represent substantial inhalation hazards, so engineering controls such as dust suppression will be used, as necessary, to prevent the inhalation of particulates, especially during drilling or dust-producing activities. All protective clothing will remain at the work site or will be decontaminated before removal from the immediate work area.

When dust levels reach 5 mg/m^3, radioactively contaminated particulates may approach levels of concern if soil concentrations of plutonium-238 or thorium-230 are greatly elevated. Therefore, at 2.5 mg/m^3, (50% of the calculated action level) as detected by the real-time aerosol monitor (Mini-Ram), the level of protection will be upgraded to Level C, and air sampling will be implemented. A downgrade to Level D can occur only when air sampling results indicate that airborne radioactively-contaminated particulate levels are below a third of the most restrictive DAC (plutonium-238, thorium-231), 1 x E-12 μCi/mL. Air sampling to allow downgrading will require the collection of air particles on a filter and gross alpha analysis using a portable alpha sample counter. Gross alpha results will be compared to the DAC for the radionuclide of concern in the area where activities are being conducted.

6.1. JUSTIFICATION FOR PROPOSED LEVELS OF PROTECTION

The concentration ranges for each level of protection prescribed in this document are applicable to the Solvent Storage Shed Area. The proposed concentration ranges are for Levels D and C protection and are supported by the following information.

The most restrictive numerical exposure limit value of potential volatile contaminants is 1 ppm for benzene. The lower detection limit of a 11.7 eV photoionization detector is also approximately 0.2 ppm.

Since the odor threshold of benzene is greater than the exposure limit, the use of air-purifying cartridges in known benzene environments is prohibited.

If concentrations of benzene (as measured by a PID calibrated to isobutylene and confirmed by the use of detector tubes) are present at concentrations greater than 1 ppm above background, work will stop. The level of protection will be revised, and the appropriate equipment and personnel will be mobilized to the site.

As presented in Table VI.1, the levels of protection will be based on the following action levels for a 1-minute sustained reading in the breathing zone, as measured with the PID, Dräger detector tubes, LEL/O_2 meter and the Mini-Ram aerosol monitor.

6.2. RESPIRATORY PROTECTION (GENERAL)

The use of respiratory protective equipment will be consistent with the requirements of ICF KE Procedure S&H-21, Respiratory Protection, and 29 CFR 1910.134. These MSA full-face, air-purifying respirators equipped with GMC-H cartridges will provide respiratory protection if organic vapors, dust levels, or airborne radioactive contamination exceeds action levels. All respiratory cartridges will be changed at the end of each working day or at the first sign of warning property breakthrough.

TABLE VI.1 PROTECTION AND ACTION LEVELS

Protection Level	Action Levels
Level D	< 2.5 mg/M^3 Dust Levels
	< 1 ppm above background
Level C	1-5 ppm above background on PID without benzene present
	> 2.5 mg/m^3 dust levels
	> DAC on the air filters
Exit site; reevaluate condition with the site health and safety officer	> 1 ppm above background on PID with benzene present
	> 20% LEL on the combustible gas indicator (LEL/O_2 meter)
	> 10 times the DAC on air filters
	> 3 times background or 1 mR/hr (alpha, beta, gamma)
	> 5 ppm above background on PID or FID
	< 19.5 % oxygen on the LEL/O_2 meter

- Only properly cleaned and maintained, NIOSH/MSHA approved respirators shall be used on-site.
- Selection of respirators, as well as any decisions regarding upgrading or downgrading of respiratory protection will be made by the Site Health and Safety Officer after consulting with the Project Health and Safety Officer.
- Air purifying cartridges shall be replaced at the beginning of each shift or when load-up or breakthrough occur.
- No employee shall be assigned to tasks requiring the use of respirators if, based upon the most recent examination, a physician determined that the employee will be unable to function normally wearing a respirator or that the safety or health of the employee or other employees will be impaired by use of a respirator. This shall be so stated on the medical certificate.
- Only employees who have had pre-issue qualitative fit tests and annual fit tests thereafter shall be allowed to work in atmospheres where respirators are required.
- If an employee has demonstrated difficulty in breathing during the fitting test or during use, he or she shall have a supplemental physical examination to determine the cause of the difficulty.
- Where practical, respirators will be assigned to individuals for their exclusive use.
- Respiratory devices will be cleaned, sanitized, and inspected at the completion of each shift activities.
- Contact lenses are not to be worn while using any type of respiratory protection.
- Excessive facial hair (beards) prohibits proper face fit and effectiveness of respirators. persons required to wear respirators must not have excessive growth of beard. All personnel wearing respirators will be required to be clean shaven prior to each day's shift.
- Regular eyeglasses cannot be worn with full-face respirators (breaks the face-piece seal). Inserts must be used.
- Where respirators are designated for protection against particulate contaminants, the employee shall be permitted to change canisters or cartridges whenever an increase in breathing resistance (load-up) is detected.

7. AIR MONITORING REQUIREMENTS

The concentration ranges for each level of protection prescribed in this HASP are applicable to the Solvent Storage Shed activities. The proposed concentration ranges for levels D and C protection are supported by the following information:

- The most restrictive numerical value of the exposure limits for VOCs is 1 ppm due to possible exposure to benzene.
- The lower detection limit of a Photoionization Detector (PID) is approximately 0.2 ppm, depending on the chemical being detected.
- The known VOCs at the Mound Plant all have ionization potentials and relative responses that allow detection by photoionization with an 11.7 eV lamp.
- Air-purifying respirators equipped with GMC-H cartridges will provide respiratory protection if organic vapors, dust levels, or airborne radioactive contamination exceeds action levels. Level C may not be used with benzene (at concentrations greater than 1 ppm).
- Concentrations of radioactive contamination in soils, in the range of 600 pCi/g, must be present to exceed the DAC for thorium or plutonium, if 2.5 mg/m^3 of respirable dust (<10 microns) is generated. This is verified by the following calculation:

$$3 \times 10^{-12}\ uCi/mL \times 10^6\ mL/m^3 / (5\ mg/m^3 \times 10^3\ g/mg) = 600\ pCi/g.$$

where: DAC for plutonium-238 and thorium-230 = 3×10^{-12} uCi/mL; and
Limit for respirable particulates in air = 5 mg/m^3.

As a minimum, the following instruments will be used during all activities:

- PID - The PID will be used to continuously monitor intrusive activities. The 11.7 eV probe will be used unless identified chemicals of concern have an ionization potential of less than 10.2 eV. The use of the 10.2 eV probe must be authorized by the ICF KE PHSO.
- Alpha scintillometer - The alpha scintillometer will be used by EG&G to screen personnel and equipment prior to their leaving an area of suspected alpha contamination.

The following instruments must be added on an activity-specific basis. These are in addition to the baseline instruments identified above.

- Real-Time Aerosol Monitor (Mini-RAM™) - The Mini-RAM™ will be used in all studies to determine total dust levels during activities where dusts are anticipated to be a problem.
- LEL/O_2 Meter - The LEL/O_2 meter will be used to detect the presence of combustible gases at areas where any intrusive activity deeper than 5 ft. below ground surface takes place or when there is an enclosed space such as the

head-space in a monitoring well. The activities that include intrusive sampling are the drilling investigation.

- FIDLER or NaI μR meter - EG&G Mound will use either of these when elevated radioactive levels are anticipated or suspected. The general action level is three times background. All drilling, soil borings, and soil sampling activities within 1,000 ft of the plant boundary may require use of the FIDLER or NaI μR meter. The FIDLER instrument is used for the detection of plutonium. It is relatively insensitive for higher energy gamma rays.

- Geiger-Mueller (G-M) detector with pancake probe - EG&G Mound will use this instrument for on-site intrusive work where elevated radioactive levels of gamma and beta activity other than plutonium are suspected. The general action level is three times background. All drilling, soil boring, and soil sampling activities within 1,000 ft of the plant boundary will require use of the G-M detector.

- Air sampling pumps and filters - Medium volume (80 L/m) portable air samplers will be used by EG&G Mound when the Mini-RAM™ exceeds 2.5 mg/m^3 or when airborne alpha contamination is expected. A portable gross alpha counter will be used to analyze the glass fiber acetate filters.

- Drager tubes - These tubes are to be used to confirm the presence or absence of benzene (part no. 6728561).

7.1. PRE-WORK AREA SURVEY

Each work location or area will be surveyed for organic vapors and radioactive contamination before sampling begins and continuously while intrusive activities are performed.

- The organic vapor survey will be conducted using a PID that has a 11.7 eV lamp, as appropriate, to confirm levels of organic contaminants. PID measurements will be taken in the breathing zone during all intrusive activities to document the levels of VOCs and to confirm the level of protection.

- Detector tube measurements specific to benzene will be taken if photoionization detector readings reach 1 ppm above background in the breathing zone.

- During drilling, monitoring will be performed after every drilling depth increment, not to exceed a maximum of 10 ft.

In addition to organic vapor monitoring, several types of radiation monitoring/screening will be performed by EG&G Mound during this survey and continuously while intrusive activities are performed. The types of instruments used and their frequency of use are as follows:

- Personnel and equipment will be screened for radioactive contamination every time a member of the field team leaves a potentially radioactive contaminated area or every time potentially contaminated equipment is removed from a work area. In addition, the Mound Plant requires final screening of all equipment prior to removal from the plant security boundary at the end of a job.

- As a part of the work area survey, radiological instruments will scan for widespread unexpected radioactive contamination hazards. If unexpected contamination is detected, no work will begin until the situation is discussed with

the ICF KE PHSO and the EG&G Mound health physics department. The decision to proceed with appropriate action must be agreed upon by ICF KE and EG&G Mound prior to authorizing on-site work to proceed.

- FIDLER screening will be performed during all intrusive activities (soil sampling and drilling). Samples, drill cuttings, and newly exposed soil will be screened as necessary.

- Air sampling and filter analysis will also be performed when potential dust producing activities are performed and contamination is known to be present (as evidenced by past data or by screening of work areas, samples, or cuttings). When air monitoring is performed, portable air samples with filter(s) attached will be placed at the worst case exposure location (on the drill rig or backhoe) and operated for 4 to 6 hours. The filters will be analyzed (counted) each night.

Every member of the field team will wear a thermoluminescent dosimeter during all field activities. Thermoluminescent dosimeters can record external exposures from gamma and beta radiation.

When intrusive work is performed in areas with the potential for removable radioactive contamination, bioassay samples will be taken before the work begins and at the completion of the task. These samples will be analyzed for the radionuclides of concern, typically plutonium-238, to document any internal exposures that have occurred. Additional analytes such as tritium may be added as necessary. Small releases of tritium do occur and may result in slightly elevated tritium levels in bioassay samples.

In areas with the potential for radioactive contamination, the Mound Plant may require analysis of 24-hour urine samples before work begins and exit counts when the work is completed. This 24-hour urinalysis documents baseline and exit internal radiation, as well as tritium levels.

The decision to upgrade personal protection levels based on radiation levels can be the result of several occurrences, which are listed below. The decision is based on a combination of data types or observations, the most important of which is often the discretion of the ICF KE SHSO in conference with the health physicist.

- Significant levels of radioactive contamination are found during screening of samples, drill cuttings, or work areas, and an activity is being performed that may produce dust.

- Mini-RAM™ readings in excess of 2.5 mg/m^3.

If the Mini-Ram readings exceed 2.5 mg/m^3, air samples for radioactive contamination will collected and analyzed by EG&G Mound. If these concentrations in the air (as measured and calculated using air sampling and filter analysis) exceed one third of the DAC, Level C will remain in effect until data to justify downgrading is collected. This air sampling is also useful as a way of documenting conditions in the work areas. Air sampling may also be performed if site information or past data indicate the possibility if airborne (particulate) contaminant levels. These filter(s) will be counted using an alpha scintillometer.

8. MEDICAL SURVEILLANCE

OSHA requires medical surveillance for "employees who are or may be exposed to hazardous substances or health hazards at or above the permissible exposure limits or, if there is no permissible exposure limit, above the published exposure levels for these substances without regard to the use of respirators, for 30 days or more a year" (29 CFR 1910.120, paragraph f). All ICF KE personnel who will be performing field activities participate in the ICF KE Medical Surveillance Program, which complies with this section of the OSHA regulations.

8.1. ROUTINE EXAMINATION

All ICF KE personnel shall have medical examinations prior to participation in on-site operations, at the conclusion of the work and/or at 12-month intervals during the project. The exams are evaluated by Environmental Medicine Resources, Inc. (EMR), Atlanta, GA and shall consist of the following:

- Medical history
- General physical examination (including evaluation of all major organ systems)
- Pulmonary function testing ($FEV_{1.0}$ and FVC) to evaluate ability to wear respiratory protective equipment
- Electrocardiogram
- Blood chemistry profile
- CBC
- Standard laboratory urinalysis with microscopic examination
- Audiometric testing
- Chest X-ray
- Visual acuity

EMR maintains employees records and provides work related medical restrictions, as necessary.

8.2. NON-ROUTINE MEDICAL EXAMINATION

Nonscheduled medical examinations shall be conducted under the following circumstances:

- After known or suspected acute exposure to any toxic or hazardous material.
- At the discretion of the Project Manager, SHSO, or the Health and Safety Director, when an employee has been exposed to significant levels of toxic or hazardous materials.

- At the discretion of the Project Manager, SHSO, or Health and Safety Director, and upon receipt of a request for a medical examination from an employee with demonstrated symptoms of exposure to hazardous substances.
- Prior to an employee returning to work after a lost-time injury or illness.

8.3. MEDICAL RECORDS

Medical records for all ICF KE personnel are maintained by EMR and in a database at the Pittsburgh office. All requirements of 29 CFR 1910.20, Access to Employee Exposure and Medical Records, will be followed. Medical records will not be maintained on-site.

8.4. ADDITIONAL REQUIREMENTS

Additional medical monitoring of all field team members will be performed as required by EG&G Mound when work is to be performed at radioactively contaminated areas. This will include baseline whole-body counts to be performed on-site by Mound Plant staff, urinalysis before work begins, and whole-body counts and/or urinalysis after work is completed. In addition, Mound Plant procedures require the issue of personal protective equipment (including respirators) for work performed in radioactively contaminated areas. These procedures will quantify and document internal exposures to the radionuclides.

For the work being performed in the B Building Courtyard, the site field team members will not need additional medical monitoring unless deemed necessary by EG&G Mound personnel.

9. SITE CONTROL ZONES

9.1. WORK ZONE DELINEATION

Control zones will be established before work begins at potentially contaminated work sites to protect employees and the general public from unnecessary exposure to toxic materials and radiation and to prevent the spread of contamination. Figure 9.1 shows a typical layout of the three control zones: 1) the exclusion zone; 2) the contamination reduction zone; and 3) the support zone.

The exclusion zones or work areas will be designated at each work site based on the nature, magnitude, and extent of contamination and on the potential for contaminant migration. If levels of radioactivity in the air or soil require the use of respiratory protective equipment, this area will be posted with caution signs alerting affected personnel.

Additional exclusion zones may also be established for safety considerations other than contamination, including hard hat, eye protection, and ear protection zones, particularly during the operation of heavy machinery and drilling. During drilling, the control zone will be at least 25 ft or one boom length in diameter.

Surrounding the exclusion zones is the contamination-reduction zone in which a corridor will be established for final decontamination activities. Decontamination is required for personnel, equipment, and vehicles moving from the exclusion zone to the contamination reduction zone. The size of the contamination-reduction corridor will depend on the number of stations required for decontamination activities and will be determined on-site by the SHSO with the approval of Mound Plant representatives.

For immediate response and treatment, emergency equipment, such as fire extinguishers, first aid kits, blankets, and eye wash kits, will be available in the contamination reduction zone adjacent to the exclusion zone. Emergency equipment will be clearly marked, and the locations will be pointed out during the pre-investigation training session described in Section 5.

9.2. SITE ENTRY/EGRESS

Egress from an exclusion zone will normally be allowed only through an access station manned by the ICF KE SHSO, health physicist or a designated safety person specifically trained to conduct radioactive contamination monitoring. All personnel and equipment leaving the restricted work area or contacting potentially contaminated materials will be monitored for radioactive waste, and if necessary adhere to contamination reduction procedures for removal of residual waste. Visitors will not be permitted to enter control zones.

Figure 9.1. Control Zones

9.3. COMMUNICATION

Radios will be used, as necessary, to communicate from the exclusion zone to the contamination reduction zone and support zone. Site security escorts will provide communication to the guard watch in the event of an emergency.

9.4. SITE SECURITY

Only specified areas of the EG&G Mound facility require a security guard escort. IN these areas, fully trained security personnel will escort ICF KE personnel to the exclusion zone as necessary. ICF KE will not allow untrained personnel to participate in exclusion zone activities.

10. DECONTAMINATION AND DISPOSAL PROCEDURES

Decontamination procedures are established for the purpose of removing gross contamination that may have accumulated on workers during site activities and also to prevent contaminants from migrating from the site. As leaving the contaminated area, all personnel and equipment will initially be decontaminated. Based on the initial screening for radioactive waste, repetitive decontamination practices may be necessary.

Equipment and personnel will be screened for radioactive contamination before release from the site and periodically during field work using a alpha scintillometer to detect alpha-emitting radionuclides such as plutonium-238 according to Table X.1. If release limits are not met initially, a second decontamination will be required.

10.1. PERSONNEL DECONTAMINATION

All personnel working within the exclusion zone or work area will be required to pass through the contamination reduction zone upon exiting the area. This zone will be set up at the perimeter of the work area or areas and will consist of the following sequential wash and rinse procedure:

- Equipment drop
- Boot wash/rinse
- Outerglove wash/rinse
- Outerglove removal
- Protective coverall removal
- Respirator removal
- Inner glove removal

During this procedure, methods for properly doffing any disposable or thoroughly decontaminated reusable personal protective clothing or equipment must be followed to reduce the possibility of contacting potentially contaminated media. Field personnel who are unable to remove radioactive contamination below the release limit must report to the Mound Plant Health Physics group.

10.2. EQUIPMENT DECONTAMINATION

The following equipment will be decontaminated. All equipment that cannot meet the radioactive contamination release limits will be confiscated and disposed of by Mound Plant Health Physics personnel.

10.2.1. Sampling and Monitoring Equipment

Measures shall be taken by personnel to prevent the contamination of any monitoring equipment used on the site. Once contaminated, instruments are difficult to clean without damaging them. Any delicate

Table X.1. Surface Radioactivity Guides (Regulatory Guide 1.86)

Acceptable Surface Contamination Levels			
Nuclide[a]	Average [b]	Maximum[b,d]	Removable[b,e]
Uranium-natural, uranium-235, uranium-238, and associated decay products	5,000 dpm α/100 cm^2	15,000 dpm α/100 cm^2	1,000 dpm α/100 cm^2
Transuranics, radium-226, radium-228, thorium-230, thorium-228, protactinium-231, actinium-227, iodine-125, iodine-129	100 dpm α/100 cm^2	300 dpm α/100 cm^2	20 dpm α/100 cm^2
Thorium-natural, thorium-232, strontium-90, radium-223, radium-224, uranium-232, iodine-126, iodine-131, iodine-133	1,000 dpm α/100 cm^2	3,000 dpm α/100 cm^2	200 dpm α/100 cm^2
Beta-gamma emitters (nuclides with decay modes other than alpha emission or spontaneous fission) except strontium-90 and other noted above.	5,000 dpm /100 cm^2	15,000 dpm /100 cm^2	1,000 dpm /100 cm^2

Source: NRC 1974

[a] Where surface contamination by both alpha- and beta-gamma-emitting nuclides exists, the limits established for alpha- and beta-gamma-emitting nuclides should apply independently.

[b] As used in this table, dpm (disintegrations per minute) means the rate of emission by radioactive material as determined by correcting the counts per minute observed by an appropriate detector for background, efficiency, and geometric factors associated with the instrumentation.

[c] Measurements of average contaminant should not be averaged over more than 1 square meter. For objects of less surface area, the average should be derived for each such object.

[d] The maximum contamination level applies to an area of not more than 100 cm^2

[e] The amount of removable radioactive material per 100 cm^2 of surface area should be determined by wiping that area with a dry filter or soft absorbent paper, applying moderate pressure, and assessing the amount of radioactive material on the wipe with an appropriate instrument of known efficiency. When removable contamination on objects of less surface area is determined, the pertinent levels should be reduced proportionally, and the entire surface should be wiped.

instrument such as monitoring equipment, that cannot be decontaminated easily, should be protected while it is being used by placing it in a bag and using tape to secure the bag around the instrument. Openings in the bag can be made for sample intake and exhaust.

10.2.2. Respiratory and Personal Protective Equipment

When air-purifying respirators are required, there is a high potential for these units to become contaminated. At the end of each work day, all respirators will be thoroughly cleaned according to the ICF KE respiratory protection procedure. When decontaminating, this equipment will be properly disassembled (according to manufacturer specifications) washed in soap and water, rinsed and allowed to dry before reassembly. Disassembly and reassembly shall only be performed by personnel trained in this task.

10.2.3. Heavy Equipment

Potentially contaminated heavy equipment (i.e., drill rigs and associated tools, trucks, etc.) will also be decontaminated using high pressure hot water washing prior to leaving the facility. The equipment will be monitored for radioactive contamination and, if found, decontaminated a second time. At a minimum, Level C personal protection will be required for equipment decontamination activities. The decontaminated runoff will be collected and containerized until the waste is characterized and the proper disposal method is determined.

10.2.4. Audits

Periodically, audits of the decontamination procedures will be performed to ensure compliance.

10.3 DISPOSAL OF INVESTIGATION DERIVED MATERIALS

In general, contaminated, investigation-derived wastes will be containerized on-site, sealed and labelled as to the contents. These containers will be staged at the work site in a secured, easily accessible location until disposal alternatives are investigated.

11. STANDARD OPERATING PROCEDURES

As discussed in Section 4, ER Program investigations at Mound Plant will be performed according to established SOPs (DOE1991). The ICF KE and ER Program health and safety SOPs are provided in Appendix A.

12. CONTINGENCY PLANNING

12.1. EMERGENCY CONTACTS

Persons and organizations to contact in case of emergencies at Mound Plant are provided in Table XII.1. These emergency contacts will be called prior to initiating field activities to confirm their location and remedy any concerns. This emergency contact list will be posted in prominent locations at the work site. In an emergency, the ICF KE SHSO will ensure EG&G plant personnel are notified immediately. Outside response agencies will be contacted and the evacuation of the site will be coordinated through the security escort. Mound Plant personnel will be contacted to contain and clean up all spills and releases.

12.2. SITE EMERGENCIES

Sycamore Hospital has been identified as the closest Hospital to the EG&G Mound Site. Directions to this facility are presented as Figure 12.1 and will be posted with the emergency contact information. This route will be driven by ICF KE site personnel to familiarize themselves with this location.

12.2.1. Basic Emergency Equipment

During on-site sampling activities at the site, ICF KE will maintain a variety of first aid and emergency equipment in the support zone. All personnel and subcontractors will have access to this equipment in the event of an injury or if an exposure to hazardous materials occurs. The various types of first aid equipment that will be available include:

- First Aid Kit
- Sterile Eye Wash
- Stretcher
- Splints
- Instant Coldpacks.
- Fire Extinguishers

12.2.2. First Aid and CPR

In case of minor injuries to personnel, first-aid treatment will be initiated by trained personnel in the field. These trained personnel will be identified prior to initiating onsite activities. First-aid treatment will be available from Mound Plant paramedics (x 911). In case of serious injuries, the victim will be initially treated using first aid/CPR techniques and transported by Mound paramedics to Sycamore Hospital as soon as possible.

TABLE XII.1 EMERGENCY CONTACTS

Fire, Security, Ambulance	911
Police	3400
Chemical-Oil Spills Cleanup	800-424-8802
National Response Center	202-462-2657
Chemtrec (Chemical Emergencies 24 hrs)	800-424-9300
Centers for Disease Control	404-488-4100 (24 hr)
AT&F (Explosives Information)	800-424-9555
Poison Control Center	304-348-4211 (Local) 800-642-3625
USEPA Region III Response Center	(215) 597-9898 (24 hr)
U.S. Coast Guard	(800) 424-8802

PROJECT EMERGENCY CONTACTS

ICF KE Group Health and Safety Director	Gerald J. Joy Emergency Beeper	(412) 497-2056 (800) 710-0935
ICF KE Project Health and Safety Officer	Daniel J. Welshons Emergency Beeper	(412) 497-2329 (412) 594-1097
ICF KE Project Manager	Keith Egan	(513) 745-2769
EG&G Project Manager	Gary Coons	X-3867
EG&G Construction Inspection	Joyce Geisler	X-3817

Figure 12.1. Hospital Map

Injuries in contaminated areas require additional steps to address possible contamination of the injured person. The SHSO will contact the Mound paramedics for injuries in potentially contaminated areas.

Emergency first aid will be applied on-site as deemed necessary followed by decontamination and transport of the individual(s) to Sycamore Hospital if needed. The SHSO will supply medical information to the appropriate medical personnel and will complete the Exposure/Injury Incident Report (See Appendix E) required.

An ambulance/rescue squad shall be contacted for transport in an emergency, if necessary.

Generic first aid procedures and typical responses may include:

- Skin Contact - Use copious amounts of soap and water. Wash/rinse affected area thoroughly, then provide appropriate medical attention. An eyewash system will be provided on-site at the support zone as appropriate. Eyes should be rinsed for 15 minutes when chemical contamination has occurred.
- Inhalation - Move the victim to fresh air immediately. If necessary, restore breathing. Decontaminate and transport to hospital if required.
- Ingestion - Decontaminate and transport the victim to emergency medical facility immediately.

12.2.3. Adverse Weather Conditions

In the event of adverse weather conditions, the SHSO will determine if work can continue without sacrificing the health and safety of any field workers. Items to be considered prior to determining if work should continue include:

- Potential for heat stress and heat-related injuries,
- Limited visibility,
- Electrical storms (Drilling will be suspended if lightning is visible)
- Potential for high winds resulting in contaminant transport.
- Tornados

12.3. SPILLS

In the event of a spill of a hazardous substance during handing, transportation, or disposal, 911 must be called immediately to alert EG&G personnel. The following actions will be taken:

- Notify the ICF KE Site Field Leader and Project Manager;
- Take immediate measures to control and contain the spill within the site boundaries;
- Keep unnecessary people away, isolate hazardous areas, and deny entry;

- Do not allow anyone to touch spilled material;
- Stay upwind, keep out of low areas
- Keep combustibles away from the spilled material;
- Use a water spray of foam to reduce vapor or dust generation, as needed;
- Take other actions as necessary.

Continue monitoring and arrange with Mound Plant personnel to contain and clean up spill.

12.4. EMERGENCY RESPONSE PLANS

Emergency-response plans in this subsection will be followed during field investigations. A copy of the task-specific HASP will be available at each work site at all times. Personnel working on-site will be familiar with the HASP and will sign the page at the end of the document. Evacuation plans and routes will be established on a site-specific basis and discussed with field personnel before field activities begin.

12.4.1. Evacuations

Evacuations may be required under certain circumstances; for example, fire, explosion, release of toxic or hazardous materials, multiple injuries, tornadoes, etc. If an evacuation becomes necessary, personnel will be alerted by a vehicle horn or a portable air horn and instructed to meet at the pre-determined evacuation area. In most circumstances, it will be upwind of the potential hazard. A head count will be taken, and all applicable emergency procedures will be followed.

12.4.2. Fire/Explosion

A fire emergency will be handled by evacuating the work area and immediately notifying the Mound Plant fire department or the Miamisburg Fire Department at 911. Only if a fire appears to be small and easily extinguishable will field personnel attempt to put out the fire with available fire extinguishers. The Mound Plant fire department will be notified of all fires. If an explosion occurs, all personnel will be evacuated, and no one will reenter the work area until it has been cleared by the Mound Plant fire department personnel.

12.4.3. Personnel Injuries

In case of minor injuries to personnel, first-aid treatment will be initiated by trained personnel in the field. First-aid treatment is available from Mound Plant paramedics (ext. 911). In case of serious injuries, the victim will be transported to Sycamore Hospital as soon as possible. Directions to the hospital are given

in section H and the task-specific plans. These will be posted with the emergency contact form at prominent locations at the work sites.

Injuries in contaminated areas require additional steps to address possible contamination of the injured person. The SHSO will contact Mound Plant paramedics for injuries in potentially contaminated areas. Responses will vary, depending on the severity of the injury and the extent of contamination, and will be determined initially by the SHSO and later by Mound Plant paramedics.

13. REPORTING

13.1. HEALTH AND SAFETY LOG BOOK

The SHSO will keep a Health and Safety Site Log Book to record site information, the names of subcontracting personnel working on-site and the names of visitors to the site. At a minimum, the following information must be put in the log book on a daily basis:

- weather
- personnel on-site, company and title
- proposed work activity
- level(s) of protection donned
- air monitoring equipment readings obtained during work activities
- any health and safety-related issues or situations
- daily start-up findings

13.2. EMPLOYEE EXPOSURE/INJURY INCIDENT REPORTING

All incidents resulting in an exposure or injury to personnel on-site (employee or otherwise) are to be recorded on the Employee Exposure/Injury Incident Report Form. This form is to be completed by the SHSO and submitted to the Project Health and Safety Officer, the Health and Safety Director and the ICF KE and EG&G Mound Project Manager within 24 hours of the incident. Accident investigations will be performed as required by ICF KE and EG&G policy.

14. REFERENCES

ACGIH. 1987. "Threshold Limit Values and Biological Exposure Indices for 1987-88." American Conference of Governmental Industrial Hygienists. Unnumbered report.

CFR. 1990. "General Industry Standards for Hazardous Waste Operations." Occupational Safety and Health Administration. 29 CFR 1910.120.

DOE. 1992. "Standard Operating Procedures." Mound Plant, Environmental Restoration Program. U.S. Department of Energy, Albuquerque Field Office, Albuquerque, New Mexico. January 1991.

DOE. 1991. DOE/EH 0227P. Environmental Guidance - OSHA Training Requirements for Hazardous Waste Operations. December 1991.

DOE. nd. DOE Order 5480.11. Radiation Safety for Occupational Workers.

EPA. 1988. "Guidance for Conducting Remedial Investigations and Feasibility Studies Under CERCLA [Interim Final]." Office of Emergency and Remedial Response, U.S. Environmental Protection Agency, Washington, D.C. October 1988.

HGC. 1987. "Soil Gas Sampling at the DOE Mound Plant in Miamisburg, Ohio." Hydro Geo Chem, Inc. September 1987.

NCRP. 1971. "Basic Radiation Protection Criteria." National Council on Radiation Protection and Measurements. Report No. 39. Bethesda, Maryland.

NCRP. 1980. "Management of Persons Accidentally Contaminated with Radionuclides." National Council on Radiation Protection and Measurements. Report No. 65. Bethesda, Maryland. April 1980.

NIOSH. 1990. "Pocket Guide to Chemical Hazards." National Institute for Occupational Safety and Health. Report 78-210. June 1990.

NRC. 1974. "Termination of Operating License for Nuclear Reactors." Regulatory Guide 1.86. U.S. Nuclear Regulatory Commission, Washington D.C. U.S. Government Printing Office.

OSHA. 1990. "General Industry Standards for Toxic and Hazardous Substances as of March 6, 1989." Occupational Safety and Health Administration report in 29 CFR 1910, subpart Z.

STANDARD OPERATING PROCEDURE 1.1

GENERAL INSTRUCTIONS FOR FIELD PERSONNEL

1. PURPOSE

To provide field personnel with instructions regarding activities to be performed before, during, and after field investigations.

2. DISCUSSION

The Field Sampling Plan (FSP) or Work Plan (WP) contains specific details about procedures and equipment for a given operation. Refer to the FSP or WP for the type of samples, measurements, and tests to be collected or performed. The collection and documentation of data should be performed as described in specific SOPs. These general instructions are intended to supplement the information supplied in the FSP or WP and associated SOPs and clarify the role of field personnel at remedial investigations. These instructions will ensure that field personnel take the proper precautions to understand the site, the objective and the schedule for the field program, their authority, and their responsibilities described in the FSP or WP.

This SOP is supported by others that describe procedures and rationale for performing reconnaissance geophysical and soil gas surveys; soil and rock boring; sample logging; soil and sediment sample collection; installation and operation of vadose-zone instruments and samplers; groundwater monitoring well installation, development, and sampling; operation of sampling equipment; sample control and data documentation; performance of aquifer testing; collection, preservation, handling, packaging, and shipping of samples; decontamination procedures; health and safety monitoring; and radiological surveys.

3. PROCEDURES

3.1. Associated Procedures

Before every operation, a review of this SOP and SOPs 1.3-1.10 is required. In addition, a review of associated SOPs for each task is necessary. The associated SOPs are listed in Section 3.1 of each task SOP. Constant review of the SOPs will ensure that the work performed in the field is legally defensible, well documented, and cost-effective. The decontamination procedures are important for protecting the health and safety of workers, and to minimize the risk of cross-contamination among samples.

3.2. Preparation

3.2.1. Office

A. Personnel should review the FSP or WP and associated documentation for a specific operation and obtain all information related to the purpose and intent of the field program. This may include (but is not limited to) the documents listed below.

1. The scope of work or work plan described in the FSP or WP
2. Previous reports related to the site
3. Reports related to the area
4. Site maps
5. Area maps
6. Access agreements
7. The subcontractor's work plan
8. Data collection forms and equipment checklists
9. Associated SOPs

B. Field personnel are expected to maintain a good working relationship with the client, community, and subcontractors. With this in mind, field personnel should contact installation staff, members of the community (in coordination with installation staff), and subcontractors before work is initiated. During the initial contact, permission to enter private property or security areas should be obtained.

C. Obtain and test all equipment needed for the task. See checklist in Appendix 5.1.

D. Most sample analyses must be performed within a stringent time period. In addition, laboratories are vulnerable to heavy overloads. Contact the laboratory before sampling activities begin to ensure that the personnel are aware of specific requirements for analyses and can complete the work quickly and efficiently.

E. Delays at the freight office can be eliminated by contacting the carrier before arrival with a shipment. The carrier can supply information on regulations and specifications for shipping, the address of the nearest delivery office, and the time of the next freight pickup in the area.

3.2.2. Documentation

A. Obtain a logbook and ER Program data collection forms. All measurements, observations, and instrument readings should be entered on the forms according to the instructions supplied. All entries should be made in black ink that is not water soluble (not a felt-tip pen). Make an entry in each blank. Where there is no data entry, enter UNK for Unknown, NA for Not Applicable, or NP for Not Performed. If any procedure was not performed as prescribed, give the reason for the change or omission in the comments field of the form. To change an entry to a form or field log book, draw a single line through it, add the correct information above it, and initial the change. Information that does not require data entry should be entered in the logbook. All logbooks are numbered, bound, and contain numbered pages for quality assurance/quality control purposes. Do not alter the logbook (e.g., tearing out pages) or data collection forms in any manner.

B. The information management codes and sample identification numbers used in data entry are assigned by the data administrator. The data administrator directly transmits the updated codes to the project personnel. This system is necessary to avoid duplication of site identifiers or inaccurate entries. Because the list of codes is continually being updated, SOPs cannot be revised each time a new list is produced.

C. Three days before leaving for any field trip, a previsit/pretravel report form must be submitted to DOE. The report contains information about dates of travel, mode of travel, hotel accommodations, and contact phone numbers. Arrangements for renting field vehicles should be made at this time.

3.2.3. Field

A. Check the condition and operation of all supplies and equipment at the site. Perform calibration checks specified in operators' manuals or appropriate SOPs.

B. Establish decontamination zones and barricades to public access.

3.3. Operation

A. The field personnel monitor and provide technical direction for the field work, log samples, take measurements, and sometimes pack and ship samples as required.

B. Under direction of the site manager, field personnel may designate sampling or hole locations, depth and completion zones, types of samples and depths of sample (or measured, if *in situ*), and approve and record procedures, materials, and all activities conducted in compliance with the FSP or WP.

NOTE: Whenever a sample is collected, a custody record must be initiated on the Custody Transfer Record/Lab Work Request form and a label affixed to the sample container—either a Soil Sample Identification Label or a Water Sample Identification Label. SOP 1.3, Sample Control and Documentation, contains copies of these forms and instructions for completing the forms.

C. Additional duties that the field personnel may perform are described below.

1. Keep a logbook to record information concerning equipment, personnel, site visitors, and activities (start and stop times, supplies used, footage drilled/installed, and site observations), as well as weather or site conditions affecting the activities. The field personnel should note all relevant instructions and information and document that proper QA/QC protocols have been followed. All information pertaining to a field activity should be entered in a bound book with consecutively numbered pages (see SOP 1.3, Sample Control and Documentation, for instructions on keeping the logbook). Subcontractors should sign/initial the daily log, thereby certifying that the account records agree with their estimates.

2. Telephone the site manager or office headquarters daily and provide a progress report.

3. Observe that the subcontractor complies with the FSP or WP and all applicable permits and licenses.

4. Complete all data collection forms according to applicable instructions as work progresses.

5. Observe whether the subcontractor follows the applicable health and safety requirements. If violations occur, the field personnel should stop work and immediately notify the site manager or site health and safety officer.

6. Monitor air, personnel, and equipment for contamination and record results on appropriate forms or in the logbook.

7. Supervise decontamination of equipment and personnel. Record procedures used for decontamination in the logbook. Collect decontamination solutions in containers for appropriate disposal as specified in the FSP or WP.

8. Notify the site manager of any modifications to the contract that may be appropriate. Work not defined in the FSP or WP should not be initiated without the approval of the site manager.

3.4. Postoperation

3.4.1. Field

A. Ensure that all equipment is accounted for, decontaminated (see SOP 1.6, General Equipment Decontamination), and ready for shipment.

B. Restore the site to the presampling conditions as specified in the FSP or WP. Restoration can include repair of damage to the land surface (tire ruts) or private property (fences), as well as restoration anticipated at the time the FSP or WP was prepared (for example, revegetation or borehole abandonment).

C. Mark sampling locations or survey points with wooden lathe stakes, wooden survey pegs, or metal fenceposts. Write the location ID on the marker or survey flagging so that it is readily visible. Mark groundwater monitoring wells on the guard pipe and inside the casing cap. Use a black marker for wooden stakes, flagging, and the casing cap. Mark the guard pipes with welds or stencils and paint.

D. Shipping samples is the last task in most field operations. SOPs 1.3-1.5 should be used as guides to sample handling and transport. SOP 1.5, Guide to Handling, Packaging, and Shipping of Samples, is a summary of Department of Transportation regulations pertaining to the transport of hazardous substances most commonly sampled in the field. Use SOP 1.5 in conjunction with the appropriate Code of Federal Regulations and guidance supplied by the freight carrier to ensure that packages are documented and properly labeled.

3.4.2. Documentation

A. Record any restoration work in the logbook.

B. Record any uncompleted work in the logbook. This record may include sampling that could not be performed, damage that could not be repaired, or requirements for long-term monitoring (for example, the need to verify instrument readings at different times of the year).

C. Complete logbook entries, verify the accuracy of entries, and sign/initial all pages.

D. Review data collection forms for completeness.

E. Submit a travel expense report.

3.4.3. Office

A. Deliver original forms and logbooks to the site manager for technical review. He/she will review, sign forms, and transmit to the document control officer (copies to the files) for eventual delivery to the Department of Energy.

B. Inventory equipment and supplies. Repair or replace all broken or damaged equipment. Replace expendable items. Return equipment to the equipment manager and report incidents of malfunction or damage.

C. Contact the analytical laboratory to ensure that samples arrived safely and instructions for sample analyses are clearly understood.

4. SOURCES

None.

5. APPENDIX

5.1. Equipment and Supplies Checklist

APPENDIX 5.1

EQUIPMENT AND SUPPLIES CHECKLIST

_____ Overshoes

_____ Work gloves (2 pairs)

_____ Acid (10% HCL) bottle

_____ Clipboard case

_____ Strapping tape

_____ Pin hammer

_____ Tape measure (tenths)

_____ Protractor

_____ Hat

_____ First aid kit

_____ Sun screen

_____ Thermoluminescent dosimeter (TLD)

_____ Safety shoes/boots

_____ Ziplock bags

_____ Preprinted labels

_____ Distilled (organic-free) water

_____ Methanol (Nanograde)

_____ Freight forms

_____ Telephone directories

_____ Chain-of-custody forms

_____ Hard hat

_____ Pieces of wood (2 inches x 2 inches x 8 inches) to indicate core loss intervals

APPENDIX 5.1, continued

EQUIPMENT AND SUPPLIES CHECKLIST

_____ Stamped, addressed envelopes (large and regular sizes)

_____ Phone and gas credit cards

_____ Calculator

_____ Pens, pencils, and permanent markers

_____ Package cord

_____ Flagging

_____ Hand lens

_____ Tool box

_____ Rain suit

_____ Camera

_____ Ear plugs

_____ Stopwatch

_____ Cold-weather gear

_____ Alpha meter

_____ Safety glasses

_____ Kitchen screen (determine lithology)

_____ Ice chest

_____ Bound logbook

_____ Data collection forms

STANDARD OPERATING PROCEDURE 1.6

GENERAL EQUIPMENT DECONTAMINATION

1. PURPOSE

To describe methods for the decontamination of field equipment potentially contaminated during sample collection.

2. DISCUSSION

The Field Sampling Plan (FSP) or Work Plan (WP) provides information about the scope and details of a given operation. The FSP or WP also contains specifications for the use of decontamination agents, areas where decontamination will be performed, and quality assurance procedures to verify the effectiveness of the decontamination procedures. Decontamination is performed as a quality assurance measure and a safety precaution. It prevents cross-contamination among samples and helps maintain a clean working environment for the safety of all field personnel.

Decontamination is mainly achieved by rinsing with liquids that include soap or detergent solutions, tap water, deionized water, and methanol. Equipment is allowed to air dry after being cleaned or wiped dry with chemical-free cloths or paper towels. It can then be reused immediately. Steam cleaning should be used whenever visible contamination exists or for large machinery/vehicles.

It is the primary responsibility of the site manager to assure that proper decontamination procedures are followed and that all waste materials produced are properly stored or disposed of. It is the responsibility of all personnel involved with sample collection or decontamination to maintain a clean working environment and ensure that contaminants are not negligently introduced into the environment.

3. PROCEDURES

3.1. Associated Procedures

Before every operation, a review of SOPs 1.1-1.10 is necessary. These SOPs contain information on the performance of field activities. They should be consulted for specific information about equipment and supplies; sample collection, preservation, packaging, and shipping; decontamination procedures; and documentation requirements. Procedures directly associated with this SOP are listed below.

SOP No.	SOP Title
1.1	General Instructions for Field Personnel
6.4	Total Alpha Surface Contamination Measurements

6.11 Beta-Gamma Radiation Measurements Using a Geiger-Mueller Detector

3.2. Preparation

3.2.1. Office

A. Review the FSP or WP and SOPs listed in Section 3.1.

B. Coordinate schedules/actions with the installation staff.

C. Obtain appropriate permission for property access.

D. Assemble the equipment and supplies listed in Appendix 5.1.

E. Notify the analytical laboratory of the decontamination blank sample and the approximate arrival date.

F. Contact the carrier that will transport the sample to obtain information on regulations and specifications.

3.2.2. Documentation

A. Obtain a logbook from the QA officer.

B. There are no forms required to document decontamination procedures and the degree of decontamination attained.

3.2.3. Field

A. Assemble containers and equipment for decontamination.

B. Decontaminate all equipment before use.

3.3. Operation

The extent of known contamination determines the extent to which equipment must be decontaminated. If the extent of contamination cannot be readily determined, clean the equipment on the assumption that it is highly contaminated until enough data are available to allow an accurate assessment of the level of contamination.

Adequate supplies of rinsing liquids and all materials should be available. Perform decontamination in the same level of protective clothing as sampling activities unless a different level of protection is specified in the FSP or Health and Safety Plan.

The procedure for full field decontamination follows. Any deviations from this procedure for a specific project are included in the FSP or WP.

Decontamination Steps

1. The purpose of the initial step is to remove gross contamination. Remove any solid particles from the equipment or material by brushing and then

rinsing with available tap water. For drilling equipment, steam cleaning is necessary.

2. Wash equipment with a nonphosphate soap or detergent solution, such as Alconox®.

3. Rinse with tap water by submerging or spraying.

4. For organic contaminants, rinse with methanol then hexane. Methanol must be of a laboratory-reagent grade and hexane a "pesticide" grade.

5. Rinse thoroughly with distilled water.

6. Air dry equipment or rinse with nanograde methanol to expedite drying.

7. If radiation screening is required by the FSP or WP, screen the equipment with a radiation detector according to SOP 6.4, Total Alpha Surface Contamination Measurements; or SOP 6.12, Radon-222 Flux Measurements Using Charcoal Canisters. If activity above the limits for unrestricted use is detected, repeat steps 1-6.

8. Samples of drippings from the last rinse in step 5 may be collected and analyzed to verify the effectiveness of the decontamination procedure. This type of sample is called a decontamination blank. The results of these analyses are not usually available for at least one week after they arrive in the laboratory, so it is important to do a thorough decontamination from the start of the sampling activity to minimize the potential for a positive hit in the decontamination drippings.

3.4. Postoperation

3.4.1. Field

A. Decontaminate as much sampling equipment as possible and properly dispose of expendable items that cannot be decontaminated. Proper disposal may involve onsite drumming of liquids and solids in approved containers for subsequent disposal. Expensive items like machinery may require a more advanced decontamination analysis.

B. Prepare the decontamination blank sample and transport it according to SOP 1.3, Sample Control and Documentation; SOP 1.4, Sample Containers and Preservation; and SOP 1.5, Guide to Handling, Packaging, and Shipping of Samples.

C. Store containers of solutions produced during decontamination in a secure area.

D. Dispose of any soiled materials as designated in the FSP or WP.

3.4.2. Documentation

A. Record radiological measurements in the logbook before leaving the site.

B. There are no forms required to document decontamination procedures and the degree of contamination attained.

3.4.3. Office

A. Deliver original logbooks to the site manager for technical review. He/she will review and transmit to the document control officer (copies to the files) for eventual delivery to the Department of Energy.

B. Inventory equipment and supplies. Repair or replace all broken or damaged equipment. Replace expendable items. Return equipment to the equipment manager and report incidents of malfunction or damage.

C. Contact the analytical laboratory to ensure that the sample arrives safely and instructions for analyses are clearly understood.

D. After receiving the results of the laboratory analyses, arrange for the disposal of wastes generated during the investigation.

4. SOURCE

NIOSH, OSHA, USCG and EPA. 1985. "Occupational Safety and Health Guidance Manual for Hazardous Waste Site Activities." prepared by the National Institute for Occupational Safety and Health (NIOSH), Occupational Safety and Health Administration (OSHA), U.S. Coast Guard (USCG), and the U.S. Environmental Protection Agency (EPA). U.S. Department of Health and Human Services, Public Health Service, Centers for Disease Control, NIOSH report, October 1985. Washington, D.C.: U.S. Government Printing Office.

5. APPENDIX

5.1. Equipment and Supplies Checklist

APPENDIX 5.1

EQUIPMENT AND SUPPLIES CHECKLIST

_____ Decontamination solutions preselected by the laboratory

_____ Cleaning liquids: soap or detergent solutions, tap water, deionized water, and methanol

_____ Chemical-free paper towels

_____ Cleaning brushes

_____ Cleaning containers: plastic buckets and galvanized steel pans

_____ Waste storage containers: drums and plastic bags

STANDARD OPERATING PROCEDURE 1.7

SAMPLING FOR REMOVABLE ALPHA CONTAMINATION

URPOSE

:scribe a method of verifying that equipment leaving a controlled area that contains active materials meets unrestricted release criteria for removable contamination. equipment may include tools, vehicles, and miscellaneous items brought into contact radioactive materials.

SCUSSION

'ield Sampling Plan (FSP) or Work Plan (WP) provides information on the scope of a operation, related health and safety requirements, and the applicability of this iure to the activities.

ment and vehicles must be monitored for surface contamination before release for ricted use from a radiologically controlled area. Levels of surface alpha nination on equipment will be determined and compared to release criteria ter in DOE Order 5480.11. These criteria are based on U.S. Nuclear Regulatory Regulatory Guide 1.86 and presented as either total average, total maximum, le. Total average measurements are based on portable instrument surveys for amination over a 1 m^2 area. Total maximum measurements are based on le instrument surveys for alpha contamination over a 100 cm^2 area. Removable ination is defined as that amount of surface alpha activity that may be transferred oft, dry filter paper after wiping 100 cm^2 areas of the surface with moderate re. The swipe is then counted in a stationary radiation detector to determine able alpha activity.

imary alpha-emitting radionuclide of concern at the Mound Plant is plutonium-238. e instances, these plutonium, uranium, and thorium sources may contaminate some ent surfaces concurrently. It is therefore necessary to select the surface ination limits based on the most restrictive radionuclide, plutonium-238. For um-238 and other transuranics, the surface contamination limits are as follows:

Nuclide	Average	Maximum	Removable
Plutonium-238	100 dpm/100 cm^2	300 dpm/100 cm^2	20 dpm/100 cm^2

y per unit area is reported in units of disintegrations per minute (dpm) over a 100 face area. Natural uranium and thorium isotopes have significantly higher release han plutonium-238, thus are bounded by plutonium-238 limits. It is important to at due to the characteristics of portable alpha detection instruments, it is generally sible to statistically detect 20 dpm/100 cm^2 on a potentially contaminated surface. ore, removable alpha contamination measurements must be made on all equipment iologically controlled area of the Mound Site.

d technique for verification is to wipe (swipe) an area on a piece of ent and analyze the swipe sample for elevated levels of radioactivity. A gross-

alpha count is performed with an alpha sample counter connected to a portable scaler. The 2p efficiency of the counter is usually 30-40%.

High-voltage plateau curves and National Bureau of Standards (NBS) traceable source calibrations must be performed on the detector semiannually to ensure proper operation. Alpha detector counting efficiencies must be determined daily before using the instrument for contamination monitoring. The counting efficiency also must be determined following any adjustments or repairs on the instrument. The counting efficiency is used to convert instrument readings to a measure of activity in units of dpm per 100 cm^2.

It may also be necessary to take direct instrument measurements with portable alpha scintillators or Geiger-Mueller detectors. A comparison of swipe results and direct instrument readings will distinguish between amounts of removable and total contamination.

3. PROCEDURE

3.1. Associated Procedures

Information that applies to most field activities is provided in SOPs 1.1-1.10. In addition to the FSP or WP, those SOPs provide guidance that may supplement the information in this procedure. They should be consulted as necessary to obtain specific information about equipment and supplies; sample collection, preservation, packaging, and shipping; decontamination procedures; and documentation requirements. Procedures directly associated with this SOP are listed below.

SOP No.	SOP Title
1.1	General Instructions for Field Personnel
1.6	General Equipment Decontamination
6.4	Total Alpha Surface Contamination Measurements
6.11	Beta-Gamma Radiation Measurements Using a Geiger-Mueller Detector

3.2. Preparation

3.2.1 Office

A. Review the FSP or WP and SOPs listed in Section 3.1.

B. Coordinate schedules/actions with the installation staff.

C. Obtain appropriate permission for property access.

D. Arrange for a laboratory counting system and personnel to perform the desired radiological analysis of swipes onsite.

E. Assemble the equipment and supplies listed in Appendix 5.1. Ensure the proper operation of all field equipment.

APPENDIX 5.4

DATA FORM COMPLETION

: a pen with black ink that is not water soluble (not a felt-tip pen). Make an entry in h blank. Where there is no data entry, enter UNK for Unknown, NA for Not plicable, or ND for Not Done. If any procedure was not performed as prescribed, give reason for the change or omission on the form. To change an entry, draw a single : through it, add the correct information above it, and initial the change.

DAILY ALPHA EFFICIENCY CHECK FORM

1. Facility Code. Five-character code abbreviating the facility name where program activity is being conducted. The first three characters indicate the facility, and the remaining two numbers designate the specific site within the facility.

2. Field Rep. The name of the field representative.

3. Logger Code. Three-character or four-character code identifying the company responsible for collecting the information recorded on the form.

4. Acceptance Code. One-character code assigned by the site manager.

Ratemeter/Scaler Model No. The model number of the ratemeter/scaler.

Ratemeter/Scaler Serial No. The serial number of the ratemeter/scaler.

7. Ratemeter/Scaler Calibration Date. The date when the ratemeter/scaler was last calibrated.

8. Window. The window is in the out position unless otherwise specified.

9. Threshold. The adjustment for the lower energy level of the discriminator shown on the calibration sticker.

10. High Voltage. The voltage that is applied to the detector shown on the calibration sticker.

11. Battery. The battery voltage reading at the beginning of the measurement.

12. Probe Model No. The model number of the alpha scintillation probe.

13. Probe Serial No. The serial number of the alpha scintillation probe.

14. Probe Calibration Date. The date when the alpha scintillation probe was last calibrated.

15. Source Serial No. The serial number of the radiation source.

Source Isotope. The radioactive isotope contained in the source and given as an element and mass number, like Am-241 or Pu-238.

17. Source Activity. The activity of the radioactive source. An activity given in microcuries (lCi) can be converted to disintegrations per minute (dpm) using 2.22×10^6 dpm = 1 lCi.

18. Log Date. The date the information recorded on the form was obtained in the format DD-MMM-YY (01-JAN-88).

19. Time (HH:MM). The time the efficiency was determined using the 24-hr clock in the format hours:minutes.

20. Counting Time (Min). The time in minutes over which the scaler counts. Enter NA if using a ratemeter.

21. Background cpm. The count rate resulting from the 10-min background count.

$$\text{Background counts per minute (cpm)} = \frac{\text{10-min background count}}{10}$$

22. Gross Counts.. The number of pulses recorded by the ratemeter/scaler during the 1-min source-counting time. Enter NA if using a ratemeter.

23. Gross cpm. The gross count rate of the source given in pulses per minute.

24. Net cpm. This is equal to the gross cpm minus the background cpm.

25. Efficiency (Net cpm/dpm). The ratio of the observed net count rate to the true disintegration rate (dpm).

$$\text{Efficiency} = \frac{\text{Net cpm}}{\text{Source dpm}}$$

APPENDIX 5.4, Continued

ALPHA CONTAMINATION SURVEY DATA FORM

1. Facility Code. Five-character code abbreviating the facility name where program activity is being conducted. The first three characters indicate the facility, and the remaining two numbers designate the specific site within the facility.

2. Log Date. The date the information recorded on the form was obtained in the format DD-MMM-YY (01-JAN-88).

3. Logger Code. Three-character or four-character code identifying the company responsible for collecting the information recorded on the form.

4. Field Rep. The name of the field representative.

5. Acceptance Code. One-character code assigned by the site manager.

6. Ratemeter/Scaler Model No. The model number of the ratemeter/scaler.

7. Ratemeter/Scaler Serial No. The serial number of the ratemeter/scaler.

8. Ratemeter/Scaler Calibration Date. The date when the ratemeter/scaler was last calibrated.

9. Window. The window will be in the out position unless otherwise specified.

10. Threshold. The adjustment for the lower energy level of the discriminator. This is determined during calibration before instrument use in the field.

11. High Voltage. The voltage that is applied to the detector. The operating voltage for an alpha detector is typically 500 to 700 volts. The voltage is determined by a voltage plateau during calibration.

12. Battery. The battery voltage reading at the beginning of the measurement.

13. Alpha Probe Model No. The model number of the alpha scintillation probe.

14. Alpha Probe Serial No. The serial number of the alpha scintillation probe.

15. Alpha Probe Calibration Date. The date when the probe was last calibrated.

16. Date/Time of Eff Check. The date and time of the last efficiency check from the Daily Alpha Efficiency Check form.

17. Efficiency. Ratio of observed count rate to the known disintegration rate of the check source from the Daily Alpha Efficiency Check form.

18. Comments. Any additional information.

19. Item Surveyed (Specify). A description of the article swiped.

20. Instrument Reading (cpm). The count rate in counts per minute for the swipe.

21. Area Surveyed (cm^2). The swiped area measured in cm^2.

22. Adjusted Count Rate (cpm/100 cm^2). If the area swiped was 100 cm^2, this is the meter cpm reading. If the swiped area was not 100 cm^2, the cpm reading must be adjusted to cpm/100 cm^2 in order to apply the release limits from Appendix 5.5. The formula shown below is used.

$$\text{Adjusted cpm} = \frac{100\ cm^2}{\text{area swiped in } cm^2} \times \text{Instrument reading in cpm}$$

23. Contamination Level (dpm/100 cm^2). The surface contamination level in units of dpm per 100 cm^2. Because the swiped area was adjusted to 100 cm^2, the removable contamination level is the instrument reading divided by the efficiency.

$$\text{Contamination level (dpm/100 } cm^2) = \frac{\text{Adjusted cpm}}{\text{Efficiency}}$$

24. Within Release Limit? (Yes/No). The result of a comparison of the contamination level with the applicable release limit. The result may be abbreviated Y for yes if the measured contamination is less than the limit; N is used for no if above the limit.

APPENDIX 5.5

LIMITS FOR REMOVABLE SURFACE CONTAMINATION

NUCLIDE[a]	REMOVABLE[b c]
U-nat, U-235,U-238, and associated decay products	1000 dpm a/100 cm^2
Transuranics (Pu-238), Ra-226, Ra-228, Th-230, Th-228, Pa-231, and Ac-227	20 dpm/100 cm^2
Th-nat, Th-232, Sr-90, Ra-223, Ra-224, U-232, I-126, I-131, and I-133	200 dpm/100 cm^2
Beta-gamma emitters (nuclides with decay modes other than alpha emission or spontaneous fission) cept Sr-90 and others noted above	1000 dpm bc/100 cm^2

here surface contamination by both alpha- and beta-gamma-emitting nuclides exists, the limits established for alpha- beta-gamma-emitting nuclides should apply independently.

used in this table, disintegrations per minute (dpm) means the rate of emission by radioactive material as determined orrecting the counts per minute observed by an appropriate detector for background, efficiency, and geometric factors iated with the instrumentation.

e amount of removable radioactive material per 100 cm^2 of surface area should be determined by wiping that area with ilter or soft absorbent paper, applying moderate pressure, and assessing the amount of radioactive material on the wipe an appropriate instrument of known efficiency. When removable contamination on objects of less surface area is mined, the pertinent levels should be reduced proportionally. The entire surface should be wiped.

STANDARD OPERATING PROCEDURE 1.8

PERSONNEL DECONTAMINATION--LEVEL D PROTECTION

1. PURPOSE

To describe the equipment and procedures required for the decontamination of persons who have performed field activities in Level D protective clothing.

2. DISCUSSION

The Field Sampling Plan (FSP) or Work Plan (WP) provides information about the scope and details of a specific operation. Refer to the FSP or WP Health and Safety Plan for recommendations about the level of protection worn to enter a site and the criteria for upgrading to higher levels of protection.

Level D protective clothing is primarily a work uniform. This level of protection is worn when work functions preclude splashes, immersion, inhalation, or exposure to materials above the action limits specified in the FSP or WP.

Although Level D protection is worn under these conditions, workers may be wearing disposable coveralls and gloves, safety boots/shoes, a hard hat, and safety glasses. Therefore, the site Health and Safety Plan must address the proper disposition of disposable clothing and decontamination measures that should be implemented. The disposition of disposable items must follow installation requirements and any applicable state and federal regulations.

3. PROCEDURES

3.1. Associated Procedures

Before every operation, a review of the SOPs 1.1-1.10 is necessary. These SOPs contain information on the performance of field activities. They should be consulted for specific information on equipment and supplies; sample collection, preservation, packaging, and shipping; documentation procedures; and documentation requirements. Procedures directly associated with this SOP are listed below.

SOP No.	SOP Title
1.1	General Instructions for Field Personnel
1.6	General Equipment Decontamination
1.9	Personnel Decontamination--Level C Protection

3.2. Preparation

3.2.1. Office

A. Review the FSP or WP and SOPs listed in Section 3.1.

B. The FSP or WP Health and Safety Plan will specify the procedures and equipment required for the decontamination and disposal of Level D protective clothing. All onsite personnel will be informed about the proper disposal of protective clothing and any decontamination solutions used.

C. Appendix 5.1 lists the items suggested for Level D decontamination. This list provides general guidelines and can be modified in order to meet site-specific work activities or features.

D. Obtain necessary clothing, protective gear, and equipment. Read the Health and Safety Plan and ensure that necessary decontamination materials are available.

3.2.2. Documentation

A. Obtain a logbook from the QA officer.

B. There are no forms required to document decontamination procedures and the degree of decontamination attained.

3.2.3. Field

Before initiating field activities, designate an area for decontamination activities. Although Level D areas should be minimally contaminated, always use caution to prevent the potential spread of any unknown contaminants.

3.3. Operation

The following decontamination procedures are recommended for Level D protection. These measures represent suggested guidelines and may be modified to meet site-specific conditions.

A. Remove any disposable coveralls, rubber gloves, and boot covers and place in a plastic trash sack.

B. If dusty conditions have been encountered, use water-dampened paper towels to remove the dust from hard hats and safety glasses/goggles. Place used paper towels in a trash sack.

C. If necessary, decontaminate safety boots with water and a steel brush. Do not wear muddy or dusty boots out of the exclusion zone.

D. All workers should wash hands and face before leaving the site.

E. All workers should change clothing and shower as soon as possible after the day's work activities.

3.4. Postoperation

3.4.1. Field

Collect all trash sacks containing disposable clothing. Dispose of trash sacks according to the requirements of the site Health and Safety Plan. The site manager or field team leader is responsible for the safe disposal of any items.

3.4.2. Documentation

A. Record radiological measurements in the logbook before leaving the site.

B. There are no forms required to document decontamination procedures and the degree of decontamination attained.

3.4.3. Office

Return all unused items to the equipment manager. The equipment manager should be informed of all stock items that need to be ordered to replenish the inventory.

4. SOURCES

NIOSH, OSHA, USCG and EPA. 1985. "Occupational Safety and Health Guidance Manual for Hazardous Waste Site Activities." Prepared by the National Institute for Occupational Safety and Health (NIOSH), Occupational Safety and Health Administration (OSHA), U.S. Coast Guard (USCG) and the U.S. Environmental Protection Agency (EPA). U.S. Department of Health and Human Services, Public Health Service, Centers for Disease Control, NIOSH report, October 1985. Washington, D.C.: U.S. Government Printing Office.

EPA. 1984. "Standard Operating Safety Guides." Environmental Response Branch, Hazardous Response Support Division, Office of Emergency and Remedial Response, U.S. Environmental Protection Agency, November 1984. Washington, D.C.: U.S. Government Printing Office.

5. APPENDIX

5.1. Equipment and Supplies Checklist

APPENDIX 5.1

EQUIPMENT AND SUPPLIES CHECKLIST

_____ Plastic trash sacks
30-gallon size: (no. of boxes) _____
20-gallon size: (no. of boxes) _____

_____ Plastic wash tub: (number) _____

_____ Paper towels: (no. of rolls)_____

_____ Liquid hand soap

_____ Wet wipe towelettes

_____ Water container
(size) 1 gallon_____ 5 gallon_____

_____ Brushes (scrub or wire)

_____ Alpha scintillation detector

. Documentation

A. Obtain a logbook from the QA officer.

B. Record results of the equipment check in the logbook.

C. Obtain a sufficient number of the appropriate ER Program data collection forms (see INDEX TO SOPs).

D. Consult the ER Program data administrator for a current list of codes used in the completion of data forms.

3.2.3. Field

A. Complete the Daily Alpha Efficiency Check form (Appendix 5.2) by following instructions in Appendix 5.4, Data Form Completion.

B. Perform a 10-min background count and a 1-min NBS-traceable alpha source count daily when using the instrument. Record the results on the Daily Alpha Efficiency Check form (Appendix 5.2) and under efficiency on the Removable Alpha Contamination Survey Data form (Appendix 5.3). The efficiency is calculated as shown below.

$$\text{Efficiency} = \frac{\text{net source counts per minute (cpm)} - \text{background cpm}}{\text{source dpm}}$$

Any significant deviation of the efficiency from previous days or from the average may be a signal that the instrument is malfunctioning and should be investigated. Any significant increase in the 10-min background count usually indicates that the probe is contaminated and should be cleaned thoroughly.

3.3. Operation

3.3.1 Swipe Test

A. Label all swipe envelopes with the date, time, description or number of the item swiped, the location, and the initials of the person who collected the swipe sample. Make sure a sufficient number of swipes are available for the desired tasks.

B. If swipes are to be taken in a controlled area, wear appropriate protective clothing. Consult the Health and Safety Plan for the level of protection.

C. Obtain swipes from an area of 100 cm^2 when possible, noting the area swiped or surveyed in cm^2 on the Removable Alpha Contamination Survey Data form (Appendix 5.2). When it is not possible to cover this area, make an estimate of the surface area (in cm^2). For convenience, 100 cm^2 can be approximated by a square that is 4 inches on each side. If contamination is detected on a swipe taken from an area greater than 100 cm^2, the area must be reswiped in 100 cm^2 increments to ensure that a hot spot in excess of the limit is not present.

. Use sufficient pressure on the swipe to pick up loose contamination without tearing or separating the swipe. Rough surfaces like concrete, cast iron, and rough-cut lumber should be surveyed according to SOP 6.4, Total Alpha Surface

Contamination Measurements, and 6.11, Beta-Gamma Radiation Measurements Using a Geiger-Mueller Detector.

E. During routine swipe surveys, pay particular attention to areas on equipment where contamination is most likely to occur (for example, handles, footrests, and tires).

E. Return the swipe to a properly labeled glassine envelope. Maintain the swipe integrity and ensure that the sample material is not dislodged from the swipe.

G. Count each swipe with the alpha sample counter and scaler by inserting the swipe into the slide tray, closing the tray, and starting a 1-min count. This time may have to be decreased for swipes with high activity. Any swipe that appears to exceed the release criterion should be counted more than once for confirmation. Release criteria are described in Appendix 5.5, Limits for Removable Surface Contamination.

H. Record all results on the Removable Alpha Contamination Survey Data form (Appendix 5.3) according to instructions in Appendix 5.4, Data Form Completion.

I. Give the survey results to the personnel responsible for releasing equipment. Save any swipes that exceed the removable contamination limit in case a recount or additional analysis is needed. Equipment that fails to meet the release limits must undergo additional decontamination according to SOP 1.6, General Equipment Decontamination, and must be resurveyed.

Postoperation

.1. **Field**

A. Ensure that all equipment is accounted for, decontaminated (see SOP 1.6, General Equipment Decontamination), and ready for shipment.

B. Return all equipment to the storage area. Be certain the ratemeter/scaler is in the off position.

C. Equipment that fails to meet the release criteria after repeated decontamination efforts must be held from unrestricted release.

D. Make sure that swiped items are properly numbered or marked and identifications are readily visible and permanent.

1.2. **Documentation**

A. Record any uncompleted work (like uncounted swipes or items needing decontamination) in the logbook.

B. Complete logbook entries, verify the accuracy of entries, and sign/initial all pages.

C. Review data collection forms for completeness.

Office

A. Deliver original forms and logbooks to the document control officer (with copies to the site manager and files) for eventual delivery to the Department of Energy.

B. Inventory equipment and supplies. Repair or replace all broken or damaged equipment. Replace expendable items. Return equipment to the equipment manager and report incidents of malfunction or damage.

C. Ensure that all radiological sources and standards have been stored in a locked area.

SOURCE

.S. Nuclear Regulatory Commission. 1974. Regulatory Guide 1.86, "Termination of Operating Licenses for Nuclear Reactors." Washington, D.C.: U.S. Government Printing Office.

APPENDIXES

1 **Equipment and Supplies Checklist**

2 **Daily Alpha Efficiency Check Form**

3 **Removable Alpha Contamination Survey Data Form**

Data Form Completion

5 **Limits for Removable Surface Contamination**

APPENDIX 5.1

EQUIPMENT AND SUPPLIES CHECKLIST

_____ Round swipe pads, 2-inch diameter

_____ Sample holders or glassine envelopes

_____ Indelible marker

_____ Latex gloves

_____ Alpha detector, Ludlum model 43-10 or the equivalent

_____ Portable scaler (Ludlum 2200 or the equivalent) and connecting cable

_____ Forceps (for handling contaminated swipes)

_____ NBS-traceable alpha source, like Am-241 or Pu-238

_____ Hand-held calculator

APPENDIX 5.2

DAILY ALPHA EFFICIENCY CHECK FORM

DAILY ALPHA EFFICIENCY CHECK

FACILITY CODE _____ FIELD REP _____

LOGGER CODE _____ ACCEPTANCE CODE _____

RATEMETER/SCALER:

MODEL NO _____ SERIAL NO _____ CALIBRATION DATE _____

WINDOW OUT THRESHOLD _____ HIGH VOLTAGE _____ BATTERY _____

ALPHA SCINTILLATION PROBE:

MODEL NO _____ SERIAL NO _____ CALIBRATION DATE _____

SOURCE:

SERIAL NO _____ ISOTOPE _____ ACTIVITY _____ DPM

LOG DATE	TIME (HH:MM)	COUNTING TIME (MIN)	BACKGROUND CPM	GROSS COUNTS	GROSS CPM	NET CPM	EFFICIENCY (NET CPM/DPM)

ACCEPTANCE CODES: A—ACCEPTABLE R—RECONNAISSANCE U—UNACCEPTABLE N—NOT DETERMINED

[illegible]LETE BOLDED DATA FOR ENTRY INTO TIMS

DRE-103 (3/88)

FORM COMPLETED BY/DATE _____ TECHNICAL REVIEWER/DATE _____

APPENDIX 5.3

REMOVABLE ALPHA CONTAMINATION SURVEY DATA FORM

REMOVABLE ALPHA CONTAMINATION SURVEY DATA

FACILITY CODE _____ **LOG DATE** _____

LOGGER CODE _____ FIELD REP _____

RATEMETER/SCALER: **ACCEPTANCE CODE** _____

MODEL NO _____ SERIAL NO _____ CALIBRATION DATE _____

WINDOW _____ THRESHOLD _____ HIGH VOLTAGE _____ BATTERY _____

ALPHA PROBE:

MODEL NO _____ SERIAL NO _____ CALIBRATION DATE _____

DATE/TIME OF EFF CHECK _____ EFFICIENCY _____ CPM/DPM

COMMENTS _____

ITEM SURVEYED (SPECIFY)	INSTRUMENT READING (cpm)	AREA SURVEYED (cm^2)	ADJUSTED COUNT RATE[1] (cpm/100cm^2)	CONTAMINATION LEVEL[2] (dpm/100cm^2)	WITHIN RELEASE LIMIT? (20 dpm/100cm^2) (YES/NO)

1 ADJUSTED COUNT RATE = $\left(\frac{100\ cm^2}{\text{AREA SWIPED IN } cm^2}\right)$ X INSTRUMENT READING

2 CONTAMINATION LEVEL IN dpm/100 cm^2 = $\frac{\text{ADJUSTED COUNT RATE}}{\text{EFFICIENCY}}$

ACCEPTANCE CODES: A—ACCEPTABLE R—RECONNAISSANCE U—UNACCEPTABLE N—NOT DETERMINED

COMPLETE BOLDED DATA FOR ENTRY INTO TIMS
ACS—104 (6/92)

_____ FORM COMPLETED BY/DATE

_____ TECHNICAL REVIEWER/DATE

STANDARD OPERATING PROCEDURE 1.9

PERSONNEL DECONTAMINATION--LEVEL C PROTECTION

1. PURPOSE

To describe the equipment and procedures required for the decontamination of persons who have performed field activities in Level C protective clothing.

2. DISCUSSION

The Field Sampling Plan (FSP) or Work Plan (WP) provides information regarding the scope and details of a specific operation. Refer to the FSP or WP Health and Safety Plan for recommendations about the level of protection worn to enter a site and the criteria for upgrading or downgrading to other levels of protection.

Protective clothing and equipment must be worn by personnel when known or suspected hazardous substances are involved. The necessary equipment and procedures for decontaminating personnel in Level C protection are addressed in this SOP. The procedures include maximum and minimum decontamination measures.

The establishment of decontamination lines is site specific; these lines depend upon the types of contamination and the work performed. When the decontamination line is no longer required, contaminated wash and rinse solutions and articles must be contained and disposed of appropriately. Disposal must follow installation requirements and any applicable state and federal regulations.

3. PROCEDURES

3.1. Associated Procedures

Before every operation, a review of the SOPs 1.1-1.10 is necessary. These SOPs contain information on the performance of field activities. They should be consulted for specific information on equipment and supplies; sample collection, preservation, packaging, and shipping; decontamination procedures; and documentation requirements. Procedures directly associated with this SOP are listed below.

SOP No.	SOP Title
1.1	General Instructions for Field Personnel
1.6	General Equipment Decontamination
1.8	Personnel Decontamination--Level D Protection

3.2. Preparation

3.2.1. Office

A. Review the FSP or WP and SOPs listed in Section 3.1.

B. The selection of the appropriate level of personnel decontamination is site specific and is given in the site Health and Safety Plan. Coordinate any changes with the site health and safety coordinator. Considerations for selection include work activity, known or suspected contaminants, previous experience at the site, and health and safety requirements.

C. The site Health and Safety Plan should include details of the procedures for the ultimate disposal of protective clothing and waste water. The packaging and disposal procedures must be approved by the installation authorities responsible for waste disposal. Inform all onsite personnel about the proper disposal of protective clothing and decontamination solutions.

D. Appendix 5.1 includes recommendations for equipment and supplies used in maximum decontamination measures. Appendix 5.2 includes recommendations for equipment and supplies used in minimum decontamination measures. These appendixes contain general equipment guidelines. The selection of equipment must be site specific to incorporate unusual work activities or site features. Detailed information is in the FSP or WP.

3.2.2. Documentation

A. Obtain a logbook from the QA officer.

B. There are no forms required to document decontamination procedures and the degree of decontamination attained.

3.2.3. Field

A. Before field activities begin, establish site work zones to prevent the accidental spread of hazardous substances. The establishment of work zones is site specific and coordinated with the site health and safety coordinator at the time the Health and Safety Plan is prepared. Considerations for establishing work zones should include wind direction, weather conditions, emergency situations, changes in site activities, and access.

B. Appendix 5.3 shows an example of a maximum decontamination layout for Level C protection. Appendix 5.4 shows an example of the minimum decontamination layout for Level C protection.

NOTE: The layouts may be modified according to site-specific conditions.

3.3. Operation

3.3.1. Maximum Decontamination Measures

The maximum decontamination measures for Level C are described in Appendix 5.5. These measures are guidelines and may be modified according to site-specific conditions.

3.3.2. Modification of Maximum Decontamination Measures

Depending upon site-specific conditions and circumstances, modifications to the maximum decontamination measures may be permissible. Two example situations in which the maximum decontamination measures may be modified are described below.

A. Situation 1--The individual entering the contamination reduction zone is expected to be minimally contaminated. Extremely skin-corrosive materials are not present. Outer gloves and boot covers are worn. The inner gloves and safety boots are not contaminated.

   The following decontamination stations described in Appendix 5.5 would be utilized in this situation: Station Numbers 1, 4 through 8, 10, 11, and 14 through 17.

B. Situation 2--The individual entering the contamination reduction zone is expected to be minimally contaminated. Extremely toxic or skin-corrosive materials are not present. Outer gloves and boot covers are worn. The inner gloves and safety boots are not contaminated. The individual needs a new canister or mask and will return to the exclusion zone.

   The following decontamination stations described in Appendix 5.5 would be utilized in this situation: Station Numbers 1 and 4 through 9.

3.3.3. Minimum Decontamination Measures

The minimum decontamination measures for Level C are described in Appendix 5.6. These measures are guidelines and may be modified according to site-specific conditions.

3.4. Postoperation

3.4.1. Field

After the completion of field activities, all contaminated wash and rinse waters, decontamination solutions, and contaminated articles must be properly disposed of. The disposal methods must follow installation requirements. The site manager or field team leader is responsible for the safe disposal of contaminated materials. Planning for the proper disposal should be included during office preparation before field activities begin.

3.4.2. Documentation

A. Record radiological measurements in the logbook before leaving the site.

B. There are no forms required to document decontamination procedures and the degree of decontamination attained.

3.4.3. Office

Return all unused or properly decontaminated equipment will be returned to the equipment manager. The equipment manager should be informed of all stock items that need to be ordered to replenish the inventory.

4. SOURCES

NIOSH, OSHA, USCG and EPA. 1985. "Occupational Safety and Health Guidance Manual for Hazardous Waste Site Activities." Prepared by the National Institute for Occupational Safety and Health (NIOSH), Occupational Safety and Health Administration (OSHA), U.S. Coast Guard (USCG), and the U.S. Environmental Protection Agency (EPA). U.S. Department of Health and Human Services, Public Health Service, Centers for Disease Control, NIOSH report, October 1985. Washington, D.C.: U.S. Government Printing Office.

EPA. 1984. "Standard Operating Safety Guides." Environmental Response Branch, Hazardous Response Support Division, Office of Emergency and Remedial Response, U.S. Environmental Protection Agency document, November 1984. Washington, D.C.: U.S. Government Printing Office.

5. APPENDIXES

5.1. Equipment and Supplies for Maximum Decontamination Measures for Level C

5.2. Equipment and Supplies for Minimum Decontamination Measure for Level C

5.3. Maximum Decontamination Layout for Level C Protection

5.4. Minimum Decontamination Layout for Level C Protection

5.5. Maximum Measures for Level C Decontamination

5.6. Minimum Measures for Level C Decontamination

APPENDIX 5.1

EQUIPMENT AND SUPPLIES FOR MAXIMUM DECONTAMINATION MEASURES FOR LEVEL C

Station 1:
- a. Various Size Containers
- b. Plastic Liners
- c. Plastic Drop Cloths

Station 2:
- a. Containers (20-30 Gallons)
- b. Decon Solution or Detergent Water
- c. 2-3 Long-handled, Soft-bristled Scrub Brushes

Station 3:
- a. Containers (20-30 Gallons)
  or
  High-pressure Spray Unit
- b. Water
- c. 2-3 Long-handled, Soft-bristled Scrub Brushes

Station 4:
- a. Containers (20-30 Gallons)
- b. Plastic Liners

Station 5:
- a. Containers (20-30 Gallons)
- b. Plastic Liners
- c. Bench or Stools

Station 6:
- a. Containers (20-30 Gallons)
- b. Plastic Liners

Station 7:
- a. Containers (20-30 Gallons)
- b. Decon Solution or Detergent Water
- c. 2-3 Long-handled, Soft-bristled Scrub Brushes

Station 8:
- a. Containers (20-30 Gallons)
  or
  High-pressure spray Unit
- b. Water
- c. 2-3 Long-handled, Soft-bristled Scrub Brushes

Station 9:
- a. Air Tanks or Face Masks and Cartridge, Depending on Level
- b. Tape
- c. Boot Covers
- d. Gloves

Station 10:
- a. Containers (20-30 Gallons)
- b. Plastic Liners
- c. Bench or Stools
- d. Boot Jack

Station 11:
- a. Rack
- b. Drop Cloths
- c. Bench or Stools

Station 12:
- a. Table

Station 13:
- a. Basin or Bucket
- b. Decon Solution
- c. Small Table

Station 14:
- a. Water
- b. Basin or Bucket
- c. Small Table

Station 15:
- a. Containers (20-30 Gallons)
- b. Plastic Liners

Station 16:
- a. Containers (20-30 Gallons)
- b. Plastic Liners

Station 17:
- a. Containers (20-30 Gallons)
- b. Plastic Liners

Station 18:
- a. Water
- b. Soap
- c. Small Table
- d. Basin or Bucket
- e. Field Showers
- f. Towels

Station 19:
- a. Dressing Trailer in Inclement Weather
- b. Tables
- c. Chairs
- d. Lockers
- e. Cloths

Sources: NIOSH, OSHA, USCG and EPA, October 1985.
U.S. EPA, November 1984.

APPENDIX 5.2

EQUIPMENT AND SUPPLIES FOR MINIMUM DECONTAMINATION MEASURES FOR LEVEL C

Station 1:
- a: Various Size Containers
- b. Plastic Liners
- c. Plastic Drop Cloths

Station 2:
- a. Containers (20-30 Gallons)
- b. Decon Solution
- c. Rinse Water
- d. 2-3 Long-handled, Soft-bristled Scrub Brushes

Station 3:
- a. Containers (20-30 Gallons)
- b. Plastic Liners
- c. Bench or Stools

Station 4:
- a. Air Tanks or Masks and Cartridges, Depending Upon
- b. Tape
- c. Boot Covers
- d. Gloves

Station 5:
- a. Containers (20-30 Gallons)
- b. Plastic Liners
- c. Bench or Stools

Station 6:
- a. Plastic Sheets
- b. Basin or Bucket
- c. Soap and Towels
- d. Bench or Stools

Station 7:
- a. Water
- b. Soap
- c. Tables
- d. Wash Basin or Bucket

Sources: NIOSH, OSHA, USCG and EPA, October 1985.
U.S. EPA, November 1984.

APPENDIX 5.3

MAXIMUM DECONTAMINATION LAYOUT FOR LEVEL C PROTECTION

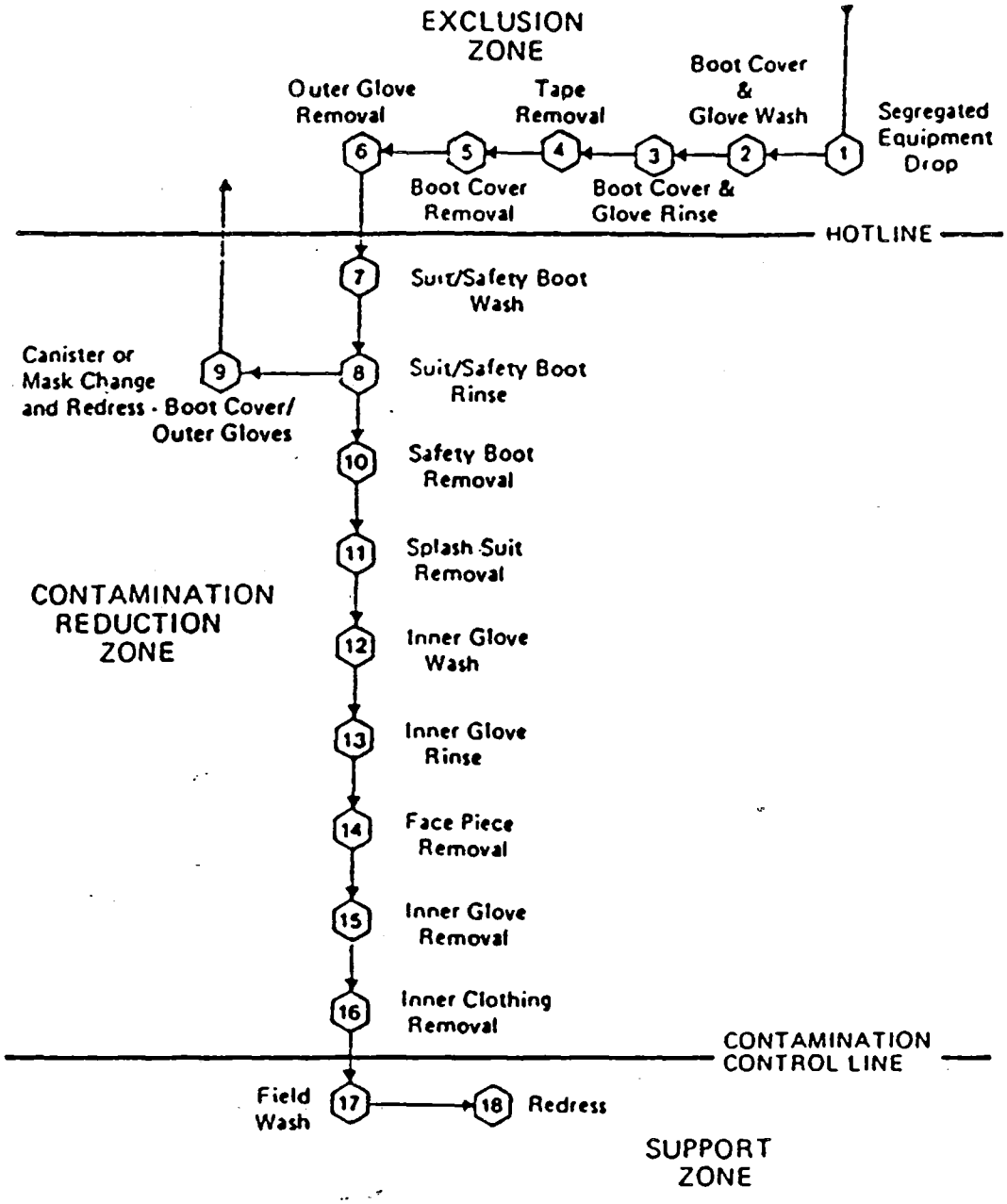

SOURCES: NIOSH, OSHA, USCG and EPA, October 1985
U.S. EPA, November 1985

APPENDIX 5.4

MINIMUM DECONTAMINATION LAYOUT FOR LEVEL C PROTECTION

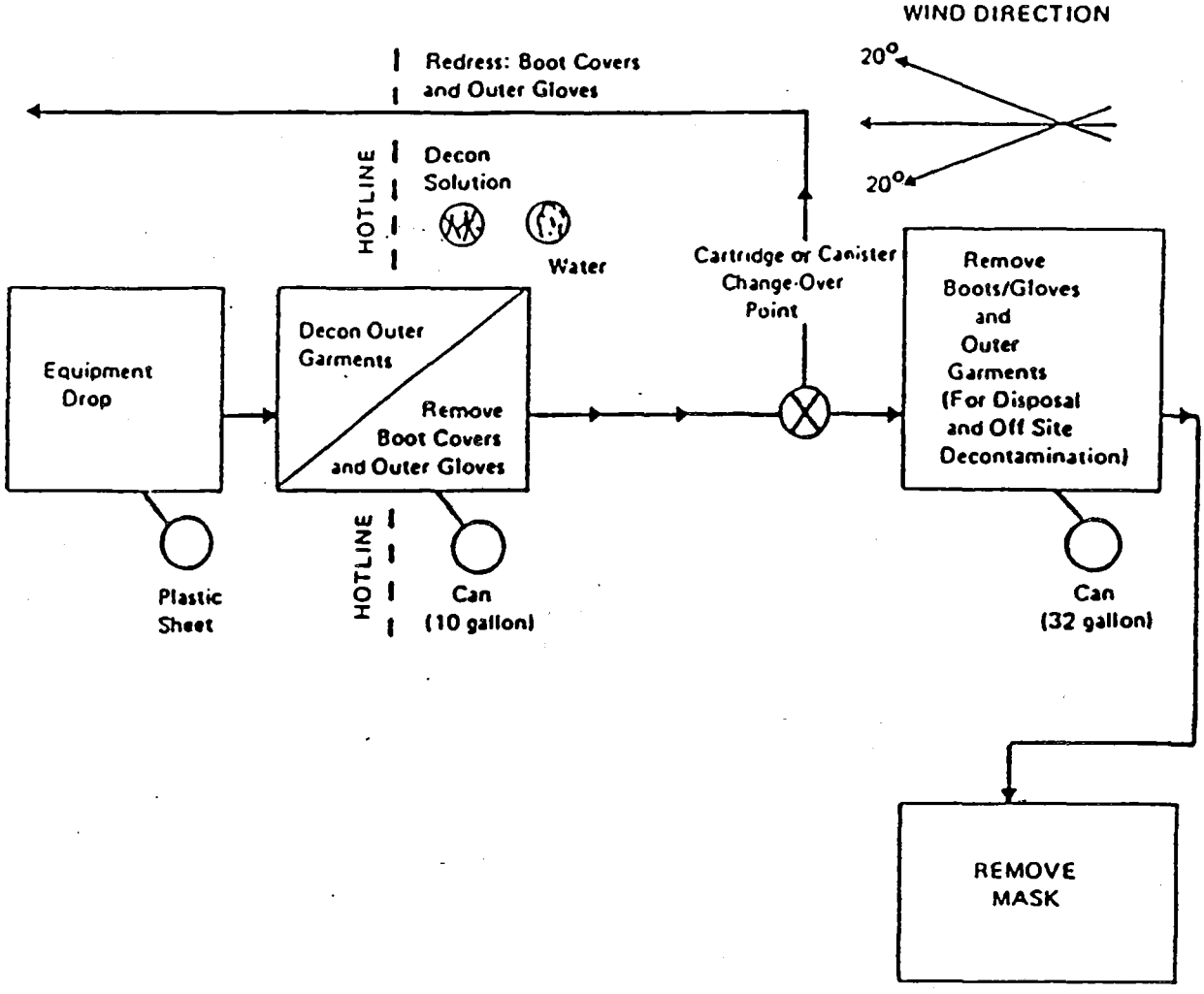

SOURCES: NIOSH, OSHA, USCG and EPA, October 1985
U.S. EPA, November 1985

APPENDIX 5.5

MAXIMUM MEASURES FOR LEVEL C DECONTAMINATION

Station 1:	**Segregated Equipment Drop**	**1. Deposit equipment used at the site (tools, sampling devices and containers, monitoring instruments, radios, and clipboards) on plastic drop cloths or in different containers with plastic liners. Segregation at the drop reduces the probability of cross-contamination. During hot weather operations, a cool-down station may be set up within this area.**
Station 2:	**Boot Cover and Glove Wash**	**2. Scrub outer boot covers and gloves with decon solution or detergent and water.**
Station 3:	**Boot Cover and Glove Rinse**	**3. Rinse off decon solution from station 2 using copious amounts of water.**
Station 4:	**Tape Removal**	**4. Remove tape around boots and gloves and deposit in container with plastic liner.**
Station 5:	**Boot Cover Removal**	**5. Remove boot covers and deposit in containers with plastic liner.**
Station 6:	**Outer Glove Removal**	**6. Remove outer gloves and deposit in container with plastic liner.**
Station 7:	**Suit and Boot Wash**	**7. Wash splash suit, gloves, and safety boots. Scrub with long-handled scrub brush and decon solution.**
Station 8:	**Suit and Boot and Glove Rinse**	**8. Rinse off decon solution using water. Repeat as many times as necessary.**
Station 9:	**Canister or Mask Change**	**9. If worker leaves exclusion zone to change canister (or mask), this is the last step in the decontamination procedure. The worker's canister is exchanged. New outer gloves and boot covers are put on, and joints are taped. The worker returns to duty.**

APPENDIX 5.5, Continued

MAXIMUM MEASURES FOR LEVEL C DECONTAMINATION

Station 10:	**Safety Boot Removal**	**10. Remove safety boots and deposit in container with plastic liner.**
Station 11:	**Splash Suit Removal**	**11. With assistance of helper, remove splash suit. Deposit in container with plastic liner.**
Station 12:	**Inner Glove Rinse**	**12. Wash inner gloves with decon solution.**
Station 13:	**Inner Glove Wash**	**13. Rinse inner gloves with water.**
Station 14:	**Face Piece Removal**	**14. Remove face piece. Deposit in container with plastic liner. Avoid touching face with fingers.**
Station 15:	**Inner Glove Removal**	**15. Remove inner gloves and deposit in lined container.**
Station 16:	**Inner Clothing Removal**	**16. Remove clothing soaked with perspiration and place in lined container. Do not wear inner clothing away from the site, because there is a possibility that small amounts of contaminants might have been transferred in removing the outer clothing. When applicable, begin a gross alpha contamination survey.**
Station 17:	**Field Wash**	**17. Shower if highly toxic, skin-corrosive, or skin-absorbable materials are known or suspected to be present. Wash hands and face if shower is not available.**
Station 18:	**Redress**	**18. Put on clean clothes.**

Sources: NIOSH, OSHA, USCG and EPA, October 1985.
U.S. EPA, November 1984.

APPENDIX 5.6

MINIMUM MEASURES FOR LEVEL C DECONTAMINATION

Station 1:	**Equipment Drop**	**1. Deposit equipment used at the site (tools, sampling devices and containers, monitoring instruments, radios, and clipboards) on plastic drop cloths. Segregation at the drop reduces the probability of cross-contamination. During hot weather operations, a cool-down station may be set up within this area.**
Station 2:	**Outer Garment, Boots, and Gloves Wash and Rinse**	**2. Scrub outer boots, outer gloves, and splash suit with decon solution or detergent water. Rinse off using water.**
Station 3:	**Outer Boot and Glove Removal**	**3. Remove outer boots and gloves. Deposit in container with plastic liner.**
Station 4:	**Canister or Mask Change**	**4. If worker leaves exclusive zone to change canister (or mask), this is the last step in the decontamination procedure. The worker's canister is exchanged. New outer gloves and boot covers are put on, and joints are taped. The worker returns to duty.**
Station 5:	**Boots, Gloves, and Outer Garment Removal**	**5. Boots, chemical-resistant splash suit, and inner gloves are removed and deposited in separate containers lined with plastic.**
Station 6:	**Face Piece Removal**	**6. Face piece is removed. Avoid touching face with fingers. Face piece deposited on plastic sheet.**
Station 7:	**Field Wash**	**7. Hands and face are thoroughly washed. Shower as soon as possible.**

Sources: NIOSH, OSHA, USCG and EPA, October 1985.
U.S. EPA, November 1984.

STANDARD OPERATING PROCEDURE 1.12

AIR PARTICULATE SAMPLING WITH A REAL-TIME AEROSOL MONITOR

1. PURPOSE

To describe the equipment, operation, and procedures for collecting real-time air particulate data.

2. DISCUSSION

The Field Sampling Plan (FSP) or Work Plan (WP) provides information about the scope of specific operations and the applicability of this procedure to the activities.

2.1 Functions of RAMs

Airborne particulate contaminants can present a significant threat to the health and safety of workers. Real-time aerosol monitoring (RAM) instruments are used to determine the relative concentrations of airborne particulates that may cause a respiratory hazard. These instruments can determine concentrations of airborne particulates in dust, fumes, smoke, and fog. The real-time data obtained from these instruments are used to establish the level of protection for the health and safety of workers and assist in the establishment of possible control measures. The RAM is typically calibrated at the factory and recalibrated by the manufacturer at least annually.

The RAM uses a pulsed, gallium arsenide light-emitting diode source. The radiation scattered by airborne particles is sensed by a silicon-photovoltaic hybrid detector. The instrument continuously senses the combined scattering from the population of particles present within its sensing volume (approximately 1 cm^3) when dimensions are large in comparison to the average separation between the individual airborne particles. The scattering sensing parameters have been designed for preferential response to the range of particle size from 0.1 to 10 microns.

Most RAMs read in units of mg/m^3. In order to quantify the results, apply the appropriate guidelines, and establish action levels, it is necessary to have some knowledge of the sample composition and to determine what percent of the total dust seen is respirable. In some cases, it may be necessary to perform continuous air monitoring in conjunction with the RAM measurements to help identify contaminant characteristics. In terms of dust content, it can be assumed that 100% of the dust produced is silica if drilling through sandstone. In areas where the dust produced is from other sources, quantitative analysis must be performed to determine the exact content of the dust-producing media. The analysis should include the silica content, type of silicates (crystalline, amorphous, coal dust, and others), and a general background analysis of the soil. The results of the soil analyses are then used to establish guidelines for action levels during work activities that are based on the current Threshold Limit Values (TLVs).

2.2 Limitations of RAMs

A. RAMs are designed for qualitative analysis. For that reason, they can be used to provide only an indication of total particulate concentration unless samples of the

medium of interest (like soil) are taken before the work begins and quantitatively analyzed for content.

B. Certain models (GCA Model PDM-3 MINIRAM, for example) satisfy the requirements for intrinsically safe operation in methane and air mixtures Consult the manufacturer's operating manual for use of these instruments in unknown atmospheres when potentially combustible or flammable compounds may be present.

C. RAMs determine the concentrations of airborne particulates, but do not provide information about the hazardous or toxic nature of airborne particulates.

D. Over time, RAM performance may be affected by the slow buildup of dust in the sensor. Therefore, RAMs must be serviced and cleaned regularly.

E. RAMs respond preferentially to a physical particle size of 0.1 to 10 microns. Some fumes may contain particles smaller than this.

F. The particle size of 0.1 to 10 microns refers to the physical size, as opposed to the aerodynamic size. Different aerodynamic sizes may have different degrees of transportability and respirability.

3. PROCEDURE

3.1. Associated Procedures

Information that applies to most field activities is provided in SOPs 1.1-1.10. In addition to the FSP or WP, those SOPs provide guidance that may supplement the information in this procedure. They should be consulted as necessary to obtain specific information about equipment and supplies; sample collection, preservation, packaging, and shipping; decontamination procedures; and documentation requirements. Procedures directly associated with this SOP are listed below.

SOP No.	SOP Title
1.1	General Instructions for Field Personnel
1.6	General Equipment Decontamination

3.2. Preparation

3.2.1. Office

A. Review the FSP or WP and SOPs listed in Section 3.1.

B. Coordinate schedules/actions with the installation staff.

C. Obtain appropriate permission for property access.

D Assemble the equipment and supplies listed in Appendix 5.1. The purpose of an office instrument checkout is to verify that an instrument will function properly, the batteries are serviceable, and the instrument can be zeroed and is ready for field use. Ensure the proper operation of the RAM according to instructions included in the operating manual, logbook, and the steps listed below.

APPENDIX A
ICF KE AND ER PROGRAM
STANDARD OPERATING PROCEDURES

ICF KE PROCEDURES

SOP No.	Title
S&H-4	Cold Stress
S&H-5	Confined Space Entry
S&H-14	Hearing Protection Program
S&H-15	Heat Stress Control
S&H-20	Personal Protective Equipment
S&H-21	Respiratory Protection

ER PROGRAM PROCEDURES

SOP No.	Title
1.1	General Instructions for Field Personnel
1.6	General Equipment Decontamination
1.7	Sampling for Removable Alpha Contamination
1.8	Personal Decontamination - Level D Protection
1.9	Personal Decontamination - Level C Protection
1.12	Air Particulate Sampling With a Real-Time Aerosol Monitor
1.15	Guide to Waste Management
6.1	Health and Safety Monitoring of Combustible Gas Levels
6.2	Health and Safety Monitoring of Organic Vapors with a Photoionization Detector
6.4	Total Alpha Surface Contamination Measurements
6.7	Near Surface and Soil Sample Screening for Low-Energy Gamma Radiation Using the FIDLER
6.11	Beta-Gamma Radiation Measurements
6.15	Measurement of Gamma-Ray Fields Using a Sodium Iodide (NaI) Detector

1. Check the battery charge level. If in doubt, charge the battery as described in the operating manual.

2. Open the sensor chamber and visually examine the sensor. If cleaning is required, carefully follow the procedures contained in the operating manual.

   CAUTION: Do not touch the lens or the inside of the chamber.

3. Turn the unit on. Verify the operation of the instrument display and other controls according to the operating manual.

4. Perform the zero procedure described in the operating manual. This procedure must be performed in an area known to be free of dust.

   NOTE: The instruments are factory calibrated against a filter gravimetric reference using a standard test dust (Arizona road dust). If recalibration of the instrument is desired, consult the manufacturer's operating manual for the location of the factory that will perform the calibration.

5. If the RAM is not ready for use, initiate steps to have the malfunctions corrected, obtain a working replacement, and repeat the checkout procedures.

3.2.2. Documentation

A. Obtain a logbook from the QA officer.

B. Record all information related to the instrument checkout in the logbook. This information may include the date of the last factory calibration, the date the sensor was last cleaned, the date of replacing the battery pack, and any problems during the instrument checkout. Sign and date the logbook.

C. Obtain a sufficient number of the appropriate ER Program data collection forms (see INDEX TO SOPs).

D. Consult the ER Program data administrator for a current list of information management codes, location IDs, and sample numbers used in the completion of data forms.

E. Record the initial information on the Real-Time Aerosol Field Monitoring Data form (Appendix 5.2). See Appendix 5.3 for instructions to complete the form.

3.2.3. Field

A. Perform the instrument checkout procedures as described in Section 3.2.1.C.

B. Record the initial information on the Real-time Aerosol Field Monitoring Data form (Appendix 5.2). See Appendix 5.3 for completion of the data form.

3.3. Operation

3.3.1. Sampling

For accurate results, follow the instructions contained in the operating manual.

A. Position the instrument near the aerosol source and obtain readings.

B. Position the instrument in the worker's breathing zone and obtain readings according to operating instructions.

C. Record data on the Real-Time Aerosol Field Monitoring Data form (Appendix 5.2) by following the instructions in Appendix 5.3.

3.3.2. Interpretation of Results/Action Levels

A. Apply the results of the quantitative soil sample analyses to the mg/m^3 concentration obtained using the RAM. Consult the site Health and Safety Plan for the exact hazards and the action levels. Action levels are typically 50% of the threshold limit value (TLV).

B. Compare the applicable TLVs to these concentrations. If the estimated concentrations are greater than any of the applicable TLVs, the level of protection must be upgraded to include respiratory protection. Consult the site Health and Safety Plan for current TLVs of the known hazards and the proper respiratory protection. When quantitative contaminant results are not available, the TLV for an upgrade to respiratory protection specified by the site Health and Safety Plan is 10 mg/m^3 for total dust containing no asbestos and less than 1% crystalline silica.

Example: Analysis of the soil at a drilling site shows a mica content of 75%. Assuming that 50% of the dust is respirable, a RAM reading of 10 mg/m^3 would result in 3.75 mg/m^3 of mica being inhaled by the workers in that area (0.50 x 10 x 0.75 = 3.75). The TLV time-weighted average (TWA) for mica is a 3.0 mg/m^3, which is less than 3.75. Air purifying respirators with high-efficiency particulate filters would have to be employed.

C. Document all levels of protection in the logbook. Record the time spent in each level, the type of respirator in use, the persons involved, and the concentrations of contaminants.

3.4. Postoperation

3.4.1. Field

A. Turn all switches to the off position.

B Decontaminate or clean the instrument. If decontamination is required, follow the procedures specified in SOP 1.6, General Equipment Decontamination. If cleaning is required, refer to the manufacturer's operating manual.

C. Charge the instrument batteries as specified in the instrument manual.

D If necessary, make sure all survey or sampling locations are properly staked and the location ID is readily visible on the location stake.

3.4.2. Documentation

A. Record any uncompleted work (like additional monitoring) in the logbook.

B. Complete logbook entries, verify the accuracy of entries, and sign/initial all pages.

C. Review data collection forms for completeness.

3.4.3. Office

A. Deliver original forms and logbooks to the document control officer (with copies to the site manager and files) for eventual delivery to the Department of Energy.

B. Replace expendable items. Return the RAM to the equipment manager and identify any operational problems from previous use.

4. SOURCE

GCA/Environmental Instruments. n.d. "Instruction Manual for Model PDM-3 Miniature Real-Time Aerosol Monitor (Miniram)." GCA/Environmental Instruments publication. Bedford, Massachusetts: MIE Incorporated.

5. APPENDIXES

5.1. Equipment and Supplies Checklist

5.2. Real-Time Aerosol Field Monitoring Data Form

5.3. Data Form Completion

APPENDIX 5.1

REAL-TIME AEROSOL MONITOR EQUIPMENT AND SUPPLIES CHECKLIST

_____ RAM

_____ Operating manual

_____ Battery charger

_____ Spare battery pack

_____ Jeweler's screwdriver

_____ Current ACGIH TLV indices

APPENDIX 5.2

REAL-TIME AEROSOL FIELD MONITORING DATA FORM

REAL – TIME AEROSOL FIELD MONITORING DATA

FACILITY CODE _____ LOG DATE _____

LOGGER CODE _____ FIELD REP _____

MANUFACTURER _____

MODEL NO _____ SERIAL NO _____

DATE CALIBRATED _____ ACCEPTANCE CODE _____

FIELD MEASUREMENTS

LOCATION ID OR DESCRIPTION	TIME (HH:MM)	SAMPLE TYPE	ACTIVITY TYPE	CONCENTRATION (mg/m³)	COMMENTS

ACCEPTANCE CODES: A–ACCEPTABLE M–MARGINALLY ACCEPTABLE R–RECONNAISSANCE U–UNACCEPTABLE N–NOT DETERMINED

SAMPLE TYPES :
A – AREA G – GRAB P – PERSONAL T – TIME WEIGHTED AVERAGE O – OTHER (SPECIFY)

ACTIVITY TYPES:
AM – AMBIENT (BACKGROUND) TR – TRENCHING OPERATION CS – CONFINED SPACE
DR – DRILLING OPERATION SS – SURFACE SOIL SAMPLING OT – OTHER (SPECIFY)

COMPLETE BOLDED DATA FOR ENTRY INTO TIME
AER–043 (3/88)

FORM COMPLETED BY/DATE _____ TECHNICAL REVIEWER/DATE _____

APPENDIX 5.3

DATA FORM COMPLETION

Use a pen with black ink that is not water soluble (not a felt-tip pen). Make an entry in each blank. Where there is no data entry, enter UNK for Unknown, NA for Not Applicable, or ND for Not Done. If any procedure was not performed as prescribed, give the reason for the change or omission on the form. To change an entry, draw a single line through it, add the correct information above it, and initial the change.

REAL-TIME AEROSOL FIELD MONITORING DATA FORM

1. Facility Code. Five-character code abbreviating the facility name where program activity is being conducted. The first three characters indicate the facility, and the remaining two numbers designate the specific site within the facility.

2. Log Date. The date that information recorded on the form was obtained in the format DD-MMM-YY (01-JAN-88).

3. Logger Code. Three-character or four-character code identifying the company responsible for collecting the information recorded on the form.

4. Field Rep. The name of the field representative.

5. Manufacturer. The name of the company that manufactures the real-time aerosol monitor (RAM) instrument being used.

6. Model No. The model number of the RAM.

7. Serial No. The serial number of the RAM.

8. Date Calibrated. The date when the RAM was calibrated. This data field follows the same format as the data field for log date.

9. Acceptance Code. One-character code assigned by the site manager.

10. Location ID or Description. Four-character code assigned sequentially to each borehole, test pit, or surface location where physical, chemical, biological, radiological, and other measurements are taken.

11. Time (HH:MM). The time when a RAM reading was taken using the 24-hr clock in the format of hours:minutes (for example, 08:37 for 8:37 AM and 19:12 for 7:12 PM).

12. Sample Type. The type of sample taken by the RAM.

    T - Time-weighted average (TWA)
    G - Grab sample
    A - Area sample
    P - Personal sample
    O - Other (specify)

STANDARD OPERATING PROCEDURE 1.15

GUIDE TO MANAGEMENT OF INVESTIGATION-DERIVED MATERIAL

1. PURPOSE

The purpose of this standard operating procedure (SOP) is to provide general guidance and specific procedures for the management of investigation-derived material (IDM) at the U.S. Department of Energy's (DOE) Mound Plant in Ohio. This SOP describes the procedures used by the Environmental Restoration (ER) Program technical assistance contractors for the sampling of IDM, and provides guidance on the sampling and disposition of IDM. A discussion on material segregation and drum reuse is also included. Other procedures or requirements used by installation subcontractors must conform to this SOP. The disposal of hazardous, radioactive, or mixed IDM is covered under separate policies and procedures.

2. DISCUSSION

In general, IDM is material derived from environmental site investigation activities such as soil boring procedures, well construction and installation, aquifer testing, water quality sampling of wells, and decontamination of sampling and drilling equipment (rinsate). These materials are potentially subject to various regulations governing storage and disposal. Mound Plant is a CERCLA Site, therefore, applicable or relevant and appropriate requirements (ARARs) must be followed. Also, the response is required to comply with the substantive requirements for permits, but is not required to obtain permits. Figure 1 is a decision tree illustrating the management of IDM.

2.1. Sampling and Staging

The IDM is sampled for analytical testing and placed in labeled drums. Drums containing solid IDM, such as soil, are staged at the original sampling site, if possible, or moved to the Central Staging Area. All drums containing liquid IDM, such as purge water, are moved to the Central Staging Area. The containerized IDM is held until results of the analytical testing are used to classify the IDM and determine what actions are to be followed.

2.2. Classification Criteria

IDM can be classified as hazardous, radioactive, mixed, solid, or clean, depending on its characteristics. Each class is managed differently. Solid IDM that is not classified as hazardous, radioactive, or mixed by the CERCLA, RCRA, and DOE criteria described below is handled as solid waste in accordance with State of Ohio Environmental Protection Agency (OEPA) regulations.

Hazardous IDM is material exhibiting the characteristics of ignitability, corrosivity, reactivity, or toxicity as specified in 40 CFR 261, Subpart C, or mixtures of IDM and hazardous wastes specifically listed in 40 CFR 261, Subpart D.

Radioactive IDM is material containing concentrations of plutonium-238 and thorium-232 greater than 25 picoCuries per gram (pCi/g) and 5 pCi/g, respectively.

Mixed IDM is material that meets the definition of both hazardous and radioactive IDM.

Solid IDM is material that cannot be classified as hazardous, radioactive, or mixed, yet exhibits concentrations of identified potential chemical contaminants above background levels.

Clean IDM is material which contains identified potential chemical contaminants at concentrations less than background levels.

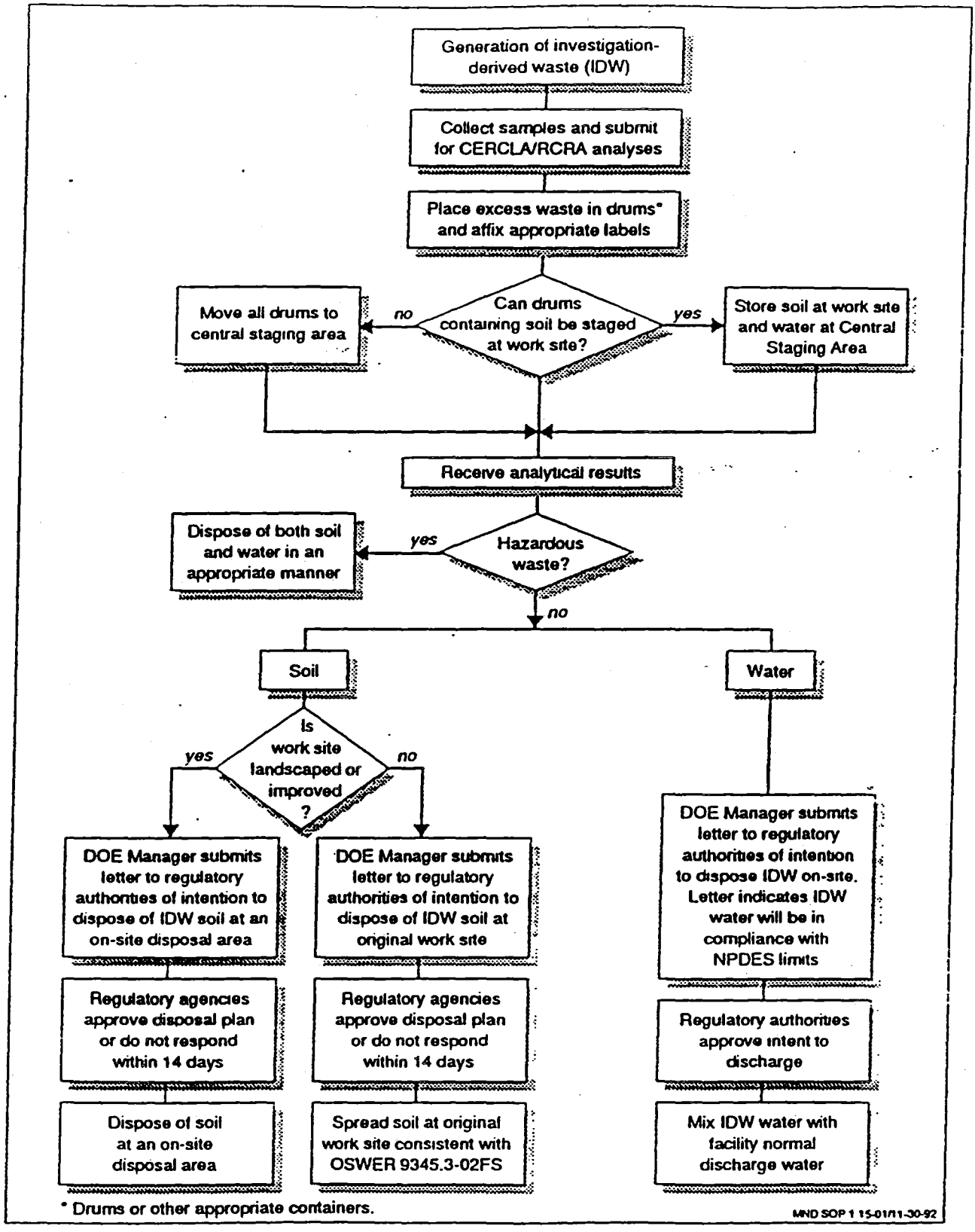

Management of investigation-derived waste.

2.3. Actions

Liquid IDM (purge water) that is nonhazardous will be added to Mound Plant normal discharge water and discharged through NPDES Outfall 001.

IDM classified as clean may be moved to Mound Plant's IDM Area, yet to be approved and constructed. IDM classified as solid waste will be disposed of at an OEPA approved landfill (off site).

IDM classified as hazardous, radioactive, or mixed will be disposed of or treated as dictated by federal and state regulations. There are currently (February 1993) only limited alternatives for mixed waste, so it would be held until alternatives could be evaluated as directed by CERCLA.

3. PROCEDURES

3.1. Associated Procedures

Before every operation, SOPs 1.1 through 1.10 must be reviewed. These SOPs contain information on the performance of field activities. They should be consulted for specific information on equipment and supplies, decontamination procedures, and documentation requirements. Procedures directly associated with this SOP are listed below.

SOP No.	SOP Title
1.1	General Instructions for Field Personnel
1.3	Sample Control and Documentation
1.5	Guide to the Handling, Packaging and Shipping of Samples
1.6	General Equipment Decontamination

3.2. Preparation

3.2.1. Office

A. Review the Work Plan or Sampling and Analysis Plan, and SOPs listed in subsection 3.1.

B. Coordinate schedules/actions with the installation staff.

C. Obtain appropriate permission for property access.

D. Determine that a sufficient number of drums and labeling materials are available for the IDM.

3.2.2. Documentation

A. Obtain a logbook from the QA officer.

B. Obtain a sufficient number of the appropriate ER Program data collection forms. Consult Mound Plant OU-9 Quality Assurance Project Plan (QAPP) Table of Contents (DOE 1992).

C. Consult the ER Program data administrator for a current list of information management codes, location IDs, and sample numbers used in the completion of data forms and drum labels.

3.3. Operation

The following step-by-step procedure will ensure that all agreed-to practices are followed in the management of the IDM.

3.3.1. Drum Labeling

Drums will be marked with waterproof labels with the following information:

- date material was placed in the drum;
- source location ID (release site/well number (for decon water));
- medium (soil, water, or personal protective equipment);
- statement to the effect: "Investigation-derived material from CERCLA RI/FS; for more information contact subcontractor manager (name, phone number), EG&G Operable Unit Manager (name, phone number), or Monte Williams (x 4543)";
- FIDLER screening value;
- head space analysis value, if applicable; and
- sample numbers

3.3.2. Soil

A. Samples of soil cuttings will be collected at the work site, analyzed for radioactivity, and transmitted to the laboratory for CERCLA- and RCRA-type analyses.

B. Remaining soil that is not sampled will be placed in labeled, open-top (removable lid), metal drums and held at either the original sampling site, if possible, or moved to the Central Staging Area, currently the Waste Oil Drumfield.

C. Drum groups within the staging area will be placed on wooden pallets and covered with tarps to prevent weathering of the drums and protect label integrity.

D. A sign posted within the staging area will identify the drums as "Investigation-Derived Material" and will include the same information described in Section 3.3.1.

E. After receiving analytical results from the laboratory, the IDM will be classified as solid, hazardous, radioactive, or mixed in accordance with OEPA regulations and RCRA, CERCLA, and DOE criteria.

F. If the soil is determined to be solid, hazardous, or radioactive, it will be disposed of or treated at an appropriate disposal or treatment facility. Mixed waste will be held for further evaluation of alternatives.

G. Solid waste, other than soils, generated by the technical assistance contractor and subcontractor(s) (e.g., wipes, protective clothing that is not LSA, visqueen, garbage) will be segregated and placed in a dumpster for off-site disposal.

H. Bulk (large pieces) of asphalt or demolition material generated by breaking through pavement will be segregated and disposed of separately in an approved on-site area.

3.3.3. Water

A. Samples of water produced at the work site will be collected, analyzed for radioactivity, and transmitted to the laboratory for CERCLA analyses.

B. The remaining water that is not sampled will be placed in labeled, closed-top (non-removable lid), polyethylene drums and held at the Central Staging Area, currently the Waste Oil Drumfield.

C. Drum groups will be placed on wooden pallets and covered with tarps to prevent weathering of the drums and protect label integrity.

D. A sign posted within each staging area will identify the drums as "Investigation-Derived Material" and will include the same information described in Section 3.3.1.

E. After receiving analytical results from the laboratory, the IDM will be classified as nonhazardous, hazardous, radioactive, or mixed in accordance with OEPA regulations and RCRA, CERCLA, and DOE criteria.

F. If the water is nonhazardous, the remedial project manager at DAO will submit a letter to the OEPA water quality branch indicating that the IDM water will be added to normal Mound Plant discharge and will be in compliance with NPDES limits. Analytical results will be included in the submission. A copy of this letter will be submitted to U.S. EPA by DAO. Upon approval from OEPA, the water will then be discharged through Mound Plant NPDES Outfall 001 and directed off site to the Great Miami River. DAO will simultaneously notify U.S. EPA of the intent to discharge.

G. If the water is determined to be hazardous or radioactive, it will be disposed of or treated at an appropriate disposal or treatment facility. Mixed waste will be held for further evaluation of alternatives.

H. Liquid waste generated by the technical assistance contractor and subcontractor(s) (e.g., motor oil, additives, detergent solutions) will be segregated and disposed of or recycled separately at an appropriate facility.

3.3.4. Central Staging Area

A. The Central Staging Area is currently the Waste Oil Drumfield. It will be used for:

- purge water from wells;
- soil that cannot be stored at the work site because it hinders Mound Plant operations; and
- soil from areas off the site (e.g., the Miami-Erie Canal).

B. The Waste Oil Drumfield will be used immediately with the knowledge that it is a potential release site and remedial activities are in progress. Surface and subsurface samples obtained from the Waste Oil Drumfield will be analyzed for radioactivity and submitted to the laboratory for CERCLA analyses.

C. After results of surface and subsurface sampling and analysis are available, assuming that no remediation is required, the Waste Oil Drumfield will become a semi-permanent staging area for CERCLA wastes. It will be fenced and locked, with ER Program (EG&G and its contractors) to retain control of the area. It is presumed that at the conclusion of the ER Program, the area may need to be sampled again to verify that it was not contaminated by spills.

3.3.5. Waste Segregation

A. Waste Segregation will occur at a Central Staging Area. Drums presumed to contain radioactive soil (e.g., from Miami-Erie Canal) will be labeled as such and will be kept in a separate zone away from those presumed to contain hazardous waste. This is to prevent the accidental creation of mixed waste.

B. When information is available indicating the nature of the contents, containers may be stored separately from other noncompatible materials which may interact with the waste in a hazardous manner.

3.3.6. Drum Database

A database will be created and maintained to track the drums and their contents for the duration of time that they contain IDM. The database will contain information described in Section 3.3.1 and include a timeline documenting waste management procedures.

3.3.7. Drum Reuse

A. Empty drums used to move solid, nonhazardous IDM to an off-site landfill will be rinsed of visible solid residue. Rinsate from these drums will be handled in the same manner as the purge water as described in section 3.3.3. Empty drums used for nonhazardous liquid IDM that has been disposed of into NPDES Outfall 001 are not expected to contain solid residue and will not be rinsed. When these procedures are completed, empty drums may then be reused for subsequent IDM generated by the ER Program (it is assumed that drums will be reused only within the ER Program).

B. Drums that previously held low-specific activity (LSA) waste and have been emptied into LSA containers will be marked and retained only for radioactive soil that is unlikely to be hazardous.

C. It is assumed that drums containing IDM that is determined to be hazardous will be used to transport the waste off site.

3.4. Post Operation

3.4.1. Documentation

Complete logbook entries, verify the accuracy of entries, and sign/initial all pages.

3.4.2. Office

Deliver original forms and logbooks to the site manager for technical review. The site manager will review and sign the forms, and transmit them to the document control officer (copies to the files) for eventual delivery to the DOE.

4. REFERENCES

DOE. 1992. "Remedial Investigation/Feasibility Study, Operable Unit 9, Site-Wide Quality Assurance Project Plan, Draft Final, Mound Plant Environmental Restoration Program, U.S. Department of Energy, Albuquerque Operations Office, Albuquerque, New Mexico, December 1992.

EPA. 1991. "Guide to Management of Investigation-Derived Wastes." U.S. Environmental Protection Agency, Office of Solid Waste and Emergency Response, Publication: 9345.3-02FS, May 1991.

STANDARD OPERATING PROCEDURE 6.1

HEALTH AND SAFETY MONITORING OF COMBUSTIBLE GAS LEVELS

1. PURPOSE

To describe the equipment and proper method for monitoring combustible gas levels in order to determine when an explosion hazard exists in the work environment.

2. DISCUSSION

The Field Sampling Plan (FSP) or Work Plan (WP) provides information on the scope of specific operations, related health and safety requirements, and the applicability of this procedure. Combustible gas indicators (or explosimeters) are used to determine the potential for the combustion or explosion of unknown atmospheres. A typical combustible gas indicator (CGI) determines the level of organic vapors and gases present in an atmosphere as a percentage of the lower explosive limit (LEL) or lower flammability limit (LFL) by measuring the change in electrical resistance in a Wheatstone bridge circuit.

CGIs provide readouts in units of percent LEL, in parts per million (ppm) combustible gases by volume, or both. The types of combustible gases to be encountered are often unknown. In those instances, the more explosive the calibration gas (the lower the LEL), the more sensitive the indication of explosivity, and a greater margin of safety results. The operator should be familiar with the LEL concentrations for specific gases to effectively use instruments that provide data only in ppm combustible gas (by volume).

Although instruments can be purchased that are factory-calibrated for gases like butane, pentane, natural gas, or petroleum vapors, methane calibration is the most common. The LEL of methane is 5% by volume in air; therefore, an air mixture containing 5% methane will be read as 100% LEL and is explosive. When combustible gases other than methane are sampled, the relative response of the detector must be considered. Recalibration to other gases may be possible (see the manufacturer's recommendations), and National Bureau of Standards (NBS) traceable calibration gases should be used. The relative sensitivity of the detector and the differences in LEL for different gases will produce varying meter responses. Correlation equations that will convert the percent LEL (based on methane) indicated by the instrument to a percent LEL for another combustible gas can usually be found in the CGI operating manual. Many units have alarm systems that can be adjusted for various LELs, and several incorporate oxygen analyzers.

2.1. Definitions

A. Lower Explosive Limit (LEL)

The LEL (also LFL, lower flammability limit) is defined as the lowest concentration of gas or vapor in air by volume that can be ignited and cause an explosion or flame propagation.

B. Upper Explosive Limit (UEL)

The UEL (also UFL, upper flammability limit) is the concentration of gas in air above which there is insufficient oxygen available to support combustion and an explosion is unlikely. A flame, however, may burn at the gas/air interface. Should additional air enter the mixture, a very explosive atmosphere may develop.

2.2. Instrument Limitations

A. Of the many instruments commercially available for detecting combustible or explosive gas, some are not certified safe for operation in the atmospheres they can detect. It is important to use only those instruments that are certified safe for use in atmospheres greater than 25% of the LEL. The instrument manufacturer's operating manual should be consulted to determine safety certification in specific atmospheres.

B. Combustible gas measurement instruments do not indicate if a given atmosphere contains hazardous or toxic compounds.

C. The CGI cannot be used in atmospheres containing silanes, silicones, silicates, or other compounds containing silicon because these substances seriously impair the instrument response.

D. If the detector has a platinum filament, its sensitivity may be reduced by exposure to gases like leaded gasoline vapors (tetraethyl lead), sulfur compounds (mercaptans and hydrogen sulfide), and sulfide compounds. An inhibitor filament that will nullify the effect of leaded gasoline vapors is available on some commercial units (Mine Safety Appliances Company, Model 260 Portable Combustible Gas and Oxygen Alarm). The instrument manufacturer's operating manual should be consulted to determine the instrument's ability to function in leaded gasoline atmospheres.

E. An oxygen detector should be used in conjunction with a CGI. Select a unit with this feature and follow the operating manual when the oxygen detector is calibrated and used. This is especially important when atmospheres are monitored within enclosed spaces or where oxygen deficient atmospheres (<19.5%) may exist.

F. Unusually high concentrations of sulfur dioxide, fluorine, chlorine, bromine, iodine, and oxides of nitrogen cause measurement interference.

G. Combustible gas indicator instruments must be calibrated frequently. Using an NBS traceable calibration gas, consult the manufacturer's operating manual for calibration frequency. Also, frequent calibration

will be necessary if several known organic species are present. Maximum accuracy requires a recalibration for each gas.

3. PROCEDURE

3.1. Associated Procedures

Information that applies to most field activities is provided in SOPs 1.1-1.10. In addition to the FSP or WP, those SOPs provide guidance that may supplement the information in this procedure. They should be consulted as necessary to obtain specific information about equipment and supplies; sample collection, preservation, packaging, and shipping; decontamination procedures; and documentation requirements. Procedures directly associated with this SOP are listed below.

SOP No.	SOP Title
1.1	General Instructions for Field Personnel
1.6	General Equipment Decontamination

3.2. Preparation

3.2.1. Office

A. Review the FSP or WP and SOPs listed in Section 3.1.

B. Coordinate schedules/actions with the installation staff.

C. Obtain appropriate permission for property access.

D. Assemble the equipment and supplies listed in Appendix 5.1. Perform a minimal check of the CGI in the office to ensure that it is functioning properly. Obtain the CGI, its operating manual, and a supply of NBS traceable gas. Methane is the factory calibration gas, but other gases may be used for specific requirements. Perform the equipment checks described below.

1. Make sure the instrument is clean and serviceable, especially sample lines and detector surfaces.

2. Check the battery charge level. If in doubt, charge the battery as described in the operating manual. Some units have charge level meters, while others have only low charge alarms.

3. Turn the unit to the on position and allow the instrument sufficient warmup time.

4. Verify that the sample pump is operable when the analyzer is on. The pump can usually be heard when operating.

5. With the intake assembly in combustible gas-free ambient air, zero the meter by rotating the zero control until the meter reads 0% LEL. For instruments with an additional oxygen meter, adjust the dial to 21% oxygen in nonhazardous locations.

6. Calibrate the unit against a known concentration of a calibration gas like hexane by rotating the calibration control (span or gain) until the meter reads the same concentration as the known standard.

7. Some instruments, like the Gas Tech Model 1314, require internal calibrating with a small screwdriver. Consult the operating manual before calibration. With this model, it is also necessary to maintain the proper flow rate during calibration. Connect a flow meter between the CGI and the calibration gas cylinder to monitor the flow rate.

8. The Gas Tech Model 1314 and others are equipped with three meters that read in percent O_2, percent LEL, and ppm. A correctly calibrated instrument for determining percent LEL is critical for monitoring many work environments. The percent oxygen is usually factory calibrated and should not be adjusted in the field. The ppm dial is often not used in the field unless a Photoionization Detector (PID) or Flame Ionization Detector (FID) is not available, as these instruments are considered to be more accurate.

3.2.2. Documentation

A. Obtain a logbook from the QA officer.

B. Record results of the equipment check in the logbook.

C. Obtain a sufficient number of the appropriate ER Program data collection forms (see INDEX TO SOPs).

D. Consult the ER Program data administrator for a current list of information management codes and location IDs used in the completion of data forms.

3.2.3. Field

A. Instrument Check

Before using the CGI in the field, follow the procedures in Section 3.2.1.D. Additional adjustments may be made. If necessary, adjust the alarm setting to the appropriate combustibility limit. The action level or the point at which activities are halted and personnel removed from the immediate vicinity is usually less than 25% of the LEL for the gases that are present.

B. Record necessary calibration data in the logbook and include the information listed below.

1. Date and time of arrival at the site

2. Site identification

3. Instrument, model number, and serial number

4. Date/time calibrated

5. Calibration gas used

6. Calibration location

7. Operator's signature

3.3. Operation

3.3.1. Field Measurements

A. Calibrate the CGI daily before use in the field. The calibration procedure for the Gas Tech Model 1314 is outlined in Appendix 5.4. Also, consult the manufacturer's manual.

B. Complete the Combustible Gas Indicator Monitoring Data form (Appendix 5.2) as described in Appendix 5.3, Data Form Completion.

C. Position the intake assembly close to the area in question to get an accurate reading. For readings taken downhole during drilling, there will be a slight delay between positioning the intake tubing downhole and registering accurate meter readings because of the time required for the sample to travel the length of the tube.

D. In general, combustible gas indicator instruments respond in the manner described below.

1. The meter indicates 0.5 LEL (50%). This means that 50% of the concentration of combustible gas needed to reach an unstable combustible situation is present. If the LEL of the gas is 5% in air, then the instrument indicates the presence of a 2.5% mixture.

2. The meter needle stays above 1.0 LEL (100%). This means that the concentration of combustible gas is greater than the LEL and less than the UEL. Therefore, the concentration is immediately combustible and explosive.

3. The meter needle rises above the 1.0 (100%) mark and then returns to zero. This response indicates that the ambient atmosphere has a combustible gas concentration greater than the UEL.

E. Personnel should evacuate the area if any of the events listed below occur.

1. Sounding of the alarm

2. Readings that reach the action levels designated in the Health and Safety Plan

3. Malfunctioning of the CGI

4. Condition encountered or suspected that indicates oxygen enrichment or depletion of the atmosphere (specially designed units are available for operation in those atmospheres)

F. Some important factors to keep in mind during use are listed below.

1. Slow, sweeping motions of intake or cell assembly will help ensure that problem atmospheres are not bypassed. Cover an area from floor (ground) to ceiling, the breathing zone, and areas where maximum concentrations may be expected (for example, downhole during drilling).

2. Operation of the unit in temperatures outside the recommended operating range may compromise the accuracy of readings or damage the instrument. Check the operating manual for the temperature limitations of a particular model.

3. Many combustible gas indicators are not designed for use in oxygen-enriched or depleted atmospheres. If this condition is encountered or suspected, personnel should evacuate the area. Specially designed units are available for operation in those atmospheres.

4. Use an oxygen detector in conjunction with a CGI. Select a unit and follow the operating manual for calibration and use of the oxygen detector.

5. Calibrate the equipment regularly and charge the battery after each field use. See the operating manual for details.

6. The operator should fully understand the operating principles and procedures for the specific CGI in use.

3.4 Postoperation

3.4.1 Field

A. When the activity is completed or at the end of the day, carefully clean the outside of the CGI with a damp disposable towel to remove any visible dirt. Return the CGI to a secure area and place on charge.

B. Ensure that all equipment is accounted for, decontaminated (see SOP 1.6, General Equipment Decontamination), and ready for shipment.

C. Make sure all survey or sampling locations are properly staked and the location ID is readily visible on the location stake.

3.4.2. Documentation

A. Record any uncompleted work (like additional monitoring) in the logbook.

B. Complete logbook entries, verify the accuracy of entries, and sign/initial all pages.

C. Review data collection forms for completeness.

3.4.3. Office

A. Deliver original forms and logbooks to the document control officer (with copies to the site manager and files) for eventual delivery to the Department of Energy.

B. Inventory equipment and supplies. Repair or replace all broken or damaged equipment. Replace expendable items. Return equipment to the equipment manager and report incidents of malfunction or damage.

4. SOURCE

EPA. 1984. "Characterization of Hazardous Waste Sites - A Methods Manual: Volume II, Available Sampling Methods, Second Edition," U.S. Environmental Protection Agency report EPA-600/4-84-076. Environmental Monitoring Systems Laboratory, Office of Research and Development, Las Vegas, Nevada.

5. APPENDIXES

5.1. Equipment and Supplies Checklist

5.2. Combustible Gas Indicator Monitoring Data Form

5.3. Data Form Completion

5.4. Calibration Procedure for Gas Tech Model 1314

APPENDIX 5.1

EQUIPMENT AND SUPPLIES CHECKLIST

_____ CGI

_____ Battery charger for CGI

_____ Oxygen sensor

_____ Battery charger for oxygen sensor

_____ Spare gas detector filaments

_____ Spare batteries for CGI

_____ Jeweler's screwdrivers for internal adjustment

_____ Calibration kit

A) Spare gas cylinder (NBS traceable calibration gas)
B) Valve attachment
C) Flexible tubing (tygon)
D) Cylinder to encapsulate sensor probe

_____ Probe extensions

APPENDIX 5.2

COMBUSTIBLE GAS INDICATOR MONITORING DATA FORM

COMBUSTIBLE GAS INDICATOR (CGI) MONITORING DATA

FACILITY CODE _____ LOG DATE _____

LOGGER CODE _____ FIELD REP _____

CGI MANUFACTURER _____ CGI MODEL NO _____

SERIAL NO _____ CALIBRATION DATE/TIME _____

ACCEPTANCE CODE _____ BATTERY CONDITION _____

CALIBRATION GAS (%LEL):

TYPE _____ CONCENTRATION _____ % LEL CYLINDER SERIAL NO _____

CALIBRATION GAS (PPM):

TYPE _____ CONCENTRATION _____ PPM CYLINDER SERIAL NO _____

COMMENTS _____

LOCATION ID OR DESCRIPTION	COORDINATES (FT)		MONITORING TIME (HH:MM)	LOCATION TYPE	% LOWER EXPLOSIVE LIMIT	PPM	% OXYGEN
	NORTH	EAST					

ACCEPTANCE CODES: A—ACCEPTABLE R—RECONNAISSANCE U—UNACCEPTABLE N—NOT DETERMINED

LOCATION TYPES: BH — BOREHOLE SL — SURFACE LOCATION TP — TEST PIT WL — WELL

COMPLETE BOLDED DATA FOR ENTRY INTO TIMS

CGI—101 (1/88)

FORM COMPLETED BY/DATE _____ TECHNICAL REVIEWER/DATE _____

APPENDIX 5.3

DATA FORM COMPLETION

Use a pen with black ink that is not water soluble (not a felt-tip pen). Make an entry in each blank. Where there is no data entry, enter UNK for Unknown, NA for Not Applicable, or ND for Not Done. If any procedure was not performed as prescribed, give the reason for the change or omission on the form. To change an entry, draw a single line through it, add the correct information above it, and initial the change.

COMBUSTIBLE GAS INDICATOR MONITORING DATA FORM

1. Facility Code. Five-character code abbreviating the facility name where program activity is being conducted. The first three characters indicate the facility, and the remaining two numbers designate the specific site within the facility.

2. Log Date. The date the information recorded on the form was obtained, in the format DD-MMM-YY (01-JAN-88).

3. Logger Code. Three-character or four-character code identifying the company responsible for collecting the information recorded on the form.

4. Field Rep. The name of the field representative.

5. CGI Manufacturer. The company that manufactured the CGI.

6. CGI Model No. The model number of the CGI.

7. CGI Serial No. The serial number of the CGI.

8. CGI Calibration Date/Time. The date and time when the CGI was last calibrated.

9. Acceptance Code. One-character code assigned by the site manager.

10. Battery Condition. The battery charge reading at the beginning of the measurement.

11. Calibration Gas (% LEL). This information consists of three data fields: the chemical name of the calibration gas (type), concentration of the calibration gas (% LEL), and the serial number of the gas cylinder.

12. Calibration Gas (ppm). This information consists of three data fields: the chemical name of the calibration gas (type), concentration of the calibration gas (ppm), and the serial number of the gas cylinder.

13. Comments. Any additional information.

14. Location ID or Description. Four-character code assigned sequentially to each borehole, test pit, or surface location where physical, chemical, biological, radiological, and other measurements are taken.

15. Coordinates (Ft). The location of the measurement of the survey grid in units of feet. The two coordinate fields are in the format north, east.

16. Monitoring Time (HH:MM). The time when a field measurement was taken in the format hours:minutes using a 24-hr clock. Example: 08:37 for 8:37 a.m. and 19:12 for 7:12 p.m. (See conversion table below.)

Conversion Table

Conventional Time	24-Hr Time
1:00 a.m.	1:00
12:00 Noon	12:00
1:00 p.m.	13:00
2:00 p.m.	14:00
3:00 p.m.	15:00
4:00 p.m.	16:00
5:00 p.m.	17:00
6:00 p.m.	18:00
7:00 p.m.	19:00
8:00 p.m.	20:00
9:00 p.m.	21:00
10:00 p.m.	22:00
11:00 p.m.	23:00
12:00 Midnight	24:00

17. Location Type. Code describing the location of the CGI reading. The location type codes are: BH--borehole, TP--test pit, SL--surface location, and WL--well.

18. Percent Lower Explosive Limit. The reading obtained with the meter set to the LEL Scale.

19. PPM. The reading with the meter set to the PPM scale.

20. Percent Oxygen. Record the percent oxygen reading in this data field.

APPENDIX 5.4

CALIBRATION PROCEDURE FOR GAS TECH MODEL 1314

GASTECH MODEL 1314 CALIBRATION

CALIBRATION PROCEDURE

1. PPM RANGE
   - 1.01 Turn on instrument, allow to warm up and adjust zero in normal way.
   - 1.02 Add a few drops of water to glass wool packing inside humidifier. Glass wool should be moist but not dripping.
   - 1.03 Couple flowmeter to Cliplok fitting, and humidifier to flowmeter inlet, as shown.
   - 1.04 Couple Cliplok fitting to instrument inlet.
   - 1.05 Readjust zero as required after instrument stabilizes.
   - 1.06 Note flowmeter reading.
   - 1.07 Connect calibration valve to ppm-range cylinder. Open valve slightly to produce a small flow.
   - 1.08 Couple valve outlet to humidifier inlet.
   - 1.09 Adjust valve to give same flow on flowmeter as observed in 1.06.
   - 1.10 Watch meter as gas enters instrument. Observe highest reading.
   - 1.11 Compare reading with marked gas concentration on cylinder.
   - 1.12 If not correct, adjust calibration as shown in Section V of Instruction Manual.
   - 1.13 Turn off valve and disconnect calibration components.
2. LEL Range

   Use same procedure as above, but in LEL range. However, omit humidifier as it is not necessary in LEL range. Use LEL range cylinder.

GMC-130 (1/88)

STANDARD OPERATING PROCEDURE 6.2

HEALTH AND SAFETY MONITORING OF ORGANIC VAPORS WITH A PHOTOIONIZATION DETECTOR

1. PURPOSE

To describe the equipment and proper method for environmental monitoring of toxic gases and vapors using a portable photoionization detector (PID).

2. DISCUSSION

The Field Sampling Plan (FSP) or Work Plan (WP) provides information on the scope of the given operation and the applicability of this procedure to the work activities.

The PID is useful as a general survey instrument at hazardous waste sites. A PID is capable of detecting and measuring real-time concentrations of many organic and inorganic vapors in the air. A PID is similar to a flame ionization detector (FID) in application. The PID has somewhat broader capabilities because it can detect certain inorganic vapors. Conversely, the PID is unable to respond to certain low molecular weight hydrocarbons (like methane and ethane) that are readily detected by FID instruments. Appendix 5.1 describes the application comparisons between an FID organic vapor analyzer and a PID.

A PID will respond to most vapors that have an ionization potential less than or equal to that supplied by the ionizing source in the detector, which is an ultraviolet (UV) lamp. Several probes are available for the PID, each having a different source and a different ionization potential. For this reason, the selection of the appropriate probe is essential in obtaining useful field results. Though it can be calibrated to a particular compound, the instrument cannot distinguish between detectable compounds in a mixture of gases. Therefore, it indicates an integrated response to the mixture.

2.1. PID Instrument Limitations

A. The PID is a nonspecific total vapor detector. It cannot be used to identify unknown substances; it can only quantify them.

B. The PID must be calibrated to a specific compound.

C. The PID does not respond to certain low molecular weight hydrocarbons like methane and ethane.

D. Certain toxic gases and vapors like carbon tetrachloride and hydrogen cyanide have high ionization potentials and cannot be detected with a PID.

E. Certain models of PID instruments are not intrinsically safe. Refer to the manufacturer's operating manual for use in potentially flammable or

combustible atmospheres. A PID should be used in conjunction with a combustible gas indicator (see SOP 6.1, Health and Safety Monitoring of Combustible Gas Levels).

F. Electrical power lines or power transformers close to the PID instrument may cause measurement errors. Under this circumstance, refer to the operating manual for proper procedures.

G. High winds and high humidity will affect measurement readings. Certain models of PID instruments become unusable under foggy conditions. An indication of this is the needle dropping below 0.

H. The lamp window must be periodically cleaned to ensure ionization of the air contaminants.

I. One PID instrument, the HNu, measures concentrations from about 1 to 2000 ppm, although the response is not linear over this entire range. For example, the response to benzene is linear from about 0 to 600 ppm. This means the HNu reads a true concentration of benzene only between 0 and 600. Greater concentrations are read at a lower level than the true value. Consult the manufacturer's operating manual to determine the instrument's response to various chemicals.

2.2. Regulatory Limitations

A. Transport of calibration gas cylinders by passenger and cargo aircraft follow the U.S. Code of Federal Regulations, 49 CFR Parts 100-177. Benzene is a typical calibration gas included with a PID. Benzene is classified as a nonflammable gas, UN 1556, and the proper shipping name is compressed gas. It must be shipped in cargo aircraft only.

3. PROCEDURE

3.1. Associated Procedures

Information that applies to most field activities is provided in SOPs 1.1-1.10. In addition to the FSP or WP, those SOPs provide guidance that may supplement the information in this procedure. They should be consulted as necessary to obtain specific information about equipment and supplies; sample collection, preservation, packaging, and shipping; decontamination procedures; and documentation requirements. Procedures directly associated with this SOP are listed below.

SOP No.	SOP Title
1.1	General Instructions for Field Personnel
1.6	General Equipment Decontamination
6.1	Health and Safety Monitoring of Combustible Gas Levels

3.2. Preparation

3.2.1 Office

A. Review the FSP or WP and SOPs listed in Section 3.1.

B. Coordinate schedules/actions with the installation staff.

C. Obtain appropriate permission for property access.

D. Assemble the equipment and supplies listed in Appendix 5.2. Perform the procedures described below.

1. Start-Up Procedure

a. Before attaching the probe, check the function switch on the control panel to ensure that it is in the off position. Attach the probe by plugging it into the interface on the top of the readout module. Use care in aligning the prongs in the probe cord with the plug interface. Do not use excessive force.

b. Turn the function switch to the battery check position. The needle on the meter should be within or above the green battery arc on the scale; if not, recharge the battery. If the red indicator light comes on, the battery needs recharging.

c. Turn the function switch to any range setting. Look into the end of the probe to see if the lamp is on. If it is on, it will emit a purple glow. Do not stare into the probe any longer than 3 sec. Long-term exposure to UV light will damage the eyes. Also, listen for the hum of the fan motor.

d. To zero the instrument, turn the function switch to the standby position and rotate the zero adjustment until the meter reads zero. A calibration gas is not needed because this is an electronic zero adjustment. If the span adjustment setting is changed after the zero is set, the zero should be rechecked and adjusted (if necessary). Wait 15 to 20 sec to ensure that the zero reading is stable. If necessary, readjust the zero.

2. Operational Check

a. Follow the start-up procedure.

b. With the instrument set on the 0 to 20 range, hold a solvent-based marker pen near the probe tip. If the meter deflects upscale, the instrument is working.

3. Calibration Procedure

a. Follow the start-up procedure and the operational check.

b. Set the function switch to the range setting for the concentration of the calibration gas.

c. Remove the detector from the outer casing by loosening the screw on the bottom of the casing.

d. Attach a regulator to a disposable cylinder of calibration gas. Connect the regulator to the probe of the PID with a piece of clean tygon tubing. Open the valve on the regulator.

e. After 15 sec, adjust the internal calibration screw until the meter reading equals the concentration of the calibration gas used. Consult the operating manual for the location of this screw.

f. If the PID does not start up, check out or calibrate properly and notify the equipment manager immediately. Under no circumstances should work requiring monitoring with a PID be performed without a properly functioning instrument.

g. Replace the detector in the outer casing.

h. Contact the carrier that will transport equipment and hazardous materials to obtain information on regulations and specifications.

3.2.2. Documentation

A. Obtain a logbook from the QA officer.

B. Record results of the equipment check in the logbook.

C. Obtain a sufficient number of the appropriate ER Program data collection forms (see INDEX TO SOPs).

D. Consult the ER Program data administrator for a current list of management codes, location IDs, and sample numbers used in the completion of data forms.

E. Record the calibration data on the Photoionization Detector Field Data form (Appendix 5.3). See Appendix 5.4 (Data Form Completion) for instructions.

3.2.3. Field

A. Follow the start-up procedure, operational check, and calibration check described in Section 3.2.1.D.

B. Set the function switch to the appropriate range. If the concentration of gases or vapors is unknown, set the function switch to the 0 to 20 ppm range; adjust the range if necessary.

C. With the exception of the probe's inlet and exhaust, wrap the PID in clear plastic to prevent it from becoming contaminated and to prevent water from getting inside the instrument in the event of precipitation.

3.3. Operation

3.3.1 Measuring organic vapor levels using the PID

A. As with any field instrument, accurate results depend on the operator's knowledge of the operator's manual. Follow the instructions in the operating manual explicitly in order to obtain accurate results.

B. Position the intake assembly close to the monitoring area because the low sampling rate allows for only very localized readings. Do not immerse the intake assembly in fluid under any circumstances.

C. While taking care not to permit the PID to be exposed to excessive moisture, dirt, or contamination, monitor the work activity as specified in the site Health and Safety Plan. Conduct the PID survey at a slow to moderate rate of speed and slowly sweep the intake assembly (the probe) from side to side.

D. During drilling activities, perform PID monitoring at every 5-ft interval downhole, at the headspace, and in the breathing zone. In addition, monitoring may be performed in the breathing zone during actual drilling when elevated organic vapor levels are encountered. When the activity being monitored does not involve drilling (like surface sampling), readings may only be recorded in the breathing zone. Refer to the site Health and Safety Plan for specific monitoring instructions.

E. Be prepared to evacuate the area if the preset alarm sounds. Operators using supplied air systems may not need to evacuate the work area, but they should frequently observe the levels indicated by the instrument.

F. Static voltage sources like power lines, radio transmissions, or transformers may interfere with measurements. See the operator's manual for a discussion of necessary considerations.

3.4. Postoperation

3.4.1. Field

A. When the activity is completed or at the end of the day, carefully clean the outside of the PID with a damp disposable towel to remove any visible dirt. Return the PID to a secure area and place on charge.

B. Ensure that all equipment is accounted for, decontaminated (see SOP 1.6, General Equipment Decontamination), and ready for shipment.

C. Make sure all survey or sampling locations are properly staked and the location ID is readily visible on the location stake.

3.4.2. Documentation

A. Record any uncompleted work (like additional monitoring) in the logbook.

B. Complete logbook entries, verify the accuracy of entries, and sign/initial all pages.

C. Review data collection forms for completeness.

3.4.3. Office

A. Deliver original forms and logbooks to the document control officer (with copies to the site manager and files) for eventual delivery to the Department of Energy.

B. Inventory equipment and supplies. Repair or replace all broken or damaged equipment and charge the batteries. Replace expendable items. Return equipment to the equipment manager and report incidents of malfunction or damage.

4. SOURCES

HNU Systems, Inc. 1986. "Instruction Manual for the Trace Gas Analyzer Model PI 101." Newton, Massachusetts.

CFR 49. 1985. Code of Federal Regulations, Title 49, U.S. Department of Transporatation, Parts 100-177. November 1, 1985. Washington, D.C.: U.S. Government Printing Office.

EPA. 1984. "Characterization of Hazardous Waste Sites--A Methods Manual: Volume II, Available Sampling Methods, Second Edition" U.S. Environmental Protection Agency report EPA-600/4-84-076. Environmental Monitoring Systems Laboratory, Office of Research and Development, Las Vegas, Nevada.

5. APPENDIXES

5.1. Comparison of the FID and PID

5.2. Equipment and Supplies Checklist

5.3. Photoionization Detector Field Data Form

5.4. Data Form Completion

APPENDIX 5.1

COMPARISON OF THE FID AND PID

	FID	PID
Response	Responds to many organic gases and vapors, especially low molecular weight hydrocarbons.	Responds to many organic and some inorganic gases and vapors, especially heavy hydrocarbons.
Application	In survey mode, detects total concentrations of gases and vapors. In GC mode, identifies and measures specific compounds.	In survey mode, detects total concentrations of gases and vapors. Some identification of compounds possible if GC column and standards are used.
Limitations	Does not respond to inorganic gases and vapors with a higher ionization potential than the flame detector. No temperature control.	Does not respond to methane or inorganic aliphatic chlorinated solvents. Does not respond properly in presence of water vapor (high humidity). Does not detect a compound if probe (lamp) has a lower energy than compound's ionization potential.
Calibration gas	Methane and others	Benzene (1,3-butadiene) and others
Ease of operation	Requires experience to interpret correctly, especially in GC mode.	Fairly easy to use and interpret. More difficult in the GC mode.
Detection limits	0.1 ppm (methane)	0.1 ppm (benzene), depends on lamp voltage.
Response time	2-3 sec (survey mode)	3 sec for 90% of total concentration

APPENDIX 5.1, Continued

	FID	PID
Maintenance	Periodically clean and inspect particle filters, valve rings, and burner chamber. Check calibration and pumping system for leaks. Recharge battery after each use.	Clean UV lamp frequently. Check calibration regularly. Recharge battery after each use.
Useful range	0-1000 ppm	0-2000 ppm
Service life	8 hrs; 3 hrs with strip chart recorder	10 hrs; 5 hrs with strip chart recorder

APPENDIX 5.2

EQUIPMENT AND SUPPLIES CHECKLIST

_____ Photoionization detector (PID)

_____ Operating manual

_____ Probes: 9.5eV_____, 10.2eV_____, and 11.7eV_____

_____ Battery charger for PID

_____ Spare batteries

_____ Jeweler's screwdriver for adjustments

_____ Tygon tubing

_____ NBS traceable calibration gas (type)_____

_____ "T" valve for calibration

_____ Intake assembly extension

_____ Strap for carrying PID

_____ Teflon tubing for downhole measurements

_____ Plastic bags for protecting the PID from moisture and dirt

APPENDIX 5.3

PHOTOIONIZATION DETECTOR FIELD DATA FORM

PHOTOIONIZATION DETECTOR FIELD DATA

FACILITY CODE _____ LOG DATE _____

LOCATION ID _____ LOCATION TYPE _____

LOGGER CODE _____ FIELD REP _____

PHOTOIONZATION DETECTOR INSTRUMENT: MODEL _____

MANUFACTURER _____ DATE/TIME CALIBRATED _____

SERIAL NO _____ ACCEPTANCE CODE _____

CALIBRATION GASES:	
TYPE/CYLINDER ID NO	CONCENTRATION (PPM)/SPAN
1	1
2	2

COMMENTS _____

TIME (HH:MM)	SAMPLE ID	OBSERVED READING (ppm)					DRILLING DEPTH (FT)	COMMENTS
		DH	HS	BZ	D	OT		

ACCEPTANCE CODES: A—ACCEPTABLE R—RECONNAISSANCE U—UNACCEPTABLE N—NOT DETERMINED

LOCATION TYPES:
BH – BOREHOLE
SS – SOIL SAMPLE
SL – SURFACE LOCATION
SB – SAMPLE BOTTLE
TP – TEST PIT
WL – WELL
OT – OTHER

OBSERVED READING: D – DURING DRILLING (BZ)
DH – DOWNHOLE BZ – BREATHING ZONE
HS – HEADSPACE OT – OTHER

COMPLETE BOLDED DATA FOR ENTRY INTO TIMS
PHO–040 (1/88)

FORM COMPLETED BY/DATE _____ TECHNICAL REVIEWER/DATE _____

APPENDIX 5.4

DATA FORM COMPLETION

Use a pen with black ink that is not water soluble (not a felt-tip pen). Make an entry in each blank. Where there is no data entry, enter UNK for Unknown, NA for Not Applicable, or ND for Not Done. If any procedure was not performed as prescribed, give the reason for the change or omission on the form. To change an entry, draw a single line through it, add the correct information above it, and initial the change.

PHOTOIONIZATION DETECTOR FIELD DATA FORM

1. Facility Code. Five-character code abbreviating the facility name where the program activity is being conducted. The first three characters indicate the facility, and the remaining two numbers designate the specific site within the facility.

2. Log Date. The date the information recorded on the form was obtained in the format DD-MMM-YY (01-JAN-88).

3. Location ID. Four-character code assigned sequentially to each borehole, test pit, or surface location where physical, chemical, biological, radiological, and other measurements are taken.

4. Location Type. Two-character code identifying where the sample was taken. There is one location type for each location ID. Location types include those listed below.

   BH--Borehole

   TP--Test Pit

   SL--Surface Location

   WL--Well

   SB--Sample Bottle

   SS--Soil Sample

   OT--Other (explain)

5. Logger Code. Three-character or four-character code identifying the company responsible for collecting the information on the form.

6. Field Rep. The name of the field representative.

7. PID Model. Model of photoionization detector (PID) instrument.

8. PID Manufacturer. Manufacturer's name on the PID instrument used.

9. Date/Time Calibrated. Last day and time when the PID instrument was calibrated. Calibration should be performed daily.

10. Serial No. Serial No. of PID instrument.

11. Acceptance Code. One-character code assigned by the site manager.

12. Calibration Gases

    a) Type/Cylinder ID No. Name of the calibration gas and the identification number of the cylinder.

    b) Concentration (ppm)/span. Concentration of calibration gas in parts per million (ppm) and the span setting for calibration.

13. Comments. Any additional information.

14. Time (HH:MM). The time when a field measurement was taken in the 24-hr clock format of hours:minutes (for example, 08:37 for 8:37 a.m. and 19:12 for 7:12 p.m.). See the conversion table below.

Conversion Table

Conventional Time	24-Hr Time
1:00 a.m.	1:00
12:00 Noon	12:00
1:00 p.m.	13:00
2:00 p.m.	14:00
3:00 p.m.	15:00
4:00 p.m.	16:00
5:00 p.m.	17:00
6:00 p.m.	18:00
7:00 p.m.	19:00
8:00 p.m.	20:00
9:00 p.m.	21:00
10:00 p.m.	22:00
11:00 p.m.	23:00
12:00 Midnight	24:00

15. Sample ID. When samples are being taken during a PID monitoring, the identification number or code assigned to a particular sample (like 01) is correlated with the observed readings and appropriate drilling depth (if drilling is being performed). This is useful in selecting samples for analyses and in the correlation of laboratory data with PID measurements.

16. Observed Reading (ppm). PID reading at the respective location ID in the units indicated on the meter. When the calibration gas and the gas being measured for the environment are the same, the meter reads in parts per million (ppm) during drilling. Readings may be taken downhole, at the headspace, and in the breathing zone, and data should be recorded in the appropriately marked column.

17. Drilling Depth (Ft). PID monitoring is performed every 5 ft during drilling. The depth of the drilling is listed in feet and can be given as the most recent interval (like 5-10) or as the ending depth (like 10).

18. Comments. Any additional information, including the type of gas being measured if this determination can be made (for example, by labels on drums).

STANDARD OPERATING PROCEDURE 6.4

TOTAL ALPHA SURFACE CONTAMINATION MEASUREMENTS

1. PURPOSE

To provide guidance for determining levels of total surface alpha contamination on equipment, vehicles, and personnel that have been in contact with material that was potentially contaminated with alpha-emitting radionuclides.

2. DISCUSSION

The Field Sampling Plan (FSP) or Work Plan (WP) provides information on the scope of a given operation, related health and safety requirements, and the applicability of this procedure to the activities.

Equipment and vehicles must be monitored for surface contamination before release for unrestricted use from a radiologically controlled area. Levels of surface alpha contamination on equipment will be determined and compared to release criteria presented in DOE Order 5480.11. These criteria are based on U.S. Nuclear Regulatory Commission Regulatory Guide 1.86 and presented as either total average, total maximum, or removable. Total average measurements are based on portable instrument surveys for alpha contamination over a 1 m^2 area. Total maximum measurements are based on portable instrument surveys for alpha contamination over a 100 cm^2 area. Removable contamination is defined as that amount of surface alpha activity that may be transferred to a soft, dry filter paper after wiping 100 cm^2 areas of the surface with moderate pressure. The swipe is then counted in a stationary radiation detector to determine removable alpha activity.

The primary alpha-emitting radionuclide of concern at the Mound Plant is plutonium-238. In some areas, isotopes of natural uranium and thorium are also of concern. In some instances, these plutonium, uranium, and thorium sources may contaminate some equipment surfaces concurrently. It is therefore necessary to select the surface contamination limits based on the most restrictive radionuclide, plutonium-238. For plutonium-238 and other transuranics, the surface contamination limits are as follow:

Nuclide	Average	Maximum	Removable
Plutonium-238	100 dpm/100 cm^2	300 dpm/100cm^2	20 dpm/100 cm^2

Activity per unit area is reported in units of disintegrations per minute (dpm) over a 100 cm^2 surface area. Natural uranium and thorium isotopes have significantly higher release limits than plutonium-238, thus are bounded by plutonium-238 limits. It is important to note that due to the characteristics of portable alpha detection instruments, it is generally not possible to statistically detect 20 dpm/100 cm^2 on a potentially contaminated surface. Therefore, removable alpha contamination measurements must be made on all equipment used in a radiologically controlled area of the Mound site. These measurements are addressed in SOP 1.7, Sampling for Removable Alpha Contamination.

All equipment must be decontaminated to levels that are as low as reasonably achievable and below the applicable release criterion in all cases. Personnel must be monitored for

contamination before leaving a controlled area and decontaminated to the lowest reasonably achievable levels.

High-voltage plateau curves and National Bureau of Standards (NBS) traceable source calibrations must be performed on the detector semiannually to ensure proper operation. Alpha detector counting efficiencies must be determined daily before using the instrument for contamination monitoring. The counting efficiency also must be determined following any adjustments or repairs on the instrument. The counting efficiency is used to convert instrument readings to a measure of activity in units of dpm per 100 cm^2.

3. PROCEDURE

3.1. Associated Procedures

Information that applies to most field activities is provided in SOPs 1.1-1.10. In addition to the FSP or WP, those SOPs provide guidance that may supplement the information in this procedure. They should be consulted as necessary to obtain specific information about equipment and supplies; sample collection, preservation, packaging, and shipping; decontamination procedures; and documentation requirements. Procedures directly associated with this SOP are listed below.

SOP No.	SOP Title
1.1	General Instructions for Field Personnel
1.6	General Equipment Decontamination
1.7	Sampling for Removable Alpha Contamination
6.11	Beta-Gamma Radiation Measurements Using a Geiger-Mueller Detector

3.2. Preparation

3.2.1. Office

A. Review the FSP or WP and SOPs listed in Section 3.1.

B. Coordinate schedules/actions with the installation staff.

C. Obtain appropriate permission for property access.

D. Assemble the equipment and supplies listed in Appendix 5.1. Ensure the proper operation of all field equipment. Ensure that the alpha scintillator and the ratemeter/scaler have current calibrations.

3.2.2. Documentation

A. Obtain a logbook from the QA officer.

B. Record results of the equipment check in the logbook.

C. Obtain a sufficient number of the appropriate ER Program data collection forms (see INDEX TO SOPs).

D. Consult the ER Program data administrator for a current list of codes used in the completion of data forms.

3.2.3. Field

A. Complete the Daily Alpha Efficiency Check form (Appendix 5.2) by following instructions in Appendix 5.4, Data Form Completion.

B. Perform a daily 10-min background count and a 1-min alpha source count during use and record the results on the Daily Alpha Efficiency Check form. To perform a background count, place the probe on a clean, uncontaminated surface and record the number of counts accumulated over a period of 10 min. To perform a check source count, place the alpha source in the detector tray or against the detector surface and record the number of counts accumulated per minute (cpm).

C. Calculate the counting efficiency (E) using the formula shown below.

$$E = \frac{(\text{source cpm}) - (\text{background cpm})}{(\text{source dpm})}$$

D. While counting samples or performing surveys, the alpha probe may be contaminated, causing the background count rate to increase. If this is suspected, repeat the 10-min background count. If the background count rate is more than 50% above the average value, the detector should be cleaned.

3.3 Operation

3.3.1 Total Alpha Survey

A. Complete the Total Alpha Contamination Survey Data form by following instructions in Appendix 5.4, Data Form Completion.

B. List the items to be surveyed in the first column on the form. Items must be identified as specifically as possible with serial numbers, model numbers, license numbers, or other forms of unique descriptions. If the items to be surveyed need to be labeled with the assigned identification number, use an indelible marker, spray paint, or some type of permanent marker. Use a separate line of the form to list each area surveyed on the items.

C. List the surveyor's name, date of survey, and identification number of the monitoring instrument/detector.

D. Switch the instrument on, check the batteries for adequate power, and check the instrument for damage. Record the instrument daily background, efficiency, and calibration factor in the appropriate spaces. The instrument background and efficiency should be determined at least once during each operational day.

E. Monitor potentially contaminated surfaces by passing the probe face along each surface at a rate of 5 cm/sec or less. Without touching it, hold the probe face as close as possible to the surface being monitored and not more than 0.5 cm away. Be careful not to damage the Mylar face of the probe. Hold the probe steady at any area that appears to indicate an elevated reading. Record the highest reading for each separate area of the item monitored, listing a description of each area in the space provided under the first column.

F. When monitoring potentially contaminated skin and clothing surfaces, hold the probe face as close as possible to the surface being monitored, no more than 0.5 cm away. Move the probe along the surface at a rate of 5 cm/sec or less. At a minimum, monitor the areas listed below.

1. Both sides of each hand

2. Tops, sides, and bottoms of shoes or boots

3. The torso of the body, both front and back

4. All loose equipment (for example, papers, clipboards, and hand-carried tools)

G. Instrument readings will fluctuate during monitoring. Investigate any significant elevation of the meter reading by holding the meter in the suspected area. A noticeable elevation in the meter reading identifies contamination that may need to be removed.

H. Multiply each instrument reading (cpm) by the calibration factor to obtain the contamination level in dpm/100 cm^2.

I. If the radiologically controlled area is known or suspected to contain plutonium-238, perform the swipe or smear survey procedure. See SOP 1.7, Sampling for Removable Alpha Contamination.

J. Wash contaminated skin and equipment with water and soap. Contaminated clothing may be removed and laundered at an appropriate facility.

K. Give the survey results to the personnel responsible for releasing equipment. Equipment that fails to meet the release limits must undergo additional decontamination according to SOP 1.6, General Equipment Decontamination, and must be resurveyed.

3.4. Postoperation

3.4.1. Field

A. Turn the power off.

B. Ensure that all equipment is accounted for, decontaminated (see SOP 1.6, General Equipment Decontamination), and ready for shipment.

3.4.2. Documentation

A. Record any uncompleted work (like additional monitoring) in the logbook.

B. Complete logbook entries, verify the accuracy of entries, and sign/initial all pages.

C. Review data collection forms for completeness.

3.4.3. Office

A. Deliver original forms and logbooks to the document control officer (with copies to the site manager and files) for eventual delivery to the Department of Energy.

B. Inventory equipment and supplies. Repair or replace all broken or damaged equipment. Replace expendable items. Return equipment to the equipment manager and report incidents of malfunction or damage.

4. SOURCE

NRC. 1974. Regulatory Guide 1.86, "Termination of Operating Licenses for Nuclear Reactors." U. S. Regulatory Commission, Washington, D.C.: U.S. Government Printing Office.

5. APPENDIXES

5.1. Equipment and Supplies Checklist

5.2. Daily Alpha Efficiency Check Form

5.3. Total Alpha Contamination Survey Data Form

5.4. Data Form Completion

APPENDIX 5.1

EQUIPMENT AND SUPPLIES CHECKLIST

_____ Alpha scintillation probe (Ludlum 43-5 or the equivalent)

_____ Ratemeter/scaler (Ludlum Model 3 or the equivalent)

_____ Alpha check source (Am-241 or the equivalent)

_____ Data forms

_____ Voltage meter

_____ Hand-held calculator

_____ Tape measure

APPENDIX 5.2

DAILY ALPHA EFFICIENCY CHECK FORM

DAILY ALPHA EFFICIENCY CHECK

FACILITY CODE _____ FIELD REP _____

LOGGER CODE _____ ACCEPTANCE CODE _____

RATEMETER/SCALER:

MODEL NO _____ SERIAL NO _____ CALIBRATION DATE _____

WINDOW OUT THRESHOLD _____ HIGH VOLTAGE _____ BATTERY _____

ALPHA SCINTILLATION PROBE:

MODEL NO _____ SERIAL NO _____ CALIBRATION DATE _____

SOURCE:

SERIAL NO _____ ISOTOPE _____ ACTIVITY _____ DPM

LOG DATE	TIME (HH:MM)	COUNTING TIME (MIN)	BACKGROUND CPM	GROSS COUNTS	GROSS CPM	NET CPM	EFFICIENCY (NET CPM/DPM)

ACCEPTANCE CODES: A–ACCEPTABLE R–RECONNAISSANCE U–UNACCEPTABLE N–NOT DETERMINED

COMPLETE BOLDED DATA FOR ENTRY INTO TIMS
DAE–103 (3/88)

_____ FORM COMPLETED BY/DATE

_____ TECHNICAL REVIEWER/DATE

APPENDIX 5.3

TOTAL ALPHA CONTAMINATION SURVEY DATA FORM

TOTAL ALPHA CONTAMINATION SURVEY DATA

FACILITY CODE _____ **LOG DATE** _____

LOGGER CODE _____ FIELD REP _____

RATEMETER/SCALER: **ACCEPTANCE CODE** _____

MODEL NO _____ SERIAL NO _____ CALIBRATION DATE _____

WINDOW OUT THRESHOLD _____ HIGH VOLTAGE _____ BATTERY _____

ALPHA PROBE:

MODEL NO _____ SERIAL NO _____ EFFICIENCY _____ CPM/DPM

PROBE FACE AREA[1] _____ CALIBRATION FACTOR[2] _____ $\frac{(DPM/100cm^2)}{CPM}$

ARE TRANSURANICS PRESENT OR SUSPECTED? (YES/NO) _____

IF YES – SWIPES ARE REQUIRED

ITEM SURVEYED (SPECIFY)	GROSS COUNTS	COUNT TIME	NET CPM	CONTAMINATION[3] LEVEL (IN DPM/100cm^2)	MEETS TOTAL SURFACE RELEASE LIMIT (100 dpm/cm^2) /(YES/NO)	SWIPE NECESSARY (YES/NO)

1 LUDLUM MODEL 43-1 PROBE FACE AREA = 83.0cm^2 LUDLUM MODEL 43-5 PROBE FACE AREA = 78.5 cm^2

2 CALIBRATION FACTOR = (100/PROBEFACE AREA (cm^2))/EFFECIENCY(CPM/DPM)

3 CONTAMINATION LEVEL = (NET CPM)(CALIBRATION FACTOR)

ACCEPTANCE CODES: A–ACCEPTABLE R–RECONNAISSANCE U–UNACCEPTABLE N–NOT DETERMINED

COMPLETE BOLDED DATA FOR ENTRY INTO TIMS
TAC-128 (6/92)

_____ FORM COMPLETED BY/DATE

_____ TECHNICAL REVIEWER/DATE

APPENDIX 5.4

DATA FORM COMPLETION

Use a pen with black ink that is not water soluble (not a felt-tip pen). Make an entry in each blank. Where there is no data entry, enter UNK for Unknown, NA for Not Applicable, or ND for Not Done. If any procedure was not performed as prescribed, give the reason for the change or omission on the form. To change an entry, draw a single line through it, add the correct information above it, and initial the change.

DAILY ALPHA EFFICIENCY CHECK

1. Facility Code. Five-character code abbreviating the facility name where program activity is being conducted. The first three characters indicate the facility, and the remaining two numbers designate the specific site within the facility.

2. Field Rep. The name of the field representative.

3. Logger Code. Three-character or four-character code identifying the company responsible for collecting the information recorded on the form.

4. Acceptance Code. One-character code assigned by the site manager.

5. Ratemeter/Scaler Model No. The model number of the ratemeter/scaler.

6. Ratemeter/Scaler Serial No. The serial number of the ratemeter/scaler.

7. Ratemeter/Scaler Calibration Date. The date when the ratemeter/scaler was last calibrated.

8. Window. The window is in the out position unless otherwise specified.

9. Threshold. The adjustment for the lower energy level of the discriminator shown on the calibration sticker.

10. High Voltage. The voltage that is applied to the alpha scintillation probe shown on the calibration sticker. This voltage is determined semiannually using a voltage plateau.

11. Battery. The battery voltage reading at the beginning of the measurement.

12. Alpha Scintillation Probe Model No. The model number of the alpha detector probe.

13. Alpha Scintillation Probe Serial No. The serial number of the alpha probe.

14. Alpha Scintillation Probe Calibration Date. The date the probe was last calibrated.

15. Source Serial No. The serial number of the radiation source.

16. Source Isotope. The identity of the radioactive isotope contained in the source given as element and mass number, like Am-241.

17. Source Activity. The activity of the radioactive source in disintegrations per minute (dpm). If the check source activity is given in microcuries (μCi), it can be converted to dpm using 1 μCi = 2.22×10^{6}dpm.

18. Log Date. The date the information recorded on the form was obtained in the format DD-MMM-YY (01-JAN-88).

19. Time (HH:MM). The time the efficiency was determined using the 24-hr clock in the format hours:minutes.

20. Counting Time (Min). The time in minutes over which the scaler counts. Enter N/A if using a ratemeter.

21. Background cpm. The count rate with no source present.

22. Gross Counts. The number of pulses recorded by the scaler during the counting time. Enter N/A if using a ratemeter.

23. Gross cpm. The count rate with the source present given in pulses per minute.

24. Net cpm. Net counts per minute (cpm) equals gross cpm minus background cpm.

25. Efficiency (Net cpm/dpm). The ratio of the observed count rate to the true disintegration rate.

$$\text{Efficiency} = \frac{\text{Net cpm}}{\text{Source dpm}}$$

TOTAL ALPHA CONTAMINATION SURVEY DATA FORM

1. Facility Code. Five-character code abbreviating the facility name where program activity is being conducted. The first three characters indicate the facility, and the remaining two numbers designate the specific site within the facility.

2. Log Date. The date the information recorded on the form was obtained in the format DD-MMM-YY (01-JAN-88).

3. Logger Code. Three-character or four-character code identifying the company responsible for collecting the information recorded on the form.

4. Field Rep. The name of the field representative.

5. Acceptance Code. One-character code assigned by the site manager.

6. Ratemeter/Scaler Model No. The model number of the ratemeter/scaler.

7. Ratemeter/Scaler Serial No. The serial number of the ratemeter/scaler.

8. Ratemeter/Scaler Calibration Date. The date when the ratemeter/scaler was last calibrated.

9. Window. The window will be in the out position unless otherwise specified.

10. Threshold. The adjustment for the lower energy level of the discriminator shown on the calibration sticker.

11. High Voltage. The voltage applied to the alpha detector shown on the calibration sticker.

12. Battery. The battery voltage reading at the beginning of the measurement.

13. Alpha Probe Model No. The model number of the alpha detector probe.

14. Alpha Probe Serial No. The serial number of the alpha detector probe.

15. Alpha Probe Efficiency. The ratio of observed net count rate to the known disintegration rate of the check source from the Daily Alpha Efficiency Check form (Appendix 5.2).

16. Probe Face Area. The surface area of the Mylar window on the alpha scintillation detector in square cm. Values for Ludlum Models 43-1 and 43-5 are listed at the bottom of the form.

17. Calibration Factor. Factor that takes the detector efficiency and surface area into account to convert from cpm to dpm per 100 cm^2. The calibration factor in (dpm/100cm^2)/cpm equals (100/Probe Face Area in cm^2)/efficiency in cpm/dpm.

18. Are transuranics present or suspected (Yes/No). Answer based on historical data and Safety Plan review.

19. Item Surveyed (Specify). A description or identification number of the article surveyed. A separate line on the form is used to list and describe each area to be surveyed on the article.

20. Gross Counts. The total counts collected during the counting period.

21. Count Time. The time (in minutes) during which the counts were collected.

22. Net cpm. Gross count cpm minus background cpm.

23. Contamination Level (in dpm/100cm^2). This is calculated by multiplying the net cpm by the calibration factor.

    Contamination level = (Net cpm) (Calibration Factor)

24. Meets Release Limit (Yes/No). If the contamination level is greater than the applicable release limit, a no is written here. If the contamination level is less than the release limit, a yes is written here.

25. Swipe Necessary (Yes/No). If the total alpha contamination level exceeds the applicable removable contamination criteria, a swipe must be performed to determined the activity contribution of fixed and loose contamination. If item 18 is Yes, all locations will require a swipe.

STANDARD OPERATING PROCEDURE 6.7

NEAR SURFACE AND SOIL SAMPLE SCREENING FOR LOW-ENERGY GAMMA RADIATION USING THE FIDLER

1. PURPOSE

To describe the procedure in which a field instrument for the detection of low-energy radiation (FIDLER) is used to monitor surfaces and soil samples for the presence of low-energy gamma radiations that accompany some alpha emissions.

2. DISCUSSION

The Field Sampling Plan (FSP) or Work Plan (WP) provides information on the scope of specific operations, related health and safety requirements, and the applicability of this procedure.

The FIDLER uses a thin, 5-inch-diameter sodium iodide (NaI) crystal to detect low-energy radiation. The NaI crystal is optically coupled to a quartz light pipe and installed in a standard 5-inch probe housing that has an entrance window of beryllium. The principal use of this detector is for photons with energies less than 75 kilo-electron volts (keV).

The FIDLER probe can be used to scan individual samples for low-energy photons that normally accompany alpha emissions. Uranium is principally an alpha emitter. However, the radiation from its daughter products includes low-energy photons, principally L-orbital x rays from thorium. In the case of U-238, for example, two low-energy photons from Th-234 can be detected by the FIDLER. During most investigations, the instrument will be adjusted for maximum response for the 63 keV photon from Th-234 or the 60 keV photon of Am-241 formed by the beta decay of Pu-241.

The detection limit for a FIDLER during field use is dependent on the source to detector geometry, the energy of gamma and x-rays associated with radionuclides present, and what radionuclide was used to calibrate the instrument to a calculated efficiency. A wide range in background soures can affect the estimated sensitivity as well.

Source to detector geometry can be influenced by the terrain roughness, amount and type of vegetation, and the physical configuration of the detector. These items should be noted during a field survey.

The thin NaI crystal in a FIDLER becomes less sensitive to increasing gamma and x-ray energies. It is necessary to note the energy and yield associated with potential radionuclides encountered. The energy and yield of the calibration source must also be known prior to field use. A FIDLER that has been calibrated to an americium-241 source (approximately 60 keV) may have a high voltage that is insufficient to amplify plutonium-238 (approximately 23 keV) pulses to a detector threshold.

Data from these measurements are presented as gross counts in the 60 keV energy range. The combination of this information with gross alpha counts of the same sample conducted according to SOP 6.5, Screening Soil Samples for Alpha Emitters, can be used to determine the presence or absence of radionuclides.

Included in this procedure are instructions for 1) initial instrument setup (voltage plateau), 2) daily response standardization using a sealed check source, 3) determination of the instrument's response to terrestrial background radiation, and 4) use of the instrument to scan ground surface areas and samples.

3. PROCEDURE

3.1. Associated Procedures

Information that applies to most field activities is provided in SOPs 1.1-1.10. In addition to the FSP or WP, those SOPs provide guidance that may supplement the information in this procedure. They should be consulted as necessary to obtain specific information about equipment and supplies; sample collection, preservation, packaging, and shipping; decontamination procedures; and documentation requirements. Procedures directly associated with this SOP are listed below.

SOP No.	SOP Title
1.1	General Instructions for Field Personnel
1.6	General Equipment Decontamination
6.5	Screening Soil Samples for Alpha Emitters

3.2. Preparation

3.2.1. Office

A. Review the FSP or WP and SOPs listed in Section 3.1.

B. Coordinate schedules/actions with the installation staff.

C. Assemble the equipment and supplies listed in Appendix 5.1. Ensure the proper operation of all equipment.

D. Obtain appropriate permission for property access.

E. Before the FIDLER can be used in the field, it is necessary to determine the correct operating voltage. This is accomplished by determining the plateau for background radiation and for radiation from a source of Am-241 (60 keV) in which the intensity is several times greater than background radiation levels. Determine the operating voltage once each week.

1. Inspect the FIDLER, the ratemeter/scaler, and interconnecting cable for obvious damage.

2. If no damage is observed, adjust the high voltage to 0 volts before connecting the FIDLER and the ratemeter/scaler.

3. Connect the FIDLER to the ratemeter/scaler in an area that has exhibited background radiation in previous measurements.

4. Turn the ratemeter/scaler selector switch to the high voltage setting and slowly adjust the high voltage to 900 volts (V).

5. Place the FIDLER in a position so that a series of 0.5-min counts can be made at various high-voltage settings.

6. Make three 0.5-min readings and record the voltage, count time, counts, and counts per minute in the columns on the Plateau Curve Record. When these three readings have been completed, adjust the high voltage upward 40 to 50 V. Repeat the three readings. Continue this procedure until three recordings have been made at a high-voltage setting of 1400 V. Do not exceed 1400 V.

7. Place the Am-241 source approximately 1 inch from the beryllium entrance window near the center of the probe and repeat the series of 0.5-min readings for high-voltage settings between 900 and 1400 V.

8. On the Plateau Curve Record, plot the FIDLER response as a function of high voltage. Between 1100 and 1300 V, there is little change in the detector's response. This represents the operating plateau. Set the ratemeter/scaler high voltage at the midpoint of the plateau (typically 1200 V) for field operation. Minor fluctuations in the high voltage caused by environmental conditions or battery drain will have little effect on the count rate. Record this ratemeter/scaler voltage on the Plateau Curve Record form.

3.2.2. Documentation

A. Obtain a logbook from the QA officer.

B. Record results of the equipment check and information concerning the initial setup of the FIDLER in the logbook.

C. Obtain a sufficient number of the appropriate ER Program data collection forms (see INDEX TO SOPs).

D. Consult the ER Program data administrator for a current list of information management codes, location IDs, and sample numbers used in the completion of data forms.

E. Record information concerning the initial setup of the FIDLER on the Plateau Curve Record form (Appendix 5.2). Instructions for completing the form are in Appendix 5.5 (Data Form Completion).

3.2.3. Field

A. Daily Source Check

1. Establish a fixed geometry between the detector and the source so that their relative position is a matter of record and reproducible from one work period to the next.

2. Make five 1-min counts with the Am-241 source in its check position. Record each count in the logbook. Repeat this step twice daily when the instrument is in use or at any new locations.

3. Determine the average and standard deviation of the five 1-min counts. Record these values and three times the standard deviation in the logbook.

The average source count (X) = $\frac{x1+x2+x3+x4+x5}{5}$

The standard deviation of the average source count (SDX) = (X/5)1/2

B. Monitoring the performance of the FIDLER

1. Prepare a control chart at the beginning of the site characterization and use it each day to record the FIDLER's response to the Am-241 source.

2. On a piece of linear graph paper, place consecutive calendar dates on the x-axis. Define a range along the y-axis that includes the average FIDLER source count + 3 standard deviations. Draw three horizontal lines that intersect the y-axis at these three points.

3. Determine the average count rate and plot this value on the control chart for that day. If the average count rate falls within the +3 standard deviations as defined above, the FIDLER may be used for field measurements. If the average count rate is not within this range, corrective action must be taken (see Section 3.2.3.C).

C. Corrective Action

1. Check the ratemeter/scaler calibration due date.

2. Check to see that the ratemeter/scaler high voltage is set at the plateau midpoint.

3. Turn off the ratemeter/scaler and disconnect the cable to the FIDLER. Clean the cable and chassis connectors with ethyl alcohol and let dry.

4. Reconnect the cable, turn on the ratemeter/scaler, and check the voltage setting.

5. Check the source-to-detector distance and make any necessary corrections.

6. Repeat the daily source check procedure. If the FIDLER response is within the range of the average count rate + 3 standard deviations, the unit may be used. If the average count rate is still outside the control boundary, turn off the instrument and use a substitute instrument. Repeated failures will require attention by the manufacturer. The FIDLER is temperature sensitive and constant response will be ensured through the use of a battery-powered "warming jacket" in cold temperatures.

D. Determination of Background

1. In order to provide a statistical basis to determine if samples or locations are contaminated, calculate the mean background and standard deviation.

   a. In a location designated as background (not in the contaminated area) or using five soil samples collected from a background area, perform a series of five 1-minute counts with the FIDLER probe in the same position as it will be for screening samples in locations (see Sections 3.3.1 and 3.3.2).

   b. Determine the mean and standard deviation of the five background counts.

$$\text{Mean} = X = \frac{x1+x2+x3+x4+x5}{5}$$

where

x1, x2, x3, x4, x5 = the background counts

standard deviation = SDX = (X/5)1/2

2. The contamination criterion used for further samples is the mean background plus 3 standard deviations (X + 3SDX). Samples with 1-min counts greater than this criterion should be considered contaminated.

3. Record this number or criterion on the FIDLER Soil Sample Screening Log (Appendix 5.3) or the FIDLER Measurement Data form (Appendix 5.4), depending on the type of screening to be performed.

3.3. Operation

3.3.1 Screening Soil Samples

A. Record the soil sample screening data on the FIDLER Soil Sample Screening Log form (Appendix 5.3) following the instructions in Appendix 5.5, Data Form Completion.

B. Place the soil samples in the petri dishes (fill to the top).

C. The steps for screening samples are described below.

1. Place the soil sample container (petri dish) in the counting shield.

2. Place the FIDLER probe in a counting jig inside the lead shield so that it is positioned above the center of a sample container holder. Adjust the height so that the FIDLER is one inch above the sample container. Close the shield door.

3. Turn the ratemeter/scaler selector switch to preset time and set the time for one min. Push the reset button to start and count.

4. Record the counts and the counting time on the FIDLER Soil Sample Screening Log form.

6. Remove the sample container, store it in sample archive, and repeat with additional samples.

3.3.2. Near-Surface Screening

A. The FIDLER Measurement Data form (Appendix 5.4) is completed as described in Appendix 5.5, Data Form Completion.

B. Determine that the FIDLER system has been checked and is ready for field measurements.

C. Refer to the FSP or WP for the areas to be scanned, the number of people required, time requirements, and special instructions.

D. Subdivide the grid block squares into square (or regular) grid blocks, the total area of which can be scanned in 0.5 or 1-min intervals. Use a calibrated measurement tape.

E. Drainage paths can only be scanned with a FIDLER if the area is free of standing or flowing water. If the area is dry, place grid stakes at regular intervals between the preexisting stakes.

F. Record scan measurements as integral counts over the area to be scanned. Pulses from the FIDLER will be summed for 0.5 min or 1 min. Turn the main selector switch of the ratemeter/scaler to either 0.5 or 1 min (as specified in the FSP or WP).

G. Begin scans at one corner of a grid block and progress in a serpentine pattern over the entire block, ending at the diagonally opposite corner of the block. Push the ratemeter/scaler reset button as the scan begins. With practice, the timed count should end upon reaching the opposite corner. During the scan, the field representative must listen to the audible signal from the meter. Although scanning speed should not be slowed when increased audible signals are heard, note the presence of apparent hot spots when recording the integrated count for the scan.

H. After completing the scan for an individual grid block, record the integrated count in its respective position on the FIDLER Measurement Data form (Appendix 5.4). Place a check mark above the recorded count to signify that anomalous or hot spot areas may exist on the basis of audible signals for that grid block.

I. Compare the location count rate to the contamination criterion (average background and 3 standard deviations). If the count rate is greater, the location is marked Y for further study or characterization.

3.4. Postoperation

3.4.1. Field

A. Ensure that all equipment is accounted for, decontaminated (see SOP 1.6, General Equipment Decontamination), and ready for shipment.

B. If necessary, make sure all survey or sampling locations are properly staked and the location ID is readily visible on the location stake.

C. Ensure that all radiological sources and standards have been stored in a locked area.

3.4.2. Documentation

A. Complete logbook entries, verify the accuracy of entries, and sign/initial all pages.

B. Review data collection forms for completeness.

3.4.3. Office

A. Deliver original forms and logbooks to the document control officer (with copies to the site manager and files) for eventual delivery to the Department of Energy.

B. Inventory Equipment and supplies. Repair or replace all broken or damaged equipment. Replace expendable items. Return equipment to the equipment manager and report incidents of malfunction or damage.

4. SOURCE

Becron. 1985. "Technical Manual, Model: Labtech Scaler/Ratemeter/Analyzer with 2-Channel Option." Bicron Corporation, Newbury, Ohio.

5. APPENDIXES

5.1. Equipment and Supplies Checklist

5.2. Plateau Curve Record

5.3. FIDLER Soil Sample Screening Log Form

5.4. FIDLER Measurement Data Form

5.5. Data Form Completion

APPENDIX 5.1

EQUIPMENT AND SUPPLIES CHECKLIST

_____ FIDLER probe

_____ Ratemeter/scaler with voltage indicator and optional headphones

_____ Connector cable

_____ Lead shield and counting jig (optional)

_____ Plan view (site map) of the area to be surveyed that includes grid system coordinates

_____ Calibrated measurement tape or chain

_____ Am-241 source or the equivalent

_____ Hand-held calculator

_____ FIDLER heat shield, if available

_____ Linear graph paper for the performance control chart

_____ Petri dishes for soil samples

APPENDIX 5.2

PLATEAU CURVE RECORD

PLATEAU CURVE RECORD

PAGE 1 OF ____

FACILITY CODE _____ LOG DATE _____

LOGGER CODE _____ FIELD REP _____

RATEMETER/SCALER: ACCEPTANCE CODE _____

MODEL NO _____ SERIAL NO _____ CALIBRATION DATE _____

WINDOW _____ THRESHOLD _____ BATTERY _____

PROBE:

MODEL NO _____ SERIAL NO _____ HIGH VOLTAGE _____

CHECK SOURCE:

SERIAL NO _____ ISOTOPE _____ ACTIVITY _____

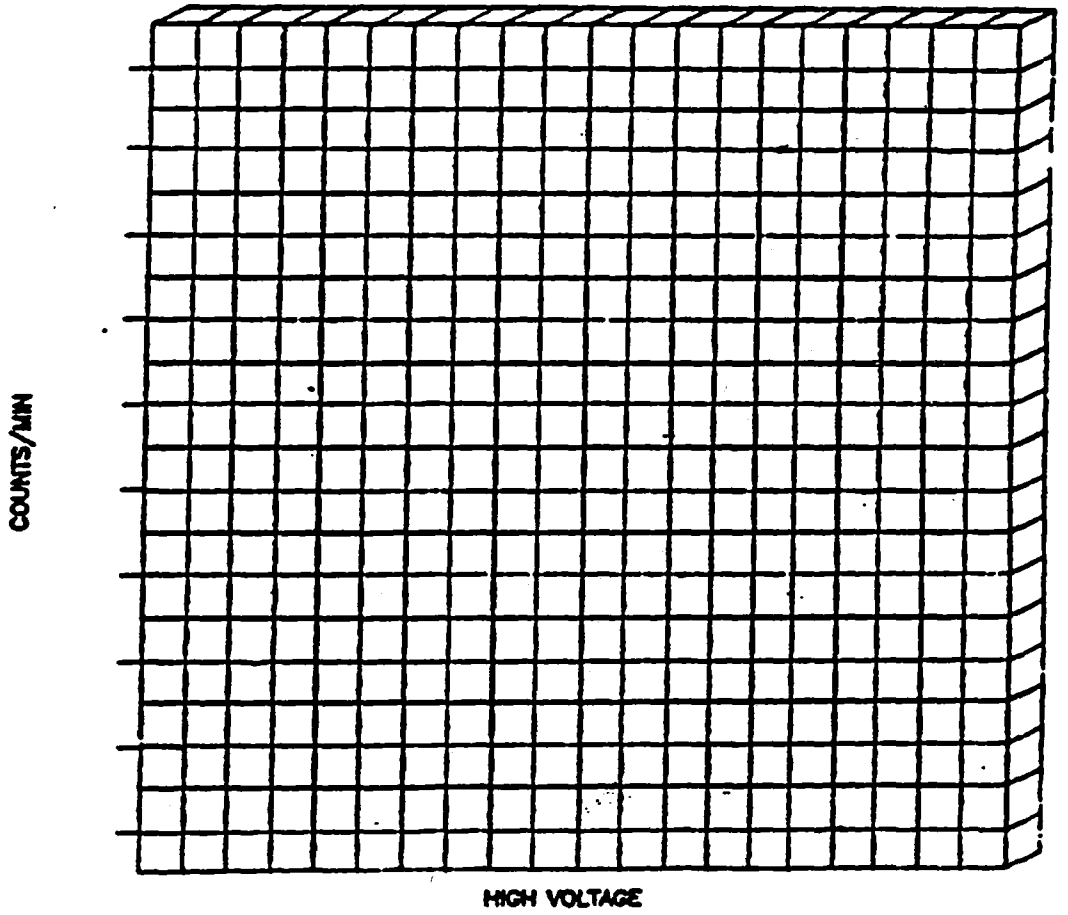

ACCEPTANCE CODES: A–ACCEPTABLE R–RECONNAISSANCE U–UNACCEPTABLE N–NOT DETERMINED

COMPLETE BOLDED DATA FOR ENTRY INTO TIMS

FOR–102 (3/88)

FORM COMPLETED BY/DATE _____ TECHNICAL REVIEWER/DATE _____

APPENDIX 5.3

FIDLER SOIL SAMPLE SCREENING LOG

FIDLER SOIL SAMPLE SCREENING LOG

PAGE 1 OF ____

FACILITY CODE _____ LOG DATE _____

LOGGER CODE _____ FIELD REP _____

RATEMETER/SCALER: ACCEPTANCE CODE _____

MODEL NO _____ SERIAL NO _____ CALIBRATION DATE _____

WINDOW _____ THRESHOLD _____ HIGH VOLTAGE _____ BATTERY _____

NaI PROBE :

MODEL NO _____ SERIAL NO _____ CALIBRATION DATE _____

CHECK SOURCE:

ISOTOPE _____ ACTIVITY _____ DPM SERIAL NO _____

SOURCE CHECK

METER READING _____ COUNTS/_____ MIN = _____ CPM

(WITHIN ± 3 STANDARD DEVIATIONS?[1] _____ (Y/N))

AVERAGE BACKGROUND + 3 STANDARD DEVIATIONS = _____ CPM

COMMENTS _____

LOCATION ID	COORDINATES (FT)		SAMPLE ID	COUNTS (=CPM)	CONTAMINATED YES/NO	ESTIMATED[2] pCi/gram
	NORTH	EAST				

1 SOURCE CHECK WITHIN ± 3 STANDARD DEVIATIONS (YES/NO), FROM THE CONTROL CHART

2 THE pCi/gram RADIONUCLIDE CONCENTRATION CAN BE ESTIMATED ONLY IF FIELD CALIBRATION FACTORS ARE AVAILABLE

ACCEPTANCE CODES: A–ACCEPTABLE R–RECONNAISSANCE U–UNACCEPTABLE N–NOT DETERMINED

COMPLETE BOLDED DATA FOR ENTRY IN TIMS
F38–128 (3/88)

FORM COMPLETED BY/DATE _____ TECHNICAL REVIEWER/DATE _____

APPENDIX 5.4

FIDLER MEASUREMENT DATA FORM

FIDLER MEASUREMENT DATA

PAGE 1 OF ___

FACILITY CODE _____ LOG DATE _____

LOGGER CODE _____ FIELD REP _____

RATEMETER/SCALER: ACCEPTANCE CODE _____

MODEL NO _____ SERIAL NO _____ CALIBRATION DATE _____

WINDOW _____ THRESHOLD _____ VOLTAGE _____ BATTERY _____

NaI PROBE:

MODEL NO _____ SERIAL NO _____ CALIBRATION DATE _____

CHECK SOURCE:

ISOTOPE _____ ACTIVITY _____ DPM SERIAL NO _____

SOURCE CHECK

METER READING _____ COUNTS/_____ MIN = _____ CPM

(WITHIN ± 3 STANDARD DEVIATIONS?[1] _____ (Y/N)

AVERAGE BACKGROUND + 3 STANDARD DEVIATIONS = _____

COMMENTS _____

LOCATION ID	GRID BLOCK SCANNED (FROM N.E. CORNER)		INTEGRATED COUNT (CPM)	AUDIBLE (Y)es or (N)o	CONTAMINATED (Y)es or (N)o
	NORTH	EAST			

1 SOURCE CHECK WITH ± 3 STANDARD DEVIATIONS, (YES/NO) FROM THE CONTROL CHART

ACCEPTANCE CODES: A—ACCEPTABLE R—RECONNAISSANCE U—UNACCEPTABLE N—NOT DETERMINED

COMPLETE BOLDED DATA FOR ENTRY INTO TMS
FMD-120 (3/88)

FORM COMPLETED BY/DATE

TECHNICAL REVIEWER/DATE

APPENDIX 5.5

DATA FORM COMPLETION

Use a pen with black ink that is not water soluble (not a felt-tip pen). Make an entry in each blank. Where there is no data entry, enter UNK for Unknown, NA for Not Applicable, or ND for Not Done. If any procedure was not performed as prescribed, give the reason for the change or omission on the form. To change an entry, draw a single line through it, add the correct information above it, and initial the change.

PLATEAU CURVE RECORD

1. Facility Code. Five-character code abbreviating the facility name where program activity is being conducted. The first three characters indicate the facility, and the remaining two numbers designate the specific site within the facility.

2. Log Date. The date the information recorded on the form was obtained in the format DD-MMM-YY (01-JAN-88).

3. Logger Code. Three-character or four-character code identifying the company responsible for collecting the information recorded on the form.

4. Field Rep. The name of the field representative.

5. Acceptance Code. One-character code assigned by the site manager.

6. Ratemeter/Scaler Model No. The model number of the ratemeter/scaler.

7. Ratemeter/Scaler Serial No. The serial number of the ratemeter/scaler.

8. Ratemeter/Scaler Calibration Date. The date when the ratemeter/scaler was last calibrated.

9. Window. The window will be in the out position unless otherwise specified.

10. Threshold. The adjustment for the lower energy level of the discriminator shown on the calibration sticker.

11. Battery. The battery voltage reading at the beginning of the measurement.

12. Probe Model Number. The model number of the FIDLER probe.

13. Probe Serial Number. The serial number of the FIDLER probe.

14. Probe High Voltage. The final voltage setting that will be applied to the detector, as determined by the Plateau Curve procedure. For the FIDLER, the operating voltage should be about 1200V.

15. Check Source Serial No. The serial number of the radiation check source.

16. Check Source Isotope. The radioactive isotope contained in the check source given as element and mass number, like Am-241.

17. Check Source Activity. The activity of the radioactive check source in disintegrations per minute (dpm). An activity given in microcuries (lCi) can be converted to dpm using 2.22 x 106 dpm = 1 lCi.

18. Counts/Min. The count rate given in counts per minute (cpm).

19. High Voltage. The voltage applied to the detector during the collection of the associated counts.

APPENDIX 5.5, Continued

FIDLER SOIL SAMPLE SCREENING LOG

1. Facility Code. Five-character code abbreviating the facility name where program activity is being conducted. The first three characters indicate the facility, and the remaining two numbers designate the specific site within the facility.

2. Log Date. The date the information recorded on the form was obtained in the format DD-MMM-YY (01-JAN-88).

3. Logger Code. Three-character or four-character code identifying the company responsible for collecting the information recorded on the form.

4. Field Rep. The name of the field representative.

5. Acceptance Code. One-character code assigned by the site manager.

6. Ratemeter/Scaler Model No. The model number of the ratemeter/scaler.

7. Ratemeter/Scaler Serial No. The serial number of the ratemeter/scaler.

8. Ratemeter/Scaler Calibration Date. The date when the ratemeter/scaler was last calibrated.

9. Window. The window will be in the out position unless otherwise specified.

10. Threshold. The adjustment for the lower energy level of the discriminator shown on the calibration sticker.

11. High Voltage. The voltage setting that is applied to the probe as determined by the Plateau Curve procedure.

12. Battery. The battery voltage reading at the beginning of the measurement.

13. NaI Probe Model No. The model number of the FIDLER probe.

14. NaI Probe Serial No. The serial number of the FIDLER probe.

15. NaI Probe Calibration Date. The date when the FIDLER probe was last calibrated.

16. Check Source Isotope. The radioactive isotope that the source contains, given as element and mass number, like Am-241.

17. Check Source Activity. The activity of the check source, measured in disintegrations per minute (dpm). An activity given in microcuries can be converted to dpm using 2.22 x 106 dpm = 1 lCi.

18. Check Source Serial No. The serial number of the check source.

19. Source Check Meter Reading. The results of a count on a check source. The check source data consists of three fields: total counts, counting time in minutes, and count rate in counts per minute (cpm).

20. Within + 3 Standard Deviations (Y/N). This field describes the performance of the FIDLER, from the control chart in 3.2.3.B., Field Preparation.

21. Average Background + 3 Standard Deviations (cpm). This field gives the average background count rate + 3 standard deviations of the average count rate. It is used as a contamination criterion. Count rates greater than this are considered contaminated. Count time equals 1 min.

$$X = \text{Average or Mean Background} = \frac{x1+x2+x3...xn}{N}$$

where

x1, x2, x3 etc = individual background counts

N = the number of counts taken

SDX = standard deviation of the average background = (X/N)1/2

22. Comments. Any additional information.

23. Location ID. Four-character code assigned sequentially to each borehole, test pit, or surface location where physical, chemical, biological, radiological, and other measurements are taken.

24. Coordinates (Ft). The location of the FIDLER measurement on the survey grid in units of feet. The two coordinate fields are in the format north and east.

25. Sample ID. The identifying code or number given to the sample.

26. Counts (=cpm). The number of counts registering on the FIDLER meter during the 1-min counting period.

27. Contaminated (Yes/No). If the counts per 1 min obtained are greater than the average background plus 3 standard deviations, the sample is considered contaminated. Enter Yes or Y if contaminated and No or N if not contaminated.

28. Estimated pCi/gram. If calibration factors are available for the specific site under investigation, the FIDLER cpm can be converted to a pCi/gram concentration. Enter N/A if these factors are not available.

APPENDIX 5.5, Continued

FIDLER MEASUREMENT DATA FORM

1. Facility Code. Five-character code abbreviating the facility name where program activity is being conducted. The first three characters indicate the facility, and the remaining two numbers designate the specific site within the facility.

2. Log Date. The date the information recorded on the form was obtained in the format DD-MMM-YY (01-JAN-88).

3. Logger Code. Three-character or four-character code identifying the company responsible for collecting the information recorded on the form.

4. Field Rep. The name of the field representative.

5. Acceptance Code. One-character code assigned by the site manager.

6. Ratemeter/Scaler Model No. The model number of the ratemeter/scaler.

7. Ratemeter/Scaler Serial No. The serial number of the ratemeter/scaler.

8. Ratemeter/Scaler Calibration Date. The date when the ratemeter/scaler was last calibrated.

9. Window. The window will be in the out position unless otherwise specified.

10. Threshold. The adjustment for the lower energy level of the discriminator shown on the calibration sticker.

11. Voltage. The voltage setting that is applied to the probe, as determined by the Plateau Curve procedure.

12. Battery. The battery voltage reading at the beginning of the measurement.

13. NaI Probe Model No. The model number of the FIDLER probe.

14. NaI Probe Serial No. The serial number of the FIDLER probe.

15. NaI Probe Calibration Date. The date when the FIDLER probe was last calibrated.

16. Check Source Isotope. The radioactive isotope that the source contains, given as element and mass number, like Am-241.

17. Check Source Activity. The activity of the check source, measured in disintegrations per minute (dpm). An activity given in microcuries (lCi) can be converted to dpm using 2.22 x 106 dpm = 1 lCi.

18. Check Source Serial No. The serial number of the check source.

19. Source Check Meter Reading. The results of a count on a check source. Check source data consists of three fields: total counts, count time in minutes, and count rate in cpm.

20. Within + 3 Standard Deviations. This field describes the performance of the FIDLER, from the control chart in Section 3.2.3.B, Field Preparation. Enter Y (yes) or N (no).

21. Average Background + 3 Standard Deviations. This field gives the average background count rate (cpm) + 3 standard deviations of the average. It is used as a contamination criterion; count rates greater than this number indicate contaminated areas.

$$X = \text{Average or Mean Background} = \frac{x1+x2+x3...xn}{N}$$

where

x1, x2, x3, etc. = individual background counts

N = the number of counts taken

SDX = standard deviation of the average background = (X/N)1/2

22. Comments. Any additional information.

23. Location ID. Four-character code assigned sequentially to each borehole, test pit, or surface location where physical, chemical, biological, radiological, and other measurements are taken.

24. Grid Block Scanned (From N.E. Corner). The location of the grid block that was scanned, identified by the survey coordinates of the northeast corner relative to the survey grid in units of feet. There are two fields in the coordinate description: north and east.

25. Integrated Count (cpm). The count rate in counts per minute obtained from the walkover scan of the grid.

26. Audible. If an audible anomaly was noted, enter YES; if no audible anomaly was detected, enter NO.

27. Contaminated. If the count rate recorded is greater than the average background plus 3 standard deviations, the location is considered contaminated (Y). If it is less, it is not considered contaminated (N).

STANDARD OPERATING PROCEDURE 6.11

BETA-GAMMA RADIATION MEASUREMENTS

1. PURPOSE

To provide guidance for determining levels of total surface beta contamination on equipment, vehicles, and personnel that have been in contact with material that was potentially contaminated with beta-emitting radionuclides. To describe the methodology for measuring beta-gamma radiation levels.

2. DISCUSSION

The Field Sampling Plan (FSP) or Work Plan (WP) provides information on the scope of specific operations, related health and safety requirements, and the applicability of this procedure to the activities.

Equipment and vehicles must be monitored for surface contamination before release for unrestricted use from a radiologically controlled area. Levels of surface beta contamination on equipment will be determined and compared to release criteria presented in DOE Order 5400.5. These criteria are based on U.S. Nuclear Regulatory Commission Regulatory Guide 1.86 and presented as either total average, total maximum, or removable. Total average measurements are based on portable instrument surveys for beta contamination over a 1 m^2 area. Total maximum measurements are based on portable instrument surveys for beta contamination over a 100 cm^2 area. Removable contamination is defined as that amount of surface beta activity that may be transferred to a soft, dry filter paper after wiping 100 cm^2 areas of [illegible]rface with moderate pressure. The swipe is then counted in a stationary radiation detector to [illegible]ine removable beta activity. The scope of this procedure, however, is not to include removable [illegible]etermination.

Potential hazards from radionuclides that are beta-gamma emitters (like cesium-137) arise from ingestion or inhalation and external radiation that penetrates critical body organs. Protection requires the measurement and control of internal and external pathways.

Beta and gamma radiations are considered together because many radioactive materials emit both. The techniques for measuring the two are similar. A calibration source should be selected that most closely represents the energies of the radiation field to be measured.

Activity per unit area is reported in units of disintegrations per minute (dpm) over a 100 cm^2 surface area.

All equipment must be decontaminated to levels that are as low as reasonably achievable and below the applicable release criterion called out in DOE Order 5400.5. Personnel must be monitored for contamination before leaving a controlled area and decontaminated to the lowest reasonably achievable levels.

High-voltage plateau curves and National Bureau of Standards (NBS) traceable source calibrations must be performed on the detector semiannually to ensure proper operation. Beta detector counting efficiencies must be determined daily before using the instrument for contamination monitoring. The counting efficiency also must be determined following any adjustments or repairs on the instrument. The counting [illegible]y is used to convert instrument readings to a measure of activity in units of dpm per 100 cm^2.

For general beta-gamma radiation monitoring, the ionization chamber and the Geiger-Müller (GM) counter are the primary instruments. Only the technique using the GM counter will be described here.

Portable GM counters have battery-operated power supplies and amplifiers. The sensitive element is a small Geiger tube contained in a probe. The probe is attached to a ratemeter/scaler that has several different scales, a time-response switch, and an audible output.

The primary beta-emitting radionculdie of concern at the Mound Plant is cesium-137. The surface contamination limits are as follows:

Nuclide	Average	Maximum	Removable
Cesium-137	5,000 dpm β/100 cm^2	15,000 dpm $\beta\gamma$/100 cm^2	1,000 dpm $\beta\gamma$/100 cm^2

Two GM probe configurations are described in this procedure: a pancake probe and an energy-compensated tube. The pancake probe consists of a flat, thin-windowed GM tube in a shielded housing. It measures radiation coming primarily from in front of the thin window and is used for measuring beta-gamma contamination on surfaces. The energy-compensated probe is typically a thick-walled GM tube measuring 4 to 6 inches long that is covered with a material of sufficient thickness to allow consistent measurement over a broad energy range. (The GM tube measures radiation from any direction and absorbed dose rates from beta-gamma radiation fields of energies greater than about 100 kilo-electron volts [keV]). Energies for cesium-137 are below:

E Maximum (KeV)	E Average (KeV)
511.6	156.8
1173.2	415.2

2.1. Limitations

GM counters have several characteristics that can lead to erroneous results unless the user is aware of them.

A. At high radiation levels, the counter will not recover from a count soon enough to measure the next entering particle. This causes a decreased response at higher radiation levels; at extremely high levels, the response may no longer increase with increased radiation. In certain cases, the response may decrease or go to zero at very high levels.

B. At extreme temperatures, the instrument may respond erratically or not at all. Under these conditions, a check source is needed to ensure reliable behavior.

C. The GM tube is delicate and sensitive to damage if dropped or exposed to significant changes in air pressure. If a rattling sound is heard when the user blows air across the probe face, it is likely that the tube has broken. To avoid a common means of tube breakage, do not ship the probe in an unpressurized airplane.

3. PROCEDURE

3.1. Associated Procedures

Information that applies to most field activities is provided in SOPs 1.1-1.10. In addition to the FSP or WP, those SOPs provide guidance that may supplement the information in this procedure. They should

onsulted as necessary to obtain specific information about equipment and supplies; sample collection, ervation, packaging, and shipping; decontamination procedures; and documentation requirements. edures directly associated with this SOP are listed below.

SOP No.	Sop Title
1.1	General Instructions for Field Personnel
1.6	General Equipment Decontamination
6.11	Beta-Gamma Radiation Measurements Using a Geiger-Müller Detector

3.2. Preparation

3.2.1. Office

A. Review the FSP or WP and SOPs listed in Section 3.1.

B. Coordinate schedules/actions with the installation staff.

C. Obtain appropriate permission for property access.

D. Assemble the equipment and supplies listed in Appendix 5.1. Ensure the current calibration of the probe and the ratemeter/scaler.

Documentation

A. Obtain a logbook from the QA officer.

B. Record results of the equipment check and calibration in the logbook.

C. Obtain a sufficient number of the appropriate ER Program data collection forms (see INDEX TO SOPs).

D. Consult the ER Program data administrator for a current list of information management codes, location IDs, and sample numbers used in the completion of data forms.

3.2.3. Field

A. Take five, 1-min background counts to ensure that the probe is not contaminated and to determine contamination criteria. If the count rate is greater than normal, check for surface contamination and be sure that the high-voltage setting is as marked on the probe. Calculate the mean background, the standard deviation of the mean, and three times the standard deviation as shown below.

$$X = (x1 + x2 + x3...+xn) / N$$

where

X = the mean

N = number of samples

x1+x2+x3...xn = summation of count results for all background counts measured

SDX = standard deviation of the mean = $(X/N)^{1/2}$

3SDX = $3(X/N)^{1/2}$ = contamination criterion

B. Take a 1-min count using a check source (like Tc-99) to check instrument response. The efficiency of the Ludlum 44-9 is typically about 15%.

Efficiency = net counts per minute/source disintegrations per minute

3.3. Operation

3.3.1. Obtaining Measurements

A. Record beta-gamma measurements with the GM detector on the Beta-Gamma Measurements form (Appendix 5.2). Complete the form according to Appendix 5.3, Data Form Completion.

B. Place the GM probe at a small distance (one-half inch) from the location to be monitored.

NOTE: The thin window of the probe is easily punctured. Care should be taken to protect the surface from sharp objects.

C. Take a count of predetermined duration (0.5 min to 2 min) and record the count rate.

D. If using an energy-compensated GM, multiply the count rate by the calibration factor and determine the beta-gamma dose rate in millirads/hour (mrad/hr).

E. Compare the counts to the contamination criteria. The FSP or WP may require further characterization of samples or locations exceeding these criteria. Samples or locations with counts greater than 3SDX are considered contaminated.

3.4. Postoperation

3.4.1. Field

A. Turn all switches to the off position.

B. Ensure that all equipment is accounted for, decontaminated (see SOP 1.6, General Equipment Decontamination), and ready for shipment.

C. If necessary, make sure all survey or sampling locations are properly staked and the location ID is readily visible on the location stake.

3.4.2. Documentation

A. Record any uncompleted work (like additional monitoring) in the logbook.

B. Complete logbook entries, verify the accuracy of entries, and sign/initial all pages.

C. Review data collection forms for completeness.

3.4.3. Office

A. Deliver original forms and logbooks to the document control officer (with copies to the site manager and files) for eventual delivery to the Department of Energy.

B. Ensure that all radiological sources and standards have been stored in a locked area.

C. Inventory equipment and supplies. Repair or replace all broken or damaged items. Replace expendable items. Return equipment to the equipment manager and report incidents of malfunctions or damage.

4. SOURCE

Healy, J. W. 1970. "Los Alamos Handbook of Radiation Monitoring." Los Alamos Scientific Laboratory report LA-4400. Los Alamos, New Mexico.

5. APPENDIXES

5.1. Equipment and Supplies Checklist

5.2. Beta-Gamma Measurements Form

5.3. Data Form Completion

APPENDIX 5.1

EQUIPMENT AND SUPPLIES CHECKLIST

_____ GM pancake probe (Ludlum 44-9 or the equivalent)

_____ Ratemeter/scaler (Ludlum 2220 or the equivalent)

_____ Energy-compensated GM (Ludlum 44-38 or the equivalent)

_____ Cable

_____ Beta source (TC-99 or Sr-90)

APPENDIX 5.2

BETA-GAMMA MEASUREMENTS FORM

BETA–GAMMA MEASUREMENTS

PAGE 1 OF _____

FACILITY CODE _____ LOG DATE _____

LOGGER CODE _____ FIELD REP _____

RATEMETER/SCALER: ACCEPTANCE CODE _____

MODEL NO _____ SERIAL NO _____ CALIBRATION DATE _____

VOLTAGE _____ BATTERY _____

GM PROBE:

MODEL NO _____ SERIAL NO _____ CALIBRATION DATE _____

AVERAGE BACKGROUND CPM _____ + 3 STANDARD DEVIATIONS = $3(\frac{\bar{X}}{N})^{1/2}$ = _____

SOURCE CHECK DATE/TIME _____

WINDOW OPEN (O) OR WINDOW CLOSED (C) _____

CALIBRATION FACTOR _____ (mrad/hr)/CPM

COMMENTS _____

LOC ID	COORDINATES (FT)		SAMPLE ID OR ITEM DESCRIPTION	COUNTS	COUNT TIME	CPM	mrad/hr	ABOVE CRITERIA (YES/NO)
	NORTH	EAST						

ACCEPTANCE CODES: A–ACCEPTABLE R–RECONNAISSANCE U–UNACCEPTABLE N–NOT DETERMINED

COMPLETE BOLDED DATA FOR ENTRY INTO TMS
BOM–121 (3/86)

FORM COMPLETED BY/DATE _____ TECHNICAL REVIEWER/DATE _____

APPENDIX 5.3

DATA FORM COMPLETION

Use a pen with black ink that is not water soluble (not a felt-tip pen). Make an entry in each blank. Where there is no data entry, enter UNK for Unknown, NA for Not Applicable, or ND for Not Done. If any procedure was not performed as prescribed, give the reason for the change or omission on the form. To change an entry, draw a single line through it, add the correct information above it, and initial the change.

BETA-GAMMA MEASUREMENTS FORM

1. Facility Code. Five-character code abbreviating the facility name where program activity is being conducted. The first three characters indicate the facility, and the remaining two numbers designate the specific site within the facility.

2. Log Date. The date that information recorded on the form was obtained in the format DD-MMM-YY (01-JAN-88).

3. Logger Code. Three-character or four-character code identifying the company responsible for collecting the information recorded on the form.

4. Field Rep. The name of the field representative.

5. Acceptance Code. One-character code assigned by the site manager.

6. Ratemeter/Scaler Model No. The model number of the ratemeter/scaler.

7. Ratemeter/Scaler Serial No. The serial number of the ratemeter/scaler.

8. Ratemeter/Scaler Calibration Date. The date when the ratemeter/scaler was last calibrated.

9. Voltage. The voltage that is applied to the detector. For a pancake Geiger-Müller (GM), this is usually about 900 volts.

10. Battery. The battery voltage reading at the beginning of the measurement.

11. GM Probe Model No. The model number of the GM probe.

12. GM Probe Serial No. The serial number of the GM probe.

13. GM Probe Calibration Date. The date when the GM probe was last calibrated.

14. Average Background cpm + 3 Standard Deviations. This field is used to establish contamination criteria for use in sample selection for analyses or general screening.

$$\text{Average background} = X = (x1+x2+x3+...Xn) / N$$

where

x1,x2, x3...xn = a summation of all the background counts obtained

N = the total number of background counts taken

3 standard deviations = 3SDX = 3(X/N)1/2

15. Source Check Date/Time. The date and time the system was last source checked.

16. Window Open (O) or Window Closed (C). When using an energy-compensated GM, the window can be open or closed as specified in the site Health and Safety Plan. Enter N/A if using a pancake GM.

17. Calibration Factor. The calibration factor in millirads per hour (mrad/hr)/counts per minute (cpm) used to convert cpm to mrad/hr when using an energy-compensated GM. Enter N/A if using a pancake GM.

18. Comments. Any additional information.

19. Location ID. Four-character code assigned sequentially to each borehole, test pit, or surface location where physical, chemical, biological, radiological, and other measurements are taken.

20. Coordinates (Ft). The coordinates of the measurement location in feet. The format is north and east.

21. Sample ID or Item Description. The sample identification number or description of the item being counted. Enter N/A if not applicable.

22. Counts. The counts obtained over the counting period. Enter N/A if using a ratemeter.

23. Count Time. The time in minutes over which the counts were collected. Enter N/A if using a ratemeter.

24. CPM. The counts per minute obtained by dividing the total counts by the counting time or by recording the ratemeter cpm reading.

25. mrad/hr. The dose rate obtained using a calibration factor applied to an energy-compensated GM.

26. Above Criteria (Yes/No). If the counts obtained are greater than the average background + 3 standard deviations, the item or location is considered contaminated (yes). If the counts are below this criterion, the item or location is not considered contaminated (no).

STANDARD OPERATING PROCEDURE 6.15

MEASUREMENT OF GAMMA-RAY FIELDS USING A SODIUM IODIDE (NaI) DETECTOR

1. PURPOSE

To describe the procedure for making count-rate measurements of a gamma-ray field with a sodium iodide (NaI) detector.

2. DISCUSSION

The Field Sampling Plan (FSP) or Work Plan (WP) provides information on the scope of a given operation, related health and safety requirements, and the applicability of this procedure to the activities.

Gamma radiation field strengths may be used to indicate contamination by gamma emitters. Elevated count-rate data must be carefully interpreted because uncontaminated areas can demonstrate high readings if they are next to an area contaminated with gamma emitters.

Using this procedure, it is possible to identify area or point sources of gamma-emitting radionuclides and determine whether an observed reading is due to shine from an adjacent source. These techniques are outlined in Sections 3.3.2 and 3.3.3. It should be noted that these are considered gross screening techniques only, rather than determinate measures.

Count-rate data from a sodium iodide (NaI) detector can be converted to exposure rate (μR/hr) measurements if the detector has been correlated with a calibrated, pressurized ionization chamber (PIC). See SOP 6.9, Correlation of a Sodium Iodide Detector to the Pressurized Ionization Chamber.

3. PROCEDURE

3.1. Associated Procedures

Information that applies to most field activities is provided in SOPs 1.1-1.10. In addition to the FSP or WP, those SOPs provide guidance that may supplement the information in this procedure. They should be consulted as necessary to obtain specific information about equipment and supplies; sample collection, preservation, packaging, and shipping; decontamination procedures; and documentation requirements. Procedures directly associated with this SOP are listed below.

SOP No.	SOP Title
1.1	General Instructions for Field Personnel
1.6	General Equipment Decontamination

6.9 Exposure Rate Measurements Using a Pressurized Ionization Chamber

6.10 Correlation of a Sodium Iodide Detector to the Pressurized Ionization Chamber

3.2. Preparation

3.2.1. Office

A. Review the FSP or WP and SOPS listed in Section 3.1.

B. Coordinate schedules/actions with the installation staff.

C. Obtain appropriate permission for property access.

D. Assemble the equipment and supplies listed in Appendix 5.1. Ensure the proper operation of all field equipment. Ensure current calibration of the probe and the ratemeter/scaler.

E. Obtain PIC correlation data if these have been determined for the surveyed area.

3.2.2. Documentation

A. Obtain a logbook from the QA officer.

B. Record results of the equipment check and calibration in the logbook.

C. Obtain a sufficient number of the appropriate ER Program data collection forms (see INDEX TO SOPs).

D. Consult the ER Program data administrator for a current list of codes and location IDs used in the completion of data forms.

3.2.3. Field

A. Visually inspect the equipment, including the connector cable, for breakage.

B. Check the battery charge. If necessary, replace the batteries.

C. Set the threshold to the value given on the calibration sticker (usually 100 volts).

D. Set the detector voltage to the value given on the calibration sticker. The operating voltage for an NaI probe is usually 700 to 1000 volts.

E. Set the window to the out position (gross mode).

F. Note the response of the detector to the check source.

3.3. Operation

3.3.1. Count-Rate Measurements

A. Record the gamma count-rate measurements taken with the NaI detector on the Gamma Ray Count-Rate Data form (Appendix 5.2). Instructions to complete the form are in Appendix 5.4.

B. Turn on the instrument.

C. Hold the detector first at a height of 3 ft above the ground (waist height), then at the ground surface if an above-background level is noted. Allow the ratemeter/scaler to integrate the count rate for at least 10 sec.

D. Record the results on the Gamma Ray Count-Rate Data form.

3.3.2. Recognizing Area and Point Sources

A. Walk slowly in the area of interest, holding the NaI detector waist high and note the count rate. Determine the location of the highest observed gamma count rate (sometimes called the HOG).

B. At the HOG, compare the count rate obtained at waist height with the count rate obtained at ground level. If both count rates are above background and increase rapidly as the detector is held closer to the ground surface, the anomalous area may be an isolated hot spot with an area of only a few square feet. If the HOG is broad in extent and there is no difference in the count rate at ground level and waist height, the anomalous area probably is not highly localized.

3.3.3. Recognizing Gamma Shine from Nearby Anomalies

Walk slowly in the area of interest, holding the NaI detector at waist height. If the count rate increases while leaving the area of interest, some of the gamma count rate observed at the area of interest may be due to shine from an adjacent gamma source. If the count rate increases as the height of the detector above the ground increases, some of the gamma count rate at the area of interest may be due to shine.

3.4. Postoperation

3.4.1. Field

A. Turn all switches to the off position.

B. Ensure that all equipment is accounted for, decontaminated (see SOP 1.6, General Equipment Decontamination), and ready for shipment.

C. If necessary, make sure all survey or sampling locations are properly staked and the location ID is readily visible on the location stake.

3.4.2. Documentation

A. Record any uncompleted work (like additional monitoring) in the logbook.

B. Complete logbook entries, verify the accuracy of entries, and sign/initial all pages.

C. Review data collection forms for completeness.

3.4.3. Office

A. Deliver original forms and logbooks to the document control officer (with copies to the site manager and files) for eventual delivery to the Department of Energy.

B. Inventory equipment and supplies. Repair or replace all broken or damaged equipment. Replace expendable items. Return all field equipment to the equipment manager and identify any operational problems from previous use.

C. Ensure that all radiological sources and standards have been stored in a locked area.

4. SOURCE

Ludlum. 1982. "Instruction Manual Model 2220 Portable Scaler Ratemeter." Ludlum Measurements, Inc. April 1982. Sweetwater, Texas.

5. APPENDIXES

5.1. Equipment and Supplies Checklist

5.2. Gamma Ray Count-Rate Data Form

5.3. Data Form Completion

17. Probe Serial No. The serial number of the NaI probe.

18. Probe Calibration Date. The date when the NaI probe was last calibrated.

19. Source Check Date/Time. The date and time that the detector response to a gamma source was last checked.

20. Location ID. Four-character code assigned sequentially to each borehole, test pit, or surface location where physical, chemical, biological, radiological, and other measurements are taken.

21. Coordinates (Ft). The coordinates of the measurement location in feet. The format is north and east.

22. Meter Reading (CPM). The count rate in counts per minute. There are two fields. One field is for readings at ground level, and the other is for readings at 3 ft above the ground.

23. Exposure Rate. The exposure rate in microR/hour (μR/hr). In order to make entries into these fields, it is necessary to determine the count rate to exposure rate conversion factor for the area of the site under investigation. A calibrated microR meter can also be used for entries in these fields. One field is for readings at ground level, and the other is for readings at 3 ft above the ground.

TITLE: COLD STRESS

1. PURPOSE

To establish the minimum requirements for ICF Kaiser Engineers (ICF KE) to perform activities associated with cold stress conditions.

2. SCOPE

This procedure applies in its entirety to all ICF KE projects unless otherwise indicated within the Project Management Plan or other pertinent planning documents.

3. RESPONSIBILITIES

3.1 The Project Manager has overall responsibility for establishing and ensuring compliance with this procedure.

3.2 The Field Safety and Health Staff is responsible for implementing and/or monitoring activities associated with this procedure.

3.3 It is the responsibility of all managers and supervisory personnel to enforce this procedure and of each employee to follow it.

4. DEFINITIONS

Not applicable.

5. GENERAL REQUIREMENTS

5.1 Most cold-related worker fatalities have resulted from failure to escape low environmental air temperatures, or from immersion in low temperature water. The single most important aspect of life-threatening hypothermia is a fall in the deep core temperature of the body.

5.2 Hypothermia occurs when a person's body loses heat faster than it can be produced. The body's "normal" deep body temperature is 99.6° Fahrenheit. If your body temperature drops to 95° Fahrenheit, uncontrollable shivers occurs. If cooling continues, these other symptoms may occur.

- Vague, slow, slurred speech
- Forgetfulness, memory lapses
- Inability to use hands
- Frequent stumbling
- Drowsiness
- Exhaustion, collapse
- Unconsciousness

- Death

5.3 Hypothermia can occur at temperatures above freezing. Cold, wet, windy conditions make prime hypothermia weather.

5.4 Hypothermia impairs your judgement. You may not be able to make good decisions about your situation.

5.5 Frostbite is the freezing of some part of the body. Fingers, toes, and even whole arms and legs can be lost as a result of frostbite.

5.6 Pain in the hands and feet is felt only when temperature of the tissue is changing very rapidly. There may be no pain with gradual freezing.

5.7 Loss of the sensations of touch, pressure, and pain may occur without awareness of any numbness or other sensation. Therefore, it is important to test these sensations often and to wear clothing that is loose and does not restrict the flow of the blood to the limbs.

5.8 Exposed parts of the body should be inspected routinely. This is done best by a partner. Just before freezing, the skin - especially the face with its many blood vessels - becomes bright red. Then small patches of white appear, as freezing actually occurs.

5.9 The skin also becomes less elastic. This is best noted in the finger pads, which remain pitted when touched or squeezed. Any further cooling will surely result in frostbite.

5.10 Serious freezing is most common in the feet because of less awareness of them, poor circulation and sensation, and inadequate foot gear. Hands are next in order of serious injury. Exposed head parts are less likely to become frostbitten than feet because they are conditioned to exposure and have a better blood supply.

5.11 Next to the extent of freezing, inadequate or improper treatment of a frozen part is the most common cause of serious loss of tissue. If you suspect you or a co-worker has experienced frostbite, seek medical attention immediately.

6. IMPLEMENTATION

6.1 Workers shall be provided with warm clothing, such as mittens, heavy socks, etc., when the air temperature is below 40-45° Fahrenheit (F). Chemical protective clothing may be used to protect the employee from the cold.

6.2 When the air temperature is below 30-40°F (depending upon employee comfort), clothing for warmth, in addition to chemical protective clothing, shall be provided. This will include insulated suits, such as whole-body thermal underwear; wool socks or polypropylene socks to keep moisture off the feet if there is a potential of work activity which would cause sweating; insulated gloves (when air temperatures are extremely low [less

than 5-10°F, gloves with reflective surfaces, which reflect body heat back to the hand, should be used); boots; and insulated head cover, such as knit caps (ski caps).

6.3 At air temperature below 35°F, the following work practices must be followed:

6.3.1 If the clothing of an employee might become wet on a job site, the outer layer of the clothing must be impermeable to water.

6.3.2 If an employee's underclothing (socks, mittens, etc.) becomes wet in any way, the employee must change into dry clothing immediately. If the clothing becomes wet from sweating, the employee may finish the task which caused the sweating before changing into dry clothing.

6.3.3 Employees must be provided a warm area (65°F or above) to change from work clothing into street clothing.

6.3.4 Employees must be provided a warm break area (60°F or above).

6.3.5 If appropriate, space heaters may be provided in the work area to warm the hands, feet, etc. Necessary fire and electrical safety practices shall be observed when using space heaters. Space heaters shall be shut off when the site is not occupied.

6.3.6 Hot liquids, such as soups, warm, sweet drinks, etc. shall be provided in the break area. The intake of caffeinated beverages shall be limited because of the attendant diuretic and circulatory effects.

6.3.7 The buddy system shall be practiced at all times. Any employee observed with severe shivering shall leave the cold area immediately.

6.3.8 Employees should layer their clothing, i.e., wear thinner, lighter clothing next to the body with heavier clothing layered outside the inner clothing.

6.3.9 Avoid overdressing when going into warm areas or when performing activities which are strenuous. This could lead to heat stress problem.

6.3.10 Auxiliary heated versions of handwear, footwear, etc., can be used in lieu of mittens, insulated socks, etc. if extremely cold conditions exist, and if compatible with hazards in the work area.

6.3.11 Employees handling evaporative liquids (gasoline, hexane, alcohol, etc.) shall take special precautions to avoid soaking of clothing or gloves with the liquids because of the added danger of cold injury due to evaporative cooling.

6.3.12 Work shall be arranged in such a way that sitting still or standing for long periods is minimized.

6.4 All employees who may work in cold areas shall be trained in the following subjects in accordance with procedure S&H-9.

- Proper first aid treatment
- Proper clothing practices
- Proper eating and drinking habits
- Recognition of impending adverse health effects
- Safe work practices

6.5 Clothing for warmth, which is worn under chemical protective clothing, can be laundered in normal fashion, without the wash water being collected as contaminated water so long as the chemical protective clothing remains intact.

6.6 If there is a rip or tear in the chemical protective clothing in a contaminated area, the clothing for warmth must be handled as potentially contaminated, and the water in which it was washed must be collected as potentially contaminated water. More rigorous steps may be required if materials handled are extremely toxic (dioxin, etc.).

7. RECORDS

Not applicable.

TITLE: CONFINED SPACES

1. PURPOSE

To establish the minimum requirements for ICF Kaiser Engineers (ICF KE) to perform activities associated with confined space entry; and to serve as the foundation of the project-specific mandatory written permit-required confined space entry program.

2. SCOPE

This procedure applies in its entirety to all ICF KE projects unless otherwise indicated within the Project Management Plan or other pertinent planning documents.

3. RESPONSIBILITIES

3.1 The Project Manager has overall responsibility for establishing and ensuring compliance with this procedure.

3.2 The Field Safety and Health Staff is responsible for implementing and/or monitoring activities associated with this procedure.

3.3 It is the responsibility of all managers and supervisory personnel to enforce this procedure and of each employee to follow it.

4. DEFINITIONS

4.1 **Acceptable entry conditions** means the conditions that must exist in a permit space to allow entry and to ensure that employees involved with a permit-required confined space entry can safely enter into and work within the space.

4.2 **Attendant** means an individual stationed outside one or more permit spaces who monitors the authorized entrants and who performs all attendant's duties assigned in the employer's permit space program.

4.3 **Authorized entrant** means an employee who is authorized by the employer to enter a permit space.

4.4 **Confined space** means a space that: (1) Is large enough and so configured that an employee can bodily enter and perform assigned work; and (2) Has limited or restricted means for entry or exit (for example, tanks, vessels, silos, storage bins, hoppers, vaults, and pits are spaces that may have limited means of entry.); and (3) Is not designed for continuous employee occupancy.

4.5 **Entry** means the action by which a person passes through an opening into a permit-required confined space. Entry includes ensuing work activities in that space and is considered to have occurred as soon as any part of the entrant's body breaks the plane of an opening into the space.

4.6 **Entry permit (permit)** means the written or printed document that is provided by the employer to allow and control entry into a permit space and that contains the information specified in section 8.1 of this procedure.

4.7 **Entry supervisor** means the person (such as the employer, foreman, or crew chief) responsible for determining if acceptable entry conditions are present at a permit space where entry is planned, for authorizing entry and overseeing entry operations, and for terminating entry as required by this section. *NOTE: An entry supervisor also may serve as an attendant or as an authorized entrant, as long as that person is trained and equipped as required by this section for each role he or she fills. Also, the duties of entry supervisor may be passed from one individual to another during the course of an entry operation.*

4.8 **Hazardous atmosphere** means an atmosphere that may expose employees to the risk of death, incapacitation, impairment of ability to self-rescue (that is, escape unaided from a permit space), injury, or acute illness from one or more of the following causes:

(1) Flammable gas, vapor, or mist in excess of 10 percent of its lower flammable limit (LFL); (2) Airborne combustible dust at a concentration that meets or exceeds its LFL; *NOTE: This concentration may be approximated as a condition in which the dust obscures vision at a distance of 5 feet (1.52 m) or less.* (3) Atmospheric oxygen concentration below 19.5 percent or above 23.5 percent; (4) Atmospheric concentration of any substance for which a dose or a permissible exposure limit is published in Subpart G, Occupational Health and Environmental Control, or in Subpart Z, Toxic and Hazardous Substances, of 29 CFR 1910, and which could result in employee exposure in excess of its dose or permissible exposure limit; *NOTE: An atmospheric concentration of any substance that is not capable of causing death, incapacitation, impairment of ability to self-rescue, injury, or acute illness due to its health effects is not covered by this provision.* (5) Any other atmospheric condition that is immediately dangerous to life or health. *NOTE: For air contaminants for which OSHA has not determined a dose or permissible exposure limit, other sources of information, such as Material Safety Data Sheets that comply with the Hazard Communication Standard, 29 CFR 1910.1200, published information, and internal documents can provide guidance in establishing acceptable atmospheric conditions.*

4.9 Immediately dangerous to life or health (IDLH) means any condition that poses an immediate or delayed threat to life or that would cause irreversible adverse health effects or that would interfere with an individual's ability to escape unaided from a permit space. *NOTE: Some materials -- hydrogen fluoride gas*

and cadmium vapor, for example -- may produce immediate transient effects that, even if severe, may pass without medical attention, but are followed by sudden, possibly fatal collapse 12-72 hours after exposure. The victim "feels normal" from recovery from transient effects until collapse. Such materials in hazardous quantities are considered to be "immediately" dangerous to life or health.

4.10 **Inerting** means the displacement of the atmosphere in a permit space by a noncombustible gas (such as nitrogen) to such an extent that the resulting atmosphere is noncombustible. *NOTE: this procedure produces an IDLH oxygen-deficient atmosphere.*

4.11 **Isolation** means the process by which a permit space is removed from service and completely protected against the release of energy and material into the space by such means as: blanking or blinding; misaligning or removing sections of lines, pipes, or ducts; a double block and bleed system; lockout or tagout of all sources of energy; or blocking or disconnecting all mechanical linkages.

4.12 **Non-permit confined space** means a confined space that does not contain or, with respect to atmospheric hazards, have the potential to contain any hazard capable of causing death or serious physical harm.

4.13 **Oxygen deficient atmosphere** means an atmosphere containing less than 19.5 percent oxygen by volume.

4.14 **Oxygen enriched atmosphere** means an atmosphere containing more than 23.5 percent oxygen by volume.

4.15 **Permit-required confined space (permit space)** means a confined space that has one or more of the following characteristics: (1) Contains or has a potential to contain a hazardous atmosphere; (2) Contains a material that has the potential for engulfing an entrant; (3) Has an internal configuration such that an entrant could be trapped or asphyxiated by inwardly converging walls or by a floor which slopes downward and tapers to a smaller cross-section; or (4) Contains any other recognized serious safety or health hazard.

4.16 **Prohibited condition** means any condition in a permit space that is not allowed by the permit during the period when entry is authorized.

4.17 **Rescue service** means the personnel designated to rescue employees from permit spaces.

4.18 **Retrieval system** means the equipment (including a retrieval line, chest or full-body harness, wristlets, if appropriate, and a lifting device or anchor) used for non-entry rescue of persons from permit spaces.

4.19 **Testing** means the process by which the hazards that may confront entrants of a permit space are identified and evaluated. Testing includes specifying the tests that are to be performed in the permit space. *NOTE: Testing enables employers both to devise and implement adequate control measures for the protection of authorized entrants and to determine if acceptable entry conditions are present immediately prior to, and during, entry.*

5. GENERAL REQUIREMENTS

5.1 The project manager shall have a competent person evaluate the workplace to determine if any spaces are permit-required confined spaces. *NOTE: Proper application of the decision flow chart in Attachment A would facilitate compliance with this requirement.*

5.2 If the workplace contains permit spaces, the project manager shall inform exposed employees, and subcontractors if applicable, by posting danger signs or by any other equally effective means, of the existence and location of and the danger posed by the permit spaces. *NOTE: A sign reading DANGER -- PERMIT-REQUIRED CONFINED SPACE, DO NOT ENTER or using other similar language would satisfy the requirement for a sign.*

5.3 If permit spaces exist in the workplace, and employees will <u>not</u> be permitted to enter permit spaces, the project manager shall take effective measures to prevent employee entry into permit spaces.

5.4 If non-permit spaces are modified, or experience any change that causes an increased hazard to entrants, the project manager shall reevaluate that space and if necessary reclassify it as a permit-required confined space.

5.5 If any subcontract employee is to enter a permit space, prior to the initial entry, the project manager shall: (1) inform the subcontract employer that the workplace contains permit spaces, and that entry must comply with 29 CFR 1910.146; (2) inform the subcontract employer of the elements, including known hazards and experiences from any previous entries into the space, that classify the space as a permit space; (3) inform the subcontract employer of any controls or procedures implemented to protect employees near the subcontractor's work area; (4) coordinate entry operations among client, contractor and subcontractor personnel when necessary; and (5) debrief the subcontract employer at the conclusion of entry operations regarding the permit space entry program and any hazards or problems encountered during the entry operations.

6. IMPLEMENTATION

6.1 **Non-Permit Confined Spaces** Entry into non-permit confined spaces will be subject to the following controls:

- The project manager (or designee) and project safety officer shall be informed in advance of the planned entry.

- The entry shall be coordinated with any work activities near the non-permit space so that hazardous conditions will not be created in or around the space.

- The buddy system will be used for all entries.

- Entrants will immediately withdraw upon recognition of any hazardous condition.

- The project manager and project safety officer will be advised of any unanticipated incidents related to the non-permit space entry.

6.2 **Permit-Required Confined Spaces** Entry into permit-required confined spaces will be subject to the following controls:

6.2.1 Unauthorized entries shall be prohibited, and measures implemented to prevent such entries.

6.2.2 The project manager shall develop additional written program controls which will specifically address the permit spaces and entries unique to the individual project scope of work.

6.2.3 Hazards shall be identified and evaluated prior to entry. Hazards to be addressed include:

- Chemical exposure (via inhalation, ingestion, or dermal absorption) from the contents or residues of previous contents of the space, from chemicals introduced into the space as part of the entry operation, and from chemicals used near the space;

- Oxygen deficiency or enrichment;

- Discharge of steam, high-pressure air, water or oil into the confined space, or against personnel working outside.

- Structural failure of the space walls, roof, roof support members, swing line cables or other structural members.

- Tools, debris, or other objects dropping from overhead.

- Falls through or from the roof, or from scaffolds, stairs or ladders.

- Tripping over hoses, pipes, tools, or equipment.

- Slipping on wet, oily surfaces or colliding with objects in inadequately lighted interiors.

- Insufficient or faulty personal protective equipment.

- Insufficient or faulty operations equipment and tools.

- Noise in excess of acceptable levels.

- Temperature extremes which may require additional protection or shorter work periods.

6.2.4 The project manager shall, as part of the written material under 6.2.2 above, develop procedures and practices to ensure safe conduct of entry operations. The following points at least shall be fully addressed:

- acceptable entry conditions shall be specified (both chemical and physical conditions shall be addressed, and conditions which could arise as a result of operations performed outside the space shall be considered).

- procedures to fully isolate the space (this may not be feasible in sewers). Isolation of a space shall include the following steps as applicable:

  - Depressurize the confined space.

  - Prevent accidental introduction into the confined space of hazardous materials through interconnecting equipment such as piping, ducts, vents, drains, or other means.

  - De-energize, lockout, and tagout machinery, mixers, agitators, or other equipment containing moving parts that are in a confined space.

  - Removing a valve, spool piece, or expansion joint in piping to, and as close as possible to, the confined space, and blanking or capping the open end of the pipe leading to the confined space.

  - Inserting a suitable full-pressure blank in piping between the flanges nearest to the confined space.

  - Closing, locking, and tagging at least two valves in the piping leading to the confined space, and locking or tagging open to atmosphere a drain valve between the two closed valves, which shall be checked to ensure that it is not plugged.

- In all cases, blanks or caps shall be of a material that is compatible with the liquid, vapor, or gas with which they are in contact.
- The material shall also have sufficient strength to withstand the maximum operating pressure, including surges, which can be built up in the piping.
- In addition, all electrical and mechanical devices within or attached to the confined space shall be disconnected, or locked, and tagged to prevent accidental movement or energizing of such systems.
- All employees who will be working in the confined space shall be informed of the isolation devices in use at the jobsite during safety meetings.

- Purge, inert, flush, or ventilate the space as necessary to eliminate or control atmospheric hazards.
- Provide barriers to protect entrants from external hazards
- Verify that conditions in the permit space are acceptable throughout the duration of the entry.

6.2.5 The following equipment shall be provided, maintained and utilized whenever necessary for safe entry operations:

- Testing and monitoring equipment needed to perform specified atmospheric testing.
- Ventilating equipment needed to create and maintain acceptable entry conditions. Ventilation of permit spaces shall be performed as follows:
  - Prior to ventilating a confined space, a qualified person shall take positive steps to ensure that no pyrophoric materials that will ignite in the presence of air are present in the confined space.
  - All confined spaces shall be mechanically ventilated to remove and/or prevent the accumulation of hazardous atmospheres.
  - Only air or steam driven air movers shall be used to ventilate confined spaces. Use of electric powered ventilators is strictly prohibited.

- Oxygen shall not be used to power air-driven ventilators or to ventilate any confined space location.
- The entry supervisor shall check periodically to ensure that contaminated air from a confined space is exhausted to a location where it presents no hazard.
- Whenever possible, air movers shall be used with ducting to increase the efficiency of ventilation in the confined space and to prevent recirculation of contaminated air due to ventilation "short circuiting".
- When two or more air movers are used for ventilation, all such units should be operated in the same flow direction to maximize efficiency, i.e., all in the exhaust mode or all in the supply mode.

- Communications equipment necessary to permit immediate, understandable communications between the entrant(s) and the attendant(s).
- Personal protective equipment necessary to supplement feasible engineering and work practice controls.
- Lighting equipment necessary for safe operations and emergency exit. Temporary lighting used in confined spaces shall meet the following requirements:
  - All lighting shall be approved for use in Class I, Division I, Groups A, B, C, and D atmospheres.
  - Extension cords used for temporary lighting shall be equipped with connectors or switches approved for hazardous locations.
  - Temporary lighting shall be equipped with adequate guards to prevent accidental contact with the bulb.
  - The lighting shall not be suspended by the electric cords, unless they are designed for this method of suspension.
  - Electric cords shall be kept clear of working spaces and walkways or other locations in which they may be exposed to damage.
  - Temporary lighting and electric cords shall be inspected regularly for signs of damage to insulation and wiring.

- Specified barriers and shields.
- Equipment such as ladders needed for safe ingress and egress.
- Rescue and emergency equipment unless provided by local rescue services.
- Any other equipment necessary for safe entry and rescue from permit spaces.

6.2.6 Prior to authorizing entry, tests shall be conducted by a competent person to determine if acceptable entry conditions exist. When spaces are not fully isolated due to their size or design (sewers), pre-entry testing will be conducted to the extent feasible, and if entry is authorized, conditions shall be continuously monitored in the work area.

During the course of entry operations, test or monitor the permit space as necessary to determine if acceptable entry conditions are being maintained; and

When testing for atmospheric hazards, test first for oxygen, then for combustible gases and vapors, and then for toxic gases and vapors. *NOTE: Atmospheric testing conducted in accordance with Attachment B would be considered as satisfying these requirements. For permit space operations in sewers, atmospheric testing conducted in accordance with Attachment B, as supplemented by Attachment C, would be considered as satisfying these requirements.*

6.2.7 At least one attendant shall be stationed outside the permit space for the duration of the entry operations. *NOTE: Attendants may be assigned to monitor more than one permit space provided the duties described in section 10.2 of this procedure can be effectively performed for each permit space that is monitored. Likewise, attendants may be stationed at any location outside the permit space to be monitored as long as the duties described in section 10.2 of this procedure can be effectively performed for each permit space that is monitored.*

If multiple spaces are to be monitored by a single attendant, include in the permit program the means and procedures to enable the attendant to respond to an emergency affecting one or more of the permit spaces being monitored without distraction from the attendant's responsibilities under section 10.2 of this procedure.

6.2.8 The roles and duties of each person participating in an entry operation (as, for example, authorized entrants, attendants, entry supervisors, or persons who test or monitor the atmosphere in a permit space) shall be

established and each person shall receive training commensurate with the duties assigned.

6.2.9 Procedures for summoning rescue and emergency services, for rescuing entrants from permit spaces, for providing necessary emergency services to rescued employees, and for preventing unauthorized personnel from attempting a rescue shall be developed and implemented.

6.2.10 Procedures to coordinate entry operations among multi-employer workforces shall be developed and implemented.

6.2.11 The permit space shall be secured and entry-related documentation shall be completed and retained in project files for a period of at least one year.

6.2.12 The entry program shall be reviewed and any deficiencies corrected whenever evidence exists that employee protection is inadequate. *NOTE: Examples of circumstances requiring the review of the permit-required confined space program are: any unauthorized entry of a permit space, the detection of a permit space hazard not covered by the permit, the detection of a condition prohibited by the permit, the occurrence of an injury or near-miss during entry, a change in the use or configuration of a permit space, and employee complaints about the effectiveness of the program.*

6.2.13 The permit-required confined space program shall be reviewed, using the canceled permits retained under section 7.6 of this procedure within 1 year after each entry and revise the program as necessary, to ensure that employees participating in entry operations are protected from permit space hazards. *NOTE: Employers may perform a single annual review covering all entries performed during a 12-month period. If no entry is performed during a 12-month period, no review is necessary.*

6.3 **Alternate Entry Procedure** A simpler, alternate procedure may be followed for permit-required space entry if all of the following conditions are met:

- The only hazard posed by the permit space is from an existing, or potential hazardous atmosphere.
- Continuous forced air ventilation alone is sufficient to maintain the space safe for entry.
- Monitoring and inspection data supporting the above two conditions is collected and documented. Entries conducted to obtain this data must be conducted according to 6.2 above.

- Supporting data must be made available to each employee who enters the permit space under this alternate procedure.

6.3.1 The alternate entry procedure shall conform to the following:

- Any conditions making it unsafe to remove an entrance cover shall be eliminated before the cover is removed.

- When entrance covers are removed, the opening shall be promptly guarded by a railing, temporary cover, or other temporary barrier that will prevent an accidental fall through the opening and that will protect each employee working in the space from foreign objects entering the space.

- Before an employee enters the space, the internal atmosphere shall be tested, with a calibrated direct-reading instrument, for the following conditions in the order given: (1) oxygen content, (2) flammable gases and vapors, and (3) potential toxic air contaminants.

- There may be no hazardous atmosphere within the space whenever any employee is inside the space.

- Continuous forced air ventilation shall be used, as follows: (1) an employee may not enter the space until the forced air ventilation has eliminated any hazardous atmosphere; (2) the forced air ventilation shall be so directed as to ventilate the immediate areas where an employee is or will be present within the space and shall continue until all employees have left the space; (3) The air supply for the forced air ventilation shall be from a clean source and may not increase the hazards in the space.

- The atmosphere within the space shall be periodically tested as necessary to ensure that the continuous forced air ventilation is preventing the accumulation of a hazardous atmosphere.

- If a hazardous atmosphere is detected during entry: (1) each employee shall leave the space immediately; (2) the space shall be evaluated to determine how the hazardous atmosphere developed; and (3) measures shall be implemented to protect employees from the hazardous atmosphere before any subsequent entry takes place.

- The employer shall verify that the space is safe for entry and that the measures required by 6.3.1 have been taken, through

a written certification that contains the date, the location of the space, and the signature of the person providing the certification.

- The certification shall be made before entry and shall be made available to each employee entering the space.

7. ENTRY PERMIT SYSTEM

7.1 Before authorization to enter is granted, the completion of hazard control measures specified in 6.2 and 6.3 above shall be documented on an entry permit (Attachment C).

7.2 The entry supervisor shall authorize the entry by signing the completed permit.

7.3 The signed permit shall be posted or otherwise made available to all authorized entrants so that they may confirm that all pre-entry preparations are in place.

7.4 The duration of the permit may not exceed the time required to complete the assigned purpose of the entry.

7.5 The entry supervisor will terminate the entry and cancel the permit when either of the following occur:

- the operations covered by the permit have been completed;
- any condition not allowed under the entry permit occurs in or near the permit space.

7.6 Canceled entry permits shall be retained for at least 1 year so that the program review required under 6.2.13 above may be performed. Any problems which occur during an entry shall be noted on the permit.

8. ENTRY PERMIT

8.1 The entry permit shall contain the following information:

- The permit space to be entered;
- The purpose of the entry;
- The date and the authorized duration of the entry permit;
- The authorized entrants within the permit space, by name or by such other means (for example, through the use of rosters or tracking systems) as will enable the attendant to determine quickly and accurately, for the duration of the permit, which authorized entrants are inside the permit space; *NOTE: This*

requirement may be met by inserting a reference on the entry permit as to the means used, such as a roster or tracking system, to keep track of the authorized entrants within the permit space.

- The personnel, by name, currently serving as attendants;
- The individual, by name, currently serving as entry supervisor, with a space for the signature or initials of the entry supervisor who originally authorized entry;
- The hazards of the permit space to be entered;
- The measures used to isolate the permit space and to eliminate or control permit space hazards before entry; *NOTE: Those measures can include the lockout or tagging of equipment and procedures for purging, inerting, ventilating, and flushing permit spaces.*
- The acceptable entry conditions;
- The results of initial and periodic tests performed under section 6.2.6 of this procedure, accompanied by the names or initials of the testers and by an indication of when the tests were performed;
- The rescue and emergency services that can be summoned and the means (such as the equipment to use and the numbers to call) for summoning those services;
- The communication procedures used by authorized entrants and attendants to maintain contact during the entry;
- Equipment, such as personal protective equipment, testing equipment, communications equipment, alarm systems, and rescue equipment, to be provided for compliance with this section;
- Any other information whose inclusion is necessary, given the circumstances of the particular confined space, in order to ensure employee safety; and
- Any additional permits, such as for hot work, that have been issued to authorize work in the permit space.

9. TRAINING

The Project Manager shall assure that all employees assigned to tasks under this procedure have been trained, and have the understanding, knowledge, and skills necessary for the safe performance of their duties.

9.1 Training shall be provided to each employee on the following occasions:

- Before the employee is first assigned duties under this procedure;
- Before there is a change in assigned duties;
- Whenever there is a change in permit space operations that presents a hazard about which an employee has not previously been trained;
- Whenever the employer has reason to believe either that there are deviations from the permit space entry procedures required by 6.2 and 6.3 of this procedure or that there are inadequacies in the employee's knowledge or use of these procedures.

9.2 The training shall establish employee proficiency in the duties required by this procedure and shall introduce new or revised practices, as necessary, for compliance with this procedure.

9.3 Training required by this section shall be certified. The certification shall contain each employee's name, the signatures or initials of the trainers, and the dates of training. The certification shall be available for inspection by employees and their authorized representatives.

10 ASSIGNMENT OF DUTIES

10.1 **Authorized Entrants.** The employer shall ensure that all authorized entrants:

10.1.1 Know the hazards that may be faced during entry, including information on the mode, signs or symptoms, and consequences of the exposure;

10.1.2 Properly use equipment as required by section 6.3 of this procedure;

10.1.3 Communicate with the attendant as necessary to enable the attendant to monitor entrant status and to enable the attendant to alert entrants of the need to evacuate the space as required by section 10.2.6 of this procedure;

10.1.4 Alert the attendant whenever:

- The entrant recognizes any warning sign or symptom of exposure to a dangerous situation, or
- The entrant detects a prohibited condition; and

10.1.5 Exit from the permit space as quickly as possible whenever:

- An order to evacuate is given by the attendant or the entry supervisor,

- The entrant recognizes any warning sign or symptom of exposure to a dangerous situation,
- The entrant detects a prohibited condition, or
- An evacuation alarm is activated.

10.2 **Attendant.** The employer shall ensure that each attendant:

10.2.1 Knows the hazards that may be faced during entry, including information on the mode, signs or symptoms, and consequences of the exposure;

10.2.2 Is aware of possible behavioral effects of hazard exposure in authorized entrants;

10.2.3 Continuously maintains an accurate count of authorized entrants in the permit space and ensures that the means used to identify authorized entrants under section 8.1 of this procedure accurately identifies who is in the permit space;

10.2.4 Remains outside the permit space during entry operations until relieved by another attendant; *NOTE: When the employer's permit entry program allows attendant entry for rescue, attendants may enter a permit space to attempt a rescue if they have been trained and equipped for rescue operations as required by section 11.1 of this procedure and if they have been relieved as required by section 10.2.4 of this procedure.*

10.2.5 Communicates with authorized entrants as necessary to monitor entrant status and to alert entrants of the need to evacuate the space under section 10.2.6 of this procedure:

10.2.6 Monitors activities inside and outside the space to determine if it is safe for entrants to remain in the space and orders the authorized entrants to evacuate the permit space immediately under any of the following conditions;

- If the attendant detects a prohibited condition;
- If the attendant detects the behavioral effects of hazard exposure in an authorized entrant;
- If the attendant detects a situation outside the space that could endanger the authorized entrants; or
- If the attendant cannot effectively and safely perform all the duties required under section 10.2 of this procedure:

10.2.7 Summon rescue and other emergency services as soon as the attendant determines that authorized entrants may need assistance to escape from permit space hazards;

10.2.8 Takes the following actions when unauthorized persons approach or enter a permit space while entry is underway:

- Warn the unauthorized persons that they must stay away from the permit space;
- Advise the unauthorized persons that they must exit immediately if they have entered the permit space; and
- Inform the authorized entrants and the entry supervisor if unauthorized persons have entered the permit space;

10.2.9 Performs non-entry rescues as specified by the employer's rescue procedure; and

10.2.10 Performs no duties that might interfere with the attendant's primary duty to monitor and protect the authorized entrants.

10.3 **Entry supervisor.** The employer shall ensure that each entry supervisor:

10.3.1 Knows the hazards that may be faced during entry, including information on the mode, signs or symptoms, and consequences of the exposure;

10.3.2 Verifies, by checking that the appropriate entries have been made on the permit, that all tests specified by the permit have been conducted and that all procedures and equipment specified by the permit are in place before endorsing the permit and allowing entry to begin;

10.3.3 Terminates the entry and cancels the permit as required by section 7.5 of this procedure:

10.3.4 Verifies that rescue services are available and that the means for summoning them are operable;

10.3.5 Removes unauthorized individuals who enter or who attempt to enter the permit space during entry operations; and

10.3.6 Determines, whenever responsibility for a permit space entry operation is transferred and at intervals dictated by the hazards and operations performed within the space, that entry operations remain consistent with terms of the entry permit and that acceptable entry conditions are maintained.

11 RESCUE AND EMERGENCY SERVICES

11.1 The following requirements apply to employers who have employees enter permit spaces to perform rescue services.

- The employer shall ensure that each member of the rescue service is provided with, and is trained to use properly, the personal protective equipment and rescue equipment necessary for making rescues from permit spaces.

- Each member of the rescue service shall be trained to perform the assigned rescue duties. Each member of the rescue service shall also receive the training required of authorized entrants under section 9 of this procedure.

- Each member of the rescue service shall practice making permit space rescues at least once every 12 months, by means of simulated rescue operations in which they remove dummies, manikins, or actual persons from the actual permit spaces or from representative permit spaces. Representative permit spaces shall, with respect to opening size, configuration, and accessibility, simulate the types of permit spaces from which rescue is to be performed.

- Each member of the rescue service shall be trained in basic first-aid and in cardiopulmonary resuscitation (CPR). At least one member of the rescue service holding current certification in first aid and in CPR shall be available.

11.2 When an employer (host employer) arranges to have persons other than the host employer's employees perform permit space rescue, the host employer shall:

- Inform the rescue service of the hazards they may confront when called on to perform rescue at the host employer's facility, and

- Provide the rescue service with access to all permit spaces from which rescue may be necessary so that the rescue service can develop appropriate rescue plans and practice rescue operations.

11.3 To facilitate non-entry rescue, retrieval systems or methods shall be used whenever an authorized entrant enters a permit space, unless the retrieval equipment would increase the overall risk of entry or would not contribute to the rescue of the entrant. Retrieval systems shall meet the following requirements.

- Each authorized entrant shall use a chest or full body harness, with a retrieval line attached at the center of the entrant's back near shoulder level, or above the entrant's head. Wristlets may be used in lieu of the chest or full body harness if the employer can demonstrate that the use of a chest or full body harness is infeasible or creates a greater hazard and that the use of wristlets is the safest and most effective alternative.

- The other end of the retrieval line shall be attached to a mechanical device or fixed point outside the permit space in such a manner that rescue can begin as soon as the rescuer becomes aware that rescue is necessary. A mechanical device shall be available to retrieve personnel from vertical type permit spaces more than 5 feet deep.

11.4 If an injured entrant is exposed to a substance for which a Material Safety Data Sheet (MSDS) or other similar written information is required to be kept at the worksite, that MSDS or written information shall be made available to the medical facility treating the exposed entrant.

12. RECORDS

The Confined Space Entry Permit (Appendix D) is used for documenting activities associated with this procedure. The completed Permits shall be maintained for a period of 1 year from the date of cancellation, in accord with section 7.6 above.

APPENDIX B -- PROCEDURES FOR ATMOSPHERIC TESTING.

Atmospheric testing is required for two distinct purposes: evaluation of the hazards of the permit space and verification that acceptable entry conditions for entry into that space exist.

B.1. **Evaluation testing.** The atmosphere of a confined space should be analyzed using equipment of sufficient sensitivity and specificity to identify and evaluate any hazardous atmospheres that may exist or arise, so that appropriate permit entry procedures can be developed and acceptable entry conditions stipulated for that space. Evaluation and interpretation of these data, and development of the entry procedure, should be done by, or reviewed by, a technically qualified professional (e.g., OSHA consultation service, or certified industrial hygienist, marine chemist registered safety engineer, certified safety professional, etc.) based on evaluation of all serious hazards.

B.2. **Verification testing.** The atmosphere of a permit space which may contain a hazardous atmosphere should be tested for residues of all contaminants identified by evaluation testing using permit specified equipment to determine that residual concentrations at the time of testing and entry are within the range of acceptable entry conditions. Results of testing (i.e., actual concentration, etc.) should be recorded on the permit in the space provided adjacent to the stipulated acceptable entry condition.

B.3. **Duration of testing.** Measurement of values for each atmospheric parameter should be made for at least the minimum response time of the test instrument specified by the manufacturer.

B.4. **Testing stratified atmospheres.** When monitoring for entries involving a descent into atmospheres that may be stratified, the atmospheric envelope should be tested a distance of approximately 4 feet (1.22 m) in the direction of travel and to each side. If a sampling probe is used, the entrant's rate of progress should be slowed to accommodate the sampling speed and detector response.

APPENDIX C -- SEWER SYSTEM ENTRY.

Sewer entry differs in three vital respects from other permit entries; first, there rarely exists any way to completely isolate the space (a section of a continuous system) to be entered; second, because isolation is not complete, the atmosphere may suddenly and unpredictably become lethally hazardous (toxic, flammable or explosive) from causes beyond the control of the entrant or employer, and third, experienced sewer workers are especially knowledgeable in entry and work in their permit spaces because of their frequent entries. Unlike other employments where permit space entry is a rare and exceptional event, sewer workers' usual work environment is a permit space.

C.1. **Adherence to procedure.** The employer should designate as entrants only employees who are thoroughly trained in the employer's sewer entry procedures and who demonstrate that they follow these entry procedures exactly as prescribed when performing sewer entries.

C.2. **Atmospheric monitoring.** Entrants should be trained in the use of, and be equipped with, atmospheric monitoring equipment which sounds an audible alarm, in addition to its visual readout, whenever one of the following conditions is encountered: oxygen concentration less than 19.5 percent; flammable gas or vapor at 10 percent or more of the lower flammable limit (LFL); or hydrogen sulfide or carbon monoxide at or above their PEL (10 ppm or 50 ppm, respectively); or, if a broad range sensor device is used, at 100 ppm as characterized by its response to toluene. Normally, the oxygen sensor/broad range sensor instrument is best suited for sewer entry. However, substance specific devices should be used whenever actual contaminants have been identified. The instrument should be carried and used by the entrant in sewer line work to monitor the atmosphere in the entrant's environment, and in advance of the entrants' direction of movement, to warn the entrant of any deterioration in atmospheric conditions. Where several entrants are working together in the same immediate location, one instrument, used by the lead entrant, is acceptable.

C.3. **Surge flow and flooding.** Sewer crews should develop and maintain liaison, to the extent possible, with the local weather bureau and fire and emergency services in their area so that sewer work may be delayed or interrupted and entrants withdrawn whenever sewer lines might be suddenly flooded by rain or fire suppression activities, or whenever flammable or other hazardous materials are released into sewers during emergencies by industrial or transportation accidents.

C.4. **Special Equipment.** Entry into large bore sewers may require the use of special equipment. Such equipment might include such items as atmosphere monitoring devices with automatic audible alarms, escape self-contained breathing apparatus (ESCBA) with at least 10 minute air supply (or other NIOSH approved self-rescuer), and waterproof flashlights, and may also include boats and rafts, radios and rope stand-offs for pulling around bends and corners as needed.

CONFINED SPACE ENTRY PERMIT

*** VALID FOR ONE SHIFT ONLY ***

PROJECT #	CLIENT	DATE	TIME
LOCATION OF SPACE			
PURPOSE OF ENTRY			
PRIOR CONTENTS OF SPACE		TYPE OF SPACE	

PRE ENTRY ATMOSPHERIC TESTING

COMPOUND	ACCEPTABLE RANGE	TIME	YES	NO	N/A
OXYGEN	>19.5% AND <23.5%				
LEL	<10%				
CO	<35 PPM				
H_2S	<10 PPM				
HYDROCARBONS	<1 PPM				
OTHER	< PEL				

HAZARD CONTROLS IMPLEMENTED

ACTION COMPLETED	YES	NO	N/A
SPACE FULLY ISOLATED			
SPACE EMPTIED AND FREE OF RESIDUE			
MECHANICAL VENTILATION OPERATING			
SPACE SECURE FROM ACCIDENTAL ENTRY			
SAFE ACCESS INTO/FROM SPACE AVAILABLE			
EQUIPMENT USED IN SPACE INTRINSICALLY SAFE			
ELECTRICAL GROUNDING AND BONDING IN PLACE			
ALL ENTRANTS, ATTENDANTS, AND SUPERVISORS TRAINED			
RESPIRATORY PROTECTION PROVIDED			
SKIN/BODY PROTECTION PROVIDED			
EYE, EAR, AND HEAD PROTECTION PROVIDED			
EMERGENCY RESCUE SERVICES AVAILABLE			

SIGNATURES

ALL ITEMS ABOVE MUST BE YES OR N/A

ENTRY AUTHORIZED BY: (ENTRY SUPERVISOR)	
ATTENDANT:	ATTENDANT:
ENTRANT:	ENTRANT:
ENTRANT:	ENTRANT:

USE THIS FORM ONLY IN ACCORDANCE WITH ICF KE PROCEDURE S&H-5

TITLE: HEARING PROTECTION PROGRAM

1. PURPOSE

To establish the minimum requirements for ICF Kaiser Engineers (ICF KE) to perform activities associated with hearing protection.

2. SCOPE

This procedure applies in its entirety to all ICF KE projects unless otherwise indicated within the Project Management Plan or other pertinent planning documents.

3. RESPONSIBILITIES

3.1 The Project Manager has overall responsibility for establishing and ensuring compliance with this procedure.

3.2 The Field Safety and Health Staff is responsible for implementing and/or monitoring activities associated with this procedure.

3.3 It is the responsibility of all managers and supervisory personnel to enforce this procedure and of each employee to follow it.

4. DEFINITIONS

4.1 **Ambient Noise (residual noise, background noise):** Noise of a measurable intensity that is normally present in the background in a given environment.

4.2 **Audiogram:** A chart, table, or graph resulting from an audiometric test showing an individual's hearing threshold levels as a function of frequency.

4.3 **Audiologist:** A professional specializing in the study of rehabilitation of hearing, who is certified by the American Speech, Hearing and Language Association or licensed by a state board of examiners.

4.4 **Auditory Trauma:** Damage to the hearing mechanism resulting in some degree of permanent or temporary hearing loss. Auditory trauma may be caused by agents other than noise, e.g., head injury; burns; sudden or excessive changes of atmospheric pressure.

4.5 **A-Weighted Sound Level:** To obtain a single number representing the sound level of a noise containing a wide range of frequencies in a manner representative of the ear's response, it is necessary to reduce, or weight, the effects of the low and high frequencies with respect to the medium frequencies. Three weighing networks are provided on standard

sound level meters in an attempt to duplicate the response of the human ear to various sounds.

The A-weighing network is the most useful since from it most human responses can be predicted adequately.

4.6 **Baseline Audiogram:** The audiogram against which future audiograms are compared.

4.7 **Criterion Sound Level:** A sound level of 90 decibels.

4.8 **Decibels - A-Weighted (dBA):** A unit of measurement of sound level corrected to the A-weighted scale, as defined in ANSI S1.4 - 1981 (R 1976), using a reference level of 0.00002 Newton per square meter.

4.9 **Damage Risk Criterion (DRC):** A graphical or other expression of sound levels above which a designated or a general population incurs a specified risk of noise-induced hearing loss.

4.10 **Dosimeter:** An instrument which registers the occurrence and cumulative duration of noise exceeding a predetermined level at a chosen point in the environment or on a person.

4.11 **Hearing Protective Device (HPD):** A device inserted into or placed over the ear in order to attenuate air-conducted sounds.

4.12 **Earmuff:** An HPD that encloses the entire outer ear.

4.13 **Earplug:** An HPD, having specified or standard acoustic characteristics, which upon insertion occludes the external auditory meatus.

4.14 **Frequency:** The number of times per second that a sine-wave repeats itself. It is expressed in hertz (Hz) or cycles per second (cps).

4.15 **Hearing Impairment:** Hearing loss exceeding a designated criterion (commonly 25 dB, re ISO standard, averaged from the threshold levels at 500, 1000, and 2000 Hz).

4.16 **Impulse Noise (Impact Noise):** Noise of short duration (typically, less than one second) especially of high intensity, abrupt onset and rapid decay, and often rapidly changing spectral composition.

4.17 **Medical Pathology:** A disorder or disease affecting the ear, which should be treated by a physician specialist.

4.18 **Noise Reduction Rating (NRR):** A rating system for hearing protective devices developed by the Environmental Protection Agency. The NRR is a measure of the ability of a given protective device to attenuate nose, as a function of noise intensity and frequency. The NRR must be shown on the hearing protector package.

4.19 **Otolaryngologist**: A physician specializing in diagnosis and treatment of disorders of the ear, nose, and throat.

4.20 **Representative Exposure**: Measurements of an employee's noise dose or 8-hour time-weighted average sound level that the employers deem to be representative of exposures of other employees in the workplace.

4.21 **Significant Threshold Shift (STS)**: Defined by OSHA as follows:

- A change in hearing threshold relative to the baseline audiogram of 20 dB or greater at any test frequency other than 500 Hz in either ear, if no previous audiograms have thresholds that exceed 25 dB with reference to audiometric zero as specified by American National Standard S3.6-1969; or

- A change in hearing threshold relative to the baseline audiogram of 10 dB or greater at 1000 or 2000 Hz, 15 dB at 3000 or 4000 Hz or 20 dB at 6000 Hz, in either ear, if any previous audiogram has one or more thresholds that exceed dB with reference to audiometric zero; or

- A change in hearing threshold relative to the baseline audiogram of 10 dB or greater at any test frequency other than 500 Hz in either ear, if any previous audiogram has thresholds exceeding an average of 25 dB with reference to audiometric zero at the frequencies 1000, 2000, and 3000 Hz; or

- A change in hearing threshold relative to the baseline audiogram of 10 dB or greater at any test frequency other than 500 Hz in either ear, if the employee previously has suffered one or more permanent significant threshold shifts.

4.22 **Sound Level**: Ten times the common logarithm of the ratio of the square of the measured A-weighted sound pressure to the square of the standard reference pressure of 20 micropascals, given in decibels (dB). For use with the directive, slow time response, in accordance with ANSI S1.,4-1971 (S 1976), is required.

5. GENERAL REQUIREMENTS

5.1 Evidence is well established that worker exposure to noise of sufficient intensity and duration can result in hearing damage. Noise induced hearing loss can happen unnoticed over a period of years. Hearing loss in the high frequency ranges seriously affects understanding of speech, since hearing at these higher frequencies is necessary to discriminate the consonants of speech that carry information. Many factors may influence the course of noise induced hearing loss including:

5.1.1 The overall "decibel level" of the noise exposure is obviously important. If a noise exposure does not cause auditory fatigue, the exposure is not considered harmful to hearing sensitivity.

5.1.2 The "frequency spectrum" of the noise must also be considered. Noise exposure in the high frequency ranges is generally more harmful than low frequency noise.

5.1.3 The daily "time distribution" of the noise exposure is another factor. Noise which is intermittent in character is generally less harmful to hearing than steady state noise exposure. The potential for hearing loss increases as a function of the duration of the exposure over a working lifetime.

5.1.4 The "susceptibility" of the worker to hazardous noise must be considered, since not every individual will develop identical hearing impairment if exposed to the same noise intensity over the same time period.

5.1.5 The extra-auditory (or nonauditory) effects of noise should also be considered. While evidence to support extra-auditory health effects may not be as complete as the case for hearing loss, some concern is arranged. Noise can alter the normal functions of the endocrine, cardiovascular and neurological systems. Subjective complaints of nausea, malaise, and headache have been reported in workers exposed to ultrasonic noise levels.

5.2 Employee exposures to excessive noise levels are regulated by Federal OSHA (29 CFR 1910.95). These regulations require that the employee administer a continuing, effective hearing conservation program whenever employee noise exposures equal or exceed an 8-hour time-weighted average sound level of 85 decibels.

5.3 A hearing conservation program shall be implemented and protection against the effects of noise exposure shall be provided when the exposures exceed those shown in Attachment A of this procedure, when measured on the A-weighted scale of a standard sound level meter at slow response.

5.4 For compliance purposes, a minimally effective hearing conservation program consists of the following:

5.4.1 Monitoring of the workplace to determine the representative exposure of employees to excessive noise levels.

5.4.2 An audiometric testing program which includes: a baseline audiogram for all employees exposed to noise levels equal to or in excess of the standard; annual audiograms for each overexposed employee; analysis of audiogram results with retesting and/or referral to an otolaryngologist or qualified physician when a significant threshold shift (STS) occurs, and written employee notification of the STS.

5.4.3 A training program for all employees exposed to noise levels of this standard shall be performed in accordance with procedure S&H-9.

5.4.4 Provision of personal protective equipment to all affected employees when administrative or engineering controls fail to reduce sound levels to within the levels of the standards.

6. IMPLEMENTATION

6.1 Monitoring

6.1.1 Monitoring of employee exposures to noise shall be conducted by the Field Safety and Health Staff to establish damage risk criteria (DRC) for categories of employees.

6.1.2 The monitoring requirement may be met by either area monitoring or personal monitoring that is representative of employee exposures.

6.1.3 For purposes of the hearing conservation program, employee noise exposures shall be computed in accordance with Attachment A of this procedure and without regard to any attenuation provided by the use of hearing protective equipment.

6.2 Audiometric Testing

6.2.1 Audiometric testing shall continue to be provided as part of the regular medical examinations.

6.2.2 Baseline Audiogram

6.2.2.1 Audiometric test results obtained from the prehire medical examination for new employees shall be used as the baseline audiogram.

6.2.2.2 Testing to establish a baseline audiogram shall be preceded by at least 14 hours without exposure to workplace noise.

6.2.2.3 Hearing protectors shall not be used as a substitute for the requirement that baseline audiograms be preceded by 14 hours without exposure to workplace noise.

6.2.2.4 Employees shall be notified of the need to avoid high levels of non-occupational noise exposure during this 14-hour period.

6.2.3 **Annual Audiograms**: Annual audiograms shall be obtained as a regular part of the periodic/update medical examination.

6.3 Employee Training and Information

6.3.1 Training Program

6.3.1.1 All employees who may be exposed to excessive noise levels shall complete a formal training program, which shall include, as a minimum, the following information:

- The effects of noise on hearing.
- The purpose of hearing protectors, the advantages, disadvantages, and attenuation of various types, and instructions on selection, fitting, use and care.
- The specific nature of the operations which could result in exposure to excessive noise levels.
- A description of the medical surveillance program, including a description of the purpose of audiometric testing, and an explanation of the test procedures.
- The engineering controls and safe work practices associated with the employee's work assignment.

6.3.1.2 The training program shall be repeated annually, and each employee receiving such training shall complete the Hearing Protection Training Completion Form. All training shall be documented in accordance with procedure S&H-9.

6.3.2 **Safety Meetings**: Job site safety meetings and site-specific health and safety plans shall include instruction on the need for hearing protective devices in designated areas. All safety meetings shall be in accordance with procedure S&H-9.

6.4 Control Measures

6.4.1 **General**: A straightforward method of controlling noise exposure is to examine the problem in terms of its three basic elements: i.e., sound arises from a source, travels over a path, and affects a receiver, or listener. Solution of a given noise problem might require alteration or modification of any or all of these three basic elements:

6.4.1.1 Modifying the **source** to reduce its noise output.

6.4.1.2 Altering or controlling the transmission **path** and the environment to reduce the nose level reaching the listener.

6.4.1.3 Providing the **receiver** with personal protective equipment (but only if the noise source or path cannot be controlled).

6.4.2 Noise Control at the Source

6.4.2.1 **Select Quiet Equipment**: Perhaps the best method for controlling noise at its source is to select quiet equipment initially. The following summarizes those features that the buyer should look for and steps to be taken in selecting quiet equipment:

- Low-noise certification.
- Advertisement of "quiet" operation, evidence of noise control design.
- Evidence of "lower" and "slower" operating characteristics.
- Conduct side-by-side noise tests of equipment.
- Request an "on-site" or "in operation" inspection of mechanical equipment before purchase.

6.4.2.2 **Reduce Operating Noise**: Most mechanical devices are complex noise generators. Though it is impractical to discuss all possible solutions to all noise problems, some general description of control measures are provided below:

- Reduce impact or impulse noise by reducing weight, size, or height of fall of impacting mass.
- Reduce speed in machines and flow velocities and pressure in fluid systems.
- Balance rotating parts - to control machinery noise and vibration of fans, fly wheels, pulleys, cams, shafts, etc.
- Reduce frictional resistance between rotating, sliding or moving parts in mechanical systems: frequent lubrication, proper alignment of moving parts; static and dynamic balancing of rotating parts; correction of eccentricity or "out-of-roundness" of wheels, gears, rollers, pulley, etc.
- Reduce resistance in air or fluid systems: use of low flow velocities, smooth boundary surfaces of duct or pipe systems, and long-radius turns and flared sections in pipes, etc., to reduce turbulence noise.
- Isolate vibration elements in machinery; install motors, pumps, etc., on most massive part of machine; use belt or roller drives in place of gear trains; use flexible hoses and wiring instead of rigid piping and stiff wiring, etc.

- Apply vibration damping materials such as liquid mastic; pads of rubber, felt, foam or fibrous blankets; or sheet metal viscoelastic laminates or composites to vibrating machine surfaces.

- Reduce noise leakage from the interior of machines such as compressors by sealing or covering all openings or applying acoustical materials to machine interiors.

6.4.3 Noise Control in the Transmission Path

6.4.3.1 Separate the noise source and receiver as much as possible.

6.4.3.2 Use sound-absorbing materials on ceiling, floor or wall surfaces as close to the machine as possible.

6.4.3.3 Use sound barriers and deflectors in the noise path.

6.4.3.4 Use acoustical lining on inside surfaces of such passageways as ducts, pipe chases, or electrical channels.

6.4.3.5 Use mufflers, silencers or snubbers on all gasoline or diesel engines, regardless of size; and particularly on equipment when large quantities of high-pressure, high-velocity gases, liquids, steam or air are discharged into the open air.

6.4.3.6 Use vibration isolators and flexible couplers where the noise transmission path is structureborne in character.

6.4.4 Protection for the Receiver

6.4.4.1 General

- When engineering controls fail to reduce the levels to within the levels specified in Attachment A of this procedure, personal protective equipment shall be provided.

- Hearing protectors shall be provided at no cost to employees and shall be replaced as necessary.

- Supervisors shall ensure that hearing protectors are worn by all employees who are exposed to a time-weighted average of 85 decibels or greater and who have experienced a significant threshold shift.

- Employees shall be given the opportunity to select their hearing protectors from a variety of suitable protectors.

6.5 Recordkeeping

6.5.1 The **Audiogram** shall include:

- Name and job classification of the employee.
- Date of the audiogram.
- The examiner's name.
- Date of the last acoustic or exhaustive calibration of the audiometer.
- Employee's most recent noise exposure assessment.

7. RECORDS

The Hearing Protection Training Record as shown in Appendix B of this manual is used for documenting activities associated with this procedure. Requirements for record distribution, retention, and maintenance is established within applicable project planning documents.

ATTACHMENT A

PERMISSIBLE NOISE EXPOSURE

A-Weighted Sound Level (dB)	Permitted Duration Per Workday (Hours)	A-Weighted Sound Level (dB)	Permitted Duration Per Workday (Hours)
80	32.0	106	0.87
81	27.9	107	0.76
82	24.3	108	0.66
83	21.1	109	0.57
84	18.4	110	0.50
85	16.0	111	0.44
86	13.9	112	0.38
87	12.1	113	0.33
88	10.6	114	0.29
89	9.2	115	0.25
90	8.0	116	0.22
91	7.0	117	0.19
92	6.2	118	0.16
93	5.3	119	0.14
94	4.6	120	0.125
95	4.0	121	0.11
96	3.5	122	0.095
97	3.0	123	0.082
98	2.6	124	0.072
99	2.3	125	0.063
100	2.0	126	0.054
101	1.7	127	0.047
102	1.5	128	0.041
103	1.3	129	0.038
104	1.1	130	0.031
105	1.0		

HEARING PROTECTION
TRAINING RECORD

NAME _____
(Please Print)

	INITIAL
1. I have been informed about the health hazards associated with exposure to excessive noise levels and the effect of noise on hearing.	
2. I have been informed about the types of work that may result in exposure to excessive noise levels, and the necessary protective steps to prevent exposure, including engineering controls and required safe work practices.	
3. I understand the purpose for, proper use and limitations of hearing protective devices, and I have received instruction on selection, fitting, use and care of such devices.	
4. I have been informed about the monitoring and medical surveillance programs, including information on audiometric testing and an explanation of the test procedures.	
5. I have received copies of the applicable regulations governing occupational exposure to excessive noise.	

Signature _____

Date _____

Form No. S&H14-001

HEAT STRESS PROCEDURE

Discussion

Hyperthermia is a common hazard to employees working on projects involving exposure to hazardous substances, most particularly when impermeable protective clothing is used. This problem can occur at ambient temperatures below what is normally considered "hot weather." The body normally sheds excess heat primarily through radiation (capillaries in the skin dilate, transferring heat from the body core to the surface), and evaporation of sweat. Thermodynamically, evaporation is much more effective than radiation. Heat stress results when the body's regulating mechanisms are inadequate to dispose of internally generated, and externally supplied heat.

Heat is normally generated internally through metabolic processes, and the quantity of heat generated corresponds to the level of muscle activity. External heat sources include radiant bodies (the Sun, furnaces, fires, etc.), and convection (temperature difference between the skin and ambient air). External heat gain can occur through conduction from hot surfaces, but this is normally not significant since such contact will be avoided (it is a very important factor if submersed in water, however).

The overall heat balance of a human can be written as an equation:

$$H = M \pm R \pm C - E$$

where: H = body heat burden
M = metabolic heat gain
R = radiant or infrared heat load
C = convective heat load
E = evaporative heat loss.

The "normal" person maintains a core body temperature of 37°C ± 1°C, (98.5°F ± 1.8°F). Core body temperatures should not exceed 38°C (100.4°F) as a result of the total heat burden. Heat stroke occurs when the core temperature is greater than 40°C, and death is probable at core temperatures ≥42°C.

Working outdoors in hot, sunny weather places the worker under increased heat load from M, R, and C. If the heat loss from E, is less than the sum of M, R, and C, the total body heat balance will increase. Unfortunately, the use of impermeable protective clothing can reduce the heat loss from E to near zero.

Controls

Heat stress is difficult to control in environmental work. Most work takes place outdoors, and, in much of the country, during the spring and summer months. There are three factors that impact on control of heat stress: worker acclimatization, replacement of fluid lost through sweating, and reducing work schedules.

Acclimatization is the process by which the body adapts to higher environmental temperatures, and is very significant in preventing heat related illnesses. Acclimatization is a gradual adaptation requiring seven to ten days to complete. In an acclimatized worker, the heart rate is lower, the resting body temperature is lower, sweating begins more rapidly, and the sweat is more dilute (less salt loss). Acclimatization is temporary, and much of the benefit can be lost if the worker is not exposed to heat stress for a week or so. Lack of acclimatization is the reason heat-related illnesses are more common, and more severe in the early summer.

Replacement of lost fluids is critical for all workers weather acclimated or not. Intake of fluid must be increased beyond that which satisfies thirst, and it is important to avoid "fluid debt," which will not be made up as long as the individual is sweating. Two 8 oz. glasses of water should be taken **prior** to beginning work, then up to 32 oz per hour during the work shift; fluid replacement at frequent intervals is more effective. The best fluid to drink is water; liquids like coffee or soda do not provide efficient hydration, and may increase loss of water. If commercial electrolyte drinks (Gatorade, Squincher, etc.) are used, the drink should be diluted ⅓ to ½ with water, or 8 oz of water should be taken with each 8 oz of electrolyte. Additional salt is usually not needed; and **salt tablets should never be taken**. Replacement fluids should be cool, but not cold.

A reduced work schedule lowers the contribution of the metabolic heat gain by periodically reducing the level of activity. Breaks should be taken in a cool, shaded location, and any impermeable clothing should be removed. Dry clothing or towels should be available to minimize chills when taking breaks. No manual labor may be performed during breaks, but paperwork, and other similar light tasks may be performed.

Other controls include working at night or during the cooler parts of the day (6am - 10am, 3pm - 7pm), erecting a shade over the work area, and use of cooling garments. The last option is expensive and logistically difficult to implement.

Work Schedules

Work schedules providing periodic rest periods must be implemented when employees are exposed to heat stress. Schedules may be developed based on instrumental measurements of the environment (temperature, radiant heat, humidity, and wind speed) with the resulting measurement compared to published guidelines (NIOSH REL, ACGIH TLV, for Heat Stress). When using this method, allowance must be made for the use of impermeable protective clothing.

Alternate methods of establishing a work schedule are based on measuring physiological indices (heart rate, or oral temperature), which correlate to the core body temperature. Oral temperature does not correlate well to increasing core temperature (during heat exhaustion, it may be normal or even depressed due to extreme peripheral vasodilation), and is subject to effects from drinking replacement fluids.

Measures of heart rate (pulse) appear to correlate well with heat-related stress, and can be used to estimate the impact of heat stress on individuals with differing levels of fitness (i.e. individuals with a pulse of 150/minute are experiencing about the same level of stress, even though the work output required to reach this rate will be quite higher for a fit person). The heart rate also incorporates the combined effects of environmental heat, muscle activity, and elevated body temperature, making it a useful, and easily measured variable.

The procedure for controlling heat stress via the measurement of heart rate is presented below. The Site Safety Officer and Site Manager shall determine the potential for heat stress based on planned activities, and weather forecasts.

If the potential for heat stress exists:

- All site workers shall be informed of the potential for heat stress during the daily safety meeting.
- The site safety officer and site manager shall determine if any hot zone workers are at particular risk for heat stress due to illness, etc.
- The site safety officer and site manager shall assure that sufficient quantities of potable water, and electrolyte drinks are available in the decon area; and that a shaded rest area is available at, or immediately outside the decon area.
- All hot zone workers and relief workers shall drink 16 oz. of water prior to beginning work; and at least 16 oz. during each rest period.
- The initial work period is set according to the table below.
- Within the first minute of each rest period, each worker's heart rate (pulse) shall be measured, and compared to the following:

  Initial heart rate: ≤ 110 beats/minute (28 beats/15 sec).

- Each worker's heart rate will be measured again three minutes later, and compared to the following:

  Recovery heart rate: ≤ 80 beats/minute (20 beats/15 sec).

If both heart rate criteria are met, the subsequent work period may be increased by one third, provided the temperature remains constant. If the initial heart rate is > than 110 beats per minute, **or** the recovery rate is not less than 80 beats per minute, the subsequent work shift is decreased by one third.

First Aid Procedures

- Get the person to a cooler place
- Place him or her in the shock position, lying on their back, with feet up.
- Remove or loosen the victim's clothing
- Cool him or her by fanning or applying cold packs (placing a cloth between the pack and the victim's skin) or wet towel.
- If the victim has no injuries and can tolerate water, give him or her one-half glassful every fifteen minutes for an hour.

FREQUENCY OF MEASUREMENT		
AMBIENT TEMPERATURE (°F)	NORMAL WORK CLOTHING[1]	IMPERMEABLE WORK CLOTHING
70° - 80°	N/A	90 MIN
80° - 85°	120 MIN	60 MIN
85° - 90	90 MIN	30 MIN
> 90°	60 MIN	15 MIN

[1]Normal work clothing is cotton coveralls, or other cotton clothing with long sleeves and pants.

Note: Individuals with pre-existing medical conditions or restrictions contraindicating exposure to elevated environmental heat are precluded from assignments that involve exposure to high temperatures.

Note: Healthy individuals will vary significantly in their tolerance to heat, and heat tolerance can be affected by minor illnesses (cold, flu) and by prescription, and over-the-counter medications.

Note: The heart rate measure is only a part of the overall situation to be considered; other objective, and subjective symptoms of heat stress, such as: extreme fatigue, nausea, disorientation, lightheadedness, and breathlessness must be fully considered when evaluating the adequacy of control measures.

Note: The heart rate measure will provide guidance that can be significantly different for each member of a field team based on their acclimatization, physical fitness, and heat-tolerance. If it is critical that all team members use the same work/break schedule, the schedule that accommodates the least heat-tolerant team member will be observed.

TITLE: PERSONAL PROTECTIVE EQUIPMENT

1. PURPOSE

To establish the minimum requirements for ICF Kaiser Engineers (ICF KE) to perform activities associated with equipment lockout and tagout operations.

2. SCOPE

This procedure applies in its entirety to all ICF KE projects unless otherwise indicated within the Project Management Plan or other pertinent planning documents.

3. RESPONSIBILITIES

3.1 The Project Manager has overall responsibility for establishing and ensuring compliance with this procedure.

3.2 The Field Safety and Health Staff is responsible for implementing and/or monitoring activities associated with this procedure.

3.3 It is the responsibility of all managers and supervisory personnel to enforce this procedure and of each employee to follow it.

4. DEFINITIONS

Not applicable.

5. GENERAL REQUIREMENTS

5.1 ICF KE will provide suitable personal protective equipment as required for the nature of the job being performed, such as, but not limited to, steel-toe boots, chemical protective clothing, respirators, eye and face protection, hard hats, and gloves.

5.2 Employees shall use assigned protective equipment on any task where there is potential exposure to physical hazards such as equipment operation, falling objects, or exposure to materials which may cause respiratory injury or skin irritation. Specific requirements shall be established and documented in the applicable Job Safety Analysis Plan or other applicable planning documents.

5.3 All personal protective equipment shall meet all applicable ANSI standards for the work to be performed.

5.4 Employees shall be trained in both the need for and requirements of this procedure in accordance with procedure S&H-9. Training shall additionally include the use of the proper type of personal protective equipment for the task.

Training shall be provided initially during the employee orientation with follow-up training during safety meetings.

6. IMPLEMENTATION

6.1 Eye Protection

6.1.1 Basic Eye Protection

6.1.1.1 As standard eye protection, approved, non-prescription industrial standard safety glasses with side shields are considered as minimum protection.

6.1.1.2 Standard eye protection is required in all designated construction, warehouse areas, and maintenance/equipment yards.

6.1.1.3 Standard eye protection may be required in work atmospheres other than construction and warehouse areas as hazards dictate (determined by the Field Safety and Health Staff).

6.1.2 **Contact Lenses:** Contact lenses are not recommended for use at the worksite due to the possibility of particles and chemicals getting behind the contact lens, the lens being broken into small particles in the eye or welding spatter fusing the lens to the eye. These can be very serious injuries.

6.1.3 Impact-Type Goggles

6.1.3.1 Approved impact-type mono-goggles shall be provided to ensure greater eye protection from flying particles. Tasks which need such eye wear include:

- Chipping
- Scraping
- Buffing
- Blowing
- Sawing
- Hammering
- Grinding
- Pneumatic tool use

6.1.3.2 Impact-type goggles should not be worn in conjunction with basic eye protection because a good seal cannot be obtained, but they may be worn in conjunction with a face shield. Such may be recommended for certain tasks.

6.1.4 Chemical (splash-proof) Goggles

6.1.4.1 Approved chemical mono-goggles shall be provided to ensure eye protection from the hazards associated with handling or dispensing liquid chemicals.

6.1.4.2 Hazards from irritant chemical operations may include:

- Irritant dust
- Irritant mist/sprays
- Irritant splashes
- Working with melted metal or tar

6.1.4.3 The Field Safety and Health Staff and the chemical Materials Safety Data Sheets (MSDS) can provide specific use information. The MSDSs can be obtained in accordance with procedure S&H-13.

6.1.4.4 Basic eye protection and chemical goggles should not be worn at the same time, but a face shield may be worn in conjunction with chemical goggles and may be required for certain operations.

6.1.5 Face Shield

6.1.5.1 An approved full-face shield shall be worn to provide face protection to the employee from flying particles, splashes, or mist. A face shield only provides protection to the face from direct impact objects. Additional standard eye protection must be worn in conjunction with a face shield.

6.1.5.2 Tasks which dictate the use of a face shield include:

- Chipping
- Scraping
- Blowing
- Hot tar work
- Liquid metal work
- Sawing
- Grinding
- Pneumatic tool use
- Pouring of irritants
- Steam cleaning

6.1.6 **Burning Goggles:** Approved burning goggles shall be worn to provide employee protection from ultra-violet radiation. Burning goggles shall be worn whenever an oxy-gas torch is used for cutting or burning.

6.1.7 **Welding Hood:** A welding hood with a filtered lens of number 10 shade or darker shall be used to provide protection from the ultra-violet rays produced during electric arc welding. Approved safety glasses with side shields shall be worn in conjunction with the welding hood to ensure protection from popping hot slag when the hood is raised. Welding hoods shall meet ANSI standards.

6.2 Head Protection

6.2.1 **Basic Head Protection:** Approved hard hats include both plastic and fiberglass hats which meet ANSI Z89.1 standards for Class I and II only.

Metal hard hats or bumper caps are not considered approved head protection and shall not be used on Company projects. Approved hard hats shall be worn by ALL employees exposed to overhead hazards form moving equipment or falling objects.

6.2.2 **Issuance of Head Protection**: An approved hard hat shall be issued to all employees upon hire. The decision to charge a fee for replacement hard hats shall depend on the requirements of the individual project.

6.2.3 **Color Coding**: Color coding of hard hats will be at the discretion of the individual project.

6.2.4 **General Requirements**: Hard hats shall conform to the approved specifications of ANSI Z289.1. Therefore, it shall be forbidden for employees to:

- Drill holes in the shell of the hard hat
- Alter the shape of the hard hat or bill
- Remove the suspension straps or cut/alter them in any way
- Paint the hat or cover in non-approved decals

6.3 Hearing Protection

6.3.1 Employees shall not be exposed to noise in excess of the Occupational Exposure Limits established by OSHA. Procedure S&H-14 provides guidance in the determination of these limits.

6.3.2 The two types of recognized hearing protection available for use in effectively reducing noise exposure are ear plugs and ear muffs.

6.3.3 In most instances, universal-fit ear plugs are acceptable hearing protection. Cotton plugs are not acceptable and shall not be used.

6.3.4 When using ear muffs for hearing protection, special car shall be given to ensure that the muffs are disinfected before being issued to another employee.

6.4 **Hand Protection**: Practically every part of every job requires the use of the hands, and it is imperative that adequate hand protection be utilized by the employee to reduce the possibility of injury.

6.4.1 **General Purpose Gloves**: General purpose work gloves should be worn by the employee for protection against:

- Splinters
- Jagged surfaces
- Glass
- Sharp edges
- Wire rope
- Metal splinters

6.4.2 Special Purpose Gloves

6.4.2.1 Special purpose work gloves should be worn and, at times, shall be required when employees are performing certain tasks. Special purpose gloves include:

- Electric "hot" gloves
- Cut resistant gloves
- Chemical resistant gloves
- Standard rubber gloves
- Heat resistant gloves

6.4.2.2 Tasks which require the use of special purpose gloves include:

- Working with solvents or fuels (thinners, degreasers, gasoline, safety solvents, etc.)
- Handling pesticides, herbicides, or any poison
- Working with insulating materials
- Assisting welders or handling hot materials

6.4.2.3 Hydrocarbon resistant rubber gloves should be worn to protect the hands when using kerosene or varsol as a cleaning agent.

6.4.3 Barrier Creams/Moisturizing Lotions

6.4.3.1 Barrier creams provide protection from minor exposure to some irritants. Such barrier creams should be evaluated to ensure the proper protection is provided. Barrier creams are NOT a substitute for gloves.

6.4.3.2 Moisturizing lotions/creams should be utilized to restore the natural oils to the skin which are removed through chemical exposure or frequent hand washing.

6.5 Foot Protection

6.5.1 Basic Foot Protection

6.5.1.1 Steel-toed footwear is not required but is highly recommended.

6.5.1.2 Various clients or industrial operations, i.e., sandblasting, MSHA, may require steel-toed footwear.

6.5.1.3 Sneakers, sandals, tennis shoes, high heels, leather soled, street or dress shoes, and thongs shall not be considered approved industrial or construction footwear.

6.5.2 Special Purpose Footwear

6.5.2.1 Special purpose footwear, i.e., rubber boots, shall be selected to provide maximum protection to the employee. Strong consideration should be given to such footwear which incorporates a steel shank and steel toe.

6.5.2.2 Whenever employees may possibly be exposed to corrosives or irritant chemicals, they shall wear the appropriate special purpose footwear.

6.5.3 **Foot Protectors:** Employees performing tasks which potentially expose them to extreme foot injury hazards (i.e., operating a ground tamper, or chipping concrete with jackhammer), shall wear metal foot protectors.

6.6 Clothing

6.6.1 Standard Work Clothing

6.6.1.1 Employees performing tasks on construction projects shall wear appropriate clothing. Cotton is the best all-around material to wear. Synthetic materials are not recommended because they melt easily, and some may burn rapidly when exposed to small ignition sources. Pants should fit properly and not have bell bottoms, large cuffs, or frayed bottoms.

6.6.1.2 Clothing shall be in good repair. Frayed or tattered clothing can be a hazard to the employee.

6.6.1.3 Tank tops or sleeveless (less than 4 inches below shoulder) shirts shall not be worn on the site. If dictated by the client, or the exposures, long sleeve shirts shall be required.

6.6.1.4 Shirts shall be worn tucked in at all times. Employees flame cutting or welding must have clothing suitable for that operation. Clothing should be worn to preclude slag from being caught in cuffs, waist, or pocket openings.

6.6.1.5 Neckties, gauntlet type gloves, and baggy loose, or ragged clothing shall not be worn around, or when working with moving machinery.

6.6.1.6 The wearing of jewelry such as rings, watchbands, necklaces, earrings, or the like can cause or contribute to accidents; therefore, the wearer should take the proper precautions. Loose, dangling jewelry shall not be allowed.

6.6.2 Special Clothing

6.6.2.1 Situations may arise that require the use of special protective clothing to protect the employee from exposure to hazardous materials, such as:

- Corrosives
- Irritants
- Fire
- Heat
- Toxins
- Sensitizers

6.6.2.2 The task exposure shall be evaluated and the employee shall wear the appropriate clothing for the hazard.

6.7 Elevation Safety Equipments

6.7.1 **Safety Belts/Harnesses:** Safety belts/harnesses in association with life lines shall be used as employee protection against falls to a lower level when working without guard rails 6 or more feet above the ground floor or work surface. Client and Company local facility safety policies may require usage at lesser heights. Safety belts/harnesses shall meet ANSI Standard A10.14 requirements. Safety belts/harnesses should be of the drop forged single tongue buckle type. Quick release buckles shall only be used working over water.

6.7.1.1 **Heights:** As a minimum, employees working from an unprotected elevation more than 6 feet above the ground floor shall be required to wear an approved safety belt and be secured to an object of substantial capacity capable of supporting 5,400 pounds (i.e., pipe, structure, cable, or rope life line).

6.7.1.2 **Suspension:** Employees shall additionally wear a safety belt and be secured when working from floats, needle beam scaffolds, boatswain chairs, painter's spiders, etc. Independent life lines shall be required to secure the safety belt.

6.7.1.3 **Aerial Lifts:** Safety belts shall be worn and attached to aerial lifts, personnel baskets, etc., when employees are required to work from these mechanical personnel hoists.

6.7.2 **Lanyard and Lifelines:** The following requirements and specifications shall be strictly adhered to:

6.7.2.1 Safety belts lanyards shall be a minimum of one-half inch nylon rope or the equivalent, with a breaking strength of at least 5,400 pounds.

6.7.2.2 Lanyards shall have a maximum length to provide for a fall of no greater than 6 feet.

6.7.2.3 Life lines and lanyards shall be secured above the point of operation of an anchorage or structural member capable of supporting a minimum dead weight of 5,400 pounds.

6.7.2.4 Personnel performing work on electrical equipment shall use a minimum of one-half inch nylon rope or equivalent. Flexible steel shall not be used.

6.7.2.5 Life lines, lanyards, and safety belts shall be used for employee safeguarding, not as work belts. Using lanyards for other than their intended uses as fall protection is prohibited.

6.7.2.6 Life lines and lanyards shall be protected from cutting, pinching, or burning and shall not be placed over a sharp edge.

6.7.2.7 In hot work operations or work involving the use of acids, solvents, or caustic; lifelines and lanyards shall be kept clear to avoid burning or damage.

6.7.2.8 Flexible steel lanyards are to be restricted to use in rock sealing operations only.

6.7.2.9 A two lanyard system (one lanyard on each side "D" rings) may be needed in climbing from walls, working pipe racks, working on structural iron, etc.

6.7.3 **Storage/General Use:** Safety belts and all supporting equipment shall be stored in a clean, dry place free from abrasive or cutting materials and excessive heat. Any lifeline, safety belt, or lanyard actually subjected to in-service loading, as distinguished from static load testing, shall be immediately removed from service and shall not be used again for employee protection.

6.7.4 Equipment Inspection

6.7.4.1 Prior to issuance, safety belts, lanyards, and lifelines shall be inspected. In additional, they shall be inspected on a regular basis by the wearer. In the event the wearer feels that his or her safety belt, lanyard, or lifeline is not in good condition, it shall be returned immediately for inspection and/or replacement.

6.7.4.2 Inspection shall consist of a visual inspection of:

Belts	Lanyards/life lines
Stitching	Frayed Strands
Rivets	Broken Strands
Buckle Tabs	Rot
"D" Rings	Burns
Rust and Abrasion	Corrosion
Burns	General Appearance
General Appearance	

7. RECORDS

Not applicable.

TITLE: RESPIRATORY PROTECTION

1. PURPOSE

To establish the minimum requirements for ICF Kaiser Engineers (ICF KE) to perform activities associated with respiratory protection.

2. SCOPE

This procedure applies in its entirety to all ICF KE projects unless otherwise indicated within the Project Management Plan or other pertinent planning documents.

3. RESPONSIBILITIES

3.1 The Project Manager has overall responsibility for establishing and ensuring compliance with this procedure.

3.2 The Field Safety and Health Staff is responsible for implementing and/or monitoring activities associated with this procedure.

3.3 It is the responsibility of all managers and supervisory personnel to enforce this procedure and of each employee to follow it.

4. DEFINITIONS

Not applicable.

5. GENERAL REQUIREMENTS

5.1 Respirator wearers cannot be afforded protection from hazardous airborne contaminants when conditions prevent a complete gas-tight face seal. Facial hair, head hair, and eyeglasses are among these physical obstructions. While eyeglasses are in the category of obstructions that prevent a gas-tight face seal, primarily in the case of full-face supplied-air respirators, this problem is correctable by use of mounting devices to hold the eyeglasses. The criteria is that there can be no obstruction of contact between the wearer's skin and the mask whatsoever. Beard stubble constitutes a physical obstruction. Affected employees shall be required to be clean shaven, as a condition of employment.

5.2 Candidates for employment objecting to this policy shall be made aware that their versatility may be limited and that this can affect their job assignments. As a consequence, an individual's attitude regarding the removal of gas-tight face seal obstructions should be assessed prior to employment.

5.3 Respirators shall be provided by the employer whenever a qualified person determines that such equipment is necessary to protect the health of the employee from significant inhalation exposure.

5.4 Only that respirator equipment that has been jointly approved by the Mine Safety and Health Administration (MSHA) and the National Institute for Occupational Safety and Health (NIOSH) shall be provided.

5.5 Employees shall be instructed and trained in the need, use, sanitary care, and limitations of such respiratory equipment prior to assignment to activities requiring respiratory protection.

5.6 ICF KE shall provide, repair, or replace respiratory protective equipment as may be required due to wear and deterioration.

5.7 Means of cleaning all respiratory protective equipment shall be provided.

5.8 Only those employees who are trained in accordance with procedure S&H-9 and medically qualified to wear respirators shall be assigned to respiratory work.

6. IMPLEMENTATION

6.1 Respiratory Selection

6.1.1 When respirator use is required, only properly cleaned and maintained NIOSH/MSHA approved respirators shall be used. Single use respirators (dust masks) may only be used with specific approval by the Field Safety and Health Staff.

6.1.2 Employees shall be allowed to pick the most comfortable respirator from a selection including respirators of various sizes from different manufacturers.

6.1.3 Selection of respirators shall be approved by the Field Safety and Health Staff in all cases, and shall be based on the following considerations:

- Nature of the hazard - The chemical and physical properties, toxicity, and concentration of hazardous material or mixture of materials.
- Oxygen-deficient atmospheres - Entry into oxygen-deficient atmospheres is **prohibited.**
- Immediate Dangerous to Life and Death (IDLH) Atmospheres - Entry into any IDLH atmosphere is **prohibited.**
- Irritant or Corrosive Atmospheres - Respirators selected must provide adequate face and eye protection. The contaminant or

mixture of contaminants must have adequate warning properties (odor, irritation, or taste) to indicate respirator breakthrough if an air-purifying device is used.

6.1.4 **Regulated Materials** - In all cases where OSHA has required that a specific respirator is used (carcinogen standards, Confined Space Entry, etc.), the specified respirator or one providing equal or better protection shall be used.

6.1.5 Air purifying respirators shall not be used for protection against the following materials. This is only a partial listing, contact the Field Safety and Health Staff for further information.

Acrolein	Methyl chloride
Aniline	Methylene chloride
Arsine	Nickel carbonyl
Bromine	Nitrobenzene
Carbon monoxide	Nitrogen oxides
Diisocyanates	Nitroglycerine
Dimethylaniline	Nitromethane
Dimethyl sulfate	Ozone
Hydrogen cyanide	Phosgene
Hydrogen fluoride	Phosphine
Hydrogen selenide	Phosphorus trichloride
Hydrogen sulfide	Stibine
Methanol	Sulfur chloride
Methyl bromide	Vinyl chloride

6.1.6 Full facepiece negative pressure air purifying respirators are not approved for protection against asbestos exposure.

6.2 Use of Corrosive Lens Eyewear in Environments Where Respiratory Protection is Necessary

6.2.1 The wearing of contact lenses in work environments which entails exposure to chemical fumes, vapors, splashes, intense heat, molten metals, or highly particulate-contaminated atmospheres is prohibited.

6.2.2 Management shall assess which employees in their operations wear eye glasses routinely, determine what types (make and models) of respiratory protective masks are used, and assure that the appropriate frames or ophthalmic device hangers are obtained and provided at company expense.

6.3 Employee Training and Instruction

6.3.1 The basic respiratory training program shall include, as a minimum, the following:

6.3.1.1 Instruction in the need for, use, sanitary care, and limitations of each respirator type.

6.3.1.2 Opportunity for "hands-on" experience with respirators.

6.3.1.3 Proper fitting, including demonstrations and practice in wearing, adjusting, and determining the fit of the respirator. A selection of respirators shall be available to determine the most comfortable respirator and the best fit.

6.3.1.4 How to perform a positive and negative pressure test if the facepiece-to-face seal.

6.3.1.5 A familiarization period of wear in normal air.

6.3.1.6 For negative pressure respirators, wearing the respirator in an irritant fume test atmosphere for qualitative fit testing. All qualitative fit testing shall be performed by a qualified person using the protocol found in Attachment C of this procedure or other protocol as designated by specific standards (e.g., asbestos, benzene). Powered air-purifying respirators (PAPRs) shall be worn in a test atmosphere with the power supply disconnected to evaluate fit in the negative pressure mode.

6.3.1.7 Qualitative fit testing shall be performed annually, or more frequently as required by law. Quantitative fit testing may be required for some respirator or contaminants. The Field Safety and Health Staff will determine fit test requirements.

6.3.1.8 Instruction in the nature of the respiratory hazards, whether acute, chronic, or both, and a description of potential health effects if the respirators are not used.

6.3.1.9 Classroom and field training to recognize and cope with emergency situations (including respirator failure).

6.3.2 Subject training shall be repeated annually, and each employee receiving such training shall complete the Respiratory Training Completion Form (found in Appendix B).

6.3.3 Training provided as part of this procedure shall be performed in accordance with procedure S&H-9.

6.4 Respirator Inspection, Cleaning, Maintenance, and Storage

6.4.1 **General:** The Field Safety and Health Staff will define a program to area/facility management for maintenance and care of respirators which shall be adjusted to the type of facility, working conditions, and hazards involved, and shall include the following basic elements:

6.4.1.1 Inspection for defects and/or deterioration.

6.4.1.2 Cleaning and disinfecting in accordance with manufacturers' instruction.

6.4.1.3 Repair as necessary.

6.4.1.4 Establishment and maintenance of a recordkeeping system to document respiratory inspection, repair, and maintenance.

6.4.1.5 Proper storage.

6.4.2 Inspection, Maintenance, and Storage

6.4.2.1 All respirators shall be inspected routinely before, during, and after each use by the user. Any defects shall be reported to supervision. No defective respirator shall be issued or worn. Defective respirators shall be tagged and returned for repair.

6.4.2.2 Respirators maintained for emergency use (such as SCBA) shall be inspected and sanitized after each use and inspected at least monthly. A record of the most recent inspection shall be maintained on the respirator or the storage container; and shall include the inspector's identification, the date, and a respirator identification number. The record shall be made on the Self Contained Breathing Apparatus (SCBA) Monthly Inspection Checklist. Alternate Inspection checklist(s) forms may be used if they contain, as a minimum, the same information.

6.4.2.3 Routinely used respiratory equipment shall regularly cleaned, inspected, and sanitized by an individual qualified by experience or training to do the work.

6.4.2.4 Other types of respiratory equipment shall be maintained according to the manufacturer's instructions.

6.4.2.5 Where respirators are assigned to individual employees, area management shall ensure compliance with cleaning and maintenance requirements by periodic inspection and field audits of respiratory equipment.

6.4.2.6 Respiratory equipment shall not be passed from one person to another until it has been cleaned and sanitized.

6.4.2.7 When not in use, respirators shall be stored to protect against dust, sunlight, extreme temperatures, excessive moisture, damaging chemicals, and physical damage.

6.5 Air Purifying Respirators (APR)

6.5.1 Fit testing shall be accomplished in accordance with Attachment C of this procedure.

6.5.2 When APRs are worn, employees shall change the filter-cartridge elements daily, in the case of cartridges used for non-particulate contaminants, or sooner if "breakthrough" is perceived; and, for other filter cartridges whenever an increase in breathing resistance is detected.

6.6 Powered Air Purifying Respirators (PAPR)

6.6.1 When PAPRs are worn, employees shall change filter/cartridges elements daily, in the case of cartridges used for non-particulate contaminants, or sooner if "breakthrough" is perceived; and for other filter cartridges:

- Whenever an increase in breathing resistance is detected, or
- When airflow through filter elements decreases to an unacceptable level, as indicated by the manufacturer's test device.

6.7 Compressed Air Systems

6.7.1 Air Quality

6.7.1.1 Compressed air used for respiration shall be of high purity, and shall meet, as a minimum, the requirements for the specification for Grade D breathing air as described in Compressed Gas Association Specification G-7.1 (ANSI Z86.1-1973). The supplier shall certify compliance with these requirements for each lot of breathing air supplied.

6.7.1.2 Breathing air shall be free from harmful dusts, fumes, mists, vapors, gases, or odors.

6.7.1.3 Oxygen shall **NOT** be used at any time in open-circuit SCBAs or air-line respirators.

6.7.2 Compressed Air Cylinder Systems (Cascade)

6.7.2.1 Breathing air cylinders shall be legibly identified with the word AIR by means of stenciling, stamping, or labeling as near to the valve end as practical.

6.7.2.2 Cascade systems shall be equipped with low pressure warning bells or similar warning devices to indicate air pressure in the manifold below 500 psi.

6.7.2.3 When a cascade system is used to supply breathing air, one employee shall be assigned as safety standby within audible range of the low pressure alarm.

6.7.2.4 When a cascade system is used to recharge SCBA air cylinders, it shall be equipped with a high-pressure supply hose and coupling rated at a capacity of at least 3000 psi.

6.7.2.5 Air-line couplings shall be incompatible with outlets for other gas systems to prevent inadvertently supplying air-line respirators with nonrespirable gases or oxygen.

6.7.2.6 The air pressure at the hose connection to positive-pressure respiratory equipment shall be within the range specified in the approval of the equipment by the manufacturer.

6.7.2.7 Cylinders shall be stored and handled to prevent damage to the cylinder or valve. Cylinders shall be stored upright with the protective valve cover in place and, in such a way (e.g., supported with substantial rope or chain in the upper one-third of the cylinder, or in racks designed for this purpose) as to prevent the cylinder from falling. Cylinders shall not be dropped, dragged, rolled, or allowed to strike each other or to be struck violently. Cylinders shall never be exposed to temperatures exceeding 125°F. Cylinders with visible external damage, evidence of corrosion damage, or exposure to fire shall not be accepted or used.

6.7.2.8 Only cylinders within current hydrostatic test periods shall be used.

6.7.3 Compressor Supplied Breathing Air

6.7.3.1 All compressors used for supplying breathing air shall be equipped with the following safety and standby devices:

- The compressor intake shall be located to assure that only respirable (uncontaminated) air is admitted. This requires attention to the location of the compressor intake with respect to compressor engine exhaust, chemical storage or use areas, and suitable intake screening or filtration.

- Alarms to indicate compressor failure (such as low-pressure air horns, etc.) shall be installed in the system.

- A receiver of sufficient capacity to enable the respirator wearer to exit from a contaminated atmosphere upon compressor failure shall be provided.

- Oil lubricated compressors - if an oil-lubricated compressor is used to supply breathing air, it shall be equipped with **both** of the following devices:

  1) Continuous reading carbon monoxide monitoring system set to alarm should the carbon monoxide concentration exceed 10 ppm.

  2) High temperature alarm which will activate when the discharge air exceeds 110% of the normal operating temperature in degrees Fahrenheit.

- A designated employee shall be assigned as safety standby who shall remain continuously within audible range of the alarms.

- An inline purifying filter assembly to remove oil, condensed water, particulate, odors, and organic vapors shall be used in conjunction with the air compressor.

6.7.3.2 Routine inspection and maintenance of the air compressor shall be performed in accordance with manufacturer's specifications.

6.8 Escape/Egress Units

6.8.1 These respirators are intended for use in areas where escape with a short-term (5-10 minute) air supply is necessary. They may be used as adjuncts to airline pressure demand respirators as a backup air supply; or as independent emergency devices in areas where respiratory protection is not normally required.

6.8.2 Appropriate training shall be accomplished and documented prior to assigning employees to tasks or locations subject to the use of these respirators.

6.8.3 Escape/egress units shall never be used as primary standby respirators for confined space entry.

6.9 Medical Surveillance

6.9.1 A medical questionnaire for respiratory users shall be completed by all potential candidates, prior to respiratory use. A more comprehensive medical evaluation may be required based on the results of the questionnaire.

6.9.2 No employee shall be assigned to a task that requires the use of a respirator unless it has been determined that he/she is physically able to perform the work while using the required respirator.

6.9.3 If an employee experienced difficulty in breathing during the fitting test or during use, he or she shall be re-examined by a physician to determine whether the employee can wear a respirator while performing the required duty.

6.9.4 Once a medical determination has been made to physical ability to wear a respirator, a review of the employee's health status shall be made at a minimum annually.

7. RECORDS

The following records are shown in Appendix B of this manual and are used for documenting activities associated with this procedure. Requirements for record distribution, retention, and maintenance is established within applicable project planning documents.

- Respirator Training Completion Form
- SCBA Monthly Inspection Checklist
- Medical Questionnaire for Respirator Users

ATTACHMENT A

MSA ULTRA-TWIN INSPECTION AND CHECKOUT

1. Visually inspect the entire unit for any obvious damage, defects, deterioration and/or extreme distortion.

2. Make sure that the facepiece harness is not damaged. The serrated portion of the harness can fragment, and this will prevent proper face seal adjustments.

3. Inspect the lens for damage, excessive scratching and cracks (which could interfere with proper vision) and for proper fit in the facepiece. Ensure that the retaining clamp is properly in place.

4. Pull off the cover to the exhalation valve and check the valve for debris, buildup of foreign materials or for tears in the valve (which could cause leakage).

5. Screw off cartridges and visually inspect inhalation valves (two) for tears and/or debris. Make sure that the inhalation valves and cartridge receptacle gaskets are in place and that their integrity has been breached.

6. Make sure that a protective lens cover is attached to the lens.

7. Make sure that the speaking diaphragm retaining ring is in tight.

8. Make sure that the correct cartridges are being used.

9. Don and perform a positive and negative pressure test (as described in Attachment C).

ATTACHMENT B

MSA 401/ULTRA-LITE SCBA INSPECTION AND CHECKOUT

MONTHLY INSPECTION

1. Check cylinder label for current hydrostatic test.

2. Inspect cylinder for dents and/or gouges, and unwrapping of the fiberglass wrap.

3. Inspect cylinder gauge for damage.

4. Complete routine inspection (see below).

5. Fill out the appropriate records with results and recommendations.

ROUTINE INSPECTION (Perform immediately prior to donning and after cleaning)

1. Before preceding check that the:

   - High-pressure hose connector is tightly on the cylinder fitting.
   - By-pass valve is closed.
   - Mainline valve is closed.
   - O-rings are intact.

2. Backpack and harness assembly:

   - Visually inspect straps for wear, damage, and completeness.
   - Check wear (especially around attachment points and around serrated areas) and function of belts.
   - Check backplate and cylinder retaining ring for damage and functioning.

3. Cylinder and high pressure hose assembly:

   - Check cylinder to assure that it is firmly attached to the backpack.
   - Open cylinder valve; listen or feel for leakage around packing and hose connection.
   - Check high pressure hose for damage or leaks.

4. Regulator:

   - Cover regulator outlet with palm of hand.
   - Open mainline valve.
   - Note stoppage of air flow after positive pressure builds.
   - Close mainline valve and remove hand from regulator outlet.

ATTACHMENT B (continued)

- Open by-pass valve slowly to assure proper functioning (DO NOT COVER REGULATORY OUTLET).
- Close by-pass valve.
- Cover regulator outlet again with palm of hand.
- Open mainline valve.
- Note pressure reading on regulator gauge.
- Close cylinder valve while keeping hand over regulator outlet.
- Slowly remove hand from outlet and allow air to escape.
- Note pressure between low-pressure alarm warning sounds; it should be between 550-650 psi.
- Remove hand from regulator outlet.
- Close mainline valve.
- Check regulator for leaks by blowing air into the regulator for 5-10 seconds. Draw air from regulator outlet for 5-10 seconds. If a positive pressure or vacuum (negative pressure) cannot be maintained, there is a leak. **DO NOT USE SCBA.**

5. Facepiece and corrugated breathing tube:

- Visually inspect facepiece and harness for damage, serration and deteriorated rubber.
- Inspect lens for damage and proper seal in the facepiece. Inspect exhalation valve for damage and buildup of foreign materials.
- Stretch breathing tube and carefully inspect for holes and deterioration.
- Inspect connector for damage and presence/integrity of O-ring.
- Perform positive and negative pressure checks with facepiece donned.

6. Storage:

- Refill cylinder to 2,216 psi.
- Close cylinder valve.
- Tightly connect high pressure hole to cylinder.
- Bleed pressure from high pressure hose to opening mainline valve.
- Close mainline valve and by-pass valves.
- Fully extend all straps.
- Store facepiece in a clean plastic bag for protection.
- Store entire unit in provided carrying case.

ATTACHMENT C

ICF KE MANDATORY QUALITATIVE RESPIRATOR FIT TEST PROTOCOL

NOTE: This protocol does not satisfy the fit test requirements for certain materials including asbestos and benzene. Contact the Field Safety and Health Staff for assistance.

A. Respirator Selection

Respirators shall be selected as described in this procedure. The respirator shall be equipped with HEPA filters.

B. Fit Test

1. The test conductor shall review this protocol with the test subject before testing.

2. The test subject shall perform the conventional positive and negative pressure fit checks.

   Negative Pressure Test - Cover the cartridge/filter inlets with your palm and gently inhale. The facepiece should collapse against the face.

   Positive Pressure Test - Cover the exhalation valve cover with your palm and gently exhale. The facepiece should expand away from the face.

   If either test fails, loosen and readjust the respirator straps and check for obstructions to the sealing surface. Repeat both tests. If the test(s) fail again, select an alternate respirator.

3. A test atmosphere shall be generated with irritant smoke.

4. The test subject shall be advised that the smoke can be irritating to the eyes and instructed to keep the eyes closed while the test is being conducted (applies to half-mask respirators).

5. While wearing the selected respirator, the test subject shall enter the test atmosphere and perform the following exercises:

   - Breathe normally.
   - Breathe deeply. Be certain breaths are deep and regular.
   - Turn head all the way from one side to the other. Be certain movement is complete. Inhale on each side. Do not bump the respirator against the shoulders.

ATTACHMENT C (continued)

- Nod head up and down. Be certain motions are complete and made every second. Inhale on each side. Do not bump the respirator against the shoulders.

- Nod head up and down. Be certain motions are complete and made every second. Inhale when head is in the full up position (looking toward ceiling). Do not bump the respirator against the chest.

- Talking. Talk aloud and slowly in a fashion which will generate a wide range of facial movements.

- Breathe normally.

6. The test subject shall indicate to the test conductor if the irritant smoke is detected. If smoke is detected, the test conductor shall stop the test. In this case, the tested respirator is rejected and another respirator shall be selected.

7. Each test subject passing the smoke test (i.e., without detecting the smoke) shall be given a sensitivity check of smoke from the same tube to determine if the test subject reacts to the smoke. This may be performed by cracking the mask and gently inhaling while inside the test atmosphere. Failure to evoke a response shall void the fit test.

8. The test shall not be conducted if there is any hair growth between the skin and the facepiece sealing surface.

9. If hair growth or apparel interfere with a satisfactory fit, then they shall be altered or removed so as to eliminate interference and allow a satisfactory fit. If a satisfactory fit is still not attained, the test subject must use a positive-pressure respirator, such as powered air-purifying respirators, supplied air respirator, or self-contained breathing apparatus.

10. If a test subject exhibits difficulty in breathing during the tests, she or he shall be referred to a physician trained in respiratory diseases or pulmonary medicine to determine whether the test subject can wear a respirator while performing her or his duties.

11. Qualitative fit testing shall be repeated at least every year, or more often as required by law.

12. In addition, because the sealing of the respirator may be affected, qualitative fit testing shall be repeated immediately when the test subject has experienced:

    - Weight change of 20 pounds or more.

    - Significant facial scarring in the area of the facepiece seal.

ATTACHMENT C (continued)

- Significant dental changes, i.e., multiple extractions without prothesis, or acquisition of dentures.

- Reconstructive or cosmetic surgery.

- Any other conditions that may interfere with facepiece sealing.

C. Recordkeeping

A summary of all test results shall be maintained in each office for 3 years. Permanent records shall be maintained by the Safety and Health Services Unit. The summary shall include:

- Name of test subject.
- Date of testing.
- Name of test conductor.
- Respirators selected (indicate manufacturer, model, size, and approval number).
- Testing agent.

RESPIRATOR TRAINING COMPLETION FORM

FIT TEST PROTOCOL USED:

__ Standard

__ Other (Specify) _____

BUSINESS UNIT _____

FIT TEST CONDUCTED BY: _____

Initial only the apropriate blocks

LOCATION _____

DATE _____

NAME _____ (print please) SIG. _____ SS# _____	SCBA Model: Size: S M L	AIRLINE PRESSURE DEMAND Size: S M L Brand:	PAPR Model: Size: S M L	AIR PURIFYING FULL FACE Size: S M L Brand:	AIR PURIFYING HALF MASK Size: S M L Brand:	OTHER
1. I understand why respiratory protection is needed and where and when it should be used.						
2. I know how to use this respirator properly.						
3. I know how to clean and inspect this respirator.						
4. I understand the limitations and restrictions of the respirators I will be using.						
5. I wore this respiratory equipment in normal air and checked the facepiece fit.						
6. I wore this respiratory equipment in a test atmosphere generated by smoke or other means.						
7. I understand that a good gas-tight face seal cannot be achieved with obstruction such as facial hair or glasses (with fullface mask).						

Form No. S&H21-001

SCBA MONTHLY INSPECTION CHECKLIST

'SPECTED BY: _____ BACKPACK # _____

ATE: _____ AIR CYLINDERS # _____

		PASS		FAIL
A. BACKPACK AND HARNESS ASSEMBLY	1. STRAPS	___	INSPECT FOR COMPLETE SET	___
		___	INSPECT FOR DAMAGED STRAPS	___
	2. BUCKLES	___	INSPECT FOR MATING ENDS	___
		___	CHECK LOCKING FUNCTION	___
	3. BACKPLATE AND CYLINDER LOCK	___	INSPECT BACKPLATE FOR CRACKS, MISSING SCREWS/RIVETS	___
		___	INSPECT CYLINDERS HOLD DOWN STRAP	___
		___	INSPECT STRAP TIGHTENER	___
B. CYLINDER AND CYLINDER VALVE ASSEMBLY	1. CYLINDER	___	CYLINDER TIGHT TO BACKPLATE	___
		___	CURRENT HYDROSTATIC TEST	___
		___	INSPECT CYLINDER FOR DENTS/GOUGES	___
	2. HEAD AND VALVE ASSEMBLY	___	INSPECT CYLINDER VALVE FOR CONDITION	___
		___	INSPECT CYLINDER GAUGE FOR CONDITION	___
		___	TEST FOR CYLINDER VALVE LEAKAGE	___
REGULATOR AND HIGH PRESSURE HOSE	1. HIGH PRESSURE HOSE HOSE AND CONNECTOR	___	LEAKAGE IN HOSE	___
		___	LEAKAGE IN HOSE-TO CYLINDER CONNECTOR	___
	2. REGULATOR AND LOW PRESSURE ALARM	___	READ REGULATOR GAUGE (AT LEAST 2000 PSI)	___
		___	LOW PRESSURE ALARM SOUNDS AT 500 - 650 PSI	___
		___	TEST INTEGRITY OF DIAPHRAM	___
		___	TEST FOR POSITIVE PRESSURE	___
		___	TEST BY PASS SYSTEM	___
D. FACEPIECE AND CORRUGATED BREATHING TUBE	1. FACEPIECE	___	INSPECT HARNESS FOR DETERIORATION	___
		___	INSPECT FACEPIECE BODY FOR DETERIORATION	___
		___	INSPECT LENS	___
		___	INSPECT EXHALATION VALVE	___
	2. BREATHING TUBE AND CONNECTOR	___	INSPECT BREATHING TUBE FOR DETERIORATION	___
		___	INSPECTION THREADS AND GASKET	___
	3. LEAK TEST AND CLEANING	___	PERFORM NEGATIVE PRESSURE TEST ON FACEPIECE/BREATHING TUBE	___
		___	CLEAN AND SANITIZE FACEPIECE	___

)TE: ANY ITEM MARKED "FAIL" WILL PLACE SCBA OUT OF SERVICE.

Form No. S&H21-002

MEDICAL QUESTIONNAIRE FOR RESPIRATOR USERS

Name	Date
Social Security No.	Payroll No.

1. Have you ever worn a respirator before? ☐ Yes ☐ No

2. Have you ever been fit tested? ☐ Yes ☐ No

   If YES, describe type of respirator fit tested and approximate date of test.

   _____

   _____

   If YES, describe any apparent difficulties noted with respirator use. _____

   _____

   _____

   _____

   _____

3. Have you had or do you now have any of the following:

   A. Lung disease ☐ Yes ☐ No

   B. Persistent cough ☐ Yes ☐ No

   C. Heart trouble ☐ Yes ☐ No

   D. Shortness of breath ☐ Yes ☐ No

   E. Sensation of smothering ☐ Yes ☐ No

   F. Ruptured ear drum ☐ Yes ☐ No

   G. Other conditions that might interfere with respirator use or result in limited work ability ☐ Yes ☐ No

   H. Medical restrictions ☐ Yes ☐ No

   Please explain any YES answers* _____

   _____

   _____

   _____

   _____

   _____

Employee Signature	Approval Signature

Form No. S&H21-003

APPENDIX B
HEALTH AND SAFETY PLAN ADDENDUM/REVISION FORM

HEALTH AND SAFETY PLAN ADDENDUM/REVISION

Section _____

Addendum _____

Revision _____

Effective Date _____

Approved By:

Project Health and Safety Officer

_____

Date _____

SITE DESIGNATION/LOCATION

EG&G Mound Site

B Solvent Storage Shed

SUBJECT:

Concurrence:

Project Manager

_____

Date _____

Sheet _____ of _____

APPENDIX C
MATERIAL SAFETY DATA SHEETS

OH 670

SECTION 1 CHEMICAL PRODUCTS & COMPANY IDENTIFICATION

OCCUPATIONAL HEALTH SERVICES, INC.
11 WEST 42ND STREET, 12TH FLOOR
NEW YORK, NEW YORK 10036
1-800-445-MSDS (1-800-445-6737) OR
1-212-789-3535

FOR EMERGENCY SOURCE INFORMATION
CONTACT: 1-615-366-2000 USA

CAS NUMBER: 156-60-5
RTECS NUMBER: KV9400000

SUBSTANCE: TRANS-1,2-DICHLOROETHYLENE

TRADE NAMES/SYNONYMS:
TRANS-ACETYLENE DICHLORIDE; TRANS-DICHLOROETHYLENE;
TRANS-1,2-DICHLOROETHENE; RCRA U079; C2H2CL2; OHS23670

CHEMICAL FAMILY:
Halogen compound, aliphatic

CREATION DATE: 09/07/84 REVISION DATE: 01/15/94

SECTION 2 COMPOSITION/INFORMATION ON INGREDIENTS

COMPONENT : TRANS-1,2-DICHLOROETHYLENE
CAS NUMBER: 156-60-5
PERCENTAGE: 100.0

OTHER CONTAMINANTS: NONE.

SECTION 3 HAZARDS IDENTIFICATION

CERCLA RATINGS (SCALE 0-3): HEALTH=2 FIRE=3 REACTIVITY=2 PERSISTENCE=1
NFPA RATINGS (SCALE 0-4): HEALTH=2 FIRE=3 REACTIVITY=2

EMERGENCY OVERVIEW:
Colorless liquid with a pleasant odor.
Causes respiratory tract, skin and eye irritation. May affect the central nervous system. Flammable liquid and vapor. May cause flash fire. May react dangerously with water. May form explosive peroxides on standing.
Keep away from all ignition sources. Do not allow water to get in container. Avoid breathing vapor or mist. Avoid contact with eyes, skin and clothing. Do not allow to evaporate or distill to dryness. Keep container tightly closed. Wash thoroughly after handling. Use only with adequate ventilation.

POTENTIAL HEALTH EFFECTS:
ALATION:
ORT TERM EFFECTS: May cause irritation. Additional effects may include nausea, vomiting, weakness, drowsiness, drunkeness, twitching and

nconsciousness.
ONG TERM EFFECTS: May cause lack of appetite.
SKIN CONTACT:
SHORT TERM EFFECTS: May cause irritation.
LONG TERM EFFECTS: Same effects as short term exposure.
EYE CONTACT:
SHORT TERM EFFECTS: May cause irritation.
LONG TERM EFFECTS: Same effects as short term exposure.
INGESTION:
SHORT TERM EFFECTS: May cause drunkeness.
LONG TERM EFFECTS: No information available on significant adverse effects.

CARCINOGEN STATUS:
OSHA: N
NTP: N
IARC: N

SECTION 4 FIRST AID MEASURES

INHALATION:
FIRST AID- Remove from exposure area to fresh air immediately. If breathing has stopped, perform artificial respiration. Keep person warm and at rest. Treat symptomatically and supportively. Get medical attention immediately.

SKIN CONTACT:
FIRST AID- Remove contaminated clothing and shoes immediately. Wash affected area with soap or mild detergent and large amounts of water until no evidence of chemical remains (approximately 15-20 minutes). Get medical attention immediately.

EYE CONTACT:
FIRST AID- Wash eyes immediately with large amounts of water or normal saline, occasionally lifting upper and lower lids, until no evidence of chemical remains (approximately 15-20 minutes). Get medical attention immediately.

INGESTION:
FIRST AID- Remove by gastric lavage or emesis. Maintain blood pressure and airway. Give oxygen if respiration is depressed. Do not perform gastric lavage or emesis if victim is unconscious. Get medical attention immediately (Dreisbach, Handbook of Poisoning, 12th Ed.). Administration of gastric lavage or oxygen should be performed by qualified medical personnel.

NOTE TO PHYSICIAN
ANTIDOTE:
No specific antidote. Treat symptomatically and supportively.

SECTION 5 FIRE FIGHTING MEASURES

FIRE AND EXPLOSION HAZARD:
Dangerous fire hazard when exposed to heat or flame.

V[illegible]r-air mixtures are explosive above flash point.

Vapors are heavier than air and may travel a considerable distance to a source of ignition and flash back.

EXTINGUISHING MEDIA:
Dry chemical, carbon dioxide, water spray or regular foam
(1990 Emergency Response Guidebook, DOT P 5800.5).

For larger fires, use water spray, fog or regular foam
(1990 Emergency Response Guidebook, DOT P 5800.5).

FIREFIGHTING:
Move container from fire area if you can do it without risk. Apply cooling water to sides of containers that are exposed to flames until well after fire is out. Stay away from ends of tanks. For massive fire in cargo area, use unmanned hose holder or monitor nozzles; if this is impossible, withdraw from area and let fire burn. Withdraw immediately in case of rising sound from venting safety device or any discoloration of tank due to fire. Isolate for 1/2 mile in all directions if tank, rail car or tank truck is involved in fire (1990 Emergency Response Guidebook, DOT P 5800.5, Guide Page 27).

Extinguish only if flow can be stopped; use flooding amounts of water as a fog, solid streams may be ineffective. Cool containers with flooding a[illegible]unts of water, apply from as far a distance as possible. Avoid breathing v[illegible]rs, keep upwind.

Water may be ineffective except as a blanket (NFPA 325M, Fire Hazard Properties of Flammable Liquids, Gases, and Volatile Solids, 1984)

FLASH POINT: 36 F (2 C) (CC)
LOWER FLAMMABLE LIMIT: 9.7%
UPPER FLAMMABLE LIMIT: 12.8%
AUTOIGNITION: 860 F (460 C)
FLAMMABILITY CLASS(OSHA): IB

HAZARDOUS COMBUSTION PRODUCTS:
Thermal decomposition products may include highly toxic fumes of phosgene, toxic and corrosive fumes of chlorides, and oxides of carbon.

SECTION 6 ACCIDENTAL RELEASE MEASURES

OCCUPATIONAL SPILL:
Shut off ignition sources. Stop leak if you can do it without risk. Use water spray to reduce vapors. For small spills, take up with sand or other absorbent material and place into containers for later disposal. For larger spills, dike far ahead of spill for later disposal. No smoking, flames or flares in hazard area. Keep unnecessary people away; isolate hazard area and restrict entry.

[illegible]rtable Quantity (RQ): 1000 pounds
T[illegible] Superfund Amendments and Reauthorization Act (SARA) Section 304 requires that a release equal to or greater than the reportable quantity for this

stance be immediately reported to the local emergency planning committee the state emergency response commission (40 CFR 355.40). If the release of this substance is reportable under CERCLA Section 103, the National Response Center must be notified immediately at (800) 424-8802 or (202) 426-2675 in the metropolitan Washington, D.C. area (40 CFR 302.6).

SECTION 7 HANDLING AND STORAGE

Observe all federal, state and local regulations when storing this substance.

Store in accordance with 29 CFR 1910.106.

Bonding and grounding: Substances with low electroconductivity, which may be ignited by electrostatic sparks, should be stored in containers which meet the bonding and grounding guidelines specified in NFPA 77-1983, Recommended Practice on Static Electricity.

Store away from incompatible substances.

SECTION 8 EXPOSURE CONTROLS/PERSONAL PROTECTION

EXPOSURE LIMITS:
1,2-DICHLOROETHYLENE (ALL ISOMERS):
200 ppm (793 mg/m3) OSHA TWA
200 ppm (793 mg/m3) ACGIH TWA
200 ppm (793 mg/m3) NIOSH recommended TWA
200 ppm (793 mg/m3) DFG MAK TWA;
400 ppm (1586 mg/m3) DFG MAK 30 minute peak, average value, 4 times/shift

Measurement method: Charcoal tube/carbon disulfide; gas chromatography with flame ionization detection; (NIOSH Vol. III # 1003, Halogenated Hydrocarbons).

Subject to SARA Section 313 Annual Toxic Chemical Release Reporting

TRANS-1,2-DICHLOROETHYLENE:
1000 pounds CERCLA Section 103 Reportable Quantity

VENTILATION:
Provide local exhaust ventilation to meet published exposure limits. Ventilation equipment should be explosion-proof if explosive concentrations of dust, vapor or fume are present.

EYE PROTECTION:
Employee must wear splash-proof or dust-resistant safety goggles and a faceshield to prevent contact with this substance.

Emergency wash facilities:
Where there is any possibility that an employee's eyes and/or skin may be exposed to this substance, the employer should provide an eye wash fountain and quick drench shower within the immediate work area for emergency use.

C THING:
Employee must wear appropriate protective (impervious) clothing and equipment to prevent repeated or prolonged skin contact with this substance.

GLOVES:
Employee must wear appropriate protective gloves to prevent contact with this substance.

RESPIRATOR:
The following respirators and maximum use concentrations are recommendations by the U.S. Department of Health and Human Services, NIOSH Pocket Guide to Chemical Hazards; NIOSH criteria documents or by the U.S. Department of Labor, 29 CFR 1910 Subpart Z.
The specific respirator selected must be based on contamination levels found in the work place, must not exceed the working limits of the respirator and be jointly approved by the National Institute for Occupational Safety and Health and the Mine Safety and Health Administration (NIOSH-MSHA).

1,2-DICHLOROETHYLENE (ALL ISOMERS):

1000 ppm- Any powered air-purifying respirator with organic vapor cartridges.
Any chemical cartridge respirator with an organic vapor canister and a full facepiece.

4000 ppm- Any supplied-air respirator operated in a continuous flow mode.
Any air-purifying full facepiece respirator (gas mask) with a chin-style or front- or back-mounted organic vapor canister.
Any supplied-air respirator with a full facepiece.
Any self-contained breathing apparatus with a full facepiece.

Escape- Any air-purifying full facepiece respirator (gas mask) with a chin-style or front- or back-mounted organic vapor canister.
Any appropriate escape-type self-contained breathing apparatus.

FOR FIREFIGHTING AND OTHER IMMEDIATELY DANGEROUS TO LIFE OR HEALTH CONDITIONS:

Any self-contained breathing apparatus that has a full facepiece and is operated in a pressure-demand or other positive-pressure mode.

Any supplied-air respirator that has a full facepiece and is operated in a pressure-demand or other positive-pressure mode in combination with an auxiliary self-contained breathing apparatus operated in pressure-demand or other positive-pressure mode.

SECTION 9 PHYSICAL AND CHEMICAL PROPERTIES

DESCRIPTION: Colorless liquid with a pleasant odor.
MOLECULAR WEIGHT: 96.94
MOLECULAR FORMULA: C2-H2-CL2
BOILING POINT: 118 F (48 C)
MELTING POINT: -58 F (-50 C)
VAPOR PRESSURE: 400 mmHg @ 87 F
VAPOR DENSITY: 3.34

SPECIFIC GRAVITY: 1.2565
WATER SOLUBILITY: slightly soluble
SOLVENT SOLUBILITY: Soluble in ethanol and ethyl ether.

SECTION 10 STABILITY AND REACTIVITY

REACTIVITY:
May form explosive peroxides in air.
Unless inhibited, gradual decomposition by air, light, ultaviolet light and moisture may release corrosive hydrogen chloride.

CONDITIONS TO AVOID:
Avoid contact with heat, sparks, flames, or other sources of ignition. Vapors may be explosive. Avoid overheating of containers; containers may violently rupture in heat of fire. Avoid contamination of water sources.

INCOMPATIBILITIES:
1,2-DICHLOROETHYLENE (ALL ISOMERS):
- CAUSTIC ALKALIES (SOLID OR CONCENTRATED SOLUTIONS): May form explosive, spontaneously flammable chloroacetylene.
- COPPER OR COPPER ALLOYS: May form explosive, spontaneously flammable chloroacetylene.
- DIFLUOROMETHYLENE DIHYPOFLUORITE (WITH TRANS-ISOMER): Violent explosion at room temperature.
- FREE RADICAL INITIATOR: Oxidation forms corrosive chloroacetyl chloride via epoxide intermediates.
- METAL (HOT): Gradual decomposition with release of corrosive hydrogen chloride.
- NITROGEN TETROXIDE: Explosive, especially when shocked.
- OXIDIZERS (STRONG): Fire and explosion hazard.
- OZONE: Form explosive product.
- PERCHLORYL FLUORIDE: Explosive reaction on heating.
- POTASSIUM HYDROXIDE (SOLID OR CONCENTRATED SOLUTION): May form explosive, spontaneously flammable chloroacetylene.
- PLASTICS, RUBBER AND COATINGS: May be attacked.
- SODIUM: May form explosive, spontaneously flammable chloroacetylene.
- SODIUM HYDROXIDE (SOLID OR CONCENTRATED SOLUTION): May form explosive, spontaneously flammable chloroacetylene.
- SULFURIC ACID (CONCENTRATED): Oxidation forms corrosive chloroacetyl chloride via epoxide intermediates.
- STRONG OXIDIZERS: Vigorous reaction or possible fire and explosion hazard.

HAZARDOUS DECOMPOSITION:
Thermal decomposition products may include highly toxic fumes of phosgene, toxic and corrosive fumes of chlorides, and oxides of carbon.

POLYMERIZATION:
Slightly susceptible to polymerization, but not likely unless the material becomes contaminated. Both isomers dimerize to tetrachlorobutene in the presence of organic peroxides. The polymerization reaction is not vigorous.

SECTION 11 TOXICOLOGY INFORMATION

TRANS-1,2-DICHLOROETHYLENE:
IRRITATION DATA: 500 mg/24 hours skin-rabbit moderate; 10 mg eye-rabbit moderate.
TOXICITY DATA: 4800 mg/m3/10 minutes inhlalation-human TCLo; 75000 mg/m3/2 hours inhalation-mouse LCLo; 43000 mg/m3/6 hours inhalation-cat LCLo; 200 ppm/8 hours/16 weeks-intermittent inhalation-rat TCLo; >5 gm/kg skin-rabbit LD50; 1235 mg/kg oral-rat LD50; 2122 mg/kg oral-mouse LD50; 7411 mg/kg intraperitoneal-rat LD50; 3952 mg/kg intraperitoneal-mouse LD50; mutagenic data (RTECS).
CARCINOGEN STATUS: None.
LOCAL EFFECTS: Irritant- inhalation, skin, eye.
ACUTE TOXICITY LEVEL: Moderately toxic by ingestion; slightly toxic by dermal absorption.
TARGET EFFECTS: Central nervous system depressant. Poisoning may affect the lung, liver and kidneys.
AT INCREASED RISK FROM EXPOSURE: Persons with chronic respiratory disease.
ADDITIONAL DATA: Stimulants such as epinephrine and ephedrine may enhance the toxicity of some halogenated hydrocarbons.

HEALTH EFFECTS
INHALATION:
1,2-DICHLOROETHYLENE (ALL ISOMERS):
IRRITANT/NARCOTIC. 4000 ppm Immediately Dangerous to Life or Health.
ACUTE EXPOSURE- Vapor exposure may cause mucous membrane irritation, nausea, vomiting, dizziness, weakness, tremor, and epigastric cramps. Higher levels may cause central nervous system depression ranging from drowsiness to unconsciousness. The cis- and trans- isomers together have been used as an anesthetic in man. A human death has been reported from industrial exposure. An 8 hour exposure to the trans- isomer at 200 ppm lowered the leukocyte count in rats; 1000 ppm caused a fall in the blood serum albumin, urea nitrogen, alkaline phosphatase activity, and the number of erythrocytes. Narcosis was not produced at these levels. 3000 ppm produced fibrous swelling of the cardiac muscle and hyperemia which persisted for 14 hours after exposure. The cis- isomer did not anesthetize rats in 4 hours at 8000 ppm, but at 16,000 ppm they were anesthetized in 8 minutes and killed in 4 hours. Reversible superficial corneal turbidity has been observed in some anesthetized dogs.
CHRONIC EXPOSURE- Variations in data exist on the chronic toxicity of the cis- and trans- isomers. Rats exposed to 200 ppm of the trans- isomer for 8 hours/day, 5 days/week for 16 weeks showed histological evidence of slight to severe fatty degeneration of liver lobules and kupffer cells, marked pulmonary hyperemia, alveolar septal distension and fibrous swelling of the cardiac muscle. Similar exposures with rats, guinea pigs, rabbits and dogs exposed to 500 ppm or 1000 ppm 7 hours/day, 5 days/week for 6 months to a mixture of 60% cis- and 40% trans- isomers resulted in no adverse effects detected. Cats and rabbits were repeatedly exposed to vapor concentrations of 0.16-0.19% in air. The cis- isomer caused anorexia, decreased body weight and pathological changes in the lungs, liver, and kidneys. The trans- isomer caused anorexia and some respiratory irritation, but no histopathological changes in organs.

SKIN CONTACT:
1,2-DICHLOROETHYLENE (ALL ISOMERS):

ITANT.
UTE EXPOSURE- Direct contact may cause irritation. Skin absorption may occur due to lipid solubility.
CHRONIC EXPOSURE- Repeated or prolonged contact may cause dermatitis.

EYE CONTACT:
1,2-DICHLOROETHYLENE (ALL ISOMERS):
IRRITANT.
ACUTE EXPOSURE- Direct contact, or the vapor in sufficient concentration, may cause irritation. The trans- isomer caused burning of the eyes at 2000 ppm. Reversible superficial corneal turbidity has been reported as a systemic effect in dogs following inhalation exposure.
CHRONIC EXPOSURE- Repeated or prolonged contact with irritants may cause conjunctivitis.

INGESTION:
1,2-DICHLOROETHYLENE (ALL ISOMERS):
NARCOTIC.
ACUTE EXPOSURE- Depending on exposure, symptoms may vary from slight central nervous system depression to deep narcosis.
CHRONIC EXPOSURE- Used as a low temperature extracting agent for heat sensitive substances such as caffeine in coffee, perfumes, and oils and fats from fish and meat. Mice exposed to 22 mg/kg or 220 mg/kg of trans-1,2 dichloroethylene by gavage for 14 consecutive days showed a trend toward suppression of the humoral immune response, but no effect on the cell-mediated immune response.

SECTION 12 ECOLOGICAL INFORMATION

ENVIRONMENTAL IMPACT RATING (0-4): no data available

ACUTE AQUATIC TOXICITY: no data available

DEGRADABILITY: no data available

LOG BIOCONCENTRATION FACTOR (BCF): no data available

LOG OCTANOL/WATER PARTITION COEFFICIENT: no data available

SECTION 13 DISPOSAL INFORMATION

Observe all federal, state and local regulations when disposing of this substance.

Disposal must be in accordance with standards applicable to generators of hazardous waste, 40 CFR 262. EPA Hazardous Waste Number D001.
100 pound CERCLA Section 103 Reportable Quantity.

US EPA RCRA Hazardous Waste Number: RCRA U079

SECTION 14 TRANSPORTATION INFORMATION

U.S. DEPARTMENT OF TRANSPORTATION SHIPPING NAME-ID NUMBER, 49 CFR 172.101:
Flammable liquids, n.o.s.-UN 1993

U.S. DEPARTMENT OF TRANSPORTATION HAZARD CLASS OR DIVISION, 49 CFR 172.101:
3 - Flammable liquid

U.S. DEPARTMENT OF TRANSPORTATION PACKING GROUP, 49 CFR 172.101:
PG II

U.S. DEPARTMENT OF TRANSPORTATION LABELING REQUIREMENTS, 49 CFR 172.101
AND SUBPART E:
Flammable liquid

U.S. DEPARTMENT OF TRANSPORTATION PACKAGING AUTHORIZATIONS:
EXCEPTIONS: 49 CFR 173.150
NON-BULK PACKAGING: 49 CFR 173.202
BULK PACKAGING: 49 CFR 173.242

U.S. DEPARTMENT OF TRANSPORTATION QUANTITY LIMITATIONS 49 CFR 172.101:
PASSENGER AIRCRAFT OR RAILCAR: 5 l
CARGO AIRCRAFT ONLY: 60 l

SECTION 15 REGULATORY INFORMATION

TSCA STATUS: Y

CERCLA SECTION 103 (40CFR302.4):	Y	1000 pounds RQ
SARA SECTION 302 (40CFR355.30):	N	
SARA SECTION 304 (40CFR355.40):	N	
SARA SECTION 313 (40CFR372.65):	Y	
OSHA PROCESS SAFETY (29CFR1910.119):	N	
CALIFORNIA PROPOSITION 65:	N	

SARA HAZARD CATEGORIES, SARA SECTIONS 311/312 (40 CFR 370.21)

ACUTE HAZARD:	Y
CHRONIC HAZARD:	N
FIRE HAZARD:	Y
REACTIVITY HAZARD:	Y
SUDDEN RELEASE HAZARD:	N

SECTION 16 OTHER

COPYRIGHT 1994 OCCUPATIONAL HEALTH SERVICES, INC. ALL RIGHTS RESERVED.

Licensed to: ICF KAISER INTERNATIONAL, INC & AFFILIATES
To make unlimited paper copies for internal distribution and use only.

OHS05125

SECTION 1 CHEMICAL PRODUCTS & COMPANY IDENTIFICATION

OCCUPATIONAL HEALTH SERVICES, INC.
11 WEST 42ND STREET, 12TH FLOOR
NEW YORK, NEW YORK 10036
1-800-445-MSDS (1-800-445-6737) OR
1-212-789-3535

FOR EMERGENCY SOURCE INFORMATION
CONTACT: 1-615-366-2000 USA

CAS NUMBER: 156-59-2
RTECS NUMBER: KV9420000

SUBSTANCE: CIS-1,2-DICHLOROETHYLENE

TRADE NAMES/SYNONYMS:
CIS-ACETYLENE DICHLORIDE; 1,2-DICHLOROETHYLENE; C2H2CL2; OHS05125

CHEMICAL FAMILY:
Halogen compound, aliphatic

CREATION DATE: 03/12/86 REVISION DATE: 01/15/94

SECTION 2 COMPOSITION/INFORMATION ON INGREDIENTS

COMPONENT : CIS-1,2-DICHLOROETHYLENE
CAS NUMBER: 156-59-2
PERCENTAGE: 100.0

OTHER CONTAMINANTS: NONE.

SECTION 3 HAZARDS IDENTIFICATION

CERCLA RATINGS (SCALE 0-3): HEALTH=2 FIRE=3 REACTIVITY=2 PERSISTENCE=1
NFPA RATINGS (SCALE 0-4): HEALTH=2 FIRE=3 REACTIVITY=2

EMERGENCY OVERVIEW:
Colorless liquid with a pleasant odor.
Causes respiratory tract, skin and eye irritation. May affect the central nervous system. Flammable liquid and vapor. May cause flash fire. May react dangerously with water. May form explosive peroxides on standing.
Keep away from all ignition sources. Do not allow water to get in container. Avoid breathing vapor or mist. Avoid contact with eyes, skin and clothing. Do not allow to evaporate or distill to dryness. Keep container tightly closed. Wash thoroughly after handling. Use only with adequate ventilation.

POTENTIAL HEALTH EFFECTS:
INHALATION:
SHORT TERM EFFECTS: May cause irritation. Additional effects may include nausea, vomiting, weakness, drowsiness, drunkeness, twitching and unconsciousness.

LONG TERM EFFECTS: May cause lack of appetite.
SKIN CONTACT:
SHORT TERM EFFECTS: May cause irritation.
LONG TERM EFFECTS: Same effects as short term exposure.
EYE CONTACT:
SHORT TERM EFFECTS: May cause irritation.
LONG TERM EFFECTS: Same effects as short term exposure.
INGESTION:
SHORT TERM EFFECTS: May cause drunkeness.
LONG TERM EFFECTS: No information available on significant adverse effects.

CARCINOGEN STATUS:
OSHA: N
NTP: N
IARC: N

SECTION 4 FIRST AID MEASURES

INHALATION:
FIRST AID- Remove from exposure area to fresh air immediately. If breathing has stopped, perform artificial respiration. Keep person warm and at rest. Treat symptomatically and supportively. Get medical attention immediately.

SKIN CONTACT:
FIRST AID- Remove contaminated clothing and shoes immediately. Wash affected area with soap or mild detergent and large amounts of water until no evidence of chemical remains (approximately 15-20 minutes). Get medical attention immediately.

EYE CONTACT:
FIRST AID- Wash eyes immediately with large amounts of water or normal saline, occasionally lifting upper and lower lids, until no evidence of chemical remains (approximately 15-20 minutes). Get medical attention immediately.

INGESTION:
FIRST AID- Remove by gastric lavage or emesis. Maintain blood pressure and airway. Give oxygen if respiration is depressed. Do not perform gastric lavage or emesis if victim is unconscious. Get medical attention immediately (Dreisbach, Handbook of Poisoning, 12th Ed.). Administration of gastric lavage or oxygen should be performed by qualified medical personnel.

NOTE TO PHYSICIAN
ANTIDOTE:
No specific antidote. Treat symptomatically and supportively.

SECTION 5 FIRE FIGHTING MEASURES

FIRE AND EXPLOSION HAZARD:
Dangerous fire hazard when exposed to heat or flame.

I erate explosion hazard when exposed to heat or flame.

V or-air mixtures are explosive above flash point.

Vapors are heavier than air and may travel a considerable distance to a source of ignition and flash back.

EXTINGUISHING MEDIA:
Dry chemical, carbon dioxide, water spray or regular foam (1990 Emergency Response Guidebook, DOT P 5800.5).

For larger fires, use water spray, fog or regular foam (1990 Emergency Response Guidebook, DOT P 5800.5).

FIREFIGHTING:
Move container from fire area if you can do it without risk. Apply cooling water to sides of containers that are exposed to flames until well after fire is out. Stay away from ends of tanks. For massive fire in cargo area, use unmanned hose holder or monitor nozzles; if this is impossible, withdraw from area and let fire burn. Withdraw immediately in case of rising sound from venting safety device or any discoloration of tank due to fire. Isolate for 1/2 mile in all directions if tank, rail car or tank truck is involved in fire (1990 Emergency Response Guidebook, DOT P 5800.5, Guide Page 27).

Extinguish only if flow can be stopped; use flooding amounts of water as a f , solid streams may be ineffective. Cool containers with flooding a nts of water, apply from as far a distance as possible. Avoid breathing v rs, keep upwind.

Water may be ineffective except as a blanket (NFPA 325M, Fire Hazard Properties of Flammable Liquids, Gases, and Volatile Solids, 1984)

FLASH POINT: 39 F (4 C) (CC)
LOWER FLAMMABLE LIMIT: 9.7
UPPER FLAMMABLE LIMIT: 12.8
FLAMMABILITY CLASS(OSHA): IB

HAZARDOUS COMBUSTION PRODUCTS:
Thermal decomposition products may include highly toxic fumes of phosgene, toxic and corrosive fumes of chlorides, and oxides of carbon.

SECTION 6 ACCIDENTAL RELEASE MEASURES

OCCUPATIONAL SPILL:
Shut off ignition sources. Stop leak if you can do it without risk. Use water spray to reduce vapors. For small spills, take up with sand or other absorbent material and place into containers for later disposal. For larger spills, dike far ahead of spill for later disposal. No smoking, flames or flares in hazard area. Keep unnecessary people away; isolate hazard area and restrict entry.

CTION 7 HANDLING AND STORAGE

(erve all federal, state and local regulations when storing this substance.

Store in accordance with 29 CFR 1910.106.

Bonding and grounding: Substances with low electroconductivity, which may be ignited by electrostatic sparks, should be stored in containers which meet the bonding and grounding guidelines specified in NFPA 77-1983, Recommended Practice on Static Electricity.

Store away from incompatible substances.

SECTION 8 EXPOSURE CONTROLS/PERSONAL PROTECTION

EXPOSURE LIMITS:
1,2-DICHLOROETHYLENE (ALL ISOMERS):
200 ppm (793 mg/m3) OSHA TWA
200 ppm (793 mg/m3) ACGIH TWA
200 ppm (793 mg/m3) NIOSH recommended TWA
200 ppm (793 mg/m3) DFG MAK TWA;
400 ppm (1586 mg/m3) DFG MAK 30 minute peak, average value, 4 times/shift

Measurement method: Charcoal tube/carbon disulfide; gas chromatography with flame ionization detection; (NIOSH Vol. III # 1003, Halogenated Hydrocarbons).

bject to SARA Section 313 Annual Toxic Chemical Release Reporting

VENTILATION:
Provide local exhaust ventilation to meet published exposure limits. Ventilation equipment should be explosion-proof if explosive concentrations of dust, vapor or fume are present.

EYE PROTECTION:
Employee must wear splash-proof or dust-resistant safety goggles and a faceshield to prevent contact with this substance.

Emergency wash facilities:
Where there is any possibility that an employee's eyes and/or skin may be exposed to this substance, the employer should provide an eye wash fountain and quick drench shower within the immediate work area for emergency use.

CLOTHING:
Employee must wear appropriate protective (impervious) clothing and equipment to prevent repeated or prolonged skin contact with this substance.

GLOVES:
Employee must wear appropriate protective gloves to prevent contact with this substance.

RESPIRATOR:
following respirators and maximum use concentrations are recommendations the U.S. Department of Health and Human Services, NIOSH Pocket Guide to Chemical Hazards; NIOSH criteria documents or by the U.S. Department of

abor, 29 CFR 1910 Subpart Z.
specific respirator selected must be based on contamination levels found n the work place, must not exceed the working limits of the respirator and be jointly approved by the National Institute for Occupational Safety and Health and the Mine Safety and Health Administration (NIOSH-MSHA).

1,2-DICHLOROETHYLENE (ALL ISOMERS):

1000 ppm- Any powered air-purifying respirator with organic vapor cartridges.
Any chemical cartridge respirator with an organic vapor canister and a full facepiece.

4000 ppm- Any supplied-air respirator operated in a continuous flow mode.
Any air-purifying full facepiece respirator (gas mask) with a chin-style or front- or back-mounted organic vapor canister.
Any supplied-air respirator with a full facepiece.
Any self-contained breathing apparatus with a full facepiece.

Escape- Any air-purifying full facepiece respirator (gas mask) with a chin-style or front- or back-mounted organic vapor canister.
Any appropriate escape-type self-contained breathing apparatus.

FOR FIREFIGHTING AND OTHER IMMEDIATELY DANGEROUS TO LIFE OR HEALTH CONDITIONS:

Any self-contained breathing apparatus that has a full facepiece and is operated in a pressure-demand or other positive-pressure mode.

ny supplied-air respirator that has a full facepiece and is operated in a pressure-demand or other positive-pressure mode in combination with an auxiliary self-contained breathing apparatus operated in pressure-demand or other positive-pressure mode.

SECTION 9 PHYSICAL AND CHEMICAL PROPERTIES

DESCRIPTION: Colorless liquid with a pleasant odor.
MOLECULAR WEIGHT: 96.94
MOLECULAR FORMULA: C2-H2-CL2
BOILING POINT: 140 F (60 C)
MELTING POINT: -114 F (-81 C)
VAPOR PRESSURE: 400 mmHg @ 41 C
VAPOR DENSITY: 3.34
SPECIFIC GRAVITY: 1.2837
WATER SOLUBILITY: insoluble
SOLVENT SOLUBILITY: Acetone, benzene, ether, alcohol

SECTION 10 STABILITY AND REACTIVITY

REACTIVITY:
May form explosive peroxides in air.
ess inhibited, gradual decomposition by air, light, ultaviolet light and ture may release corrosive hydrogen chloride.

CONDITIONS TO AVOID:
Avoid contact with heat, sparks, flames, or other sources of ignition. Vapors may be explosive. Avoid overheating of containers; containers may violently rupture in heat of fire. Avoid contamination of water sources.

INCOMPATIBILITIES:
1,2-DICHLOROETHYLENE (ALL ISOMERS):
CAUSTIC ALKALIES (SOLID OR CONCENTRATED SOLUTIONS): May form explosive, spontaneously flammable chloroacetylene.
COPPER OR COPPER ALLOYS: May form explosive, spontaneously flammable chloroacetylene.
DIFLUOROMETHYLENE DIHYPOFLUORITE (WITH TRANS-ISOMER): Violent explosion at room temperature.
FREE RADICAL INITIATOR: Oxidation forms corrosive chloroacetyl chloride via epoxide intermediates.
METAL (HOT): Gradual decomposition with release of corrosive hydrogen chloride.
NITROGEN TETROXIDE: Explosive, especially when shocked.
OXIDIZERS (STRONG): Fire and explosion hazard.
OZONE: Form explosive product.
PERCHLORYL FLUORIDE: Explosive reaction on heating.
POTASSIUM HYDROXIDE (SOLID OR CONCENTRATED SOLUTION): May form explosive, spontaneously flammable chloroacetylene.
PLASTICS, RUBBER AND COATINGS: May be attacked.
SODIUM: May form explosive, spontaneously flammable chloroacetylene.
SODIUM HYDROXIDE (SOLID OR CONCENTRATED SOLUTION): May form explosive, spontaneously flammable chloroacetylene.
SULFURIC ACID (CONCENTRATED): Oxidation forms corrosive chloroacetyl chloride via epoxide intermediates.
STRONG OXIDIZERS: Vigorous reaction or possible fire and explosion hazard.

HAZARDOUS DECOMPOSITION:
Thermal decomposition products may include highly toxic fumes of phosgene, toxic and corrosive fumes of chlorides, and oxides of carbon.

POLYMERIZATION:
Slightly susceptible to polymerization, but not likely unless the material becomes contaminated. Both isomers dimerize to tetrachlorobutene in the presence of organic peroxides. The polymerization reaction is not vigorous.

SECTION 11 TOXICOLOGY INFORMATION

CIS-1,2-DICHLOROETHYLENE:
TOXICITY DATA: 65000 mg/m3/2 hours inhalation-mouse LCLo; 20000 mg/m3/6 hours inhalation-cat LCLo; mutagenic data (RTECS).
CARCINOGEN STATUS: None.
LOCAL EFFECTS: Irritant- inhalation, skin, eye.
ACUTE TOXICITY LEVEL: Insufficient data.
TARGET EFFECTS: Central nervous system depressant. Poisoning may affect the lungs, liver, and kidneys.
INCREASED RISK FROM EXPOSURE: Persons with chronic respiratory disease.
ADDITIONAL DATA: Stimulants such as epinephrine and ephedrine may enhance the toxicity of some halogenated hydrocarbons.

LTH EFFECTS
ALATION:
1,2-DICHLOROETHYLENE (ALL ISOMERS):
IRRITANT/NARCOTIC. 4000 ppm Immediately Dangerous to Life or Health.
ACUTE EXPOSURE- Vapor exposure may cause mucous membrane irritation, nausea, vomiting, dizziness, weakness, tremor, and epigastric cramps. Higher levels may cause central nervous system depression ranging from drowsiness to unconsciousness. The cis- and trans- isomers together have been used as an anesthetic in man. A human death has been reported from industrial exposure. An 8 hour exposure to the trans- isomer at 200 ppm lowered the leukocyte count in rats; 1000 ppm caused a fall in the blood serum albumin, urea nitrogen, alkaline phosphatase activity, and the number of erythrocytes. Narcosis was not produced at these levels. 3000 ppm produced fibrous swelling of the cardiac muscle and hyperemia which persisted for 14 hours after exposure. The cis- isomer did not anesthetize rats in 4 hours at 8000 ppm, but at 16,000 ppm they were anesthetized in 8 minutes and killed in 4 hours. Reversible superficial corneal turbidity has been observed in some anesthetized dogs.
CHRONIC EXPOSURE- Variations in data exist on the chronic toxicity of the cis- and trans- isomers. Rats exposed to 200 ppm of the trans- isomer for 8 hours/day, 5 days/week for 16 weeks showed histological evidence of slight to severe fatty degeneration of liver lobules and kupffer cells, marked pulmonary hyperemia, alveolar septal distension and fibrous swelling of the cardiac muscle. Similar exposures with rats, guinea pigs, rabbits and dogs exposed to 500 ppm or 1000 ppm 7 hours/day, 5 days/week for 6 months to a mixture of 60% cis- and 40% trans- isomers resulted in no adverse effects detected. Cats and rabbits were repeatedly exposed to vapor concentrations of 0.16-0.19% in air. The cis- isomer caused anorexia, decreased body weight and pathological changes in the lungs, liver, and kidneys. The trans- isomer caused anorexia and some respiratory irritation, but no histopathological changes in organs.

SKIN CONTACT:
1,2-DICHLOROETHYLENE (ALL ISOMERS):
IRRITANT.
ACUTE EXPOSURE- Direct contact may cause irritation. Skin absorption may occur due to lipid solubility.
CHRONIC EXPOSURE- Repeated or prolonged contact may cause dermatitis.

EYE CONTACT:
1,2-DICHLOROETHYLENE (ALL ISOMERS):
IRRITANT.
ACUTE EXPOSURE- Direct contact, or the vapor in sufficient concentration, may cause irritation. The trans- isomer caused burning of the eyes at 2000 ppm. Reversible superficial corneal turbidity has been reported as a systemic effect in dogs following inhalation exposure.
CHRONIC EXPOSURE- Repeated or prolonged contact with irritants may cause conjunctivitis.

INGESTION:
-DICHLOROETHYLENE (ALL ISOMERS):
OTIC.
CUTE EXPOSURE- Depending on exposure, symptoms may vary from slight central

nervous system depression to deep narcosis.
CHRONIC EXPOSURE- Used as a low temperature extracting agent for heat sensitive substances such as caffeine in coffee, perfumes, and oils and fats from fish and meat. Mice exposed to 22 mg/kg or 220 mg/kg of trans-1,2 dichloroethylene by gavage for 14 consecutive days showed a trend toward suppression of the humoral immune response, but no effect on the cell-mediated immune response.

SECTION 12 ECOLOGICAL INFORMATION

ENVIRONMENTAL IMPACT RATING (0-4): no data available

ACUTE AQUATIC TOXICITY: no data available

DEGRADABILITY: no data available

LOG BIOCONCENTRATION FACTOR (BCF): no data available

LOG OCTANOL/WATER PARTITION COEFFICIENT: no data available

SECTION 13 DISPOSAL INFORMATION

Observe all federal, state and local regulations when disposing of this substance.

Disposal must be in accordance with standards applicable to generators of hazardous waste, 40 CFR 262. EPA Hazardous Waste Number D001.
100 pound CERCLA Section 103 Reportable Quantity.

SECTION 14 TRANSPORTATION INFORMATION

U.S. DEPARTMENT OF TRANSPORTATION SHIPPING NAME-ID NUMBER, 49 CFR 172.101:
Dichloroethylene-UN 1150

U.S. DEPARTMENT OF TRANSPORTATION HAZARD CLASS OR DIVISION, 49 CFR 172.101:
3 - Flammable liquid

U.S. DEPARTMENT OF TRANSPORTATION PACKING GROUP, 49 CFR 172.101:
PG II

U.S. DEPARTMENT OF TRANSPORTATION LABELING REQUIREMENTS, 49 CFR 172.101 AND SUBPART E:
Flammable liquid

U.S. DEPARTMENT OF TRANSPORTATION PACKAGING AUTHORIZATIONS:
EXCEPTIONS: 49 CFR 173.150
NON-BULK PACKAGING: 49 CFR 173.202
BULK PACKAGING: 49 CFR 173.242

U.S. DEPARTMENT OF TRANSPORTATION QUANTITY LIMITATIONS 49 CFR 172.101:
PASSENGER AIRCRAFT OR RAILCAR: 5 l

OHS14160

SECTION 1 CHEMICAL PRODUCTS & COMPANY IDENTIFICATION

OCCUPATIONAL HEALTH SERVICES, INC.
11 WEST 42ND STREET, 12TH FLOOR
NEW YORK, NEW YORK 10036
1-800-445-MSDS (1-800-445-6737) OR
1-212-789-3535

FOR EMERGENCY SOURCE INFORMATION
CONTACT: 1-615-366-2000 USA

CAS NUMBER: 74-82-8
RTECS NUMBER: PA1490000

SUBSTANCE: METHANE

TRADE NAMES/SYNONYMS:
FIRE DAMP; MARSH GAS; METHYL HYDRIDE; NATURAL GAS; STCC 4905755; UN 1971; R50; CH4; DEUTERATED METHANE GAS; METHANE, COMPRESSED GAS; OHS14160

CHEMICAL FAMILY:
Hydrocarbon, aliphatic

CREATION DATE: 03/01/85 REVISION DATE: 01/15/94

SECTION 2 COMPOSITION/INFORMATION ON INGREDIENTS

COMPONENT : METHANE
CAS NUMBER: 74-82-8
PERCENTAGE: >99.9

OTHER CONTAMINANTS: MERCAPTAN MAY BE ADDED AS AN ODORIZER

SECTION 3 HAZARDS IDENTIFICATION

CERCLA RATINGS (SCALE 0-3): HEALTH=1 FIRE=3 REACTIVITY=0 PERSISTENCE=1
NFPA RATINGS (SCALE 0-4): HEALTH=1 FIRE=4 REACTIVITY=0

EMERGENCY OVERVIEW:
Odorless, colorless, tasteless gas.
May cause convulsions. May affect the central nervous system. Reduces oxygen available for breathing. Flammable gas. May cause flash fire.
Keep away from all ignition sources. Avoid breathing gas. Avoid contact with eyes, skin and clothing. Do not enter confined spaces unless adequately ventilated. Do not puncture container. Keep container tightly closed. Wash thoroughly after handling. Use only with adequate ventilation.

POTENTIAL HEALTH EFFECTS:
INHALATION:
SHORT TERM EFFECTS: May cause nausea, vomiting, weakness, dizziness, incoordination, tingling sensation, suffocation, convulsions, unconsciousness and coma.

LONG TERM EFFECTS: No information available on significant adverse effects.
SKIN CONTACT:
SHORT TERM EFFECTS: May cause blisters, frostbite and numbness.
LONG TERM EFFECTS: No information is available.
EYE CONTACT:
SHORT TERM EFFECTS: May cause frostbite and blurred vision.
LONG TERM EFFECTS: No information is available.
INGESTION:
SHORT TERM EFFECTS: May cause frostbite.
LONG TERM EFFECTS: No information is available.

CARCINOGEN STATUS:
OSHA: N
NTP: N
IARC: N

SECTION 4 FIRST AID MEASURES

INHALATION:
FIRST AID- Remove from exposure area to fresh air immediately. If breathing has stopped, give artificial respiration. Maintain airway and blood pressure and administer oxygen if available. Keep affected person warm and at rest. Treat symptomatically and supportively. Administration of oxygen should be performed by qualified personnel. Get medical attention immediately.

SKIN CONTACT:
FIRST AID- It is unlikely that emergency treatment will be required. If adverse effects occur, get medical attention.
In case of frostbite, warm affected skin in warm water at a temperature of 107 F. If warm water is not available or impractical to use, gently wrap affected part in blankets. Encourage victim to exercise affected part while it is being warmed. Allow circulation to return naturally (Matheson Gas, 6th Ed.). Get medical attention immediately.

EYE CONTACT:
FIRST AID- It is unlikely that contact with the gas form will require emergency treatment. If contact with liquefied or compressed gas occurs, wash with large amounts of warm water until no evidence of chemical remains (approximately 15-20 minutes). Get medical attention immediately.

INGESTION:
FIRST AID- It is unlikely that emergency treatment will be required. If adverse effects occur, treat symptomatically and supportively and get medical attention.

NOTE TO PHYSICIAN
ANTIDOTE:
No specific antidote. Treat symptomatically and supportively.

SECTION 5 FIRE FIGHTING MEASURES

I[illegible] AND EXPLOSION HAZARD:
D[illegible]erous fire hazard when exposed to heat or flame.

Dangerous explosion hazard when exposed to heat or flame.

Container may explode in heat of fire.

Vapor-air mixtures are explosive above flash point.

Due to low electroconductivity of the substance, flow or agitation may generate electrostatic charges resulting in sparks with possible ignition.

EXTINGUISHING MEDIA:
Dry chemical or carbon dioxide
(1990 Emergency Response Guidebook, DOT P 5800.5).

For larger fires, use water spray, fog or regular foam
(1990 Emergency Response Guidebook, DOT P 5800.5).

FIREFIGHTING:
Move container from fire area if you can do it without risk. For massive fire in cargo area, use unmanned hose holder or monitor nozzles; if this is impossible, withdraw from area and let fire burn. Withdraw immediately in case of rising sound from venting safety device or any discoloration of tank due to fire. Cool container with water using unmanned device until well after fire is [illegible] Let tank, tank car or tank truck burn unless leak can be stopped; with [illegible]ller tanks or cylinders, extinguish/isolate from other flammables. Isolate fo[illegible] 1/2 mile in all directions if tank, rail car or tank truck is involved in fire (1990 Emergency Response Guidebook, DOT P 5800.5, Guide Page 17).

Extinguish only if flow can be stopped; use water in flooding amounts as fog. Cool containers with flooding amounts of water, apply from as far a distance as possible. Avoid breathing toxic vapors, keep upwind. Evacuate to a radius of 1500 feet for uncontrollable fires. Consider evacuation of downwind area if material is leaking.

Stop flow of gas (NFPA 325M, Fire Hazard Properties of Flammable Liquids, Gases, and Volatile Solids, 1991).

FLASH POINT: -369 F (-223 C)
LOWER FLAMMABLE LIMIT: 5.0%
UPPER FLAMMABLE LIMIT: 15%
AUTOIGNITION: 999 F (537 C)

HAZARDOUS COMBUSTION PRODUCTS:
Thermal decomposition products may include toxic oxides of carbon.

SECTION 6 ACCIDENTAL RELEASE MEASURES

[illegible] UPATIONAL SPILL:
[illegible] off ignition sources. Stop leak if you can do it without risk. Use water s[illegible]y to reduce vapors. Isolate area until gas has dispersed. No smoking,

'GO AIRCRAFT ONLY: 60 l

SECTION 15 REGULATORY INFORMATION

TSCA STATUS: Y

CERCLA SECTION 103 (40CFR302.4): N
SARA SECTION 302 (40CFR355.30): N
SARA SECTION 304 (40CFR355.40): N
SARA SECTION 313 (40CFR372.65): Y
OSHA PROCESS SAFETY (29CFR1910.119): N
CALIFORNIA PROPOSITION 65: N

SARA HAZARD CATEGORIES, SARA SECTIONS 311/312 (40 CFR 370.21)
ACUTE HAZARD: Y
CHRONIC HAZARD: N
FIRE HAZARD: Y
REACTIVITY HAZARD: Y
SUDDEN RELEASE HAZARD: N

SECTION 16 OTHER

OPYRIGHT 1994 OCCUPATIONAL HEALTH SERVICES, INC. ALL RIGHTS RESERVED.

Licensed to: ICF KAISER INTERNATIONAL, INC & AFFILIATES
To make unlimited paper copies for internal distribution and use only.

O[illegible]370

SECTION 1 CHEMICAL PRODUCTS & COMPANY IDENTIFICATION

OCCUPATIONAL HEALTH SERVICES, INC.
11 WEST 42ND STREET, 12TH FLOOR
NEW YORK, NEW YORK 10036
1-800-445-MSDS (1-800-445-6737) OR
1-212-789-3535

FOR EMERGENCY SOURCE INFORMATION
CONTACT: 1-615-366-2000 USA

CAS NUMBER: 76-13-1
RTECS NUMBER: KJ4000000

SUBSTANCE: 1,1,2-TRICHLORO-1,2,2-TRIFLUOROETHANE

TRADE NAMES/SYNONYMS:
TRICHLOROTRIFLUOROETHANE; 1,1,2-TRIFLUORO-1,2,2-TRICHLOROETHANE; 1,1,2-TRICHLOROTRIFLUOROETHANE; 1,2,2-TRICHLOROTRIFLUOROETHANE; 1,1,2-TRIFLUOROTRICHLOROETHANE; ETHANE, 1,1,2-TRICHLORO-1,2,2-TRIFLUORO-; ARCTON 63; FRIGEN 113TR; GENETRON 113; UCON 113; FREON 113; FREON 113TR; FLUOROCARBON 113; REFRIGERANT 113; FREON TF SOLVENT (ASHLAND); RACON 113 (RACON INC.); FREON TF/PCA (DUPONT); RHO-TRON PCA STOCK #4000 (RHO-CHEM CORPORATION); RHO-TRON PCA (RHO-CHEM CORPORATION); C2CL3F3; OHS26370

[illegible]ICAL FAMILY:
[illegible]ogen compound, aliphatic

CREATION DATE: 01/15/85 REVISION DATE: 07/14/93

SECTION 2 COMPOSITION/INFORMATION ON INGREDIENTS

COMPONENT : 1,1,2-TRICHLORO-1,2,2-TRIFLUOROETHANE
CAS NUMBER: 76-13-1
PERCENTAGE: 100.0

OTHER CONTAMINANTS: NONE

SECTION 3 HAZARDS IDENTIFICATION

CERCLA RATINGS (SCALE 0-3): HEALTH=1 FIRE=1 REACTIVITY=0 PERSISTENCE=3
NFPA RATINGS (SCALE 0-4): HEALTH=1 FIRE=1 REACTIVITY=0

EMERGENCY OVERVIEW:
Clear, colorless, volatile liquid with a slight ethereal odor.
May be irritating to the respiratory tract, skin and eyes. May affect the central nervous system. Reduces oxygen available for breathing. May damage the lungs.
[illegible]void breathing vapor or mist. Avoid contact with eyes, skin and clothing. [illegible] not enter confined spaces unless adequately ventilated. Keep container [illegible]ightly closed. Wash thoroughly after handling. Use only with adequate

ventilation.

POTENTIAL HEALTH EFFECTS:
INHALATION:
SHORT TERM EFFECTS: May cause irritation. Additional effects may include vomiting, irregular heartbeat, low blood pressure, weakness, drowsiness, drunkeness, nervousness, twitching, suffocation and lung congestion.
LONG TERM EFFECTS: No information available on significant adverse effects.
SKIN CONTACT:
SHORT TERM EFFECTS: May cause irritation.
LONG TERM EFFECTS: Same effects as short term exposure.
EYE CONTACT:
SHORT TERM EFFECTS: May cause irritation.
LONG TERM EFFECTS: No information is available.
INGESTION:
SHORT TERM EFFECTS: May cause diarrhea, irregular heartbeat, drunkeness, numbness, bluish skin color and lung damage.
LONG TERM EFFECTS: No information available on significant adverse effects.

CARCINOGEN STATUS:
OSHA: N
NTP: N
IARC: N

SECTION 4 FIRST AID MEASURES

INHALATION:
FIRST AID- Remove from exposure area to fresh air immediately. If breathing has stopped, perform artificial respiration. Keep person warm and at rest. Treat symptomatically and supportively. Get medical attention immediately.

SKIN CONTACT:
FIRST AID- Remove contaminated clothing and shoes immediately. Wash affected area with soap or mild detergent and large amounts of water until no evidence of chemical remains (approximately 15-20 minutes). Get medical attention immediately.

EYE CONTACT:
FIRST AID- Wash eyes immediately with large amounts of water or normal saline, occasionally lifting upper and lower lids, until no evidence of chemical remains (approximately 15-20 minutes). Get medical attention immediately.

INGESTION:
FIRST AID- Treat symptomatically and supportively. Get medical attention immediately. If vomiting occurs, keep head lower than hips to prevent aspiration.

NOTE TO PHYSICIAN
ANTIDOTE:
No specific antidote. Treat symptomatically and supportively.

SECTION 5 FIRE FIGHTING MEASURES

FIRE AND EXPLOSION HAZARD:
Slight fire hazard when exposed to heat or flame.

EXTINGUISHING MEDIA:
Dry chemical, carbon dioxide, water spray or regular foam (1990 Emergency Response Guidebook, DOT P 5800.5).

For larger fires, use water spray, fog or regular foam (1990 Emergency Response Guidebook, DOT P 5800.5).

FIREFIGHTING:
Move container from fire area if you can do it without risk. Do not scatter spilled material with high-pressure water streams. Dike fire-control water for later disposal (1990 Emergency Response Guidebook, DOT P 5800.5, Guide Page 31).

Use agents suitable for type of surrounding fire. Avoid breathing hazardous vapors, keep upwind.

AUTOIGNITION: 1256 F (680 C)

HAZARDOUS COMBUSTION PRODUCTS:
Thermal decomposition products may include toxic and corrosive fumes of chlorides and fluorides, and toxic oxides of carbon.

SECTION 6 ACCIDENTAL RELEASE MEASURES

OCCUPATIONAL SPILL:
Stop leak if you can do it without risk. For small spills, take up with sand or other absorbent material and place into clean, dry containers for later disposal. Keep unnecessary people away. Isolate hazard area and deny entry.

SECTION 7 HANDLING AND STORAGE

Observe all federal, state and local regulations when storing this substance.

Store away from incompatible substances.

Keep in a tightly closed container. Store in a cool, dry, ventilated area.

SECTION 8 EXPOSURE CONTROLS/PERSONAL PROTECTION

EXPOSURE LIMITS:
1,1,2-TRICHLORO-1,2,2-TRIFLUOROETHANE (FREON TF):
1000 ppm (7670 mg/m3) OSHA TWA; 1250 ppm (9590 m3/m3) OSHA STEL
1000 ppm (7670 mg/m3) ACGIH TWA; 1250 ppm (9590 mg/m3) ACGIH STEL
1000 ppm (7670 mg/m3) NIOSH recommended TWA;
1250 ppm (9590 mg/m3) NIOSH recommended STEL
500 ppm (3832 mg/m3) DFG MAK TWA;

000 ppm (7670 mg/m3) DFG MAK 60 minute peak, momentary value, 3 times/shift

Measurement method: Charcoal tube; carbon disulfide; gas chromatography with flame ionization detection; (NIOSH Vol. III # 1020).

Subject to SARA Section 313 Annual Toxic Chemical Release Reporting.

OSHA revoked the final rule limits of January 19, 1989 in response to the 11th Circuit Court of Appeals decision (AFL-CIO v. OSHA) effective June 30, 1993. See 29 CFR 1910.1000 (58 FR 35338)

VENTILATION:
Provide general dilution ventilation to meet published exposure limits.

EYE PROTECTION:
Employee must wear splash-proof or dust-resistant safety goggles to prevent eye contact with this substance.

Emergency eye wash: Where there is any possibility that an employee's eyes may be exposed to this substance, the employer should provide an eye wash fountain within the immediate work area for emergency use.

CLOTHING:
Employee must wear appropriate protective (impervious) clothing and equipment to prevent repeated or prolonged skin contact with this substance.

GLOVES:
Employee must wear appropriate protective gloves to prevent contact with this substance.

RESPIRATOR:
The following respirators and maximum use concentrations are recommendations by the U.S. Department of Health and Human Services, NIOSH Pocket Guide to Chemical Hazards; NIOSH criteria documents or by the U.S. Department of Labor, 29 CFR 1910 Subpart Z.
The specific respirator selected must be based on contamination levels found in the work place, must not exceed the working limits of the respirator and be jointly approved by the National Institute for Occupational Safety and Health and the Mine Safety and Health Administration (NIOSH-MSHA).

1,1,2-TRICHLORO-1,2,2-TRIFLUOROETHANE:

4500 ppm- Any supplied-air respirator.
Any self-contained breathing apparatus.

Escape- Any air-purifying full facepiece respirator (gas mask) with a chin-style or front or back-mounted organic vapor canister.
Any appropriate escape-type self-contanined breathing apparatus.

FOR FIREFIGHTING AND OTHER IMMEDIATELY DANGEROUS TO LIFE OR HEALTH CONDITIONS:

Any self-contained breathing apparatus that has a full facepiece and is operated in a pressure-demand or other positive-pressure mode.

ny supplied-air respirator that has a full facepiece and is operated in a pressure-demand or other positive-pressure mode in combination with an auxiliary self-contained breathing apparatus operated in pressure-demand or other positive-pressure mode.

SECTION 9 PHYSICAL AND CHEMICAL PROPERTIES

DESCRIPTION: Clear, colorless, volatile liquid with a slight ethereal odor.
MOLECULAR WEIGHT: 187.38
MOLECULAR FORMULA: C-F2-CL-C-CL2-F
BOILING POINT: 118 F (48 C)
MELTING POINT: -34 F (-36 C)
VAPOR PRESSURE: 284 mmHg @ 20 C
VAPOR DENSITY: 6.47
SPECIFIC GRAVITY: 1.5635 @ 25 C
WATER SOLUBILITY: 0.017% @ 25 C
VOLATILITY: 100%
ODOR THRESHOLD: 135 ppm
EVAPORATION RATE: (acetone=1) 0.45
SOLVENT SOLUBILITY: Soluble in alcohol, ether, benzene.

VISCOSITY: 0.497 cP @ 49 C

SECTION 10 STABILITY AND REACTIVITY

I TIVITY:
Stable under normal temperatures and pressures.

CONDITIONS TO AVOID:
May burn but does not ignite readily. Avoid contact with strong oxidizers, excessive heat, sparks, or open flame.

INCOMPATIBILITIES:
1,1,2-TRICHLORO-1,2,2-TRIFLUOROETHANE:
ALKALI METALS: Violent reaction possible.
ALUMINUM (POWDERED): Forms shock-sensitive mixture.
BARIUM (POWDERED): Forms explosive mixture.
BERYLLIUM: Violent reaction possible.
CALCIUM: Violent reaction possible.
LITHIUM (POWDERED): Forms explosive mixture.
MAGNESIUM: Violent reaction possible.
MAGNESIUM ALLOY: Decomposition possible.
PLASTICS, RUBBER, COATINGS: May be attacked.
POTASSIUM: Forms ignitable compound.
SAMARIUM: Explodes on friction.
SODIUM: Forms ignitable compound.
SODIUM-POTASSIUM ALLOY: Violent explosion.
TITANIUM (POWDERED): Forms shock-sensitive mixture.
ZINC: Violent reaction possible.

H RDOUS DECOMPOSITION:
T rmal decomposition products may include toxic and corrosive fumes of

orides and fluorides, and toxic oxides of carbon.

YMERIZATION:
Hazardous polymerization has not been reported to occur under normal temperatures and pressures.

SECTION 11 TOXICOLOGY INFORMATION

1,1,2-TRICHLORO-1,2,2-TRIFLUOROETHANE (FREON TF):
IRRITATION DATA: 500 mg open skin-rabbit mild; 500 mg/24 hours skin-rabbit mild.
TOXICITY DATA: 87,000 ppm/6 hours inhalation-rat LCLo; 25 pph/90 seconds inhalation-mouse LCLo; 43 gm/kg oral-rat LD50.
CARCINOGEN STATUS: None.
ACUTE TOXICITY LEVEL: Relatively non-toxic by ingestion.
TARGET EFFECTS: Central nervous system depressant; simple asphyxiant. Poisoning may also affect the liver and kidneys.
AT INCREASED RISK FROM EXPOSURE: Persons with pre-existing skin disorders, impaired cardiovascular function, particularly cardiac arrythmias or impaired respiratory function.
ADDITIONAL DATA: Stimulants such as epinephrine may induce ventricular fibrillation.

HEALTH EFFECTS
INHALATION:
.2-TRICHLORO-1,2,2-TRIFLUOROETHANE (FREON TF):
COTIC/SIMPLE ASPHYXIANT.
0 ppm Immediately Dangerous to Life or Health.
ACUTE EXPOSURE- May cause mild irritation of the mucous membranes of the upper respiratory tract. May be anesthetic and cause central nervous system depression with drowsiness and arrhythmias. Humans exposed to 2500 to 4500 ppm for 30-100 minutes showed significant impairment of manual dexterity and vigilance, loss of concentration, somnolence and heaviness in the head, which disappeared 15 minutes after the exposure ended. Simple asphyxiation may occur at high concentrations. Overexposure could result in epinephine sensitization of the heart and subsequently may cause sudden death from ventricular fibrillation under physical or emotional stress. Dogs exposed to 11,000-13,000 ppm for 6 hours experienced vomiting, lethargy, nervousness, and tremors. All symptoms were reversible within 15 minutes. In experimental animals, variable degrees of cardiodynamic effects that included tachycardia, myocardial depression, and hypotension have been reported. Pulmonary edema and severe ventricular dysrhythmia may result from the inhalation of freons.
CHRONIC EXPOSURE- Prolonged human exposures for 2 weeks at concentrations of approximately 500 and 1000 ppm caused mild throat irritation on the first day, but no decrement in performance of complex mental tasks. Pathologic findings in rats included very slight diffuse degenerative fatty infiltration of the liver. No changes were produced in the offspring of pregnant rabbits exposed to 9 daily 2 hour exposures at levels as high as 20,000 ppm.

I CONTACT:
,2-TRICHLORO-1,2,2-TRIFLUOROETHANE (FREON TF):

ACUTE EXPOSURE- Contact may cause irritation.
CHRONIC EXPOSURE- Repeated or prolonged contact may cause dermatitis with drying and cracking. No effects were noted in rabbits after 20 weeks of application to uncovered skin. However, occluded contact of 5 gm/kg with rabbit skin for 5 successive days resulted in local necrosis and sloughing plus conspicuous enlargement of liver cells.

EYE CONTACT:
1,1,2-TRICHLORO-1,2,2-TRIFLUOROETHANE (FREON TF):
ACUTE EXPOSURE- May cause irritation. Application of 0.1 ml to rabbit eyes is reported to have produced only mild conjunctivitis and minimal corneal dullness at 24 hours. All eyes returned to normal within 48 hours.
CHRONIC EXPOSURE- No data available.

INGESTION:
1,1,2-TRICHLORO-1,2,2-TRIFLUOROETHANE (FREON TF):
NARCOTIC.
ACUTE EXPOSURE- One human accidentally received 1 liter of 1,1,2-trichloro-1,2,2-trifluoroethane in the stomach while under anesthesia. This produced immediate but transient cyanosis. The individual survived and reported only severe rectal irritation and diarrhea for 3 days thereafter. If sufficient amounts are ingested, systemic toxicity may occur as detailed in acute inhalation. Ingestion of hydrocarbons is associated with pneumonitis, central nervous system depression and arrhythmias.
CHRONIC EXPOSURE- No changes were produced in the offspring of pregnant rabbits exposed orally.

SECTION 12 ECOLOGICAL INFORMATION

ENVIRONMENTAL IMPACT RATING (0-4): no data available

ACUTE AQUATIC TOXICITY: no data available

DEGRADABILITY: no data available

LOG BIOCONCENTRATION FACTOR (BCF): no data available

LOG OCTANOL/WATER PARTITION COEFFICIENT: no data available

SECTION 13 DISPOSAL INFORMATION

Observe all federal, state and local regulations when disposing of this substance.

SECTION 14 TRANSPORTATION INFORMATION

No classification currently assigned

SECTION 15 REGULATORY INFORMATION

STATUS: Y

CERCLA SECTION 103 (40CFR302.4): N
SARA SECTION 302 (40CFR355.30): N
SARA SECTION 304 (40CFR355.40): N
SARA SECTION 313 (40CFR372.65): Y
OSHA PROCESS SAFETY (29CFR1910.119): N
CALIFORNIA PROPOSITION 65: N

SARA HAZARD CATEGORIES, SARA SECTIONS 311/312 (40 CFR 370.21)
ACUTE HAZARD: Y
CHRONIC HAZARD: N
FIRE HAZARD: N
REACTIVITY HAZARD: N
SUDDEN RELEASE HAZARD: N

SECTION 16 OTHER

COPYRIGHT 1994 OCCUPATIONAL HEALTH SERVICES, INC. ALL RIGHTS RESERVED.

Licensed to: ICF KAISER INTERNATIONAL, INC & AFFILIATES
To make unlimited paper copies for internal distribution and use only.

OHS23590

SECTION 1 CHEMICAL PRODUCTS & COMPANY IDENTIFICATION

OCCUPATIONAL HEALTH SERVICES, INC.
11 WEST 42ND STREET, 12TH FLOOR
NEW YORK, NEW YORK 10036
1-800-445-MSDS (1-800-445-6737) OR
1-212-789-3535

FOR EMERGENCY SOURCE INFORMATION
CONTACT: 1-615-366-2000 USA

CAS NUMBER: 108-88-3
RTECS NUMBER: XS5250000

SUBSTANCE: TOLUENE

TRADE NAMES/SYNONYMS:
BENZENE, METHYL-; METHYLBENZENE; 1-METHYLBENZENE; METHYLBENZOL; PHENYLMETHANE; METHANE, PHENYL-; METHACIDE; TOLUOL; AMSCO SOLV 1410, TOLUENE (UNION OIL COMPANY); DIAPHRAGM REPAIR KIT SOLVENT FOR HL29 & M8-M9 KITS (3M); POLYSTYRENE Q-DOPE THINNER 104102 & 10-4104; PRINT COAT SOLVENT 13-2; 0-DOPE THINNER (GC ELECTRONICS); TAFA SPRAY GUARD SP (TAFA INC); RCRA U220; STCC 4909305; UN 1294; C7H8; OHS23590

CHEMICAL FAMILY:
Hydrocarbon, aromatic

CREATION DATE: 10/25/84 REVISION DATE: 01/15/94

SECTION 2 COMPOSITION/INFORMATION ON INGREDIENTS

COMPONENT : TOLUENE
CAS NUMBER: 108-88-3
PERCENTAGE: 100.0

OTHER CONTAMINANTS: NONE

SECTION 3 HAZARDS IDENTIFICATION

CERCLA RATINGS (SCALE 0-3): HEALTH=3 FIRE=3 REACTIVITY=0 PERSISTENCE=1
NFPA RATINGS (SCALE 0-4): HEALTH=2 FIRE=3 REACTIVITY=0

EMERGENCY OVERVIEW:
Clear, colorless liquid with an aromatic odor.
Causes respiratory tract, skin and eye irritation. May cause blood disorders. May damage nerves. May affect the central nervous system. May cause adverse reproductive effects. May cause brain damage. May affect the heart. May affect the kidneys. May affect the liver. May damage the lungs.
Flammable liquid and vapor. May cause flash fire.
Keep away from all ignition sources. Avoid breathing vapor or mist. Avoid contact with eyes, skin and clothing. Keep container tightly closed. Wash

ıoroughly after handling. Use only with adequate ventilation. Handle with ution.

POTENTIAL HEALTH EFFECTS:
INHALATION:
SHORT TERM EFFECTS: May cause irritation. Additional effects may include lack of sense of smell, metallic taste, nausea, irregular heartbeat, headache, weakness, drowsiness, drunkeness, feeling of well-being, confusion, nervousness, sleeplessness, tingling sensation, dilated pupils, liver and kidney damage and nerve damage.
LONG TERM EFFECTS: In addition to effects from short term exposure, nose bleed, ringing in the ears, lack of appetite, stomach pain, bloody vomit, difficulty speaking, chest pain, fainting, loss of memory, menstrual disorders, suffocation, blood disorders, liver enlargement, paralysis, brain damage, coma and heart failure may occur. May also cause reproductive effects.
SKIN CONTACT:
SHORT TERM EFFECTS: May cause irritation.
LONG TERM EFFECTS: Same effects as short term exposure.
EYE CONTACT:
SHORT TERM EFFECTS: May cause irritation. Additional effects may include burns and tearing.
LONG TERM EFFECTS: Same effects as short term exposure.
INGESTION:
SHORT TERM EFFECTS: May cause effects as reported in short term inhalation. ·dditional effects may include coughing, drunkeness and lung damage.
·NG TERM EFFECTS: May cause reproductive effects.
I ·TIONAL DATA: Drinking alcohol may worsen the effects.

CARCINOGEN STATUS:
OSHA: N
NTP: N
IARC: N

SECTION 4 FIRST AID MEASURES

INHALATION:
FIRST AID- Remove from exposure area to fresh air immediately. If breathing has stopped, perform artificial respiration. Keep person warm and at rest. Treat symptomatically and supportively. Get medical attention immediately.

SKIN CONTACT:
FIRST AID- Remove contaminated clothing and shoes immediately. Wash affected area with soap or mild detergent and large amounts of water until no evidence of chemical remains (approximately 15-20 minutes). Get medical attention immediately.

EYE CONTACT:
FIRST AID- Wash eyes immediately with large amounts of water or normal saline, ·casionally lifting upper and lower lids, until no evidence of chemical mains (approximately 15-20 minutes). Get medical attention immediately.

INGESTION:
FIRST AID- Extreme care must be used to prevent aspiration. Gastric lavage with a cuffed endotracheal tube in place to prevent further aspiration should be done within 15 minutes. In the absence of depression or convulsions or impaired gag reflex, emesis can also be induced using syrup of ipecac without increasing the hazard of aspiration (Dreisbach, Handbook of Poisoning, 12th Ed.). Treat symptomatically and supportively. Gastric lavage should be performed by qualified medical personnel. Get medical attention immediately.

NOTE TO PHYSICIAN
ANTIDOTE:
No specific antidote. Treat symptomatically and supportively.

SECTION 5 FIRE FIGHTING MEASURES

FIRE AND EXPLOSION HAZARD:
Dangerous fire hazard when exposed to heat or flame.

Vapors are heavier than air and may travel a considerable distance to a source of ignition and flash back.

Vapor-air mixtures are explosive.

Due to low electroconductivity of the substance, flow or agitation may generate electrostatic charges resulting in sparks with possible ignition.

EXTINGUISHING MEDIA:
Dry chemical, carbon dioxide, water spray or regular foam (1990 Emergency Response Guidebook, DOT P 5800.5).

For larger fires, use water spray, fog or regular foam (1990 Emergency Response Guidebook, DOT P 5800.5).

FIREFIGHTING:
Move container from fire area if you can do it without risk. Apply cooling water to sides of containers that are exposed to flames until well after fire is out. Stay away from ends of tanks. For massive fire in cargo area, use unmanned hose holder or monitor nozzles; if this is impossible, withdraw from area and let fire burn. Withdraw immediately in case of rising sound from venting safety device or any discoloration of tank due to fire. Isolate for 1/2 mile in all directions if tank, rail car or tank truck is involved in fire (1990 Emergency Response Guidebook, DOT P 5800.5, Guide Page 27).

Extinguish only if flow can be stopped; use water in flooding quantities as fog, solid streams may spread fire. Cool containers with flooding amounts of water, apply from as far a distance as possible. Avoid breathing toxic vapors, keep upwind.

Water may be ineffective (NFPA 325M, Fire Hazard Properties of Flammable Liquids, Gases, and Volatile Solids, 1991)

FLASH POINT: 40 F (4 C) (CC)

LOWER FLAMMABLE LIMIT: 1.2%
UPPER FLAMMABLE LIMIT: 7.1%
AUTOIGNITION: 896 F (480 C)
FLAMMABILITY CLASS(OSHA): IB

HAZARDOUS COMBUSTION PRODUCTS:
Thermal decomposition may release acrid smoke and irritating fumes.

SECTION 6 ACCIDENTAL RELEASE MEASURES

OCCUPATIONAL SPILL:
Shut off ignition sources. Stop leak if you can do it without risk. Use water spray to reduce vapors. For small spills, take up with sand or other absorbent material and place into containers for later disposal. For larger spills, dike far ahead of spill for later disposal. No smoking, flames or flares in hazard area. Keep unnecessary people away; isolate hazard area and restrict entry.

Reportable Quantity (RQ): 1000 pounds
The Superfund Amendments and Reauthorization Act (SARA) Section 304 requires that a release equal to or greater than the reportable quantity for this substance be immediately reported to the local emergency planning committee and the state emergency response commission (40 CFR 355.40). If the release of this substance is reportable under CERCLA Section 103, the National Response Center must be notified immediately at (800) 424-8802 or (202) 426-2675 in the metropolitan Washington, D.C. area (40 CFR 302.6).

LAND SPILL:
Dig holding area such as lagoon, pond or pit for containment.

Dike flow of spilled material using soil or sandbags or foamed barriers such as polyurethane or concrete.

Use cement powder or fly ash to absorb liquid mass.

Immobilize spill with universal gelling agent.

Reduce vapor and fire hazard with appropriate foam.

AIR SPILL:
Knock down vapors with water spray. Keep upwind.

WATER SPILL:
If material dissolved, apply activated carbon. Use dredges or lifts to extract masses of pollution and precipitates. Apply universal gelling agent to immobilize trapped spill and increase efficiency of removal. Limit spill motion and dispersion with natural barriers or oil spill control booms. Use soaps, detergents, alcohols or other surface active agent to thicken spilled material. Use suction hoses to remove trapped spill material.

The California Safe Drinking Water and Toxic Enforcement Act of 1986 (Proposition 65) prohibits contaminating any known source of drinking water with substances known to cause cancer and/or reproductive toxicity.

SECTION 7 HANDLING AND STORAGE

Observe all federal, state and local regulations when storing this substance.

Store in accordance with 29 CFR 1910.106.

Protect against physical damage. Outside or detached storage is preferable. Inside storage should be in a standard flammable liquids storage room or cabinet. Separate from oxidizing materials (NFPA 49, hazardous chemicals data, 1975).

Bonding and grounding: Substances with low electroconductivity, which may be ignited by electrostatic sparks, should be stored in containers which meet the bonding and grounding guidelines specified in NFPA 77-1983, Recommended Practice on Static Electricity.

Store away from incompatible substances.

SECTION 8 EXPOSURE CONTROLS/PERSONAL PROTECTION

EXPOSURE LIMITS:
TOLUENE:
100 ppm (377 mg/m3) OSHA TWA; 150 ppm (565 mg/m3) OSHA STEL
50 ppm (188 mg/m3) ACGIH TWA (skin)
100 ppm (377 mg/m3) NIOSH recommended TWA;
150 ppm (565 mg/m3) NIOSH recommended STEL
100 ppm (377 mg/m3) DFG MAK TWA;
500 ppm (1885 mg/m3) DFG MAK 30 minute peak, average value, 2 times/shift

Measurement method: Charcoal tube; carbon disulfide; gas chromatography with flame ionization detection; (NIOSH Vol. III # 1500, Hydrocarbons).

1000 pounds CERCLA Section 103 Reportable Quantity
Subject to SARA Section 313 Annual Toxic Chemical Release Reporting
Subject to California Proposition 65 cancer and/or reproductive toxicity warning and release requirments- (January 1, 1991)

OSHA revoked the final rule limits of January 19, 1989 in response to the 11th Circuit Court of Appeals decision (AFL-CIO v. OSHA) effective June 30, 1993. See 29 CFR 1910.1000 (58 FR 35338)

VENTILATION:
Provide local exhaust or general dilution ventilation to meet published exposure limits. Ventilation equipment should be explosion-proof if explosive concentrations of dust, vapor or fume are present.

EYE PROTECTION:
Employee must wear splash-proof or dust-resistant safety goggles to prevent eye contact with this substance.

Emergency eye wash: Where there is any possibility that an employee's eyes may be exposed to this substance, the employer should provide an eye wash

ntain within the immediate work area for emergency use.

CLOTHING:
Employee must wear appropriate protective (impervious) clothing and equipment to prevent repeated or prolonged skin contact with this substance.

GLOVES:
Employee must wear appropriate protective gloves to prevent contact with this substance.

RESPIRATOR:
The following respirators and maximum use concentrations are recommendations by the U.S. Department of Health and Human Services, NIOSH Pocket Guide to Chemical Hazards; NIOSH criteria documents or by the U.S. Department of Labor, 29 CFR 1910 Subpart Z.
The specific respirator selected must be based on contamination levels found in the work place, must not exceed the working limits of the respirator and be jointly approved by the National Institute for Occupational Safety and Health and the Mine Safety and Health Administration (NIOSH-MSHA).

TOLUENE:
1000 ppm- Any chemical cartridge respirator with organic vapor cartridge(s).
Any supplied-air respirator.
Any powered air-purifying respirator with organic vapor cartridge(s).
Any self-contained breathing apparatus.

[illegible]0 ppm- Any supplied-air respirator operated in a continuous flow mode.
Any self-contained breathing apparatus with a full facepiece.
Any supplied-air respirator with a full facepiece.
Any air-purifying full facepiece respirator (gas mask) with a chin-style, front- or back-mounted organic vapor canister.

Escape- Any air-purifying, full facepiece respirator (gas mask) with a chin-style, front- or back-mounted organic vapor canister.
Any appropriate escape-type, self-contained breathing apparatus.

FOR FIREFIGHTING AND OTHER IMMEDIATELY DANGEROUS TO LIFE OR HEALTH CONDITIONS:

Any self-contained breathing apparatus that has a full facepiece and is operated in a pressure-demand or other positive-pressure mode.

Any supplied-air respirator that has a full facepiece and is operated in a pressure-demand or other positive-pressure mode in combination with an auxiliary self-contained breathing apparatus operated in pressure-demand or other positive-pressure mode.

SECTION 9 PHYSICAL AND CHEMICAL PROPERTIES

DESCRIPTION: Clear, colorless liquid with an aromatic odor.
[illegible]ECULAR WEIGHT: 92.14
[illegible]CULAR FORMULA: C6-H5-C-H3
B[illegible]LING POINT: 231 F (111 C)

TING POINT: -139 F (-95 C)
OR PRESSURE: 22 mmHg @ 20 C
OR DENSITY: 3.14
SPECIFIC GRAVITY: 0.8669
WATER SOLUBILITY: 0.05% @ 20 C
VOLATILITY: 100%
ODOR THRESHOLD: 10-15 ppm
EVAPORATION RATE: (butyl acetate=1) 2.24
SOLVENT SOLUBILITY: Soluble in alcohol, ether, benzene, chloroform, ligroin, glacial acetic acid, carbon disulfide, acetone.

SECTION 10 STABILITY AND REACTIVITY

REACTIVITY:
Stable under normal temperatures and pressures.

CONDITIONS TO AVOID:
Avoid contact with heat, sparks, flames, or other sources of ignition. Vapors may be explosive. Avoid overheating of containers; containers may violently rupture in heat of fire. Avoid contamination of water sources.

INCOMPATIBILITIES:
TOLUENE:
ALLYL CHLORIDE + DICHLOROETHYL ALUMINUM OR ETHYLALUMINUM SESQUICHLORIDE: Possible explosion.
ROMINE TRIFLUORIDE (SOLID): Violent reaction.
,3-DICHLORO-5,5-DIMETHYL-2,4-IMIDAZOLIDIDIONE: Explosive reaction.
DINITROGEN TETRAFLUORIDE: Forms explosive mixture.
NITRIC ACID: Vigorous reaction.
NITRIC ACID + SULFURIC ACID: Violent decomposition possible.
NITROGEN TETROXIDE: Explosive reaction.
OXIDIZERS (STRONG): Fire and explosion hazard.
PLASTICS, RUBBER, AND COATINGS: May be attacked.
SILVER PERCHLORATE: Forms shock-sensitive mixture.
SULFUR DICHLORIDE: Violent reaction, greatly accelerated in the presence of iron or ferric chloride.
SULFURIC ACID: Exothermic reaction.
TETRANITROMETHANE: Forms explosive mixture.
URANIUM HEXAFLUORIDE: Violent reaction.

HAZARDOUS DECOMPOSITION:
Thermal decomposition may release acrid smoke and irritating fumes.

POLYMERIZATION:
Hazardous polymerization has not been reported to occur under normal temperatures and pressures.

SECTION 11 TOXICOLOGY INFORMATION

UENE:
TATION DATA: 300 ppm eye-human; 870 ug eye-rabbit mild; 2 mg/24 hours ye-rabbit severe; 100 mg/30 seconds rinsed eye-rabbit mild; 435 mg

kin-rabbit mild; 500 mg skin-rabbit moderate; 20 mg/24 hours
kin-rabbit moderate.
ICITY DATA: 200 ppm inhalation-human TCLo; 100 ppm inhalation-man TCLo; >26,700 ppm/1 hour inhalation-rat LC50; 400 ppm/24 hours inhalation-mouse LC50; 55,000 ppm/40 minutes inhalation-rabbit LCLo; 1600 ppm inhalation-guinea pig LCLo; 12,124 mg/kg skin-rabbit LD50; 50 mg/kg oral-human LDLo; 636 mg/kg oral-rat LD50; 2250 mg/kg subcutaneous-mouse LD50; 1960 mg/kg intravenous-rat LD50; 130 mg/kg intravenous-rabbit LDLo; 500 mg/kg intraperitoneal-guinea pig LD50; 1332 mg/kg intraperitoneal-rat LD50; 59 mg/kg intraperitoneal-mouse LD50; 1750 mg/kg intraperitoneal-mammal LDLo; 6900 mg/kg unreported-rat LD50; 2000 mg/kg unreported-mouse LD50; mutagenic data (RTECS); reproductive effects data (RTECS).

CARCINOGEN STATUS: Human Inadequate Evidence, Animal Inadequate Evidence (IARC Group-3).

LOCAL EFFECTS: Irritant- inhalation, skin, eye.

ACUTE TOXICITY LEVEL: Moderately toxic by ingestion; slightly toxic by inhalation and dermal absorption.

TARGET EFFECTS: Central nervous system depressant; neurotoxin. Poisoning may also affect the heart, liver, kidneys, and blood.

ADDITIONAL DATA: Stimulants such as epinephrine may induce ventricular fibrillation. Alcohol may enhance the toxic effects. The metabolism of other solvents may be inhibited resulting in a potentiation of toxic effects of those chemicals. Uptake is directly proportional to the amount of body fat. Blood levels may be cumulative when exposure is extended.

TH EFFECTS
ALATION:
LUENE:
IRRITANT/NARCOTIC/NEUROTOXIN.
2000 ppm Immediately Dangerous to Life or Health.

ACUTE EXPOSURE- Odor detection may be insufficient for warning due to olfactory fatigue. Exposure to 100 ppm may cause irritation. 200-600 ppm for up to 8 hours caused fatigue, weakness, confusion, headache, nausea, impaired coordination and reaction time, paresthesias of the skin, euphoria, dizziness, and dilated pupils. 800 ppm caused rapid irritation, nasal mucous secretion, metallic taste, drowsiness, and impaired balance. After effects including nervousness, muscular fatigue, and insomnia lasted for several days. A worker found unconscious after exposure to high vapor concentrations for 18 hours developed hepatic and renal damage with myoglobinuria. Recovery was complete within 6 months. Hematologic effects occur rarely with exposure to high concentrations. Death may be due to respiratory failure or ventricular fibrillation.

CHRONIC EXPOSURE- Prolonged or repeated exposure may cause mucous membrane irritation, vomiting, insomnia, nosebleeds, chest pains, euphoria, headache, vertigo, nausea, anorexia, momentary loss of memory, loss of coordination and impairment of reaction time, tinnitus, impaired speech, vision, and/or hearing, alcohol intolerance, and petechiae and abnormal bleeding. Bone marrow hypoplasia and leukopenia have been reported occasionally, but may be due to benzene contamination. Examination of workers exposed to 100-1100 ppm revealed hepatomegaly, mild macrocytosis, moderate erythropenia, and absolute lymphocytosis but no leukopenia. Other workers exposed to toluene fumes developed leukopenia and especially neutropenia. Within 6 months, they showed decreased prothrombin level

and increased coagulation time. Periodontal effects were also noted. Volunteers exposed to 200 ppm for 6 hours/day for 2 days showed a significant increase in heart rate. Cardiac sensitization may occur and may result in cardiac arrest due to ventricular fibrillation. Repeated inhalation to the point of euphoria has caused irreversible encephalopathy with cerebellar ataxia, rhythmic limb movements, disequilibrium, bizarre behavior, emotional lability, optic atrophy, and diffuse cerebral atrophy. Other neuropsychiatric effects may include dizziness, syncope, paresthesias, peripheral neuropathy, hallulcinations, lethargy, and coma. Intentional sniffing can produce renal tubular defects with metabolic acidosis, electrolyte abnormalities and potassium loss. Severe muscle weakness leading to limb paralysis and cardiac arrhythmias may result from the hypokalemia; however, sensory function and tendon reflexes are not impaired. Gastrointestinal effects may include abdominal pain, nausea, vomiting, and hematemesis. Chromosome changes were observed in some workers up to two years after cessation of exposure to toluene. Women occupationally exposed to toluene and other varnish solvents have reported menstrual disorders, underweight offspring who did not nurse well, and fetal asphyxia. One case study indicated toluene apparently crossed the placenta and created cerebellar damage in an unborn infant. Dysmenorrhea has been reported in women occupationally exposed to toluene levels of 60-100 ppm. Reproductive effects have also been reported in animals.

SKIN CONTACT:
TOLUENE:
IRRITANT.
ACUTE EXPOSURE- Contact with the liquid may cause irritation. Vapors may cause drying. Skin absorption does occur, but it is generally too slow to produce signs of acute systemic toxicity.
CHRONIC EXPOSURE- Prolonged or repeated contact with the liquid may cause defatting of the skin with a dry fissured dermatitis. Repeated application to rabbit skin produced slight to moderate irritation and slight necrosis. Topical application of 10 gm/kg produced an increase in plasmic and lymphoid reticular cells in bone marrow of rats, while 1 gm/kg had no effect.

EYE CONTACT:
TOLUENE:
IRRITANT.
ACUTE EXPOSURE- Liquid may cause irritation and corneal burns if not promptly removed. Concentrations around 300-800 ppm may cause noticeable irritation and lacrimation. Corneal lesions and very fine vacuoles have been reported in workers exposed to a solvent containing toluene. The lesions subsided following several days of non-exposure. Similar lesions have been produced in cats following exposure to toluene.
CHRONIC EXPOSURE- Repeated or prolonged contact with irritants may cause conjunctivitis.

INGESTION:
TOLUENE:
NARCOTIC.
ACUTE EXPOSURE- May cause a burning sensation in the epigastrium and abdominal spasms. Systemic effects may occur as described in acute

inhalation. Aspiration of the liquid into the lungs may cause coughing, gagging, distress, acute hemorrhagic pneumonitis, and rapidly developing pulmonary edema. The approximate lethal dose in humans is 15-30 ml.

CHRONIC EXPOSURE- No effects were reported in rats fed up to 590 mg/kg/day for 193 days. Administration to animals during gestation produced significant embryolethality and an increase in cleft palate in offspring.

SECTION 12 ECOLOGICAL INFORMATION

ENVIRONMENTAL IMPACT RATING (0-4): no data available

ACUTE AQUATIC TOXICITY: no data available

DEGRADABILITY: no data available

LOG BIOCONCENTRATION FACTOR (BCF): no data available

LOG OCTANOL/WATER PARTITION COEFFICIENT: no data available

SECTION 13 DISPOSAL INFORMATION

Observe all federal, state and local regulations when disposing of this substance.

Disposal must be in accordance with standards applicable to generators of hazardous waste, 40CFR 262. EPA Hazardous Waste Number U220.

US EPA RCRA Hazardous Waste Number: RCRA U220

SECTION 14 TRANSPORTATION INFORMATION

U.S. DEPARTMENT OF TRANSPORTATION SHIPPING NAME-ID NUMBER, 49 CFR 172.101:
Toluene-UN 1294

U.S. DEPARTMENT OF TRANSPORTATION HAZARD CLASS OR DIVISION, 49 CFR 172.101:
3 - Flammable liquid

U.S. DEPARTMENT OF TRANSPORTATION PACKING GROUP, 49 CFR 172.101:
PG II

U.S. DEPARTMENT OF TRANSPORTATION LABELING REQUIREMENTS, 49 CFR 172.101 AND SUBPART E:
Flammable liquid

U.S. DEPARTMENT OF TRANSPORTATION PACKAGING AUTHORIZATIONS:
EXCEPTIONS: 49 CFR 173.150
NON-BULK PACKAGING: 49 CFR 173.202
BULK PACKAGING: 49 CFR 173.242

. DEPARTMENT OF TRANSPORTATION QUANTITY LIMITATIONS 49 CFR 172.101:
SENGER AIRCRAFT OR RAILCAR: 5 l
GO AIRCRAFT ONLY: 60 l

SECTION 15 REGULATORY INFORMATION

TSCA STATUS: Y

CERCLA SECTION 103 (40CFR302.4):	Y	1000 pounds RQ
SARA SECTION 302 (40CFR355.30):	N	
SARA SECTION 304 (40CFR355.40):	N	
SARA SECTION 313 (40CFR372.65):	Y	
OSHA PROCESS SAFETY (29CFR1910.119):	N	
CALIFORNIA PROPOSITION 65:	Y	

SARA HAZARD CATEGORIES, SARA SECTIONS 311/312 (40 CFR 370.21)

ACUTE HAZARD:	Y
CHRONIC HAZARD:	Y
FIRE HAZARD:	Y
REACTIVITY HAZARD:	N
SUDDEN RELEASE HAZARD:	N

SECTION 16 OTHER

COPYRIGHT 1994 OCCUPATIONAL HEALTH SERVICES, INC. ALL RIGHTS RESERVED.

Licensed to: ICF KAISER INTERNATIONAL, INC & AFFILIATES
To make unlimited paper copies for internal distribution and use only.

OH 3850

SECTION 1 CHEMICAL PRODUCTS & COMPANY IDENTIFICATION

OCCUPATIONAL HEALTH SERVICES, INC.
11 WEST 42ND STREET, 12TH FLOOR
NEW YORK, NEW YORK 10036
1-800-445-MSDS (1-800-445-6737) OR
1-212-789-3535

FOR EMERGENCY SOURCE INFORMATION
CONTACT: 1-615-366-2000 USA

CAS NUMBER: 79-01-6
RTECS NUMBER: KX4550000

SUBSTANCE: TRICHLOROETHYLENE

TRADE NAMES/SYNONYMS:
ACETYLENE TRICHLORIDE; ETHYLENE TRICHLORIDE; ALGYLEN; 1-CHLORO-2,2-DICHLOROETHYLENE; 1,1-DICHLORO-2-CHLOROETHYLENE; TCE; ANAMENTH; ETHINYL TRICHLORIDE; TRICHLOROETHENE; 1,1,2-TRICHLOROETHYLENE; ETHYLENE, TRICHLORO-; CHLORYLEN; 1,1,2-TRICHLOROETHENE; ETHENE, TRICHLORO-; NEU-TRI (R) SOLVENT (DOW CHEMICAL); BLACO-TRI (BARON-BLAKESLEE); UN 1710; RCRA U228; STCC 4941171; C2HCL3; OHS23850

CHEMICAL FAMILY:
Halogen compound, aliphatic

CREATION DATE: 10/24/84 REVISION DATE: 01/15/94

SECTION 2 COMPOSITION/INFORMATION ON INGREDIENTS

COMPONENT : TRICHLOROETHYLENE
CAS NUMBER: 79-01-6
PERCENTAGE: >99

OTHER CONTAMINANTS: TRACES OF AMINES OR EPOXIDES AS INHIBITORS.

SECTION 3 HAZARDS IDENTIFICATION

CERCLA RATINGS (SCALE 0-3): HEALTH=3 FIRE=1 REACTIVITY=0 PERSISTENCE=3
NFPA RATINGS (SCALE 0-4): HEALTH=2 FIRE=1 REACTIVITY=0

EMERGENCY OVERVIEW:
Colorless liquid with a mild chloroform-like odor.
Causes respiratory tract, skin and eye irritation. May cause blood disorders. May cause convulsions. May damage nerves. May affect the central nervous system. May cause allergic skin reaction. May cause adverse reproductive effects. May affect respiration. May cause blindness. May cause brain damage. May affect the heart. May affect the kidneys. May affect the liver. May cause visual disturbances.
Avoid breathing vapor or mist. Avoid contact with eyes, skin and clothing. Avoid repeated or prolonged contact. Keep container tightly closed. Wash

horoughly after handling. Use only with adequate ventilation. Handle with ution.

POTENTIAL HEALTH EFFECTS:
INHALATION:
SHORT TERM EFFECTS: May cause irritation. Additional effects may include paleness, nausea, vomiting, stomach pain, difficulty breathing, irregular heartbeat, low blood pressure, headache, weakness, drunkeness, feeling of well-being, disorientation, excitation or drowsiness, numbness, twitching, hallucinations, mental disorders, visual disturbances, bluish skin color, lung congestion, liver and kidney damage, nerve damage, unconsciousness, coma and heart failure.
LONG TERM EFFECTS: In addition to effects from short term exposure, swelling of the eyes, flushing, yellowing of the skin and eyes, lack of appetite, weight loss, wheezing, anemia, giddiness, anxiety, joint and muscle pain, liver damage and brain damage may occur. May also cause reproductive effects.
SKIN CONTACT:
SHORT TERM EFFECTS: May cause irritation. May cause allergic reactions. Additional effects may include blisters.
LONG TERM EFFECTS: In addition to effects from short term exposure, lack of appetite, weight loss, nausea, wheezing, weakness, joint pain and paralysis may occur.
EYE CONTACT:
SHORT TERM EFFECTS: May cause irritation. Additional effects may include burns, tearing and blurred vision.
NG TERM EFFECTS: In addition to effects from short term exposure, indness and nerve effects may occur.
INGESTION:
SHORT TERM EFFECTS: May cause nausea, vomiting, diarrhea, irregular heartbeat, headache, weakness, drunkeness, confusion, numbness, loss of memory, mental disorders, kidney damage, paralysis, convulsions and coma.
LONG TERM EFFECTS: In addition to effects from short term exposure, drowsiness and giddiness may occur. May also cause reproductive effects and cancer.

CARCINOGEN STATUS:
OSHA: N
NTP: N
IARC: N

SECTION 4 FIRST AID MEASURES

INHALATION:
FIRST AID- Remove from exposure area to fresh air immediately. If breathing has stopped, perform artificial respiration. Keep person warm and at rest. Treat symptomatically and supportively. Get medical attention immediately.

SKIN CONTACT:
RST AID- Remove contaminated clothing and shoes immediately. Wash affected ea with soap or mild detergent and large amounts of water until no vidence of chemical remains (approximately 15-20 minutes). Get medical

ttention immediately.

CONTACT:
FIRST AID- Wash eyes immediately with large amounts of water or normal saline, occasionally lifting upper and lower lids, until no evidence of chemical remains (approximately 15-20 minutes). Get medical attention immediately.

INGESTION:
FIRST AID- Remove by gastric lavage or emesis. Maintain blood pressure and airway. Give oxygen if respiration is depressed. Do not perform gastric lavage or emesis if victim is unconscious. Get medical attention immediately (Dreisbach, Handbook of Poisoning, 12th Ed.). Administration of gastric lavage or oxygen should be performed by qualified medical personnel.

NOTE TO PHYSICIAN
ANTIDOTE:
No specific antidote. Treat symptomatically and supportively.

SECTION 5 FIRE FIGHTING MEASURES

FIRE AND EXPLOSION HAZARD:
Slight fire hazard when exposed to heat or flame.

EXTINGUISHING MEDIA:
chemical or carbon dioxide
0 Emergency Response Guidebook, DOT P 5800.5).

For larger fires, use water spray, fog or regular foam
(1990 Emergency Response Guidebook, DOT P 5800.5).

FIREFIGHTING:
Apply cooling water to sides of containers that are exposed to flames until well after fire is out. Stay away from ends of tanks. Isolate for 1/2 mile in all directions if tank, rail car or tank truck is involved in fire (1990 Emergency Response Guidebook, DOT P 5800.5, Guide Page 74).

Use agent suitable for type of fire. Avoid breathing toxic vapors, keep upwind.

LOWER FLAMMABLE LIMIT: 7.8% @ 100 C
UPPER FLAMMABLE LIMIT: 52% @ 100 C
AUTOIGNITION: 770 F (410 C)

HAZARDOUS COMBUSTION PRODUCTS:
Thermal decomposition products may include highly toxic fumes of phosgene, toxic and corrosive fumes of chlorides, and oxides of carbon.

SECTION 6 ACCIDENTAL RELEASE MEASURES

ATIONAL SPILL:
off ignition sources. Stop leak if you can do it without risk. For small

uid spills, take up with sand, earth or other absorbent material. For ger spills, dike far ahead of spill for later disposal. No smoking, flames flares in hazard area! Keep unnecessary people away.

Reportable Quantity (RQ): 100 pounds
The Superfund Amendments and Reauthorization Act (SARA) Section 304 requires that a release equal to or greater than the reportable quantity for this substance be immediately reported to the local emergency planning committee and the state emergency response commission (40 CFR 355.40). If the release of this substance is reportable under CERCLA Section 103, the National Response Center must be notified immediately at (800) 424-8802 or (202) 426-2675 in the metropolitan Washington, D.C. area (40 CFR 302.6).

SOIL SPILL:
Dig a holding area such as a pit, pond or lagoon to contain spill and dike surface flow using barrier of soil, sandbags, foamed polyurethane or foamed concrete. Absorb liquid mass with fly ash or cement powder.

AIR SPILL:
Apply water spray to knock down and reduce vapors. Knock-down water is corrosive and toxic and should be diked for containment.

WATER SPILL:
Use activated carbon to absorb spilled substance that is dissolved.

Use suction hoses to remove trapped spill material.

mechanical dredges or lifts to extract immobilized masses of pollution and precipitates.

The California Safe Drinking Water and Toxic Enforcement Act of 1986 (Proposition 65) prohibits contaminating any known source of drinking water with substances known to cause cancer and/or reproductive toxicity.

SECTION 7 HANDLING AND STORAGE

Observe all federal, state and local regulations when storing this substance.

Store in a cool, dry, well-ventilated location, away from any area where the fire hazard may be acute (NFPA 49, Hazardous Chemicals Data, 1975).

Store away from incompatible substances.

SECTION 8 EXPOSURE CONTROLS/PERSONAL PROTECTION

EXPOSURE LIMITS:
TRICHLOROETHYLENE:
50 ppm (269 mg/m3) OSHA TWA; 200 ppm (1070 mg/m3) OSHA STEL
50 ppm (269 mg/m3) ACGIH TWA; 100 ppm (537 mg/m3) ACGIH STEL
CGIH A5-not suspected as a Human Carcinogen
ppm (134 mg/m3) NIOSH recommended TWA
ppm (269 mg/m3) DFG MAK TWA;

OHS11120

SECTION 1 CHEMICAL PRODUCTS & COMPANY IDENTIFICATION

OCCUPATIONAL HEALTH SERVICES, INC.
11 WEST 42ND STREET, 12TH FLOOR
NEW YORK, NEW YORK 10036
1-800-445-MSDS (1-800-445-6737) OR
1-212-789-3535

FOR EMERGENCY SOURCE INFORMATION
CONTACT: 1-615-366-2000 USA

CAS NUMBER: 1333-74-0
RTECS NUMBER: MW8900000

SUBSTANCE: HYDROGEN

TRADE NAMES/SYNONYMS:
HYDROGEN GAS; HYDROGEN COMPRESSED; HYDROGEN (H2); DIHYDROGEN; STCC 4905746; UN 1049; H2; OHS11120

CHEMICAL FAMILY:
Inorganic gas

CREATION DATE: 03/12/85 REVISION DATE: 01/15/94

SECTION 2 COMPOSITION/INFORMATION ON INGREDIENTS

COMPONENT : HYDROGEN
CAS NUMBER: 1333-74-0
PERCENTAGE: 100.0

OTHER CONTAMINANTS: NONE.

SECTION 3 HAZARDS IDENTIFICATION

CERCLA RATINGS (SCALE 0-3): HEALTH=0 FIRE=3 REACTIVITY=0 PERSISTENCE=0
NFPA RATINGS (SCALE 0-4): HEALTH=0 FIRE=4 REACTIVITY=0

EMERGENCY OVERVIEW:
Odorless, colorless, tasteless gas.
May cause convulsions. May affect the central nervous system. Reduces oxygen available for breathing. Flammable gas. May cause flash fire.
Keep away from all ignition sources. Avoid breathing gas. Avoid contact with eyes, skin and clothing. Do not enter confined spaces unless adequately ventilated. Do not puncture container. Keep container tightly closed. Wash thoroughly after handling. Use only with adequate ventilation.

POTENTIAL HEALTH EFFECTS:
INHALATION:
SHORT TERM EFFECTS: May cause nausea, vomiting, weakness, dizziness, incoordination, tingling sensation, suffocation, convulsions, unconsciousness and coma.

ONG TERM EFFECTS: No information available on significant adverse effects.
I CONTACT:
HORT TERM EFFECTS: May cause blisters, frostbite and numbness.
LONG TERM EFFECTS: No information is available.
EYE CONTACT:
SHORT TERM EFFECTS: May cause frostbite and blurred vision.
LONG TERM EFFECTS: No information is available.
INGESTION:
SHORT TERM EFFECTS: May cause frostbite.
LONG TERM EFFECTS: No information is available.

CARCINOGEN STATUS:
OSHA: N
NTP: N
IARC: N

SECTION 4 FIRST AID MEASURES

INHALATION:
FIRST AID- Remove from exposure area to fresh air immediately. If breathing has stopped, give artificial respiration. Maintain airway and blood pressure and administer oxygen if available. Keep affected person warm and at rest. Treat symptomatically and supportively. Administration of oxygen should be performed by qualified personnel. Get medical attention immediately.

SKIN CONTACT:
FIRST AID- It is unlikely that emergency treatment will be required. If adverse effects occur, get medical attention.
In case of frostbite, warm affected skin in warm water at a temperature of 107 F. If warm water is not available or impractical to use, gently wrap affected part in blankets. Encourage victim to exercise affected part while it is being warmed. Allow circulation to return naturally (Matheson Gas, 6th Ed.). Get medical attention immediately.

EYE CONTACT:
FIRST AID- It is unlikely that contact with the gas form will require emergency treatment. If contact with liquefied or compressed gas occurs, wash with large amounts of warm water until no evidence of chemical remains (approximately 15-20 minutes). Get medical attention immediately.

INGESTION:
FIRST AID- It is unlikely that emergency treatment will be required. If adverse effects occur, treat symptomatically and supportively and get medical attention.

NOTE TO PHYSICIAN
ANTIDOTE:
No specific antidote. Treat symptomatically and supportively.

ECTION 5 FIRE FIGHTING MEASURES

AND EXPLOSION HAZARD:
Dangerous fire hazard when exposed to heat or flame.

Dangerous explosion hazard when exposed to heat or flame.

Vapor-air mixtures are explosive.

Container may explode in heat of fire.

Due to low electroconductivity of the substance, flow or agitation may generate electrostatic charges resulting in sparks with possible ignition.

EXTINGUISHING MEDIA:
Dry chemical or carbon dioxide
(1990 Emergency Response Guidebook, DOT P 5800.5).

For larger fires, use water spray or fog
(1990 Emergency Response Guidebook, DOT P 5800.5).

FIREFIGHTING:
Move container from fire area if you can do it without risk. Apply cooling water to sides of containers that are exposed to flames until well after fire is out. Stay away from ends of tanks. For massive fire in cargo area, use unmanned holder or monitor nozzles; if this is impossible, withdraw from area and let fire burn. Withdraw immediately in case of rising sound from venting safety device or any discoloration of tank due to fire. Let tank, tank car or tank truck burn unless leak can be stopped; with smaller tanks or cylinders, extinguish/isolate from other flammables. Isolate for 1/2 mile in all directions if tank, rail car or tank truck is involved in fire (1990 emergency response guidebook, DOT P 5800.5, Guide Page 22).

Extinguish only if gas flow can be stopped. Use flooding amounts of water as fog. Cool cylinders with flooding amounts of water from as far a distance as possible. Avoid breathing vapors; keep upwind. If fire is uncontrollable or cylinders are exposed to fire, evacuate for a radius of 1500 feet. Consider evacuation of downwind area if material is leaking.

Stop flow of gas (NFPA 325M, Fire Hazard Properties of Flammable Liquids, Gases, and Volatile Solids, 1991).

LOWER FLAMMABLE LIMIT: 4.0%
UPPER FLAMMABLE LIMIT: 75%
AUTOIGNITION: 932 F (500 C)

HAZARDOUS COMBUSTION PRODUCTS:
None hazardous.

SECTION 6 ACCIDENTAL RELEASE MEASURES

OCCUPATIONAL SPILL:
Shut off ignition sources. Do not touch spilled material. Stop leak if you can do it without risk. Use water spray to reduce vapors. Isolate area until

has dispersed. No smoking, flames or flares in hazard area! Keep necessary people away; isolate hazard area and deny entry. Ventilate closed spaces before entering.

SECTION 7 HANDLING AND STORAGE

Observe all federal, state and local regulations when storing this substance.

Store in accordance with 29 CFR 1910.103.

Store in a cool, dry, well-ventilated location. Outside or detached storage is preferred. Isolate from oxygen, halogens, other oxidizing materials (NFPA 49, Hazardous Chemicals Data, 1991).

Bonding and grounding: Substances with low electroconductivity, which may be ignited by electrostatic sparks, should be stored in containers which meet the bonding and grounding guidelines specified in NFPA 77-1983, Recommended Practice on Static Electricity.

Store away from incompatible substances.

SECTION 8 EXPOSURE CONTROLS/PERSONAL PROTECTION

EXPOSURE LIMITS:
Occupational exposure limits established by OSHA, ACGIH, or NIOSH.

VENTILATION:
Provide local exhaust or general dilution ventilation. Ventilation equipment should be explosion-proof if explosive concentrations of dust, vapor or fume are present.

EYE PROTECTION:
For the gas form eye protection is not required but recommended.
Where there is any possibility of contact with the liquid form, employee must wear splash-proof safety goggles and a faceshield to prevent contact with this substance. Contact lenses should not be worn.

Emergency wash facilities:
Where there is any possibility that an employee's eyes and/or skin may be exposed to the liquid form of this substance, the employer should provide an eye wash fountain and quick drench shower within the immediate work area for emergency use.

CLOTHING:
For the gas form, protective clothing not required.
If contact with the liquid form is possible, employee must wear appropriate protective clothing and equipment to prevent skin from freezing.

GLOVES:
For full protective, cold insulating gloves.

RESPIRATOR:

following respirators are recommended based on information found in the ysical data, toxicity and health effects sections. They are ranked in rder from minimum to maximum respiratory protection.
The specific respirator selected must be based on contamination levels found in the work place, must be based on the specific operation, must not exceed the working limits of the respirator and must be jointly approved by the National Institute for Occupational Safety and Health and the Mine Safety and Health Administration (NIOSH-MSHA).

Any supplied-air respirator operated in pressure-demand or other positive pressure mode.

Any self-contained breathing apparatus.

FOR FIREFIGHTING AND OTHER IMMEDIATELY DANGEROUS TO LIFE OR HEALTH CONDITIONS:

Any self-contained breathing apparatus that has a full facepiece and is operated in a pressure-demand or other positive-pressure mode.

Any supplied-air respirator that has a full facepiece and is operated in a pressure-demand or other positive-pressure mode in combination with an auxiliary self-contained breathing apparatus operated in pressure-demand or other positive-pressure mode.

SECTION 9 PHYSICAL AND CHEMICAL PROPERTIES

CRIPTION: Odorless, colorless, tasteless gas.
MOLECULAR WEIGHT: 2.0
MOLECULAR FORMULA: H_2
BOILING POINT: -423 F (-253 C)
MELTING POINT: -434 F (-259 C)
VAPOR PRESSURE: 760 mmHg @ -253 C
VAPOR DENSITY: 0.07
SPECIFIC GRAVITY: 0.0899 g/L @ 0 C
WATER SOLUBILITY: 1.82% @ 20 C
SOLVENT SOLUBILITY: Slightly soluble in alcohol and ether.

VISCOSITY: 0.008957 cP @ 26.8 C

SECTION 10 STABILITY AND REACTIVITY

REACTIVITY:
Stable under normal temperatures and pressures.

CONDITIONS TO AVOID:
Avoid contact with heat, sparks, flames or other ignition sources. Vapors may be explosive. Do not allow contact with skin; material may cause frostbite. Contents are under pressure; containers may rupture violently and travel a considerable distance.

MPATIBILITIES:
HYDROGEN:

ALKALINE METALS: Ignition at elevated temperatures.
CALCIUM CARBONATE + MAGNESIUM (POWDER): Explosion on heating.
CHLORINE DIOXIDE: Detonates when sparked or on contact with platinum sponge.
COPPER (II) OXIDE: Violent explosion when heated.
DICHLORINE OXIDE: Detonates on ignition.
DIFLUORODIAZENE: Explosive reaction above 90 C.
DINITROGEN OXIDE: Sensitizes hydrogen-oxygen mixtures.
DINITROGEN TETRAOXIDE: Sensitizes hydrogen-oxygen mixtures.
DIOXANE + NICKEL (CATALYST): Explosive reaction above 200 C.
FLUORINE PERCHLORATE: Ignition.
HALOGENS: Ignition or explosive reaction.
INTERHALOGENS: Ignition or explosive reaction.
ISOPROPYL ALCOHOL + PALLADIUM: Ignition.
NITROANISOLE + NICKEL (CATALYST): Explosion.
NITROGEN (LIQUID) + ALKENES: May form explosive products.
NITROGEN OXIDE: Sensitizes hydrogen-oxygen mixutres.
NITROGEN TRIFLUORIDE: Explosive reaction on ignition.
NITROSYL CHLORIDE: Causes ignition in hydrogen-oxygen mixtures.
NITRYL FLUORIDE: Explosion @ 200-300 C.
OXIDIZERS: Ignition or explosion.
OXYGEN: Flammable, explosive mixtures, particularly in the presence of a catalyst.
OXYGEN DIFLUORIDE: Explodes if ignited..
OZONE (SOLID): Highly explosive mixtures with liquid hydrogen.
PALLADIUM(II) OXIDE: Incandesces on contact.
PALLADIUM TRIFLUORIDE: Reduces with incandescence.
PENTOL: Explosive reaction on heating.
POLY(CARBON MONOFLUORIDE): Deflagration above 400 C.
1,1,1-TRIS(AZIDOMETHYL)ETHANE + CATALYST: Possible explosion.
1,1,1-TRIS(HYDROXYMETHYL)NITROMETHANE + CATALYST: Possible explosion.
UNSATURATED HYDROCARBONS: Hydrogenation of unsaturated hydrocarbons in the presence of a catalyst may proceed with explosive violence if conditions are not properly controlled.
XENON HEXAFLUORIDE: Violent reaction.

HAZARDOUS DECOMPOSITION:
None hazardous.

POLYMERIZATION:
Hazardous polymerization has not been reported to occur under normal temperatures and pressures.

SECTION 11 TOXICOLOGY INFORMATION

HYDROGEN:
CARCINOGEN STATUS: None.
ACUTE TOXICITY LEVEL: No data available.
TARGET EFFECTS: Simple asphyxiant.

HEALTH EFFECTS
INHALATION:
HYDROGEN:
SIMPLE ASPHYXIANT.

See information on simple asphyxiants.

SIMPLE ASPHYXIANTS:
ACUTE EXPOSURE- The symptoms of asphyxia depend on the rapidity with which the oxygen deficiency develops and how long it continues. In sudden acute asphyxia, unconsciousness may be immediate. With slow development there may be rapid respiration and pulse, air hunger, dizziness, reduced awareness, tightness in the head, tingling sensations, incoordination, faulty judgement, emotional instability, and rapid fatigue. As the asphyxia progresses, nausea, vomiting, collapse, unconsciousness, convulsions, deep coma and death are possible.
CHRONIC EXPOSURE- No data available.

SKIN CONTACT:
HYDROGEN:
ACUTE EXPOSURE- No adverse effects have been reported from the gas. Due to rapid evaporation, the liquid may cause frostbite with redness, tingling and pain or numbness. In more severe cases, the skin may become hard and white and develop blisters.
CHRONIC EXPOSURE- No data available.

EYE CONTACT:
HYDROGEN:
ACUTE EXPOSURE- No adverse effects have been reported from the gas. Due to rapid evaporation, the liquid may cause frostbite with redness, pain and blurred vision.
CHRONIC EXPOSURE- No data available.

INGESTION:
HYDROGEN:
ACUTE EXPOSURE- Ingestion of a gas is unlikely. If liquid is swallowed, frostbite damage to the lips, mouth and mucous membranes may occur.
CHRONIC EXPOSURE- No data available.

SECTION 12 ECOLOGICAL INFORMATION

ENVIRONMENTAL IMPACT RATING (0-4): no data available

ACUTE AQUATIC TOXICITY: no data available

DEGRADABILITY: no data available

LOG BIOCONCENTRATION FACTOR (BCF): no data available

LOG OCTANOL/WATER PARTITION COEFFICIENT: no data available

SECTION 13 DISPOSAL INFORMATION

Observe all federal, state and local regulations when disposing of this substance.

Disposal must be in accordance with standards applicable to generators of

ardous waste, 40 CFR 262. EPA Hazardous Waste Number D001.
0 pound CERCLA Section 103 Reportable Quantity.

SECTION 14 TRANSPORTATION INFORMATION

U.S. DEPARTMENT OF TRANSPORTATION SHIPPING NAME-ID NUMBER, 49 CFR 172.101:
Hydrogen, compressed-UN 1049

U.S. DEPARTMENT OF TRANSPORTATION HAZARD CLASS OR DIVISION, 49 CFR 172.101:
2.1 - Flammable gas

U.S. DEPARTMENT OF TRANSPORTATION LABELING REQUIREMENTS, 49 CFR 172.101
AND SUBPART E:
Flammable gas

U.S. DEPARTMENT OF TRANSPORTATION PACKAGING AUTHORIZATIONS:
EXCEPTIONS: 49 CFR 173.306
NON-BULK PACKAGING: 49 CFR 173.302
BULK PACKAGING: 49 CFR 173.302

U.S. DEPARTMENT OF TRANSPORTATION QUANTITY LIMITATIONS 49 CFR 172.101:
PASSENGER AIRCRAFT OR RAILCAR: Forbidden
CARGO AIRCRAFT ONLY: 150 kg

CTION 15 REGULATORY INFORMATION

TSCA STATUS: Y

CERCLA SECTION 103 (40CFR302.4):	N
SARA SECTION 302 (40CFR355.30):	N
SARA SECTION 304 (40CFR355.40):	N
SARA SECTION 313 (40CFR372.65):	N
OSHA PROCESS SAFETY (29CFR1910.119):	N
CALIFORNIA PROPOSITION 65:	N

SARA HAZARD CATEGORIES, SARA SECTIONS 311/312 (40 CFR 370.21)

ACUTE HAZARD:	Y
CHRONIC HAZARD:	N
FIRE HAZARD:	Y
REACTIVITY HAZARD:	N
SUDDEN RELEASE HAZARD:	Y

SECTION 16 OTHER

COPYRIGHT 1994 OCCUPATIONAL HEALTH SERVICES, INC. ALL RIGHTS RESERVED.

Licensed to: ICF KAISER INTERNATIONAL, INC & AFFILIATES
o make unlimited paper copies for internal distribution and use only.

APPENDIX D
HEALTH AND SAFETY PLAN SIGNATURE FORM

HEALTH AND SAFETY PLAN SIGNATURE RECORD

SITE NAME/NUMBER _____

REGION/LOCATION _____

I have read, understood, and agreed to comply with the provisions of the above-referenced Health and Safety Plan (HASP) for work activities on this site.

PRINTED NAME	SIGNATURE	DATE

APPENDIX E
EMPLOYEE EXPOSURE/INJURY INCIDENT REPORT

50 ppm (1344 mg/m3) DFG MAK 30 minute peak, average value, 2 times/shift

easurement method: Charcoal tube; carbon disulfide; gas chromatography with flame ionization detection; (NIOSH Vol. III # 1022).

100 pounds CERCLA Section 103 Reportable Quantity
Subject to SARA Section 313 Annual Toxic Chemical Release Reporting
Subject to California Proposition 65 cancer and/or reproductive toxicity warning and release requirements- (April 1, 1988)

OSHA revoked the final rule limits of January 19, 1989 in response to the 11th Circuit Court of Appeals decision (AFL-CIO v. OSHA) effective June 30, 1993. See 29 CFR 1910.1000 (58 FR 35338)

VENTILATION:
Provide local exhaust ventilation system to meet published exposure limits.

EYE PROTECTION:
Employee must wear splash-proof or dust-resistant safety goggles to prevent eye contact with this substance.

Emergency eye wash: Where there is any possibility that an employee's eyes may be exposed to this substance, the employer should provide an eye wash fountain within the immediate work area for emergency use.

CLOTHING:
oyee must wear appropriate protective (impervious) clothing and equipment prevent repeated or prolonged skin contact with this substance.

GLOVES:
Employee must wear appropriate protective gloves to prevent contact with this substance.

RESPIRATOR:
The following respirators and maximum use concentrations are recommendations by the U.S. Department of Health and Human Services, NIOSH Pocket Guide to Chemical Hazards; NIOSH criteria documents or by the U.S. Department of Labor, 29 CFR 1910 Subpart Z.
The specific respirator selected must be based on contamination levels found in the work place, must not exceed the working limits of the respirator and be jointly approved by the National Institute for Occupational Safety and Health and the Mine Safety and Health Administration (NIOSH-MSHA).

TRICHLOROETHYLENE:
At any detectable concentration:

Any self-contained breathing apparatus with full facepiece and operated in a pressure-demand or other positive pressure mode.

Any supplied-air respirator with a fullface-piece and operated in pressure-demand or other positive pressure mode in combination with an auxiliary self-contained breathing apparatus operated in pressure-demand or other positive pressure mode.

cape- Any air-purifying full facepiece respirator (gas mask) with a chin-style or front- or back-mounted organic vapor canister.

Any appropriate escape-type self-contained breathing apparatus.

FOR FIREFIGHTING AND OTHER IMMEDIATELY DANGEROUS TO LIFE OR HEALTH CONDITIONS:

Any self-contained breathing apparatus that has a full facepiece and is operated in a pressure-demand or other positive-pressure mode.

Any supplied-air respirator that has a full facepiece and is operated in a pressure-demand or other positive-pressure mode in combination with an auxiliary self-contained breathing apparatus operated in pressure-demand or other positive-pressure mode.

SECTION 9 PHYSICAL AND CHEMICAL PROPERTIES

DESCRIPTION: Colorless liquid with a mild chloroform-like odor.
MOLECULAR WEIGHT: 131.39
MOLECULAR FORMULA: CL-C-H-C-CL2
BOILING POINT: 189 F (87 C)
MELTING POINT: -99 F (-73 C)
VAPOR PRESSURE: 58 mmHg @ 20 C
VAPOR DENSITY: 4.53
SPECIFIC GRAVITY: 1.4642
WATER SOLUBILITY: 0.1%
ODOR THRESHOLD: 21 ppm
EVAPORATION RATE: (carbon tetrachloride=1) 0.69
SOLVENT SOLUBILITY: Soluble in alcohol, ether, acetone, chloroform, benzene and vegetable oils.

SECTION 10 STABILITY AND REACTIVITY

REACTIVITY:
Stable under normal temperatures and pressures in a closed container. Uninhibited material, on heating or exposure to light, may decompose or polymerize, releasing hydrogen chloride.

CONDITIONS TO AVOID:
May burn but does not ignite readily. Container may explode in heat of fire.

INCOMPATIBILITIES:
TRICHLOROETHYLENE:
ALKALI: Forms explosive mixture.
ALUMINUM + DILUTE HYDROCHLORIC ACID: Violent poymerization.
ALUMINUM: Violent decomposition may occur on contact with aluminum powder or freshly formed surfaces.
BARIUM: Possible detonation.
BERYLLIUM: Forms impact-sensitive mixture.
BORON: Forms explosive or ignitable compound.
1-CHLORO-2,3-EPOXYPROPANE: Forms explosive mixture.
2,4-BIS(4(2',3'-EPOXYPROPOXY)PHENYL)PROPANE: Forms explosive mixture.
1-2,3-EPOXYPROPYL ETHER OF 1,4-BUTANEDIOL: Forms explosive mixture.
OXIDES: Possible explosion.
LITHIUM: Forms impact-sensitive mixture.

ˆGNESIUM: Forms impact-sensitive mixture.
.TALS (POWDERED): Forms explosive or ignitable compound.
.ONO-2,3-EPOXYPROPYL ETHER OF 1,4-BUTANEDIOL: Forms explosive mixture.
NITROGEN TETRAOXIDE: Forms explosive mixture.
OXIDIZERS (STRONG): Fire and explosion hazard.
OXYGEN (LIQUID): Explodes when initiated with a blasting cap.
OXYGEN (GAS): Explodes under pressure at room temperature.
PERCHLORIC ACID: Violent reaction.
POTASSIUM: Forms explosive chloroacetylenes.
POTASSIUM HYDROXIDE: Forms explosive dichloroacetylene when heated.
SODIUM: Forms explosive chloroacetylenes.
SODIUM HYDROXIDE: Forms explosive chloroacetylenes.
TITANIUM (POWDER): Forms impact-sensitive mixture.

HAZARDOUS DECOMPOSITION:
Thermal decomposition products may include highly toxic fumes of phosgene, toxic and corrosive fumes of chlorides, and oxides of carbon.

POLYMERIZATION:
May polymerize when catalyzed by aluminum chloride in a self-sustaining reaction which may develop temperatures up to 1350 C. A stabilizer is required to prevent polymerization when heated or exposed to sunlight.

SECTION 11 TOXICOLOGY INFORMATION

HLOROETHYLENE:
ITATION DATA: 2 mg/24 hours skin-rabbit severe; 20 mg/24 hours eye-rabbit moderate.
TOXICITY DATA: 6900 mg/m3/10 minutes inhalation-human TCLo; 160 ppm/83 minutes inhalation-human TCLo; 812 mg/kg inhalation-human TDLo; 110 ppm/8 hours inhalation-man TCLo; 2900 ppm inhalation-man LCLo; 8000 ppm/4 hours inhalation-rat LCLo; 8450 ppm/4 hours inhalation-mouse LC50; 11,000 ppm inhalation-rabbit LCLo; 32,500 mg/m3/2 hours inhalation-cat LCLo; 37,200 ppm/40 minutes inhalation-guinea pig LCLo; 7 gm/kg oral-human LDLo; 2143 mg/kg oral-man TDLo; 2402 mg/kg oral-mouse LD50; 7330 mg/kg oral-rabbit LDLo; 5864 mg/kg oral-cat LDLo; 16 gm/kg subcutaneous-mouse LD50; 1800 mg/kg subcutaneous-rabbit LDLo; 150 mg/kg subcutaneous-dog LDLo; 33,900 ug/kg intravenous-mouse LD50; 150 mg/kg intravenous-dog LDLo; 1282 mg/kg intraperitoneal-rat LD50; 1900 mg/kg intraperitoneal-dog LD50; mutagenic data (RTECS); reproductive effects data (RTECS); tumorigenic data (RTECS).
CARCINOGEN STATUS: Human Inadequate Evidence, Animal Limited Evidence (IARC Group-3). Repeated oral administration produced hepatocellular carcinomas in male and female mice; hepatocellular adenomas in female mice; lung tumors in male and female mice; tubular cell neoplasms of the kidney and interstitial cell neoplasms of the testis in rats. Inhalation exposures resulted in increased incidences of liver and lung tumors in male and female mice and low incidences of adenocarcinomas of the renal tubules in rats.
LOCAL EFFECTS: Irritant- inhalation, skin, eye.
ACUTE TOXICITY LEVEL: Moderately toxic by ingestion. Slightly toxic by ˆhalation.
GET EFFECTS: Sensitizer- dermal; central nervous system depressant. Poisoning may affect the liver, kidneys, lung and heart.

INCREASED RISK FROM EXPOSURE: Person with pre-existing heart disease.
ITIONAL DATA: The presence of tetrachloroethane as an impurity, or the consumption of alcoholic beverages, caffeine, or other drugs may enhance the systemic toxicity. Epinephrine or other stimulants may induce ventricular arrhythmias. May cross the placenta. One study shows an increased risk of leukemia for children whose fathers had occupational exposure to chlorinated solvents after the birth of the child.

HEALTH EFFECTS
INHALATION:
TRICHLOROETHYLENE:
IRRITANT/NARCOTIC.
1000 ppm Immediately Dangerous to Life or Health.

ACUTE EXPOSURE- May cause mild irritation of the respiratory tract. Levels of 250-1000 ppm have caused impaired judgement and coordination. 1000-5000 ppm has caused excitation followed by central nervous system depression with drowsiness, dizziness, headache, nausea, vomiting, unconsciousness and coma. If consciousness is regained, nausea and vomiting may follow for several hours. Psychotic effects may include euphoria, disorientation, visual disturbances and hallucinations, and delusions. Other effects may include weakness, abdominal cramps, pallor, dyspnea, tachypnea, irregular pulse and heartbeat, pulmonary edema, hypotension, anesthesia, tremors, profuse perspiration, cyanosis, and rarely convulsions. Death may occur from respiratory arrest or ventricular fibrillation resulting in primary cardiac failure. Liver and kidney damage may also occur. Animal studies have also shown spleen damage. Trigeminal nerve damage and hepatotoxic effects have been attributed to exposure to the impure substance or to the decomposition products.

CHRONIC EXPOSURE- Repeated exposure to levels below 300 ppm may cause nausea, vomiting, headache, abdominal cramps, sleepiness, drunkenness, flushing, anorexia, swelling of the eyes, face and hands, and mild cardiac arrhythmias. Other symptoms may include wheezing, weight loss, anorexia, joint and muscle pain, anemia, cranial and peripheral neuropathies, anemia, chemical hepatitis, cirrhosis, and rarely jaundice. Intolerance to alcohol and tobacco, tremor, giddiness, anxiety and cardiac arrhythmias have been found in workers chronically exposed to 5-630 ppm. Liver, kidney and brain damage may also occur. Reproductive effects have been reported in animals. Administration to mice was associated with an increased incidence of liver and lung tumors and adenocarcinomas of the renal tubules in rats.

SKIN CONTACT:
TRICHLOROETHYLENE:
IRRITANT/SENSITIZER.

ACUTE EXPOSURE- May cause irritation and contact dermatitis. May cause sensitization in previously exposed individuals and result in generalized exfoliative or papulovesicular dermatitis, and erythroderma. Skin contact with soaked clothing for a long period of time may result in blistering. May be absorbed through the skin, however, dermal absorption is not likely to be of toxicological significance under normal use.

CHRONIC EXPOSURE- May cause a defatting type of dermatitis resulting in roughness, chapping, vesiculation and secondary infection. Repeated contact may result in paralysis of the fingers. Sensitization may occur. Repeated low level exposure may cause inebriation, irritability, and

personality changes. Chronic absorption may also produce weight loss, nausea, anorexia, fatigue, visual impairment, joint pain and wheezing. Jaundice is rare.

EYE CONTACT:
TRICHLOROETHYLENE:
IRRITANT.
ACUTE EXPOSURE- Direct contact with vapor or liquid may cause burns of the lids, conjunctiva and cornea with symptoms of redness, tearing and blurred vision. A splash in the eye may cause smarting pain and injury to the corneal epithelium which may regenerate with complete recovery.
CHRONIC EXPOSURE- Repeated and prolonged exposure may cause conjunctivitis, corneal inflammation, optic neuritis, double vision, nystagmus, changes in color perception and blindness.

INGESTION:
TRICHLOROETHYLENE:
NARCOTIC/LIMITED ANIMAL CARCINOGEN.
ACUTE EXPOSURE- May cause severe burning sensation in the mouth, throat, esophagus, and stomach, diarrhea, inebriation, confusion, tachycardia, and central nervous system depression with dizziness, nausea, vomiting, headache, collapse, convulsions, and coma followed by death from respiratory, cardiac or hepatorenal failure. Low-level concentrations may cause headache, amnesia, numbness, weakness of the extremities, hemiparesis and psychosis.
CHRONIC EXPOSURE- May cause irritation of mucous membranes, headache, drowsiness, fatigue, giddiness, excitability, indigestion, nausea, disturbances of sensations in the extremities and other symptoms noted in chronic inhalation. Reproductive effects have been reported in animals. Repeated oral administration produced liver and lung tumors in mice. Tubular cell neoplasms of the kidney and interstitial cell neoplasms of the testis were observed in rats.

SECTION 12 ECOLOGICAL INFORMATION

ENVIRONMENTAL IMPACT RATING (0-4): no data available

ACUTE AQUATIC TOXICITY: no data available

DEGRADABILITY: no data available

LOG BIOCONCENTRATION FACTOR (BCF): no data available

LOG OCTANOL/WATER PARTITION COEFFICIENT: no data available

SECTION 13 DISPOSAL INFORMATION

Observe all federal, state and local regulations when disposing of this substance.

Disposal must be in accordance with standards applicable to generators of

h rdous waste, 40CFR 262. EPA Hazardous Waste Number U228.

Trichloroethylene - regulatory level: 0.5 mg/l (TCLP-40 CFR 261 Appendix II) materials which contain the above substance at or above the TCLP regulatory level meet the EPA toxicity characteristic, and must be disposed of in accordance with 40 CFR part 262. EPA Hazardous Waste Number D040.

US EPA RCRA Hazardous Waste Number: RCRA U228

SECTION 14 TRANSPORTATION INFORMATION

U.S. DEPARTMENT OF TRANSPORTATION SHIPPING NAME-ID NUMBER, 49 CFR 172.101:
Trichloroethylene-UN 1710

U.S. DEPARTMENT OF TRANSPORTATION HAZARD CLASS OR DIVISION, 49 CFR 172.101:
6.1 - Poisonous materials

U.S. DEPARTMENT OF TRANSPORTATION PACKING GROUP, 49 CFR 172.101:
PG III

U.S. DEPARTMENT OF TRANSPORTATION LABELING REQUIREMENTS, 49 CFR 172.101 AND SUBPART E:
Keep away from food

U . DEPARTMENT OF TRANSPORTATION PACKAGING AUTHORIZATIONS:
P PTIONS: 49 CFR 173.153
N -BULK PACKAGING: 49 CFR 173.203
BULK PACKAGING: 49 CFR 173.241

U.S. DEPARTMENT OF TRANSPORTATION QUANTITY LIMITATIONS 49 CFR 172.101:
PASSENGER AIRCRAFT OR RAILCAR: 60 l
CARGO AIRCRAFT ONLY: 220 l

SECTION 15 REGULATORY INFORMATION

TSCA STATUS: Y

CERCLA SECTION 103 (40CFR302.4):	Y	100 pounds RQ
SARA SECTION 302 (40CFR355.30):	N	
SARA SECTION 304 (40CFR355.40):	N	
SARA SECTION 313 (40CFR372.65):	Y	
OSHA PROCESS SAFETY (29CFR1910.119):	N	
CALIFORNIA PROPOSITION 65:	Y	

SARA HAZARD CATEGORIES, SARA SECTIONS 311/312 (40 CFR 370.21)

ACUTE HAZARD:	Y
CHRONIC HAZARD:	Y
FIRE HAZARD:	N
R ACTIVITY HAZARD:	N
S EN RELEASE HAZARD:	N

COPYRIGHT 1994 OCCUPATIONAL HEALTH SERVICES, INC. ALL RIGHTS RESERVED.

Licensed to: ICF KAISER INTERNATIONAL, INC & AFFILIATES
To make unlimited paper copies for internal distribution and use only.

OHS14371

SECTION 1 CHEMICAL PRODUCTS & COMPANY IDENTIFICATION

OCCUPATIONAL HEALTH SERVICES, INC.
11 WEST 42ND STREET, 12TH FLOOR
NEW YORK, NEW YORK 10036
1-800-445-MSDS (1-800-445-6737) OR
1-212-789-3535

FOR EMERGENCY SOURCE INFORMATION
CONTACT: 1-615-366-2000 USA

CAS NUMBER: 71-55-6
RTECS NUMBER: KJ2975000

SUBSTANCE: 1,1,1-TRICHLOROETHANE, STABILIZED

TRADE NAMES/SYNONYMS:
1,1,1-TRICHLOROETHANE; ALPHA-TRICHLOROETHANE; INHIBISOL; METHYLTRICHLOROMETHANE; METHYL CHLOROFORM; TRICHLOROMETHYLMETHANE; TRICHLOROETHANE; ETHANE, 1,1,1-TRICHLORO-; CHLORTEN; 1,1,1-TRICHLORETHANE; TRICHLOROETHANE 111 DEGREASE COLD/VAPOR (ASHLAND); ST-1000A CLEANER (STRESSCOAT); BLACO-THANE (BARON-BLAKESLEE); PERM ETHANE DG (DETREX CHEMICALS); SAFETY SOLVENT (LOCTITE CORPORATION); ACTIVATOR 711, 702, 703 (LOCTITE CORPORATION); RCRA U226; UN 2831; STCC 4941176; C2H3CL3; OHS14371

CHEMICAL FAMILY:
Halogen compound, aliphatic

CREATION DATE: 05/24/90 REVISION DATE: 01/15/94

SECTION 2 COMPOSITION/INFORMATION ON INGREDIENTS

COMPONENT : 1,1,1-TRICHLOROETHANE
CAS NUMBER: 71-55-6
PERCENTAGE: 94.0-98.0

COMPONENT : 1,4-DIOXANE
CAS NUMBER: 123-91-1
PERCENTAGE: 0.0-4.0

OTHER CONTAMINANTS: NONE.

SECTION 3 HAZARDS IDENTIFICATION

CERCLA RATINGS (SCALE 0-3): HEALTH=3 FIRE=0 REACTIVITY=0 PERSISTENCE=3
NFPA RATINGS (SCALE 0-4): HEALTH=2 FIRE=0 REACTIVITY=0

EMERGENCY OVERVIEW:
Clear, colorless liquid with a mild chloroform-like odor.
Suspect cancer hazard (contains material which can cause cancer in animals). Risk of cancer depends on duration and level of contact. Causes respiratory

ract, skin and eye irritation. May cause convulsions. May damage liver. May damage kidneys. May affect the central nervous system. May cause adverse reproductive effects. May cause eye damage. May affect the heart. May damage the lungs.
Avoid breathing vapor or mist. Avoid contact with eyes, skin and clothing. Keep container tightly closed. Wash thoroughly after handling. Use only with adequate ventilation. Handle with caution.

POTENTIAL HEALTH EFFECTS:
INHALATION:
SHORT TERM EFFECTS: May cause irritation. Additional effects may include tearing, drooling, nausea, vomiting, diarrhea, difficulty breathing, irregular heartbeat, headache, weakness, drowsiness, drunkeness, feeling of well-being, numbness, lung, liver and kidney damage, convulsions, unconsciousness and coma.
LONG TERM EFFECTS: In addition to effects from short term exposure, lack of appetite, inability to urinate, lung damage and liver enlargement may occur. May also cause reproductive effects.
SKIN CONTACT:
SHORT TERM EFFECTS: May cause irritation. Additional effects may include nausea, vomiting, headache, drunkeness and liver and kidney damage.
LONG TERM EFFECTS: In addition to effects from short term exposure, burns may occur.
EYE CONTACT:
SHORT TERM EFFECTS: May cause irritation. Additional effects may include eye damage.
LONG TERM EFFECTS: Same effects as short term exposure.
INGESTION:
SHORT TERM EFFECTS: May cause vomiting, digestive disorders, headache, weakness, drunkeness, confusion, lung damage, kidney damage, liver damage, unconsciousness, coma and heart failure.
LONG TERM EFFECTS: May cause sores. May also cause reproductive effects and cancer.
ADDITIONAL DATA: Drinking alcohol may worsen the effects.

CARCINOGEN STATUS:
OSHA: N
NTP: Y
IARC: Y

SECTION 4 FIRST AID MEASURES

INHALATION:
FIRST AID- Remove from exposure area to fresh air immediately. If breathing has stopped, give artificial respiration. Maintain airway and blood pressure and administer oxygen if available. Keep affected person warm and at rest. Treat symptomatically and supportively. Administration of oxygen should be performed by qualified personnel. Get medical attention immediately.

SKIN CONTACT:
FIRST AID- Remove contaminated clothing and shoes immediately. Wash affected

rea with soap or mild detergent and large amounts of water until no idence of chemical remains (approximately 15-20 minutes). Get medical tention immediately.

EYE CONTACT:
FIRST AID- Wash eyes immediately with large amounts of water or normal saline, occasionally lifting upper and lower lids, until no evidence of chemical remains (approximately 15-20 minutes). Get medical attention immediately.

INGESTION:
FIRST AID- Treat symptomatically and supportively. Get medical attention and advice on whether to use gastric lavage. Extreme care must be taken to prevent aspiration. A cuffed endotracheal tube used by qualified medical personnel might be advisable. Keep head lower than hips to prevent aspiration should vomiting occur.

NOTE TO PHYSICIAN
ANTIDOTE:
No specific antidote. Treat symptomatically and supportively.

SECTION 5 FIRE FIGHTING MEASURES

FIRE AND EXPLOSION HAZARD:
Negligible fire hazard when exposed to heat or flame.

NGUISHING MEDIA:
I chemical or carbon dioxide
(1990 Emergency Response Guidebook, DOT P 5800.5).

For larger fires, use water spray, fog or regular foam
(1990 Emergency Response Guidebook, DOT P 5800.5).

FIREFIGHTING:
Apply cooling water to sides of containers that are exposed to flames until well after fire is out. Stay away from ends of tanks. Isolate for 1/2 mile in all directions if tank, rail car or tank truck is involved in fire (1990 Emergency Response Guidebook, DOT P 5800.5, Guide Page 74).

Extinguish using agents for surrounding fire. Cool fire-exposed containers with flooding amounts of water applied from as far a distance as possible. Do not allow run-off water into sewers and water sources. Avoid breathing vapors.

FLASH POINT: not available

HAZARDOUS COMBUSTION PRODUCTS:
Thermal decomposition products may include toxic and corrosive fumes of chlorides, toxic fumes of phosgene and chloroacetylenes, and oxides of carbon.

CTION 6 ACCIDENTAL RELEASE MEASURES

OUPATIONAL SPILL:

S t off ignition sources. Stop leak if you can do it without risk. For small id spills, take up with sand, earth or other absorbent material. For ger spills, dike far ahead of spill for later disposal. No smoking, flames or flares in hazard area! Keep unnecessary people away.

Reportable Quantity (RQ): 1000 pounds
The Superfund Amendments and Reauthorization Act (SARA) Section 304 requires that a release equal to or greater than the reportable quantity for this substance be immediately reported to the local emergency planning committee and the state emergency response commission (40 CFR 355.40). If the release of this substance is reportable under CERCLA Section 103, the National Response Center must be notified immediately at (800) 424-8802 or (202) 426-2675 in the metropolitan Washington, D.C. area (40 CFR 302.6).

SOIL SPILL:
Dig a holding area such as a pit, pond or lagoon to contain spill and dike surface flow using barrier of soil, sandbags, foamed polyurethane or foamed concrete. Absorb liquid mass with fly ash or cement powder.

WATER SPILL:
Limit spill motion and dispersion with natural barriers or oil spill control booms.

Trap spilled material at bottom in deep water pockets, excavated holding areas or within sand bag barriers.

suction hoses to remove trapped spill material.

The California Safe Drinking Water and Toxic Enforcement Act of 1986 (Proposition 65) prohibits contaminating any known source of drinking water with substances known to cause cancer and/or reproductive toxicity.

SECTION 7 HANDLING AND STORAGE

Observe all federal, state and local regulations when storing this substance.

Store in a cool, dry, well-ventilated location (NFPA 49, hazardous chemicals data, 1991).

Store away from incompatible substances.

SECTION 8 EXPOSURE CONTROLS/PERSONAL PROTECTION

EXPOSURE LIMITS:
METHYL CHLOROFORM (1,1,1-TRICHLOROETHANE):
350 ppm (1910 mg/m3) OSHA TWA; 450 ppm (2460 mg/m3) OSHA STEL
350 ppm (1910 mg/m3) ACGIH TWA; 450 ppm (2460 mg/m3) ACGIH STEL
350 ppm (1910 mg/m3) NIOSH recommended 15 minute ceiling
200 ppm (1080 mg/m3) DFG MAK TWA;
00 ppm (5400 mg/m3) DFG MAK 30 minute peak, average value, 2 times/shift

Measurement method: Charcoal tube; carbon disulfide; gas chromatography with

lame ionization detection; (NIOSH Vol. III # 1003, Halogenated drocarbons).

1000 pounds CERCLA Section 103 Reportable Quantity
Subject to SARA Section 313 Annual Toxic Chemical Release Reporting

1,4-DIOXANE:
25 ppm (90 mg/m3) OSHA TWA (skin)
25 ppm (90 mg/m3) ACGIH TWA (skin)
1 ppm (3.6 mg/m3) NIOSH recommended 30 minute ceiling
50 ppm (180 mg/m3) DFG MAK TWA (skin);
100 ppm (360 mg/m3) DFG MAK 30 minute peak, average value, 4 times/shift

Measurement method: Charcoal tube; carbon disulfide; gas chromatography with flame ionization detection; (NIOSH Vol. III # 1602).

100 pound CERCLA Section 103 Reportable Quantity
Subject to SARA Section 313 Annual Toxic Chemical Release Reporting
Subject to California Proposition 65 cancer and/or reproductive toxicity warning and release requirements- (January 1, 1988)

OSHA revoked the final rule limits of January 19, 1989 in response to the 11th Circuit Court of Appeals decision (AFL-CIO v. OSHA) effective June 30, 1993. See 29 CFR 1910.1000 (58 FR 35338)

VENTILATION:
ide local exhaust or process enclosure ventilation to meet published sure limits.

EYE PROTECTION:
Employee must wear splash-proof or dust-resistant safety goggles and a faceshield to prevent contact with this substance.

Emergency wash facilities:
Where there is any possibility that an employee's eyes and/or skin may be exposed to this substance, the employer should provide an eye wash fountain and quick drench shower within the immediate work area for emergency use.

CLOTHING:
Employee must wear appropriate protective (impervious) clothing and equipment to prevent any possibility of skin contact with this substance.

GLOVES:
Employee must wear appropriate protective gloves to prevent contact with this substance.

RESPIRATOR:
The following respirators and maximum use concentrations are recommendations by the U.S. Department of Health and Human Services, NIOSH Pocket Guide to Chemical Hazards; NIOSH criteria documents or by the U.S. Department of Labor, 29 CFR 1910 Subpart Z.
T specific respirator selected must be based on contamination levels found the work place, must not exceed the working limits of the respirator and e jointly approved by the National Institute for Occupational Safety and

ealth and the Mine Safety and Health Administration (NIOSH-MSHA).

METHYL CHLOROFORM (1,1,1-TRICHLOROETHANE):

1000 ppm- Any supplied-air respirator.
Any self-contained breathing apparatus.

Escape- Any air-purifying, full-facepiece respirator (gas mask) with a chin-style, front or back-mounted organic vapor canister.
Any appropriate escape-type, self-contained breathing apparatus.

FOR FIREFIGHTING AND OTHER IMMEDIATELY DANGEROUS TO LIFE OR HEALTH CONDITIONS:

Any self-contained breathing apparatus that has a full facepiece and is operated in a pressure-demand or other positive-pressure mode.

Any supplied-air respirator that has a full facepiece and is operated in a pressure-demand or other positive-pressure mode in combination with an auxiliary self-contained breathing apparatus operated in pressure-demand or other positive-pressure mode.

SECTION 9 PHYSICAL AND CHEMICAL PROPERTIES

DESCRIPTION: Clear, colorless liquid with a mild chloroform-like odor.
MOLECULAR WEIGHT: 133.40
MOLECULAR FORMULA: C-H3-C-CL3
BOILING POINT: 160-190 F (71-88 C)
MELTING POINT: -58 F (-50 C)
VAPOR PRESSURE: 134 mmHg @ 20 C
VAPOR DENSITY: 4.6
SPECIFIC GRAVITY: 1.29-1.33
WATER SOLUBILITY: <5%
VOLATILITY: 100%
EVAPORATION RATE: (butyl acetate=1) 6.0
SOLVENT SOLUBILITY: Soluble in acetone, benzene, chloroform, methanol, ethanol, carbon disulfide, ether, carbon tetrachloride, n-heptane.

SECTION 10 STABILITY AND REACTIVITY

REACTIVITY:
Slowly decomposes over time yielding hydrogen chloride. An inhibitor may be added to scavenge the acid that is formed and prevent corrosion to metals. Water may react with the inhibitor and allow the natural decomposition to occur.

CONDITIONS TO AVOID:
May burn but does not ignite readily. Container may explode in heat of fire.

INCOMPATIBILITIES:
METHYL CHLOROFORM (1,1,1-TRICHLOROETHANE):
ACETONE: Exothermic reaction.
ALKALI (STRONG): Possible violent reaction.

ALUMINUM AND ALLOYS: May decompose violently.
BARIUM: Fire and explosion hazard.
MAGNESIUM: Violent decomposition with evolution of hydrogen chloride.
METALS (POWDERED): Fire and explosion hazard.
NITROGEN TETROXIDE: Forms explosive mixture.
OXIDIZERS (STRONG): Possible violent reaction.
OXYGEN (GAS): Possible explosion when heated @ 100 C.
OXYGEN (LIQUID): Possible violent explosion.
POTASH: Forms flammable or explosive product.
POTASSIUM AND ALLOYS: Forms shock-sensitive mixture.
POTASSIUM HYDROXIDE: Formation of spontaneously flammable product.
RUBBER, PLASTICS, COATINGS: May be attacked.
SODIUM AND ALLOYS: Fire and explosion hazard.
SODIUM HYDROXIDE: Forms spontaneously flammable product.
SODIUM-POTASSIUM ALLOY: Possible explosion.
TIN AND ALLOYS: Incompatible.
ZINC AND ALLOYS: Incompatible.

1,4-DIOXANE:
DECABORANE: Forms shock-sensitive mixture.
NICKEL (RANEY CATALYST): Possible explosive reaction above 210 C.
NITRIC ACID + PERCHLORIC ACID: Possible explosive reaction.
OXIDIZERS (STRONG): Fire and explosion hazard.
SILVER PERCHLORATE: May form explosive compound.
SULFUR TRIOXIDE: Violent decomposition on storage.
TRIETHYNYLALUMINUM: May explode when heated.
also ethers.

HAZARDOUS DECOMPOSITION:
Thermal decomposition products may include toxic and corrosive fumes of chlorides, toxic fumes of phosgene and chloroacetylenes, and oxides of carbon.

POLYMERIZATION:
Hazardous polymerization has not been reported to occur under normal temperatures and pressures.

SECTION 11 TOXICOLOGY INFORMATION

METHYL CHLOROFORM (1,1,1-TRICHLOROETHANE):
IRRITATION DATA: 450 ppm/8 hours eye-man; 5 gm/12 days intermittent skin-rabbit mild; 20 mg/24 hours skin-rabbit moderate; 100 mg eye-rabbit mild; 2 mg/24 hours eye-rabbit severe.
TOXICITY DATA: 350 ppm inhalation-man TCLo; 200 ppm/4 hours inhalation-man TCLo; 920 ppm/70 minutes inhalation-human TCLo; 18000 ppm/4 hours inhalation-rat LC50; 10000 ppm/1 hour/13 weeks intermittent inhalation-rat TCLo; 3911 ppm/2 hours inhalation-mouse LC50; 1000 ppm/1 hour/13 weeks intermittent inhalation-guinea pig; 24400 mg/m3 inhalation-cat LC50; 15800 mg/kg skin-rabbit LD50 (EPA-600/8-82-003f, 1084); >5 gm/kg skin-rabbit LD50; 670 mg/kg oral-human TDLo; 10300 mg/kg oral-rat LD50; 11240 mg/kg oral-mouse LD50; 5660 mg/kg oral-rabbit LD50; 9470 mg/kg oral-guinea pig LD50; 750 mg/kg oral-dog LD50; 16 gm/kg subcutaneous-mouse LD50; 500 mg/kg subcutaneous-rabbit LDLo; 95 mg/kg intravenous-dog LDLo; 3593 mg/kg intraperitoneal-rat LD50; 3636 mg/kg intraperitoneal-mouse LD50; 3100 mg/kg

ntraperitoneal-dog LD50; mutagenic data (RTECS); reproductive effects data (RTECS).
CARCINOGEN STATUS: Animal Inadequate Evidence (IARC Group-3).
LOCAL EFFECTS: Irritant- inhalation, skin, eye.
ACUTE TOXICITY LEVEL: Slightly toxic by inhalation, dermal absorption and ingestion.
TARGET EFFECTS: Central nervous system depressant. Poisoning may also affect the heart, liver and kidneys.
AT INCREASED RISK FROM EXPOSURE: Persons with pre-existing skin disorders or liver, kidney, or cardiovascular disease.
ADDITIONAL DATA: Alcohol may enhance the toxic effects. Stimulants such as epinephrine may induce ventricular fibrillation.

1,4-DIOXANE:
IRRITATION DATA: 515 mg open skin-rabbit mild; 300 ppm/15 minutes eye-human; 100 mg eye-rabbit severe; 100 mg/24 hours eye-rabbit moderate; 10 ug eye-guinea pig moderate.
TOXICITY DATA: 470 ppm inhalation-human TCLo; 5500 ppm/1 minute inhalation-human TCLo; 470 ppm/3 days inhalation-human LCLo; 46 gm/m3/2 hours inhalation-rat LC50; 37 gm/m3/2 hours inhalation-mouse LC50; 44 gm/m3/7 hours inhalation-cat LCLo; 20500 mg/m3 inhalation-mammal LC50; 6000 ppm/4 hours/2 weeks-intermittent inhalation-rat TCLo; 7600 mg/kg skin-rabbit LD50; 2 gm/kg oral-rabbit LD50; 5700 mg/kg oral-mouse LD50; 2 gm/kg oral-cat LD50; 3150 mg/kg oral-guinea pig LD50; 1500 mg/kg intravenous-rabbit LDLo; 1500 mg/kg intravenous-cat LDLo; 790 mg/kg intraperitoneal-mouse LD50; 799 mg/kg intraperitoneal-rat LD50; mutagenic data (RTECS); reproductive effects data (RTECS); tumorigenic data (RTECS).
CARCINOGEN STATUS: Anticipated Human Carcinogen (NTP); Human Inadequate Evidence, Animal Sufficient Evidence (IARC Group-2B). Oral administration produced adenomas and carcinomas in the liver and carcinomas of the nasal cavity in rats and hematomas and carcinomas of the gall bladder in guinea pigs.
LOCAL EFFECTS: Irritant- inhalation, skin, eyes.
ACUTE TOXICITY LEVEL: Moderately toxic by inhalation; slightly toxic by dermal absorption and ingestion.
TARGET EFFECTS: Hepatotoxin; central nervous system depressant; nephrotoxin. Poisoning may affect the brain.
AT INCREASED RISK FROM EXPOSURE: Persons with pre-existing liver, kidney, pulmonary or skin disorders.
ADDITIONAL DATA: Alcohol may enhance the toxic effects.

HEALTH EFFECTS
INHALATION:
METHYL CHLOROFORM (1,1,1-TRICHLOROETHANE):
IRRITANT/NARCOTIC. 1000 ppm Immediately Dangerous to Life or Health.
ACUTE EXPOSURE- Exposure to 500 ppm for 60 minutes should cause no effect except for a distinctive odor while 900-1000 ppm for 20 minutes may cause mild respiratory tract irritation and prompt but minimal impairment of equilibrium which may be accompanied by headache, lassitude and ataxia. Impaired performance of behavioral tests was also reported at 1000 ppm. Higher levels of 2000-5000 ppm may cause incoordination, anesthesia, euphoria, loss of consciousness, coma and death due to central nervous system depression, respiratory arrest, or cardiac arrythmia. Cardiac sensitization may be a contributing factor. Other effects may

include nausea, vomiting, diarrhea, drowsiness, convulsions, fall of blood pressure, liver and kidney damage, bradycardia and blood clotting changes.
CHRONIC EXPOSURE- No adverse effects related to exposure were reported in volunteers exposed to 500 ppm for 7 hours a day for 5 days, or in workers exposed to 200 ppm for several months to 6 years. There is some evidence from human case reports that repeated exposure to high concentrations may cause lasting damage to the heart. Exposure of animals for 3 months at concentrations from 1000 to 10,000 ppm caused symptoms of central nervous system depression and some pathological changes in the livers and lungs of some species. Reproductive effects have been reported in animals.

1,4-DIOXANE:
IRRITANT/NARCOTIC/HEPATOTOXIN/NEPHROTOXIN.
ACUTE EXPOSURE- May be irritating to the nose, throat and respiratory tract at 220 ppm. This compound has poor warning properties and can be inhaled in amounts that may cause serious systemic injury. Symptoms of systemic toxicity may include headache, vertigo, drowsiness, dyspnea, nausea, and vomiting. Inhalation caused increased salivation, lacrimation, narcosis, behavioral changes, and death in animals. Autopsy revealed lung, liver and kidney damage, congestion and edema of the lungs, and increased blood counts.
CHRONIC EXPOSURE- Repeated exposure caused mucous membrane irritation, dyspnea, headache, vertigo, loss of appetite, nausea and vomiting, pain and tenderness in the abdomen and lumbar region, drowsiness, malaise, liver enlargement and damage, oliguria, anuria, uremia, coma, and death from acute renal failure. Autopsies revealed lung and brain congestion, central nervous system damage, liver necrosis, hemorrhagic nephritis and necrosis, leukocytosis, and bronchopneumonia.

SKIN CONTACT:
METHYL CHLOROFORM (1,1,1-TRICHLOROETHANE):
IRRITANT.
ACUTE EXPOSURE- Direct contact may cause irritation and redness. Vapors are poorly absorbed, but the liquid, especially if confined under an impermeable barrier may be absorbed to some extent. This alone is unlikely to result in toxic effects, but may add to the effects of inhalation exposure.
CHRONIC EXPOSURE- Repeated skin contact may produce a dry, scaly, fissured dermatitis due to the defatting properties of the liquid, and possibly burns.

1,4-DIOXANE:
IRRITANT/NARCOTIC/HEPATOTOXIN/NEPHROTOXIN.
ACUTE EXPOSURE- May cause irritation with redness and pain. Allergic contact dermatitis has been reported. Skin absorption may occur and cause headache, nausea and vomiting. Skin absorption produced signs of unsteadiness, incoordination, narcosis, erythema, and liver and kidney damage in animals.
CHRONIC EXPOSURE- Prolonged or repeated contact may cause drying and cracking of the skin, dermatitis, and eczema. Skin absorption may have contributed to the death of a worker following skin and inhalation exposure for one week. Animal studies indicate repeated skin application may result in liver and kidney damage. Tumor promoter activity has been

reported in mice.

I CONTACT:
METHYL CHLOROFORM (1,1,1-TRICHLOROETHANE):
IRRITANT.
ACUTE EXPOSURE- Exposure to 500 ppm may cause irritation and redness. Direct contact with the liquid may cause temporary injury with complete recovery expected in 48 hours. Direct application to the eyes of rabbits has caused conjunctival irritation, but no corneal damage.
CHRONIC EXPOSURE- Repeated or prolonged contact may cause conjunctivitis.

1,4-DIOXANE:
IRRITANT.
ACUTE EXPOSURE- Vapors may cause irritation at concentrations above 220 ppm. No serious disturbances have been reported by external contact. Direct application to rabbit eyes caused transient corneal injury.
CHRONIC EXPOSURE- Repeated or prolonged exposure may result in conjunctivitis.

INGESTION:
METHYL CHLOROFORM (1,1,1-TRICHLOROETHANE):
NARCOTIC.
ACUTE EXPOSURE- May cause nausea, vomiting, diarrhea, gastrointestinal disturbances and abdominal pain followed by central nervous system depression with headache, dizziness, weakness, incoordination, mental confusion and unconsciousness. Death may occur from chronic respiratory failure. Other symptoms as described in acute inhalation may also occur. Myocardial sensitization to epinephrine and subsequent death due to cardiac arrest may occur. Aspiration may result in pulmonary edema or chemical pneumonitis.
CHRONIC EXPOSURE- Reproductive effects have been reported in animals.

1,4-DIOXANE:
NARCOTIC/HEPATOTOXIN/NEPHROTOXIN/CARCINOGEN.
ACUTE EXPOSURE- May cause light burning sensation on contact with oral mucous membranes. Large doses resulted in weakness, incoordination, depression, coma and death in animals. Autopsy revealed hemorrhagic areas in the pyloric region of the stomach, bladders distended with urine, slight proteinuria and enlarged kidneys. Aspiration may result in pneumonia.
CHRONIC EXPOSURE- In animal feeding studies, this compound produced liver and kidney degeneration and necrosis, ulceration of the stomach, hepatomas, carcinoma of the nasal cavity, carcinoma of the kidney pelvis, leukemia, lymphosarcoma, cholangiomas, gall bladder carcinomas, and tumors of the lung. Reproductive effects have been reported in animals.

SECTION 12 ECOLOGICAL INFORMATION

ENVIRONMENTAL IMPACT RATING (0-4): no data available

E AQUATIC TOXICITY: no data available

DEGRADABILITY: no data available

LOG BIOCONCENTRATION FACTOR (BCF): no data available

LOG OCTANOL/WATER PARTITION COEFFICIENT: no data available

SECTION 13 DISPOSAL INFORMATION

Observe all federal, state and local regulations when disposing of this substance.

Disposal must be in accordance with standards applicable to generators of hazardous waste, 40CFR 262. EPA Hazardous Waste Number U226.

US EPA RCRA Hazardous Waste Number: RCRA U226

SECTION 14 TRANSPORTATION INFORMATION

U.S. DEPARTMENT OF TRANSPORTATION SHIPPING NAME-ID NUMBER, 49 CFR 172.101:
1,1,1-trichloroethane-UN 2831

U.S. DEPARTMENT OF TRANSPORTATION HAZARD CLASS OR DIVISION, 49 CFR 172.101:
6.1 - Poisonous materials

U.S. DEPARTMENT OF TRANSPORTATION PACKING GROUP, 49 CFR 172.101:
PG III

U.S. DEPARTMENT OF TRANSPORTATION LABELING REQUIREMENTS, 49 CFR 172.101 AND SUBPART E:
Keep away from food

U.S. DEPARTMENT OF TRANSPORTATION PACKAGING AUTHORIZATIONS:
EXCEPTIONS: 49 CFR 173.153
NON-BULK PACKAGING: 49 CFR 173.203
BULK PACKAGING: 49 CFR 173.241

U.S. DEPARTMENT OF TRANSPORTATION QUANTITY LIMITATIONS 49 CFR 172.101:
PASSENGER AIRCRAFT OR RAILCAR: 60 l
CARGO AIRCRAFT ONLY: 220 l

SECTION 15 REGULATORY INFORMATION

TSCA STATUS: Y

CERCLA SECTION 103 (40CFR302.4):	Y	100 pounds RQ
SARA SECTION 302 (40CFR355.30):	N	
SARA SECTION 304 (40CFR355.40):	N	
SARA SECTION 313 (40CFR372.65):	Y	
OSHA PROCESS SAFETY (29CFR1910.119):	N	
CALIFORNIA PROPOSITION 65:	Y	

SARA HAZARD CATEGORIES, SARA SECTIONS 311/312 (40 CFR 370.21)

ACUTE HAZARD:	Y
CHRONIC HAZARD:	Y
FIRE HAZARD:	N
REACTIVITY HAZARD:	N
SUDDEN RELEASE HAZARD:	N

SECTION 16 OTHER

COPYRIGHT 1994 OCCUPATIONAL HEALTH SERVICES, INC. ALL RIGHTS RESERVED.

Licensed to: ICF KAISER INTERNATIONAL, INC & AFFILIATES
To make unlimited paper copies for internal distribution and use only.

f mes or flares in hazard area! Keep unnecessary people away; isolate hazard a and deny entry. Ventilate closed spaces before entering.

SECTION 7 HANDLING AND STORAGE

Observe all federal, state and local regulations when storing this substance.

Store in accordance with 29 CFR 1910.106.

Bonding and grounding: Substances with low electroconductivity, which may be ignited by electrostatic sparks, should be stored in containers which meet the bonding and grounding guidelines specified in NFPA 77-1983, Recommended Practice on Static Electricity.

Store away from incompatible substances.

SECTION 8 EXPOSURE CONTROLS/PERSONAL PROTECTION

EXPOSURE LIMITS:
No occupational exposure limits established by OSHA, ACGIH, or NIOSH.

VENTILATION:
Provide local exhaust or general dilution ventilation. Ventilation equipment should be explosion-proof if explosive concentrations of dust, vapor or fume a present.

EYE PROTECTION:
For the gas form eye protection is not required but recommended.
Where there is any possibility of contact with the liquid form, employee must wear splash-proof safety goggles and a faceshield to prevent contact with this substance. Contact lenses should not be worn.

Emergency wash facilities:
Where there is any possibility that an employee's eyes and/or skin may be exposed to the liquid form of this substance, the employer should provide an eye wash fountain and quick drench shower within the immediate work area for emergency use.

CLOTHING:
For the gas form, protective clothing not required.
If contact with the liquid form is possible, employee must wear appropriate protective clothing and equipment to prevent skin from freezing.

GLOVES:
Wear full protective, cold insulating gloves.

RESPIRATOR:
The following respirators are recommended based on information found in the physical data, toxicity and health effects sections. They are ranked in rder from minimum to maximum respiratory protection.
The specific respirator selected must be based on contamination levels found n the work place, must be based on the specific operation, must not exceed

he working limits of the respirator and must be jointly approved by the tional Institute for Occupational Safety and Health and the Mine Safety d Health Administration (NIOSH-MSHA).

Any supplied-air respirator operated in pressure-demand or other positive pressure mode.

Any self-contained breathing apparatus.

FOR FIREFIGHTING AND OTHER IMMEDIATELY DANGEROUS TO LIFE OR HEALTH CONDITIONS:

Any self-contained breathing apparatus that has a full facepiece and is operated in a pressure-demand or other positive-pressure mode.

Any supplied-air respirator that has a full facepiece and is operated in a pressure-demand or other positive-pressure mode in combination with an auxiliary self-contained breathing apparatus operated in pressure-demand or other positive-pressure mode.

SECTION 9 PHYSICAL AND CHEMICAL PROPERTIES

DESCRIPTION: Odorless, colorless, tasteless gas.
MOLECULAR WEIGHT: 16.04
MOLECULAR FORMULA: C-H4
BOILING POINT: -260 F (-162 C)
MELTING POINT: -296 F (-183 C)
VAPOR PRESSURE: 760 mmHg @ -161 C
VAPOR DENSITY: 0.555
SPECIFIC GRAVITY: 0.717 g/L @ 0 C
WATER SOLUBILITY: 3.5% @ 17 C
SOLVENT SOLUBILITY: Soluble in alcohol, ether, benzene, organic solvents.

VISCOSITY: 0.01118 cP @ 27 C

SECTION 10 STABILITY AND REACTIVITY

REACTIVITY:
Stable under normal temperatures and pressures.

CONDITIONS TO AVOID:
Material is extremely flammable; avoid contact with heat, sparks, flames or other sources of ignition. Contents are under pressure; containers may rupture violently and travel a considerable distance.

INCOMPATIBILITIES:
METHANE:
BROMINE: Explosive reaction.
CHLORINE: Explosive reaction, particularly in the presence of light or catalysts.
CHLORINE DIOXIDE: Spontaneous explosion.
OXYGEN DIFLUORIDE: Explosive interaction.
DIOXYGENYL TETRAFLUOROBORATE: Explosive interaction.

FLUORINE: Ignition.
INTERHALOGENS: Contact will result in fire or explosion.
NITROGEN TRIFLUORIDE: Explosive reaction on ignition.
OXIDIZERS (STRONG): Fire and explosion hazard.
OXYGEN: Mixtures of the liquids are explosive.
OXYGEN DIFLUORIDE: Explodes when sparked.
TRIOXYGEN DIFLUORIDE: Explodes violently with the liquid.

HAZARDOUS DECOMPOSITION:
Thermal decomposition products may include toxic oxides of carbon.

POLYMERIZATION:
Hazardous polymerization has not been reported to occur under normal temperatures and pressures.

SECTION 11 TOXICOLOGY INFORMATION

METHANE:
CARCINOGEN STATUS: None.
ACUTE TOXICITY LEVEL: No data available.
TARGET EFFECTS: Simple asphyxiant.

HEALTH EFFECTS
INHALATION:
METHANE:
SIMPLE ASPHYXIANT.
Pregnant mice were exposed for one hour to fuel gas, containing 85% methane. Resultant abnormalities of the fetal brain produced brain hernias and hydrocephalus. See information on simple asphyxiants.

SIMPLE ASPHYXIANTS:
ACUTE EXPOSURE- The symptoms of asphyxia depend on the rapidity with which the oxygen deficiency develops and how long it continues. In sudden acute asphyxia, unconsciousness may be immediate. With slow development there may be rapid respiration and pulse, air hunger, dizziness, reduced awareness, tightness in the head, tingling sensations, incoordination, faulty judgement, emotional instability, and rapid fatigue. As the asphyxia progresses, nausea, vomiting, collapse, unconsciousness, convulsions, deep coma and death are possible.
CHRONIC EXPOSURE- No data available.

SKIN CONTACT:
METHANE:
ACUTE EXPOSURE- No adverse effects have been reported from the gas. Due to rapid evaporation, the liquid may cause frostbite with redness, tingling and pain or numbness. In more severe cases, the skin may become hard and white and develop blisters.
CHRONIC EXPOSURE- No data available.

EYE CONTACT:
METHANE:
ACUTE EXPOSURE- No adverse effects have been reported from the gas. Due to rapid evaporation, the liquid may cause frostbite with redness, pain and

blurred vision.
RONIC EXPOSURE- No data available.

INGESTION:
METHANE:
ACUTE EXPOSURE- Ingestion of a gas is unlikely. If liquid is swallowed, frostbite damage to the lips, mouth and mucous membranes may occur.
CHRONIC EXPOSURE- No data available.

SECTION 12 ECOLOGICAL INFORMATION

ENVIRONMENTAL IMPACT RATING (0-4): no data available

ACUTE AQUATIC TOXICITY: no data available

DEGRADABILITY: no data available

LOG BIOCONCENTRATION FACTOR (BCF): no data available

LOG OCTANOL/WATER PARTITION COEFFICIENT: no data available

SECTION 13 DISPOSAL INFORMATION

Observe all federal, state and local regulations when disposing of this substance.

Disposal must be in accordance with standards applicable to generators of hazardous waste, 40 CFR 262. EPA Hazardous Waste Number D001.
100 pound CERCLA Section 103 Reportable Quantity.

SECTION 14 TRANSPORTATION INFORMATION

U.S. DEPARTMENT OF TRANSPORTATION SHIPPING NAME-ID NUMBER, 49 CFR 172.101:
Methane, compressed-UN 1971

U.S. DEPARTMENT OF TRANSPORTATION HAZARD CLASS OR DIVISION, 49 CFR 172.101:
2.1 - Flammable gas

U.S. DEPARTMENT OF TRANSPORTATION LABELING REQUIREMENTS, 49 CFR 172.101 AND SUBPART E:
Flammable gas

U.S. DEPARTMENT OF TRANSPORTATION PACKAGING AUTHORIZATIONS:
EXCEPTIONS: 49 CFR 173.306
NON-BULK PACKAGING: 49 CFR 173.302
BULK PACKAGING: 49 CFR 173.302

U.S. DEPARTMENT OF TRANSPORTATION QUANTITY LIMITATIONS 49 CFR 172.101:
PASSENGER AIRCRAFT OR RAILCAR: Forbidden
CARGO AIRCRAFT ONLY: 150 kg

SECTION 15 REGULATORY INFORMATION

TSCA STATUS: Y

CERCLA SECTION 103 (40CFR302.4): N
SARA SECTION 302 (40CFR355.30): N
SARA SECTION 304 (40CFR355.40): N
SARA SECTION 313 (40CFR372.65): N
OSHA PROCESS SAFETY (29CFR1910.119): N
CALIFORNIA PROPOSITION 65: N

SARA HAZARD CATEGORIES, SARA SECTIONS 311/312 (40 CFR 370.21)
ACUTE HAZARD: Y
CHRONIC HAZARD: N
FIRE HAZARD: Y
REACTIVITY HAZARD: N
SUDDEN RELEASE HAZARD: Y

SECTION 16 OTHER

COPYRIGHT 1994 OCCUPATIONAL HEALTH SERVICES, INC. ALL RIGHTS RESERVED.

Licensed to: ICF KAISER INTERNATIONAL, INC & AFFILIATES
To make unlimited paper copies for internal distribution and use only.

O[illegible]210

SECTION 1 CHEMICAL PRODUCTS & COMPANY IDENTIFICATION

OCCUPATIONAL HEALTH SERVICES, INC.
11 WEST 42ND STREET, 12TH FLOOR
NEW YORK, NEW YORK 10036
1-800-445-MSDS (1-800-445-6737) OR
1-212-789-3535

FOR EMERGENCY SOURCE INFORMATION
CONTACT: 1-615-366-2000 USA

CAS NUMBER: 109-66-0
RTECS NUMBER: RZ9450000

SUBSTANCE: PENTANE

TRADE NAMES/SYNONYMS:
N-PENTANE; AMYL HYDRIDE; STCC 4908255; UN 1265; C5H12; OHS18210

CHEMICAL FAMILY:
Hydrocarbon, aliphatic

CREATION DATE: 12/27/84 REVISION DATE: 01/15/94

SECTION 2 COMPOSITION/INFORMATION ON INGREDIENTS

[illegible]PONENT : PENTANE
CAS NUMBER: 109-66-0
PERCENTAGE: 100.0

OTHER CONTAMINANTS: NONE

SECTION 3 HAZARDS IDENTIFICATION

CERCLA RATINGS (SCALE 0-3): HEALTH=2 FIRE=3 REACTIVITY=0 PERSISTENCE=1
NFPA RATINGS (SCALE 0-4): HEALTH=1 FIRE=4 REACTIVITY=0

EMERGENCY OVERVIEW:
Colorless, clear liquid with a gasoline odor.
Causes respiratory tract and skin irritation. May damage nerves. May affect the central nervous system. May cause brain damage. May affect the heart. May damage the lungs. Flammable liquid and vapor. May cause flash fire. Keep away from all ignition sources. Avoid breathing vapor or mist. Avoid contact with eyes, skin and clothing. Keep container tightly closed. Wash thoroughly after handling. Use only with adequate ventilation. Handle with caution.

POTENTIAL HEALTH EFFECTS:
INHALATION:
[illegible]HORT TERM EFFECTS: May cause irritation. Additional effects may include [illegible]usea, difficulty breathing, headache, drowsiness, drunkeness, confusion, [illegible]umbness, suffocation and unconsciousness.

)NG TERM EFFECTS: May cause lack of appetite, weakness, tingling sensation d nerve damage.

S CONTACT:

SHORT TERM EFFECTS: May cause irritation. Additional effects may include blisters and itching.

LONG TERM EFFECTS: Same effects as short term exposure.

EYE CONTACT:

SHORT TERM EFFECTS: No information available on significant adverse effects.

LONG TERM EFFECTS: May cause redness and swelling of the eyes.

INGESTION:

SHORT TERM EFFECTS: May cause nausea, stomach pain, drunkeness, suffocation, lung damage, brain damage and heart failure.

LONG TERM EFFECTS: No information is available.

ADDITIONAL DATA: Drinking alcohol may worsen the effects.

CARCINOGEN STATUS:
OSHA: N
NTP: N
IARC: N

SECTION 4 FIRST AID MEASURES

INHALATION:

FIRST AID- Remove from exposure area to fresh air immediately. If breathing s stopped, perform artificial respiration. Keep person warm and at rest. eat symptomatically and supportively. Get medical attention immediately.

SKIN CONTACT:

FIRST AID- Remove contaminated clothing and shoes immediately. Wash affected area with soap or mild detergent and large amounts of water until no evidence of chemical remains (approximately 15-20 minutes). Get medical attention immediately.

EYE CONTACT:

FIRST AID- Wash eyes immediately with large amounts of water or normal saline, occasionally lifting upper and lower lids, until no evidence of chemical remains (approximately 15-20 minutes). Get medical attention immediately.

INGESTION:

FIRST AID- Extreme care must be used to prevent aspiration. Use gastric lavage with activated charcoal and a cuffed endotracheal tube within 15 minutes. In the absence of depression or convulsions or impaired gag reflex, ipecac emesis can be done. When vomiting begins, keep head lower than hips to prevent aspiration. After vomiting stops, give 30-60 milliliters of Fleet's phospho-soda diluted 1:4 in water. Maintain airway, blood pressure and respiration. (Dreisbach, Handbook of Poisoning, 11th Ed.) Treatment must be administered by qualified medical personnel. Get medical attention.

N TO PHYSICIAN

DOTE:

N specific antidote. Treat symptomatically and supportively.

ECTION 5 FIRE FIGHTING MEASURES

FIRE AND EXPLOSION HAZARD:
Dangerous fire hazard when exposed to heat or flame.

Vapors are heavier than air and may travel a considerable distance to a source of ignition and flash back.

Vapor-air mixtures are explosive.

Due to low electroconductivity of the substance, flow or agitation may generate electrostatic charges resulting in sparks with possible ignition.

EXTINGUISHING MEDIA:
Dry chemical, carbon dioxide, water spray or regular foam (1990 Emergency Response Guidebook, DOT P 5800.5).

For larger fires, use water spray, fog or regular foam (1990 Emergency Response Guidebook, DOT P 5800.5).

FIREFIGHTING:
Move container from fire area if you can do it without risk. Apply cooling water to sides of containers that are exposed to flames until well after fire is out. Stay away from ends of tanks. For massive fire in cargo area, use unmanned hose holder or monitor nozzles; if this is impossible, withdraw from area and let fire burn. Withdraw immediately in case of rising sound from venting safety device or any discoloration of tank due to fire. Isolate for 1/2 mile in all directions if tank, rail car or tank truck is involved in fire (1990 Emergency Response Guidebook, DOT P 5800.5, Guide Page 27).

Extinguish only if flow can be stopped; use water in flooding amounts as fog, solid streams may not be effective. Cool containers with flooding quantities of water, apply from as far a distance as possible. Avoid breathing toxic vapors, keep upwind. Evacuate to a radius of 1500 feet for uncontrollable fires. Consider evacuation of downwind area if material is leaking.

Water may be ineffective (NFPA 325M, Fire Hazard Properties of Flammable Liquids, Gases, and Volatile Solids, 1991)

FLASH POINT: -57 F (-49 C) (CC)
LOWER FLAMMABLE LIMIT: 1.5%
UPPER FLAMMABLE LIMIT: 7.8%
AUTOIGNITION: 500 F (260 C)
FLAMMABILITY CLASS(OSHA): IA

HAZARDOUS COMBUSTION PRODUCTS:
Thermal decomposition products may include toxic oxides of carbon.

ECTION 6 ACCIDENTAL RELEASE MEASURES

OCCUPATIONAL SPILL:

s t off ignition sources. Stop leak if you can do it without risk. Use water s y to reduce vapors. For small spills, take up with sand or other absorbent m rial and place into containers for later disposal. For larger spills, dike far ahead of spill for later disposal. No smoking, flames or flares in hazard area. Keep unnecessary people away; isolate hazard area and restrict entry.

SECTION 7 HANDLING AND STORAGE

Observe all federal, state and local regulations when storing this substance.

Store in accordance with 29 CFR 1910.106.

Bonding and grounding: Substances with low electroconductivity, which may be ignited by electrostatic sparks, should be stored in containers which meet the bonding and grounding guidelines specified in NFPA 77-1983, Recommended Practice on Static Electricity.

Store away from incompatible substances.

SECTION 8 EXPOSURE CONTROLS/PERSONAL PROTECTION

EXPOSURE LIMITS:
PENTANE:
600 ppm (1770 mg/m3) OSHA TWA; 750 ppm (2210 mg/m3) OSHA STEL
0 ppm (1770 mg/m3) ACGIH TWA; 750 ppm (2210 mg/m3) ACGIH STEL
0 ppm (350 mg/m3) NIOSH recommended TWA;
610 ppm (1800 mg/m3) NIOSH recommended ceiling
1000 ppm (2950 mg/m3) DFG MAK TWA;
2000 ppm (5900 mg/m3) DFG MAK 60 minute peak, momentary value, 3 times/shift

Measurement method: Charcoal tube; carbon disulfide; gas chromatography with flame ionization detection; (NIOSH Vol. III # 1500, Hydrocarbons).

OSHA revoked the final rule limits of January 19, 1989 in response to the 11th Circuit Court of Appeals decision (AFL-CIO v. OSHA) effective June 30, 1993. See 29 CFR 1910.1000 (58 FR 35338)

VENTILATION:
Provide local exhaust or general dilution ventilation to meet published exposure limits. Ventilation equipment should be explosion-proof if explosive concentrations of dust, vapor or fume are present.

EYE PROTECTION:
Employee must wear splash-proof or dust-resistant safety goggles to prevent eye contact with this substance.

Emergency eye wash: Where there is any possibility that an employee's eyes may be exposed to this substance, the employer should provide an eye wash fountain within the immediate work area for emergency use.

HING:
Employee must wear appropriate protective (impervious) clothing and equipment

t prevent repeated or prolonged skin contact with this substance.

GLOVES:
Employee must wear appropriate protective gloves to prevent contact with this substance.

RESPIRATOR:
The following respirators and maximum use concentrations are recommendations by the U.S. Department of Health and Human Services, NIOSH Pocket Guide to Chemical Hazards; NIOSH criteria documents or by the U.S. Department of Labor, 29 CFR 1910 Subpart Z.
The specific respirator selected must be based on contamination levels found in the work place, must not exceed the working limits of the respirator and be jointly approved by the National Institute for Occupational Safety and Health and the Mine Safety and Health Administration (NIOSH-MSHA).

PENTANE:

1200 ppm- Any supplied-air respirator.
Any self-contained breathing apparatus.

3000 ppm- Any supplied-air respirator operated in a continuous-flow mode.

6000 ppm- Any self-contained breathing apparatus with a full facepiece.
Any supplied-air respirator with a full facepiece.
Any supplied-air respirator that has a tight-fitting facepiece and is operated in a continuous-flow mode.

15000 ppm- Any supplied-air respirator operated in a pressure-demand or other positive-pressure mode.

Escape- Any air-purifying, full-facepiece respirator (gas mask) with a chin-style, front- or back-mounted organic vapor canister.
Any appropriate escape-type, self-contained breathing apparatus.

FOR FIREFIGHTING AND OTHER IMMEDIATELY DANGEROUS TO LIFE OR HEALTH CONDITIONS:

Any self-contained breathing apparatus that has a full facepiece and is operated in a pressure-demand or other positive-pressure mode.

Any supplied-air respirator that has a full facepiece and is operated in a pressure-demand or other positive-pressure mode in combination with an auxiliary self-contained breathing apparatus operated in pressure-demand or other positive-pressure mode.

SECTION 9 PHYSICAL AND CHEMICAL PROPERTIES

DESCRIPTION: Colorless, clear liquid with a gasoline odor.
MOLECULAR WEIGHT: 72.15
MOLECULAR FORMULA: C-H3-(C-H2)3-C-H3
FREEZING POINT: 97 F (36 C)
BOILING POINT: -202 F (-130 C)
VAPOR PRESSURE: 426 mmHg @ 20 C

VAPOR DENSITY: 2.5
SPECIFIC GRAVITY: 0.6262
WATER SOLUBILITY: 0.04%
VOLATILITY: 100%
ODOR THRESHOLD: 2.2 ppm
EVAPORATION RATE: (butyl acetate=1) 28.6
SOLVENT SOLUBILITY: Soluble in chloroform, acetone, benzene, ether, ethyl alcohol, hydrocarbons, oils, and most organic solvents.

SECTION 10 STABILITY AND REACTIVITY

REACTIVITY:
Stable under normal temperatures and pressures.

CONDITIONS TO AVOID:
Avoid contact with heat, sparks, flames, or other sources of ignition. Vapors may be explosive. Avoid overheating of containers; containers may violently rupture in heat of fire. Avoid contamination of water sources.

INCOMPATIBILITIES:
PENTANE:
OXIDIZERS (STRONG): Fire and explosion hazard.
PLASTICS, RUBBER, AND COATINGS: May attack some forms.

HAZARDOUS DECOMPOSITION:
Thermal decomposition products may include toxic oxides of carbon.

POLYMERIZATION:
Hazardous polymerization has not been reported to occur under normal temperatures and pressures.

SECTION 11 TOXICOLOGY INFORMATION

PENTANE:
TOXICITY DATA: 325 gm/m3/2 hours inhalation-mouse LCLo; 446 mg/kg intravenous-mouse LD50.
CARCINOGEN STATUS: None.
LOCAL EFFECTS: Irritant- inhalation, skin, eyes.
ACUTE TOXICITY LEVEL: Insufficient data.
TARGET EFFECTS: Central nervous system depressant.
AT INCREASED RISK FROM EXPOSURE: Persons with preexisting skin disorders or impaired pulmonary function.
ADDITIONAL DATA: Alcohol may enhance the toxic effects. Use of stimulants such as epinephrine may cause ventricular fibrillation.

HEALTH EFFECTS
INHALATION:
PENTANE:
IRRITANT/NARCOTIC. 15000 ppm Immediately Dangerous to Life or Health.
ACUTE EXPOSURE- Human exposures to 5,000 ppm for 10 minutes resulted in no irritation or systemic effects. Concentrations greater than 5000 ppm may cause irritation of the nose and throat, exhilaration, headache,

dizziness, drowsiness, and difficulty in breathing. Very high concentrations may cause nausea, confusion, a persistent taste of gasoline, incoordination, unconsciousness, and if sufficient oxygen is displaced, asphyxiation. Mice exposed to 32000-64000 ppm for 5 minutes showed signs of respiratory irritation and light anesthesia; 90000-120000 ppm for 5-60 minutes produced narcosis; and 128000-129000 ppm has been fatal in 5-37 minutes. It is a weak cardiac sensitizer in dogs. Exposed rats developed neurohistological structural changes in the developing cerebral cortex.

CHRONIC EXPOSURE- 5 workers exposed to a solvent which was 80% pentane, 14% heptane, and 5% hexane developed polyneuropathy. 3 of the 5 experienced anorexia, asthenia, paresthesia, fatigue, and bilateral muscle failure, mostly in the legs. In mice, pentane has caused anoxemia. Rats exposed to 3000 ppm for 12 hours a day, 5 days a week for 16 weeks, or to 3000 ppm for 9 hours a day, 5 days a week, for 30 weeks showed no signs of neurotoxicity.

SKIN CONTACT:
PENTANE:
IRRITANT.

ACUTE EXPOSURE- Brief contact may cause mild irritation. 1 hour contact with the undiluted liquid has caused itching, erythema, pigmentation, swelling, burning, and pain. Five hours exposure has caused blisters.

CHRONIC EXPOSURE- Prolonged or repeated exposure may cause drying, cracking, and dermatitis.

EYE CONTACT:
PENTANE:
IRRITANT

ACUTE EXPOSURE- Contact with vapors or liquid may cause redness and pain.

CHRONIC EXPOSURE- Repeated or prolonged exposure to irritants may cause conjunctivitis.

INGESTION:
PENTANE:

ACUTE EXPOSURE- May cause abdominal pain and nausea. If large amounts of aliphatic hydrocarbons are ingested and retained, central nervous system depression may occur. Aspiration may result in asphyxia and brain damage, chemical pneumonia, pulmonary edema, cardiac arrest, and death.

CHRONIC EXPOSURE- No data available.

SECTION 12 ECOLOGICAL INFORMATION

ENVIRONMENTAL IMPACT RATING (0-4): no data available

ACUTE AQUATIC TOXICITY: no data available

DEGRADABILITY: no data available

BIOCONCENTRATION FACTOR (BCF): no data available

LOG OCTANOL/WATER PARTITION COEFFICIENT: no data available

SECTION 13 DISPOSAL INFORMATION

Observe all federal, state and local regulations when disposing of this substance.

Disposal must be in accordance with standards applicable to generators of hazardous waste, 40 CFR 262. EPA Hazardous Waste Number D001.
100 pound CERCLA Section 103 Reportable Quantity.

SECTION 14 TRANSPORTATION INFORMATION

U.S. DEPARTMENT OF TRANSPORTATION SHIPPING NAME-ID NUMBER, 49 CFR 172.101:
N-pentanes-UN 1265

U.S. DEPARTMENT OF TRANSPORTATION HAZARD CLASS OR DIVISION, 49 CFR 172.101:
3 - Flammable liquid

U.S. DEPARTMENT OF TRANSPORTATION PACKING GROUP, 49 CFR 172.101:
PG I

U.S. DEPARTMENT OF TRANSPORTATION LABELING REQUIREMENTS, 49 CFR 172.101 AND SUBPART E:
Flammable liquid

U.S. DEPARTMENT OF TRANSPORTATION PACKAGING AUTHORIZATIONS:
EXCEPTIONS: 49 CFR 173.150
NON-BULK PACKAGING: 49 CFR 173.201
BULK PACKAGING: 49 CFR 173.243

U.S. DEPARTMENT OF TRANSPORTATION QUANTITY LIMITATIONS 49 CFR 172.101:
PASSENGER AIRCRAFT OR RAILCAR: 1 l
CARGO AIRCRAFT ONLY: 30 l

SECTION 15 REGULATORY INFORMATION

TSCA STATUS: Y

CERCLA SECTION 103 (40CFR302.4):	N
SARA SECTION 302 (40CFR355.30):	N
SARA SECTION 304 (40CFR355.40):	N
SARA SECTION 313 (40CFR372.65):	N
OSHA PROCESS SAFETY (29CFR1910.119):	N
CALIFORNIA PROPOSITION 65:	N

SARA HAZARD CATEGORIES, SARA SECTIONS 311/312 (40 CFR 370.21)

ACUTE HAZARD:	Y
CHRONIC HAZARD:	N
FIRE HAZARD:	Y
REACTIVITY HAZARD:	N
SUDDEN RELEASE HAZARD:	N

SECTION 16 OTHER

COPYRIGHT 1994 OCCUPATIONAL HEALTH SERVICES, INC. ALL RIGHTS RESERVED.

Licensed to: ICF KAISER INTERNATIONAL, INC & AFFILIATES
To make unlimited paper copies for internal distribution and use only.

)H .610

SECTION 1 CHEMICAL PRODUCTS & COMPANY IDENTIFICATION

OCCUPATIONAL HEALTH SERVICES, INC.
11 WEST 42ND STREET, 12TH FLOOR
NEW YORK, NEW YORK 10036
1-800-445-MSDS (1-800-445-6737) OR
1-212-789-3535

FOR EMERGENCY SOURCE INFORMATION
CONTACT: 1-615-366-2000 USA

CAS NUMBER: 115-11-7
RTECS NUMBER: UD0890000

SUBSTANCE: ISOBUTENE

TRADE NAMES/SYNONYMS:
2-METHYLPROPENE; ISOBUTYLENE; LIQUIFIED PETROLEUM GAS; 2-METHYL-1-PROPENE; L.P.G.; GAMMA-BUTYLENE; ASYM-DIMETHYL ETHYLENE; UN 1055; OHS11610

CHEMICAL FAMILY:
Hydrocarbon, aliphatic

CREATION DATE: 02/03/86 REVISION DATE: 01/15/94

SECTION 2 COMPOSITION/INFORMATION ON INGREDIENTS

COMPONENT : ISOBUTENE
CAS NUMBER: 115-11-7
PERCENTAGE: 100

OTHER CONTAMINANTS: NONE

SECTION 3 HAZARDS IDENTIFICATION

CERCLA RATINGS (SCALE 0-3): HEALTH=1 FIRE=3 REACTIVITY=0 PERSISTENCE=0
NFPA RATINGS (SCALE 0-4): HEALTH=1 FIRE=4 REACTIVITY=0

EMERGENCY OVERVIEW:
Colorless, volatile liquid or easily liquified gas with coal gas odor
May be irritating to the respiratory tract and eyes. May cause convulsions. May affect the central nervous system. Reduces oxygen available for breathing. Flammable gas. May cause flash fire.
Keep away from all ignition sources. Avoid breathing gas. Avoid contact with eyes, skin and clothing. Do not enter confined spaces unless adequately ventilated. Do not puncture container. Keep container tightly closed. Wash thoroughly after handling. Use only with adequate ventilation.

E ENTIAL HEALTH EFFECTS:
LATION:
HORT TERM EFFECTS: May cause irritation. Additional effects may include

ausea, vomiting, headache, weakness, drunkeness, disorientation, citation, tingling sensation, suffocation, convulsions, unconsciousness nd coma.
LONG TERM EFFECTS: No information available on significant adverse effects.
SKIN CONTACT:
SHORT TERM EFFECTS: May cause burns and frostbite.
LONG TERM EFFECTS: No information is available.
EYE CONTACT:
SHORT TERM EFFECTS: May cause irritation. Additional effects may include frostbite and blurred vision.
LONG TERM EFFECTS: No information available on significant adverse effects.
INGESTION:
SHORT TERM EFFECTS: May cause frostbite.
LONG TERM EFFECTS: No information is available.

CARCINOGEN STATUS:
OSHA: N
NTP: N
IARC: N

SECTION 4 FIRST AID MEASURES

INHALATION:
FIRST AID- Remove from exposure area to fresh air immediately. If breathing s stopped, give artificial respiration. Maintain airway and blood ressure and administer oxygen if available. Keep affected person warm and at rest. Treat symptomatically and supportively. Administration of oxygen should be performed by qualified personnel. Get medical attention immediately.

SKIN CONTACT:
FIRST AID- It is unlikely that emergency treatment will be required. If adverse effects occur, get medical attention.
In case of frostbite, warm affected skin in warm water at a temperature of 107 F. If warm water is not available or impractical to use, gently wrap affected part in blankets. Encourage victim to exercise affected part while it is being warmed. Allow circulation to return naturally (Matheson Gas, 6th Ed.). Get medical attention immediately.

EYE CONTACT:
FIRST AID- Wash eyes immediately with large amounts of water, occasionally lifting upper and lower lids, until no evidence of chemical remains (at least 15-20 minutes). Continue irrigating with normal saline until the pH has returned to normal (30-60 minutes). Cover with sterile bandages. Get medical attention immediately.

INGESTION:
FIRST AID- Treat symptomatically and supportively. Get medical attention immediately. If vomiting occurs, keep head lower than hips to prevent spiration.

NOTE TO PHYSICIAN

ANTIDOTE:
No specific antidote. Treat symptomatically and supportively.

SECTION 5 FIRE FIGHTING MEASURES

FIRE AND EXPLOSION HAZARD:
Dangerous fire hazard when exposed to heat or flame.

Vapors are heavier than air and may travel a considerable distance to a source of ignition and flash back.

Vapor-air mixtures are explosive above flash point.

EXTINGUISHING MEDIA:
Dry chemical or carbon dioxide
(1990 Emergency Response Guidebook, DOT P 5800.5).

For larger fires, use water spray or fog
(1990 Emergency Response Guidebook, DOT P 5800.5).

FIREFIGHTING:
Move container from fire area if you can do it without risk. Apply cooling water to sides of containers that are exposed to flames until well after fire is out. Stay away from ends of tanks. For massive fire in cargo area, use unmanned holder or monitor nozzles; if this is impossible, withdraw from area and let fire burn. Withdraw immediately in case of rising sound from venting safety device or any discoloration of tank due to fire. Let tank, tank car or tank truck burn unless leak can be stopped; with smaller tanks or cylinders, extinguish/isolate from other flammables. Isolate for 1/2 mile in all directions if tank, rail car or tank truck is involved in fire (1990 emergency response guidebook, DOT P 5800.5, Guide Page 22).

Extinguish only if gas flow can be stopped. Use flooding amounts of water as fog. Cool cylinders with flooding amounts of water from as far a distance as possible. Avoid breathing vapors; keep upwind. If fire is uncontrollable or cylinders are exposed to fire, evacuate for a radius of 1500 feet. Consider evacuation of downwind area if material is leaking.

Stop flow of gas (NFPA 325M, Fire Hazard Properties of Flammable Liquids, Gases, and Volatile Solids, 1991).

FLASH POINT: -105 F (-76 C)
LOWER FLAMMABLE LIMIT: 1.8
UPPER FLAMMABLE LIMIT: 9.6
AUTOIGNITION: 869 F (465 C)

HAZARDOUS COMBUSTION PRODUCTS:
Thermal decomposition products may include toxic oxides of carbon.

SECTION 6 ACCIDENTAL RELEASE MEASURES

OCCUPATIONAL SPILL:

Shut off ignition sources. Do not touch spilled material. Stop leak if you can do it without risk. Use water spray to reduce vapors. Isolate area until gas has dispersed. No smoking, flames or flares in hazard area! Keep unnecessary people away; isolate hazard area and deny entry. Ventilate closed spaces before entering.

SECTION 7 HANDLING AND STORAGE

Observe all federal, state and local regulations when storing this substance.

SECTION 8 EXPOSURE CONTROLS/PERSONAL PROTECTION

EXPOSURE LIMITS:
No occupational exposure limits established by OSHA, ACGIH, or NIOSH.

VENTILATION:
Provide local exhaust ventilation. Ventilation equipment should be explosion-proof if explosive concentrations of dust, vapor or fume are present.

EYE PROTECTION:
Employee must wear splash-proof or dust-resistant safety goggles and a faceshield to prevent contact with this substance.

Emergency wash facilities:
Where there is any possibility that an employee's eyes and/or skin may be exposed to this substance, the employer should provide an eye wash fountain and quick drench shower within the immediate work area for emergency use.

CLOTHING:
For the gas form, protective clothing not required.
If contact with the liquid form is possible, employee must wear appropriate protective clothing and equipment to prevent skin from freezing.

GLOVES:
Wear full protective, cold insulating gloves.

RESPIRATOR:
The following respirators are recommended based on information found in the physical data, toxicity and health effects sections. They are ranked in order from minimum to maximum respiratory protection.
The specific respirator selected must be based on contamination levels found in the work place, must be based on the specific operation, must not exceed the working limits of the respirator and must be jointly approved by the National Institute for Occupational Safety and Health and the Mine Safety and Health Administration (NIOSH-MSHA).

Any type 'C' supplied-air respirator with a full facepiece operated in pressure-demand or other positive pressure mode or with a full facepiece, helmet or hood operated in continuous-flow mode.

Any self-contained breathing apparatus with a full facepiece operated in pressure-demand or other positive pressure mode.

FOR FIREFIGHTING AND OTHER IMMEDIATELY DANGEROUS TO LIFE OR HEALTH CONDITIONS:

Any self-contained breathing apparatus that has a full facepiece and is operated in a pressure-demand or other positive-pressure mode.

Any supplied-air respirator that has a full facepiece and is operated in a pressure-demand or other positive-pressure mode in combination with an auxiliary self-contained breathing apparatus operated in pressure-demand or other positive-pressure mode.

SECTION 9 PHYSICAL AND CHEMICAL PROPERTIES

DESCRIPTION: Colorless, volatile liquid or easily liquified gas with coal gas odor
MOLECULAR WEIGHT: 56.12
MOLECULAR FORMULA: C4-H8
BOILING POINT: 20 F (-7 C)
MELTING POINT: -220 F (-140 C)
VAPOR PRESSURE: 1.96 mmHg @ 20 C
VAPOR DENSITY: 1.9
SPECIFIC GRAVITY: 0.5879 at 25 C
WATER SOLUBILITY: practically insoluble
SOLVENT SOLUBILITY: Organic solvents, alcohol, ether, sulfuric acid

---

SECTION 10 STABILITY AND REACTIVITY

REACTIVITY:
Stable under normal temperatures and pressures.

CONDITIONS TO AVOID:
Avoid contact with heat, sparks, flames or other ignition sources. Vapors may be explosive. Do not allow contact with skin; material may cause frostbite. Contents are under pressure; containers may rupture violently and travel a considerable distance.

INCOMPATIBILITIES:
ISOBUTENE:
OXIDIZING MATERIAL: May react.

HAZARDOUS DECOMPOSITION:
Thermal decomposition products may include toxic oxides of carbon.

POLYMERIZATION:
No data available.

SECTION 11 TOXICOLOGY INFORMATION

ISOBUTENE:

T ICITY DATA: 620 gm/m3/4 hours inhalation-rat LC50; 415 gm/m3/2 hours halation-mouse LC50.
C CINOGEN STATUS: None.
ACUTE TOXICITY LEVEL: Relatively non-toxic by inhalation.
TARGET EFFECTS: Central nervous system depressant; simple asphyxiant.

HEALTH EFFECTS
INHALATION:
ISOBUTENE:
NARCOTIC/SIMPLE ASPHYXIANT.
May cause irritation of the mucous membranes. Isobutene is a mild anesthetic and may cause at large concentrations symptoms of dizziness, dullness, shortness of breath, disorientation, excitation, headaches, and vomiting. Severe exposure may cause loss of consciousness, convulsions, coma, and possible death. See information on simple asphyxiants.

SIMPLE ASPHYXIANTS:
ACUTE EXPOSURE- The symptoms of asphyxia depend on the rapidity with which the oxygen deficiency develops and how long it continues. In sudden acute asphyxia, unconsciousness may be immediate. With slow development there may be rapid respiration and pulse, air hunger, dizziness, reduced awareness, tightness in the head, tingling sensations, incoordination, faulty judgement, emotional instability, and rapid fatigue. As the asphyxia progresses, nausea, vomiting, collapse, unconsciousness, convulsions, deep coma and death are possible.
CHRONIC EXPOSURE- No data available.

N CONTACT:
ISOBUTENE:
ACUTE EXPOSURE- Contact with liquified gas may cause frostbite, redness, pain and burns.
CHRONIC EXPOSURE- No data available.

EYE CONTACT:
ISOBUTENE:
ACUTE EXPOSURE- Contact with the vapor may cause irritation of the eyes. Eye contact with liquified gas may cause frostbite, redness, pain and blurred vision.
CHRONIC EXPOSURE- No effects reported in humans.

INGESTION:
ISOBUTENE:
ACUTE EXPOSURE- Ingestion of a gas is unlikely. If liquid is swallowed, frostbite damage of the lips, mouth and mucous membranes may occur.
CHRONIC EXPOSURE- No data available.

SECTION 12 ECOLOGICAL INFORMATION

ENVIRONMENTAL IMPACT RATING (0-4): no data available

TE AQUATIC TOXICITY: no data available

DEGRADABILITY: no data available

BIOCONCENTRATION FACTOR (BCF): no data available

LOG OCTANOL/WATER PARTITION COEFFICIENT: no data available

SECTION 13 DISPOSAL INFORMATION

Observe all federal, state and local regulations when disposing of this substance.

SECTION 14 TRANSPORTATION INFORMATION

U.S. DEPARTMENT OF TRANSPORTATION SHIPPING NAME-ID NUMBER, 49 CFR 172.101:
Isobutylene-UN 1055

U.S. DEPARTMENT OF TRANSPORTATION HAZARD CLASS OR DIVISION, 49 CFR 172.101:
2.1 - Flammable gas

U.S. DEPARTMENT OF TRANSPORTATION LABELING REQUIREMENTS, 49 CFR 172.101
AND SUBPART E:
Flammable gas

U.S. DEPARTMENT OF TRANSPORTATION PACKAGING AUTHORIZATIONS:
EXCEPTIONS: 49 CFR 173.306
BULK PACKAGING: 49 CFR 173.304
PACKAGING: 49 CFR 173.314 and 49 CFR 173.315

U.S. DEPARTMENT OF TRANSPORTATION QUANTITY LIMITATIONS 49 CFR 172.101:
PASSENGER AIRCRAFT OR RAILCAR: Forbidden
CARGO AIRCRAFT ONLY: 150 kg

SECTION 15 REGULATORY INFORMATION

TSCA STATUS: Y

CERCLA SECTION 103 (40CFR302.4):	N
SARA SECTION 302 (40CFR355.30):	N
SARA SECTION 304 (40CFR355.40):	N
SARA SECTION 313 (40CFR372.65):	N
OSHA PROCESS SAFETY (29CFR1910.119):	N
CALIFORNIA PROPOSITION 65:	N

SARA HAZARD CATEGORIES, SARA SECTIONS 311/312 (40 CFR 370.21)

ACUTE HAZARD:	Y
CHRONIC HAZARD:	N
FIRE HAZARD:	Y
REACTIVITY HAZARD:	N
SUDDEN RELEASE HAZARD:	Y

SECTION 16 OTHER

COPYRIGHT 1994 OCCUPATIONAL HEALTH SERVICES, INC. ALL RIGHTS RESERVED.

Licensed to: ICF KAISER INTERNATIONAL, INC & AFFILIATES
To make unlimited paper copies for internal distribution and use only.