300502-0605010020

CH2M HILL
Mound, Inc.
1 Mound Road
P.O. Box 3030
Miamisburg, OH
45343-3030

CH2MHILL

SMO-126/05
May 31, 2005

U. S. Department of Energy
Miamisburg Closure Project
Ms. Margaret L. Marks, Director
1075 Mound Road
Miamisburg, OH 45342

ATTENTION: Paul Lucas

SUBJECT: **Contract No. DE-AC24-03OH20152:** Deliverable #36 Building Data Package; Section C.2.1.1 Facility Demolition; Building 50 Red Drain Line OSC Report, Final

Dear Ms. Marks:

Attached is the following Final document for your records:

- Building 50 Red Drain Line OSC Report, Final

If you or members of your staff have any questions regarding the document, or if additional support is needed, please contact Dave Rakel at 937-865-4203.

Sincerely,

John Lehew
Site Manager

JL/ms

Enclosures

cc: T. Fischer, USEPA, (1) w/attachments
B. Nickel, OEPA, (1) w/attachments
R. Vandegrift, ODH, (1) w/attachments
M. Wojciechowski, Tetra Tech, (1) w/attachs
F. Schmaltz, DOE/MCP, (1) w/attachments
L. Rawls, MCP, w/o attachments
R. Tormey, DOE/OH, (1) w/attachments
G. Desai, DOE/HQ, (1) w/attachments
F. Bullock, MMCIC, (2) w/attachments
Public Reading Room, (4) w/attachments
Admin. Record, (2) w/attachments
DCC (1) w/attachments
ER Records, (1) w/attachments
CERCLA Records, (1) w/ attachments
C. Watson, (1) w/attachments
J. Lehew, w/o attachments
K. Armstrong, w/o attachments
D. Rakel, w/o attachments
V. Darnell, w/o attachments
B. Wier, w/o attachments
MOAT Coordinator, w/o attachments
W. Webb, w/o attachments
M. McDougal, w/o attachments
file, w/o attachments

300502-0605010020

BUILDING 50 RED DRAIN LINE REMOVAL ACTION

Includes the Building 36 Dock Data Report

No PRSs are closed via this OSC Report

OSC REPORT

May 2005

Final

Department of Energy
Miamisburg Closure Project

CH2MHILL

Bldg 36, 36 dock, Bldg 37, 37 tanks (PRSs 271 & 336) & Bldg 50 & 50 RDS

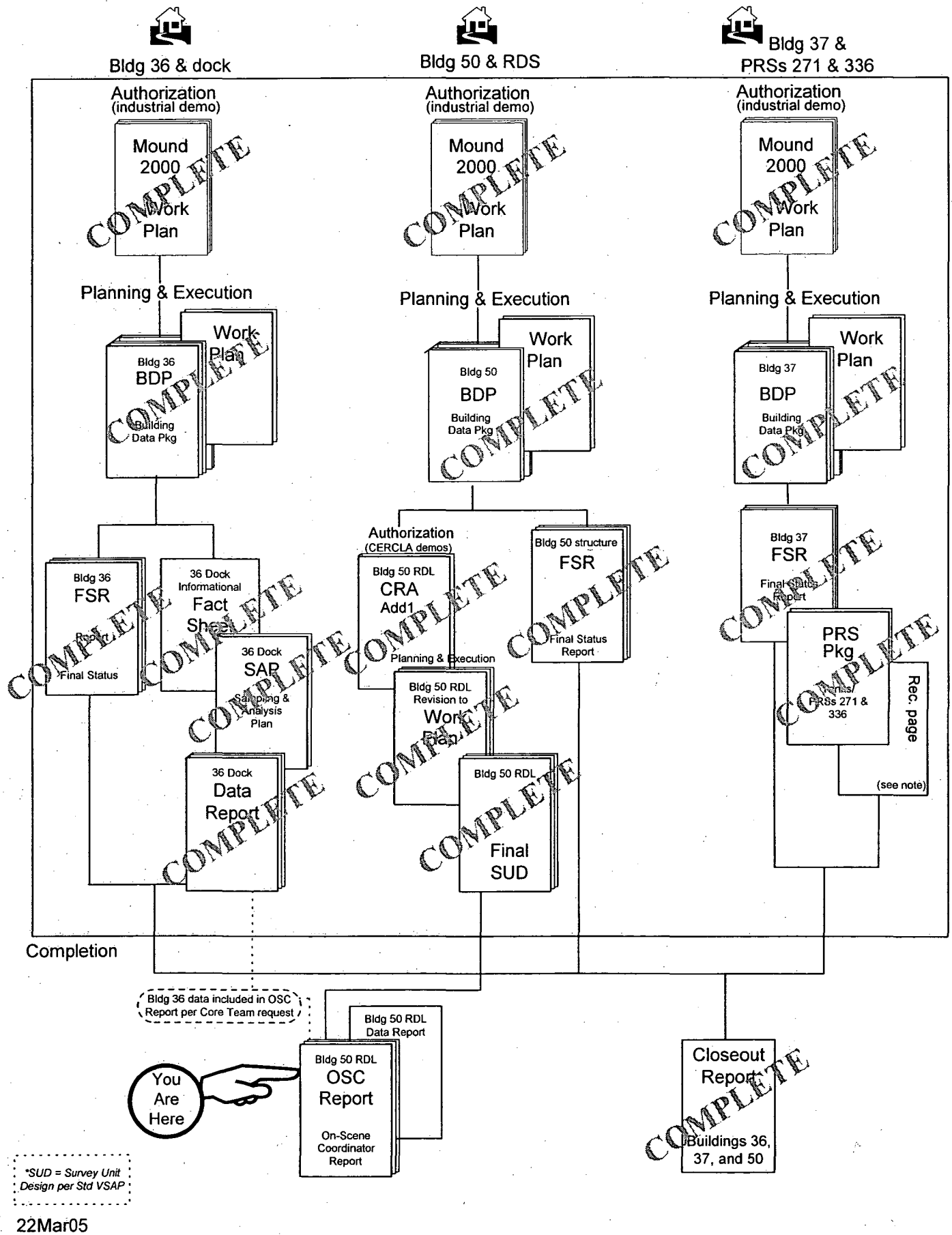

22Mar05

This page intentionally left blank.

TABLE OF CONTENTS

Section | Page

Recommendation iii

1.0 SUMMARY OF EVENTS 1
- 1.1 Background 1
- 1.1.1 Scope of this OSC Report 1
- 1.2 Organization of the Removal Action 3
- 1.3 Objectives 3
- 1.4 Chronological Narrative of the Removal Action 4

2.0 EFFECTIVENESS OF THE REMOVAL ACTION 4
- 2.1 Actions Taken by Site Contractor 4
- 2.2 Actions Taken by Local, State, and Federal Agencies 5
- 2.3 Actions Taken by Subcontractors 5

3.0 DIFFICULTIES ENCOUNTERED 5
- 3.1 Items that Affect the Removal Action 5
- 3.2 Issues of Intergovernmental Coordination 5

4.0 RECOMMENDATIONS 5
- 4.1 Means to Prevent Spread of Contamination 5

Figures

Figure 1: Site Map
Figure 2: Building 50 Red Drain Line Removal Action Area and Soil Sampling Locations

Tables

Table 1: Organization of the Removal Action
Table 2: Building 50 Red Drain Line Waste Disposition
Table 3: Cluster 50 Estimated Total Cost

Appendices

Appendix A Figures
Appendix B Tables
Appendix C General Media Information
Appendix D Building 36 Dock Data Report
Appendix E Building 50 Red Drain Line Soil Sampling Results

Acronyms

BOSS	Balance of Site Structures
CERCLA	Comprehensive Environmental Response, Compensation, and Liability Act
cm^2	square centimeters
CO	cleanup objective
COC	contaminant of concern
cy	cubic yard
DOE	Department of Energy
dpm	disintegrations per minute
EE/CA	engineering evaluation/cost analysis
LDL	lower detection limit
LSDG	laboratory sample delivery group
MCP	Miamisburg Closure Project
OEPA	Ohio Environmental Protection Agency
OSC	On-Scene Coordinator
pCi/g	pico curies per gram
PRP	Potentially Responsible Party
PRS	Potential Release Site
RA	Removal Action
RDL	Red Drain Line
SAP	Sampling and Analysis Plan
SUD	Survey Unit Design
TPU	total propagated uncertainty
USEPA	United States Environmental Protection Agency
VSAP	Verification Sampling and Analysis Plan

Recommendation

The Building 50 Red Drain Line (RDL) Removal Action (RA) (authorized via the Action Memorandum EE/CA Contingent Removal Actions for Contaminated Soils, Addendum 1: Structures) was completed. An RA was indicated based on the discovery of radiologically contaminated sediment in the Building 50 RDL during routine pre-demolition building surveys. Two contaminants of concern (COCs) were identified: Th-232 at 13.84 pCi/g (0.185 pCi/g Lower Detection Limit [LDL]) compared with 2.1 pCi/g Cleanup Objective (CO), and Th-228 at 12.16 pCi/g (0.586 pCi/g LDL) compared with 2.6 pCi/g CO. The Building 50 superstructure and slab were removed as a standard industrial demolition and closed out via the Buildings 36, 37, and 50 Closeout Report (Final, February 2005). The contaminated RDL and tank were removed in accordance with this RA, and are closed out via this OSC Report. The RA resulted in the disposal of approximately 20 cubic yards (cy) of radioactive waste (sent to Envirocare). Verification soil sampling was performed in accordance with the Core Team approved Survey Unit Design (SUD), and no soil contamination was found. All results were below COs.

Information regarding confirmation soil sampling following the Building 36 industrial demolition project (unrelated to the Building 50 RDL RA) is also included in this OSC Report. Building 36 and its adjoining dock were demolished in accordance with the Building 36 Building Data Package (Public Review Draft, November 2003). Because the top surface of the dock was radiologically contaminated (Pu-238), the Core Team requested that the public be notified via a Public Fact Sheet (Public Review Draft, May 2004), and that the results of confirmation soil sampling be provided in an OSC Report (as well as in the Buildings 36, 37, and 50 Closeout Report). The Building 36 Dock removal resulted in the disposal of approximately 20 cy of demolition debris as radioactive waste (sent to Envirocare). Confirmation soil sampling was performed in accordance with the Core Team approved Sampling and Analysis Plan (SAP), and no soil contamination was found. All results were below CO.

After a thorough review of this Building 50 Red Drain Line On-Scene Coordinator Report, the Core Team agrees the Removal Action of the Building 50 Red Drain Line is complete and that all previously existing environmental issues associated with the Building 50 Red Drain Line have been resolved. The Core Team also has reviewed and approved the Building 36 Dock Data Report and agrees that no environmental issue exists at the dock's former location.

Paul Lucas 5/25/05

Paul Lucas, OSC
U.S. Department of Energy
Miamisburg, Ohio

Timothy J. Fischer 5/25/05

Timothy J. Fischer, Remedial Project Manager
USEPA
Chicago, Illinois

B. K. Nickel 5/25/05

Brian K. Nickel, Project Manager
OEPA
Dayton, Ohio

1.0 SUMMARY OF EVENTS

This section describes the site background and events leading up to the RA, parties involved in supporting the RA, chronological narrative of the RA, and resources committed to complete the project.

1.1 Background

The authorization for the Building 50 Red Drain Line (RDL) Removal Action was made by the Core Team on April 16, 2004 via the Action Memorandum EE/CA Contingent Removal Actions for Contaminated Soils, Addendum 1: Structures (Final, January 2005).

The levels of radiological contamination present in the Building 50 RDL warranted an RA under CERCLA (Comprehensive Environmental Response, Compensation, and Liability Act) and subsequent removal of the Building 50 RDL. The location of Building 50 is shown on Figure 1 (Appendix A).

1.1.1 Scope of this OSC Report

This OSC Report documents the events associated with the Building 50 RDL RA, which includes demolition and removal of the Building 50 RDL, tank, and concrete vault, and the verification sampling and analysis of the soil in the RA survey unit.

Building 50 RDL Background.

Building 50 was planned to be demolished as a standard industrial demolition. However, during pre-demolition radiological surveys, elevated levels of thorium were discovered on a drain cover, and in the sediment in a drain line and in the 1,100-gallon sump. The sump was a steel tank (within a concrete secondary containment pit) designed to hold wastewater from the Building 50 red drain system (lines that could potentially be radiologically contaminated). The dotted red line on Figure 2 (Appendix A) shows the location of the contaminated portion of the Building 50 red drain system.

Analysis of the drain line sediment identified two contaminants of concern (COCs): Th-232 at 13.84 pCi/g (0.185 pCi/g LDL) compared with 2.1 pCi/g Cleanup Objective (CO), and Th-228 at 12.16 pCi/g (0.586 pCi/g LDL) compared with 2.6 pCi/g CO. The Building 50 superstructure and slab were removed as a standard industrial demolition project and closed out via the Buildings 36, 37, and 50 Closeout Report (Final, February 2005). The contaminated RDL and tank were removed in accordance with this RA, and are closed out via this OSC Report. Verification soil sampling was performed, and no soil contamination was found. All results were below COs. Figure 2 (Appendix A) shows the verification soil sample locations, and Appendix E provides the analytical data compared with the respective COs, and a list of the sample location coordinates.

Associated Potential Release Sites (PRSs) and Previous Investigations.

No PRSs are associated with this removal action, or closed out via this OSC Report.

Removal Action.

The authorization for the Building 50 RDL RA was made by the Core Team on April 16, 2004 via the Action Memorandum EE/CA Contingent Removal Actions for Contaminated Soils, Addendum 1: Structures (Final, January 2005). The RA included the removal of approximately 100 linear feet of contaminated piping, the 1,100-gallon wastewater holding tank, and the concrete secondary containment pit that surrounded the tank. The RA resulted in the disposal of approximately 20 cy of radioactive waste.

Following removal of the contaminated structures, verification sampling was performed in an area measuring approximately 90 feet by 62 feet (5,580 square feet) as shown in Figure 2 (Appendix A). The verification area included the southern portion of the Building 50 footprint and below the locations of the former sanitary tank and former wastewater tank. Verification sampling was performed per the Core Team approved Building 50 RDL Post-Excavation SUD, in accordance with the Standard Soils Verification Sampling and Analysis Plan (VSAP) (Final, August 2004). All verification sampling results are below COs (Appendix E). No contaminated soil was removed by this RA.

Since DOE is the sole responsible party for cleanup of contamination, no Potentially Responsible Parties (PRPs) were sought to clean up the site. Monsanto Research Corporation, EG&G Mound Applied Technologies, and BWXT of Ohio, Inc. were the operating contractors at the site from 1948 to 30 September 1988, from 1 October 1988 to 30 September 1997, and from 1 October 1997 to 31 December 2002 respectively. CH2M Hill Mound, Inc. became the site contractor for the Miamisburg Closure Project (MCP) effective January 1, 2003.

1.1.2 Additional information included in this OSC Report

The Building 36 Dock Data Report is included in this OSC Report (Appendix D) at the request of the Core Team. The demolition and removal of the Building 36 Dock is not part of the Building 50 RDL RA.

Building 36 Dock Background.

Building 36 and its adjoining dock were demolished as an industrial demolition project in accordance with the Building 36 Building Data Package (Public Review Draft, November 2003). The Building 36 location is shown on Figure 1 (Appendix A). During the Building 36 pre-demolition surveys, radiological contamination was discovered on the top surface of the concrete dock. All interior and exterior surfaces of Building 36 met release criteria. The public was notified of the dock contamination via the Building 36 Dock Public Fact Sheet (Public Review Draft, May 2004). The soil under and around the dock was sampled and analyzed in accordance with the Core Team-approved Building 36 Dock Sampling and Analysis Plan (SAP). All results were below the COs (Appendix D). The Building 36 demolition activities (including the dock removal) were closed out via the Buildings 36, 37, and 50 Closeout Report (Final, February 2005).

1.2 Organization of the Removal Action

Table 1 (Appendix B) lists the parties supporting the removal action and their responsibilities.

1.3 Objectives

Documentation Objective: The objectives of this Building 50 RDL OSC Report are to describe the removal action fieldwork, and document successful completion of the project. Demolition debris quantities and disposition locations are presented in Table 2 (Appendix A). The cost breakdown of the removal of Cluster 50 (including Buildings 36, 37, and 50) and the Building 50 RDL RA is provided in Table 3 (Appendix B). The Building 50 RDL soil verification data summary is provided in Appendix E, and Figure 2 (Appendix B) shows the verification sampling locations.

The demolition of the Building 50 superstructure and slab was a standard industrial demolition and its completion is documented in the Buildings 36, 37 and 50 Closeout Report.

Cleanup Objective: Contaminates of Concern (COC) and cleanup objectives as identified in the Contingent Removal Action and SUD are as follows:

Contaminants of Concern	Cleanup Objective (pCi/g)
Pu-238	55
Th-228*	2.6
Th-230	2.8
Th-232	2.1

*Th-228 is not listed as a COC in the SUD because an evaluation of Th-228 is made by evaluating the parent nuclide, Th-232.

All verification results are below their respective CO (Appendix E).

Removal Action Objectives: The objectives of the removal action included:

- Project Planning
- Public Notification
- Site Preparation
- Remove Structures and Soil (Building 50 RDL)
- Verification
- Site Restoration
- Documentation of Completion

1.4 Chronological Narrative of the Removal Action

The following is a chronological narrative of events surrounding the Building 50 RDL RA.

Timeframe	Activity
April 2004	Removal Action authorized
May 16, 2004	Building 50 Demolition Work Plan approved
August 3, 2004	Building 50 RDL removed
September 15, 2005	Building 50 Red Drain Line and Waste Retention Tank Removal Post-Excavation SUD approved
September 27-28, 2005	Verification sampling performed
November 22, 2004	Raw Data Report provided to Core Team
March 2005	OSC Report prepared

2.0 EFFECTIVENESS OF THE REMOVAL ACTION

The Building 50 RDL and Waste Retention Tank have been demolished, and the debris removed and properly disposed of per the Work Package (BOSS 36965-02). Verification sampling was performed and all results are below the applicable COs (Appendix E).

2.1 Actions Taken by Site Contractor

CH2M HILL Mound, Inc. personnel planned and performed removal action oversight; site preparation; removal of the RDL, tank, and concrete vault; onsite transportation and staging of debris; sampling and analysis of the soil in the RA area; and site restoration. The project met the RA objectives as outlined in the Action Memorandum EE/CA Contingent Removal Actions for Contaminated Soils, Addendum 1: Structures (Final, January 2005). CH2M Hill Mound, Inc. personnel prepared the OSC Report, which shows that the RA objectives related to the Building 50 RDL were achieved.

This OSC Report provides the documentation of completion for the removal of Building 50 RDL. Verification sampling was performed for this RA, and analytical results are provided in Appendix E.

Removal Action Activities

The Building 50 RDL demolition debris was disposed of as low-level radiological waste (see Table 2). All radioactively contaminated debris was size reduced and packaged to meet the Envirocare waste acceptance criteria. No contaminated soil was removed by this RA. Prior to demolition, acid etching was done as part of the isotopic analysis of certain contaminated areas of the structure. The resulting samples were analyzed by gamma and/or alpha spectroscopy as appropriate. The samples were then disposed of through the appropriate waste stream. Water misting was performed with the goal of eliminating fugitive dust. Surface water runoff was controlled by silt protection covers over field grates and by the use of straw bales around designated demolition areas.

Soil sampling was performed per the Building 50 RDL and Waste Retention Tank Removal Post Excavation SUD in accordance with the Standard Soil VSAP. The analytical results are provided in Appendix E. All verification results are below COs.

Air Monitoring for Worker Safety

Due to the small amount of contamination present in the red drain line, no air monitoring was required or performed during this activity in accordance with Mound Air Monitoring procedures (MD-80042).

2.2 Actions Taken by Local, State, and Federal Agencies

The Department of Energy (DOE)/MCP, the United States Environmental Protection Agency (USEPA), and Ohio EPA (OEPA) had oversight responsibility for the removal action. The DOE/MCP was the lead agency for the RA and provided the funding and oversight for the RA. The USEPA and OEPA had oversight responsibility for the RA and review of the Action Memorandum and OSC Report to ensure that the objectives are/were met.

2.3 Actions Taken by Subcontractors

Subcontractors involved in the project included the following:

- Terran, 4080 Executive Drive, Beavercreek, Ohio. Soil sampling and analysis after removal of the Building 50 RDL and waste tank.
- Envirocare, 605 North 5600 West, Salt Lake City, Utah. Disposal of low-level radioactive waste.

3.0 DIFFICULTIES ENCOUNTERED

3.1 Items that Affect the Removal Action

No difficulties were encountered that affected the removal action.

3.2 Issues of Intergovernmental Coordination

All DOE/USEPA/OEPA interactions were good. The agencies were updated informally on a regular basis, and formally at monthly Core Team meetings. The Mound 2000 Process worked well.

4.0 RECOMMENDATIONS

4.1 Means to Prevent Spread of Contamination

The RDL, tank, and vault were removed and disposed of per the Core Team-approved work plan; therefore, the spread of contamination was prevented. The scope of work for this Removal Action is complete. Evaluation of the Building 50 RDL soil was performed

and the results presented in Appendix E. All results were below cleanup objectives. Therefore, no further action is required. No contaminated soil was removed by this RA.

Evaluation of the Building 36 Dock area soil was performed and the results are presented in Appendix D. All results were below cleanup objectives. No contaminated soil was found. Therefore, no further action is required.

The area was graded and seeded. Photos of the area after final grading and seeding are provided in the Buildings 36, 37 and 50 Closeout Report, Final, February 2005.

APPENDIX A

FIGURES

Figure 1: Location of Buildings 36 and 50

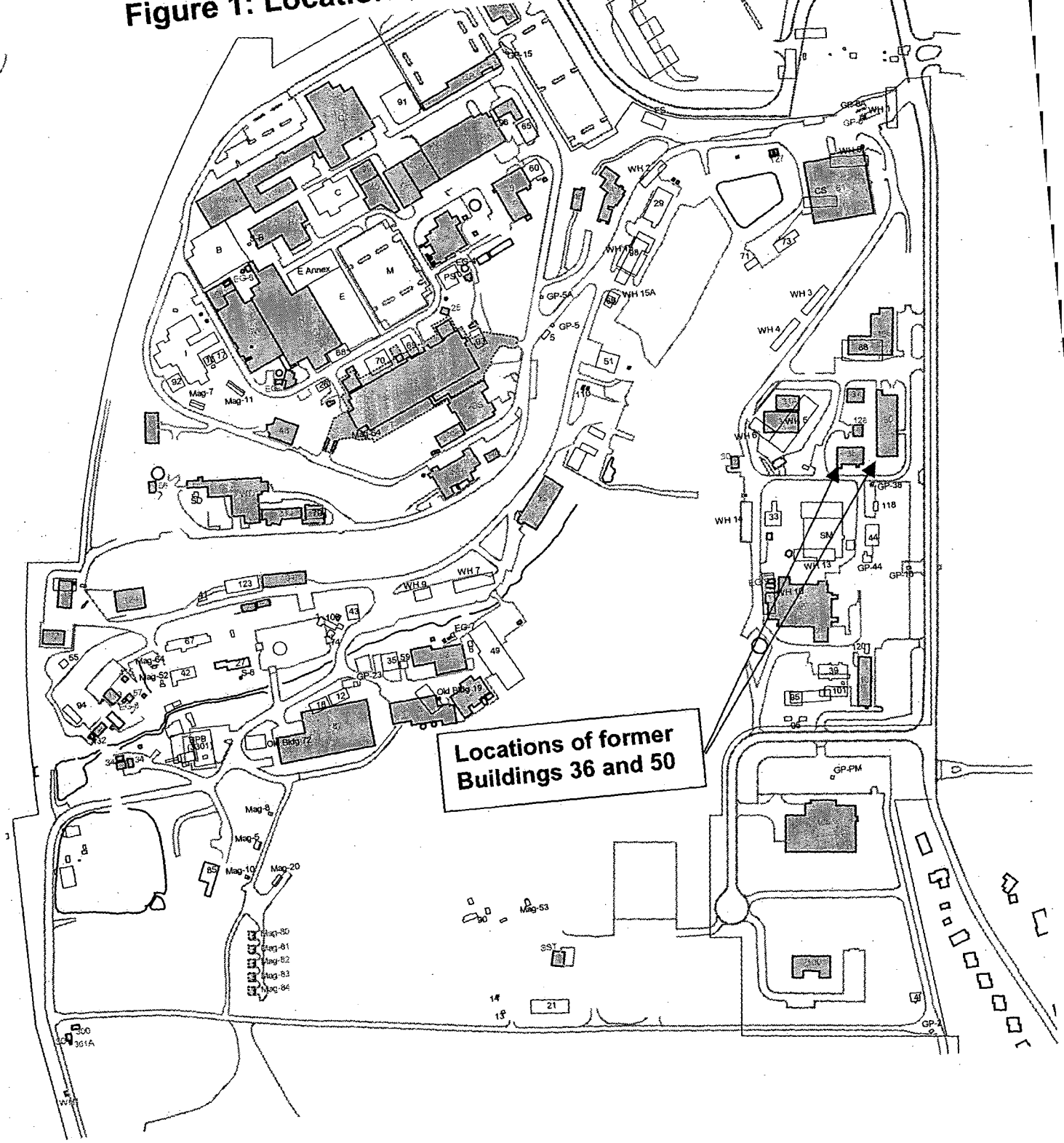

Figure 2
Building 50 Red Drain Line Removal Action Area and Soil Sampling Locations

Building 50 Red Drain Line Survey Unit 1 Data Points
L = 90 W = 62 N = 28 Area = 5580sqft L = 15.0 L' = 13.0

Coordinates

	X	Y
1	4	3
2	19	3
3	34	3
4	49	3
5	64	3
6	79	3
7	12	16
8	27	16
9	42	16
10	57	16
11	72	16
12	4	29
13	19	29
14	34	29
15	49	29
16	64	29
17	79	29
18	12	42
19	27	42
20	42	42
21	57	42
22	72	42
23	4	55
24	19	55
25	34	55
26	49	55
27	64	55
28	79	55
B1	16.5	23.5
B2	16.5	38.0
B3	31.5	38.0
B4	46.5	38.0
B5	61.5	38.0
B6	76.5	38.0
B7	79.0	48.0

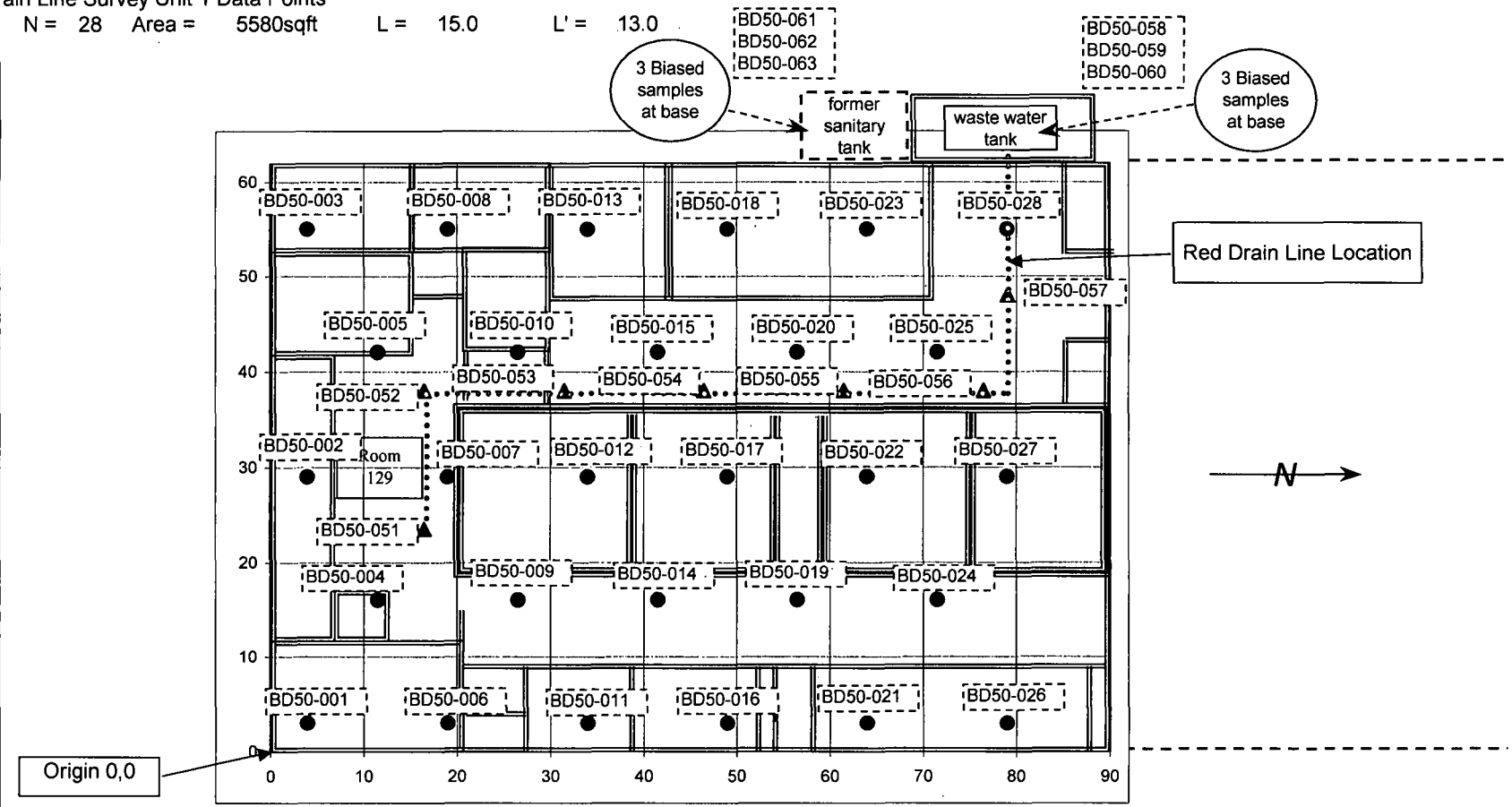

Note: L = 15 feet based on Pu-238 scan MDC

▲ : Denotes Red Drain Line Bias Sample Point

A2/2

APPENDIX B

TABLES

Table 1: Organization of the Removal Action

Agency or Party Involved	Contact	Description of Participation
US EPA (SR-6J) 77 W. Jackson Chicago, IL 60604 312-886-7058	Timothy Fischer	Federal agency responsible for MCP oversight.
Ohio EPA 410 E. Fifth Street Dayton, OH 45402-2911 937-285-6468	Brian Nickel	State agency responsible for MCP oversight.
DOE/ MCP 1075 Mound Road Miamisburg, OH 45342 937-847-8350, ext. 304	Frank Schmaltz	DOE/ MCP Project Manager responsible for project oversight and success.
CH2M Hill Mound, Inc. BOSS Project P.O. Box 3030 1 Mound Road Miamisburg, OH 45343-3030 937-608-8007	Chris Watson	Provided the DOE/ MCP Project Manager with technical assistance, administrative support, sampling, decontamination, photo and site documentation, site safety, and report preparation.
CH2M Hill Mound, Inc. General Superintendent and Equipment Manager P.O. Box 3030 1 Mound Road Miamisburg, OH 45343-3030 937-865-4278	Max Edington	Provided the equipment necessary for the demolition.

Table 2: Building 50 RDL Waste Disposition

Building Material	Quantity	Disposal Method	Destination
Building 50 RDL Radioactive Waste	20 cubic yards	Disposal site	Envirocare Salt Lake City, Utah

The removal of the Building 36 Dock was performed as a standard industrial demolition (and is not included in the Building 50 RDL RA). The Building 36 Dock removal resulted in the disposal of approximately 20 cy of radioactive waste (sent to Envirocare). The disposition of Building 36 materials is provided in the Buildings 36, 37, and 50 Closeout Report (Final, February 2005).

Table 3: Cluster 50 Estimated Total Cost

Under the site contract, CH2M Hill Mound, Inc. has elected to cluster financial data for multiple buildings together. Buildings 36, 37 and 50 compose Cluster 50. The total cluster cost is presented below.

Activity	Cost
Work Planning	$91,000
Facility Preparation	$343,000
Demolition	$265,000
Total	$699,000

APPENDIX C

GENERAL MEDIA INFORMATION

No Media Information Exists

This appendix intentionally left blank.

APPENDIX D

Building 36 Dock Data Report

This data report is included in the Building 50 RDL OSC Report at the request of the Core Team.

1.0 INTRODUCTION

This Sampling and Analysis Plan (SAP) will evaluate the soil exposed by the removal of the Building 36 Dock, and soil downgradient from the former dock location. Analytical results will be compared with the cleanup criteria, and presented to the Core Team in a Data Report. Because the dock was removed prior to the Contingent Action Memorandum being revised to incorporate structure removals, the Core Team requested that the Building 36 Dock Data Report be included as an attachment in the Building 36 Closeout Report and in the Building 50 Red Drain System On-Scene Coordinator (OSC) Report. Inclusion in the latter document ensures that the soil data is documented in the administrative record.

1.1 History

The Building 36 Dock was located in the eastern central portion of the site, immediately adjacent to the west side of the former Building 36 (Power Systems Technologies Assembly and Testing Support Facility). The dock measured approximately 10.5 feet by 75 feet. During pre-demolition surveys, radiological contamination above surface release criteria was discovered on the top surface of the dock. All interior and exterior surfaces of Building 36 met release criteria. Accordingly, it was believed that the contamination did not originate in Building 36 or as a result of Building 36 processes; it is unknown how the top surface of the dock became contaminated.

A number of locations on the top surface of the dock exceeded the surface release criteria of 100 disintegrations per minute per 100 centimeters squared (100 dpm/100cm^2). The location with the highest alpha fixed activity measured 259 dpm/100cm^2. The locations of the three highest measurements were acid etched and the isotopic analysis results showed the presence of plutonium-238 (146 dpm/sample).

1.2 Previous Sampling

The dock surface slab was removed and disposed of as low level radioactive waste. The remaining fill material consists mainly of crushed stone and gravel. This material was scanned with a Field Instrument for the Detection of Low Energy Radiation (FIDLER) and sampled (RSDS# 03-TF-0349, Attachment A). No FIDLER measurements were observed above background and sample results were below cleanup objectives for all observed nuclides. Sample locations and results are included in Figure 1. This sampling was performed as part of the demolition activities. The results indicate that neither prior operations, nor the demolition process impacted the material below the dock. However, in light of the Pu-238 contamination found on the dock surface, the Core Team requested a formal sampling plan be developed to confirm that the soil below and downgradient of the dock was not impacted by the prior operation or demolition process.

2.0 DATA QUALITY OBJECTIVES

The Data Quality Objectives (DQO) process is a series of planning steps that have been defined by the EPA (USEPA QA/G-4, 1994) to ensure that the type, quantity, and quality

D-A

This page intentionally left blank.

Building 36 Dock

DATA REPORT

October 27, 2004

Prepared By:	Robert Coblentz	Date: 10/27/04	
Reviewed By:	Robert Ransbottom	Date: 10/27/04	
Approved By:	Dave Rakel	Date: 10/27/4	

Department of Energy
Miamisburg Closure Project

CH2MHILL

D1/20

TABLE OF CONTENTS

1.0 Historical Overview 1
2.0 Survey Objectives 1
2.1 Survey Design 1
2.2 Survey Data 1
2.3 Quality Control 1
2.4 Conclusion 2
3.0 References 2

Tables

Table 1: Sample Results
Table 2: MEIMS Database

Figures

Figure 1: Sample Locations
Figure 2: Statistical Sample Graph

Attachments

RSDS # 04-TF-0218

Data Review and Validation Reports

Acronyms

COC	contaminant of concern
CO	Cleanup objective
DQO	Data Quality Objective
MEIMS	Mound Environmental Information Management System
OEPA	Ohio Environmental Protection Agency
pCi/g	picocuries per gram
PRS	Potential Release Site
QC	quality control

D2/20

RRE	residual risk evaluation
RSDS	Radiological Survey Data Sheet
USEPA	United States Environmental Protection Agency
SAP	Sampling and Analysis Plan

D 3/20

1.0 Historical Overview

The Building 36 Dock was located in the eastern central portion of the site, immediately adjacent to the west side of the former Building 36 (Power Systems Technologies Assembly and Testing Support Facility). The dock measured approximately 10.5 feet by 75 feet. During pre-demolition surveys, radiological contamination above surface release criteria was discovered on the top surface of the dock. The locations of the three highest measurements were acid etched and the isotopic analysis results showed the presence of plutonium-238 (146 disintegrations per minute (dpm)/sample). Building 36 Dock has been demolished and debris has been removed and disposed of as low level waste.

2.0 Survey Objectives

The objective of the Sampling and Analysis Plan (SAP) was to determine whether residual plutonium-238 contamination is present above the cleanup objective (CO) in the remaining soils below the former dock location and a 15-foot perimeter around the former dock location. This was accomplished by performing a walkover survey of the entire survey unit and performing isotopic analysis on soil samples collected at randomly placed locations.

2.1 Survey Design

The SAP was designed to evaluate the surface soils at the base of the excavation left by the demolition of Building 36 Dock. This area as shown in Figure 1 is approximately 2,677 square feet and is classified as a single Class 3 survey unit in accordance with Reference 1.

The number of random sample points required to satisfy the nonparametric statistical test was determined to be 14 in accordance with the MARSSIM.

2.2 Survey Data

A walkover survey was performed over 100% of the survey unit using a FIDLER probe in accordance with the SAP and no elevated levels were detected. Fourteen (14) randomly placed soil samples were taken in accordance with the SAP (B36DS-01 through B36DS-14). One replicate sample was taken (B36DS-06FD). All of the sample results were less than the cleanup objective and the Sign test was not required to demonstrate compliance. Sample results that are less than the analysis lower limit of detection (LDL) are considered to be at the LDL. Random sample locations are shown on Figure 1. Individual sample results are given in Table 2. A graphical representation of the sample results is shown in Figure 2.

2.3 Quality Control

Analytical data assessment can be performed on two quality control levels. Data Review involves an assessment of the quality controls used by the laboratory during the performance of the analysis. These include such things as laboratory blanks, system monitoring compound (surrogate) recoveries, matrix spikes, etc. Which controls are assessed and what criteria are applied depend on the analysis performed. The results

D 4/20

of field quality control measures such as field duplicates and trip blanks may also be evaluated. Data Review is normally performed on 100% of the analytical data per MD-80045 Op Q-006. See the attachment "Data Review and Validation" for the analysis performed on this data set.

Data Validation is a much more detailed review of the entire laboratory data package. It includes all the elements of the Data Review plus verification of such things as proper instrument calibration, proper use of standards and correct performance of data calculations. Data Validation is used to identify systemic problems with the way the laboratory performs and reports analyses. Data validation was performed on the entire sample set.

All sample data was found to be acceptable. Data Review and Validation Assessments for each COC are included as an attachment to this report.

2.4 Conclusion

The objective of this SAP was to determine whether residual Pu-238 contamination is present above the cleanup objective in the remaining soils within the survey unit as a result of the operation or demolition of the Building 36 Dock. The highest observed activity was 24.3 pCi/g Pu-238 and the average was 3.03 ± 3.254 pCi/g Pu-238. The data presented in this report has been recorded in the Mound Environmental Information Management System (MEIMS).

3.0 References

1. NUREG 1575, Rev 1, Aug 2000, *Multi-Agency Radiation Survey and Site Investigation Manual*, (MARSSIM)

D5/20

TABLES

D6/20

Summary
Building 36 Loading Dock Verification
On Site Gamma Spec Off Site Alpha Spec Results

Sample ID	Alpha Spec pCi/g		Gamma Spec pCi/g
	Pu-238	Pu-239/240	Pu-238
B36DS-01	1.45	< 0.103	21.4
B36DS-02	1.33	< 0.09	43.4
B36DS-03	2.51	< 0.089	37.7
B36DS-04	< 0.137	< 0.034	< 16.1
B36DS-05	1.34	0.171	< 21.6
B36DS-06	0.361	< 0.134	< 16.8
B36DS-07	0.532	0.106	21.1
B36DS-08	1.89	< 0.104	< 18.8
B36DS-09	0.612	0.047	< 15.5
B36DS-10	0.860	0.045	< 15.2
B36DS-11	0.975	0.036	< 17.3
B36DS-12	2.30	0.054	41.5
B36DS-13	24.3	0.732	43.9
B36DS-14	3.89	0.122	< 17.1
B36DS-06FD	< 0.243	< 0.134	31.8
Average	3.03	0.13	24.81
Max	24.30	0.73	43.90
#	14	14	14
StDev	6.20	0.18	11.30
Confidence Int	3.25	0.09	5.92
Cleanup Objective	55	62	55

Note: < values reported at LDL

D7/20

Bldg 36 Loading Dock
Table 2

Sample Id	Sample Location	Date Collected	Time Collected	Project Name	Media/Matrix	Sample Method	Analysis Type	Lab Name	Method	Result Type	LSDG Number	Lab Sample ID	CAS Number	CAS Name	Result	Detection Limit	Results Units	Lab Flag *	Analysis Date	Date Received
B36DS-01	36-1	19-Jul-04	14:10	Bldg. 36 Dock	soil	scoop	RAD	GEL of Ohio	Alpha Spec Pu	REG	117358	117358001	13981-16-3	Pu-238	1.45	0.168	pCi/g		3-Aug-04	21-Jul-04
													15117-48-3	Pu-239/240	0.070	0.103		U		
B36DS-02	36-2	19-Jul-04	14:40	Bldg. 36 Dock	soil	scoop	RAD	GEL of Ohio	Alpha Spec Pu	REG	117358	117358002	13981-16-3	Pu-238	1.33	0.173	pCi/g		3-Aug-04	21-Jul-04
													15117-48-3	Pu-239/240	0.086	0.090		U		
B36DS-03	36-3	19-Jul-04	14:25	Bldg. 36 Dock	soil	scoop	RAD	GEL of Ohio	Alpha Spec Pu	REG	117358	117358003	13981-16-3	Pu-238	2.51	0.130	pCi/g		3-Aug-04	21-Jul-04
													15117-48-3	Pu-239/240	0.073	0.089		U		
B36DS-04	36-4	19-Jul-04	14:30	Bldg. 36 Dock	soil	scoop	RAD	GEL of Ohio	Alpha Spec Pu	REG	117358	117358004	13981-16-3	Pu-238	0.127	0.137	pCi/g	U	3-Aug-04	21-Jul-04
													15117-48-3	Pu-239/240	0.013	0.035		U		
B36DS-05	36-5	19-Jul-04	14:35	Bldg. 36 Dock	soil	scoop	RAD	GEL of Ohio	Alpha Spec Pu	REG	117358	117358005	13981-16-3	Pu-238	1.34	0.122	pCi/g		3-Aug-04	21-Jul-04
													15117-48-3	Pu-239/240	0.171	0.097				
B36DS-06	36-6	19-Jul-04	14:40	Bldg. 36 Dock	soil	scoop	RAD	GEL of Ohio	Alpha Spec Pu	REG	117358	117358006	13981-16-3	Pu-238	0.361	0.134	pCi/g		3-Aug-04	21-Jul-04
													15117-48-3	Pu-239/240	0.000	0.134		U		
B36DS-07	36-7	19-Jul-04	14:50	Bldg. 36 Dock	soil	scoop	RAD	GEL of Ohio	Alpha Spec Pu	REG	117358	117358007	13981-16-3	Pu-238	0.532	0.222	pCi/g		3-Aug-04	21-Jul-04
													15117-48-3	Pu-239/240	0.106	0.036				
B36DS-08	36-8	19-Jul-04	14:55	Bldg. 36 Dock	soil	scoop	RAD	GEL of Ohio	Alpha Spec Pu	REG	117358	117358008	13981-16-3	Pu-238	1.89	0.147	pCi/g		3-Aug-04	21-Jul-04
													15117-48-3	Pu-239/240	0.034	0.104		U		
B36DS-09	36-9	19-Jul-04	15:00	Bldg. 36 Dock	soil	scoop	RAD	GEL of Ohio	Alpha Spec Pu	REG	117358	117358009	13981-16-3	Pu-238	0.612	0.109	pCi/g		3-Aug-04	21-Jul-04
													15117-48-3	Pu-239/240	0.047	0.032				
B36DS-10	36-10	19-Jul-04	15:10	Bldg. 36 Dock	soil	scoop	RAD	GEL of Ohio	Alpha Spec Pu	REG	117358	117358010	13981-16-3	Pu-238	0.860	0.104	pCi/g		3-Aug-04	21-Jul-04
													15117-48-3	Pu-239/240	0.045	0.030				
B36DS-11	36-11	19-Jul-04	15:12	Bldg. 36 Dock	soil	scoop	RAD	GEL of Ohio	Alpha Spec Pu	REG	117358	117358011	13981-16-3	Pu-238	0.975	0.033	pCi/g		3-Aug-04	21-Jul-04
													15117-48-3	Pu-239/240	0.036	0.033				
B36DS-12	36-12	19-Jul-04	15:18	Bldg. 36 Dock	soil	scoop	RAD	GEL of Ohio	Alpha Spec Pu	REG	117358	117358012	13981-16-3	Pu-238	2.30	0.100	pCi/g		3-Aug-04	21-Jul-04
													15117-48-3	Pu-239/240	0.054	0.037				
B36DS-13	36-13	19-Jul-04	15:25	Bldg. 36 Dock	soil	scoop	RAD	GEL of Ohio	Alpha Spec Pu	REG	117358	117358013	13981-16-3	Pu-238	24.3	0.095	pCi/g		3-Aug-04	21-Jul-04
													15117-48-3	Pu-239/240	0.732	0.035				
B36DS-14	36-14	19-Jul-04	15:35	Bldg. 36 Dock	soil	scoop	RAD	GEL of Ohio	Alpha Spec Pu	REG	117358	117358014	13981-16-3	Pu-238	3.89	0.160	pCi/g		3-Aug-04	21-Jul-04
													15117-48-3	Pu-239/240	0.122	0.113				
B36DS-06FD	36-6	19-Jul-04	14:40	Bldg. 36 Dock	soil	scoop	RAD	GEL of Ohio	Alpha Spec Pu	REG	117358	117358015	13981-16-3	Pu-238	0.187	0.243	pCi/g	U	3-Aug-04	21-Jul-04
													15117-48-3	Pu-239/240	0.000	0.134		U		

* U = Non-Detect

08/28

FIGURES

D 9/20

Building 36 Dock SAP Sample Locations
Figure 1

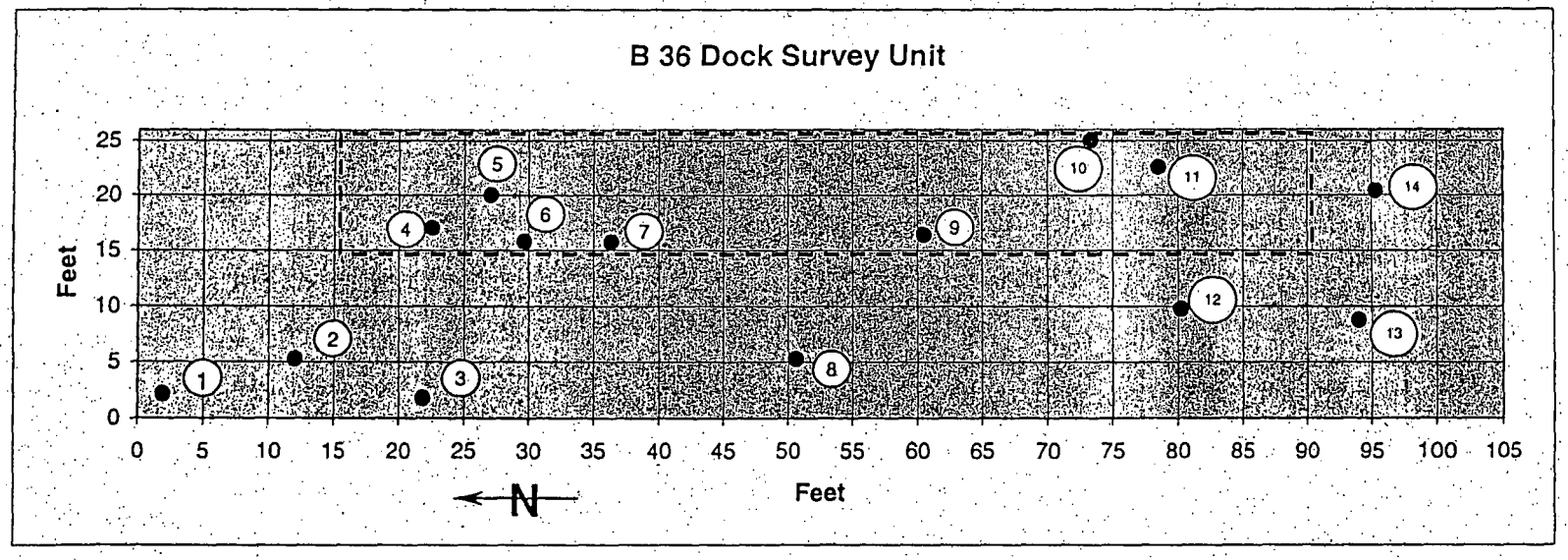

Sample Number	Sample ID	Coordinates	
		X'	Y'
1	B36DS-01	2	2
2	B36DS-02	12	5
3	B36DS-03	22	2
4	B36DS-04	23	17
5	B36DS-05	27	20
6	B36DS-06	30	16
7	B36DS-07	36	16
8	B36DS-08	51	5
9	B36DS-09	60	16
10	B36DS-10	73	25
11	B36DS-11	79	23
12	B36DS-12	80	10
13	B36DS-13	94	9
14	B36DS-14	95	20

Building 36 Dock Sample Results

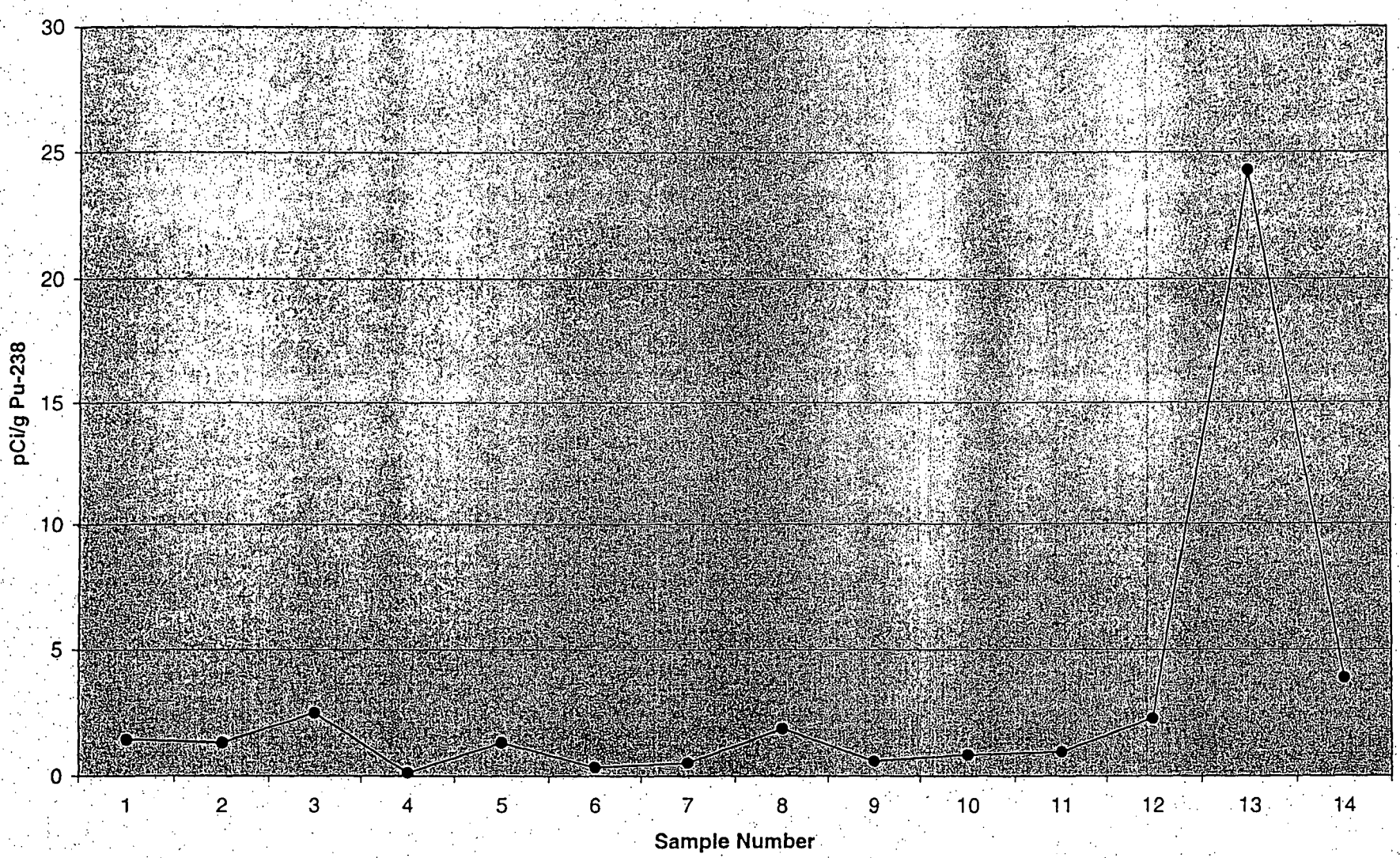

0 4/20

ATTACHMENTS

D 12/20

RADIOLOGICAL SURVEY DATA SHEET

LOCATION: (BLDG./AREA/ROOM)	SURVEY NO.
Building 36 Dock Area	04-TF-0218
PURPOSE:	RWP NO.
Building 36 Soil Sampling and Contact with Lud-2360	N/A
	DATE: 7/19/04
	TIME: 15:45

MAP / DRAWING

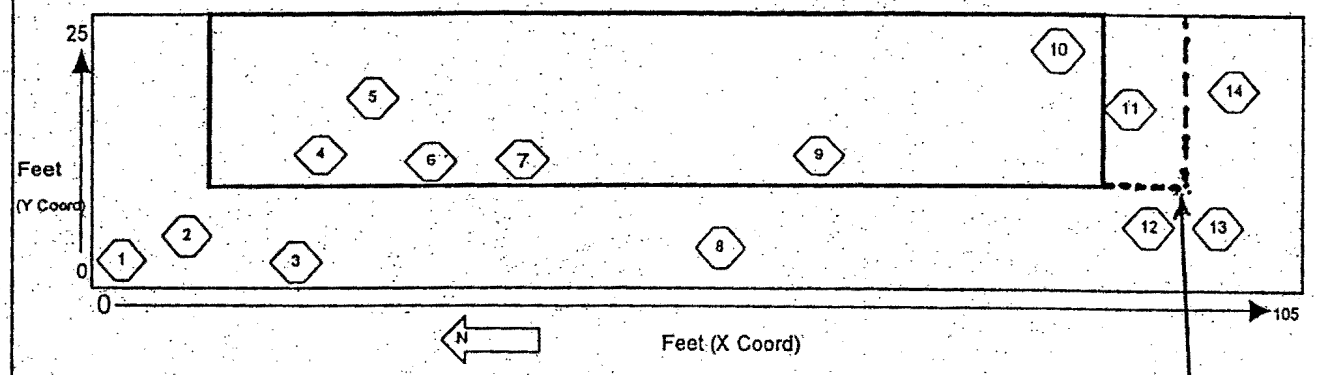

ACTUAL DOCK FOOTPRINT LOCATION

(DRAWING NOT TO SCALE)

B 36 Dock			B 36 Dock		
	X Coord	Y Coord		X Coord	Y Coord
1	2	2	8	51	5
2	12	5	9	60	16
3	22	2	10	73	25
4	23	17	11	79	23
5	27	20	12	80	10
6	30	16	13	94	9
7	36	16	14	95	20

LEGEND:

- # = mrem/hr (γ) whole body
- #E = mrem/hr (β+η+γ) extremity on contact
- K = factor of 1000
- = radiological boundary
- = Soil Sample/Contact reading w/ 2360
- # - mrem/hr neutron
- # - swipe number
- # - air sample number
- #/α or /β - direct contamination measurement in dpm/100cm²

INSTRUMENTS USED

Instrument	Serial Number	Cal. Due Date
Lud-2360	5873/3966	01/13/05
Lud-2360(89)	5748/5736	02/04/05
	N/A	

	HP#	Date:
[redacted]	7244	07/19/04
Counted by: (Signature) N/A	N/A	07/19/04
Counted by: (Printed Name) [redacted]		
Reviewed/ [redacted]	7492	8/2/04
Reviewed/Approved by: (Print Name) [redacted]		

ML-9620 (2-98)

D 13/28

Survey No. 04-TF-0218

RADIOLOGICAL SURVEY DATA SHEET (cont.)

Removable Contamination				
Swipes (dpm/100cm^2)				
Sample #	β/γ	Alpha	Tritium	Comments
1	See	See	N/A	Sample # 1
2	Atached	Atached		Sample # 2
3				Sample # 3
4				Sample # 4
5				Sample # 5
6				Sample # 6
7				Sample # 7
8				Sample # 8
9				Sample # 9
10				Sample # 10
11				Sample # 11
12				Sample # 12
13				Sample # 13
14				Sample # 14
15				Re-Sample # 6
16				
17				
18				
19				
20				
21				
22				
23				
24				
25			NFE	
26				
27				
28				
29				
30				
31				
32				
33				
34				
35				

Removable Contamination				
Swipes (dpm/100cm^2)				
Sample #	β/γ	Alpha	Tritium	Comments
36				
37				
38				
39				
40				
41				
42				
43				
44				
45				
46				
47				
48				
49				
50				
51				
52				
53				
54				
55			NFE	
56				
57				
58				
59				
60				
61				
62				
63				
64				
65				
66				
67				
68				
69				
70				

COMMENTS: NFE= No Further Entries, Lud-2360 used to field check swipes prior to sending to count lab.

NOTES:

1. See MD-80036 10002 for calculations of WB, extremity and skin dose rates.
2. To request RO Count Room analysis for β/γ, alpha or tritium, leave column blank. Mark column N/A if not needed. If count room printout of results are attached, write "see attached" in column.
3. Annotate special sample type (e.g., soil, water), special identifiers or otherwise in Comments. If not needed, mark N/A.

ML-9620A (4-98)

D 14/20

Smear Analysis

Unit Type: LB4100/W
Counting Unit ID: Aqua
Data file name: SMEAR006
Batch Ended: 7/20/04 10:00

Crosstalk correction performed.

Recalibration Date: 03/18/05
Serial Number: 26966-1

Batch ID: COLLINS 04-TF-0218 [15] JC

Detector ID	Sample ID	Alpha Activity DPM	Alpha Activity σ	Alpha Activity flags	Beta Activity DPM	Beta Activity σ	Beta Activity flags
A1	1	1.64	2.00		0.00	1.25	
A2	2	0.00	2.09		2.32	2.40	
A3	3	0.00	1.96		0.15	1.70	
A4	4	0.00	1.97		0.00	1.18	
B1	5	0.00	1.97		0.00	1.17	
B2	6	0.00	2.01		0.29	1.66	
B3	7	0.00	1.84		0.89	2.08	
B4	8	0.00	1.86		0.00	1.14	
C1	9	1.70	2.12		5.02	3.27	
C2	10	0.00	2.08		3.02	2.77	
C3	11	0.00	1.95		0.00	1.69	
C4	12	1.49	1.89		0.00	1.17	
D1	13	1.45	2.14		0.88	2.12	
D2	14	1.85	2.39		0.00	1.20	
D3	15	0.00	1.93		0.80	2.03	

DJH DJH

3 of 4
~~Page 1 of 1~~
DJH 7-26-04

F. Collins

015/28

Survey No.
04-TF-0218

RADIOLOGICAL SURVEY DATA SHEET (cont.)

Ludlum 2360 Fidler Integrated Measurement Results							
		Alpha			Beta		
		BKGD	N/A	cpm	BKGD	270	cpm
		DL	N/A	Net cpm	DL	N/A	Net cpm
No.	Item/Location Description	Gross (cpm)	CF	Results (dpm/100cm2 or Sample)	Gross (cpm)	CF	Results (dpm/100cm2 or Sample)
1	Ground				257	1	257
2	Ground				279	1	279
3	Ground				377	1	377
4	Ground				288	1	288
5	Ground				294	1	294
6	Ground				283	1	283
7	Ground				291	1	291
8	Ground				334	1	334
9	Ground				270	1	270
10	Ground				256	1	256
11	Ground				218	1	218
12	Ground				299	1	299
13	Ground				265	1	265
14	Ground				279	1	279

NFE

NFE

ML-9620C

D 16/20

1.0 Introduction

Analytical data assessment can be performed on at least two quality control levels. Data Review involves an assessment of the quality controls used by the laboratory during the performance of the analysis. These include such things as laboratory blanks, system monitoring compound (surrogate) recoveries, matrix spikes, etc. Which controls are assessed and what criteria are applied depend on the analysis performed. The results of field quality control measures such as field duplicates and trip blanks may also be evaluated. Data Review is normally performed on 100% of the analytical data.

Data Validation is a much more detailed review of the entire laboratory data package. It includes all the elements of the Data Review plus verification of such things as proper instrument calibration, proper use of standards and correct performance of data calculations. Data Validation is used to identify systemic problems with the way the laboratory performs and reports analyses.

2.0 Description of the Data Set

During demolition of Building 36 some indication of Plutonium (Pu) contamination was found on the Building 36 loading dock on the west side of the building. To ensure that all Pu contamination was removed during demolition an SAP was developed to sample the soil around and on where the dock once stood. Surface soil samples were collected from locations both randomly and selected grid locations. All samples were collected and analyzed as planned.

Since no equipment was field decontaminated, no equipment rinsates samples were collected.

Offsite sample analysis was performed at GEL of Ohio. There were no problems associated with the documentation, shipment, or chain of custody of the samples. There were no problems in achieving the analyte detection goals.

Table 1 Sampling Event

Sample Date	LSDG	Number of Samples	Mound Sample IDs
7/19/04	117358	15	B36DS-01 thru B36DS-14 including B36DS-06FD

3.0 Data Review

The quality control data submitted with the analytical data packages were reviewed and assessed. The results of the assessment are presented in this section. The following qualification flags are used to indicate data quality problems identified during the data review process.

D17/20

Table 2 Data Review Qualifications

Flag	Description
J	Estimated sample result
U	Non-detect sample result
UJ	Estimated non-detected sample result
R	Rejected (unusable) sample result

3.1 Tracer Recovery

The laboratory spikes every Pu alpha spectrometry sample with Pu-242. The percent recovery of Pu-242 is then used to scale the detected presence of the other Pu isotopes. To fully meet QC criteria the Pu-242 isotope recovery must be between 30 – 110 % and have an accumulated count of at least 200 counts.

Tracer recovery for sample analyses ranged from 63% to 78%. Tracer recovery for all verification samples met QC criteria.

3.2 Blanks

The laboratory analyzes one blank for every 20 samples or LSDG. Laboratory blanks are analyzed to determine if laboratory processes are contributing to the detected sample activities. To meet the QC criteria the method blank must be ≤ 2 times the MDA.

The method blank associated with the verification samples met QC criteria.

3.3 Laboratory Duplicate

A laboratory duplicate analysis is performed to assess the precision and accuracy of the laboratory analysis. One duplicate is performed for every 20 samples or LSDG. To meet QC criteria the Relative Error Ratio of duplicate samples must be < 3.0.

$$RER = \frac{[\text{Sample Result} - \text{Duplicate Result}]}{[TPU^2_{sample} + TPU^2_{dup}]^{1/2}}$$

It is known that for Mound soils plutonium contamination is often distributed non-homogeneously even in dried and ground samples.

The Relative Error Ratios of the duplicate analyses for this LSDG's were within QC criteria.

3.4 Matrix Spike

A matrix spike (MS) analysis is performed to assess the precision and accuracy of the laboratory analysis. One matrix spike is performed for every 20 samples or LSDG. It also may indicate analysis bias due to sample matrix effects. For plutonium by alpha spectrometry the sample is spiked with Pu-239/240.

The matrix spike recovery for Pu-239/240 was 103% well within QC criteria.

D 18/20

3.5 Laboratory Control Sample

The Laboratory Control Sample (LCS) is a standard sample with a known quantity of the analyte of concern. The LCS recovery is an indication of whether the analytical process was in control during the analysis. For plutonium by alpha spectrometry the LCS is spiked with Pu-239/240.

The LCS recovery for Pu-239/240 was 108% well within QC requirements.

3.6 Equipment Rinsates

Equipment rinsates are used to ensure efficacy of equipment field decontamination procedures, and that the sample collection process is not causing cross contamination. Only isotopes at background levels were found in the four equipment rinsates.

No equipment rinsates were collected.

3.7 Field Duplicates

Field Duplicates give an indication of the degree of homogeneity within the sample material. As with Laboratory duplicates they are reported as RPD.

Agreement between field duplicates was within acceptable range.

4.0 Data Validation

The results of LSDG 115499 were fully data validated. In addition to the items discussed above, the following items were evaluated:

1. Instrument calibration
2. Daily Source checks
3. Background and efficiency measurement
4. Proper frequency and use of blanks
5. All calculations

No additional qualification resulted from this assessment. There was no indication of a systemic deficiency.

5.0 Certification

Based upon this review the plutonium analysis data may be used as presented with no further qualifications.

Table 3 Building 36 Loading Dock Pu Results (pCi/g)

Sample ID	Pu-238	Data Qualification	Pu-239/240	Data Qualification
B36DS-01	1.45		< 0.103	U
B36DS-02	1.33		< 0.090	U
B36DS-03	2.51		< 0.089	U
B36DS-04	< 0.137	U	< 0.034	U
B36DS-05	1.34		0.171	
B36DS-06	0.361		< 0.134	U
B36DS-07	0.532		0.106	
B36DS-08	1.89		< 0.104	U
B36DS-09	0.612		0.047	
B36DS-10	0.860		0.045	
B36DS-11	0.975		0.036	
B36DS-12	2.30		0.054	
B36DS-13	24.3		0.732	
B36DS-14	3.89		0.122	
B36DS-06FD	< 0.243	U	< 0.134	U

Values listed as "<" are below the Minimum Detectable Activity (MDA)
Blank row grids had insufficient non-bedrock material for an analytical sample.
They were verified by swipe and direct readings.
"U" qualifier indicates non-detection at or above the MDA.

D 20/20

APPENDIX E

Building 50 RDL Soil Sampling Results

Table E1 - Building 50 Red Drain Line Soil Sample Analysis Results (pCi/g)

Statistical Samples	Pu-238	MDC	Th-230	MDC	Th-232	MDC	Th-228	MDC
BD50-0-000001	0.223	0.026	0.710	0.050	0.320	0.050	0.360	0.110
BD50-0-000002	0.225	0.026	0.730	0.050	0.310	0.040	0.370	0.100
BD50-0-000003	0.390	0.031	0.800	0.060	0.530	0.030	0.450	0.100
BD50-0-000004	0.127	0.026	0.790	0.020	0.270	0.020	0.253	0.038
BD50-0-000005	0.113	0.026	0.790	0.030	0.325	0.034	0.340	0.050
BD50-0-000006	0.198	0.027	0.880	0.030	0.340	0.020	0.330	0.060
BD50-0-000007	0.212	0.025	0.840	0.020	0.285	0.036	0.360	0.050
BD50-0-000008	0.303	0.027	0.900	0.040	0.470	0.020	0.340	0.050
BD50-0-000009	0.199	0.017	0.750	0.030	0.294	0.030	0.400	0.030
BD50-0-000010	0.090	0.029	0.890	0.030	0.278	0.029	0.320	0.043
BD50-0-000011	0.417	0.027	0.690	0.030	0.269	0.020	0.290	0.060
BD50-0-000012	0.237	0.021	0.770	0.030	0.430	0.030	0.440	0.030
BD50-0-000013	1.000	0.020	0.840	0.020	0.330	0.030	0.305	0.045
BD50-0-000014	0.261	0.035	0.730	0.050	0.340	0.050	0.290	0.070
BD50-0-000015	0.181	0.023	0.630	0.040	0.256	0.032	0.330	0.060
BD50-0-000016	0.362	0.029	0.710	0.020	0.266	0.035	0.318	0.042
BD50-0-000017	0.316	0.015	0.570	0.020	0.323	0.019	0.278	0.039
BD50-0-000018	0.026	0.029	0.720	0.040	0.302	0.019	0.360	0.050
BD50-0-000019	0.164	0.024	0.410	0.020	0.300	0.016	0.351	0.030
BD50-0-000020	0.630	0.040	0.750	0.030	0.281	0.026	0.265	0.039
BD50-0-000021	0.228	0.018	0.400	0.013	0.308	0.022	0.269	0.025
BD50-0-000022	0.204	0.021	0.680	0.020	0.349	0.031	0.316	0.039
BD50-0-000023	0.213	0.025	0.900	0.030	0.360	0.020	0.327	0.048
BD50-0-000024	0.120	0.018	0.970	0.030	0.520	0.040	0.550	0.040
BD50-0-000025	0.231	0.028	0.360	0.060	0.260	0.030	0.330	0.090
BD50-0-000026	0.147	0.022	0.850	0.020	0.262	0.024	0.320	0.034
BD50-0-000027	0.139	0.021	0.870	0.020	0.270	0.019	0.295	0.041
BD50-0-000028	0.253	0.025	0.880	0.020	0.350	0.020	0.340	0.040
Hot Spot:	165.13		4.60		3.50		4.80	
Action Level (CO):	55.00		2.80		2.10		2.60	
Maximum:	1.000		0.970		0.530		0.550	
below/ABOVE CO:	below		below		below		below	
Standard Deviation:	0.19		0.15		0.07		0.06	

Biased Samples:	Pu-238	MDC	Th-230	MDC	Th-232	MDC	Th-228	MDC
BD50-0-000051	0.397	0.016	0.820	0.040	0.256	0.030	0.350	0.030
BD50-0-000052	0.159	0.022	1.020	0.030	0.263	0.029	0.288	0.037
BD50-0-000053	0.196	0.029	0.680	0.030	0.322	0.017	0.360	0.050
BD50-0-000054	0.199	0.018	0.930	0.020	0.338	0.017	0.390	0.030
BD50-0-000055	0.232	0.027	1.020	0.030	0.273	0.034	0.410	0.050
BD50-0-000056	0.142	0.024	0.630	0.030	0.322	0.034	0.302	0.038
BD50-0-000057	0.166	0.020	1.140	0.030	0.350	0.040	0.430	0.040
BD50-0-000058	0.096	0.029	0.770	0.020	0.330	0.040	0.250	0.044
BD50-0-000059	0.058	0.024	0.750	0.020	0.340	0.020	0.460	0.040
BD50-0-000060	0.029	0.026	0.910	0.030	0.660	0.020	0.460	0.040
BD50-0-000061	0.121	0.026	0.800	0.020	0.500	0.010	0.347	0.036
BD50-0-000062	0.184	0.023	0.660	0.030	0.284	0.027	0.258	0.035
BD50-0-000063	0.099	0.015	0.930	0.020	0.550	0.030	0.440	0.040

Statistical Samples	Pu-238	MDC	Th-230	MDC	Th-232	MDC	Th-228	MDC
Hot Spot:	165.13		4.60		3.50		4.80	
Action Level (CO):	55.00		2.80		2.10		2.60	
Maximum:	0.397		1.140		0.660		0.460	
below/ABOVE CO:	below		below		below		below	

Lab/Field Duplicates:	Pu-238	MDC	Th-230	MDC	Th-232	MDC	Th-228	MDC
BD50-1-000002	0.209	0.025	0.690	0.050	0.360	0.050	0.440	0.090
BD50-1-000013	0.910	0.030	0.890	0.030	0.335	0.017	0.360	0.040
BD50-1-000021	0.262	0.030	0.810	0.030	0.400	0.020	0.300	0.060
BD50-1-000057	0.224	0.022	0.77	0.04	0.285	0.029	0.250	0.057
Hot Spot:	165.13		4.60		3.50		4.80	
Action Level (CO):	55.00		2.80		2.10		2.60	
Maximum:	0.910		0.890		0.400		0.440	
below/ABOVE CO:	below		below		below		below	

Rinsates:	Pu-238	MDC	Th-230	MDC	Th-232	MDC	Th-228	MDC
BD50-2-000042	Rinsate							
BD50-2-000042 DUP	Rinsate							
BD50-2-000043	Rinsate							
BD50-2-000044	Rinsate							

Matrix Spike:	Pu-238	MDC	Th-230	MDC	Th-232	MDC	Th-228	MDC
BD50-0-000013 DUP	Matrix Spike							
BD50-0-000026 DUP	Matrix Spike							
BD50-0-000057 DUP	Matrix Spike							

CO = Cleanup Objective
Sample locations provided on Figure 2 (Appendix A)

Table 2 - Data Validation Report Sample ID Cross Reference
(Lab/Field Duplicates, Rinsates, and Matrix Spike)

Laboratory Sample ID	Client Sample ID
F4J040170-003	BD50-1-000002
F4J040170-006	BD50-2-000042
F4J040170-006X	BD50-2-000042 DUP
F4J040170-015X	BD50-0-000013 DUP
F4J040170-016	BD50-1-000013
F4J040180-005	BD50-1-000021
F4J040180-006	BD50-2-000043
F4J040180-011X	BD50-0-000026 DUP
F4J040180-019	BD50-2-000044
F4J040188-003	BD50-1-000057
F4J040188-002X	BD50-0-000057 DUP

BUILDING 50 RED DRAIN LINE SOIL SAMPLE LOCATIONS
TABLE E3

Location	Easting	Northing	Elevation
BD50-001	1466580.003	598403.948	884.166
BD50-002	1466551.233	598406.753	884.374
BD50-003	1466525.414	598408.967	884.658
BD50-004	1466564.954	598413.396	884.144
BD50-005	1466539.135	598415.758	883.941
BD50-006	1466581.626	598418.585	883.868
BD50-007	1466552.709	598421.516	883.512
BD50-008	1466526.742	598424.173	883.497
BD50-009	1466566.429	598428.454	883.278
BD50-010	1466540.463	598430.817	882.757
BD50-011	1466582.806	598433.917	883.343
BD50-012	1466554.184	598436.427	882.68
BD50-013	1466528.07	598439.084	882.104
BD50-014	1466567.61	598443.365	882.752
BD50-015	1466541.938	598445.727	882.113
BD50-016	1466584.429	598448.68	882.934
BD50-017	1466555.512	598451.337	882.219
BD50-018	1466529.545	598453.995	881.558
BD50-019	1466569.085	598458.128	882.03
BD50-020	1466543.414	598460.638	881.501
BD50-021	1466585.757	598463.738	881.795
BD50-022	1466556.987	598466.396	881.316
BD50-023	1466531.021	598468.905	880.98
BD50-024	1466570.708	598473.187	881.196
BD50-025	1466544.742	598475.696	880.875
BD50-026	1466587.232	598478.501	881.154
BD50-027	1466558.315	598481.454	880.798
BD50-028	1466532.496	598483.816	880.484
BD50-051	1466558.408	598417.26	883.859
BD50-052	1466543.468	598418.718	883.563
BD50-053	1466543.711	598432.574	882.697
BD50-054	1466544.926	598447.524	882.122
BD50-055	1466546.383	598462.353	881.418
BD50-056	1466547.841	598477.424	880.844
BD50-057	1466538.366	598483.623	880.544
BD50-058	1466526.427	598488.462	880.252
BD50-059	1466522.694	598485.971	880.285
BD50-060	1466525.953	598483.778	880.421
BD50-061	1466523.464	598479.805	880.526
BD50-062	1466526.012	598476.604	880.67
BD50-063	1466522.99	598475.121	880.68

DATA VALIDATION REPORT

DOE - Mound Facility
Miamisburg, Ohio

Prepared for:

Terran Corporation
Project Manager: Chris Ruef

Prepared by:

Waste Science, Inc.
1411 Fallswood Drive
Potomac, MD 20854
Point of Contact: Katy Makeig
301-340-3301
www.wastescience.com

November 6, 2004

E1/38

THIS REPORT INCLUDES:

Lot No. F4J040170
Lot No. F4J040180
Lot No. F4J040188

Lot No. F4J040170

E 3/38

DATA VALIDATION REPORT
Mound Facility – Bldg. 50 Verification Sampling
November 2, 2004

SUMMARY OF FINDINGS

Lot No. F4J040170 consisted of 19 solid samples and one water sample (F4J040170-006) collected at Building 50 of the DOE-Mound facility on September 27, 2004. Samples were received October 4 and analyzed by the Earth City (St. Louis), MO facility of Severn-Trent Laboratories, Inc. for the following radionuclides, by the following methods:

- Alpha spectroscopy for isotopic plutonium (Pu) and thorium (Th) by DOE Environmental Monitoring Lab (EML) Method A-01-R, Modified.
- Gamma spectroscopy for Cesium-137 (Cs-137) and other radionuclides by EPA Method 901.1.

Samples for alpha spectrometry were prepared October 6 and analyzed on October 11-12. Samples for gamma spectrometry were prepared October 7 and analyzed on October 8, 2004.

An EPA Level III validation was conducted in accordance with the method requirements and the applicable portions of the *Radiochemical Data Verification and Validation Guidelines* (Lockheed Martin Energy Systems, Oak Ridge, TN, December, 1995) and the *Radiochemical Data Validation Guidelines - Isotopic Analyses by Alpha Spectrometry* (TechLaw, Inc. for EG&G Rocky Flats, Golden, CO, September, 1989). All samples were successfully analyzed as requested by the Terran Corp. chain-of-custody (COC) forms.

This report summarizes the results of the data validation. Summary forms and validation checklists have been included as an attachment to this report.

ALPHA SPECTROSCOPY

Accuracy

Accuracy is the characteristic of data that reflects the degree to which the reported result portrays the true concentration (activity) of the sample. The following factors contribute to an evaluation of data accuracy in this method.

Calibration

Raw continuing calibration data were provided, and appear to have been conducted in an appropriate manner and at an acceptable frequency. Dates bracket the sample analyses and show acceptably small variations in instrument performance for the isotopes of interest.

Preservation / Holding Times

The samples were received intact with completed chain of custody documentation. Sample preservation is not required for solid samples; the water sample was properly acidified with nitric acid. Samples were analyzed within a reasonable time of sample collection. (The half lives of the plutonium and thorium isotopes are such that holding time is not a significant issue: Pu-238, 88 years; Pu-239, 2.4 x 10^4 years; Pu-242 3.7 x 10^5 years; Th-228 1.9 years; Th-230 7.9 x 10^4 years and Th-232 1.4 x 10^{10} years.)

Background

Background readings determine the degree to which sources other than the sample in the laboratory environment contribute to activity readings. Background values were acceptably low for the isotopes of interest, and were appropriately determined during the period that includes the dates of analysis.

Method Blank

The method blank is a reagent water or solid matrix sample which should be free of activity and which is carried through the sample preparation and measurement processes along with the samples in an associated analytical batch. If cross-contamination is absent, the results of this sample will be non-detect. The solid matrix method blank was free of plutonium and thorium isotopes at the following levels: Pu-238, 0.012U pCi/L; Pu-239/40, 0.005U pCi/L; Th-228, 0.005U pCi/L; Th-232, 0.005U pCi/L. This blank was contaminated with Th-230 at 0.031J pCi/g, a negligible level compared to the concentrations of this isotope in all samples. No data qualification was required. The aqueous method blank was free of plutonium contamination; thorium results were not reported for the aqueous blank.

Matrix Spike / Matrix Spike Duplicate

Matrix spike (MS) and matrix spike duplicate (MSD) samples (field samples spiked with known amounts of target isotopes) were analyzed in this batch for sample BD50-0-000013 (F4J040170-015). All recoveries were acceptable versus 50%-150% control limits.

Laboratory Control Sample / Laboratory Control Sample Duplicate

A laboratory control sample (LCS) and laboratory control sample duplicate (LCSD), a blank sample fortified with known amounts of target isotopes, was analyzed for each sample matrix to assess accuracy. Recoveries for the target radionuclides (Pu-238 and Pu-239/40) in the aqueous LCS/LCSD were 82-99%, well within the control limits of 72-109% and 79-122%, respectively. In the solid matrix LCS, all recoveries were acceptable: Pu-238, 97% versus 70-111% limits; Pu-239/40, 95% versus 77-125% limits and Th-230, 101% versus 75-130% limits.

Chemical Tracer Yield

In this method, each sample is spiked at the beginning of sample preparation with a known amount of the non-target isotopes Pu-242 and Th-229, to evaluate potential losses in the sample preparation steps prior to the final determination of sample activity. Sample-specific chemical

yields of Pu-242 tracer ranged from 53.9% to 84.8% recovery in the field samples, and 44.0% to 75.3% recovery for Th-229, all within control limits. Recoveries for all QC samples were also well within the control limits of 20-115%.

Precision

Duplicate Analyses

Duplicates of the MS/MSD of solid sample BD50-0-000013 (F4J040170-015) and of the aqueous LCS were analyzed to evaluate the precision (reproducibility) of the analytical method. For the reported isotopes, relative percent differences were acceptable (for water, under 20%; for soil, under 35%) or both the sample and the duplicate were non-detect, which is also acceptable agreement.

Representativeness

Sample COC forms were appropriately completed, and sample analyses were conducted as specified therein. Sample preservation and holding times were acceptable.

Acceptable blank and background results indicate the analyses were free of contamination from the laboratory environment.

Uncertainties associated with these measurements were acceptable and provide an additional level of assurance that the data are representative of site conditions.

Completeness

A comparison of the total number of valid compounds reported to the total number of compounds analyzed indicates that 100% completeness was achieved for the soil samples. For the water sample, a field duplicate sample (BD50-2-000042 Dup) was supposed to have been reported, but due to instrument problems a reanalysis was necessary, but insufficient sample remained for a reanalysis, so no data were reported.

Sensitivity

Minimum detectable activities (MDA) were assessed and found to be well below the typically-required reporting limit of 1 pCi/L.

No positive results had uncertainties larger than the sample results (which would have indicated the sample result was less than the 95% confidence level of positive detection).

No negative results with uncertainties larger than or equal to the absolute value of the sample result were reported (which would have indicated the sample count was less than background).

Other Observations

The detected results for Pu-238 in sample F4J040170-012 and for Pu-239/40 in samples F4J040170-009 and -020 were reported as estimated (qualified "J") by the laboratory, as the concentration is well below the required reporting limit. Below the reporting limit, the inherent noise level in a reading becomes increasingly great as the detection limit is approached. (At the detection limit, it is impossible to differentiate signal from noise with statistical confidence.) As a result, it is standard practice for such data to be qualified as estimated.

Target peaks in the raw data were acceptably formed (no excessive tailing towards low energies, resulting from over-deposition of the target isotopes during sample preparation), and energy levels were in the appropriate range for the target isotopes.

No problems were identified in calculation checks performed on this analytical batch.

Conclusion

This review and evaluation indicates that sampling procedures and laboratory analyses have been conducted satisfactorily. The resulting data are of known and acceptable quality, in accordance with standard practices for evaluation of radiological data quality. No changes in data qualifiers already noted by the laboratory were required.

GAMMA SPECTROMETRY

Accuracy

Accuracy is the characteristic of data that reflects the degree to which the reported result portrays the true concentration (activity) of the sample. The following factors contribute to an evaluation of data accuracy in this method.

Calibration

Raw continuing calibration data were provided, and appear to have been conducted in an appropriate manner and at an acceptable frequency. Dates bracket the sample analyses and show acceptably small variations in instrument performance for the isotopes of interest.

Preservation / Holding Times

The samples were received intact with completed chain of custody documentation. Sample preservation is not required for solid samples; the water sample was properly acidified with nitric acid. Samples were analyzed within a reasonable time of sample collection. The half-life of the specified target isotope, Cs-137, is such that holding time is not a significant issue (30 years).

Background

Background readings determine the degree to which sources other than the sample in the laboratory environment contribute to activity readings. Background values were acceptably low for the isotopes of interest, and were appropriately determined during the period that includes the dates of analysis.

Method Blank

The method blank is a reagent water or solid matrix sample which should be free of activity and which is carried through the sample preparation and measurement processes along with the samples in an associated analytical batch. If cross-contamination is absent, the results of this sample will be non-detect. The solid and liquid matrix method blanks were free of Cs-137 contamination at –0.009UJ pCi/g and 5.44U pCi/L, respectively. The "UJ" qualifier was required on the solid blank result since a negative result was reported. This qualified blank result did not cause qualification of associated field sample results.

Matrix Spike / Matrix Spike Duplicate

Matrix spike (MS) and matrix spike duplicate (MSD) samples (field samples spiked with known amounts of target isotopes) were not analyzed for the gamma spectroscopy analyses. Data were not qualified for this occurrence, as the LCS and internal QC checks indicated acceptable performance; however, performance against project data quality objectives for the frequency of QC checks may be affected.

Laboratory Control Sample / Laboratory Control Sample Duplicate

A laboratory control sample (LCS) and laboratory control sample duplicate (LCSD), blank samples fortified with known amounts of target isotopes, were analyzed for each sample matrix to assess accuracy. Isotopes reported were Cs-137, Am-241, and Co-60. Recoveries for the target radionuclides were 101-106% for the solid and 103-108% for water, acceptable for both matrices. (Solid and aqueous control limits were 90-115% and 90-110%, respectively.)

Precision

Duplicate Analyses

Duplicates of water sample BD50-2-000042 (F4J040170-006) and the and the solid and aqueous LCS samples were analyzed to evaluate the precision (reproducibility) of the analytical method. For the reported isotopes, relative percent differences were acceptable (for water, under 20%; for soil, under 35%) or both the sample and the duplicate were non-detect, which is also acceptable agreement. Data were not qualified in cases where an isotope was nondetect in one sample and detected at a low level in the other sample.

Representativeness

Sample COC forms were appropriately completed, and sample analyses were conducted as specified therein. Sample preservation and holding times were acceptable.

Acceptable blank and background results indicate the analyses were free of contamination from the laboratory environment.

Uncertainties associated with these measurements were acceptable and provide an additional level of assurance that the data are representative of site conditions.

Completeness

A comparison of the total number of valid compounds reported to the total number of compounds analyzed indicates that 100% completeness was achieved for the soil and water samples

Sensitivity

Minimum detectable activities (MDA) were assessed and found to be well below the typically-required reporting limit of 1 pCi/L.

No positive results had uncertainties larger than the sample results (which would have indicated the sample result was less than the 95% confidence level of positive detection).

Negative results with uncertainties larger than or equal to the absolute value of the sample result (which would have indicated the sample count was less than background) were reported for several samples; these results were qualified "UJ" to indicate that the reporting limit is an estimated value.

Other Observations

No results are reported as estimated (qualified "J") for a concentration below the required reporting limit.

Target peaks in the raw data were acceptably formed (no excessive tailing towards low energies, resulting from over-deposition of the target isotopes during sample preparation), and energy levels were in the appropriate range for the target isotopes.

No problems were identified in calculation checks performed on this analytical batch.

Conclusion

This review and evaluation indicates that sampling procedures and laboratory analyses have been conducted satisfactorily. The resulting data are of known and acceptable quality (some data are qualified), in accordance with standard practices for evaluation of radiological data quality.

Validation Checklist

E 10/38

Radiochemical Data Completeness:
Checklist for Alpha Spectrometric Analyses

I. Case Narrative

- ✓ Abnormalities explained
- N/A Matrix Problems explained
- N/A Instrument problems explained
- N/A Improper collection, storage, preservation, container explained
- ✓ Hold times were met, explained if not met
- ✓ Proper sample custody documented

II. Initial and Continuing Calibration Data

- ✓ Detector ID (provided in appropriate places throughout the raw data for items below also)
- ✓ Analyst ID (names of technicians and analysts for each analytical step in summary data)
- ✓ Date, Time calibrated
- ✓ NBS traceable standards with certification dates and DPMs
- ✓ Proper channel numbers of isotopes of interest
- ✓ Instrument settings recorded
- ✓ spectra provided, peak shape and height acceptable
- ✓ Acceptable background documented

III. Blank Data

- ✓ Date, Times of counts
- ✓ Number and ID of samples included with the blank
- ✓ Type of method blank used, LLD of method

IV. Replicate Sample Data

- ✓ Date, Time Analyzed
- ✓ Value obtained for sample, replicates, mean values
- ✓ Count Durations of samples and backgrounds
- ✓ Analysis of Range, Control Limits

V. Lab Control Samples Data

- ✓ Sample ID, Detector ID
- ✓ Values obtained, true value of sample
- ✓ Analysis of Percent Recovery

VI. Sample Data

- ✓ Printed report of results for sample, reruns
- ✓ Computer calculations

VII. Lower Limits of Detection

- ✓ Background Measurements
- ✓ Date and time of count, counting duration
- ✓ Mean background CPM over long period
- ✓ Calculated LLD for isotope of interest

VIII. Internal Recovery Factors

- ✓ Efficiency determined experimentally, copy of raw data
- ✓ Analyst Initials, Date, Time of count
- ✓ Isotopic Tracer used and DPM value
- ✓ Certification Data on Tracer
- ✓ Net CPM obtained
- ✓ Count duration
- ✓ Efficiency Factors
- ✓ Calculated Chemical Recovery of Tracer

Radiochemical Data Completeness:
Checklist for Gamma Spectroscopic Analyses

I. Case Narrative

- N/A Abnormalities explained
- N/A Matrix Problems explained
- N/A Instrument problems explained
- N/A Improper collection, storage, preservation, container explained
- ✓ Hold times were met, explained if not met
- ✓ Proper sample custody documented

II. Initial and Continuing Calibration Data

- ✓ Detector ID (provided in appropriate places throughout the raw data for items below also)
- ✓ Analyst ID (names of technicians and analysts for each analytical step in summary data)
- ✓ Date, Time calibrated
- ✓ NBS traceable standards with certification dates and DPMs

III. Blank Data

- ✓ Date, Time Analyzed
- ✓ Number and ID of samples included with the blank
- ✓ Detection Level reported

IV. Replicate Sample Data

- ✓ Date, Time Analyzed
- ✓ Value obtained for sample, replicates, mean values
- ✓ Count Durations of samples and backgrounds
- ✓ Analysis of Range, Control Limits

V. Lab Control Samples Data

- ✓ Sample ID, Detector ID
- ✓ Values obtained, true value of sample
- ✓ Analysis of Percent Recovery

VI. Sample Data

- ✓ Printed report of results for sample, reruns
- ✓ Computer calculations

VII. Lower Limits of Detection

- ✓ Background Measurements
- ✓ Date and time of count, counting duration
- ✓ Mean background CPM over long period
- ✓ Calculated LLD compared to Required Detection Level

Analytical Data Summary

(Available Upon Request)

See Table 1E, page E-A,
Soil Sample Analysis Results

Lot No. F4J040180

E 15/38

DATA VALIDATION REPORT
Mound Facility – Bldg. 50 Verification Sampling
November 3, 2004

SUMMARY OF FINDINGS

Lot No. F4J040180 consisted of 17 solid samples and two water samples (F4J040180-006 and -019) collected at Building 50 of the DOE-Mound facility on September 27, 2004. Samples were received October 4 and analyzed by the Earth City (St. Louis), MO facility of Severn-Trent Laboratories, Inc. for the following radionuclides, by the following methods:

- Alpha spectroscopy for isotopic plutonium (Pu) and thorium (Th) by DOE Environmental Monitoring Lab (EML) Method A-01-R, Modified.
- Gamma spectroscopy for Cesium-137 (Cs-137) and other radionuclides by EPA Method 901.1.

Solid samples for alpha spectrometry were prepared October 6 and analyzed on October 12-13, and water samples were prepared October 11 and analyzed October 14. Solid samples for gamma spectrometry were prepared October 7 and analyzed on October 13-14, 2004; water samples were prepared October 6 and analyzed October 9.

An EPA Level III validation was conducted in accordance with the method requirements and the applicable portions of the *Radiochemical Data Verification and Validation Guidelines* (Lockheed Martin Energy Systems, Oak Ridge, TN, December, 1995) and the *Radiochemical Data Validation Guidelines - Isotopic Analyses by Alpha Spectrometry* (TechLaw, Inc. for EG&G Rocky Flats, Golden, CO, September, 1989). All samples were successfully analyzed as requested by the Terran Corp. chain-of-custody (COC) forms.

This report summarizes the results of the data validation. Summary forms and validation checklists have been included as an attachment to this report.

ALPHA SPECTROSCOPY

Accuracy

Accuracy is the characteristic of data that reflects the degree to which the reported result portrays the true concentration (activity) of the sample. The following factors contribute to an evaluation of data accuracy in this method.

Calibration

Raw continuing calibration data were provided, and appear to have been conducted in an appropriate manner and at an acceptable frequency. Dates bracket the sample analyses and show acceptably small variations in instrument performance for the isotopes of interest.

Preservation / Holding Times

The samples were received intact with completed chain of custody documentation. Sample preservation is not required for solid samples; the water sample was properly acidified with nitric acid. Samples were analyzed within a reasonable time of sample collection. (The half lives of the plutonium and thorium isotopes are such that holding time is not a significant issue: Pu-238, 88 years; Pu-239, 2.4 x 10^4 years; Pu-242 3.7 x 10^5 years; Th-228 1.9 years; Th-230 7.9 x 10^4 years and Th-232 1.4 x 10^{10} years.)

Background

Background readings determine the degree to which sources other than the sample in the laboratory environment contribute to activity readings. Background values were acceptably low for the isotopes of interest, and were appropriately determined during the period that includes the dates of analysis.

Method Blank

The method blank is a reagent water or solid matrix sample which should be free of activity and which is carried through the sample preparation and measurement processes along with the samples in an associated analytical batch. If cross-contamination is absent, the results of this sample will be non-detect. The solid matrix method blank was free of plutonium and thorium isotopes at the following levels: Pu-238, 0.007U pCi/L; Pu-239/40, 0.0023U pCi/L; Th-228, 0.04U pCi/L; Th-232, 0.010U pCi/L. This blank was contaminated with Th-230 at 0.088J pCi/g, a negligible level compared to the sample concentrations of this isotope, except for samples F4J040180-002 (0.41 pCi/g), -004 (0.40 pCi/g) and –010 (0.36 pCi/g). For these samples, the reported concentrations were "U" qualified as nondetects. The aqueous method blank was free of plutonium contamination; thorium results were not reported for the aqueous blank.

Matrix Spike / Matrix Spike Duplicate

Matrix spike (MS) and matrix spike duplicate (MSD) samples (field samples spiked with known amounts of target isotopes) were analyzed in this batch for sample BD50-0-000026 (F4J040180-011). All recoveries were acceptable versus 50%-150% control limits.

Laboratory Control Sample / Laboratory Control Sample Duplicate

A laboratory control sample (LCS) and laboratory control sample duplicate (LCSD), a blank sample fortified with known amounts of target isotopes, was analyzed for each sample matrix to assess accuracy. Recoveries for the target radionuclides (Pu-238 and Pu-239/40) in the aqueous LCS/LCSD were 82-99%, well within the control limits of 72-109% and 79-122%, respectively. In the solid matrix LCS, all recoveries were acceptable: Pu-238, 88% versus 70-111% limits; Pu-239/40, 96% versus 77-125% limits and Th-230, 125% versus 75-130% limits.

Chemical Tracer Yield

In this method, each sample is spiked at the beginning of sample preparation with a known amount of the non-target isotopes Pu-242 and Th-229, to evaluate potential losses in the sample

preparation steps prior to the final determination of sample activity. Sample-specific chemical yields in the field samples for Pu-242 tracer ranged from 49.1% to 91.6% recovery, all within control limits. For Th-229, all solid samples were within control limits, with 36.8% to 88.65% recovery. For the two water samples, recoveries of Th-229 were 0.25% and 0.39%; however, thorium isotopes were not reported for the waters, so no data were qualified.

Precision

Duplicate Analyses

The MS/MSD of solid sample BD50-0-000026 (F4J040180-011) and a duplicate of the aqueous LCS were analyzed to evaluate the precision (reproducibility) of the analytical method. For the reported isotopes, relative percent differences were acceptable (for water, under 20%; for soil, under 35%) or both the sample and the duplicate were non-detect, which is also acceptable agreement.

Representativeness

Sample COC forms were appropriately completed, and sample analyses were conducted as specified therein. Sample preservation and holding times were acceptable.

Acceptable blank and background results indicate the analyses were free of contamination from the laboratory environment.

Uncertainties associated with these measurements were acceptable and provide an additional level of assurance that the data are representative of site conditions.

Completeness

A comparison of the total number of valid compounds reported to the total number of compounds analyzed indicates that 100% completeness was achieved for the soil and water samples.

Sensitivity

Minimum detectable activities (MDA) were assessed and found to be well below the typically-required reporting limit of 1 pCi/L.

No positive results had uncertainties larger than the sample results (which would have indicated the sample result was less than the 95% confidence level of positive detection).

No negative results with uncertainties larger than or equal to the absolute value of the sample result were reported (which would have indicated the sample count was less than background).

Other Observations

The detected results for Pu-239/40 in sample F4J040180-002 was reported as estimated (qualified "J") by the laboratory, as the concentration is well below the required reporting limit. Below the reporting limit, the inherent noise level in a reading becomes increasingly great as the detection limit is approached. (At the detection limit, it is impossible to differentiate signal from noise with statistical confidence.) As a result, it is standard practice for such data to be qualified as estimated.

Target peaks in the raw data were acceptably formed (no excessive tailing towards low energies, resulting from over-deposition of the target isotopes during sample preparation), and energy levels were in the appropriate range for the target isotopes.

No problems were identified in calculation checks performed on this analytical batch.

Conclusion

This review and evaluation indicates that sampling procedures and laboratory analyses have been conducted satisfactorily. The resulting data are of known and acceptable quality, in accordance with standard practices for evaluation of radiological data quality. No changes in data qualifiers already noted by the laboratory were required.

GAMMA SPECTROMETRY

Accuracy

Accuracy is the characteristic of data that reflects the degree to which the reported result portrays the true concentration (activity) of the sample. The following factors contribute to an evaluation of data accuracy in this method.

Calibration

Raw continuing calibration data were provided, and appear to have been conducted in an appropriate manner and at an acceptable frequency. Dates bracket the sample analyses and show acceptably small variations in instrument performance for the isotopes of interest.

Preservation / Holding Times

The samples were received intact with completed chain of custody documentation. Sample preservation is not required for solid samples; the water sample was properly acidified with nitric acid. Samples were analyzed within a reasonable time of sample collection. The half-life of the specified target isotope, Cs-137, is such that holding time is not a significant issue (30 years).

Background

Background readings determine the degree to which sources other than the sample in the laboratory environment contribute to activity readings. Background values were acceptably low for the isotopes of interest, and were appropriately determined during the period that includes the dates of analysis.

Method Blank

The method blank is a reagent water or solid matrix sample which should be free of activity and which is carried through the sample preparation and measurement processes along with the samples in an associated analytical batch. If cross-contamination is absent, the results of this sample will be non-detect. The solid and liquid matrix method blanks were free of Cs-137 contamination at –0.017UJ pCi/g and 5.4U pCi/L, respectively. The "UJ" qualifier was required on the solid blank result since a negative result was reported. This qualified blank result did not cause qualification of associated field sample results.

Matrix Spike / Matrix Spike Duplicate

Matrix spike (MS) and matrix spike duplicate (MSD) samples (field samples spiked with known amounts of target isotopes) were not analyzed for the gamma spectroscopy analyses. Data were not qualified for this occurrence, as the LCS and internal QC checks indicated acceptable performance; however, performance against project data quality objectives for the frequency of QC checks may be affected.

Laboratory Control Sample / Laboratory Control Sample Duplicate

A laboratory control sample (LCS) and laboratory control sample duplicate (LCSD), blank samples fortified with known amounts of target isotopes, were analyzed for each sample matrix to assess accuracy. Isotopes reported were Cs-137, Am-241, and Co-60. Recoveries for the target radionuclides were 100-108% for the solid and 103-108% for water, acceptable for both matrices. (Solid and aqueous control limits were 90-115% and 90-110%, respectively.)

Precision

Duplicate Analyses

Duplicates of solid sample BD50-0-000026 (F4J040180-011) and aqueous sample BD50-0-000022 (F4J040180-006) were analyzed to evaluate the precision (reproducibility) of the analytical method. For the reported isotopes, relative percent differences were acceptable (for water, under 20%; for soil, under 35%) or both the sample and the duplicate were non-detect, which is also acceptable agreement. Data were not qualified in cases where an isotope was nondetect in one sample and detected at a low level in the other sample.

Representativeness

Sample COC forms were appropriately completed, and sample analyses were conducted as specified therein. Sample preservation and holding times were acceptable.

Acceptable blank and background results indicate the analyses were free of contamination from the laboratory environment.

Uncertainties associated with these measurements were acceptable and provide an additional level of assurance that the data are representative of site conditions.

Completeness

A comparison of the total number of valid compounds reported to the total number of compounds analyzed indicates that 100% completeness was achieved for the soil and water samples

Sensitivity

Minimum detectable activities (MDA) were assessed and found to be well below the typically-required reporting limit of 1 pCi/L.

No positive results had uncertainties larger than the sample results (which would have indicated the sample result was less than the 95% confidence level of positive detection).

Negative results with uncertainties larger than or equal to the absolute value of the sample result (which would have indicated the sample count was less than background) were reported for several samples; these results were qualified "UJ" to indicate that the reporting limit is an estimated value.

Other Observations

No results are reported as estimated (qualified "J") for a concentration below the required reporting limit.

Target peaks in the raw data were acceptably formed (no excessive tailing towards low energies, resulting from over-deposition of the target isotopes during sample preparation), and energy levels were in the appropriate range for the target isotopes.

No problems were identified in calculation checks performed on this analytical batch.

Conclusion

This review and evaluation indicates that sampling procedures and laboratory analyses have been conducted satisfactorily. The resulting data are of known and acceptable quality (some data are qualified), in accordance with standard practices for evaluation of radiological data quality.

Validation Checklist

Radiochemical Data Completeness:
Checklist for Alpha Spectrometric Analyses

I. Case Narrative

- ✓ Abnormalities explained
- N/A Matrix Problems explained
- N/A Instrument problems explained
- N/A Improper collection, storage, preservation, container explained
- ✓ Hold times were met, explained if not met
- ✓ Proper sample custody documented

II. Initial and Continuing Calibration Data

- ✓ Detector ID (provided in appropriate places throughout the raw data for items below also)
- ✓ Analyst ID (names of technicians and analysts for each analytical step in summary data)
- ✓ Date, Time calibrated
- ✓ NBS traceable standards with certification dates and DPMs
- ✓ Proper channel numbers of isotopes of interest
- ✓ Instrument settings recorded
- ✓ spectra provided, peak shape and height acceptable
- ✓ Acceptable background documented

III. Blank Data

- ✓ Date, Times of counts
- ✓ Number and ID of samples included with the blank
- ✓ Type of method blank used, LLD of method

IV. Replicate Sample Data

- ✓ Date, Time Analyzed
- ✓ Value obtained for sample, replicates, mean values
- ✓ Count Durations of samples and backgrounds
- ✓ Analysis of Range, Control Limits

V. Lab Control Samples Data

- ✓ Sample ID, Detector ID
- ✓ Values obtained, true value of sample
- ✓ Analysis of Percent Recovery

VI. Sample Data

- ✓ Printed report of results for sample, reruns
- ✓ Computer calculations

VII. Lower Limits of Detection

- ✓ Background Measurements
- ✓ Date and time of count, counting duration
- ✓ Mean background CPM over long period
- ✓ Calculated LLD for isotope of interest

VIII. Internal Recovery Factors

- ✓ Efficiency determined experimentally, copy of raw data
- ✓ Analyst Initials, Date, Time of count
- ✓ Isotopic Tracer used and DPM value
- ✓ Certification Data on Tracer
- ✓ Net CPM obtained
- ✓ Count duration
- ✓ Efficiency Factors
- ✓ Calculated Chemical Recovery of Tracer

Radiochemical Data Completeness:
Checklist for Gamma Spectroscopic Analyses

I. Case Narrative

- N/A Abnormalities explained
- N/A Matrix Problems explained
- N/A Instrument problems explained
- N/A Improper collection, storage, preservation, container explained
- ✓ Hold times were met, explained if not met
- ✓ Proper sample custody documented

II. Initial and Continuing Calibration Data

- ✓ Detector ID (provided in appropriate places throughout the raw data for items below also)
- ✓ Analyst ID (names of technicians and analysts for each analytical step in summary data)
- ✓ Date, Time calibrated
- ✓ NBS traceable standards with certification dates and DPMs

III. Blank Data

- ✓ Date, Time Analyzed
- ✓ Number and ID of samples included with the blank
- ✓ Detection Level reported

IV. Replicate Sample Data

- ✓ Date, Time Analyzed
- ✓ Value obtained for sample, replicates, mean values
- ✓ Count Durations of samples and backgrounds
- ✓ Analysis of Range, Control Limits

V. Lab Control Samples Data

- ✓ Sample ID, Detector ID
- ✓ Values obtained, true value of sample
- ✓ Analysis of Percent Recovery

VI. Sample Data

- ✓ Printed report of results for sample, reruns
- ✓ Computer calculations

VII. Lower Limits of Detection

- ✓ Background Measurements
- ✓ Date and time of count, counting duration
- ✓ Mean background CPM over long period
- ✓ Calculated LLD compared to Required Detection Level

Analytical Data Summary

(Available Upon Request)

See Table 1E, page E-A,
Soil Sample Analytical Results

Lot No. F4J040188

E27/38

DATA VALIDATION REPORT
Mound Facility – Bldg. 50 Verification Sampling
November 4, 2004

SUMMARY OF FINDINGS

Lot No. F4J040188 consisted of 9 solid samples collected at Building 50 of the DOE-Mound facility on September 28, 2004. Samples were received October 4 and analyzed by the Earth City (St. Louis), MO facility of Severn-Trent Laboratories, Inc. for the following radionuclides, by the following methods:

- Alpha spectroscopy for isotopic plutonium (Pu) and thorium (Th) by DOE Environmental Monitoring Lab (EML) Method A-01-R, Modified.
- Gamma spectroscopy for Cesium-137 (Cs-137) and other radionuclides by EPA Method 901.1.

Samples for alpha spectrometry were prepared October 6-7 and analyzed on October 13-14. Samples for gamma spectrometry were prepared October 7 and analyzed on October 14, 2004.

An EPA Level III validation was conducted in accordance with the method requirements and the applicable portions of the *Radiochemical Data Verification and Validation Guidelines* (Lockheed Martin Energy Systems, Oak Ridge, TN, December, 1995) and the *Radiochemical Data Validation Guidelines - Isotopic Analyses by Alpha Spectrometry* (TechLaw, Inc. for EG&G Rocky Flats, Golden, CO, September, 1989). All samples were successfully analyzed as requested by the Terran Corp. chain-of-custody (COC) forms.

This report summarizes the results of the data validation. Summary forms and validation checklists have been included as an attachment to this report.

ALPHA SPECTROSCOPY

Accuracy

Accuracy is the characteristic of data that reflects the degree to which the reported result portrays the true concentration (activity) of the sample. The following factors contribute to an evaluation of data accuracy in this method.

Calibration

Raw continuing calibration data were provided, and appear to have been conducted in an appropriate manner and at an acceptable frequency. Dates bracket the sample analyses and show acceptably small variations in instrument performance for the isotopes of interest.

Preservation / Holding Times

The samples were received intact with completed chain of custody documentation. Sample preservation is not required for solid samples; the water sample was properly acidified with nitric acid. Samples were analyzed within a reasonable time of sample collection. (The half lives of the plutonium and thorium isotopes are such that holding time is not a significant issue: Pu-238, 88 years; Pu-239, 2.4 x 10^4 years; Pu-242 3.7 x 10^5 years; Th-228 1.9 years; Th-230 7.9 x 10^4 years and Th-232 1.4 x 10^{10} years.)

Background

Background readings determine the degree to which sources other than the sample in the laboratory environment contribute to activity readings. Background values were acceptably low for the isotopes of interest, and were appropriately determined during the period that includes the dates of analysis.

Method Blank

The method blank is a reagent water or solid matrix sample which should be free of activity and which is carried through the sample preparation and measurement processes along with the samples in an associated analytical batch. If cross-contamination is absent, the results of this sample will be non-detect. The solid matrix method blank was free of plutonium and thorium isotopes at the following levels: Pu-238, 0.03U pCi/L; Pu-239/40, 0.0016U pCi/L; Th-228, 0.0005U pCi/L; Th-232, 0.02U pCi/L. This blank was contaminated with Th-230 at 0.081J pCi/g, a negligible level compared to the concentrations of this isotope in all samples. No data qualification was required. The aqueous method blank was free of plutonium contamination; thorium results were not reported for the aqueous blank.

Matrix Spike / Matrix Spike Duplicate

Matrix spike (MS) and matrix spike duplicate (MSD) samples (field samples spiked with known amounts of target isotopes) were analyzed in this batch for sample BD50-0-000057 (F4J040188-002). All recoveries were acceptable versus 50%-150% control limits.

Laboratory Control Sample / Laboratory Control Sample Duplicate

A laboratory control sample (LCS) and laboratory control sample duplicate (LCSD), a blank sample fortified with known amounts of target isotopes, was analyzed for each sample matrix to assess accuracy. Recoveries for the target radionuclides in the solid matrix LCS/D, all recoveries were acceptable: Pu-238, 105% versus 70-111% limits; Pu-239/40, 102% versus 77-125% limits and Th-230, 114% versus 75-130% limits.

Chemical Tracer Yield

In this method, each sample is spiked at the beginning of sample preparation with a known amount of the non-target isotopes Pu-242 and Th-229, to evaluate potential losses in the sample preparation steps prior to the final determination of sample activity. Sample-specific chemical yields of Pu-242 tracer ranged from 82.3% to 94.8% recovery in the field samples, and 66.5% to

89.9% recovery for Th-229, all within control limits. Recoveries for all QC samples were also well within the control limits of 20-115%.

Precision

Duplicate Analyses

Duplicates of the MS/MSD of solid sample BD50-0-000057 (F4J040188-002) were analyzed to evaluate the precision (reproducibility) of the analytical method. For the reported isotopes, relative percent differences were acceptable (2-10% RPD versus control limit of 35% for solids).

Representativeness

Sample COC forms were appropriately completed, and sample analyses were conducted as specified therein. Sample preservation and holding times were acceptable.

Acceptable blank and background results indicate the analyses were free of contamination from the laboratory environment.

Uncertainties associated with these measurements were acceptable and provide an additional level of assurance that the data are representative of site conditions.

Completeness

A comparison of the total number of valid compounds reported to the total number of compounds analyzed indicates that 100% completeness was achieved for the solid samples.

Sensitivity

Minimum detectable activities (MDA) were assessed and found to be well below the typically-required reporting limit of 1 pCi/L.

No positive results had uncertainties larger than the sample results (which would have indicated the sample result was less than the 95% confidence level of positive detection).

No negative results with uncertainties larger than or equal to the absolute value of the sample result were reported (which would have indicated the sample count was less than background).

Other Observations

The detected results for Pu-238 in samples F4J040188-005, -006, -007, and –010, and for Pu-239/40 in sample F4J040188-006 were reported as estimated (qualified "J") by the laboratory, as the concentration is well below the required reporting limit. Below the reporting limit, the inherent noise level in a reading becomes increasingly great as the detection limit is approached. (At the detection limit, it is impossible to differentiate signal from noise with statistical confidence.) As a result, it is standard practice for such data to be qualified as estimated.

Target peaks in the raw data were acceptably formed (no excessive tailing towards low energies, resulting from over-deposition of the target isotopes during sample preparation), and energy levels were in the appropriate range for the target isotopes.

No problems were identified in calculation checks performed on this analytical batch.

Conclusion

This review and evaluation indicates that sampling procedures and laboratory analyses have been conducted satisfactorily. The resulting data are of known and acceptable quality, in accordance with standard practices for evaluation of radiological data quality. No changes in data qualifiers already noted by the laboratory were required.

GAMMA SPECTROMETRY

Accuracy

Accuracy is the characteristic of data that reflects the degree to which the reported result portrays the true concentration (activity) of the sample. The following factors contribute to an evaluation of data accuracy in this method.

Calibration

Raw continuing calibration data were provided, and appear to have been conducted in an appropriate manner and at an acceptable frequency. Dates bracket the sample analyses and show acceptably small variations in instrument performance for the isotopes of interest.

Preservation / Holding Times

The samples were received intact with completed chain of custody documentation. Sample preservation is not required for solid samples. Samples were analyzed within a reasonable time of sample collection. The half-life of the specified target isotope, Cs-137, is such that holding time is not a significant issue (30 years).

Background

Background readings determine the degree to which sources other than the sample in the laboratory environment contribute to activity readings. Background values were acceptably low for the isotopes of interest, and were appropriately determined during the period that includes the dates of analysis.

Method Blank

The method blank is a reagent water or solid matrix sample which should be free of activity and which is carried through the sample preparation and measurement processes along with the samples in an associated analytical batch. If cross-contamination is absent, the results of this sample will be non-detect. The solid matrix method blanks was free of Cs-137 contamination at –0.01UJ pCi/g. The "UJ" qualifier was required on the solid blank result since a negative result was reported. This qualified blank result did not cause qualification of associated field sample results.

Matrix Spike / Matrix Spike Duplicate

Matrix spike (MS) and matrix spike duplicate (MSD) samples (field samples spiked with known amounts of target isotopes) were not analyzed for the gamma spectroscopy analyses. Data were not qualified for this occurrence, as the LCS and internal QC checks indicated acceptable performance; however, performance against project data quality objectives for the frequency of QC checks may be affected.

Laboratory Control Sample / Laboratory Control Sample Duplicate

A laboratory control sample (LCS) and laboratory control sample duplicate (LCSD), blank samples fortified with known amounts of target isotopes, were analyzed for each sample matrix to assess accuracy. Isotopes reported were Cs-137, Am-241, and Co-60. Recoveries for the target radionuclides were acceptable, at 102-105% versus control limits of 90-115% (for Cs-136 and Am-241) and 90-111% (for Co-60).

Precision

Duplicate Analyses

A duplicate of sample BD50-0-000057 (F4J040188-002) was analyzed to evaluate the precision (reproducibility) of the analytical method. For the reported isotopes, relative percent differences were acceptable (for solids, under 35%) or both the sample and the duplicate were non-detect, which is also acceptable agreement. Data were not qualified in cases (i.e., Tl-208) where an isotope was nondetect in one sample and detected at a low level in the other sample.

Representativeness

Sample COC forms were appropriately completed, and sample analyses were conducted as specified therein. Sample preservation and holding times were acceptable.

Acceptable blank and background results indicate the analyses were free of contamination from the laboratory environment.

Uncertainties associated with these measurements were acceptable and provide an additional level of assurance that the data are representative of site conditions.

Completeness

A comparison of the total number of valid compounds reported to the total number of compounds analyzed indicates that 100% completeness was achieved for the soil and water samples

Sensitivity

Minimum detectable activities (MDA) were assessed and found to be well below the typically-required reporting limit of 1 pCi/L.

No positive results had uncertainties larger than the sample results (which would have indicated the sample result was less than the 95% confidence level of positive detection).

Negative results with uncertainties larger than or equal to the absolute value of the sample result (which would have indicated the sample count was less than background) were reported for seven of nine samples; these results were qualified "UJ" to indicate that the reporting limit is an estimated value.

Other Observations

No results are reported as estimated (qualified "J") for a concentration below the required reporting limit.

Target peaks in the raw data were acceptably formed (no excessive tailing towards low energies, resulting from over-deposition of the target isotopes during sample preparation), and energy levels were in the appropriate range for the target isotopes.

No problems were identified in calculation checks performed on this analytical batch.

Conclusion

This review and evaluation indicates that sampling procedures and laboratory analyses have been conducted satisfactorily. The resulting data are of known and acceptable quality (some data are qualified), in accordance with standard practices for evaluation of radiological data quality.

Validation Checklist

Radiochemical Data Completeness:
Checklist for Alpha Spectrometric Analyses

I. Case Narrative

- N/A Abnormalities explained
- N/A Matrix Problems explained
- N/A Instrument problems explained
- N/A Improper collection, storage, preservation, container explained
- ✓ Hold times were met, explained if not met
- ✓ Proper sample custody documented

II. Initial and Continuing Calibration Data

- ✓ Detector ID (provided in appropriate places throughout the raw data for items below also)
- ✓ Analyst ID (names of technicians and analysts for each analytical step in summary data)
- ✓ Date, Time calibrated
- ✓ NBS traceable standards with certification dates and DPMs
- ✓ Proper channel numbers of isotopes of interest
- ✓ Instrument settings recorded
- ✓ spectra provided, peak shape and height acceptable
- ✓ Acceptable background documented

III. Blank Data

- ✓ Date, Times of counts
- ✓ Number and ID of samples included with the blank
- ✓ Type of method blank used, LLD of method

IV. Replicate Sample Data

- ✓ Date, Time Analyzed
- ✓ Value obtained for sample, replicates, mean values
- ✓ Count Durations of samples and backgrounds
- ✓ Analysis of Range, Control Limits

V. Lab Control Samples Data

- ✓ Sample ID, Detector ID
- ✓ Values obtained, true value of sample
- ✓ Analysis of Percent Recovery

VI. Sample Data

- ✓ Printed report of results for sample, reruns
- ✓ Computer calculations

VII. Lower Limits of Detection

- ✓ Background Measurements
- ✓ Date and time of count, counting duration
- ✓ Mean background CPM over long period
- ✓ Calculated LLD for isotope of interest

VIII. Internal Recovery Factors

- ✓ Efficiency determined experimentally, copy of raw data
- ✓ Analyst Initials, Date, Time of count
- ✓ Isotopic Tracer used and DPM value
- ✓ Certification Data on Tracer
- ✓ Net CPM obtained
- ✓ Count duration
- ✓ Efficiency Factors
- ✓ Calculated Chemical Recovery of Tracer

Radiochemical Data Completeness:
Checklist for Gamma Spectroscopic Analyses

I. Case Narrative

- N/A Abnormalities explained
- N/A Matrix Problems explained
- N/A Instrument problems explained
- N/A Improper collection, storage, preservation, container explained
- ✓ Hold times were met, explained if not met
- ✓ Proper sample custody documented

II. Initial and Continuing Calibration Data

- ✓ Detector ID (provided in appropriate places throughout the raw data for items below also)
- ✓ Analyst ID (names of technicians and analysts for each analytical step in summary data)
- ✓ Date, Time calibrated
- ✓ NBS traceable standards with certification dates and DPMs

III. Blank Data

- ✓ Date, Time Analyzed
- ✓ Number and ID of samples included with the blank
- ✓ Detection Level reported

IV. Replicate Sample Data

- ✓ Date, Time Analyzed
- ✓ Value obtained for sample, replicates, mean values
- ✓ Count Durations of samples and backgrounds
- ✓ Analysis of Range, Control Limits

V. Lab Control Samples Data

- ✓ Sample ID, Detector ID
- ✓ Values obtained, true value of sample
- ✓ Analysis of Percent Recovery

VI. Sample Data

- ✓ Printed report of results for sample, reruns
- ✓ Computer calculations

VII. Lower Limits of Detection

- ✓ Background Measurements
- ✓ Date and time of count, counting duration
- ✓ Mean background CPM over long period
- ✓ Calculated LLD compared to Required Detection Level

Analytical Data Summary

(Available Upon Request)

See Table E1, page E-A
Soil Sample Analytical Results