2C102

000063418

RMRS Rocky Mountain Remediation Services, L.L.C.
. . . protecting the environment

MEMORANDUM

DATE: August 26,1996 MAL MP-SMM-038

TO: K. F. Lenarcic, Traffic Management, B111, X2377

FROM: Herb Finkelman, Project Management, T130F, X5491

SUBJECT: REQUEST FOR APPROVAL OF GLOVEBOX A80 TRAFFIC PLAN - HNF-086-96

Action: Review this proposal at the Transportation Committee Meeting, August 27, 1996

PURPOSE

The purpose of this correspondence is to present the recommended plan of action to move Glovebox A80 from the Building 707 Module "A" to Building 776 for further size reduction and waste processing.

DISCUSSION

Glovebox A80 requires removal to support installation of a new glovebox under the Salt Residue Stabilization/Repacking Project. Similar to a previous effort for Module "J" , this glovebox is targeted for final waste processing and disposition in Building 776.

The glovebox has been subjected to several decontamination efforts using strippable paint. Prevailing levels of contamination residual remain in excess of the target 50,000 cpm/100 cm^2; however, Radiological Engineering calculations using data derived from surveys conducted prior to the last decontamination action indicate that, given its weight, the glovebox can be considered a Low Level component. Radiological surveys and computations are attached. The above target surface activity was based on an effort to simplify the later size reduction effort. The estimated gram loading is on the order of a half a gram by the Radiological Engineering estimates.

The final Safeguards & Measurements in-situ assay of the Glovebox A80 residual is planned after final decontamination is complete. The glovebox to Building 776 is not expected to fit into the Building 569 crate counter. Intentions are to use the Safeguards & Measurements assay to confirm Criticality Safety Operational Limit (CSOL) compliance, and ship the crate to Building 776. Another Safeguards Measurements Assay of the completed crate will be performed on the dock to satisfy Nuclear Materials Control (NMC) requirements. Given the low estimate of gram residual through utilization of radiological surveys, it is anticipated the CSOLs for the originating and receiving buildings will be easily met.

Through discussion with Engineering, the crate has been designed for the 575 pound load with a standard safety margin, and meets the requirements for a "non-standard" crate per the On-site Transportation Manual (drawing attached). Since the crate will not fit in the counter and in-situ may produce a "Transuranic" result, this letter request approval that the crate be allowed to transit to Building 776 without further approval by the Transportation Committee.

1/9

The following steps will be implemented to ensure safe movement:

1. The glovebox has been decontaminated to As Low As Reasonably Achievable (ALARA).
2. The leaded gloves, lead sheeting and leaded-glass windows will be removed prior to packaging and all ports will be blanked off. This will ensure that all contaminated lead, i.e., mixed waste, will be segregated and packaged separately from the glovebox.
3. Upon completion of decontamination, as determined by Building 707 Radiological Engineering, the glovebox will be double-wrapped in heavy plastic and pigtailed to seal the contents.
4. The glovebox will not contain free liquids.
5. The double wrapped glovebox will be moved on a load table to the Building 707 dock area where the crate will be assembled around the glovebox.
6. The engineered crate will be double banded and labelled with project identification and pertinent radiological information.
7. The crate will be loaded onto a flatbed for transport to Building 569 and Building 776. Forklifts will be used where need for loading and unloading.
8. If the crate"as-built", will not fit in the crate counter, or if the counter characterizes the contents as Transuranic (TRU), no additional repacking or crate interventions will be pursued, and the crate will subsequently be shipped to Building 776. This logic is adopted to minimize personnel exposure and address ALARA considerations.

RESPONSE REQUIREMENTS
Please review this proposal at the next Transportation Committee Meeting schedule for 8:00 a.m. on August 27, 1996. If you need any additional information, please contact Mary T. Aycock at X5309 or Pete M, Sauer at X5957/D4227.

Attachment:
As Stated

PMS:dlu

APPROVED:

_____ _____
On-Site Transportation Committee Date

Distribution:

K-H
J. Kamerman - 750

RMRS
M. Aycock - T130F

2

RMRS con't.

G.	Beers	-	T891C
C	Bicher	-	T130F
T.	Bourgeois	-	T891C
G.	Bracken	-	T130B
D.	Chojnacki	-	T130B
C.	Guthrie	-	T130F
J.	Koffer	-	T764B
S.	Kranker	-	371
B.	McAndrew	-	T130F
M.	Nelson	-	T764B
R.	Paschall	-	T764B
D.	Santi	-	779
P.	Sauer	-	T130F
J.	Thomson	-	T130F

SSOC

J.	Elkins	-	750
D.	Herrick	-	750
W.	Roushey	-	750
P.	Sasa	-	707
J.	Stailing	-	750
G.	Trieste	-	750

File 17.402.F

Glovebox Radiological Characterization Spreadsheet

GLOVEBOX A80

Dimension Units = ft

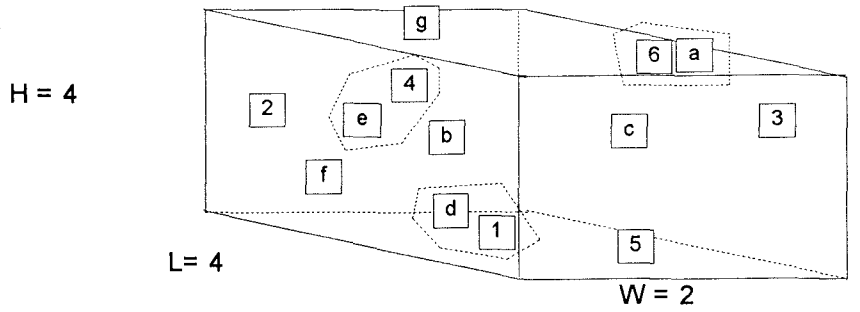

KEY DATA:

Contaminated Surface Area =	64	square ft
=	594.6	$100cm^2$
Weight =	575	lbs
=	261050	gms
1g Transuranic @ 33yrs =	1.83E+11	dpm Total α
1g Transuranic @ 33yrs =	0.082	Ci
100 nCi/g-glovebox =	9.75E+07	$dpm/100cm^2$

Swipe Location	Direct Location	Total α **	Removable	Fixed *
		dpm-Transuranic/$100cm^2$		
1	d	1.00E+07	1.00E+06	9.00E+06
2	c	5.00E+04	2.00E+04	
3	b	5.00E+04	2.50E+04	
4	e	2.00E+05	8.00E+04	1.20E+05
5	f	1.00E+07	9.00E+05	
6	a	8.00E+06	2.50E+04	7.98E+06
	g	5.00E+04		

* = not taken in same location

** = corrected for probe Area

	Total α	Removable	Fixed
Average =	4.05E+06	3.42E+05	5.70E+06
Std. Dev =	4.99E+06	4.73E+05	4.86E+06
Student-t_{95} Number of Std Deviations =	0.734	0.823	1.686
95% UCL of Transuranic ($dpm/100cm^2$) =	7.71E+06	7.31E+05	1.39E+07

95% UCL of Total α Activity = 7.91 nCi/gm

Sum of Fixed and Removable 95% UCLs = 15.00 nCi/gm

Radiological Waste Characterization = Low Level

Calculated by 8/29/96
Peter M. Sauer SEG

Reviewed by
James W. Kamerman

4

ROCKY FLATS ENVIRONMENTAL TECH

GLOVE BOX SURVEY
ROUTINE ALPHA

707 G.B. A - 80

INSTRUMENT DATA

MFG. Ludum	MFG.	MFG.
MODEL 12-1A	MODEL	MODEL
SERIAL # 56257	SERIAL #	SERIAL #
CAL. DATE 10-25-95	CAL. DATE	CAL. DATE
CAL. DUE. 10-96	CAL. DUE.	CAL. DUE.
BKG <500	BKG	BKG
MFG. EBERLINE	MFG. EBERLINE	MFG. EBERLINE
MODEL SAC-4	MODEL SAC-4	MODEL SAC-4
SERIAL #	SERIAL #	SERIAL #
CAL. DATE	CAL. DATE	CAL. DATE
CAL. DUE.	CAL. DUE.	CAL. DUE.
BKG	BKG	BKG

AREA STATUS: MAL 8-14-96
* WITHIN LIMITS
___ LIMITS EXCEEDED
___ POSTED
___ DEPOSTED
___ SURVEY COPY POSTED

GLOVE INSPECTION
PASS___ FAIL___

COMMENTS

Survey inside of glovebox Page 1 of 2
Pg 2 has survey points

GLOVEBOX SURFACE

	DPM REMOVABLE (WIPE)		DPM/100cm 2 REMOVABLE (SWIPE)
1.	1000000	1.	
2.	20000	2.	
3.	25000	3.	
4.	80000	4.	
5.	900000	5.	
6.	25000	6.	
7.		7.	
8.		8.	
9.		9.	
10.		10.	
11.		11.	
12.		12.	
13.		13.	
14.		14.	
15.		15.	
16.		16.	
17.		17.	
18.		18.	
19.		19.	
20.		20.	
21.		21.	
22.		22.	
23.		23.	
24.		24.	
25.		25.	
26.		26.	
27.		27.	
28.		28.	
29.		29.	
30.		30.	

8-13-96

FIXED CONTAMINATION

	DPM REMOVABLE (WIPE)		DPM DIRECT		DPM/100cm 2 REMOVABLE (SWIPE)
A.		A.	4000000	A.	
B.		B.	25000	B.	
C.		C.	25000	C.	
D.		D.	5000000	D.	
E.		E.	100000	E.	
F.		F.	5000000	F.	
G.		G.	25000	G.	
H.		H.		H.	
I.		I.		I.	
J.		J.		J.	
K.		K.		K.	
L.		L.		L.	
M.		M.		M.	
N.		N.		N.	
O.		O.		O.	
P.		P.		P.	
Q.		Q.		Q.	
R.		R.		R.	
S.		S.		S.	
T.		T.		T.	
U.		U.		U.	
V.		V.		V.	
W.		W.		W.	
X.		X.		X.	
Y.		Y.		Y.	
Z.		Z.		Z.	
AA.		AA.		AA.	
AB.		AB.		AB.	
AC.		AC.		AC.	
AD.		AD.		AD.	

8-13-96

[redacted]

[redacted]

RCT _____

EMP. # _____

DATE REVIEWED: 8-14-96

[redacted]

#

5

RWP# 96-707-5070 707 GB A-80

EG&G ROCKY FLATS

Radiological Operations
Area or Equipment Drawing Showing Survey Points

INSIDE GLOVEBOX A-80

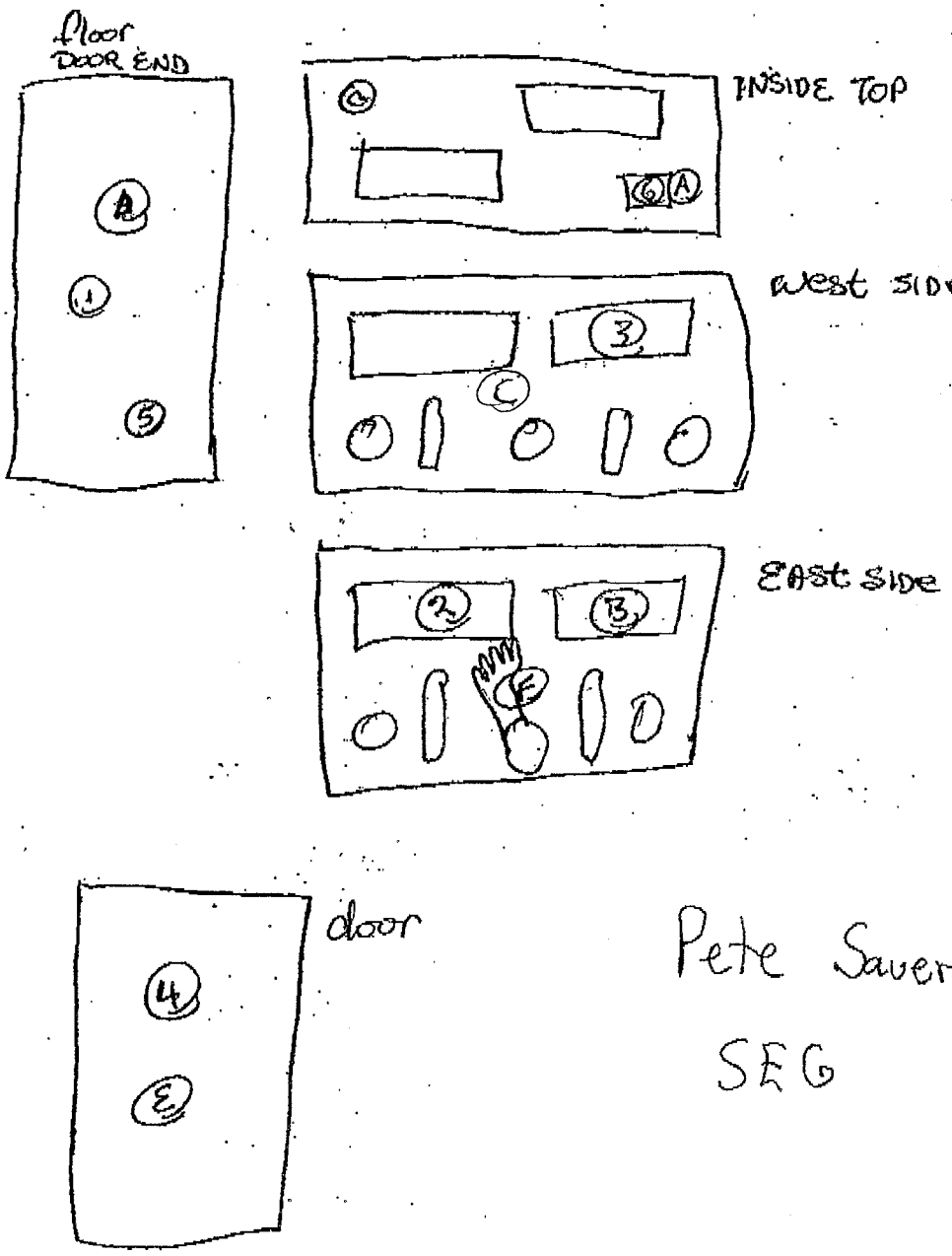

Pete Saver
SEG

6

Weapons Plutonium Decay for 50 Years

Halflives in Years:

Pu-238	Pu-239	Pu-240	Pu-241	Pu-242	Am-241
8.77E+01	2.41E+04	6.56E+03	1.44E+01	3.75E+05	4.33E+02

Time (Years)	Activity per gram plutonium (Ci/g): Pu-238	Pu-239	Pu-240	Pu-241	Pu-242	Am-241	Alpha
0	1.70E-03	5.80E-02	1.30E-02	3.70E-01	1.20E-06	6.00E-04	7.33E-02
1	1.69E-03	5.80E-02	1.30E-02	3.53E-01	1.20E-06	1.18E-03	7.39E-02
2	1.67E-03	5.80E-02	1.30E-02	3.36E-01	1.20E-06	1.73E-03	7.44E-02
3	1.66E-03	5.80E-02	1.30E-02	3.20E-01	1.20E-06	2.25E-03	7.49E-02
4	1.65E-03	5.80E-02	1.30E-02	3.05E-01	1.20E-06	2.75E-03	7.54E-02
5	1.63E-03	5.80E-02	1.30E-02	2.91E-01	1.20E-06	3.22E-03	7.58E-02
6	1.62E-03	5.80E-02	1.30E-02	2.77E-01	1.20E-06	3.67E-03	7.63E-02
7	1.61E-03	5.80E-02	1.30E-02	2.64E-01	1.20E-06	4.09E-03	7.67E-02
8	1.60E-03	5.80E-02	1.30E-02	2.52E-01	1.20E-06	4.50E-03	7.71E-02
9	1.58E-03	5.80E-02	1.30E-02	2.40E-01	1.20E-06	4.89E-03	7.74E-02
10	1.57E-03	5.80E-02	1.30E-02	2.29E-01	1.20E-06	5.25E-03	7.78E-02
11	1.56E-03	5.80E-02	1.30E-02	2.18E-01	1.20E-06	5.60E-03	7.81E-02
12	1.55E-03	5.80E-02	1.30E-02	2.08E-01	1.20E-06	5.93E-03	7.84E-02
13	1.53E-03	5.80E-02	1.30E-02	1.98E-01	1.20E-06	6.25E-03	7.87E-02
14	1.52E-03	5.80E-02	1.30E-02	1.89E-01	1.20E-06	6.55E-03	7.90E-02
15	1.51E-03	5.80E-02	1.30E-02	1.80E-01	1.20E-06	6.83E-03	7.93E-02
16	1.50E-03	5.80E-02	1.30E-02	1.71E-01	1.20E-06	7.10E-03	7.96E-02
17	1.49E-03	5.80E-02	1.30E-02	1.63E-01	1.20E-06	7.36E-03	7.98E-02
18	1.47E-03	5.80E-02	1.30E-02	1.56E-01	1.20E-06	7.60E-03	8.00E-02
19	1.46E-03	5.80E-02	1.30E-02	1.48E-01	1.20E-06	7.83E-03	8.02E-02
20	1.45E-03	5.80E-02	1.30E-02	1.41E-01	1.20E-06	8.05E-03	8.04E-02
21	1.44E-03	5.80E-02	1.30E-02	1.35E-01	1.20E-06	8.26E-03	8.06E-02
22	1.43E-03	5.80E-02	1.30E-02	1.28E-01	1.20E-06	8.46E-03	8.08E-02
23	1.42E-03	5.80E-02	1.30E-02	1.22E-01	1.20E-06	8.64E-03	8.10E-02
24	1.41E-03	5.80E-02	1.30E-02	1.17E-01	1.20E-06	8.82E-03	8.12E-02
25	1.40E-03	5.80E-02	1.30E-02	1.11E-01	1.20E-06	8.99E-03	8.13E-02
26	1.38E-03	5.80E-02	1.30E-02	1.06E-01	1.20E-06	9.15E-03	8.15E-02
27	1.37E-03	5.80E-02	1.30E-02	1.01E-01	1.20E-06	9.30E-03	8.16E-02
28	1.36E-03	5.80E-02	1.30E-02	9.61E-02	1.20E-06	9.44E-03	8.17E-02
29	1.35E-03	5.80E-02	1.30E-02	9.16E-02	1.20E-06	9.58E-03	8.18E-02
30	1.34E-03	5.79E-02	1.30E-02	8.73E-02	1.20E-06	9.71E-03	8.20E-02
31	1.33E-03	5.79E-02	1.30E-02	8.32E-02	1.20E-06	9.83E-03	8.21E-02
32	1.32E-03	5.79E-02	1.30E-02	7.93E-02	1.20E-06	9.94E-03	8.22E-02
33	1.31E-03	5.79E-02	1.30E-02	7.56E-02	1.20E-06	1.00E-02	8.23E-02
34	1.30E-03	5.79E-02	1.30E-02	7.20E-02	1.20E-06	1.02E-02	8.23E-02
35	1.29E-03	5.79E-02	1.30E-02	6.86E-02	1.20E-06	1.02E-02	8.24E-02
36	1.28E-03	5.79E-02	1.30E-02	6.54E-02	1.20E-06	1.03E-02	8.25E-02
37	1.27E-03	5.79E-02	1.29E-02	6.23E-02	1.20E-06	1.04E-02	8.26E-02
38	1.26E-03	5.79E-02	1.29E-02	5.94E-02	1.20E-06	1.05E-02	8.26E-02
39	1.25E-03	5.79E-02	1.29E-02	5.66E-02	1.20E-06	1.06E-02	8.27E-02
40	1.24E-03	5.79E-02	1.29E-02	5.40E-02	1.20E-06	1.07E-02	8.28E-02
41	1.23E-03	5.79E-02	1.29E-02	5.14E-02	1.20E-06	1.07E-02	8.28E-02
42	1.22E-03	5.79E-02	1.29E-02	4.90E-02	1.20E-06	1.08E-02	8.29E-02
43	1.21E-03	5.79E-02	1.29E-02	4.67E-02	1.20E-06	1.08E-02	8.29E-02

~~Trans/α Ratio = Σ Pu238 → Am241 Ci/g / Total α Ci/g~~

Don't use Ratio per J. Miller 8/20

Total α dpm @ 33 yrs

7

Student-t Table

DOF	$n^{1/2}$	$t_{95\%}$	No. Samples	No. SD's	Gain in Certainty	Gain Change
1	1.41	6.314	2	4.465	4.465	
2	1.73	2.920	3	1.686	2.779	
3	2.00	2.353	4	1.177	0.509	-2.27
4	2.24	2.132	5	0.953	0.223	-0.29
5	2.45	2.015	6	0.823	0.131	-0.09
6	2.65	1.943	7	0.734	0.088	-0.04
7	2.83	1.895	8	0.670	0.064	-0.02
8	3.00	1.860	9	0.620	0.050	-0.01
9	3.16	1.833	10	0.580	0.040	-0.01
10	3.32	1.821	11	0.549	0.031	-0.01
11	3.46	1.796	12	0.518	0.031	0.00
12	3.61	1.782	13	0.494	0.024	
13	3.74	1.771	14	0.473	0.021	
14	3.87	1.761	15	0.455	0.019	
15	4.00	1.753	16	0.438	0.016	
16	4.12	1.746	17	0.423	0.015	
17	4.24	1.740	18	0.410	0.013	
18	4.36	1.734	19	0.398	0.012	
19	4.47	1.729	20	0.387	0.011	
20	4.58	1.725	21	0.376	0.010	
21	4.69	1.721	22	0.367	0.010	
22	4.80	1.717	23	0.358	0.009	
23	4.90	1.714	24	0.350	0.008	
24	5.00	1.711	25	0.342	0.008	
25	5.10	1.708	26	0.335	0.007	
26	5.20	1.706	27	0.328	0.007	
27	5.29	1.703	28	0.322	0.006	
28	5.39	1.701	29	0.316	0.006	
29	5.48	1.699	30	0.310	0.006	
30	5.57	1.697	31	0.305	0.005	
40	6.40	1.684	41	0.263	0.004	
60	7.81	1.671	61	0.214	0.002	
120	11.00	1.658	121	0.151	0.001	

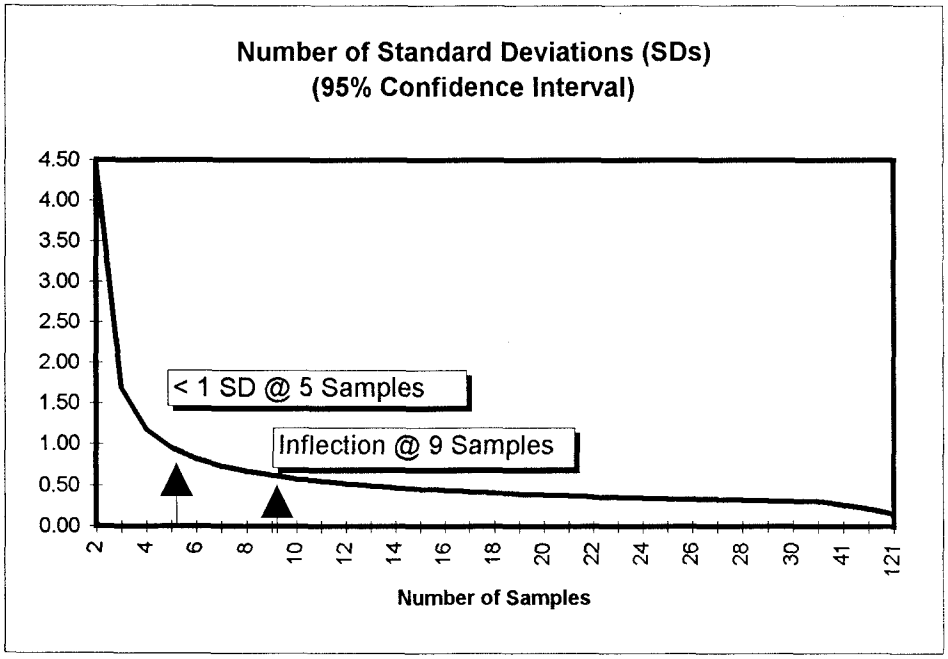

8

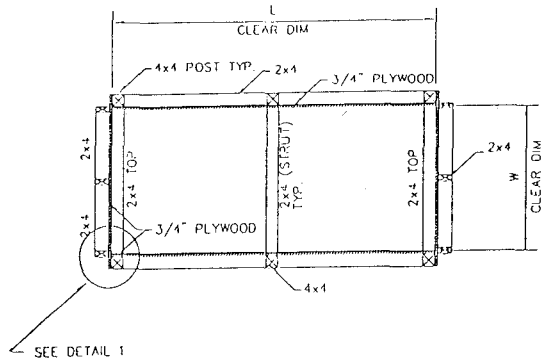

TOP PLAN
1/2" = 1'

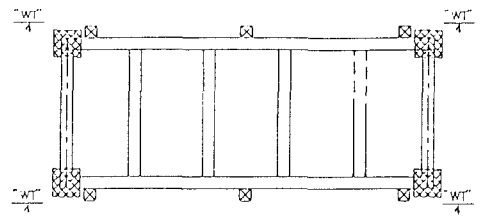

TOP PLAN
1/2" = 1'

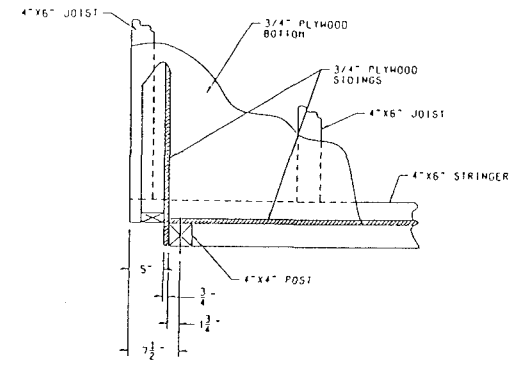

1 TYP CORNER DET AT BOTTOM (PLAN)
SCALE: NONE

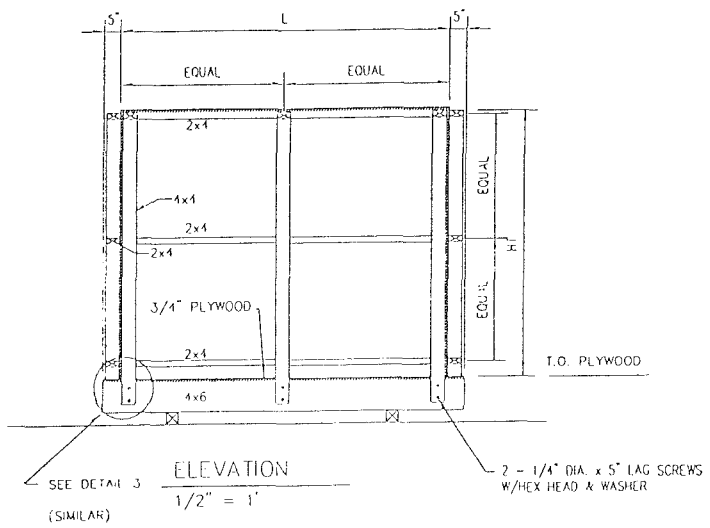

ELEVATION
1/2" = 1'

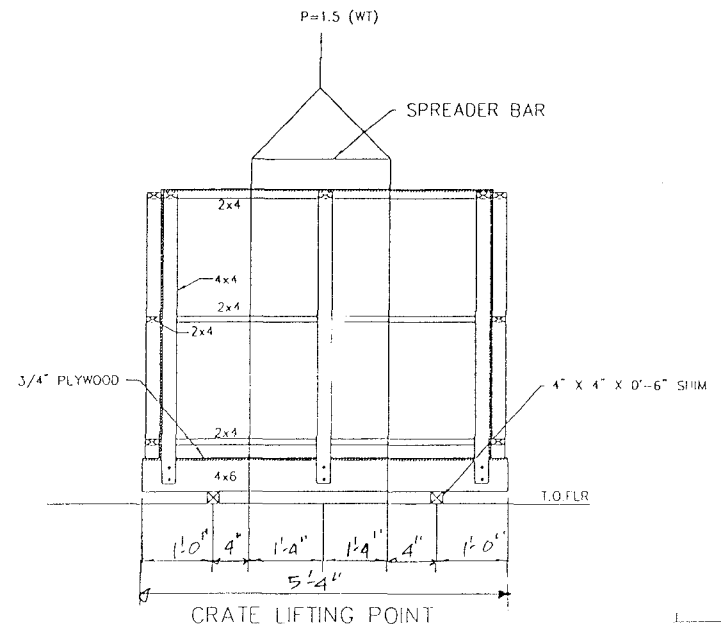

CRATE LIFTING POINT
1/2" = 1'

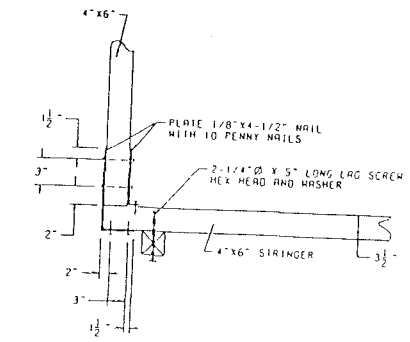

2 DETAIL
SCALE: NONE

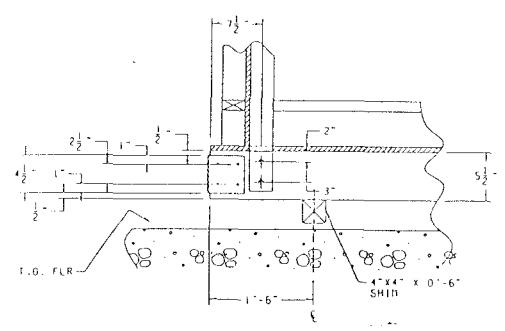

3 DETAIL
SCALE: NONE

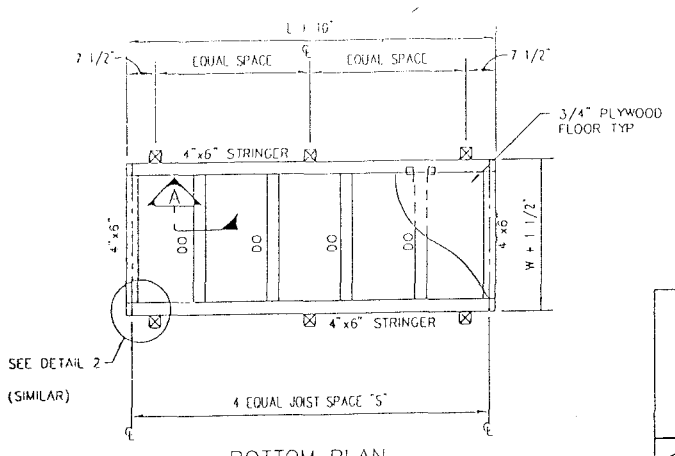

BOTTOM PLAN
1/2" = 1'

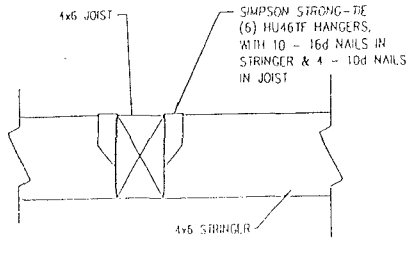

SECTION A-A
2" = 1'

ITEM	REMARKS		DIMENSIONS					WEIGHTS			LIFTING LOAD	
	USAGE	QUANTITY NO. OF UNITS REQ'D	LENGTH L	LENGTH L+10"	WIDTH W	HEIGHT HT.	JOIST SPACE S	EMPTY WT. (PER CRATE) APPROX.	WEIGHT OF EQUIPMENT (APPROX.)	TOTAL WEIGHT (WT)	WT/4 LBS	P=1.5(WT.)
GB-A80 CRATE	Glove Box A-80	1-UNIT	4'-6" (54")	5'-4" (64")	3'-6" (42")	4'-8" (56")	21 3/8" (-)	500 #	575 LBS	1075#	269 #	1612 #

NOTES:

1.0 WEIGHTS

1.0 APPROXIMATE WEIGHT OF EMPTY CRATE IS = 500 LB.

1.2 MAXIMUM WEIGHT OF LOAD IN CRATE = 575 LB.

1.3 TOTAL WEIGHT OF CRATE AND MAXIMUM LOAD = 1075 LB.

2.0 MATERIAL

2.1 STRUCTURAL JOIST, STRINGERS, AND ALL OTHER FRAMING LUMBER SHALL BE DOUGLAS FIR - LARCH GRADE NO. 2 OR BETTER, STANDARD DRESSED (S4S) SAWN LUMBER.

2.2 NAILS SHALL BE SMOOTH SHANK, HOT DIP GALVANIZED RANGING FROM 6d TO 16d. NAIL ALL 3/4" PLYWOOD WITH 8d (or 6d with 2 x 4's laid flat) NAILS AT 6" ON CENTERS, AT ALL SUPPORTS AND EDGES.

2.3 STEEL JOIST HANGERS SHALL BE "SIMPSON STRONG-TIE CONNECTORS" OR EQUAL.

2.4 ALL WOOD SHALL HAVE FIRE RETARDANT PAINTED ON IN THE FIELD.

MOVING SPECIFICATIONS

MOVING OF CRATES LOADED WITH GLOVE BOXES SHALL BE TO THE FOLLOWING SPECIFICATIONS:

1. GLOVE BOX AND ALL MISCELLANEOUS ITEMS MOVED IN THE CRATE SHALL BE ANCHORED TO THE CRATE BOTTOM SHIMS AND THE SHIMS ANCHORED TO THE CRATE BOTTOM BEFORE MOVING.
2. * THE FLOOR MUST BE COVERED WITH A MINIMUM 1/8" STEEL PLATE OVER CONCRETE FLOOR TO ROLL CRATES ON, SO THAT THE EXISTING FLOOR IS NOT DISTURBED.
3. MOVE CRATES WITH A MINIMUM OF (4) MULTI-TON ROLLERS.
4. LOCATION OF MULTI-TON ROLLERS MUST BE ON THE CENTER LINE OF THE CRATE STRINGERS. (Multi-ton Rollers can not be placed under a joist, because the joist to stringer connections are designed for downward loading only.)
5. IF (4) MULTI-TON ROLLERS ARE USED THEN THEY MUST BE PLACED BEYOND THE OUTER QUARTER SPAN POINTS FOR STABILITY.
6. MULTI-TON LOAD CAPACITY MUST BE A MINIMUM OF 2000 lb.
7. MULTI-TON MUST BE A MAXIMUM OF 4" IN HEIGHT.

NOTE: MOVING BY ANY OTHER SYSTEM MUST BE APPROVED BY ENGINEERING BEFORE PROCEEDING.

* NOTE 2 APPLIES AT FLOORS WHERE THERE IS A BERM OR DEEP DEPRESSION AT FLOORS, OR WHERE IT IS NECESSARY.

INFORMATION ONLY

KEYWORDS	A	ORIGINAL ISSUE						
1.	ISSUE	DESCRIPTION	DATE	REP	DOE	CLASS	JOB NO	
2.								
3.	DESIGNED	BY: ALVARA	DATE: 7-31-96	U.S. DEPARTMENT OF ENERGY ROCKY FLATS AREA OFFICE GOLDEN, COLORADO				
4.	DRAWN	REG	7-31-96					
5.	CHECKED			ROCKY FLATS PLANT GOLDEN, COLORADO				
BLDG/FACILITY	APPROVED							
ROOM/AREA				BLDG 707, MODULE "A" CRATE				
GRID COORD/JOB NO.								
	SUBMITTED			SIZE	DRAWING NUMBER	ISSUE	SHEET	
	APPROVED REP			D	SK 1000	A	x	
	APPROVED DOE							