Rocky Flats Environmental Technology Site

WASTE STREAM AND RESIDUE IDENTIFICATION AND CHARACTERIZATION

BUILDING 771

Version 6.0

Prepared for:

Rocky Flats Environmental Technology Site
Golden, Colorado 80402-0464

Prepared by:

Waste Systems
Rocky Mountain Remediation Services, L.L.C.

ELECTRONIC COPY

Reviewing Official: UNCLASSIFIED NOT UCNI*
*REFERENCE EXEMPTION NUMBER CEX-061-96
Name
Date: NOVEMBER 21,1996

PADC-93-00169

ADMIN RECORD
IA-B771-A-00016

LIST OF EFFECTIVE SECTIONS

The following list of effective sections of this document is used to verify the currency and completeness of the document. This list will be reissued to each manual holder each time an official change is published.

If, after the sections of the document have been verified using this list, it is determined that pages are incorrect or missing, request replacement pages.

SECTION	TITLE/DMR'S	NO. OF PAGES	DATE
	Reverification Information Letter No: JMS-040-98 Reverification Date: 7/21/98	3	09/09/98
	Executive Summary DCF-771-99-01 DCF-771-99-02 DCF-771-99-03 DCF-771-99-04	3	10/13/98
	Table of Contents DCF-771-99-01 DCF-771-99-02 DCF-771-99-03 DCF-771-99-04	4	10/13/98
0.0	Introduction DCF-771-99-01 DCF-771-99-02 DCF-771-99-03 DCF-771-99-04	10	10/13/98
1.0	Process 771-01: High Level Dissolution (Deleted) DMR-771-97-08(R) DMR-LDR-97-01 DMR-TSCA-97-01	2	05/19/97
2.0	Process 771-02: Low-Level Dissolution (Deleted) DMR-771-97-08(R) DMR-LDR-97-01 DMR-TSCA-97-01	2	05/19/97
3.0	Process 750-03: Cation Exchange (Deleted) DMR-771-97-08(R) DMR-LDR-97-01 DMR-TSCA-97-01	2	05/19/97
4.0	Process 771-04: Anion Exchange (Deleted) DMR-771-97-08(R) DMR-LDR-97-01 DMR-TSCA-97-01	2	05/19/97

SECTION	TITLE/DMR'S	NO. OF PAGES	DATE
5.0	Process 771-05: Feed Evaporation (Deleted) DMR-771-97-08(R) DMR-LDR-97-01 DMR-TSCA-97-01	2	05/19/97
6.0	Process 771-06: Precipitation Feed Batching (Deleted) DMR-771-97-08(R) DMR-LDR-97-01 DMR-TSCA-97-01	2	05/19/97
7.0	Process 771-07: Precipitation (Deleted) DMR-771-97-08(R) DMR-LDR-97-01 DMR-TSCA-97-01	2	05/19/97
8.0	Process 771-08: Precipitation Filtrate Evaporation (Deleted) DMR-771-97-08(R) DMR-LDR-979-01 DMR-TSCA-97-01	2	05/19/97
9.0	Process 771-09: Calcination (Deleted) DMR-771-97-08(R) DMR-LDR-97-01 DMR-TSCA-97-01	2	05/19/97
10.0	Process 771-10: Hydrofluorination (Deleted) DMR-771-97-08(R) DMR-LDR-97-01 DMR-TSCA-97-01	2	05/19/97
11.0	Process 771-11: Reduction and Button Break-Out (Deleted) DMR-771-97-08(R) DMR-LDR-97-01 DMR-TSCA-97-01	2	05/19/97
12.0	Process 771-12: Miscellaneous Residue Processing (Deleted) DMR-771-97-08(R) DMR-LDR-97-01 DMR-TSCA-97-01	2	05/19/97
13.0	Process 771-13: Metal Burning (Deleted) DMR-771-97-08(R) DMR-LDR-97-01 DMR-TSCA-97-01	2	05/19/97

SECTION	TITLE/DMR'S	NO. OF PAGES	DATE
14.0	Process 771-14: Crushing and Grinding (Deleted) DMR-771-97-08(R) DMR-LDR-97-01 DMR-TSCA-97-01	2	05/19/97
15.0	Process 771-15: Spray Leach (Deleted) DMR-771-97-08(R) DMR-LDR-97-01 DMR-TSCA-97-01	2	05/19/97
16.0	Process 771-16: Oralloy Leach (Deleted) DMR-771-97-08(R) DMR-LDR-97-01 DMR-TSCA-97-01	2	05/19/97
17.0	Process 771-17: Oy Precipitation (Deleted) DMR-771-97-08(R) DMR-LDR-97-01 DMR-TSCA-97-01	2	05/19/97
18.0	Process 771-18: Special Recovery Anion Exchange (Deleted) DMR-771-97-08(R) DMR-LDR-97-01 DMR-TSCA-97-01	2	05/19/97
19.0	Process 771-19: Caustic Filtration (Deleted) DMR-771-97-08(R) DMR-LDR-97-01 DMR-TSCA-97-01	2	05/19/97
20.0	Process 771-20: Fume Scrubber (Deleted) DMR-771-97-08(R) DMR-LDR-97-01 DMR-TSCA-97-01	2	05/19/97
21.0	Process 771-21: Vacuum System (Deleted) DMR-771-97-08(R) DMR-LDR-97-01 DMR-TSCA-97-01	2	05/19/97
22.0	Process 771-22: Chemical Makeup (Deleted) DMR-771-97-08(R) DMR-LDR-97-01 DMR-TSCA-97-01	2	05/19/97

SECTION	TITLE/DMR'S	NO. OF PAGES	DATE
23.0	Process 771-23: Radioactive Inorganic Laboratory DCF-771-98-06(R)	20	07/22/98
24.0	Process 771-24: Chemical Standards Labatory DMR-771-97-08(R) DMR-LDR-97-01 DMR-TSCA-97-01	6	05/19/97
25.0	Process 771-25: Chemical Technology (Deleted) DMR-771-97-08(R) DMR-LDR-97-01 DMR-TSCA-97-01	2	05/19/97
26.0	Process 771-26: Plutonium Metallurgy (Deleted) DMR-771-97-08(R) DMR-LDR-97-01 DMR-TSCA-97-01	2	05/19/97
27.0	Process 771-27: Plenums DCF-771-98-06(R)	18	07/22/98
28.0	Process 771-28: Cooling Towers DMR-771-97-08(R) DMR-LDR-97-01 DMR-TSCA-97-01	10	05/19/97
29.0	Process 771-29: Maintenance DCF-TSCA-98-01	50	09/15/98
30.0	Process 771-30: Preventive Maintenance DCF-771-98-06(R)	14	07/22/98
31.0	Process 771-31: Raschig Ring Removal and Replacement DCF-771-98-06(R)	12	07/22/98
32.0	Process 771-32: Radiological Safety DMR-771-97-09	8	09/30/97

SECTION	TITLE/DMR'S	NO. OF PAGES	DATE
33.0	Process 771-33: Nondestructive Assay (Deleted) DMR-771-97-08(R) DMR-LDR-97-01 DMR-TSCA-97-01	2	05/19/97
34.0	Process 771-34: Incinerator (Deleted) DMR-771-97-08(R) DMR-LDR-97-01 DMR-TSCA-97-01	2	05/19/97
35.0	Process 771-35: General Building Waste (RMMA) DCF-771-99-06	60	10/20/98
36.0	Process 771-36: H-4 Support Vacuum System DMR-771-97-08(R) DMR-LDR-97-01 DMR-TSCA-97-01	14	05/19/97
37.0	Process 771-37: General Building Waste (Non-RMMA) DCF-771-98-05	26	04/14/98
38.0	Process 771-38: Radiation Instrumentation DMR-771-97-09	12	09/30/97
39.0	Process 771-39: Solution Processing DCF-771-98-06(R)	26	07/22/98
40.0	Set 34, Decontamination & Decommissioning DCF-771-99-01	2	10/13/98
41.0	Set 37, Decontamination & Decommissioning DCF-771-99-02	2	10/13/98
42.0	Set 40, Decontamination & Decommissioning DCF-771-99-03	2	10/13/98
43.0	Set 44, Decontamination & Decommissioning DCF-771-99-04	2	10/13/98
Appendix A	Waste Management Units (WMUs) (Deleted) DMR-771-97-08(R) DMR-LDR-97-01 DMR-TSCA-97-01	2	05/19/97
Appendix B	Deleted Process Descriptions DMR-771-97-08(R) DMR-LDR-97-01 DMR-TSCA-97-01	28	05/19/97
Appendix C	Idle Equipment Inventory DMR-APPXC-97-01	4	09/24/97
Appendix D	Superseded WSRIC Building Books DMR-771-97-08(R) DMR-LDR-97-01 DMR-TSCA-97-01	2	05/19/97
Appendix E	UHC Worksheets DCF-771-98-05	26	04/14/98

Reverification Information

The following reverification information is used to document the reverification performed on this WSRIC book and to ensure that the information contained in this WSRIC book is being reverified on an annual basis.

Annual Reverification Schedule Month	Reverification Letter No.	Reverified Process Approval Date	Processes Reverified	Reverification Status/ Change No.
July	JMS-040-98	07/21/98	Executive Summary	No Change
			Table of Contents	No Change
			Introduction	No Change
			Process 771-01	No Process
			Process 771-02	No Process
			Process 771-03	No Process
			Process 771-04	No Process
			Process 771-05	No Process
			Process 771-06	No Process
			Process 771-07	No Process
			Process 771-08	No Process
			Process 771-09	No Process
			Process 771-10	No Process
			Process 771-11	No Process
			Process 771-12	No Process
			Process 771-13	No Process
			Process 771-14	No Process
			Process 771-15	No Process
			Process 771-16	No Process

Annual Reverification Schedule Month	Reverification Letter No.	Reverified Process Approval Date	Processes Reverified	Reverification Status/ Change No.
June	JMS-033-98	06/18/98	Process 771-17	No Process
			Process 771-18	No Process
			Process 771-19	No Process
			Process 771-20	No Process
			Process 771-21	No Process
			Process 771-22	No Process
			Process 771-23	DCF-771-98-06(R)
			Process 771-24	No Change
			Process 771-25	No Process
			Process 771-26	No Process
			Process 771-27	DCF-771-98-06(R)
			Process 771-28	No Change
			Process 771-29	DCF-771-98-06(R)
			Process 771-30	DCF-771-98-06(R)
			Process 771-31	DCF-771-98-06(R)
			Process 771-32	No Change
			Process 771-33	No Process
			Process 771-34	No Process
			Process 771-35	DCF-771-98-06(R)
			Process 771-36	No Change
			Process 771-37	No Change
			Process 771-38	No Change
			Process 771-39	DCF-771-98-06(R)

Annual Reverification Schedule Month	Reverification Letter No.	Reverified Process Approval Date	Processes Reverified	Reverification Status/ Change No.
June	JMS-033-98	06/18/98	Appendix A	No Appendix
			Appendix B	No Change
			Appendix C	No Change
			Appendix D	No Change
			Appendix E	No Change

Building 771 houses the primary plutonium recovery facility at RFETS. Plutonium recovery processes are no longer being utilized for PU recovery in Building 771, although the gloveboxes and equipment are still in place. The processes not in use were deleted from the WSRIC book. Information on the deleted processes can be found in Appendix B.

Building Support groups and systems operating in Building 771 are radiation monitoring, cooling water system, filter plenum systems, tank maintenance group, vacuum systems, and analytical laboratories. This building contains its own maintenance operations as support services.

The bulk of the solid wastes generated in Building 771 are glovebox cleanup and maintenance wastes such as combustibles, filters, glass, gloves, plastic, abrasive pads, and light metals. These are put in the appropriate waste container in various rooms. They are eventually taken to the appropriate storage areas based on assay information. Hazardous wastes are stored in the appropriate satellite, 90-day collection areas, interim storage and permitted storage areas.

Building 771/774, a former plutonium processing facility, is undergoing decontamination and decommissioning (D&D) under the authority of a CDPHE-approved Decommissioning Operations Plan (DOP). D&D activities will include Contaminated Areas (CA), Radiological Buffer Areas (RBA), and other areas outside RBAs including offices, locker rooms, and support buildings and structures. D&D will begin with approval of the B771 DOP in FY99.

Buildings 771/774 and approximately 25 ancillary buildings and structures are divided into 82 "sets" to facilitate planning and execution of D&D activities. A set is a geographical area within the facility that can be decommissioned as a stand-alone project by a dedicated D&D team. A set is typically one or more rooms within the facility and its contents, or a portion of a large room containing a logical grouping of process equipment. A set may also include one or more outside buildings or structures or utility systems that must remain operational until other sets are removed. Included in these sets is an estimated 116,000 feet of non-process piping, over 200 gloveboxes and more that 300 tanks. In general, D&D of a set includes removal of low-level equipment first which is packaged in 55-gallon drums or standard plywood or metal low-level waste crates. This is followed by disassembly and bagout of glovebox internal equipment and debris which is then packaged as TRU or TRM waste in 55-gallon drums or Standard Waste Boxes. Removal of overhead piping and components is next and is expected to consist of approximately 70% low-level waste and 30% TRU waste. Finally, where applicable, tanks and gloveboxes are enclosed in a soft sided containment (SSC) structure, manually size reduced, wrapped and packaged as TRU waste. Waste that requires special packaging may include asbestos in various forms, PCB light ballasts, and HEPA filters. Secondary waste will be generated from D&D activities and will include, but not be limited to, personal protective clothing (PPE), used SSC building materials, Kimwipes, absorbents, surgeon's gloves, tape, tools, and plastic containers. An estimated 14,000 feet of process piping will be drained and removed as part of facility deactivation and it is estimated that this removal will overlap some D&D activities in Building 771. Zone I exhaust will be disconnected from gloveboxes and blanked off at the header. Zone I exhaust headers and other key utilities will be removed as part of a utility set at the end of the Building 771/774 D&D project. The baseline plan calls for size reduction and removal of gloveboxes and tanks by D&D from within a soft sided containment structure. Size reduction will be performed by D&D workers using conventional hand and power tools. It is expected that a centralized size reduction facility will be installed in one of

the set areas vacated in FY99 and will be used for size reduction of major components during the mid and later stages of facility closure.

Personnel performing D&D activities in radiological contaminated areas (RCA) will use protective clothing (Anti-C) and Powered Air Purifying Respirators (PAPR) or Supplied Breathing Air (SBA) suits. SBA work will typically be limited to the size reduction of gloveboxes and tanks from within an SSC. Glovebox integrity and personnel safety will be maximized by recertification of gloveboxes, replacement of cracked or opaque glovebox windows and the use of SSCs and glovebags for equipment size reduction and raschig ring removal, and through the use of sleeves for cutting exhaust ducting and contaminated overhead piping > 2 inches in diameter. The use of a hydraulic cut and crimp device will be used for removal of overhead piping 2 inches or less.

Baseline planning assumes glovebox and tank size reduction will be performed in-situ from inside an SSC. Two alternative concepts for centrally located size reduction facilities are being considered at this time but will not be available until after FY99.

Risk reduction and housekeeping activities are being/have been conducted during facility deactivation. These include the following:

- Removal and disposition of accountable nuclear material
- Removal and disposition of residue waste drums
- Removal and disposal of excess chemicals
- Removal and disposal of external debris and combustibles
- Draining and removal of 38 process piping systems

Following deactivation and approval of the DOP, D&D activities will be conducted and include the following:

- Radiological survey and free release of candidate equipment items
- Isolation of 120/240/480 electrical systems not required for D&D operations
- Removal, size reduction and waste packaging of electrical conduit and panels
- Removal, size reduction and waste packaging of external low-level equipment
- Certification and preparation of gloveboxes
- Disassembly/size reduction and removal of internal glovebox equipment and debris
- Removal of SNM holdup from gloveboxes and associated ducting
- Application of spray fixative to interior surfaces of glovebox
- Stripping of fixative coatings to decontaminate glovebox interior surfaces
- Isolation and removal of non-process piping systems not required for D&D of subsequent sets.
- Removal, segregation, and packaging of asbestos containing materials
- Removal, segregation, and packaging of PCB or PCB containing components
- Construction of soft side containment structures around tanks and gloveboxes
- Removal and packaging of contaminated raschig rings from tanks and sumps
- Manual size reduction of gloveboxes and tanks to facilitate waste packaging
- Draining and proper disposal of non-process solutions, liquids, i.e., pump oils, water, etc.
- Deconstruction and waste packaging of used soft side containment structures

- Floor repair where necessary to facilitate further D&D efforts

Radiation Protection personnel use paper smears to determine the level of removable contamination on equipment and facilities in the area and on items being prepared for transfer out of the area. Wipes are processed through an alpha counter and disposed in a designated container located at each counter. Personnel leaving the Contaminated Area are monitored at a step off pad for alpha contamination, where anti-contamination clothing/gear collected.

Note: All waste must be provided with a Radiological Engineering Waste Release Evaluation prior to unrestricted release from RFETS, or to the RFETS landfill, in accordance with HSP 18.10.

0.0 INTRODUCTION 0-1
0.1 Waste Stream and Residue Identification and Characterization Program . . 0-1
0.2 Document Organization 0-1
0.3 Overview of Building 0-2
0.4 List of Processes in Building 0-2
0.5 Numbering Systems 0-3
0.5.1 Process/Output Numbering System 0-3
0.5.2 Waste Stream Numbering System 0-4
0.5.3 WMU Numbering System 0-4
0.6 Process Descriptions and Flow Diagrams 0-5
0.7 Conventions Used In Process Descriptions 0-5

1.0 PROCESS 771-1: HIGH-LEVEL DISSOLUTION (DELETED 02/03/94) . . . 1-1

2.0 PROCESS 771-2: LOW-LEVEL DISSOLUTION (DELETED 02/03/94) 2-1

3.0 PROCESS 771-3: CATION EXCHANGE (DELETED 02/03/94) 3-1

4.0 PROCESS 771-4: ANION EXCHANGE (DELETED 05/19/97) 4-1

5.0 PROCESS 771-5: FEED PREPARATION EVAPORATION (DELETED 02/03/94) 5-1

6.0 PROCESS 771-6: PRECIPITATION FEED BATCHING (DELETED 02/03/94) 6-1

7.0 PROCESS 771-7: PRECIPITATION (DELETED 01/03/94) 7-1

8.0 PROCESS 771-8: PRECIPITATION FILTRATE EVAPORATION (DELETED 02/03/94) 8-1

9.0 PROCESS 771-9: CALCINATION (DELETED 02/03/94) 9-1

10.0 PROCESS 771-10: HYDROFLUORINATION (DELETED 02/03/94) 10-1

11.0 PROCESS 771-11: REDUCTION AND BUTTON BREAK-OUT (DELETED 02/03/94) 11-1

12.0 PROCESS 771-12: MISCELLANEOUS RESIDUE PROCESSING (DELETED 05/19/97) 12-1

13.0 PROCESS 771-13: METAL BURNING (DELETED 02/03/94) 13-1

14.0 PROCESS 771-14: CRUSHING AND GRINDING (DELETED 02/03/94) . . 14-1

15.0 PROCESS 771-15: SPRAY LEACH (DELETED 02/03/94) 15-1

16.0 PROCESS 771-16: OY LEACH (DELETED 02/03/94) 16-1

17.0 PROCESS 771-17: OY PRECIPITATION (DELETED 02/03/94) 17-1

18.0 PROCESS 771-18: SPECIAL RECOVERY ANION EXCHANGE (DELETED 05/19/97) 18-1

19.0 PROCESS 771-19: CAUSTIC FILTRATION (DELETED 02/03/94) 19-1

20.0 PROCESS 771-20: FUME SCRUBBER (DELETED 02/03/94) 20-1

21.0 PROCESS 771-21: VACUUM SYSTEMS (DELETED 02/03/94) 21-1

22.0 PROCESS 771-22: CHEMICAL MAKE-UP (DELETED 05/19/97) 22-1

23.0 PROCESS 771-23: RADIOACTIVE INORGANIC LABORATORY 23-1

24.0 PROCESS 771-24: CHEMICAL STANDARDS LAB 24-1

25.0 PROCESS 771-25: CHEMICAL TECHNOLOGY (DELETED 05/19/97) . . . 25-1

26.0 PROCESS 771-26: PLUTONIUM METALLURGY (DELETED 02/03/94) . . 26-1

27.0 PROCESS 771-27: PLENUMS 27-1

28.0 PROCESS 771-28: COOLING TOWERS 28-1

29.0 PROCESS 771-29: MAINTENANCE 29-1

30.0 PROCESS 771-30: PREVENTATIVE MAINTENANCE 30-1

31.0 PROCESS 771-31: RASCHIG RING REMOVAL AND REPLACEMENT . . 31-1

32.0 PROCESS 771-32: RADIATION MONITORING 32-1

33.0 PROCESS 771-33: NONDESTRUCTIVE ASSAY (DELETED 05/19/97) . . . 33-1

34.0 PROCESS 771-34: INCINERATOR (DELETED 05/19/97) 34-1

35.0 PROCESS 771-35: GENERAL BUILDING WASTE (RMMA) 35-1

36.0 PROCESS 771-36: H-4 SUPPORT VACUUM SYSTEM 36-1

37.0 PROCESS 771-37: GENERAL BUILDING WASTE (NON-RMMA) 37-1

38.0 PROCESS 771-38: RADIATION INSTRUMENTATION 38-1

39.0 PROCESS 771-39: SOLUTION PROCESSING 39-1

40.0 PROCESS 771-40: SET 34 DECONTAMINATION & DECOMMISSIONING 40-1

41.0 PROCESS 771-41: SET 37 DECONTAMINATION & DECOMMISSIONING 41-1

42.0 PROCESS 771-42: SET 40 DECONTAMINATION & DECOMMISSIONING 42-1

43.0 PROCESS 771-43: SET 44 DECONTAMINATION & DECOMMISSIONING 43-1

APPENDIX A: WASTE MANAGEMENT UNITS (WMUs) A-1

APPENDIX B: DELETED PROCESS DESCRIPTIONS B-1

1.0 PROCESS 771-1: HIGH-LEVEL DISSOLUTION B-2
2.0 PROCESS 771-2: LOW-LEVEL DISSOLUTION B-3
3.0 PROCESS 771-3: CATION EXCHANGE B-4
4.0 PROCESS 771-4: ANION EXCHANGE B-5
5.0 PROCESS 771-5: FEED PREPARATION EVAPORATION B-6
6.0 PROCESS 771-6: PRECIPITATION FEED BATCHING B-7
7.0 PROCESS 771-7: PRECIPITATION B-8
8.0 PROCESS 771-8: PRECIPITATION FILTRATE EVAPORATION . . B-9
9.0 PROCESS 771-9: CALCINATION B-10
10.0 PROCESS 771-10: HYDROFLUORINATION B-11
11.0 PROCESS 771-11: REDUCTION AND BUTTON BREAK-OUT . . . B-12
12.0 PROCESS 771-12: MISCELLANEOUS RESIDUE PROCESSING . . . B-13
13.0 PROCESS 771-13: METAL BURNING B-14
14.0 PROCESS 771-14: CRUSHING AND GRINDING B-15
15.0 PROCESS 771-15: SPRAY LEACH B-16
16.0 PROCESS 771-16: OY LEACH B-17
17.0 PROCESS 771-17: OY PRECIPITATION B-18
18.0 PROCESS 771-18: SPECIAL RECOVERY ANION EXCHANGE . . . B-19
19.0 PROCESS 771-19: CAUSTIC FILTRATION B-20
20.0 PROCESS 771-20: FUME SCRUBBER B-21
21.0 PROCESS 771-21: VACUUM SYSTEMS B-22
22.0 PROCESS 771-22: CHEMICAL MAKE-UP B-23
25.0 PROCESS 771-25: CHEMICAL TECHNOLOGY B-24
26.0 PROCESS 771-26: PLUTONIUM METALLURGY B-25
33.0 PROCESS 771-33: NONDESTRUCTIVE ASSAY B-26

34.0 PROCESS 771-34: INCINERATOR B-27

APPENDIX C: IDLE EQUIPMENT INVENTORY C-1

APPENDIX D: SUPERSEDED WSRIC BOOKS D-1

APPENDIX E: UHC WORKSHEETS E-1

0.0 INTRODUCTION

0.1 Waste Stream and Residue Identification and Characterization Program

The Waste Stream and Residue Identification and Characterization (WSRIC) Program was undertaken to identify and characterize the waste streams and residues generated or stored at the Rocky Flats Environmental Technology Site (RFETS) and to determine which streams and residues should be characterized as land disposal restricted (LDR) material.

This report and its companion reports have been prepared in fulfillment of requirements contained in the Agreement in Principle between the United States Department of Energy and the State of Colorado signed June 28, 1989, the Settlement Agreement and Compliance Order on Consent No. 89-10-30-01 between the United States Department of Energy and the Colorado Department of Public Health and Environment signed November 3, 1989, Federal Facility Compliance Agreement and Compliance Order on Consent, (Docket No. RCRA (3008) VIII-89-25) between the United States Department of Energy, the United States Environmental Protection Agency, and the State of Colorado signed September 19, 1989, and the Final Rocky Flats Cleanup Agreement between the Department of Energy, the State of Colorado, and the United States Environmental Protection Agency, dated July 19, 1996. In fiscal year 1994 Environmental Remediation (ER) Operable Units (OUs) were added to the scope of the WSRIC Program and additional investigative areas in the buffer zone and around RFETS.

The material contained herein provides additional detail on the nature, quantities, and hazards associated with hazardous, mixed hazardous and radioactive, and solely radioactive wastes which may result from operations at the RFETS.

This report was prepared using currently available information and data which may be subject to future modification.

The WSRIC Program identified and characterized the waste streams and residues based on information obtained from field investigations and waste stream sample analyses. Part of the characterization program entailed determining if the waste stream materials are RCRA hazardous and LDR. The program also identified which streams required sampling and analysis to augment the information collected during the field investigations and to assist in the hazardous waste determination.

The use of the word "hazardous" in this document means hazardous only in the sense that the waste/residue is subject to RCRA hazardous waste regulations. There are wastes and other outputs from the various processes that are hazardous according to other laws such as the Toxic Substances Control Act (TSCA), that are designated here as nonhazardous. "Nonhazardous," as used in this study, means that a substance is not subject to RCRA hazardous waste regulations. It is quite possible that a substance known to pose hazards to human health or the environment will be characterized as nonhazardous in accordance with RCRA regulations.

0.2 Document Organization

The complete WSRIC Program Report consists of the WSRIC Program Description and separately bound reports each addressing individual buildings or structures at RFETS. This document is one of approximately 150 such reports.

The WSRIC Program Description contains information on the various methods of data acquisition used during the program. All the building reports will use the same format and organization. Each will contain an introductory section, a number of process description sections, and appendices for supporting material.

NOTE: A process is a loosely defined term that has been used to describe common actions that generate waste. The term includes the formal definition of a process, i.e. a series of operations in the production of something; as well as referring to similar actions or tasks that generate waste.

Each book begins with an Executive Summary. It briefly describes the building's processes, waste streams, residues, and waste stream destinations.

Section 0.0 contains a brief program overview, document organization, introductory material on the specific building covered in the report, and the numbering system used to differentiate processes, waste streams, and waste management units (WMUs).

The remaining sections contain descriptions of the processes occurring within the building. Each section contains all the information exclusive to a given process. The process is described using a standardized presentation of narrative discussion, a flow diagram, a table presenting the process outputs, and a form describing each of the process outputs in further detail.

0.3 Overview of Building

Building 771 was the principal plutonium recovery facility at the Rocky Flats Environmental Technology Site. Due to the changing mission of the plant, the PU recovery processes in Building 771 have been curtailed.

The following are support processes current in Building 771. Plenums filter the building glovebox, exhaust, and air streams. The cooling towers cool the process water from Building 771. Maintenance provides service to all areas of the building. Radiation Operations provide radiological support to all building operations.

The primary functions performed in Building 771 Radioactive Inorganic Laboratory are Waste Characterization program support, which include isotopic, radiochemistry, calorimetry, X-ray diffraction, X-ray fluorescence, and particle size, inorganic metal, and gamma spectroscopy analyses. Chemical Standards Laboratory prepares equipment calibration standards and develops methods for checking the accuracy of analyses.

Building 771/774, a former plutonium processing facility, is undergoing decontamination and decommissioning (D&D) under the authority of a CDPHE-approved Decommissioning Operations Plan (DOP). D&D activities will include Contaminated Areas (CA), Radiological

Buffer Areas (RBA), and other areas outside RBAs including offices, locker rooms, and support buildings and structures. D&D will begin with approval of the B771 DOP in FY99.

Buildings 771/774 and approximately 25 ancillary buildings and structures are divided into 82 "sets" to facilitate planning and execution of D&D activities. A set is a geographical area within the facility that can be decommissioned as a stand-alone project by a dedicated D&D team. A set is typically one or more rooms within the facility and its contents, or a portion of a large room containing a logical grouping of process equipment. A set may also include one or more outside buildings or structures or utility systems that must remain operational until other sets are removed. Included in these sets is an estimated 116,000 feet of non-process piping, over 200 gloveboxes and more that 300 tanks. In general, D&D of a set includes removal of low-level equipment first which is packaged in 55-gallon drums or standard plywood or metal low-level waste crates. This is followed by disassembly and bagout of glovebox internal equipment and debris which is then packaged as TRU or TRM waste in 55-gallon drums or Standard Waste Boxes. Removal of overhead piping and components is next and is expected to consist of approximately 70% low-level waste and 30% TRU waste. Finally, where applicable, tanks and gloveboxes are enclosed in a soft sided containment (SSC) structure, manually size reduced, wrapped and packaged as TRU waste. Waste that requires special packaging may include asbestos in various forms, PCB light ballasts, and HEPA filters. Secondary waste will be generated from D&D activities and will include, but not be limited to, personal protective clothing (PPE), used SSC building materials, Kimwipes, absorbents, surgeon's gloves, tape, tools, and plastic containers. An estimated 14,000 feet of process piping will be drained and removed as part of facility deactivation and it is estimated that this removal will overlap some D&D activities in Building 771. Zone I exhaust will be disconnected from gloveboxes and blanked off at the header. Zone I exhaust headers and other key utilities will be removed as part of a utility set at the end of the Building 771/774 D&D project. The baseline plan calls for size reduction and removal of gloveboxes and tanks by D&D from within a soft sided containment structure. Size reduction will be performed by D&D workers using conventional hand and power tools. It is expected that a centralized size reduction facility will be installed in one of the set areas vacated in FY99 and will be used for size reduction of major components during the mid and later stages of facility closure.

Personnel performing D&D activities in radiological contaminated areas (RCA) will use protective clothing (Anti-C) and Powered Air Purifying Respirators (PAPR) or Supplied Breathing Air (SBA) suits. SBA work will typically be limited to the size reduction of gloveboxes and tanks from within an SSC. Glovebox integrity and personnel safety will be maximized by recertification of gloveboxes, replacement of cracked or opaque glovebox windows and the use of SSCs and glovebags for equipment size reduction and raschig ring removal, and through the use of sleeves for cutting exhaust ducting and contaminated overhead piping > 2 inches in diameter. The use of a hydraulic cut and crimp device will be used for removal of overhead piping 2 inches or less.

Baseline planning assumes glovebox and tank size reduction will be performed in-situ from inside an SSC. Two alternative concepts for centrally located size reduction facilities are being considered at this time but will not be available until after FY99.

Risk reduction and housekeeping activities are being/have been conducted during facility deactivation. These include the following:

- Removal and disposition of accountable nuclear material
- Removal and disposition of residue waste drums
- Removal and disposal of excess chemicals
- Removal and disposal of external debris and combustibles
- Draining and removal of 38 process piping systems

Following deactivation and approval of the DOP, D&D activities will be conducted and include the following:

- Radiological survey and free release of candidate equipment items
- Isolation of 120/240/480 electrical systems not required for D&D operations
- Removal, size reduction and waste packaging of electrical conduit and panels
- Removal, size reduction and waste packaging of external low-level equipment
- Certification and preparation of gloveboxes
- Disassembly/size reduction and removal of internal glovebox equipment and debris
- Removal of SNM holdup from gloveboxes and associated ducting
- Application of spray fixative to interior surfaces of glovebox
- Stripping of fixative coatings to decontaminate glovebox interior surfaces
- Isolation and removal of non-process piping systems not required for D&D of subsequent sets.
- Removal, segregation, and packaging of asbestos containing materials
- Removal, segregation, and packaging of PCB or PCB containing components
- Construction of soft side containment structures around tanks and gloveboxes
- Removal and packaging of contaminated raschig rings from tanks and sumps
- Manual size reduction of gloveboxes and tanks to facilitate waste packaging
- Draining and proper disposal of non-process solutions, liquids, i.e., pump oils, water, etc.
- Deconstruction and waste packaging of used soft side containment structures
- Floor repair where necessary to facilitate further D&D efforts

Radiation Protection personnel use paper smears to determine the level of removable contamination on equipment and facilities in the area and on items being prepared for transfer out of the area. Wipes are processed through an alpha counter and disposed in a designated container located at each counter. Personnel leaving the Contaminated Area are monitored at a step off pad for alpha contamination, where anti-contamination clothing/gear collected.

0.4 List of Processes in Building

771-1, High-Level Dissolution (Deleted)
771-2, Low-Level Dissolution (Deleted)
771-3, Cation Exchange (Deleted)
771-4, Anion Exchange (Deleted)
771-5, Feed Preparation Evaporation (Deleted)
771-6, Precipitation Feed Batching (Deleted)
771-7, Precipitation (Deleted)
771-8, Precipitation Filtrate Evaporator (Deleted)
771-9, Calcination (Deleted)
771-10, Hydrofluorination (Deleted)
771-11, Reduction and Button Breakout (Deleted)
771-12, Miscellaneous Residue Processing (Deleted)
771-13, Metal Burning (Deleted)
771-14, Crushing and Grinding (Deleted)
771-15, Spray Leach (Deleted)
771-16, Oralloy Leach (Deleted)
771-17, Oralloy Precipitation (Deleted)
771-18, Special Recovery Anion Exchange (Deleted)
771-19, Caustic Filtration (Deleted)
771-20, Fume Scrubber (Deleted)
771-21, Vacuum Systems (Deleted)
771-22, Chemical Make-up (Deleted)
771-23, Radioactive Inorganic Laboratory
771-24, Chemical Standards Laboratory
771-25, Chemical Technology (Deleted)
771-26, Plutonium Metallurgy (Deleted)
771-27, Plenums
771-28, Cooling Towers
771-29, Maintenance
771-30, Preventive Maintenance
771-31, Raschig Ring Removal and Replacement
771-32, Radiation Monitoring
771-33, Nondestructive Assay (Deleted)
771-34, Incinerator (Deleted)
771-35, General Building Waste (RMMA)
771-36, H-4 Support Vacuum System
771-37, General Building Waste (Non-RMMA)
771-38, Radiation Instrumentation
771-39, Solution Processing
771-40, Set 34, Decontamination & Decommissioning
771-41, Set 37, Decontamination & Decommissioning
771-42, Set 40, Decontamination & Decommissioning
771-43, Set 44, Decontamination & Decommissioning

0.5 Numbering Systems

Three numbering systems have been devised to uniquely identify each process, waste stream, and WMU at RFETS. The process numbering system is described in Section 0.5.1; the waste stream numbering system is described in Section 0.5.2; the WMU numbering system is described in Section 0.5.3.

0.5.1 Process/Output Numbering System

Each process that occurs or has occurred at RFETS has been assigned a unique number that consists of the building number, a number assigned to a given process within the building, and an output number. The following is an example of a process/output number:

111-1-5

The first field, "111," identifies the building, and the second field, "1," is the number assigned to a specific process within Building 111. If an additional process were housed in Building 111, it would be given the number "111-2." In this manner, all processes at RFETS have a distinct label. The third field, "5," is the output number. This is a sequential number given to each waste stream within a process. In cases where waste streams within the same building and process have identical IDC or WFC and CCC codes (see Section 0.5.2), the output number will uniquely identify each.

A process/output number may also be revised. A revised process/output number would be identified by an alpha character in the third field. The following is an example of a revised process/output number:

111-1-5A

A revised process number indicates that a characterization change has been made to the waste stream due to either analytical data, regulatory changes, or reassessments indicating a characterization change is warranted. A revised process/output number does not indicate that the waste stream itself has changed; only that the characterization of the waste stream has changed.

0.5.2 Waste Stream Numbering System

All the waste streams at RFETS have been assigned a unique number. This number consists of the process/output number (see Section 0.5.1), the waste form code (WFC) or item description code (IDC), and a chemical constituent code. The following is an example of a waste stream number:

111-1-5-1930-36

The first three fields are the building, process, and output numbers respectively, as discussed in Section 0.5.1. The fourth field, "1930," is the WFC or IDC. This number describes the type of material the waste is. IDCs are used for radioactive wastes and the WFCs are used for nonradioactive wastes. The waste form code helps track waste streams and residues generated at RFETS. The fifth field, "36," is the chemical constituent code (CCC). The CCC system will

aid RFETS in tracking up to three chemical constituents within a waste stream. An arbitrary two-digit number has been assigned to the chemical constituents of interest to RFETS; certain chemical composites are denoted by two alpha-numeric characters. A "00" CCC denotes an output stream which contains no chemicals of interest or is not a solid waste. A list of CCCs and WFCs are maintained by Waste Systems. The IDCs are identified and described in WO-4034, "Radioactive Waste Packaging Requirements".

0.5.3 WMU Numbering System

Each WMU has been assigned a unique number consistent with the numbers currently used at RFETS. The following is an example of a WMU number:

111-1729

The first field, "111," identifies the building, and the second field, "1729," is the number assigned to a specific WMU within Building 111. In this manner, all WMUs at RFETS have a distinct number. The WSRIC book does not normally identify the WMU number, but identifies the WMU type (e.g., satellite or 90-day collection area).

0.6 Process Descriptions and Flow Diagrams

Characterizations of waste streams and residues contained in this report are based on process knowledge. Each process is described in sufficient detail to provide the reader with an understanding of the rationale of each characterization. Flow diagrams enhance the narrative descriptions with pictorial representations of the process. Not all processes have a flow diagram. Flow diagrams show inputs, outputs, material flow, and major equipment. Standard symbols for the flow diagrams are shown on the following page in Figure 0.1.

0.7 Conventions Used In Process Descriptions

Informally defined, a process is a grouping of individual operations performed with chemicals or equipment in a given building. Each process in this building is fully described in this section. Each process description details the functions and mechanics of the process and the waste streams and residues generated by the process. Each process description contains the following:

1) A narrative description
2) A process flow diagram (not always included)
3) An output information table
4) A waste stream and residue description form.

The narrative discussion describes the function of the process, the equipment used in the process, the individual operations required to perform the function, and the outputs from the process.

The process output table follows the process flow diagram(s) and summarizes the information on each of the process waste streams in a process. The process output table contains information presented through clearly labeled and easily understood columns.

The waste stream and residue description sheets that follow each table provide additional information for each output. Description sheets include waste characterizations, detailed narrative descriptions, output destinations, and the justification rationale for the characterization.

Generation rates for output materials were estimated based on the information obtained during the field investigations. When such estimates of the quantities were available, the standardized units from Appendix A of 40 CFR 300 were used as follows:

$$1 \text{ ton} = 1 \text{ yd}^3 = 4 \text{ drums} 1 \text{ drum} = 50 \text{ gal} = 500 \text{ lbs}$$
$$1 \text{ gal} = 10 \text{ lbs}$$

AutoCAD 12, File Name: Symbol

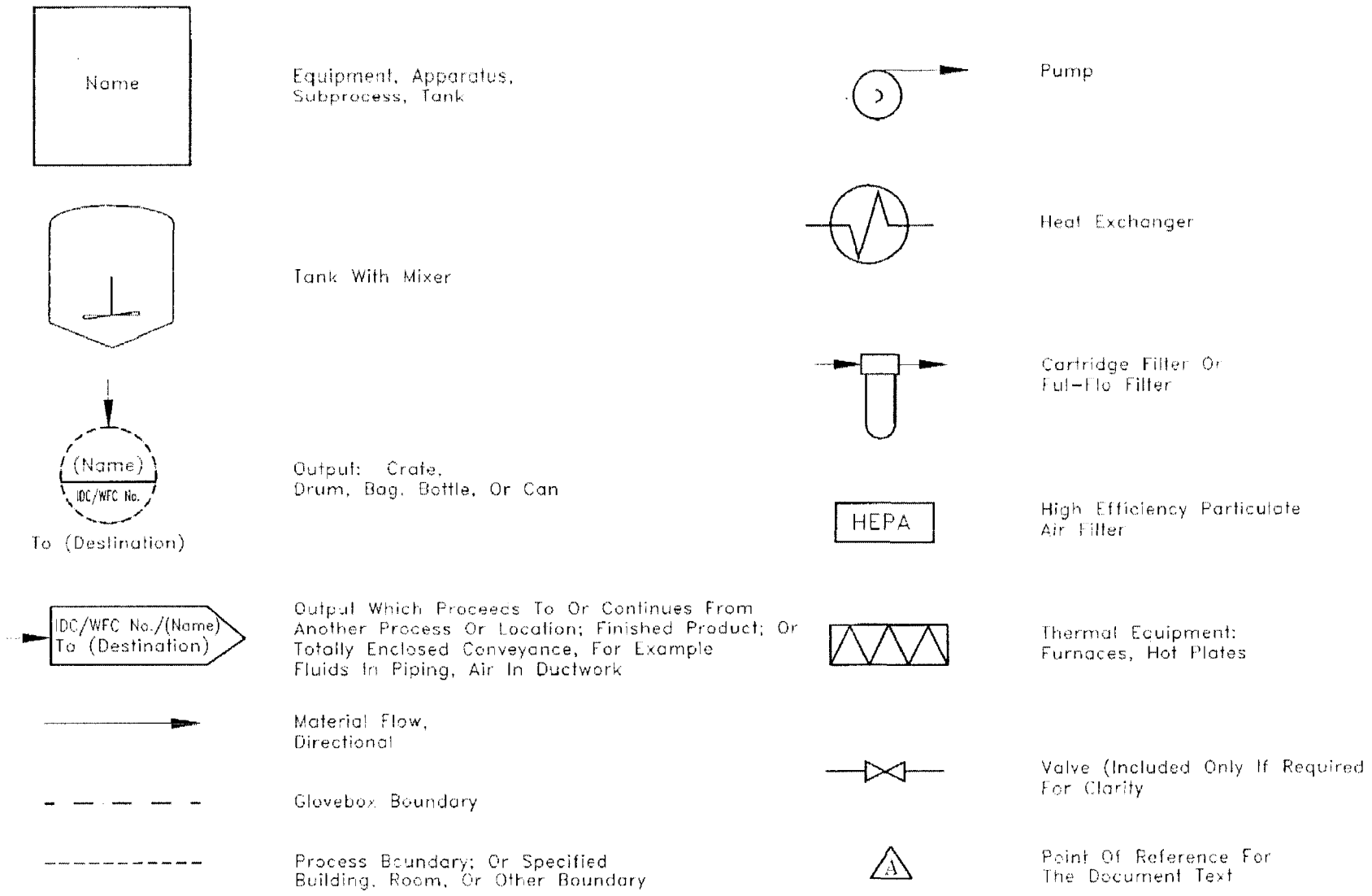

FIGURE 0.1

Rocky Flats Environmental Technology Site Waste Stream & Residue Identification & Characterization	WSRIC PROCESS FLOW DIAGRAM SYMBOL SHEET	Task	By	Date
		Designed	J. Joyce	02/25/94
		Drawn	B. Crawford	02/21/95
		Checked	A. A. Damiano	02/21/95

THIS PAGE INTENTIONALLY LEFT BLANK

1.0 PROCESS 771-1: HIGH-LEVEL DISSOLUTION

This process has been deleted by EG&G operations personnel on 02/03/94.

THIS PAGE INTENTIONALLY LEFT BLANK

2.0 PROCESS 771-2: LOW-LEVEL DISSOLUTION

This process has been deleted by EG&G operations personnel on 02/03/94.

THIS PAGE INTENTIONALLY LEFT BLANK

3.0 PROCESS 771-3: CATION EXCHANGE

This process has been deleted by EG&G operations personnel on 02/03/94.

PADC-93-01599

THIS PAGE INTENTIONALLY LEFT BLANK

4.0 PROCESS 771-4: ANION EXCHANGE

This process has been deleted by RFETS personnel on 05/19/97.

PADC-93-01598

THIS PAGE INTENTIONALLY LEFT BLANK

5.0 PROCESS 771-5: FEED EVAPORATION

This process has been deleted by EG&G operations personnel on 02/03/94.

PADC-93-01597

THIS PAGE INTENTIONALLY LEFT BLANK

6.0 PROCESS 771-6: PRECIPITATION FEED BATCHING

This process has been deleted by EG&G operations personnel on 02/03/94.

PADC-93-01596

THIS PAGE INTENTIONALLY LEFT BLANK

7.0 PROCESS 771-7: PRECIPITATION

This process has been deleted by EG&G operations personnel on 02/03/94.

PADC-93-01595

THIS PAGE INTENTIONALLY LEFT BLANK

8.0 PROCESS 771-8: PRECIPITATION FILTRATE EVAPORATION

This process has been deleted by EG&G operations personnel on 02/03/94.

PADC-93-01594

THIS PAGE INTENTIONALLY LEFT BLANK

9.0 PROCESS 771-9: CALCINATION

This process has been deleted by EG&G operations personnel on 02/03/94.

THIS PAGE INTENTIONALLY LEFT BLANK

10.0 PROCESS 771-10: HYDROFLUORINATION

This process has been deleted by EG&G operations personnel on 02/03/94.

PADC-93-01592

THIS PAGE INTENTIONALLY LEFT BLANK

11.0 PROCESS 771-11: REDUCTION AND BUTTON BREAK-OUT

This process has been deleted by EG&G operations personnel on 02/03/94.

THIS PAGE INTENTIONALLY LEFT BLANK

12.0 PROCESS 771-12: MISCELLANEOUS RESIDUE PROCESSING

This process has been deleted by RFETS personnel on 05/19/97.

PADC-93-01590

THIS PAGE INTENTIONALLY LEFT BLANK

13.0 PROCESS 771-13: METAL BURNING

This process has been deleted by EG&G operations personnel on 02/03/94.

THIS PAGE INTENTIONALLY LEFT BLANK

14.0 PROCESS 771-14: CRUSHING AND GRINDING

This process has been deleted by EG&G operations personnel on 02/03/94.

PADC-93-01548

THIS PAGE INTENTIONALLY LEFT BLANK

15.0 PROCESS 771-15: SPRAY LEACH

This process has been deleted by EG&G operations personnel on 02/03/94.

PADC-93-01547

THIS PAGE INTENTIONALLY LEFT BLANK

16.0 PROCESS 771-16: ORALLOY LEACH

This process has been deleted by EG&G operations personnel on 02/03/94.

PADC-93-01546

THIS PAGE INTENTIONALLY LEFT BLANK

17.0 PROCESS 771-17: OY PRECIPITATION

This process has been deleted by EG&G operations personnel on 02/03/94.

PADC-93-01545

THIS PAGE INTENTIONALLY LEFT BLANK

18.0 PROCESS 771-18: SPECIAL RECOVERY ANION EXCHANGE

This process has been deleted by RFETS personnel on 05/19/97.

THIS PAGE INTENTIONALLY LEFT BLANK

19.0 PROCESS 771-19: CAUSTIC FILTRATION

This process has been deleted by EG&G operations personnel on 02/03/94.

THIS PAGE INTENTIONALLY LEFT BLANK

20.0 PROCESS 771-20: FUME SCRUBBER

This process has been deleted by EG&G operations personnel on 02/03/94.

THIS PAGE INTENTIONALLY LEFT BLANK

21.0 PROCESS 771-21: VACUUM SYSTEMS

This process has been deleted by EG&G operations personnel on 02/03/94.

PADC-93-01541

THIS PAGE INTENTIONALLY LEFT BLANK

22.0 PROCESS 771-22: CHEMICAL MAKE-UP

This process has been deleted by RFETS personnel on 05/19/97.

PADC-93-01548

THIS PAGE INTENTIONALLY LEFT BLANK

23.0 PROCESS 771-23: RADIOACTIVE INORGANIC LABORATORY

The Radioactive Inorganic Laboratory, located in Rooms 152, 154-156, 158, 160 and 162-165, provides plutonium assay, impurity analysis, and miscellaneous other chemical analyses in support of material processing operations, Environmental Restoration, Safeguards (Nuclear Material Accountability), R&D laboratories and other laboratories. The analytical techniques involved include X-ray fluorescence, X-ray diffraction, particle size, pH measurements, alpha/gamma scintillation, spectrophotometry, calorimetry, gamma spectroscopy, and various titration procedures. Equipment used in this lab include balances, small furnaces, mixing equipment, filtration units, and standard laboratory instruments. Figure 23.1 shows the inputs, process flow, and outputs associated with the Radioactive Inorganic Laboratory.

The samples sent to the lab include plutonium metal turnings, plutonium oxide, acidic and basic plutonium solutions, organic solutions, various process residues, waste characterization, and environmental samples. The principal chemicals used in the lab include sodium hydroxide, hydrochloric acid, nitric acid, cyclohexane, trioctylphosphinic oxide (TOPO), yttrium, sodium citrate, silver nitrate, KNCS hydrofloric, and potassium thiocyanate. Samples are received from production, R&D and other laboratories and waste generators throughout plant site. Aqueous or organic samples are prepared for alpha or gamma scintillation analysis using nitric acid or nitric acid and TOPO-cyclohexane. Aqueous samples are prepared for x-ray fluorescence analysis using yttrium dissolved in nitric acid. Sodium hydroxide is the titrant for the analysis of hydrogen and hydroxyl ion concentration. These samples are prepared in Gloveboxes 79-83. Hydrochloric acid and nitric acid is used in the preparation of samples for analysis by atomic absorption. Minimal numbers of samples are analyzed using spectrophotometry, and chloride ion titration.

Solid samples are analyzed by fusing the solid with potassium pyrosulfate flux and dissolving the resultant material with nitric acid. Some solid samples require grinding prior to analysis.

Sample solutions are segregated by radioactive species, concentration and whether aqueous or organic. These analyzed sample solutions are collected in four-liter plastic bottles and transferred to a satellite collection area. Empty reagent bottles are rinsed in process sinks and reused to make various reagents or discarded in glass or plastic drums. Excess sample materials are collected in 4-liter bottles then placed in a satellite collection area or transferred back to the originator. Unused chemicals are being stored in the lab awaiting final disposition. Dry combustibles are consolidated to a drum and then taken to the drum counter for assay. Wet combustibles are placed in a drum in Room 164 and then taken to the drum counter for assay. Used glovebox filters, glass, plastic, and light metal are all placed in the appropriate drums and then taken to the drum counter for assay. Circuit boards and parts, (generated by Radiation Instrumentation) and glovebox gloves are placed in the appropriate satellite collection areas. Glovebox exhaust is vented through the filter plenum. Rinse water is sent down the process drain. Process Table 771-23 presents the outputs associated with the Radioactive Inorganic Laboratory process and provides their dispositions and hazardous character.

AutoCAD 12, File Name: 771-23

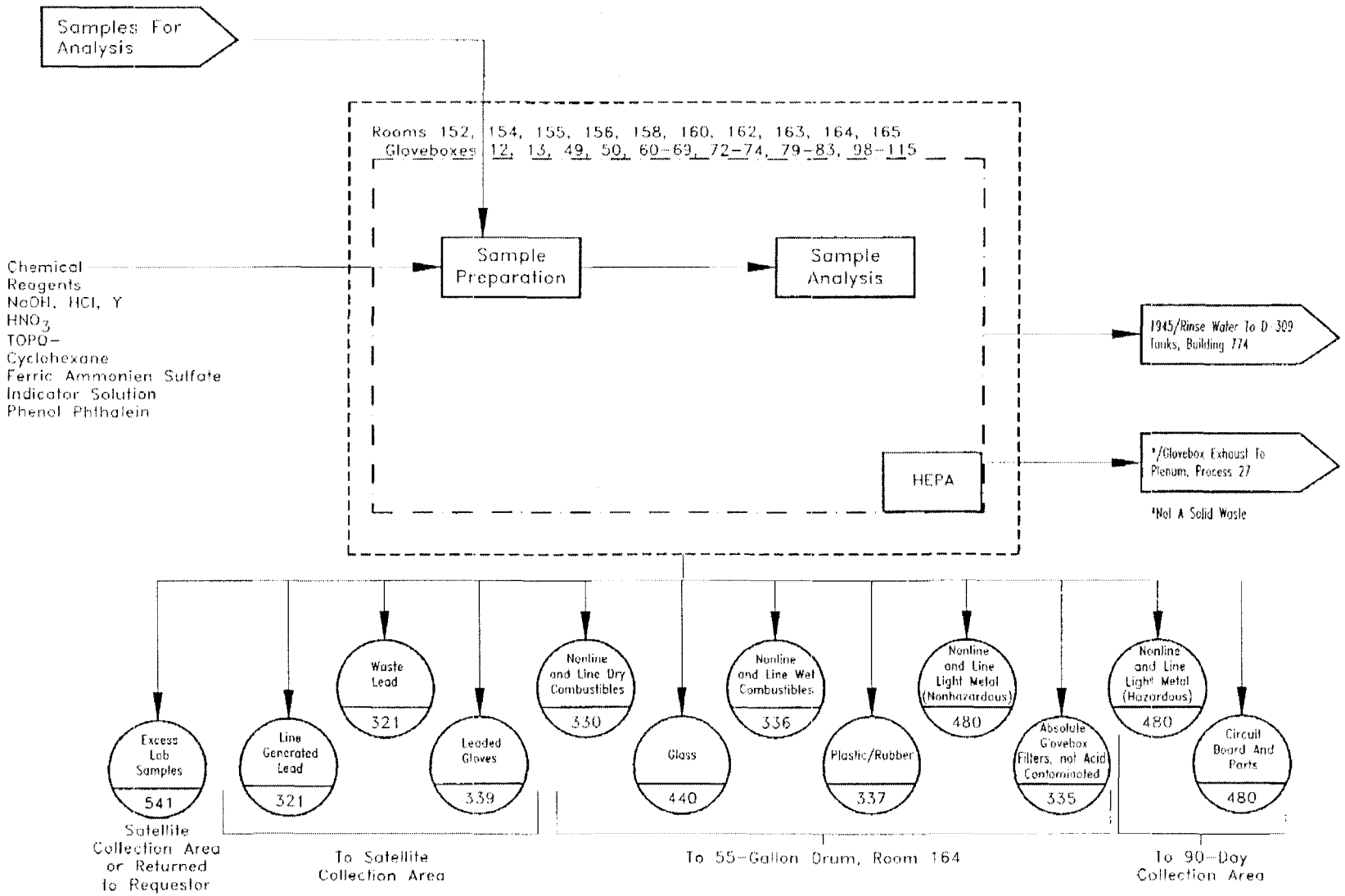

FIGURE 23.1

Rocky Flats Environmental Technology Site Waste Stream & Residue Identification & Characterization	BUILDING 771/PROCESS 23 PROTECTED AREA RADIOASSAY LAB	Task	By	Date
		Designed	R. Medlyn	07/10/90
		Drawn	R. Nisely	06/12/96
		Checked	J. Schoen	08/04/98

PROCESS 771-23 RADIOACTIVE INORGANIC LABORATORY

Process Number	IDC/ WFC No.	CCCs RCRA Reg. Const.	CCCs Non-RCRA Reg. Const.	Comp. Codes	Description RCRA Reg. Chemical Constituents: Non-RCRA Reg. Chemical Constituents:	Collection	LDR Codes	RCRA Haz. Waste	RCRA-Land Disposal Restricted (Part 268)	Wastewater/Non-Wastewater: Debris/Non-Debris: Subcategory:	EPA Codes
771-23-1	330	00	00	NA	Dry Combustibles (Nonline And Line) RCRA Reg. Chemical Constituents: None Non-RCRA Reg. Chemical Constituents: None	55-Gallon Drum		No	No		
771-23-2	336	00	0205	NA	Wet Combustibles (Nonline And Line) RCRA Reg. Chemical Constituents: None Non-RCRA Reg. Chemical Constituents: Acid - General Base	55-Gallon Drum In Room 164		No	No		

Process Number	IDC/ WFC No.	CCCs RCRA Reg. Const.	CCCs Non-RCRA Reg. Const.	Comp. Codes	Description RCRA Reg. Chemical Constituents: Non-RCRA Reg. Chemical Constituents:	Collection	LDR Codes	RCRA Haz. Waste	RCRA-Land Disposal Restricted (Part 268)	Wastewater/Non-Wastewater: Debris/Non-Debris: Subcategory:	EPA Codes
771-23-4	339	24	00	NA	Leaded Glovebox Gloves RCRA Reg. Chemical Constituents: Lead Non-RCRA Reg. Chemical Constituents: None	Satellite Collection Area	RT D PB1	Yes	Yes Does Not Meet Treatment Standards	Debris Lead	D008
771-23-5	335	00	02	NA	Absolute Glovebox Filters-Not Acid Contaminated RCRA Reg. Chemical Constituents: None Non-RCRA Reg. Chemical Constituents: Acid - General	55-Gallon Drum In Room 164		No	No		

Process Number	IDC/ WFC No.	CCCs RCRA Reg. Const.	CCCs Non-RCRA Reg. Const.	Comp. Codes	Description RCRA Reg. Chemical Constituents: Non-RCRA Reg. Chemical Constituents:	Collection	LDR Codes	RCRA Haz. Waste	RCRA-Land Disposal Restricted (Part 268)	Wastewater/Non-Wastewater: Debris/Non-Debris: Subcategory:	EPA Codes
771-23-6	337	00	00	NA	Plastic And Rubber RCRA Reg. Chemical Constituents: None Non-RCRA Reg. Chemical Constituents; None	55-Gallon Drum In Room 164		No	No		
771-23-7	440	00	00	NA	Glass RCRA Reg. Chemical Constituents: None Non-RCRA Reg. Chemical Constituents: None	55-Gallon Drum In Room 164		No	No		

Process Number	IDC/ WFC No.	CCCs RCRA Reg. Const.	CCCs Non-RCRA Reg. Const.	Comp. Codes	Description RCRA Reg. Chemical Constituents: Non-RCRA Reg. Chemical Constituents:	Collection	LDR Codes	RCRA Haz. Waste	RCRA-Land Disposal Restricted (Part 268)	Wastewater/Non-Wastewater: Debris/Non-Debris: Subcategory:	EPA Codes
771-23-8	480	00	00	NA	Nonline And Line Light Metal (Nonhaz) RCRA Reg. Chemical Constituents: None Non-RCRA Reg. Chemical Constituents: None	55-Gallon Drum In Room 164		No	No		
771-23-10	1945	00	00	3A	Rinse Water RCRA Reg. Chemical Constituents: None Non-RCRA Reg. Chemical Constituents: None	D-309 Tanks, Building 774		No	No		

Process Number	IDC/ WFC No.	CCCs RCRA Reg. Const.	CCCs Non-RCRA Reg. Const.	Comp. Codes	Description RCRA Reg. Chemical Constituents: Non-RCRA Reg. Chemical Constituents:	Collection	LDR Codes	RCRA Haz. Waste	RCRA-Land Disposal Restricted (Part 268)	Wastewater/Non-Wastewater: Debris/Non-Debris: Subcategory:	EPA Codes
771-23-12A	541	N2	00	??	Excess Sample And Rinsate RCRA Reg. Chemical Constituents: RCRA Metals, Toxicity Characteristic Organics, Listed Solvents, Or P-And U-Listed Waste Non-RCRA Reg. Chemical Constituents: None	Satellite Collection Area	RA	Yes	Yes Requires Analysis		See Rationale
771-23-15A	480	2436	00	NA	Circuit Boards & Electronic Equipment Parts RCRA Reg. Chemical Constituents: Lead Silver Non-RCRA Reg. Chemical Constituents: None	Satellite Collection Area	RT D CD1, PB1	Yes	Yes Does Not Meet Treatment Standards	Debris Cadmium, Lead	D008, D011

Process Number	IDC/ WFC No.	CCCs RCRA Reg. Const.	CCCs Non-RCRA Reg. Const.	Comp. Codes	Description RCRA Reg. Chemical Constituents: Non-RCRA Reg. Chemical Constituents:	Collection	LDR Codes	RCRA Haz. Waste	RCRA-Land Disposal Restricted (Part 268)	Wastewater/Non-Wastewater: Debris/Non-Debris: Subcategory:	EPA Codes
771-23-18	321	24	00	NA	Waste Lead RCRA Reg. Chemical Constituents: Lead Non-RCRA Reg. Chemical Constituents: None	Placed In A 55-Gallon Drum In A Satellite Collection Area	RT NWW PB3	Yes	Yes Does Not Meet Treatment Standards	Non-Wastewater Lead/Radioactive	D008

WASTE STREAM AND RESIDUE DESCRIPTION AND CHARACTERIZATION

Process Number: 771-23-1
IDC/WFC: 330

Title: RADIOACTIVE INORGANIC LABORATORY
Description: Dry Combustibles (Nonline And Line)

- ☐ RCRA Hazardous
- ■ RCRA Nonhazardous
- ☐ By Analytical Data
- ■ By Process Knowledge
- ☐ LDR Regulated
- ■ Not LDR Regulated
- ☐ Non-Wastewater
- ☐ Wastewater
- ☐ Product
- ☐ High Content Residue
- ☐ Low Content Residue
- ■ Transuranic
- ■ Low-Level
- ☐ Nonradioactive
- ☐ Source/Special Nuclear Materials
- ☐ Debris
- ☐ Fuel Blending
- ☐ Uncontained Gas
- ☐ RCRA Sample
- ☐ Recyclable Material
- ☐ Recycled/Reused
- ☐ TSCA Reg. Waste
- ☐ Evaluated in Another Process

EPA Codes:

Description (Material, Type, Size, Color, etc.):
Dry combustibles may include paper, rags, wipes, cloth or other combustibles generated inside or outside of the gloveboxes.

How the Output is Generated:
Laboratory Cleanup Or Maintenance

Generation Rate:
400 Gallons Yearly

How the Output is Managed:
Dry combustibles are disposed of in a 55-gallon drum in Room 164. Full drums are taken to the drum counter.

Chemicals/Contaminants in or on the Output:
None

Characterization Rationale:
This output may be line or nonline generated in a Radioactive Materials Management Area and can be a transuranic or low-level waste. According to process knowledge, the output contains no RCRA hazardous constituents and exhibits no RCRA hazardous characteristics. Therefore, this output has been designated a nonhazardous, transuranic or low-level waste.

WASTE STREAM AND RESIDUE DESCRIPTION AND CHARACTERIZATION

Process Number: 771-23-2
IDC/WFC: 336

Title: RADIOACTIVE INORGANIC LABORATORY
Description: Wet Combustibles (Nonline And Line)

- ☐ RCRA Hazardous
- ■ RCRA Nonhazardous
- ☐ By Analytical Data
- ■ By Process Knowledge
- ☐ LDR Regulated
- ■ Not LDR Regulated
- ☐ Non-Wastewater
- ☐ Wastewater
- ☐ Product
- ☐ High Content Residue
- ☐ Low Content Residue
- ■ Transuranic
- ■ Low-Level
- ☐ Nonradioactive
- ☐ Source/Special Nuclear Materials
- ☐ Debris
- ☐ Fuel Blending
- ☐ Uncontained Gas
- ☐ RCRA Sample
- ☐ Recyclable Material
- ☐ Recycled/Reused
- ☐ TSCA Reg. Waste
- ☐ Evaluated in Another Process

EPA Codes:

Description (Material, Type, Size, Color, etc.):
Wet combustibles may contain paper, rags, wipes, cloth or other combustibles contaminated with solution generated by the analytical laboratory.

How the Output is Generated:
During Routine Process Operations And Through Some Spillage

Generation Rate:
200 Gallons Yearly

How the Output is Managed:
Wet combustibles are disposed of in a 55-gallon drum in Room 164. Full drums are taken to the drum counter.

Chemicals/Contaminants in or on the Output:
Acids And Bases

Characterization Rationale:
This output can contain line or nonline material, but is not generated as a residue. Based on process knowledge, the wet combustibles have not contacted any lab solutions which contain RCRA hazardous constituents other than acids or bases. Because the acids and bases are not in liquid form on the wet combustibles, then cannot exhibit the characteristic of corrosivity. Therefore, the wet combustibles are nonhazardous TRU, or low-level waste.

Process Number: 771-23-4
IDC/WFC: 339

Title: RADIOACTIVE INORGANIC LABORATORY
Description: Leaded Glovebox Gloves

- ■ RCRA Hazardous
- □ RCRA Nonhazardous
- ■ By Analytical Data
- □ By Process Knowledge
- ■ LDR Regulated
- □ Not LDR Regulated
- □ Non-Wastewater
- □ Wastewater
- □ Product
- □ High Content Residue
- □ Low Content Residue
- ■ Transuranic
- ■ Low-Level
- □ Nonradioactive
- □ Source/Special Nuclear Materials
- ■ Debris
- □ Fuel Blending
- □ Uncontained Gas
- □ RCRA Sample
- □ Recyclable Material
- □ Recycled/Reused
- □ TSCA Reg. Waste
- □ Evaluated in Another Process

EPA Codes:
D008

Description (Material, Type, Size, Color, etc.):
Leaded glovebox gloves are used for personnel protection for handling plutonium and plutonium-containing materials.

How the Output is Generated:
The gloves are replaced on a periodic or as-needed basis.

Generation Rate:
55 Gallons Yearly

How the Output is Managed:
Leaded glovebox gloves are disposed of in a 55-gallon drum (Satellite Collection Area) in Room 114. Full drums are taken to drum counting.

Chemicals/Contaminants in or on the Output:
Lead

Characterization Rationale:
This output is line generated, but is always generated as TRU or low-level waste. According to process knowledge, and supported by analytical data (91G0049, 93G0191), this output contains a hazardous constituent, lead, and exhibits a hazardous characteristic of TC toxicity under RCRA, and is designated as TRU, mixed waste or low-level, mixed waste. The output may be contaminated with acid, which is known to be a corrosive liquid under RCRA, but cannot exhibit this characteristic, as the gloves are rinsed and dried before disposal. This output meets the definition of hazardous debris and can be treated by an appropriate technology in 40 CFR 268.45. The concentration-based treatment standard for lead, and the treatment standards for underlying hazardous constituents as defined in 40 CFR 268.48 must be met for treatment residue(s) prior to land disposal. The underlying hazardous constituents associated with this output are listed in Appendix E.

WASTE STREAM AND RESIDUE DESCRIPTION AND CHARACTERIZATION

Process Number: 771-23-5
IDC/WFC: 335

Title: RADIOACTIVE INORGANIC LABORATORY
Description: Absolute Glovebox Filters-Not Acid Cont.

- ▫ RCRA Hazardous
- ▪ RCRA Nonhazardous
- ▫ By Analytical Data
- ▪ By Process Knowledge
- ▫ LDR Regulated
- ▪ Not LDR Regulated
- ▫ Non-Wastewater
- ▫ Wastewater
- ▫ Product
- ▫ High Content Residue
- ▪ Low Content Residue
- ▪ Transuranic
- ▪ Low-Level
- ▫ Nonradioactive
- ▫ Source/Special Nuclear Materials
- ▫ Debris
- ▫ Fuel Blending
- ▫ Uncontained Gas
- ▫ RCRA Sample
- ▫ Recyclable Material
- ▫ Recycled/Reused
- ▫ TSCA Reg. Waste
- ▫ Evaluated in Another Process

EPA Codes:

Description (Material, Type, Size, Color, etc.):
High Efficiency Particulate Air (HEPA) filters are used to filter particulate matter from air entering and exhausting from the glovebox. HEPA filters used by the analytical laboratory could be exposed to acid vapors in small quantities.

How the Output is Generated:
When The Filters Are Changed Out

Generation Rate:
250 Gallons Yearly

How the Output is Managed:
HEPA filters are disposed of in a 55-gallon drum in Room 164. Full drums are taken to the drum counter.

Chemicals/Contaminants in or on the Output:
Acid

Characterization Rationale:
According to process knowledge, this output is line generated, and can be a residue or a waste. Although it is contaminated with corrosive, it cannot exhibit the characteristic of corrosivity because the waste is not liquid. It is designated as nonhazardous, low-content residue, or nonhazardous TRU or low-level waste, to be determined at assay.

WASTE STREAM AND RESIDUE DESCRIPTION AND CHARACTERIZATION

Process Number: 771-23-6
IDC/WFC: 337

Title: RADIOACTIVE INORGANIC LABORATORY
Description: Plastic And Rubber

- ☐ RCRA Hazardous
- ■ RCRA Nonhazardous
- ☐ By Analytical Data
- ■ By Process Knowledge
- ☐ LDR Regulated
- ■ Not LDR Regulated
- ☐ Non-Wastewater
- ☐ Wastewater
- ☐ Product
- ☐ High Content Residue
- ■ Low Content Residue
- ■ Transuranic
- ■ Low-Level
- ☐ Nonradioactive
- ☐ Source/Special Nuclear Materials
- ☐ Debris
- ☐ Fuel Blending
- ☐ Uncontained Gas
- ☐ RCRA Sample
- ☐ Recyclable Material
- ☐ Recycled/Reused
- ☐ TSCA Reg. Waste
- ☐ Evaluated in Another Process

EPA Codes:

Description (Material, Type, Size, Color, etc.):
Rubber Parts And Hoses, Plastic Bags, Empty Plastic Vials, Pipette Tips, And Other Plasticware Rinsed Prior To Being Discarded

How the Output is Generated:
Empty Containers, Used Lab Equipment, Plastic Bags

Generation Rate:
700 Gallons Yearly

How the Output is Managed:
Plastics will be disposed of in a 55-gallon drum in Room 164. Full drums are taken to the drum counter.

Chemicals/Contaminants in or on the Output:
None

Characterization Rationale:
This output is line and nonline generated in a Radioactive Materials Management Area. According to process knowledge, this output contains no RCRA hazardous constituents and exhibits no RCRA hazardous characteristics. This output can be a nonhazardous, low-content residue or a nonhazardous, transuranic or low-level waste. The level of radioactivity will be determined by assay of each collection container.

WASTE STREAM AND RESIDUE DESCRIPTION AND CHARACTERIZATION

Process Number: 771-23-7 **Title:** RADIOACTIVE INORGANIC LABORATORY
IDC/WFC: 440 **Description:** Glass

- ☐ RCRA Hazardous
- ■ RCRA Nonhazardous
- ☐ By Analytical Data
- ■ By Process Knowledge
- ☐ LDR Regulated
- ■ Not LDR Regulated
- ☐ Non-Wastewater
- ☐ Wastewater
- ☐ Product
- ☐ High Content Residue
- ■ Low Content Residue
- ■ Transuranic
- ■ Low-Level
- ☐ Nonradioactive
- ☐ Source/Special Nuclear Materials
- ☐ Debris
- ☐ Fuel Blending
- ☐ Uncontained Gas
- ☐ RCRA Sample
- ☐ Recyclable Material
- ☐ Recycled/Reused
- ☐ TSCA Reg. Waste
- ☐ Evaluated in Another Process

EPA Codes:

Description (Material, Type, Size, Color, etc.):
This waste stream consists of any glass waste (except for leaded glass) generated by the Building 771 analytical lab.

How the Output is Generated:
Broken Or Excess Glassware And Empty Containers

Generation Rate:
250 Gallons Yearly

How the Output is Managed:
Glass waste is disposed of in a 55-gallon drum in Room 164. Full drums are taken to the drum counter.

Chemicals/Contaminants in or on the Output:
None

Characterization Rationale:
This output is line and nonline generated in a Radioactive Materials Management Area. According to process knowledge, this output contains no RCRA hazardous constituents and exhibits no RCRA hazardous characteristics. According to Laboratory Management, all glass containers are inverted to remove any free liquids, and air dried prior to disposal; these containers are empty as defined in 40 CFR, Section 261.7 (b). This output can be a nonhazardous, low-content residue or a nonhazardous, transuranic or low-level waste. The level of radioactivity will be determined by assay of each collection container.

WASTE STREAM AND RESIDUE DESCRIPTION AND CHARACTERIZATION

Process Number: 771-23-8
IDC/WFC: 480

Title: RADIOACTIVE INORGANIC LABORATORY
Description: Nonline And Line Light Metal (Nonhaz)

- ☐ RCRA Hazardous
- ■ RCRA Nonhazardous
- ☐ By Analytical Data
- ■ By Process Knowledge
- ☐ LDR Regulated
- ■ Not LDR Regulated
- ☐ Non-Wastewater
- ☐ Wastewater

- ☐ Product
- ☐ High Content Residue
- ■ Low Content Residue
- ■ Transuranic
- ■ Low-Level
- ☐ Nonradioactive
- ☐ Source/Special Nuclear Materials
- ☐ Debris

- ☐ Fuel Blending
- ☐ Uncontained Gas
- ☐ RCRA Sample
- ☐ Recyclable Material
- ☐ Recycled/Reused
- ☐ TSCA Reg. Waste
- ☐ Evaluated in Another Process

EPA Codes:

Description (Material, Type, Size, Color, etc.):
Light metal consists of generated metals such as tools and replaced metal parts, primarily stainless steel rings. This stream also includes analytical lab equipment and piping. (Do not put soldered electronic parts in this waste.)

How the Output is Generated:
Broken Or Excess Tools, Parts, Or Equipment

Generation Rate:
55 Gallons Yearly

How the Output is Managed:
Light metal is disposed of in a 55-gallon drum in Room 164. Full drums are taken to the drum counter.

Chemicals/Contaminants in or on the Output:
None

Characterization Rationale:
This output may be line or nonline generated in a Radioactive Materials Management Area and can be a low-content waste or a transuranic or low-level waste. According to process knowledge, the output contains no RCRA hazardous constituents and exhibits no RCRA hazardous characteristics. Therefore, this output has been designated a nonhazardous, low-content residue or a transuranic or low-level waste.

WASTE STREAM AND RESIDUE DESCRIPTION AND CHARACTERIZATION

Process Number: 771-23-10 **Title:** RADIOACTIVE INORGANIC LABORATORY
IDC/WFC: 1945 **Description:** Rinse Water

- ▫ RCRA Hazardous
- ▪ RCRA Nonhazardous
- ▫ By Analytical Data
- ▪ By Process Knowledge
- ▫ LDR Regulated
- ▪ Not LDR Regulated
- ▫ Non-Wastewater
- ▫ Wastewater
- ▫ Product
- ▫ High Content Residue
- ▫ Low Content Residue
- ▫ Transuranic
- ▫ Low-Level
- ▪ Nonradioactive
- ▫ Source/Special Nuclear Materials
- ▫ Debris
- ▫ Fuel Blending
- ▫ Uncontained Gas
- ▫ RCRA Sample
- ▫ Recyclable Material
- ▫ Recycled/Reused
- ▫ TSCA Reg. Waste
- ▫ Evaluated in Another Process

EPA Codes:

Description (Material, Type, Size, Color, etc.):
Rinse Water

How the Output is Generated:
Empty reagent bottles are rinsed in process sinks.

Generation Rate:
1,000 Gallons Yearly

How the Output is Managed:
Released To The Process Drain, Then To The D-309 Tanks In Building 774

Chemicals/Contaminants in or on the Output:
None

Characterization Rationale:
This output is generated in a Radioactive Materials Management Area. According to process knowledge, this output contains no RCRA hazardous constituents and exhibits no RCRA hazardous characteristics. This output is surveyed by Rad Ops and if found to be nonradioactive this output may be designated a nonhazardous, nonradioactive waste.

WASTE STREAM AND RESIDUE DESCRIPTION AND CHARACTERIZATION

Process Number: 771-23-12A
IDC/WFC: 541

Title: RADIOACTIVE INORGANIC LABORATORY
Description: Excess Sample And Rinsate

- ■ RCRA Hazardous
- □ RCRA Nonhazardous
- ■ By Analytical Data
- ■ By Process Knowledge
- ■ LDR Regulated
- □ Not LDR Regulated
- ■ Non-Wastewater
- □ Wastewater
- □ Product
- ■ High Content Residue
- ■ Low Content Residue
- ■ Transuranic
- ■ Low-Level
- □ Nonradioactive
- ■ Source/Special Nuclear Materials
- □ Debris
- □ Fuel Blending
- □ Uncontained Gas
- □ RCRA Sample
- □ Recyclable Material
- □ Recycled/Reused
- □ TSCA Reg. Waste
- □ Evaluated in Another Process

EPA Codes:
See Rationale

Description (Material, Type, Size, Color, etc.):
Excess Laboratory Sample, Unused Portion Of Samples, And Rinsate From Analysis

How the Output is Generated:
Rinsate, Excess Sample And Unused Portion Of Sample Are Collected From The Laboratory Analysis

Generation Rate:
Variable

How the Output is Managed:
Excess laboratory waste is collected in 4-liter bottles in a satellite collection area. Excess sample material is sometimes transferred back to the operation from which it originated.

Chemicals/Contaminants in or on the Output:
See Characterization Rationale

Characterization Rationale:
These excess laboratory samples are characterized as hazardous. The EPA codes have not been identified because the excess chemicals vary considerably in composition and characteristics; therefore, the appropriate codes will be assigned on a case-by-case basis. The compatibility code is designated as "??", and is to be replaced by the appropriate code on a case-by-case basis. This output may be line or nonline generated inside of a Radioactive Materials Management Area, and can be a low-level or transuranic waste or a low content residue. An evaluation to determine if this output meets the LDR treatment standards defined in 40 CFR 268.40 will be made on a case-by-case basis.

WASTE STREAM AND RESIDUE DESCRIPTION AND CHARACTERIZATION

Process Number: 771-23-15A
IDC/WFC: 480

Title: RADIOACTIVE INORGANIC LABORATORY
Description: Circuit Boards & Electronic Equip Parts

- ■ RCRA Hazardous
- □ RCRA Nonhazardous
- □ By Analytical Data
- ■ By Process Knowledge
- ■ LDR Regulated
- □ Not LDR Regulated
- □ Non-Wastewater
- □ Wastewater
- □ Product
- □ High Content Residue
- □ Low Content Residue
- □ Transuranic
- ■ Low-Level
- □ Nonradioactive
- □ Source/Special Nuclear Materials
- ■ Debris
- □ Fuel Blending
- □ Uncontained Gas
- □ RCRA Sample
- □ Recyclable Material
- □ Recycled/Reused
- □ TSCA Reg. Waste
- □ Evaluated in Another Process

EPA Codes:
D008, D011

Description (Material, Type, Size, Color, etc.):
Circuit Boards And Electronics Which Contains Lead And Silver Solder

How the Output is Generated:
Replacement And Repair Of Electronic Equipment Parts

Generation Rate:
Variable, "On an as needed basis"

How the Output is Managed:
The circuit boards and parts are placed in a satellite collection area.

Chemicals/Contaminants in or on the Output:
Lead and Silver

Characterization Rationale:
According to process knowledge, this output exhibits the characteristic of toxicity due to the presence of lead and silver. They are nonline material generated in a Radioactive Materials Management Area and are consequently a mixed, low-level waste. This output meets the definition of hazardous debris and can be treated by an appropriate technology in 40 CFR 268.45. The concentration-based treatment standard for cadmium, chromium, lead, and silver and the treatment standards for underlying hazardous constituents as defined in 40 CFR 268.48 must be met for treatment residue(s) prior to land disposal. The underlying hazardous constituents associated with this output are listed in Appendix E.

WASTE STREAM AND RESIDUE DESCRIPTION AND CHARACTERIZATION

Process Number: 771-23-18
IDC/WFC: 321

Title: RADIOACTIVE INORGANIC LABORATORY
Description: Waste Lead

- ■ RCRA Hazardous
- □ RCRA Nonhazardous
- □ By Analytical Data
- ■ By Process Knowledge
- ■ LDR Regulated
- □ Not LDR Regulated
- ■ Non-Wastewater
- □ Wastewater

- □ Product
- □ High Content Residue
- □ Low Content Residue
- ■ Transuranic
- □ Low-Level
- □ Nonradioactive
- □ Source/Special Nuclear Materials
- □ Debris

- □ Fuel Blending
- □ Uncontained Gas
- □ RCRA Sample
- □ Recyclable Material
- □ Recycled/Reused
- □ TSCA Reg. Waste
- □ Evaluated in Another Process

EPA Codes:
D008

Description (Material, Type, Size, Color, etc.):
Lead Bricks And Lead Shielding

How the Output is Generated:
Once Determined That The Lead Bricks Or Shielding Is No Longer Needed; The Materials Are Bagged Out Of Glovebox

Generation Rate:
Variable

How the Output is Managed:
Placed In A 55-Gallon Drum In A Satellite Collection Area

Chemicals/Contaminants in or on the Output:
Lead Bricks And Lead Shielding

Characterization Rationale:
This output is line generated in a Radioactive Materials Management Area. According to process knowledge, this output exhibits the characteristic of toxicity due to the presence of lead. This output has been designated TRU, mixed waste. This output does not meet the LDR treatment standards defined in 40 CFR 268.40. The output is included in the radioactive lead solids subcategory and must be treated by the specified technology-based treatment standard.

THIS PAGE INTENTIONALLY LEFT BLANK

24.0 PROCESS 771-24: CHEMICAL STANDARDS LABORATORY

The Building 771 Chemical Standards Laboratory is currently in limited use. Most of the operations formerly performed there have been moved to the Chemical Standards Laboratory in Building 371, Room 3408. Valid remaining operations consist of calorimetry testing of pre-prepared standards, periodic B-box decontamination, and glovebox and safety system maintenance. Remaining calorimetry testing, currently in Room 169, could soon be moved to Building 707 NDT Vaults. Figure 24.1 shows the inputs, process flow, and outputs associated with the Chemical Standards Laboratory.

As per laboratory management, remaining calorimetry operations in Room 169 do not generate any wastes.

B-box decontamination activities are performed in Room 159 when deemed necessary by the assigned Radiation Control Technician (RCT). This involves using KW Detergent and Kimwipes to wipe out any contaminated debris within the B-boxes. Moist combustibles generated during these activities are disposed of in a 55-gallon waste drum in Room 159.

Periodic glovebox filter change-outs are performed by Filter Technicians, who manage the resultant wastes. Additionally, testing of the area safety shower and eye-wash station releases wastewater into the process drain.

PADC-93-01538

AutoCAD 12, File Name: 771-24

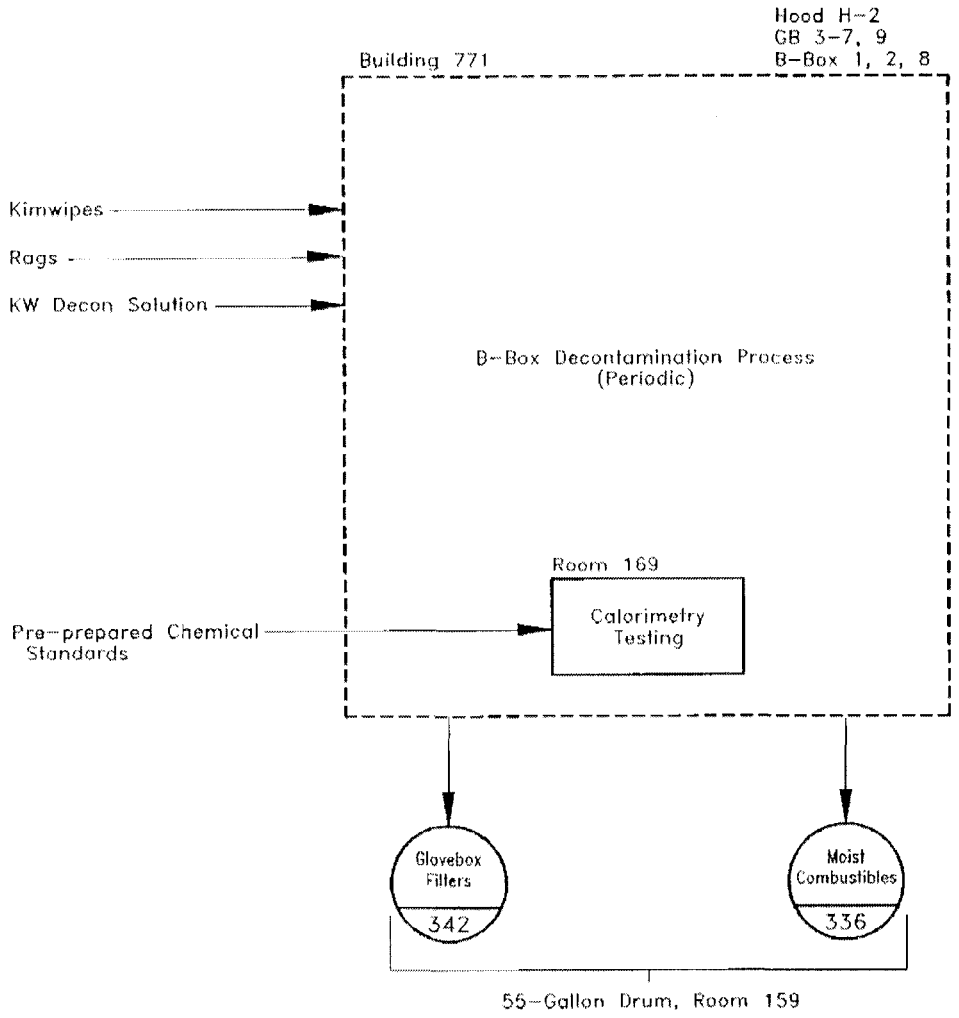

FIGURE 24.1

Rocky Flats Environmental Technology Site Waste Stream & Residue Identification & Characterization	BUILDING 771/PROCESS 24 CHEMICAL STANDARDS LABORATORY	Task	By	Date
		Designed	A. Cress	04/01/90
		Drawn	B. Crawford	01/30/95
		Checked	J. Schoen	06/11/97

PROCESS 771-24 CHEMICAL STANDARDS LABORATORY

Process Number	IDC/ WFC No.	CCCs RCRA Reg. Const.	CCCs Non-RCRA Reg. Const.	Comp. Codes	Description RCRA Reg. Chemical Constituents: Non-RCRA Reg. Chemical Constituents:	Collection	LDR Codes	RCRA Haz. Waste	RCRA-Land Disposal Restricted (Part 268)	Wastewater/Non-Wastewater: Debris/Non-Debris: Subcategory:	EPA Codes
771-24-2	336	00	05	NA	Moist Combustibles (Line) RCRA Reg. Chemical Constituents: None Non-RCRA Reg. Chemical Constituents: Base	Drum In Room 159		No	No		
771-24-5	342	00	02	NA	Glovebox Filters RCRA Reg. Chemical Constituents: None Non-RCRA Reg. Chemical Constituents: Acid - General	Drum In Room 159		No	No		

WASTE STREAM AND RESIDUE DESCRIPTION AND CHARACTERIZATION

Process Number: 771-24-2 **Title:** CHEMICAL STANDARDS LABORATORY
IDC/WFC: 336 **Description:** Moist Combustibles (Line)

- ▫ RCRA Hazardous
- ▪ RCRA Nonhazardous
- ▫ By Analytical Data
- ▪ By Process Knowledge
- ▫ LDR Regulated
- ▪ Not LDR Regulated
- ▫ Non-Wastewater
- ▫ Wastewater
- ▫ Product
- ▫ High Content Residue
- ▫ Low Content Residue
- ▪ Transuranic
- ▪ Low-Level
- ▫ Nonradioactive
- ▫ Source/Special Nuclear Materials
- ▫ Debris
- ▫ Fuel Blending
- ▫ Uncontained Gas
- ▫ RCRA Sample
- ▫ Recyclable Material
- ▫ Recycled/Reused
- ▫ TSCA Reg. Waste
- ▫ Evaluated in Another Process

EPA Codes:

Description (Material, Type, Size, Color, etc.):
Moist Combustibles May Contain Rags, Kimwipes, Cloth

How the Output is Generated:
During Decontamination and Filter Changes In Gloveboxes

Generation Rate:
Variable

How the Output is Managed:
Moist combustibles are bagged out of the B-box and collected in a drum in Room 159. Full drums are taken to the drum counter.

Chemicals/Contaminants in or on the Output:
KW Decontamination Liquid/Solution

Characterization Rationale:
These moist combustibles are line generated in a Radioactive Materials Management Area and are a radioactive waste. According to process knowledge, these combustibles are contaminated with a corrosive liquid, due to the presence of decontamination detergent. However, since there is no free liquid phase, this output cannot exhibit the hazardous characteristic of corrosivity (Section 261.22). Therefore, these combustibles are designated as nonhazardous, TRU or low-level waste, the level of radioactivity to be determined by counter.

WASTE STREAM AND RESIDUE DESCRIPTION AND CHARACTERIZATION

Process Number: 771-24-5 **Title:** CHEMICAL STANDARDS LABORATORY
IDC/WFC: 342 **Description:** Glovebox Filters

- ☐ RCRA Hazardous
- ■ RCRA Nonhazardous
- ☐ By Analytical Data
- ■ By Process Knowledge
- ☐ LDR Regulated
- ■ Not LDR Regulated
- ☐ Non-Wastewater
- ☐ Wastewater
- ☐ Product
- ☐ High Content Residue
- ■ Low Content Residue
- ■ Transuranic
- ■ Low-Level
- ☐ Nonradioactive
- ☐ Source/Special Nuclear Materials
- ☐ Debris
- ☐ Fuel Blending
- ☐ Uncontained Gas
- ☐ RCRA Sample
- ☐ Recyclable Material
- ☐ Recycled/Reused
- ☐ TSCA Reg. Waste
- ☐ Evaluated in Another Process

EPA Codes:

Description (Material, Type, Size, Color, etc.):
High Efficiency Particulate Air (HEPA) filters are used to filter particulate matter from air entering and exhausting from the glovebox.

How the Output is Generated:
The filters are replaced on a periodic or as-needed basis.

Generation Rate:
Variable

How the Output is Managed:
HEPA filters are collected in a drum in Room 159. Full drums are taken to the drum counter.

Chemicals/Contaminants in or on the Output:
None

Characterization Rationale:
This output is line generated in a Radioactive Materials Management Area and can be a residue or a waste. According to process knowledge, the output may be contaminated with corrosive liquid, due to the presence of acid, but cannot exhibit the characteristic of corrosivity because the waste is not liquid. It is designated as nonhazardous, low-content, residue or nonhazardous, TRU or low-level waste.

THIS PAGE INTENTIONALLY LEFT BLANK

25.0 PROCESS 771-25: CHEMICAL TECHNOLOGY

This process has been deleted by RFETS personnel on 05/19/97.

THIS PAGE INTENTIONALLY LEFT BLANK

26.0 PROCESS 771-26: PLUTONIUM METALLURGY

This process has been deleted by EG&G operations personnel on 02/03/94.

PADC-93-01536

THIS PAGE INTENTIONALLY LEFT BLANK

27.0 PROCESS 771-27: PLENUMS

The Plenums Process is located on the second floor of Building 771. Building and glovebox air and exhaust streams are filtered here. The process uses various filters and electric fans. Figure 27.1 shows the inputs, process flow, and outputs associated with the Plenums Process.

Glovebox exhaust, after being prefiltered in the process area, enters a demister section where entrained liquids are removed from the exhaust stream by a series of baffles. Next, the glovebox exhaust stream enters HEPA filter sections. The exhaust then enters the building main filter plenum, which consists of a mist eliminator followed by HEPA filters, and finally is directed to the building stack. Room exhaust, after being prefiltered at the room exhaust duct, enters directly into the building main filter plenum. Laboratory and R&D glovebox exhaust enters a HEPA filter plenum on its way to the building main filter plenum. Production glovebox acid fumes enter the Fume Scrubber Process (Process 20) prior to entering the glovebox exhaust filter plenum and building main filter plenum. Locker room exhaust is filtered through a plenum system designed to filter any air from the main plenum if any airflow reversal occurs, protecting the locker rooms from contamination.

Glovebox exhaust filter plenums FU-1, FU-1E, FU-2C, and FU-2B have fire system deluge systems that discharge into the V-2 deluge catch tank. The V-2 deluge catch tank is a 5,000 gallon Raschig ring-filled tank in Room 190. Any liquid (fire water) in V-2 is circulated, sampled, and pumped to 928 Tank in Room 149 prior to being transferred to Building 774 for treatment.

Used HEPA filters are collected in filter transport carts and crates and taken to Size Reduction in Building 776 or to Glovebox 2 in Miscellaneous Residue Processing (Process 12) based on filter counting. Used prefilters are collected in 55-gallon drums. Sludge is collected in the filter plenums and then taken to Glovebox 2 (the Miscellaneous Residue Recovery Process). Dry and wet combustibles, light metal, and plastic are disposed of in 55-gallon drums. Final building exhaust air is vented through the Building 771 stack to the atmosphere. In the event of a plenum fire in the building, water from the plant fire system deluges the plenum and discharges to tanks in Building 728. Process Table 771-27 gives the outputs associated with the Plenums Process and provides their dispositions and hazardous character.

AutoCAD 12, File Name: 771-27

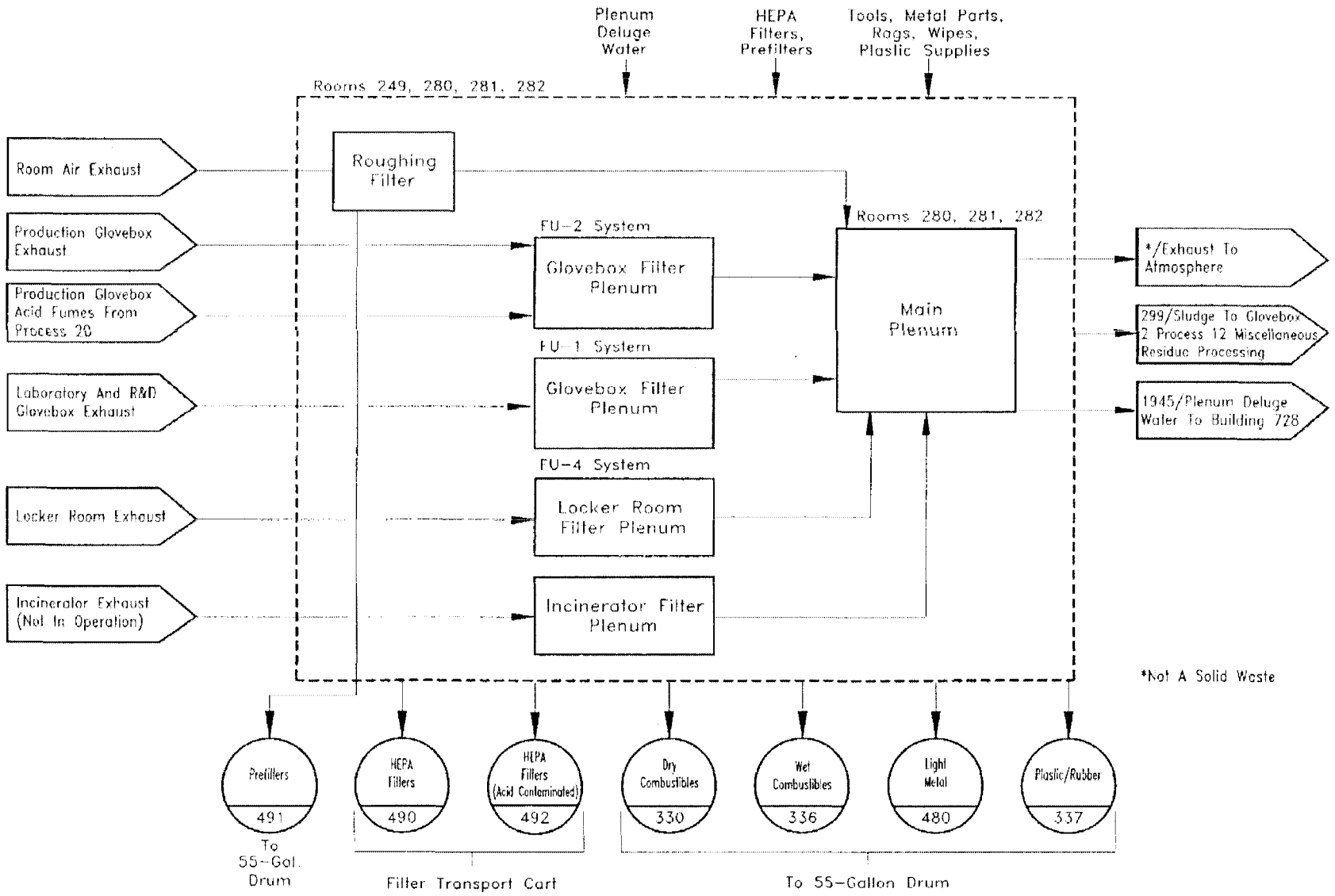

FIGURE 27.1

Rocky Flats Environmental Technology Site Waste Stream & Residue Identification & Characterization	BUILDING 771/PROCESS 27 PLENUMS	Task	By	Date
		Designed	W. Eakins	02/25/93
		Drawn	B. Crawford	01/24/95
		Checked	J. Joyce	08/04/98

PROCESS 771-27 PLENUMS

Process Number	IDC/ WFC No.	CCCs RCRA Reg. Const.	CCCs Non-RCRA Reg. Const.	Comp. Codes	Description RCRA Reg. Chemical Constituents: Non-RCRA Reg. Chemical Constituents:	Collection	LDR Codes	RCRA Haz. Waste	RCRA-Land Disposal Restricted (Part 268)	Wastewater/Non-Wastewater: Debris/Non-Debris: Subcategory:	EPA Codes
771-27-1	330	00	00	NA	Dry Combustibles RCRA Reg. Chemical Constituents: None Non-RCRA Reg. Chemical Constituents: None	55-Gallon Drum		No	No		
771-27-2	336	00	02	NA	Wet Combustibles RCRA Reg. Chemical Constituents: None Non-RCRA Reg. Chemical Constituents: Acid - General	55-Gallon Drum		No	No		

Process Number	IDC/ WFC No.	CCCs RCRA Reg. Const.	CCCs Non-RCRA Reg. Const.	Comp. Codes	Description RCRA Reg. Chemical Constituents: Non-RCRA Reg. Chemical Constituents:	Collection	LDR Codes	RCRA Haz. Waste	RCRA-Land Disposal Restricted (Part 268)	Wastewater/Non-Wastewater: Debris/Non-Debris: Subcategory:	EPA Codes
771-27-3	337	00	00	NA	Plastic And Rubber RCRA Reg. Chemical Constituents: None Non-RCRA Reg. Chemical Constituents: None	55-Gallon Drum		No	No		
771-27-4	480	00	00	NA	Light Metal RCRA Reg. Chemical Constituents: None Non-RCRA Reg. Chemical Constituents: None	55-Gallon Drum		No	No		

Process Number	IDC/ WFC No.	CCCs RCRA Reg. Const.	CCCs Non-RCRA Reg. Const.	Comp. Codes	Description RCRA Reg. Chemical Constituents: Non-RCRA Reg. Chemical Constituents:	Collection	LDR Codes	RCRA Haz. Waste	RCRA-Land Disposal Restricted (Part 268)	Wastewater/Non-Wastewater: Debris/Non-Debris: Subcategory:	EPA Codes
771-27-5	490	00	00	NA	HEPA Filters RCRA Reg. Chemical Constituents: None Non-RCRA Reg. Chemical Constituents: None	Filter Transport Cart		No	No		
771-27-6	492	00	02	NA	HEPA Filters (Acid) RCRA Reg. Chemical Constituents: None Non-RCRA Reg. Chemical Constituents: Acid - General	Filter Transport Cart		No	No		

Process Number	IDC/ WFC No.	CCCs RCRA Reg. Const.	CCCs Non-RCRA Reg. Const.	Comp. Codes	Description RCRA Reg. Chemical Constituents: Non-RCRA Reg. Chemical Constituents:	Collection	LDR Codes	RCRA Haz. Waste	RCRA-Land Disposal Restricted (Part 268)	Wastewater/Non-Wastewater: Debris/Non-Debris: Subcategory:	EPA Codes
771-27-7	299	00	02	NA	Sludge RCRA Reg. Chemical Constituents: None Non-RCRA Reg. Chemical Constituents: Acid - General	To GB 2		No	No		
771-27-9	1945	00	00	NA	Plenum Deluge Water RCRA Reg. Chemical Constituents: None Non-RCRA Reg. Chemical Constituents: None	Building 728 Tanks		No	No		

Process Number	IDC/ WFC No.	CCCs RCRA Reg. Const.	CCCs Non-RCRA Reg. Const.	Comp. Codes	Description RCRA Reg. Chemical Constituents: Non-RCRA Reg. Chemical Constituents:	Collection	LDR Codes	RCRA Haz. Waste	RCRA-Land Disposal Restricted (Part 268)	Wastewater/Non-Wastewater: Debris/Non-Debris: Subcategory:	EPA Codes
771-27-10	491	00	00	NA	Prefilters RCRA Reg. Chemical Constituents: None Non-RCRA Reg. Chemical Constituents: None	55-Gallon Drum		No	No		
771-27-12	491	00	00	NA	Low Efficiency Roll Filters RCRA Reg. Chemical Constituents: None Non-RCRA Reg. Chemical Constituents: None	55-Gallon Drum		No	No		

WASTE STREAM AND RESIDUE DESCRIPTION AND CHARACTERIZATION

Process Number: 771-27-1
IDC/WFC: 330

Title: PLENUMS
Description: Dry Combustibles

- ▫ RCRA Hazardous
- ▪ RCRA Nonhazardous
- ▫ By Analytical Data
- ▪ By Process Knowledge
- ▫ LDR Regulated
- ▪ Not LDR Regulated
- ▫ Non-Wastewater
- ▫ Wastewater
- ▫ Product
- ▫ High Content Residue
- ▪ Low Content Residue
- ▪ Transuranic
- ▪ Low-Level
- ▫ Nonradioactive
- ▫ Source/Special Nuclear Materials
- ▫ Debris
- ▫ Fuel Blending
- ▫ Uncontained Gas
- ▫ RCRA Sample
- ▫ Recyclable Material
- ▫ Recycled/Reused
- ▫ TSCA Reg. Waste
- ▫ Evaluated in Another Process

EPA Codes:

Description (Material, Type, Size, Color, etc.):
Dry combustibles may include paper, rags, wipes, cloth, or plastic generated by the plenums.

How the Output is Generated:
Various Maintenance And Filter Changing Activities

Generation Rate:
Variable

How the Output is Managed:
Dry combustibles are collected in a 55-gallon drum in Building 771.

Chemicals/Contaminants in or on the Output:
None

Characterization Rationale:
This output is line generated in a Radioactive Materials Management Area and can be a low-content residue or a transuranic or low-level waste. According to process knowledge, the output contains no RCRA hazardous constituents and exhibits no RCRA hazardous characteristics. Therefore, the output can be a nonhazardous, low-content residue or a nonhazardous, transuranic or low-level waste.

WASTE STREAM AND RESIDUE DESCRIPTION AND CHARACTERIZATION

Process Number: 771-27-2
IDC/WFC: 336

Title: PLENUMS
Description: Wet Combustibles

- ☐ RCRA Hazardous
- ■ RCRA Nonhazardous
- ☐ By Analytical Data
- ■ By Process Knowledge
- ☐ LDR Regulated
- ■ Not LDR Regulated
- ☐ Non-Wastewater
- ☐ Wastewater
- ☐ Product
- ☐ High Content Residue
- ■ Low Content Residue
- ■ Transuranic
- ■ Low-Level
- ☐ Nonradioactive
- ☐ Source/Special Nuclear Materials
- ☐ Debris
- ☐ Fuel Blending
- ☐ Uncontained Gas
- ☐ RCRA Sample
- ☐ Recyclable Material
- ☐ Recycled/Reused
- ☐ TSCA Reg. Waste
- ☐ Evaluated in Another Process

EPA Codes:

Description (Material, Type, Size, Color, etc.):
Wet combustibles may include paper, rags, wipes, cloth, or plastic that have been contaminated with aqueous solutions (KW detergent or DOP) or acids.

How the Output is Generated:
Various Maintenance And Filter Changing Activities

Generation Rate:
Variable

How the Output is Managed:
Wet combustibles are collected in a 55-gallon drum in Building 771.

Chemicals/Contaminants in or on the Output:
Nitric Acid

Characterization Rationale:
This output is line generated in a Radioactive Materials Management Area and can be a residue or a waste. According to process knowledge, the output may be contaminated with a corrosive liquid, due to the presence of nitric acid, but it cannot exhibit the characteristic of corrosivity because the waste form is not liquid. It is designated as nonhazardous, low-content residue, or nonhazardous, TRU or low-level waste.

WASTE STREAM AND RESIDUE DESCRIPTION AND CHARACTERIZATION

Process Number: 771-27-3
IDC/WFC: 337

Title: PLENUMS
Description: Plastic And Rubber

- ☐ RCRA Hazardous
- ■ RCRA Nonhazardous
- ☐ By Analytical Data
- ■ By Process Knowledge
- ☐ LDR Regulated
- ■ Not LDR Regulated
- ☐ Non-Wastewater
- ☐ Wastewater
- ☐ Product
- ☐ High Content Residue
- ■ Low Content Residue
- ■ Transuranic
- ■ Low-Level
- ☐ Nonradioactive
- ☐ Source/Special Nuclear Materials
- ☐ Debris
- ☐ Fuel Blending
- ☐ Uncontained Gas
- ☐ RCRA Sample
- ☐ Recyclable Material
- ☐ Recycled/Reused
- ☐ TSCA Reg. Waste
- ☐ Evaluated in Another Process

EPA Codes:

Description (Material, Type, Size, Color, etc.):
This output includes any plastic material used and rubber material generated from operation and maintenance of the plenums.

How the Output is Generated:
Various Maintenance And Filter Changing Activities

Generation Rate:
Variable

How the Output is Managed:
Plastic and rubber waste is collected in a 55-gallon drum in Building 771.

Chemicals/Contaminants in or on the Output:
None

Characterization Rationale:
This output is line generated in a Radioactive Materials Management Area and can be a low-content residue or a transuranic or low-level waste. According to process knowledge, the output contains no RCRA hazardous constituents and exhibits no RCRA hazardous characteristics. Therefore, the output can be a nonhazardous, low-content residue or a nonhazardous, transuranic or low-level waste.

WASTE STREAM AND RESIDUE DESCRIPTION AND CHARACTERIZATION

Process Number: 771-27-4 **Title:** PLENUMS
IDC/WFC: 480 **Description:** Light Metal

- ☐ RCRA Hazardous
- ■ RCRA Nonhazardous
- ☐ By Analytical Data
- ■ By Process Knowledge
- ☐ LDR Regulated
- ■ Not LDR Regulated
- ☐ Non-Wastewater
- ☐ Wastewater
- ☐ Product
- ☐ High Content Residue
- ■ Low Content Residue
- ■ Transuranic
- ■ Low-Level
- ☐ Nonradioactive
- ☐ Source/Special Nuclear Materials
- ☐ Debris
- ☐ Fuel Blending
- ☐ Uncontained Gas
- ☐ RCRA Sample
- ☐ Recyclable Material
- ☐ Recycled/Reused
- ☐ TSCA Reg. Waste
- ☐ Evaluated in Another Process

EPA Codes:

Description (Material, Type, Size, Color, etc.):
Light metal consists of maintenance-generated metals such as tools and replaced metal parts.

How the Output is Generated:
Various Maintenance And Filter Changing Activities

Generation Rate:
Variable

How the Output is Managed:
Light metals are collected in a 55-gallon drum in Building 771.

Chemicals/Contaminants in or on the Output:
None

Characterization Rationale:
This output is line generated in a Radioactive Materials Management Area and can be a low-content residue or a transuranic or low-level waste. According to process knowledge, the output contains no RCRA hazardous constituents and exhibits no RCRA hazardous characteristics. Therefore, the output can be a nonhazardous, low-content residue or a nonhazardous, transuranic or low-level waste.

WASTE STREAM AND RESIDUE DESCRIPTION AND CHARACTERIZATION

Process Number: 771-27-5
IDC/WFC: 490

Title: PLENUMS
Description: HEPA Filters

- ☐ RCRA Hazardous
- ■ RCRA Nonhazardous
- ☐ By Analytical Data
- ■ By Process Knowledge
- ☐ LDR Regulated
- ■ Not LDR Regulated
- ☐ Non-Wastewater
- ☐ Wastewater
- ☐ Product
- ☐ High Content Residue
- ■ Low Content Residue
- ■ Transuranic
- ■ Low-Level
- ☐ Nonradioactive
- ☐ Source/Special Nuclear Materials
- ☐ Debris
- ☐ Fuel Blending
- ☐ Uncontained Gas
- ☐ RCRA Sample
- ☐ Recyclable Material
- ☐ Recycled/Reused
- ☐ TSCA Reg. Waste
- ☐ Evaluated in Another Process

EPA Codes:

Description (Material, Type, Size, Color, etc.):
High-efficiency particulate air (HEPA) filters in the FU-1 and FU-4 System, Incinerator System, and Main Plenum are used to filter laboratory and R&D glovebox exhaust streams, locker rooms and the incinerator (which is out-of-service).

How the Output is Generated:
Periodic Filter Changeout

Generation Rate:
Variable

How the Output is Managed:
HEPA filters are collected in filter transport carts in Building 771 and taken to Size Reduction in Building 776 or Glovebox 2 in Miscellaneous Residue Processing (Process 12).

Chemicals/Contaminants in or on the Output:
None

Characterization Rationale:
This output is line generated in a Radioactive Materials Management Area and can be a low-content residue or a transuranic or low-level waste. According to process knowledge, the output contains no RCRA hazardous constituents and exhibits no RCRA hazardous characteristics. Therefore, the output can be a nonhazardous, low-content residue or a nonhazardous, transuranic or low-level waste.

WASTE STREAM AND RESIDUE DESCRIPTION AND CHARACTERIZATION

Process Number: 771-27-6
IDC/WFC: 492

Title: PLENUMS
Description: HEPA Filters (Acid)

- ☐ RCRA Hazardous
- ■ RCRA Nonhazardous
- ☐ By Analytical Data
- ■ By Process Knowledge
- ☐ LDR Regulated
- ■ Not LDR Regulated
- ☐ Non-Wastewater
- ☐ Wastewater
- ☐ Product
- ☐ High Content Residue
- ■ Low Content Residue
- ■ Transuranic
- ■ Low-Level
- ☐ Nonradioactive
- ☐ Source/Special Nuclear Materials
- ☐ Debris
- ☐ Fuel Blending
- ☐ Uncontained Gas
- ☐ RCRA Sample
- ☐ Recyclable Material
- ☐ Recycled/Reused
- ☐ TSCA Reg. Waste
- ☐ Evaluated in Another Process

EPA Codes:

Description (Material, Type, Size, Color, etc.):
High-efficiency particulate air (HEPA) filters in the FU-2 System are used to filter production glovebox acid fumes and are designated as acid-contaminated when replaced.

How the Output is Generated:
Periodic Filter Changeout

Generation Rate:
Variable

How the Output is Managed:
HEPA filters are collected in a filter transport cart in Building 771, neutralized, then taken to Size Reduction in Building 776 or Glovebox 2 in Miscellaneous Residue Processing (Process 12).

Chemicals/Contaminants in or on the Output:
Acids, Primarily Nitric Acid

Characterization Rationale:
This output is line generated in a Radioactive Materials Management Area and can be a residue or a waste. According to process knowledge, the output may be contaminated with corrosive liquid, due to the presence of acid, but it cannot exhibit the characteristic of corrosivity because the waste form is not liquid. It is designated as nonhazardous, low-content residue, or nonhazardous, TRU or low-level waste.

WASTE STREAM AND RESIDUE DESCRIPTION AND CHARACTERIZATION

Process Number: 771-27-7 **Title:** PLENUMS
IDC/WFC: 299 **Description:** Sludge

- ▫ RCRA Hazardous
- ▪ RCRA Nonhazardous
- ▫ By Analytical Data
- ▪ By Process Knowledge
- ▫ LDR Regulated
- ▪ Not LDR Regulated
- ▫ Non-Wastewater
- ▫ Wastewater
- ▫ Product
- ▫ High Content Residue
- ▪ Low Content Residue
- ▪ Transuranic
- ▪ Low-Level
- ▫ Nonradioactive
- ▫ Source/Special Nuclear Materials
- ▫ Debris
- ▫ Fuel Blending
- ▫ Uncontained Gas
- ▫ RCRA Sample
- ▫ Recyclable Material
- ▫ Recycled/Reused
- ▫ TSCA Reg. Waste
- ▫ Evaluated in Another Process

EPA Codes:

Description (Material, Type, Size, Color, etc.):
Sludge is generated from the filters used in the Building 771 Plenum Process.

How the Output is Generated:
From Corrosion Inside The Plenum And Entrained Liquids

Generation Rate:
Variable

How the Output is Managed:
Sludges are collected in 55-gallon drums and taken to Glovebox 2 in Miscellaneous Residue Processing (Process 12).

Chemicals/Contaminants in or on the Output:
Acids, Primarily Nitric Acid

Characterization Rationale:
This output is line generated in a Radioactive Materials Management Area and can be a low-content residue or a transuranic or low-level waste. According to process knowledge, the output contains no RCRA hazardous constituents and exhibits no RCRA hazardous characteristics. Therefore, the output can be a nonhazardous, low-content residue or a nonhazardous, transuranic or low-level waste.

WASTE STREAM AND RESIDUE DESCRIPTION AND CHARACTERIZATION

Process Number: 771-27-9
IDC/WFC: 1945

Title: PLENUMS
Description: Plenum Deluge Water

- ☐ RCRA Hazardous
- ■ RCRA Nonhazardous
- ■ By Analytical Data
- ☐ By Process Knowledge
- ☐ LDR Regulated
- ■ Not LDR Regulated
- ☐ Non-Wastewater
- ☐ Wastewater
- ☐ Product
- ☐ High Content Residue
- ☐ Low Content Residue
- ☐ Transuranic
- ■ Low-Level
- ■ Nonradioactive
- ☐ Source/Special Nuclear Materials
- ☐ Debris
- ☐ Fuel Blending
- ☐ Uncontained Gas
- ☐ RCRA Sample
- ☐ Recyclable Material
- ☐ Recycled/Reused
- ☐ TSCA Reg. Waste
- ☐ Evaluated in Another Process

EPA Codes:

Description (Material, Type, Size, Color, etc.):
Water Used To Extinguish Plenum Fires

How the Output is Generated:
In the event of a plenum fire, the plenum is deluged with water.

Generation Rate:
Variable

How the Output is Managed:
Discharged to storage tanks in Building 728, transported via tanker to Building 231, then piped to Building 374 for treatment.

Chemicals/Contaminants in or on the Output:
None

Characterization Rationale:
This output is nonline generated in a Radioactive Materials Management Area. According to analytical data (Ref. CMM-336-94), this output contains no RCRA hazardous constituents and exhibits no RCRA hazardous characteristics. This output has been designated a low-level, nonhazardous waste.

WASTE STREAM AND RESIDUE DESCRIPTION AND CHARACTERIZATION

Process Number: 771-27-10 **Title:** PLENUMS
IDC/WFC: 491 **Description:** Prefilters

- ☐ RCRA Hazardous
- ■ RCRA Nonhazardous
- ☐ By Analytical Data
- ■ By Process Knowledge
- ☐ LDR Regulated
- ■ Not LDR Regulated
- ☐ Non-Wastewater
- ☐ Wastewater
- ☐ Product
- ☐ High Content Residue
- ☐ Low Content Residue
- ☐ Transuranic
- ■ Low-Level
- ☐ Nonradioactive
- ☐ Source/Special Nuclear Materials
- ☐ Debris
- ☐ Fuel Blending
- ☐ Uncontained Gas
- ☐ RCRA Sample
- ☐ Recyclable Material
- ☐ Recycled/Reused
- ☐ TSCA Reg. Waste
- ☐ Evaluated in Another Process

EPA Codes:

Description (Material, Type, Size, Color, etc.):
Roughing Filters

How the Output is Generated:
When The Filters Are Periodically Changed

Generation Rate:
Variable

How the Output is Managed:
Prefilters are collected in 55-gallon drums.

Chemicals/Contaminants in or on the Output:
None

Characterization Rationale:
This output is nonline generated in a Radioactive Materials Management Area and is known by the generator to always be low-level waste. According to process knowledge, the output contains no RCRA hazardous constituents and exhibits no RCRA hazardous characteristics. It is designated as low-level, nonhazardous waste.

WASTE STREAM AND RESIDUE DESCRIPTION AND CHARACTERIZATION

Process Number: 771-27-12
IDC/WFC: 491

Title: PLENUMS
Description: Low Efficiency Roll Filters

- ☐ RCRA Hazardous
- ■ RCRA Nonhazardous
- ☐ By Analytical Data
- ■ By Process Knowledge
- ☐ LDR Regulated
- ■ Not LDR Regulated
- ☐ Non-Wastewater
- ☐ Wastewater
- ☐ Product
- ☐ High Content Residue
- ☐ Low Content Residue
- ☐ Transuranic
- ■ Low-Level
- ☐ Nonradioactive
- ☐ Source/Special Nuclear Materials
- ☐ Debris
- ☐ Fuel Blending
- ☐ Uncontained Gas
- ☐ RCRA Sample
- ☐ Recyclable Material
- ☐ Recycled/Reused
- ☐ TSCA Reg. Waste
- ☐ Evaluated in Another Process

EPA Codes:

Description (Material, Type, Size, Color, etc.):
Used Low-Efficiency Filters From Filtering Intake Air

How the Output is Generated:
The filters are periodically changed when they become clogged.

Generation Rate:
Variable

How the Output is Managed:
Placed In A 55-Gallon Drum

Chemicals/Contaminants in or on the Output:
None

Characterization Rationale:
This output is nonline generated in a Radioactive Materials Management Area. According to process knowledge, this output contains no RCRA hazardous constituents and exhibits no RCRA hazardous characteristics. This output has been designated a low-level, nonhazardous waste.

THIS PAGE INTENTIONALLY LEFT BLANK

28.0 PROCESS 771-28: COOLING TOWERS

The cooling towers are located on the roof of Building 771. The water cooling process uses sodium hypochlorite, a swimming pool chlorine, which is consumed in the process. Equipment consists of an open spray system, heat exchanges, and pumps. Building 771 process water is cooled in the heat exchanges. Figure 28.1 shows the inputs, process flow, and outputs associated with the cooling towers.

Sodium hypochlorite is added regularly and logged with each addition to maintain appropriate part-per-million levels; HTH (brand name) swimming pool chlorine is the specific type used. Cold process reservoir water is used to supply the open spray system cooling tower. Blowdown occurs approximately once a month to flush dissolved solids from the tower, with about 1,000 gallons of water used during each blowdown. No other inputs besides water and sodium hypochlorite are involved in this process.

No product is generated in this process. The waste materials are blowdown water and the cooling tower sludge. Blowdown water is passed to a process drain for eventual treatment in Building 374. The sludge, consisting of dust, leaves, dirt, and insects from the outside environment, is handled according to Waste Guidance directions. Water vapor is vented to the atmosphere. Process Table 771-28 presents the outputs associated with the Cooling Towers Process and provides their dispositions and hazardous character.

PADC-93-01534

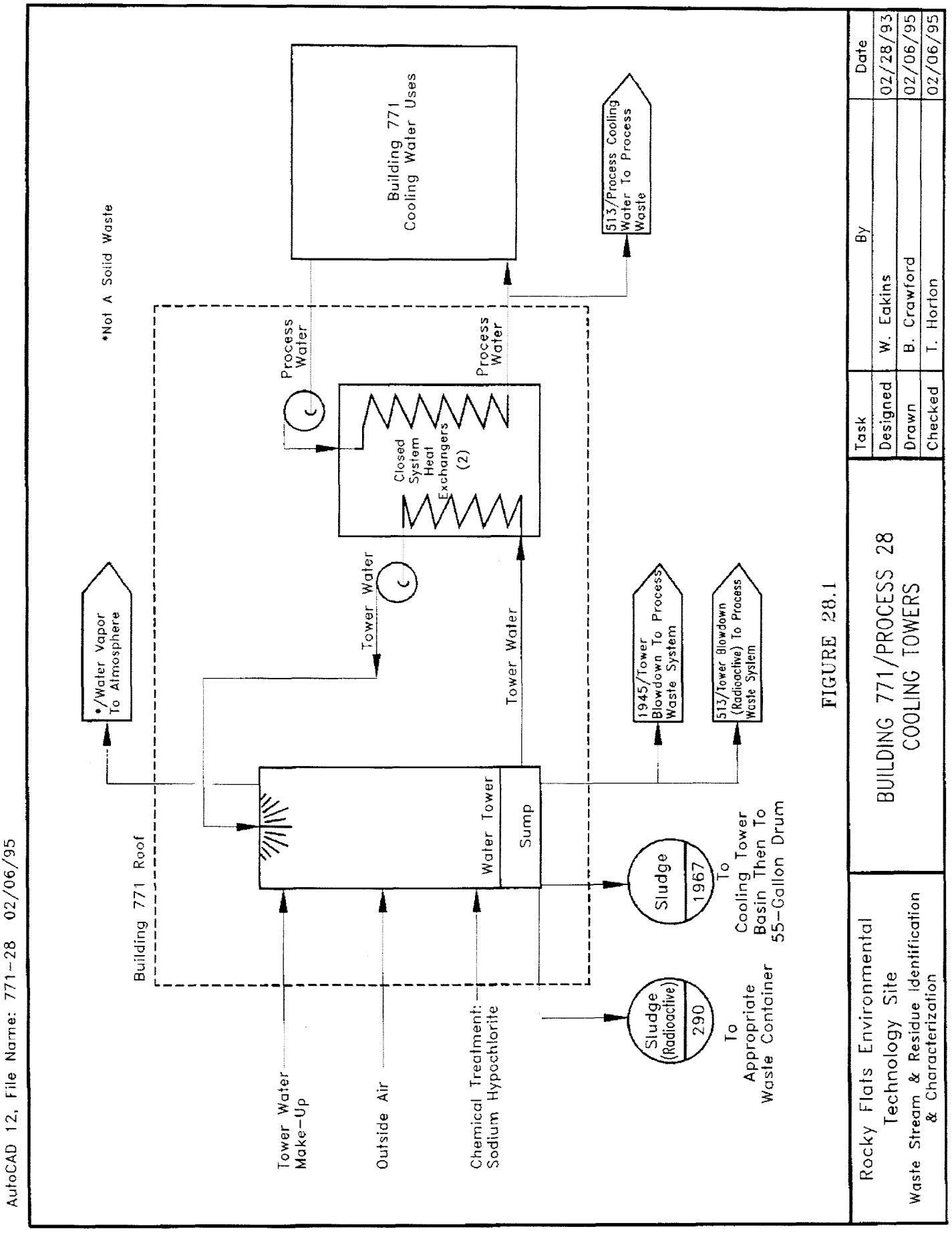
AutoCAD 12, File Name: 771-28 02/06/95
*Not A Solid Waste
Building 771
Cooling Water Uses
513/Process Cooling
Water To Process
Waste
Process
Water
Process
Water
Closed
System
Heat
Exchangers
(2)
Tower Water
Tower Water
*/Water Vapor
To Atmosphere
1945/Tower
Blowdown To Process
Waste System
513/Tower Blowdown
(Radioactive) To Process
Waste System
Building 771 Roof
Water Tower
Sump
Sludge
1967
To
Cooling Tower
Basin Then To
55-Gallon Drum
Sludge
(Radioactive)
290
To
Appropriate
Waste Container
Tower Water
Make-Up
Outside Air
Chemical Treatment:
Sodium Hypochlorite
FIGURE 28.1
BUILDING 771/PROCESS 28
COOLING TOWERS
Rocky Flats Environmental
Technology Site
Waste Stream & Residue Identification
& Characterization
Task
By
Date
Designed
W. Eakins
02/28/93
Drawn
B. Crawford
02/06/95
Checked
T. Horton
02/06/95

PROCESS 771-28 COOLING TOWERS

Process Number	IDC/ WFC No.	CCCs RCRA Reg. Const.	CCCs Non-RCRA Reg. Const.	Comp. Codes	Description RCRA Reg. Chemical Constituents: Non-RCRA Reg. Chemical Constituents:	Collection	LDR Codes	RCRA Haz. Waste	RCRA-Land Disposal Restricted (Part 268)	Wastewater/Non-Wastewater: Debris/Non-Debris: Subcategory:	EPA Codes
771-28-1	1945	00	00	3A	Blowdown Water RCRA Reg. Chemical Constituents: None Non-RCRA Reg. Chemical Constituents: None	Process Drain To 309 Tanks		No	No		
771-28-2	1967	00	00	NA	Sludge RCRA Reg. Chemical Constituents: None Non-RCRA Reg. Chemical Constituents: None	Cooling Tower Basin		No	No		

Process Number	IDC/ WFC No.	CCCs RCRA Reg. Const.	CCCs Non-RCRA Reg. Const.	Comp. Codes	Description RCRA Reg. Chemical Constituents: Non-RCRA Reg. Chemical Constituents:	Collection	LDR Codes	RCRA Haz. Waste	RCRA-Land Disposal Restricted (Part 268)	Wastewater/Non-Wastewater: Debris/Non-Debris: Subcategory:	EPA Codes
771-28-4	513	00	00	3A	Blowdown Water (Radioactive) RCRA Reg. Chemical Constituents: None Non-RCRA Reg. Chemical Constituents: None	Process Waste System		No	No		
771-28-5	290	00	00	NA	Sludge (Radioactive) RCRA Reg. Chemical Constituents: None Non-RCRA Reg. Chemical Constituents: None	Appropriate Waste Container		No	No		

Process Number	IDC/ WFC No.	CCCs RCRA Reg. Const.	CCCs Non-RCRA Reg. Const.	Comp. Codes	Description RCRA Reg. Chemical Constituents: Non-RCRA Reg. Chemical Constituents:	Collection	LDR Codes	RCRA Haz. Waste	RCRA-Land Disposal Restricted (Part 268)	Wastewater/Non-Wastewater: Debris/Non-Debris: Subcategory:	EPA Codes
771-28-6	513	00	00	3A	Process Cooling Water RCRA Reg. Chemical Constituents: None Non-RCRA Reg. Chemical Constituents: None	Process Waste System		No	No		

WASTE STREAM AND RESIDUE DESCRIPTION AND CHARACTERIZATION

Process Number: 771-28-1 **Title:** COOLING TOWERS
IDC/WFC: 1945 **Description:** Blowdown Water

- ▫ RCRA Hazardous
- ▪ RCRA Nonhazardous
- ▫ By Analytical Data
- ▪ By Process Knowledge
- ▫ LDR Regulated
- ▪ Not LDR Regulated
- ▫ Non-Wastewater
- ▫ Wastewater
- ▫ Product
- ▫ High Content Residue
- ▫ Low Content Residue
- ▫ Transuranic
- ▫ Low-Level
- ▪ Nonradioactive
- ▫ Source/Special Nuclear Materials
- ▫ Debris
- ▫ Fuel Blending
- ▫ Uncontained Gas
- ▫ RCRA Sample
- ▫ Recyclable Material
- ▫ Recycled/Reused
- ▫ TSCA Reg. Waste
- ▫ Evaluated in Another Process

EPA Codes:

Description (Material, Type, Size, Color, etc.):
Blowdown Water

How the Output is Generated:
Produced When Total Dissolved Solids Levels Are Too High

Generation Rate:
Insufficient Data

How the Output is Managed:
Blowdown water is sent to the 309 Tanks in the process waste system.

Chemicals/Contaminants in or on the Output:
None

Characterization Rationale:
According to process knowledge, this output contains no RCRA hazardous constituents and exhibits no RCRA hazardous characteristics. It is known that no radioactive material is introduced into this output, and it is a nonhazardous, nonradioactive waste.

WASTE STREAM AND RESIDUE DESCRIPTION AND CHARACTERIZATION

Process Number: 771-28-2 **Title:** COOLING TOWERS
IDC/WFC: 1967 **Description:** Sludge

- ☐ RCRA Hazardous
- ■ RCRA Nonhazardous
- ☐ By Analytical Data
- ■ By Process Knowledge
- ☐ LDR Regulated
- ■ Not LDR Regulated
- ☐ Non-Wastewater
- ☐ Wastewater
- ☐ Product
- ☐ High Content Residue
- ☐ Low Content Residue
- ☐ Transuranic
- ☐ Low-Level
- ■ Nonradioactive
- ☐ Source/Special Nuclear Materials
- ☐ Debris
- ☐ Fuel Blending
- ☐ Uncontained Gas
- ☐ RCRA Sample
- ☐ Recyclable Material
- ☐ Recycled/Reused
- ☐ TSCA Reg. Waste
- ☐ Evaluated in Another Process

EPA Codes:

Description (Material, Type, Size, Color, etc.):
A sludge consisting primarily of dust, leaves, dirt, and insects is produced by the cooling tower and accumulates in the tower basin.

How the Output is Generated:
When Sump Is Periodically Cleaned Out

Generation Rate:
Variable

How the Output is Managed:
Sludge is collected at the base of the cooling tower, placed in plastic bags then 55-gallon drums, sampled, then disposed of per Waste Guidance directions.

Chemicals/Contaminants in or on the Output:
None

Characterization Rationale:
According to process knowledge, this output contains no RCRA hazardous constituents and exhibits no RCRA hazardous characteristics. It is known that no radioactive material is introduced into this output, and it is a nonhazardous, nonradioactive waste.

WASTE STREAM AND RESIDUE DESCRIPTION AND CHARACTERIZATION

Process Number: 771-28-4
IDC/WFC: 513

Title: COOLING TOWERS
Description: Blowdown Water (Radioactive)

- ☐ RCRA Hazardous
- ■ RCRA Nonhazardous
- ☐ By Analytical Data
- ■ By Process Knowledge
- ☐ LDR Regulated
- ■ Not LDR Regulated
- ☐ Non-Wastewater
- ☐ Wastewater
- ☐ Product
- ☐ High Content Residue
- ☐ Low Content Residue
- ☐ Transuranic
- ■ Low-Level
- ☐ Nonradioactive
- ☐ Source/Special Nuclear Materials
- ☐ Debris
- ☐ Fuel Blending
- ☐ Uncontained Gas
- ☐ RCRA Sample
- ☐ Recyclable Material
- ☐ Recycled/Reused
- ☐ TSCA Reg. Waste
- ☐ Evaluated in Another Process

EPA Codes:

Description (Material, Type, Size, Color, etc.):
Tower Blowdown Water

How the Output is Generated:
Produced When Total Dissolved Solids Level Is Too High

Generation Rate:
Variable

How the Output is Managed:
Blowdown water is sent to the 309 tanks in the process waste system.

Chemicals/Contaminants in or on the Output:
None

Characterization Rationale:
This output is nonline generated in a Radioactive Materials Management Area, and is known by the generator to always be low-level waste. According to process knowledge, the output contains no RCRA hazardous constituents, and exhibits no RCRA hazardous characteristics. It is designated as low-level, nonhazardous waste.

WASTE STREAM AND RESIDUE DESCRIPTION AND CHARACTERIZATION

Process Number: 771-28-5
IDC/WFC: 290

Title: COOLING TOWERS
Description: Sludge (Radioactive)

- ▫ RCRA Hazardous
- ▪ RCRA Nonhazardous
- ▫ By Analytical Data
- ▪ By Process Knowledge
- ▫ LDR Regulated
- ▪ Not LDR Regulated
- ▫ Non-Wastewater
- ▫ Wastewater
- ▫ Product
- ▫ High Content Residue
- ▫ Low Content Residue
- ▫ Transuranic
- ▪ Low-Level
- ▫ Nonradioactive
- ▫ Source/Special Nuclear Materials
- ▫ Debris
- ▫ Fuel Blending
- ▫ Uncontained Gas
- ▫ RCRA Sample
- ▫ Recyclable Material
- ▫ Recycled/Reused
- ▫ TSCA Reg. Waste
- ▫ Evaluated in Another Process

EPA Codes:

Description (Material, Type, Size, Color, etc.):
Sludge

How the Output is Generated:
When Sump Is Periodically Cleaned Out

Generation Rate:
Variable

How the Output is Managed:
Sludge is collected, sampled, then placed in an appropriate waste container. The sludge is then disposed of properly.

Chemicals/Contaminants in or on the Output:
None

Characterization Rationale:
This output is nonline generated in a Radioactive Materials Management Area, and is known by the generator to always be low-level waste. According to process knowledge, the output contains no RCRA hazardous constituents, and exhibits no RCRA hazardous characteristics. It is designated as low-level, nonhazardous waste.

WASTE STREAM AND RESIDUE DESCRIPTION AND CHARACTERIZATION

Process Number: 771-28-6
IDC/WFC: 513

Title: COOLING TOWERS
Description: Process Cooling Water

- ☐ RCRA Hazardous
- ■ RCRA Nonhazardous
- ☐ By Analytical Data
- ■ By Process Knowledge
- ☐ LDR Regulated
- ■ Not LDR Regulated
- ☐ Non-Wastewater
- ☐ Wastewater
- ☐ Product
- ☐ High Content Residue
- ☐ Low Content Residue
- ☐ Transuranic
- ■ Low-Level
- ☐ Nonradioactive
- ☐ Source/Special Nuclear Materials
- ☐ Debris
- ☐ Fuel Blending
- ☐ Uncontained Gas
- ☐ RCRA Sample
- ☐ Recyclable Material
- ☐ Recycled/Reused
- ☐ TSCA Reg. Waste
- ☐ Evaluated in Another Process

EPA Codes:

Description (Material, Type, Size, Color, etc.):
Process Cooling Water

How the Output is Generated:
During Process Operations

Generation Rate:
Variable

How the Output is Managed:
Process Cooling Water Is Sent To The 309 Tanks In The Process Waste System

Chemicals/Contaminants in or on the Output:
None

Characterization Rationale:
This output is nonline generated in a Radioactive Materials Management Area. According to process knowledge, this output contains no RCRA hazardous constituents and exhibits no RCRA hazardous characteristics. This output has been designated a low-level, nonhazardous waste.

29.0 PROCESS 771-29: MAINTENANCE

Maintenance provides service to all areas of Building 771 and consists of a number of relatively small, unrelated, ongoing activities as well as periodic major activities. The Maintenance Process maintains other processes, equipment, and facilities in the building. The process uses carpentry machinery and various tools. Figure 29.1 shows the inputs, process flow, and outputs associated with Maintenance.

The Maintenance Process provides installations, line replacements, craft work, piping, electrical work, carpentry, sheet metal installation, painting, machinist work, valve replacements, bookcase building for office areas, equipment strip-out, scaffolding construction, and machining work, including shafts and passthroughs for production equipment. Construction materials, including lumber; wallboard; wire; nails; metal such as pipe, sheet, and stainless steel; plastics; cutting oils; window gaskets; bags; containers; fluorescent and standard light bulbs; window glass; and strippers, are some of the inputs to Maintenance activities. Some lubricant is used for drilling, then the equipment is cleaned with Kimwipes.

Preventive Maintenance Operations (Process 771-30) handles all oil change-outs. Threading oil is not replaced; each machine has its own reservoir and the oil is circulated in a continuous stream. Paint thinner and paint strippers are used in relatively small amounts. Both latex and enamel paints are used by Maintenance.

Construction wastes, both contaminated and noncontaminated, are collected in Building 771. These wastes are evaluated in the specific processes in which they are generated and are not considered outputs of the Maintenance Process. Hardened paint is collected with low-level waste if it is used in a contamination control area. The hardened paint is placed in a flammable materials cabinet and then transferred to a drum. Light metal, plastic, painted wood, and combustibles are placed in their appropriate drum in the shop. Nonhazardous waste is collected in a drum. Fluorescent bulbs are crushed into a collection drum. Leaded glass and radioactive lead scraps are collected in RCRA collection areas. Used air conditioning filter media, nonasbestos insulation waste, and cement and sand waste are placed in drums labeled with the appropriate IDC. Nonradioactive lead scraps are collected on a pallet and sent to Property Utilization and Disposal. Waste generation varies depending on maintenance demands in the building. Process Table 771-29 presents the outputs associated with the Maintenance Process and provides their dispositions and hazardous character.

AutoCAD 12, File Name: 771-29

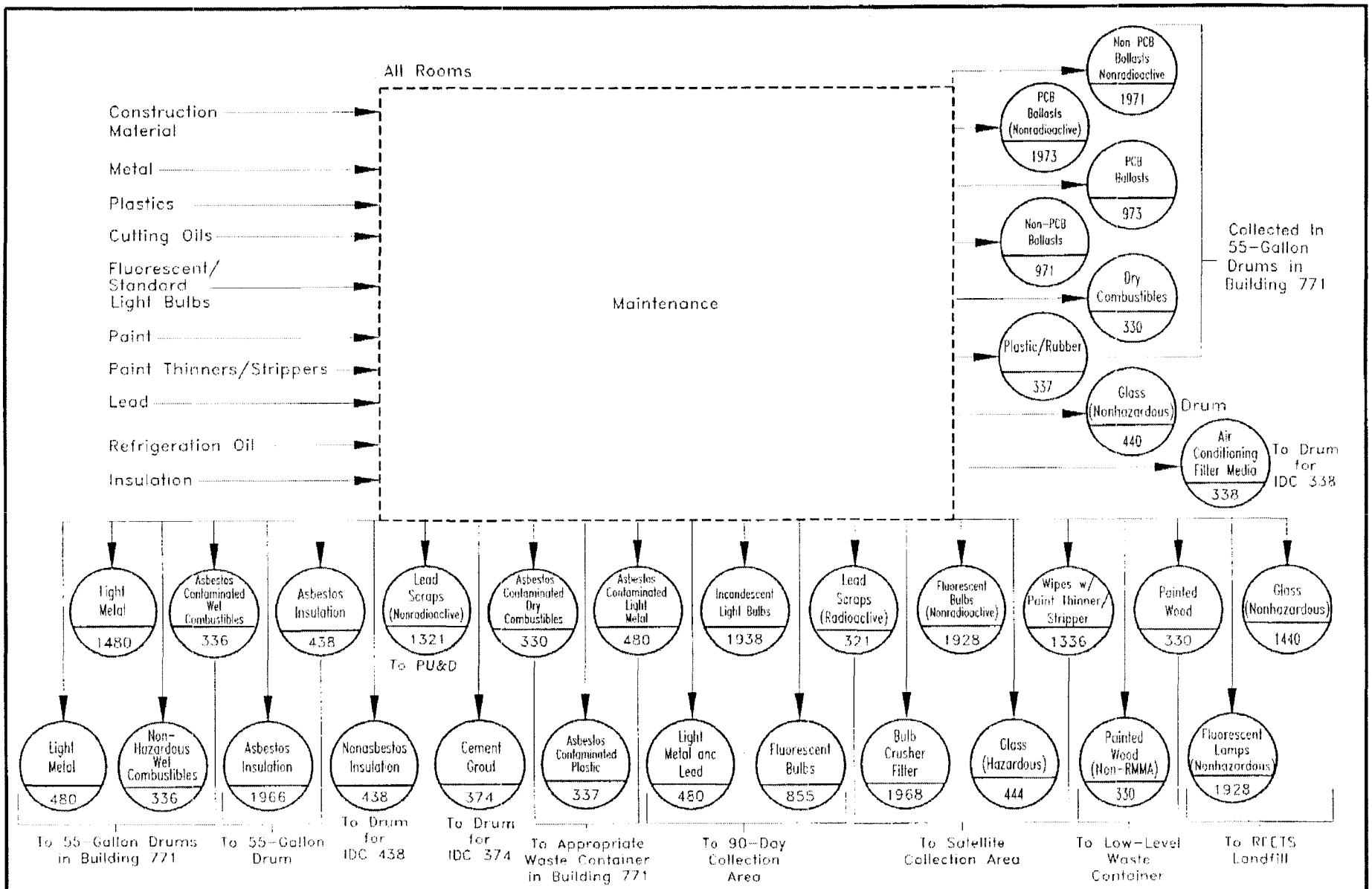

FIGURE 29.1

Rocky Flats Environmental Technology Site Waste Stream & Residue Identification & Characterization	BUILDING 771/PROCESS 29 MAINTENANCE	Task	By	Date
		Designed	R. Medlyn/J. Kleckner	07/12/90
		Drawn	R. Nisely	08/14/96
		Checked	J. Schoen	10/15/98

PROCESS 771-29 MAINTENANCE

Process Number	IDC/ WFC No.	CCCs RCRA Reg. Const.	CCCs Non-RCRA Reg. Const.	Comp. Codes	Description RCRA Reg. Chemical Constituents: Non-RCRA Reg. Chemical Constituents:	Collection	LDR Codes	RCRA Haz. Waste	RCRA-Land Disposal Restricted (Part 268)	Wastewater/Non-Wastewater: Debris/Non-Debris: Subcategory:	EPA Codes
771-29-1	330	00	00	NA	Dry Combustibles RCRA Reg. Chemical Constituents: None Non-RCRA Reg. Chemical Constituents: None	Drum, Building 771		No	No		
771-29-3	337	00	00	NA	Plastic And Rubber RCRA Reg. Chemical Constituents: None Non-RCRA Reg. Chemical Constituents: None	Drum, Building 771		No	No		

Process Number	IDC/ WFC No.	CCCs RCRA Reg. Const.	CCCs Non-RCRA Reg. Const.	Comp. Codes	Description RCRA Reg. Chemical Constituents: Non-RCRA Reg. Chemical Constituents:	Collection	LDR Codes	RCRA Haz. Waste	RCRA-Land Disposal Restricted (Part 268)	Wastewater/Non-Wastewater: Debris/Non-Debris: Subcategory:	EPA Codes
771-29-4	444	2404	00	NA	Glass (Hazardous) RCRA Reg. Chemical Constituents: Lead Barium Non-RCRA Reg. Chemical Constituents: None	90-Day Collection Area	RT D PB1	Yes	Yes Does Not Meet Treatment Standards	Debris Lead	D005, D008
771-29-5	480	00	32	NA	Light Metal RCRA Reg. Chemical Constituents: None Non-RCRA Reg. Chemical Constituents: Oil (Used)	Drum, Building 771		No	No		

Process Number	IDC/ WFC No.	CCCs RCRA Reg. Const.	CCCs Non-RCRA Reg. Const.	Comp. Codes	Description RCRA Reg. Chemical Constituents: Non-RCRA Reg. Chemical Constituents:	Collection	LDR Codes	RCRA Haz. Waste	RCRA-Land Disposal Restricted (Part 268)	Wastewater/Non-Wastewater: Debris/Non-Debris: Subcategory:	EPA Codes
771-29-9	1321	24	00	NA	Lead Scraps RCRA Reg. Chemical Constituents: Lead Non-RCRA Reg. Chemical Constituents: None	PU&D	NR	Yes	No Not Regulated		D008
771-29-10	855	26	00	NA	Fluorescent Light Bulbs RCRA Reg. Chemical Constituents: Mercury Non-RCRA Reg. Chemical Constituents: None	90-Day Collection Area	RT NWW HG3	Yes	Yes Does Not Meet Treatment Standards	Non-Wastewater Mercury/Low	D009

Process Number	IDC/ WFC No.	CCCs RCRA Reg. Const.	CCCs Non-RCRA Reg. Const.	Comp. Codes	Description RCRA Reg. Chemical Constituents: Non-RCRA Reg. Chemical Constituents:	Collection	LDR Codes	RCRA Haz. Waste	RCRA-Land Disposal Restricted (Part 268)	Wastewater/Non-Wastewater: Debris/Non-Debris: Subcategory:	EPA Codes
771-29-13	374	00	00	NA	Cement Grout RCRA Reg. Chemical Constituents: None Non-RCRA Reg. Chemical Constituents: None	Drum, Building 771		No	No		
771-29-14	438	00	00	NA	Nonasbestos Insulation RCRA Reg. Chemical Constituents: None Non-RCRA Reg. Chemical Constituents: None	Drum, Building 771		No	No		

Process Number	IDC/ WFC No.	CCCs RCRA Reg. Const.	CCCs Non-RCRA Reg. Const.	Comp. Codes	Description RCRA Reg. Chemical Constituents: Non-RCRA Reg. Chemical Constituents:	Collection	LDR Codes	RCRA Haz. Waste	RCRA-Land Disposal Restricted (Part 268)	Wastewater/Non-Wastewater: Debris/Non-Debris: Subcategory:	EPA Codes
771-29-15	338	00	00	NA	Air Conditioning Filter Media RCRA Reg. Chemical Constituents: None Non-RCRA Reg. Chemical Constituents: None	Drum, Building 771		No	No		
771-29-16	330	00	00	NA	Painted Wood RCRA Reg. Chemical Constituents: None Non-RCRA Reg. Chemical Constituents: None	Low-level Waste Container		No	No		

Process Number	IDC/ WFC No.	CCCs RCRA Reg. Const.	CCCs Non-RCRA Reg. Const.	Comp. Codes	Description RCRA Reg. Chemical Constituents: Non-RCRA Reg. Chemical Constituents:	Collection	LDR Codes	RCRA Haz. Waste	RCRA-Land Disposal Restricted (Part 268)	Wastewater/Non-Wastewater: Debris/Non-Debris: Subcategory:	EPA Codes
771-29-17	1336	343828	00	NA	Wipes With Paint Thinner And Stripper RCRA Reg. Chemical Constituents: Paint Thinner Toluene Methyl Ethyl Ketone Non-RCRA Reg. Chemical Constituents: None	90-Day Collection Area	RT D N/A	Yes	Yes Does Not Meet Treatment Standards	Debris No Applicable Subcategory	F005
771-29-19	440	00	00	NA	Glass (Nonhazardous) RCRA Reg. Chemical Constituents: None Non-RCRA Reg. Chemical Constituents: None	55-Gallon Drum		No	No		

Process Number	IDC/ WFC No.	CCCs RCRA Reg. Const.	CCCs Non-RCRA Reg. Const.	Comp. Codes	Description RCRA Reg. Chemical Constituents: Non-RCRA Reg. Chemical Constituents:	Collection	LDR Codes	RCRA Haz. Waste	RCRA-Land Disposal Restricted (Part 268)	Wastewater/Non-Wastewater: Debris/Non-Debris: Subcategory:	EPA Codes
771-29-20	321	24	00	NA	Lead (Radioactive) RCRA Reg. Chemical Constituents: Lead Non-RCRA Reg. Chemical Constituents: None	Satellite Collection Area	RT NWW PB3	Yes	Yes Does Not Meet Treatment Standards	Non-Wastewater Lead/Radioactive	D008
771-29-21	336	00	??	NA	Wet Combustibles (Nonhazardous) RCRA Reg. Chemical Constituents: None Non-RCRA Reg. Chemical Constituents: Constituents vary and will be determined on a case-by-case basis.	55-Gallon Drum		No	No		

Process Number	IDC/ WFC No.	CCCs RCRA Reg. Const.	CCCs Non-RCRA Reg. Const.	Comp. Codes	Description RCRA Reg. Chemical Constituents: Non-RCRA Reg. Chemical Constituents:	Collection	LDR Codes	RCRA Haz. Waste	RCRA-Land Disposal Restricted (Part 268)	Wastewater/Non-Wastewater: Debris/Non-Debris: Subcategory:	EPA Codes
771-29-22A	971	00	32	NA	Ballasts (Non-PCB) RCRA Reg. Chemical Constituents: None Non-RCRA Reg. Chemical Constituents: Oil (Used)	55-Gallon Drum		No	No		
771-29-23A	1973	00	3271	NA	Ballasts (PCB) (Nonradioactive) RCRA Reg. Chemical Constituents: None Non-RCRA Reg. Chemical Constituents: Oil (Used) PCB	55-Gallon Drum		No	No		

Process Number	IDC/ WFC No.	CCCs RCRA Reg. Const.	CCCs Non-RCRA Reg. Const.	Comp. Codes	Description RCRA Reg. Chemical Constituents: Non-RCRA Reg. Chemical Constituents:	Collection	LDR Codes	RCRA Haz. Waste	RCRA-Land Disposal Restricted (Part 268)	Wastewater/Non-Wastewater: Debris/Non-Debris: Subcategory:	EPA Codes
771-29-24A	973	00	3271	NA	Ballasts (PCB) RCRA Reg. Chemical Constituents: None Non-RCRA Reg. Chemical Constituents: Oil (Used) PCB	55-Gallon Drum		No	No		
771-29-25	480	00	00	NA	Light Metal RCRA Reg. Chemical Constituents: None Non-RCRA Reg. Chemical Constituents: None	55-Gallon Drum		No	No		

Process Number	IDC/ WFC No.	CCCs RCRA Reg. Const.	CCCs Non-RCRA Reg. Const.	Comp. Codes	Description RCRA Reg. Chemical Constituents: Non-RCRA Reg. Chemical Constituents:	Collection	LDR Codes	RCRA Haz. Waste	RCRA-Land Disposal Restricted (Part 268)	Wastewater/Non-Wastewater: Debris/Non-Debris: Subcategory:	EPA Codes
771-29-26	1966	00	70	NA	Asbestos Insulation (Nonradioactive) RCRA Reg. Chemical Constituents: None Non-RCRA Reg. Chemical Constituents: Asbestos	55-Gallon Drum		No	No		
771-29-27	438	00	70	NA	Asbestos Insulation RCRA Reg. Chemical Constituents: None Non-RCRA Reg. Chemical Constituents: Asbestos	55-Gallon Drum		No	No		

Process Number	IDC/ WFC No.	CCCs RCRA Reg. Const.	CCCs Non-RCRA Reg. Const.	Comp. Codes	Description RCRA Reg. Chemical Constituents: Non-RCRA Reg. Chemical Constituents:	Collection	LDR Codes	RCRA Haz. Waste	RCRA-Land Disposal Restricted (Part 268)	Wastewater/Non-Wastewater: Debris/Non-Debris: Subcategory:	EPA Codes
771-29-28	1440	00	00	NA	Glass (Nonhazardous) RCRA Reg. Chemical Constituents: None Non-RCRA Reg. Chemical Constituents: None	Sanitary Landfill		No	No		
771-29-29	330	00	00	NA	Painted Wood (In A Non-RMMA) RCRA Reg. Chemical Constituents: None Non-RCRA Reg. Chemical Constituents: None	Low-Level Waste Container		No	No		

Process Number	IDC/ WFC No.	CCCs RCRA Reg. Const.	CCCs Non-RCRA Reg. Const.	Comp. Codes	Description RCRA Reg. Chemical Constituents: Non-RCRA Reg. Chemical Constituents:	Collection	LDR Codes	RCRA Haz. Waste	RCRA-Land Disposal Restricted (Part 268)	Wastewater/Non-Wastewater: Debris/Non-Debris: Subcategory:	EPA Codes
771-29-30	330	00	70	NA	Dry Combustibles (Asbestos Contaminated) RCRA Reg. Chemical Constituents: None Non-RCRA Reg. Chemical Constituents: Asbestos	Appropriate Waste Container		No	No		
771-29-31	480	00	70	NA	Light Metal (Asbestos Contaminated) RCRA Reg. Chemical Constituents: None Non-RCRA Reg. Chemical Constituents: Asbestos	Appropriate Waste Container		No	No		

Process Number	IDC/ WFC No.	CCCs RCRA Reg. Const.	CCCs Non-RCRA Reg. Const.	Comp. Codes	Description RCRA Reg. Chemical Constituents: Non-RCRA Reg. Chemical Constituents:	Collection	LDR Codes	RCRA Haz. Waste	RCRA-Land Disposal Restricted (Part 268)	Wastewater/Non-Wastewater: Debris/Non-Debris: Subcategory:	EPA Codes
771-29-32	337	00	70	NA	Plastic (Asbestos Contaminated) RCRA Reg. Chemical Constituents: None Non-RCRA Reg. Chemical Constituents: Asbestos	Appropriate Waste Container		No	No		
771-29-33	1928	26	24	NA	Fluorescent Bulbs RCRA Reg. Chemical Constituents: Mercury Non-RCRA Reg. Chemical Constituents: Lead	90-Day Collection Area	RT NWW HG3	Yes	Yes Does Not Meet Treatment Standards	Non-Wastewater Mercury/Low	D009

Process Number	IDC/ WFC No.	CCCs RCRA Reg. Const.	CCCs Non-RCRA Reg. Const.	Comp. Codes	Description RCRA Reg. Chemical Constituents: Non-RCRA Reg. Chemical Constituents:	Collection	LDR Codes	RCRA Haz. Waste	RCRA-Land Disposal Restricted (Part 268)	Wastewater/Non-Wastewater: Debris/Non-Debris: Subcategory:	EPA Codes
771-29-36	336	00	70	NA	Wet Combustibles Contaminated W/Asbestos RCRA Reg. Chemical Constituents: None Non-RCRA Reg. Chemical Constituents: Asbestos	55-Gallon White Drum		No	No		
771-29-37A	1971	00	32	NA	Ballasts (Non-PCB) (Nonradioactive) RCRA Reg. Chemical Constituents: None Non-RCRA Reg. Chemical Constituents: Oil (Used)	Gray 55-Gallon Open Top Drum		No	No		

Process Number	IDC/ WFC No.	CCCs RCRA Reg. Const.	CCCs Non-RCRA Reg. Const.	Comp. Codes	Description RCRA Reg. Chemical Constituents: Non-RCRA Reg. Chemical Constituents:	Collection	LDR Codes	RCRA Haz. Waste	RCRA-Land Disposal Restricted (Part 268)	Wastewater/Non-Wastewater: Debris/Non-Debris: Subcategory:	EPA Codes
771-29-38	1928	00	00	NA	Fluorescent Lamps (Nonhazardous) RCRA Reg. Chemical Constituents: None Non-RCRA Reg. Chemical Constituents: None	Boxed And Sent To The 130 Laydown Area		No	No		
771-29-39A	1938	24	082631	NA	Incandescent Light Bulbs RCRA Reg. Chemical Constituents: Lead Non-RCRA Reg. Chemical Constituents: Cadmium Mercury Nickel	90-Day Collection Area	RT NWW PB1	Yes	Yes Does Not Meet Treatment Standards	Non-Wastewater Lead	D008

Process Number	IDC/ WFC No.	CCCs RCRA Reg. Const.	CCCs Non-RCRA Reg. Const.	Comp. Codes	Description RCRA Reg. Chemical Constituents: Non-RCRA Reg. Chemical Constituents:	Collection	LDR Codes	RCRA Haz. Waste	RCRA-Land Disposal Restricted (Part 268)	Wastewater/Non-Wastewater: Debris/Non-Debris: Subcategory:	EPA Code
771-29-40	1968	26	00	NA	Bulb Crusher Filter RCRA Reg. Chemical Constituents: Mercury Non-RCRA Reg. Chemical Constituents: None	55-Gallon Drum With Crushed Fluorescent Tubes	RT NWW HG3	Yes	Yes Does Not Meet Treatment Standards	Non-Wastewater Mercury/Low	D009
771-29-41	480	24	00	NA	Light Metal Bonded With Lead RCRA Reg. Chemical Constituents: Lead Non-RCRA Reg. Chemical Constituents: None	55-Gallon Drum In A 90-Day Collection Area	RT NWW PB1	Yes	Yes Does Not Meet Treatment Standards	Non-Wastewater Lead	D008

WASTE STREAM AND RESIDUE DESCRIPTION AND CHARACTERIZATION

Process Number: 771-29-1 **Title:** MAINTENANCE
IDC/WFC: 330 **Description:** Dry Combustibles

- ☐ RCRA Hazardous
- ■ RCRA Nonhazardous
- ☐ By Analytical Data
- ■ By Process Knowledge
- ☐ LDR Regulated
- ■ Not LDR Regulated
- ☐ Non-Wastewater
- ☐ Wastewater
- ☐ Product
- ☐ High Content Residue
- ☐ Low Content Residue
- ☐ Transuranic
- ■ Low-Level
- ☐ Nonradioactive
- ☐ Source/Special Nuclear Materials
- ☐ Debris
- ☐ Fuel Blending
- ☐ Uncontained Gas
- ☐ RCRA Sample
- ☐ Recyclable Material
- ☐ Recycled/Reused
- ☐ TSCA Reg. Waste
- ☐ Evaluated in Another Process

EPA Codes:

Description (Material, Type, Size, Color, etc.):
Dry combustibles consist of surgeon's gloves, cloth, tape, package material, wood, and dried paint generated during the Maintenance Process.

How the Output is Generated:
During Maintenance Process

Generation Rate:
Variable

How the Output is Managed:
Dry combustibles are collected in a drum in Building 771.

Chemicals/Contaminants in or on the Output:
Dried Paint

Characterization Rationale:
These dry combustibles are nonline generated in a Radioactive Materials Management Area. According to process knowledge, the output contains no RCRA hazardous constituents and exhibits no RCRA hazardous characteristics. It is designated as low-level, nonhazardous, waste.

WASTE STREAM AND RESIDUE DESCRIPTION AND CHARACTERIZATION

Process Number: 771-29-3
IDC/WFC: 337

Title: MAINTENANCE
Description: Plastic And Rubber

- ▫ RCRA Hazardous
- ▪ RCRA Nonhazardous
- ▫ By Analytical Data
- ▪ By Process Knowledge
- ▫ LDR Regulated
- ▪ Not LDR Regulated
- ▫ Non-Wastewater
- ▫ Wastewater
- ▫ Product
- ▫ High Content Residue
- ▫ Low Content Residue
- ▫ Transuranic
- ▪ Low-Level
- ▫ Nonradioactive
- ▫ Source/Special Nuclear Materials
- ▫ Debris
- ▫ Fuel Blending
- ▫ Uncontained Gas
- ▫ RCRA Sample
- ▫ Recyclable Material
- ▫ Recycled/Reused
- ▫ TSCA Reg. Waste
- ▫ Evaluated in Another Process

EPA Codes:

Description (Material, Type, Size, Color, etc.):
Plastic and rubber waste consisting of window gaskets, nylon, Tygon gasket material, Lexan, tubing, bags, containers, and tents is produced as waste by the Maintenance department.

How the Output is Generated:
During Replacement Of Plastic And Rubber Parts Carried Out By Maintenance Personnel

Generation Rate:
Variable

How the Output is Managed:
Plastic and rubber waste is collected in a drum in Building 771.

Chemicals/Contaminants in or on the Output:
None

Characterization Rationale:
This plastic is nonline generated in a Radioactive Materials Management Area. According to process knowledge, the output contains no RCRA hazardous constituents, and exhibits no RCRA hazardous characteristics. It is designated as low-level, nonhazardous waste.

WASTE STREAM AND RESIDUE DESCRIPTION AND CHARACTERIZATION

Process Number: 771-29-4
IDC/WFC: 444

Title: MAINTENANCE
Description: Glass (Hazardous)

- ■ RCRA Hazardous
- □ RCRA Nonhazardous
- □ By Analytical Data
- ■ By Process Knowledge
- ■ LDR Regulated
- □ Not LDR Regulated
- □ Non-Wastewater
- □ Wastewater
- □ Product
- □ High Content Residue
- □ Low Content Residue
- ■ Transuranic
- □ Low-Level
- □ Nonradioactive
- □ Source/Special Nuclear Materials
- ■ Debris
- □ Fuel Blending
- □ Uncontained Gas
- □ RCRA Sample
- □ Recyclable Material
- □ Recycled/Reused
- □ TSCA Reg. Waste
- □ Evaluated in Another Process

EPA Codes:
D005, D008

Description (Material, Type, Size, Color, etc.):
Glass waste consisting of broken glovebox windows is produced by the Maintenance department. Windows are removed as production needs arise for lead glass windows. This glass is considered line generated.

How the Output is Generated:
Replacement Of Leaded Glass Windows

Generation Rate:
Variable

How the Output is Managed:
Glass waste is collected in 90-day collection area.

Chemicals/Contaminants in or on the Output:
Barium And Lead

Characterization Rationale:
This output is line generated in a Radioactive Materials Management Area. According to process knowledge, this output exhibits the characteristic of toxicity due to the presence of barium and lead. This output has been designated a TRU, mixed waste. This output meets the definition of hazardous debris and can be treated by an appropriate technology in 40 CFR 268.45. The concentration-based treatment standard for barium and lead, and the treatment standards for underlying hazardous constituents as defined in 40 CFR 268.48 must be met for treatment residue(s) prior to land disposal. The underlying hazardous constituents associated with this output are listed in Appendix E.

WASTE STREAM AND RESIDUE DESCRIPTION AND CHARACTERIZATION

Process Number: 771-29-5 **Title:** MAINTENANCE
IDC/WFC: 480 **Description:** Light Metal

- ☐ RCRA Hazardous
- ■ RCRA Nonhazardous
- ☐ By Analytical Data
- ■ By Process Knowledge
- ☐ LDR Regulated
- ■ Not LDR Regulated
- ☐ Non-Wastewater
- ☐ Wastewater
- ☐ Product
- ☐ High Content Residue
- ☐ Low Content Residue
- ☐ Transuranic
- ■ Low-Level
- ☐ Nonradioactive
- ☐ Source/Special Nuclear Materials
- ☐ Debris
- ☐ Fuel Blending
- ☐ Uncontained Gas
- ☐ RCRA Sample
- ☐ Recyclable Material
- ☐ Recycled/Reused
- ☐ TSCA Reg. Waste
- ☐ Evaluated in Another Process

EPA Codes:

Description (Material, Type, Size, Color, etc.):
Light metal waste consists of tools and metal chips with cutting oil.

How the Output is Generated:
During Maintenance Process

Generation Rate:
Variable

How the Output is Managed:
Light metal waste is collected in a drum in Building 771.

Chemicals/Contaminants in or on the Output:
Cutting Oil

Characterization Rationale:
This output is nonline generated in a Radioactive Materials Management Area. According to process knowledge, the output contains no RCRA hazardous constituents and exhibits no RCRA hazardous characteristics. It is designated as low-level, nonhazardous waste.

WASTE STREAM AND RESIDUE DESCRIPTION AND CHARACTERIZATION

Process Number: 771-29-9
IDC/WFC: 1321

Title: MAINTENANCE
Description: Lead Scraps

- ■ RCRA Hazardous
- □ RCRA Nonhazardous
- □ By Analytical Data
- ■ By Process Knowledge
- □ LDR Regulated
- ■ Not LDR Regulated
- □ Non-Wastewater
- □ Wastewater
- □ Product
- □ High Content Residue
- □ Low Content Residue
- □ Transuranic
- □ Low-Level
- ■ Nonradioactive
- □ Source/Special Nuclear Materials
- □ Debris
- □ Fuel Blending
- □ Uncontained Gas
- □ RCRA Sample
- ■ Recyclable Material
- □ Recycled/Reused
- □ TSCA Reg. Waste
- □ Evaluated in Another Process

EPA Codes:
D008

Description (Material, Type, Size, Color, etc.):
Lead scraps are generated from cutting and forming lead in the maintenance shop.

How the Output is Generated:
During Cutting And Forming Process In Maintenance Shop

Generation Rate:
Variable

How the Output is Managed:
Lead is collected on a pallet and sent to Property Utilization and Disposal (PU&D).

Chemicals/Contaminants in or on the Output:
Lead

Characterization Rationale:
This scraps metal (lead) is a hazardous waste that is recycled and meets the definition of a recyclable material in Section 261.6 and therefore is not subject to regulation under Part 262 through 266 and Part 268, the land disposal restriction regulations. These materials are generated in a non-Radioactive Materials Management Area. This output has been designated a nonradioactive, hazardous waste that is recycled.

WASTE STREAM AND RESIDUE DESCRIPTION AND CHARACTERIZATION

Process Number: 771-29-10
IDC/WFC: 855

Title: MAINTENANCE
Description: Fluorescent Light Bulbs

- ■ RCRA Hazardous
- □ RCRA Nonhazardous
- ■ By Analytical Data
- □ By Process Knowledge
- ■ LDR Regulated
- □ Not LDR Regulated
- ■ Non-Wastewater
- □ Wastewater
- □ Product
- □ High Content Residue
- □ Low Content Residue
- □ Transuranic
- ■ Low-Level
- □ Nonradioactive
- □ Source/Special Nuclear Materials
- □ Debris
- □ Fuel Blending
- □ Uncontained Gas
- □ RCRA Sample
- □ Recyclable Material
- □ Recycled/Reused
- □ TSCA Reg. Waste
- □ Evaluated in Another Process

EPA Codes:
D009

Description (Material, Type, Size, Color, etc.):
Fluorescent Light Bulbs

How the Output is Generated:
During Bulb Replacement Performed By Maintenance Department

Generation Rate:
110 Gallons Yearly

How the Output is Managed:
Placed In A 90-Day Collection Area

Chemicals/Contaminants in or on the Output:
Mercury

Characterization Rationale:
According to analytical data (Ref. ALS-328-94) these fluorescent light tubes exhibit the RCRA hazardous characteristic of toxicity due to the presence of mercury. All materials removed from a Radioactive Materials Management Area must be surveyed by Radiological Operations to ensure they meet unrestricted release criteria for offsite shipment. All materials removed from non-Radioactive Materials Management Areas require a PWRE for their release. Therefore, this output is designated as RCRA hazardous, low-level waste. This output does not meet the LDR treatment standards defined in 40 CFR 268.40. The output must meet the concentration-based treatment standards for mercury and the treatment standards for the underlying hazardous constituents. The treatment standards for the underlying hazardous constituents as defined in 40 CFR 268.48 must be met for treatment residue(s) prior to land disposal. The underlying hazardous constituents associated with this output are listed in Appendix E.

WASTE STREAM AND RESIDUE DESCRIPTION AND CHARACTERIZATION

Process Number: 771-29-13 **Title:** MAINTENANCE
IDC/WFC: 374 **Description:** Cement Grout

- ☐ RCRA Hazardous
- ■ RCRA Nonhazardous
- ☐ By Analytical Data
- ■ By Process Knowledge
- ☐ LDR Regulated
- ■ Not LDR Regulated
- ☐ Non-Wastewater
- ☐ Wastewater
- ☐ Product
- ☐ High Content Residue
- ☐ Low Content Residue
- ☐ Transuranic
- ■ Low-Level
- ☐ Nonradioactive
- ☐ Source/Special Nuclear Materials
- ☐ Debris
- ☐ Fuel Blending
- ☐ Uncontained Gas
- ☐ RCRA Sample
- ☐ Recyclable Material
- ☐ Recycled/Reused
- ☐ TSCA Reg. Waste
- ☐ Evaluated in Another Process

EPA Codes:

Description (Material, Type, Size, Color, etc.):
Cement And Sand

How the Output is Generated:
During Completion Of Routine Work Packages

Generation Rate:
110 Gallons Yearly

How the Output is Managed:
Placed In A 55-Gallon Drum For IDC 374

Chemicals/Contaminants in or on the Output:
None

Characterization Rationale:
This output is nonline generated, in a Radioactive Materials Management Area, and is known by the generator to always be low-level waste. According to process knowledge, the output contains no RCRA hazardous constituents, and exhibits no RCRA hazardous characteristics. It is designated as low-level, nonhazardous waste.

WASTE STREAM AND RESIDUE DESCRIPTION AND CHARACTERIZATION

Process Number: 771-29-14
IDC/WFC: 438

Title: MAINTENANCE
Description: Nonasbestos Insulation

- ▫ RCRA Hazardous
- ▪ RCRA Nonhazardous
- ▫ By Analytical Data
- ▪ By Process Knowledge
- ▫ LDR Regulated
- ▪ Not LDR Regulated
- ▫ Non-Wastewater
- ▫ Wastewater
- ▫ Product
- ▫ High Content Residue
- ▫ Low Content Residue
- ▫ Transuranic
- ▪ Low-Level
- ▫ Nonradioactive
- ▫ Source/Special Nuclear Materials
- ▫ Debris
- ▫ Fuel Blending
- ▫ Uncontained Gas
- ▫ RCRA Sample
- ▫ Recyclable Material
- ▫ Recycled/Reused
- ▫ TSCA Reg. Waste
- ▫ Evaluated in Another Process

EPA Codes:

Description (Material, Type, Size, Color, etc.):
Ceiling Tile And Fiberglass And Nonasbestos Piping Insulation

How the Output is Generated:
During The Completion Of Routine Work Packages And Preventive Maintenance Operations

Generation Rate:
300 Gallons Yearly

How the Output is Managed:
Placed In A 55-Gallon Drum For IDC 438

Chemicals/Contaminants in or on the Output:
None

Characterization Rationale:
This output is nonline generated, in a Radioactive Materials Management Area, and is known by the generator to always be low-level waste. According to process knowledge, the output contains no RCRA hazardous constituents, and exhibits no RCRA hazardous characteristics. It is designated as low-level, nonhazardous waste.

WASTE STREAM AND RESIDUE DESCRIPTION AND CHARACTERIZATION

Process Number: 771-29-15
IDC/WFC: 338

Title: MAINTENANCE
Description: Air Conditioning Filter Media

- ☐ RCRA Hazardous
- ■ RCRA Nonhazardous
- ☐ By Analytical Data
- ■ By Process Knowledge
- ☐ LDR Regulated
- ■ Not LDR Regulated
- ☐ Non-Wastewater
- ☐ Wastewater
- ☐ Product
- ☐ High Content Residue
- ☐ Low Content Residue
- ☐ Transuranic
- ■ Low-Level
- ☐ Nonradioactive
- ☐ Source/Special Nuclear Materials
- ☐ Debris
- ☐ Fuel Blending
- ☐ Uncontained Gas
- ☐ RCRA Sample
- ☐ Recyclable Material
- ☐ Recycled/Reused
- ☐ TSCA Reg. Waste
- ☐ Evaluated in Another Process

EPA Codes:

Description (Material, Type, Size, Color, etc.):
Various Air Conditioning Filters Consisting Of Synthetic Fibers

How the Output is Generated:
During The Completion Of Routine Work Packages And Preventive Maintenance Operations

Generation Rate:
110 Gallons Yearly

How the Output is Managed:
Placed In A 55-Gallon Drum For IDC 338

Chemicals/Contaminants in or on the Output:
None

Characterization Rationale:
This output is nonline generated, in a Radioactive Materials Management Area, and is known by the generator to always be low-level waste. According to process knowledge, the output contains no RCRA hazardous constituents and exhibits no RCRA hazardous characteristics. It is designated as low-level, nonhazardous waste.

WASTE STREAM AND RESIDUE DESCRIPTION AND CHARACTERIZATION

Process Number: 771-29-16
IDC/WFC: 330

Title: MAINTENANCE
Description: Painted Wood

- ☐ RCRA Hazardous
- ■ RCRA Nonhazardous
- ☐ By Analytical Data
- ● By Process Knowledge
- ☐ LDR Regulated
- ■ Not LDR Regulated
- ☐ Non-Wastewater
- ☐ Wastewater
- ☐ Product
- ☐ High Content Residue
- ☐ Low Content Residue
- ☐ Transuranic
- ■ Low-Level
- ☐ Nonradioactive
- ☐ Source/Special Nuclear Materials
- ☐ Debris
- ☐ Fuel Blending
- ☐ Uncontained Gas
- ☐ RCRA Sample
- ☐ Recyclable Material
- ☐ Recycled/Reused
- ☐ TSCA Reg. Waste
- ☐ Evaluated in Another Process

EPA Codes:

Description (Material, Type, Size, Color, etc.):
Painted Wood

How the Output is Generated:
Routine Maintenance Within The Radioactive Materials Management Area

Generation Rate:
Variable

How the Output is Managed:
The painted wood is placed in a low-level waste container (plywood box or 55-gallon drum).

Chemicals/Contaminants in or on the Output:
None

Characterization Rationale:
This output is nonline generated in a Radioactive Materials Management Area. According to process knowledge, this output contains no RCRA hazardous constituents and exhibits no RCRA hazardous characteristics. This output has been designated a low-level, nonhazardous waste.

WASTE STREAM AND RESIDUE DESCRIPTION AND CHARACTERIZATION

Process Number: 771-29-17
IDC/WFC: 1336

Title: MAINTENANCE
Description: Wipes With Paint Thinner And Stripper

- ■ RCRA Hazardous
- □ RCRA Nonhazardous
- □ By Analytical Data
- ■ By Process Knowledge
- ■ LDR Regulated
- □ Not LDR Regulated
- □ Non-Wastewater
- □ Wastewater
- □ Product
- □ High Content Residue
- □ Low Content Residue
- □ Transuranic
- □ Low-Level
- ■ Nonradioactive
- □ Source/Special Nuclear Materials
- ■ Debris
- □ Fuel Blending
- □ Uncontained Gas
- □ RCRA Sample
- □ Recyclable Material
- □ Recycled/Reused
- □ TSCA Reg. Waste
- □ Evaluated in Another Process

EPA Codes:
F005

Description (Material, Type, Size, Color, etc.):
Wipes With Paint Thinner And Stripper

How the Output is Generated:
Stripping Paint And Cleaning With Paint Thinner

Generation Rate:
Variable

How the Output is Managed:
Paint thinner waste is collected in a 90-day collection area.

Chemicals/Contaminants in or on the Output:
Paint Thinner, Toluene, And Methyl Ethyl Ketone

Characterization Rationale:
According to process knowledge, this output contains toluene and methyl ethyl ketone, which is used as a solvent, and therefore, the output meets the definition of an F-listed waste. It is generated in a non-Radioactive Materials Management Area, and is designated as nonradioactive, hazardous waste. This output meets the definition of hazardous debris and can be treated by an appropriate technology in 40 CFR 268.45. The concentration-based treatment standard for toluene and methyl ethyl ketone must be met for treatment residue(s) prior to land disposal.

WASTE STREAM AND RESIDUE DESCRIPTION AND CHARACTERIZATION

Process Number: 771-29-19
IDC/WFC: 440

Title: MAINTENANCE
Description: Glass (Nonhazardous)

- ☐ RCRA Hazardous
- ■ RCRA Nonhazardous
- ☐ By Analytical Data
- ■ By Process Knowledge
- ☐ LDR Regulated
- ■ Not LDR Regulated
- ☐ Non-Wastewater
- ☐ Wastewater
- ☐ Product
- ☐ High Content Residue
- ☐ Low Content Residue
- ☐ Transuranic
- ■ Low-Level
- ☐ Nonradioactive
- ☐ Source/Special Nuclear Materials
- ☐ Debris
- ☐ Fuel Blending
- ☐ Uncontained Gas
- ☐ RCRA Sample
- ☐ Recyclable Material
- ☐ Recycled/Reused
- ☐ TSCA Reg. Waste
- ☐ Evaluated in Another Process

EPA Codes:

Description (Material, Type, Size, Color, etc.):
Nonleaded Glass

How the Output is Generated:
Replacement Of Nonleaded Glass

Generation Rate:
Variable

How the Output is Managed:
Glass waste is collected in a 55-gallon drum.

Chemicals/Contaminants in or on the Output:
None

Characterization Rationale:
This output is nonline generated in a Radioactive Materials Management Area. According to process knowledge, the output contains no RCRA hazardous constituents and exhibits no RCRA hazardous characteristics. This output has been designated a low-level, nonhazardous waste.

WASTE STREAM AND RESIDUE DESCRIPTION AND CHARACTERIZATION

Process Number: 771-29-20
IDC/WFC: 321

Title: MAINTENANCE
Description: Lead (Radioactive)

- ■ RCRA Hazardous
- □ RCRA Nonhazardous
- □ By Analytical Data
- ■ By Process Knowledge
- ■ LDR Regulated
- □ Not LDR Regulated
- ■ Non-Wastewater
- □ Wastewater

- ■ Product
- □ High Content Residue
- □ Low Content Residue
- □ Transuranic
- ■ Low-Level
- □ Nonradioactive
- □ Source/Special Nuclear Materials
- □ Debris

- □ Fuel Blending
- □ Uncontained Gas
- □ RCRA Sample
- □ Recyclable Material
- □ Recycled/Reused
- □ TSCA Reg. Waste
- □ Evaluated in Another Process

EPA Codes:
D008

Description (Material, Type, Size, Color, etc.):
Lead Shielding

How the Output is Generated:
Removal Or Replacement Of Lead Shielding

Generation Rate:
Variable

How the Output is Managed:
Lead is collected in a satellite collection area.

Chemicals/Contaminants in or on the Output:
Lead

Characterization Rationale:
This output is nonline generated in a Radioactive Materials Management Area. According to process knowledge, this output exhibits the characteristic of toxicity due to the presence of lead. This output has been designated a low-level, hazardous waste. This output does not meet the LDR treatment standards defined in 40 CFR 268.40. The output is radioactive lead solids and must be treated by the specified technology-based treatment standard.

WASTE STREAM AND RESIDUE DESCRIPTION AND CHARACTERIZATION

Process Number: 771-29-21
IDC/WFC: 336

Title: MAINTENANCE
Description: Wet Combustibles (Nonhazardous)

- ▫ RCRA Hazardous
- ▪ RCRA Nonhazardous
- ▫ By Analytical Data
- ▪ By Process Knowledge
- ▫ LDR Regulated
- ▪ Not LDR Regulated
- ▫ Non-Wastewater
- ▫ Wastewater
- ▫ Product
- ▫ High Content Residue
- ▫ Low Content Residue
- ▫ Transuranic
- ▪ Low-Level
- ▫ Nonradioactive
- ▫ Source/Special Nuclear Materials
- ▫ Debris
- ▫ Fuel Blending
- ▫ Uncontained Gas
- ▫ RCRA Sample
- ▫ Recyclable Material
- ▫ Recycled/Reused
- ▫ TSCA Reg. Waste
- ▫ Evaluated in Another Process

EPA Codes:

Description (Material, Type, Size, Color, etc.):
Wet Combustibles Consist Of Kimwipes Used In Various Maintenance Processes

How the Output is Generated:
Clean-Up Activities

Generation Rate:
Variable

How the Output is Managed:
Wet combustibles are placed in a 55-gallon drum in Room 179.

Chemicals/Contaminants in or on the Output:
Constituents vary but may include nonhazardous oil, KW, and water. The CCC is entered on the drum traveler on a case-by-case basis.

Characterization Rationale:
These wet combustibles are nonline generated in a Radioactive Materials Management Area. According to process knowledge, the output contains no RCRA hazardous constituents and exhibits no RCRA hazardous characteristics. The non-RCRA chemical constituent code (??) is to be replaced by the actual numeric or alphanumeric constituent code on the drum traveler. It is designated as low-level, nonhazardous waste.

WASTE STREAM AND RESIDUE DESCRIPTION AND CHARACTERIZATION

Process Number: 771-29-22A
IDC/WFC: 971

Title: MAINTENANCE
Description: Ballasts (Non-PCB)

- ☐ RCRA Hazardous
- ■ RCRA Nonhazardous
- ☐ By Analytical Data
- ■ By Process Knowledge
- ☐ LDR Regulated
- ■ Not LDR Regulated
- ☐ Non-Wastewater
- ☐ Wastewater
- ☐ Product
- ☐ High Content Residue
- ☐ Low Content Residue
- ☐ Transuranic
- ■ Low-Level
- ☐ Nonradioactive
- ☐ Source/Special Nuclear Materials
- ☐ Debris
- ☐ Fuel Blending
- ☐ Uncontained Gas
- ☐ RCRA Sample
- ☐ Recyclable Material
- ☐ Recycled/Reused
- ☐ TSCA Reg. Waste
- ☐ Evaluated in Another Process

EPA Codes:

Description (Material, Type, Size, Color, etc.):
Non-PCB Ballasts

How the Output is Generated:
During Change-Out Of Worn Ballasts

Generation Rate:
Variable

How the Output is Managed:
Placed In 55-Gallon Drum

Chemicals/Contaminants in or on the Output:
None

Characterization Rationale:
This output is nonline generated in a Radioactive Materials Management Area, and is known by the generator to always be low-level waste. According to process knowledge, the output contains no RCRA hazardous constituents and exhibits no RCRA hazardous characteristics. It is designated as low-level, nonhazardous waste.

WASTE STREAM AND RESIDUE DESCRIPTION AND CHARACTERIZATION

Process Number: 771-29-23A
IDC/WFC: 1973

Title: MAINTENANCE
Description: Ballasts (PCB) (Nonradioactive)

- ☐ RCRA Hazardous
- ■ RCRA Nonhazardous
- ☐ By Analytical Data
- ■ By Process Knowledge
- ☐ LDR Regulated
- ■ Not LDR Regulated
- ☐ Non-Wastewater
- ☐ Wastewater
- ☐ Product
- ☐ High Content Residue
- ☐ Low Content Residue
- ☐ Transuranic
- ☐ Low-Level
- ■ Nonradioactive
- ☐ Source/Special Nuclear Materials
- ☐ Debris
- ☐ Fuel Blending
- ☐ Uncontained Gas
- ☐ RCRA Sample
- ☐ Recyclable Material
- ☐ Recycled/Reused
- ■ TSCA Reg. Waste
- ☐ Evaluated in Another Process

EPA Codes:

Description (Material, Type, Size, Color, etc.):
Ballasts Containing PCB's Generated In A non-Radioactive Materials Management Area

How the Output is Generated:
During Replacement Of Worn Ballasts

Generation Rate:
Variable

How the Output is Managed:
Placed In A 55-Gallon Drum

Chemicals/Contaminants in or on the Output:
PCBs

Characterization Rationale:
This output is generated in a non-Radioactive Materials Management Area. According to process knowledge, this output contains no RCRA hazardous constituents and exhibits no RCRA hazardous characteristics. Leaking PCB ballasts are TSCA regulated and therefore, this output has been designated a nonradioactive, nonhazardous waste that is regulated under TSCA.

WASTE STREAM AND RESIDUE DESCRIPTION AND CHARACTERIZATION

Process Number: 771-29-24A
IDC/WFC: 973

Title: MAINTENANCE
Description: Ballasts (PCB)

- ☐ RCRA Hazardous
- ■ RCRA Nonhazardous
- ☐ By Analytical Data
- ■ By Process Knowledge
- ☐ LDR Regulated
- ■ Not LDR Regulated
- ☐ Non-Wastewater
- ☐ Wastewater
- ☐ Product
- ☐ High Content Residue
- ☐ Low Content Residue
- ☐ Transuranic
- ■ Low-Level
- ☐ Nonradioactive
- ☐ Source/Special Nuclear Materials
- ☐ Debris
- ☐ Fuel Blending
- ☐ Uncontained Gas
- ☐ RCRA Sample
- ☐ Recyclable Material
- ☐ Recycled/Reused
- ■ TSCA Reg. Waste
- ☐ Evaluated in Another Process

EPA Codes:

Description (Material, Type, Size, Color, etc.):
Ballasts Containing Possible PCB Contamination

How the Output is Generated:
During Replacement Of Worn Ballasts

Generation Rate:
Variable

How the Output is Managed:
Placed In A 55-Gallon Drum

Chemicals/Contaminants in or on the Output:
PCBs

Characterization Rationale:
This output is generated in a Radioactive Materials Management Area. According to process knowledge, this output contains no RCRA hazardous constituents and exhibits no RCRA hazardous characteristics. Leaking PCB ballasts are TSCA regulated and therefore, this output has been designated a low-level, nonhazardous waste that is regulated under TSCA.

WASTE STREAM AND RESIDUE DESCRIPTION AND CHARACTERIZATION

Process Number: 771-29-25
IDC/WFC: 480

Title: MAINTENANCE
Description: Light Metal

- ☐ RCRA Hazardous
- ■ RCRA Nonhazardous
- ☐ By Analytical Data
- ■ By Process Knowledge
- ☐ LDR Regulated
- ■ Not LDR Regulated
- ☐ Non-Wastewater
- ☐ Wastewater

- ☐ Product
- ☐ High Content Residue
- ☐ Low Content Residue
- ☐ Transuranic
- ■ Low-Level
- ☐ Nonradioactive
- ☐ Source/Special Nuclear Materials
- ☐ Debris

- ☐ Fuel Blending
- ☐ Uncontained Gas
- ☐ RCRA Sample
- ☐ Recyclable Material
- ☐ Recycled/Reused
- ☐ TSCA Reg. Waste
- ☐ Evaluated in Another Process

EPA Codes:

Description (Material, Type, Size, Color, etc.):
Light Metal

How the Output is Generated:
During Routine Maintenance

Generation Rate:
Variable

How the Output is Managed:
Placed In A 55-Gallon Drum

Chemicals/Contaminants in or on the Output:
None

Characterization Rationale:
This output is nonline generated in a Radioactive Materials Management Area, and is known by the generator to always be low-level waste. According to process knowledge, the output contains no RCRA hazardous constituents and exhibits no RCRA hazardous characteristics. It is designated as low-level, nonhazardous waste.

WASTE STREAM AND RESIDUE DESCRIPTION AND CHARACTERIZATION

Process Number: 771-29-26
IDC/WFC: 1966

Title: MAINTENANCE
Description: Asbestos Insulation (Nonradioactive)

- ☐ RCRA Hazardous
- ■ RCRA Nonhazardous
- ☐ By Analytical Data
- ■ By Process Knowledge
- ☐ LDR Regulated
- ■ Not LDR Regulated
- ☐ Non-Wastewater
- ☐ Wastewater
- ☐ Product
- ☐ High Content Residue
- ☐ Low Content Residue
- ☐ Transuranic
- ☐ Low-Level
- ■ Nonradioactive
- ☐ Source/Special Nuclear Materials
- ☐ Debris
- ☐ Fuel Blending
- ☐ Uncontained Gas
- ☐ RCRA Sample
- ☐ Recyclable Material
- ☐ Recycled/Reused
- ☐ TSCA Reg. Waste
- ☐ Evaluated in Another Process

EPA Codes:

Description (Material, Type, Size, Color, etc.):
Asbestos Insulation (Nonradioactive)

How the Output is Generated:
During Routine Maintenance

Generation Rate:
Variable

How the Output is Managed:
Placed In A 55-Gallon Drum

Chemicals/Contaminants in or on the Output:
Asbestos

Characterization Rationale:
This output is generated in a non-Radioactive Materials Management Area. According to process knowledge, this output contains no RCRA hazardous constituents and exhibits no RCRA hazardous characteristics. This output may contain or be contaminated with asbestos which is regulated under 40 CFR 61 Subpart M, National Emission Standards for Hazardous Air Pollutants (NESHAP). This output has been designated a nonradioactive, nonhazardous waste.

WASTE STREAM AND RESIDUE DESCRIPTION AND CHARACTERIZATION

Process Number: 771-29-27 **Title:** MAINTENANCE
IDC/WFC: 438 **Description:** Asbestos Insulation

- ▫ RCRA Hazardous
- ▪ RCRA Nonhazardous
- ▫ By Analytical Data
- ▪ By Process Knowledge
- ▫ LDR Regulated
- ▪ Not LDR Regulated
- ▫ Non-Wastewater
- ▫ Wastewater
- ▫ Product
- ▫ High Content Residue
- ▫ Low Content Residue
- ▫ Transuranic
- ▪ Low-Level
- ▫ Nonradioactive
- ▫ Source/Special Nuclear Materials
- ▫ Debris
- ▫ Fuel Blending
- ▫ Uncontained Gas
- ▫ RCRA Sample
- ▫ Recyclable Material
- ▫ Recycled/Reused
- ▫ TSCA Reg. Waste
- ▫ Evaluated in Another Process

EPA Codes:

Description (Material, Type, Size, Color, etc.):
Asbestos Insulation Generated In A Radioactive Materials Management Area

How the Output is Generated:
During Routine Maintenance

Generation Rate:
Variable

How the Output is Managed:
Placed In A 55-Gallon Drum

Chemicals/Contaminants in or on the Output:
Asbestos

Characterization Rationale:
This output is generated in a Radioactive Materials Management Area. According to process knowledge, this output contains no RCRA hazardous constituents and exhibits no RCRA hazardous characteristics. This output may contain or be contaminated with asbestos which is regulated under 40 CFR 61 Subpart M, National Emission Standards for Hazardous Air Pollutants (NESHAP). This output has been designated a low-level, nonhazardous waste.

WASTE STREAM AND RESIDUE DESCRIPTION AND CHARACTERIZATION

Process Number: 771-29-28
IDC/WFC: 1440

Title: MAINTENANCE
Description: Glass (Nonhazardous)

- ☐ RCRA Hazardous
- ■ RCRA Nonhazardous
- ☐ By Analytical Data
- ■ By Process Knowledge
- ☐ LDR Regulated
- ■ Not LDR Regulated
- ☐ Non-Wastewater
- ☐ Wastewater
- ☐ Product
- ☐ High Content Residue
- ☐ Low Content Residue
- ☐ Transuranic
- ☐ Low-Level
- ■ Nonradioactive
- ☐ Source/Special Nuclear Materials
- ☐ Debris
- ☐ Fuel Blending
- ☐ Uncontained Gas
- ☐ RCRA Sample
- ☐ Recyclable Material
- ☐ Recycled/Reused
- ☐ TSCA Reg. Waste
- ☐ Evaluated in Another Process

EPA Codes:

Description (Material, Type, Size, Color, etc.):
Glass

How the Output is Generated:
During Routine Maintenance

Generation Rate:
Variable

How the Output is Managed:
Placed In A Dumpster, To Be Disposed Of In The Sanitary Landfill

Chemicals/Contaminants in or on the Output:
None

Characterization Rationale:
According to process knowledge, this output contains no RCRA hazardous constituents and exhibits no RCRA hazardous characteristics. The output is generated in a non-Radioactive Materials Management Area and is characterized as nonhazardous, nonradioactive waste.

WASTE STREAM AND RESIDUE DESCRIPTION AND CHARACTERIZATION

Process Number: 771-29-29
IDC/WFC: 330

Title: MAINTENANCE
Description: Painted Wood (In A Non-RMMA)

- ▫ RCRA Hazardous
- ▪ RCRA Nonhazardous
- ▫ By Analytical Data
- ▪ By Process Knowledge
- ▫ LDR Regulated
- ▪ Not LDR Regulated
- ▫ Non-Wastewater
- ▫ Wastewater
- ▫ Product
- ▫ High Content Residue
- ▫ Low Content Residue
- ▫ Transuranic
- ▪ Low-Level
- ▫ Nonradioactive
- ▫ Source/Special Nuclear Materials
- ▫ Debris
- ▫ Fuel Blending
- ▫ Uncontained Gas
- ▫ RCRA Sample
- ▫ Recyclable Material
- ▫ Recycled/Reused
- ▫ TSCA Reg. Waste
- ▫ Evaluated in Another Process

EPA Codes:

Description (Material, Type, Size, Color, etc.):
Painted Wood

How the Output is Generated:
During Routine Maintenance

Generation Rate:
Variable

How the Output is Managed:
Painted wood is placed in a low-level waste container.

Chemicals/Contaminants in or on the Output:
None

Characterization Rationale:
This painted wood is generated in a non-Radioactive Materials Management Area. According to process knowledge, the output is generated in a non-Radioactive Materials Management Area and can not be accurately scanned for radioactivity because it is coated with paint. Therefore, it is always considered a low-level waste. The output contains no RCRA hazardous constituents, and exhibits no RCRA hazardous characteristics. The output is a nonhazardous, low-level waste. The output is a nonhazardous, low-level waste.

WASTE STREAM AND RESIDUE DESCRIPTION AND CHARACTERIZATION

Process Number: 771-29-30 **Title:** MAINTENANCE
IDC/WFC: 330 **Description:** Dry Combustibles (Asbestos Contaminated)

- ☐ RCRA Hazardous
- ■ RCRA Nonhazardous
- ☐ By Analytical Data
- ■ By Process Knowledge
- ☐ LDR Regulated
- ■ Not LDR Regulated
- ☐ Non-Wastewater
- ☐ Wastewater
- ☐ Product
- ☐ High Content Residue
- ☐ Low Content Residue
- ☐ Transuranic
- ■ Low-Level
- ☐ Nonradioactive
- ☐ Source/Special Nuclear Materials
- ☐ Debris
- ☐ Fuel Blending
- ☐ Uncontained Gas
- ☐ RCRA Sample
- ☐ Recyclable Material
- ☐ Recycled/Reused
- ☐ TSCA Reg. Waste
- ☐ Evaluated in Another Process

EPA Codes:

Description (Material, Type, Size, Color, etc.):
Dry Combustibles Contaminated With Asbestos

How the Output is Generated:
During Routine Maintenance Operations In Building 771

Generation Rate:
Variable

How the Output is Managed:
Placed In An Appropriate Waste Container

Chemicals/Contaminants in or on the Output:
Asbestos

Characterization Rationale:
This output is generated in a Radioactive Materials Management Area. According to process knowledge, this output contains no RCRA hazardous constituents and exhibits no RCRA hazardous characteristics. This output may contain or be contaminated with asbestos which is regulated under 40 CFR 61 Subpart M, National Emission Standards for Hazardous Air Pollutants (NESHAP). This output has been designated a low-level, nonhazardous waste.

WASTE STREAM AND RESIDUE DESCRIPTION AND CHARACTERIZATION

Process Number: 771-29-31
IDC/WFC: 480

Title: MAINTENANCE
Description: Light Metal (Asbestos Contaminated)

- ☐ RCRA Hazardous
- ■ RCRA Nonhazardous
- ☐ By Analytical Data
- ■ By Process Knowledge
- ☐ LDR Regulated
- ■ Not LDR Regulated
- ☐ Non-Wastewater
- ☐ Wastewater
- ☐ Product
- ☐ High Content Residue
- ☐ Low Content Residue
- ☐ Transuranic
- ■ Low-Level
- ☐ Nonradioactive
- ☐ Source/Special Nuclear Materials
- ☐ Debris
- ☐ Fuel Blending
- ☐ Uncontained Gas
- ☐ RCRA Sample
- ☐ Recyclable Material
- ☐ Recycled/Reused
- ☐ TSCA Reg. Waste
- ☐ Evaluated in Another Process

EPA Codes:

Description (Material, Type, Size, Color, etc.):
Light Metal Contaminated With Asbestos

How the Output is Generated:
During Routine Maintenance Operations In Building 771

Generation Rate:
Variable

How the Output is Managed:
Placed In A Appropriate Waste Container

Chemicals/Contaminants in or on the Output:
Asbestos

Characterization Rationale:
This output is generated in a Radioactive Materials Management Area. According to process knowledge, this output contains no RCRA hazardous constituents and exhibits no RCRA hazardous characteristics. This output may contain or be contaminated with asbestos which is regulated under 40 CFR 61 Subpart M, National Emission Standards for Hazardous Air Pollutants (NESHAP). This output has been designated a low-level, nonhazardous waste.

WASTE STREAM AND RESIDUE DESCRIPTION AND CHARACTERIZATION

Process Number: 771-29-32 **Title:** MAINTENANCE
IDC/WFC: 337 **Description:** Plastic (Asbestos Contaminated)

- ☐ RCRA Hazardous
- ■ RCRA Nonhazardous
- ☐ By Analytical Data
- ■ By Process Knowledge
- ☐ LDR Regulated
- ■ Not LDR Regulated
- ☐ Non-Wastewater
- ☐ Wastewater
- ☐ Product
- ☐ High Content Residue
- ☐ Low Content Residue
- ☐ Transuranic
- ■ Low-Level
- ☐ Nonradioactive
- ☐ Source/Special Nuclear Materials
- ☐ Debris
- ☐ Fuel Blending
- ☐ Uncontained Gas
- ☐ RCRA Sample
- ☐ Recyclable Material
- ☐ Recycled/Reused
- ☐ TSCA Reg. Waste
- ☐ Evaluated in Another Process

EPA Codes:

Description (Material, Type, Size, Color, etc.):
Plastic Contaminated With Asbestos

How the Output is Generated:
During Routine Maintenance Operations

Generation Rate:
Variable

How the Output is Managed:
Placed In A Appropriate Waste Container

Chemicals/Contaminants in or on the Output:
Asbestos

Characterization Rationale:
This output is generated in a Radioactive Materials Management Area. According to process knowledge, this output contains no RCRA hazardous constituents and exhibits no RCRA hazardous characteristics. This output may contain or be contaminated with asbestos which is regulated under 40 CFR 61 Subpart M, National Emission Standards for Hazardous Air Pollutants (NESHAP). This output has been designated a low-level, nonhazardous waste.

WASTE STREAM AND RESIDUE DESCRIPTION AND CHARACTERIZATION

Process Number: 771-29-33 **Title:** MAINTENANCE
IDC/WFC: 1928 **Description:** Fluorescent Bulbs

- ■ RCRA Hazardous
- □ RCRA Nonhazardous
- ■ By Analytical Data
- □ By Process Knowledge
- ■ LDR Regulated
- □ Not LDR Regulated
- ■ Non-Wastewater
- □ Wastewater
- □ Product
- □ High Content Residue
- □ Low Content Residue
- □ Transuranic
- □ Low-Level
- ■ Nonradioactive
- □ Source/Special Nuclear Materials
- □ Debris
- □ Fuel Blending
- □ Uncontained Gas
- □ RCRA Sample
- □ Recyclable Material
- □ Recycled/Reused
- □ TSCA Reg. Waste
- □ Evaluated in Another Process

EPA Codes:
D009

Description (Material, Type, Size, Color, etc.):
Fluorescent Bulbs

How the Output is Generated:
During Routine Operations

Generation Rate:
Variable

How the Output is Managed:
Placed In A 90-Day Collection Area

Chemicals/Contaminants in or on the Output:
Lead, Mercury

Characterization Rationale:
According to analytical data (Ref. ALS-328-94) these fluorescent light tubes exhibit the RCRA hazardous characteristic of toxicity due to the presence of mercury. All materials removed from a Radioactive Materials Management Area must be surveyed by Radiological Operations to ensure they meet unrestricted release criteria for offsite shipment. All materials removed from non-Radioactive Materials Management Areas require a PWRE for their release. Therefore, this output is designated as RCRA hazardous, nonradioactive waste. This output does not meet the LDR treatment standards defined in 40 CFR 268.40. The output must meet the concentration-based treatment standards for mercury and the treatment standards for the underlying hazardous constituents. The treatment standards for the underlying hazardous constituents as defined in 40 CFR 268.48 must be met for treatment residue(s) prior to land disposal. The underlying hazardous constituents associated with this output are listed in Appendix E.

WASTE STREAM AND RESIDUE DESCRIPTION AND CHARACTERIZATION

Process Number: 771-29-36
IDC/WFC: 336

Title: MAINTENANCE
Description: Wet Combustibles Contaminated W/Asbestos

- ▪ RCRA Hazardous
- ▪ RCRA Nonhazardous
- ▫ By Analytical Data
- ▪ By Process Knowledge
- ▫ LDR Regulated
- ▪ Not LDR Regulated
- ▫ Non-Wastewater
- ▫ Wastewater
- ▫ Product
- ▫ High Content Residue
- ▫ Low Content Residue
- ▫ Transuranic
- ▪ Low-Level
- ▫ Nonradioactive
- ▫ Source/Special Nuclear Materials
- ▫ Debris
- ▫ Fuel Blending
- ▫ Uncontained Gas
- ▫ RCRA Sample
- ▫ Recyclable Material
- ▫ Recycled/Reused
- ▫ TSCA Reg. Waste
- ▫ Evaluated in Another Process

EPA Codes:

Description (Material, Type, Size, Color, etc.):
Wet Kimwipes And Rags Contaminated With Asbestos Or Any Wet Combustibles Contaminated With Asbestos

How the Output is Generated:
During Routine Maintenance

Generation Rate:
Variable

How the Output is Managed:
Placed In A 55-Gallon White Drum

Chemicals/Contaminants in or on the Output:
Friable Asbestos

Characterization Rationale:
These wet combustibles are nonline generated in a Radioactive Materials Management Area and are known by the generator to always be low-level waste. According to process knowledge, this output contains no RCRA hazardous constituents and exhibits no RCRA hazardous characteristics. This output may contain or be contaminated with asbestos which is regulated under 40 CFR 61, Subpart M, National Emission Standards for Hazardous Air Pollutants (NESHAP). This output has been designated as a nonhazardous, low-level waste.

WASTE STREAM AND RESIDUE DESCRIPTION AND CHARACTERIZATION

Process Number: 771-29-37A
IDC/WFC: 1971

Title: MAINTENANCE
Description: Ballasts (Non-PCB) (Nonradioactive)

- ☐ RCRA Hazardous
- ■ RCRA Nonhazardous
- ☐ By Analytical Data
- ■ By Process Knowledge
- ☐ LDR Regulated
- ■ Not LDR Regulated
- ☐ Non-Wastewater
- ☐ Wastewater
- ☐ Product
- ☐ High Content Residue
- ☐ Low Content Residue
- ☐ Transuranic
- ☐ Low-Level
- ■ Nonradioactive
- ☐ Source/Special Nuclear Materials
- ☐ Debris
- ☐ Fuel Blending
- ☐ Uncontained Gas
- ☐ RCRA Sample
- ☐ Recyclable Material
- ☐ Recycled/Reused
- ☐ TSCA Reg. Waste
- ☐ Evaluated in Another Process

EPA Codes:

Description (Material, Type, Size, Color, etc.):
Ballasts Removed From Light Fixtures Marked Non-PCBs

How the Output is Generated:
During Replacement Of Worn-Out Ballasts

Generation Rate:
Variable

How the Output is Managed:
Ballasts are packaged in gray 55-gallon open top drums.

Chemicals/Contaminants in or on the Output:
None

Characterization Rationale:
This output is generated in a non-Radioactive Materials Management Area. According to process knowledge, this output contains no RCRA hazardous constituents or exhibits no RCRA hazardous characteristics. It is therefore designated as a nonradioactive, nonhazardous waste.

WASTE STREAM AND RESIDUE DESCRIPTION AND CHARACTERIZATION

Process Number: 771-29-38 **Title:** MAINTENANCE
IDC/WFC: 1928 **Description:** Fluorescent Lamps (Nonhazardous)

- ▫ RCRA Hazardous
- ▪ RCRA Nonhazardous
- ▫ By Analytical Data
- ▪ By Process Knowledge
- ▫ LDR Regulated
- ▪ Not LDR Regulated
- ▫ Non-Wastewater
- ▫ Wastewater
- ▫ Product
- ▫ High Content Residue
- ▫ Low Content Residue
- ▫ Transuranic
- ▫ Low-Level
- ▪ Nonradioactive
- ▫ Source/Special Nuclear Materials
- ▫ Debris
- ▫ Fuel Blending
- ▫ Uncontained Gas
- ▫ RCRA Sample
- ▫ Recyclable Material
- ▫ Recycled/Reused
- ▫ TSCA Reg. Waste
- ▫ Evaluated in Another Process

EPA Codes:

Description (Material, Type, Size, Color, etc.):
Fluorescent Bulbs That Are Special Ordered And Have Green Endcaps

How the Output is Generated:
During Routine Operations

Generation Rate:
Variable

How the Output is Managed:
Boxed And Sent To The 130 Laydown Area

Chemicals/Contaminants in or on the Output:
None

Characterization Rationale:
According to process knowledge, and supported by analytical data (Environmental/Waste Compliance Guidance No. 14 (KN-154-96)), this output does not contain any RCRA hazardous constituents or exhibit any RCRA hazardous characteristics. This output is designated a nonradioactive, nonhazardous waste.

WASTE STREAM AND RESIDUE DESCRIPTION AND CHARACTERIZATION

Process Number: 771-29-39A
IDC/WFC: 1938

Title: MAINTENANCE
Description: Incandescent Light Bulbs

- ■ RCRA Hazardous
- □ RCRA Nonhazardous
- ■ By Analytical Data
- □ By Process Knowledge
- ■ LDR Regulated
- □ Not LDR Regulated
- ■ Non-Wastewater
- □ Wastewater
- □ Product
- □ High Content Residue
- □ Low Content Residue
- □ Transuranic
- □ Low-Level
- ■ Nonradioactive
- □ Source/Special Nuclear Materials
- □ Debris
- □ Fuel Blending
- □ Uncontained Gas
- □ RCRA Sample
- □ Recyclable Material
- □ Recycled/Reused
- □ TSCA Reg. Waste
- □ Evaluated in Another Process

EPA Codes:
D008

Description (Material, Type, Size, Color, etc.):
Incandescent Light Bulbs

How the Output is Generated:
Replacement Of Incandescent Light Bulbs

Generation Rate:
Variable

How the Output is Managed:
Placed In A 90-Day Collection Area

Chemicals/Contaminants in or on the Output:
Cadmium, Lead, Mercury, Nickel

Characterization Rationale:
According to analytical data (ref. JAH-009-95 and Environmental /Waste Compliance Guidance No. 17) these incandescent light bulbs exhibit the RCRA hazardous characteristic of toxicity due to the presence of lead. Thus, the bulbs are characterized as a non-radioactive, RCRA hazardous waste as per Section 261.24. This output does not meet the LDR treatment standards defined in 40 CFR 268.40. The output must meet the concentration-based treatment standards for lead and the treatment standards for the underlying hazardous constituents. The treatment standards for the underlying hazardous constituents as defined in 40 CFR 268.48 must be met for treatment residue(s) prior to land disposal. The underlying hazardous constituents associated with this output are listed in Appendix E.

WASTE STREAM AND RESIDUE DESCRIPTION AND CHARACTERIZATION

Process Number: 771-29-40 **Title:** MAINTENANCE
IDC/WFC: 1968 **Description:** Bulb Crusher Filter

- ■ RCRA Hazardous
- □ RCRA Nonhazardous
- □ By Analytical Data
- ■ By Process Knowledge
- ■ LDR Regulated
- □ Not LDR Regulated
- ■ Non-Wastewater
- □ Wastewater
- □ Product
- □ High Content Residue
- □ Low Content Residue
- □ Transuranic
- □ Low-Level
- ■ Nonradioactive
- □ Source/Special Nuclear Materials
- □ Debris
- □ Fuel Blending
- □ Uncontained Gas
- □ RCRA Sample
- □ Recyclable Material
- □ Recycled/Reused
- □ TSCA Reg. Waste
- □ Evaluated in Another Process

EPA Codes:
D009

Description (Material, Type, Size, Color, etc.):
Mercury Vapor Filter From Bulb Crusher

How the Output is Generated:
When the filter becomes plugged a "change filter" light illuminates on the bulb crusher, at which time the filter is changed.

Generation Rate:
1 Filter Yearly

How the Output is Managed:
Spent filters are placed in the 55-gallon drum containing crushed fluorescent tubes.

Chemicals/Contaminants in or on the Output:
Mercury

Characterization Rationale:
Based on process knowledge the bulb crusher filter exhibits the RCRA characteristic of toxicity due to the presence of mercury. All materials removed from a non-Radioactive area require a PWRE for release. Therefore, this output is designated as a hazardous, nonradioactive waste. This output meets the definition of hazardous debris and can be treated by an appropriate technology in 40 CFR 268.45. The concentration-based treatment standard for mercury, and the treatment standards for underlying hazardous constituents as defined in 40 CFR 268.48 must be met for treatment residue(s) prior to land disposal. The underlying hazardous constituents associated with this output are listed in Appendix E.

WASTE STREAM AND RESIDUE DESCRIPTION AND CHARACTERIZATION

Process Number: 771-29-41
IDC/WFC: 480

Title: MAINTENANCE
Description: Light Metal Bonded With Lead

- ■ RCRA Hazardous
- □ RCRA Nonhazardous
- □ By Analytical Data
- ■ By Process Knowledge
- ■ LDR Regulated
- □ Not LDR Regulated
- ■ Non-Wastewater
- □ Wastewater
- □ Product
- □ High Content Residue
- □ Low Content Residue
- □ Transuranic
- ■ Low-Level
- □ Nonradioactive
- □ Source/Special Nuclear Materials
- □ Debris
- □ Fuel Blending
- □ Uncontained Gas
- □ RCRA Sample
- □ Recyclable Material
- □ Recycled/Reused
- □ TSCA Reg. Waste
- □ Evaluated in Another Process

EPA Codes:
D008

Description (Material, Type, Size, Color, etc.):
This output consists of light metal such as stainless steel, aluminum, etc. bonded with non-removable lead pieces or shielding, from glovebox stripouts, production equipment or other maintenance activity.

How the Output is Generated:
This output is generated only when radiation contamination levels pose a risk to workers and equipment while trying to separate lead from light metal.

Generation Rate:
Variable

How the Output is Managed:
Metal pieces are size reduced and placed in a 55-gallon drum and disposed of in a 90-day collection area in Room 114.

Chemicals/Contaminants in or on the Output:
Lead
Radionuclides: Plutonium

Characterization Rationale:
According to process knowledge, this output exhibits the RCRA hazardous characteristic of toxicity for lead. This output is characterized as a low-level mixed waste. This output meets the definition of hazardous debris and can be treated by an appropriate technology in 40 CFR 268.45. The concentration-based standard for lead and the treatment standards for underlying hazardous constituents must be met for treatment residue(s) prior to land disposal. The underlying hazardous constituents associated with this output are listed in Appendix E.

30.0 PROCESS 771-30: PREVENTIVE MAINTENANCE

The Preventive Maintenance Process involves lubricating, checking fluid levels, and changing fluids as necessary. Equipment used in this process consists of a variety of small tools. Figure 30.1 shows the inputs, process flow, and outputs associated with Preventive Maintenance.
Grease is added to fittings, lubrication sprockets, and drive chains. Many types of fluids, such as lubrication fluid and hydraulic fluid, are checked and maintained. Refrigeration oil is drained from compressors. The various operations in Preventive Maintenance also use WD-40, Dykem (machinist's dye), tap fluid, thread cutting oil, Trim Sol coolant, greases, and lead acid batteries. Oakite cleaning fluid is used to clean stainless and carbon steel pipe.

This process operates in a continuous, ongoing manner with maintenance intervals staggered as necessary. Lubrication oils and hydraulic fluids are sampled periodically for useability.

Used oils and cutting fluids are initially sampled and collected in separate 1-gallon drums. Nonradioactive oil is collected in a 55-gallon drum for management in the fuel blending program. Used lead acid batteries are recycled by an offsite vendor. Nonhazardous batteries are placed in a dumpster for RFETS landfill disposal. Used Oakite solution is collected in 55-gallon drums prior to disposal. Non-asbestos pipe insulation and air conditioning filter media are collected in low-level waste drums. Process Table 771-30 presents the outputs associated with Preventive Maintenance and provides their dispositions and hazardous character.

AutoCAD 12, File Name: 771-30

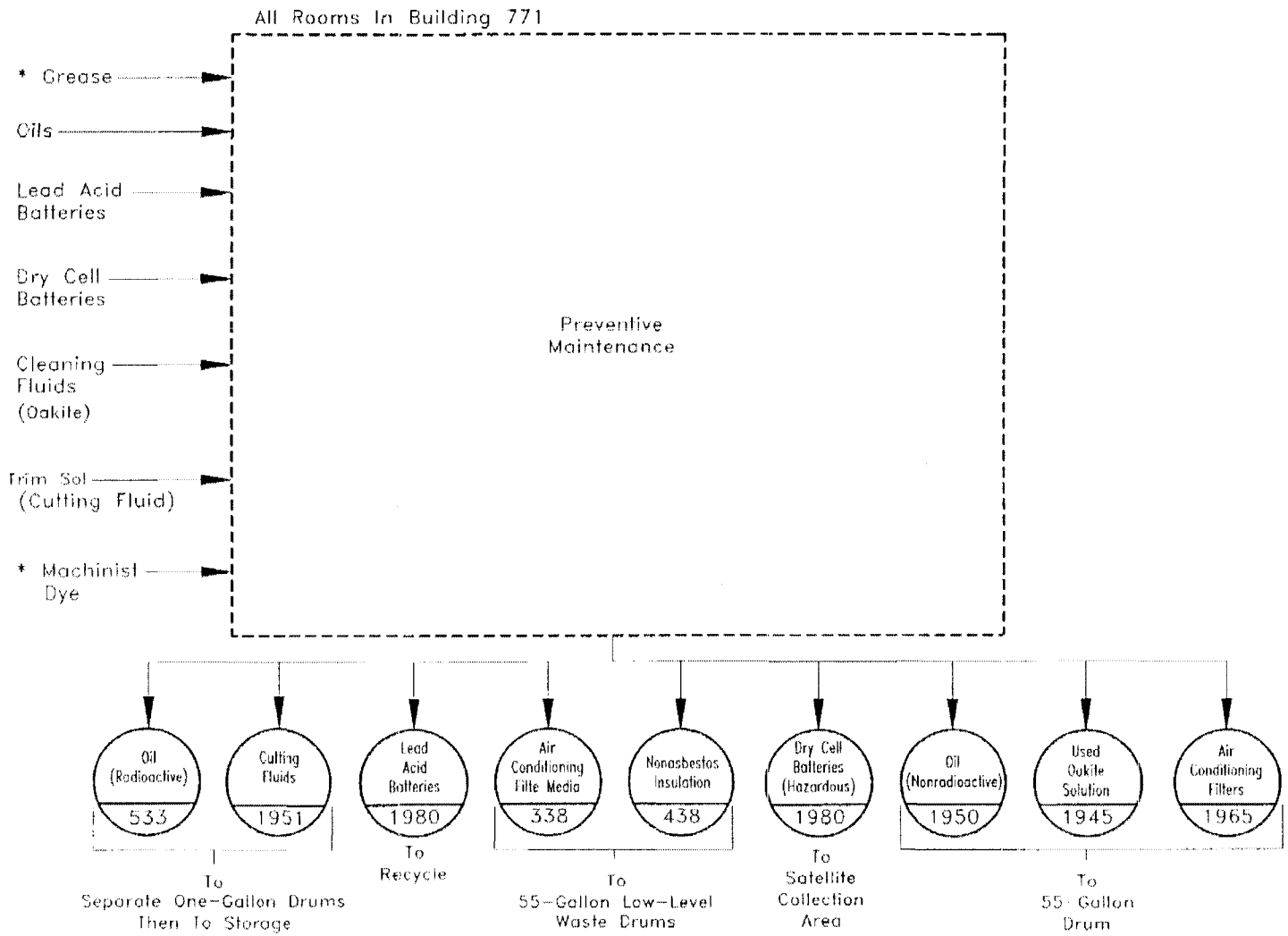

* Inputs That Remain On The Serviced Equipment And Are Not Outputs Of This Process

FIGURE 30.1

Rocky Flats Environmental Technology Site Waste Stream & Residue Identification & Characterization	BUILDING 771/PROCESS 30 PREVENTIVE MAINTENANCE	Task	By	Date
		Designed	M. Vigil/J. Kleckner	01/26/90
		Drawn	R. Nisely	06/12/96
		Checked	J. Schoen	07/22/98

PROCESS 771-30 PREVENTIVE MAINTENANCE

Process Number	IDC/ WFC No.	CCCs RCRA Reg. Const.	CCCs Non-RCRA Reg. Const.	Comp. Codes	Description RCRA Reg. Chemical Constituents: Non-RCRA Reg. Chemical Constituents:	Collection	LDR Codes	RCRA Haz. Waste	RCRA-Land Disposal Restricted (Part 268)	Wastewater/Non-Wastewater: Debris/Non-Debris: Subcategory:	EPA Codes
771-30-1	533	00	32	4A	Oil (Radioactive) RCRA Reg. Chemical Constituents: None Non-RCRA Reg. Chemical Constituents: Oil (Used)	55-Gallon Drum		No	No		
771-30-2	1951	00	41	3A	Cutting Fluids RCRA Reg. Chemical Constituents: None Non-RCRA Reg. Chemical Constituents: Trim Sol	1-Gallon Drum		No	No		

Process Number	IDC/ WFC No.	CCCs RCRA Reg. Const.	CCCs Non-RCRA Reg. Const.	Comp. Codes	Description RCRA Reg. Chemical Constituents: Non-RCRA Reg. Chemical Constituents:	Collection	LDR Codes	RCRA Haz. Waste	RCRA-Land Disposal Restricted (Part 268)	Wastewater/Non-Wastewater: Debris/Non-Debris: Subcategory:	EPA Codes
771-30-3	1945	00	32	3A	Used Oakite Solution RCRA Reg. Chemical Constituents: None Non-RCRA Reg. Chemical Constituents: Oil (Used)	55-Gallon Drum		No	No		
771-30-4	1980	0224	00	1B	Lead Acid Batteries RCRA Reg. Chemical Constituents: Acid - General Lead Non-RCRA Reg. Chemical Constituents: None	Cargo Container Pending Recycle	RT NWW C1, PB2	Yes	Yes Does Not Meet Treatment Standards	Non-Wastewater Corrosive/Non-CW, Lead/Acid Battery	D002, D008

Process Number	IDC/ WFC No.	CCCs RCRA Reg. Const.	CCCs Non-RCRA Reg. Const.	Comp. Codes	Description RCRA Reg. Chemical Constituents: Non-RCRA Reg. Chemical Constituents:	Collection	LDR Codes	RCRA Haz. Waste	RCRA-Land Disposal Restricted (Part 268)	Wastewater/Non-Wastewater: Debris/Non-Debris: Subcategory:	EPA Codes
771-30-6	338	00	00	NA	Air Conditioning Filter Media RCRA Reg. Chemical Constituents: None Non-RCRA Reg. Chemical Constituents: None	55-Gallon Drum		No	No		
771-30-7	1980	00	00	NA	Alkaline Batteries (Nonhazardous) RCRA Reg. Chemical Constituents: None Non-RCRA Reg. Chemical Constituents: None	Dumpster		No	No		

Process Number	IDC/ WFC No.	CCCs RCRA Reg. Const.	CCCs Non-RCRA Reg. Const.	Comp. Codes	Description RCRA Reg. Chemical Constituents: Non-RCRA Reg. Chemical Constituents:	Collection	LDR Codes	RCRA Haz. Waste	RCRA-Land Disposal Restricted (Part 268)	Wastewater/Non-Wastewater: Debris/Non-Debris: Subcategory:	EPA Codes
771-30-8	1950	00	32	4A	Oil (Nonradioactive) RCRA Reg. Chemical Constituents: None Non-RCRA Reg. Chemical Constituents: Oil (Used)	55-Gallon Drum		No	No		
771-30-9	1965	00	00	NA	Air Conditioning Filter Media (Nonrad) RCRA Reg. Chemical Constituents: None Non-RCRA Reg. Chemical Constituents: None	Collected In A Dumpster Until Full Then Shipped To Offsite Landfill		No	No		

WASTE STREAM AND RESIDUE DESCRIPTION AND CHARACTERIZATION

Process Number: 771-30-1
IDC/WFC: 533

Title: PREVENTIVE MAINTENANCE
Description: Oil (Radioactive)

- ☐ RCRA Hazardous
- ■ RCRA Nonhazardous
- ☐ By Analytical Data
- ■ By Process Knowledge
- ☐ LDR Regulated
- ■ Not LDR Regulated
- ☐ Non-Wastewater
- ☐ Wastewater
- ☐ Product
- ☐ High Content Residue
- ☐ Low Content Residue
- ☐ Transuranic
- ■ Low-Level
- ☐ Nonradioactive
- ☐ Source/Special Nuclear Materials
- ☐ Debris
- ☐ Fuel Blending
- ☐ Uncontained Gas
- ☐ RCRA Sample
- ☐ Recyclable Material
- ☐ Recycled/Reused
- ☐ TSCA Reg. Waste
- ☐ Evaluated in Another Process

EPA Codes:

Description (Material, Type, Size, Color, etc.):
Preventive maintenance performs routine oil changes from compressors, vacuum pumps, balance scales (wet seal), diffusion pumps, and hydraulic systems.

How the Output is Generated:
During Equipment Oil Changes

Generation Rate:
Variable

How the Output is Managed:
Oil is collected in 55-gallon drums in Room 179. Oil from air conditioners is collected in a drum marked "A/C oil only". Oils are stored pending a disposal determination.

Chemicals/Contaminants in or on the Output:
Various Oils

Characterization Rationale:
This output is nonline generated, in a Radioactive Materials Management Area, and is known by the generator to always be low-level waste. According to process knowledge, the output contains no RCRA hazardous constituents, and exhibits no RCRA hazardous characteristics. It is designated as low-level, nonhazardous waste.

WASTE STREAM AND RESIDUE DESCRIPTION AND CHARACTERIZATION

Process Number: 771-30-2
IDC/WFC: 1951

Title: PREVENTIVE MAINTENANCE
Description: Cutting Fluids

- ▫ RCRA Hazardous
- ▪ RCRA Nonhazardous
- ▫ By Analytical Data
- ▪ By Process Knowledge
- ▫ LDR Regulated
- ▪ Not LDR Regulated
- ▫ Non-Wastewater
- ▫ Wastewater
- ▫ Product
- ▫ High Content Residue
- ▫ Low Content Residue
- ▫ Transuranic
- ▫ Low-Level
- ▪ Nonradioactive
- ▫ Source/Special Nuclear Materials
- ▫ Debris
- ▫ Fuel Blending
- ▫ Uncontained Gas
- ▫ RCRA Sample
- ▫ Recyclable Material
- ▫ Recycled/Reused
- ▫ TSCA Reg. Waste
- ▫ Evaluated in Another Process

EPA Codes:

Description (Material, Type, Size, Color, etc.):
Cutting Fluids

How the Output is Generated:
Cutting fluid waste is generated during preventive maintenance operations.

Generation Rate:
2 Gallons Yearly

How the Output is Managed:
Cutting fluids are collected in a 1-gallon drum and then sent to Building 771 Annex for shipment. Oil is disposed of as the need arises.

Chemicals/Contaminants in or on the Output:
Trim Sol

Characterization Rationale:
According to process knowledge, cutting fluids contain no RCRA hazardous constituents, and exhibits no RCRA hazardous characteristics. The output is generated in a non-Radioactive Materials Management Area, and is characterized as nonhazardous, nonradioactive waste.

WASTE STREAM AND RESIDUE DESCRIPTION AND CHARACTERIZATION

Process Number: 771-30-3
IDC/WFC: 1945

Title: PREVENTIVE MAINTENANCE
Description: Used Oakite Solution

- ☐ RCRA Hazardous
- ■ RCRA Nonhazardous
- ☐ By Analytical Data
- ■ By Process Knowledge
- ☐ LDR Regulated
- ■ Not LDR Regulated
- ☐ Non-Wastewater
- ☐ Wastewater
- ☐ Product
- ☐ High Content Residue
- ☐ Low Content Residue
- ☐ Transuranic
- ☐ Low-Level
- ■ Nonradioactive
- ☐ Source/Special Nuclear Materials
- ☐ Debris
- ☐ Fuel Blending
- ☐ Uncontained Gas
- ☐ RCRA Sample
- ☐ Recyclable Material
- ☐ Recycled/Reused
- ☐ TSCA Reg. Waste
- ☐ Evaluated in Another Process

EPA Codes:

Description (Material, Type, Size, Color, etc.):
Oakite Detergent Solution

How the Output is Generated:
Cleaning Stainless Steel And Steel Pipe

Generation Rate:
Variable

How the Output is Managed:
Placed In A 55-Gallon Drum

Chemicals/Contaminants in or on the Output:
Cutting Oil

Characterization Rationale:
According to process knowledge, used oakite solution contains no RCRA hazardous constituents, and exhibits no RCRA hazardous characteristics. It is known that no radioactive material is introduced into this output, and it is a nonhazardous, nonradioactive waste.

WASTE STREAM AND RESIDUE DESCRIPTION AND CHARACTERIZATION

Process Number: 771-30-4
IDC/WFC: 1980

Title: PREVENTIVE MAINTENANCE
Description: Lead Acid Batteries

- ■ RCRA Hazardous
- □ RCRA Nonhazardous
- □ By Analytical Data
- ■ By Process Knowledge
- ■ LDR Regulated
- □ Not LDR Regulated
- ■ Non-Wastewater
- □ Wastewater

- □ Product
- □ High Content Residue
- □ Low Content Residue
- □ Transuranic
- □ Low-Level
- ■ Nonradioactive
- □ Source/Special Nuclear Materials
- □ Debris

- □ Fuel Blending
- □ Uncontained Gas
- □ RCRA Sample
- ■ Recyclable Material
- □ Recycled/Reused
- □ TSCA Reg. Waste
- □ Evaluated in Another Process

EPA Codes:
D002, D008

Description (Material, Type, Size, Color, etc.):
Lead Acid Batteries

How the Output is Generated:
Used lead acid batteries are replaced as necessary during preventive maintenance operations.

Generation Rate:
Variable

How the Output is Managed:
Lead acid batteries are stored in a cargo container until sent to an offsite vendor for recycling.

Chemicals/Contaminants in or on the Output:
Acid And Lead

Characterization Rationale:
These batteries are a hazardous waste that is recycled and meet the definition of a recyclable material in Section 261.6. These batteries are not subject to regulations under Parts 262 through 267 or Parts 99 and 100, but are still subject to regulation under Part 268, and land disposal restriction regulations. Radiological Operations surveys this material to ensure it is nonradioactive. This output is designated a nonradioactive, hazardous waste. This output does not meet the LDR treatment standards defined in 40 CFR 268.40. Lead acid batteries must be treated by the specified technology-based treatment standard. The battery reclaimer will monitor for underlying hazardous constituents in the treatment residue(s) prior to land disposal.

WASTE STREAM AND RESIDUE DESCRIPTION AND CHARACTERIZATION

Process Number: 771-30-6
IDC/WFC: 338

Title: PREVENTIVE MAINTENANCE
Description: Air Conditioning Filter Media

- ☐ RCRA Hazardous
- ■ RCRA Nonhazardous
- ☐ By Analytical Data
- ■ By Process Knowledge
- ☐ LDR Regulated
- ■ Not LDR Regulated
- ☐ Non-Wastewater
- ☐ Wastewater
- ☐ Product
- ☐ High Content Residue
- ☐ Low Content Residue
- ☐ Transuranic
- ■ Low-Level
- ☐ Nonradioactive
- ☐ Source/Special Nuclear Materials
- ☐ Debris
- ☐ Fuel Blending
- ☐ Uncontained Gas
- ☐ RCRA Sample
- ☐ Recyclable Material
- ☐ Recycled/Reused
- ☐ TSCA Reg. Waste
- ☐ Evaluated in Another Process

EPA Codes:

Description (Material, Type, Size, Color, etc.):
Commercial Grade Filter Media For Use In Air Conditioning Units

How the Output is Generated:
Routine Preventive Maintenance Operations

Generation Rate:
2 Drums Annually

How the Output is Managed:
Collected In 55-Gallon Low-Level Drums

Chemicals/Contaminants in or on the Output:
None

Characterization Rationale:
This output is nonline generated, in a Radioactive Materials Management Area. According to process knowledge, the output contains no RCRA hazardous constituents, and exhibits no RCRA hazardous characteristics. It is designated as low-level, nonhazardous waste.

WASTE STREAM AND RESIDUE DESCRIPTION AND CHARACTERIZATION

Process Number: 771-30-7
IDC/WFC: 1980

Title: PREVENTIVE MAINTENANCE
Description: Alkaline Batteries (Nonhazardous)

- ☐ RCRA Hazardous
- ■ RCRA Nonhazardous
- ☐ By Analytical Data
- ■ By Process Knowledge
- ☐ LDR Regulated
- ■ Not LDR Regulated
- ☐ Non-Wastewater
- ☐ Wastewater
- ☐ Product
- ☐ High Content Residue
- ☐ Low Content Residue
- ☐ Transuranic
- ☐ Low-Level
- ■ Nonradioactive
- ☐ Source/Special Nuclear Materials
- ☐ Debris
- ☐ Fuel Blending
- ☐ Uncontained Gas
- ☐ RCRA Sample
- ☐ Recyclable Material
- ☐ Recycled/Reused
- ☐ TSCA Reg. Waste
- ☐ Evaluated in Another Process

EPA Codes:

Description (Material, Type, Size, Color, etc.):
Standard Alkaline Batteries In Various Sizes And Voltages

How the Output is Generated:
Routine Replacement Of Spent Batteries

Generation Rate:
Variable

How the Output is Managed:
Taken To A Dumpster For Disposal In The Sanitary Landfill

Chemicals/Contaminants in or on the Output:
None

Characterization Rationale:
This output is generated in a non-Radioactive Materials Management Area. According to process knowledge, this output contains on RCRA hazardous constituents and exhibits no RCRA hazardous characteristics. This output has been designated a nonradioactive, nonhazardous waste.

WASTE STREAM AND RESIDUE DESCRIPTION AND CHARACTERIZATION

Process Number: 771-30-8
IDC/WFC: 1950

Title: PREVENTIVE MAINTENANCE
Description: Oil (Nonradioactive)

- ☐ RCRA Hazardous
- ■ RCRA Nonhazardous
- ☐ By Analytical Data
- ■ By Process Knowledge
- ☐ LDR Regulated
- ■ Not LDR Regulated
- ☐ Non-Wastewater
- ☐ Wastewater
- ☐ Product
- ☐ High Content Residue
- ☐ Low Content Residue
- ☐ Transuranic
- ☐ Low-Level
- ■ Nonradioactive
- ☐ Source/Special Nuclear Materials
- ☐ Debris
- ■ Fuel Blending
- ☐ Uncontained Gas
- ☐ RCRA Sample
- ☐ Recyclable Material
- ☐ Recycled/Reused
- ☐ TSCA Reg. Waste
- ☐ Evaluated in Another Process

EPA Codes:

Description (Material, Type, Size, Color, etc.):
Various Oils Generated In A non-Radioactive Materials Management Area

How the Output is Generated:
Replacement Of Cutting, Hydraulic, Lubrication, And Compressor Oil

Generation Rate:
Variable

How the Output is Managed:
The oil is placed in a 55-gallon drum for management in the fuel blending program. Oil from air conditions is collected in a drum marked "AC/ oil only."

Chemicals/Contaminants in or on the Output:
Oil

Characterization Rationale:
This used oil is considered a solid waste as provided in Section 261.2(a), and is sent for fuel blending, and eventual recycling. It is also subject to regulation under Part 279. According to process knowledge, the used oil may exhibit a characteristic of hazardous waste, but is not regulated as a hazardous waste fuel when burned for energy recovery, provided it is not mixed with a hazardous waste. The output is a nonradioactive, nonhazardous waste sent for fuel blending.

WASTE STREAM AND RESIDUE DESCRIPTION AND CHARACTERIZATION

Process Number: 771-30-9
IDC/WFC: 1965

Title: PREVENTIVE MAINTENANCE
Description: Air Conditioning Filter Media (Nonrad)

- ☐ RCRA Hazardous
- ■ RCRA Nonhazardous
- ☐ By Analytical Data
- ■ By Process Knowledge
- ☐ LDR Regulated
- ■ Not LDR Regulated
- ☐ Non-Wastewater
- ☐ Wastewater
- ☐ Product
- ☐ High Content Residue
- ☐ Low Content Residue
- ☐ Transuranic
- ☐ Low-Level
- ■ Nonradioactive
- ☐ Source/Special Nuclear Materials
- ☐ Debris
- ☐ Fuel Blending
- ☐ Uncontained Gas
- ☐ RCRA Sample
- ☐ Recyclable Material
- ☐ Recycled/Reused
- ☐ TSCA Reg. Waste
- ☐ Evaluated in Another Process

EPA Codes:

Description (Material, Type, Size, Color, etc.):
This output consists of commercial grade filter media for use in air conditioning units on the outside of Building 771, 774, 770, and trailers.

How the Output is Generated:
Filter Media is changed out on an as-needed basis.

Generation Rate:
Variable

How the Output is Managed:
The used filter media is disposed of as non-routine waste in the USA Waste container provided for non-routine waste. The dumpster, when full is shipped to an offsite landfill.

Chemicals/Contaminants in or on the Output:
None

Characterization Rationale:
According to process knowledge, the output contains no RCRA hazardous constituents and exhibits no RCRA hazardous characteristics. This output is generated in a non-Radioactive Materials Management Area, and is characterized as nonradioactive, nonhazardous waste.

31.0 PROCESS 771-31: RASCHIG RING REMOVAL AND REPLACEMENT

Raschig Ring Removal and Replacement is a portable, routine maintenance operation where Raschig rings are sampled, removed and/or replaced in Building 771. Raschig rings are borosilicate glass rings used to maintain sub-critical conditions in fissile solution storage tanks, which are not safe by dimension. Equipment used in this process includes a tank, Supplied Breathing Air (SBA) tent, and a variety of hand tools. Figure 31.1 shows the inputs, process flow, and outputs associated with Raschig Ring Removal and Replacement.

Tanks used for radioactive solutions storage contain Raschig rings. The boron in the rings is a neutron poison (an element which absorbs neutrons and immobilizes them). The volume of the ring displaces a proportionate volume of solution and, along with the neutron poison, creates a critically safe configuration. Over a period of time, the rings may become broken or otherwise damaged, especially in air-sparged tanks. In the sampling and change-out process, the tank to be sampled is drained and rinsed with a compatible solution (i.e., acid, water, or caustic) a plastic SBA house is constructed around the sample and/or change-out port, and the tank port is opened. Workers in protective gear remove the rings and place them in plastic bags for eventual transfer to waste drums. Plastic sheets, tape, and wood dunnage are used for packing and handling rings. Kimwipes, Texwipes, glass, leaded glovebox gloves, and leather gloves are used for general area cleanup and materials handling. Tools are decontaminated and reused if possible.

The drums containing the Raschig rings are assayed. If the nuclear material count is above the EDL, they are stored for future leaching. Drums of rings are packed with Oil-Dri to absorb any possible residual liquid. Nonline dry combustibles, wet combustibles, plastic, and light metal are disposed of in drums, then taken to the drum counter for assay. Sludge is placed in 8801 Vollrath cans then placed in 55-gallon drums in a satellite collection area. The Waste Management Unit has not yet been determined. Process Table 771-31 presents the outputs associated with the Raschig Ring Removal and Replacement Process and provides their dispositions and hazardous character.

AutoCAD 11, File Name: 771-31

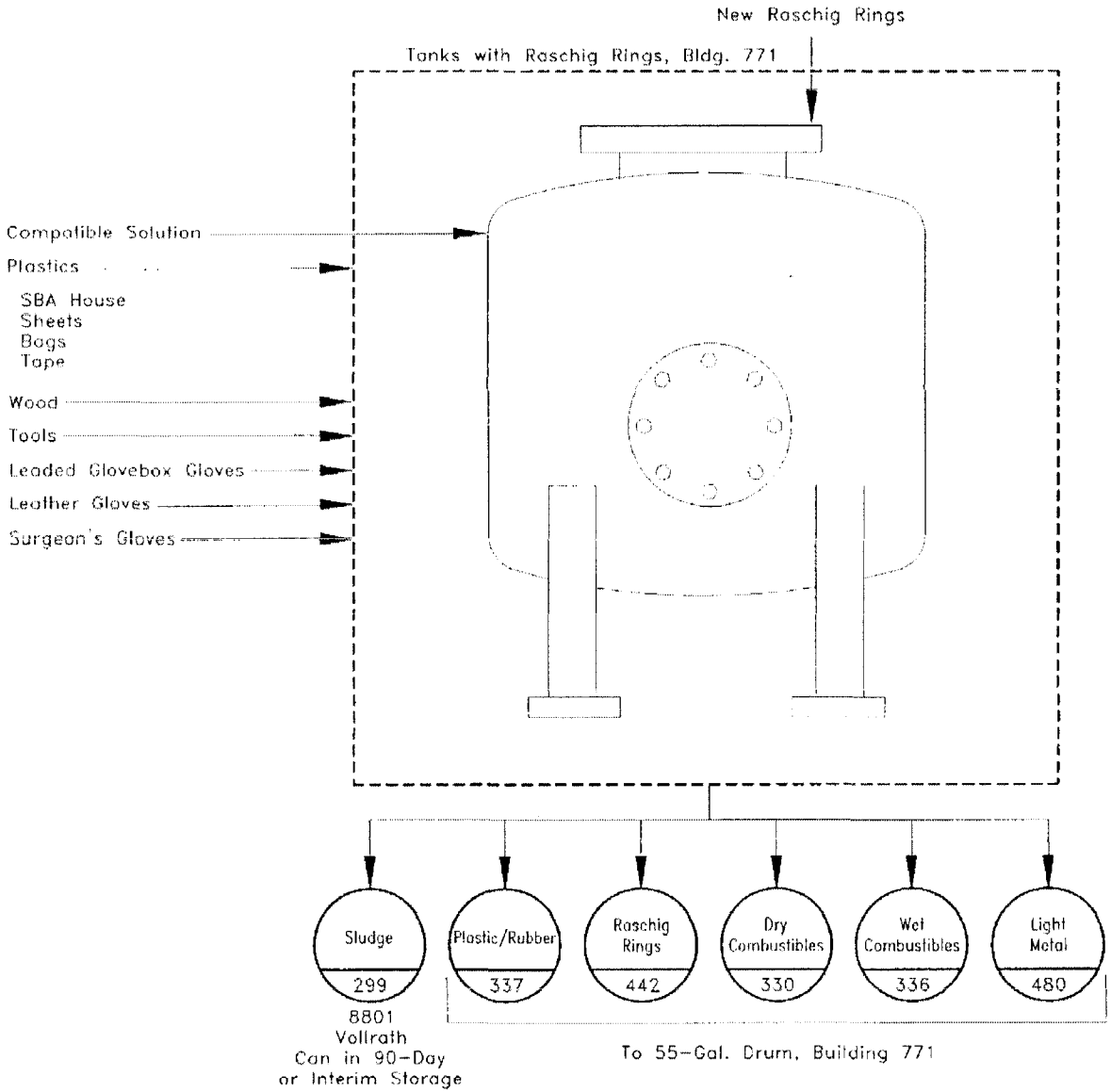

FIGURE 31.1

Rocky Flats Plant Waste Stream & Residue Identification & Characterization	BUILDING 771/PROCESS 31 RASCHIG RING REMOVAL AND REPLACEMENT	Task	By	Date
		Designed	W. Eakins	02/25/93
		Drawn	C. Stadt	03/05/93
		Checked	J. Schoen	08/04/98

PROCESS 771-31 RASCHIG RING REMOVAL

Process Number	IDC/ WFC No.	CCCs RCRA Reg. Const.	CCCs Non-RCRA Reg. Const.	Comp. Codes	Description RCRA Reg. Chemical Constituents: Non-RCRA Reg. Chemical Constituents:	Collection	LDR Codes	RCRA Haz. Waste	RCRA-Land Disposal Restricted (Part 268)	Wastewater/Non-Wastewater: Debris/Non-Debris: Subcategory:	EPA Codes
771-31-1	442	00	00	NA	Raschig Rings RCRA Reg. Chemical Constituents: None Non-RCRA Reg. Chemical Constituents: None	55-Gallon Drum		No	No		
771-31-2	337	00	00	NA	Plastics And Rubber RCRA Reg. Chemical Constituents: None Non-RCRA Reg. Chemical Constituents: None	55-Gallon Drum		No	No		

Process Number	IDC/ WFC No.	CCCs RCRA Reg. Const.	CCCs Non-RCRA Reg. Const.	Comp. Codes	Description RCRA Reg. Chemical Constituents: Non-RCRA Reg. Chemical Constituents:	Collection	LDR Codes	RCRA Haz. Waste	RCRA-Land Disposal Restricted (Part 268)	Wastewater/Non-Wastewater: Debris/Non-Debris: Subcategory:	EPA Codes
771-31-3	336	00	0205	NA	Wet Combustibles RCRA Reg. Chemical Constituents: None Non-RCRA Reg. Chemical Constituents: Acid - General Base	55-Gallon Drum		No	No		
771-31-4	480	00	00	NA	Light Metal RCRA Reg. Chemical Constituents: None Non-RCRA Reg. Chemical Constituents: None	55-Gallon Drum		No	No		

Process Number	IDC/ WFC No.	CCCs RCRA Reg. Const.	CCCs Non-RCRA Reg. Const.	Comp. Codes	Description RCRA Reg. Chemical Constituents: Non-RCRA Reg. Chemical Constituents:	Collection	LDR Codes	RCRA Haz. Waste	RCRA-Land Disposal Restricted (Part 268)	Wastewater/Non-Wastewater: Debris/Non-Debris: Subcategory:	EPA Codes
771-31-5	330	00	00	NA	Dry Combustibles RCRA Reg. Chemical Constituents: None Non-RCRA Reg. Chemical Constituents: None	55-Gallon Drum		No	No		
771-31-6A	299	020512	00	1B	Sludge RCRA Reg. Chemical Constituents: Acid - General Base Chromium Non-RCRA Reg. Chemical Constituents: None	90-Day Collection Area Or Interim Status Storage Area	RT NWW C1	Yes	Yes Does Not Meet Treatment Standards	Non-Wastewater Corrosive/Non-CW	D002

WASTE STREAM AND RESIDUE DESCRIPTION AND CHARACTERIZATION

Process Number: 771-31-1 **Title:** RASCHIG RING REMOVAL
IDC/WFC: 442 **Description:** Raschig Rings

- ☐ RCRA Hazardous
- ■ RCRA Nonhazardous
- ☐ By Analytical Data
- ■ By Process Knowledge
- ☐ LDR Regulated
- ■ Not LDR Regulated
- ☐ Non-Wastewater
- ☐ Wastewater
- ☐ Product
- ☐ High Content Residue
- ■ Low Content Residue
- ■ Transuranic
- ■ Low-Level
- ☐ Nonradioactive
- ☐ Source/Special Nuclear Materials
- ☐ Debris
- ☐ Fuel Blending
- ☐ Uncontained Gas
- ☐ RCRA Sample
- ☐ Recyclable Material
- ☐ Recycled/Reused
- ☐ TSCA Reg. Waste
- ☐ Evaluated in Another Process

EPA Codes:

Description (Material, Type, Size, Color, etc.):
Raschig Rings

How the Output is Generated:
Raschig ring waste is produced by sampling and change out of Raschig rings as a routine maintenance operation.

Generation Rate:
Variable

How the Output is Managed:
Raschig rings are collected in a 55-gallon drum in Building 771.

Chemicals/Contaminants in or on the Output:
None

Characterization Rationale:
This output is line generated, and can be a low-content residue or a transuranic or low-level waste. According to process knowledge, no hazardous constituents are used in this process, and the output contains no RCRA hazardous constituents, and exhibits no RCRA hazardous characteristics. Therefore, the output can be a nonhazardous, low-content residue or a nonhazardous transuranic or low-level waste. The level of radioactivity will be determined by assay of each collection container.

WASTE STREAM AND RESIDUE DESCRIPTION AND CHARACTERIZATION

Process Number: 771-31-2 **Title:** RASCHIG RING REMOVAL
IDC/WFC: 337 **Description:** Plastics And Rubber

- ☐ RCRA Hazardous
- ■ RCRA Nonhazardous
- ☐ By Analytical Data
- ■ By Process Knowledge
- ☐ LDR Regulated
- ■ Not LDR Regulated
- ☐ Non-Wastewater
- ☐ Wastewater
- ☐ Product
- ☐ High Content Residue
- ■ Low Content Residue
- ■ Transuranic
- ■ Low-Level
- ☐ Nonradioactive
- ☐ Source/Special Nuclear Materials
- ☐ Debris
- ☐ Fuel Blending
- ☐ Uncontained Gas
- ☐ RCRA Sample
- ☐ Recyclable Material
- ☐ Recycled/Reused
- ☐ TSCA Reg. Waste
- ☐ Evaluated in Another Process

EPA Codes:

Description (Material, Type, Size, Color, etc.):
Plastic and rubber waste consists of supplied breathing air houses, plastic bags, supplied air suits, tape and other plastics and rubber.

How the Output is Generated:
After Use In Personnel Protection Or Packaging And Handling

Generation Rate:
Variable

How the Output is Managed:
Plastic and rubber waste is collected in a 55-gallon drum in Building 771.

Chemicals/Contaminants in or on the Output:
None

Characterization Rationale:
This output is line generated, and can be a low-content residue or a transuranic or low-level waste. According to process knowledge, no hazardous constituents are used in this process, and the output contains no RCRA hazardous constituents, and exhibits no RCRA hazardous characteristics. Therefore, the output can be a nonhazardous, low-content residue or a nonhazardous transuranic or low-level waste. The level of radioactivity will be determined by assay of each collection container.

WASTE STREAM AND RESIDUE DESCRIPTION AND CHARACTERIZATION

Process Number: 771-31-3 **Title:** RASCHIG RING REMOVAL
IDC/WFC: 336 **Description:** Wet Combustibles

- ▫ RCRA Hazardous
- ▪ RCRA Nonhazardous
- ▫ By Analytical Data
- ▪ By Process Knowledge
- ▫ LDR Regulated
- ▪ Not LDR Regulated
- ▫ Non-Wastewater
- ▫ Wastewater
- ▫ Product
- ▫ High Content Residue
- ▪ Low Content Residue
- ▪ Transuranic
- ▪ Low-Level
- ▫ Nonradioactive
- ▫ Source/Special Nuclear Materials
- ▫ Debris
- ▫ Fuel Blending
- ▫ Uncontained Gas
- ▫ RCRA Sample
- ▫ Recyclable Material
- ▫ Recycled/Reused
- ▫ TSCA Reg. Waste
- ▫ Evaluated in Another Process

EPA Codes:

Description (Material, Type, Size, Color, etc.):
Kimwipes, Leather Gloves, Tape, Wood, And Other Combustible Materials

How the Output is Generated:
During The Raschig Ring Change Out Process In Which Nonhazardous Solutions Are Contacted

Generation Rate:
Variable

How the Output is Managed:
Wet wipes are collected in a 55-gallon drum in Building 771.

Chemicals/Contaminants in or on the Output:
Acid, Caustic

Characterization Rationale:
This output is line generated, and can be a residue or a waste. Although it is contaminated with corrosive or ignitable liquid, due to the presence of acid and caustic, it cannot exhibit the characteristic of corrosivity or ignitability because it is nonliquid. It is designated as nonhazardous, low-content residue, or nonhazardous TRU or low-level waste, to be determined at assay.

WASTE STREAM AND RESIDUE DESCRIPTION AND CHARACTERIZATION

Process Number: 771-31-4 **Title:** RASCHIG RING REMOVAL
IDC/WFC: 480 **Description:** Light Metal

- ☐ RCRA Hazardous
- ■ RCRA Nonhazardous
- ☐ By Analytical Data
- ■ By Process Knowledge
- ☐ LDR Regulated
- ■ Not LDR Regulated
- ☐ Non-Wastewater
- ☐ Wastewater
- ☐ Product
- ☐ High Content Residue
- ■ Low Content Residue
- ■ Transuranic
- ■ Low-Level
- ☐ Nonradioactive
- ☐ Source/Special Nuclear Materials
- ☐ Debris
- ☐ Fuel Blending
- ☐ Uncontained Gas
- ☐ RCRA Sample
- ☐ Recyclable Material
- ☐ Recycled/Reused
- ☐ TSCA Reg. Waste
- ☐ Evaluated in Another Process

EPA Codes:

Description (Material, Type, Size, Color, etc.):
Metal waste consists of broken bolts, part covers, tools and other light metals.

How the Output is Generated:
When Metals Cannot Be Decontaminated Or Reused

Generation Rate:
Variable

How the Output is Managed:
Metal waste is collected in a 55-gallon drum in Building 771.

Chemicals/Contaminants in or on the Output:
None

Characterization Rationale:
This output is line generated, and can be a low-content residue or a transuranic or low-level waste. According to process knowledge, no hazardous constituents are used in this process, and the output contains no RCRA hazardous constituents, and exhibits no RCRA hazardous characteristics. Therefore, the output can be a nonhazardous, low-content residue or a nonhazardous transuranic or low-level waste. The level of radioactivity will be determined by assay of each collection container.

WASTE STREAM AND RESIDUE DESCRIPTION AND CHARACTERIZATION

Process Number: 771-31-5 **Title:** RASCHIG RING REMOVAL
IDC/WFC: 330 **Description:** Dry Combustibles

- ☐ RCRA Hazardous
- ■ RCRA Nonhazardous
- ☐ By Analytical Data
- ■ By Process Knowledge
- ☐ LDR Regulated
- ■ Not LDR Regulated
- ☐ Non-Wastewater
- ☐ Wastewater
- ☐ Product
- ☐ High Content Residue
- ☐ Low Content Residue
- ■ Transuranic
- ■ Low-Level
- ☐ Nonradioactive
- ☐ Source/Special Nuclear Materials
- ☐ Debris
- ☐ Fuel Blending
- ☐ Uncontained Gas
- ☐ RCRA Sample
- ☐ Recyclable Material
- ☐ Recycled/Reused
- ☐ TSCA Reg. Waste
- ☐ Evaluated in Another Process

EPA Codes:

Description (Material, Type, Size, Color, etc.):
Kimwipes, Texwipes, Surgeon's Gloves, Leather Gloves, Tape, Wood, And Other Combustible Materials

How the Output is Generated:
During The Raschig Ring Changeout Process In Which No Solutions Are Contacted

Generation Rate:
Variable

How the Output is Managed:
Collected In A 55-Gallon Drum In Building 771

Chemicals/Contaminants in or on the Output:
None

Characterization Rationale:
This output is line generated, but is always generated as TRU or low-level waste. It contains no hazardous constituents, and does not exhibit a hazardous characteristic. It is designated as nonhazardous, TRU or low-level waste.

WASTE STREAM AND RESIDUE DESCRIPTION AND CHARACTERIZATION

Process Number: 771-31-6A
IDC/WFC: 299

Title: RASCHIG RING REMOVAL
Description: Sludge

- ■ RCRA Hazardous
- □ RCRA Nonhazardous
- □ By Analytical Data
- ■ By Process Knowledge
- ■ LDR Regulated
- □ Not LDR Regulated
- ■ Non-Wastewater
- □ Wastewater

- □ Product
- □ High Content Residue
- ■ Low Content Residue
- ■ Transuranic
- ■ Low-Level
- □ Nonradioactive
- □ Source/Special Nuclear Materials
- □ Debris

- □ Fuel Blending
- □ Uncontained Gas
- □ RCRA Sample
- □ Recyclable Material
- □ Recycled/Reused
- □ TSCA Reg. Waste
- □ Evaluated in Another Process

EPA Codes:
D002

Description (Material, Type, Size, Color, etc.):
Sludge Remaining In Tanks After Liquids Are Drained

How the Output is Generated:
When Sludge Is Removed From Tanks During Changeout Of Raschig Rings

Generation Rate:
Variable

How the Output is Managed:
Placed In An 8801 Vollrath Can, Then Managed In A 90-Day Collection Area Or An Interim Status Storage Area

Chemicals/Contaminants in or on the Output:
Nitric Acid, Hydrogen Peroxide, Chromium, And Caustics

Characterization Rationale:
This output does not meet the LDR treatment standards defined in 40 CFR 268.40. The output must be deactivated to remove the characteristic of corrosivity. The treatment standards for the underlying hazardous constituents must be met for treatment residue(s) prior to land disposal. The underlying hazardous constituents associated with this output are listed in Appendix E.

THIS PAGE INTENTIONALLY LEFT BLANK

32.0 PROCESS 771-32: RADIOLOGICAL SAFETY

Radiological Safety, located in Room 151, provides radiological support to all building operations. Radiation is monitored using direct reading instruments and by conducting swipe or smear surveys. The process uses a SAC-4 smear counter. Figure 32.1 shows the inputs, process flow, and outputs associated with Radiation Monitoring.

A radiological control technician uses filter media (paper) or large-area swipes to physically smear objects. The media are analyzed by a radiation counter and discarded into a collection can. Paper towels, water, bar soap, surgical gloves, and paper coveralls are used for personnel decontamination. Smoke tubes and smoke candles are used to test airflow patterns of rooms in the Radiation Control Area.

Dry combustibles, including large-area swipes, filter media, coveralls, paper towels, and surgical gloves, are put in the appropriate 55-gallon drum. Smoke tubes and smoke candles are also disposed of in the appropriate 55-gallon drums. Decontamination water with soap is disposed of in the process waste drain, and is eventually piped to Building 774. Process Table 771-32 presents the outputs associated with Radiation Monitoring and provides their dispositions and hazardous character.

AutoCAD 12, File Name: 771-32

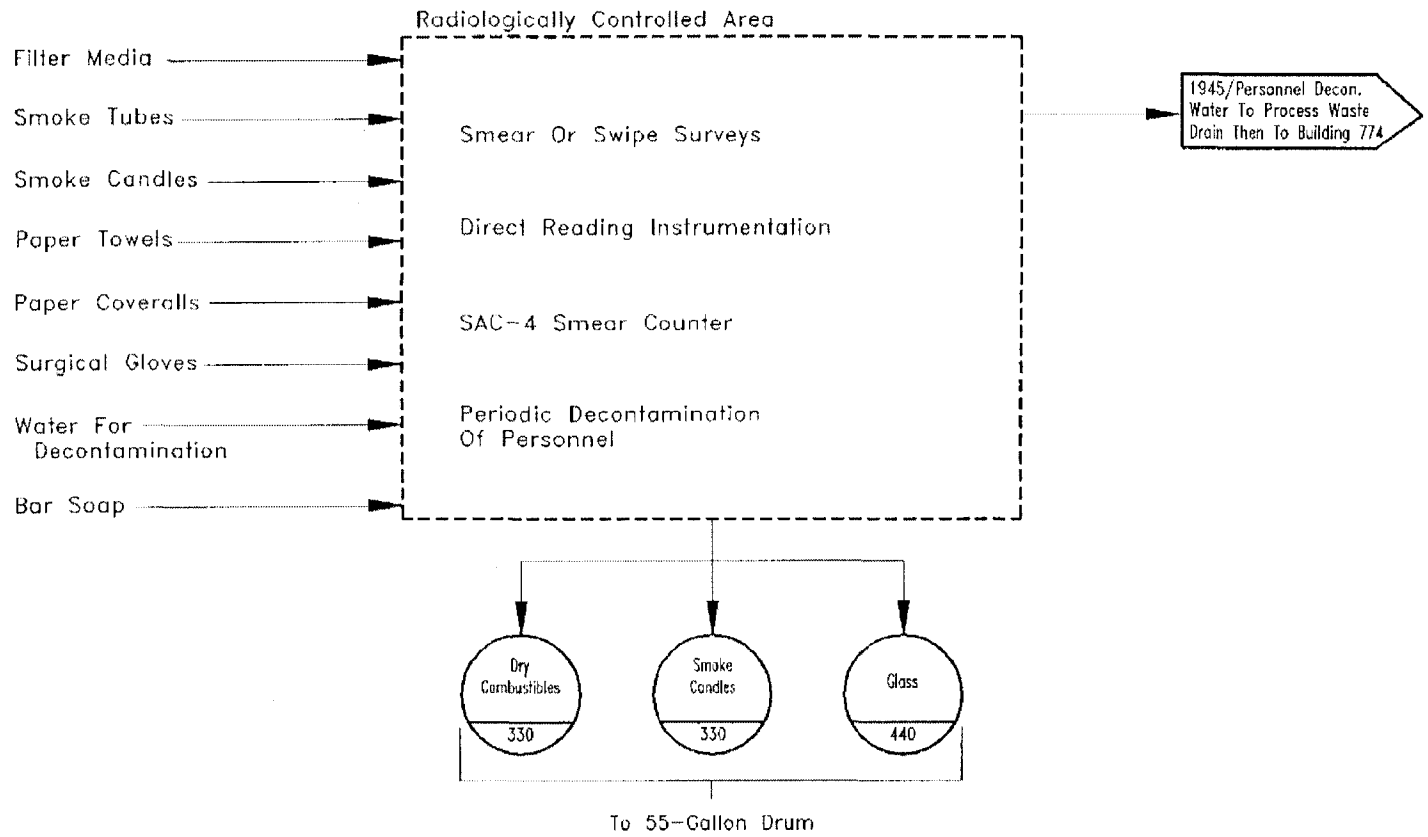

FIGURE 32.1

Rocky Flats Environmental Technology Site Waste Stream & Residue Identification & Characterization	BUILDING 771/PROCESS 32 RADIOLOGICAL SAFETY	Task	By	Date
		Designed	A. Cress/M. Vigil	01/30/90
		Drawn	B. Crawford	12/09/94
		Checked	J. Schoen	07/30/97

PROCESS 771-32 RADIOLOGICAL SAFETY

Process Number	IDC/ WFC No.	CCCs RCRA Reg. Const.	CCCs Non-RCRA Reg. Const.	Comp. Codes	Description RCRA Reg. Chemical Constituents: Non-RCRA Reg. Chemical Constituents:	Collection	LDR Codes	RCRA Haz. Waste	RCRA-Land Disposal Restricted (Part 268)	Wastewater/Non-Wastewater: Debris/Non-Debris: Subcategory:	EPA Codes
771-32-1	330	00	00	NA	Dry Combustibles RCRA Reg. Chemical Constituents: None Non-RCRA Reg. Chemical Constituents: None	55-Gallon Drum		No	No		
771-32-2A	945	00	00	3A	Decontamination Water RCRA Reg. Chemical Constituents: None Non-RCRA Reg. Chemical Constituents: None	Process Waste Drain		No	No		

Process Number	IDC/ WFC No.	CCCs RCRA Reg. Const.	CCCs Non-RCRA Reg. Const.	Comp. Codes	Description RCRA Reg. Chemical Constituents: Non-RCRA Reg. Chemical Constituents:	Collection	LDR Codes	RCRA Haz. Waste	RCRA-Land Disposal Restricted (Part 268)	Wastewater/Non-Wastewater: Debris/Non-Debris: Subcategory:	EPA Codes
771-32-5	440	00	00	NA	Glass RCRA Reg. Chemical Constituents: None Non-RCRA Reg. Chemical Constituents: None	55-Gallon Drum		No	No		
771-32-7	330	00	00	NA	Smoke Candles RCRA Reg. Chemical Constituents: None Non-RCRA Reg. Chemical Constituents: None	55-Gallon Drum		No	No		

WASTE STREAM AND RESIDUE DESCRIPTION AND CHARACTERIZATION

Process Number: 771-32-1
IDC/WFC: 330

Title: RADIOLOGICAL SAFETY
Description: Dry Combustibles

- ☐ RCRA Hazardous
- ■ RCRA Nonhazardous
- ☐ By Analytical Data
- ■ By Process Knowledge
- ☐ LDR Regulated
- ■ Not LDR Regulated
- ☐ Non-Wastewater
- ☐ Wastewater
- ☐ Product
- ☐ High Content Residue
- ☐ Low Content Residue
- ■ Transuranic
- ■ Low-Level
- ☐ Nonradioactive
- ☐ Source/Special Nuclear Materials
- ☐ Debris
- ☐ Fuel Blending
- ☐ Uncontained Gas
- ☐ RCRA Sample
- ☐ Recyclable Material
- ☐ Recycled/Reused
- ☐ TSCA Reg. Waste
- ☐ Evaluated in Another Process

EPA Codes:

Description (Material, Type, Size, Color, etc.):
Dry combustibles consist of filter media used to produce a smear analyzed by a radiation counter, paper towels used during large-area swipes, surgeon's gloves and tape removed at the step-off pad, room posting signs, and coveralls.

How the Output is Generated:
Routine RCA Surveys And Monitoring Of Materials Leaving Area

Generation Rate:
Variable

How the Output is Managed:
Deposited in designated 55-gallon drums located at the step-off pad and throughout the RCA.

Chemicals/Contaminants in or on the Output:
None

Characterization Rationale:
This output is nonline generated, in a Radioactive Materials Management Area, and can be low-level or transuranic waste. According to process knowledge, the output contains no RCRA hazardous constituents, and exhibits no RCRA hazardous characteristics. It is designated as TRU or low-level, nonhazardous waste.

WASTE STREAM AND RESIDUE DESCRIPTION AND CHARACTERIZATION

Process Number: 771-32-2A
IDC/WFC: 945

Title: RADIOLOGICAL SAFETY
Description: Decontamination Water

- ▫ RCRA Hazardous
- ▪ RCRA Nonhazardous
- ▫ By Analytical Data
- ▪ By Process Knowledge
- ▫ LDR Regulated
- ▪ Not LDR Regulated
- ▫ Non-Wastewater
- ▫ Wastewater
- ▫ Product
- ▫ High Content Residue
- ▫ Low Content Residue
- ▫ Transuranic
- ▪ Low-Level
- ▫ Nonradioactive
- ▫ Source/Special Nuclear Materials
- ▫ Debris
- ▫ Fuel Blending
- ▫ Uncontained Gas
- ▫ RCRA Sample
- ▫ Recyclable Material
- ▫ Recycled/Reused
- ▫ TSCA Reg. Waste
- ▫ Evaluated in Another Process

EPA Codes:

Description (Material, Type, Size, Color, etc.):
Decontamination Water With Soap

How the Output is Generated:
Water is used to decontaminate radioactive material or contaminated personnel.

Generation Rate:
Variable

How the Output is Managed:
Decontamination water is disposed of in the process waste drain and sent to Building 774.

Chemicals/Contaminants in or on the Output:
None

Characterization Rationale:
This output is nonline generated, in a Radioactive Materials Management Area, and is known by the generator to always be low-level waste. According to process knowledge, the output contains no RCRA hazardous constituents, and exhibits no RCRA hazardous characteristics. It is designated as low-level, nonhazardous waste.

WASTE STREAM AND RESIDUE DESCRIPTION AND CHARACTERIZATION

Process Number: 771-32-5 **Title:** RADIOLOGICAL SAFETY
IDC/WFC: 440 **Description:** Glass

- ☐ RCRA Hazardous
- ■ RCRA Nonhazardous
- ☐ By Analytical Data
- ■ By Process Knowledge
- ☐ LDR Regulated
- ■ Not LDR Regulated
- ☐ Non-Wastewater
- ☐ Wastewater
- ☐ Product
- ☐ High Content Residue
- ☐ Low Content Residue
- ■ Transuranic
- ■ Low-Level
- ☐ Nonradioactive
- ☐ Source/Special Nuclear Materials
- ☐ Debris
- ☐ Fuel Blending
- ☐ Uncontained Gas
- ☐ RCRA Sample
- ☐ Recyclable Material
- ☐ Recycled/Reused
- ☐ TSCA Reg. Waste
- ☐ Evaluated in Another Process

EPA Codes:

Description (Material, Type, Size, Color, etc.):
Smoke Tubes

How the Output is Generated:
Used To Test Airflow Patterns

Generation Rate:
Variable

How the Output is Managed:
Glass is collected in a 55-gallon drum.

Chemicals/Contaminants in or on the Output:
None

Characterization Rationale:
This output is nonline generated, in a Radioactive Materials Management Area, and can be low-level or transuranic waste. According to process knowledge, the output contains no RCRA hazardous constituents, and exhibits no RCRA hazardous characteristics. It is designated as TRU or low-level, nonhazardous waste.

WASTE STREAM AND RESIDUE DESCRIPTION AND CHARACTERIZATION

Process Number: 771-32-7
IDC/WFC: 330

Title: RADIOLOGICAL SAFETY
Description: Smoke Candles

- ☐ RCRA Hazardous
- ■ RCRA Nonhazardous
- ☐ By Analytical Data
- ■ By Process Knowledge
- ☐ LDR Regulated
- ■ Not LDR Regulated
- ☐ Non-Wastewater
- ☐ Wastewater
- ☐ Product
- ☐ High Content Residue
- ☐ Low Content Residue
- ☐ Transuranic
- ■ Low-Level
- ☐ Nonradioactive
- ☐ Source/Special Nuclear Materials
- ☐ Debris
- ☐ Fuel Blending
- ☐ Uncontained Gas
- ☐ RCRA Sample
- ☐ Recyclable Material
- ☐ Recycled/Reused
- ☐ TSCA Reg. Waste
- ☐ Evaluated in Another Process

EPA Codes:

Description (Material, Type, Size, Color, etc.):
Smoke Candles

How the Output is Generated:
After Use In Testing The Airflow Patterns Of Rooms In The Radioactive Materials Management Area

Generation Rate:
55 Gallons Yearly

How the Output is Managed:
Placed In A 55-Gallon Drum

Chemicals/Contaminants in or on the Output:
None

Characterization Rationale:
This output is nonline generated, in a Radioactive Materials Management Area, and can be low-level or transuranic waste. According to process knowledge, the output contains no RCRA hazardous constituents, and exhibits no RCRA hazardous characteristics. It is designated as low-level, nonhazardous waste.

33.0 PROCESS 771-33: NONDESTRUCTIVE ASSAY

This process has been deleted by RFETS personnel on 05/19/97.

PADC-93-01529

THIS PAGE INTENTIONALLY LEFT BLANK

34.0 PROCESS 771-34: INCINERATOR

This process has been deleted by RFETS personnel on 05/19/97.

THIS PAGE INTENTIONALLY LEFT BLANK

35.0 PROCESS 771-35: GENERAL BUILDING WASTE (RMMA)

The General Building Waste (RMMA) Process is applicable to the nonprocess-specific wastes generated in the radiation controlled area (RMMA) of Building 771, including offices, step-off pads, and corridors. Figure 35.1 gives the inputs, process flow, and outputs associated with General Building Waste (RMMA).

Paper, tape, labels, light plastics, Kimwipes, detergent, tools, and packaged materials are used in routine operations in the offices, corridors, and step-off pads in the RMMA. Radiation Protection Technicians (RPTs) use small paper smears to determine the levels of nonfixed (removable) contamination on equipment and facilities in the area and on items being prepared for transfer out of the area. The item surfaces are wiped with smears, which are then processed through an alpha counter and put in a designated container located at each counter. Radiation Protection activities also require rubber gloves, tape, and room posting signs. All personnel working in the RMMA and visitors wear personal protective equipment (PPE) consisting of various items of apparel. Personnel leaving the RMMA are monitored at the step-off pads for alpha contamination, where shoe covers (booties), tape, surgical gloves, and visitors' coveralls are collected. Leaded glovebox gloves are supplied for routine replacement as needed. Nickel-Cadmium (Ni-Cad) and Gel-Cel batteries are replaced as needed. Unusable tools, lead metal, expired items, empty cans, and general trash are generated by routine building operations. Absorbent materials are used to clean up spilled liquids. Lumber is used for building scaffolds and other general building needs.

Elemental mercury from electrical parts and measuring equipment, absorbed mercury from spills, circuit boards, nonradioactive leaded glass, leaded aprons, wet and dry combustible waste, PPE waste, soft plastic, hard plastic, light metal, expired and unused leaded glovebox gloves, used glovebox gloves, full-face masks, masks with plastic cartridges, masks with metal cartridges, glass, wood, RPT wastes, concrete, dirt, sand, insulation (nonasbestos), and floor sweepings are placed in 55-gallon drums designated for the appropriate IDC. Contaminated and uncontaminated items of apparel are collected in separate containers and taken to the laundry or discarded. Ni-Cad and Gel-Cel batteries and lead metal are placed in satellite collection areas. Mercury batteries are surveyed and sent to a 90-day collection area or permitted storage area. Lithium batteries are surveyed and sent to an appropriate storage area. Hazardous liquid and solid waste/excess chemicals are placed in an appropriate satellite accumulation area or 90-day accumulation area to be determined. Nonhazardous liquid and solid waste/excess chemicals are stored in 55 gallon drums awaiting further disposition. Process Table 771-35 presents the outputs associated with General Building Waste (RMMA) and provides their dispositions and hazardous character.

AutoCAD 12, File Name: 771-35

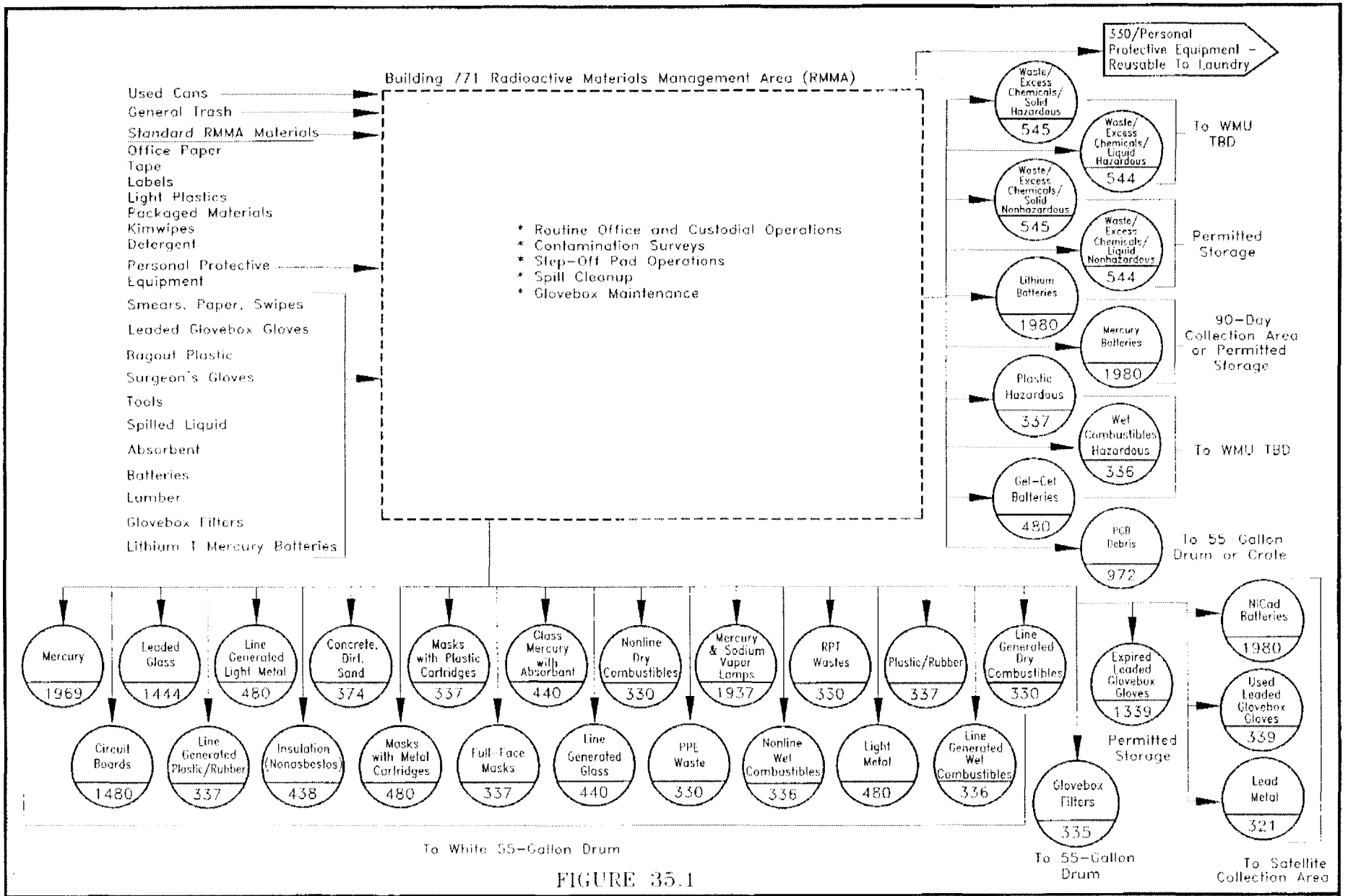

FIGURE 35.1

Rocky Flats Environmental Technology Site Waste Stream & Residue Identification & Characterization	BUILDING 771/PROCESS 35 GENERAL BUILDING WASTE (RMMA)	Task	By	Date
		Designed	W. Eakins	03/18/93
		Drawn	R. Nisely	06/12/96
		Checked	J. Schoen	11/02/98

PROCESS 771-35 GENERAL BUILDING WASTE (RMMA)

Process Number	IDC/ WFC No.	CCCs RCRA Reg. Const.	CCCs Non-RCRA Reg. Const.	Comp. Codes	Description RCRA Reg. Chemical Constituents: Non-RCRA Reg. Chemical Constituents:	Collection	LDR Codes	RCRA Haz. Waste	RCRA-Land Disposal Restricted (Part 268)	Wastewater/Non-Wastewater: Debris/Non-Debris: Subcategory:	EPA Codes
771-35-7A	1339	24	00	NA	Expired Unused Leaded Glovebox Gloves RCRA Reg. Chemical Constituents: Lead Non-RCRA Reg. Chemical Constituents: None	Permitted Storage	RT D PB1	Yes	Yes Does Not Meet Treatment Standards	Debris Lead	D008
771-35-9	330	00	00	NA	Personal Protective Equipment - Waste RCRA Reg. Chemical Constituents: None Non-RCRA Reg. Chemical Constituents: None	55-Gallon Drum		No	No		

Process Number	IDC/ WFC No.	CCCs RCRA Reg. Const.	CCCs Non-RCRA Reg. Const.	Comp. Codes	Description RCRA Reg. Chemical Constituents: Non-RCRA Reg. Chemical Constituents:	Collection	LDR Codes	RCRA Haz. Waste	RCRA-Land Disposal Restricted (Part 268)	Wastewater/Non-Wastewater: Debris/Non-Debris: Subcategory:	EPA Codes
771-35-10	330	00	00	NA	RPT Wastes RCRA Reg. Chemical Constituents: None Non-RCRA Reg. Chemical Constituents: None	55-Gallon Drum		No	No		
771-35-11	336	00	6988	NA	Wet Combustibles (Nonline) RCRA Reg. Chemical Constituents: None Non-RCRA Reg. Chemical Constituents: KW Detergent Water	55-Gallon Drum		No	No		

Process Number	IDC/ WFC No.	CCCs RCRA Reg. Const.	CCCs Non-RCRA Reg. Const.	Comp. Codes	Description RCRA Reg. Chemical Constituents: Non-RCRA Reg. Chemical Constituents:	Collection	LDR Codes	RCRA Haz. Waste	RCRA-Land Disposal Restricted (Part 268)	Wastewater/Non-Wastewater: Debris/Non-Debris: Subcategory:	EPA Codes
771-35-12	480	00	00	NA	Light Metal RCRA Reg. Chemical Constituents: None Non-RCRA Reg. Chemical Constituents: None	55-Gallon Drum		No	No		
771-35-13	337	00	00	NA	Plastic And Rubber (Nonline) RCRA Reg. Chemical Constituents: None Non-RCRA Reg. Chemical Constituents: None	55-Gallon Drum		No	No		

Process Number	IDC/ WFC No.	CCCs RCRA Reg. Const.	CCCs Non-RCRA Reg. Const.	Comp. Codes	Description RCRA Reg. Chemical Constituents: Non-RCRA Reg. Chemical Constituents:	Collection	LDR Codes	RCRA Haz. Waste	RCRA-Land Disposal Restricted (Part 268)	Wastewater/Non-Wastewater: Debris/Non-Debris: Subcategory:	EPA Codes
771-35-14	330	00	00	NA	Dry Combustibles (Nonline) RCRA Reg. Chemical Constituents: None Non-RCRA Reg. Chemical Constituents: None	55-Gallon Drum		No	No		
771-35-15	440	00	00	NA	Glass RCRA Reg. Chemical Constituents: None Non-RCRA Reg. Chemical Constituents: None	55-Gallon Drum		No	No		

Process Number	IDC/ WFC No.	CCCs RCRA Reg. Const.	CCCs Non-RCRA Reg. Const.	Comp. Codes	Description RCRA Reg. Chemical Constituents: Non-RCRA Reg. Chemical Constituents:	Collection	LDR Codes	RCRA Haz. Waste	RCRA-Land Disposal Restricted (Part 268)	Wastewater/Non-Wastewater: Debris/Non-Debris: Subcategory:	EPA Codes
771-35-22	337	00	00	NA	Masks With Plastic Cartridges RCRA Reg. Chemical Constituents: None Non-RCRA Reg. Chemical Constituents: None	55-Gallon Drum For Masks With Plastic Cartridges		No	No		
771-35-23A	337	00	00	NA	Masks With Metal Cartridges RCRA Reg. Chemical Constituents: None Non-RCRA Reg. Chemical Constituents: None	55-Gallon Drum For Masks With Metal Cartridges		No	No		

Process Number	IDC/ WFC No.	CCCs RCRA Reg. Const.	CCCs Non-RCRA Reg. Const.	Comp. Codes	Description RCRA Reg. Chemical Constituents: Non-RCRA Reg. Chemical Constituents:	Collection	LDR Codes	RCRA Haz. Waste	RCRA-Land Disposal Restricted (Part 268)	Wastewater/Non-Wastewater: Debris/Non-Debris: Subcategory:	EPA Codes
771-35-24A	337	00	00	NA	Full-Face Masks RCRA Reg. Chemical Constituents: None Non-RCRA Reg. Chemical Constituents: None	55-Gallon Drum		No	No		
771-35-25	480	2402	00	1B	Lead-Acid Batteries RCRA Reg. Chemical Constituents: Lead Acid - General Non-RCRA Reg. Chemical Constituents: None	90-Day Collection Area	RT NWW C1, PB2	Yes	Yes Does Not Meet Treatment Standards	Non-Wastewater Corrosive/Non-CW, Lead/Acid Battery	D002, D008

Process Number	IDC/ WFC No.	CCCs RCRA Reg. Const.	CCCs Non-RCRA Reg. Const.	Comp. Codes	Description RCRA Reg. Chemical Constituents: Non-RCRA Reg. Chemical Constituents:	Collection	LDR Codes	RCRA Haz. Waste	RCRA-Land Disposal Restricted (Part 268)	Wastewater/Non-Wastewater: Debris/Non-Debris: Subcategory:	EPA Codes
771-35-26	1980	3108	00	NA	Ni-Cad Batteries RCRA Reg. Chemical Constituents: Nickel Cadmium Non-RCRA Reg. Chemical Constituents: None	Satellite Collection Area	RT NWW CD2	Yes	Yes Does Not Meet Treatment Standards	Non-Wastewater Cadmium/Battery	D006
771-35-27	321	24	00	NA	Lead Metal RCRA Reg. Chemical Constituents: Lead Non-RCRA Reg. Chemical Constituents: None	Satellite Collection Area	RT NWW PB3	Yes	Yes Does Not Meet Treatment Standards	Non-Wastewater Lead/Radioactive	D008

Process Number	IDC/ WFC No.	CCCs RCRA Reg. Const.	CCCs Non-RCRA Reg. Const.	Comp. Codes	Description RCRA Reg. Chemical Constituents: Non-RCRA Reg. Chemical Constituents:	Collection	LDR Codes	RCRA Haz. Waste	RCRA-Land Disposal Restricted (Part 268)	Wastewater/Non-Wastewater: Debris/Non-Debris: Subcategory:	EPA Codes
771-35-28	374	00	00	NA	Sand, Concrete, Blacktop RCRA Reg. Chemical Constituents: None Non-RCRA Reg. Chemical Constituents: None	55-Gallon Drum		No	No		
771-35-29	438	00	00	NA	Insulation (Nonasbestos) RCRA Reg. Chemical Constituents: None Non-RCRA Reg. Chemical Constituents: None	55-Gallon Drum		No	No		

Process Number	IDC/ WFC No.	CCCs RCRA Reg. Const.	CCCs Non-RCRA Reg. Const.	Comp. Codes	Description RCRA Reg. Chemical Constituents: Non-RCRA Reg. Chemical Constituents:	Collection	LDR Codes	RCRA Haz. Waste	RCRA-Land Disposal Restricted (Part 268)	Wastewater/Non-Wastewater: Debris/Non-Debris: Subcategory:	EPA Codes
771-35-30	545	**	00	??	Waste/Excess Chemicals - Solid (Haz) RCRA Reg. Chemical Constituents: Chemical constituents vary and will be characterized on a case-by-case basis. Non-RCRA Reg. Chemical Constituents: None	To Offsite Contractor With Excess Chemical Disposition Form	RA NWW	Yes	Yes Requires Analysis	Non-Wastewater	See Rationale
771-35-32	545	00	**	NA	Waste/Excess Chemicals - Solid (Nonhaz) RCRA Reg. Chemical Constituents: None Non-RCRA Reg. Chemical Constituents: Chemical constituents vary and will be characterized on a case-by-case basis.	Contact Waste Operations		No	No		

Process Number	IDC/ WFC No.	CCCs RCRA Reg. Const.	CCCs Non-RCRA Reg. Const.	Comp. Codes	Description RCRA Reg. Chemical Constituents: Non-RCRA Reg. Chemical Constituents:	Collection	LDR Codes	RCRA Haz. Waste	RCRA-Land Disposal Restricted (Part 268)	Wastewater/Non-Wastewater: Debris/Non-Debris: Subcategory:	EPA Codes
771-35-33	544	00	**	??	Waste/Excess Chemicals - Liquid (Nonhaz) RCRA Reg. Chemical Constituents: None Non-RCRA Reg. Chemical Constituents: Chemical constituents vary and will be characterized on a case-by-case basis.	Contact Waste Operations		No	No		
771-35-34	544	**	00	??	Waste/Excess Chemicals - Liquid (Haz) RCRA Reg. Chemical Constituents: Chemical constituents vary and will be characterized on a case-by-case basis. Non-RCRA Reg. Chemical Constituents: None	To Offsite Contractor With Excess Chemical Disposition Form	RA	Yes	Yes Requires Analysis		See Rationale

Process Number	IDC/ WFC No.	CCCs RCRA Reg. Const.	CCCs Non-RCRA Reg. Const.	Comp. Codes	Description RCRA Reg. Chemical Constituents: Non-RCRA Reg. Chemical Constituents:	Collection	LDR Codes	RCRA Haz. Waste	RCRA-Land Disposal Restricted (Part 268)	Wastewater/Non-Wastewater: Debris/Non-Debris: Subcategory:	EPA Codes
771-35-35	339	24	00	NA	Used Leaded GB Gloves & Leaded Aprons RCRA Reg. Chemical Constituents: Lead Non-RCRA Reg. Chemical Constituents: None	Satellite Collection Area	RT D PB1	Yes	Yes Does Not Meet Treatment Standards	Debris Lead	D008
771-35-36	335	00	00	NA	Glovebox Filters RCRA Reg. Chemical Constituents: None Non-RCRA Reg. Chemical Constituents: None	55-Gallon Drum		No	No		

Process Number	IDC/ WFC No.	CCCs RCRA Reg. Const.	CCCs Non-RCRA Reg. Const.	Comp. Codes	Description RCRA Reg. Chemical Constituents: Non-RCRA Reg. Chemical Constituents:	Collection	LDR Codes	RCRA Haz. Waste	RCRA-Land Disposal Restricted (Part 268)	Wastewater/Non-Wastewater: Debris/Non-Debris: Subcategory:	EPA Codes
771-35-37	336	00	00	NA	Wet Combustibles (Line Generated) RCRA Reg. Chemical Constituents: None Non-RCRA Reg. Chemical Constituents: None	55-Gallon Drum		No	No		
771-35-39	330	00	00	NA	Dry Combustibles (Line Generated) RCRA Reg. Chemical Constituents: None Non-RCRA Reg. Chemical Constituents: None	55-Gallon Drum		No	No		

Process Number	IDC/ WFC No.	CCCs RCRA Reg. Const.	CCCs Non-RCRA Reg. Const.	Comp. Codes	Description RCRA Reg. Chemical Constituents: Non-RCRA Reg. Chemical Constituents:	Collection	LDR Codes	RCRA Haz. Waste	RCRA-Land Disposal Restricted (Part 268)	Wastewater/Non-Wastewater: Debris/Non-Debris: Subcategory:	EPA Codes
771-35-40	480	00	00	NA	Line Generated Light Metal RCRA Reg. Chemical Constituents: None Non-RCRA Reg. Chemical Constituents: None	55-Gallon Drum		No	No		
771-35-42A	337	00	33	NA	Plastic RCRA Reg. Chemical Constituents: None Non-RCRA Reg. Chemical Constituents: Oxidizer	55-Gallon Drum		No	No		

Process Number	IDC/ WFC No.	CCCs RCRA Reg. Const.	CCCs Non-RCRA Reg. Const.	Comp. Codes	Description RCRA Reg. Chemical Constituents: Non-RCRA Reg. Chemical Constituents:	Collection	LDR Codes	RCRA Haz. Waste	RCRA-Land Disposal Restricted (Part 268)	Wastewater/Non-Wastewater: Debris/Non-Debris: Subcategory:	EPA Codes
771-35-43	336	33	00	NA	Wet Combustibles Hazardous RCRA Reg. Chemical Constituents: Oxidizer Non-RCRA Reg. Chemical Constituents: None	Satellite Collection Area	RT D I1	Yes	Yes Does Not Meet Treatment Standards	Debris Ignitable/Non-CWA	D001
771-35-44	440	00	00	NA	Glass (Line Generated) RCRA Reg. Chemical Constituents: None Non-RCRA Reg. Chemical Constituents: None	55-Gallon Drum		No	No		

Process Number	IDC/ WFC No.	CCCs RCRA Reg. Const.	CCCs Non-RCRA Reg. Const.	Comp. Codes	Description RCRA Reg. Chemical Constituents: Non-RCRA Reg. Chemical Constituents:	Collection	LDR Codes	RCRA Haz. Waste	RCRA-Land Disposal Restricted (Part 268)	Wastewater/Non-Wastewater: Debris/Non-Debris: Subcategory:	EPA Codes
771-35-54	337	00	00	NA	Plastic And Rubber (Line Generated) RCRA Reg. Chemical Constituents: None Non-RCRA Reg. Chemical Constituents: None	55-Gallon Drum		No	No		
771-35-56	1937	00	26	NA	Mercury Vapor Lamps RCRA Reg. Chemical Constituents: None Non-RCRA Reg. Chemical Constituents: Mercury	90-Day Collection Area	RT NWW PB1	Yes	Yes Does Not Meet Treatment Standards	Non-Wastewater Lead	D009

Process Number	IDC/ WFC No.	CCCs RCRA Reg. Const.	CCCs Non-RCRA Reg. Const.	Comp. Codes	Description RCRA Reg. Chemical Constituents: Non-RCRA Reg. Chemical Constituents:	Collection	LDR Codes	RCRA Haz. Waste	RCRA-Land Disposal Restricted (Part 268)	Wastewater/Non-Wastewater: Debris/Non-Debris: Subcategory:	EPA Codes
771-35-57	1937	00	2426	NA	Sodium Vapor Lamps RCRA Reg. Chemical Constituents: None Non-RCRA Reg. Chemical Constituents: Lead Mercury	90-Day Collection Area	RT NWW PB1, HG3	Yes	Yes Does Not Meet Treatment Standards	Non-Wastewater Lead, Mercury/Low	D008, D009
771-35-58	302	00	00	NA	Benelex And Plexiglas Removal RCRA Reg. Chemical Constituents: None Non-RCRA Reg. Chemical Constituents: None	Appropriate Waste Container		No	No		

Process Number	IDC/ WFC No.	CCCs RCRA Reg. Const.	CCCs Non-RCRA Reg. Const.	Comp. Codes	Description RCRA Reg. Chemical Constituents: Non-RCRA Reg. Chemical Constituents:	Collection	LDR Codes	RCRA Haz. Waste	RCRA-Land Disposal Restricted (Part 268)	Wastewater/Non-Wastewater: Debris/Non-Debris: Subcategory:	EPA Codes
771-35-59	1444	0424	00	NA	Leaded Glass RCRA Reg. Chemical Constituents: Barium Lead Non-RCRA Reg. Chemical Constituents: None	90-Day Or Permitted Storage	RT D PB1	Yes	Yes Does Not Meet Treatment Standards	Debris Lead	D005, D008
771-35-60	1480	2436	00	NA	Circuit Boards RCRA Reg. Chemical Constituents: Lead Silver Non-RCRA Reg. Chemical Constituents: None	Collected For Recycle	RT D PB1	Yes	Yes Does Not Meet Treatment Standards	Debris Lead	D008, D011

Process Number	IDC/ WFC No.	CCCs RCRA Reg. Const.	CCCs Non-RCRA Reg. Const.	Comp. Codes	Description RCRA Reg. Chemical Constituents: Non-RCRA Reg. Chemical Constituents:	Collection	LDR Codes	RCRA Haz. Waste	RCRA-Land Disposal Restricted (Part 268)	Wastewater/Non-Wastewater: Debris/Non-Debris: Subcategory:	EPA Codes
771-35-61	440	26	00	NA	Absorbed Mercury RCRA Reg. Chemical Constituents: Mercury Non-RCRA Reg. Chemical Constituents: None	90-Day Or Permitted Storage Unit	MS	Yes	No Meets Treatment Standards See Rationale		D009
771-35-62	1969	26	00	3A	Mercury Containing Equipment RCRA Reg. Chemical Constituents: Mercury Non-RCRA Reg. Chemical Constituents: None	90-Day Or Permitted Storage Unit	RT NWW HG2	Yes	Yes Does Not Meet Treatment Standards	Non-Wastewater Mercury/Hi-Inorganic	D009
771-35-63	1980	26	00	NA	Used Mercury Batteries RCRA Reg. Chemical Constituents: Mercury Non-RCRA Reg. Chemical Constituents: None	90-Day Or Permitted Storage Area	RT NWW HG2	Yes	Yes Does Not Meet Treatment Standards	Non-Wastewater Mercury/Hi-Inorganic	D009

Process Number	IDC/ WFC No.	CCCs RCRA Reg. Const.	CCCs Non-RCRA Reg. Const.	Comp. Codes	Description RCRA Reg. Chemical Constituents: Non-RCRA Reg. Chemical Constituents:	Collection	LDR Codes	RCRA Haz. Waste	RCRA-Land Disposal Restricted (Part 268)	Wastewater/Non-Wastewater: Debris/Non-Debris: Subcategory:	EPA Codes
771-35-64	1980	00	68	NA	Lithium Batteries RCRA Reg. Chemical Constituents: None Non-RCRA Reg. Chemical Constituents: Lithium Metal	Permitted Storage Area		No	No		
771-35-65	972	00	3271	NA	PCB Debris RCRA Reg. Chemical Constituents: None Non-RCRA Reg. Chemical Constituents: Oil (Used) PCB	55-Gallon Drums Or Crates		No	No		

WASTE STREAM AND RESIDUE DESCRIPTION AND CHARACTERIZATION

Process Number: 771-35-7A
IDC/WFC: 1339

Title: GENERAL BUILDING WASTE (RMMA)
Description: Expired Unused Leaded Glovebox Gloves

- ■ RCRA Hazardous
- □ RCRA Nonhazardous
- ■ By Analytical Data
- □ By Process Knowledge
- ■ LDR Regulated
- □ Not LDR Regulated
- □ Non-Wastewater
- □ Wastewater
- □ Product
- □ High Content Residue
- □ Low Content Residue
- □ Transuranic
- □ Low-Level
- ■ Nonradioactive
- □ Source/Special Nuclear Materials
- ■ Debris
- □ Fuel Blending
- □ Uncontained Gas
- □ RCRA Sample
- ■ Recyclable Material
- □ Recycled/Reused
- □ TSCA Reg. Waste
- □ Evaluated in Another Process

EPA Codes:
D008

Description (Material, Type, Size, Color, etc.):
Unused, Nonline Generated, Glovebox Gloves Impregnated With Lead

How the Output is Generated:
Expiration date assigned to gloves is exceeded prior to gloves being used.

Generation Rate:
Variable

How the Output is Managed:
Surveyed For Unrestricted Release And Taken To Permitted Storage

Chemicals/Contaminants in or on the Output:
Lead

Characterization Rationale:
This output is nonline generated in an RBA. According to process knowledge and supported by analytical data (Sample No. G910049, 93G0191, and E901808), unused leaded glovebox gloves are a RCRA characteristic waste due to the presence of lead. This output is surveyed for unrestricted release and transferred to a Hazardous Waste Unit. This output has been designated a nonradioactive, hazardous waste. This output meets the definition of hazardous debris and can be treated by an appropriate technology in 40 CFR 268.45. The concentration-based treatment standard for lead, and the treatment standards for underlying hazardous constituents as defined in 40 CFR 268.48 must be met for treatment residue(s) prior to land disposal. The underlying hazardous constituents associated with this output are listed in Appendix E.

WASTE STREAM AND RESIDUE DESCRIPTION AND CHARACTERIZATION

Process Number: 771-35-9
IDC/WFC: 330

Title: GENERAL BUILDING WASTE (RMMA)
Description: Personal Protective Equipment - Waste

- ☐ RCRA Hazardous
- ■ RCRA Nonhazardous
- ☐ By Analytical Data
- ■ By Process Knowledge
- ☐ LDR Regulated
- ■ Not LDR Regulated
- ☐ Non-Wastewater
- ☐ Wastewater
- ☐ Product
- ☐ High Content Residue
- ☐ Low Content Residue
- ■ Transuranic
- ■ Low-Level
- ☐ Nonradioactive
- ☐ Source/Special Nuclear Materials
- ☐ Debris
- ☐ Fuel Blending
- ☐ Uncontained Gas
- ☐ RCRA Sample
- ☐ Recyclable Material
- ☐ Recycled/Reused
- ☐ TSCA Reg. Waste
- ☐ Evaluated in Another Process

EPA Codes:

Description (Material, Type, Size, Color, etc.):
Coveralls, Shoe Covers, Hats, Tyvek Suits, Cotton Glove Liners, And Other Apparel

How the Output is Generated:
Discarded by personnel in the Radioactive Materials Management Area or leaving the Radioactive Materials Management Area, both as routine procedure or because items are determined to be radioactively contaminated.

Generation Rate:
Variable

How the Output is Managed:
Packaged In Plastic Bags, Segregated By Contamination Level, And Deposited Into Appropriate Drum In Process Area

Chemicals/Contaminants in or on the Output:
None

Characterization Rationale:
This output is nonline generated in a Radioactive Materials Management Area. According to process knowledge, this output contains no RCRA hazardous constituents and exhibits no RCRA hazardous characteristics. This output has been designated a TRU or low-level, nonhazardous waste.

WASTE STREAM AND RESIDUE DESCRIPTION AND CHARACTERIZATION

Process Number: 771-35-10 **Title:** GENERAL BUILDING WASTE (RMMA)
IDC/WFC: 330 **Description:** RPT Wastes

- ▫ RCRA Hazardous
- ▪ RCRA Nonhazardous
- ▫ By Analytical Data
- ▪ By Process Knowledge
- ▫ LDR Regulated
- ▪ Not LDR Regulated
- ▫ Non-Wastewater
- ▫ Wastewater
- ▫ Product
- ▫ High Content Residue
- ▫ Low Content Residue
- ▪ Transuranic
- ▪ Low-Level
- ▫ Nonradioactive
- ▫ Source/Special Nuclear Materials
- ▫ Debris
- ▫ Fuel Blending
- ▫ Uncontained Gas
- ▫ RCRA Sample
- ▫ Recyclable Material
- ▫ Recycled/Reused
- ▫ TSCA Reg. Waste
- ▫ Evaluated in Another Process

EPA Codes:

Description (Material, Type, Size, Color, etc.):
Smear Papers, Rubber Gloves, Tape, Room Posting Signs

How the Output is Generated:
Routine Radioactive Materials Management Area Surveys And Monitoring Of Materials Leaving Area

Generation Rate:
Insufficient Data

How the Output is Managed:
Smear papers are initially collected in small containers located at alpha counters. All RPT wastes are deposited in designated 55-gallon drums.

Chemicals/Contaminants in or on the Output:
None

Characterization Rationale:
This output is nonline generated in a Radioactive Materials Management Area. According to process knowledge, this output contains no RCRA hazardous constituents and exhibits no RCRA hazardous characteristics. This output has been designated a TRU or low-level, nonhazardous waste.

WASTE STREAM AND RESIDUE DESCRIPTION AND CHARACTERIZATION

Process Number: 771-35-11
IDC/WFC: 336

Title: GENERAL BUILDING WASTE (RMMA)
Description: Wet Combustibles (Nonline)

- ▫ RCRA Hazardous
- ■ RCRA Nonhazardous
- ▫ By Analytical Data
- ■ By Process Knowledge
- ▫ LDR Regulated
- ■ Not LDR Regulated
- ▫ Non-Wastewater
- ▫ Wastewater
- ▫ Product
- ▫ High Content Residue
- ▫ Low Content Residue
- ■ Transuranic
- ■ Low-Level
- ▫ Nonradioactive
- ▫ Source/Special Nuclear Materials
- ▫ Debris
- ▫ Fuel Blending
- ▫ Uncontained Gas
- ▫ RCRA Sample
- ▫ Recyclable Material
- ▫ Recycled/Reused
- ▫ TSCA Reg. Waste
- ▫ Evaluated in Another Process

EPA Codes:

Description (Material, Type, Size, Color, etc.):
Kimwipes, Clothing, Absorbent, And Smear Paper

How the Output is Generated:
Materials Become Wetted When Used For Decontamination, Spill Or Leak (Water) Cleanup

Generation Rate:
Variable

How the Output is Managed:
Deposited In Designated 55-Gallon Drums

Chemicals/Contaminants in or on the Output:
Water, Detergents, And May Contain A Variety Of Liquid Substances

Characterization Rationale:
This output is nonline generated in a Radioactive Materials Management Area. According to process knowledge, this output contains no RCRA hazardous constituents and exhibits no RCRA hazardous characteristics. This output has been designated a TRU or low-level, nonhazardous waste.

WASTE STREAM AND RESIDUE DESCRIPTION AND CHARACTERIZATION

Process Number: 771-35-12 **Title:** GENERAL BUILDING WASTE (RMMA)
IDC/WFC: 480 **Description:** Light Metal

- ▫ RCRA Hazardous
- ▪ RCRA Nonhazardous
- ▫ By Analytical Data
- ▪ By Process Knowledge
- ▫ LDR Regulated
- ▪ Not LDR Regulated
- ▫ Non-Wastewater
- ▫ Wastewater
- ▫ Product
- ▫ High Content Residue
- ▫ Low Content Residue
- ▪ Transuranic
- ▪ Low-Level
- ▫ Nonradioactive
- ▫ Source/Special Nuclear Materials
- ▫ Debris
- ▫ Fuel Blending
- ▫ Uncontained Gas
- ▫ RCRA Sample
- ▫ Recyclable Material
- ▫ Recycled/Reused
- ▫ TSCA Reg. Waste
- ▫ Evaluated in Another Process

EPA Codes:

Description (Material, Type, Size, Color, etc.):
Broken Or Worn Tools Or Cleaning Implements, Metal Respirator Cartridges Which Can Be Segregated, Wire, Empty Reusable Cans, And Scrap Metal, Do Not Include Electronic Parts, Including Circuit Boards, In This Waste Stream Unless Approved By Environmental Compliance

How the Output is Generated:
Routine Operation In The Offices, Corridors, And Step-Off Pads Within The Radioactive Materials Management Area

Generation Rate:
Variable

How the Output is Managed:
Deposited In Designated 55-Gallon Drums

Chemicals/Contaminants in or on the Output:
None

Characterization Rationale:
This output is nonline generated in a Radioactive Materials Management Area. According to process knowledge, this output contains no RCRA hazardous constituents and exhibits no RCRA hazardous characteristics. This output has been designated a TRU or low-level, nonhazardous waste.

WASTE STREAM AND RESIDUE DESCRIPTION AND CHARACTERIZATION

Process Number: 771-35-13
IDC/WFC: 337

Title: GENERAL BUILDING WASTE (RMMA)
Description: Plastic And Rubber (Nonline)

- ☐ RCRA Hazardous
- ■ RCRA Nonhazardous
- ☐ By Analytical Data
- ■ By Process Knowledge
- ☐ LDR Regulated
- ■ Not LDR Regulated
- ☐ Non-Wastewater
- ☐ Wastewater
- ☐ Product
- ☐ High Content Residue
- ☐ Low Content Residue
- ☐ Transuranic
- ■ Low-Level
- ☐ Nonradioactive
- ☐ Source/Special Nuclear Materials
- ☐ Debris
- ☐ Fuel Blending
- ☐ Uncontained Gas
- ☐ RCRA Sample
- ☐ Recyclable Material
- ☐ Recycled/Reused
- ☐ TSCA Reg. Waste
- ☐ Evaluated in Another Process

EPA Codes:

Description (Material, Type, Size, Color, etc.):
Plastic And Rubber Waste Consisting Of Safety Glasses, Goggles, Respirators, Plastic Respirator Cartridges, Contaminated Vented Supply Tanks And Hoses, Hard Plastic Boxes From Smear Paper, Fiberglass, Ladders And Rubber Mats

How the Output is Generated:
Routine operations In The Offices, Corridors, And Step-Off Pads Within The Radioactive Materials Management Area

Generation Rate:
Variable

How the Output is Managed:
Deposited In Designated 55-Gallon Drums

Chemicals/Contaminants in or on the Output:
None

Characterization Rationale:
This output is nonline generated in a Radioactive Materials Management Area. According to process knowledge, this output contains no RCRA hazardous constituents and exhibits no RCRA hazardous characteristics. This output has been designated a low-level, nonhazardous waste.

WASTE STREAM AND RESIDUE DESCRIPTION AND CHARACTERIZATION

Process Number: 771-35-14 **Title:** GENERAL BUILDING WASTE (RMMA)
IDC/WFC: 330 **Description:** Dry Combustibles (Nonline)

- ☐ RCRA Hazardous
- ■ RCRA Nonhazardous
- ☐ By Analytical Data
- ■ By Process Knowledge
- ☐ LDR Regulated
- ■ Not LDR Regulated
- ☐ Non-Wastewater
- ☐ Wastewater
- ☐ Product
- ☐ High Content Residue
- ☐ Low Content Residue
- ■ Transuranic
- ■ Low-Level
- ☐ Nonradioactive
- ☐ Source/Special Nuclear Materials
- ☐ Debris
- ☐ Fuel Blending
- ☐ Uncontained Gas
- ☐ RCRA Sample
- ☐ Recyclable Material
- ☐ Recycled/Reused
- ☐ TSCA Reg. Waste
- ☐ Evaluated in Another Process

EPA Codes:

Description (Material, Type, Size, Color, etc.):
Office Trash, Tape, Gloves, Labels, Package Materials, Paper Wipes, Wood, And Floor Sweepings

How the Output is Generated:
Routine Operations In The Offices, Corridors, And Step-Off Pads Within The Radioactive Materials Management Area

Generation Rate:
Variable

How the Output is Managed:
Deposited In White 55-Gallon Drums

Chemicals/Contaminants in or on the Output:
None

Characterization Rationale:
This output is nonline generated in a Radioactive Materials Management Area. According to process knowledge, this output contains no RCRA hazardous constituents and exhibits no RCRA hazardous characteristics. This output has been designated a TRU or low-level, nonhazardous waste.

WASTE STREAM AND RESIDUE DESCRIPTION AND CHARACTERIZATION

Process Number: 771-35-15 **Title:** GENERAL BUILDING WASTE (RMMA)
IDC/WFC: 440 **Description:** Glass

- ▫ RCRA Hazardous
- ▪ RCRA Nonhazardous
- ▫ By Analytical Data
- ▪ By Process Knowledge
- ▫ LDR Regulated
- ▪ Not LDR Regulated
- ▫ Non-Wastewater
- ▫ Wastewater
- ▫ Product
- ▫ High Content Residue
- ▫ Low Content Residue
- ▪ Transuranic
- ▪ Low-Level
- ▫ Nonradioactive
- ▫ Source/Special Nuclear Materials
- ▫ Debris
- ▫ Fuel Blending
- ▫ Uncontained Gas
- ▫ RCRA Sample
- ▫ Recyclable Material
- ▫ Recycled/Reused
- ▫ TSCA Reg. Waste
- ▫ Evaluated in Another Process

EPA Codes:

Description (Material, Type, Size, Color, etc.):
Nonleaded Glass, Including Broken Containers And Smoke Tubes

How the Output is Generated:
Generated As Waste After Use

Generation Rate:
Variable

How the Output is Managed:
Deposited In Designated 55-Gallon Drums

Chemicals/Contaminants in or on the Output:
None

Characterization Rationale:
This output is nonline generated in a Radioactive Materials Management Area. According to process knowledge, this output contains no RCRA hazardous constituents and exhibits no RCRA hazardous characteristics. This output has been designated a TRU or low-level, nonhazardous waste.

WASTE STREAM AND RESIDUE DESCRIPTION AND CHARACTERIZATION

Process Number: 771-35-22
IDC/WFC: 337

Title: GENERAL BUILDING WASTE (RMMA)
Description: Masks With Plastic Cartridges

- ▫ RCRA Hazardous
- ▪ RCRA Nonhazardous
- ▫ By Analytical Data
- ▪ By Process Knowledge
- ▫ LDR Regulated
- ▪ Not LDR Regulated
- ▫ Non-Wastewater
- ▫ Wastewater
- ▫ Product
- ▫ High Content Residue
- ▫ Low Content Residue
- ▪ Transuranic
- ▪ Low-Level
- ▫ Nonradioactive
- ▫ Source/Special Nuclear Materials
- ▫ Debris
- ▫ Fuel Blending
- ▫ Uncontained Gas
- ▫ RCRA Sample
- ▫ Recyclable Material
- ▫ Recycled/Reused
- ▫ TSCA Reg. Waste
- ▫ Evaluated in Another Process

EPA Codes:

Description (Material, Type, Size, Color, etc.):
Full-Face Masks With Plastic Respirator Cartridges For Which Excessive Contamination Does Not Allow Segregation Of The Cartridges

How the Output is Generated:
When Masks Are Removed

Generation Rate:
Insufficient Data

How the Output is Managed:
Placed In A 55-Gallon, IDC 337 Drum Which Is Used Only For The Accumulation Of These Masks

Chemicals/Contaminants in or on the Output:
None

Characterization Rationale:
This output is nonline generated in a Radioactive Materials Management Area. According to process knowledge, this output contains no RCRA hazardous constituents and exhibits no RCRA hazardous characteristics. This output has been designated a TRU or low-level, nonhazardous waste.

WASTE STREAM AND RESIDUE DESCRIPTION AND CHARACTERIZATION

Process Number: 771-35-23A
IDC/WFC: 337

Title: GENERAL BUILDING WASTE (RMMA)
Description: Masks With Metal Cartridges

- ▫ RCRA Hazardous
- ▪ RCRA Nonhazardous
- ▫ By Analytical Data
- ▪ By Process Knowledge
- ▫ LDR Regulated
- ▪ Not LDR Regulated
- ▫ Non-Wastewater
- ▫ Wastewater
- ▫ Product
- ▫ High Content Residue
- ▫ Low Content Residue
- ▪ Transuranic
- ▪ Low-Level
- ▫ Nonradioactive
- ▫ Source/Special Nuclear Materials
- ▫ Debris
- ▫ Fuel Blending
- ▫ Uncontained Gas
- ▫ RCRA Sample
- ▫ Recyclable Material
- ▫ Recycled/Reused
- ▫ TSCA Reg. Waste
- ▫ Evaluated in Another Process

EPA Codes:

Description (Material, Type, Size, Color, etc.):
Full-Face Masks With Metal Respirator Cartridges For Which Excessive Contamination Does Not Allow Segregation Of The Cartridges

How the Output is Generated:
When Masks Are Removed

Generation Rate:
Variable

How the Output is Managed:
Deposited In A 55-Gallon, IDC 337 Drum Which Is Used Only For The Accumulation Of These Masks

Chemicals/Contaminants in or on the Output:
None

Characterization Rationale:
This output is nonline generated in a Radioactive Materials Management Area. According to process knowledge, this output contains no RCRA hazardous constituents and exhibits no RCRA hazardous characteristics. This output has been designated a TRU or low-level, nonhazardous waste.

WASTE STREAM AND RESIDUE DESCRIPTION AND CHARACTERIZATION

Process Number: 771-35-24A
IDC/WFC: 337

Title: GENERAL BUILDING WASTE (RMMA)
Description: Full-Face Masks

- ▫ RCRA Hazardous
- ▪ RCRA Nonhazardous
- ▫ By Analytical Data
- ▪ By Process Knowledge
- ▫ LDR Regulated
- ▪ Not LDR Regulated
- ▫ Non-Wastewater
- ▫ Wastewater
- ▫ Product
- ▫ High Content Residue
- ▫ Low Content Residue
- ▪ Transuranic
- ▪ Low-Level
- ▫ Nonradioactive
- ▫ Source/Special Nuclear Materials
- ▫ Debris
- ▫ Fuel Blending
- ▫ Uncontained Gas
- ▫ RCRA Sample
- ▫ Recyclable Material
- ▫ Recycled/Reused
- ▫ TSCA Reg. Waste
- ▫ Evaluated in Another Process

EPA Codes:

Description (Material, Type, Size, Color, etc.):
Full-Face Respirator Masks

How the Output is Generated:
After Use And Removal Of The Plastic Or Metal Filter Cartridges

Generation Rate:
Variable

How the Output is Managed:
Placed In A 55-Gallon Drum

Chemicals/Contaminants in or on the Output:
None

Characterization Rationale:
This output is nonline generated in a Radioactive Materials Management Area. According to process knowledge, this output contains no RCRA hazardous constituents and exhibits no RCRA hazardous characteristics. This output has been designated a TRU or low-level, nonhazardous waste.

WASTE STREAM AND RESIDUE DESCRIPTION AND CHARACTERIZATION

Process Number: 771-35-25
IDC/WFC: 480

Title: GENERAL BUILDING WASTE (RMMA)
Description: Lead-Acid Batteries

- ■ RCRA Hazardous
- □ RCRA Nonhazardous
- □ By Analytical Data
- ■ By Process Knowledge
- ■ LDR Regulated
- □ Not LDR Regulated
- ■ Non-Wastewater
- □ Wastewater

- □ Product
- □ High Content Residue
- □ Low Content Residue
- ■ Transuranic
- ■ Low-Level
- □ Nonradioactive
- □ Source/Special Nuclear Materials
- □ Debris

- □ Fuel Blending
- □ Uncontained Gas
- □ RCRA Sample
- □ Recyclable Material
- □ Recycled/Reused
- □ TSCA Reg. Waste
- □ Evaluated in Another Process

EPA Codes:
D002, D008

Description (Material, Type, Size, Color, etc.):
Lead-Acid Batteries

How the Output is Generated:
When Batteries Are Replaced

Generation Rate:
Variable

How the Output is Managed:
Placed In A 90-Day Collection Area Pending Recycle

Chemicals/Contaminants in or on the Output:
Lead, Acid

Characterization Rationale:
This output is nonline generated. According to process knowledge, this output exhibits the characteristics of corrosivity and toxicity under RCRA due to the presence of acid and lead. Therefore the output can be a hazardous, low-level or transuranic waste. The level of radioactivity will be determined by assay of each collection container. This output does not meet the LDR treatment standards defined in 40 CFR 268.40. Lead acid batteries must be treated by the specified technology-based treatment standard. The battery reclaimer will monitor for underlying hazardous constituents in the treatment residue(s) prior to land disposal.

WASTE STREAM AND RESIDUE DESCRIPTION AND CHARACTERIZATION

Process Number: 771-35-26
IDC/WFC: 1980

Title: GENERAL BUILDING WASTE (RMMA)
Description: Ni-Cad Batteries

- ■ RCRA Hazardous
- □ RCRA Nonhazardous
- □ By Analytical Data
- ■ By Process Knowledge
- ■ LDR Regulated
- □ Not LDR Regulated
- ■ Non-Wastewater
- □ Wastewater

- □ Product
- □ High Content Residue
- □ Low Content Residue
- □ Transuranic
- □ Low-Level
- ■ Nonradioactive
- □ Source/Special Nuclear Materials
- □ Debris

- □ Fuel Blending
- □ Uncontained Gas
- □ RCRA Sample
- □ Recyclable Material
- □ Recycled/Reused
- □ TSCA Reg. Waste
- □ Evaluated in Another Process

EPA Codes:
D006

Description (Material, Type, Size, Color, etc.):
Used Ni-Cad Batteries

How the Output is Generated:
When Batteries Are Replaced

Generation Rate:
Variable

How the Output is Managed:
Placed In Satellite Collection Area

Chemicals/Contaminants in or on the Output:
Nickel, Cadmium

Characterization Rationale:
This output is generated in a Radioactive Materials Management Area. According to process knowledge, this output exhibits the characteristic of toxicity due to the presence of cadmium. This output is surveyed by Rad Ops and if found to be nonradioactive, this output may be designated a nonradioactive, hazardous waste. This output does not meet the LDR treatment standards defined in 40 CFR 268.40. The output is cadmium containing batteries and must be treated by the specified technology-based treatment standard.

WASTE STREAM AND RESIDUE DESCRIPTION AND CHARACTERIZATION

Process Number: 771-35-27 **Title:** GENERAL BUILDING WASTE (RMMA)
IDC/WFC: 321 **Description:** Lead Metal

- ■ RCRA Hazardous
- □ RCRA Nonhazardous
- □ By Analytical Data
- ■ By Process Knowledge
- ■ LDR Regulated
- □ Not LDR Regulated
- ■ Non-Wastewater
- □ Wastewater
- □ Product
- □ High Content Residue
- □ Low Content Residue
- □ Transuranic
- ■ Low-Level
- □ Nonradioactive
- □ Source/Special Nuclear Materials
- □ Debris
- □ Fuel Blending
- □ Uncontained Gas
- □ RCRA Sample
- □ Recyclable Material
- □ Recycled/Reused
- □ TSCA Reg. Waste
- □ Evaluated in Another Process

EPA Codes:
D008

Description (Material, Type, Size, Color, etc.):
Lead Metal Such As Lead Bricks, Glovebox Shielding, Etc

How the Output is Generated:
Replacement Of Shielding

Generation Rate:
Variable

How the Output is Managed:
The lead metal is collected in a satellite collection area.

Chemicals/Contaminants in or on the Output:
Lead

Characterization Rationale:
This output is nonline generated in a Radioactive Materials Management Area. According to process knowledge, this output exhibits the characteristic of toxicity due to the presence of lead. This output has been designated a low-level, mixed waste. This output does not meet the LDR treatment standards defined in 40 CFR 268.40. The output is radioactive lead solids and must be treated by the specified technology-based treatment standard.

WASTE STREAM AND RESIDUE DESCRIPTION AND CHARACTERIZATION

Process Number: 771-35-28
IDC/WFC: 374

Title: GENERAL BUILDING WASTE (RMMA)
Description: Sand Concrete Blacktop

- ☐ RCRA Hazardous
- ■ RCRA Nonhazardous
- ☐ By Analytical Data
- ■ By Process Knowledge
- ☐ LDR Regulated
- ■ Not LDR Regulated
- ☐ Non-Wastewater
- ☐ Wastewater
- ☐ Product
- ☐ High Content Residue
- ☐ Low Content Residue
- ☐ Transuranic
- ■ Low-Level
- ☐ Nonradioactive
- ☐ Source/Special Nuclear Materials
- ☐ Debris
- ☐ Fuel Blending
- ☐ Uncontained Gas
- ☐ RCRA Sample
- ☐ Recyclable Material
- ☐ Recycled/Reused
- ☐ TSCA Reg. Waste
- ☐ Evaluated in Another Process

EPA Codes:

Description (Material, Type, Size, Color, etc.):
Sand, Concrete. And Blacktop

How the Output is Generated:
Routine Maintenance And Custodial Operations

Generation Rate:
Insufficient Data

How the Output is Managed:
Placed In Designated 55-Gallon Drum

Chemicals/Contaminants in or on the Output:
None

Characterization Rationale:
This sand, concrete, and blacktop are nonline generated in a Radioactive Materials Management Area. According to process knowledge, the output contains no RCRA hazardous constituents and exhibits no RCRA hazardous characteristics. It is designated a low-level, nonhazardous waste.

WASTE STREAM AND RESIDUE DESCRIPTION AND CHARACTERIZATION

Process Number: 771-35-29
IDC/WFC: 438

Title: GENERAL BUILDING WASTE (RMMA)
Description: Insulation (Nonasbestos)

- ☐ RCRA Hazardous
- ■ RCRA Nonhazardous
- ☐ By Analytical Data
- ■ By Process Knowledge
- ☐ LDR Regulated
- ■ Not LDR Regulated
- ☐ Non-Wastewater
- ☐ Wastewater
- ☐ Product
- ☐ High Content Residue
- ☐ Low Content Residue
- ☐ Transuranic
- ■ Low-Level
- ☐ Nonradioactive
- ☐ Source/Special Nuclear Materials
- ☐ Debris
- ☐ Fuel Blending
- ☐ Uncontained Gas
- ☐ RCRA Sample
- ☐ Recyclable Material
- ☐ Recycled/Reused
- ☐ TSCA Reg. Waste
- ☐ Evaluated in Another Process

EPA Codes:

Description (Material, Type, Size, Color, etc.):
Nonasbestos Insulation

How the Output is Generated:
Routine Maintenance And Custodial Operations

Generation Rate:
Insufficient Data

How the Output is Managed:
Placed In Appropriate 55-Gallon Drum

Chemicals/Contaminants in or on the Output:
None

Characterization Rationale:
This insulation (nonasbestos) is nonline generated in a Radioactive Materials Management Area. According to process knowledge, the output contains no RCRA hazardous constituents and exhibits no RCRA hazardous characteristics. It is designated a low-level, nonhazardous waste.

WASTE STREAM AND RESIDUE DESCRIPTION AND CHARACTERIZATION

Process Number: 771-35-30
IDC/WFC: 545

Title: GENERAL BUILDING WASTE (RMMA)
Description: Waste/Excess Chemicals - Solid (Haz)

- ■ RCRA Hazardous
- □ RCRA Nonhazardous
- □ By Analytical Data
- ■ By Process Knowledge
- ■ LDR Regulated
- □ Not LDR Regulated
- ■ Non-Wastewater
- □ Wastewater
- □ Product
- □ High Content Residue
- □ Low Content Residue
- ■ Transuranic
- ■ Low-Level
- □ Nonradioactive
- □ Source/Special Nuclear Materials
- □ Debris
- □ Fuel Blending
- □ Uncontained Gas
- □ RCRA Sample
- □ Recyclable Material
- □ Recycled/Reused
- □ TSCA Reg. Waste
- □ Evaluated in Another Process

EPA Codes:
See Rationale

Description (Material, Type, Size, Color, etc.):
Hazardous Solid Waste, Expired, Or Excess Chemicals

How the Output is Generated:
Waste/excess solid chemicals are generated due to discontinued use (and not useable elsewhere on plantsite). Chemicals are expired or off-specification in some manner and therefore not useable.

Generation Rate:
Variable

How the Output is Managed:
Waste Regulatory Programs must be contacted and an excess chemical form must be filled out prior to final disposition of waste. (This waste stream is to be managed in an appropriate satellite accumulation area or 90-day collection area).

Chemicals/Contaminants in or on the Output:
Constituents vary depending on the actual waste/excess chemicals.

Characterization Rationale:
According to process knowledge, these solid, waste/excess chemicals are characterized as hazardous. The EPA codes have not been identified because the waste/excess chemicals vary considerably in composition and characteristics: therefore, appropriate codes must be assigned on a case-by-case basis. The chemical constituent code (**) is to be replaced by the actual numeric or alphanumeric constituent code on the drum traveler. The compatibility code is designated as "??", and is to be replaced with appropriate codes on a case-by-case basis. This output was generated in a Radioactive Materials Management Area and is therefore designated a low-level, TRU, or hazardous waste. An evaluation to determine if this output meets the LDR treatment standards defined in 40 CFR 268.40 will be made on a case-by-case basis.

WASTE STREAM AND RESIDUE DESCRIPTION AND CHARACTERIZATION

Process Number: 771-35-32
IDC/WFC: 545

Title: GENERAL BUILDING WASTE (RMMA)
Description: Waste/Excess Chemical - Solid (Nonhaz)

- ▫ RCRA Hazardous
- ▪ RCRA Nonhazardous
- ▫ By Analytical Data
- ▪ By Process Knowledge
- ▫ LDR Regulated
- ▪ Not LDR Regulated
- ▫ Non-Wastewater
- ▫ Wastewater
- ▫ Product
- ▫ High Content Residue
- ▫ Low Content Residue
- ▪ Transuranic
- ▪ Low-Level
- ▫ Nonradioactive
- ▫ Source/Special Nuclear Materials
- ▫ Debris
- ▫ Fuel Blending
- ▫ Uncontained Gas
- ▫ RCRA Sample
- ▫ Recyclable Material
- ▫ Recycled/Reused
- ▫ TSCA Reg. Waste
- ▫ Evaluated in Another Process

EPA Codes:

Description (Material, Type, Size, Color, etc.):
Nonhazardous Solid Waste, Expired, Or Excess Chemicals

How the Output is Generated:
Waste/excess solid chemicals are generated due to discontinued use (and not useable elsewhere on plantsite), chemicals are expired or off-specification in some manner and are therefore not useable.

Generation Rate:
Variable

How the Output is Managed:
Waste Operations must be contacted and an excess chemical form must be filled out prior to final disposition of waste.

Chemicals/Contaminants in or on the Output:
Constituents vary depending on the actual waste/excess chemical.

Characterization Rationale:
According to process knowledge, these solid, waste/excess chemicals are characterized as nonhazardous. The chemical constituent code (**) is to be replaced by the actual numeric or alphanumeric code on the drum traveller. This output was generated in a Radioactive Materials Management Area and is therefore designated a low-level or TRU, nonhazardous waste.

WASTE STREAM AND RESIDUE DESCRIPTION AND CHARACTERIZATION

Process Number: 771-35-33
IDC/WFC: 544

Title: GENERAL BUILDING WASTE (RMMA)
Description: Waste/Excess Chemicals - Liquid(Nonhaz)

- ▫ RCRA Hazardous
- ▪ RCRA Nonhazardous
- ▫ By Analytical Data
- ▪ By Process Knowledge
- ▫ LDR Regulated
- ▪ Not LDR Regulated
- ▫ Non-Wastewater
- ▫ Wastewater
- ▫ Product
- ▫ High Content Residue
- ▫ Low Content Residue
- ▪ Transuranic
- ▪ Low-Level
- ▫ Nonradioactive
- ▫ Source/Special Nuclear Materials
- ▫ Debris
- ▫ Fuel Blending
- ▫ Uncontained Gas
- ▫ RCRA Sample
- ▫ Recyclable Material
- ▫ Recycled/Reused
- ▫ TSCA Reg. Waste
- ▫ Evaluated in Another Process

EPA Codes:

Description (Material, Type, Size, Color, etc.):
Nonhazardous Liquid Waste/Excess Chemicals

How the Output is Generated:
Waste/excess solid chemicals are generated due to discontinued use (and not useable elsewhere on plantsite), chemicals are expired or off specification in some manner and therefore not useable.

Generation Rate:
Variable

How the Output is Managed:
Waste Operations must be contacted and an excess chemical form must be filled out prior to final disposition of waste.

Chemicals/Contaminants in or on the Output:
Constituents vary depending on the actual waste/excess chemical.

Characterization Rationale:
According to process knowledge, these liquid waste/excess chemicals are characterized as nonhazardous. The chemical constituent code (**) is to be replaced by the actual numeric or alphanumeric code on the drum traveller. The compatibility code is designated as "??" and is to be replaced by the appropriate code on a case-by-case basis. This output was generated in a Radioactive Materials Management Area and is therefore designated a low-level or TRU, nonhazardous waste.

WASTE STREAM AND RESIDUE DESCRIPTION AND CHARACTERIZATION

Process Number: 771-35-34
IDC/WFC: 544

Title: GENERAL BUILDING WASTE (RMMA)
Description: Waste/Excess Chemicals - Liquid (Haz.)

- ■ RCRA Hazardous
- □ RCRA Nonhazardous
- □ By Analytical Data
- ■ By Process Knowledge
- ■ LDR Regulated
- □ Not LDR Regulated
- □ Non-Wastewater
- □ Wastewater
- □ Product
- □ High Content Residue
- □ Low Content Residue
- ■ Transuranic
- ■ Low-Level
- □ Nonradioactive
- □ Source/Special Nuclear Materials
- □ Debris
- □ Fuel Blending
- □ Uncontained Gas
- □ RCRA Sample
- □ Recyclable Material
- □ Recycled/Reused
- □ TSCA Reg. Waste
- □ Evaluated in Another Process

EPA Codes:
See Rationale

Description (Material, Type, Size, Color, etc.):
Hazardous Liquid Waste, Expired, Or Excess Chemicals

How the Output is Generated:
Waste/excess chemicals are generated due to discontinued use, and not useable elsewhere on plantsite. The chemicals are expired or off specification in some manner and therefore unusable.

Generation Rate:
Variable

How the Output is Managed:
Waste Regulatory Programs must be contacted and an excess chemical form must be filled out prior to final disposition of waste.

Chemicals/Contaminants in or on the Output:
Constituents vary depending on the actual waste/excess chemical.

Characterization Rationale:
According to process knowledge, these liquid waste/excess chemicals are characterized as hazardous. The EPA codes have not been identified because the waste/excess chemicals vary considerably in composition and characteristics: therefore, appropriate codes must be assigned on a case-by-case basis. The chemical constituent code (**) is to be replaced by the actual numeric or alphanumeric constituent code on the drum traveler. The compatibility code is designated as "??", and is to be replaced with appropriate codes on a case-by-case basis. This output was generated in a Radioactive Materials Management Area and is therefore designated a low-level or TRU hazardous waste. An evaluation to determine if this output meets the LDR treatment standards defined in 40 CFR 268.40 will be made on a case-by-case basis.

WASTE STREAM AND RESIDUE DESCRIPTION AND CHARACTERIZATION

Process Number: 771-35-35
IDC/WFC: 339

Title: GENERAL BUILDING WASTE (RMMA)
Description: Used Leaded GB Gloves & Leaded Aprons

- ■ RCRA Hazardous
- □ RCRA Nonhazardous
- □ By Analytical Data
- ■ By Process Knowledge
- ■ LDR Regulated
- □ Not LDR Regulated
- □ Non-Wastewater
- □ Wastewater

- □ Product
- □ High Content Residue
- □ Low Content Residue
- ■ Transuranic
- ■ Low-Level
- □ Nonradioactive
- □ Source/Special Nuclear Materials
- ■ Debris

- □ Fuel Blending
- □ Uncontained Gas
- □ RCRA Sample
- □ Recyclable Material
- □ Recycled/Reused
- □ TSCA Reg. Waste
- □ Evaluated in Another Process

EPA Codes:
D008

Description (Material, Type, Size, Color, etc.):
Used Leaded Glovebox Gloves And Used Or Damaged Leaded Aprons

How the Output is Generated:
Used leaded glovebox gloves are changed out on a periodic basis. Used leaded aprons are determined to be waste.

Generation Rate:
Variable

How the Output is Managed:
Used leaded glovebox gloves and used leaded aprons are disposed of in a 55-gallon drum in a satellite collection area in Room 114.

Chemicals/Contaminants in or on the Output:
Lead

Characterization Rationale:
According to process knowledge and supported by analytical data (G910049, 93G0191), used leaded glovebox gloves and aprons are line generated and exhibit the characteristic of TC toxicity under RCRA due to the presence of lead. This output may be a transuranic or low level mixed waste. This output meets the definition of hazardous debris and can be treated by an appropriate technology in 40 CFR 268.45. The concentration-based treatment standard for lead, and the treatment standards for underlying hazardous constituents as defined in 40 CFR 268.48 must be met for treatment residue(s) prior to land disposal. The underlying hazardous constituents associated with this output are listed in Appendix E.

WASTE STREAM AND RESIDUE DESCRIPTION AND CHARACTERIZATION

Process Number: 771-35-36 **Title:** GENERAL BUILDING WASTE (RMMA)
IDC/WFC: 335 **Description:** Glovebox Filters

- ▫ RCRA Hazardous
- ▪ RCRA Nonhazardous
- ▫ By Analytical Data
- ▪ By Process Knowledge
- ▫ LDR Regulated
- ▪ Not LDR Regulated
- ▫ Non-Wastewater
- ▫ Wastewater
- ▫ Product
- ▫ High Content Residue
- ▪ Low Content Residue
- ▪ Transuranic
- ▪ Low-Level
- ▫ Nonradioactive
- ▫ Source/Special Nuclear Materials
- ▫ Debris
- ▫ Fuel Blending
- ▫ Uncontained Gas
- ▫ RCRA Sample
- ▫ Recyclable Material
- ▫ Recycled/Reused
- ▫ TSCA Reg. Waste
- ▫ Evaluated in Another Process

EPA Codes:

Description (Material, Type, Size, Color, etc.):
Glovebox Filters, High Efficiency Particulate Air (HEPA) Filters

How the Output is Generated:
Glovebox filters are changed out periodically.

Generation Rate:
Variable

How the Output is Managed:
HEPA filters are disposed of in a 55-gallon drum. Full drums are taken to the drum counter.

Chemicals/Contaminants in or on the Output:
None

Characterization Rationale:
This output is line generated, and can be a low-content residue or a transuranic or low-level waste. According to process knowledge, the output contains no RCRA hazardous constituents and exhibits no RCRA hazardous characteristics. Therefore, the output can be a nonhazardous, low-content residue or a nonhazardous, transuranic or low-level waste.

WASTE STREAM AND RESIDUE DESCRIPTION AND CHARACTERIZATION

Process Number: 771-35-37 **Title:** GENERAL BUILDING WASTE (RMMA)
IDC/WFC: 336 **Description:** Wet Combustibles (Line Generated)

- ▫ RCRA Hazardous
- ▪ RCRA Nonhazardous
- ▫ By Analytical Data
- ▪ By Process Knowledge
- ▫ LDR Regulated
- ▪ Not LDR Regulated
- ▫ Non-Wastewater
- ▫ Wastewater
- ▫ Product
- ▫ High Content Residue
- ▪ Low Content Residue
- ▪ Transuranic
- ▪ Low-Level
- ▫ Nonradioactive
- ▫ Source/Special Nuclear Materials
- ▫ Debris
- ▫ Fuel Blending
- ▫ Uncontained Gas
- ▫ RCRA Sample
- ▫ Recyclable Material
- ▫ Recycled/Reused
- ▫ TSCA Reg. Waste
- ▫ Evaluated in Another Process

EPA Codes:

Description (Material, Type, Size, Color, etc.):
Line Generated Wet Combustibles

How the Output is Generated:
During Glovebox Operations

Generation Rate:
Variable

How the Output is Managed:
Deposited In Designated 55-Gallon Drums

Chemicals/Contaminants in or on the Output:
None

Characterization Rationale:
This output is line generated, and can be a low-content residue or a transuranic or low-level waste. According to process knowledge, the output contains no RCRA hazardous constituents and exhibits no RCRA hazardous characteristics. Therefore, the output can be a nonhazardous, low-content residue or a nonhazardous, transuranic or low-level waste.

WASTE STREAM AND RESIDUE DESCRIPTION AND CHARACTERIZATION

Process Number: 771-35-39
IDC/WFC: 330

Title: GENERAL BUILDING WASTE (RMMA)
Description: Dry Combustibles (Line Generated)

- ▫ RCRA Hazardous
- ▪ RCRA Nonhazardous
- ▫ By Analytical Data
- ▪ By Process Knowledge
- ▫ LDR Regulated
- ▪ Not LDR Regulated
- ▫ Non-Wastewater
- ▫ Wastewater
- ▫ Product
- ▫ High Content Residue
- ▪ Low Content Residue
- ▪ Transuranic
- ▪ Low-Level
- ▫ Nonradioactive
- ▫ Source/Special Nuclear Materials
- ▫ Debris
- ▫ Fuel Blending
- ▫ Uncontained Gas
- ▫ RCRA Sample
- ▫ Recyclable Material
- ▫ Recycled/Reused
- ▫ TSCA Reg. Waste
- ▫ Evaluated in Another Process

EPA Codes:

Description (Material, Type, Size, Color, etc.):
Dry Combustibles

How the Output is Generated:
During Glovebox Operations Within The Radioactive Materials Management Area

Generation Rate:
Variable

How the Output is Managed:
Deposited In Designated 55-Gallon Drums

Chemicals/Contaminants in or on the Output:
None

Characterization Rationale:
This output is line generated, and can be a low-content residue or a transuranic or low-level waste. According to process knowledge, the output contains no RCRA hazardous constituents and exhibits no RCRA hazardous characteristics. Therefore, the output can be a nonhazardous, low-content residue or a nonhazardous, transuranic or low-level waste.

WASTE STREAM AND RESIDUE DESCRIPTION AND CHARACTERIZATION

Process Number: 771-35-40
IDC/WFC: 480

Title: GENERAL BUILDING WASTE (RMMA)
Description: Line Generated Light Metal

- ☐ RCRA Hazardous
- ■ RCRA Nonhazardous
- ☐ By Analytical Data
- ■ By Process Knowledge
- ☐ LDR Regulated
- ■ Not LDR Regulated
- ☐ Non-Wastewater
- ☐ Wastewater
- ☐ Product
- ☐ High Content Residue
- ☐ Low Content Residue
- ■ Transuranic
- ■ Low-Level
- ☐ Nonradioactive
- ☐ Source/Special Nuclear Materials
- ☐ Debris
- ☐ Fuel Blending
- ☐ Uncontained Gas
- ☐ RCRA Sample
- ☐ Recyclable Material
- ☐ Recycled/Reused
- ☐ TSCA Reg. Waste
- ☐ Evaluated in Another Process

EPA Codes:

Description (Material, Type, Size, Color, etc.):
Light Metal

How the Output is Generated:
During Routine Operations

Generation Rate:
Variable

How the Output is Managed:
Placed In A 55-Gallon Drum

Chemicals/Contaminants in or on the Output:
None

Characterization Rationale:
This output is line generated, but is never generated as a residue. According to process knowledge, the output contains no RCRA hazardous constituents and exhibits no RCRA hazardous characteristics. Therefore, the output can be a nonhazardous, transuranic or low-level waste.

WASTE STREAM AND RESIDUE DESCRIPTION AND CHARACTERIZATION

Process Number: 771-35-42A
IDC/WFC: 337

Title: GENERAL BUILDING WASTE (RMMA)
Description: Plastic

- ▫ RCRA Hazardous
- ▪ RCRA Nonhazardous
- ▫ By Analytical Data
- ▪ By Process Knowledge
- ▫ LDR Regulated
- ▪ Not LDR Regulated
- ▫ Non-Wastewater
- ▫ Wastewater
- ▫ Product
- ▫ High Content Residue
- ▪ Low Content Residue
- ▪ Transuranic
- ▪ Low-Level
- ▫ Nonradioactive
- ▫ Source/Special Nuclear Materials
- ▫ Debris
- ▫ Fuel Blending
- ▫ Uncontained Gas
- ▫ RCRA Sample
- ▫ Recyclable Material
- ▫ Recycled/Reused
- ▫ TSCA Reg. Waste
- ▫ Evaluated in Another Process

EPA Codes:

Description (Material, Type, Size, Color, etc.):
Plastic Waste

How the Output is Generated:
During Cleanup Operations

Generation Rate:
Variable

How the Output is Managed:
Placed In A 55-Gallon Drum

Chemicals/Contaminants in or on the Output:
Aluminum Nitrate

Characterization Rationale:
This output can be line or nonline generated in a Radioactive Materials Management Area. According to process knowledge, this output does not meet the definition of an oxidizer as defined in 49 CFR 173.151. This waste stream in line or nonline generated waste generated during cleanup and repair activities. During cleanup, plastic contaminated with aluminum nitrate is wiped down with KW or other decon solutions and packaged with absorbent. The aluminum nitrate present on this plastic is in trace amounts and could not spontaneously ignite. This output is characterized as a nonhazardous, TRU or a low-level mixed waste or a nonhazardous, low-content residue.

WASTE STREAM AND RESIDUE DESCRIPTION AND CHARACTERIZATION

Process Number: 771-35-43 **Title:** GENERAL BUILDING WASTE (RMMA)
IDC/WFC: 336 **Description:** Wet Combustibles Hazardous

- ■ RCRA Hazardous
- □ RCRA Nonhazardous
- □ By Analytical Data
- ■ By Process Knowledge
- ■ LDR Regulated
- □ Not LDR Regulated
- □ Non-Wastewater
- □ Wastewater
- □ Product
- □ High Content Residue
- ■ Low Content Residue
- ■ Transuranic
- ■ Low-Level
- □ Nonradioactive
- □ Source/Special Nuclear Materials
- ■ Debris
- □ Fuel Blending
- □ Uncontained Gas
- □ RCRA Sample
- □ Recyclable Material
- □ Recycled/Reused
- □ TSCA Reg. Waste
- □ Evaluated in Another Process

EPA Codes:
D001

Description (Material, Type, Size, Color, etc.):
Wet Combustibles

How the Output is Generated:
During Cleanup Operations

Generation Rate:
Variable

How the Output is Managed:
Placed In A Satellite Collection Area

Chemicals/Contaminants in or on the Output:
Aluminum Nitrate

Characterization Rationale:
This output is line generated in a Radioactive Materials Management Area. According to process knowledge, this output exhibits the characteristic of ignitability due to the presence of Aluminum Nitrate which is a D.O.T. oxidizer. This output may be mixed, low-content residue, or a mixed, transuranic or low-level waste. This output meets the definition of hazardous debris and must be deactivated to remove the characteristic of ignitability using an appropriate technology in 40 CFR 268.45. No underlying hazardous constituents have been identified for this output. Therefore, this output will meet the LDR treatment standards following deactivation.

WASTE STREAM AND RESIDUE DESCRIPTION AND CHARACTERIZATION

Process Number: 771-35-44 **Title:** GENERAL BUILDING WASTE (RMMA)
IDC/WFC: 440 **Description:** Glass (Line Generated)

- ▫ RCRA Hazardous
- ▪ RCRA Nonhazardous
- ▫ By Analytical Data
- ▪ By Process Knowledge
- ▫ LDR Regulated
- ▪ Not LDR Regulated
- ▫ Non-Wastewater
- ▫ Wastewater
- ▫ Product
- ▫ High Content Residue
- ▫ Low Content Residue
- ▪ Transuranic
- ▪ Low-Level
- ▫ Nonradioactive
- ▫ Source/Special Nuclear Materials
- ▫ Debris
- ▫ Fuel Blending
- ▫ Uncontained Gas
- ▫ RCRA Sample
- ▫ Recyclable Material
- ▫ Recycled/Reused
- ▫ TSCA Reg. Waste
- ▫ Evaluated in Another Process

EPA Codes:

Description (Material, Type, Size, Color, etc.):
Various Glass Waste

How the Output is Generated:
During Routine Operations

Generation Rate:
Variable

How the Output is Managed:
Placed In A 55-Gallon Drum

Chemicals/Contaminants in or on the Output:
None

Characterization Rationale:
This output is line generated in a Radioactive Materials Management Area. According to process knowledge, this output contains no RCRA hazardous constituents and exhibits no RCRA hazardous characteristics. This output can be a nonhazardous, transuranic or low-level waste.

WASTE STREAM AND RESIDUE DESCRIPTION AND CHARACTERIZATION

Process Number: 771-35-54
IDC/WFC: 337

Title: GENERAL BUILDING WASTE (RMMA)
Description: Plastic And Rubber (Line Generated)

- ☐ RCRA Hazardous
- ■ RCRA Nonhazardous
- ☐ By Analytical Data
- ■ By Process Knowledge
- ☐ LDR Regulated
- ■ Not LDR Regulated
- ☐ Non-Wastewater
- ☐ Wastewater
- ☐ Product
- ☐ High Content Residue
- ☐ Low Content Residue
- ■ Transuranic
- ■ Low-Level
- ☐ Nonradioactive
- ☐ Source/Special Nuclear Materials
- ☐ Debris
- ☐ Fuel Blending
- ☐ Uncontained Gas
- ☐ RCRA Sample
- ☐ Recyclable Material
- ☐ Recycled/Reused
- ☐ TSCA Reg. Waste
- ☐ Evaluated in Another Process

EPA Codes:

Description (Material, Type, Size, Color, etc.):
Plastic And Rubber Waste Such As Polyethylene Bottles, Bags, Tape, And Gloves

How the Output is Generated:
During Routine Operations

Generation Rate:
Variable

How the Output is Managed:
Placed In A 55-Gallon Drum

Chemicals/Contaminants in or on the Output:
None

Characterization Rationale:
This output is line generated in a Radioactive Materials Management Area. According to process knowledge, this output contains no RCRA hazardous constituents and exhibits no RCRA hazardous characteristics. This output can be a nonhazardous transuranic, or nonhazardous low-level waste.

WASTE STREAM AND RESIDUE DESCRIPTION AND CHARACTERIZATION

Process Number: 771-35-56 **Title:** GENERAL BUILDING WASTE (RMMA)
IDC/WFC: 1937 **Description:** Mercury Vapor Lamps

- ■ RCRA Hazardous
- □ RCRA Nonhazardous
- ■ By Analytical Data
- ■ By Process Knowledge
- ■ LDR Regulated
- □ Not LDR Regulated
- ■ Non-Wastewater
- □ Wastewater
- □ Product
- □ High Content Residue
- □ Low Content Residue
- □ Transuranic
- □ Low-Level
- ■ Nonradioactive
- □ Source/Special Nuclear Materials
- □ Debris
- □ Fuel Blending
- □ Uncontained Gas
- □ RCRA Sample
- □ Recyclable Material
- □ Recycled/Reused
- □ TSCA Reg. Waste
- □ Evaluated in Another Process

EPA Codes:
D009

Description (Material, Type, Size, Color, etc.):
Spent Mercury Vapor Lamps

How the Output is Generated:
Used lamps are changed as needed and surveyed for unrestricted release.

Generation Rate:
Variable

How the Output is Managed:
Unbroken lamps are put in a drum and sent to a 90-day collection area.

Chemicals/Contaminants in or on the Output:
Mercury Vapor

Characterization Rationale:
Mercury vapor lamps have been analyzed using the Toxicity Characteristic Leaching Procedure (TCLP), and found to exceed regulatory limits for toxicity characteristic metals. The number 26 is designated in the Chemical Constituent Code to denote the presence of mercury. (Choose 1 or 2) (1)It is generated in a non-Radioactive Materials Management Area. (2)Radiological Operations surveys this material to ensure it is nonradioactive. Based on the analytical data, the bulbs are characterized as a nonradioactive, hazardous waste. This output does not meet the LDR treatment standards defined in 40 CFR 268.40. The output must meet the concentration-based treatment standards for mercury and the treatment standards for the underlying hazardous constituents. The treatment standards for the underlying hazardous constituents as defined in 40 CFR 268.48 must be met for treatment residue(s) prior to land disposal. The underlying hazardous constituents associated with this output are listed in Appendix E.

WASTE STREAM AND RESIDUE DESCRIPTION AND CHARACTERIZATION

Process Number: 771-35-57 **Title:** GENERAL BUILDING WASTE (RMMA)
IDC/WFC: 1937 **Description:** Sodium Vapor Lamps

- ■ RCRA Hazardous
- □ RCRA Nonhazardous
- ■ By Analytical Data
- ■ By Process Knowledge
- ■ LDR Regulated
- □ Not LDR Regulated
- ■ Non-Wastewater
- □ Wastewater
- □ Product
- □ High Content Residue
- □ Low Content Residue
- □ Transuranic
- □ Low-Level
- ■ Nonradioactive
- □ Source/Special Nuclear Materials
- □ Debris
- □ Fuel Blending
- □ Uncontained Gas
- □ RCRA Sample
- □ Recyclable Material
- ■ Recycled/Reused
- □ TSCA Reg. Waste
- □ Evaluated in Another Process

EPA Codes:
D008, D009

Description (Material, Type, Size, Color, etc.):
Sodium Vapor Lamps

How the Output is Generated:
Used lamps are changed as needed and surveyed for unrestricted release.

Generation Rate:
Variable

How the Output is Managed:
Unbroken lamps are taken to a 90-day collection area.

Chemicals/Contaminants in or on the Output:
Sodium Vapor Lamps Contaminated With Lead And Mercury

Characterization Rationale:
Sodium vapor lamps have been analyzed using the Toxicity Characteristic Leaching Procedure (TCLP), and found to exceed regulatory limits for toxicity characteristic metals. The number 24 and 26 are designated in the Chemical Constituent Code to denote the presence of mercury. Radiological Operations surveys this material to ensure it is nonradioactive. Based on the analytical data, the bulbs are characterized as a nonradioactive, hazardous waste. This output does not meet the LDR treatment standards defined in 40 CFR 268.40. The output must meet the concentration-based treatment standards for lead and mercury and the treatment standards for the underlying hazardous constituents. The treatment standards for the underlying hazardous constituents as defined in 40 CFR 268.48 must be met for treatment residue(s) prior to land disposal. The underlying hazardous constituents associated with this output are listed in Appendix E.

WASTE STREAM AND RESIDUE DESCRIPTION AND CHARACTERIZATION

Process Number: 771-35-58 **Title:** GENERAL BUILDING WASTE (RMMA)
IDC/WFC: 302 **Description:** Benelex And Plexiglas Removal

- ▫ RCRA Hazardous
- ▪ RCRA Nonhazardous
- ▪ By Analytical Data
- ▪ By Process Knowledge
- ▫ LDR Regulated
- ▪ Not LDR Regulated
- ▫ Non-Wastewater
- ▫ Wastewater
- ▫ Product
- ▫ High Content Residue
- ▫ Low Content Residue
- ▪ Transuranic
- ▪ Low-Level
- ▫ Nonradioactive
- ▫ Source/Special Nuclear Materials
- ▫ Debris
- ▫ Fuel Blending
- ▫ Uncontained Gas
- ▫ RCRA Sample
- ▫ Recyclable Material
- ▫ Recycled/Reused
- ▫ TSCA Reg. Waste
- ▫ Evaluated in Another Process

EPA Codes:

Description (Material, Type, Size, Color, etc.):
Benelex Shielding Used Throughout Building; Doors, Walls, Plexiglas For Areas Around Benelex That Needed Visual Sight Through Area

How the Output is Generated:
During Removal Activities To Reduce Fire Loading In Building

Generation Rate:
Approximately 2,000 Square Feet Per Year

How the Output is Managed:
Appropriate Waste Container

Chemicals/Contaminants in or on the Output:
Plutonium

Characterization Rationale:
According to process knowledge and supported by analytical data (97P1987-001), this output contains no RCRA hazardous constituents and exhibits no RCRA hazardous characteristics. This output may or may not be painted. By definition this output is considered a surface contaminated object and must be surveyed prior to packaging to determine its level of radioactivity. This output is designated a nonhazardous, low-level or nonhazardous, TRU waste.

WASTE STREAM AND RESIDUE DESCRIPTION AND CHARACTERIZATION

Process Number: 771-35-59 **Title:** GENERAL BUILDING WASTE (RMMA)
IDC/WFC: 1444 **Description:** Leaded Glass

- ■ RCRA Hazardous
- □ RCRA Nonhazardous
- ■ By Analytical Data
- ■ By Process Knowledge
- ■ LDR Regulated
- □ Not LDR Regulated
- □ Non-Wastewater
- □ Wastewater
- □ Product
- □ High Content Residue
- □ Low Content Residue
- □ Transuranic
- □ Low-Level
- ■ Nonradioactive
- □ Source/Special Nuclear Materials
- ■ Debris
- □ Fuel Blending
- □ Uncontained Gas
- □ RCRA Sample
- □ Recyclable Material
- □ Recycled/Reused
- □ TSCA Reg. Waste
- □ Evaluated in Another Process

EPA Codes:
D005, D008

Description (Material, Type, Size, Color, etc.):
Leaded Glass

How the Output is Generated:
Leaded Glass Determined To Be Waste

Generation Rate:
Variable

How the Output is Managed:
90-Day Or Permitted Storage

Chemicals/Contaminants in or on the Output:
Barium, Lead

Characterization Rationale:
According to process knowledge and supported by analytical data (Sample Numbers E901467, E901468, 168-WG-91), this leaded glass exhibits the RCRA hazardous characteristic of toxicity for lead and barium. This output does not meet the LDR treatment standards defined in 40 CFR 268.40. The output must meet the concentration-based treatment standards for lead and barium and the treatment standards for underlying hazardous constituents. The treatment standards for the underlying hazardous constituents must also be met for treatment residues prior to land disposal. The underlying hazardous constituents associated with this output are listed in Appendix E.

WASTE STREAM AND RESIDUE DESCRIPTION AND CHARACTERIZATION

Process Number: 771-35-60 **Title:** GENERAL BUILDING WASTE (RMMA)
IDC/WFC: 1480 **Description:** Circuit Boards

- ■ RCRA Hazardous
- □ RCRA Nonhazardous
- ■ By Analytical Data
- ■ By Process Knowledge
- ■ LDR Regulated
- □ Not LDR Regulated
- □ Non-Wastewater
- □ Wastewater
- □ Product
- □ High Content Residue
- □ Low Content Residue
- □ Transuranic
- □ Low-Level
- ■ Nonradioactive
- □ Source/Special Nuclear Materials
- ■ Debris
- □ Fuel Blending
- □ Uncontained Gas
- □ RCRA Sample
- ■ Recyclable Material
- □ Recycled/Reused
- □ TSCA Reg. Waste
- □ Evaluated in Another Process

EPA Codes:
D008, D011

Description (Material, Type, Size, Color, etc.):
Waste Circuit Boards That Can Be Recycled For Precious Metal Recovery

How the Output is Generated:
Circuit Boards That Are Determined To Be Waste

Generation Rate:
Variable

How the Output is Managed:
Collected For Recycle

Chemicals/Contaminants in or on the Output:
Lead, Silver

Characterization Rationale:
According to process knowledge and supported by analytical data (Sample Numbers 93G0056, 95G0138, 95G0322), these circuit boards exhibit the RCRA hazardous characteristic of toxicity for lead and silver and, therefore, are a hazardous waste. Waste circuit boards that can be recycled for precious metal recovery are exempt from accumulation, labeling and inspection requirements of RCRA under 6 CCR 1007-3, Part 267 Subpart F (CFR Part 266). This output meets the definition of hazardous debris and can be treated by an appropriate technology in 40 CFR 268.45. The concentration-based treatment standards for lead and silver and the treatment standards for underlying hazardous constituents must be met for treatment residues prior to land disposal. The underlying hazardous constituents associated with this output are listed in Appendix E.

WASTE STREAM AND RESIDUE DESCRIPTION AND CHARACTERIZATION

Process Number: 771-35-61
IDC/WFC: 440

Title: GENERAL BUILDING WASTE (RMMA)
Description: Absorbed Mercury

- ■ RCRA Hazardous
- □ RCRA Nonhazardous
- □ By Analytical Data
- ■ By Process Knowledge
- □ LDR Regulated
- ■ Not LDR Regulated
- □ Non-Wastewater
- □ Wastewater
- □ Product
- □ High Content Residue
- □ Low Content Residue
- ■ Transuranic
- ■ Low-Level
- □ Nonradioactive
- □ Source/Special Nuclear Materials
- □ Debris
- □ Fuel Blending
- □ Uncontained Gas
- □ RCRA Sample
- □ Recyclable Material
- □ Recycled/Reused
- □ TSCA Reg. Waste
- □ Evaluated in Another Process

EPA Codes:
D009

Description (Material, Type, Size, Color, etc.):
This output consists of broken thermometers, ampules that contained elemental mercury and were cleaned up using a mercury absorbent such as amalgam or sponges from mercury spill kit.

How the Output is Generated:
During Cleanup Of Mercury Spills

Generation Rate:
Variable

How the Output is Managed:
90-Day Or Permitted Storage Unit

Chemicals/Contaminants in or on the Output:
Mercury
Radionuclides: Plutonium

Characterization Rationale:
This output is the result of elemental mercury being amalgamated with sulfur, copper, zinc or nickel. It is unlikely that the amalgamation process is 99.9996 percent efficient (the efficiency required in order for this output to not exhibit the characteristic of toxicity for mercury) and therefore, this output is characterized as a hazardous, low-level waste. However, amalgamation is the specified treatment technology for this waste in 40 CFR 268.40 and, therefore, this output meets LDR treatment standards.

WASTE STREAM AND RESIDUE DESCRIPTION AND CHARACTERIZATION

Process Number: 771-35-62
IDC/WFC: 1969

Title: GENERAL BUILDING WASTE (RMMA)
Description: Mercury Containing Equipment

- ■ RCRA Hazardous
- □ RCRA Nonhazardous
- □ By Analytical Data
- ■ By Process Knowledge
- ■ LDR Regulated
- □ Not LDR Regulated
- ■ Non-Wastewater
- □ Wastewater
- □ Product
- □ High Content Residue
- □ Low Content Residue
- □ Transuranic
- □ Low-Level
- ■ Nonradioactive
- □ Source/Special Nuclear Materials
- □ Debris
- □ Fuel Blending
- □ Uncontained Gas
- □ RCRA Sample
- □ Recyclable Material
- □ Recycled/Reused
- □ TSCA Reg. Waste
- ■ Evaluated in Another Process

EPA Codes:
D009

Description (Material, Type, Size, Color, etc.):
This output consists of mercury ampules removed from electronic equipment and thermometers that cannot be reused.

How the Output is Generated:
This output is generated when mercury ampules are removed from electronic equipment that is no longer needed and from collecting thermometers and other measuring devices that contain mercury which cannot be reused.

Generation Rate:
Variable

How the Output is Managed:
90-Day Or Permitted Storage Unit

Chemicals/Contaminants in or on the Output:
Mercury

Characterization Rationale:
According to process knowledge, this output exhibits the RCRA hazardous characteristic of toxicity for mercury. This output does not meet the LDR treatment standards defined in 40 CFR 268.40. The output is a high mercury inorganic and must be treated by a specified technology-based treatment standard. This waste stream is surveyed to be free released from the building as nonradioactive. This output is characterized as a nonradioactive, hazardous waste.

WASTE STREAM AND RESIDUE DESCRIPTION AND CHARACTERIZATION

Process Number: 771-35-63
IDC/WFC: 1980

Title: GENERAL BUILDING WASTE (RMMA)
Description: Used Mercury Batteries

- ■ RCRA Hazardous
- □ RCRA Nonhazardous
- □ By Analytical Data
- ■ By Process Knowledge
- ■ LDR Regulated
- □ Not LDR Regulated
- ■ Non-Wastewater
- □ Wastewater

- □ Product
- □ High Content Residue
- □ Low Content Residue
- □ Transuranic
- □ Low-Level
- ■ Nonradioactive
- □ Source/Special Nuclear Materials
- □ Debris

- □ Fuel Blending
- □ Uncontained Gas
- □ RCRA Sample
- □ Recyclable Material
- □ Recycled/Reused
- □ TSCA Reg. Waste
- □ Evaluated in Another Process

EPA Codes:
D009

Description (Material, Type, Size, Color, etc.):
Used Mercury Batteries Dry Cell

How the Output is Generated:
When Batteries Are Replaced

Generation Rate:
Variable

How the Output is Managed:
90-Day Or Permitted Storage Area

Chemicals/Contaminants in or on the Output:
Mercury

Characterization Rationale:
According to process knowledge, this output exhibits the RCRA hazardous characteristic of toxicity for mercury. This output does not meet the LDR treatment standards defined in 40 CFR 268.40. The output is a high mercury inorganic and must be treated by the specified technology-based treatment standard.

WASTE STREAM AND RESIDUE DESCRIPTION AND CHARACTERIZATION

Process Number: 771-35-64
IDC/WFC: 1980

Title: GENERAL BUILDING WASTE (RMMA)
Description: Lithium Batteries

- ☐ RCRA Hazardous
- ■ RCRA Nonhazardous
- ☐ By Analytical Data
- ■ By Process Knowledge
- ☐ LDR Regulated
- ■ Not LDR Regulated
- ☐ Non-Wastewater
- ☐ Wastewater
- ☐ Product
- ☐ High Content Residue
- ☐ Low Content Residue
- ☐ Transuranic
- ☐ Low-Level
- ■ Nonradioactive
- ☐ Source/Special Nuclear Materials
- ☐ Debris
- ☐ Fuel Blending
- ☐ Uncontained Gas
- ☐ RCRA Sample
- ☐ Recyclable Material
- ☐ Recycled/Reused
- ☐ TSCA Reg. Waste
- ☐ Evaluated in Another Process

EPA Codes:

Description (Material, Type, Size, Color, etc.):
Lithium Batteries

How the Output is Generated:
When Batteries Are Replaced

Generation Rate:
Variable

How the Output is Managed:
Permitted Storage Area

Chemicals/Contaminants in or on the Output:
Lithium Metal

Characterization Rationale:
According to regulator guidance (Contact Record between Karen North, Kaiser-Hill and Cathy Alstatt, CDPHE dated 2/7/96), lithium batteries exhibit no RCRA hazardous characteristics and contain no RCRA regulated constituents. This output is characterized as a nonhazardous, nonradioactive waste.

WASTE STREAM AND RESIDUE DESCRIPTION AND CHARACTERIZATION

Process Number: 771-35-65 **Title:** GENERAL BUILDING WASTE (RMMA)
IDC/WFC: 972 **Description:** PCB Debris

- ☐ RCRA Hazardous
- ■ RCRA Nonhazardous
- ☐ By Analytical Data
- ■ By Process Knowledge
- ☐ LDR Regulated
- ■ Not LDR Regulated
- ☐ Non-Wastewater
- ☐ Wastewater
- ☐ Product
- ☐ High Content Residue
- ☐ Low Content Residue
- ■ Transuranic
- ■ Low-Level
- ☐ Nonradioactive
- ☐ Source/Special Nuclear Materials
- ☐ Debris
- ☐ Fuel Blending
- ☐ Uncontained Gas
- ☐ RCRA Sample
- ☐ Recyclable Material
- ☐ Recycled/Reused
- ■ TSCA Reg. Waste
- ☐ Evaluated in Another Process

EPA Codes:

Description (Material, Type, Size, Color, etc.):
This output consists of PCB contaminated material debris including glass, plastic bottles and sheets, Kimwipes, PPE, rags, scrap metal, electric wiring, gaskets, and equipment (does not include PCB ballasts, capacitors, or transformers).

How the Output is Generated:
During General Building Cleanup, Sampling Events, Or Equipment Disposal

Generation Rate:
Variable

How the Output is Managed:
Packaged In 55-Gallon Drums Or Crates

Chemicals/Contaminants in or on the Output:
Used Oil, Or PCB Contaminated Items
Radionuclides: Plutonium

Characterization Rationale:
According to process knowledge, no RCRA hazardous constituents are used in this process. According to historical process knowledge, this output contains no RCRA hazardous constituents, exhibits no RCRA hazardous characteristics, and contains PCBs greater than 50 ppm. Therefore, this output is a TRU or low-level, nonhazardous waste regulated under TSCA (40 CFR 761). The level of radioactivity will be determined by assay of each collection container.

36.0 PROCESS 771-36: H-4 SUPPORT VACUUM SYSTEMS

The H-4 Support Vacuum Systems Process, located in gloveboxes in Rooms 114, 149 and 174 and outside the gloveboxes in Room 146 is used to pull a vacuum on selected process lines in order to transfer solutions from tank to tank. Negative pressure is used to effect the transfer and allows solutions to be vacuumed from process area floors and pulled through filters. The process uses five H-4 vacuum pumps and piping. All equipment is stainless steel except the pump bearing house. Heat exchangers, process tanks, and mist tanks are also part of the systems. Acid solutions and filtered air pass through the systems in support of various Building 771 processes. Figure 36.1 shows the inputs, process flow, and outputs associated with the H-4 Support Vacuum Systems Process.

Vacuum pumps create a vacuum on a vacuum header, which serves as a means to transfer fluids on demand by valving arrangements. The vacuum is pulled on process lines and tanks; some process lines pass through Ful-Flo filters. The vacuum pumps use a seal liquid to exert a vacuum on process lines. The pumps in Gloveboxes 5A, 9A, and 1097 use water as the seal liquid. The pumps in Gloveboxes 7A and 39 use potassium hydroxide solution as the seal liquid. The liquids are centrifugally dispersed within the pump housings and exit at the pump exhaust as a mist. The pump exhausts are directly piped to mist tanks (at A, Figure 36.1), where the air is separated from the seal liquids. Seal liquids are recirculated through heat exchangers. Make-up water or potassium hydroxide solution are added to the seal liquid daily. Spent water (seal liquid) is drained into Tanks D-551 and D-552 for eventual treatment in the Anion Exchange Process (Process 771-04). Potassium hydroxide seal liquid is drained from mist tanks to Tanks D-705, D-714, D-921, and D-922 for eventual treatment in the Caustic Filtration Process (Process 771-19).

Oil and grease are used to lubricate vacuum pump bearings. HEPA filters are used to filter glovebox intake and exhaust. Plastic bags, Kimwipes, glovebox gloves, and tools are used for general glovebox cleaning, materials handling, and pump maintenance purposes.

Glovebox exhaust is passed to the Building 771 Fume Scrubber (Process 771-27). HEPA filters are placed by filter technicians in 55-gallon drums in Rooms 114 and 174. Waste plastics, metals, wet combustibles, and Ful-Flo filters are bagged out and placed in the appropriate IDC 55-gallon drum in Room 114 or 174. Leaded glovebox gloves are placed in satellite collection areas in Rooms 114 and 174. Process Table 771-36 presents the outputs associated with the H-4 Support Vacuum Systems Process and provides their dispositions and hazardous character.

AutoCAD 12, File Name: 771-36

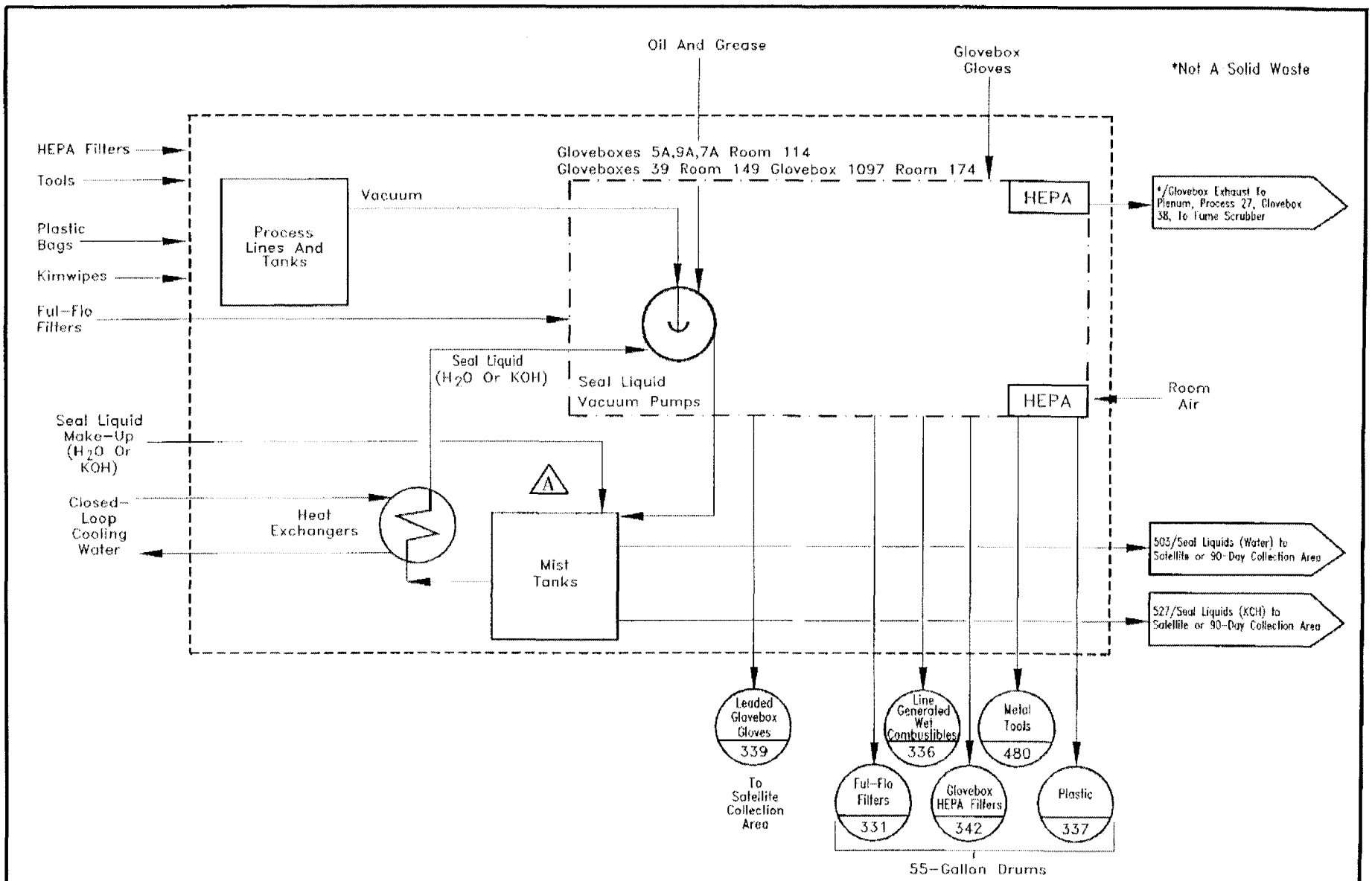

FIGURE 36.1

Rocky Flats Environmental Technology Site Waste Stream & Residue Identification & Characterization	BUILDING 771/PROCESS 36 H-4 SUPPORT VACUUM SYSTEMS	Task	By	Date
		Designed	B. Bayne	11/08/91
		Drawn	R. Nisely	06/12/96
		Checked	J. Schoen	08/11/97

PROCESS 771-36 H-4 SUPPORT VACUUM SYSTEMS

Process Number	IDC/ WFC No.	CCCs RCRA Reg. Const.	CCCs Non-RCRA Reg. Const.	Comp. Codes	Description RCRA Reg. Chemical Constituents: Non-RCRA Reg. Chemical Constituents:	Collection	LDR Codes	RCRA Haz. Waste	RCRA-Land Disposal Restricted (Part 268)	Wastewater/Non-Wastewater: Debris/Non-Debris: Subcategory:	EPA Codes
771-36-1	503	02	00	1B	Water (Seal Liquid) RCRA Reg. Chemical Constituents: Acid - General Non-RCRA Reg. Chemical Constituents: None	Satellite Or 90-Day Collection Area	RT WW C1	Yes	Yes Does Not Meet Treatment Standards	Wastewater Corrosive/Non-CW	D002
771-36-3	342	00	0205	NA	HEPA Filters RCRA Reg. Chemical Constituents: None Non-RCRA Reg. Chemical Constituents: Acid - General Base	55-Gallon Drum		No	No		

Process Number	IDC/ WFC No.	CCCs RCRA Reg. Const.	CCCs Non-RCRA Reg. Const.	Comp. Codes	Description RCRA Reg. Chemical Constituents: Non-RCRA Reg. Chemical Constituents:	Collection	LDR Codes	RCRA Haz. Waste	RCRA-Land Disposal Restricted (Part 268)	Wastewater/Non-Wastewater: Debris/Non-Debris: Subcategory:	EPA Codes
771-36-4	337	00	0205	NA	Plastic RCRA Reg. Chemical Constituents: None Non-RCRA Reg. Chemical Constituents: Acid - General Base	55-Gallon Drum		No	No		
771-36-5	480	00	00	NA	Metal Tools RCRA Reg. Chemical Constituents: None Non-RCRA Reg. Chemical Constituents: None	55-Gallon Drum		No	No		

Process Number	IDC/ WFC No.	CCCs RCRA Reg. Const.	CCCs Non-RCRA Reg. Const.	Comp. Codes	Description RCRA Reg. Chemical Constituents: Non-RCRA Reg. Chemical Constituents:	Collection	LDR Codes	RCRA Haz. Waste	RCRA-Land Disposal Restricted (Part 268)	Wastewater/Non-Wastewater: Debris/Non-Debris: Subcategory:	EPA Codes
771-36-6	336	00	0205	NA	Combustibles, Wet (Line Generated) RCRA Reg. Chemical Constituents: None Non-RCRA Reg. Chemical Constituents: Acid - General Base	55-Gallon Drum		No	No		
771-36-7	339	24	00	NA	Leaded Glovebox Gloves RCRA Reg. Chemical Constituents: Lead Non-RCRA Reg. Chemical Constituents: None	Satellite Collection Area	RT D PB1	Yes	Yes Does Not Meet Treatment Standards	Debris Lead	D008

Process Number	IDC/ WFC No.	CCCs RCRA Reg. Const.	CCCs Non-RCRA Reg. Const.	Comp. Codes	Description RCRA Reg. Chemical Constituents: Non-RCRA Reg. Chemical Constituents:	Collection	LDR Codes	RCRA Haz. Waste	RCRA-Land Disposal Restricted (Part 268)	Wastewater/Non-Wastewater: Debris/Non-Debris: Subcategory:	EPA Codes
771-36-9	331	00	0205	NA	Ful-Flo Filters RCRA Reg. Chemical Constituents: None Non-RCRA Reg. Chemical Constituents: Acid - General Base	55-Gallon Drum		No	No		

WASTE STREAM AND RESIDUE DESCRIPTION AND CHARACTERIZATION

Process Number: 771-36-1
IDC/WFC: 503

Title: H-4 SUPPORT VACUUM SYSTEMS
Description: Water (Seal Liquid)

- ■ RCRA Hazardous
- □ RCRA Nonhazardous
- □ By Analytical Data
- ■ By Process Knowledge
- ■ LDR Regulated
- □ Not LDR Regulated
- □ Non-Wastewater
- ■ Wastewater

- □ Product
- □ High Content Residue
- ■ Low Content Residue
- ■ Transuranic
- ■ Low-Level
- □ Nonradioactive
- □ Source/Special Nuclear Materials
- □ Debris

- □ Fuel Blending
- □ Uncontained Gas
- □ RCRA Sample
- □ Recyclable Material
- □ Recycled/Reused
- □ TSCA Reg. Waste
- □ Evaluated in Another Process

EPA Codes:
D002

Description (Material, Type, Size, Color, etc.):
Water (seal liquid) is comprised of acidic plutonium solution diluted in seal liquid water.

How the Output is Generated:
Drained Into The Process Piping System During Daily Maintenance

Generation Rate:
As Needed Basis

How the Output is Managed:
Satellite Or 90-Day Collection Area

Chemicals/Contaminants in or on the Output:
Acids

Characterization Rationale:
This output is line generated in a Radioactive Materials Management Area. According to process knowledge, this output exhibits the characteristic of corrosivity due to the presence of acid. This output may be a mixed, low-content residue, or a mixed, transuranic or low-level waste. This output does not meet the LDR treatment standards defined in 40 CFR 268.40. The output must be deactivated to remove the characteristic of corrosivity and meet the treatment standards for underlying hazardous constituents. The treatment standards for the underlying hazardous constituents must be met for treatment residue(s) prior to land disposal. The underlying hazardous constituents associated with this output are listed in Appendix E.

WASTE STREAM AND RESIDUE DESCRIPTION AND CHARACTERIZATION

Process Number: 771-36-3
IDC/WFC: 342

Title: H-4 SUPPORT VACUUM SYSTEMS
Description: HEPA Filters

- ▫ RCRA Hazardous
- ▪ RCRA Nonhazardous
- ▫ By Analytical Data
- ▪ By Process Knowledge
- ▫ LDR Regulated
- ▪ Not LDR Regulated
- ▫ Non-Wastewater
- ▫ Wastewater
- ▫ Product
- ▫ High Content Residue
- ▪ Low Content Residue
- ▪ Transuranic
- ▪ Low-Level
- ▫ Nonradioactive
- ▫ Source/Special Nuclear Materials
- ▫ Debris
- ▫ Fuel Blending
- ▫ Uncontained Gas
- ▫ RCRA Sample
- ▫ Recyclable Material
- ▫ Recycled/Reused
- ▫ TSCA Reg. Waste
- ▫ Evaluated in Another Process

EPA Codes:

Description (Material, Type, Size, Color, etc.):
HEPA filters are 8"x 8" filters which fit into glovebox vents.

How the Output is Generated:
Generated As The Filters Are Periodically Changed Out

Generation Rate:
Variable

How the Output is Managed:
Placed By Building 442 Filter Technicians In A 55-Gallon Drum In Room 114

Chemicals/Contaminants in or on the Output:
Contains Acid Vapors And Potassium Hydroxide Vapors

Characterization Rationale:
This output is line generated, and can be a residue or a waste. According to process knowledge, the waste is contaminated with corrosive liquid, due to the presence of acid and potassium hydroxide vapors. The waste cannot exhibit the characteristic of corrosivity because the waste is not liquid. It is designated as a nonhazardous, low-content residue or a nonhazardous, TRU or low-level waste.

WASTE STREAM AND RESIDUE DESCRIPTION AND CHARACTERIZATION

Process Number: 771-36-4 **Title:** H-4 SUPPORT VACUUM SYSTEMS
IDC/WFC: 337 **Description:** Plastic

- ☐ RCRA Hazardous
- ■ RCRA Nonhazardous
- ☐ By Analytical Data
- ■ By Process Knowledge
- ☐ LDR Regulated
- ■ Not LDR Regulated
- ☐ Non-Wastewater
- ☐ Wastewater
- ☐ Product
- ☐ High Content Residue
- ■ Low Content Residue
- ■ Transuranic
- ■ Low-Level
- ☐ Nonradioactive
- ☐ Source/Special Nuclear Materials
- ☐ Debris
- ☐ Fuel Blending
- ☐ Uncontained Gas
- ☐ RCRA Sample
- ☐ Recyclable Material
- ☐ Recycled/Reused
- ☐ TSCA Reg. Waste
- ☐ Evaluated in Another Process

EPA Codes:

Description (Material, Type, Size, Color, etc.):
Plastic Consists Of Bag Cuts From The Gloveboxes

How the Output is Generated:
Generated As Tools And Materials Are Moved Into And Out Of The Gloveboxes

Generation Rate:
Variable

How the Output is Managed:
Bagged Out And Placed In An IDC 337, 55-Gallon Drum In Room 114

Chemicals/Contaminants in or on the Output:
May Contain Residual Acid, Potassium Hydroxide Solution

Characterization Rationale:
This output is line generated, and can be a residue or a waste. According to process knowledge, the waste is contaminated with corrosive liquid, due to the presence of acid and potassium hydroxide. The waste cannot exhibit the characteristic of corrosivity because the waste is not liquid. It is designated as a nonhazardous, low-content residue or a nonhazardous TRU or low-level waste.

WASTE STREAM AND RESIDUE DESCRIPTION AND CHARACTERIZATION

Process Number: 771-36-5
IDC/WFC: 480

Title: H-4 SUPPORT VACUUM SYSTEMS
Description: Metal Tools

- ☐ RCRA Hazardous
- ■ RCRA Nonhazardous
- ☐ By Analytical Data
- ■ By Process Knowledge
- ☐ LDR Regulated
- ■ Not LDR Regulated
- ☐ Non-Wastewater
- ☐ Wastewater
- ☐ Product
- ☐ High Content Residue
- ■ Low Content Residue
- ■ Transuranic
- ■ Low-Level
- ☐ Nonradioactive
- ☐ Source/Special Nuclear Materials
- ☐ Debris
- ☐ Fuel Blending
- ☐ Uncontained Gas
- ☐ RCRA Sample
- ☐ Recyclable Material
- ☐ Recycled/Reused
- ☐ TSCA Reg. Waste
- ☐ Evaluated in Another Process

EPA Codes:

Description (Material, Type, Size, Color, etc.):
Metal Tools Consist Of Screwdrivers, Wrenches, Pliers, Etc.

How the Output is Generated:
As tools are broken, they are replaced.

Generation Rate:
Variable

How the Output is Managed:
Bagged Out And Placed In An IDC 480, 55-Gallon Drum In Room 114

Chemicals/Contaminants in or on the Output:
May Contain Residual Acids, Potassium Hydroxide Solution

Characterization Rationale:
This output is line generated in a Radioactive Materials Management Area. According to process knowledge, this output contains no RCRA hazardous constituents and exhibits no RCRA hazardous characteristics. This output can be a nonhazardous, low-content residue or a nonhazardous, transuranic or low-level waste.

WASTE STREAM AND RESIDUE DESCRIPTION AND CHARACTERIZATION

Process Number: 771-36-6
IDC/WFC: 336

Title: H-4 SUPPORT VACUUM SYSTEMS
Description: Combustibles, Wet (Line Generated)

- ☐ RCRA Hazardous
- ■ RCRA Nonhazardous
- ☐ By Analytical Data
- ■ By Process Knowledge
- ☐ LDR Regulated
- ■ Not LDR Regulated
- ☐ Non-Wastewater
- ☐ Wastewater
- ☐ Product
- ☐ High Content Residue
- ■ Low Content Residue
- ■ Transuranic
- ■ Low-Level
- ☐ Nonradioactive
- ☐ Source/Special Nuclear Materials
- ☐ Debris
- ☐ Fuel Blending
- ☐ Uncontained Gas
- ☐ RCRA Sample
- ☐ Recyclable Material
- ☐ Recycled/Reused
- ☐ TSCA Reg. Waste
- ☐ Evaluated in Another Process

EPA Codes:

Description (Material, Type, Size, Color, etc.):
Combustibles Consist Of Rags And Kimwipes

How the Output is Generated:
Generated After Cleaning During Inventory Twice Each Year

Generation Rate:
Variable

How the Output is Managed:
Bagged Out And Placed In An IDC 336, 55-Gallon Drum In Room 114

Chemicals/Contaminants in or on the Output:
Contact With Mild Acid Or Potassium Hydroxide

Characterization Rationale:
This output is line generated, and can be a residue or a waste. According to process knowledge, the waste is contaminated with corrosive liquid, due to the presence of acid or potassium hydroxide. The waste cannot exhibit the characteristic of corrosivity because the waste is not liquid. It is designated as a nonhazardous, low-content residue or a nonhazardous TRU or low-level waste.

WASTE STREAM AND RESIDUE DESCRIPTION AND CHARACTERIZATION

Process Number: 771-36-7
IDC/WFC: 339

Title: H-4 SUPPORT VACUUM SYSTEMS
Description: Leaded Glovebox Gloves

- ■ RCRA Hazardous
- □ RCRA Nonhazardous
- ■ By Analytical Data
- ■ By Process Knowledge
- ■ LDR Regulated
- □ Not LDR Regulated
- □ Non-Wastewater
- □ Wastewater
- □ Product
- □ High Content Residue
- □ Low Content Residue
- ■ Transuranic
- ■ Low-Level
- □ Nonradioactive
- □ Source/Special Nuclear Materials
- ■ Debris
- □ Fuel Blending
- □ Uncontained Gas
- □ RCRA Sample
- □ Recyclable Material
- □ Recycled/Reused
- □ TSCA Reg. Waste
- □ Evaluated in Another Process

EPA Codes:
D008

Description (Material, Type, Size, Color, etc.):
Leaded Glovebox Gloves

How the Output is Generated:
Generated During Change Out Of Glovebox Gloves As Needed

Generation Rate:
Variable

How the Output is Managed:
Bagged Out And Placed In An IDC 341, 55-Gallon Drum In Room 114 (Satellite Collection Area)

Chemicals/Contaminants in or on the Output:
May Contain Traces Of Acids, Potassium Hydroxide Solutions, Lead From The Glove Lining

Characterization Rationale:
This output is line generated, but is always generated as TRU or low-level waste. According to process knowledge, and supported by analytical data (G910049, 93G0191), this output contains a hazardous constituent, lead, and exhibits a hazardous characteristic of TC toxicity under RCRA, and is designated as TRU-mixed waste or low-level, mixed waste. This output meets the definition of hazardous debris and can be treated by an appropriate technology in 40 CFR 268.45. The concentration-based treatment standard for lead, and the treatment standards for underlying hazardous constituents as defined in 40 CFR 268.48 must be met for treatment residue(s) prior to land disposal. The underlying hazardous constituents associated with this output are listed in Appendix E.

WASTE STREAM AND RESIDUE DESCRIPTION AND CHARACTERIZATION

Process Number: 771-36-9
IDC/WFC: 331

Title: H-4 SUPPORT VACUUM SYSTEMS
Description: Ful-Flo Filters

- ▫ RCRA Hazardous
- ▪ RCRA Nonhazardous
- ▫ By Analytical Data
- ▪ By Process Knowledge
- ▫ LDR Regulated
- ▪ Not LDR Regulated
- ▫ Non-Wastewater
- ▫ Wastewater
- ▫ Product
- ▫ High Content Residue
- ▪ Low Content Residue
- ▪ Transuranic
- ▪ Low-Level
- ▫ Nonradioactive
- ▫ Source/Special Nuclear Materials
- ▫ Debris
- ▫ Fuel Blending
- ▫ Uncontained Gas
- ▫ RCRA Sample
- ▫ Recyclable Material
- ▫ Recycled/Reused
- ▫ TSCA Reg. Waste
- ▫ Evaluated in Another Process

EPA Codes:

Description (Material, Type, Size, Color, etc.):
Ful-Flo filters are polypropylene filters used to remove solids from liquid solutions.

How the Output is Generated:
Generated As Waste When A Filter Becomes Clogged With Solids

Generation Rate:
Variable

How the Output is Managed:
Bagged Out And Placed In An IDC 331, 55-Gallon Drum In Room 114

Chemicals/Contaminants in or on the Output:
Contains Acid Precipitates, Acids, Or KOH

Characterization Rationale:
This output is line generated, and can be a residue or a waste. According to process knowledge, the waste is contaminated with corrosive liquid, due to the presence of acid or potassium hydroxide. The waste cannot exhibit the characteristic of corrosivity because the waste is not liquid. It is designated as nonhazardous, low-content residue or a nonhazardous TRU or low-level waste.

THIS PAGE INTENTIONALLY LEFT BLANK

37.0 PROCESS 771-37: GENERAL BUILDING WASTE (NON-RMMA)

Routine operations in areas of Building 771 in a non-Radioactive Materials Management Area require the use of operating materials, fluorescent bulbs, and materials and equipment from the warehouse. Figure 37.1 shows the inputs, process flow, and outputs associated with General Building Waste (Non-Radioactive Materials Management Area).

Operating materials include Kimwipes, tape, plastic bags, latex gloves, KW detergent, plastic bottles and plastic sheets. These materials are used in decontamination and general maintenance and operation of the building. Metals include banding from received equipment, scrap metal, small tools, and wire used in various operations. Materials and equipment are received from the warehouse and other areas on plant site in support of general building operations. Packaging materials are usually included with these items. Water is used with Kimwipes and detergent in cleanup activities in all areas of the building. Spilled liquids are cleaned up with absorbent materials. Spilled mercury is cleaned up using a mercury spill kit. Wood is used for scaffolding and other general purposes.

Dry and wet combustibles, sand, concrete, blacktop, insulation (nonasbestos), light metal, plastic, wood, and nonhazardous alkaline batteries are placed in waste containers for Rocky Flats Environmental Technology Site landfill disposal. Hazardous liquid and solid waste/excess chemicals are to be placed in an appropriate satellite collection area or 90 day accumulation area to be determined. Nonhazardous liquid and solid waste/excess chemicals are placed in appropriate waste containers. Process Table 771-37 presents the outputs associated with General Building Waste (Non-Radioactive Materials Management Area) and provides their dispositions and hazardous character.

PADC-93-01525 (6.A)

AutoCAD 12, File Name: 771-37

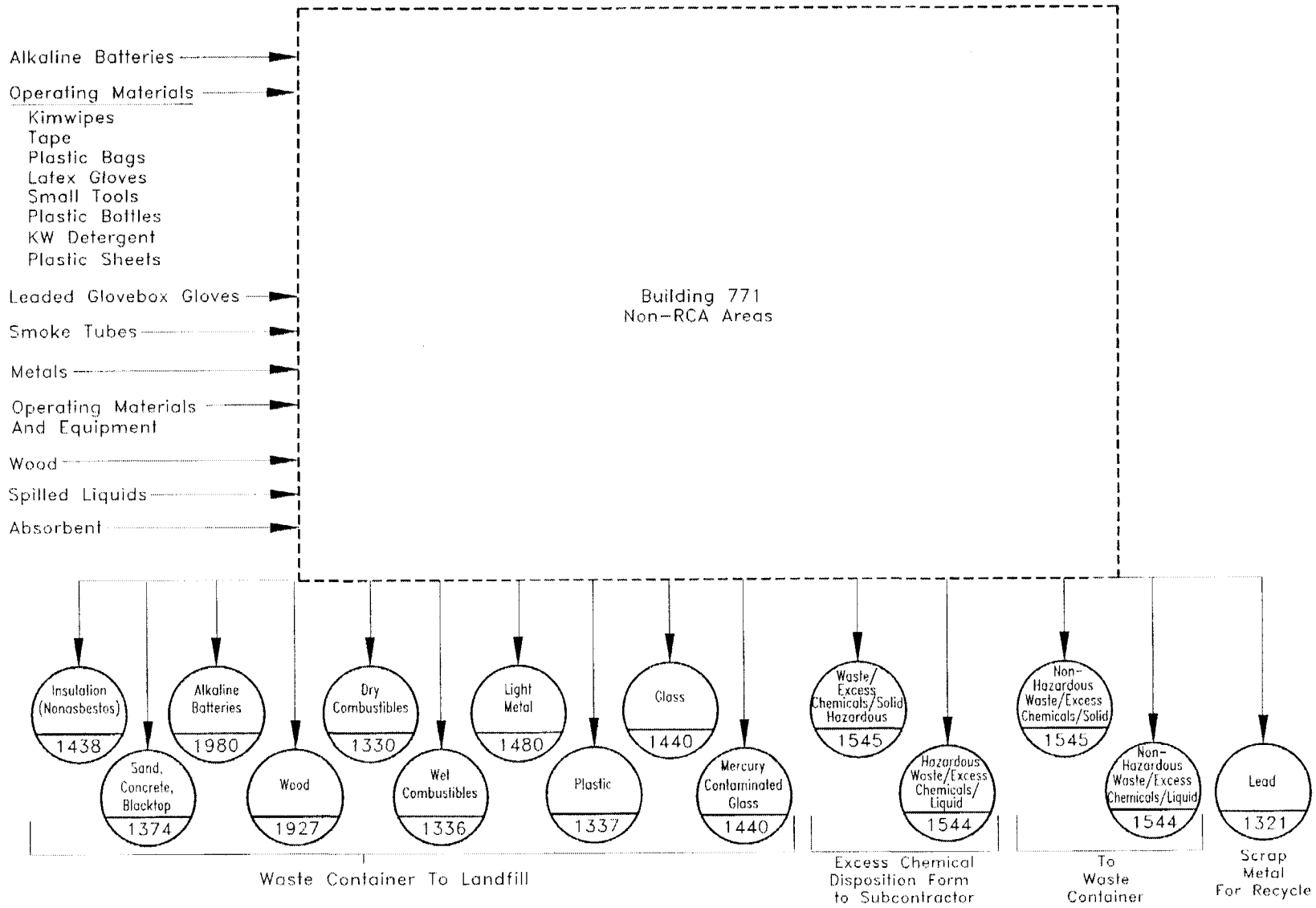

FIGURE 37.1

Rocky Flats Environmental Technology Site Waste Stream & Residue Identification & Characterization	BUILDING 771/PROCESS 37 GENERAL BUILDING WASTE (NON-RCA)	Task	By	Date
		Designed	W. Eakins	03/18/93
		Drawn	B. Crawford	02/09/95
		Checked	J. Schoen	04/28/98

PROCESS 771-37 GENERAL BUILDING WASTE (NON-RMMA)

Process Number	IDC/ WFC No.	CCCs RCRA Reg. Const.	CCCs Non-RCRA Reg. Const.	Comp. Codes	Description RCRA Reg. Chemical Constituents: Non-RCRA Reg. Chemical Constituents:	Collection	LDR Codes	RCRA Haz. Waste	RCRA-Land Disposal Restricted (Part 268)	Wastewater/Non-Wastewater: Debris/Non-Debris: Subcategory:	EPA Codes
771-37-1	1330	00	00	NA	Dry Combustibles RCRA Reg. Chemical Constituents: None Non-RCRA Reg. Chemical Constituents: None	55-Gallon Drum		No	No		
771-37-2	1336	00	8788	NA	Wet Combustibles RCRA Reg. Chemical Constituents: None Non-RCRA Reg. Chemical Constituents: Soap (Liquid) Water	55-Gallon Drum		No	No		

Process Number	IDC/ WFC No.	CCCs RCRA Reg. Const.	CCCs Non-RCRA Reg. Const.	Comp. Codes	Description RCRA Reg. Chemical Constituents: Non-RCRA Reg. Chemical Constituents:	Collection	LDR Codes	RCRA Haz. Waste	RCRA-Land Disposal Restricted (Part 268)	Wastewater/Non-Wastewater: Debris/Non-Debris: Subcategory:	EPA Codes
771-37-3	1480	00	00	NA	Light Metal RCRA Reg. Chemical Constituents: None Non-RCRA Reg. Chemical Constituents: None	55-Gallon Drums		No	No		
771-37-5	1337	00	00	NA	Plastic RCRA Reg. Chemical Constituents: None Non-RCRA Reg. Chemical Constituents: None	55-Gallon Drums		No	No		

Process Number	IDC/ WFC No.	CCCs RCRA Reg. Const.	CCCs Non-RCRA Reg. Const.	Comp. Codes	Description RCRA Reg. Chemical Constituents: Non-RCRA Reg. Chemical Constituents:	Collection	LDR Codes	RCRA Haz. Waste	RCRA-Land Disposal Restricted (Part 268)	Wastewater/Non-Wastewater: Debris/Non-Debris: Subcategory:	EPA Codes
771-37-9	1980	00	00	NA	Alkaline Batteries RCRA Reg. Chemical Constituents: None Non-RCRA Reg. Chemical Constituents: None	Waste Container		No	No		
771-37-10	1927	00	00	NA	Wood RCRA Reg. Chemical Constituents: None Non-RCRA Reg. Chemical Constituents: None	Waste Container		No	No		

Process Number	IDC/ WFC No.	CCCs RCRA Reg. Const.	CCCs Non-RCRA Reg. Const.	Comp. Codes	Description RCRA Reg. Chemical Constituents: Non-RCRA Reg. Chemical Constituents:	Collection	LDR Codes	RCRA Haz. Waste	RCRA-Land Disposal Restricted (Part 268)	Wastewater/Non-Wastewater: Debris/Non-Debris: Subcategory:	EPA Codes
771-37-15	1440	00	00	NA	Glass RCRA Reg. Chemical Constituents: None Non-RCRA Reg. Chemical Constituents: None	Waste Container		No	No		
771-37-16	1321	24	00	NA	Lead Metal RCRA Reg. Chemical Constituents: Lead Non-RCRA Reg. Chemical Constituents: None	55-Gallon Drum Pending Recycle	NR	Yes	No Not Regulated		D008

Process Number	IDC/ WFC No.	CCCs RCRA Reg. Const.	CCCs Non-RCRA Reg. Const.	Comp. Codes	Description RCRA Reg. Chemical Constituents: Non-RCRA Reg. Chemical Constituents:	Collection	LDR Codes	RCRA Haz. Waste	RCRA-Land Disposal Restricted (Part 268)	Wastewater/Non-Wastewater: Debris/Non-Debris: Subcategory:	EPA Codes
771-37-17	1438	00	00	NA	Insulation (Nonasbestos) RCRA Reg. Chemical Constituents: None Non-RCRA Reg. Chemical Constituents: None	Waste Container To Landfill		No	No		
771-37-18	1374	00	00	NA	Sand, Concrete, Blacktop RCRA Reg. Chemical Constituents: None Non-RCRA Reg. Chemical Constituents: None	Waste Container To Landfill		No	No		

Process Number	IDC/ WFC No.	CCCs RCRA Reg. Const.	CCCs Non-RCRA Reg. Const.	Comp. Codes	Description RCRA Reg. Chemical Constituents: Non-RCRA Reg. Chemical Constituents:	Collection	LDR Codes	RCRA Haz. Waste	RCRA-Land Disposal Restricted (Part 268)	Wastewater/Non-Wastewater: Debris/Non-Debris: Subcategory:	EPA Codes
771-37-19	1544	**	00	??	Waste/Excess Chemicals - Liquid (Hazardous) RCRA Reg. Chemical Constituents: Chemical constituents vary and will be characterized on a case-by-case basis. Non-RCRA Reg. Chemical Constituents: None	To Offsite Contractor With Excess Chemical Disposition Form	RA	Yes	Yes Requires Analysis		See Rationa
771-37-20	1545	**	00	??	Waste/Excess Chemicals - Solid (Hazardous) RCRA Reg. Chemical Constituents: Chemical constituents vary and will be characterized on a case-by-case basis. Non-RCRA Reg. Chemical Constituents: None	To Offsite Contractor With Excess Chemical Disposition Form	RA NWW	Yes	Yes Requires Analysis	Non-Wastewater	See Ration

Process Number	IDC/ WFC No.	CCCs RCRA Reg. Const.	CCCs Non-RCRA Reg. Const.	Comp. Codes	Description RCRA Reg. Chemical Constituents: Non-RCRA Reg. Chemical Constituents:	Collection	LDR Codes	RCRA Haz. Waste	RCRA-Land Disposal Restricted (Part 268)	Wastewater/Non-Wastewater: Debris/Non-Debris: Subcategory:	EPA Codes
771-37-21	1545	00	**	NA	Waste/Excess Chemicals - Solid (Nonhazardous) RCRA Reg. Chemical Constituents: None Non-RCRA Reg. Chemical Constituents: Chemical constituents vary and will be characterized on a case-by-case basis.	To Offsite Contractor With Excess Chemical Disposition Form		No	No		
771-37-22	1544	00	**	??	Waste/Excess Chemicals - Liquid (Nonhazardous) RCRA Reg. Chemical Constituents: None Non-RCRA Reg. Chemical Constituents: Chemical constituents vary and will be characterized on a case-by-case basis.	To Offsite Contractor With Excess Chemical Disposition Form		No	No		

Process Number	IDC/ WFC No.	CCCs RCRA Reg. Const.	CCCs Non-RCRA Reg. Const.	Comp. Codes	Description RCRA Reg. Chemical Constituents: Non-RCRA Reg. Chemical Constituents:	Collection	LDR Codes	RCRA Haz. Waste	RCRA-Land Disposal Restricted (Part 268)	Wastewater/Non-Wastewater: Debris/Non-Debris: Subcategory:	EPA Codes
771-37-25	1440	26	00	NA	Mercury Contaminated Glass RCRA Reg. Chemical Constituents: Mercury Non-RCRA Reg. Chemical Constituents: None	90-Day Collection Area	MS NWW HG2	Yes	No Meets Treatment Standards See Rationale	Non-Wastewater Mercury/Hi-Inorganic	D009

WASTE STREAM AND RESIDUE DESCRIPTION AND CHARACTERIZATION

Process Number: 771-37-1 **Title:** GENERAL BUILDING WASTE (NON-RMMA)
IDC/WFC: 1330 **Description:** Dry Combustibles

- ☐ RCRA Hazardous
- ■ RCRA Nonhazardous
- ☐ By Analytical Data
- ■ By Process Knowledge
- ☐ LDR Regulated
- ■ Not LDR Regulated
- ☐ Non-Wastewater
- ☐ Wastewater

- ☐ Product
- ☐ High Content Residue
- ☐ Low Content Residue
- ☐ Transuranic
- ☐ Low-Level
- ■ Nonradioactive
- ☐ Source/Special Nuclear Materials
- ☐ Debris

- ☐ Fuel Blending
- ☐ Uncontained Gas
- ☐ RCRA Sample
- ☐ Recyclable Material
- ☐ Recycled/Reused
- ☐ TSCA Reg. Waste
- ☐ Evaluated in Another Process

EPA Codes:

Description (Material, Type, Size, Color, etc.):
Kimwipes, Latex Gloves, Tape

How the Output is Generated:
Routine Cleanup And Building Operations

Generation Rate:
Variable

How the Output is Managed:
Placed In A Waste Container For Landfill Disposal

Chemicals/Contaminants in or on the Output:
None

Characterization Rationale:
According to process knowledge, this output contains no RCRA hazardous constituents and exhibits no RCRA hazardous characteristics. It is known that no radioactive material is introduced into this output, and it is a nonhazardous, nonradioactive waste.

WASTE STREAM AND RESIDUE DESCRIPTION AND CHARACTERIZATION

Process Number: 771-37-2 **Title:** GENERAL BUILDING WASTE (NON-RMMA)
IDC/WFC: 1336 **Description:** Wet Combustibles

- ☐ RCRA Hazardous
- ■ RCRA Nonhazardous
- ☐ By Analytical Data
- ■ By Process Knowledge
- ☐ LDR Regulated
- ■ Not LDR Regulated
- ☐ Non-Wastewater
- ☐ Wastewater
- ☐ Product
- ☐ High Content Residue
- ☐ Low Content Residue
- ☐ Transuranic
- ☐ Low-Level
- ■ Nonradioactive
- ☐ Source/Special Nuclear Materials
- ☐ Debris
- ☐ Fuel Blending
- ☐ Uncontained Gas
- ☐ RCRA Sample
- ☐ Recyclable Material
- ☐ Recycled/Reused
- ☐ TSCA Reg. Waste
- ☐ Evaluated in Another Process

EPA Codes:

Description (Material, Type, Size, Color, etc.):
Kimwipes, Latex Surgeon's Gloves, And Tape Containing Cleaning Solutions And Spilled Liquids

How the Output is Generated:
Routine Cleanup And Building Operations

Generation Rate:
Variable

How the Output is Managed:
Placed In A Waste Container For Landfill Disposal

Chemicals/Contaminants in or on the Output:
None

Characterization Rationale:
According to process knowledge, this output contains no RCRA hazardous constituents and exhibits no RCRA hazardous characteristics. It is known that no radioactive material is introduced into this output, and it is a nonhazardous, nonradioactive waste.

WASTE STREAM AND RESIDUE DESCRIPTION AND CHARACTERIZATION

Process Number: 771-37-3 **Title:** GENERAL BUILDING WASTE (NON-RMMA)
IDC/WFC: 1480 **Description:** Light Metal

- ☐ RCRA Hazardous
- ■ RCRA Nonhazardous
- ☐ By Analytical Data
- ■ By Process Knowledge
- ☐ LDR Regulated
- ■ Not LDR Regulated
- ☐ Non-Wastewater
- ☐ Wastewater
- ☐ Product
- ☐ High Content Residue
- ☐ Low Content Residue
- ☐ Transuranic
- ☐ Low-Level
- ■ Nonradioactive
- ☐ Source/Special Nuclear Materials
- ☐ Debris
- ☐ Fuel Blending
- ☐ Uncontained Gas
- ☐ RCRA Sample
- ☐ Recyclable Material
- ☐ Recycled/Reused
- ☐ TSCA Reg. Waste
- ☐ Evaluated in Another Process

EPA Codes:

Description (Material, Type, Size, Color, etc.):
Small Tools, Scrap Metal, Metal Utensils, Do Not Include Electronic Parts In The Waste Stream, Unless Approved By Waste Technical Support

How the Output is Generated:
Routine Operation Of Building 771

Generation Rate:
Variable

How the Output is Managed:
Placed In A Waste Container For Landfill Disposal

Chemicals/Contaminants in or on the Output:
None

Characterization Rationale:
According to process knowledge, this output contains no RCRA hazardous constituents and exhibits no RCRA hazardous characteristics. It is known that no radioactive material is introduced into this output, and it is a nonhazardous, nonradioactive waste.

WASTE STREAM AND RESIDUE DESCRIPTION AND CHARACTERIZATION

Process Number: 771-37-5 **Title:** GENERAL BUILDING WASTE (NON-RMMA)
IDC/WFC: 1337 **Description:** Plastic

- ☐ RCRA Hazardous
- ■ RCRA Nonhazardous
- ☐ By Analytical Data
- ■ By Process Knowledge
- ☐ LDR Regulated
- ■ Not LDR Regulated
- ☐ Non-Wastewater
- ☐ Wastewater
- ☐ Product
- ☐ High Content Residue
- ☐ Low Content Residue
- ☐ Transuranic
- ☐ Low-Level
- ■ Nonradioactive
- ☐ Source/Special Nuclear Materials
- ☐ Debris
- ☐ Fuel Blending
- ☐ Uncontained Gas
- ☐ RCRA Sample
- ☐ Recyclable Material
- ☐ Recycled/Reused
- ☐ TSCA Reg. Waste
- ☐ Evaluated in Another Process

EPA Codes:

Description (Material, Type, Size, Color, etc.):
Plastic Bags, Plastic Sheets, Packaging Material, Bottles, Includes Expired Bagout Plastic

How the Output is Generated:
Routine Operation And Cleanup Of Building 771, Expiration Date Assigned To Bags Is Exceeded Prior To Bags Being Used

Generation Rate:
Variable

How the Output is Managed:
Placed In A Waste Container For Landfill Disposal

Chemicals/Contaminants in or on the Output:
None

Characterization Rationale:
According to process knowledge, this output contains no RCRA hazardous constituents and exhibits no RCRA hazardous characteristics. It is known that no radioactive material is introduced into this output, and it is a nonhazardous, nonradioactive waste.

WASTE STREAM AND RESIDUE DESCRIPTION AND CHARACTERIZATION

Process Number: 771-37-9 **Title:** GENERAL BUILDING WASTE (NON-RMMA)
IDC/WFC: 1980 **Description:** Alkaline Batteries

- ☐ RCRA Hazardous
- ■ RCRA Nonhazardous
- ■ By Analytical Data
- ■ By Process Knowledge
- ☐ LDR Regulated
- ■ Not LDR Regulated
- ☐ Non-Wastewater
- ☐ Wastewater
- ☐ Product
- ☐ High Content Residue
- ☐ Low Content Residue
- ☐ Transuranic
- ☐ Low-Level
- ■ Nonradioactive
- ☐ Source/Special Nuclear Materials
- ☐ Debris
- ☐ Fuel Blending
- ☐ Uncontained Gas
- ☐ RCRA Sample
- ☐ Recyclable Material
- ☐ Recycled/Reused
- ☐ TSCA Reg. Waste
- ☐ Evaluated in Another Process

EPA Codes:

Description (Material, Type, Size, Color, etc.):
Alkaline Batteries

How the Output is Generated:
When Batteries Are Changed From Equipment

Generation Rate:
Variable

How the Output is Managed:
Placed In A Waste Container For Landfill Disposal

Chemicals/Contaminants in or on the Output:
None

Characterization Rationale:
According to process knowledge and supported by analytical data (Sample No. E901860, E901861), this output contains no RCRA hazardous constituents and exhibits no RCRA hazardous characteristics. It is known that no radioactive material is introduced into this output, and it is a nonhazardous, nonradioactive waste.

WASTE STREAM AND RESIDUE DESCRIPTION AND CHARACTERIZATION

Process Number: 771-37-10 **Title:** GENERAL BUILDING WASTE (NON-RMMA)
IDC/WFC: 1927 **Description:** Wood

- ☐ RCRA Hazardous
- ■ RCRA Nonhazardous
- ☐ By Analytical Data
- ■ By Process Knowledge
- ☐ LDR Regulated
- ■ Not LDR Regulated
- ☐ Non-Wastewater
- ☐ Wastewater
- ☐ Product
- ☐ High Content Residue
- ☐ Low Content Residue
- ☐ Transuranic
- ☐ Low-Level
- ■ Nonradioactive
- ☐ Source/Special Nuclear Materials
- ☐ Debris
- ☐ Fuel Blending
- ☐ Uncontained Gas
- ☐ RCRA Sample
- ☐ Recyclable Material
- ☐ Recycled/Reused
- ☐ TSCA Reg. Waste
- ☐ Evaluated in Another Process

EPA Codes:

Description (Material, Type, Size, Color, etc.):
Wood Waste

How the Output is Generated:
After Use In Building Scaffolds Or Other Uses

Generation Rate:
Variable

How the Output is Managed:
Placed In A Waste Container For Landfill Disposal

Chemicals/Contaminants in or on the Output:
None

Characterization Rationale:
According to process knowledge, this output contains no RCRA hazardous constituents and exhibits no RCRA hazardous characteristics. It is known that no radioactive material is introduced into this output, and it is a nonhazardous, nonradioactive waste.

WASTE STREAM AND RESIDUE DESCRIPTION AND CHARACTERIZATION

Process Number: 771-37-15 **Title:** GENERAL BUILDING WASTE (NON-RMMA)
IDC/WFC: 1440 **Description:** Glass

- ☐ RCRA Hazardous
- ■ RCRA Nonhazardous
- ☐ By Analytical Data
- ■ By Process Knowledge
- ☐ LDR Regulated
- ■ Not LDR Regulated
- ☐ Non-Wastewater
- ☐ Wastewater
- ☐ Product
- ☐ High Content Residue
- ☐ Low Content Residue
- ☐ Transuranic
- ☐ Low-Level
- ■ Nonradioactive
- ☐ Source/Special Nuclear Materials
- ☐ Debris
- ☐ Fuel Blending
- ☐ Uncontained Gas
- ☐ RCRA Sample
- ☐ Recyclable Material
- ☐ Recycled/Reused
- ☐ TSCA Reg. Waste
- ☐ Evaluated in Another Process

EPA Codes:

Description (Material, Type, Size, Color, etc.):
Smoke Tubes

How the Output is Generated:
After Use By RPTs For Respirator Fit Testing

Generation Rate:
Variable

How the Output is Managed:
Placed In A Waste Container For Landfill Disposal

Chemicals/Contaminants in or on the Output:
None

Characterization Rationale:
According to process knowledge, this output contains no RCRA hazardous constituents and exhibits no RCRA hazardous characteristics. It is known that no radioactive material is introduced into this output, and it is a nonhazardous, nonradioactive waste.

WASTE STREAM AND RESIDUE DESCRIPTION AND CHARACTERIZATION

Process Number: 771-37-16 **Title:** GENERAL BUILDING WASTE (NON-RMMA)
IDC/WFC: 1321 **Description:** Lead Metal

- ■ RCRA Hazardous
- □ RCRA Nonhazardous
- □ By Analytical Data
- ■ By Process Knowledge
- □ LDR Regulated
- ■ Not LDR Regulated
- □ Non-Wastewater
- □ Wastewater
- □ Product
- □ High Content Residue
- □ Low Content Residue
- □ Transuranic
- □ Low-Level
- ■ Nonradioactive
- □ Source/Special Nuclear Materials
- □ Debris
- □ Fuel Blending
- □ Uncontained Gas
- □ RCRA Sample
- ■ Recyclable Material
- □ Recycled/Reused
- □ TSCA Reg. Waste
- □ Evaluated in Another Process

EPA Codes:
D008

Description (Material, Type, Size, Color, etc.):
Lead Metal

How the Output is Generated:
During Maintenance Operations

Generation Rate:
Variable

How the Output is Managed:
Placed In 55-Gallon Drum As Scrap Metal For Recycling

Chemicals/Contaminants in or on the Output:
Lead

Characterization Rationale:
According to process knowledge, this scrap metal (lead) is a hazardous waste that is recycled and meets the definition of a recyclable material in section 261.6 and therefore is not subject to regulation under Parts 262 through 266 and Part 268, the land disposal restriction regulations. These materials are generated in a non-Radioactive Materials Management Area. This output has been designated a nonradioactive, hazardous waste that is recycled.

WASTE STREAM AND RESIDUE DESCRIPTION AND CHARACTERIZATION

Process Number: 771-37-17 **Title:** GENERAL BUILDING WASTE (NON-RMMA)
IDC/WFC: 1438 **Description:** Insulation (Nonasbestos)

- ☐ RCRA Hazardous
- ■ RCRA Nonhazardous
- ☐ By Analytical Data
- ■ By Process Knowledge
- ☐ LDR Regulated
- ■ Not LDR Regulated
- ☐ Non-Wastewater
- ☐ Wastewater
- ☐ Product
- ☐ High Content Residue
- ☐ Low Content Residue
- ☐ Transuranic
- ☐ Low-Level
- ■ Nonradioactive
- ☐ Source/Special Nuclear Materials
- ☐ Debris
- ☐ Fuel Blending
- ☐ Uncontained Gas
- ☐ RCRA Sample
- ☐ Recyclable Material
- ☐ Recycled/Reused
- ☐ TSCA Reg. Waste
- ☐ Evaluated in Another Process

EPA Codes:

Description (Material, Type, Size, Color, etc.):
Nonasbestos Insulation

How the Output is Generated:
Routine Maintenance And Custodial Operations

Generation Rate:
Variable

How the Output is Managed:
Placed In A Solid Waste Container For Disposal At The Rocky Flats Environmental Technology Site Landfill

Chemicals/Contaminants in or on the Output:
None

Characterization Rationale:
This insulation is nonline material generated in a non-Radioactive Materials Management Area. According to process knowledge, the output contains no RCRA hazardous constituents and exhibits no RCRA hazardous characteristics. It is designated as nonradioactive, nonhazardous waste.

WASTE STREAM AND RESIDUE DESCRIPTION AND CHARACTERIZATION

Process Number: 771-37-18 **Title:** GENERAL BUILDING WASTE (NON-RMMA)
IDC/WFC: 1374 **Description:** Sand, Concrete, Blacktop

- ☐ RCRA Hazardous
- ■ RCRA Nonhazardous
- ☐ By Analytical Data
- ■ By Process Knowledge
- ☐ LDR Regulated
- ■ Not LDR Regulated
- ☐ Non-Wastewater
- ☐ Wastewater
- ☐ Product
- ☐ High Content Residue
- ☐ Low Content Residue
- ☐ Transuranic
- ☐ Low-Level
- ■ Nonradioactive
- ☐ Source/Special Nuclear Materials
- ☐ Debris
- ☐ Fuel Blending
- ☐ Uncontained Gas
- ☐ RCRA Sample
- ☐ Recyclable Material
- ☐ Recycled/Reused
- ☐ TSCA Reg. Waste
- ☐ Evaluated in Another Process

EPA Codes:

Description (Material, Type, Size, Color, etc.):
Sand, Concrete, And Blacktop

How the Output is Generated:
Routine Maintenance Operations

Generation Rate:
Variable

How the Output is Managed:
Placed In A Solid Waste Container For Disposal At The Rocky Flats Environmental Technology Site Landfill

Chemicals/Contaminants in or on the Output:
None

Characterization Rationale:
This sand, concrete, and blacktop is nonline material generated in a non-Radioactive Materials Management Area. According to process knowledge, the output contains no RCRA hazardous constituents and exhibits no RCRA hazardous characteristics. It is designated a nonradioactive, nonhazardous waste.

WASTE STREAM AND RESIDUE DESCRIPTION AND CHARACTERIZATION

Process Number: 771-37-19 **Title:** GENERAL BUILDING WASTE (NON-RMMA)
IDC/WFC: 1544 **Description:** Waste/Excess Chemicals - Liquid (Hazardous)

- ■ RCRA Hazardous
- □ RCRA Nonhazardous
- □ By Analytical Data
- ■ By Process Knowledge
- ■ LDR Regulated
- □ Not LDR Regulated
- □ Non-Wastewater
- □ Wastewater
- □ Product
- □ High Content Residue
- □ Low Content Residue
- □ Transuranic
- □ Low-Level
- ■ Nonradioactive
- □ Source/Special Nuclear Materials
- □ Debris
- □ Fuel Blending
- □ Uncontained Gas
- □ RCRA Sample
- □ Recyclable Material
- □ Recycled/Reused
- □ TSCA Reg. Waste
- □ Evaluated in Another Process

EPA Codes:
See Rationale

Description (Material, Type, Size, Color, etc.):
Hazardous Liquid Waste, Expired, Or Excess Chemicals

How the Output is Generated:
Waste/excess chemicals are generated due to discontinued use, (and not useable elsewhere), expired or off specification in some manner and therefore not useable.

Generation Rate:
Variable

How the Output is Managed:
Waste Regulatory Programs must be contacted and an excess chemical form must be filled out prior to final disposition of waste.

Chemicals/Contaminants in or on the Output:
Constituents Vary Depending On The Actual Waste/Excess Chemical

Characterization Rationale:
According to process knowledge, these liquid wastes/excess chemicals are characterized as hazardous. The EPA codes have not been identified because the waste/excess chemicals vary considerably in composition and characteristics; therefore, the appropriate codes must be assigned on a case-by-case basis. The chemical constituent code (**) is to be replaced by the actual numeric or alpha numeric constituent code on the drum traveller. The compatibility code is designated as "??" and is to be replaced by the appropriate code on a case-by-case basis. This output was generated in a non-Radioactive Materials Management Area and is therefore designated a nonradioactive, hazardous waste. An evaluation to determine if this output meets the LDR treatment standards defined in 40 CFR 268.40 will be made on a case-by-case basis.

WASTE STREAM AND RESIDUE DESCRIPTION AND CHARACTERIZATION

Process Number: 771-37-20 **Title:** GENERAL BUILDING WASTE (NON-RMMA)
IDC/WFC: 1545 **Description:** Waste/Excess Chemicals - Solid (Hazardous)

- ■ RCRA Hazardous
- □ RCRA Nonhazardous
- □ By Analytical Data
- ■ By Process Knowledge
- ■ LDR Regulated
- □ Not LDR Regulated
- ■ Non-Wastewater
- □ Wastewater
- □ Product
- □ High Content Residue
- □ Low Content Residue
- □ Transuranic
- □ Low-Level
- ■ Nonradioactive
- □ Source/Special Nuclear Materials
- □ Debris
- □ Fuel Blending
- □ Uncontained Gas
- □ RCRA Sample
- □ Recyclable Material
- □ Recycled/Reused
- □ TSCA Reg. Waste
- □ Evaluated in Another Process

EPA Codes:
See Rationale

Description (Material, Type, Size, Color, etc.):
Solid Waste/Excess Chemicals

How the Output is Generated:
Waste/excess chemicals are generated due to discontinued use, (and not useable elsewhere) expired or off-specification in some manner and therefore not useable.

Generation Rate:
Variable

How the Output is Managed:
Waste Regulatory Programs must be contacted and an excess chemical form must be filled out prior to final disposition of waste.

Chemicals/Contaminants in or on the Output:
Constituents Vary Depending On The Actual Waste/Excess Chemical

Characterization Rationale:
According to process knowledge, these solid waste/excess chemicals are characterized as hazardous. The EPA codes have not been identified because the waste/excess chemicals vary considerably in composition and characteristics, therefore, the appropriate codes must be assigned on a case-by-case bases. The chemical constituent code (**) is to be replaced by the actual numerical, or alphanumeric constituent code on the drum traveler. The compatibility code is designated as "??" and is to be replaced by the appropriate code on a case-by-case basis. This output was generated in a Radioactive Materials Management Area and is therefore designated a nonradioactive, hazardous waste. An evaluation to determine if this output meets the LDR treatment standards defined in 40 CFR 268.40 will be made on a case-by-case basis.

WASTE STREAM AND RESIDUE DESCRIPTION AND CHARACTERIZATION

Process Number: 771-37-21 **Title:** GENERAL BUILDING WASTE (NON-RMMA)
IDC/WFC: 1545 **Description:** Waste/Excess Chemicals - Solid (Nonhazardous)

- ☐ RCRA Hazardous
- ■ RCRA Nonhazardous
- ☐ By Analytical Data
- ■ By Process Knowledge
- ☐ LDR Regulated
- ■ Not LDR Regulated
- ☐ Non-Wastewater
- ☐ Wastewater
- ☐ Product
- ☐ High Content Residue
- ☐ Low Content Residue
- ☐ Transuranic
- ☐ Low-Level
- ■ Nonradioactive
- ☐ Source/Special Nuclear Materials
- ☐ Debris
- ☐ Fuel Blending
- ☐ Uncontained Gas
- ☐ RCRA Sample
- ☐ Recyclable Material
- ☐ Recycled/Reused
- ☐ TSCA Reg. Waste
- ☐ Evaluated in Another Process

EPA Codes:

Description (Material, Type, Size, Color, etc.):
Nonhazardous Solid Waste, Expired, Or Excess Chemicals

How the Output is Generated:
Waste/excess solid chemicals are generated due to discontinued use (and not useable elsewhere on plantsite), expired or off-specification in some manner and therefore not useable.

Generation Rate:
Variable

How the Output is Managed:
Waste Regulatory Programs must be contacted and an excess chemical form must be filled out prior to final disposition of waste.

Chemicals/Contaminants in or on the Output:
Constituents Vary Depending On The Actual Waste/Excess Chemical

Characterization Rationale:
According to process knowledge, these solid waste/excess chemicals are characterized as nonhazardous. The chemical constituent code (**) is to be replaced by the actual numeric or alphanumeric constituent code on the drum traveller. This output was generated in a non-Radioactive Material Management Area and is therefore designated a nonradioactive, nonhazardous waste.

WASTE STREAM AND RESIDUE DESCRIPTION AND CHARACTERIZATION

Process Number: 771-37-22 **Title:** GENERAL BUILDING WASTE (NON-RMMA)
IDC/WFC: 1544 **Description:** Waste/Excess Chemicals - Liquid (Nonhazardous)

- ☐ RCRA Hazardous
- ■ RCRA Nonhazardous
- ☐ By Analytical Data
- ■ By Process Knowledge
- ☐ LDR Regulated
- ■ Not LDR Regulated
- ☐ Non-Wastewater
- ☐ Wastewater
- ☐ Product
- ☐ High Content Residue
- ☐ Low Content Residue
- ☐ Transuranic
- ☐ Low-Level
- ■ Nonradioactive
- ☐ Source/Special Nuclear Materials
- ☐ Debris
- ☐ Fuel Blending
- ☐ Uncontained Gas
- ☐ RCRA Sample
- ☐ Recyclable Material
- ☐ Recycled/Reused
- ☐ TSCA Reg. Waste
- ☐ Evaluated in Another Process

EPA Codes:

Description (Material, Type, Size, Color, etc.):
Nonhazardous Liquid Waste, Expired, Or Excess Chemicals

How the Output is Generated:
Waste/excess chemicals are generated due to the discontinued use (and not useable elsewhere on plantsite), expired, or off-specification in some manner and therefore unusable.

Generation Rate:
Variable

How the Output is Managed:
Waste Regulatory Programs must be contacted and an excess chemical form must be filled out prior to final disposition of waste.

Chemicals/Contaminants in or on the Output:
Constituents Vary Depending On The Actual Waste/Excess Chemical

Characterization Rationale:
According to process knowledge, these liquid waste/excess chemicals are characterized as nonhazardous. The chemical constituent code (**) is to be replaced by the actual numeric or alphanumeric constituent code on the drum traveller. The compatibility code is designated as "??" and is to be replaced by the appropriate code on a case-by-case basis. This output was generated in a non-Radioactive Material Management Area and is therefore designated a nonradioactive, nonhazardous waste.

WASTE STREAM AND RESIDUE DESCRIPTION AND CHARACTERIZATION

Process Number: 771-37-25 **Title:** GENERAL BUILDING WASTE (NON-RMMA)
IDC/WFC: 1440 **Description:** Mercury Contaminated Glass

- ■ RCRA Hazardous
- □ RCRA Nonhazardous
- □ By Analytical Data
- ■ By Process Knowledge
- □ LDR Regulated
- ■ Not LDR Regulated
- ■ Non-Wastewater
- □ Wastewater
- □ Product
- □ High Content Residue
- □ Low Content Residue
- □ Transuranic
- □ Low-Level
- ■ Nonradioactive
- □ Source/Special Nuclear Materials
- □ Debris
- □ Fuel Blending
- □ Uncontained Gas
- □ RCRA Sample
- □ Recyclable Material
- □ Recycled/Reused
- □ TSCA Reg. Waste
- □ Evaluated in Another Process

EPA Codes:
D009

Description (Material, Type, Size, Color, etc.):
Absorbed Mercury And Glass

How the Output is Generated:
During Mercury Cleanup

Generation Rate:
Variable

How the Output is Managed:
90-Day Collection Area

Chemicals/Contaminants in or on the Output:
Mercury

Characterization Rationale:
This output is the result of elemental mercury being amalgamated with sulfur, copper, zinc or nickel. It is unlikely that the amalgamation process is 99.9996 percent efficient (the efficiency required in order for this output to not exhibit the characteristic of toxicity for mercury) and therefore, this output is characterized as a nonradioactive, hazardous waste. However, amalgamation is the specified treatment technology for this waste in 40 CFR 268.40 and, therefore, this output meets LDR treatment standards.

THIS PAGE INTENTIONALLY LEFT BLANK

38.0 PROCESS 771-38: RADIATION INSTRUMENTATION

The Radiation Instrumentation Process, located in Rooms 166 and 166B, involves the maintenance of radiation monitoring equipment from Building 771. Various calibration equipment is used to adjust alarms, air monitors, and contamination control equipment. Figure 38.1 shows the inputs, process flow, and outputs associated with Radiation Instrumentation.

Criticality alarms and selective alpha air monitors (SAAMs) are generally taken to Rooms 166 and 166B for repair, if necessary. In rare cases, this equipment is repaired in place. All alarms and equipment are decontaminated prior to removal to Rooms 166 and 166B.

The Health Physics Instrumentation Group maintains all Alpha-mets and Combos. When screen assemblies (Mylar and cardboard) are torn, they are replaced. The defective screen assemblies are sent to the Health Physics Instrumentation Process in Building 881 for repair.

Materials used for maintenance and repair of the alarms, air monitors, and probes include various electronic components such as circuit boards, resistors, detectors, and transistors. Metal parts, consisting of frames and housings, plastic parts, wire, vinyl tape, O-rings, bulbs, fuses, and alkaline batteries are also used to maintain the equipment. Repaired Alpha-met and combo probes are received from the Health and Physics Instrumentation Process in Building 881. Equipment is cleaned with Kimwipes and occasionally small amounts of isopropyl alcohol. Paper is used for administrative tasks associated with equipment maintenance.

Repaired alarms, air monitors, and contamination control equipment are returned to their users. Electronic components are placed in a satellite collection area. Light metal, dry combustibles, plastics, batteries, and bulbs and fuses are placed in 55-gallon drums. Process Table 771-38 presents the outputs associated with Radiation Instrumentation and provides their dispositions and hazardous character.

PADC-93-01524

AutoCAD 11, File Name: 771-38

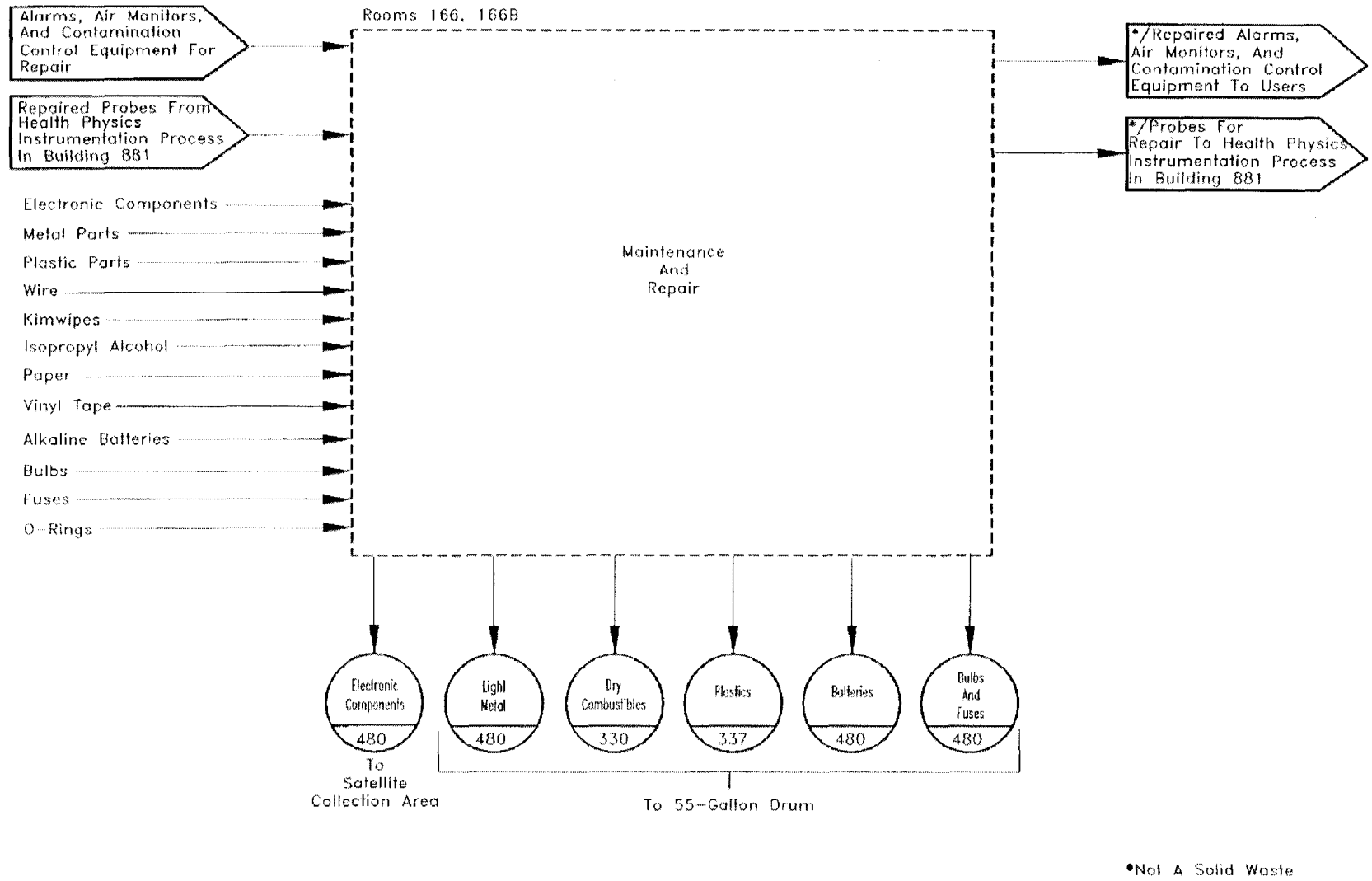

FIGURE 38.1

Rocky Flats Environmental Technology Site Waste Stream & Residue Identification & Characterization	BUILDING 771/PROCESS 38 RADIATION INSTRUMENTATION	Task	By	Date
		Designed	W. Eakins	03/10/93
		Drawn	R. Nisely	06/12/96
		Checked	J. Schoen	06/12/96

PROCESS 771-38 RADIATION INSTRUMENTATION

Process Number	IDC/ WFC No.	CCCs RCRA Reg. Const.	CCCs Non-RCRA Reg. Const.	Comp. Codes	Description RCRA Reg. Chemical Constituents: Non-RCRA Reg. Chemical Constituents:	Collection	LDR Codes	RCRA Haz. Waste	RCRA-Land Disposal Restricted (Part 268)	Wastewater/Non-Wastewater: Debris/Non-Debris: Subcategory:	EPA Codes
771-38-1	480	2436	00	NA	Electronic Components RCRA Reg. Chemical Constituents: Lead Silver Non-RCRA Reg. Chemical Constituents: None	Satellite Collection Area	RT D PB1	Yes	Yes Does Not Meet Treatment Standards	Debris Lead	D008, D011
771-38-2	480	00	00	NA	Light Metal RCRA Reg. Chemical Constituents: None Non-RCRA Reg. Chemical Constituents: None	55-Gallon Drum		No	No		

Process Number	IDC/ WFC No.	CCCs RCRA Reg. Const.	CCCs Non-RCRA Reg. Const.	Comp. Codes	Description RCRA Reg. Chemical Constituents: Non-RCRA Reg. Chemical Constituents:	Collection	LDR Codes	RCRA Haz. Waste	RCRA-Land Disposal Restricted (Part 268)	Wastewater/Non-Wastewater: Debris/Non-Debris: Subcategory:	EPA Codes
771-38-3	330	00	00	NA	Dry Combustibles RCRA Reg. Chemical Constituents: None Non-RCRA Reg. Chemical Constituents: None	55-Gallon Drum		No	No		
771-38-4	480	00	00	NA	Alkaline Batteries RCRA Reg. Chemical Constituents: None Non-RCRA Reg. Chemical Constituents: None	55-Gallon Drum		No	No		

Process Number	IDC/ WFC No.	CCCs RCRA Reg. Const.	CCCs Non-RCRA Reg. Const.	Comp. Codes	Description RCRA Reg. Chemical Constituents: Non-RCRA Reg. Chemical Constituents:	Collection	LDR Codes	RCRA Haz. Waste	RCRA-Land Disposal Restricted (Part 268)	Wastewater/Non-Wastewater: Debris/Non-Debris: Subcategory:	EPA Codes
771-38-5	337	00	00	NA	Plastics RCRA Reg. Chemical Constituents: None Non-RCRA Reg. Chemical Constituents: None	55-Gallon Drum		No	No		
771-38-6	480	00	00	NA	Bulbs And Fuses RCRA Reg. Chemical Constituents: None Non-RCRA Reg. Chemical Constituents: None	55-Gallon Drum		No	No		

WASTE STREAM AND RESIDUE DESCRIPTION AND CHARACTERIZATION

Process Number: 771-38-1
IDC/WFC: 480

Title: RADIATION INSTRUMENTATION
Description: Electronic Components

- ■ RCRA Hazardous
- □ RCRA Nonhazardous
- □ By Analytical Data
- ■ By Process Knowledge
- ■ LDR Regulated
- □ Not LDR Regulated
- □ Non-Wastewater
- □ Wastewater
- □ Product
- □ High Content Residue
- □ Low Content Residue
- □ Transuranic
- ■ Low-Level
- □ Nonradioactive
- □ Source/Special Nuclear Materials
- ■ Debris
- □ Fuel Blending
- □ Uncontained Gas
- □ RCRA Sample
- □ Recyclable Material
- □ Recycled/Reused
- □ TSCA Reg. Waste
- □ Evaluated in Another Process

EPA Codes:
D008, D011

Description (Material, Type, Size, Color, etc.):
Circuit Boards, Resistors, Capacitors, Detectors, Transistors, And Other Electronic Components, May Contain Lead, Tin, Or Silver Solder

How the Output is Generated:
When Defective Circuit Boards Are Replaced

Generation Rate:
5 Gallons Yearly

How the Output is Managed:
Placed In Satellite Collection Area

Chemicals/Contaminants in or on the Output:
Lead, Silver

Characterization Rationale:
This output is nonline generated in a Radioactive Materials Management Area. According to process knowledge, this output exhibits the characteristic of toxicity due to the presence of lead and silver. This output has been designated a low-level, mixed waste. This output meets the definition of hazardous debris and can be treated by an appropriate technology in 40 CFR 268.45. The concentration-based treatment standard for lead, silver, and cadmium, and the treatment standards for underlying hazardous constituents as defined in 40 CFR 268.48 must be met for treatment residue(s) prior to land disposal. The underlying hazardous constituents associated with this output are listed in Appendix E.

WASTE STREAM AND RESIDUE DESCRIPTION AND CHARACTERIZATION

Process Number: 771-38-2
IDC/WFC: 480

Title: RADIATION INSTRUMENTATION
Description: Light Metal

- ▫ RCRA Hazardous
- ▪ RCRA Nonhazardous
- ▫ By Analytical Data
- ▪ By Process Knowledge
- ▫ LDR Regulated
- ▪ Not LDR Regulated
- ▫ Non-Wastewater
- ▫ Wastewater
- ▫ Product
- ▫ High Content Residue
- ▫ Low Content Residue
- ▫ Transuranic
- ▪ Low-Level
- ▫ Nonradioactive
- ▫ Source/Special Nuclear Materials
- ▫ Debris
- ▫ Fuel Blending
- ▫ Uncontained Gas
- ▫ RCRA Sample
- ▫ Recyclable Material
- ▫ Recycled/Reused
- ▫ TSCA Reg. Waste
- ▫ Evaluated in Another Process

EPA Codes:

Description (Material, Type, Size, Color, etc.):
Aluminum Or Stainless Steel Frames And Housings, Which Include Plastic Components, Copper, Aluminum, And Tin Wire

How the Output is Generated:
From Equipment Maintenance

Generation Rate:
55 Gallons Yearly

How the Output is Managed:
Placed In A 55-Gallon Drum For IDC 480

Chemicals/Contaminants in or on the Output:
None

Characterization Rationale:
This output is nonline generated, in a Radioactive Materials Management Area and is known by the generator to always be low-level waste. According to process knowledge, the output contains no RCRA hazardous constituents and exhibits no RCRA hazardous characteristics. It is designated as low-level, nonhazardous waste.

WASTE STREAM AND RESIDUE DESCRIPTION AND CHARACTERIZATION

Process Number: 771-38-3
IDC/WFC: 330

Title: RADIATION INSTRUMENTATION
Description: Dry Combustibles

- ☐ RCRA Hazardous
- ■ RCRA Nonhazardous
- ☐ By Analytical Data
- ■ By Process Knowledge
- ☐ LDR Regulated
- ■ Not LDR Regulated
- ☐ Non-Wastewater
- ☐ Wastewater
- ☐ Product
- ☐ High Content Residue
- ☐ Low Content Residue
- ☐ Transuranic
- ■ Low-Level
- ☐ Nonradioactive
- ☐ Source/Special Nuclear Materials
- ☐ Debris
- ☐ Fuel Blending
- ☐ Uncontained Gas
- ☐ RCRA Sample
- ☐ Recyclable Material
- ☐ Recycled/Reused
- ☐ TSCA Reg. Waste
- ☐ Evaluated in Another Process

EPA Codes:

Description (Material, Type, Size, Color, etc.):
Kimwipes, Paper, Mylar, And Tape, Small Amounts Of Isopropyl Alcohol Which Evaporate Prior To Disposal May Be Used On The Kimwipes

How the Output is Generated:
Kimwipes From Cleaning Instruments, Mylar And Tape Are Removed From Probes, Paper Is Generated From Administrative Tasks

Generation Rate:
55 Gallons Yearly

How the Output is Managed:
Placed In A 55-Gallon Drum For IDC 330

Chemicals/Contaminants in or on the Output:
None

Characterization Rationale:
This output is nonline generated, in a Radioactive Materials Management Area and is known by the generator to always be low-level waste. According to process knowledge, the output contains no RCRA hazardous constituents and exhibits no RCRA hazardous characteristics. It is designated as low-level, nonhazardous waste.

WASTE STREAM AND RESIDUE DESCRIPTION AND CHARACTERIZATION

Process Number: 771-38-4
IDC/WFC: 480

Title: RADIATION INSTRUMENTATION
Description: Alkaline Batteries

- ☐ RCRA Hazardous
- ■ RCRA Nonhazardous
- ☐ By Analytical Data
- ■ By Process Knowledge
- ☐ LDR Regulated
- ■ Not LDR Regulated
- ☐ Non-Wastewater
- ☐ Wastewater
- ☐ Product
- ☐ High Content Residue
- ☐ Low Content Residue
- ☐ Transuranic
- ■ Low-Level
- ☐ Nonradioactive
- ☐ Source/Special Nuclear Materials
- ☐ Debris
- ☐ Fuel Blending
- ☐ Uncontained Gas
- ☐ RCRA Sample
- ☐ Recyclable Material
- ☐ Recycled/Reused
- ☐ TSCA Reg. Waste
- ☐ Evaluated in Another Process

EPA Codes:

Description (Material, Type, Size, Color, etc.):
Alkaline Batteries Used As The Power Supply For Alpha-mets And Combos

How the Output is Generated:
Routine Change Out Or Replacement

Generation Rate:
100 Gallons Yearly

How the Output is Managed:
Placed In A 55-Gallon Drum For IDC 480

Chemicals/Contaminants in or on the Output:
None

Characterization Rationale:
This output is nonline generated, in a Radioactive Materials Management Area and is known by the generator to always be low-level waste. According to process knowledge, the output contains no RCRA hazardous constituents and exhibits no RCRA hazardous characteristics. It is designated as low-level, nonhazardous waste.

WASTE STREAM AND RESIDUE DESCRIPTION AND CHARACTERIZATION

Process Number: 771-38-5 **Title:** RADIATION INSTRUMENTATION
IDC/WFC: 337 **Description:** Plastics

- ☐ RCRA Hazardous
- ■ RCRA Nonhazardous
- ☐ By Analytical Data
- ■ By Process Knowledge
- ☐ LDR Regulated
- ■ Not LDR Regulated
- ☐ Non-Wastewater
- ☐ Wastewater
- ☐ Product
- ☐ High Content Residue
- ☐ Low Content Residue
- ☐ Transuranic
- ■ Low-Level
- ☐ Nonradioactive
- ☐ Source/Special Nuclear Materials
- ☐ Debris
- ☐ Fuel Blending
- ☐ Uncontained Gas
- ☐ RCRA Sample
- ☐ Recyclable Material
- ☐ Recycled/Reused
- ☐ TSCA Reg. Waste
- ☐ Evaluated in Another Process

EPA Codes:

Description (Material, Type, Size, Color, etc.):
Small Plastic Parts, Meter Faces, Knobs, And Other Plastic Materials, Includes Neoprene O-rings

How the Output is Generated:
From Equipment Maintenance

Generation Rate:
1 Gallon Yearly

How the Output is Managed:
Placed In A 55-Gallon Drum For IDC 337

Chemicals/Contaminants in or on the Output:
None

Characterization Rationale:
This output is nonline generated, in a Radioactive Materials Management Area and is known by the generator to always be low-level waste. According to process knowledge, the output contains no RCRA hazardous constituents and exhibits no RCRA hazardous characteristics. It is designated as low-level, nonhazardous waste.

WASTE STREAM AND RESIDUE DESCRIPTION AND CHARACTERIZATION

Process Number: 771-38-6 **Title:** RADIATION INSTRUMENTATION
IDC/WFC: 480 **Description:** Bulbs And Fuses

- ☐ RCRA Hazardous
- ■ RCRA Nonhazardous
- ☐ By Analytical Data
- ■ By Process Knowledge
- ☐ LDR Regulated
- ■ Not LDR Regulated
- ☐ Non-Wastewater
- ☐ Wastewater
- ☐ Product
- ☐ High Content Residue
- ☐ Low Content Residue
- ☐ Transuranic
- ■ Low-Level
- ☐ Nonradioactive
- ☐ Source/Special Nuclear Materials
- ☐ Debris
- ☐ Fuel Blending
- ☐ Uncontained Gas
- ☐ RCRA Sample
- ☐ Recyclable Material
- ☐ Recycled/Reused
- ☐ TSCA Reg. Waste
- ☐ Evaluated in Another Process

EPA Codes:

Description (Material, Type, Size, Color, etc.):
Plastic Or Glass Bulbs And Fuses With Metal Bases And Contacts

How the Output is Generated:
When The Parts Are Replaced During Equipment Maintenance

Generation Rate:
5 Gallons Yearly

How the Output is Managed:
Placed In A 55-Gallon Drum For IDC 480

Chemicals/Contaminants in or on the Output:
None

Characterization Rationale:
This output is nonline generated, in a Radioactive Materials Management Area and is known by the generator to always be low-level waste. According to process knowledge, the output contains no RCRA hazardous constituents and exhibits no RCRA hazardous characteristics. It is designated as low-level, nonhazardous waste.

THIS PAGE INTENTIONALLY LEFT BLANK

39.0 PROCESS 771-39 SOLUTION PROCESSING

Solution Processing Process activities include solutions in process system low points that were generated and left in place prior to curtailment of production in 1989. These solutions are drained from system low points and collected in 4-liter narrow-mouth bottles or into the Portable Vacuum Liquid Transfer System (PVLTS) by Production Operations under the Liquids Removal Team. Incompatible solutions are retained in the 4-liter bottles for sampling, characterization and appropriate disposition. Compatible solutions are off-loaded from the PVLTS and/or bottles into one of two annular temporary storage tanks D544 or D545 for commingling. The solution contained in the annular tanks will be drained when the tanks are full into 4-liter bottles in Line 13/14 for sampling, characterization and appropriate disposition. Other solutions will be generated from RCRA closure activities. Water drained from fire suppression systems, water drained from water walls, incidental waters and solutions drained from low points (e.g., piping and tanks) that have a neutral pH. Figure 39.1 shows the inputs, process flow, and outputs associated with the Solution Processing Process.

Dry combustibles, wet combustibles, used glovebox HEPA and Ful-Flo filters, glass, light metal and plastics are placed in the appropriate 55-gallon drum. Leaded glovebox gloves are placed in the satellite collection area in Room 114.

Filled solution bottles are sampled in accordance with 1-10000 EWQA, Section 1.6.1, Addendum 13, Sampling and Analysis Plan for Building 771 Tanks. Process Table 771-39 presents the outputs associated with Solution Processing and provides their dispositions and hazardous character.

AutoCAD 12, File Name: 771-39

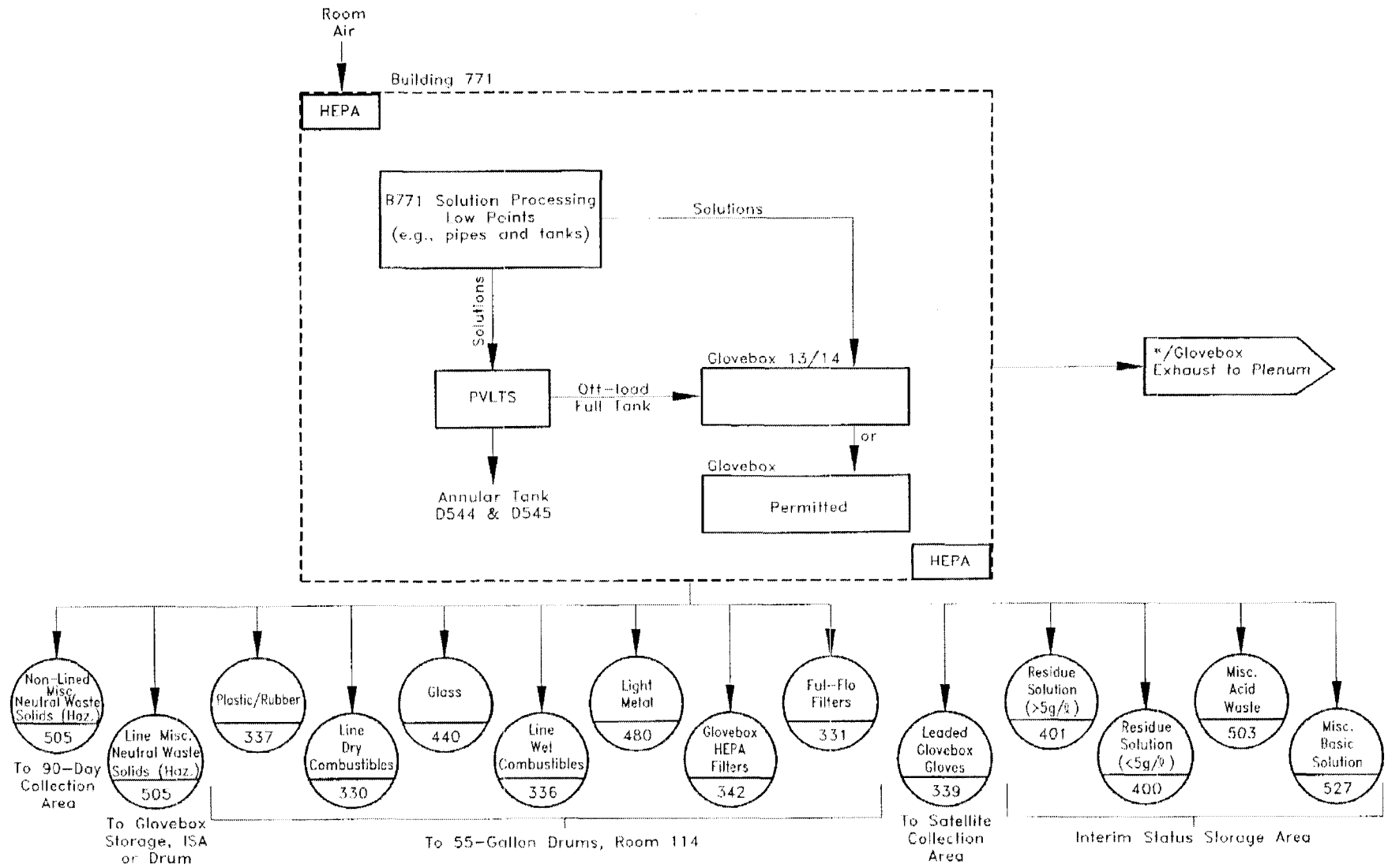

FIGURE 39.1

* Not a Solid Waste

Rocky Flats Environmental Technology Site Waste Stream & Residue Identification & Characterization	BUILDING 771/PROCESS 39 SOLUTION PROCESSING	Task	By	Date
		Designed	J. Schoen	06/09/97
		Drawn	C. Sladt	06/11/97
		Checked	J. Schoen	08/05/98

PROCESS 771-39 SOLUTION PROCESSING

Process Number	IDC/ WFC No.	CCCs RCRA Reg. Const.	CCCs Non-RCRA Reg. Const.	Comp. Codes	Description RCRA Reg. Chemical Constituents: Non-RCRA Reg. Chemical Constituents:	Collection	LDR Codes	RCRA Haz. Waste	RCRA-Land Disposal Restricted (Part 268)	Wastewater/Non-Wastewater: Debris/Non-Debris: Subcategory:	EPA Codes
771-39-1	331	00	00	NA	Ful-Flo Filters RCRA Reg. Chemical Constituents: None Non-RCRA Reg. Chemical Constituents: None	Placed In A 55-Gallon Drum		No	No		
771-39-2	342	00	02	NA	Glovebox Filters, Acid Contaminated RCRA Reg. Chemical Constituents: None Non-RCRA Reg. Chemical Constituents: Acid - General	55-Gallon Drum Then To Drum Counter		No	No		

Process Number	IDC/ WFC No.	CCCs RCRA Reg. Const.	CCCs Non-RCRA Reg. Const.	Comp. Codes	Description RCRA Reg. Chemical Constituents: Non-RCRA Reg. Chemical Constituents:	Collection	LDR Codes	RCRA Haz. Waste	RCRA-Land Disposal Restricted (Part 268)	Wastewater/Non-Wastewater: Debris/Non-Debris: Subcategory:	EPA Codes
771-39-3	330	00	00	NA	Dry Combustibles Line Or Nonline RCRA Reg. Chemical Constituents: None Non-RCRA Reg. Chemical Constituents: None	55-Gallon Drum		No	No		
771-39-4	400	??	??	1B	Miscellaneous Residue Solutions <5 g/ℓ RCRA Reg. Chemical Constituents: Constituents vary and will be determined on a case-by-case basis. Non-RCRA Reg. Chemical Constituents: Constituents vary and will be determined on a case-by-case basis.	Collected In 4-Liter Bottles Or PVLTS In An Interim Status Storage Area	RT WW C1	Yes	Yes Does Not Meet Treatment Standards	Wastewater Corrosive/Non-CW	D002, See Rationale

Process Number	IDC/ WFC No.	CCCs RCRA Reg. Const.	CCCs Non-RCRA Reg. Const.	Comp. Codes	Description RCRA Reg. Chemical Constituents: Non-RCRA Reg. Chemical Constituents:	Collection	LDR Codes	RCRA Haz. Waste	RCRA-Land Disposal Restricted (Part 268)	Wastewater/Non-Wastewater: Debris/Non-Debris: Subcategory:	EPA Codes
771-39-5	336	00	02	NA	Wet Combustibles Line Generated RCRA Reg. Chemical Constituents: None Non-RCRA Reg. Chemical Constituents: Acid - General	55-Gallon Drum		No	No		
771-39-6	336	00	02	NA	Wet Combustibles RCRA Reg. Chemical Constituents: None Non-RCRA Reg. Chemical Constituents: Acid - General	55-Gallon Drum		No	No		

Process Number	IDC/ WFC No.	CCCs RCRA Reg. Const.	CCCs Non-RCRA Reg. Const.	Comp. Codes	Description RCRA Reg. Chemical Constituents: Non-RCRA Reg. Chemical Constituents:	Collection	LDR Codes	RCRA Haz. Waste	RCRA-Land Disposal Restricted (Part 268)	Wastewater/Non-Wastewater: Debris/Non-Debris: Subcategory:	EPA Codes
771-39-7	440	00	00	NA	Glass RCRA Reg. Chemical Constituents: None Non-RCRA Reg. Chemical Constituents: None	55-Gallon Drum		No	No		
771-39-8	339	24	00	NA	Leaded Glovebox Gloves RCRA Reg. Chemical Constituents: Lead Non-RCRA Reg. Chemical Constituents: None	Satellite Collection Area	RT D PB1	Yes	Yes Does Not Meet Treatment Standards	Debris Lead	D008

Process Number	IDC/ WFC No.	CCCs RCRA Reg. Const.	CCCs Non-RCRA Reg. Const.	Comp. Codes	Description RCRA Reg. Chemical Constituents: Non-RCRA Reg. Chemical Constituents:	Collection	LDR Codes	RCRA Haz. Waste	RCRA-Land Disposal Restricted (Part 268)	Wastewater/Non-Wastewater: Debris/Non-Debris: Subcategory:	EPA Codes
771-39-9	337	00	00	NA	Plastics (Line Generated) RCRA Reg. Chemical Constituents: None Non-RCRA Reg. Chemical Constituents: None	55-Gallon Drum		No	No		
771-39-10	480	00	00	NA	Light Metal (Line Generated) RCRA Reg. Chemical Constituents: None Non-RCRA Reg. Chemical Constituents: None	55-Gallon Drum		No	No		

Process Number	IDC/ WFC No.	CCCs RCRA Reg. Const.	CCCs Non-RCRA Reg. Const.	Comp. Codes	Description RCRA Reg. Chemical Constituents: Non-RCRA Reg. Chemical Constituents:	Collection	LDR Codes	RCRA Haz. Waste	RCRA-Land Disposal Restricted (Part 268)	Wastewater/Non-Wastewater: Debris/Non-Debris: Subcategory:	EPA Codes
771-39-11	401	??	??	1B	Miscellaneous Residue Solutions >5 g/ℓ RCRA Reg. Chemical Constituents: Constituents vary and will be determined on a case-by-case basis. Non-RCRA Reg. Chemical Constituents: Constituents vary and will be determined on a case-by-case basis.	Collected In 4-Liter Bottles Or PVLTS In An Interim Status Storage Area	RT WW C1	Yes	Yes Does Not Meet Treatment Standards	Wastewater Corrosive/Non-CW	D002, See Rationale
771-39-12	527	05	00	1A	Miscellaneous Basic Waste Solutions RCRA Reg. Chemical Constituents: Base Non-RCRA Reg. Chemical Constituents: None	Collected In 4-Liter Bottles Or PVLTS In An Interim Status Or Permitted Storage Area	RA WW N/A	Yes	Yes Requires Analysis	Wastewater No Applicable Subcategory	D002

Process Number	IDC/ WFC No.	CCCs RCRA Reg. Const.	CCCs Non-RCRA Reg. Const.	Comp. Codes	Description RCRA Reg. Chemical Constituents: Non-RCRA Reg. Chemical Constituents:	Collection	LDR Codes	RCRA Haz. Waste	RCRA-Land Disposal Restricted (Part 268)	Wastewater/Non-Wastewater: Debris/Non-Debris: Subcategory:	EPA Codes
771-39-13	505	00	00	3A	Miscellaneous Neutral Waste Solutions (Nonline) RCRA Reg. Chemical Constituents: None Non-RCRA Reg. Chemical Constituents: None	Collected In Drums Or 4-Liter Bottles		No	No		
771-39-14	503	02	00	1B	Miscellaneous Acid Waste Solutions RCRA Reg. Chemical Constituents: Acid - General Non-RCRA Reg. Chemical Constituents: None	Collected In 4-Liter Bottles Or PVLTS In An Interim Status Or Permitted Storage Area	RA WW N/A	Yes	Yes Requires Analysis	Wastewater No Applicable Subcategory	D002

Process Number	IDC/ WFC No.	CCCs RCRA Reg. Const.	CCCs Non-RCRA Reg. Const.	Comp. Codes	Description RCRA Reg. Chemical Constituents: Non-RCRA Reg. Chemical Constituents:	Collection	LDR Codes	RCRA Haz. Waste	RCRA-Land Disposal Restricted (Part 268)	Wastewater/Non-Wastewater: Debris/Non-Debris: Subcategory:	EPA Codes
771-39-15	505	2412	00	3A	Miscellaneous Neutral Waste Solutions (Line, Haz) RCRA Reg. Chemical Constituents: Lead Chromium Non-RCRA Reg. Chemical Constituents: None	Collected In Drums Or 4-Liter Bottles In Interim Storage Area Or Permitted Glovebox	RT WW PB1	Yes	Yes Does Not Meet Treatment Standards	Wastewater Lead	D007, D008
771-39-16	505	1224	00	3A	Miscellaneous Neutral Waste Solutions (Nonline, Haz) RCRA Reg. Chemical Constituents: Chromium Lead Non-RCRA Reg. Chemical Constituents: None	Collected In Drums Managed In A 90-Day Collection Area	RT WW PB1	Yes	Yes Does Not Meet Treatment Standards	Wastewater Lead	D007, D008

WASTE STREAM AND RESIDUE DESCRIPTION AND CHARACTERIZATION

Process Number: 771-39-1 **Title:** SOLUTION PROCESSING
IDC/WFC: 331 **Description:** Ful-Flo Filters

- ☐ RCRA Hazardous
- ■ RCRA Nonhazardous
- ☐ By Analytical Data
- ■ By Process Knowledge
- ☐ LDR Regulated
- ■ Not LDR Regulated
- ☐ Non-Wastewater
- ☐ Wastewater
- ☐ Product
- ☐ High Content Residue
- ■ Low Content Residue
- ■ Transuranic
- ■ Low-Level
- ☐ Nonradioactive
- ☐ Source/Special Nuclear Materials
- ☐ Debris
- ☐ Fuel Blending
- ☐ Uncontained Gas
- ☐ RCRA Sample
- ☐ Recyclable Material
- ☐ Recycled/Reused
- ☐ TSCA Reg. Waste
- ☐ Evaluated in Another Process

EPA Codes:

Description (Material, Type, Size, Color, etc.):
Acid Contaminated Ful-Flo Filters

How the Output is Generated:
During Filter Changeout

Generation Rate:
Variable

How the Output is Managed:
Placed In A 55-Gallon Drum, The Acid Filters Are Rinsed To Remove HNO_3 Residue And Dried

Chemicals/Contaminants in or on the Output:
Acid

Characterization Rationale:
Ful-Flo filters are line generated and can be a residue or a waste. Although the output is contaminated with corrosive liquid, the output cannot exhibit the characteristic of corrosivity because the waste form is not liquid. According to process knowledge, Ful-Flo filters do not exhibit D007 the characteristic code for chromium. This output is designated as a nonhazardous, low-content residue, TRU waste or low-level waste. The level or radioactivity to be determined at assay.

WASTE STREAM AND RESIDUE DESCRIPTION AND CHARACTERIZATION

Process Number: 771-39-2
IDC/WFC: 342

Title: SOLUTION PROCESSING
Description: Glovebox Filters, Acid Contaminated

- ▫ RCRA Hazardous
- ▪ RCRA Nonhazardous
- ▫ By Analytical Data
- ▪ By Process Knowledge
- ▫ LDR Regulated
- ▪ Not LDR Regulated
- ▫ Non-Wastewater
- ▫ Wastewater
- ▫ Product
- ▫ High Content Residue
- ▪ Low Content Residue
- ▪ Transuranic
- ▪ Low-Level
- ▫ Nonradioactive
- ▫ Source/Special Nuclear Materials
- ▫ Debris
- ▫ Fuel Blending
- ▫ Uncontained Gas
- ▫ RCRA Sample
- ▫ Recyclable Material
- ▫ Recycled/Reused
- ▫ TSCA Reg. Waste
- ▫ Evaluated in Another Process

EPA Codes:

Description (Material, Type, Size, Color, etc.):
Acid Contaminated HEPA Filters

How the Output is Generated:
During Filter Changeout

Generation Rate:
Variable

How the Output is Managed:
HEPA filters are disposed of in 55-gallon drums. Full drums are taken to the drum counter.

Chemicals/Contaminants in or on the Output:
Acid

Characterization Rationale:
This output is line generated as TRU waste. According to process knowledge, this output contains no RCRA hazardous constituents and exhibits no RCRA hazardous characteristics. Although the output is contaminated by acid vapors and a small amount of nitrate salt crystals can form on filters, this waste form is not considered to ba an oxidizer and does not exhibit the characteristic of corrosivity. The level of radioactivity will be determined by assay.

WASTE STREAM AND RESIDUE DESCRIPTION AND CHARACTERIZATION

Process Number: 771-39-3
IDC/WFC: 330

Title: SOLUTION PROCESSING
Description: Dry Combustibles Line Or Nonline

- ▫ RCRA Hazardous
- ▪ RCRA Nonhazardous
- ▫ By Analytical Data
- ▪ By Process Knowledge
- ▫ LDR Regulated
- ▪ Not LDR Regulated
- ▫ Non-Wastewater
- ▫ Wastewater

- ▫ Product
- ▫ High Content Residue
- ▪ Low Content Residue
- ▪ Transuranic
- ▪ Low-Level
- ▫ Nonradioactive
- ▫ Source/Special Nuclear Materials
- ▫ Debris

- ▫ Fuel Blending
- ▫ Uncontained Gas
- ▫ RCRA Sample
- ▫ Recyclable Material
- ▫ Recycled/Reused
- ▫ TSCA Reg. Waste
- ▫ Evaluated in Another Process

EPA Codes:

Description (Material, Type, Size, Color, etc.):
Dry combustibles may include paper, rags, wipes, etc.

How the Output is Generated:
During Tank Draining

Generation Rate:
Variable

How the Output is Managed:
Dry combustibles are placed in a 55-gallon drum in Room 114. Full drums are taken to the drum counter.

Chemicals/Contaminants in or on the Output:
None

Characterization Rationale:
This output is line or nonline generated in an RMMA. According to process knowledge, this output contains no RCRA hazardous constituents and exhibits no RCRA hazardous characteristics. This output can be a nonhazardous, low-content residue or a nonhazardous, transuranic or low-level waste. The level of radioactivity will be determined by assay of each collection container.

WASTE STREAM AND RESIDUE DESCRIPTION AND CHARACTERIZATION

Process Number: 771-39-4
IDC/WFC: 400

Title: SOLUTION PROCESSING
Description: Miscellaneous Residue Solutions <5 g/ℓ

- ■ RCRA Hazardous
- □ RCRA Nonhazardous
- □ By Analytical Data
- ■ By Process Knowledge
- ■ LDR Regulated
- □ Not LDR Regulated
- □ Non-Wastewater
- ■ Wastewater

- □ Product
- ■ High Content Residue
- ■ Low Content Residue
- ■ Transuranic
- ■ Low-Level
- □ Nonradioactive
- □ Source/Special Nuclear Materials
- □ Debris

- □ Fuel Blending
- □ Uncontained Gas
- □ RCRA Sample
- □ Recyclable Material
- □ Recycled/Reused
- □ TSCA Reg. Waste
- □ Evaluated in Another Process

EPA Codes:
D002, See Rationale

Description (Material, Type, Size, Color, etc.):
Liquid HNO_3 From Processing System Low Points (e.g., Piping And Tanks)

How the Output is Generated:
Solution is drained from processing system low points (e.g., piping and tanks) and stored in 4-liter bottles or annular tanks.

Generation Rate:
Variable

How the Output is Managed:
Collected In 4-Liter Bottles or PVLTS In An Interim Status Storage Area

Chemicals/Contaminants in or on the Output:
Liquid HNO_3

Characterization Rationale:
By process knowledge, the miscellaneous residue solutions are characterized as hazardous for corrosivity. The EPA Codes have not been identified because the residue solutions vary considerably in composition and characterization. The miscellaneous residue solutions will be sampled and characterized individually as described in the Sampling and Analysis Plan, Addendum 13 (1-10000-EWQA-1.6.1) and the appropriate EPA Codes will be assigned at that time. The chemical constituent code (??) is to be replaced by the actual numerical or alphanumeric constituent code on the drum traveler. This output is line generated, low-content or high content, mixed residue or a low-level or TRU mixed waste. This output does not meet the LDR treatment standards defined in 40 CFR 268.40. The output must be deactivated to remove the characteristic(s) of corrosivity. No underlying hazardous constituents have been identified for this output. Therefore, this output will meet the LDR treatment standards following deactivation.

WASTE STREAM AND RESIDUE DESCRIPTION AND CHARACTERIZATION

Process Number: 771-39-5
IDC/WFC: 336

Title: SOLUTION PROCESSING
Description: Wet Combustibles Line Generated

- ☐ RCRA Hazardous
- ■ RCRA Nonhazardous
- ☐ By Analytical Data
- ■ By Process Knowledge
- ☐ LDR Regulated
- ■ Not LDR Regulated
- ☐ Non-Wastewater
- ☐ Wastewater
- ☐ Product
- ☐ High Content Residue
- ■ Low Content Residue
- ■ Transuranic
- ■ Low-Level
- ☐ Nonradioactive
- ☐ Source/Special Nuclear Materials
- ☐ Debris
- ☐ Fuel Blending
- ☐ Uncontained Gas
- ☐ RCRA Sample
- ☐ Recyclable Material
- ☐ Recycled/Reused
- ☐ TSCA Reg. Waste
- ☐ Evaluated in Another Process

EPA Codes:

Description (Material, Type, Size, Color, etc.):
Wet combustibles may include paper, rags, wipes, etc. contaminated with nitric acid.

How the Output is Generated:
Generated During Tank Draining Activities

Generation Rate:
Variable

How the Output is Managed:
Wet combustibles are disposed of in a 55-gallon Drum. Full drums are taken to the drum counter.

Chemicals/Contaminants in or on the Output:
None

Characterization Rationale:
This output is line generated in an RMMA. According to process knowledge, this output contains no RCRA hazardous constituents and exhibits no RCRA hazardous characteristics. This output can be a nonhazardous, low-content residue or a nonhazardous, transuranic or low-level waste. The level or radioactivity will be determined by assay. Although wipes are exposed to acid they are rinsed and dried and cannot exhibit the corrosive characteristic because they are in solid form.

WASTE STREAM AND RESIDUE DESCRIPTION AND CHARACTERIZATION

Process Number: 771-39-6 **Title:** SOLUTION PROCESSING
IDC/WFC: 336 **Description:** Wet Combustibles

- ☐ RCRA Hazardous
- ■ RCRA Nonhazardous
- ☐ By Analytical Data
- ■ By Process Knowledge
- ☐ LDR Regulated
- ■ Not LDR Regulated
- ☐ Non-Wastewater
- ☐ Wastewater
- ☐ Product
- ☐ High Content Residue
- ☐ Low Content Residue
- ☐ Transuranic
- ■ Low-Level
- ☐ Nonradioactive
- ☐ Source/Special Nuclear Materials
- ☐ Debris
- ☐ Fuel Blending
- ☐ Uncontained Gas
- ☐ RCRA Sample
- ☐ Recyclable Material
- ☐ Recycled/Reused
- ☐ TSCA Reg. Waste
- ☐ Evaluated in Another Process

EPA Codes:

Description (Material, Type, Size, Color, etc.):
Wipes Contaminated With Nitric Acid

How the Output is Generated:
During Tank Draining Activities To Wipe Up Any Excess Liquid

Generation Rate:
Variable

How the Output is Managed:
The wipes are rinsed and dried to remove the nitric acid. The combustibles are then placed in a 55-gallon drum.

Chemicals/Contaminants in or on the Output:
Wipes Contaminated With Nitric Acid

Characterization Rationale:
This output is nonline generated as low-level waste. According to process knowledge, this output contains no RCRA hazardous constituents and exhibits no RCRA characteristics. Although wipes are exposed to acid they are rinsed and dried and cannot exhibit the corrosive characteristic because they are in solid form. The output is nonhazardous, low-level waste and the level of radioactivity will be determined by assay.

WASTE STREAM AND RESIDUE DESCRIPTION AND CHARACTERIZATION

Process Number: 771-39-7 **Title:** SOLUTION PROCESSING
IDC/WFC: 440 **Description:** Glass

- ▫ RCRA Hazardous
- ▪ RCRA Nonhazardous
- ▫ By Analytical Data
- ▪ By Process Knowledge
- ▫ LDR Regulated
- ▪ Not LDR Regulated
- ▫ Non-Wastewater
- ▫ Wastewater
- ▫ Product
- ▫ High Content Residue
- ▪ Low Content Residue
- ▪ Transuranic
- ▪ Low-Level
- ▫ Nonradioactive
- ▫ Source/Special Nuclear Materials
- ▫ Debris
- ▫ Fuel Blending
- ▫ Uncontained Gas
- ▫ RCRA Sample
- ▫ Recyclable Material
- ▫ Recycled/Reused
- ▫ TSCA Reg. Waste
- ▫ Evaluated in Another Process

EPA Codes:

Description (Material, Type, Size, Color, etc.):
Glassware Or Any Glass Waste (Except For Leaded Glass) Generated During Tank Draining Activities

How the Output is Generated:
Through Replacement Or Breakage Of Glassware

Generation Rate:
Variable

How the Output is Managed:
Glass waste is disposed of in a 55-gallon drum in Room 114. Full drums are taken to the drum counter.

Chemicals/Contaminants in or on the Output:
Glass

Characterization Rationale:
This output is line generated and can be a residue or a waste. According to process knowledge, this output contains no RCRA hazardous constituents and exhibits no RCRA hazardous characteristics. This output can be a nonhazardous, low-content residue or a nonhazardous, transuranic or low-level waste. The level of radioactivity will be determined by assay of each collection container.

WASTE STREAM AND RESIDUE DESCRIPTION AND CHARACTERIZATION

Process Number: 771-39-8
IDC/WFC: 339

Title: SOLUTION PROCESSING
Description: Leaded Glovebox Gloves

- ■ RCRA Hazardous
- □ RCRA Nonhazardous
- ■ By Analytical Data
- □ By Process Knowledge
- ■ LDR Regulated
- □ Not LDR Regulated
- □ Non-Wastewater
- □ Wastewater
- □ Product
- □ High Content Residue
- □ Low Content Residue
- ■ Transuranic
- ■ Low-Level
- □ Nonradioactive
- □ Source/Special Nuclear Materials
- ■ Debris
- □ Fuel Blending
- □ Uncontained Gas
- □ RCRA Sample
- □ Recyclable Material
- □ Recycled/Reused
- □ TSCA Reg. Waste
- □ Evaluated in Another Process

EPA Codes:
D008

Description (Material, Type, Size, Color, etc.):
Leaded glovebox gloves are used for personnel protection and handling plutonium and plutonium containing materials.

How the Output is Generated:
The gloves are replaced when damaged or on an as-needed basis.

Generation Rate:
Variable

How the Output is Managed:
Leaded gloves are collected in a satellite collection area.

Chemicals/Contaminants in or on the Output:
Lead

Characterization Rationale:
This output is line generated as TRU waste. According to process knowledge and supported by analytical data (G910049, 93G0191), the output contains a hazardous constituent, lead, and exhibits a hazardous characteristic of TC toxicity under RCRA and is designated as a TRU or low-level, mixed waste. The output may be contaminated with acid, but cannot exhibit this characteristic because the gloves are rinsed and dried before disposal. This output meets the definition of hazardous debris and can be treated by an appropriate technology in 40 CFR 268.45. The concentration-based treatment standard for lead, and the treatment standards for underlying hazardous constituents as defined in 40 CFR 268.48 must be met for treatment residue(s) prior to land disposal. The underlying hazardous constituents associated with this output are listed in Appendix E.

WASTE STREAM AND RESIDUE DESCRIPTION AND CHARACTERIZATION

Process Number: 771-39-9
IDC/WFC: 337

Title: SOLUTION PROCESSING
Description: Plastics (Line Generated)

- ▫ RCRA Hazardous
- ▪ RCRA Nonhazardous
- ▫ By Analytical Data
- ▪ By Process Knowledge
- ▫ LDR Regulated
- ▪ Not LDR Regulated
- ▫ Non-Wastewater
- ▫ Wastewater
- ▫ Product
- ▫ High Content Residue
- ▪ Low Content Residue
- ▪ Transuranic
- ▫ Low-Level
- ▫ Nonradioactive
- ▫ Source/Special Nuclear Materials
- ▫ Debris
- ▫ Fuel Blending
- ▫ Uncontained Gas
- ▫ RCRA Sample
- ▫ Recyclable Material
- ▫ Recycled/Reused
- ▫ TSCA Reg. Waste
- ▫ Evaluated in Another Process

EPA Codes:

Description (Material, Type, Size, Color, etc.):
Plastic Bottles, Plastic Bags, Etc., Generated During Glovebox Operations

How the Output is Generated:
Generated During Glovebox Operations, When Tank Draining Occurs, Or During Movement Of Waste Containers In Or Out Of Glovebox

Generation Rate:
Variable

How the Output is Managed:
55-Gallon Drum

Chemicals/Contaminants in or on the Output:
Plastic Bottles, Plastic Bags, Etc.

Characterization Rationale:
This output is line generated and can be a low-content residue or a transuranic waste. According to process knowledge, no hazardous constituents are used in this process and the output contains no RCRA hazardous constituents and exhibits no RCRA hazardous characteristics. Therefore, the output can be a nonhazardous, low-content residue or a nonhazardous, transuranic waste. The level of radioactivity will be determined by assay of each container.

WASTE STREAM AND RESIDUE DESCRIPTION AND CHARACTERIZATION

Process Number: 771-39-10
IDC/WFC: 480

Title: SOLUTION PROCESSING
Description: Light Metal (Line Generated)

- ☐ RCRA Hazardous
- ■ RCRA Nonhazardous
- ☐ By Analytical Data
- ■ By Process Knowledge
- ☐ LDR Regulated
- ■ Not LDR Regulated
- ☐ Non-Wastewater
- ☐ Wastewater
- ☐ Product
- ☐ High Content Residue
- ■ Low Content Residue
- ■ Transuranic
- ■ Low-Level
- ☐ Nonradioactive
- ☐ Source/Special Nuclear Materials
- ☐ Debris
- ☐ Fuel Blending
- ☐ Uncontained Gas
- ☐ RCRA Sample
- ☐ Recyclable Material
- ☐ Recycled/Reused
- ☐ TSCA Reg. Waste
- ☐ Evaluated in Another Process

EPA Codes:

Description (Material, Type, Size, Color, etc.):
Light Metal Such As Tools And Metal Parts Generated During Tank Draining Activities

How the Output is Generated:
During Parts Replacement Or Breakage

Generation Rate:
Variable

How the Output is Managed:
Light metal is disposed of in 55-gallon drums. Full drum are taken to the drum counter.

Chemicals/Contaminants in or on the Output:
Metal Parts

Characterization Rationale:
This output is line generated and can be a residue or a waste. According to process knowledge, this output contains no RCRA hazardous constituents and exhibits no RCRA hazardous characteristics. This output can be a nonhazardous, low-content residue or a nonhazardous, transuranic or low-level waste. The level of radioactivity will be determined by assay.

WASTE STREAM AND RESIDUE DESCRIPTION AND CHARACTERIZATION

Process Number: 771-39-11
IDC/WFC: 401

Title: SOLUTION PROCESSING
Description: Miscellaneous Residue Solutions >5 g/ℓ

- ■ RCRA Hazardous
- □ RCRA Nonhazardous
- □ By Analytical Data
- ■ By Process Knowledge
- ■ LDR Regulated
- □ Not LDR Regulated
- □ Non-Wastewater
- ■ Wastewater
- □ Product
- ■ High Content Residue
- ■ Low Content Residue
- ■ Transuranic
- ■ Low-Level
- □ Nonradioactive
- □ Source/Special Nuclear Materials
- □ Debris
- □ Fuel Blending
- □ Uncontained Gas
- □ RCRA Sample
- □ Recyclable Material
- □ Recycled/Reused
- □ TSCA Reg. Waste
- □ Evaluated in Another Process

EPA Codes:
D002, See Rationale

Description (Material, Type, Size, Color, etc.):
Liquid HNO_3 From Processing System Low Points (e.g., Piping And Tanks)

How the Output is Generated:
Solution is drained from processing system low points (e.g., piping and tanks) and stored in 4-liter bottles or annular tanks.

Generation Rate:
Variable

How the Output is Managed:
Collected In 4-Liter Bottles Or PVLTS In An Interim Status Storage Area

Chemicals/Contaminants in or on the Output:
Liquid HNO_3

Characterization Rationale:
By process knowledge, the miscellaneous residue solutions are characterized as hazardous for corrosivity. The EPA Codes have not been identified because the residue solutions vary considerably in composition and characterization. The miscellaneous residue solutions will be sampled and characterized individually as described in the Sampling and Analysis Plan, Addendum 13 (1-10000-EWQA-1.6.1) and the appropriate EPA Codes will be assigned at that time. The chemical constituent code (??) is to be replaced by the actual numerical or alphanumeric constituent code on the drum traveler. This output is line generated, low-content or high-content, mixed residue or a low-level or TRU mixed waste. An evaluation to determine if this output meets the LDR treatment standards defined in 40 CFR 268.40 will be made on a case-by-case basis.

WASTE STREAM AND RESIDUE DESCRIPTION AND CHARACTERIZATION

Process Number: 771-39-12
IDC/WFC: 527

Title: SOLUTION PROCESSING
Description: Miscellaneous Basic Waste Solutions

- ■ RCRA Hazardous
- □ RCRA Nonhazardous
- □ By Analytical Data
- ■ By Process Knowledge
- ■ LDR Regulated
- □ Not LDR Regulated
- □ Non-Wastewater
- ■ Wastewater
- □ Product
- ■ High Content Residue
- ■ Low Content Residue
- □ Transuranic
- □ Low-Level
- □ Nonradioactive
- □ Source/Special Nuclear Materials
- □ Debris
- □ Fuel Blending
- □ Uncontained Gas
- □ RCRA Sample
- □ Recyclable Material
- □ Recycled/Reused
- □ TSCA Reg. Waste
- □ Evaluated in Another Process

EPA Codes:
D002

Description (Material, Type, Size, Color, etc.):
Miscellaneous Basic Waste From Process Lines And Tanks

How the Output is Generated:
Solution is drained from processing system low points (e.g. piping and tanks) and stored in 4-liter bottles or annular tanks.

Generation Rate:
Variable

How the Output is Managed:
Collected In 4-Liter Bottles Or Portable Vacuum Liquid Transfer System (PVLTS) In An Interim Status Or Permitted Storage Area

Chemicals/Contaminants in or on the Output:
Corrosive Miscellaneous Basic Solutions That Could Contain KOH Or NAOH And Other Basic Solutions
Radionuclides: Plutonium

Characterization Rationale:
According to process knowledge and supported by analytical data (ongoing), this output exhibits the RCRA characteristic of corrosivity. This output is line generated in a Radiological Area, and is characterized as a mixed high content or low content residue. This output does not meet the LDR treatment standards defined in 40 CFR 268.40. The output must be deactivated to remove the characteristic of corrosivity. No underlying hazardous constituents have been identified for this output. An evaluation to determine if the treatment residues meet LDR treatment standards defined in 40 CFR 268.40 will be made on a case-by-case basis.

WASTE STREAM AND RESIDUE DESCRIPTION AND CHARACTERIZATION

Process Number: 771-39-13 **Title:** SOLUTION PROCESSING
IDC/WFC: 505 **Description:** Miscellaneous Neutral Waste Solutions (Nonline)

- ☐ RCRA Hazardous
- ■ RCRA Nonhazardous
- ☐ By Analytical Data
- ■ By Process Knowledge
- ☐ LDR Regulated
- ■ Not LDR Regulated
- ☐ Non-Wastewater
- ☐ Wastewater
- ☐ Product
- ☐ High Content Residue
- ☐ Low Content Residue
- ☐ Transuranic
- ■ Low-Level
- ☐ Nonradioactive
- ☐ Source/Special Nuclear Materials
- ☐ Debris
- ☐ Fuel Blending
- ☐ Uncontained Gas
- ☐ RCRA Sample
- ☐ Recyclable Material
- ☐ Recycled/Reused
- ☐ TSCA Reg. Waste
- ☐ Evaluated in Another Process

EPA Codes:

Description (Material, Type, Size, Color, etc.):
Wash Water, Water Drained From Fire Suppression System, Water Wall Liquid, Miscellaneous Neutral Solutions

How the Output is Generated:
This output consists of wash water from RCRA closure activities from washing floors; water drained from fire suppression systems, water drained from water walls, incidental water from roof leaks and solution drained from low points (e.g. piping and tanks) that is neutral pH.

Generation Rate:
Variable

How the Output is Managed:
Collected In Drums Or 4-Liter Bottles

Chemicals/Contaminants in or on the Output:
Water from fire suppression system could contain ethylene glycol.
Radionuclides: Plutonium, Americium

Characterization Rationale:
This output is nonline generated in a Radioactive Materials Management Area, and is known by the generator to always be low-level waste. According to process knowledge, this output contains no RCRA hazardous constituents, and exhibits no RCRA hazardous characteristics. It is designated as low-level, nonhazardous waste.

WASTE STREAM AND RESIDUE DESCRIPTION AND CHARACTERIZATION

Process Number: 771-39-14
IDC/WFC: 503

Title: SOLUTION PROCESSING
Description: Miscellaneous Acid Waste Solutions

- ■ RCRA Hazardous
- □ RCRA Nonhazardous
- □ By Analytical Data
- ■ By Process Knowledge
- ■ LDR Regulated
- □ Not LDR Regulated
- □ Non-Wastewater
- ■ Wastewater
- □ Product
- ■ High Content Residue
- ■ Low Content Residue
- □ Transuranic
- □ Low-Level
- □ Nonradioactive
- □ Source/Special Nuclear Materials
- □ Debris
- □ Fuel Blending
- □ Uncontained Gas
- □ RCRA Sample
- □ Recyclable Material
- □ Recycled/Reused
- □ TSCA Reg. Waste
- □ Evaluated in Another Process

EPA Codes:
D002

Description (Material, Type, Size, Color, etc.):
Miscellaneous Acid Waste From Process Lines And Tanks

How the Output is Generated:
Solution is drained from processing system low points (e.g. piping and tanks) and stored in 4-liter bottles or annular tanks.

Generation Rate:
Variable

How the Output is Managed:
Collected In 4-Liter Bottles Or PVLTS In An Interim Status Or Permitted Storage Area

Chemicals/Contaminants in or on the Output:
Corrosive: Miscellaneous Acid Solutions That Could Contain: Ferric Sulfamate, Sulfamic Acid, HCl, HNO_3, Etc.
Radionuclides: Plutonium

Characterization Rationale:
According to process knowledge and supported by analytical data (ongoing), this output exhibits the RCRA characteristic of corrosivity. This output is line generated in a Radiological Area, and is characterized as a mixed high content or low content residue. This output does not meet the LDR treatment standards defined in 40 CFR 268.40. The output must be deactivated to remove the characteristic of corrosivity. No underlying hazardous constituents have been identified for this output. An evaluation to determine if the treatment residues meet LDR treatment standards defined in 40 CFR 268.40 will be made on a case-by-case basis.

WASTE STREAM AND RESIDUE DESCRIPTION AND CHARACTERIZATION

Process Number: 771-39-15 **Title:** SOLUTION PROCESSING
IDC/WFC: 505 **Description:** Miscellaneous Neutral Waste Solutions (Line, Haz)

- ■ RCRA Hazardous
- □ RCRA Nonhazardous
- □ By Analytical Data
- ■ By Process Knowledge
- ■ LDR Regulated
- □ Not LDR Regulated
- □ Non-Wastewater
- ■ Wastewater
- □ Product
- □ High Content Residue
- ■ Low Content Residue
- ■ Transuranic
- □ Low-Level
- □ Nonradioactive
- □ Source/Special Nuclear Materials
- □ Debris
- □ Fuel Blending
- □ Uncontained Gas
- □ RCRA Sample
- □ Recyclable Material
- □ Recycled/Reused
- □ TSCA Reg. Waste
- □ Evaluated in Another Process

EPA Codes:
D007, D008

Description (Material, Type, Size, Color, etc.):
This output consists of wash water contaminated with lead or chromium, water drained from water walls, neutral solutions drained from low points (e.g. piping and tanks) that is neutral pH.

How the Output is Generated:
This output is generated from wash water from RCRA closure activities from washing floors or gloveboxes; water drained from water walls, solutions drained from low points (e.g. piping and tanks) that is neutral pH.

Generation Rate:
Variable

How the Output is Managed:
Collected In Drums Or 4-Liter Bottles In An Interim Storage Area Or Permitted Glovebox That Is Reasonably Expected To Be Contaminated With Lead And Or Chromium.

Chemicals/Contaminants in or on the Output:
This output could be contaminated with lead and possibly chromium.
Radionuclides: Plutonium, Americium

Characterization Rationale:
According to process knowledge and supported by analytical data (ongoing), this output exhibits the characteristic of toxicity for lead and chromium. This output is line generated in a Radiological Area, and is characterized as a mixed TRU waste or a mixed low content residue. This output does not meet the LDR treatment standards defined in 40 CFR 268.40. This output must meet the concentration-based treatment standards for lead and chromium and the treatment standards for the underlying hazardous constituents. The treatment standards for the underlying hazardous constituents as defined in 40 CFR 268.40 must be met for treatment residue(s) prior to land disposal. The underlying hazardous constituents associated with this output are listed in Appendix E.

WASTE STREAM AND RESIDUE DESCRIPTION AND CHARACTERIZATION

Process Number: 771-39-16 **Title:** SOLUTION PROCESSING
IDC/WFC: 505 **Description:** Miscellaneous Neutral Waste Solutions (Nonline, Haz)

- ■ RCRA Hazardous
- □ RCRA Nonhazardous
- ■ By Analytical Data
- ■ By Process Knowledge
- ■ LDR Regulated
- □ Not LDR Regulated
- □ Non-Wastewater
- ■ Wastewater
- □ Product
- □ High Content Residue
- □ Low Content Residue
- □ Transuranic
- ■ Low-Level
- □ Nonradioactive
- □ Source/Special Nuclear Materials
- □ Debris
- □ Fuel Blending
- □ Uncontained Gas
- □ RCRA Sample
- □ Recyclable Material
- □ Recycled/Reused
- ■ TSCA Reg. Waste
- □ Evaluated in Another Process

EPA Codes:
D007, D008

Description (Material, Type, Size, Color, etc.):
This output consists of wash water from RCRA closure activities, water drained from water walls, solutions drained from low points (e.g. piping and tanks) that is neutral pH that could be reasonably expected to be contaminated with lead or chromium.

How the Output is Generated:
This output is generated from wash water from RCRA closure activities, water drained from water walls, neutral solutions drained from low points (e.g. piping and tanks) that pH is neutral.

Generation Rate:
Variable

How the Output is Managed:
Drums Managed In A 90-Day Collection Area

Chemicals/Contaminants in or on the Output:
Could Reasonably Be Expected To Be Contaminated With Lead And/Or Chromium
Radionuclides: Plutonium, Americium

Characterization Rationale:
According to process knowledge and supported by analytical data (ongoing), this output exhibits the characteristic of toxicity for lead and chromium. This output is nonline generated in a Radiological Area, and is characterized as a mixed, low-level waste. This output does not meet the LDR treatment standards defined in 40 CFR 268.40. This output must meet the concentration-based treatment standards for lead and chromium and the treatment standards for the underlying hazardous constituents. The treatment standards for the underlying hazardous constituents as defined in 40 CFR 268.40 must be met for treatment residue(s) prior to land disposal. The underlying hazardous constituents associated with this output are listed in Appendix E.

40.0 PROCESS 771-40 SET 34, DECONTAMINATION & DECOMMISSIONING

Set 34, Room 148 - During Set 34 Decontamination and Decommissioning (D&D), electrical conduit, external equipment and debris, tanks, and external non-process piping will be removed, size reduced where necessary to facilitate packaging, and disposed of as low-level or TRU waste. This set includes Room 148, Tanks D-1976, D-1977, D-1978, D-1979, D-1984, D-1987, D-1990, D-1991, D-1992 and D-1993. These lead shielded annular tanks were never put into service and should be cold (non-contaminated). Set also includes electrical conduit, ladders, tool boxes, cabinets, welding units, waste containers, miscellaneous furniture, equipment and debris. Radioactive material contamination is known to exist under the stainless steel floor cover. Asbestos is expected to be present in the form of thermal systems insulation on pipes in the area.

THIS PAGE INTENTIONALLY LEFT BLANK

41.0 PROCESS 771-41 SET 37, DECONTAMINATION & DECOMMISSIONING

Set 37, Room 181A - During Set 37 D&D, electrical conduit, external equipment and debris, a glovebox, internal glovebox equipment, tanks, and external non-process piping will be removed, size reduced to facilitate packaging, and disposed of as low-level or TRU waste. This set includes Glovebox SR14, Tanks D-1400, D-1401, D-1402, D-1406, D-1407, D-1409, D-1410, D-1411, D-1414 and D-1415, an electrical panel, a scrubber refrigeration unit and associated valves and piping. The west end of the room contains 55-gallon drums of High-Level Mixed Waste. SR14 contained a solvent extraction process for uranium bearing acidic solutions. Acids and bases were used in the stripper/scrubber and residual amounts are expected to be present. CFC's and chromates are present in the chiller/refrigeration unit. Oils and lubricants are expected to be present on components and equipment reservoirs. Lead plate shielding, leaded glass windows and lead lined gloves are present on the glovebox. Gloveboxes contain pumps, glass pipe, FulFlo filters, piping, valves and debris. Set 37 also contains 2 heat exchangers electrical conduit, a transformer, alarm and control panels, electric motors, drum lifting devices, a chiller unit and cooling water surge tank, cabinets, overhead piping, vacuum traps, chemical pumps, criticality drain, miscellaneous debris, exhaust piping for Glovebox SR-14 and off gas piping for the scrubber. Glovebox SR-14 contains a dissolution column that is listed as Idle equipment #771-0065. Part of Room 181A is permitted unit 771.1 which stores liquid and solid mixed residues. Satellite 771-1935 located in middle of room, collects low-level lead waste.

THIS PAGE INTENTIONALLY LEFT BLANK

42.0 PROCESS 771-42 SET 40, DECONTAMINATION & DECOMMISSIONING

Set 40, Room 183 - During Set 40 D&D, electrical conduit, external equipment and debris, and external non-process piping will be removed, size reduced to facilitate packaging, and disposed of as low-level or TRU waste. This set includes Rooms 183, 184 and 185. Room 183 is a former residue drum storage area. Room 184 is a former residue storage vault containing 183 storage bins. Each of the bins contains a water-filled storage container, a water-filled door and associated framework. Room 185 is a small storage room containing personnel alpha monitors (combos), carts and shelving. Residual fixed radiological contamination from past glovebox operations exists. Insulated piping in the overhead areas is expected to contain asbestos. Room 183 is permitted unit 771.1 used for storing solid mixed residues. 90-Day Unit 2465 is currently active for excess chemicals.

THIS PAGE INTENTIONALLY LEFT BLANK

43.0 PROCESS 771-43 SET 44, DECONTAMINATION & DECOMMISSIONING

Set 44, Room 179 Maintenance Area - During Set 44 D&D, electrical conduit, external equipment and debris, a glovebox, internal glovebox equipment, and external non-process piping will be removed, size reduced to facilitate packaging, and disposed of as low-level or TRU waste. This set includes Rooms 178, 179, 179A and Glovebox 179A. This former maintenance machine shop contains approximately 20 machine tools, including lathes, mills, saws and other maintenance equipment, that may become low-level waste. Asbestos insulation and solid surfacing materials are present. Lead and other metals were machined and formed on the shop tools. Lubricating oils, cutting oils and solvents were used and stored here. Freon was commonly used as a degreaser. The glovebox in Room 179A was primarily used for maintenance of contaminated equipment. Equipment in Set 44 includes 24 cabinets, 5 benches, 2 mills, 4 drill presses, 3 ladders, 7 tool boxes, 4 grinders, 3 lathes, 3 welders and miscellaneous saws, tables, presses, carts, racks, lifting aids, etc. Also included in this set are electrical conduit, debris and overhead non-process piping and valves. Some equipment such as mills and drill presses are listed in the Building 771 Idle Equipment Inventory.

THIS PAGE INTENTIONALLY LEFT BLANK

The Appendix A for this WSRIC Book has been deleted.

PADC-93-01523

THIS PAGE INTENTIONALLY LEFT BLANK

The following sheets describe processes that no longer exist in this building. The process descriptions are given for historical information.

PADC-93-01522

1.0 PROCESS 771-1: HIGH-LEVEL DISSOLUTION

The High-Level Dissolution Process, located in Rooms 114 and 149, dissolves low- and high-purity plutonium content residues (Glovebox 3 high purity, Glovebox 24 low purity). The principal process feed is foundry oxide. Additional sources of feed include dirty out-of-specification or impure oxides and fluorides, and oxide and fluoride dissolution heels (undissolved solids resulting from incomplete dissolution). High-Level Dissolution is also known as "Fast Side" dissolution, since the plutonium nitrate solution from this process is generally pure enough to by-pass the Anion Exchange purification process. Equipment used in this process includes tanks, pumps, pipes, air-lift dissolver pots, various filters, a screw conveyor, a hot plate, and an off-gas condenser. Figure 1.1 gives the inputs, process flow, and outputs associated with the High-Level Dissolution Process.

The process begins when the residues contained in reusable metal cans enter the glovebox by a bag-in procedure, wherein cans of the plutonium oxides, plutonium fluorides, and other plutonium residues are passed through the plastic bag port entry to the glovebox enclosure. The feed materials are screened to remove pieces of nonplutonium metals and oxide too large to pass through the screen, then weighed to determine the amount of calcium fluoride (used as a catalyst to aid dissolution) needed for the process. The feed materials are then placed onto the screw conveyor which feeds the residues into the first dissolution pot at a constant rate (at A, Figure 1.1). In the first dissolution pot, nitric acid is introduced as the digestion medium. Steam is used in a coil for heating the solution in all three digestion pots. The solution flows by gravity into the second and third pots, where a majority of the residues are dissolved in the heated nitric acid. The resulting plutonium nitrate is pulled by vacuum through the R-6 filter for removal of undissolved solids (at B, Figure 1.1), and then through a cartridge Ful-Flo filter to remove the remaining particulates (at C, Figure 1.1). The undissolved solids are stored and then recycled back into the Dissolution Process.

The plutonium nitrate solution is then transferred by process piping to storage tanks, Tanks D-548, D-549, and D-550 (Room 114). Low-purity solutions (nitric acid condensate) are transferred to Tanks D-971 and D-972 before further processing in Batching or Feed Precipitation Evaporation. Undissolved solids, or heels, including impure fluoride heels and low-purity oxide heels are recovered from the dissolver pots, R-6 filter, Ful-Flo filter; pan filtered; dried on a hot plate (at D, Figure 1.1), packaged; bagged-out of the glovebox; and staged for high-level redissolution. Oxide from the initial screening is reincorporated into the process and the nonplutonium metal is placed in a metal container. Off-gas from the dissolvers condenses by cooling in the off-gas condenser (at E, Figure 1.1) and continues on to the fume scrubber. The steam condensate is transferred to the composite steam condensate collection tanks, Tanks D-923 and D-927. Nonline dry combustibles, wet combustibles, leaded gloves—acid contaminated, used Ful-Flo and R-6 pad filters, HEPA filters, glass, and light metal are initially collected in the appropriate holding drum in Room 114 or 149 then taken to the drum counter for assay. Empty reusable cans are returned to operations for reuse. Glovebox and condenser exhaust is vented to the fume scrubber in Room 149. Process Table 771-1 presents the outputs associated with High-Level Dissolution and provides their dispositions and hazardous character.

2.0 PROCESS 771-2: LOW-LEVEL DISSOLUTION

The Low-Level Dissolution Process, located in Room 149, Gloveboxes 23 and 25, dissolves high-impurity low plutonium content residues to recover plutonium in two identical process lines. These two lines are currently dedicated to dissolution of sand, slag, and crucible (SS&C) from the Reduction and Button Break-Out Process. The Low-Level Dissolution Process uses tanks, pumps, pipes, a screw conveyor, air-lift dissolver pots or vessels, various filters, a hot plate, and a condenser. Figure 2.1 shows the inputs, process flow, and outputs associated with the Low-Level Dissolution Process.

The SS&C comes in 2- or 4-liter poly bottles and is bagged into one of the two dissolution lines and fed by screw conveyor into the first dissolver pot. Unlike High-Level Dissolution, calcium fluoride is not added with the feed as the slag is essentially calcium fluoride. Nitric acid is added to the first dissolver pot along with the SS&C (at A, Figure 2.1). The dissolver pots are 6-inch-diameter cylinders, which are geometrically designed to be critically safe for the low-concentration plutonium solution. Steam-heated bayonet coils are used to heat the solution to approximately 100°C. Aluminum nitrate is added to the first dissolver pot as a fluoride-complexing agent to prevent fluoride corrosion of downstream process equipment. The Plutonium nitrate solution flows out of the last dissolver pot to a R-6 filter for removal of undissolved solids (at B, Figure 2.1) and then through a 1-micron cartridge filter for final particulate removal (at C, Figure 2.1). Water is used for washing the heels at the secondary R-6 filter. Undissolved solids, or heels, are collected and dried on a hot plate (at D, Figure 2.1). Off-gas from the dissolver pots condenses by cooling in the off-gas condenser (at E, Figure 2.1). Vapors from the off-gas condenser go to a HEPA filter and then to the fume scrubber (Process 20).

The ion column feed (plutonium nitrate solution) is transferred via process piping to storage Tanks D-971 and D-972 prior to further processing in the Anion Exchange Process. The heels are counted for plutonium content and stored prior to discard or recycling. Most of these heels are below the Economic Discard Limit (EDL). Any heels above the EDL are staged for redissolution. The water condensate from the steam-heated coils is transferred to the composite steam condensate collection tanks, Tanks D-923 and D-927. Potassium hydroxide used for flushing the condenser is first collected in Tank D-928 and then transferred to Caustic Filtration only when dissolving incineration ash. Nonline dry combustibles, wet combustibles, leaded gloves—acid contaminated, HEPA glovebox filters—acid contaminated, glass, and light metal are initially collected in the appropriate holding drum in Room 114 and then sent to the drum counter to be assayed. A RCRA collection area will be established for used Ful-Flo and R-6 pad filters if they are generated. Empty metal reusable cans are returned to production for reuse. Glovebox and condenser off-gas exhausts are vented to the fume scrubber in Room 149. Process Table 771-2 presents the outputs associated with Low-Level Dissolution and provides their dispositions and hazardous character.

Historically, the two process lines currently used for this process have also processed incinerator ash and graphite fines; however, the incineration process is not in operation at this time, and graphite fines are currently stored as backlog residue.

3.0 PROCESS 771-3: CATION EXCHANGE

The Cation Exchange Process, located in Room 149, Glovebox 29, processes chloride solutions from the laboratories in Buildings 371, 559, and 771. These chloride solutions cannot be processed in the other production areas due to chloride corrosion of stainless-steel pipes and equipment. Equipment used in this process consists of ion columns with resin, tanks, pumps, and pipes. Figure 3.1 shows the inputs, process flow, and outputs associated with the Cation Exchange Process.

The chloride solutions, contained in 4-liter plastic bottles, are introduced into the glovebox through the bag-in access port. They are then transferred by vacuum from the bottles to one of two feed tanks (at A Figure 3.1). The solutions are sampled and either nitric acid or water is then added to the tank to adjust process parameters.

Four steps are involved in the Cation Exchange Process (all occur at B, Figure 3.1). The first step, reconditioning, allows the ion exchange columns to be flushed with dilute nitric acid in order to adjust the valence of the resin beads. In the loading step, chloride feed solution is pumped through one or two sets of ion exchange columns; each set includes two columns. The plutonium then loads onto the cation exchange resin while most of the impurities stay in the solution, which is referred to as effluent as it leaves the columns. The third step, washing, uses dilute nitric acid to remove any residual impurities from the cation exchange resin. The eluting step uses concentrated nitric acid to strip the plutonium from the resin. The resulting concentrated plutonium solution (eluate) is now in the nitrate form. This nitric-acid-based solution is compatible with the rest of the Building 771 processing system.

The eluate is transferred via process piping to storage tank for further processing in Anion Exchange. The effluent from loading and washing is transferred via process piping to Storage Tanks D-362 and D-363, where the solution is sampled for plutonium concentration. If the solution is above the Economic Discard Limit (EDL), the solution is recycled through Cation Exchange. However, if the solution is below the EDL, the solution is transferred to Tank 208 and is sampled before it is transferred to Building 774 Waste Treatment. Nonline dry combustibles, wet combustibles, plastic, glass, resin, and light metal are all placed in the appropriate 55-gallon drum in Room 149 or 114 and then taken to the drum counter to be assayed. Leaded gloves and glovebox filters are placed in satellite collection areas. A RCRA collection area will be established for Ful-Flo filters, if they are generated in the future. Glovebox exhaust is directed to the filter plenum. Process Table 771-3 presents the outputs associated with Cation Exchange and defines their dispositions and hazardous character.

Tanks 208, D-362, and D-363 are destined for RCRA closure and there are no plans for further use of these tasks.

4.0 PROCESS 771-4: ANION EXCHANGE

The Anion Exchange process is located in Room 149. Gloveboxes 42 and 43D are cleaned and maintained. Figure 4.1 shows the inputs, process flow, and outputs associated with the Anion Exchange Process.

Line generated wet combustibles, leaded gloves, glovebox HEPA filters, glass, light metal, and resin are all disposed of in the appropriate 55-gallon drums in Room 149, and then taken to the drum counter to be assayed. Glovebox exhaust is vented through the building filter plenum. Process Table 771-4 presents the outputs associated with the Anion Exchange Process and provides their dispositions and hazardous character.

A RCRA collection area has been established for Ful-Flo filters.

5.0 PROCESS 771-5: FEED EVAPORATION

The Feed Evaporation Process, located in Room 114, Glovebox 14, concentrates the plutonium nitrate solution for more efficient precipitation. The feed principally consists of plutonium nitrate product from High-Level Dissolution and Anion Exchange. The process uses tanks, pipes, valves, an evaporator, and a condenser. Figure 5.1 shows the inputs, process flow, and outputs associated with the Feed Evaporation Process.

The feed solution is transferred via internal process piping to the evaporator chamber (at A, Figure 5.1). The evaporator is heated by steam and the vapors are condensed in a water-cooled condenser to become distillate (at B, Figure 5.1).

The steam condensate is transferred to Holding Tanks D-923 and D-927 prior to transfer to Building 774, Waste Treatment. The filtrate recovery nitrate feed (i.e., evaporator bottoms) is transferred to Tanks D-503 through D-506, D546, D547, and then to Precipitation Feed Batching, Process 771-6. The distillate is collected in Tanks D-509 and D-510, transferred to Tanks D-549 and D-951, and then transferred to Building 774, Waste Treatment. Tank D950 is the transfer tank to 774. Tanks D549 and D951 are collection tanks. Liquid is sampled and sent to Tank D950 then to Building 774. Tanks D-503 through D-506, D-509, and D-510 are destined for RCRA closure and there are no plans for further use. Plutonium nitrate solution collected by the floor pick-up is transferred to Tanks D-500 through D-502. Off-gases are directed to the fume scrubber. Nonline dry combustibles, wet combustibles, used Ful-Flo filters, plastic, glass, and light metal are all placed in the appropriate 55-gallon drums in Room 114 and then taken to the drum counter to be assayed. Leaded gloves are placed in a satellite collection area. Glove box filters which have been acid contaminated will be managed as RCRA hazardous waste. Glove box filters which have not been exposed to acids will be managed as nonhazardous. Glovebox exhaust is directed to the filter plenum. Process Table 771-5 presents the outputs associated with the Feed Evaporation Process and defines their dispositions and hazardous character.

6.0 PROCESS 771-6: PRECIPITATION FEED BATCHING

The Precipitation Feed Batching Process, located in Room 114, Glovebox 13, prepares plutonium nitrate feed for the precipitation process. The Precipitation Feed Batching Process adjusts the acid, plutonium, sulfate, and iron concentrations of the feed for further processing. The process uses various tanks, pipes, pumps, and valves. Figure 6.1 shows the inputs, process flow, and outputs associated with the Precipitation Feed Batching Process.

Plutonium solutions from the various feed sources are combined in the batching tank to achieve the desired concentrations for further processing (at A and B, Figure 6.1). Sulfuric acid may be added to adjust the sulfate concentration. Nitrate or ion column eluate, evaporator bottoms, and nitric acid are all inputs to the process. Feeds are batched in Tanks D-544 and D-545 and then transferred to Peroxide Precipitation, Process 771-7.

Outputs, including nonline dry combustibles, wet combustibles, plastic, glass, and light metal, are all placed in the appropriate drums in Room 114, then taken to the drum counter to be assayed. Leaded gloves and glovebox filters are placed in satellite collection areas. Nitrate feed is transferred to Feed Preparation and Evaporation, Process 771-05. Evaporator bottoms are transferred to Peroxide Precipitation. Ion column feed is sent to Anion Exchange, Process 771-4, for recovery. Ful-flo filters are bagged out, placed in clam shell and sent to the drum counter. NDA places containers into drums. Glovebox exhaust is vented through the building filter plenum. Process Table 6.1 presents the outputs associated with the Precipitation Feed Batching Process and defines their dispositions and hazardous character.

7.0 PROCESS 771-7: PRECIPITATION

The Precipitation Process, located in Room 114, Glovebox 15, is both a purification process as well as the process that separates the plutonium from the nitrate solution. This process is the only purification step for solutions from High-Level Dissolution. For solutions from Low-Level (high impurity) Dissolution, purification by precipitation augments ion exchange purification. The process uses tanks, pumps, pipes, various filters, vessels, and a precipitation digester. Figure 7.1 shows the inputs, process flow, and outputs associated with the Precipitation Process.

Batched feed solution is transferred via process piping to the precipitation feed tanks, where the solution is recirculated through a Ful-Flo filter cartridge (at A, Figure 7.1). The solution is then fed into a mechanically agitated, chilled vessel (precipitation pot) where hydrogen peroxide is added (at B, Figure 7.1). The solution then flows into a chilled digester pot, where additional hydrogen peroxide is introduced and further agitation occurs (at C, Figure 7.1). After a set time in the digester, the slurry is passed over a vacuum drum filter and washed with .35N nitric acid (at D, Figure 7.1). As the solid plutonium peroxide cake forms on the vacuum drum it is cut away and collected in boats (cans). Nitrate feed, nitric acid, and sulfuric acid are used in the process.

The filtrate is transferred via process piping to one of two refrigerated receiving vessels, Vessels D-525 and D-526 located in Glovebox 11, which then feed into the Evaporation Process. The plutonium peroxide cake is transferred within the glovebox system to the Calcination Process, Glovebox 16. Floor pick-up liquids are transferred to Slop Pot D-531 which feeds to the Evaporation process. Wet combustibles, dry combustibles, glass, and light metal are all placed in the appropriate 55-gallon drum in Room 114 then taken to the drum counter to be counted. Leaded gloves and glovebox filters are placed in satellite collection areas. A RCRA collection area will be established for Ful-Flo filters if they are generated in the future. Glovebox exhaust is vented to the building filter plenum system. Process Table 771-7 presents the outputs associated with the Precipitation Process and defines their dispositions and hazardous character.

8.0 PROCESS 771-8: PRECIPITATION FILTRATE EVAPORATION

The Precipitation Filtrate Evaporator Process, located in Room 114, Glovebox 11, destroys the hydrogen peroxide in filtrate from the Precipitation Process by heat evaporation. It also concentrates the unrecovered plutonium in the filtrate solution. Equipment used in this process includes tanks, pipes, pumps, an evaporator, and a condenser. Figure 8.1 shows the inputs, process flow, and outputs associated with the Precipitation Filtrate Evaporation Process.

The peroxide precipitation filtrate is transferred from filtrate receiving Vessels D-525 and D-526 via internal process piping to the steam-heated filtrate evaporator (at A, Figure 8.1). As the heat decomposes the peroxide, the solution is concentrated by evaporation. The concentrated evaporator bottoms are transferred to receiving Tanks D-503 through D-506. The distillate is condensed by a water-cooled condenser (at B, Figure 8.1), then flows into distillate receiving Tanks D-529 and D-530 where it is sampled. Floor pick-up from Process 7 and floor pick-up from Glovebox 11 is transferred to Slop Pot D-531. The floor pick-up solution is processed through the evaporator.

The distillate is transferred via process piping to waste processing in Building 774. The evaporator bottoms are sampled in the Batching glovebox and then sent to Anion Exchange for purification processing. Off-gas from the evaporator exhausts through the distillate condenser and continues on to the Fume Scrubber. Steam condensate from the steam-heated filtrate evaporator is piped to Tanks D-923 and D-927. Nonline dry combustibles, line-generated wet combustibles, glass, and light metal are all taken to the appropriate 55-gallon drum in Room 114, then to the drum counter to be assayed. Leaded gloves and glovebox filters are placed in satellite collection areas. A RCRA collection areas will be established for Ful-Flo filters if they are generated in the future. Glovebox exhaust is vented through the building filter plenums. Process Table 771-8 presents the outputs associated with the Precipitation Filtrate Evaporation Process and defines their dispositions and hazardous character.

9.0 PROCESS 771-9: CALCINATION

Calcination, located in Room 114, Gloveboxes 16 and 16A, removes excess nitric acid and moisture from the plutonium peroxide cake formed in the Precipitation Process. The nitric acid must be removed to prevent corrosion of the hydrofluorination equipment. The process uses a screw feeder, rotary tube calciner, scrubber, filter, hot plate, scale, and pneumatic transfer system. Figure 9.1 shows the inputs, process flow, and outputs associated with Calcination.

The calciner consists of a slightly inclined horizontal rotary tube furnace. The plutonium peroxide cake is fed into the furnace via a screw feeder (at A, Figure 9.1). Air, introduced into the calciner (at B, Figure 9.1), carries acid and water vapor to the off-gas system. The Calcination Process converts plutonium peroxide into plutonium green cake. Because some of the plutonium green cake is entrained in off-gas the off-gas passes through a packed-bed nitric acid scrubber to dissolve the green cake (at C, Figure 9.1) from the off-gas stream. The scrubber is loaded with Tellerettes which require occasional replacement.

The plutonium product or calcined peroxide cake (also known as "green cake") is transferred by an enclosed pneumatic transfer line to a storage glovebox, Glovebox 8 or 9, to await transfer to the Hydrofluorination Process. The spent nitric acid scrubber filtrate solution is transferred via enclosed process piping to Tanks D-500, D-501, and D-502, before being processed through Anion Exchange. Other residues produced in the Calcination Process include grease oxide and impure greencake which have been collected from the glovebox floor of the Calcination Process. Both are placed in temporary storage, pending recovery. Boats (empty reusable cans) are returned to Precipitation for reuse. The scrubber off-gas stream continues on through a demister trap to the filter plenum via the calciner vacuum system. Nonline dry combustibles, line-generated wet combustibles, Tellerettes, glovebox filters, glass, and light metal are gram estimated and taken to the appropriate 55-gallon drum in Room 114, then to the drum counter to be assayed. Leaded gloves are placed in a satellite collection area. A RCRA collection area will be created for Ful-Flo filters if they are generated in the future. Glovebox exhaust is vented through the building filter plenums. Process Table 771-9 presents the outputs associated with the Calcination Process and defines their dispositions and hazardous character.

10.0 PROCESS 771-10: HYDROFLUORINATION

The Hydrofluorination Process, located in Building 771, Room 114, Glovebox 7, converts calcinated plutonium peroxide cake, "green cake," into plutonium tetrafluoride in preparation for metal reduction. Equipment used includes tanks, pumps, Glovebox 7A vacuum pump, heat exchanger, scales, screw feeder, rotary tube fluorinator, hot plate, various filters, and a pneumatic transfer system. Figures 10.1 and 10.2 show the inputs, process flow, and outputs associated with Hydrofluorination.

Plutonium oxide is transferred to the hydrofluorination glovebox via an enclosed pneumatic transfer tube. The oxide is manually fed into a hopper (at A, Figure 10.1), from which it is augured into the hydrofluorinator, a slightly inclined, horizontal rotary tube furnace (at B, Figure 10.1). Anhydrous hydrogen fluoride gas is introduced at the discharge zone of the tube. The off gas, which consists of unreacted hydrogen fluoride, water vapor, oxygen, and some entrained plutonium particles, is passed through a potassium hydroxide scrubber, Glovebox 6 (Figure 10.2).

The product, plutonium tetrafluoride, is collected in polypropylene bottles and transferred via pneumatic transfer tube to the Reduction and Button Breakout Process. The sludge (nonspecification fluoride) from the scrubber is picked up on the R-4 Filter in Glovebox 6 and stored for recycling back to the High-Level Dissolution Process. The spent potassium hydroxide or caustic from the scrubber is passed through a cartridge filter and transferred to Caustic Waste Tanks 713 and 714 for sampling and subsequent transfer to Building 774, Waste Treatment. Plutonium oxides and fluorides, including nonspecification fluorides collected as dust from the glovebox floor and process equipment, are placed in a can, weighed, bagged out of the glovebox, and stored temporarily within Building 771 for recycling back to the High-Level Dissolution Process. Line and nonline dry combustibles, line and nonline wet combustibles, leaded gloves, used Ful-Flo filters, Glovebox filters, and light metal are all taken to the appropriate 55-gallon drum in Room 114, then to the drum counter to be assayed. Hydrogen fluoride off gas is transferred to Glovebox 6 and neutralized by the scrubber. Glovebox exhaust is vented through the filter plenum. Process Table 771-10 presents the outputs associated with the Hydrofluorination Process and provides their dispositions and hazardous character.

11.0 PROCESS 771-11: REDUCTION AND BUTTON BREAK-OUT

Reduction and Button Break-out, located in Room 114B, Glovebox 17, is the final step in the plutonium recovery process producing a purified plutonium metal product intended for use in the plutonium foundry operations. The process uses vessels, scales, a bath, and induction furnaces. Figure 11.1 shows the inputs, process flow, and outputs associated with the Reduction and Button Break-Out Process.

To prepare for a reduction operation, a magnesium oxide crucible is placed in the stainless-steel reduction vessel (at A, Figure 11.1). The annulus (the void between the outside of the crucible and the stainless-steel vessel) of the vessel is filled with magnesium oxide sand. The plutonium tetrafluoride is mixed with calcium metal and a pyrotechnic initiator (magnesium metal, sodium peroxide and potassium iodate) and placed in the crucible. The vessel is sealed, placed in an induction furnace (at B, Figure 11.1), purged with argon, and heated until the reaction occurs. Argon is used to purge oxidizers from the atmosphere within the vessel.

In Button Break-out (at C, Figure 11.1), the plutonium metal is manually separated from the crucible and reaction by-products. The sand is screened and reused. The sand is replaced twice a year, at inventory time. The metal button is stamped with an identification number, and then pickled in a water bath to remove any residual calcium (at D, Figure 11.1). Once the button is dried, a drill press is used to take metal turnings from the button for analysis (at E, Figure 11.1). Occasionally, the reduction process fails, and the unused calcium metal is removed from the glovebox.

The metal button is bagged out of the glovebox, placed in a can, and transferred to the foundry. The plutonium samples or metal turnings from the plutonium metal buttons are initially collected in Room 114B, Glovebox 17, then sent to the analytic lab for impurity analysis. The used sand, slag (calcium oxide and pyrotechnic residue), and crucible, which contains recoverable quantities of plutonium, are bagged out. After assay, the used sand, slag, and crucibles continue on to Crushing and Grinding (771-14), before they are processed in Low-Level Dissolution (771-2). The scrap plutonium fines or metal turnings are initially stored in Room 114, Glovebox 17; they are then moved to the Metal Burning Process (771-13) to convert the pyrophoric metal to the noncombustible oxide form, and finally are transferred to the High-Level Dissolution process (771-1). The water from the pickling step is transferred via internal process piping to Storage Tanks D-952, D-953, D-954, and D-955, and then transferred to the Anion Exchange process (771-4). Dirty fluoride is swept up off the floor and sent for processing in High-Level Dissolution (771-1). Sand, removed at inventory time, and unused calcium metal are placed in separate cans and removed from the glovebox for assay. Leaded gloves are placed in a satellite collection area. Nonline dry combustibles, line wet combustibles including paper, rags, wipes, cloth, or plastic, Ful-Flo filters, glovebox filters, MgO crucibles, and light metal are all taken to the appropriate 55-gallon drum in Room 114, then to the drum counter to be assayed. Glovebox exhaust is vented through the building filter plenum. Process Table 771-11 presents the outputs associated with the Reduction and Button Break-out Process and defines their dispositions and hazardous character.

12.0 PROCESS 771-12: MISCELLANEOUS RESIDUE PROCESSING

Miscellaneous Residue Processing, located in Room 114, Glovebox 2, includes HEPA filter processing, pipe reduction, and sludge dissolution. This process is not in operation at this time, but may resume in the future. Equipment used in the process includes a hot plate, power saws, dissolver pots, and storage tanks. Figure 12.1 shows the inputs, process flow, and outputs associated with the Miscellaneous Residue Processing Process.

Glovebox or plenum filters that are above the EDL are disassembled for recovery in HEPA filter processing. First, the filters are manually shaken to loosen dust before they are disassembled and the dust is swept from the floor and placed into cans.

Steam condensate is piped to Tank D-923 or D-927, then transferred to Building 774, Waste Treatment. Line dry and line wet combustibles, Ful-Flo filters, glovebox filters, glass, filter media, and light metal are all taken to the appropriate 55-gallon drums in Room 114, then to the drum counter for assay. Leaded gloves are collected in a satellite collection area. Glovebox exhaust is vented through the building filter plenum. Process Table 771-12 presents the outputs, associated with Miscellaneous Residue Processing and defines their dispositions and hazardous character.

13.0 PROCESS 771-13: METAL BURNING

Metal Burning, located in Room 114, Glovebox 22, is where scrap and off-specification plutonium metal is converted into plutonium oxide. Equipment used in the process consists of a hot plate and a pan. Figure 13.1 shows the inputs, process flow, and outputs associated with Metal Burning.

The scrap or off-specification plutonium metal is heated in a pan on a hotplate to convert the metal into plutonium oxide. No other materials are introduced. Once the metal has oxidized, it is placed into containers and stored temporarily.

The stored oxidized metal is ultimately sent to High-Level Dissolution (771-1) for further recovery processing. Nonline dry combustibles, glovebox filters, moist combustibles, and light metal are all taken to the appropriate 55-gallon drum in Room 114, then to the drum counter to be assayed. Leaded gloves are placed in a satellite collection area. Glovebox exhaust is vented through the building filter plenum. Table 13.1 presents the outputs associated with the Metal Burning Process and defines their dispositions and hazardous character.

14.0 PROCESS 771-14: CRUSHING AND GRINDING

The Crushing and Grinding Process, located in Room 149, Gloveboxes 43B and 43C, pulverizes sand, slag, and crucible (SS&C) from the Reduction and Button Break-Out Process to prepare it for recovery processing in Low-Level Dissolution. Equipment used includes a jaw crusher and a hammermill/pulverizer. Figure 14.1 shows the inputs, process flow, and outputs associated with crushing and grinding.

The SS&C is pulverized using a jaw crusher (at A, Fig 14.1) and a hammermill/pulverizer (at B, Figure 14.1).

The pulverized SS&C is processed in Low-Level Dissolution. Nonline-generated dry combustibles, line-generated dry combustibles, moist combustibles, gloves, filters, reusable cans, and light metal are placed in the appropriate 55-gallon drums in Room 114 and then taken to the drum counter for assay. Pulverized SS&C is transferred to assay. Glovebox exhaust is vented to the filter plenum. Process Table 771-14 presents the outputs associated with the Crushing and Grinding Process and defines their dispositions and hazardous character.

15.0 PROCESS 771-15: SPRAY LEACH

Spray Leach Process (also referred to as Part V Leach), located in Room 114, Glovebox 5, is a process which separates a metal contaminant from plutonium parts or plutonium from foundry fixtures. Equipment used in the process include various tanks, pumps, heat exchangers, vacuum supply, and filters. Figure 15.1 shows the inputs, process flow, and outputs associated with the Spray Leach Process.

The plutonium parts or fixtures are bagged into the glovebox, weighed, and placed in a spray hood. The acids are mixed through glovebox acid supply drops and tank fills for the particular item to be sprayed. Certain parts are pretreated by soaking in a hydrofluoric and sulfuric acid mixture. A nitric and sulfuric acid mixture is used as a leaching agent for parts, whereas a nitric and hydrofluoric acid mixture is the leaching agent used for fixtures. The acid-leached parts or fixtures (at A, Figure 15.1) are subsequently rinsed with steam or water, and then with potassium hydroxide. The acid is recirculated through a Ful-Flo filter (at B, Figure 15.1) and pencil tanks (at C, Figure 15.1). Two floor pickups are used to remove acid spillage in the glovebox.

The leached metal parts are bagged-out of the glovebox and transferred to Building 776 Pyrochemical Operations (776-1). The leached fixtures are returned to the user. The leachate solution, resulting from the acid spray and rinse, is transferred via process piping from the critically safe pencil Tanks D-609 and D-610 to Tanks D-551 through D-552. Miscellaneous acid from the floor pickups and Part VI leach is transferred to Tanks D-551 and D-552. The solutions from Tanks D-551 and D-552 are transferred to Anion Exchange, Process 771-4. Nonline dry combustibles, wet combustibles, glass, and light metal are taken to the appropriate 55-gallon drums in Room 114, then to the drum counter to be counted. Leaded gloves and glovebox filters are placed in a satellite collection area. A RCRA collection area will be created for ful-flo filters if the filters are generated in the future. Steam condensate is deposited in the collection Tanks D-923 and D-927, Caustic Filtration (Process 771-19). Glovebox exhaust is vented through the filter plenum. After the liquid is condensed out of the gas, the leaching off-gas is transferred to the fume scrubber in Room 149 (Process 771-20). Process Table 771-15 presents the outputs associated with the Spray Leach Process and defines their disposition and hazardous characteristics.

16.0 PROCESS 771-16: ORALLOY LEACH

Oralloy (OY) Leach, located in Room 174, Glovebox 53, is a process which removes small amounts of plutonium contamination from uranium parts. Nitric acid, potassium hydroxide, abrasive pads, and water are used in the process. Equipment utilized includes an acid heater, acid evaporator, water evaporator, spray vessel, various filters, tanks, and pipes. Figure 16.1 shows the inputs, process flow, and outputs associated with OY Leach.

Uranium parts are placed into the hood (at A, Figure 16.1). Nitric acid is stored in a tank and heated by steam to 90°C in the acid heater (at B, Figure 16.1). The acid is then sprayed onto the parts. The nitric acid is collected in the spray vessel and is transferred to a steam-heated evaporator in Glovebox 53 (at C, Figure 16.1). Concentrated acid is sent to OY Precipitation (Process 17) for nuclear materials recovery. The distilled acid is reintroduced to the acid tank (at D, Figure 16.1) for recycling within the system. After the acid spray, the parts are rinsed with water. Water is introduced into the system from a tank as with the acid. Air pressure is used to push the fluid to the spray chamber. The water is then collected and evaporated in a steam-heated evaporator (at E, Figure 16.1). Potassium hydroxide is used to neutralize the acid fumes in the scrubber.

Oralloy parts, or uranium parts, are held in temporary storage before being shipped to another Department of Energy facility. The concentrated water solution and the uranyl nitrate bottoms are sent to OY Precipitation for nuclear materials recovery. The water distillate is transferred to a waste tank, Tank 1084; sampled for nuclear materials content; and then piped to Building 774, Waste Treatment. The spent scrubber caustic is collected in a Tank D-921, Caustic Filtration Process. Steam condensate that was used to heat the acid heater, acid evaporator, and water evaporator is piped to Tanks D-923 and D-927, then to Building 774, Waste Treatment. Nonline dry combustibles, wet combustibles, and gloves are deposited in the appropriate drum in Room 174, then taken to the drum counter for assay. Used filters, glass, and light metal are all taken to the appropriate holding drum in Room 114 to be assayed. Scrubber exhaust is vented through the filter plenum. Process Table 771-16 presents the outputs associated with the OY Leach Process and provides their disposition and hazardous character.

17.0 PROCESS 771-17: OY PRECIPITATION

OY Precipitation, located in Room 146, Glovebox MT3, is the process which precipitates plutonium and uranium from an acid solution. The acid solution consists of the concentrated "bottoms" from one of the OY Leach evaporators. Equipment includes a tank, pipes, a reaction vessel, a centrifuge, and a muffle furnace. Figure 17.1 shows the inputs, process flow, and outputs associated with OY Precipitation.

Bottoms from the OY Leach Process evaporators are transferred from a feed tank into a two-liter reaction vessel (at A, Figure 17.1). The bottoms contain uranyl nitrate, small amounts of plutonium nitrate, and dilute acid solution. Water is added to reduce the normality of the acid concentration in order to prevent excessive heat generation from the chemical reaction. Ammonia gas is bubbled into the vessel. The nuclear material (mostly enriched uranium with small amounts of plutonium) precipitates from the fluid to form solid particles in a slurry. The slurry is centrifuged to separate the precipitate solids from the solution (at B, Figure 17.1). The fluid solution is recycled to the feed tank until the solution is completely neutralized. The precipitate is filtered, heated, and calcined in a muffle furnace (at C, Figure 17.1). Ful-flo filters are used in the solution transfer lines. Standard glovebox materials, including gloves, HEPA filters, metal, glass, and combustibles, are used for cleaning and materials handling.

The neutralized solution is sent to Building 774 as a waste. The calcined precipitate, containing mixed plutonium and uranium oxide, is put in temporary storage and eventually shipped to another Department of Energy facility. Nonline dry combustibles, line wet combustibles, used Ful-Flo filters, glovebox filters, and glass are all taken to the appropriate holding drum in Room 146, then to the drum counter to be assayed. Light metal is deposited in a drum in Room 114 and also taken to the drum counter for counting. Leaded glovebox gloves are taken to WMU 1723. Glovebox exhaust is vented through the filter plenum. Process Table 771-17 presents the outputs associated with the OY Precipitation Process and provides their dispositions and hazardous character.

18.0 PROCESS 771-18: SPECIAL RECOVERY ANION EXCHANGE

Special Recovery Anion Exchange is located in Room 146, Glovebox MT-4. Equipment utilized includes ion columns, pumps, feed tanks, flow meters, an evaporator, and filters. Figures 18.1 shows the inputs, process flow, and outputs associated with Special Recovery Anion Exchange.

Line dry combustibles are placed in the appropriate 55-gallon drum in Room 146, then taken to the drum counter for assay. Used resin, wet combustibles, used glovebox HEPA and Ful-Flo filters, glass, and light metal are placed in the appropriate holding 55-gallon drum in Room 114 and then taken to the drum counter for assay. Leaded glovebox gloves are placed in a satellite collection area. Glovebox exhaust is vented to the building filter plenums. Process Table 771-18 presents the outputs associated with the Special Recovery Anion Exchange Process and provides their dispositions and hazardous character.

19.0 PROCESS 771-19: CAUSTIC FILTRATION

Caustic Filtration, located in Room 149, Glovebox 50, filters caustic streams prior to transfer to Building 774 Waste Treatment. Caustic streams are drawn from Tanks D-921 and D-922, which receive spent caustic solutions from the fume scrubber in Room 149 (see Process 771-20). Additionally, when sampling indicates that the condensate is above the Economic Discard Level (EDL) for plutonium content, steam condensate streams are drawn from collection Tanks D-923 and D-927. The filtration unit associated with Glovebox 1 and included with Hydrofluorination, Process 771-10, can be used as a back-up system when maintenance operations are performed on Tanks 921 and 922. Equipment used in the process includes tanks, pumps, valves and cartridge filters. Figure 19.1 shows the inputs, process flow, and outputs associated with Caustic Filtration.

The solutions are pumped from the process tanks to the filtration unit. After passing through Ful-Flo filters, the solution is transferred to Tank D-714, where it is analyzed for plutonium content prior to shipping. Solutions above the EDL are recycled through the filtration unit.

Filtrate below the EDL is transferred to Building 774 Waste Treatment. Wet and dry combustibles, Ful-Flo filters, glovebox filters, glass, and light metal are all put in 55-gallon drums and taken to the drum counter to be assayed. Leaded gloves are placed in a satellite collection area. Glovebox exhaust is directed to the filter plenum. Process Table 771-19 presents the outputs associated with the Caustic Filtration Process and provides their dispositions and hazardous character.

20.0 PROCESS 771-20: FUME SCRUBBER

The Fume Scrubber, located in Room 149, adjacent to Glovebox 26, neutralizes acid fumes from various process off-gas streams as well as glovebox exhaust streams. Specific streams include the dissolution glovebox exhaust, dissolution pot off-gas, exhaust from vacuum mist tanks, and the evaporator distillate off-gas from the evaporator distillate condensers. Equipment used in this process includes a fume scrubber, pumps, heat exchangers, pipes, tanks, valves, and filters. Figure 20.1 shows the inputs, process flow, and outputs associated with the Fume Scrubber Process.

The Fume Scrubber system consists of two scrubber towers packed with Teflon stars or Raschig rings (at A, Figure 20.1). Potassium hydroxide is recirculated within the towers (at B, Figure 20.1) and reacts with and neutralizes acid fumes that pass through the towers.

The spent scrubber solution or potassium hydroxide is transferred via process piping to a holding tank, Tank D-921 or D-922, Caustic Filtration Process (771-19). Wet combustibles, used glovebox filters, Ful-Flo Filters light metal, Teflon stars, Raschig rings, and glass are all put in 55-gallon drums in Room 114, and later taken to the drum counter to be assayed. Dry nonline combustibles are put in a drum in Room 114. Leaded gloves are placed in a satellite collection area. Scrubbed process and glovebox exhaust is vented to the filter plenum. Process Table 771-20 presents the outputs associated with the Fume Scrubber Process and defines their dispositions and hazardous character.

21.0 PROCESS 771-21: VACUUM SYSTEMS

Vacuum Systems, located in Room 114, Glovebox 18, and Room 149, Gloveboxes 40 and 44, is a process that uses one of two sets of liquid-sealed vacuum pumps to support building operations. The house vacuum system in Glovebox 18 services processes located in Room 114. The vacuum system located in Gloveboxes 40 and 44 services processes located in Room 149, chemical laboratories, Pu Metallurgy, and Chemical Technology R&D laboratories. Equipment used includes tanks, vacuum pumps, and heat exchangers. Figure 21.1 shows the inputs, process flow, and outputs associated with the Vacuum Systems Process.

Vacuum pumps create a vacuum on the vacuum header, which serves as a means to transfer fluids on demand by valving arrangements. A vacuum trap is positioned between each point of service and the header to capture entrained fluids. The pumps are not critically safe because of their geometry. Therefore, the header is connected to a receiving tank (at A, Figure 21.1) which collects any existing entrained fluid before the fluid reaches the vacuum pumps. The vacuum pumps use a seal liquid to exert a vacuum on the receiving tank. The vacuum systems use water as the seal liquid. The liquid is centrifugally dispersed within the pump housing (at B, Figure 21.1) and it exits at the pump exhaust as a mist. The pump exhaust is directly piped to a mist tank (at C, Figure 21.1), where the air is separated from the seal liquid.

Seal liquid from the vacuum pumps in Glovebox 18 is transferred to Tanks D-551 and D-552 and eventually processed in Glovebox 42, Anion Exchange (Process 771-04). Seal liquid from vacuum pumps in Gloveboxes 40 and 44 is also sent to Tanks D-551 and D-552. Acid Recycle, used in cleaning the vacuum header receiving tank, is sent to Anion Exchange for further processing. Wet and nonline dry combustibles, used Ful-Flo and glovebox filters, glass, and light metal are put in 55-gallon drums in Room 114 or 149. Leaded gloves are placed in a satellite collection area in Room 114. Fumes from the mist tanks are vented to the Fume Scrubber (Process 771-20). Glovebox exhaust is directed to the filter plenum. Process Table 771-21 presents the outputs associated with the Vacuum Systems Process and defines their dispositions and hazardous character.

22.0 PROCESS 771-22: CHEMICAL MAKE-UP

Chemical Make-Up, located in Rooms 246, 246A, and 247, stores and prepares chemical reagents in tanks, bottles, and drums for the Building 771 processes. Chemical make-up also includes hydrogen fluoride evaporation in the hydrogen fluoride evaporation subsystem. Equipment used in the process includes tanks, heaters, pipes, pumps, an evaporator, and a hydrogen fluoride scrubber. Figures 22.1 and 22.2 show the inputs, process flow, and outputs associated with the Chemical Make-Up Process.

A large variety of chemical reagents, including argon, several different acids, and hydrogen peroxide are prepared and stored in the chemical makeup areas. Numerous types of containers are used to receive or store these chemicals. Potassium hydroxide is prepared in three molar concentrations for various processes within the building.

An important subprocess in Chemical Make-Up is the hydrogen fluoride evaporation system. Empty cylinders of anhydrous hydrogen fluoride are stored in Building 714 (at A, Figure 22.2). The hydrogen fluoride is piped to the evaporator in Room 246A (at B, Figure 22.2); double-walled piping is used to prevent leakage incidents. The hydrogen fluoride is heated until it vaporizes. The outer chase of the piping is purged with nitrogen to remove leaking hydrogen fluoride. The nitrogen is scrubbed with potassium hydroxide for neutralization (at C, Figure 22.2). Once the nitrogen has been neutralized, it is vented to the FU-2 plenum. The hydrogen fluoride gas produced by the hydrogen fluoride evaporation system is piped to Glovebox 7—Hydrofluorination, Process 771-10.

Empty chemical containers including used glass jars, plastic containers, and cardboard cartons are containerized, checked for radioactive contamination, and noncontaminated cartons and containers are eventually removed to the Rocky Flats Environmental Technology Site landfill. Nonline dry or wet combustibles are placed in the appropriate 55-gallon drum, then taken to the drum counter for counting. The rinsate from containers is piped to two 90-day holding tanks in Room 309. Process Table 771-22 presents the outputs associated with the Chemical Make-Up Process and defines their dispositions and hazardous character.

25.0 PROCESS 771-25: CHEMICAL TECHNOLOGY

Chemical Technology Laboratories, located in Rooms 180-A through 180-L and Room 187, were used for aqueous plutonium research and development activities, such as determining the appropriate combinations for production processes. The rooms contain a variety of general purpose gloveboxes. Equipment used in these labs includes balances, small furnaces, mixing equipment, and standard laboratory apparatus and equipment. Figures 25.1 through 25.4 show the inputs, process flow, and outputs for the Chemical Technology Process.

The Chemical Technology process is no longer in use for aqueous plutonium research. Glovebox K-20, in room 180K is being used for storage and sampling of mixed residues, as shown in figure 25.4. General clean-up and maintenance is performed periodically on the gloveboxes in this process. Figure 2501 through 25.4 shows the input, and output for the Chemical Technology process.

Line dry combustibles, line wet combustibles, plastic, glass, glove box filters, and light metal outputs are collected in the appropriate 55-gallon drum in Room 180D, 180F, or 180K. These drums are moved to the drum counter for assay, as required. Leaded gloves are collected in a satellite area in Room 180K. Ful-Flo filters are placed in a plastic bottle which is then placed in a clam shell (Process Residue Container). The filter is assayed at the can counter. Glovebox exhaust is exhausted to the Building Plenum, Process 771-27.

26.0 PROCESS 771-26: PLUTONIUM METALLURGY

Plutonium Metallurgy operations, located in Rooms 180-E, 182, 182-A, and 186 (all containing gloveboxes), include alloy preparation, heat treating, rolling, metal cutting, and metallurgical testing cutting for research and development. The process uses plutonium alloys to simulate various operations currently conducted in Building 707. Equipment utilized includes a burn box; casting apparatus; hand tools; metal-cutting, tensile-testing, and hardness-testing equipment; and furnaces. Figure 26.1 shows the inputs, process flow, and outputs associated with Plutonium Metallurgy.

After the plutonium metal and alloy is prepared and cast, it is transferred to various heat treatment processes or to the rolling mills. The alloys are cast in furnaces using graphite crucibles. Metal fines and skull resulting from casting operations are calcined to an oxide form in a furnace. Dry rags are used to clean gloveboxes occasionally. No hazardous chemicals are employed in any of the metallurgical processes. FC-43 is used as a sealant for the scale passthroughs, but is not generated as a waste.

Plutonium metal, alloys, and pieces of parts are transferred to Building 707 for plutonium recovery. The plutonium oxide is sent to Glovebox 24, High-Level Dissolution Process (771-1). Ingots may be sawed, in which case the metal dust is swept up and burned in a burn-box (on the same day as the sawing). Whole pieces of plutonium are normally sent for sample analysis, so no drilling is involved. Several residues are generated by the metallurgy process. A mixture of oxide and metal (skull) is produced by casting and is later calcined in a furnace in the glovebox. This material is sent to High-Level Dissolution in cans on a cart. After experiments, nonspecification pieces of metal are taken to Module J in Building 707 for casting into ingots to be sent to Electrorefining (Process 776-1). Some oxide is generated by wire brush cleaning of plutonium during inventory cleanup or prior to use in alloy preparation. The oxide is collected and sent to recovery in Building 771. Line and nonline dry combustibles, wet combustibles, oil absorbed on Oil Dri, classified graphite shapes, leaded glovebox gloves, line- and nonline-generated insulation, glovebox filters, line and nonline plastic, glass, and light metal are placed in appropriate 55-gallon drums. Glovebox exhaust is vented to the Building 771 filter plenum. The disposition of hydraulic oil and line and nonline graphite crucibles and molds has not yet been determined. Process Table 771-26 presents the outputs associated with Plutonium Metallurgy and defines their dispositions and hazardous character.

33.0 PROCESS 771-33: NONDESTRUCTIVE ASSAY

The Nondestructive Assay (NDA) Process, located in Building 771 Annex, involves transferring drums and other associated activities. Figure 33.1 shows the inputs, process flow, and outputs associated with Nondestructive Assay.

Drums and cans are received from various sources, primarily production, labs, maintenance, and filter techs, then staged, and transferred for assay. Drums may be rejected prior to receiving primarily for the following reasons: insufficient paperwork, dents, excessive rust, bulging, and improper drum sealing. Rejected drums are returned to the generator. Kimwipes are used for cleanup of containers and excess water associated with safety showers. KW detergent and De-Solv-It are also used for container cleaning. Metal scraps are stored in the process area, awaiting disposal.

Dry combustibles consisting of Kimwipes, office waste, and computer paper are disposed of in an area drum. Wet combustibles and scrap metal are also placed in the appropriate white 55-gallon drums. Assayed drums and cans are taken to the appropriate storage areas. The wastes/residues in these drums and cans are characterized within the specific processes from which they originate. Process Table 771-33 presents the outputs associated with the Nondestructive Assay Process and provides their dispositions and hazardous character.

34.0 PROCESS 771-34: INCINERATOR

The Building 771 Incinerator system, located in Room 149, reduced above discard, Plutonium bearing, solid combustibles into ash for plutonium recovery processing. The system is comprised of a multi-chamber, refractory-lined firebox; a caustic scrubber system; a dedicated vacuum system; heat exchangers; various tanks, pipes, and valves; ball mill; and a filter plenum. Figure 34.1 shows the inputs, process flow, and outputs formerly associated with the Incinerator.

Above discard, plutonium bearing, material entered the glovebox from the drum hoist and bag-in area (at A, Figure 34.1). Material was hand-sorted to segregate combustibles. Noncombustibles (metal, glass, etc.) were removed from the glovebox. Material was fed into the incinerator (at B, Figure 34.1) and reduced in a 12-to-1 ratio, by weight. Plutonium-bearing solid combustibles including paper, PVC and polystyrene bags, polypropylene and Ful-Flo filters, surgical gloves, PVC maintenance tents, and various types of sludge were fed into the incinerator. Incinerated ash was pulverized in the ball mill (at C, Figure 34.1) before storage for recovery processing.

Incinerator off-gas was cooled through two air-to-gas heat exchangers (at D, Figure 34.1) before it passed through the caustic scrubber (at E, Figure 34.1). Cooling air from the heat exchangers was filtered through the incinerator filter plenum and main filter plenum, respectively. The cooled off-gas was filtered in the incinerator filter plenum. Booster fans were used to direct the air flow to the main plenum.

Caustic solution from the scrubber was processed through the drum filter (at F, Figure 34.1); particulate matter was entrained on the filter media. The vacuum system pulled a vacuum on the filter media. Spent caustic was transferred to Caustic Filtration, Process 777-19. Sludge from the drum filter was transferred to storage awaiting cementation. Pulverized ash and tramp metals were transferred to assay.

This description and Figure 34.1 are only included as additional information, as the Building 771 Incinerator System is not in operation at this time and has not been rescheduled for operation. As no outputs are generated from the Incinerator, neither an output table nor output sheets are included.

THIS PAGE INTENTIONALLY LEFT BLANK

Idle equipment in Building 771 has been identified and is listed in this Appendix. This Appendix lists the equipment and potential hold-up materials that are due to be deactivated.

IDLE EQUIPMENT INVENTORY, BUILDING 771

ID #	Loc. (Rm)	Description	Rad ?	Type of Material	Haz Matl	Quantity
771-0011	247	RESIN GRADEER & DROP LINES NDT #1363 & NDT 1364	Yes	WATER	NO	26 LITERS
771-0021		HYDROFLUORIC ACID EVAPORATOR NDT # 1391	Yes	HYDROFLUORIC ACID	YES	OPERATIONALLY EMPTY
771-0022		HYDRAULIC PUMP FOR BARREL COUNTER 2P-15	Yes	OIL/HYDRAULIC FLUID	NO	30 GALLONS
771-0023		HYDRAULIC SYSTEM, LN 17	Yes	OIL/HYDRAULIC FLUID	NO	2 GALLONS
771-0024	114	FLOURINATOR HYDRAULIC PUMP 328-008	Yes	OIL/HYDRAULIC FLUID	NO	30 GALLONS
771-0025	182	ARC DURANCE VACUUM PUMP 771-6073-02507	Yes	OIL/HYDRAULIC FLUID	NO	3 GALLONS
771-0026	182	MICROVAC PUMP CB85128	Yes	OIL/HYDRAULIC FLUID	NO	3 GALLONS
771-0027	182	MICROVAC PUMP CB85003	Yes	OIL/HYDRAULIC FLUID	NO	8 LITERS
771-0028	182	LEAK DETECTOR 254-113	Yes	OIL/HYDRAULIC FLUID	NO	3 GALLONS
771-0029	182	DUO CELL VACUUM PUMP 000000-42-00	Yes	270-439 OIL/HYDRAULIC FLUID	NO	1 GALLON
771-0030	182	DUO CELL VACUUM PUMP 270-053	Yes	270-439 OIL/HYDRAULIC FLUID	NO	1 GALLON
771-0031	182	DUO CELL VACUUM PUMP 143	Yes	270-439 OIL/HYDRAULIC FLUID	NO	1 GALLON

ID #	Loc. (Rm)	Description	Rad ?	Type of Material	Haz Matl	Quantity
771-0032	182	LN 207 VACUUM PUMP 270-34B	Yes	270-439 OIL/HYDRAULIC FLUID	NO	3 GALLONS
771-0033	182	PUMP MOTOR/ATTACHED TO BOX 203 - 2774	Yes	270-439 OIL/HYDRAULIC FLUID	NO	50 GALLONS
771-0034	182	MILL 771-06976-12715	Yes	270-439 OIL/HYDRAULIC FLUID	NO	50 GALLONS
771-0035	182	VACUUM PUMP 270-445	Yes	270-439 OIL/HYDRAULIC FLUID	NO	3 GALLONS
771-0036	182	VACUUM PUMP 270-417	Yes	270-439 OIL/HYDRAULIC FLUID	NO	3 GALLONS
771-0037	182	VACUUM PUMP 270-418	Yes	270-439 OIL/HYDRAULIC FLUID	NO	3 GALLONS
771-0040	179	DO-ALL BANDSAW D-81-6967-91788	Yes	DRY	NO	CHIPS
771-0042		SCANNING ELECTRON MICROSCOPE 000-3168700	Yes	VACUUM OIL	NO	1 GALLON
771-0043		VACUUM COATER 000-3177100	Yes	VACUUM OIL	NO	1 GALLON
771-0044		LAMERT VACUUM PUMP SN317P173	Yes	VACUUM OIL	NO	1 GALLON
771-0045		PELCO CARBON EVAPORATION UNIT 000-3245900	Yes	VACUUM OIL	NO	1 GALLON
771-0046	165	VACUUM PUMP FOR OY SMEAR SN-E4322067	Yes	VACUUM OIL	NO	1 GALLON
771-0047	165	VACUUM PUMP FOR OY SMEAR SN-L3504	Yes	VACUUM OIL	NO	1 GALLON
771-0048	155	VACUUM PUMP (EAST WALL) SN-14022	Yes	VACUUM OIL	NO	1 GALLON
771-0049	155	VACUUM PUMP (EASTWALL)	Yes	VACUUM OIL	NO	1 GALLON

ID #	Loc. (Rm)	Description	Rad ?	Type of Material	Haz Matl	Quantity
771-0062	146	VACUUM RECEIVING TANK	Yes	NITRIC ACID	YES	OPERATIONALLY EMPTY
771-0063	174	FUME SCRUBBER SIGHT GLASS	Y	POTASSIUM HYDROXIDE	YES	2 kg
771-0064	146	HOLDING COLUMN/MT7 D1016	Y	CORROSIVE, D002	YES	13 LITERS
771-0065		DISSOLUTION COLUMN	Y	CORROSIVE, D002	YES	4 LITERS
771-0066		CHEMICAL FEED COLUMN	Y	FERROUS SULFAMATE	YES	10 LITERS
771-0072		HYDRAULIC PRESS #771-3937-45093		OIL	NO	30 GALLONS
771-0073	179	BRIDGEPORT MILL #000-31143-00		OIL	NO	RESIDUE

THIS PAGE INTENTIONALLY LEFT BLANK

This WSRIC Book has no Appendix D.

PADC-97-00906

THIS PAGE INTENTIONALLY LEFT BLANK

APPENDIX E: UHC WORKSHEETS

This Appendix includes the Underlying Hazardous Constituents Worksheets for the listed waste streams.

UNDERLYING HAZARDOUS CONSTITUENTS WORKSHEET

WASTE STREAM # 771-23-4

The following underlying hazardous constituents (indicated by a checkmark in the appropriate box) are reasonably expected to be present in this waste stream:

INORGANIC CONSTITUENTS			
☐ Antimony	☐ Cadmium	■ Lead	☐ Silver
☐ Arsenic	☐ Chromium	☐ Mercury	☐ Sulfide (Wastewater Only)
☐ Barium	☐ Cyanides (Total)	☐ Nickel	☐ Thallium
☐ Beryllium	☐ Cyanides (Amenable)	☐ Selenium	
ORGANIC CONSTITUENTS			
☐ Acenaphthylene	☐ p-CRESOL	☐ ETHYL ACETATE	☐ N-Nitrosopiperidine
☐ Acenaphthene	☐ Cyclohexanone	☐ Ethyl Cyanide (Propanenitrile)	☐ N-Nitrosopyrrolidine
☐ ACETONE	☐ 1,2-Dibromo-3-chloropropane	☐ ETHYL BENZENE	☐ Parathion
☐ Acetonitrile	☐ Ethylene dibromide (1,2-dibromoethane)	☐ ETHYL ETHER	☐ Total PCBs
☐ Acetophenone	☐ Dibromomethane	☐ bis(2-Ethylhexyl) phthalate	☐ Pentachlorobenzene
☐ Acrylamide	☐ 2,4,D(2-4-Dichlorophenoxyacetic acid)	☐ Ethyl methacrylate	☐ Pentachlorodibenzo-p-dioxins (all)
☐ Acrylonitrile	☐ Dibenz(a,h)anthracene	☐ Ethylene oxide	☐ Pentachlorodibenzofurans (all)
☐ Aldrin	☐ Dibenz(a,e)pyrene	☐ Fluoranthene	☐ Pentachloroethane
☐ Aniline	☐ m-Dichlorobenzene	☐ Fluorene	☐ Pentachloronitrobenzene
☐ Anthracene	☐ o-DICHLOROBENZENE	☐ Heptachlor	☐ Pentachlorophenol
☐ BENZENE	☐ p-Dichlorobenzene	☐ Hexachlorobenzene	☐ Phenacetin
☐ Benz(a)anthracene	☐ Dichlorodifluoromethane	☐ Hexachlorobutadiene	☐ Phenanthrene
☐ Benzal chloride	☐ 1,1-Dichloroethane	☐ Hexachlorocyclopentadiene	☐ Phenol
☐ Benzo(b)fluoranthene	☐ 1,2-Dichloroethane	☐ Hexachlorodibenzo-p-dioxins (all)	☐ Phthalic acid
☐ Benzo(k)fluoranthene	☐ 1,1-Dichloroethylene	☐ Hexachlorodibenzofurans (all)	☐ Phthalic anhydride
☐ Benzo(g,h,i)perylene	☐ trans-1,2-Dichloroethylene	☐ Hexachloroethane	☐ Pyrene
☐ Benzo(a)pyrene	☐ 2,4-Dichlorophenol	☐ Hexachloropropylene	☐ PYRIDINE
☐ Bromodichloromethane	☐ 2,6-Dichlorophenol	☐ Indeno (1,2,3-c,d) pyrene	☐ Safrole
☐ Methyl bromide (Bromomethane)	☐ 1,2-Dichloropropane	☐ Iodomethane	☐ Silvex (2,4,5-TP)
☐ 4-Bromophenyl phenyl ether	☐ cis-1,3-Dichloropropylene	☐ ISOBUTYL ALCOHOL	☐ 2,4,5-T(2,4,5-Trichloro phenoxy-acetic acid)
☐ n-BUTYL ALCOHOL	☐ trans-1,3-Dichloropropylene	☐ Isodrin	☐ 1,2,4,5-Tetrachlorobenzene
☐ Butyl benzyl phthalate	☐ Dieldrin	☐ METHANOL	☐ 1,1,1,2-Tetrachloroethane
☐ CARBON DISULFIDE	☐ Diethyl phthalate	☐ Methapyrilene	☐ 1,1,2,2-Tetrachloroethane
☐ CARBON TETRACHLORIDE	☐ 2,4-Dimethyl phenol	☐ Methoxychlor	☐ TETRACHLOROETHYLENE
☐ Chlordane (alpha & gamma isomers)	☐ Dimethyl phthalate	☐ 4,4-Methylene bis(2-chloroaniline)	☐ 2,3,4,6-Tetrachlorophenol
☐ p-Chloroaniline	☐ Di-n-butyl phthalate	☐ METHYLENE CHLORIDE	☐ TOLUENE
☐ CHLOROBENZENE	☐ 1,4-Dinitrobenzene	☐ METHYL ETHYL KETONE	☐ Toxaphene
☐ 2-Chloro-1,3-butadiene	☐ 4,6-Dinitro-o-cresol	☐ METHYL ISOBUTYL KETONE	☐ Bromoform (Tribromomethane)
☐ Chlorodibromomethane	☐ 2,4-Dinitrophenol	☐ Methyl methacrylate	☐ 1,2,4-Trichlorobenzene
☐ Chloroethane	☐ 2,4-Dinitrotoluene	☐ Methyl methansulfonate	☐ 1,1,1-TRICHLOROETHANE
☐ bis(2-chloroethyl)ether	☐ 2,6-Dinitrotoluene	☐ Naphthalene	☐ 1,1,2-TRICHLOROETHANE
☐ Chloroform	☐ Di-n-octyl phthalate	☐ o-Nitroaniline	☐ TRICHLOROETHYLENE
☐ bis(2-Chloroisopropyl)ether	☐ Di-n-propylnitrosamine	☐ p-Nitroaniline	☐ TRICHLOROMONOFLUOROMETHANE
☐ p-Chloro-m-cresol	☐ 1,4-Dioxane	☐ NITROBENZENE	☐ 2,4,5-Trichlorophenol
☐ 2-Chloroethyl vinyl ether	☐ Diphenylamine	☐ 5-Nitro-o-toluidine	☐ 2,4,6-Trichlorophenol
☐ Chloromethane (Methyl chloride)	☐ Diphenylnitrosamine	☐ o-Nitrophenol	☐ 1,2,3-Trichloropropane
☐ 2-Chloronaphthalene	☐ 1,2-Diphenylhydrazine	☐ p-Nitrophenol	☐ 1,1,2-TRICHLORO-1,2,2-TRIFLUOROETHANE
☐ 2-Chlorophenol	☐ Disulfoton	☐ N-Nitrosodiethylamine	☐ tris-(2,3-Dibromopropyl) phosphate
☐ 3-Chloropropylene	☐ Endosulfan I	☐ N-Nitrosodimethylamine	☐ Vinyl chloride
☐ Chrysene	☐ Endosulfan II	☐ N-Nitroso-di-n-butylamine	☐ XYLENES-TOTAL MIXED ISOMERS
☐ o-CRESOL	☐ Endrin	☐ N-Nitrosomethylethylamine	
☐ m-CRESOL	☐ Endrin aldehyde	☐ N-Nitrosomorpholine	

☐ None of the above listed underlying hazardous constituents are reasonably expected to be present in this waste stream.

UNDERLYING HAZARDOUS CONSTITUENTS WORKSHEET

WASTE STREAM # 771-23-15

The following underlying hazardous constituents (indicated by a checkmark in the appropriate box) are reasonably expected to be present in this waste stream:

INORGANIC CONSTITUENTS			
☐ Antimony	■ Cadmium	■ Lead	■ Silver
☐ Arsenic	■ Chromium	☐ Mercury	☐ Sulfide (Wastewater Only)
☐ Barium	☐ Cyanides (Total)	☐ Nickel	☐ Thallium
☐ Beryllium	☐ Cyanides (Amenable)	☐ Selenium	
ORGANIC CONSTITUENTS			
☐ Acenaphthylene	☐ p-CRESOL	☐ ETHYL ACETATE	☐ N-Nitrosopiperidine
☐ Acenaphthene	☐ Cyclohexanone	☐ Ethyl Cyanide (Propanenitrile)	☐ N-Nitrosopyrrolidine
☐ ACETONE	☐ 1,2-Dibromo-3-chloropropane	☐ ETHYL BENZENE	☐ Parathion
☐ Acetonitrile	☐ Ethylene dibromide (1,2-dibromoethane)	☐ ETHYL ETHER	☐ Total PCBs
☐ Acetophenone	☐ Dibromomethane	☐ bis(2-Ethylhexyl) phthalate	☐ Pentachlorobenzene
☐ Acrylamide	☐ 2,4,D(2-4-Dichlorophenoxyacetic acid)	☐ Ethyl methacrylate	☐ Pentachlorodibenzo-p-dioxins (all)
☐ Acrylonitrile	☐ Dibenz(a,h)anthracene	☐ Ethylene oxide	☐ Pentachlorodibenzofurans (all)
☐ Aldrin	☐ Dibenz(a,e)pyrene	☐ Fluoranthene	☐ Pentachloroethane
☐ Aniline	☐ m-Dichlorobenzene	☐ Fluorene	☐ Pentachloronitrobenzene
☐ Anthracene	☐ o-DICHLOROBENZENE	☐ Heptachlor	☐ Pentachlorophenol
☐ BENZENE	☐ p-Dichlorobenzene	☐ Hexachlorobenzene	☐ Phenacetin
☐ Benz(a)anthracene	☐ Dichlorodifluoromethane	☐ Hexachlorobutadiene	☐ Phenanthrene
☐ Benzal chloride	☐ 1,1-Dichloroethane	☐ Hexachlorocyclopentadiene	☐ Phenol
☐ Benzo(b)fluoranthene	☐ 1,2-Dichloroethane	☐ Hexachlorodibenzo-p-dioxins (all)	☐ Phthalic acid
☐ Benzo(k)fluoranthene	☐ 1,1-Dichloroethylene	☐ Hexachlorodibenzofurans (all)	☐ Phthalic anhydride
☐ Benzo(g,h,i)perylene	☐ trans-1,2-Dichloroethylene	☐ Hexachloroethane	☐ Pyrene
☐ Benzo(a)pyrene	☐ 2,4-Dichlorophenol	☐ Hexachloropropylene	☐ PYRIDINE
☐ Bromodichloromethane	☐ 2,6-Dichlorophenol	☐ Indeno (1,2,3-c,d) pyrene	☐ Safrole
☐ Methyl bromide (Bromomethane)	☐ 1,2-Dichloropropane	☐ Iodomethane	☐ Silvex (2,4,5-TP)
☐ 4-Bromophenyl phenyl ether	☐ cis-1,3-Dichloropropylene	☐ ISOBUTYL ALCOHOL	☐ 2,4,5-T(2,4,5-Trichloro phenoxy-acetic acid)
☐ n-BUTYL ALCOHOL	☐ trans-1,3-Dichloropropylene	☐ Isodrin	☐ 1,2,4,5-Tetrachlorobenzene
☐ Butyl benzyl phthalate	☐ Dieldrin	☐ METHANOL	☐ 1,1,1,2-Tetrachloroethane
☐ CARBON DISULFIDE	☐ Diethyl phthalate	☐ Methapyrilene	☐ 1,1,2,2-Tetrachloroethane
☐ CARBON TETRACHLORIDE	☐ 2,4-Dimethyl phenol	☐ Methoxychlor	☐ TETRACHLOROETHYLENE
☐ Chlordane (alpha & gamma isomers)	☐ Dimethyl phthalate	☐ 4,4-Methylene bis(2-chloroaniline)	☐ 2,3,4,6-Tetrachlorophenol
☐ p-Chloroaniline	☐ Di-n-butyl phthalate	☐ METHYLENE CHLORIDE	☐ TOLUENE
☐ CHLOROBENZENE	☐ 1,4-Dinitrobenzene	☐ METHYL ETHYL KETONE	☐ Toxaphene
☐ 2-Chloro-1,3-butadiene	☐ 4,6-Dinitro-o-cresol	☐ METHYL ISOBUTYL KETONE	☐ Bromoform (Tribromomethane)
☐ Chlorodibromomethane	☐ 2,4-Dinitrophenol	☐ Methyl methacrylate	☐ 1,2,4-Trichlorobenzene
☐ Chloroethane	☐ 2,4-Dinitrotoluene	☐ Methyl methansulfonate	☐ 1,1,1-TRICHLOROETHANE
☐ bis(2-chloroethyl)ether	☐ 2,6-Dinitrotoluene	☐ Naphthalene	☐ 1,1,2-TRICHLOROETHANE
☐ Chloroform	☐ Di-n-octyl phthalate	☐ o-Nitroaniline	☐ TRICHLOROETHYLENE
☐ bis(2-Chloroisopropyl)ether	☐ Di-n-propylnitrosamine	☐ p-Nitroaniline	☐ TRICHLOROMONOFLUOROMETHANE
☐ p-Chloro-m-cresol	☐ 1,4-Dioxane	☐ NITROBENZENE	☐ 2,4,5-Trichlorophenol
☐ 2-Chloroethyl vinyl ether	☐ Diphenylamine	☐ 5-Nitro-o-toluidine	☐ 2,4,6-Trichlorophenol
☐ Chloromethane (Methyl chloride)	☐ Diphenylnitrosamine	☐ o-Nitrophenol	☐ 1,2,3-Trichloropropane
☐ 2-Chloronaphthalene	☐ 1,2-Diphenylhydrazine	☐ p-Nitrophenol	☐ 1,1,2-TRICHLORO-1,2,2-TRIFLUOROETHANE
☐ 2-Chlorophenol	☐ Disulfoton	☐ N-Nitrosodiethylamine	☐ tris-(2,3-Dibromopropyl) phosphate
☐ 3-Chloropropylene	☐ Endosulfan I	☐ N-Nitrosodimethylamine	☐ Vinyl chloride
☐ Chrysene	☐ Endosulfan II	☐ N-Nitroso-di-n-butylamine	☐ XYLENES-TOTAL MIXED ISOMERS
☐ o-CRESOL	☐ Endrin	☐ N-Nitrosomethylethylamine	
☐ m-CRESOL	☐ Endrin aldehyde	☐ N-Nitrosomorpholine	

☐ None of the above listed underlying hazardous constituents are reasonably expected to be present in this waste stream.

UNDERLYING HAZARDOUS CONSTITUENTS WORKSHEET

WASTE STREAM # 771-29-4

The following underlying hazardous constituents (indicated by a checkmark in the appropriate box) are reasonably expected to be present in this waste stream:

INORGANIC CONSTITUENTS			
☐ Antimony	☐ Cadmium	■ Lead	☐ Silver
☐ Arsenic	☐ Chromium	☐ Mercury	☐ Sulfide (Wastewater Only)
■ Barium	☐ Cyanides (Total)	☐ Nickel	■ Thallium
☐ Beryllium	☐ Cyanides (Amenable)	☐ Selenium	
ORGANIC CONSTITUENTS			
☐ Acenaphthylene	☐ p-CRESOL	☐ ETHYL ACETATE	☐ N-Nitrosopiperidine
☐ Acenaphthene	☐ Cyclohexanone	☐ Ethyl Cyanide (Propanenitrile)	☐ N-Nitrosopyrrolidine
☐ ACETONE	☐ 1,2-Dibromo-3-chloropropane	☐ ETHYL BENZENE	☐ Parathion
☐ Acetonitrile	☐ Ethylene dibromide (1,2-dibromoethane)	☐ ETHYL ETHER	☐ Total PCBs
☐ Acetophenone	☐ Dibromomethane	☐ bis(2-Ethylhexyl) phthalate	☐ Pentachlorobenzene
☐ Acrylamide	☐ 2,4,D(2-4-Dichlorophenoxyacetic acid)	☐ Ethyl methacrylate	☐ Pentachlorodibenzo-p-dioxins (all)
☐ Acrylonitrile	☐ Dibenz(a,h)anthracene	☐ Ethylene oxide	☐ Pentachlorodibenzofurans (all)
☐ Aldrin	☐ Dibenz(a,e)pyrene	☐ Fluoranthene	☐ Pentachloroethane
☐ Aniline	☐ m-Dichlorobenzene	☐ Fluorene	☐ Pentachloronitrobenzene
☐ Anthracene	☐ o-DICHLOROBENZENE	☐ Heptachlor	☐ Pentachlorophenol
☐ BENZENE	☐ p-Dichlorobenzene	☐ Hexachlorobenzene	☐ Phenacetin
☐ Benz(a)anthracene	☐ Dichlorodifluoromethane	☐ Hexachlorobutadiene	☐ Phenanthrene
☐ Benzal chloride	☐ 1,1-Dichloroethane	☐ Hexachlorocyclopentadiene	☐ Phenol
☐ Benzo(b)fluoranthene	☐ 1,2-Dichloroethane	☐ Hexachlorodibenzo-p-dioxins (all)	☐ Phthalic acid
☐ Benzo(k)fluoranthene	☐ 1,1-Dichloroethylene	☐ Hexachlorodibenzofurans (all)	☐ Phthalic anhydride
☐ Benzo(g,h,i)perylene	☐ trans-1,2-Dichloroethylene	☐ Hexachloroethane	☐ Pyrene
☐ Benzo(a)pyrene	☐ 2,4-Dichlorophenol	☐ Hexachloropropylene	☐ PYRIDINE
☐ Bromodichloromethane	☐ 2,6-Dichlorophenol	☐ Indeno (1,2,3-c,d) pyrene	☐ Safrole
☐ Methyl bromide (Bromomethane)	☐ 1,2-Dichloropropane	☐ Iodomethane	☐ Silvex (2,4,5-TP)
☐ 4-Bromophenyl phenyl ether	☐ cis-1,3-Dichloropropylene	☐ ISOBUTYL ALCOHOL	☐ 2,4,5-T(2,4,5-Trichloro phenoxy-acetic acid)
☐ n-BUTYL ALCOHOL	☐ trans-1,3-Dichloropropylene	☐ Isodrin	☐ 1,2,4,5-Tetrachlorobenzene
☐ Butyl benzyl phthalate	☐ Dieldrin	☐ METHANOL	☐ 1,1,1,2-Tetrachloroethane
☐ CARBON DISULFIDE	☐ Diethyl phthalate	☐ Methapyrilene	☐ 1,1,2,2-Tetrachloroethane
☐ CARBON TETRACHLORIDE	☐ 2,4-Dimethyl phenol	☐ Methoxychlor	☐ TETRACHLOROETHYLENE
☐ Chlordane (alpha & gamma isomers)	☐ Dimethyl phthalate	☐ 4,4-Methylene bis(2-chloroaniline)	☐ 2,3,4,6-Tetrachlorophenol
☐ p-Chloroaniline	☐ Di-n-butyl phthalate	☐ METHYLENE CHLORIDE	☐ TOLUENE
☐ CHLOROBENZENE	☐ 1,4-Dinitrobenzene	☐ METHYL ETHYL KETONE	☐ Toxaphene
☐ 2-Chloro-1,3-butadiene	☐ 4,6-Dinitro-o-cresol	☐ METHYL ISOBUTYL KETONE	☐ Bromoform (Tribromomethane)
☐ Chlorodibromomethane	☐ 2,4-Dinitrophenol	☐ Methyl methacrylate	☐ 1,2,4-Trichlorobenzene
☐ Chloroethane	☐ 2,4-Dinitrotoluene	☐ Methyl methansulfonate	☐ 1,1,1-TRICHLOROETHANE
☐ bis(2-chloroethyl)ether	☐ 2,6-Dinitrotoluene	☐ Naphthalene	☐ 1,1,2-TRICHLOROETHANE
☐ Chloroform	☐ Di-n-octyl phthalate	☐ o-Nitroaniline	☐ TRICHLOROETHYLENE
☐ bis(2-Chloroisopropyl)ether	☐ Di-n-propylnitrosamine	☐ p-Nitroaniline	☐ TRICHLOROMONOFLUOROMETHANE
☐ p-Chloro-m-cresol	☐ 1,4-Dioxane	☐ NITROBENZENE	☐ 2,4,5-Trichlorophenol
☐ 2-Chloroethyl vinyl ether	☐ Diphenylamine	☐ 5-Nitro-o-toluidine	☐ 2,4,6-Trichlorophenol
☐ Chloromethane (Methyl chloride)	☐ Diphenylnitrosamine	☐ o-Nitrophenol	☐ 1,2,3-Trichloropropane
☐ 2-Chloronaphthalene	☐ 1,2-Diphenylhydrazine	☐ p-Nitrophenol	☐ 1,1,2-TRICHLORO-1,2,2-TRIFLUOROETHANE
☐ 2-Chlorophenol	☐ Disulfoton	☐ N-Nitrosodiethylamine	☐ tris-(2,3-Dibromopropyl) phosphate
☐ 3-Chloropropylene	☐ Endosulfan I	☐ N-Nitrosodimethylamine	☐ Vinyl chloride
☐ Chrysene	☐ Endosulfan II	☐ N-Nitroso-di-n-butylamine	☐ XYLENES-TOTAL MIXED ISOMERS
☐ o-CRESOL	☐ Endrin	☐ N-Nitrosomethylethylamine	
☐ m-CRESOL	☐ Endrin aldehyde	☐ N-Nitrosomorpholine	

☐ None of the above listed underlying hazardous constituents are reasonably expected to be present in this waste stream.

UNDERLYING HAZARDOUS CONSTITUENTS WORKSHEET

WASTE STREAM # 771-29-10

The following underlying hazardous constituents (indicated by a checkmark in the appropriate box) are reasonably expected to be present in this waste stream:

INORGANIC CONSTITUENTS			
☐ Antimony	☐ Cadmium	■ Lead	☐ Silver
☐ Arsenic	☐ Chromium	■ Mercury	☐ Sulfide (Wastewater Only)
☐ Barium	☐ Cyanides (Total)	☐ Nickel	☐ Thallium
☐ Beryllium	☐ Cyanides (Amenable)	☐ Selenium	
ORGANIC CONSTITUENTS			
☐ Acenaphthylene	☐ p-CRESOL	☐ ETHYL ACETATE	☐ N-Nitrosopiperidine
☐ Acenaphthene	☐ Cyclohexanone	☐ Ethyl Cyanide (Propanenitrile)	☐ N-Nitrosopyrrolidine
☐ ACETONE	☐ 1,2-Dibromo-3-chloropropane	☐ ETHYL BENZENE	☐ Parathion
☐ Acetonitrile	☐ Ethylene dibromide (1,2-dibromoethane)	☐ ETHYL ETHER	☐ Total PCBs
☐ Acetophenone	☐ Dibromomethane	☐ bis(2-Ethylhexyl) phthalate	☐ Pentachlorobenzene
☐ Acrylamide	☐ 2,4,D(2-4-Dichlorophenoxyacetic acid)	☐ Ethyl methacrylate	☐ Pentachlorodibenzo-p-dioxins (all)
☐ Acrylonitrile	☐ Dibenz(a,h)anthracene	☐ Ethylene oxide	☐ Pentachlorodibenzofurans (all)
☐ Aldrin	☐ Dibenz(a,e)pyrene	☐ Fluoranthene	☐ Pentachloroethane
☐ Aniline	☐ m-Dichlorobenzene	☐ Fluorene	☐ Pentachloronitrobenzene
☐ Anthracene	☐ o-DICHLOROBENZENE	☐ Heptachlor	☐ Pentachlorophenol
☐ BENZENE	☐ p-Dichlorobenzene	☐ Hexachlorobenzene	☐ Phenacetin
☐ Benz(a)anthracene	☐ Dichlorodifluoromethane	☐ Hexachlorobutadiene	☐ Phenanthrene
☐ Benzal chloride	☐ 1,1-Dichloroethane	☐ Hexachlorocyclopentadiene	☐ Phenol
☐ Benzo(b)fluoranthene	☐ 1,2-Dichloroethane	☐ Hexachlorodibenzo-p-dioxins (all)	☐ Phthalic acid
☐ Benzo(k)fluoranthene	☐ 1,1-Dichloroethylene	☐ Hexachlorodibenzofurans (all)	☐ Phthalic anhydride
☐ Benzo(g,h,i)perylene	☐ trans-1,2-Dichloroethylene	☐ Hexachloroethane	☐ Pyrene
☐ Benzo(a)pyrene	☐ 2,4-Dichlorophenol	☐ Hexachloropropylene	☐ PYRIDINE
☐ Bromodichloromethane	☐ 2,6-Dichlorophenol	☐ Indeno (1,2,3-c,d) pyrene	☐ Safrole
☐ Methyl bromide (Bromomethane)	☐ 1,2-Dichloropropane	☐ Iodomethane	☐ Silvex (2,4,5-TP)
☐ 4-Bromophenyl phenyl ether	☐ cis-1,3-Dichloropropylene	☐ ISOBUTYL ALCOHOL	☐ 2,4,5-T(2,4,5-Trichloro phenoxy-acetic acid)
☐ n-BUTYL ALCOHOL	☐ trans-1,3-Dichloropropylene	☐ Isodrin	☐ 1,2,4,5-Tetrachlorobenzene
☐ Butyl benzyl phthalate	☐ Dieldrin	☐ METHANOL	☐ 1,1,1,2-Tetrachloroethane
☐ CARBON DISULFIDE	☐ Diethyl phthalate	☐ Methapyrilene	☐ 1,1,2,2-Tetrachloroethane
☐ CARBON TETRACHLORIDE	☐ 2,4-Dimethyl phenol	☐ Methoxychlor	☐ TETRACHLOROETHYLENE
☐ Chlordane (alpha & gamma isomers)	☐ Dimethyl phthalate	☐ 4,4-Methylene bis(2-chloroaniline)	☐ 2,3,4,6-Tetrachlorophenol
☐ p-Chloroaniline	☐ Di-n-butyl phthalate	☐ METHYLENE CHLORIDE	☐ TOLUENE
☐ CHLOROBENZENE	☐ 1,4-Dinitrobenzene	☐ METHYL ETHYL KETONE	☐ Toxaphene
☐ 2-Chloro-1,3-butadiene	☐ 4,6-Dinitro-o-cresol	☐ METHYL ISOBUTYL KETONE	☐ Bromoform (Tribromomethane)
☐ Chlorodibromomethane	☐ 2,4-Dinitrophenol	☐ Methyl methacrylate	☐ 1,2,4-Trichlorobenzene
☐ Chloroethane	☐ 2,4-Dinitrotoluene	☐ Methyl methansulfonate	☐ 1,1,1-TRICHLOROETHANE
☐ bis(2-chloroethyl)ether	☐ 2,6-Dinitrotoluene	☐ Naphthalene	☐ 1,1,2-TRICHLOROETHANE
☐ Chloroform	☐ Di-n-octyl phthalate	☐ o-Nitroaniline	☐ TRICHLOROETHYLENE
☐ bis(2-Chloroisopropyl)ether	☐ Di-n-propylnitrosamine	☐ p-Nitroaniline	☐ TRICHLOROMONOFLUOROMETHANE
☐ p-Chloro-m-cresol	☐ 1,4-Dioxane	☐ NITROBENZENE	☐ 2,4,5-Trichlorophenol
☐ 2-Chloroethyl vinyl ether	☐ Diphenylamine	☐ 5-Nitro-o-toluidine	☐ 2,4,6-Trichlorophenol
☐ Chloromethane (Methyl chloride)	☐ Diphenylnitrosamine	☐ o-Nitrophenol	☐ 1,2,3-Trichloropropane
☐ 2-Chloronaphthalene	☐ 1,2-Diphenylhydrazine	☐ p-Nitrophenol	☐ 1,1,2-TRICHLORO-1,2,2-TRIFLUOROETHANE
☐ 2-Chlorophenol	☐ Disulfoton	☐ N-Nitrosodiethylamine	☐ tris-(2,3-Dibromopropyl) phosphate
☐ 3-Chloropropylene	☐ Endosulfan I	☐ N-Nitrosodimethylamine	☐ Vinyl chloride
☐ Chrysene	☐ Endosulfan II	☐ N-Nitroso-di-n-butylamine	☐ XYLENES-TOTAL MIXED ISOMERS
☐ o-CRESOL	☐ Endrin	☐ N-Nitrosomethylethylamine	
☐ m-CRESOL	☐ Endrin aldehyde	☐ N-Nitrosomorpholine	

☐ None of the above listed underlying hazardous constituents are reasonably expected to be present in this waste stream.

UNDERLYING HAZARDOUS CONSTITUENTS WORKSHEET

WASTE STREAM # 771-29-33

The following underlying hazardous constituents (indicated by a checkmark in the appropriate box) are reasonably expected to be present in this waste stream:

INORGANIC CONSTITUENTS			
☐ Antimony	☐ Cadmium	■ Lead	☐ Silver
☐ Arsenic	☐ Chromium	■ Mercury	☐ Sulfide (Wastewater Only)
☐ Barium	☐ Cyanides (Total)	☐ Nickel	☐ Thallium
☐ Beryllium	☐ Cyanides (Amenable)	☐ Selenium	
ORGANIC CONSTITUENTS			
☐ Acenaphthylene	☐ p-CRESOL	☐ ETHYL ACETATE	☐ N-Nitrosopiperidine
☐ Acenaphthene	☐ Cyclohexanone	☐ Ethyl Cyanide (Propanenitrile)	☐ N-Nitrosopyrrolidine
☐ ACETONE	☐ 1,2-Dibromo-3-chloropropane	☐ ETHYL BENZENE	☐ Parathion
☐ Acetonitrile	☐ Ethylene dibromide (1,2-dibromoethane)	☐ ETHYL ETHER	☐ Total PCBs
☐ Acetophenone	☐ Dibromomethane	☐ bis(2-Ethylhexyl) phthalate	☐ Pentachlorobenzene
☐ Acrylamide	☐ 2,4,D(2-4-Dichlorophenoxyacetic acid)	☐ Ethyl methacrylate	☐ Pentachlorodibenzo-p-dioxins (all)
☐ Acrylonitrile	☐ Dibenz(a,h)anthracene	☐ Ethylene oxide	☐ Pentachlorodibenzofurans (all)
☐ Aldrin	☐ Dibenz(a,e)pyrene	☐ Fluoranthene	☐ Pentachloroethane
☐ Aniline	☐ m-Dichlorobenzene	☐ Fluorene	☐ Pentachloronitrobenzene
☐ Anthracene	☐ o-DICHLOROBENZENE	☐ Heptachlor	☐ Pentachlorophenol
☐ BENZENE	☐ p-Dichlorobenzene	☐ Hexachlorobenzene	☐ Phenacetin
☐ Benz(a)anthracene	☐ Dichlorodifluoromethane	☐ Hexachlorobutadiene	☐ Phenanthrene
☐ Benzal chloride	☐ 1,1-Dichloroethane	☐ Hexachlorocyclopentadiene	☐ Phenol
☐ Benzo(b)fluoranthene	☐ 1,2-Dichloroethane	☐ Hexachlorodibenzo-p-dioxins (all)	☐ Phthalic acid
☐ Benzo(k)fluoranthene	☐ 1,1-Dichloroethylene	☐ Hexachlorodibenzofurans (all)	☐ Phthalic anhydride
☐ Benzo(g,h,i)perylene	☐ trans-1,2-Dichloroethylene	☐ Hexachloroethane	☐ Pyrene
☐ Benzo(a)pyrene	☐ 2,4-Dichlorophenol	☐ Hexachloropropylene	☐ PYRIDINE
☐ Bromodichloromethane	☐ 2,6-Dichlorophenol	☐ Indeno (1,2,3-c,d) pyrene	☐ Safrole
☐ Methyl bromide (Bromomethane)	☐ 1,2-Dichloropropane	☐ Iodomethane	☐ Silvex (2,4,5-TP)
☐ 4-Bromophenyl phenyl ether	☐ cis-1,3-Dichloropropylene	☐ ISOBUTYL ALCOHOL	☐ 2,4,5-T(2,4,5-Trichloro phenoxy-acetic acid)
☐ n-BUTYL ALCOHOL	☐ trans-1,3-Dichloropropylene	☐ Isodrin	☐ 1,2,4,5-Tetrachlorobenzene
☐ Butyl benzyl phthalate	☐ Dieldrin	☐ METHANOL	☐ 1,1,1,2-Tetrachloroethane
☐ CARBON DISULFIDE	☐ Diethyl phthalate	☐ Methapyrilene	☐ 1,1,2,2-Tetrachloroethane
☐ CARBON TETRACHLORIDE	☐ 2,4-Dimethyl phenol	☐ Methoxychlor	☐ TETRACHLOROETHYLENE
☐ Chlordane (alpha & gamma isomers)	☐ Dimethyl phthalate	☐ 4,4-Methylene bis(2-chloroaniline)	☐ 2,3,4,6-Tetrachlorophenol
☐ p-Chloroaniline	☐ Di-n-butyl phthalate	☐ METHYLENE CHLORIDE	☐ TOLUENE
☐ CHLOROBENZENE	☐ 1,4-Dinitrobenzene	☐ METHYL ETHYL KETONE	☐ Toxaphene
☐ 2-Chloro-1,3-butadiene	☐ 4,6-Dinitro-o-cresol	☐ METHYL ISOBUTYL KETONE	☐ Bromoform (Tribromomethane)
☐ Chlorodibromomethane	☐ 2,4-Dinitrophenol	☐ Methyl methacrylate	☐ 1,2,4-Trichlorobenzene
☐ Chloroethane	☐ 2,4-Dinitrotoluene	☐ Methyl methansulfonate	☐ 1,1,1-TRICHLOROETHANE
☐ bis(2-chloroethyl)ether	☐ 2,6-Dinitrotoluene	☐ Naphthalene	☐ 1,1,2-TRICHLOROETHANE
☐ Chloroform	☐ Di-n-octyl phthalate	☐ o-Nitroaniline	☐ TRICHLOROETHYLENE
☐ bis(2-Chloroisopropyl)ether	☐ Di-n-propylnitrosamine	☐ p-Nitroaniline	☐ TRICHLOROMONOFLUOROMETHANE
☐ p-Chloro-m-cresol	☐ 1,4-Dioxane	☐ NITROBENZENE	☐ 2,4,5-Trichlorophenol
☐ 2-Chloroethyl vinyl ether	☐ Diphenylamine	☐ 5-Nitro-o-toluidine	☐ 2,4,6-Trichlorophenol
☐ Chloromethane (Methyl chloride)	☐ Diphenylnitrosamine	☐ o-Nitrophenol	☐ 1,2,3-Trichloropropane
☐ 2-Chloronaphthalene	☐ 1,2-Diphenylhydrazine	☐ p-Nitrophenol	☐ 1,1,2-TRICHLORO-1,2,2-TRIFLUOROETHANE
☐ 2-Chlorophenol	☐ Disulfoton	☐ N-Nitrosodiethylamine	☐ tris-(2,3-Dibromopropyl) phosphate
☐ 3-Chloropropylene	☐ Endosulfan I	☐ N-Nitrosodimethylamine	☐ Vinyl chloride
☐ Chrysene	☐ Endosulfan II	☐ N-Nitroso-di-n-butylamine	☐ XYLENES-TOTAL MIXED ISOMERS
☐ o-CRESOL	☐ Endrin	☐ N-Nitrosomethylethylamine	
☐ m-CRESOL	☐ Endrin aldehyde	☐ N-Nitrosomorpholine	

☐ None of the above listed underlying hazardous constituents are reasonably expected to be present in this waste stream.

UNDERLYING HAZARDOUS CONSTITUENTS WORKSHEET

WASTE STREAM # 771-29-39A

The following underlying hazardous constituents (indicated by a checkmark in the appropriate box) are reasonably expected to be present in this waste stream:

INORGANIC CONSTITUENTS			
☐ Antimony	■ Cadmium	■ Lead	☐ Silver
☐ Arsenic	☐ Chromium	■ Mercury	☐ Sulfide (Wastewater Only)
☐ Barium	☐ Cyanides (Total)	■ Nickel	☐ Thallium
☐ Beryllium	☐ Cyanides (Amenable)	☐ Selenium	
ORGANIC CONSTITUENTS			
☐ Acenaphthylene	☐ p-CRESOL	☐ ETHYL ACETATE	☐ N-Nitrosopiperidine
☐ Acenaphthene	☐ Cyclohexanone	☐ Ethyl Cyanide (Propanenitrile)	☐ N-Nitrosopyrrolidine
☐ ACETONE	☐ 1,2-Dibromo-3-chloropropane	☐ ETHYL BENZENE	☐ Parathion
☐ Acetonitrile	☐ Ethylene dibromide (1,2-dibromoethane)	☐ ETHYL ETHER	☐ Total PCBs
☐ Acetophenone	☐ Dibromomethane	☐ bis(2-Ethylhexyl) phthalate	☐ Pentachlorobenzene
☐ Acrylamide	☐ 2,4,D(2-4-Dichlorophenoxyacetic acid)	☐ Ethyl methacrylate	☐ Pentachlorodibenzo-p-dioxins (all)
☐ Acrylonitrile	☐ Dibenz(a,h)anthracene	☐ Ethylene oxide	☐ Pentachlorodibenzofurans (all)
☐ Aldrin	☐ Dibenz(a,e)pyrene	☐ Fluoranthene	☐ Pentachloroethane
☐ Aniline	☐ m-Dichlorobenzene	☐ Fluorene	☐ Pentachloronitrobenzene
☐ Anthracene	☐ o-DICHLOROBENZENE	☐ Heptachlor	☐ Pentachlorophenol
☐ BENZENE	☐ p-Dichlorobenzene	☐ Hexachlorobenzene	☐ Phenacetin
☐ Benz(a)anthracene	☐ Dichlorodifluoromethane	☐ Hexachlorobutadiene	☐ Phenanthrene
☐ Benzal chloride	☐ 1,1-Dichloroethane	☐ Hexachlorocyclopentadiene	☐ Phenol
☐ Benzo(b)fluoranthene	☐ 1,2-Dichloroethane	☐ Hexachlorodibenzo-p-dioxins (all)	☐ Phthalic acid
☐ Benzo(k)fluoranthene	☐ 1,1-Dichloroethylene	☐ Hexachlorodibenzofurans (all)	☐ Phthalic anhydride
☐ Benzo(g,h,i)perylene	☐ trans-1,2-Dichloroethylene	☐ Hexachloroethane	☐ Pyrene
☐ Benzo(a)pyrene	☐ 2,4-Dichlorophenol	☐ Hexachloropropylene	☐ PYRIDINE
☐ Bromodichloromethane	☐ 2,6-Dichlorophenol	☐ Indeno (1,2,3-c,d) pyrene	☐ Safrole
☐ Methyl bromide (Bromomethane)	☐ 1,2-Dichloropropane	☐ Iodomethane	☐ Silvex (2,4,5-TP)
☐ 4-Bromophenyl phenyl ether	☐ cis-1,3-Dichloropropylene	☐ ISOBUTYL ALCOHOL	☐ 2,4,5-T(2,4,5-Trichloro phenoxy-acetic acid)
☐ n-BUTYL ALCOHOL	☐ trans-1,3-Dichloropropylene	☐ Isodrin	☐ 1,2,4,5-Tetrachlorobenzene
☐ Butyl benzyl phthalate	☐ Dieldrin	☐ METHANOL	☐ 1,1,1,2-Tetrachloroethane
☐ CARBON DISULFIDE	☐ Diethyl phthalate	☐ Methapyrilene	☐ 1,1,2,2-Tetrachloroethane
☐ CARBON TETRACHLORIDE	☐ 2,4-Dimethyl phenol	☐ Methoxychlor	☐ TETRACHLOROETHYLENE
☐ Chlordane (alpha & gamma isomers)	☐ Dimethyl phthalate	☐ 4,4-Methylene bis(2-chloroaniline)	☐ 2,3,4,6-Tetrachlorophenol
☐ p-Chloroaniline	☐ Di-n-butyl phthalate	☐ METHYLENE CHLORIDE	☐ TOLUENE
☐ CHLOROBENZENE	☐ 1,4-Dinitrobenzene	☐ METHYL ETHYL KETONE	☐ Toxaphene
☐ 2-Chloro-1,3-butadiene	☐ 4,6-Dinitro-o-cresol	☐ METHYL ISOBUTYL KETONE	☐ Bromoform (Tribromomethane)
☐ Chlorodibromomethane	☐ 2,4-Dinitrophenol	☐ Methyl methacrylate	☐ 1,2,4-Trichlorobenzene
☐ Chloroethane	☐ 2,4-Dinitrotoluene	☐ Methyl methansulfonate	☐ 1,1,1-TRICHLOROETHANE
☐ bis(2-chloroethyl)ether	☐ 2,6-Dinitrotoluene	☐ Naphthalene	☐ 1,1,2-TRICHLOROETHANE
☐ Chloroform	☐ Di-n-octyl phthalate	☐ o-Nitroaniline	☐ TRICHLOROETHYLENE
☐ bis(2-Chloroisopropyl)ether	☐ Di-n-propylnitrosamine	☐ p-Nitroaniline	☐ TRICHLOROMONOFLUOROMETHANE
☐ p-Chloro-m-cresol	☐ 1,4-Dioxane	☐ NITROBENZENE	☐ 2,4,5-Trichlorophenol
☐ 2-Chloroethyl vinyl ether	☐ Diphenylamine	☐ 5-Nitro-o-toluidine	☐ 2,4,6-Trichlorophenol
☐ Chloromethane (Methyl chloride)	☐ Diphenylnitrosamine	☐ o-Nitrophenol	☐ 1,2,3-Trichloropropane
☐ 2-Chloronaphthalene	☐ 1,2-Diphenylhydrazine	☐ p-Nitrophenol	☐ 1,1,2-TRICHLORO-1,2,2-TRIFLUOROETHANE
☐ 2-Chlorophenol	☐ Disulfoton	☐ N-Nitrosodiethylamine	☐ tris-(2,3-Dibromopropyl) phosphate
☐ 3-Chloropropylene	☐ Endosulfan I	☐ N-Nitrosodimethylamine	☐ Vinyl chloride
☐ Chrysene	☐ Endosulfan II	☐ N-Nitroso-di-n-butylamine	☐ XYLENES-TOTAL MIXED ISOMERS
☐ o-CRESOL	☐ Endrin	☐ N-Nitrosomethylethylamine	
☐ m-CRESOL	☐ Endrin aldehyde	☐ N-Nitrosomorpholine	

☐ None of the above listed underlying hazardous constituents are reasonably expected to be present in this waste stream.

UNDERLYING HAZARDOUS CONSTITUENTS WORKSHEET

WASTE STREAM # 771-29-40

The following underlying hazardous constituents (indicated by a checkmark in the appropriate box) are reasonably expected to be present in this waste stream:

INORGANIC CONSTITUENTS			
☐ Antimony	☐ Cadmium	☐ Lead	☐ Silver
☐ Arsenic	☐ Chromium	■ Mercury	☐ Sulfide (Wastewater Only)
■ Barium	☐ Cyanides (Total)	☐ Nickel	☐ Thallium
☐ Beryllium	☐ Cyanides (Amenable)	☐ Selenium	

ORGANIC CONSTITUENTS			
☐ Acenaphthylene	☐ p-CRESOL	☐ ETHYL ACETATE	☐ N-Nitrosopiperidine
☐ Acenaphthene	☐ Cyclohexanone	☐ Ethyl Cyanide (Propanenitrile)	☐ N-Nitrosopyrrolidine
☐ ACETONE	☐ 1,2-Dibromo-3-chloropropane	☐ ETHYL BENZENE	☐ Parathion
☐ Acetonitrile	☐ Ethylene dibromide (1,2-dibromoethane)	☐ ETHYL ETHER	☐ Total PCBs
☐ Acetophenone	☐ Dibromomethane	☐ bis(2-Ethylhexyl) phthalate	☐ Pentachlorobenzene
☐ Acrylamide	☐ 2,4,D(2-4-Dichlorophenoxyacetic acid)	☐ Ethyl methacrylate	☐ Pentachlorodibenzo-p-dioxins (all)
☐ Acrylonitrile	☐ Dibenz(a,h)anthracene	☐ Ethylene oxide	☐ Pentachlorodibenzofurans (all)
☐ Aldrin	☐ Dibenz(a,e)pyrene	☐ Fluoranthene	☐ Pentachloroethane
☐ Aniline	☐ m-Dichlorobenzene	☐ Fluorene	☐ Pentachloronitrobenzene
☐ Anthracene	☐ o-DICHLOROBENZENE	☐ Heptachlor	☐ Pentachlorophenol
☐ BENZENE	☐ p-Dichlorobenzene	☐ Hexachlorobenzene	☐ Phenacetin
☐ Benz(a)anthracene	☐ Dichlorodifluoromethane	☐ Hexachlorobutadiene	☐ Phenanthrene
☐ Benzal chloride	☐ 1,1-Dichloroethane	☐ Hexachlorocyclopentadiene	☐ Phenol
☐ Benzo(b)fluoranthene	☐ 1,2-Dichloroethane	☐ Hexachlorodibenzo-p-dioxins (all)	☐ Phthalic acid
☐ Benzo(k)fluoranthene	☐ 1,1-Dichloroethylene	☐ Hexachlorodibenzofurans (all)	☐ Phthalic anhydride
☐ Benzo(g,h,i)perylene	☐ trans-1,2-Dichloroethylene	☐ Hexachloroethane	☐ Pyrene
☐ Benzo(a)pyrene	☐ 2,4-Dichlorophenol	☐ Hexachloropropylene	☐ PYRIDINE
☐ Bromodichloromethane	☐ 2,6-Dichlorophenol	☐ Indeno (1,2,3-c,d) pyrene	☐ Safrole
☐ Methyl bromide (Bromomethane)	☐ 1,2-Dichloropropane	☐ Iodomethane	☐ Silvex (2,4,5-TP)
☐ 4-Bromophenyl phenyl ether	☐ cis-1,3-Dichloropropylene	☐ ISOBUTYL ALCOHOL	☐ 2,4,5-T(2,4,5-Trichloro phenoxy-acetic acid)
☐ n-BUTYL ALCOHOL	☐ trans-1,3-Dichloropropylene	☐ Isodrin	☐ 1,2,4,5-Tetrachlorobenzene
☐ Butyl benzyl phthalate	☐ Dieldrin	☐ METHANOL	☐ 1,1,1,2-Tetrachloroethane
☐ CARBON DISULFIDE	☐ Diethyl phthalate	☐ Methapyrilene	☐ 1,1,2,2-Tetrachloroethane
☐ CARBON TETRACHLORIDE	☐ 2,4-Dimethyl phenol	☐ Methoxychlor	☐ TETRACHLOROETHYLENE
☐ Chlordane (alpha & gamma isomers)	☐ Dimethyl phthalate	☐ 4,4-Methylene bis(2-chloroaniline)	☐ 2,3,4,6-Tetrachlorophenol
☐ p-Chloroaniline	☐ Di-n-butyl phthalate	☐ METHYLENE CHLORIDE	☐ TOLUENE
☐ CHLOROBENZENE	☐ 1,4-Dinitrobenzene	☐ METHYL ETHYL KETONE	☐ Toxaphene
☐ 2-Chloro-1,3-butadiene	☐ 4,6-Dinitro-o-cresol	☐ METHYL ISOBUTYL KETONE	☐ Bromoform (Tribromomethane)
☐ Chlorodibromomethane	☐ 2,4-Dinitrophenol	☐ Methyl methacrylate	☐ 1,2,4-Trichlorobenzene
☐ Chloroethane	☐ 2,4-Dinitrotoluene	☐ Methyl methansulfonate	☐ 1,1,1-TRICHLOROETHANE
☐ bis(2-chloroethyl)ether	☐ 2,6-Dinitrotoluene	☐ Naphthalene	☐ 1,1,2-TRICHLOROETHANE
☐ Chloroform	☐ Di-n-octyl phthalate	☐ o-Nitroaniline	☐ TRICHLOROETHYLENE
☐ bis(2-Chloroisopropyl)ether	☐ Di-n-propylnitrosamine	☐ p-Nitroaniline	☐ TRICHLOROMONOFLUOROMETHANE
☐ p-Chloro-m-cresol	☐ 1,4-Dioxane	☐ NITROBENZENE	☐ 2,4,5-Trichlorophenol
☐ 2-Chloroethyl vinyl ether	☐ Diphenylamine	☐ 5-Nitro-o-toluidine	☐ 2,4,6-Trichlorophenol
☐ Chloromethane (Methyl chloride)	☐ Diphenylnitrosamine	☐ o-Nitrophenol	☐ 1,2,3-Trichloropropane
☐ 2-Chloronaphthalene	☐ 1,2-Diphenylhydrazine	☐ p-Nitrophenol	☐ 1,1,2-TRICHLORO-1,2,2-TRIFLUOROETHANE
☐ 2-Chlorophenol	☐ Disulfoton	☐ N-Nitrosodiethylamine	☐ tris-(2,3-Dibromopropyl) phosphate
☐ 3-Chloropropylene	☐ Endosulfan I	☐ N-Nitrosodimethylamine	☐ Vinyl chloride
☐ Chrysene	☐ Endosulfan II	☐ N-Nitroso-di-n-butylamine	☐ XYLENES-TOTAL MIXED ISOMERS
☐ o-CRESOL	☐ Endrin	☐ N-Nitrosomethylethylamine	
☐ m-CRESOL	☐ Endrin aldehyde	☐ N-Nitrosomorpholine	

☐ None of the above listed underlying hazardous constituents are reasonably expected to be present in this waste stream.

UNDERLYING HAZARDOUS CONSTITUENTS WORKSHEET

WASTE STREAM # 771-29-41

The following underlying hazardous constituents (indicated by a checkmark in the appropriate box) are reasonably expected to be present in this waste stream:

INORGANIC CONSTITUENTS			
☐ Antimony	☐ Cadmium	■ Lead	☐ Silver
☐ Arsenic	☐ Chromium	☐ Mercury	☐ Sulfide (Wastewater Only)
☐ Barium	☐ Cyanides (Total)	☐ Nickel	☐ Thallium
☐ Beryllium	☐ Cyanides (Amenable)	☐ Selenium	
ORGANIC CONSTITUENTS			
☐ Acenaphthylene	☐ p-CRESOL	☐ ETHYL ACETATE	☐ N-Nitrosopiperidine
☐ Acenaphthene	☐ Cyclohexanone	☐ Ethyl Cyanide (Propanenitrile)	☐ N-Nitrosopyrrolidine
☐ ACETONE	☐ 1,2-Dibromo-3-chloropropane	☐ ETHYL BENZENE	☐ Parathion
☐ Acetonitrile	☐ Ethylene dibromide (1,2-dibromoethane)	☐ ETHYL ETHER	☐ Total PCBs
☐ Acetophenone	☐ Dibromomethane	☐ bis(2-Ethylhexyl) phthalate	☐ Pentachlorobenzene
☐ Acrylamide	☐ 2,4,D(2-4-Dichlorophenoxyacetic acid)	☐ Ethyl methacrylate	☐ Pentachlorodibenzo-p-dioxins (all)
☐ Acrylonitrile	☐ Dibenz(a,h)anthracene	☐ Ethylene oxide	☐ Pentachlorodibenzofurans (all)
☐ Aldrin	☐ Dibenz(a,e)pyrene	☐ Fluoranthene	☐ Pentachloroethane
☐ Aniline	☐ m-Dichlorobenzene	☐ Fluorene	☐ Pentachloronitrobenzene
☐ Anthracene	☐ o-DICHLOROBENZENE	☐ Heptachlor	☐ Pentachlorophenol
☐ BENZENE	☐ p-Dichlorobenzene	☐ Hexachlorobenzene	☐ Phenacetin
☐ Benz(a)anthracene	☐ Dichlorodifluoromethane	☐ Hexachlorobutadiene	☐ Phenanthrene
☐ Benzal chloride	☐ 1,1-Dichloroethane	☐ Hexachlorocyclopentadiene	☐ Phenol
☐ Benzo(b)fluoranthene	☐ 1,2-Dichloroethane	☐ Hexachlorodibenzo-p-dioxins (all)	☐ Phthalic acid
☐ Benzo(k)fluoranthene	☐ 1,1-Dichloroethylene	☐ Hexachlorodibenzofurans (all)	☐ Phthalic anhydride
☐ Benzo(g,h,i)perylene	☐ trans-1,2-Dichloroethylene	☐ Hexachloroethane	☐ Pyrene
☐ Benzo(a)pyrene	☐ 2,4-Dichlorophenol	☐ Hexachloropropylene	☐ PYRIDINE
☐ Bromodichloromethane	☐ 2,6-Dichlorophenol	☐ Indeno (1,2,3-c,d) pyrene	☐ Safrole
☐ Methyl bromide (Bromomethane)	☐ 1,2-Dichloropropane	☐ Iodomethane	☐ Silvex (2,4,5-TP)
☐ 4-Bromophenyl phenyl ether	☐ cis-1,3-Dichloropropylene	☐ ISOBUTYL ALCOHOL	☐ 2,4,5-T(2,4,5-Trichloro phenoxy-acetic acid)
☐ n-BUTYL ALCOHOL	☐ trans-1,3-Dichloropropylene	☐ Isodrin	☐ 1,2,4,5-Tetrachlorobenzene
☐ Butyl benzyl phthalate	☐ Dieldrin	☐ METHANOL	☐ 1,1,1,2-Tetrachloroethane
☐ CARBON DISULFIDE	☐ Diethyl phthalate	☐ Methapyrilene	☐ 1,1,2,2-Tetrachloroethane
☐ CARBON TETRACHLORIDE	☐ 2,4-Dimethyl phenol	☐ Methoxychlor	☐ TETRACHLOROETHYLENE
☐ Chlordane (alpha & gamma isomers)	☐ Dimethyl phthalate	☐ 4,4-Methylene bis(2-chloroaniline)	☐ 2,3,4,6-Tetrachlorophenol
☐ p-Chloroaniline	☐ Di-n-butyl phthalate	☐ METHYLENE CHLORIDE	☐ TOLUENE
☐ CHLOROBENZENE	☐ 1,4-Dinitrobenzene	☐ METHYL ETHYL KETONE	☐ Toxaphene
☐ 2-Chloro-1,3-butadiene	☐ 4,6-Dinitro-o-cresol	☐ METHYL ISOBUTYL KETONE	☐ Bromoform (Tribromomethane)
☐ Chlorodibromomethane	☐ 2,4-Dinitrophenol	☐ Methyl methacrylate	☐ 1,2,4-Trichlorobenzene
☐ Chloroethane	☐ 2,4-Dinitrotoluene	☐ Methyl methansulfonate	☐ 1,1,1-TRICHLOROETHANE
☐ bis(2-chloroethyl)ether	☐ 2,6-Dinitrotoluene	☐ Naphthalene	☐ 1,1,2-TRICHLOROETHANE
☐ Chloroform	☐ Di-n-octyl phthalate	☐ o-Nitroaniline	☐ TRICHLOROETHYLENE
☐ bis(2-Chloroisopropyl)ether	☐ Di-n-propylnitrosamine	☐ p-Nitroaniline	☐ TRICHLOROMONOFLUOROMETHANE
☐ p-Chloro-m-cresol	☐ 1,4-Dioxane	☐ NITROBENZENE	☐ 2,4,5-Trichlorophenol
☐ 2-Chloroethyl vinyl ether	☐ Diphenylamine	☐ 5-Nitro-o-toluidine	☐ 2,4,6-Trichlorophenol
☐ Chloromethane (Methyl chloride)	☐ Diphenylnitrosamine	☐ o-Nitrophenol	☐ 1,2,3-Trichloropropane
☐ 2-Chloronaphthalene	☐ 1,2-Diphenylhydrazine	☐ p-Nitrophenol	☐ 1,1,2-TRICHLORO-1,2,2-TRIFLUOROETHANE
☐ 2-Chlorophenol	☐ Disulfoton	☐ N-Nitrosodiethylamine	☐ tris-(2,3-Dibromopropyl) phosphate
☐ 3-Chloropropylene	☐ Endosulfan I	☐ N-Nitrosodimethylamine	☐ Vinyl chloride
☐ Chrysene	☐ Endosulfan II	☐ N-Nitroso-di-n-butylamine	☐ XYLENES-TOTAL MIXED ISOMERS
☐ o-CRESOL	☐ Endrin	☐ N-Nitrosomethylethylamine	
☐ m-CRESOL	☐ Endrin aldehyde	☐ N-Nitrosomorpholine	

☐ None of the above listed underlying hazardous constituents are reasonably expected to be present in this waste stream.

UNDERLYING HAZARDOUS CONSTITUENTS WORKSHEET

WASTE STREAM # 771-31-6

The following underlying hazardous constituents (indicated by a checkmark in the appropriate box) are reasonably expected to be present in this waste stream:

INORGANIC CONSTITUENTS			
☐ Antimony	■ Cadmium	■ Lead	■ Silver
■ Arsenic	☐ Chromium	■ Mercury	☐ Sulfide (Wastewater Only)
■ Barium	☐ Cyanides (Total)	■ Nickel	☐ Thallium
■ Beryllium	☐ Cyanides (Amenable)	■ Selenium	

ORGANIC CONSTITUENTS			
☐ Acenaphthylene	☐ p-CRESOL	☐ ETHYL ACETATE	☐ N-Nitrosopiperidine
☐ Acenaphthene	☐ Cyclohexanone	☐ Ethyl Cyanide (Propanenitrile)	☐ N-Nitrosopyrrolidine
☐ ACETONE	☐ 1,2-Dibromo-3-chloropropane	☐ ETHYL BENZENE	☐ Parathion
☐ Acetonitrile	☐ Ethylene dibromide (1,2-dibromoethane)	☐ ETHYL ETHER	☐ Total PCBs
☐ Acetophenone	☐ Dibromomethane	☐ bis(2-Ethylhexyl) phthalate	☐ Pentachlorobenzene
☐ Acrylamide	☐ 2,4,D(2-4-Dichlorophenoxyacetic acid)	☐ Ethyl methacrylate	☐ Pentachlorodibenzo-p-dioxins (all)
☐ Acrylonitrile	☐ Dibenz(a,h)anthracene	☐ Ethylene oxide	☐ Pentachlorodibenzofurans (all)
☐ Aldrin	☐ Dibenz(a,e)pyrene	☐ Fluoranthene	☐ Pentachloroethane
☐ Aniline	☐ m-Dichlorobenzene	☐ Fluorene	☐ Pentachloronitrobenzene
☐ Anthracene	☐ o-DICHLOROBENZENE	☐ Heptachlor	☐ Pentachlorophenol
☐ BENZENE	☐ p-Dichlorobenzene	☐ Hexachlorobenzene	☐ Phenacetin
☐ Benz(a)anthracene	☐ Dichlorodifluoromethane	☐ Hexachlorobutadiene	☐ Phenanthrene
☐ Benzal chloride	☐ 1,1-Dichloroethane	☐ Hexachlorocyclopentadiene	☐ Phenol
☐ Benzo(b)fluoranthene	☐ 1,2-Dichloroethane	☐ Hexachlorodibenzo-p-dioxins (all)	☐ Phthalic acid
☐ Benzo(k)fluoranthene	☐ 1,1-Dichloroethylene	☐ Hexachlorodibenzofurans (all)	☐ Phthalic anhydride
☐ Benzo(g,h,i)perylene	☐ trans-1,2-Dichloroethylene	☐ Hexachloroethane	☐ Pyrene
☐ Benzo(a)pyrene	☐ 2,4-Dichlorophenol	☐ Hexachloropropylene	☐ PYRIDINE
☐ Bromodichloromethane	☐ 2,6-Dichlorophenol	☐ Indeno (1,2,3-c,d) pyrene	☐ Safrole
☐ Methyl bromide (Bromomethane)	☐ 1,2-Dichloropropane	☐ Iodomethane	☐ Silvex (2,4,5-TP)
☐ 4-Bromophenyl phenyl ether	☐ cis-1,3-Dichloropropylene	☐ ISOBUTYL ALCOHOL	☐ 2,4,5-T(2,4,5-Trichloro phenoxy-acetic acid)
☐ n-BUTYL ALCOHOL	☐ trans-1,3-Dichloropropylene	☐ Isodrin	☐ 1,2,4,5-Tetrachlorobenzene
☐ Butyl benzyl phthalate	☐ Dieldrin	☐ METHANOL	☐ 1,1,1,2-Tetrachloroethane
☐ CARBON DISULFIDE	☐ Diethyl phthalate	☐ Methapyrilene	☐ 1,1,2,2-Tetrachloroethane
☐ CARBON TETRACHLORIDE	☐ 2,4-Dimethyl phenol	☐ Methoxychlor	☐ TETRACHLOROETHYLENE
☐ Chlordane (alpha & gamma isomers)	☐ Dimethyl phthalate	☐ 4,4-Methylene bis(2-chloroaniline)	☐ 2,3,4,6-Tetrachlorophenol
☐ p-Chloroaniline	☐ Di-n-butyl phthalate	☐ METHYLENE CHLORIDE	☐ TOLUENE
☐ CHLOROBENZENE	☐ 1,4-Dinitrobenzene	☐ METHYL ETHYL KETONE	☐ Toxaphene
☐ 2-Chloro-1,3-butadiene	☐ 4,6-Dinitro-o-cresol	☐ METHYL ISOBUTYL KETONE	☐ Bromoform (Tribromomethane)
☐ Chlorodibromomethane	☐ 2,4-Dinitrophenol	☐ Methyl methacrylate	☐ 1,2,4-Trichlorobenzene
☐ Chloroethane	☐ 2,4-Dinitrotoluene	☐ Methyl methansulfonate	☐ 1,1,1-TRICHLOROETHANE
☐ bis(2-chloroethyl)ether	☐ 2,6-Dinitrotoluene	☐ Naphthalene	☐ 1,1,2-TRICHLOROETHANE
☐ Chloroform	☐ Di-n-octyl phthalate	☐ o-Nitroaniline	☐ TRICHLOROETHYLENE
☐ bis(2-Chloroisopropyl)ether	☐ Di-n-propylnitrosamine	☐ p-Nitroaniline	☐ TRICHLOROMONOFLUOROMETHANE
☐ p-Chloro-m-cresol	☐ 1,4-Dioxane	☐ NITROBENZENE	☐ 2,4,5-Trichlorophenol
☐ 2-Chloroethyl vinyl ether	☐ Diphenylamine	☐ 5-Nitro-o-toluidine	☐ 2,4,6-Trichlorophenol
☐ Chloromethane (Methyl chloride)	☐ Diphenylnitrosamine	☐ o-Nitrophenol	☐ 1,2,3-Trichloropropane
☐ 2-Chloronaphthalene	☐ 1,2-Diphenylhydrazine	☐ p-Nitrophenol	☐ 1,1,2-TRICHLORO-1,2,2-TRIFLUOROETHANE
☐ 2-Chlorophenol	☐ Disulfoton	☐ N-Nitrosodiethylamine	☐ tris-(2,3-Dibromopropyl) phosphate
☐ 3-Chloropropylene	☐ Endosulfan I	☐ N-Nitrosodimethylamine	☐ Vinyl chloride
☐ Chrysene	☐ Endosulfan II	☐ N-Nitroso-di-n-butylamine	☐ XYLENES-TOTAL MIXED ISOMERS
☐ o-CRESOL	☐ Endrin	☐ N-Nitrosomethylethylamine	
☐ m-CRESOL	☐ Endrin aldehyde	☐ N-Nitrosomorpholine	

☐ None of the above listed underlying hazardous constituents are reasonably expected to be present in this waste stream.

UNDERLYING HAZARDOUS CONSTITUENTS WORKSHEET

WASTE STREAM # 771-35-7

The following underlying hazardous constituents (indicated by a checkmark in the appropriate box) are reasonably expected to be present in this waste stream:

INORGANIC CONSTITUENTS			
☐ Antimony	☐ Cadmium	■ Lead	☐ Silver
☐ Arsenic	☐ Chromium	☐ Mercury	☐ Sulfide (Wastewater Only)
☐ Barium	☐ Cyanides (Total)	☐ Nickel	☐ Thallium
☐ Beryllium	☐ Cyanides (Amenable)	☐ Selenium	
ORGANIC CONSTITUENTS			
☐ Acenaphthylene	☐ p-CRESOL	☐ ETHYL ACETATE	☐ N-Nitrosopiperidine
☐ Acenaphthene	☐ Cyclohexanone	☐ Ethyl Cyanide (Propanenitrile)	☐ N-Nitrosopyrrolidine
☐ ACETONE	☐ 1,2-Dibromo-3-chloropropane	☐ ETHYL BENZENE	☐ Parathion
☐ Acetonitrile	☐ Ethylene dibromide (1,2-dibromoethane)	☐ ETHYL ETHER	☐ Total PCBs
☐ Acetophenone	☐ Dibromomethane	☐ bis(2-Ethylhexyl) phthalate	☐ Pentachlorobenzene
☐ Acrylamide	☐ 2,4,D(2-4-Dichlorophenoxyacetic acid)	☐ Ethyl methacrylate	☐ Pentachlorodibenzo-p-dioxins (all)
☐ Acrylonitrile	☐ Dibenz(a,h)anthracene	☐ Ethylene oxide	☐ Pentachlorodibenzofurans (all)
☐ Aldrin	☐ Dibenz(a,e)pyrene	☐ Fluoranthene	☐ Pentachloroethane
☐ Aniline	☐ m-Dichlorobenzene	☐ Fluorene	☐ Pentachloronitrobenzene
☐ Anthracene	☐ o-DICHLOROBENZENE	☐ Heptachlor	☐ Pentachlorophenol
☐ BENZENE	☐ p-Dichlorobenzene	☐ Hexachlorobenzene	☐ Phenacetin
☐ Benz(a)anthracene	☐ Dichlorodifluoromethane	☐ Hexachlorobutadiene	☐ Phenanthrene
☐ Benzal chloride	☐ 1,1-Dichloroethane	☐ Hexachlorocyclopentadiene	☐ Phenol
☐ Benzo(b)fluoranthene	☐ 1,2-Dichloroethane	☐ Hexachlorodibenzo-p-dioxins (all)	☐ Phthalic acid
☐ Benzo(k)fluoranthene	☐ 1,1-Dichloroethylene	☐ Hexachlorodibenzofurans (all)	☐ Phthalic anhydride
☐ Benzo(g,h,i)perylene	☐ trans-1,2-Dichloroethylene	☐ Hexachloroethane	☐ Pyrene
☐ Benzo(a)pyrene	☐ 2,4-Dichlorophenol	☐ Hexachloropropylene	☐ PYRIDINE
☐ Bromodichloromethane	☐ 2,6-Dichlorophenol	☐ Indeno (1,2,3-c,d) pyrene	☐ Safrole
☐ Methyl bromide (Bromomethane)	☐ 1,2-Dichloropropane	☐ Iodomethane	☐ Silvex (2,4,5-TP)
☐ 4-Bromophenyl phenyl ether	☐ cis-1,3-Dichloropropylene	☐ ISOBUTYL ALCOHOL	☐ 2,4,5-T(2,4,5-Trichloro phenoxy-acetic acid)
☐ n-BUTYL ALCOHOL	☐ trans-1,3-Dichloropropylene	☐ Isodrin	☐ 1,2,4,5-Tetrachlorobenzene
☐ Butyl benzyl phthalate	☐ Dieldrin	☐ METHANOL	☐ 1,1,1,2-Tetrachloroethane
☐ CARBON DISULFIDE	☐ Diethyl phthalate	☐ Methapyrilene	☐ 1,1,2,2-Tetrachloroethane
☐ CARBON TETRACHLORIDE	☐ 2,4-Dimethyl phenol	☐ Methoxychlor	☐ TETRACHLOROETHYLENE
☐ Chlordane (alpha & gamma isomers)	☐ Dimethyl phthalate	☐ 4,4-Methylene bis(2-chloroaniline)	☐ 2,3,4,6-Tetrachlorophenol
☐ p-Chloroaniline	☐ Di-n-butyl phthalate	☐ METHYLENE CHLORIDE	☐ TOLUENE
☐ CHLOROBENZENE	☐ 1,4-Dinitrobenzene	☐ METHYL ETHYL KETONE	☐ Toxaphene
☐ 2-Chloro-1,3-butadiene	☐ 4,6-Dinitro-o-cresol	☐ METHYL ISOBUTYL KETONE	☐ Bromoform (Tribromomethane)
☐ Chlorodibromomethane	☐ 2,4-Dinitrophenol	☐ Methyl methacrylate	☐ 1,2,4-Trichlorobenzene
☐ Chloroethane	☐ 2,4-Dinitrotoluene	☐ Methyl methansulfonate	☐ 1,1,1-TRICHLOROETHANE
☐ bis(2-chloroethyl)ether	☐ 2,6-Dinitrotoluene	☐ Naphthalene	☐ 1,1,2-TRICHLOROETHANE
☐ Chloroform	☐ Di-n-octyl phthalate	☐ o-Nitroaniline	☐ TRICHLOROETHYLENE
☐ bis(2-Chloroisopropyl)ether	☐ Di-n-propylnitrosamine	☐ p-Nitroaniline	☐ TRICHLOROMONOFLUOROMETHANE
☐ p-Chloro-m-cresol	☐ 1,4-Dioxane	☐ NITROBENZENE	☐ 2,4,5-Trichlorophenol
☐ 2-Chloroethyl vinyl ether	☐ Diphenylamine	☐ 5-Nitro-o-toluidine	☐ 2,4,6-Trichlorophenol
☐ Chloromethane (Methyl chloride)	☐ Diphenylnitrosamine	☐ o-Nitrophenol	☐ 1,2,3-Trichloropropane
☐ 2-Chloronaphthalene	☐ 1,2-Diphenylhydrazine	☐ p-Nitrophenol	☐ 1,1,2-TRICHLORO-1,2,2-TRIFLUOROETHANE
☐ 2-Chlorophenol	☐ Disulfoton	☐ N-Nitrosodiethylamine	☐ tris-(2,3-Dibromopropyl) phosphate
☐ 3-Chloropropylene	☐ Endosulfan I	☐ N-Nitrosodimethylamine	☐ Vinyl chloride
☐ Chrysene	☐ Endosulfan II	☐ N-Nitroso-di-n-butylamine	☐ XYLENES-TOTAL MIXED ISOMERS
☐ o-CRESOL	☐ Endrin	☐ N-Nitrosomethylethylamine	
☐ m-CRESOL	☐ Endrin aldehyde	☐ N-Nitrosomorpholine	

☐ None of the above listed underlying hazardous constituents are reasonably expected to be present in this waste stream.

UNDERLYING HAZARDOUS CONSTITUENTS WORKSHEET

WASTE STREAM # 771-35-35

The following underlying hazardous constituents (indicated by a checkmark in the appropriate box) are reasonably expected to be present in this waste stream:

INORGANIC CONSTITUENTS			
☐ Antimony	☐ Cadmium	■ Lead	☐ Silver
☐ Arsenic	☐ Chromium	☐ Mercury	☐ Sulfide (Wastewater Only)
☐ Barium	☐ Cyanides (Total)	☐ Nickel	☐ Thallium
☐ Beryllium	☐ Cyanides (Amenable)	☐ Selenium	
ORGANIC CONSTITUENTS			
☐ Acenaphthylene	☐ p-CRESOL	☐ ETHYL ACETATE	☐ N-Nitrosopiperidine
☐ Acenaphthene	☐ Cyclohexanone	☐ Ethyl Cyanide (Propanenitrile)	☐ N-Nitrosopyrrolidine
☐ ACETONE	☐ 1,2-Dibromo-3-chloropropane	☐ ETHYL BENZENE	☐ Parathion
☐ Acetonitrile	☐ Ethylene dibromide (1,2-dibromoethane)	☐ ETHYL ETHER	☐ Total PCBs
☐ Acetophenone	☐ Dibromomethane	☐ bis(2-Ethylhexyl) phthalate	☐ Pentachlorobenzene
☐ Acrylamide	☐ 2,4,D(2-4-Dichlorophenoxyacetic acid)	☐ Ethyl methacrylate	☐ Pentachlorodibenzo-p-dioxins (all)
☐ Acrylonitrile	☐ Dibenz(a,h)anthracene	☐ Ethylene oxide	☐ Pentachlorodibenzofurans (all)
☐ Aldrin	☐ Dibenz(a,e)pyrene	☐ Fluoranthene	☐ Pentachloroethane
☐ Aniline	☐ m-Dichlorobenzene	☐ Fluorene	☐ Pentachloronitrobenzene
☐ Anthracene	☐ o-DICHLOROBENZENE	☐ Heptachlor	☐ Pentachlorophenol
☐ BENZENE	☐ p-Dichlorobenzene	☐ Hexachlorobenzene	☐ Phenacetin
☐ Benz(a)anthracene	☐ Dichlorodifluoromethane	☐ Hexachlorobutadiene	☐ Phenanthrene
☐ Benzal chloride	☐ 1,1-Dichloroethane	☐ Hexachlorocyclopentadiene	☐ Phenol
☐ Benzo(b)fluoranthene	☐ 1,2-Dichloroethane	☐ Hexachlorodibenzo-p-dioxins (all)	☐ Phthalic acid
☐ Benzo(k)fluoranthene	☐ 1,1-Dichloroethylene	☐ Hexachlorodibenzofurans (all)	☐ Phthalic anhydride
☐ Benzo(g,h,i)perylene	☐ trans-1,2-Dichloroethylene	☐ Hexachloroethane	☐ Pyrene
☐ Benzo(a)pyrene	☐ 2,4-Dichlorophenol	☐ Hexachloropropylene	☐ PYRIDINE
☐ Bromodichloromethane	☐ 2,6-Dichlorophenol	☐ Indeno (1,2,3-c,d) pyrene	☐ Safrole
☐ Methyl bromide (Bromomethane)	☐ 1,2-Dichloropropane	☐ Iodomethane	☐ Silvex (2,4,5-TP)
☐ 4-Bromophenyl phenyl ether	☐ cis-1,3-Dichloropropylene	☐ ISOBUTYL ALCOHOL	☐ 2,4,5-T(2,4,5-Trichloro phenoxy-acetic acid)
☐ n-BUTYL ALCOHOL	☐ trans-1,3-Dichloropropylene	☐ Isodrin	☐ 1,2,4,5-Tetrachlorobenzene
☐ Butyl benzyl phthalate	☐ Dieldrin	☐ METHANOL	☐ 1,1,1,2-Tetrachloroethane
☐ CARBON DISULFIDE	☐ Diethyl phthalate	☐ Methapyrilene	☐ 1,1,2,2-Tetrachloroethane
☐ CARBON TETRACHLORIDE	☐ 2,4-Dimethyl phenol	☐ Methoxychlor	☐ TETRACHLOROETHYLENE
☐ Chlordane (alpha & gamma isomers)	☐ Dimethyl phthalate	☐ 4,4-Methylene bis(2-chloroaniline)	☐ 2,3,4,6-Tetrachlorophenol
☐ p-Chloroaniline	☐ Di-n-butyl phthalate	☐ METHYLENE CHLORIDE	☐ TOLUENE
☐ CHLOROBENZENE	☐ 1,4-Dinitrobenzene	☐ METHYL ETHYL KETONE	☐ Toxaphene
☐ 2-Chloro-1,3-butadiene	☐ 4,6-Dinitro-o-cresol	☐ METHYL ISOBUTYL KETONE	☐ Bromoform (Tribromomethane)
☐ Chlorodibromomethane	☐ 2,4-Dinitrophenol	☐ Methyl methacrylate	☐ 1,2,4-Trichlorobenzene
☐ Chloroethane	☐ 2,4-Dinitrotoluene	☐ Methyl methansulfonate	☐ 1,1,1-TRICHLOROETHANE
☐ bis(2-chloroethyl)ether	☐ 2,6-Dinitrotoluene	☐ Naphthalene	☐ 1,1,2-TRICHLOROETHANE
☐ Chloroform	☐ Di-n-octyl phthalate	☐ o-Nitroaniline	☐ TRICHLOROETHYLENE
☐ bis(2-Chloroisopropyl)ether	☐ Di-n-propylnitrosamine	☐ p-Nitroaniline	☐ TRICHLOROMONOFLUOROMETHANE
☐ p-Chloro-m-cresol	☐ 1,4-Dioxane	☐ NITROBENZENE	☐ 2,4,5-Trichlorophenol
☐ 2-Chloroethyl vinyl ether	☐ Diphenylamine	☐ 5-Nitro-o-toluidine	☐ 2,4,6-Trichlorophenol
☐ Chloromethane (Methyl chloride)	☐ Diphenylnitrosamine	☐ o-Nitrophenol	☐ 1,2,3-Trichloropropane
☐ 2-Chloronaphthalene	☐ 1,2-Diphenylhydrazine	☐ p-Nitrophenol	☐ 1,1,2-TRICHLORO-1,2,2-TRIFLUOROETHANE
☐ 2-Chlorophenol	☐ Disulfoton	☐ N-Nitrosodiethylamine	☐ tris-(2,3-Dibromopropyl) phosphate
☐ 3-Chloropropylene	☐ Endosulfan I	☐ N-Nitrosodimethylamine	☐ Vinyl chloride
☐ Chrysene	☐ Endosulfan II	☐ N-Nitroso-di-n-butylamine	☐ XYLENES-TOTAL MIXED ISOMERS
☐ o-CRESOL	☐ Endrin	☐ N-Nitrosomethylethylamine	
☐ m-CRESOL	☐ Endrin aldehyde	☐ N-Nitrosomorpholine	

☐ None of the above listed underlying hazardous constituents are reasonably expected to be present in this waste stream.

UNDERLYING HAZARDOUS CONSTITUENTS WORKSHEET

WASTE STREAM # 771-35-42

The following underlying hazardous constituents (indicated by a checkmark in the appropriate box) are reasonably expected to be present in this waste stream:

INORGANIC CONSTITUENTS			
☐ Antimony	☐ Cadmium	☐ Lead	☐ Silver
☐ Arsenic	☐ Chromium	☐ Mercury	☐ Sulfide (Wastewater Only)
☐ Barium	☐ Cyanides (Total)	☐ Nickel	☐ Thallium
☐ Beryllium	☐ Cyanides (Amenable)	☐ Selenium	
ORGANIC CONSTITUENTS			
☐ Acenaphthylene	☐ p-CRESOL	☐ ETHYL ACETATE	☐ N-Nitrosopiperidine
☐ Acenaphthene	☐ Cyclohexanone	☐ Ethyl Cyanide (Propanenitrile)	☐ N-Nitrosopyrrolidine
☐ ACETONE	☐ 1,2-Dibromo-3-chloropropane	☐ ETHYL BENZENE	☐ Parathion
☐ Acetonitrile	☐ Ethylene dibromide (1,2-dibromoethane)	☐ ETHYL ETHER	☐ Total PCBs
☐ Acetophenone	☐ Dibromomethane	☐ bis(2-Ethylhexyl) phthalate	☐ Pentachlorobenzene
☐ Acrylamide	☐ 2,4,D(2-4-Dichlorophenoxyacetic acid)	☐ Ethyl methacrylate	☐ Pentachlorodibenzo-p-dioxins (all)
☐ Acrylonitrile	☐ Dibenz(a,h)anthracene	☐ Ethylene oxide	☐ Pentachlorodibenzofurans (all)
☐ Aldrin	☐ Dibenz(a,e)pyrene	☐ Fluoranthene	☐ Pentachloroethane
☐ Aniline	☐ m-Dichlorobenzene	☐ Fluorene	☐ Pentachloronitrobenzene
☐ Anthracene	☐ o-DICHLOROBENZENE	☐ Heptachlor	☐ Pentachlorophenol
☐ BENZENE	☐ p-Dichlorobenzene	☐ Hexachlorobenzene	☐ Phenacetin
☐ Benz(a)anthracene	☐ Dichlorodifluoromethane	☐ Hexachlorobutadiene	☐ Phenanthrene
☐ Benzal chloride	☐ 1,1-Dichloroethane	☐ Hexachlorocyclopentadiene	☐ Phenol
☐ Benzo(b)fluoranthene	☐ 1,2-Dichloroethane	☐ Hexachlorodibenzo-p-dioxins (all)	☐ Phthalic acid
☐ Benzo(k)fluoranthene	☐ 1,1-Dichloroethylene	☐ Hexachlorodibenzofurans (all)	☐ Phthalic anhydride
☐ Benzo(g,h,i)perylene	☐ trans-1,2-Dichloroethylene	☐ Hexachloroethane	☐ Pyrene
☐ Benzo(a)pyrene	☐ 2,4-Dichlorophenol	☐ Hexachloropropylene	☐ PYRIDINE
☐ Bromodichloromethane	☐ 2,6-Dichlorophenol	☐ Indeno (1,2,3-c,d) pyrene	☐ Safrole
☐ Methyl bromide (Bromomethane)	☐ 1,2-Dichloropropane	☐ Iodomethane	☐ Silvex (2,4,5-TP)
☐ 4-Bromophenyl phenyl ether	☐ cis-1,3-Dichloropropylene	☐ ISOBUTYL ALCOHOL	☐ 2,4,5-T(2,4,5-Trichloro phenoxy-acetic acid)
☐ n-BUTYL ALCOHOL	☐ trans-1,3-Dichloropropylene	☐ Isodrin	☐ 1,2,4,5-Tetrachlorobenzene
☐ Butyl benzyl phthalate	☐ Dieldrin	☐ METHANOL	☐ 1,1,1,2-Tetrachloroethane
☐ CARBON DISULFIDE	☐ Diethyl phthalate	☐ Methapyrilene	☐ 1,1,2,2-Tetrachloroethane
☐ CARBON TETRACHLORIDE	☐ 2,4-Dimethyl phenol	☐ Methoxychlor	☐ TETRACHLOROETHYLENE
☐ Chlordane (alpha & gamma isomers)	☐ Dimethyl phthalate	☐ 4,4-Methylene bis(2-chloroaniline)	☐ 2,3,4,6-Tetrachlorophenol
☐ p-Chloroaniline	☐ Di-n-butyl phthalate	☐ METHYLENE CHLORIDE	☐ TOLUENE
☐ CHLOROBENZENE	☐ 1,4-Dinitrobenzene	☐ METHYL ETHYL KETONE	☐ Toxaphene
☐ 2-Chloro-1,3-butadiene	☐ 4,6-Dinitro-o-cresol	☐ METHYL ISOBUTYL KETONE	☐ Bromoform (Tribromomethane)
☐ Chlorodibromomethane	☐ 2,4-Dinitrophenol	☐ Methyl methacrylate	☐ 1,2,4-Trichlorobenzene
☐ Chloroethane	☐ 2,4-Dinitrotoluene	☐ Methyl methansulfonate	☐ 1,1,1-TRICHLOROETHANE
☐ bis(2-chloroethyl)ether	☐ 2,6-Dinitrotoluene	☐ Naphthalene	☐ 1,1,2-TRICHLOROETHANE
☐ Chloroform	☐ Di-n-octyl phthalate	☐ o-Nitroaniline	☐ TRICHLOROETHYLENE
☐ bis(2-Chloroisopropyl)ether	☐ Di-n-propylnitrosamine	☐ p-Nitroaniline	☐ TRICHLOROMONOFLUOROMETHANE
☐ p-Chloro-m-cresol	☐ 1,4-Dioxane	☐ NITROBENZENE	☐ 2,4,5-Trichlorophenol
☐ 2-Chloroethyl vinyl ether	☐ Diphenylamine	☐ 5-Nitro-o-toluidine	☐ 2,4,6-Trichlorophenol
☐ Chloromethane (Methyl chloride)	☐ Diphenylnitrosamine	☐ o-Nitrophenol	☐ 1,2,3-Trichloropropane
☐ 2-Chloronaphthalene	☐ 1,2-Diphenylhydrazine	☐ p-Nitrophenol	☐ 1,1,2-TRICHLORO-1,2,2-TRIFLUOROETHANE
☐ 2-Chlorophenol	☐ Disulfoton	☐ N-Nitrosodiethylamine	☐ tris-(2,3-Dibromopropyl) phosphate
☐ 3-Chloropropylene	☐ Endosulfan I	☐ N-Nitrosodimethylamine	☐ Vinyl chloride
☐ Chrysene	☐ Endosulfan II	☐ N-Nitroso-di-n-butylamine	☐ XYLENES-TOTAL MIXED ISOMERS
☐ o-CRESOL	☐ Endrin	☐ N-Nitrosomethylethylamine	
☐ m-CRESOL	☐ Endrin aldehyde	☐ N-Nitrosomorpholine	

■ None of the above listed underlying hazardous constituents are reasonably expected to be present in this waste stream.

UNDERLYING HAZARDOUS CONSTITUENTS WORKSHEET

WASTE STREAM # 771-35-43

The following underlying hazardous constituents (indicated by a checkmark in the appropriate box) are reasonably expected to be present in this waste stream:

INORGANIC CONSTITUENTS			
☐ Antimony	☐ Cadmium	☐ Lead	☐ Silver
☐ Arsenic	☐ Chromium	☐ Mercury	☐ Sulfide (Wastewater Only)
☐ Barium	☐ Cyanides (Total)	☐ Nickel	☐ Thallium
☐ Beryllium	☐ Cyanides (Amenable)	☐ Selenium	
ORGANIC CONSTITUENTS			
☐ Acenaphthylene	☐ p-CRESOL	☐ ETHYL ACETATE	☐ N-Nitrosopiperidine
☐ Acenaphthene	☐ Cyclohexanone	☐ Ethyl Cyanide (Propanenitrile)	☐ N-Nitrosopyrrolidine
☐ ACETONE	☐ 1,2-Dibromo-3-chloropropane	☐ ETHYL BENZENE	☐ Parathion
☐ Acetonitrile	☐ Ethylene dibromide (1,2-dibromoethane)	☐ ETHYL ETHER	☐ Total PCBs
☐ Acetophenone	☐ Dibromomethane	☐ bis(2-Ethylhexyl) phthalate	☐ Pentachlorobenzene
☐ Acrylamide	☐ 2,4,D(2-4-Dichlorophenoxyacetic acid)	☐ Ethyl methacrylate	☐ Pentachlorodibenzo-p-dioxins (all)
☐ Acrylonitrile	☐ Dibenz(a,h)anthracene	☐ Ethylene oxide	☐ Pentachlorodibenzofurans (all)
☐ Aldrin	☐ Dibenz(a,e)pyrene	☐ Fluoranthene	☐ Pentachloroethane
☐ Aniline	☐ m-Dichlorobenzene	☐ Fluorene	☐ Pentachloronitrobenzene
☐ Anthracene	☐ o-DICHLOROBENZENE	☐ Heptachlor	☐ Pentachlorophenol
☐ BENZENE	☐ p-Dichlorobenzene	☐ Hexachlorobenzene	☐ Phenacetin
☐ Benz(a)anthracene	☐ Dichlorodifluoromethane	☐ Hexachlorobutadiene	☐ Phenanthrene
☐ Benzal chloride	☐ 1,1-Dichloroethane	☐ Hexachlorocyclopentadiene	☐ Phenol
☐ Benzo(b)fluoranthene	☐ 1,2-Dichloroethane	☐ Hexachlorodibenzo-p-dioxins (all)	☐ Phthalic acid
☐ Benzo(k)fluoranthene	☐ 1,1-Dichloroethylene	☐ Hexachlorodibenzofurans (all)	☐ Phthalic anhydride
☐ Benzo(g,h,i)perylene	☐ trans-1,2-Dichloroethylene	☐ Hexachloroethane	☐ Pyrene
☐ Benzo(a)pyrene	☐ 2,4-Dichlorophenol	☐ Hexachloropropylene	☐ PYRIDINE
☐ Bromodichloromethane	☐ 2,6-Dichlorophenol	☐ Indeno (1,2,3-c,d) pyrene	☐ Safrole
☐ Methyl bromide (Bromomethane)	☐ 1,2-Dichloropropane	☐ Iodomethane	☐ Silvex (2,4,5-TP)
☐ 4-Bromophenyl phenyl ether	☐ cis-1,3-Dichloropropylene	☐ ISOBUTYL ALCOHOL	☐ 2,4,5-T(2,4,5-Trichloro phenoxy-acetic acid)
☐ n-BUTYL ALCOHOL	☐ trans-1,3-Dichloropropylene	☐ Isodrin	☐ 1,2,4,5-Tetrachlorobenzene
☐ Butyl benzyl phthalate	☐ Dieldrin	☐ METHANOL	☐ 1,1,1,2-Tetrachloroethane
☐ CARBON DISULFIDE	☐ Diethyl phthalate	☐ Methapyrilene	☐ 1,1,2,2-Tetrachloroethane
☐ CARBON TETRACHLORIDE	☐ 2,4-Dimethyl phenol	☐ Methoxychlor	☐ TETRACHLOROETHYLENE
☐ Chlordane (alpha & gamma isomers)	☐ Dimethyl phthalate	☐ 4,4-Methylene bis(2-chloroaniline)	☐ 2,3,4,6-Tetrachlorophenol
☐ p-Chloroaniline	☐ Di-n-butyl phthalate	☐ METHYLENE CHLORIDE	☐ TOLUENE
☐ CHLOROBENZENE	☐ 1,4-Dinitrobenzene	☐ METHYL ETHYL KETONE	☐ Toxaphene
☐ 2-Chloro-1,3-butadiene	☐ 4,6-Dinitro-o-cresol	☐ METHYL ISOBUTYL KETONE	☐ Bromoform (Tribromomethane)
☐ Chlorodibromomethane	☐ 2,4-Dinitrophenol	☐ Methyl methacrylate	☐ 1,2,4-Trichlorobenzene
☐ Chloroethane	☐ 2,4-Dinitrotoluene	☐ Methyl methansulfonate	☐ 1,1,1-TRICHLOROETHANE
☐ bis(2-chloroethyl)ether	☐ 2,6-Dinitrotoluene	☐ Naphthalene	☐ 1,1,2-TRICHLOROETHANE
☐ Chloroform	☐ Di-n-octyl phthalate	☐ o-Nitroaniline	☐ TRICHLOROETHYLENE
☐ bis(2-Chloroisopropyl)ether	☐ Di-n-propylnitrosamine	☐ p-Nitroaniline	☐ TRICHLOROMONOFLUOROMETHANE
☐ p-Chloro-m-cresol	☐ 1,4-Dioxane	☐ NITROBENZENE	☐ 2,4,5-Trichlorophenol
☐ 2-Chloroethyl vinyl ether	☐ Diphenylamine	☐ 5-Nitro-o-toluidine	☐ 2,4,6-Trichlorophenol
☐ Chloromethane (Methyl chloride)	☐ Diphenylnitrosamine	☐ o-Nitrophenol	☐ 1,2,3-Trichloropropane
☐ 2-Chloronaphthalene	☐ 1,2-Diphenylhydrazine	☐ p-Nitrophenol	☐ 1,1,2-TRICHLORO-1,2,2-TRIFLUOROETHANE
☐ 2-Chlorophenol	☐ Disulfoton	☐ N-Nitrosodiethylamine	☐ tris-(2,3-Dibromopropyl) phosphate
☐ 3-Chloropropylene	☐ Endosulfan I	☐ N-Nitrosodimethylamine	☐ Vinyl chloride
☐ Chrysene	☐ Endosulfan II	☐ N-Nitroso-di-n-butylamine	☐ XYLENES-TOTAL MIXED ISOMERS
☐ o-CRESOL	☐ Endrin	☐ N-Nitrosomethylethylamine	
☐ m-CRESOL	☐ Endrin aldehyde	☐ N-Nitrosomorpholine	

■ None of the above listed underlying hazardous constituents are reasonably expected to be present in this waste stream.

UNDERLYING HAZARDOUS CONSTITUENTS WORKSHEET

WASTE STREAM # 771-35-56

The following underlying hazardous constituents (indicated by a checkmark in the appropriate box) are reasonably expected to be present in this waste stream:

INORGANIC CONSTITUENTS			
☐ Antimony	☐ Cadmium	■ Lead	☐ Silver
☐ Arsenic	☐ Chromium	☐ Mercury	☐ Sulfide (Wastewater Only)
☐ Barium	☐ Cyanides (Total)	☐ Nickel	☐ Thallium
☐ Beryllium	☐ Cyanides (Amenable)	☐ Selenium	
ORGANIC CONSTITUENTS			
☐ Acenaphthylene	☐ p-CRESOL	☐ ETHYL ACETATE	☐ N-Nitrosopiperidine
☐ Acenaphthene	☐ Cyclohexanone	☐ Ethyl Cyanide (Propanenitrile)	☐ N-Nitrosopyrrolidine
☐ ACETONE	☐ 1,2-Dibromo-3-chloropropane	☐ ETHYL BENZENE	☐ Parathion
☐ Acetonitrile	☐ Ethylene dibromide (1,2-dibromoethane)	☐ ETHYL ETHER	☐ Total PCBs
☐ Acetophenone	☐ Dibromomethane	☐ bis(2-Ethylhexyl) phthalate	☐ Pentachlorobenzene
☐ Acrylamide	☐ 2,4,D(2-4-Dichlorophenoxyacetic acid)	☐ Ethyl methacrylate	☐ Pentachlorodibenzo-p-dioxins (all)
☐ Acrylonitrile	☐ Dibenz(a,h)anthracene	☐ Ethylene oxide	☐ Pentachlorodibenzofurans (all)
☐ Aldrin	☐ Dibenz(a,e)pyrene	☐ Fluoranthene	☐ Pentachloroethane
☐ Aniline	☐ m-Dichlorobenzene	☐ Fluorene	☐ Pentachloronitrobenzene
☐ Anthracene	☐ o-DICHLOROBENZENE	☐ Heptachlor	☐ Pentachlorophenol
☐ BENZENE	☐ p-Dichlorobenzene	☐ Hexachlorobenzene	☐ Phenacetin
☐ Benz(a)anthracene	☐ Dichlorodifluoromethane	☐ Hexachlorobutadiene	☐ Phenanthrene
☐ Benzal chloride	☐ 1,1-Dichloroethane	☐ Hexachlorocyclopentadiene	☐ Phenol
☐ Benzo(b)fluoranthene	☐ 1,2-Dichloroethane	☐ Hexachlorodibenzo-p-dioxins (all)	☐ Phthalic acid
☐ Benzo(k)fluoranthene	☐ 1,1-Dichloroethylene	☐ Hexachlorodibenzofurans (all)	☐ Phthalic anhydride
☐ Benzo(g,h,i)perylene	☐ trans-1,2-Dichloroethylene	☐ Hexachloroethane	☐ Pyrene
☐ Benzo(a)pyrene	☐ 2,4-Dichlorophenol	☐ Hexachloropropylene	☐ PYRIDINE
☐ Bromodichloromethane	☐ 2,6-Dichlorophenol	☐ Indeno (1,2,3-c,d) pyrene	☐ Safrole
☐ Methyl bromide (Bromomethane)	☐ 1,2-Dichloropropane	☐ Iodomethane	☐ Silvex (2,4,5-TP)
☐ 4-Bromophenyl phenyl ether	☐ cis-1,3-Dichloropropylene	☐ ISOBUTYL ALCOHOL	☐ 2,4,5-T(2,4,5-Trichloro phenoxy-acetic acid)
☐ n-BUTYL ALCOHOL	☐ trans-1,3-Dichloropropylene	☐ Isodrin	☐ 1,2,4,5-Tetrachlorobenzene
☐ Butyl benzyl phthalate	☐ Dieldrin	☐ METHANOL	☐ 1,1,1,2-Tetrachloroethane
☐ CARBON DISULFIDE	☐ Diethyl phthalate	☐ Methapyrilene	☐ 1,1,2,2-Tetrachloroethane
☐ CARBON TETRACHLORIDE	☐ 2,4-Dimethyl phenol	☐ Methoxychlor	☐ TETRACHLOROETHYLENE
☐ Chlordane (alpha & gamma isomers)	☐ Dimethyl phthalate	☐ 4,4-Methylene bis(2-chloroaniline)	☐ 2,3,4,6-Tetrachlorophenol
☐ p-Chloroaniline	☐ Di-n-butyl phthalate	☐ METHYLENE CHLORIDE	☐ TOLUENE
☐ CHLOROBENZENE	☐ 1,4-Dinitrobenzene	☐ METHYL ETHYL KETONE	☐ Toxaphene
☐ 2-Chloro-1,3-butadiene	☐ 4,6-Dinitro-o-cresol	☐ METHYL ISOBUTYL KETONE	☐ Bromoform (Tribromomethane)
☐ Chlorodibromomethane	☐ 2,4-Dinitrophenol	☐ Methyl methacrylate	☐ 1,2,4-Trichlorobenzene
☐ Chloroethane	☐ 2,4-Dinitrotoluene	☐ Methyl methansulfonate	☐ 1,1,1-TRICHLOROETHANE
☐ bis(2-chloroethyl)ether	☐ 2,6-Dinitrotoluene	☐ Naphthalene	☐ 1,1,2-TRICHLOROETHANE
☐ Chloroform	☐ Di-n-octyl phthalate	☐ o-Nitroaniline	☐ TRICHLOROETHYLENE
☐ bis(2-Chloroisopropyl)ether	☐ Di-n-propylnitrosamine	☐ p-Nitroaniline	☐ TRICHLOROMONOFLUOROMETHANE
☐ p-Chloro-m-cresol	☐ 1,4-Dioxane	☐ NITROBENZENE	☐ 2,4,5-Trichlorophenol
☐ 2-Chloroethyl vinyl ether	☐ Diphenylamine	☐ 5-Nitro-o-toluidine	☐ 2,4,6-Trichlorophenol
☐ Chloromethane (Methyl chloride)	☐ Diphenylnitrosamine	☐ o-Nitrophenol	☐ 1,2,3-Trichloropropane
☐ 2-Chloronaphthalene	☐ 1,2-Diphenylhydrazine	☐ p-Nitrophenol	☐ 1,1,2-TRICHLORO-1,2,2-TRIFLUOROETHANE
☐ 2-Chlorophenol	☐ Disulfoton	☐ N-Nitrosodiethylamine	☐ tris-(2,3-Dibromopropyl) phosphate
☐ 3-Chloropropylene	☐ Endosulfan I	☐ N-Nitrosodimethylamine	☐ Vinyl chloride
☐ Chrysene	☐ Endosulfan II	☐ N-Nitroso-di-n-butylamine	☐ XYLENES-TOTAL MIXED ISOMERS
☐ o-CRESOL	☐ Endrin	☐ N-Nitrosomethylethylamine	
☐ m-CRESOL	☐ Endrin aldehyde	☐ N-Nitrosomorpholine	

☐ None of the above listed underlying hazardous constituents are reasonably expected to be present in this waste stream.

UNDERLYING HAZARDOUS CONSTITUENTS WORKSHEET

WASTE STREAM # 771-35-57

The following underlying hazardous constituents (indicated by a checkmark in the appropriate box) are reasonably expected to be present in this waste stream:

INORGANIC CONSTITUENTS			
☐ Antimony	☐ Cadmium	■ Lead	☐ Silver
☐ Arsenic	☐ Chromium	■ Mercury	☐ Sulfide (Wastewater Only)
☐ Barium	☐ Cyanides (Total)	☐ Nickel	☐ Thallium
☐ Beryllium	☐ Cyanides (Amenable)	☐ Selenium	
ORGANIC CONSTITUENTS			
☐ Acenaphthylene	☐ p-CRESOL	☐ ETHYL ACETATE	☐ N-Nitrosopiperidine
☐ Acenaphthene	☐ Cyclohexanone	☐ Ethyl Cyanide (Propanenitrile)	☐ N-Nitrosopyrrolidine
☐ ACETONE	☐ 1,2-Dibromo-3-chloropropane	☐ ETHYL BENZENE	☐ Parathion
☐ Acetonitrile	☐ Ethylene dibromide (1,2-dibromoethane)	☐ ETHYL ETHER	☐ Total PCBs
☐ Acetophenone	☐ Dibromomethane	☐ bis(2-Ethylhexyl) phthalate	☐ Pentachlorobenzene
☐ Acrylamide	☐ 2,4,D(2-4-Dichlorophenoxyacetic acid)	☐ Ethyl methacrylate	☐ Pentachlorodibenzo-p-dioxins (all)
☐ Acrylonitrile	☐ Dibenz(a,h)anthracene	☐ Ethylene oxide	☐ Pentachlorodibenzofurans (all)
☐ Aldrin	☐ Dibenz(a,e)pyrene	☐ Fluoranthene	☐ Pentachloroethane
☐ Aniline	☐ m-Dichlorobenzene	☐ Fluorene	☐ Pentachloronitrobenzene
☐ Anthracene	☐ o-DICHLOROBENZENE	☐ Heptachlor	☐ Pentachlorophenol
☐ BENZENE	☐ p-Dichlorobenzene	☐ Hexachlorobenzene	☐ Phenacetin
☐ Benz(a)anthracene	☐ Dichlorodifluoromethane	☐ Hexachlorobutadiene	☐ Phenanthrene
☐ Benzal chloride	☐ 1,1-Dichloroethane	☐ Hexachlorocyclopentadiene	☐ Phenol
☐ Benzo(b)fluoranthene	☐ 1,2-Dichloroethane	☐ Hexachlorodibenzo-p-dioxins (all)	☐ Phthalic acid
☐ Benzo(k)fluoranthene	☐ 1,1-Dichloroethylene	☐ Hexachlorodibenzofurans (all)	☐ Phthalic anhydride
☐ Benzo(g,h,i)perylene	☐ trans-1,2-Dichloroethylene	☐ Hexachloroethane	☐ Pyrene
☐ Benzo(a)pyrene	☐ 2,4-Dichlorophenol	☐ Hexachloropropylene	☐ PYRIDINE
☐ Bromodichloromethane	☐ 2,6-Dichlorophenol	☐ Indeno (1,2,3-c,d) pyrene	☐ Safrole
☐ Methyl bromide (Bromomethane)	☐ 1,2-Dichloropropane	☐ Iodomethane	☐ Silvex (2,4,5-TP)
☐ 4-Bromophenyl phenyl ether	☐ cis-1,3-Dichloropropylene	☐ ISOBUTYL ALCOHOL	☐ 2,4,5-T(2,4,5-Trichloro phenoxy-acetic acid)
☐ n-BUTYL ALCOHOL	☐ trans-1,3-Dichloropropylene	☐ Isodrin	☐ 1,2,4,5-Tetrachlorobenzene
☐ Butyl benzyl phthalate	☐ Dieldrin	☐ METHANOL	☐ 1,1,1,2-Tetrachloroethane
☐ CARBON DISULFIDE	☐ Diethyl phthalate	☐ Methapyrilene	☐ 1,1,2,2-Tetrachloroethane
☐ CARBON TETRACHLORIDE	☐ 2,4-Dimethyl phenol	☐ Methoxychlor	☐ TETRACHLOROETHYLENE
☐ Chlordane (alpha & gamma isomers)	☐ Dimethyl phthalate	☐ 4,4-Methylene bis(2-chloroaniline)	☐ 2,3,4,6-Tetrachlorophenol
☐ p-Chloroaniline	☐ Di-n-butyl phthalate	☐ METHYLENE CHLORIDE	☐ TOLUENE
☐ CHLOROBENZENE	☐ 1,4-Dinitrobenzene	☐ METHYL ETHYL KETONE	☐ Toxaphene
☐ 2-Chloro-1,3-butadiene	☐ 4,6-Dinitro-o-cresol	☐ METHYL ISOBUTYL KETONE	☐ Bromoform (Tribromomethane)
☐ Chlorodibromomethane	☐ 2,4-Dinitrophenol	☐ Methyl methacrylate	☐ 1,2,4-Trichlorobenzene
☐ Chloroethane	☐ 2,4-Dinitrotoluene	☐ Methyl methansulfonate	☐ 1,1,1-TRICHLOROETHANE
☐ bis(2-chloroethyl)ether	☐ 2,6-Dinitrotoluene	☐ Naphthalene	☐ 1,1,2-TRICHLOROETHANE
☐ Chloroform	☐ Di-n-octyl phthalate	☐ o-Nitroaniline	☐ TRICHLOROETHYLENE
☐ bis(2-Chloroisopropyl)ether	☐ Di-n-propylnitrosamine	☐ p-Nitroaniline	☐ TRICHLOROMONOFLUOROMETHANE
☐ p-Chloro-m-cresol	☐ 1,4-Dioxane	☐ NITROBENZENE	☐ 2,4,5-Trichlorophenol
☐ 2-Chloroethyl vinyl ether	☐ Diphenylamine	☐ 5-Nitro-o-toluidine	☐ 2,4,6-Trichlorophenol
☐ Chloromethane (Methyl chloride)	☐ Diphenylnitrosamine	☐ o-Nitrophenol	☐ 1,2,3-Trichloropropane
☐ 2-Chloronaphthalene	☐ 1,2-Diphenylhydrazine	☐ p-Nitrophenol	☐ 1,1,2-TRICHLORO-1,2,2-TRIFLUOROETHANE
☐ 2-Chlorophenol	☐ Disulfoton	☐ N-Nitrosodiethylamine	☐ tris-(2,3-Dibromopropyl) phosphate
☐ 3-Chloropropylene	☐ Endosulfan I	☐ N-Nitrosodimethylamine	☐ Vinyl chloride
☐ Chrysene	☐ Endosulfan II	☐ N-Nitroso-di-n-butylamine	☐ XYLENES-TOTAL MIXED ISOMERS
☐ o-CRESOL	☐ Endrin	☐ N-Nitrosomethylethylamine	
☐ m-CRESOL	☐ Endrin aldehyde	☐ N-Nitrosomorpholine	

☐ None of the above listed underlying hazardous constituents are reasonably expected to be present in this waste stream.

UNDERLYING HAZARDOUS CONSTITUENTS WORKSHEET

WASTE STREAM # 771-35-59

The following underlying hazardous constituents (indicated by a checkmark in the appropriate box) are reasonably expected to be present in this waste stream:

INORGANIC CONSTITUENTS			
☐ Antimony	☐ Cadmium	■ Lead	☐ Silver
☐ Arsenic	☐ Chromium	☐ Mercury	☐ Sulfide (Wastewater Only)
■ Barium	☐ Cyanides (Total)	☐ Nickel	■ Thallium
☐ Beryllium	☐ Cyanides (Amenable)	☐ Selenium	
ORGANIC CONSTITUENTS			
☐ Acenaphthylene	☐ p-CRESOL	☐ ETHYL ACETATE	☐ N-Nitrosopiperidine
☐ Acenaphthene	☐ Cyclohexanone	☐ Ethyl Cyanide (Propanenitrile)	☐ N-Nitrosopyrrolidine
☐ ACETONE	☐ 1,2-Dibromo-3-chloropropane	☐ ETHYL BENZENE	☐ Parathion
☐ Acetonitrile	☐ Ethylene dibromide (1,2-dibromoethane)	☐ ETHYL ETHER	☐ Total PCBs
☐ Acetophenone	☐ Dibromomethane	☐ bis(2-Ethylhexyl) phthalate	☐ Pentachlorobenzene
☐ Acrylamide	☐ 2,4,D(2-4-Dichlorophenoxyacetic acid)	☐ Ethyl methacrylate	☐ Pentachlorodibenzo-p-dioxins (all)
☐ Acrylonitrile	☐ Dibenz(a,h)anthracene	☐ Ethylene oxide	☐ Pentachlorodibenzofurans (all)
☐ Aldrin	☐ Dibenz(a,e)pyrene	☐ Fluoranthene	☐ Pentachloroethane
☐ Aniline	☐ m-Dichlorobenzene	☐ Fluorene	☐ Pentachloronitrobenzene
☐ Anthracene	☐ o-DICHLOROBENZENE	☐ Heptachlor	☐ Pentachlorophenol
☐ BENZENE	☐ p-Dichlorobenzene	☐ Hexachlorobenzene	☐ Phenacetin
☐ Benz(a)anthracene	☐ Dichlorodifluoromethane	☐ Hexachlorobutadiene	☐ Phenanthrene
☐ Benzal chloride	☐ 1,1-Dichloroethane	☐ Hexachlorocyclopentadiene	☐ Phenol
☐ Benzo(b)fluoranthene	☐ 1,2-Dichloroethane	☐ Hexachlorodibenzo-p-dioxins (all)	☐ Phthalic acid
☐ Benzo(k)fluoranthene	☐ 1,1-Dichloroethylene	☐ Hexachlorodibenzofurans (all)	☐ Phthalic anhydride
☐ Benzo(g,h,i)perylene	☐ trans-1,2-Dichloroethylene	☐ Hexachloroethane	☐ Pyrene
☐ Benzo(a)pyrene	☐ 2,4-Dichlorophenol	☐ Hexachloropropylene	☐ PYRIDINE
☐ Bromodichloromethane	☐ 2,6-Dichlorophenol	☐ Indeno (1,2,3-c,d) pyrene	☐ Safrole
☐ Methyl bromide (Bromomethane)	☐ 1,2-Dichloropropane	☐ Iodomethane	☐ Silvex (2,4,5-TP)
☐ 4-Bromophenyl phenyl ether	☐ cis-1,3-Dichloropropylene	☐ ISOBUTYL ALCOHOL	☐ 2,4,5-T(2,4,5-Trichloro phenoxy-acetic acid)
☐ n-BUTYL ALCOHOL	☐ trans-1,3-Dichloropropylene	☐ Isodrin	☐ 1,2,4,5-Tetrachlorobenzene
☐ Butyl benzyl phthalate	☐ Dieldrin	☐ METHANOL	☐ 1,1,1,2-Tetrachloroethane
☐ CARBON DISULFIDE	☐ Diethyl phthalate	☐ Methapyrilene	☐ 1,1,2,2-Tetrachloroethane
☐ CARBON TETRACHLORIDE	☐ 2,4-Dimethyl phenol	☐ Methoxychlor	☐ TETRACHLOROETHYLENE
☐ Chlordane (alpha & gamma isomers)	☐ Dimethyl phthalate	☐ 4,4-Methylene bis(2-chloroaniline)	☐ 2,3,4,6-Tetrachlorophenol
☐ p-Chloroaniline	☐ Di-n-butyl phthalate	☐ METHYLENE CHLORIDE	☐ TOLUENE
☐ CHLOROBENZENE	☐ 1,4-Dinitrobenzene	☐ METHYL ETHYL KETONE	☐ Toxaphene
☐ 2-Chloro-1,3-butadiene	☐ 4,6-Dinitro-o-cresol	☐ METHYL ISOBUTYL KETONE	☐ Bromoform (Tribromomethane)
☐ Chlorodibromomethane	☐ 2,4-Dinitrophenol	☐ Methyl methacrylate	☐ 1,2,4-Trichlorobenzene
☐ Chloroethane	☐ 2,4-Dinitrotoluene	☐ Methyl methansulfonate	☐ 1,1,1-TRICHLOROETHANE
☐ bis(2-chloroethyl)ether	☐ 2,6-Dinitrotoluene	☐ Naphthalene	☐ 1,1,2-TRICHLOROETHANE
☐ Chloroform	☐ Di-n-octyl phthalate	☐ o-Nitroaniline	☐ TRICHLOROETHYLENE
☐ bis(2-Chloroisopropyl)ether	☐ Di-n-propylnitrosamine	☐ p-Nitroaniline	☐ TRICHLOROMONOFLUOROMETHANE
☐ p-Chloro-m-cresol	☐ 1,4-Dioxane	☐ NITROBENZENE	☐ 2,4,5-Trichlorophenol
☐ 2-Chloroethyl vinyl ether	☐ Diphenylamine	☐ 5-Nitro-o-toluidine	☐ 2,4,6-Trichlorophenol
☐ Chloromethane (Methyl chloride)	☐ Diphenylnitrosamine	☐ o-Nitrophenol	☐ 1,2,3-Trichloropropane
☐ 2-Chloronaphthalene	☐ 1,2-Diphenylhydrazine	☐ p-Nitrophenol	☐ 1,1,2-TRICHLORO-1,2,2-TRIFLUOROETHANE
☐ 2-Chlorophenol	☐ Disulfoton	☐ N-Nitrosodiethylamine	☐ tris-(2,3-Dibromopropyl) phosphate
☐ 3-Chloropropylene	☐ Endosulfan I	☐ N-Nitrosodimethylamine	☐ Vinyl chloride
☐ Chrysene	☐ Endosulfan II	☐ N-Nitroso-di-n-butylamine	☐ XYLENES-TOTAL MIXED ISOMERS
☐ o-CRESOL	☐ Endrin	☐ N-Nitrosomethylethylamine	
☐ m-CRESOL	☐ Endrin aldehyde	☐ N-Nitrosomorpholine	

☐ None of the above listed underlying hazardous constituents are reasonably expected to be present in this waste stream.

UNDERLYING HAZARDOUS CONSTITUENTS WORKSHEET

WASTE STREAM # 771-35-60

The following underlying hazardous constituents (indicated by a checkmark in the appropriate box) are reasonably expected to be present in this waste stream:

INORGANIC CONSTITUENTS			
☐ Antimony	■ Cadmium	■ Lead	■ Silver
☐ Arsenic	☐ Chromium	☐ Mercury	☐ Sulfide (Wastewater Only)
☐ Barium	☐ Cyanides (Total)	☐ Nickel	☐ Thallium
☐ Beryllium	☐ Cyanides (Amenable)	☐ Selenium	
ORGANIC CONSTITUENTS			
☐ Acenaphthylene	☐ p-CRESOL	☐ ETHYL ACETATE	☐ N-Nitrosopiperidine
☐ Acenaphthene	☐ Cyclohexanone	☐ Ethyl Cyanide (Propanenitrile)	☐ N-Nitrosopyrrolidine
☐ ACETONE	☐ 1,2-Dibromo-3-chloropropane	☐ ETHYL BENZENE	☐ Parathion
☐ Acetonitrile	☐ Ethylene dibromide (1,2-dibromoethane)	☐ ETHYL ETHER	☐ Total PCBs
☐ Acetophenone	☐ Dibromomethane	☐ bis(2-Ethylhexyl) phthalate	☐ Pentachlorobenzene
☐ Acrylamide	☐ 2,4,D(2-4-Dichlorophenoxyacetic acid)	☐ Ethyl methacrylate	☐ Pentachlorodibenzo-p-dioxins (all)
☐ Acrylonitrile	☐ Dibenz(a,h)anthracene	☐ Ethylene oxide	☐ Pentachlorodibenzofurans (all)
☐ Aldrin	☐ Dibenz(a,e)pyrene	☐ Fluoranthene	☐ Pentachloroethane
☐ Aniline	☐ m-Dichlorobenzene	☐ Fluorene	☐ Pentachloronitrobenzene
☐ Anthracene	☐ o-DICHLOROBENZENE	☐ Heptachlor	☐ Pentachlorophenol
☐ BENZENE	☐ p-Dichlorobenzene	☐ Hexachlorobenzene	☐ Phenacetin
☐ Benz(a)anthracene	☐ Dichlorodifluoromethane	☐ Hexachlorobutadiene	☐ Phenanthrene
☐ Benzal chloride	☐ 1,1-Dichloroethane	☐ Hexachlorocyclopentadiene	☐ Phenol
☐ Benzo(b)fluoranthene	☐ 1,2-Dichloroethane	☐ Hexachlorodibenzo-p-dioxins (all)	☐ Phthalic acid
☐ Benzo(k)fluoranthene	☐ 1,1-Dichloroethylene	☐ Hexachlorodibenzofurans (all)	☐ Phthalic anhydride
☐ Benzo(g,h,i)perylene	☐ trans-1,2-Dichloroethylene	☐ Hexachloroethane	☐ Pyrene
☐ Benzo(a)pyrene	☐ 2,4-Dichlorophenol	☐ Hexachloropropylene	☐ PYRIDINE
☐ Bromodichloromethane	☐ 2,6-Dichlorophenol	☐ Indeno (1,2,3-c,d) pyrene	☐ Safrole
☐ Methyl bromide (Bromomethane)	☐ 1,2-Dichloropropane	☐ Iodomethane	☐ Silvex (2,4,5-TP)
☐ 4-Bromophenyl phenyl ether	☐ cis-1,3-Dichloropropylene	☐ ISOBUTYL ALCOHOL	☐ 2,4,5-T(2,4,5-Trichloro phenoxy-acetic acid)
☐ n-BUTYL ALCOHOL	☐ trans-1,3-Dichloropropylene	☐ Isodrin	☐ 1,2,4,5-Tetrachlorobenzene
☐ Butyl benzyl phthalate	☐ Dieldrin	☐ METHANOL	☐ 1,1,1,2-Tetrachloroethane
☐ CARBON DISULFIDE	☐ Diethyl phthalate	☐ Methapyrilene	☐ 1,1,2,2-Tetrachloroethane
☐ CARBON TETRACHLORIDE	☐ 2,4-Dimethyl phenol	☐ Methoxychlor	☐ TETRACHLOROETHYLENE
☐ Chlordane (alpha & gamma isomers)	☐ Dimethyl phthalate	☐ 4,4-Methylene bis(2-chloroaniline)	☐ 2,3,4,6-Tetrachlorophenol
☐ p-Chloroaniline	☐ Di-n-butyl phthalate	☐ METHYLENE CHLORIDE	☐ TOLUENE
☐ CHLOROBENZENE	☐ 1,4-Dinitrobenzene	☐ METHYL ETHYL KETONE	☐ Toxaphene
☐ 2-Chloro-1,3-butadiene	☐ 4,6-Dinitro-o-cresol	☐ METHYL ISOBUTYL KETONE	☐ Bromoform (Tribromomethane)
☐ Chlorodibromomethane	☐ 2,4-Dinitrophenol	☐ Methyl methacrylate	☐ 1,2,4-Trichlorobenzene
☐ Chloroethane	☐ 2,4-Dinitrotoluene	☐ Methyl methansulfonate	☐ 1,1,1-TRICHLOROETHANE
☐ bis(2-chloroethyl)ether	☐ 2,6-Dinitrotoluene	☐ Naphthalene	☐ 1,1,2-TRICHLOROETHANE
☐ Chloroform	☐ Di-n-octyl phthalate	☐ o-Nitroaniline	☐ TRICHLOROETHYLENE
☐ bis(2-Chloroisopropyl)ether	☐ Di-n-propylnitrosamine	☐ p-Nitroaniline	☐ TRICHLOROMONOFLUOROMETHANE
☐ p-Chloro-m-cresol	☐ 1,4-Dioxane	☐ NITROBENZENE	☐ 2,4,5-Trichlorophenol
☐ 2-Chloroethyl vinyl ether	☐ Diphenylamine	☐ 5-Nitro-o-toluidine	☐ 2,4,6-Trichlorophenol
☐ Chloromethane (Methyl chloride)	☐ Diphenylnitrosamine	☐ o-Nitrophenol	☐ 1,2,3-Trichloropropane
☐ 2-Chloronaphthalene	☐ 1,2-Diphenylhydrazine	☐ p-Nitrophenol	☐ 1,1,2-TRICHLORO-1,2,2-TRIFLUOROETHANE
☐ 2-Chlorophenol	☐ Disulfoton	☐ N-Nitrosodiethylamine	☐ tris-(2,3-Dibromopropyl) phosphate
☐ 3-Chloropropylene	☐ Endosulfan I	☐ N-Nitrosodimethylamine	☐ Vinyl chloride
☐ Chrysene	☐ Endosulfan II	☐ N-Nitroso-di-n-butylamine	☐ XYLENES-TOTAL MIXED ISOMERS
☐ o-CRESOL	☐ Endrin	☐ N-Nitrosomethylethylamine	
☐ m-CRESOL	☐ Endrin aldehyde	☐ N-Nitrosomorpholine	

☐ None of the above listed underlying hazardous constituents are reasonably expected to be present in this waste stream.

UNDERLYING HAZARDOUS CONSTITUENTS WORKSHEET

WASTE STREAM # 771-36-1

The following underlying hazardous constituents (indicated by a checkmark in the appropriate box) are reasonably expected to be present in this waste stream:

INORGANIC CONSTITUENTS			
☐ Antimony	■ Cadmium	■ Lead	☐ Silver
☐ Arsenic	■ Chromium	☐ Mercury	☐ Sulfide (Wastewater Only)
■ Barium	☐ Cyanides (Total)	■ Nickel	☐ Thallium
■ Beryllium	☐ Cyanides (Amenable)	☐ Selenium	
ORGANIC CONSTITUENTS			
☐ Acenaphthylene	☐ p-CRESOL	☐ ETHYL ACETATE	☐ N-Nitrosopiperidine
☐ Acenaphthene	☐ Cyclohexanone	☐ Ethyl Cyanide (Propanenitrile)	☐ N-Nitrosopyrrolidine
☐ ACETONE	☐ 1,2-Dibromo-3-chloropropane	☐ ETHYL BENZENE	☐ Parathion
☐ Acetonitrile	☐ Ethylene dibromide (1,2-dibromoethane)	☐ ETHYL ETHER	☐ Total PCBs
☐ Acetophenone	☐ Dibromomethane	☐ bis(2-Ethylhexyl) phthalate	☐ Pentachlorobenzene
☐ Acrylamide	☐ 2,4,D(2-4-Dichlorophenoxyacetic acid)	☐ Ethyl methacrylate	☐ Pentachlorodibenzo-p-dioxins (all)
☐ Acrylonitrile	☐ Dibenz(a,h)anthracene	☐ Ethylene oxide	☐ Pentachlorodibenzofurans (all)
☐ Aldrin	☐ Dibenz(a,e)pyrene	☐ Fluoranthene	☐ Pentachloroethane
☐ Aniline	☐ m-Dichlorobenzene	☐ Fluorene	☐ Pentachloronitrobenzene
☐ Anthracene	☐ o-DICHLOROBENZENE	☐ Heptachlor	☐ Pentachlorophenol
☐ BENZENE	☐ p-Dichlorobenzene	☐ Hexachlorobenzene	☐ Phenacetin
☐ Benz(a)anthracene	☐ Dichlorodifluoromethane	☐ Hexachlorobutadiene	☐ Phenanthrene
☐ Benzal chloride	☐ 1,1-Dichloroethane	☐ Hexachlorocyclopentadiene	☐ Phenol
☐ Benzo(b)fluoranthene	☐ 1,2-Dichloroethane	☐ Hexachlorodibenzo-p-dioxins (all)	☐ Phthalic acid
☐ Benzo(k)fluoranthene	☐ 1,1-Dichloroethylene	☐ Hexachlorodibenzofurans (all)	☐ Phthalic anhydride
☐ Benzo(g,h,i)perylene	☐ trans-1,2-Dichloroethylene	☐ Hexachloroethane	☐ Pyrene
☐ Benzo(a)pyrene	☐ 2,4-Dichlorophenol	☐ Hexachloropropylene	☐ PYRIDINE
☐ Bromodichloromethane	☐ 2,6-Dichlorophenol	☐ Indeno (1,2,3-c,d) pyrene	☐ Safrole
☐ Methyl bromide (Bromomethane)	☐ 1,2-Dichloropropane	☐ Iodomethane	☐ Silvex (2,4,5-TP)
☐ 4-Bromophenyl phenyl ether	☐ cis-1,3-Dichloropropylene	☐ ISOBUTYL ALCOHOL	☐ 2,4,5-T(2,4,5-Trichloro phenoxy-acetic acid)
☐ n-BUTYL ALCOHOL	☐ trans-1,3-Dichloropropylene	☐ Isodrin	☐ 1,2,4,5-Tetrachlorobenzene
☐ Butyl benzyl phthalate	☐ Dieldrin	☐ METHANOL	☐ 1,1,1,2-Tetrachloroethane
☐ CARBON DISULFIDE	☐ Diethyl phthalate	☐ Methapyrilene	☐ 1,1,2,2-Tetrachloroethane
☐ CARBON TETRACHLORIDE	☐ 2,4-Dimethyl phenol	☐ Methoxychlor	☐ TETRACHLOROETHYLENE
☐ Chlordane (alpha & gamma isomers)	☐ Dimethyl phthalate	☐ 4,4-Methylene bis(2-chloroaniline)	☐ 2,3,4,6-Tetrachlorophenol
☐ p-Chloroaniline	☐ Di-n-butyl phthalate	☐ METHYLENE CHLORIDE	☐ TOLUENE
☐ CHLOROBENZENE	☐ 1,4-Dinitrobenzene	☐ METHYL ETHYL KETONE	☐ Toxaphene
☐ 2-Chloro-1,3-butadiene	☐ 4,6-Dinitro-o-cresol	☐ METHYL ISOBUTYL KETONE	☐ Bromoform (Tribromomethane)
☐ Chlorodibromomethane	☐ 2,4-Dinitrophenol	☐ Methyl methacrylate	☐ 1,2,4-Trichlorobenzene
☐ Chloroethane	☐ 2,4-Dinitrotoluene	☐ Methyl methansulfonate	☐ 1,1,1-TRICHLOROETHANE
☐ bis(2-chloroethyl)ether	☐ 2,6-Dinitrotoluene	☐ Naphthalene	☐ 1,1,2-TRICHLOROETHANE
☐ Chloroform	☐ Di-n-octyl phthalate	☐ o-Nitroaniline	☐ TRICHLOROETHYLENE
☐ bis(2-Chloroisopropyl)ether	☐ Di-n-propylnitrosamine	☐ p-Nitroaniline	☐ TRICHLOROMONOFLUOROMETHANE
☐ p-Chloro-m-cresol	☐ 1,4-Dioxane	☐ NITROBENZENE	☐ 2,4,5-Trichlorophenol
☐ 2-Chloroethyl vinyl ether	☐ Diphenylamine	☐ 5-Nitro-o-toluidine	☐ 2,4,6-Trichlorophenol
☐ Chloromethane (Methyl chloride)	☐ Diphenylnitrosamine	☐ o-Nitrophenol	☐ 1,2,3-Trichloropropane
☐ 2-Chloronaphthalene	☐ 1,2-Diphenylhydrazine	☐ p-Nitrophenol	☐ 1,1,2-TRICHLORO-1,2,2-TRIFLUOROETHANE
☐ 2-Chlorophenol	☐ Disulfoton	☐ N-Nitrosodiethylamine	☐ tris-(2,3-Dibromopropyl) phosphate
☐ 3-Chloropropylene	☐ Endosulfan I	☐ N-Nitrosodimethylamine	☐ Vinyl chloride
☐ Chrysene	☐ Endosulfan II	☐ N-Nitroso-di-n-butylamine	☐ XYLENES-TOTAL MIXED ISOMERS
☐ o-CRESOL	☐ Endrin	☐ N-Nitrosomethylethylamine	
☐ m-CRESOL	☐ Endrin aldehyde	☐ N-Nitrosomorpholine	

☐ None of the above listed underlying hazardous constituents are reasonably expected to be present in this waste stream.

UNDERLYING HAZARDOUS CONSTITUENTS WORKSHEET

WASTE STREAM # 771-36-7

The following underlying hazardous constituents (indicated by a checkmark in the appropriate box) are reasonably expected to be present in this waste stream:

INORGANIC CONSTITUENTS			
☐ Antimony	☐ Cadmium	■ Lead	☐ Silver
☐ Arsenic	☐ Chromium	☐ Mercury	☐ Sulfide (Wastewater Only)
☐ Barium	☐ Cyanides (Total)	☐ Nickel	☐ Thallium
☐ Beryllium	☐ Cyanides (Amenable)	☐ Selenium	
ORGANIC CONSTITUENTS			
☐ Acenaphthylene	☐ p-CRESOL	☐ ETHYL ACETATE	☐ N-Nitrosopiperidine
☐ Acenaphthene	☐ Cyclohexanone	☐ Ethyl Cyanide (Propanenitrile)	☐ N-Nitrosopyrrolidine
☐ ACETONE	☐ 1,2-Dibromo-3-chloropropane	☐ ETHYL BENZENE	☐ Parathion
☐ Acetonitrile	☐ Ethylene dibromide (1,2-dibromoethane)	☐ ETHYL ETHER	☐ Total PCBs
☐ Acetophenone	☐ Dibromomethane	☐ bis(2-Ethylhexyl) phthalate	☐ Pentachlorobenzene
☐ Acrylamide	☐ 2,4,D(2-4-Dichlorophenoxyacetic acid)	☐ Ethyl methacrylate	☐ Pentachlorodibenzo-p-dioxins (all)
☐ Acrylonitrile	☐ Dibenz(a,h)anthracene	☐ Ethylene oxide	☐ Pentachlorodibenzofurans (all)
☐ Aldrin	☐ Dibenz(a,e)pyrene	☐ Fluoranthene	☐ Pentachloroethane
☐ Aniline	☐ m-Dichlorobenzene	☐ Fluorene	☐ Pentachloronitrobenzene
☐ Anthracene	☐ o-DICHLOROBENZENE	☐ Heptachlor	☐ Pentachlorophenol
☐ BENZENE	☐ p-Dichlorobenzene	☐ Hexachlorobenzene	☐ Phenacetin
☐ Benz(a)anthracene	☐ Dichlorodifluoromethane	☐ Hexachlorobutadiene	☐ Phenanthrene
☐ Benzal chloride	☐ 1,1-Dichloroethane	☐ Hexachlorocyclopentadiene	☐ Phenol
☐ Benzo(b)fluoranthene	☐ 1,2-Dichloroethane	☐ Hexachlorodibenzo-p-dioxins (all)	☐ Phthalic acid
☐ Benzo(k)fluoranthene	☐ 1,1-Dichloroethylene	☐ Hexachlorodibenzofurans (all)	☐ Phthalic anhydride
☐ Benzo(g,h,i)perylene	☐ trans-1,2-Dichloroethylene	☐ Hexachloroethane	☐ Pyrene
☐ Benzo(a)pyrene	☐ 2,4-Dichlorophenol	☐ Hexachloropropylene	☐ PYRIDINE
☐ Bromodichloromethane	☐ 2,6-Dichlorophenol	☐ Indeno (1,2,3-c,d) pyrene	☐ Safrole
☐ Methyl bromide (Bromomethane)	☐ 1,2-Dichloropropane	☐ Iodomethane	☐ Silvex (2,4,5-TP)
☐ 4-Bromophenyl phenyl ether	☐ cis-1,3-Dichloropropylene	☐ ISOBUTYL ALCOHOL	☐ 2,4,5-T(2,4,5-Trichloro phenoxy-acetic acid)
☐ n-BUTYL ALCOHOL	☐ trans-1,3-Dichloropropylene	☐ Isodrin	☐ 1,2,4,5-Tetrachlorobenzene
☐ Butyl benzyl phthalate	☐ Dieldrin	☐ METHANOL	☐ 1,1,1,2-Tetrachloroethane
☐ CARBON DISULFIDE	☐ Diethyl phthalate	☐ Methapyrilene	☐ 1,1,2,2-Tetrachloroethane
☐ CARBON TETRACHLORIDE	☐ 2,4-Dimethyl phenol	☐ Methoxychlor	☐ TETRACHLOROETHYLENE
☐ Chlordane (alpha & gamma isomers)	☐ Dimethyl phthalate	☐ 4,4-Methylene bis(2-chloroaniline)	☐ 2,3,4,6-Tetrachlorophenol
☐ p-Chloroaniline	☐ Di-n-butyl phthalate	☐ METHYLENE CHLORIDE	☐ TOLUENE
☐ CHLOROBENZENE	☐ 1,4-Dinitrobenzene	☐ METHYL ETHYL KETONE	☐ Toxaphene
☐ 2-Chloro-1,3-butadiene	☐ 4,6-Dinitro-o-cresol	☐ METHYL ISOBUTYL KETONE	☐ Bromoform (Tribromomethane)
☐ Chlorodibromomethane	☐ 2,4-Dinitrophenol	☐ Methyl methacrylate	☐ 1,2,4-Trichlorobenzene
☐ Chloroethane	☐ 2,4-Dinitrotoluene	☐ Methyl methansulfonate	☐ 1,1,1-TRICHLOROETHANE
☐ bis(2-chloroethyl)ether	☐ 2,6-Dinitrotoluene	☐ Naphthalene	☐ 1,1,2-TRICHLOROETHANE
☐ Chloroform	☐ Di-n-octyl phthalate	☐ o-Nitroaniline	☐ TRICHLOROETHYLENE
☐ bis(2-Chloroisopropyl)ether	☐ Di-n-propylnitrosamine	☐ p-Nitroaniline	☐ TRICHLOROMONOFLUOROMETHANE
☐ p-Chloro-m-cresol	☐ 1,4-Dioxane	☐ NITROBENZENE	☐ 2,4,5-Trichlorophenol
☐ 2-Chloroethyl vinyl ether	☐ Diphenylamine	☐ 5-Nitro-o-toluidine	☐ 2,4,6-Trichlorophenol
☐ Chloromethane (Methyl chloride)	☐ Diphenylnitrosamine	☐ o-Nitrophenol	☐ 1,2,3-Trichloropropane
☐ 2-Chloronaphthalene	☐ 1,2-Diphenylhydrazine	☐ p-Nitrophenol	☐ 1,1,2-TRICHLORO-1,2,2-TRIFLUOROETHANE
☐ 2-Chlorophenol	☐ Disulfoton	☐ N-Nitrosodiethylamine	☐ tris-(2,3-Dibromopropyl) phosphate
☐ 3-Chloropropylene	☐ Endosulfan I	☐ N-Nitrosodimethylamine	☐ Vinyl chloride
☐ Chrysene	☐ Endosulfan II	☐ N-Nitroso-di-n-butylamine	☐ XYLENES-TOTAL MIXED ISOMERS
☐ o-CRESOL	☐ Endrin	☐ N-Nitrosomethylethylamine	
☐ m-CRESOL	☐ Endrin aldehyde	☐ N-Nitrosomorpholine	

☐ None of the above listed underlying hazardous constituents are reasonably expected to be present in this waste stream.

UNDERLYING HAZARDOUS CONSTITUENTS WORKSHEET

WASTE STREAM # 771-37-25

The following underlying hazardous constituents (indicated by a checkmark in the appropriate box) are reasonably expected to be present in this waste stream:

INORGANIC CONSTITUENTS			
☐ Antimony	☐ Cadmium	☐ Lead	☐ Silver
☐ Arsenic	☐ Chromium	■ Mercury	☐ Sulfide (Wastewater Only)
☐ Barium	☐ Cyanides (Total)	☐ Nickel	☐ Thallium
☐ Beryllium	☐ Cyanides (Amenable)	☐ Selenium	

ORGANIC CONSTITUENTS			
☐ Acenaphthylene	☐ p-CRESOL	☐ ETHYL ACETATE	☐ N-Nitrosopiperidine
☐ Acenaphthene	☐ Cyclohexanone	☐ Ethyl Cyanide (Propanenitrile)	☐ N-Nitrosopyrrolidine
☐ ACETONE	☐ 1,2-Dibromo-3-chloropropane	☐ ETHYL BENZENE	☐ Parathion
☐ Acetonitrile	☐ Ethylene dibromide (1,2-dibromoethane)	☐ ETHYL ETHER	☐ Total PCBs
☐ Acetophenone	☐ Dibromomethane	☐ bis(2-Ethylhexyl) phthalate	☐ Pentachlorobenzene
☐ Acrylamide	☐ 2,4,D(2-4-Dichlorophenoxyacetic acid)	☐ Ethyl methacrylate	☐ Pentachlorodibenzo-p-dioxins (all)
☐ Acrylonitrile	☐ Dibenz(a,h)anthracene	☐ Ethylene oxide	☐ Pentachlorodibenzofurans (all)
☐ Aldrin	☐ Dibenz(a,e)pyrene	☐ Fluoranthene	☐ Pentachloroethane
☐ Aniline	☐ m-Dichlorobenzene	☐ Fluorene	☐ Pentachloronitrobenzene
☐ Anthracene	☐ o-DICHLOROBENZENE	☐ Heptachlor	☐ Pentachlorophenol
☐ BENZENE	☐ p-Dichlorobenzene	☐ Hexachlorobenzene	☐ Phenacetin
☐ Benz(a)anthracene	☐ Dichlorodifluoromethane	☐ Hexachlorobutadiene	☐ Phenanthrene
☐ Benzal chloride	☐ 1,1-Dichloroethane	☐ Hexachlorocyclopentadiene	☐ Phenol
☐ Benzo(b)fluoranthene	☐ 1,2-Dichloroethane	☐ Hexachlorodibenzo-p-dioxins (all)	☐ Phthalic acid
☐ Benzo(k)fluoranthene	☐ 1,1-Dichloroethylene	☐ Hexachlorodibenzofurans (all)	☐ Phthalic anhydride
☐ Benzo(g,h,i)perylene	☐ trans-1,2-Dichloroethylene	☐ Hexachloroethane	☐ Pyrene
☐ Benzo(a)pyrene	☐ 2,4-Dichlorophenol	☐ Hexachloropropylene	☐ PYRIDINE
☐ Bromodichloromethane	☐ 2,6-Dichlorophenol	☐ Indeno (1,2,3-c,d) pyrene	☐ Safrole
☐ Methyl bromide (Bromomethane)	☐ 1,2-Dichloropropane	☐ Iodomethane	☐ Silvex (2,4,5-TP)
☐ 4-Bromophenyl phenyl ether	☐ cis-1,3-Dichloropropylene	☐ ISOBUTYL ALCOHOL	☐ 2,4,5-T(2,4,5-Trichloro phenoxy-acetic acid)
☐ n-BUTYL ALCOHOL	☐ trans-1,3-Dichloropropylene	☐ Isodrin	☐ 1,2,4,5-Tetrachlorobenzene
☐ Butyl benzyl phthalate	☐ Dieldrin	☐ METHANOL	☐ 1,1,1,2-Tetrachloroethane
☐ CARBON DISULFIDE	☐ Diethyl phthalate	☐ Methapyrilene	☐ 1,1,2,2-Tetrachloroethane
☐ CARBON TETRACHLORIDE	☐ 2,4-Dimethyl phenol	☐ Methoxychlor	☐ TETRACHLOROETHYLENE
☐ Chlordane (alpha & gamma isomers)	☐ Dimethyl phthalate	☐ 4,4-Methylene bis(2-chloroaniline)	☐ 2,3,4,6-Tetrachlorophenol
☐ p-Chloroaniline	☐ Di-n-butyl phthalate	☐ METHYLENE CHLORIDE	☐ TOLUENE
☐ CHLOROBENZENE	☐ 1,4-Dinitrobenzene	☐ METHYL ETHYL KETONE	☐ Toxaphene
☐ 2-Chloro-1,3-butadiene	☐ 4,6-Dinitro-o-cresol	☐ METHYL ISOBUTYL KETONE	☐ Bromoform (Tribromomethane)
☐ Chlorodibromomethane	☐ 2,4-Dinitrophenol	☐ Methyl methacrylate	☐ 1,2,4-Trichlorobenzene
☐ Chloroethane	☐ 2,4-Dinitrotoluene	☐ Methyl methansulfonate	☐ 1,1,1-TRICHLOROETHANE
☐ bis(2-chloroethyl)ether	☐ 2,6-Dinitrotoluene	☐ Naphthalene	☐ 1,1,2-TRICHLOROETHANE
☐ Chloroform	☐ Di-n-octyl phthalate	☐ o-Nitroaniline	☐ TRICHLOROETHYLENE
☐ bis(2-Chloroisopropyl)ether	☐ Di-n-propylnitrosamine	☐ p-Nitroaniline	☐ TRICHLOROMONOFLUOROMETHANE
☐ p-Chloro-m-cresol	☐ 1,4-Dioxane	☐ NITROBENZENE	☐ 2,4,5-Trichlorophenol
☐ 2-Chloroethyl vinyl ether	☐ Diphenylamine	☐ 5-Nitro-o-toluidine	☐ 2,4,6-Trichlorophenol
☐ Chloromethane (Methyl chloride)	☐ Diphenylnitrosamine	☐ o-Nitrophenol	☐ 1,2,3-Trichloropropane
☐ 2-Chloronaphthalene	☐ 1,2-Diphenylhydrazine	☐ p-Nitrophenol	☐ 1,1,2-TRICHLORO-1,2,2-TRIFLUOROETHANE
☐ 2-Chlorophenol	☐ Disulfoton	☐ N-Nitrosodiethylamine	☐ tris-(2,3-Dibromopropyl) phosphate
☐ 3-Chloropropylene	☐ Endosulfan I	☐ N-Nitrosodimethylamine	☐ Vinyl chloride
☐ Chrysene	☐ Endosulfan II	☐ N-Nitroso-di-n-butylamine	☐ XYLENES-TOTAL MIXED ISOMERS
☐ o-CRESOL	☐ Endrin	☐ N-Nitrosomethylethylamine	
☐ m-CRESOL	☐ Endrin aldehyde	☐ N-Nitrosomorpholine	

☐ None of the above listed underlying hazardous constituents are reasonably expected to be present in this waste stream.

UNDERLYING HAZARDOUS CONSTITUENTS WORKSHEET

WASTE STREAM # 771-39-12

The following underlying hazardous constituents (indicated by a checkmark in the appropriate box) are reasonably expected to be present in this waste stream:

INORGANIC CONSTITUENTS			
☐ Antimony	☐ Cadmium	☐ Lead	☐ Silver
☐ Arsenic	☐ Chromium	☐ Mercury	☐ Sulfide (Wastewater Only)
☐ Barium	☐ Cyanides (Total)	☐ Nickel	☐ Thallium
☐ Beryllium	☐ Cyanides (Amenable)	☐ Selenium	
ORGANIC CONSTITUENTS			
☐ Acenaphthylene	☐ p-CRESOL	☐ ETHYL ACETATE	☐ N-Nitrosopiperidine
☐ Acenaphthene	☐ Cyclohexanone	☐ Ethyl Cyanide (Propanenitrile)	☐ N-Nitrosopyrrolidine
☐ ACETONE	☐ 1,2-Dibromo-3-chloropropane	☐ ETHYL BENZENE	☐ Parathion
☐ Acetonitrile	☐ Ethylene dibromide (1,2-dibromoethane)	☐ ETHYL ETHER	☐ Total PCBs
☐ Acetophenone	☐ Dibromomethane	☐ bis(2-Ethylhexyl) phthalate	☐ Pentachlorobenzene
☐ Acrylamide	☐ 2,4,D(2-4-Dichlorophenoxyacetic acid)	☐ Ethyl methacrylate	☐ Pentachlorodibenzo-p-dioxins (all)
☐ Acrylonitrile	☐ Dibenz(a,h)anthracene	☐ Ethylene oxide	☐ Pentachlorodibenzofurans (all)
☐ Aldrin	☐ Dibenz(a,e)pyrene	☐ Fluoranthene	☐ Pentachloroethane
☐ Aniline	☐ m-Dichlorobenzene	☐ Fluorene	☐ Pentachloronitrobenzene
☐ Anthracene	☐ o-DICHLOROBENZENE	☐ Heptachlor	☐ Pentachlorophenol
☐ BENZENE	☐ p-Dichlorobenzene	☐ Hexachlorobenzene	☐ Phenacetin
☐ Benz(a)anthracene	☐ Dichlorodifluoromethane	☐ Hexachlorobutadiene	☐ Phenanthrene
☐ Benzal chloride	☐ 1,1-Dichloroethane	☐ Hexachlorocyclopentadiene	☐ Phenol
☐ Benzo(b)fluoranthene	☐ 1,2-Dichloroethane	☐ Hexachlorodibenzo-p-dioxins (all)	☐ Phthalic acid
☐ Benzo(k)fluoranthene	☐ 1,1-Dichloroethylene	☐ Hexachlorodibenzofurans (all)	☐ Phthalic anhydride
☐ Benzo(g,h,i)perylene	☐ trans-1,2-Dichloroethylene	☐ Hexachloroethane	☐ Pyrene
☐ Benzo(a)pyrene	☐ 2,4-Dichlorophenol	☐ Hexachloropropylene	☐ PYRIDINE
☐ Bromodichloromethane	☐ 2,6-Dichlorophenol	☐ Indeno (1,2,3-c,d) pyrene	☐ Safrole
☐ Methyl bromide (Bromomethane)	☐ 1,2-Dichloropropane	☐ Iodomethane	☐ Silvex (2,4,5-TP)
☐ 4-Bromophenyl phenyl ether	☐ cis-1,3-Dichloropropylene	☐ ISOBUTYL ALCOHOL	☐ 2,4,5-T(2,4,5-Trichloro phenoxy-acetic acid)
☐ n-BUTYL ALCOHOL	☐ trans-1,3-Dichloropropylene	☐ Isodrin	☐ 1,2,4,5-Tetrachlorobenzene
☐ Butyl benzyl phthalate	☐ Dieldrin	☐ METHANOL	☐ 1,1,1,2-Tetrachloroethane
☐ CARBON DISULFIDE	☐ Diethyl phthalate	☐ Methapyrilene	☐ 1,1,2,2-Tetrachloroethane
☐ CARBON TETRACHLORIDE	☐ 2,4-Dimethyl phenol	☐ Methoxychlor	☐ TETRACHLOROETHYLENE
☐ Chlordane (alpha & gamma isomers)	☐ Dimethyl phthalate	☐ 4,4-Methylene bis(2-chloroaniline)	☐ 2,3,4,6-Tetrachlorophenol
☐ p-Chloroaniline	☐ Di-n-butyl phthalate	☐ METHYLENE CHLORIDE	☐ TOLUENE
☐ CHLOROBENZENE	☐ 1,4-Dinitrobenzene	☐ METHYL ETHYL KETONE	☐ Toxaphene
☐ 2-Chloro-1,3-butadiene	☐ 4,6-Dinitro-o-cresol	☐ METHYL ISOBUTYL KETONE	☐ Bromoform (Tribromomethane)
☐ Chlorodibromomethane	☐ 2,4-Dinitrophenol	☐ Methyl methacrylate	☐ 1,2,4-Trichlorobenzene
☐ Chloroethane	☐ 2,4-Dinitrotoluene	☐ Methyl methansulfonate	☐ 1,1,1-TRICHLOROETHANE
☐ bis(2-chloroethyl)ether	☐ 2,6-Dinitrotoluene	☐ Naphthalene	☐ 1,1,2-TRICHLOROETHANE
☐ Chloroform	☐ Di-n-octyl phthalate	☐ o-Nitroaniline	☐ TRICHLOROETHYLENE
☐ bis(2-Chloroisopropyl)ether	☐ Di-n-propylnitrosamine	☐ p-Nitroaniline	☐ TRICHLOROMONOFLUOROMETHANE
☐ p-Chloro-m-cresol	☐ 1,4-Dioxane	☐ NITROBENZENE	☐ 2,4,5-Trichlorophenol
☐ 2-Chloroethyl vinyl ether	☐ Diphenylamine	☐ 5-Nitro-o-toluidine	☐ 2,4,6-Trichlorophenol
☐ Chloromethane (Methyl chloride)	☐ Diphenylnitrosamine	☐ o-Nitrophenol	☐ 1,2,3-Trichloropropane
☐ 2-Chloronaphthalene	☐ 1,2-Diphenylhydrazine	☐ p-Nitrophenol	☐ 1,1,2-TRICHLORO-1,2,2-TRIFLUOROETHANE
☐ 2-Chlorophenol	☐ Disulfoton	☐ N-Nitrosodiethylamine	☐ tris-(2,3-Dibromopropyl) phosphate
☐ 3-Chloropropylene	☐ Endosulfan I	☐ N-Nitrosodimethylamine	☐ Vinyl chloride
☐ Chrysene	☐ Endosulfan II	☐ N-Nitroso-di-n-butylamine	☐ XYLENES-TOTAL MIXED ISOMERS
☐ o-CRESOL	☐ Endrin	☐ N-Nitrosomethylethylamine	
☐ m-CRESOL	☐ Endrin aldehyde	☐ N-Nitrosomorpholine	

■ None of the above listed underlying hazardous constituents are reasonably expected to be present in this waste stream.

UNDERLYING HAZARDOUS CONSTITUENTS WORKSHEET

WASTE STREAM # 771-39-14

The following underlying hazardous constituents (indicated by a checkmark in the appropriate box) are reasonably expected to be present in this waste stream:

INORGANIC CONSTITUENTS			
☐ Antimony	☐ Cadmium	☐ Lead	☐ Silver
☐ Arsenic	☐ Chromium	☐ Mercury	☐ Sulfide (Wastewater Only)
☐ Barium	☐ Cyanides (Total)	☐ Nickel	☐ Thallium
☐ Beryllium	☐ Cyanides (Amenable)	☐ Selenium	
ORGANIC CONSTITUENTS			
☐ Acenaphthylene	☐ p-CRESOL	☐ ETHYL ACETATE	☐ N-Nitrosopiperidine
☐ Acenaphthene	☐ Cyclohexanone	☐ Ethyl Cyanide (Propanenitrile)	☐ N-Nitrosopyrrolidine
☐ ACETONE	☐ 1,2-Dibromo-3-chloropropane	☐ ETHYL BENZENE	☐ Parathion
☐ Acetonitrile	☐ Ethylene dibromide (1,2-dibromoethane)	☐ ETHYL ETHER	☐ Total PCBs
☐ Acetophenone	☐ Dibromomethane	☐ bis(2-Ethylhexyl) phthalate	☐ Pentachlorobenzene
☐ Acrylamide	☐ 2,4,D(2-4-Dichlorophenoxyacetic acid)	☐ Ethyl methacrylate	☐ Pentachlorodibenzo-p-dioxins (all)
☐ Acrylonitrile	☐ Dibenz(a,h)anthracene	☐ Ethylene oxide	☐ Pentachlorodibenzofurans (all)
☐ Aldrin	☐ Dibenz(a,e)pyrene	☐ Fluoranthene	☐ Pentachloroethane
☐ Aniline	☐ m-Dichlorobenzene	☐ Fluorene	☐ Pentachloronitrobenzene
☐ Anthracene	☐ o-DICHLOROBENZENE	☐ Heptachlor	☐ Pentachlorophenol
☐ BENZENE	☐ p-Dichlorobenzene	☐ Hexachlorobenzene	☐ Phenacetin
☐ Benz(a)anthracene	☐ Dichlorodifluoromethane	☐ Hexachlorobutadiene	☐ Phenanthrene
☐ Benzal chloride	☐ 1,1-Dichloroethane	☐ Hexachlorocyclopentadiene	☐ Phenol
☐ Benzo(b)fluoranthene	☐ 1,2-Dichloroethane	☐ Hexachlorodibenzo-p-dioxins (all)	☐ Phthalic acid
☐ Benzo(k)fluoranthene	☐ 1,1-Dichloroethylene	☐ Hexachlorodibenzofurans (all)	☐ Phthalic anhydride
☐ Benzo(g,h,i)perylene	☐ trans-1,2-Dichloroethylene	☐ Hexachloroethane	☐ Pyrene
☐ Benzo(a)pyrene	☐ 2,4-Dichlorophenol	☐ Hexachloropropylene	☐ PYRIDINE
☐ Bromodichloromethane	☐ 2,6-Dichlorophenol	☐ Indeno (1,2,3-c,d) pyrene	☐ Safrole
☐ Methyl bromide (Bromomethane)	☐ 1,2-Dichloropropane	☐ Iodomethane	☐ Silvex (2,4,5-TP)
☐ 4-Bromophenyl phenyl ether	☐ cis-1,3-Dichloropropylene	☐ ISOBUTYL ALCOHOL	☐ 2,4,5-T(2,4,5-Trichloro phenoxy-acetic acid)
☐ n-BUTYL ALCOHOL	☐ trans-1,3-Dichloropropylene	☐ Isodrin	☐ 1,2,4,5-Tetrachlorobenzene
☐ Butyl benzyl phthalate	☐ Dieldrin	☐ METHANOL	☐ 1,1,1,2-Tetrachloroethane
☐ CARBON DISULFIDE	☐ Diethyl phthalate	☐ Methapyrilene	☐ 1,1,2,2-Tetrachloroethane
☐ CARBON TETRACHLORIDE	☐ 2,4-Dimethyl phenol	☐ Methoxychlor	☐ TETRACHLOROETHYLENE
☐ Chlordane (alpha & gamma isomers)	☐ Dimethyl phthalate	☐ 4,4-Methylene bis(2-chloroaniline)	☐ 2,3,4,6-Tetrachlorophenol
☐ p-Chloroaniline	☐ Di-n-butyl phthalate	☐ METHYLENE CHLORIDE	☐ TOLUENE
☐ CHLOROBENZENE	☐ 1,4-Dinitrobenzene	☐ METHYL ETHYL KETONE	☐ Toxaphene
☐ 2-Chloro-1,3-butadiene	☐ 4,6-Dinitro-o-cresol	☐ METHYL ISOBUTYL KETONE	☐ Bromoform (Tribromomethane)
☐ Chlorodibromomethane	☐ 2,4-Dinitrophenol	☐ Methyl methacrylate	☐ 1,2,4-Trichlorobenzene
☐ Chloroethane	☐ 2,4-Dinitrotoluene	☐ Methyl methansulfonate	☐ 1,1,1-TRICHLOROETHANE
☐ bis(2-chloroethyl)ether	☐ 2,6-Dinitrotoluene	☐ Naphthalene	☐ 1,1,2-TRICHLOROETHANE
☐ Chloroform	☐ Di-n-octyl phthalate	☐ o-Nitroaniline	☐ TRICHLOROETHYLENE
☐ bis(2-Chloroisopropyl)ether	☐ Di-n-propylnitrosamine	☐ p-Nitroaniline	☐ TRICHLOROMONOFLUOROMETHANE
☐ p-Chloro-m-cresol	☐ 1,4-Dioxane	☐ NITROBENZENE	☐ 2,4,5-Trichlorophenol
☐ 2-Chloroethyl vinyl ether	☐ Diphenylamine	☐ 5-Nitro-o-toluidine	☐ 2,4,6-Trichlorophenol
☐ Chloromethane (Methyl chloride)	☐ Diphenylnitrosamine	☐ o-Nitrophenol	☐ 1,2,3-Trichloropropane
☐ 2-Chloronaphthalene	☐ 1,2-Diphenylhydrazine	☐ p-Nitrophenol	☐ 1,1,2-TRICHLORO-1,2,2-TRIFLUOROETHANE
☐ 2-Chlorophenol	☐ Disulfoton	☐ N-Nitrosodiethylamine	☐ tris-(2,3-Dibromopropyl) phosphate
☐ 3-Chloropropylene	☐ Endosulfan I	☐ N-Nitrosodimethylamine	☐ Vinyl chloride
☐ Chrysene	☐ Endosulfan II	☐ N-Nitroso-di-n-butylamine	☐ XYLENES-TOTAL MIXED ISOMERS
☐ o-CRESOL	☐ Endrin	☐ N-Nitrosomethylethylamine	
☐ m-CRESOL	☐ Endrin aldehyde	☐ N-Nitrosomorpholine	

■ None of the above listed underlying hazardous constituents are reasonably expected to be present in this waste stream.

UNDERLYING HAZARDOUS CONSTITUENTS WORKSHEET

WASTE STREAM # 771-39-15

The following underlying hazardous constituents (indicated by a checkmark in the appropriate box) are reasonably expected to be present in this waste stream:

INORGANIC CONSTITUENTS			
☐ Antimony	☐ Cadmium	■ Lead	☐ Silver
☐ Arsenic	■ Chromium	☐ Mercury	☐ Sulfide (Wastewater Only)
☐ Barium	☐ Cyanides (Total)	☐ Nickel	☐ Thallium
☐ Beryllium	☐ Cyanides (Amenable)	☐ Selenium	
ORGANIC CONSTITUENTS			
☐ Acenaphthylene	☐ p-CRESOL	☐ ETHYL ACETATE	☐ N-Nitrosopiperidine
☐ Acenaphthene	☐ Cyclohexanone	☐ Ethyl Cyanide (Propanenitrile)	☐ N-Nitrosopyrrolidine
☐ ACETONE	☐ 1,2-Dibromo-3-chloropropane	☐ ETHYL BENZENE	☐ Parathion
☐ Acetonitrile	☐ Ethylene dibromide (1,2-dibromoethane)	☐ ETHYL ETHER	☐ Total PCBs
☐ Acetophenone	☐ Dibromomethane	☐ bis(2-Ethylhexyl) phthalate	☐ Pentachlorobenzene
☐ Acrylamide	☐ 2,4,D(2-4-Dichlorophenoxyacetic acid)	☐ Ethyl methacrylate	☐ Pentachlorodibenzo-p-dioxins (all)
☐ Acrylonitrile	☐ Dibenz(a,h)anthracene	☐ Ethylene oxide	☐ Pentachlorodibenzofurans (all)
☐ Aldrin	☐ Dibenz(a,e)pyrene	☐ Fluoranthene	☐ Pentachloroethane
☐ Aniline	☐ m-Dichlorobenzene	☐ Fluorene	☐ Pentachloronitrobenzene
☐ Anthracene	☐ o-DICHLOROBENZENE	☐ Heptachlor	☐ Pentachlorophenol
☐ BENZENE	☐ p-Dichlorobenzene	☐ Hexachlorobenzene	☐ Phenacetin
☐ Benz(a)anthracene	☐ Dichlorodifluoromethane	☐ Hexachlorobutadiene	☐ Phenanthrene
☐ Benzal chloride	☐ 1,1-Dichloroethane	☐ Hexachlorocyclopentadiene	☐ Phenol
☐ Benzo(b)fluoranthene	☐ 1,2-Dichloroethane	☐ Hexachlorodibenzo-p-dioxins (all)	☐ Phthalic acid
☐ Benzo(k)fluoranthene	☐ 1,1-Dichloroethylene	☐ Hexachlorodibenzofurans (all)	☐ Phthalic anhydride
☐ Benzo(g,h,i)perylene	☐ trans-1,2-Dichloroethylene	☐ Hexachloroethane	☐ Pyrene
☐ Benzo(a)pyrene	☐ 2,4-Dichlorophenol	☐ Hexachloropropylene	☐ PYRIDINE
☐ Bromodichloromethane	☐ 2,6-Dichlorophenol	☐ Indeno (1,2,3-c,d) pyrene	☐ Safrole
☐ Methyl bromide (Bromomethane)	☐ 1,2-Dichloropropane	☐ Iodomethane	☐ Silvex (2,4,5-TP)
☐ 4-Bromophenyl phenyl ether	☐ cis-1,3-Dichloropropylene	☐ ISOBUTYL ALCOHOL	☐ 2,4,5-T(2,4,5-Trichloro phenoxy-acetic acid)
☐ n-BUTYL ALCOHOL	☐ trans-1,3-Dichloropropylene	☐ Isodrin	☐ 1,2,4,5-Tetrachlorobenzene
☐ Butyl benzyl phthalate	☐ Dieldrin	☐ METHANOL	☐ 1,1,1,2-Tetrachloroethane
☐ CARBON DISULFIDE	☐ Diethyl phthalate	☐ Methapyrilene	☐ 1,1,2,2-Tetrachloroethane
☐ CARBON TETRACHLORIDE	☐ 2,4-Dimethyl phenol	☐ Methoxychlor	☐ TETRACHLOROETHYLENE
☐ Chlordane (alpha & gamma isomers)	☐ Dimethyl phthalate	☐ 4,4-Methylene bis(2-chloroaniline)	☐ 2,3,4,6-Tetrachlorophenol
☐ p-Chloroaniline	☐ Di-n-butyl phthalate	☐ METHYLENE CHLORIDE	☐ TOLUENE
☐ CHLOROBENZENE	☐ 1,4-Dinitrobenzene	☐ METHYL ETHYL KETONE	☐ Toxaphene
☐ 2-Chloro-1,3-butadiene	☐ 4,6-Dinitro-o-cresol	☐ METHYL ISOBUTYL KETONE	☐ Bromoform (Tribromomethane)
☐ Chlorodibromomethane	☐ 2,4-Dinitrophenol	☐ Methyl methacrylate	☐ 1,2,4-Trichlorobenzene
☐ Chloroethane	☐ 2,4-Dinitrotoluene	☐ Methyl methansulfonate	☐ 1,1,1-TRICHLOROETHANE
☐ bis(2-chloroethyl)ether	☐ 2,6-Dinitrotoluene	☐ Naphthalene	☐ 1,1,2-TRICHLOROETHANE
☐ Chloroform	☐ Di-n-octyl phthalate	☐ o-Nitroaniline	☐ TRICHLOROETHYLENE
☐ bis(2-Chloroisopropyl)ether	☐ Di-n-propylnitrosamine	☐ p-Nitroaniline	☐ TRICHLOROMONOFLUOROMETHANE
☐ p-Chloro-m-cresol	☐ 1,4-Dioxane	☐ NITROBENZENE	☐ 2,4,5-Trichlorophenol
☐ 2-Chloroethyl vinyl ether	☐ Diphenylamine	☐ 5-Nitro-o-toluidine	☐ 2,4,6-Trichlorophenol
☐ Chloromethane (Methyl chloride)	☐ Diphenylnitrosamine	☐ o-Nitrophenol	☐ 1,2,3-Trichloropropane
☐ 2-Chloronaphthalene	☐ 1,2-Diphenylhydrazine	☐ p-Nitrophenol	☐ 1,1,2-TRICHLORO-1,2,2-TRIFLUOROETHANE
☐ 2-Chlorophenol	☐ Disulfoton	☐ N-Nitrosodiethylamine	☐ tris-(2,3-Dibromopropyl) phosphate
☐ 3-Chloropropylene	☐ Endosulfan I	☐ N-Nitrosodimethylamine	☐ Vinyl chloride
☐ Chrysene	☐ Endosulfan II	☐ N-Nitroso-di-n-butylamine	☐ XYLENES-TOTAL MIXED ISOMERS
☐ o-CRESOL	☐ Endrin	☐ N-Nitrosomethylethylamine	
☐ m-CRESOL	☐ Endrin aldehyde	☐ N-Nitrosomorpholine	

☐ None of the above listed underlying hazardous constituents are reasonably expected to be present in this waste stream.

UNDERLYING HAZARDOUS CONSTITUENTS WORKSHEET

WASTE STREAM # 771-39-16

The following underlying hazardous constituents (indicated by a checkmark in the appropriate box) are reasonably expected to be present in this waste stream:

INORGANIC CONSTITUENTS			
☐ Antimony	☐ Cadmium	■ Lead	☐ Silver
☐ Arsenic	■ Chromium	☐ Mercury	☐ Sulfide (Wastewater Only)
☐ Barium	☐ Cyanides (Total)	☐ Nickel	☐ Thallium
☐ Beryllium	☐ Cyanides (Amenable)	☐ Selenium	
ORGANIC CONSTITUENTS			
☐ Acenaphthylene	☐ p-CRESOL	☐ ETHYL ACETATE	☐ N-Nitrosopiperidine
☐ Acenaphthene	☐ Cyclohexanone	☐ Ethyl Cyanide (Propanenitrile)	☐ N-Nitrosopyrrolidine
☐ ACETONE	☐ 1,2-Dibromo-3-chloropropane	☐ ETHYL BENZENE	☐ Parathion
☐ Acetonitrile	☐ Ethylene dibromide (1,2-dibromoethane)	☐ ETHYL ETHER	☐ Total PCBs
☐ Acetophenone	☐ Dibromomethane	☐ bis(2-Ethylhexyl) phthalate	☐ Pentachlorobenzene
☐ Acrylamide	☐ 2,4,D(2-4-Dichlorophenoxyacetic acid)	☐ Ethyl methacrylate	☐ Pentachlorodibenzo-p-dioxins (all)
☐ Acrylonitrile	☐ Dibenz(a,h)anthracene	☐ Ethylene oxide	☐ Pentachlorodibenzofurans (all)
☐ Aldrin	☐ Dibenz(a,e)pyrene	☐ Fluoranthene	☐ Pentachloroethane
☐ Aniline	☐ m-Dichlorobenzene	☐ Fluorene	☐ Pentachloronitrobenzene
☐ Anthracene	☐ o-DICHLOROBENZENE	☐ Heptachlor	☐ Pentachlorophenol
☐ BENZENE	☐ p-Dichlorobenzene	☐ Hexachlorobenzene	☐ Phenacetin
☐ Benz(a)anthracene	☐ Dichlorodifluoromethane	☐ Hexachlorobutadiene	☐ Phenanthrene
☐ Benzal chloride	☐ 1,1-Dichloroethane	☐ Hexachlorocyclopentadiene	☐ Phenol
☐ Benzo(b)fluoranthene	☐ 1,2-Dichloroethane	☐ Hexachlorodibenzo-p-dioxins (all)	☐ Phthalic acid
☐ Benzo(k)fluoranthene	☐ 1,1-Dichloroethylene	☐ Hexachlorodibenzofurans (all)	☐ Phthalic anhydride
☐ Benzo(g,h,i)perylene	☐ trans-1,2-Dichloroethylene	☐ Hexachloroethane	☐ Pyrene
☐ Benzo(a)pyrene	☐ 2,4-Dichlorophenol	☐ Hexachloropropylene	☐ PYRIDINE
☐ Bromodichloromethane	☐ 2,6-Dichlorophenol	☐ Indeno (1,2,3-c,d) pyrene	☐ Safrole
☐ Methyl bromide (Bromomethane)	☐ 1,2-Dichloropropane	☐ Iodomethane	☐ Silvex (2,4,5-TP)
☐ 4-Bromophenyl phenyl ether	☐ cis-1,3-Dichloropropylene	☐ ISOBUTYL ALCOHOL	☐ 2,4,5-T(2,4,5-Trichloro phenoxy-acetic acid)
☐ n-BUTYL ALCOHOL	☐ trans-1,3-Dichloropropylene	☐ Isodrin	☐ 1,2,4,5-Tetrachlorobenzene
☐ Butyl benzyl phthalate	☐ Dieldrin	☐ METHANOL	☐ 1,1,1,2-Tetrachloroethane
☐ CARBON DISULFIDE	☐ Diethyl phthalate	☐ Methapyrilene	☐ 1,1,2,2-Tetrachloroethane
☐ CARBON TETRACHLORIDE	☐ 2,4-Dimethyl phenol	☐ Methoxychlor	☐ TETRACHLOROETHYLENE
☐ Chlordane (alpha & gamma isomers)	☐ Dimethyl phthalate	☐ 4,4-Methylene bis(2-chloroaniline)	☐ 2,3,4,6-Tetrachlorophenol
☐ p-Chloroaniline	☐ Di-n-butyl phthalate	☐ METHYLENE CHLORIDE	☐ TOLUENE
☐ CHLOROBENZENE	☐ 1,4-Dinitrobenzene	☐ METHYL ETHYL KETONE	☐ Toxaphene
☐ 2-Chloro-1,3-butadiene	☐ 4,6-Dinitro-o-cresol	☐ METHYL ISOBUTYL KETONE	☐ Bromoform (Tribromomethane)
☐ Chlorodibromomethane	☐ 2,4-Dinitrophenol	☐ Methyl methacrylate	☐ 1,2,4-Trichlorobenzene
☐ Chloroethane	☐ 2,4-Dinitrotoluene	☐ Methyl methansulfonate	☐ 1,1,1-TRICHLOROETHANE
☐ bis(2-chloroethyl)ether	☐ 2,6-Dinitrotoluene	☐ Naphthalene	☐ 1,1,2-TRICHLOROETHANE
☐ Chloroform	☐ Di-n-octyl phthalate	☐ o-Nitroaniline	☐ TRICHLOROETHYLENE
☐ bis(2-Chloroisopropyl)ether	☐ Di-n-propylnitrosamine	☐ p-Nitroaniline	☐ TRICHLOROMONOFLUOROMETHANE
☐ p-Chloro-m-cresol	☐ 1,4-Dioxane	☐ NITROBENZENE	☐ 2,4,5-Trichlorophenol
☐ 2-Chloroethyl vinyl ether	☐ Diphenylamine	☐ 5-Nitro-o-toluidine	☐ 2,4,6-Trichlorophenol
☐ Chloromethane (Methyl chloride)	☐ Diphenylnitrosamine	☐ o-Nitrophenol	☐ 1,2,3-Trichloropropane
☐ 2-Chloronaphthalene	☐ 1,2-Diphenylhydrazine	☐ p-Nitrophenol	☐ 1,1,2-TRICHLORO-1,2,2-TRIFLUOROETHANE
☐ 2-Chlorophenol	☐ Disulfoton	☐ N-Nitrosodiethylamine	☐ tris-(2,3-Dibromopropyl) phosphate
☐ 3-Chloropropylene	☐ Endosulfan I	☐ N-Nitrosodimethylamine	☐ Vinyl chloride
☐ Chrysene	☐ Endosulfan II	☐ N-Nitroso-di-n-butylamine	☐ XYLENES-TOTAL MIXED ISOMERS
☐ o-CRESOL	☐ Endrin	☐ N-Nitrosomethylethylamine	
☐ m-CRESOL	☐ Endrin aldehyde	☐ N-Nitrosomorpholine	

☐ None of the above listed underlying hazardous constituents are reasonably expected to be present in this waste stream.

THIS PAGE INTENTIONALLY LEFT BLANK

RMRS, L.L.C.
Employee Timesheet

[redacted].

Revision: 3
Group: R-Q/A
Weekly Period Ending: 12/18/1998

Ln	Project	Account	Pay Type	Charge Description	Sat 12/12	Sun 12/13	Mon 12/14	Tue 12/15	Wed 12/16	Thu 12/17	Fri 12/18	Total
1		9201-601	R	Towp	0.00		0.00	0.00	0.00	0.00		
[redacted]												
4												
5												
6												
7												
8												
9												
10												
11												
12												
13												
14												
15												
16												
17												
18												
19												
20												
21												
22												
23												
24												
25												
26												
27												
28												
29												
30												
Total Regular Hours					0.00		9.00	9.00	9.00	9.00	4.00	40.00
Total Overtime Hours												
Total Hours					0.00		9.00	9.00	9.00	9.00	4.00	40.00
Time In												
Time Out												
Non-Work Hours												
Off-Site Work Hours												

Timesheet Approvals

[redacted] [redacted]
Manager: Pending
Approval 2: N/A
Approval 3: N/A
Approval 4: N/A
Approval 5: N/A

Printed: 12/18/98 07:46:43

35.0 PROCESS 771-35: GENERAL BUILDING WASTE (RMMA)

The General Building Waste (RMMA) Process is applicable to the nonprocess-specific wastes generated in the radiation controlled area (RMMA) of Building 771, including offices, step-off pads, and corridors. Figure 35.1 gives the inputs, process flow, and outputs associated with General Building Waste (RMMA).

Paper, tape, labels, light plastics, Kimwipes, detergent, tools, and packaged materials are used in routine operations in the offices, corridors, and step-off pads in the RMMA. Radiation Protection Technicians (RPTs) use small paper smears to determine the levels of nonfixed (removable) contamination on equipment and facilities in the area and on items being prepared for transfer out of the area. The item surfaces are wiped with smears, which are then processed through an alpha counter and put in a designated container located at each counter. Radiation Protection activities also require rubber gloves, tape, and room posting signs. All personnel working in the RMMA and visitors wear personal protective equipment (PPE) consisting of various items of apparel. Personnel leaving the RMMA are monitored at the step-off pads for alpha contamination, where shoe covers (booties), tape, surgical gloves, and visitors' coveralls are collected. Leaded glovebox gloves are supplied for routine replacement as needed. Nickel-Cadmium (Ni-Cad) and Gel-Cel batteries are replaced as needed. Unusable tools, lead metal, expired items, empty cans, and general trash are generated by routine building operations. Absorbent materials are used to clean up spilled liquids. Lumber is used for building scaffolds and other general building needs.

Elemental mercury from electrical parts and measuring equipment, absorbed mercury from spills, circuit boards, nonradioactive leaded glass, leaded aprons, wet and dry combustible waste, PPE waste, soft plastic, hard plastic, light metal, expired and unused leaded glovebox gloves, used glovebox gloves, full-face masks, masks with plastic cartridges, masks with metal cartridges, glass, wood, RPT wastes, concrete, dirt, sand, insulation (nonasbestos), and floor sweepings are placed in 55-gallon drums designated for the appropriate IDC. Contaminated and uncontaminated items of apparel are collected in separate containers and taken to the laundry or discarded. Ni-Cad and Gel-Cel batteries and lead metal are placed in satellite collection areas. Mercury batteries are surveyed and sent to a 90-day collection area or permitted storage area. Lithium batteries are surveyed and sent to an appropriate storage area. Hazardous liquid and solid waste/excess chemicals are placed in an appropriate satellite accumulation area or 90-day accumulation area to be determined. Nonhazardous liquid and solid waste/excess chemicals are stored in 55 gallon drums awaiting further disposition. Process Table 771-35 presents the outputs associated with General Building Waste (RMMA) and provides their dispositions and hazardous character.

AutoCAD 12, File Name: 771-35

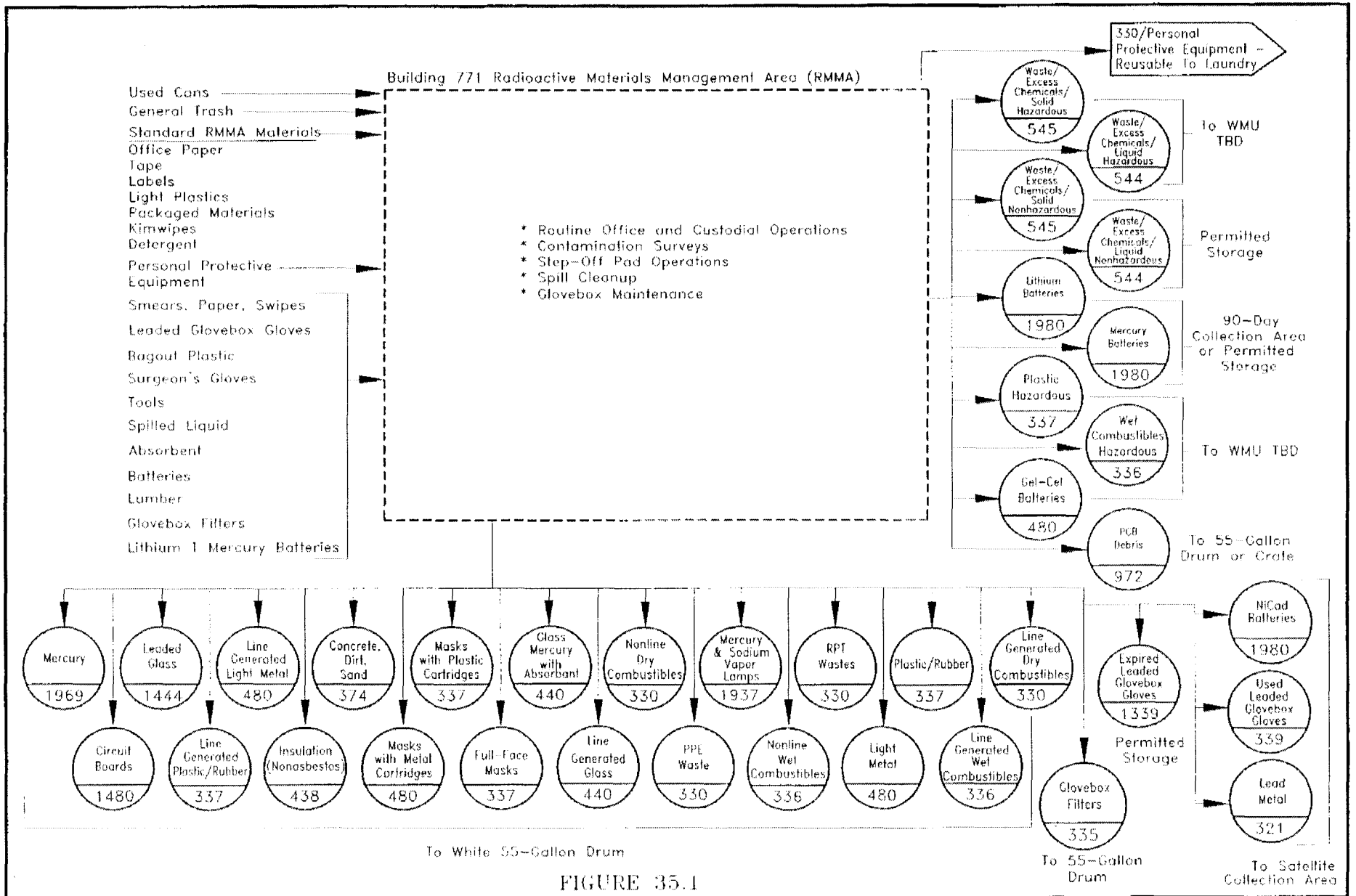

FIGURE 35.1

Rocky Flats Environmental Technology Site Waste Stream & Residue Identification & Characterization	BUILDING 771/PROCESS 35 GENERAL BUILDING WASTE (RMMA)	Task	By	Date
		Designed	W. Eakins	03/18/93
		Drawn	R. Nisely	06/12/96
		Checked	J. Schoen	11/02/98

PROCESS 771-35 GENERAL BUILDING WASTE (RMMA)

Process Number	IDC/ WFC No.	CCCs RCRA Reg. Const.	CCCs Non-RCRA Reg. Const.	Comp. Codes	Description RCRA Reg. Chemical Constituents: Non-RCRA Reg. Chemical Constituents:	Collection	LDR Codes	RCRA Haz. Waste	RCRA-Land Disposal Restricted (Part 268)	Wastewater/Non-Wastewater: Debris/Non-Debris: Subcategory:	EPA Codes
771-35-7A	1339	24	00	NA	Expired Unused Leaded Glovebox Gloves RCRA Reg. Chemical Constituents: Lead Non-RCRA Reg. Chemical Constituents: None	Permitted Storage	RT D PB1	Yes	Yes Does Not Meet Treatment Standards	Debris Lead	D008
771-35-9	330	00	00	NA	Personal Protective Equipment - Waste RCRA Reg. Chemical Constituents: None Non-RCRA Reg. Chemical Constituents: None	55-Gallon Drum		No	No		

Process Number	IDC/ WFC No.	CCCs RCRA Reg. Const.	CCCs Non-RCRA Reg. Const.	Comp. Codes	Description RCRA Reg. Chemical Constituents: Non-RCRA Reg. Chemical Constituents:	Collection	LDR Codes	RCRA Haz. Waste	RCRA-Land Disposal Restricted (Part 268)	Wastewater/Non-Wastewater: Debris/Non-Debris: Subcategory:	EPA Codes
771-35-10	330	00	00	NA	RPT Wastes RCRA Reg. Chemical Constituents: None Non-RCRA Reg. Chemical Constituents: None	55-Gallon Drum		No	No		
771-35-11	336	00	6988	NA	Wet Combustibles (Nonline) RCRA Reg. Chemical Constituents: None Non-RCRA Reg. Chemical Constituents: KW Detergent Water	55-Gallon Drum		No	No		

Process Number	IDC/ WFC No.	CCCs RCRA Reg. Const.	CCCs Non-RCRA Reg. Const.	Comp. Codes	Description RCRA Reg. Chemical Constituents: Non-RCRA Reg. Chemical Constituents:	Collection	LDR Codes	RCRA Haz. Waste	RCRA-Land Disposal Restricted (Part 268)	Wastewater/Non-Wastewater: Debris/Non-Debris: Subcategory:	EPA Codes
771-35-12	480	00	00	NA	Light Metal RCRA Reg. Chemical Constituents: None Non-RCRA Reg. Chemical Constituents: None	55-Gallon Drum		No	No		
771-35-13	337	00	00	NA	Plastic And Rubber (Nonline) RCRA Reg. Chemical Constituents: None Non-RCRA Reg. Chemical Constituents: None	55-Gallon Drum		No	No		

Process Number	IDC/ WFC No.	CCCs RCRA Reg. Const.	CCCs Non-RCRA Reg. Const.	Comp. Codes	Description RCRA Reg. Chemical Constituents: Non-RCRA Reg. Chemical Constituents:	Collection	LDR Codes	RCRA Haz. Waste	RCRA-Land Disposal Restricted (Part 268)	Wastewater/Non-Wastewater: Debris/Non-Debris: Subcategory:	EPA Codes
771-35-14	330	00	00	NA	Dry Combustibles (Nonline) RCRA Reg. Chemical Constituents: None Non-RCRA Reg. Chemical Constituents: None	55-Gallon Drum		No	No		
771-35-15	440	00	00	NA	Glass RCRA Reg. Chemical Constituents: None Non-RCRA Reg. Chemical Constituents: None	55-Gallon Drum		No	No		

Process Number	IDC/ WFC No.	CCCs RCRA Reg. Const.	CCCs Non-RCRA Reg. Const.	Comp. Codes	Description RCRA Reg. Chemical Constituents: Non-RCRA Reg. Chemical Constituents:	Collection	LDR Codes	RCRA Haz. Waste	RCRA-Land Disposal Restricted (Part 268)	Wastewater/Non-Wastewater: Debris/Non-Debris: Subcategory:	EPA Codes
771-35-22	337	00	00	NA	Masks With Plastic Cartridges RCRA Reg. Chemical Constituents: None Non-RCRA Reg. Chemical Constituents: None	55-Gallon Drum For Masks With Plastic Cartridges		No	No		
771-35-23A	337	00	00	NA	Masks With Metal Cartridges RCRA Reg. Chemical Constituents: None Non-RCRA Reg. Chemical Constituents: None	55-Gallon Drum For Masks With Metal Cartridges		No	No		

Process Number	IDC/ WFC No.	CCCs RCRA Reg. Const.	CCCs Non-RCRA Reg. Const.	Comp. Codes	Description RCRA Reg. Chemical Constituents: Non-RCRA Reg. Chemical Constituents:	Collection	LDR Codes	RCRA Haz. Waste	RCRA-Land Disposal Restricted (Part 268)	Wastewater/Non-Wastewater: Debris/Non-Debris: Subcategory:	EPA Codes
771-35-24A	337	00	00	NA	Full-Face Masks RCRA Reg. Chemical Constituents: None Non-RCRA Reg. Chemical Constituents: None	55-Gallon Drum		No	No		
771-35-25	480	2402	00	1B	Lead-Acid Batteries RCRA Reg. Chemical Constituents: Lead Acid - General Non-RCRA Reg. Chemical Constituents: None	90-Day Collection Area	RT NWW C1, PB2	Yes	Yes Does Not Meet Treatment Standards	Non-Wastewater Corrosive/Non-CW, Lead/Acid Battery	D002, D008

Process Number	IDC/ WFC No.	CCCs RCRA Reg. Const.	CCCs Non-RCRA Reg. Const.	Comp. Codes	Description RCRA Reg. Chemical Constituents: Non-RCRA Reg. Chemical Constituents:	Collection	LDR Codes	RCRA Haz. Waste	RCRA-Land Disposal Restricted (Part 268)	Wastewater/Non-Wastewater: Debris/Non-Debris: Subcategory:	EPA Codes
771-35-26	1980	3108	00	NA	Ni-Cad Batteries RCRA Reg. Chemical Constituents: Nickel Cadmium Non-RCRA Reg. Chemical Constituents: None	Satellite Collection Area	RT NWW CD2	Yes	Yes Does Not Meet Treatment Standards	Non-Wastewater Cadmium/Battery	D006
771-35-27	321	24	00	NA	Lead Metal RCRA Reg. Chemical Constituents: Lead Non-RCRA Reg. Chemical Constituents: None	Satellite Collection Area	RT NWW PB3	Yes	Yes Does Not Meet Treatment Standards	Non-Wastewater Lead/Radioactive	D008

Process Number	IDC/ WFC No.	CCCs RCRA Reg. Const.	CCCs Non-RCRA Reg. Const.	Comp. Codes	Description RCRA Reg. Chemical Constituents: Non-RCRA Reg. Chemical Constituents:	Collection	LDR Codes	RCRA Haz. Waste	RCRA-Land Disposal Restricted (Part 268)	Wastewater/Non-Wastewater: Debris/Non-Debris: Subcategory:	EPA Codes
771-35-28	374	00	00	NA	Sand, Concrete, Blacktop RCRA Reg. Chemical Constituents: None Non-RCRA Reg. Chemical Constituents: None	55-Gallon Drum		No	No		
771-35-29	438	00	00	NA	Insulation (Nonasbestos) RCRA Reg. Chemical Constituents: None Non-RCRA Reg. Chemical Constituents: None	55-Gallon Drum		No	No		

Process Number	IDC/ WFC No.	CCCs RCRA Reg. Const.	CCCs Non-RCRA Reg. Const.	Comp. Codes	Description RCRA Reg. Chemical Constituents: Non-RCRA Reg. Chemical Constituents:	Collection	LDR Codes	RCRA Haz. Waste	RCRA-Land Disposal Restricted (Part 268)	Wastewater/Non-Wastewater: Debris/Non-Debris: Subcategory:	EPA Codes
771-35-30	545	**	00	??	Waste/Excess Chemicals - Solid (Haz) RCRA Reg. Chemical Constituents: Chemical constituents vary and will be characterized on a case-by-case basis. Non-RCRA Reg. Chemical Constituents: None	To Offsite Contractor With Excess Chemical Disposition Form	RA NWW	Yes	Yes Requires Analysis	Non-Wastewater	See Rationale
771-35-32	545	00	**	NA	Waste/Excess Chemicals - Solid (Nonhaz) RCRA Reg. Chemical Constituents: None Non-RCRA Reg. Chemical Constituents: Chemical constituents vary and will be characterized on a case-by-case basis.	Contact Waste Operations		No	No		

Process Number	IDC/ WFC No.	CCCs RCRA Reg. Const.	CCCs Non-RCRA Reg. Const.	Comp. Codes	Description RCRA Reg. Chemical Constituents: Non-RCRA Reg. Chemical Constituents:	Collection	LDR Codes	RCRA Haz. Waste	RCRA-Land Disposal Restricted (Part 268)	Wastewater/Non-Wastewater: Debris/Non-Debris: Subcategory:	EPA Codes
771-35-33	544	00	**	??	Waste/Excess Chemicals - Liquid (Nonhaz) RCRA Reg. Chemical Constituents: None Non-RCRA Reg. Chemical Constituents: Chemical constituents vary and will be characterized on a case-by-case basis.	Contact Waste Operations		No	No		
771-35-34	544	**	00	??	Waste/Excess Chemicals - Liquid (Haz) RCRA Reg. Chemical Constituents: Chemical constituents vary and will be characterized on a case-by-case basis. Non-RCRA Reg. Chemical Constituents: None	To Offsite Contractor With Excess Chemical Disposition Form	RA	Yes	Yes Requires Analysis		See Rationale

Process Number	IDC/ WFC No.	CCCs RCRA Reg. Const.	CCCs Non-RCRA Reg. Const.	Comp. Codes	Description RCRA Reg. Chemical Constituents: Non-RCRA Reg. Chemical Constituents:	Collection	LDR Codes	RCRA Haz. Waste	RCRA-Land Disposal Restricted (Part 268)	Wastewater/Non-Wastewater: Debris/Non-Debris: Subcategory:	EPA Codes
771-35-35	339	24	00	NA	Used Leaded GB Gloves & Leaded Aprons RCRA Reg. Chemical Constituents: Lead Non-RCRA Reg. Chemical Constituents: None	Satellite Collection Area	RT D PB1	Yes	Yes Does Not Meet Treatment Standards	Debris Lead	D008
771-35-36	335	00	00	NA	Glovebox Filters RCRA Reg. Chemical Constituents: None Non-RCRA Reg. Chemical Constituents: None	55-Gallon Drum		No	No		

Process Number	IDC/ WFC No.	CCCs RCRA Reg. Const.	CCCs Non-RCRA Reg. Const.	Comp. Codes	Description RCRA Reg. Chemical Constituents: Non-RCRA Reg. Chemical Constituents:	Collection	LDR Codes	RCRA Haz. Waste	RCRA-Land Disposal Restricted (Part 268)	Wastewater/Non-Wastewater: Debris/Non-Debris: Subcategory:	EPA Codes
771-35-37	336	00	00	NA	Wet Combustibles (Line Generated) RCRA Reg. Chemical Constituents: None Non-RCRA Reg. Chemical Constituents: None	55-Gallon Drum		No	No		
771-35-39	330	00	00	NA	Dry Combustibles (Line Generated) RCRA Reg. Chemical Constituents: None Non-RCRA Reg. Chemical Constituents: None	55-Gallon Drum		No	No		

Process Number	IDC/ WFC No.	CCCs RCRA Reg. Const.	CCCs Non-RCRA Reg. Const.	Comp. Codes	Description RCRA Reg. Chemical Constituents: Non-RCRA Reg. Chemical Constituents:	Collection	LDR Codes	RCRA Haz. Waste	RCRA-Land Disposal Restricted (Part 268)	Wastewater/Non-Wastewater: Debris/Non-Debris: Subcategory:	EPA Codes
771-35-40	480	00	00	NA	Line Generated Light Metal RCRA Reg. Chemical Constituents: None Non-RCRA Reg. Chemical Constituents: None	55-Gallon Drum		No	No		
771-35-42A	337	00	33	NA	Plastic RCRA Reg. Chemical Constituents: None Non-RCRA Reg. Chemical Constituents: Oxidizer	55-Gallon Drum		No	No		

Process Number	IDC/ WFC No.	CCCs RCRA Reg. Const.	CCCs Non-RCRA Reg. Const.	Comp. Codes	Description RCRA Reg. Chemical Constituents: Non-RCRA Reg. Chemical Constituents:	Collection	LDR Codes	RCRA Haz. Waste	RCRA-Land Disposal Restricted (Part 268)	Wastewater/Non-Wastewater: Debris/Non-Debris: Subcategory:	EPA Codes
771-35-43	336	33	00	NA	Wet Combustibles Hazardous RCRA Reg. Chemical Constituents: Oxidizer Non-RCRA Reg. Chemical Constituents: None	Satellite Collection Area	RT D I1	Yes	Yes Does Not Meet Treatment Standards	Debris Ignitable/Non-CWA	D001
771-35-44	440	00	00	NA	Glass (Line Generated) RCRA Reg. Chemical Constituents: None Non-RCRA Reg. Chemical Constituents: None	55-Gallon Drum		No	No		

Process Number	IDC/ WFC No.	CCCs RCRA Reg. Const.	CCCs Non-RCRA Reg. Const.	Comp. Codes	Description RCRA Reg. Chemical Constituents: Non-RCRA Reg. Chemical Constituents:	Collection	LDR Codes	RCRA Haz. Waste	RCRA-Land Disposal Restricted (Part 268)	Wastewater/Non-Wastewater: Debris/Non-Debris: Subcategory:	EPA Codes
771-35-54	337	00	00	NA	Plastic And Rubber (Line Generated) RCRA Reg. Chemical Constituents: None Non-RCRA Reg. Chemical Constituents: None	55-Gallon Drum		No	No		
771-35-56	1937	00	26	NA	Mercury Vapor Lamps RCRA Reg. Chemical Constituents: None Non-RCRA Reg. Chemical Constituents: Mercury	90-Day Collection Area	RT NWW PB1	Yes	Yes Does Not Meet Treatment Standards	Non-Wastewater Lead	D009

Process Number	IDC/ WFC No.	CCCs RCRA Reg. Const.	CCCs Non-RCRA Reg. Const.	Comp. Codes	Description RCRA Reg. Chemical Constituents: Non-RCRA Reg. Chemical Constituents:	Collection	LDR Codes	RCRA Haz. Waste	RCRA-Land Disposal Restricted (Part 268)	Wastewater/Non-Wastewater: Debris/Non-Debris: Subcategory:	EPA Codes
771-35-57	1937	00	2426	NA	Sodium Vapor Lamps RCRA Reg. Chemical Constituents: None Non-RCRA Reg. Chemical Constituents: Lead Mercury	90-Day Collection Area	RT NWW PB1, HG3	Yes	Yes Does Not Meet Treatment Standards	Non-Wastewater Lead, Mercury/Low	D008, D009
771-35-58	302	00	00	NA	Benelex And Plexiglas Removal RCRA Reg. Chemical Constituents: None Non-RCRA Reg. Chemical Constituents: None	Appropriate Waste Container		No	No		

Process Number	IDC/ WFC No.	CCCs RCRA Reg. Const.	CCCs Non-RCRA Reg. Const.	Comp. Codes	Description RCRA Reg. Chemical Constituents: Non-RCRA Reg. Chemical Constituents:	Collection	LDR Codes	RCRA Haz. Waste	RCRA-Land Disposal Restricted (Part 268)	Wastewater/Non-Wastewater: Debris/Non-Debris: Subcategory:	EPA Codes
771-35-59	1444	0424	00	NA	Leaded Glass RCRA Reg. Chemical Constituents: Barium Lead Non-RCRA Reg. Chemical Constituents: None	90-Day Or Permitted Storage	RT D PB1	Yes	Yes Does Not Meet Treatment Standards	Debris Lead	D005, D008
771-35-60	1480	2436	00	NA	Circuit Boards RCRA Reg. Chemical Constituents: Lead Silver Non-RCRA Reg. Chemical Constituents: None	Collected For Recycle	RT D PB1	Yes	Yes Does Not Meet Treatment Standards	Debris Lead	D008, D011

Process Number	IDC/ WFC No.	CCCs RCRA Reg. Const.	CCCs Non-RCRA Reg. Const.	Comp. Codes	Description RCRA Reg. Chemical Constituents: Non-RCRA Reg. Chemical Constituents:	Collection	LDR Codes	RCRA Haz. Waste	RCRA-Land Disposal Restricted (Part 268)	Wastewater/Non-Wastewater: Debris/Non-Debris: Subcategory:	EPA Codes
771-35-61	440	26	00	NA	Absorbed Mercury RCRA Reg. Chemical Constituents: Mercury Non-RCRA Reg. Chemical Constituents: None	90-Day Or Permitted Storage Unit	MS	Yes	No Meets Treatment Standards See Rationale		D009
771-35-62	1969	26	00	3A	Mercury Containing Equipment RCRA Reg. Chemical Constituents: Mercury Non-RCRA Reg. Chemical Constituents: None	90-Day Or Permitted Storage Unit	RT NWW HG2	Yes	Yes Does Not Meet Treatment Standards	Non-Wastewater Mercury/Hi-Inorganic	D009
771-35-63	1980	26	00	NA	Used Mercury Batteries RCRA Reg. Chemical Constituents: Mercury Non-RCRA Reg. Chemical Constituents: None	90-Day Or Permitted Storage Area	RT NWW HG2	Yes	Yes Does Not Meet Treatment Standards	Non-Wastewater Mercury/Hi-Inorganic	D009

Process Number	IDC/ WFC No.	CCCs RCRA Reg. Const.	CCCs Non-RCRA Reg. Const.	Comp. Codes	Description RCRA Reg. Chemical Constituents: Non-RCRA Reg. Chemical Constituents:	Collection	LDR Codes	RCRA Haz. Waste	RCRA-Land Disposal Restricted (Part 268)	Wastewater/Non-Wastewater: Debris/Non-Debris: Subcategory:	EPA Codes
771-35-64	1980	00	68	NA	Lithium Batteries RCRA Reg. Chemical Constituents: None Non-RCRA Reg. Chemical Constituents: Lithium Metal	Permitted Storage Area		No	No		
771-35-65	972	00	3271	NA	PCB Debris RCRA Reg. Chemical Constituents: None Non-RCRA Reg. Chemical Constituents: Oil (Used) PCB	55-Gallon Drums Or Crates		No	No		

WASTE STREAM AND RESIDUE DESCRIPTION AND CHARACTERIZATION

Process Number: 771-35-7A
IDC/WFC: 1339

Title: GENERAL BUILDING WASTE (RMMA)
Description: Expired Unused Leaded Glovebox Gloves

- ■ RCRA Hazardous
- □ RCRA Nonhazardous
- ■ By Analytical Data
- □ By Process Knowledge
- ■ LDR Regulated
- □ Not LDR Regulated
- □ Non-Wastewater
- □ Wastewater
- □ Product
- □ High Content Residue
- □ Low Content Residue
- □ Transuranic
- □ Low-Level
- ■ Nonradioactive
- □ Source/Special Nuclear Materials
- ■ Debris
- □ Fuel Blending
- □ Uncontained Gas
- □ RCRA Sample
- □ Recyclable Material
- □ Recycled/Reused
- □ TSCA Reg. Waste
- □ Evaluated in Another Process

EPA Codes:
D008

Description (Material, Type, Size, Color, etc.):
Unused, Nonline Generated, Glovebox Gloves Impregnated With Lead

How the Output is Generated:
Expiration date assigned to gloves is exceeded prior to gloves being used.

Generation Rate:
Variable

How the Output is Managed:
Surveyed For Unrestricted Release And Taken To Permitted Storage

Chemicals/Contaminants in or on the Output:
Lead

Characterization Rationale:
This output is nonline generated in an RBA. According to process knowledge and supported by analytical data (Sample No. G910049, 93G0191, and E901808), unused leaded glovebox gloves are a RCRA characteristic waste due to the presence of lead. This output is surveyed for unrestricted release and transferred to a Hazardous Waste Unit. This output has been designated a nonradioactive, hazardous waste. This output meets the definition of hazardous debris and can be treated by an appropriate technology in 40 CFR 268.45. The concentration-based treatment standard for lead, and the treatment standards for underlying hazardous constituents as defined in 40 CFR 268.48 must be met for treatment residue(s) prior to land disposal. The underlying hazardous constituents associated with this output are listed in Appendix E.

WASTE STREAM AND RESIDUE DESCRIPTION AND CHARACTERIZATION

Process Number: 771-35-9
IDC/WFC: 330

Title: GENERAL BUILDING WASTE (RMMA)
Description: Personal Protective Equipment - Waste

- ☐ RCRA Hazardous
- ■ RCRA Nonhazardous
- ☐ By Analytical Data
- ■ By Process Knowledge
- ☐ LDR Regulated
- ■ Not LDR Regulated
- ☐ Non-Wastewater
- ☐ Wastewater
- ☐ Product
- ☐ High Content Residue
- ☐ Low Content Residue
- ■ Transuranic
- ■ Low-Level
- ☐ Nonradioactive
- ☐ Source/Special Nuclear Materials
- ☐ Debris
- ☐ Fuel Blending
- ☐ Uncontained Gas
- ☐ RCRA Sample
- ☐ Recyclable Material
- ☐ Recycled/Reused
- ☐ TSCA Reg. Waste
- ☐ Evaluated in Another Process

EPA Codes:

Description (Material, Type, Size, Color, etc.):
Coveralls, Shoe Covers, Hats, Tyvek Suits, Cotton Glove Liners, And Other Apparel

How the Output is Generated:
Discarded by personnel in the Radioactive Materials Management Area or leaving the Radioactive Materials Management Area, both as routine procedure or because items are determined to be radioactively contaminated.

Generation Rate:
Variable

How the Output is Managed:
Packaged In Plastic Bags, Segregated By Contamination Level, And Deposited Into Appropriate Drum In Process Area

Chemicals/Contaminants in or on the Output:
None

Characterization Rationale:
This output is nonline generated in a Radioactive Materials Management Area. According to process knowledge, this output contains no RCRA hazardous constituents and exhibits no RCRA hazardous characteristics. This output has been designated a TRU or low-level, nonhazardous waste.

WASTE STREAM AND RESIDUE DESCRIPTION AND CHARACTERIZATION

Process Number: 771-35-10 **Title:** GENERAL BUILDING WASTE (RMMA)
IDC/WFC: 330 **Description:** RPT Wastes

- ▫ RCRA Hazardous
- ▪ RCRA Nonhazardous
- ▫ By Analytical Data
- ▪ By Process Knowledge
- ▫ LDR Regulated
- ▪ Not LDR Regulated
- ▫ Non-Wastewater
- ▫ Wastewater
- ▫ Product
- ▫ High Content Residue
- ▫ Low Content Residue
- ▪ Transuranic
- ▪ Low-Level
- ▫ Nonradioactive
- ▫ Source/Special Nuclear Materials
- ▫ Debris
- ▫ Fuel Blending
- ▫ Uncontained Gas
- ▫ RCRA Sample
- ▫ Recyclable Material
- ▫ Recycled/Reused
- ▫ TSCA Reg. Waste
- ▫ Evaluated in Another Process

EPA Codes:

Description (Material, Type, Size, Color, etc.):
Smear Papers, Rubber Gloves, Tape, Room Posting Signs

How the Output is Generated:
Routine Radioactive Materials Management Area Surveys And Monitoring Of Materials Leaving Area

Generation Rate:
Insufficient Data

How the Output is Managed:
Smear papers are initially collected in small containers located at alpha counters. All RPT wastes are deposited in designated 55-gallon drums.

Chemicals/Contaminants in or on the Output:
None

Characterization Rationale:
This output is nonline generated in a Radioactive Materials Management Area. According to process knowledge, this output contains no RCRA hazardous constituents and exhibits no RCRA hazardous characteristics. This output has been designated a TRU or low-level, nonhazardous waste.

WASTE STREAM AND RESIDUE DESCRIPTION AND CHARACTERIZATION

Process Number: 771-35-11
IDC/WFC: 336

Title: GENERAL BUILDING WASTE (RMMA)
Description: Wet Combustibles (Nonline)

- ▫ RCRA Hazardous
- ▪ RCRA Nonhazardous
- ▫ By Analytical Data
- ▪ By Process Knowledge
- ▫ LDR Regulated
- ▪ Not LDR Regulated
- ▫ Non-Wastewater
- ▫ Wastewater
- ▫ Product
- ▫ High Content Residue
- ▫ Low Content Residue
- ▪ Transuranic
- ▪ Low-Level
- ▫ Nonradioactive
- ▫ Source/Special Nuclear Materials
- ▫ Debris
- ▫ Fuel Blending
- ▫ Uncontained Gas
- ▫ RCRA Sample
- ▫ Recyclable Material
- ▫ Recycled/Reused
- ▫ TSCA Reg. Waste
- ▫ Evaluated in Another Process

EPA Codes:

Description (Material, Type, Size, Color, etc.):
Kimwipes, Clothing, Absorbent, And Smear Paper

How the Output is Generated:
Materials Become Wetted When Used For Decontamination, Spill Or Leak (Water) Cleanup

Generation Rate:
Variable

How the Output is Managed:
Deposited In Designated 55-Gallon Drums

Chemicals/Contaminants in or on the Output:
Water, Detergents, And May Contain A Variety Of Liquid Substances

Characterization Rationale:
This output is nonline generated in a Radioactive Materials Management Area. According to process knowledge, this output contains no RCRA hazardous constituents and exhibits no RCRA hazardous characteristics. This output has been designated a TRU or low-level, nonhazardous waste.

WASTE STREAM AND RESIDUE DESCRIPTION AND CHARACTERIZATION

Process Number: 771-35-12 **Title:** GENERAL BUILDING WASTE (RMMA)
IDC/WFC: 480 **Description:** Light Metal

- ▫ RCRA Hazardous
- ▪ RCRA Nonhazardous
- ▫ By Analytical Data
- ▪ By Process Knowledge
- ▫ LDR Regulated
- ▪ Not LDR Regulated
- ▫ Non-Wastewater
- ▫ Wastewater
- ▫ Product
- ▫ High Content Residue
- ▫ Low Content Residue
- ▪ Transuranic
- ▪ Low-Level
- ▫ Nonradioactive
- ▫ Source/Special Nuclear Materials
- ▫ Debris
- ▫ Fuel Blending
- ▫ Uncontained Gas
- ▫ RCRA Sample
- ▫ Recyclable Material
- ▫ Recycled/Reused
- ▫ TSCA Reg. Waste
- ▫ Evaluated in Another Process

EPA Codes:

Description (Material, Type, Size, Color, etc.):
Broken Or Worn Tools Or Cleaning Implements, Metal Respirator Cartridges Which Can Be Segregated, Wire, Empty Reusable Cans, And Scrap Metal, Do Not Include Electronic Parts, Including Circuit Boards, In This Waste Stream Unless Approved By Environmental Compliance

How the Output is Generated:
Routine Operation In The Offices, Corridors, And Step-Off Pads Within The Radioactive Materials Management Area

Generation Rate:
Variable

How the Output is Managed:
Deposited In Designated 55-Gallon Drums

Chemicals/Contaminants in or on the Output:
None

Characterization Rationale:
This output is nonline generated in a Radioactive Materials Management Area. According to process knowledge, this output contains no RCRA hazardous constituents and exhibits no RCRA hazardous characteristics. This output has been designated a TRU or low-level, nonhazardous waste.

WASTE STREAM AND RESIDUE DESCRIPTION AND CHARACTERIZATION

Process Number: 771-35-13
IDC/WFC: 337

Title: GENERAL BUILDING WASTE (RMMA)
Description: Plastic And Rubber (Nonline)

- ☐ RCRA Hazardous
- ■ RCRA Nonhazardous
- ☐ By Analytical Data
- ■ By Process Knowledge
- ☐ LDR Regulated
- ■ Not LDR Regulated
- ☐ Non-Wastewater
- ☐ Wastewater
- ☐ Product
- ☐ High Content Residue
- ☐ Low Content Residue
- ☐ Transuranic
- ■ Low-Level
- ☐ Nonradioactive
- ☐ Source/Special Nuclear Materials
- ☐ Debris
- ☐ Fuel Blending
- ☐ Uncontained Gas
- ☐ RCRA Sample
- ☐ Recyclable Material
- ☐ Recycled/Reused
- ☐ TSCA Reg. Waste
- ☐ Evaluated in Another Process

EPA Codes:

Description (Material, Type, Size, Color, etc.):
Plastic And Rubber Waste Consisting Of Safety Glasses, Goggles, Respirators, Plastic Respirator Cartridges, Contaminated Vented Supply Tanks And Hoses, Hard Plastic Boxes From Smear Paper, Fiberglass, Ladders And Rubber Mats

How the Output is Generated:
Routine operations In The Offices, Corridors, And Step-Off Pads Within The Radioactive Materials Management Area

Generation Rate:
Variable

How the Output is Managed:
Deposited In Designated 55-Gallon Drums

Chemicals/Contaminants in or on the Output:
None

Characterization Rationale:
This output is nonline generated in a Radioactive Materials Management Area. According to process knowledge, this output contains no RCRA hazardous constituents and exhibits no RCRA hazardous characteristics. This output has been designated a low-level, nonhazardous waste.

WASTE STREAM AND RESIDUE DESCRIPTION AND CHARACTERIZATION

Process Number: 771-35-14 **Title:** GENERAL BUILDING WASTE (RMMA)
IDC/WFC: 330 **Description:** Dry Combustibles (Nonline)

- ▫ RCRA Hazardous
- ▪ RCRA Nonhazardous
- ▫ By Analytical Data
- ▪ By Process Knowledge
- ▫ LDR Regulated
- ▪ Not LDR Regulated
- ▫ Non-Wastewater
- ▫ Wastewater
- ▫ Product
- ▫ High Content Residue
- ▫ Low Content Residue
- ▪ Transuranic
- ▪ Low-Level
- ▫ Nonradioactive
- ▫ Source/Special Nuclear Materials
- ▫ Debris
- ▫ Fuel Blending
- ▫ Uncontained Gas
- ▫ RCRA Sample
- ▫ Recyclable Material
- ▫ Recycled/Reused
- ▫ TSCA Reg. Waste
- ▫ Evaluated in Another Process

EPA Codes:

Description (Material, Type, Size, Color, etc.):
Office Trash, Tape, Gloves, Labels, Package Materials, Paper Wipes, Wood, And Floor Sweepings

How the Output is Generated:
Routine Operations In The Offices, Corridors, And Step-Off Pads Within The Radioactive Materials Management Area

Generation Rate:
Variable

How the Output is Managed:
Deposited In White 55-Gallon Drums

Chemicals/Contaminants in or on the Output:
None

Characterization Rationale:
This output is nonline generated in a Radioactive Materials Management Area. According to process knowledge, this output contains no RCRA hazardous constituents and exhibits no RCRA hazardous characteristics. This output has been designated a TRU or low-level, nonhazardous waste.

WASTE STREAM AND RESIDUE DESCRIPTION AND CHARACTERIZATION

Process Number: 771-35-15 **Title:** GENERAL BUILDING WASTE (RMMA)
IDC/WFC: 440 **Description:** Glass

- ▫ RCRA Hazardous
- ▪ RCRA Nonhazardous
- ▫ By Analytical Data
- ▪ By Process Knowledge
- ▫ LDR Regulated
- ▪ Not LDR Regulated
- ▫ Non-Wastewater
- ▫ Wastewater
- ▫ Product
- ▫ High Content Residue
- ▫ Low Content Residue
- ▪ Transuranic
- ▪ Low-Level
- ▫ Nonradioactive
- ▫ Source/Special Nuclear Materials
- ▫ Debris
- ▫ Fuel Blending
- ▫ Uncontained Gas
- ▫ RCRA Sample
- ▫ Recyclable Material
- ▫ Recycled/Reused
- ▫ TSCA Reg. Waste
- ▫ Evaluated in Another Process

EPA Codes:

Description (Material, Type, Size, Color, etc.):
Nonleaded Glass, Including Broken Containers And Smoke Tubes

How the Output is Generated:
Generated As Waste After Use

Generation Rate:
Variable

How the Output is Managed:
Deposited In Designated 55-Gallon Drums

Chemicals/Contaminants in or on the Output:
None

Characterization Rationale:
This output is nonline generated in a Radioactive Materials Management Area. According to process knowledge, this output contains no RCRA hazardous constituents and exhibits no RCRA hazardous characteristics. This output has been designated a TRU or low-level, nonhazardous waste.

WASTE STREAM AND RESIDUE DESCRIPTION AND CHARACTERIZATION

Process Number: 771-35-22
IDC/WFC: 337

Title: GENERAL BUILDING WASTE (RMMA)
Description: Masks With Plastic Cartridges

- ▫ RCRA Hazardous
- ▪ RCRA Nonhazardous
- ▫ By Analytical Data
- ▪ By Process Knowledge
- ▫ LDR Regulated
- ▪ Not LDR Regulated
- ▫ Non-Wastewater
- ▫ Wastewater
- ▫ Product
- ▫ High Content Residue
- ▫ Low Content Residue
- ▪ Transuranic
- ▪ Low-Level
- ▫ Nonradioactive
- ▫ Source/Special Nuclear Materials
- ▫ Debris
- ▫ Fuel Blending
- ▫ Uncontained Gas
- ▫ RCRA Sample
- ▫ Recyclable Material
- ▫ Recycled/Reused
- ▫ TSCA Reg. Waste
- ▫ Evaluated in Another Process

EPA Codes:

Description (Material, Type, Size, Color, etc.):
Full-Face Masks With Plastic Respirator Cartridges For Which Excessive Contamination Does Not Allow Segregation Of The Cartridges

How the Output is Generated:
When Masks Are Removed

Generation Rate:
Insufficient Data

How the Output is Managed:
Placed In A 55-Gallon, IDC 337 Drum Which Is Used Only For The Accumulation Of These Masks

Chemicals/Contaminants in or on the Output:
None

Characterization Rationale:
This output is nonline generated in a Radioactive Materials Management Area. According to process knowledge, this output contains no RCRA hazardous constituents and exhibits no RCRA hazardous characteristics. This output has been designated a TRU or low-level, nonhazardous waste.

WASTE STREAM AND RESIDUE DESCRIPTION AND CHARACTERIZATION

Process Number: 771-35-23A
IDC/WFC: 337

Title: GENERAL BUILDING WASTE (RMMA)
Description: Masks With Metal Cartridges

- ▫ RCRA Hazardous
- ▪ RCRA Nonhazardous
- ▫ By Analytical Data
- ▪ By Process Knowledge
- ▫ LDR Regulated
- ▪ Not LDR Regulated
- ▫ Non-Wastewater
- ▫ Wastewater
- ▫ Product
- ▫ High Content Residue
- ▫ Low Content Residue
- ▪ Transuranic
- ▪ Low-Level
- ▫ Nonradioactive
- ▫ Source/Special Nuclear Materials
- ▫ Debris
- ▫ Fuel Blending
- ▫ Uncontained Gas
- ▫ RCRA Sample
- ▫ Recyclable Material
- ▫ Recycled/Reused
- ▫ TSCA Reg. Waste
- ▫ Evaluated in Another Process

EPA Codes:

Description (Material, Type, Size, Color, etc.):
Full-Face Masks With Metal Respirator Cartridges For Which Excessive Contamination Does Not Allow Segregation Of The Cartridges

How the Output is Generated:
When Masks Are Removed

Generation Rate:
Variable

How the Output is Managed:
Deposited In A 55-Gallon, IDC 337 Drum Which Is Used Only For The Accumulation Of These Masks

Chemicals/Contaminants in or on the Output:
None

Characterization Rationale:
This output is nonline generated in a Radioactive Materials Management Area. According to process knowledge, this output contains no RCRA hazardous constituents and exhibits no RCRA hazardous characteristics. This output has been designated a TRU or low-level, nonhazardous waste.

WASTE STREAM AND RESIDUE DESCRIPTION AND CHARACTERIZATION

Process Number: 771-35-24A
IDC/WFC: 337

Title: GENERAL BUILDING WASTE (RMMA)
Description: Full-Face Masks

- ☐ RCRA Hazardous
- ■ RCRA Nonhazardous
- ☐ By Analytical Data
- ■ By Process Knowledge
- ☐ LDR Regulated
- ■ Not LDR Regulated
- ☐ Non-Wastewater
- ☐ Wastewater
- ☐ Product
- ☐ High Content Residue
- ☐ Low Content Residue
- ■ Transuranic
- ■ Low-Level
- ☐ Nonradioactive
- ☐ Source/Special Nuclear Materials
- ☐ Debris
- ☐ Fuel Blending
- ☐ Uncontained Gas
- ☐ RCRA Sample
- ☐ Recyclable Material
- ☐ Recycled/Reused
- ☐ TSCA Reg. Waste
- ☐ Evaluated in Another Process

EPA Codes:

Description (Material, Type, Size, Color, etc.):
Full-Face Respirator Masks

How the Output is Generated:
After Use And Removal Of The Plastic Or Metal Filter Cartridges

Generation Rate:
Variable

How the Output is Managed:
Placed In A 55-Gallon Drum

Chemicals/Contaminants in or on the Output:
None

Characterization Rationale:
This output is nonline generated in a Radioactive Materials Management Area. According to process knowledge, this output contains no RCRA hazardous constituents and exhibits no RCRA hazardous characteristics. This output has been designated a TRU or low-level, nonhazardous waste.

WASTE STREAM AND RESIDUE DESCRIPTION AND CHARACTERIZATION

Process Number: 771-35-25
IDC/WFC: 480

Title: GENERAL BUILDING WASTE (RMMA)
Description: Lead-Acid Batteries

- ■ RCRA Hazardous
- □ RCRA Nonhazardous
- □ By Analytical Data
- ■ By Process Knowledge
- ■ LDR Regulated
- □ Not LDR Regulated
- ■ Non-Wastewater
- □ Wastewater

- □ Product
- □ High Content Residue
- □ Low Content Residue
- ■ Transuranic
- ■ Low-Level
- □ Nonradioactive
- □ Source/Special Nuclear Materials
- □ Debris

- □ Fuel Blending
- □ Uncontained Gas
- □ RCRA Sample
- □ Recyclable Material
- □ Recycled/Reused
- □ TSCA Reg. Waste
- □ Evaluated in Another Process

EPA Codes:
D002, D008

Description (Material, Type, Size, Color, etc.):
Lead-Acid Batteries

How the Output is Generated:
When Batteries Are Replaced

Generation Rate:
Variable

How the Output is Managed:
Placed In A 90-Day Collection Area Pending Recycle

Chemicals/Contaminants in or on the Output:
Lead, Acid

Characterization Rationale:
This output is nonline generated. According to process knowledge, this output exhibits the characteristics of corrosivity and toxicity under RCRA due to the presence of acid and lead. Therefore the output can be a hazardous, low-level or transuranic waste. The level of radioactivity will be determined by assay of each collection container. This output does not meet the LDR treatment standards defined in 40 CFR 268.40. Lead acid batteries must be treated by the specified technology-based treatment standard. The battery reclaimer will monitor for underlying hazardous constituents in the treatment residue(s) prior to land disposal.

WASTE STREAM AND RESIDUE DESCRIPTION AND CHARACTERIZATION

Process Number: 771-35-26
IDC/WFC: 1980

Title: GENERAL BUILDING WASTE (RMMA)
Description: Ni-Cad Batteries

- ■ RCRA Hazardous
- □ RCRA Nonhazardous
- □ By Analytical Data
- ■ By Process Knowledge
- ■ LDR Regulated
- □ Not LDR Regulated
- ■ Non-Wastewater
- □ Wastewater
- □ Product
- □ High Content Residue
- □ Low Content Residue
- □ Transuranic
- □ Low-Level
- ■ Nonradioactive
- □ Source/Special Nuclear Materials
- □ Debris
- □ Fuel Blending
- □ Uncontained Gas
- □ RCRA Sample
- □ Recyclable Material
- □ Recycled/Reused
- □ TSCA Reg. Waste
- □ Evaluated in Another Process

EPA Codes:
D006

Description (Material, Type, Size, Color, etc.):
Used Ni-Cad Batteries

How the Output is Generated:
When Batteries Are Replaced

Generation Rate:
Variable

How the Output is Managed:
Placed In Satellite Collection Area

Chemicals/Contaminants in or on the Output:
Nickel, Cadmium

Characterization Rationale:
This output is generated in a Radioactive Materials Management Area. According to process knowledge, this output exhibits the characteristic of toxicity due to the presence of cadmium. This output is surveyed by Rad Ops and if found to be nonradioactive, this output may be designated a nonradioactive, hazardous waste. This output does not meet the LDR treatment standards defined in 40 CFR 268.40. The output is cadmium containing batteries and must be treated by the specified technology-based treatment standard.

WASTE STREAM AND RESIDUE DESCRIPTION AND CHARACTERIZATION

Process Number: 771-35-27 **Title:** GENERAL BUILDING WASTE (RMMA)
IDC/WFC: 321 **Description:** Lead Metal

- ■ RCRA Hazardous
- □ RCRA Nonhazardous
- □ By Analytical Data
- ■ By Process Knowledge
- ■ LDR Regulated
- □ Not LDR Regulated
- ■ Non-Wastewater
- □ Wastewater
- □ Product
- □ High Content Residue
- □ Low Content Residue
- □ Transuranic
- ■ Low-Level
- □ Nonradioactive
- □ Source/Special Nuclear Materials
- □ Debris
- □ Fuel Blending
- □ Uncontained Gas
- □ RCRA Sample
- □ Recyclable Material
- □ Recycled/Reused
- □ TSCA Reg. Waste
- □ Evaluated in Another Process

EPA Codes:
D008

Description (Material, Type, Size, Color, etc.):
Lead Metal Such As Lead Bricks, Glovebox Shielding, Etc

How the Output is Generated:
Replacement Of Shielding

Generation Rate:
Variable

How the Output is Managed:
The lead metal is collected in a satellite collection area.

Chemicals/Contaminants in or on the Output:
Lead

Characterization Rationale:
This output is nonline generated in a Radioactive Materials Management Area. According to process knowledge, this output exhibits the characteristic of toxicity due to the presence of lead. This output has been designated a low-level, mixed waste. This output does not meet the LDR treatment standards defined in 40 CFR 268.40. The output is radioactive lead solids and must be treated by the specified technology-based treatment standard.

WASTE STREAM AND RESIDUE DESCRIPTION AND CHARACTERIZATION

Process Number: 771-35-28
IDC/WFC: 374

Title: GENERAL BUILDING WASTE (RMMA)
Description: Sand Concrete Blacktop

- ☐ RCRA Hazardous
- ■ RCRA Nonhazardous
- ☐ By Analytical Data
- ■ By Process Knowledge
- ☐ LDR Regulated
- ■ Not LDR Regulated
- ☐ Non-Wastewater
- ☐ Wastewater
- ☐ Product
- ☐ High Content Residue
- ☐ Low Content Residue
- ☐ Transuranic
- ■ Low-Level
- ☐ Nonradioactive
- ☐ Source/Special Nuclear Materials
- ☐ Debris
- ☐ Fuel Blending
- ☐ Uncontained Gas
- ☐ RCRA Sample
- ☐ Recyclable Material
- ☐ Recycled/Reused
- ☐ TSCA Reg. Waste
- ☐ Evaluated in Another Process

EPA Codes:

Description (Material, Type, Size, Color, etc.):
Sand, Concrete, And Blacktop

How the Output is Generated:
Routine Maintenance And Custodial Operations

Generation Rate:
Insufficient Data

How the Output is Managed:
Placed In Designated 55-Gallon Drum

Chemicals/Contaminants in or on the Output:
None

Characterization Rationale:
This sand, concrete, and blacktop are nonline generated in a Radioactive Materials Management Area. According to process knowledge, the output contains no RCRA hazardous constituents and exhibits no RCRA hazardous characteristics. It is designated a low-level, nonhazardous waste.

WASTE STREAM AND RESIDUE DESCRIPTION AND CHARACTERIZATION

Process Number: 771-35-29 **Title:** GENERAL BUILDING WASTE (RMMA)
IDC/WFC: 438 **Description:** Insulation (Nonasbestos)

- ☐ RCRA Hazardous
- ■ RCRA Nonhazardous
- ☐ By Analytical Data
- ■ By Process Knowledge
- ☐ LDR Regulated
- ■ Not LDR Regulated
- ☐ Non-Wastewater
- ☐ Wastewater
- ☐ Product
- ☐ High Content Residue
- ☐ Low Content Residue
- ☐ Transuranic
- ■ Low-Level
- ☐ Nonradioactive
- ☐ Source/Special Nuclear Materials
- ☐ Debris
- ☐ Fuel Blending
- ☐ Uncontained Gas
- ☐ RCRA Sample
- ☐ Recyclable Material
- ☐ Recycled/Reused
- ☐ TSCA Reg. Waste
- ☐ Evaluated in Another Process

EPA Codes:

Description (Material, Type, Size, Color, etc.):
Nonasbestos Insulation

How the Output is Generated:
Routine Maintenance And Custodial Operations

Generation Rate:
Insufficient Data

How the Output is Managed:
Placed In Appropriate 55-Gallon Drum

Chemicals/Contaminants in or on the Output:
None

Characterization Rationale:
This insulation (nonasbestos) is nonline generated in a Radioactive Materials Management Area. According to process knowledge, the output contains no RCRA hazardous constituents and exhibits no RCRA hazardous characteristics. It is designated a low-level, nonhazardous waste.

WASTE STREAM AND RESIDUE DESCRIPTION AND CHARACTERIZATION

Process Number: 771-35-30
IDC/WFC: 545

Title: GENERAL BUILDING WASTE (RMMA)
Description: Waste/Excess Chemicals - Solid (Haz)

- ■ RCRA Hazardous
- □ RCRA Nonhazardous
- □ By Analytical Data
- ■ By Process Knowledge
- ■ LDR Regulated
- □ Not LDR Regulated
- ■ Non-Wastewater
- □ Wastewater
- □ Product
- □ High Content Residue
- □ Low Content Residue
- ■ Transuranic
- ■ Low-Level
- □ Nonradioactive
- □ Source/Special Nuclear Materials
- □ Debris
- □ Fuel Blending
- □ Uncontained Gas
- □ RCRA Sample
- □ Recyclable Material
- □ Recycled/Reused
- ■ TSCA Reg. Waste
- □ Evaluated in Another Process

EPA Codes:
See Rationale

Description (Material, Type, Size, Color, etc.):
Hazardous Solid Waste, Expired, Or Excess Chemicals

How the Output is Generated:
Waste/excess solid chemicals are generated due to discontinued use (and not useable elsewhere on plantsite). Chemicals are expired or off-specification in some manner and therefore not useable.

Generation Rate:
Variable

How the Output is Managed:
Waste Regulatory Programs must be contacted and an excess chemical form must be filled out prior to final disposition of waste. (This waste stream is to be managed in an appropriate satellite accumulation area or 90-day collection area).

Chemicals/Contaminants in or on the Output:
Constituents vary depending on the actual waste/excess chemicals.

Characterization Rationale:
According to process knowledge, these solid, waste/excess chemicals are characterized as hazardous. The EPA codes have not been identified because the waste/excess chemicals vary considerably in composition and characteristics: therefore, appropriate codes must be assigned on a case-by-case basis. The chemical constituent code (**) is to be replaced by the actual numeric or alphanumeric constituent code on the drum traveler. The compatibility code is designated as "??", and is to be replaced with appropriate codes on a case-by-case basis. This output was generated in a Radioactive Materials Management Area and is therefore designated a low-level, TRU, or hazardous waste. An evaluation to determine if this output meets the LDR treatment standards defined in 40 CFR 268.40 will be made on a case-by-case basis.

WASTE STREAM AND RESIDUE DESCRIPTION AND CHARACTERIZATION

Process Number: 771-35-32
IDC/WFC: 545

Title: GENERAL BUILDING WASTE (RMMA)
Description: Waste/Excess Chemical - Solid (Nonhaz)

- ▫ RCRA Hazardous
- ▪ RCRA Nonhazardous
- ▫ By Analytical Data
- ▪ By Process Knowledge
- ▫ LDR Regulated
- ▪ Not LDR Regulated
- ▫ Non-Wastewater
- ▫ Wastewater
- ▫ Product
- ▫ High Content Residue
- ▫ Low Content Residue
- ▪ Transuranic
- ▪ Low-Level
- ▫ Nonradioactive
- ▫ Source/Special Nuclear Materials
- ▫ Debris
- ▫ Fuel Blending
- ▫ Uncontained Gas
- ▫ RCRA Sample
- ▫ Recyclable Material
- ▫ Recycled/Reused
- ▫ TSCA Reg. Waste
- ▫ Evaluated in Another Process

EPA Codes:

Description (Material, Type, Size, Color, etc.):
Nonhazardous Solid Waste, Expired, Or Excess Chemicals

How the Output is Generated:
Waste/excess solid chemicals are generated due to discontinued use (and not useable elsewhere on plantsite), chemicals are expired or off-specification in some manner and are therefore not useable.

Generation Rate:
Variable

How the Output is Managed:
Waste Operations must be contacted and an excess chemical form must be filled out prior to final disposition of waste.

Chemicals/Contaminants in or on the Output:
Constituents vary depending on the actual waste/excess chemical.

Characterization Rationale:
According to process knowledge, these solid, waste/excess chemicals are characterized as nonhazardous. The chemical constituent code (**) is to be replaced by the actual numeric or alphanumeric code on the drum traveller. This output was generated in a Radioactive Materials Management Area and is therefore designated a low-level or TRU, nonhazardous waste.

WASTE STREAM AND RESIDUE DESCRIPTION AND CHARACTERIZATION

Process Number: 771-35-33
IDC/WFC: 544

Title: GENERAL BUILDING WASTE (RMMA)
Description: Waste/Excess Chemicals - Liquid(Nonhaz)

- ▫ RCRA Hazardous
- ▪ RCRA Nonhazardous
- ▫ By Analytical Data
- ▪ By Process Knowledge
- ▫ LDR Regulated
- ▪ Not LDR Regulated
- ▫ Non-Wastewater
- ▫ Wastewater
- ▫ Product
- ▫ High Content Residue
- ▫ Low Content Residue
- ▪ Transuranic
- ▪ Low-Level
- ▫ Nonradioactive
- ▫ Source/Special Nuclear Materials
- ▫ Debris
- ▫ Fuel Blending
- ▫ Uncontained Gas
- ▫ RCRA Sample
- ▫ Recyclable Material
- ▫ Recycled/Reused
- ▫ TSCA Reg. Waste
- ▫ Evaluated in Another Process

EPA Codes:

Description (Material, Type, Size, Color, etc.):
Nonhazardous Liquid Waste/Excess Chemicals

How the Output is Generated:
Waste/excess solid chemicals are generated due to discontinued use (and not useable elsewhere on plantsite), chemicals are expired or off specification in some manner and therefore not useable.

Generation Rate:
Variable

How the Output is Managed:
Waste Operations must be contacted and an excess chemical form must be filled out prior to final disposition of waste.

Chemicals/Contaminants in or on the Output:
Constituents vary depending on the actual waste/excess chemical.

Characterization Rationale:
According to process knowledge, these liquid waste/excess chemicals are characterized as nonhazardous. The chemical constituent code (**) is to be replaced by the actual numeric or alphanumeric code on the drum traveller. The compatibility code is designated as "??" and is to be replaced by the appropriate code on a case-by-case basis. This output was generated in a Radioactive Materials Management Area and is therefore designated a low-level or TRU, nonhazardous waste.

WASTE STREAM AND RESIDUE DESCRIPTION AND CHARACTERIZATION

Process Number: 771-35-34
IDC/WFC: 544

Title: GENERAL BUILDING WASTE (RMMA)
Description: Waste/Excess Chemicals - Liquid (Haz.)

- ■ RCRA Hazardous
- □ RCRA Nonhazardous
- □ By Analytical Data
- ■ By Process Knowledge
- ■ LDR Regulated
- □ Not LDR Regulated
- □ Non-Wastewater
- □ Wastewater
- □ Product
- □ High Content Residue
- □ Low Content Residue
- ■ Transuranic
- ■ Low-Level
- □ Nonradioactive
- □ Source/Special Nuclear Materials
- □ Debris
- □ Fuel Blending
- □ Uncontained Gas
- □ RCRA Sample
- □ Recyclable Material
- □ Recycled/Reused
- □ TSCA Reg. Waste
- □ Evaluated in Another Process

EPA Codes:
See Rationale

Description (Material, Type, Size, Color, etc.):
Hazardous Liquid Waste, Expired, Or Excess Chemicals

How the Output is Generated:
Waste/excess chemicals are generated due to discontinued use, and not useable elsewhere on plantsite. The chemicals are expired or off specification in some manner and therefore unusable.

Generation Rate:
Variable

How the Output is Managed:
Waste Regulatory Programs must be contacted and an excess chemical form must be filled out prior to final disposition of waste.

Chemicals/Contaminants in or on the Output:
Constituents vary depending on the actual waste/excess chemical.

Characterization Rationale:
According to process knowledge, these liquid waste/excess chemicals are characterized as hazardous. The EPA codes have not been identified because the waste/excess chemicals vary considerably in composition and characteristics: therefore, appropriate codes must be assigned on a case-by-case basis. The chemical constituent code (**) is to be replaced by the actual numeric or alphanumeric constituent code on the drum traveler. The compatibility code is designated as "??", and is to be replaced with appropriate codes on a case-by-case basis. This output was generated in a Radioactive Materials Management Area and is therefore designated a low-level or TRU hazardous waste. An evaluation to determine if this output meets the LDR treatment standards defined in 40 CFR 268.40 will be made on a case-by-case basis.

WASTE STREAM AND RESIDUE DESCRIPTION AND CHARACTERIZATION

Process Number: 771-35-35
IDC/WFC: 339

Title: GENERAL BUILDING WASTE (RMMA)
Description: Used Leaded GB Gloves & Leaded Aprons

- ■ RCRA Hazardous
- □ RCRA Nonhazardous
- □ By Analytical Data
- ■ By Process Knowledge
- ■ LDR Regulated
- □ Not LDR Regulated
- □ Non-Wastewater
- □ Wastewater
- □ Product
- □ High Content Residue
- □ Low Content Residue
- ■ Transuranic
- ■ Low-Level
- □ Nonradioactive
- □ Source/Special Nuclear Materials
- ■ Debris
- □ Fuel Blending
- □ Uncontained Gas
- □ RCRA Sample
- □ Recyclable Material
- □ Recycled/Reused
- □ TSCA Reg. Waste
- □ Evaluated in Another Process

EPA Codes:
D008

Description (Material, Type, Size, Color, etc.):
Used Leaded Glovebox Gloves And Used Or Damaged Leaded Aprons

How the Output is Generated:
Used leaded glovebox gloves are changed out on a periodic basis. Used leaded aprons are determined to be waste.

Generation Rate:
Variable

How the Output is Managed:
Used leaded glovebox gloves and used leaded aprons are disposed of in a 55-gallon drum in a satellite collection area in Room 114.

Chemicals/Contaminants in or on the Output:
Lead

Characterization Rationale:
According to process knowledge and supported by analytical data (G910049, 93G0191), used leaded glovebox gloves and aprons are line generated and exhibit the characteristic of TC toxicity under RCRA due to the presence of lead. This output may be a transuranic or low level mixed waste. This output meets the definition of hazardous debris and can be treated by an appropriate technology in 40 CFR 268.45. The concentration-based treatment standard for lead, and the treatment standards for underlying hazardous constituents as defined in 40 CFR 268.48 must be met for treatment residue(s) prior to land disposal. The underlying hazardous constituents associated with this output are listed in Appendix E.

WASTE STREAM AND RESIDUE DESCRIPTION AND CHARACTERIZATION

Process Number: 771-35-36
IDC/WFC: 335

Title: GENERAL BUILDING WASTE (RMMA)
Description: Glovebox Filters

- ☐ RCRA Hazardous
- ■ RCRA Nonhazardous
- ☐ By Analytical Data
- ■ By Process Knowledge
- ☐ LDR Regulated
- ■ Not LDR Regulated
- ☐ Non-Wastewater
- ☐ Wastewater
- ☐ Product
- ☐ High Content Residue
- ■ Low Content Residue
- ■ Transuranic
- ■ Low-Level
- ☐ Nonradioactive
- ☐ Source/Special Nuclear Materials
- ☐ Debris
- ☐ Fuel Blending
- ☐ Uncontained Gas
- ☐ RCRA Sample
- ☐ Recyclable Material
- ☐ Recycled/Reused
- ☐ TSCA Reg. Waste
- ☐ Evaluated in Another Process

EPA Codes:

Description (Material, Type, Size, Color, etc.):
Glovebox Filters, High Efficiency Particulate Air (HEPA) Filters

How the Output is Generated:
Glovebox filters are changed out periodically.

Generation Rate:
Variable

How the Output is Managed:
HEPA filters are disposed of in a 55-gallon drum. Full drums are taken to the drum counter.

Chemicals/Contaminants in or on the Output:
None

Characterization Rationale:
This output is line generated, and can be a low-content residue or a transuranic or low-level waste. According to process knowledge, the output contains no RCRA hazardous constituents and exhibits no RCRA hazardous characteristics. Therefore, the output can be a nonhazardous, low-content residue or a nonhazardous, transuranic or low-level waste.

WASTE STREAM AND RESIDUE DESCRIPTION AND CHARACTERIZATION

Process Number: 771-35-37
IDC/WFC: 336

Title: GENERAL BUILDING WASTE (RMMA)
Description: Wet Combustibles (Line Generated)

- ▫ RCRA Hazardous
- ▪ RCRA Nonhazardous
- ▫ By Analytical Data
- ▪ By Process Knowledge
- ▫ LDR Regulated
- ▪ Not LDR Regulated
- ▫ Non-Wastewater
- ▫ Wastewater
- ▫ Product
- ▫ High Content Residue
- ▪ Low Content Residue
- ▪ Transuranic
- ▪ Low-Level
- ▫ Nonradioactive
- ▫ Source/Special Nuclear Materials
- ▫ Debris
- ▫ Fuel Blending
- ▫ Uncontained Gas
- ▫ RCRA Sample
- ▫ Recyclable Material
- ▫ Recycled/Reused
- ▫ TSCA Reg. Waste
- ▫ Evaluated in Another Process

EPA Codes:

Description (Material, Type, Size, Color, etc.):
Line Generated Wet Combustibles

How the Output is Generated:
During Glovebox Operations

Generation Rate:
Variable

How the Output is Managed:
Deposited In Designated 55-Gallon Drums

Chemicals/Contaminants in or on the Output:
None

Characterization Rationale:
This output is line generated, and can be a low-content residue or a transuranic or low-level waste. According to process knowledge, the output contains no RCRA hazardous constituents and exhibits no RCRA hazardous characteristics. Therefore, the output can be a nonhazardous, low-content residue or a nonhazardous, transuranic or low-level waste.

WASTE STREAM AND RESIDUE DESCRIPTION AND CHARACTERIZATION

Process Number: 771-35-39
IDC/WFC: 330

Title: GENERAL BUILDING WASTE (RMMA)
Description: Dry Combustibles (Line Generated)

- ▫ RCRA Hazardous
- ▪ RCRA Nonhazardous
- ▫ By Analytical Data
- ▪ By Process Knowledge
- ▫ LDR Regulated
- ▪ Not LDR Regulated
- ▫ Non-Wastewater
- ▫ Wastewater
- ▫ Product
- ▫ High Content Residue
- ▪ Low Content Residue
- ▪ Transuranic
- ▪ Low-Level
- ▫ Nonradioactive
- ▫ Source/Special Nuclear Materials
- ▫ Debris
- ▫ Fuel Blending
- ▫ Uncontained Gas
- ▫ RCRA Sample
- ▫ Recyclable Material
- ▫ Recycled/Reused
- ▫ TSCA Reg. Waste
- ▫ Evaluated in Another Process

EPA Codes:

Description (Material, Type, Size, Color, etc.):
Dry Combustibles

How the Output is Generated:
During Glovebox Operations Within The Radioactive Materials Management Area

Generation Rate:
Variable

How the Output is Managed:
Deposited In Designated 55-Gallon Drums

Chemicals/Contaminants in or on the Output:
None

Characterization Rationale:
This output is line generated, and can be a low-content residue or a transuranic or low-level waste. According to process knowledge, the output contains no RCRA hazardous constituents and exhibits no RCRA hazardous characteristics. Therefore, the output can be a nonhazardous, low-content residue or a nonhazardous, transuranic or low-level waste.

WASTE STREAM AND RESIDUE DESCRIPTION AND CHARACTERIZATION

Process Number: 771-35-40
IDC/WFC: 480

Title: GENERAL BUILDING WASTE (RMMA)
Description: Line Generated Light Metal

- ☐ RCRA Hazardous
- ■ RCRA Nonhazardous
- ☐ By Analytical Data
- ■ By Process Knowledge
- ☐ LDR Regulated
- ■ Not LDR Regulated
- ☐ Non-Wastewater
- ☐ Wastewater
- ☐ Product
- ☐ High Content Residue
- ☐ Low Content Residue
- ■ Transuranic
- ■ Low-Level
- ☐ Nonradioactive
- ☐ Source/Special Nuclear Materials
- ☐ Debris
- ☐ Fuel Blending
- ☐ Uncontained Gas
- ☐ RCRA Sample
- ☐ Recyclable Material
- ☐ Recycled/Reused
- ☐ TSCA Reg. Waste
- ☐ Evaluated in Another Process

EPA Codes:

Description (Material, Type, Size, Color, etc.):
Light Metal

How the Output is Generated:
During Routine Operations

Generation Rate:
Variable

How the Output is Managed:
Placed In A 55-Gallon Drum

Chemicals/Contaminants in or on the Output:
None

Characterization Rationale:
This output is line generated, but is never generated as a residue. According to process knowledge, the output contains no RCRA hazardous constituents and exhibits no RCRA hazardous characteristics. Therefore, the output can be a nonhazardous, transuranic or low-level waste.

WASTE STREAM AND RESIDUE DESCRIPTION AND CHARACTERIZATION

Process Number: 771-35-42A
IDC/WFC: 337

Title: GENERAL BUILDING WASTE (RMMA)
Description: Plastic

- ☐ RCRA Hazardous
- ■ RCRA Nonhazardous
- ☐ By Analytical Data
- ■ By Process Knowledge
- ☐ LDR Regulated
- ■ Not LDR Regulated
- ☐ Non-Wastewater
- ☐ Wastewater
- ☐ Product
- ☐ High Content Residue
- ■ Low Content Residue
- ■ Transuranic
- ■ Low-Level
- ☐ Nonradioactive
- ☐ Source/Special Nuclear Materials
- ☐ Debris
- ☐ Fuel Blending
- ☐ Uncontained Gas
- ☐ RCRA Sample
- ☐ Recyclable Material
- ☐ Recycled/Reused
- ☐ TSCA Reg. Waste
- ☐ Evaluated in Another Process

EPA Codes:

Description (Material, Type, Size, Color, etc.):
Plastic Waste

How the Output is Generated:
During Cleanup Operations

Generation Rate:
Variable

How the Output is Managed:
Placed In A 55-Gallon Drum

Chemicals/Contaminants in or on the Output:
Aluminum Nitrate

Characterization Rationale:
This output can be line or nonline generated in a Radioactive Materials Management Area. According to process knowledge, this output does not meet the definition of an oxidizer as defined in 49 CFR 173.151. This waste stream in line or nonline generated waste generated during cleanup and repair activities. During cleanup, plastic contaminated with aluminum nitrate is wiped down with KW or other decon solutions and packaged with absorbent. The aluminum nitrate present on this plastic is in trace amounts and could not spontaneously ignite. This output is characterized as a nonhazardous, TRU or a low-level mixed waste or a nonhazardous, low-content residue.

WASTE STREAM AND RESIDUE DESCRIPTION AND CHARACTERIZATION

Process Number: 771-35-43
IDC/WFC: 336

Title: GENERAL BUILDING WASTE (RMMA)
Description: Wet Combustibles Hazardous

- ■ RCRA Hazardous
- □ RCRA Nonhazardous
- □ By Analytical Data
- ■ By Process Knowledge
- ■ LDR Regulated
- □ Not LDR Regulated
- □ Non-Wastewater
- □ Wastewater

- □ Product
- □ High Content Residue
- ■ Low Content Residue
- ■ Transuranic
- ■ Low-Level
- □ Nonradioactive
- □ Source/Special Nuclear Materials
- ■ Debris

- □ Fuel Blending
- □ Uncontained Gas
- □ RCRA Sample
- □ Recyclable Material
- □ Recycled/Reused
- □ TSCA Reg. Waste
- □ Evaluated in Another Process

EPA Codes:
D001

Description (Material, Type, Size, Color, etc.):
Wet Combustibles

How the Output is Generated:
During Cleanup Operations

Generation Rate:
Variable

How the Output is Managed:
Placed In A Satellite Collection Area

Chemicals/Contaminants in or on the Output:
Aluminum Nitrate

Characterization Rationale:
This output is line generated in a Radioactive Materials Management Area. According to process knowledge, this output exhibits the characteristic of ignitability due to the presence of Aluminum Nitrate which is a D.O.T. oxidizer. This output may be mixed, low-content residue, or a mixed, transuranic or low-level waste. This output meets the definition of hazardous debris and must be deactivated to remove the characteristic of ignitability using an appropriate technology in 40 CFR 268.45. No underlying hazardous constituents have been identified for this output. Therefore, this output will meet the LDR treatment standards following deactivation.

WASTE STREAM AND RESIDUE DESCRIPTION AND CHARACTERIZATION

Process Number: 771-35-44
IDC/WFC: 440

Title: GENERAL BUILDING WASTE (RMMA)
Description: Glass (Line Generated)

- ▫ RCRA Hazardous
- ▪ RCRA Nonhazardous
- ▫ By Analytical Data
- ▪ By Process Knowledge
- ▫ LDR Regulated
- ▪ Not LDR Regulated
- ▫ Non-Wastewater
- ▫ Wastewater
- ▫ Product
- ▫ High Content Residue
- ▫ Low Content Residue
- ▪ Transuranic
- ▪ Low-Level
- ▫ Nonradioactive
- ▫ Source/Special Nuclear Materials
- ▫ Debris
- ▫ Fuel Blending
- ▫ Uncontained Gas
- ▫ RCRA Sample
- ▫ Recyclable Material
- ▫ Recycled/Reused
- ▫ TSCA Reg. Waste
- ▫ Evaluated in Another Process

EPA Codes:

Description (Material, Type, Size, Color, etc.):
Various Glass Waste

How the Output is Generated:
During Routine Operations

Generation Rate:
Variable

How the Output is Managed:
Placed In A 55-Gallon Drum

Chemicals/Contaminants in or on the Output:
None

Characterization Rationale:
This output is line generated in a Radioactive Materials Management Area. According to process knowledge, this output contains no RCRA hazardous constituents and exhibits no RCRA hazardous characteristics. This output can be a nonhazardous, transuranic or low-level waste.

WASTE STREAM AND RESIDUE DESCRIPTION AND CHARACTERIZATION

Process Number: 771-35-54
IDC/WFC: 337

Title: GENERAL BUILDING WASTE (RMMA)
Description: Plastic And Rubber (Line Generated)

- ▫ RCRA Hazardous
- ▪ RCRA Nonhazardous
- ▫ By Analytical Data
- ▪ By Process Knowledge
- ▫ LDR Regulated
- ▪ Not LDR Regulated
- ▫ Non-Wastewater
- ▫ Wastewater
- ▫ Product
- ▫ High Content Residue
- ▫ Low Content Residue
- ▪ Transuranic
- ▪ Low-Level
- ▫ Nonradioactive
- ▫ Source/Special Nuclear Materials
- ▫ Debris
- ▫ Fuel Blending
- ▫ Uncontained Gas
- ▫ RCRA Sample
- ▫ Recyclable Material
- ▫ Recycled/Reused
- ▫ TSCA Reg. Waste
- ▫ Evaluated in Another Process

EPA Codes:

Description (Material, Type, Size, Color, etc.):
Plastic And Rubber Waste Such As Polyethylene Bottles, Bags, Tape, And Gloves

How the Output is Generated:
During Routine Operations

Generation Rate:
Variable

How the Output is Managed:
Placed In A 55-Gallon Drum

Chemicals/Contaminants in or on the Output:
None

Characterization Rationale:
This output is line generated in a Radioactive Materials Management Area. According to process knowledge, this output contains no RCRA hazardous constituents and exhibits no RCRA hazardous characteristics. This output can be a nonhazardous transuranic, or nonhazardous low-level waste.

WASTE STREAM AND RESIDUE DESCRIPTION AND CHARACTERIZATION

Process Number: 771-35-56 **Title:** GENERAL BUILDING WASTE (RMMA)
IDC/WFC: 1937 **Description:** Mercury Vapor Lamps

- ■ RCRA Hazardous
- □ RCRA Nonhazardous
- ■ By Analytical Data
- ■ By Process Knowledge
- ■ LDR Regulated
- □ Not LDR Regulated
- ■ Non-Wastewater
- □ Wastewater
- □ Product
- □ High Content Residue
- □ Low Content Residue
- □ Transuranic
- □ Low-Level
- ■ Nonradioactive
- □ Source/Special Nuclear Materials
- □ Debris
- □ Fuel Blending
- □ Uncontained Gas
- □ RCRA Sample
- □ Recyclable Material
- □ Recycled/Reused
- □ TSCA Reg. Waste
- □ Evaluated in Another Process

EPA Codes:
D009

Description (Material, Type, Size, Color, etc.):
Spent Mercury Vapor Lamps

How the Output is Generated:
Used lamps are changed as needed and surveyed for unrestricted release.

Generation Rate:
Variable

How the Output is Managed:
Unbroken lamps are put in a drum and sent to a 90-day collection area.

Chemicals/Contaminants in or on the Output:
Mercury Vapor

Characterization Rationale:
Mercury vapor lamps have been analyzed using the Toxicity Characteristic Leaching Procedure (TCLP), and found to exceed regulatory limits for toxicity characteristic metals. The number 26 is designated in the Chemical Constituent Code to denote the presence of mercury. (Choose 1 or 2) (1)It is generated in a non-Radioactive Materials Management Area. (2)Radiological Operations surveys this material to ensure it is nonradioactive. Based on the analytical data, the bulbs are characterized as a nonradioactive, hazardous waste. This output does not meet the LDR treatment standards defined in 40 CFR 268.40. The output must meet the concentration-based treatment standards for mercury and the treatment standards for the underlying hazardous constituents. The treatment standards for the underlying hazardous constituents as defined in 40 CFR 268.48 must be met for treatment residue(s) prior to land disposal. The underlying hazardous constituents associated with this output are listed in Appendix E.

WASTE STREAM AND RESIDUE DESCRIPTION AND CHARACTERIZATION

Process Number: 771-35-57 **Title:** GENERAL BUILDING WASTE (RMMA)
IDC/WFC: 1937 **Description:** Sodium Vapor Lamps

- ■ RCRA Hazardous
- □ RCRA Nonhazardous
- ■ By Analytical Data
- ■ By Process Knowledge
- ■ LDR Regulated
- □ Not LDR Regulated
- ■ Non-Wastewater
- □ Wastewater
- □ Product
- □ High Content Residue
- □ Low Content Residue
- □ Transuranic
- □ Low-Level
- ■ Nonradioactive
- □ Source/Special Nuclear Materials
- □ Debris
- □ Fuel Blending
- □ Uncontained Gas
- □ RCRA Sample
- □ Recyclable Material
- □ Recycled/Reused
- □ TSCA Reg. Waste
- □ Evaluated in Another Process

EPA Codes:
D008, D009

Description (Material, Type, Size, Color, etc.):
Sodium Vapor Lamps

How the Output is Generated:
Used lamps are changed as needed and surveyed for unrestricted release.

Generation Rate:
Variable

How the Output is Managed:
Unbroken lamps are taken to a 90-day collection area.

Chemicals/Contaminants in or on the Output:
Sodium Vapor Lamps Contaminated With Lead And Mercury

Characterization Rationale:
Sodium vapor lamps have been analyzed using the Toxicity Characteristic Leaching Procedure (TCLP), and found to exceed regulatory limits for toxicity characteristic metals. The number 24 and 26 are designated in the Chemical Constituent Code to denote the presence of mercury. Radiological Operations surveys this material to ensure it is nonradioactive. Based on the analytical data, the bulbs are characterized as a nonradioactive, hazardous waste. This output does not meet the LDR treatment standards defined in 40 CFR 268.40. The output must meet the concentration-based treatment standards for lead and mercury and the treatment standards for the underlying hazardous constituents. The treatment standards for the underlying hazardous constituents as defined in 40 CFR 268.48 must be met for treatment residue(s) prior to land disposal. The underlying hazardous constituents associated with this output are listed in Appendix E.

WASTE STREAM AND RESIDUE DESCRIPTION AND CHARACTERIZATION

Process Number: 771-35-58
IDC/WFC: 302

Title: GENERAL BUILDING WASTE (RMMA)
Description: Benelex And Plexiglas Removal

- ▫ RCRA Hazardous
- ▪ RCRA Nonhazardous
- ▪ By Analytical Data
- ▪ By Process Knowledge
- ▫ LDR Regulated
- ▪ Not LDR Regulated
- ▫ Non-Wastewater
- ▫ Wastewater
- ▫ Product
- ▫ High Content Residue
- ▫ Low Content Residue
- ▪ Transuranic
- ▪ Low-Level
- ▫ Nonradioactive
- ▫ Source/Special Nuclear Materials
- ▫ Debris
- ▫ Fuel Blending
- ▫ Uncontained Gas
- ▫ RCRA Sample
- ▫ Recyclable Material
- ▫ Recycled/Reused
- ▫ TSCA Reg. Waste
- ▫ Evaluated in Another Process

EPA Codes:

Description (Material, Type, Size, Color, etc.):
Benelex Shielding Used Throughout Building; Doors, Walls, Plexiglas For Areas Around Benelex That Needed Visual Sight Through Area

How the Output is Generated:
During Removal Activities To Reduce Fire Loading In Building

Generation Rate:
Approximately 2,000 Square Feet Per Year

How the Output is Managed:
Appropriate Waste Container

Chemicals/Contaminants in or on the Output:
Plutonium

Characterization Rationale:
According to process knowledge and supported by analytical data (97P1987-001), this output contains no RCRA hazardous constituents and exhibits no RCRA hazardous characteristics. This output may or may not be painted. By definition this output is considered a surface contaminated object and must be surveyed prior to packaging to determine its level of radioactivity. This output is designated a nonhazardous, low-level or nonhazardous, TRU waste.

WASTE STREAM AND RESIDUE DESCRIPTION AND CHARACTERIZATION

Process Number: 771-35-59 **Title:** GENERAL BUILDING WASTE (RMMA)
IDC/WFC: 1444 **Description:** Leaded Glass

- ■ RCRA Hazardous
- □ RCRA Nonhazardous
- ■ By Analytical Data
- ■ By Process Knowledge
- ■ LDR Regulated
- □ Not LDR Regulated
- □ Non-Wastewater
- □ Wastewater
- □ Product
- □ High Content Residue
- □ Low Content Residue
- □ Transuranic
- □ Low-Level
- ■ Nonradioactive
- □ Source/Special Nuclear Materials
- ■ Debris
- □ Fuel Blending
- □ Uncontained Gas
- □ RCRA Sample
- □ Recyclable Material
- □ Recycled/Reused
- □ TSCA Reg. Waste
- □ Evaluated in Another Process

EPA Codes:
D005, D008

Description (Material, Type, Size, Color, etc.):
Leaded Glass

How the Output is Generated:
Leaded Glass Determined To Be Waste

Generation Rate:
Variable

How the Output is Managed:
90-Day Or Permitted Storage

Chemicals/Contaminants in or on the Output:
Barium, Lead

Characterization Rationale:
According to process knowledge and supported by analytical data (Sample Numbers E901467, E901468, 168-WG-91), this leaded glass exhibits the RCRA hazardous characteristic of toxicity for lead and barium. This output does not meet the LDR treatment standards defined in 40 CFR 268.40. The output must meet the concentration-based treatment standards for lead and barium and the treatment standards for underlying hazardous constituents. The treatment standards for the underlying hazardous constituents must also be met for treatment residues prior to land disposal. The underlying hazardous constituents associated with this output are listed in Appendix E.

WASTE STREAM AND RESIDUE DESCRIPTION AND CHARACTERIZATION

Process Number: 771-35-60 **Title:** GENERAL BUILDING WASTE (RMMA)
IDC/WFC: 1480 **Description:** Circuit Boards

- ■ RCRA Hazardous
- □ RCRA Nonhazardous
- ■ By Analytical Data
- ■ By Process Knowledge
- ■ LDR Regulated
- □ Not LDR Regulated
- □ Non-Wastewater
- □ Wastewater
- □ Product
- □ High Content Residue
- □ Low Content Residue
- □ Transuranic
- □ Low-Level
- ■ Nonradioactive
- □ Source/Special Nuclear Materials
- ■ Debris
- □ Fuel Blending
- □ Uncontained Gas
- □ RCRA Sample
- ■ Recyclable Material
- □ Recycled/Reused
- □ TSCA Reg. Waste
- □ Evaluated in Another Process

EPA Codes:
D008, D011

Description (Material, Type, Size, Color, etc.):
Waste Circuit Boards That Can Be Recycled For Precious Metal Recovery

How the Output is Generated:
Circuit Boards That Are Determined To Be Waste

Generation Rate:
Variable

How the Output is Managed:
Collected For Recycle

Chemicals/Contaminants in or on the Output:
Lead, Silver

Characterization Rationale:
According to process knowledge and supported by analytical data (Sample Numbers 93G0056, 95G0138, 95G0322), these circuit boards exhibit the RCRA hazardous characteristic of toxicity for lead and silver and, therefore, are a hazardous waste. Waste circuit boards that can be recycled for precious metal recovery are exempt from accumulation, labeling and inspection requirements of RCRA under 6 CCR 1007-3, Part 267 Subpart F (CFR Part 266). This output meets the definition of hazardous debris and can be treated by an appropriate technology in 40 CFR 268.45. The concentration-based treatment standards for lead and silver and the treatment standards for underlying hazardous constituents must be met for treatment residues prior to land disposal. The underlying hazardous constituents associated with this output are listed in Appendix E.

WASTE STREAM AND RESIDUE DESCRIPTION AND CHARACTERIZATION

Process Number: 771-35-61 **Title:** GENERAL BUILDING WASTE (RMMA)
IDC/WFC: 440 **Description:** Absorbed Mercury

- ■ RCRA Hazardous
- □ RCRA Nonhazardous
- □ By Analytical Data
- ■ By Process Knowledge
- □ LDR Regulated
- ■ Not LDR Regulated
- □ Non-Wastewater
- □ Wastewater
- □ Product
- □ High Content Residue
- □ Low Content Residue
- ■ Transuranic
- ■ Low-Level
- □ Nonradioactive
- □ Source/Special Nuclear Materials
- □ Debris
- □ Fuel Blending
- □ Uncontained Gas
- □ RCRA Sample
- □ Recyclable Material
- □ Recycled/Reused
- □ TSCA Reg. Waste
- □ Evaluated in Another Process

EPA Codes:
D009

Description (Material, Type, Size, Color, etc.):
This output consists of broken thermometers, ampules that contained elemental mercury and were cleaned up using a mercury absorbent such as amalgam or sponges from mercury spill kit.

How the Output is Generated:
During Cleanup Of Mercury Spills

Generation Rate:
Variable

How the Output is Managed:
90-Day Or Permitted Storage Unit

Chemicals/Contaminants in or on the Output:
Mercury
Radionuclides: Plutonium

Characterization Rationale:
This output is the result of elemental mercury being amalgamated with sulfur, copper, zinc or nickel. It is unlikely that the amalgamation process is 99.9996 percent efficient (the efficiency required in order for this output to not exhibit the characteristic of toxicity for mercury) and therefore, this output is characterized as a hazardous, low-level waste. However, amalgamation is the specified treatment technology for this waste in 40 CFR 268.40 and, therefore, this output meets LDR treatment standards.

WASTE STREAM AND RESIDUE DESCRIPTION AND CHARACTERIZATION

Process Number: 771-35-62
IDC/WFC: 1969

Title: GENERAL BUILDING WASTE (RMMA)
Description: Mercury Containing Equipment

- ■ RCRA Hazardous
- □ RCRA Nonhazardous
- □ By Analytical Data
- ■ By Process Knowledge
- ■ LDR Regulated
- □ Not LDR Regulated
- ■ Non-Wastewater
- □ Wastewater
- □ Product
- □ High Content Residue
- □ Low Content Residue
- □ Transuranic
- □ Low-Level
- ■ Nonradioactive
- □ Source/Special Nuclear Materials
- □ Debris
- □ Fuel Blending
- □ Uncontained Gas
- □ RCRA Sample
- □ Recyclable Material
- □ Recycled/Reused
- □ TSCA Reg. Waste
- ■ Evaluated in Another Process

EPA Codes:
D009

Description (Material, Type, Size, Color, etc.):
This output consists of mercury ampules removed from electronic equipment and thermometers that cannot be reused.

How the Output is Generated:
This output is generated when mercury ampules are removed from electronic equipment that is no longer needed and from collecting thermometers and other measuring devices that contain mercury which cannot be reused.

Generation Rate:
Variable

How the Output is Managed:
90-Day Or Permitted Storage Unit

Chemicals/Contaminants in or on the Output:
Mercury

Characterization Rationale:
According to process knowledge, this output exhibits the RCRA hazardous characteristic of toxicity for mercury. This output does not meet the LDR treatment standards defined in 40 CFR 268.40. The output is a high mercury inorganic and must be treated by a specified technology-based treatment standard. This waste stream is surveyed to be free released from the building as nonradioactive. This output is characterized as a nonradioactive, hazardous waste.

WASTE STREAM AND RESIDUE DESCRIPTION AND CHARACTERIZATION

Process Number: 771-35-63
IDC/WFC: 1980

Title: GENERAL BUILDING WASTE (RMMA)
Description: Used Mercury Batteries

- ■ RCRA Hazardous
- □ RCRA Nonhazardous
- □ By Analytical Data
- ■ By Process Knowledge
- ■ LDR Regulated
- □ Not LDR Regulated
- ■ Non-Wastewater
- □ Wastewater
- □ Product
- □ High Content Residue
- □ Low Content Residue
- □ Transuranic
- □ Low-Level
- ■ Nonradioactive
- □ Source/Special Nuclear Materials
- □ Debris
- □ Fuel Blending
- □ Uncontained Gas
- □ RCRA Sample
- □ Recyclable Material
- □ Recycled/Reused
- □ TSCA Reg. Waste
- □ Evaluated in Another Process

EPA Codes:
D009

Description (Material, Type, Size, Color, etc.):
Used Mercury Batteries Dry Cell

How the Output is Generated:
When Batteries Are Replaced

Generation Rate:
Variable

How the Output is Managed:
90-Day Or Permitted Storage Area

Chemicals/Contaminants in or on the Output:
Mercury

Characterization Rationale:
According to process knowledge, this output exhibits the RCRA hazardous characteristic of toxicity for mercury. This output does not meet the LDR treatment standards defined in 40 CFR 268.40. The output is a high mercury inorganic and must be treated by the specified technology-based treatment standard.

WASTE STREAM AND RESIDUE DESCRIPTION AND CHARACTERIZATION

Process Number: 771-35-64 **Title:** GENERAL BUILDING WASTE (RMMA)
IDC/WFC: 1980 **Description:** Lithium Batteries

- ☐ RCRA Hazardous
- ■ RCRA Nonhazardous
- ☐ By Analytical Data
- ■ By Process Knowledge
- ☐ LDR Regulated
- ■ Not LDR Regulated
- ☐ Non-Wastewater
- ☐ Wastewater
- ☐ Product
- ☐ High Content Residue
- ☐ Low Content Residue
- ☐ Transuranic
- ☐ Low-Level
- ■ Nonradioactive
- ☐ Source/Special Nuclear Materials
- ☐ Debris
- ☐ Fuel Blending
- ☐ Uncontained Gas
- ☐ RCRA Sample
- ☐ Recyclable Material
- ☐ Recycled/Reused
- ☐ TSCA Reg. Waste
- ☐ Evaluated in Another Process

EPA Codes:

Description (Material, Type, Size, Color, etc.):
Lithium Batteries

How the Output is Generated:
When Batteries Are Replaced

Generation Rate:
Variable

How the Output is Managed:
Permitted Storage Area

Chemicals/Contaminants in or on the Output:
Lithium Metal

Characterization Rationale:
According to regulator guidance (Contact Record between Karen North, Kaiser-Hill and Cathy Alstatt, CDPHE dated 2/7/96), lithium batteries exhibit no RCRA hazardous characteristics and contain no RCRA regulated constituents. This output is characterized as a nonhazardous, nonradioactive waste.

WASTE STREAM AND RESIDUE DESCRIPTION AND CHARACTERIZATION

Process Number: 771-35-65 **Title:** GENERAL BUILDING WASTE (RMMA)
IDC/WFC: 972 **Description:** PCB Debris

- ▫ RCRA Hazardous
- ▪ RCRA Nonhazardous
- ▫ By Analytical Data
- ▪ By Process Knowledge
- ▫ LDR Regulated
- ▪ Not LDR Regulated
- ▫ Non-Wastewater
- ▫ Wastewater
- ▫ Product
- ▫ High Content Residue
- ▫ Low Content Residue
- ▪ Transuranic
- ▪ Low-Level
- ▫ Nonradioactive
- ▫ Source/Special Nuclear Materials
- ▫ Debris
- ▫ Fuel Blending
- ▫ Uncontained Gas
- ▫ RCRA Sample
- ▫ Recyclable Material
- ▫ Recycled/Reused
- ▪ TSCA Reg. Waste
- ▫ Evaluated in Another Process

EPA Codes:

Description (Material, Type, Size, Color, etc.):
This output consists of PCB contaminated material debris including glass, plastic bottles and sheets, Kimwipes, PPE, rags, scrap metal, electric wiring, gaskets, and equipment (does not include PCB ballasts, capacitors, or transformers).

How the Output is Generated:
During General Building Cleanup, Sampling Events, Or Equipment Disposal

Generation Rate:
Variable

How the Output is Managed:
Packaged In 55-Gallon Drums Or Crates

Chemicals/Contaminants in or on the Output:
Used Oil, Or PCB Contaminated Items
Radionuclides: Plutonium

Characterization Rationale:
According to process knowledge, no RCRA hazardous constituents are used in this process. According to historical process knowledge, this output contains no RCRA hazardous constituents, exhibits no RCRA hazardous characteristics, and contains PCBs greater than 50 ppm. Therefore, this output is a TRU or low-level, nonhazardous waste regulated under TSCA (40 CFR 761). The level of radioactivity will be determined by assay of each collection container.

36.0 PROCESS 771-36: H-4 SUPPORT VACUUM SYSTEMS

The H-4 Support Vacuum Systems Process, located in gloveboxes in Rooms 114, 149 and 174 and outside the gloveboxes in Room 146 is used to pull a vacuum on selected process lines in order to transfer solutions from tank to tank. Negative pressure is used to effect the transfer and allows solutions to be vacuumed from process area floors and pulled through filters. The process uses five H-4 vacuum pumps and piping. All equipment is stainless steel except the pump bearing house. Heat exchangers, process tanks, and mist tanks are also part of the systems. Acid solutions and filtered air pass through the systems in support of various Building 771 processes. Figure 36.1 shows the inputs, process flow, and outputs associated with the H-4 Support Vacuum Systems Process.

Vacuum pumps create a vacuum on a vacuum header, which serves as a means to transfer fluids on demand by valving arrangements. The vacuum is pulled on process lines and tanks; some process lines pass through Ful-Flo filters. The vacuum pumps use a seal liquid to exert a vacuum on process lines. The pumps in Gloveboxes 5A, 9A, and 1097 use water as the seal liquid. The pumps in Gloveboxes 7A and 39 use potassium hydroxide solution as the seal liquid. The liquids are centrifugally dispersed within the pump housings and exit at the pump exhaust as a mist. The pump exhausts are directly piped to mist tanks (at A, Figure 36.1), where the air is separated from the seal liquids. Seal liquids are recirculated through heat exchangers. Make-up water or potassium hydroxide solution are added to the seal liquid daily. Spent water (seal liquid) is drained into Tanks D-551 and D-552 for eventual treatment in the Anion Exchange Process (Process 771-04). Potassium hydroxide seal liquid is drained from mist tanks to Tanks D-705, D-714, D-921, and D-922 for eventual treatment in the Caustic Filtration Process (Process 771-19).

Oil and grease are used to lubricate vacuum pump bearings. HEPA filters are used to filter glovebox intake and exhaust. Plastic bags, Kimwipes, glovebox gloves, and tools are used for general glovebox cleaning, materials handling, and pump maintenance purposes.

Glovebox exhaust is passed to the Building 771 Fume Scrubber (Process 771-27). HEPA filters are placed by filter technicians in 55-gallon drums in Rooms 114 and 174. Waste plastics, metals, wet combustibles, and Ful-Flo filters are bagged out and placed in the appropriate IDC 55-gallon drum in Room 114 or 174. Leaded glovebox gloves are placed in satellite collection areas in Rooms 114 and 174. Process Table 771-36 presents the outputs associated with the H-4 Support Vacuum Systems Process and provides their dispositions and hazardous character.

AutoCAD 12, File Name: 771-36

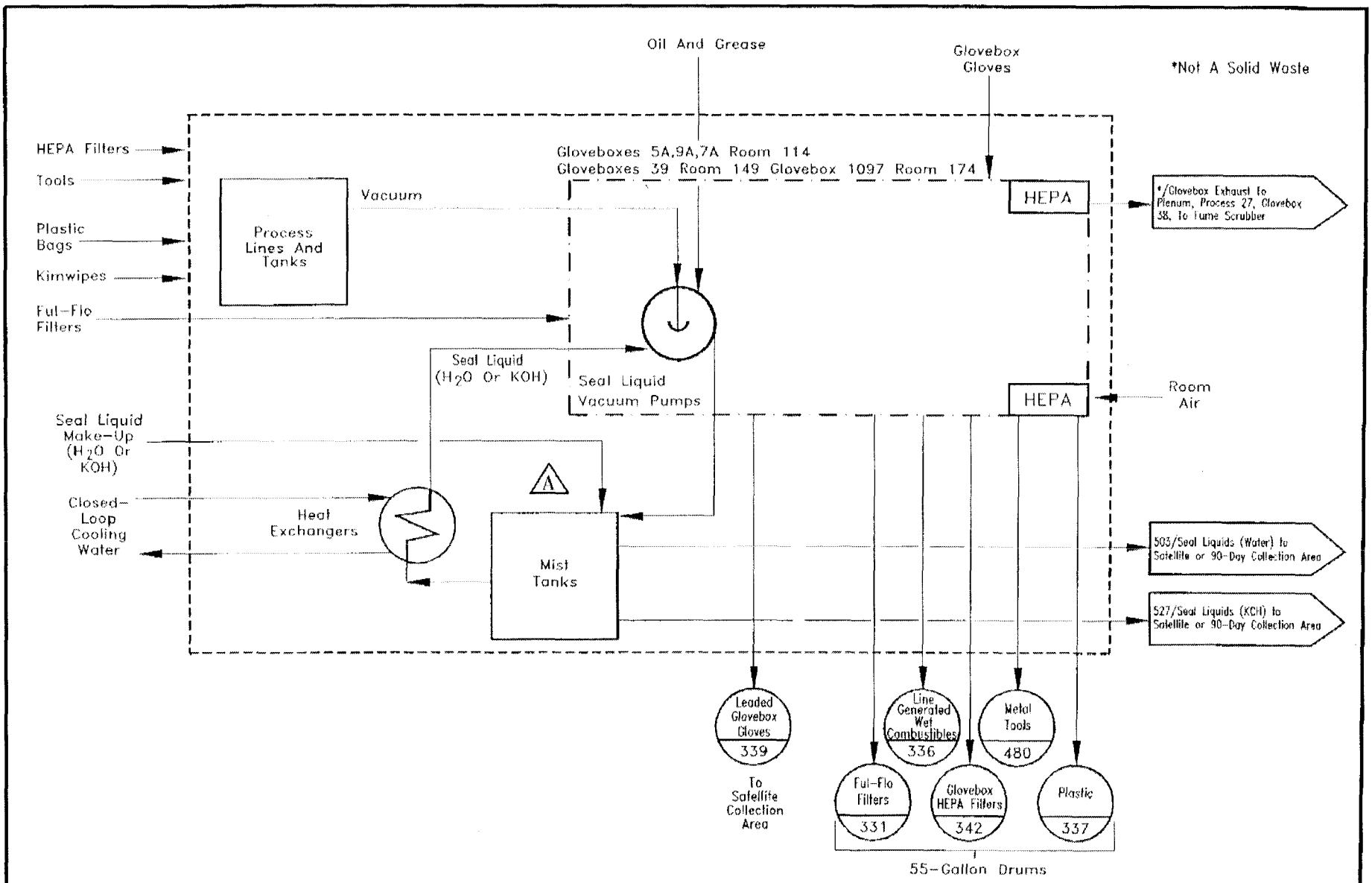

FIGURE 36.1

Rocky Flats Environmental Technology Site Waste Stream & Residue Identification & Characterization	BUILDING 771/PROCESS 36 H-4 SUPPORT VACUUM SYSTEMS	Task	By	Date
		Designed	B. Bayne	11/08/91
		Drawn	R. Nisely	06/12/96
		Checked	J. Schoen	08/11/97

PROCESS 771-36 H-4 SUPPORT VACUUM SYSTEMS

Process Number	IDC/ WFC No.	CCCs RCRA Reg. Const.	CCCs Non-RCRA Reg. Const.	Comp. Codes	Description RCRA Reg. Chemical Constituents: Non-RCRA Reg. Chemical Constituents:	Collection	LDR Codes	RCRA Haz. Waste	RCRA-Land Disposal Restricted (Part 268)	Wastewater/Non-Wastewater: Debris/Non-Debris: Subcategory:	EPA Codes
771-36-1	503	02	00	1B	Water (Seal Liquid) RCRA Reg. Chemical Constituents: Acid - General Non-RCRA Reg. Chemical Constituents: None	Satellite Or 90-Day Collection Area	RT WW C1	Yes	Yes Does Not Meet Treatment Standards	Wastewater Corrosive/Non-CW	D002
771-36-3	342	00	0205	NA	HEPA Filters RCRA Reg. Chemical Constituents: None Non-RCRA Reg. Chemical Constituents: Acid - General Base	55-Gallon Drum		No	No		

Process Number	IDC/ WFC No.	CCCs RCRA Reg. Const.	CCCs Non-RCRA Reg. Const.	Comp. Codes	Description RCRA Reg. Chemical Constituents: Non-RCRA Reg. Chemical Constituents:	Collection	LDR Codes	RCRA Haz. Waste	RCRA-Land Disposal Restricted (Part 268)	Wastewater/Non-Wastewater: Debris/Non-Debris: Subcategory:	EPA Codes
771-36-4	337	00	0205	NA	Plastic RCRA Reg. Chemical Constituents: None Non-RCRA Reg. Chemical Constituents: Acid - General Base	55-Gallon Drum		No	No		
771-36-5	480	00	00	NA	Metal Tools RCRA Reg. Chemical Constituents: None Non-RCRA Reg. Chemical Constituents: None	55-Gallon Drum		No	No		

Process Number	IDC/ WFC No.	CCCs RCRA Reg. Const.	CCCs Non-RCRA Reg. Const.	Comp. Codes	Description RCRA Reg. Chemical Constituents: Non-RCRA Reg. Chemical Constituents:	Collection	LDR Codes	RCRA Haz. Waste	RCRA-Land Disposal Restricted (Part 268)	Wastewater/Non-Wastewater: Debris/Non-Debris: Subcategory:	EPA Codes
771-36-6	336	00	0205	NA	Combustibles, Wet (Line Generated) RCRA Reg. Chemical Constituents: None Non-RCRA Reg. Chemical Constituents: Acid - General Base	55-Gallon Drum		No	No		
771-36-7	339	24	00	NA	Leaded Glovebox Gloves RCRA Reg. Chemical Constituents: Lead Non-RCRA Reg. Chemical Constituents: None	Satellite Collection Area	RT D PB1	Yes	Yes Does Not Meet Treatment Standards	Debris Lead	D008

Process Number	IDC/ WFC No.	CCCs RCRA Reg. Const.	CCCs Non-RCRA Reg. Const.	Comp. Codes	Description RCRA Reg. Chemical Constituents: Non-RCRA Reg. Chemical Constituents:	Collection	LDR Codes	RCRA Haz. Waste	RCRA-Land Disposal Restricted (Part 268)	Wastewater/Non-Wastewater: Debris/Non-Debris: Subcategory:	EPA Codes
771-36-9	331	00	0205	NA	Ful-Flo Filters RCRA Reg. Chemical Constituents: None Non-RCRA Reg. Chemical Constituents: Acid - General Base	55-Gallon Drum		No	No		

WASTE STREAM AND RESIDUE DESCRIPTION AND CHARACTERIZATION

Process Number: 771-36-1
IDC/WFC: 503

Title: H-4 SUPPORT VACUUM SYSTEMS
Description: Water (Seal Liquid)

- ■ RCRA Hazardous
- □ RCRA Nonhazardous
- □ By Analytical Data
- ■ By Process Knowledge
- ■ LDR Regulated
- □ Not LDR Regulated
- □ Non-Wastewater
- ■ Wastewater
- □ Product
- □ High Content Residue
- ■ Low Content Residue
- ■ Transuranic
- ■ Low-Level
- □ Nonradioactive
- □ Source/Special Nuclear Materials
- □ Debris
- □ Fuel Blending
- ■ Uncontained Gas
- □ RCRA Sample
- □ Recyclable Material
- □ Recycled/Reused
- □ TSCA Reg. Waste
- □ Evaluated in Another Process

EPA Codes:
D002

Description (Material, Type, Size, Color, etc.):
Water (seal liquid) is comprised of acidic plutonium solution diluted in seal liquid water.

How the Output is Generated:
Drained Into The Process Piping System During Daily Maintenance

Generation Rate:
As Needed Basis

How the Output is Managed:
Satellite Or 90-Day Collection Area

Chemicals/Contaminants in or on the Output:
Acids

Characterization Rationale:
This output is line generated in a Radioactive Materials Management Area. According to process knowledge, this output exhibits the characteristic of corrosivity due to the presence of acid. This output may be a mixed, low-content residue, or a mixed, transuranic or low-level waste. This output does not meet the LDR treatment standards defined in 40 CFR 268.40. The output must be deactivated to remove the characteristic of corrosivity and meet the treatment standards for underlying hazardous constituents. The treatment standards for the underlying hazardous constituents must be met for treatment residue(s) prior to land disposal. The underlying hazardous constituents associated with this output are listed in Appendix E.

WASTE STREAM AND RESIDUE DESCRIPTION AND CHARACTERIZATION

Process Number: 771-36-3 **Title:** H-4 SUPPORT VACUUM SYSTEMS
IDC/WFC: 342 **Description:** HEPA Filters

- ☐ RCRA Hazardous
- ■ RCRA Nonhazardous
- ☐ By Analytical Data
- ■ By Process Knowledge
- ☐ LDR Regulated
- ■ Not LDR Regulated
- ☐ Non-Wastewater
- ☐ Wastewater
- ☐ Product
- ☐ High Content Residue
- ■ Low Content Residue
- ■ Transuranic
- ■ Low-Level
- ☐ Nonradioactive
- ☐ Source/Special Nuclear Materials
- ☐ Debris
- ☐ Fuel Blending
- ☐ Uncontained Gas
- ☐ RCRA Sample
- ☐ Recyclable Material
- ☐ Recycled/Reused
- ☐ TSCA Reg. Waste
- ☐ Evaluated in Another Process

EPA Codes:

Description (Material, Type, Size, Color, etc.):
HEPA filters are 8"x 8" filters which fit into glovebox vents.

How the Output is Generated:
Generated As The Filters Are Periodically Changed Out

Generation Rate:
Variable

How the Output is Managed:
Placed By Building 442 Filter Technicians In A 55-Gallon Drum In Room 114

Chemicals/Contaminants in or on the Output:
Contains Acid Vapors And Potassium Hydroxide Vapors

Characterization Rationale:
This output is line generated, and can be a residue or a waste. According to process knowledge, the waste is contaminated with corrosive liquid, due to the presence of acid and potassium hydroxide vapors. The waste cannot exhibit the characteristic of corrosivity because the waste is not liquid. It is designated as a nonhazardous, low-content residue or a nonhazardous, TRU or low-level waste.

WASTE STREAM AND RESIDUE DESCRIPTION AND CHARACTERIZATION

Process Number: 771-36-4 **Title:** H-4 SUPPORT VACUUM SYSTEMS
IDC/WFC: 337 **Description:** Plastic

- ☐ RCRA Hazardous
- ■ RCRA Nonhazardous
- ☐ By Analytical Data
- ■ By Process Knowledge
- ☐ LDR Regulated
- ■ Not LDR Regulated
- ☐ Non-Wastewater
- ☐ Wastewater
- ☐ Product
- ☐ High Content Residue
- ■ Low Content Residue
- ■ Transuranic
- ■ Low-Level
- ☐ Nonradioactive
- ☐ Source/Special Nuclear Materials
- ☐ Debris
- ☐ Fuel Blending
- ☐ Uncontained Gas
- ☐ RCRA Sample
- ☐ Recyclable Material
- ☐ Recycled/Reused
- ☐ TSCA Reg. Waste
- ☐ Evaluated in Another Process

EPA Codes:

Description (Material, Type, Size, Color, etc.):
Plastic Consists Of Bag Cuts From The Gloveboxes

How the Output is Generated:
Generated As Tools And Materials Are Moved Into And Out Of The Gloveboxes

Generation Rate:
Variable

How the Output is Managed:
Bagged Out And Placed In An IDC 337, 55-Gallon Drum In Room 114

Chemicals/Contaminants in or on the Output:
May Contain Residual Acid, Potassium Hydroxide Solution

Characterization Rationale:
This output is line generated, and can be a residue or a waste. According to process knowledge, the waste is contaminated with corrosive liquid, due to the presence of acid and potassium hydroxide. The waste cannot exhibit the characteristic of corrosivity because the waste is not liquid. It is designated as a nonhazardous, low-content residue or a nonhazardous TRU or low-level waste.

WASTE STREAM AND RESIDUE DESCRIPTION AND CHARACTERIZATION

Process Number: 771-36-5
IDC/WFC: 480

Title: H-4 SUPPORT VACUUM SYSTEMS
Description: Metal Tools

- ☐ RCRA Hazardous
- ■ RCRA Nonhazardous
- ☐ By Analytical Data
- ■ By Process Knowledge
- ☐ LDR Regulated
- ■ Not LDR Regulated
- ☐ Non-Wastewater
- ☐ Wastewater
- ☐ Product
- ☐ High Content Residue
- ■ Low Content Residue
- ■ Transuranic
- ■ Low-Level
- ☐ Nonradioactive
- ☐ Source/Special Nuclear Materials
- ☐ Debris
- ☐ Fuel Blending
- ☐ Uncontained Gas
- ☐ RCRA Sample
- ☐ Recyclable Material
- ☐ Recycled/Reused
- ☐ TSCA Reg. Waste
- ☐ Evaluated in Another Process

EPA Codes:

Description (Material, Type, Size, Color, etc.):
Metal Tools Consist Of Screwdrivers, Wrenches, Pliers, Etc.

How the Output is Generated:
As tools are broken, they are replaced.

Generation Rate:
Variable

How the Output is Managed:
Bagged Out And Placed In An IDC 480, 55-Gallon Drum In Room 114

Chemicals/Contaminants in or on the Output:
May Contain Residual Acids, Potassium Hydroxide Solution

Characterization Rationale:
This output is line generated in a Radioactive Materials Management Area. According to process knowledge, this output contains no RCRA hazardous constituents and exhibits no RCRA hazardous characteristics. This output can be a nonhazardous, low-content residue or a nonhazardous, transuranic or low-level waste.

WASTE STREAM AND RESIDUE DESCRIPTION AND CHARACTERIZATION

Process Number: 771-36-6
IDC/WFC: 336

Title: H-4 SUPPORT VACUUM SYSTEMS
Description: Combustibles, Wet (Line Generated)

- ☐ RCRA Hazardous
- ■ RCRA Nonhazardous
- ☐ By Analytical Data
- ■ By Process Knowledge
- ☐ LDR Regulated
- ■ Not LDR Regulated
- ☐ Non-Wastewater
- ☐ Wastewater
- ☐ Product
- ☐ High Content Residue
- ■ Low Content Residue
- ■ Transuranic
- ■ Low-Level
- ☐ Nonradioactive
- ☐ Source/Special Nuclear Materials
- ☐ Debris
- ☐ Fuel Blending
- ☐ Uncontained Gas
- ☐ RCRA Sample
- ☐ Recyclable Material
- ☐ Recycled/Reused
- ☐ TSCA Reg. Waste
- ☐ Evaluated in Another Process

EPA Codes:

Description (Material, Type, Size, Color, etc.):
Combustibles Consist Of Rags And Kimwipes

How the Output is Generated:
Generated After Cleaning During Inventory Twice Each Year

Generation Rate:
Variable

How the Output is Managed:
Bagged Out And Placed In An IDC 336, 55-Gallon Drum In Room 114

Chemicals/Contaminants in or on the Output:
Contact With Mild Acid Or Potassium Hydroxide

Characterization Rationale:
This output is line generated, and can be a residue or a waste. According to process knowledge, the waste is contaminated with corrosive liquid, due to the presence of acid or potassium hydroxide. The waste cannot exhibit the characteristic of corrosivity because the waste is not liquid. It is designated as a nonhazardous, low-content residue or a nonhazardous TRU or low-level waste.

WASTE STREAM AND RESIDUE DESCRIPTION AND CHARACTERIZATION

Process Number: 771-36-7
IDC/WFC: 339

Title: H-4 SUPPORT VACUUM SYSTEMS
Description: Leaded Glovebox Gloves

- ■ RCRA Hazardous
- □ RCRA Nonhazardous
- ■ By Analytical Data
- ■ By Process Knowledge
- ■ LDR Regulated
- □ Not LDR Regulated
- □ Non-Wastewater
- □ Wastewater

- □ Product
- □ High Content Residue
- □ Low Content Residue
- ■ Transuranic
- ■ Low-Level
- □ Nonradioactive
- □ Source/Special Nuclear Materials
- ■ Debris

- □ Fuel Blending
- □ Uncontained Gas
- □ RCRA Sample
- □ Recyclable Material
- □ Recycled/Reused
- □ TSCA Reg. Waste
- □ Evaluated in Another Process

EPA Codes:
D008

Description (Material, Type, Size, Color, etc.):
Leaded Glovebox Gloves

How the Output is Generated:
Generated During Change Out Of Glovebox Gloves As Needed

Generation Rate:
Variable

How the Output is Managed:
Bagged Out And Placed In An IDC 341, 55-Gallon Drum In Room 114 (Satellite Collection Area)

Chemicals/Contaminants in or on the Output:
May Contain Traces Of Acids, Potassium Hydroxide Solutions, Lead From The Glove Lining

Characterization Rationale:
This output is line generated, but is always generated as TRU or low-level waste. According to process knowledge, and supported by analytical data (G910049, 93G0191), this output contains a hazardous constituent, lead, and exhibits a hazardous characteristic of TC toxicity under RCRA, and is designated as TRU-mixed waste or low-level, mixed waste. This output meets the definition of hazardous debris and can be treated by an appropriate technology in 40 CFR 268.45. The concentration-based treatment standard for lead, and the treatment standards for underlying hazardous constituents as defined in 40 CFR 268.48 must be met for treatment residue(s) prior to land disposal. The underlying hazardous constituents associated with this output are listed in Appendix E.

WASTE STREAM AND RESIDUE DESCRIPTION AND CHARACTERIZATION

Process Number: 771-36-9
IDC/WFC: 331

Title: H-4 SUPPORT VACUUM SYSTEMS
Description: Ful-Flo Filters

- ▫ RCRA Hazardous
- ▪ RCRA Nonhazardous
- ▫ By Analytical Data
- ▪ By Process Knowledge
- ▫ LDR Regulated
- ▪ Not LDR Regulated
- ▫ Non-Wastewater
- ▫ Wastewater
- ▫ Product
- ▫ High Content Residue
- ▪ Low Content Residue
- ▪ Transuranic
- ▪ Low-Level
- ▫ Nonradioactive
- ▫ Source/Special Nuclear Materials
- ▫ Debris
- ▫ Fuel Blending
- ▫ Uncontained Gas
- ▫ RCRA Sample
- ▫ Recyclable Material
- ▫ Recycled/Reused
- ▫ TSCA Reg. Waste
- ▫ Evaluated in Another Process

EPA Codes:

Description (Material, Type, Size, Color, etc.):
Ful-Flo filters are polypropylene filters used to remove solids from liquid solutions.

How the Output is Generated:
Generated As Waste When A Filter Becomes Clogged With Solids

Generation Rate:
Variable

How the Output is Managed:
Bagged Out And Placed In An IDC 331, 55-Gallon Drum In Room 114

Chemicals/Contaminants in or on the Output:
Contains Acid Precipitates, Acids, Or KOH

Characterization Rationale:
This output is line generated, and can be a residue or a waste. According to process knowledge, the waste is contaminated with corrosive liquid, due to the presence of acid or potassium hydroxide. The waste cannot exhibit the characteristic of corrosivity because the waste is not liquid. It is designated as nonhazardous, low-content residue or a nonhazardous TRU or low-level waste.

THIS PAGE INTENTIONALLY LEFT BLANK

37.0 PROCESS 771-37: GENERAL BUILDING WASTE (NON-RMMA)

Routine operations in areas of Building 771 in a non-Radioactive Materials Management Area require the use of operating materials, fluorescent bulbs, and materials and equipment from the warehouse. Figure 37.1 shows the inputs, process flow, and outputs associated with General Building Waste (Non-Radioactive Materials Management Area).

Operating materials include Kimwipes, tape, plastic bags, latex gloves, KW detergent, plastic bottles and plastic sheets. These materials are used in decontamination and general maintenance and operation of the building. Metals include banding from received equipment, scrap metal, small tools, and wire used in various operations. Materials and equipment are received from the warehouse and other areas on plant site in support of general building operations. Packaging materials are usually included with these items. Water is used with Kimwipes and detergent in cleanup activities in all areas of the building. Spilled liquids are cleaned up with absorbent materials. Spilled mercury is cleaned up using a mercury spill kit. Wood is used for scaffolding and other general purposes.

Dry and wet combustibles, sand, concrete, blacktop, insulation (nonasbestos), light metal, plastic, wood, and nonhazardous alkaline batteries are placed in waste containers for Rocky Flats Environmental Technology Site landfill disposal. Hazardous liquid and solid waste/excess chemicals are to be placed in an appropriate satellite collection area or 90 day accumulation area to be determined. Nonhazardous liquid and solid waste/excess chemicals are placed in appropriate waste containers. Process Table 771-37 presents the outputs associated with General Building Waste (Non-Radioactive Materials Management Area) and provides their dispositions and hazardous character.

PADC-93-01525 (6.A)

AutoCAD 12, File Name: 771-37

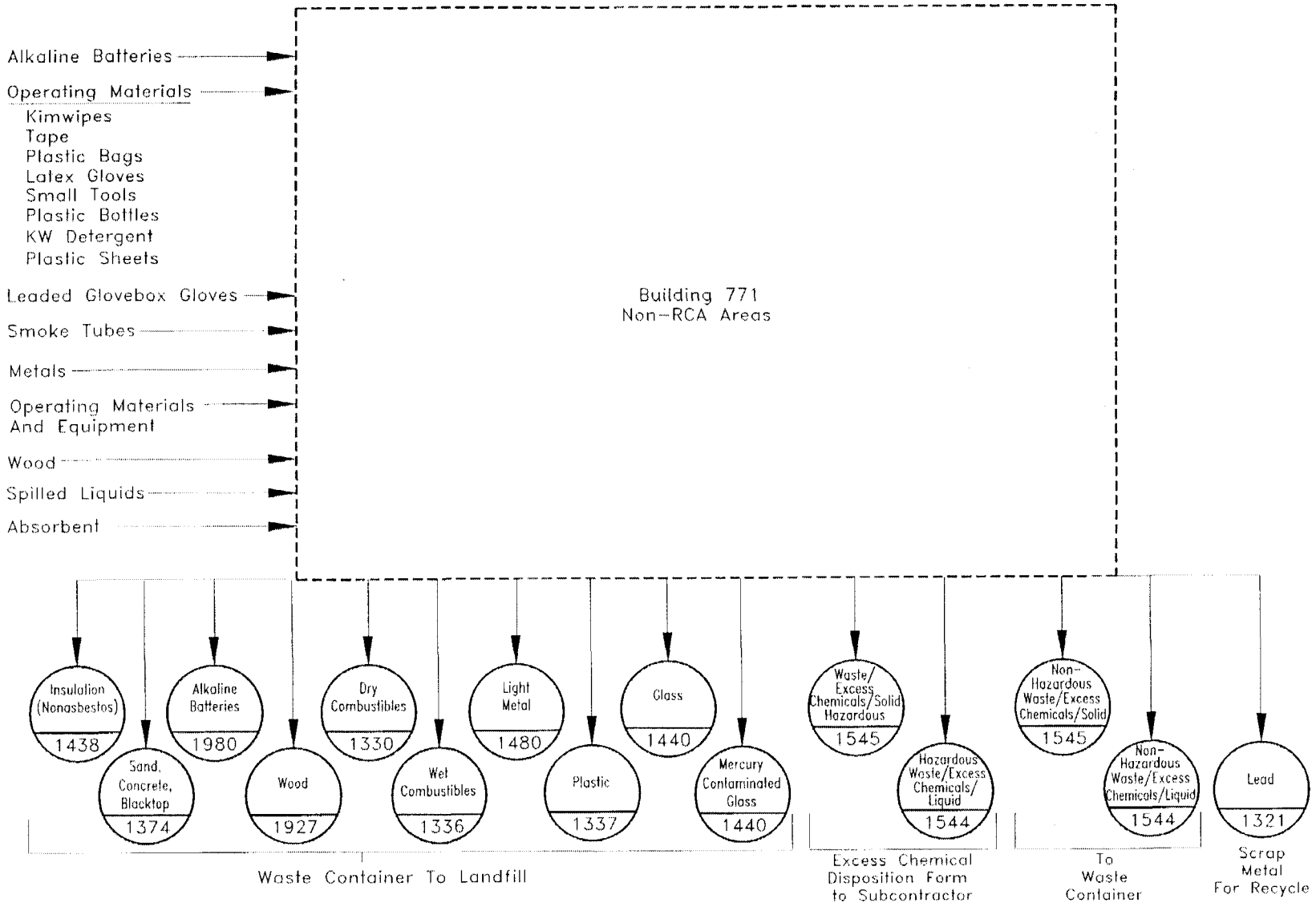

FIGURE 37.1

Rocky Flats Environmental Technology Site Waste Stream & Residue Identification & Characterization	BUILDING 771/PROCESS 37 GENERAL BUILDING WASTE (NON-RCA)	Task	By	Date
		Designed	W. Eakins	03/18/93
		Drawn	B. Crawford	02/09/95
		Checked	J. Schoen	04/28/98

PROCESS 771-37 GENERAL BUILDING WASTE (NON-RMMA)

Process Number	IDC/ WFC No.	CCCs RCRA Reg. Const.	CCCs Non-RCRA Reg. Const.	Comp. Codes	Description RCRA Reg. Chemical Constituents: Non-RCRA Reg. Chemical Constituents:	Collection	LDR Codes	RCRA Haz. Waste	RCRA-Land Disposal Restricted (Part 268)	Wastewater/Non-Wastewater: Debris/Non-Debris: Subcategory:	EPA Codes
771-37-1	1330	00	00	NA	Dry Combustibles RCRA Reg. Chemical Constituents: None Non-RCRA Reg. Chemical Constituents: None	55-Gallon Drum		No	No		
771-37-2	1336	00	8788	NA	Wet Combustibles RCRA Reg. Chemical Constituents: None Non-RCRA Reg. Chemical Constituents: Soap (Liquid) Water	55-Gallon Drum		No	No		

Process Number	IDC/ WFC No.	CCCs RCRA Reg. Const.	CCCs Non-RCRA Reg. Const.	Comp. Codes	Description RCRA Reg. Chemical Constituents: Non-RCRA Reg. Chemical Constituents:	Collection	LDR Codes	RCRA Haz. Waste	RCRA-Land Disposal Restricted (Part 268)	Wastewater/Non-Wastewater: Debris/Non-Debris: Subcategory:	EPA Codes
771-37-3	1480	00	00	NA	Light Metal RCRA Reg. Chemical Constituents: None Non-RCRA Reg. Chemical Constituents: None	55-Gallon Drums		No	No		
771-37-5	1337	00	00	NA	Plastic RCRA Reg. Chemical Constituents: None Non-RCRA Reg. Chemical Constituents: None	55-Gallon Drums		No	No		

Process Number	IDC/ WFC No.	CCCs RCRA Reg. Const.	CCCs Non-RCRA Reg. Const.	Comp. Codes	Description RCRA Reg. Chemical Constituents: Non-RCRA Reg. Chemical Constituents:	Collection	LDR Codes	RCRA Haz. Waste	RCRA-Land Disposal Restricted (Part 268)	Wastewater/Non-Wastewater: Debris/Non-Debris: Subcategory:	EPA Codes
771-37-9	1980	00	00	NA	Alkaline Batteries RCRA Reg. Chemical Constituents: None Non-RCRA Reg. Chemical Constituents: None	Waste Container		No	No		
771-37-10	1927	00	00	NA	Wood RCRA Reg. Chemical Constituents: None Non-RCRA Reg. Chemical Constituents: None	Waste Container		No	No		

Process Number	IDC/ WFC No.	CCCs RCRA Reg. Const.	CCCs Non-RCRA Reg. Const.	Comp. Codes	Description RCRA Reg. Chemical Constituents: Non-RCRA Reg. Chemical Constituents:	Collection	LDR Codes	RCRA Haz. Waste	RCRA-Land Disposal Restricted (Part 268)	Wastewater/Non-Wastewater: Debris/Non-Debris: Subcategory:	EPA Codes
771-37-15	1440	00	00	NA	Glass RCRA Reg. Chemical Constituents: None Non-RCRA Reg. Chemical Constituents: None	Waste Container		No	No		
771-37-16	1321	24	00	NA	Lead Metal RCRA Reg. Chemical Constituents: Lead Non-RCRA Reg. Chemical Constituents: None	55-Gallon Drum Pending Recycle	NR	Yes	No Not Regulated		D008

Process Number	IDC/ WFC No.	CCCs RCRA Reg. Const.	CCCs Non-RCRA Reg. Const.	Comp. Codes	Description RCRA Reg. Chemical Constituents: Non-RCRA Reg. Chemical Constituents:	Collection	LDR Codes	RCRA Haz. Waste	RCRA-Land Disposal Restricted (Part 268)	Wastewater/Non-Wastewater: Debris/Non-Debris: Subcategory:	EPA Codes
771-37-17	1438	00	00	NA	Insulation (Nonasbestos) RCRA Reg. Chemical Constituents: None Non-RCRA Reg. Chemical Constituents: None	Waste Container To Landfill		No	No		
771-37-18	1374	00	00	NA	Sand, Concrete, Blacktop RCRA Reg. Chemical Constituents: None Non-RCRA Reg. Chemical Constituents: None	Waste Container To Landfill		No	No		

Process Number	IDC/ WFC No.	CCCs RCRA Reg. Const.	CCCs Non-RCRA Reg. Const.	Comp. Codes	Description RCRA Reg. Chemical Constituents: Non-RCRA Reg. Chemical Constituents:	Collection	LDR Codes	RCRA Haz. Waste	RCRA-Land Disposal Restricted (Part 268)	Wastewater/Non-Wastewater: Debris/Non-Debris: Subcategory:	EPA Codes
771-37-19	1544	**	00	??	Waste/Excess Chemicals - Liquid (Hazardous) RCRA Reg. Chemical Constituents: Chemical constituents vary and will be characterized on a case-by-case basis. Non-RCRA Reg. Chemical Constituents: None	To Offsite Contractor With Excess Chemical Disposition Form	RA	Yes	Yes Requires Analysis		See Rationa
771-37-20	1545	**	00	??	Waste/Excess Chemicals - Solid (Hazardous) RCRA Reg. Chemical Constituents: Chemical constituents vary and will be characterized on a case-by-case basis. Non-RCRA Reg. Chemical Constituents: None	To Offsite Contractor With Excess Chemical Disposition Form	RA NWW	Yes	Yes Requires Analysis	Non-Wastewater	See Ration

Process Number	IDC/ WFC No.	CCCs RCRA Reg. Const.	CCCs Non-RCRA Reg. Const.	Comp. Codes	Description RCRA Reg. Chemical Constituents: Non-RCRA Reg. Chemical Constituents:	Collection	LDR Codes	RCRA Haz. Waste	RCRA-Land Disposal Restricted (Part 268)	Wastewater/Non-Wastewater: Debris/Non-Debris: Subcategory:	EPA Codes
771-37-21	1545	00	**	NA	Waste/Excess Chemicals - Solid (Nonhazardous) RCRA Reg. Chemical Constituents: None Non-RCRA Reg. Chemical Constituents: Chemical constituents vary and will be characterized on a case-by-case basis.	To Offsite Contractor With Excess Chemical Disposition Form		No	No		
771-37-22	1544	00	**	??	Waste/Excess Chemicals - Liquid (Nonhazardous) RCRA Reg. Chemical Constituents: None Non-RCRA Reg. Chemical Constituents: Chemical constituents vary and will be characterized on a case-by-case basis.	To Offsite Contractor With Excess Chemical Disposition Form		No	No		

Process Number	IDC/ WFC No.	CCCs RCRA Reg. Const.	CCCs Non-RCRA Reg. Const.	Comp. Codes	Description RCRA Reg. Chemical Constituents: Non-RCRA Reg. Chemical Constituents:	Collection	LDR Codes	RCRA Haz. Waste	RCRA-Land Disposal Restricted (Part 268)	Wastewater/Non-Wastewater: Debris/Non-Debris: Subcategory:	EPA Codes
771-37-25	1440	26	00	NA	Mercury Contaminated Glass RCRA Reg. Chemical Constituents: Mercury Non-RCRA Reg. Chemical Constituents: None	90-Day Collection Area	MS NWW HG2	Yes	No Meets Treatment Standards See Rationale	Non-Wastewater Mercury/Hi-Inorganic	D009

WASTE STREAM AND RESIDUE DESCRIPTION AND CHARACTERIZATION

Process Number: 771-37-1 **Title:** GENERAL BUILDING WASTE (NON-RMMA)
IDC/WFC: 1330 **Description:** Dry Combustibles

- ☐ RCRA Hazardous
- ■ RCRA Nonhazardous
- ☐ By Analytical Data
- ■ By Process Knowledge
- ☐ LDR Regulated
- ■ Not LDR Regulated
- ☐ Non-Wastewater
- ☐ Wastewater
- ☐ Product
- ☐ High Content Residue
- ☐ Low Content Residue
- ☐ Transuranic
- ☐ Low-Level
- ■ Nonradioactive
- ☐ Source/Special Nuclear Materials
- ☐ Debris
- ☐ Fuel Blending
- ☐ Uncontained Gas
- ☐ RCRA Sample
- ☐ Recyclable Material
- ☐ Recycled/Reused
- ☐ TSCA Reg. Waste
- ☐ Evaluated in Another Process

EPA Codes:

Description (Material, Type, Size, Color, etc.):
Kimwipes, Latex Gloves, Tape

How the Output is Generated:
Routine Cleanup And Building Operations

Generation Rate:
Variable

How the Output is Managed:
Placed In A Waste Container For Landfill Disposal

Chemicals/Contaminants in or on the Output:
None

Characterization Rationale:
According to process knowledge, this output contains no RCRA hazardous constituents and exhibits no RCRA hazardous characteristics. It is known that no radioactive material is introduced into this output, and it is a nonhazardous, nonradioactive waste.

WASTE STREAM AND RESIDUE DESCRIPTION AND CHARACTERIZATION

Process Number: 771-37-2 **Title:** GENERAL BUILDING WASTE (NON-RMMA)
IDC/WFC: 1336 **Description:** Wet Combustibles

- ☐ RCRA Hazardous
- ■ RCRA Nonhazardous
- ☐ By Analytical Data
- ■ By Process Knowledge
- ☐ LDR Regulated
- ■ Not LDR Regulated
- ☐ Non-Wastewater
- ☐ Wastewater
- ☐ Product
- ☐ High Content Residue
- ☐ Low Content Residue
- ☐ Transuranic
- ☐ Low-Level
- ■ Nonradioactive
- ☐ Source/Special Nuclear Materials
- ☐ Debris
- ☐ Fuel Blending
- ☐ Uncontained Gas
- ☐ RCRA Sample
- ☐ Recyclable Material
- ☐ Recycled/Reused
- ☐ TSCA Reg. Waste
- ☐ Evaluated in Another Process

EPA Codes:

Description (Material, Type, Size, Color, etc.):
Kimwipes, Latex Surgeon's Gloves, And Tape Containing Cleaning Solutions And Spilled Liquids

How the Output is Generated:
Routine Cleanup And Building Operations

Generation Rate:
Variable

How the Output is Managed:
Placed In A Waste Container For Landfill Disposal

Chemicals/Contaminants in or on the Output:
None

Characterization Rationale:
According to process knowledge, this output contains no RCRA hazardous constituents and exhibits no RCRA hazardous characteristics. It is known that no radioactive material is introduced into this output, and it is a nonhazardous, nonradioactive waste.

WASTE STREAM AND RESIDUE DESCRIPTION AND CHARACTERIZATION

Process Number: 771-37-3 **Title:** GENERAL BUILDING WASTE (NON-RMMA)
IDC/WFC: 1480 **Description:** Light Metal

- ☐ RCRA Hazardous
- ■ RCRA Nonhazardous
- ☐ By Analytical Data
- ■ By Process Knowledge
- ☐ LDR Regulated
- ■ Not LDR Regulated
- ☐ Non-Wastewater
- ☐ Wastewater
- ☐ Product
- ☐ High Content Residue
- ☐ Low Content Residue
- ☐ Transuranic
- ☐ Low-Level
- ■ Nonradioactive
- ☐ Source/Special Nuclear Materials
- ☐ Debris
- ☐ Fuel Blending
- ☐ Uncontained Gas
- ☐ RCRA Sample
- ☐ Recyclable Material
- ☐ Recycled/Reused
- ☐ TSCA Reg. Waste
- ☐ Evaluated in Another Process

EPA Codes:

Description (Material, Type, Size, Color, etc.):
Small Tools, Scrap Metal, Metal Utensils, Do Not Include Electronic Parts In The Waste Stream, Unless Approved By Waste Technical Support

How the Output is Generated:
Routine Operation Of Building 771

Generation Rate:
Variable

How the Output is Managed:
Placed In A Waste Container For Landfill Disposal

Chemicals/Contaminants in or on the Output:
None

Characterization Rationale:
According to process knowledge, this output contains no RCRA hazardous constituents and exhibits no RCRA hazardous characteristics. It is known that no radioactive material is introduced into this output, and it is a nonhazardous, nonradioactive waste.

WASTE STREAM AND RESIDUE DESCRIPTION AND CHARACTERIZATION

Process Number: 771-37-5 **Title:** GENERAL BUILDING WASTE (NON-RMMA)
IDC/WFC: 1337 **Description:** Plastic

- ▫ RCRA Hazardous
- ▪ RCRA Nonhazardous
- ▫ By Analytical Data
- ▪ By Process Knowledge
- ▫ LDR Regulated
- ▪ Not LDR Regulated
- ▫ Non-Wastewater
- ▫ Wastewater
- ▫ Product
- ▫ High Content Residue
- ▫ Low Content Residue
- ▫ Transuranic
- ▫ Low-Level
- ▪ Nonradioactive
- ▫ Source/Special Nuclear Materials
- ▫ Debris
- ▫ Fuel Blending
- ▫ Uncontained Gas
- ▫ RCRA Sample
- ▫ Recyclable Material
- ▫ Recycled/Reused
- ▫ TSCA Reg. Waste
- ▫ Evaluated in Another Process

EPA Codes:

Description (Material, Type, Size, Color, etc.):
Plastic Bags, Plastic Sheets, Packaging Material, Bottles, Includes Expired Bagout Plastic

How the Output is Generated:
Routine Operation And Cleanup Of Building 771, Expiration Date Assigned To Bags Is Exceeded Prior To Bags Being Used

Generation Rate:
Variable

How the Output is Managed:
Placed In A Waste Container For Landfill Disposal

Chemicals/Contaminants in or on the Output:
None

Characterization Rationale:
According to process knowledge, this output contains no RCRA hazardous constituents and exhibits no RCRA hazardous characteristics. It is known that no radioactive material is introduced into this output, and it is a nonhazardous, nonradioactive waste.

WASTE STREAM AND RESIDUE DESCRIPTION AND CHARACTERIZATION

Process Number: 771-37-9 **Title:** GENERAL BUILDING WASTE (NON-RMMA)
IDC/WFC: 1980 **Description:** Alkaline Batteries

- ☐ RCRA Hazardous
- ■ RCRA Nonhazardous
- ■ By Analytical Data
- ■ By Process Knowledge
- ☐ LDR Regulated
- ■ Not LDR Regulated
- ☐ Non-Wastewater
- ☐ Wastewater
- ☐ Product
- ☐ High Content Residue
- ☐ Low Content Residue
- ☐ Transuranic
- ☐ Low-Level
- ■ Nonradioactive
- ☐ Source/Special Nuclear Materials
- ☐ Debris
- ☐ Fuel Blending
- ■ Uncontained Gas
- ☐ RCRA Sample
- ☐ Recyclable Material
- ☐ Recycled/Reused
- ☐ TSCA Reg. Waste
- ☐ Evaluated in Another Process

EPA Codes:

Description (Material, Type, Size, Color, etc.):
Alkaline Batteries

How the Output is Generated:
When Batteries Are Changed From Equipment

Generation Rate:
Variable

How the Output is Managed:
Placed In A Waste Container For Landfill Disposal

Chemicals/Contaminants in or on the Output:
None

Characterization Rationale:
According to process knowledge and supported by analytical data (Sample No. E901860, E901861), this output contains no RCRA hazardous constituents and exhibits no RCRA hazardous characteristics. It is known that no radioactive material is introduced into this output, and it is a nonhazardous, nonradioactive waste.

WASTE STREAM AND RESIDUE DESCRIPTION AND CHARACTERIZATION

Process Number: 771-37-10 **Title:** GENERAL BUILDING WASTE (NON-RMMA)
IDC/WFC: 1927 **Description:** Wood

- ☐ RCRA Hazardous
- ■ RCRA Nonhazardous
- ☐ By Analytical Data
- ■ By Process Knowledge
- ☐ LDR Regulated
- ■ Not LDR Regulated
- ☐ Non-Wastewater
- ☐ Wastewater
- ☐ Product
- ☐ High Content Residue
- ☐ Low Content Residue
- ☐ Transuranic
- ☐ Low-Level
- ■ Nonradioactive
- ☐ Source/Special Nuclear Materials
- ☐ Debris
- ☐ Fuel Blending
- ☐ Uncontained Gas
- ☐ RCRA Sample
- ☐ Recyclable Material
- ☐ Recycled/Reused
- ☐ TSCA Reg. Waste
- ☐ Evaluated in Another Process

EPA Codes:

Description (Material, Type, Size, Color, etc.):
Wood Waste

How the Output is Generated:
After Use In Building Scaffolds Or Other Uses

Generation Rate:
Variable

How the Output is Managed:
Placed In A Waste Container For Landfill Disposal

Chemicals/Contaminants in or on the Output:
None

Characterization Rationale:
According to process knowledge, this output contains no RCRA hazardous constituents and exhibits no RCRA hazardous characteristics. It is known that no radioactive material is introduced into this output, and it is a nonhazardous, nonradioactive waste.

WASTE STREAM AND RESIDUE DESCRIPTION AND CHARACTERIZATION

Process Number: 771-37-15 **Title:** GENERAL BUILDING WASTE (NON-RMMA)
IDC/WFC: 1440 **Description:** Glass

- ☐ RCRA Hazardous
- ■ RCRA Nonhazardous
- ☐ By Analytical Data
- ■ By Process Knowledge
- ☐ LDR Regulated
- ■ Not LDR Regulated
- ☐ Non-Wastewater
- ☐ Wastewater
- ☐ Product
- ☐ High Content Residue
- ☐ Low Content Residue
- ☐ Transuranic
- ☐ Low-Level
- ■ Nonradioactive
- ☐ Source/Special Nuclear Materials
- ☐ Debris
- ☐ Fuel Blending
- ☐ Uncontained Gas
- ☐ RCRA Sample
- ☐ Recyclable Material
- ☐ Recycled/Reused
- ☐ TSCA Reg. Waste
- ☐ Evaluated in Another Process

EPA Codes:

Description (Material, Type, Size, Color, etc.):
Smoke Tubes

How the Output is Generated:
After Use By RPTs For Respirator Fit Testing

Generation Rate:
Variable

How the Output is Managed:
Placed In A Waste Container For Landfill Disposal

Chemicals/Contaminants in or on the Output:
None

Characterization Rationale:
According to process knowledge, this output contains no RCRA hazardous constituents and exhibits no RCRA hazardous characteristics. It is known that no radioactive material is introduced into this output, and it is a nonhazardous, nonradioactive waste.

WASTE STREAM AND RESIDUE DESCRIPTION AND CHARACTERIZATION

Process Number: 771-37-16 **Title:** GENERAL BUILDING WASTE (NON-RMMA)
IDC/WFC: 1321 **Description:** Lead Metal

- ■ RCRA Hazardous
- □ RCRA Nonhazardous
- □ By Analytical Data
- ■ By Process Knowledge
- □ LDR Regulated
- ■ Not LDR Regulated
- □ Non-Wastewater
- □ Wastewater
- □ Product
- □ High Content Residue
- □ Low Content Residue
- □ Transuranic
- □ Low-Level
- ■ Nonradioactive
- □ Source/Special Nuclear Materials
- □ Debris
- □ Fuel Blending
- □ Uncontained Gas
- □ RCRA Sample
- ■ Recyclable Material
- □ Recycled/Reused
- □ TSCA Reg. Waste
- □ Evaluated in Another Process

EPA Codes:
D008

Description (Material, Type, Size, Color, etc.):
Lead Metal

How the Output is Generated:
During Maintenance Operations

Generation Rate:
Variable

How the Output is Managed:
Placed In 55-Gallon Drum As Scrap Metal For Recycling

Chemicals/Contaminants in or on the Output:
Lead

Characterization Rationale:
According to process knowledge, this scrap metal (lead) is a hazardous waste that is recycled and meets the definition of a recyclable material in section 261.6 and therefore is not subject to regulation under Parts 262 through 266 and Part 268, the land disposal restriction regulations. These materials are generated in a non-Radioactive Materials Management Area. This output has been designated a nonradioactive, hazardous waste that is recycled.

WASTE STREAM AND RESIDUE DESCRIPTION AND CHARACTERIZATION

Process Number: 771-37-17 **Title:** GENERAL BUILDING WASTE (NON-RMMA)
IDC/WFC: 1438 **Description:** Insulation (Nonasbestos)

- ▫ RCRA Hazardous
- ▪ RCRA Nonhazardous
- ▫ By Analytical Data
- ▪ By Process Knowledge
- ▫ LDR Regulated
- ▪ Not LDR Regulated
- ▫ Non-Wastewater
- ▫ Wastewater
- ▫ Product
- ▫ High Content Residue
- ▫ Low Content Residue
- ▫ Transuranic
- ▫ Low-Level
- ▪ Nonradioactive
- ▫ Source/Special Nuclear Materials
- ▫ Debris
- ▫ Fuel Blending
- ▫ Uncontained Gas
- ▫ RCRA Sample
- ▫ Recyclable Material
- ▫ Recycled/Reused
- ▫ TSCA Reg. Waste
- ▫ Evaluated in Another Process

EPA Codes:

Description (Material, Type, Size, Color, etc.):
Nonasbestos Insulation

How the Output is Generated:
Routine Maintenance And Custodial Operations

Generation Rate:
Variable

How the Output is Managed:
Placed In A Solid Waste Container For Disposal At The Rocky Flats Environmental Technology Site Landfill

Chemicals/Contaminants in or on the Output:
None

Characterization Rationale:
This insulation is nonline material generated in a non-Radioactive Materials Management Area. According to process knowledge, the output contains no RCRA hazardous constituents and exhibits no RCRA hazardous characteristics. It is designated as nonradioactive, nonhazardous waste.

WASTE STREAM AND RESIDUE DESCRIPTION AND CHARACTERIZATION

Process Number: 771-37-18 **Title:** GENERAL BUILDING WASTE (NON-RMMA)
IDC/WFC: 1374 **Description:** Sand, Concrete, Blacktop

- ☐ RCRA Hazardous
- ■ RCRA Nonhazardous
- ☐ By Analytical Data
- ■ By Process Knowledge
- ☐ LDR Regulated
- ■ Not LDR Regulated
- ☐ Non-Wastewater
- ☐ Wastewater
- ☐ Product
- ☐ High Content Residue
- ☐ Low Content Residue
- ☐ Transuranic
- ☐ Low-Level
- ■ Nonradioactive
- ☐ Source/Special Nuclear Materials
- ☐ Debris
- ☐ Fuel Blending
- ☐ Uncontained Gas
- ☐ RCRA Sample
- ☐ Recyclable Material
- ☐ Recycled/Reused
- ☐ TSCA Reg. Waste
- ☐ Evaluated in Another Process

EPA Codes:

Description (Material, Type, Size, Color, etc.):
Sand, Concrete, And Blacktop

How the Output is Generated:
Routine Maintenance Operations

Generation Rate:
Variable

How the Output is Managed:
Placed In A Solid Waste Container For Disposal At The Rocky Flats Environmental Technology Site Landfill

Chemicals/Contaminants in or on the Output:
None

Characterization Rationale:
This sand, concrete, and blacktop is nonline material generated in a non-Radioactive Materials Management Area. According to process knowledge, the output contains no RCRA hazardous constituents and exhibits no RCRA hazardous characteristics. It is designated a nonradioactive, nonhazardous waste.

WASTE STREAM AND RESIDUE DESCRIPTION AND CHARACTERIZATION

Process Number: 771-37-19 **Title:** GENERAL BUILDING WASTE (NON-RMMA)
IDC/WFC: 1544 **Description:** Waste/Excess Chemicals - Liquid (Hazardous)

- ■ RCRA Hazardous
- □ RCRA Nonhazardous
- □ By Analytical Data
- ■ By Process Knowledge
- ■ LDR Regulated
- □ Not LDR Regulated
- □ Non-Wastewater
- □ Wastewater
- □ Product
- □ High Content Residue
- □ Low Content Residue
- □ Transuranic
- □ Low-Level
- ■ Nonradioactive
- □ Source/Special Nuclear Materials
- □ Debris
- □ Fuel Blending
- □ Uncontained Gas
- ■ RCRA Sample
- □ Recyclable Material
- □ Recycled/Reused
- □ TSCA Reg. Waste
- □ Evaluated in Another Process

EPA Codes:
See Rationale

Description (Material, Type, Size, Color, etc.):
Hazardous Liquid Waste, Expired, Or Excess Chemicals

How the Output is Generated:
Waste/excess chemicals are generated due to discontinued use, (and not useable elsewhere), expired or off specification in some manner and therefore not useable.

Generation Rate:
Variable

How the Output is Managed:
Waste Regulatory Programs must be contacted and an excess chemical form must be filled out prior to final disposition of waste.

Chemicals/Contaminants in or on the Output:
Constituents Vary Depending On The Actual Waste/Excess Chemical

Characterization Rationale:
According to process knowledge, these liquid wastes/excess chemicals are characterized as hazardous. The EPA codes have not been identified because the waste/excess chemicals vary considerably in composition and characteristics; therefore, the appropriate codes must be assigned on a case-by-case basis. The chemical constituent code (**) is to be replaced by the actual numeric or alpha numeric constituent code on the drum traveller. The compatibility code is designated as "??" and is to be replaced by the appropriate code on a case-by-case basis. This output was generated in a non-Radioactive Materials Management Area and is therefore designated a nonradioactive, hazardous waste. An evaluation to determine if this output meets the LDR treatment standards defined in 40 CFR 268.40 will be made on a case-by-case basis.

WASTE STREAM AND RESIDUE DESCRIPTION AND CHARACTERIZATION

Process Number: 771-37-20 **Title:** GENERAL BUILDING WASTE (NON-RMMA)
IDC/WFC: 1545 **Description:** Waste/Excess Chemicals - Solid (Hazardous)

- ■ RCRA Hazardous
- □ RCRA Nonhazardous
- □ By Analytical Data
- ■ By Process Knowledge
- ■ LDR Regulated
- □ Not LDR Regulated
- ■ Non-Wastewater
- □ Wastewater
- □ Product
- □ High Content Residue
- □ Low Content Residue
- □ Transuranic
- □ Low-Level
- ■ Nonradioactive
- □ Source/Special Nuclear Materials
- □ Debris
- □ Fuel Blending
- □ Uncontained Gas
- □ RCRA Sample
- □ Recyclable Material
- □ Recycled/Reused
- □ TSCA Reg. Waste
- □ Evaluated in Another Process

EPA Codes:
See Rationale

Description (Material, Type, Size, Color, etc.):
Solid Waste/Excess Chemicals

How the Output is Generated:
Waste/excess chemicals are generated due to discontinued use, (and not useable elsewhere) expired or off-specification in some manner and therefore not useable.

Generation Rate:
Variable

How the Output is Managed:
Waste Regulatory Programs must be contacted and an excess chemical form must be filled out prior to final disposition of waste.

Chemicals/Contaminants in or on the Output:
Constituents Vary Depending On The Actual Waste/Excess Chemical

Characterization Rationale:
According to process knowledge, these solid waste/excess chemicals are characterized as hazardous. The EPA codes have not been identified because the waste/excess chemicals vary considerably in composition and characteristics, therefore, the appropriate codes must be assigned on a case-by-case bases. The chemical constituent code (**) is to be replaced by the actual numerical, or alphanumeric constituent code on the drum traveler. The compatibility code is designated as "??" and is to be replaced by the appropriate code on a case-by-case basis. This output was generated in a Radioactive Materials Management Area and is therefore designated a nonradioactive, hazardous waste. An evaluation to determine if this output meets the LDR treatment standards defined in 40 CFR 268.40 will be made on a case-by-case basis.

WASTE STREAM AND RESIDUE DESCRIPTION AND CHARACTERIZATION

Process Number: 771-37-21 **Title:** GENERAL BUILDING WASTE (NON-RMMA)
IDC/WFC: 1545 **Description:** Waste/Excess Chemicals - Solid (Nonhazardous)

- ☐ RCRA Hazardous
- ■ RCRA Nonhazardous
- ☐ By Analytical Data
- ■ By Process Knowledge
- ☐ LDR Regulated
- ■ Not LDR Regulated
- ☐ Non-Wastewater
- ☐ Wastewater
- ☐ Product
- ☐ High Content Residue
- ☐ Low Content Residue
- ☐ Transuranic
- ☐ Low-Level
- ■ Nonradioactive
- ☐ Source/Special Nuclear Materials
- ☐ Debris
- ☐ Fuel Blending
- ☐ Uncontained Gas
- ☐ RCRA Sample
- ☐ Recyclable Material
- ☐ Recycled/Reused
- ☐ TSCA Reg. Waste
- ☐ Evaluated in Another Process

EPA Codes:

Description (Material, Type, Size, Color, etc.):
Nonhazardous Solid Waste, Expired, Or Excess Chemicals

How the Output is Generated:
Waste/excess solid chemicals are generated due to discontinued use (and not useable elsewhere on plantsite), expired or off-specification in some manner and therefore not useable.

Generation Rate:
Variable

How the Output is Managed:
Waste Regulatory Programs must be contacted and an excess chemical form must be filled out prior to final disposition of waste.

Chemicals/Contaminants in or on the Output:
Constituents Vary Depending On The Actual Waste/Excess Chemical

Characterization Rationale:
According to process knowledge, these solid waste/excess chemicals are characterized as nonhazardous. The chemical constituent code (**) is to be replaced by the actual numeric or alphanumeric constituent code on the drum traveller. This output was generated in a non-Radioactive Material Management Area and is therefore designated a nonradioactive, nonhazardous waste.

WASTE STREAM AND RESIDUE DESCRIPTION AND CHARACTERIZATION

Process Number: 771-37-22 **Title:** GENERAL BUILDING WASTE (NON-RMMA)
IDC/WFC: 1544 **Description:** Waste/Excess Chemicals - Liquid (Nonhazardous)

- ▫ RCRA Hazardous
- ▪ RCRA Nonhazardous
- ▫ By Analytical Data
- ▪ By Process Knowledge
- ▫ LDR Regulated
- ▪ Not LDR Regulated
- ▫ Non-Wastewater
- ▫ Wastewater
- ▫ Product
- ▫ High Content Residue
- ▫ Low Content Residue
- ▫ Transuranic
- ▫ Low-Level
- ▪ Nonradioactive
- ▫ Source/Special Nuclear Materials
- ▫ Debris
- ▫ Fuel Blending
- ▫ Uncontained Gas
- ▫ RCRA Sample
- ▫ Recyclable Material
- ▫ Recycled/Reused
- ▫ TSCA Reg. Waste
- ▫ Evaluated in Another Process

EPA Codes:

Description (Material, Type, Size, Color, etc.):
Nonhazardous Liquid Waste, Expired, Or Excess Chemicals

How the Output is Generated:
Waste/excess chemicals are generated due to the discontinued use (and not useable elsewhere on plantsite), expired, or off-specification in some manner and therefore unusable.

Generation Rate:
Variable

How the Output is Managed:
Waste Regulatory Programs must be contacted and an excess chemical form must be filled out prior to final disposition of waste.

Chemicals/Contaminants in or on the Output:
Constituents Vary Depending On The Actual Waste/Excess Chemical

Characterization Rationale:
According to process knowledge, these liquid waste/excess chemicals are characterized as nonhazardous. The chemical constituent code (**) is to be replaced by the actual numeric or alphanumeric constituent code on the drum traveller. The compatibility code is designated as "??" and is to be replaced by the appropriate code on a case-by-case basis. This output was generated in a non-Radioactive Material Management Area and is therefore designated a nonradioactive, nonhazardous waste.

WASTE STREAM AND RESIDUE DESCRIPTION AND CHARACTERIZATION

Process Number: 771-37-25 **Title:** GENERAL BUILDING WASTE (NON-RMMA)
IDC/WFC: 1440 **Description:** Mercury Contaminated Glass

- ■ RCRA Hazardous
- □ RCRA Nonhazardous
- □ By Analytical Data
- ■ By Process Knowledge
- □ LDR Regulated
- ■ Not LDR Regulated
- ■ Non-Wastewater
- □ Wastewater
- □ Product
- □ High Content Residue
- □ Low Content Residue
- □ Transuranic
- □ Low-Level
- ■ Nonradioactive
- □ Source/Special Nuclear Materials
- □ Debris
- □ Fuel Blending
- □ Uncontained Gas
- □ RCRA Sample
- □ Recyclable Material
- □ Recycled/Reused
- □ TSCA Reg. Waste
- □ Evaluated in Another Process

EPA Codes:
D009

Description (Material, Type, Size, Color, etc.):
Absorbed Mercury And Glass

How the Output is Generated:
During Mercury Cleanup

Generation Rate:
Variable

How the Output is Managed:
90-Day Collection Area

Chemicals/Contaminants in or on the Output:
Mercury

Characterization Rationale:
This output is the result of elemental mercury being amalgamated with sulfur, copper, zinc or nickel. It is unlikely that the amalgamation process is 99.9996 percent efficient (the efficiency required in order for this output to not exhibit the characteristic of toxicity for mercury) and therefore, this output is characterized as a nonradioactive, hazardous waste. However, amalgamation is the specified treatment technology for this waste in 40 CFR 268.40 and, therefore, this output meets LDR treatment standards.

THIS PAGE INTENTIONALLY LEFT BLANK

38.0 PROCESS 771-38: RADIATION INSTRUMENTATION

The Radiation Instrumentation Process, located in Rooms 166 and 166B, involves the maintenance of radiation monitoring equipment from Building 771. Various calibration equipment is used to adjust alarms, air monitors, and contamination control equipment. Figure 38.1 shows the inputs, process flow, and outputs associated with Radiation Instrumentation.

Criticality alarms and selective alpha air monitors (SAAMs) are generally taken to Rooms 166 and 166B for repair, if necessary. In rare cases, this equipment is repaired in place. All alarms and equipment are decontaminated prior to removal to Rooms 166 and 166B.

The Health Physics Instrumentation Group maintains all Alpha-mets and Combos. When screen assemblies (Mylar and cardboard) are torn, they are replaced. The defective screen assemblies are sent to the Health Physics Instrumentation Process in Building 881 for repair.

Materials used for maintenance and repair of the alarms, air monitors, and probes include various electronic components such as circuit boards, resistors, detectors, and transistors. Metal parts, consisting of frames and housings, plastic parts, wire, vinyl tape, O-rings, bulbs, fuses, and alkaline batteries are also used to maintain the equipment. Repaired Alpha-met and combo probes are received from the Health and Physics Instrumentation Process in Building 881. Equipment is cleaned with Kimwipes and occasionally small amounts of isopropyl alcohol. Paper is used for administrative tasks associated with equipment maintenance.

Repaired alarms, air monitors, and contamination control equipment are returned to their users. Electronic components are placed in a satellite collection area. Light metal, dry combustibles, plastics, batteries, and bulbs and fuses are placed in 55-gallon drums. Process Table 771-38 presents the outputs associated with Radiation Instrumentation and provides their dispositions and hazardous character.

AutoCAD 11, File Name: 771-38

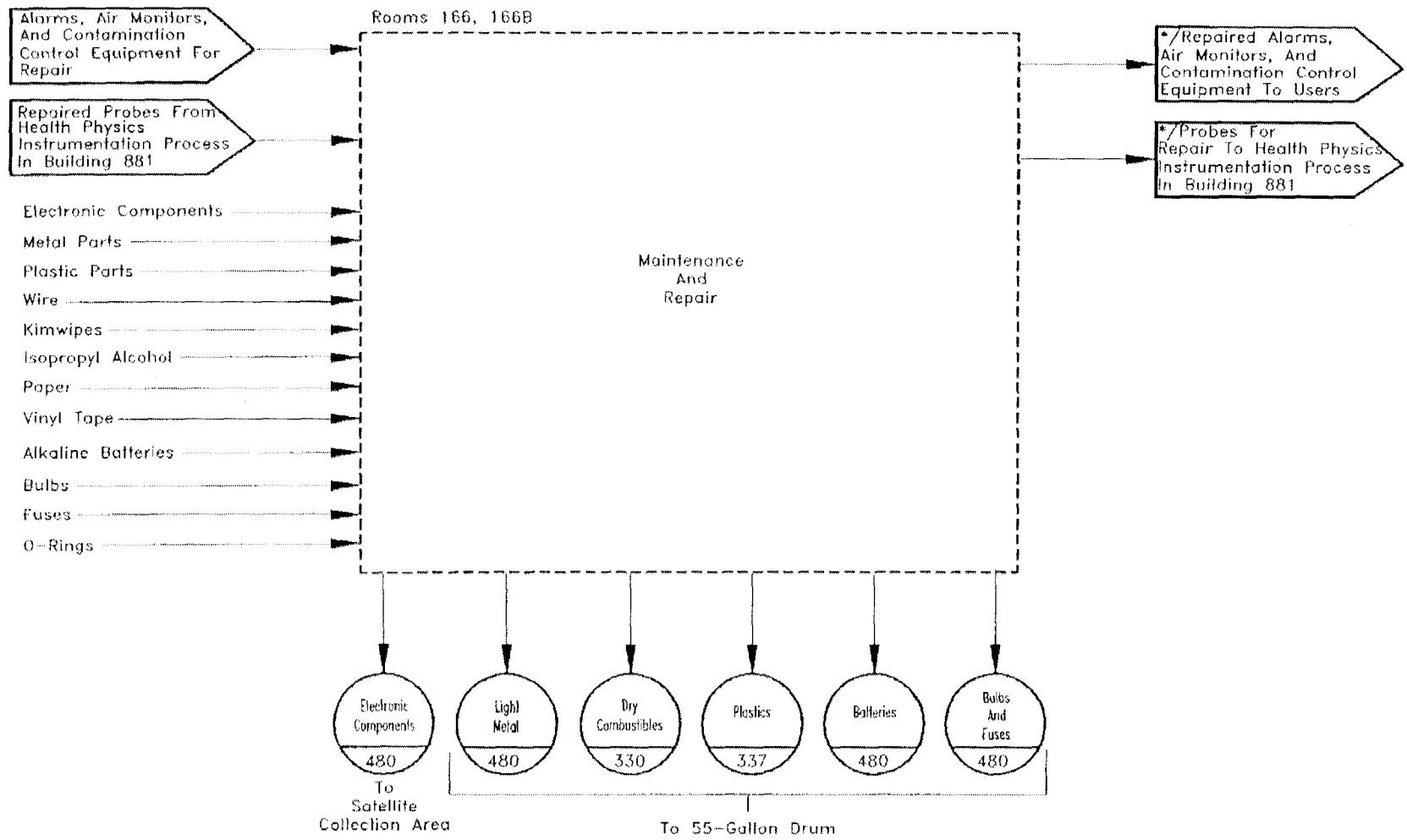

*Not A Solid Waste

FIGURE 38.1

Rocky Flats Environmental Technology Site Waste Stream & Residue Identification & Characterization	BUILDING 771/PROCESS 38 RADIATION INSTRUMENTATION	Task	By	Date
		Designed	W. Eakins	03/10/93
		Drawn	R. Nisely	06/12/96
		Checked	J. Schoen	06/12/96

PROCESS 771-38 RADIATION INSTRUMENTATION

Process Number	IDC/ WFC No.	CCCs RCRA Reg. Const.	CCCs Non-RCRA Reg. Const.	Comp. Codes	Description RCRA Reg. Chemical Constituents: Non-RCRA Reg. Chemical Constituents:	Collection	LDR Codes	RCRA Haz. Waste	RCRA-Land Disposal Restricted (Part 268)	Wastewater/Non-Wastewater: Debris/Non-Debris: Subcategory:	EPA Codes
771-38-1	480	2436	00	NA	Electronic Components RCRA Reg. Chemical Constituents: Lead Silver Non-RCRA Reg. Chemical Constituents: None	Satellite Collection Area	RT D PB1	Yes	Yes Does Not Meet Treatment Standards	Debris Lead	D008, D011
771-38-2	480	00	00	NA	Light Metal RCRA Reg. Chemical Constituents: None Non-RCRA Reg. Chemical Constituents: None	55-Gallon Drum		No	No		

Process Number	IDC/ WFC No.	CCCs RCRA Reg. Const.	CCCs Non-RCRA Reg. Const.	Comp. Codes	Description RCRA Reg. Chemical Constituents: Non-RCRA Reg. Chemical Constituents:	Collection	LDR Codes	RCRA Haz. Waste	RCRA-Land Disposal Restricted (Part 268)	Wastewater/Non-Wastewater: Debris/Non-Debris: Subcategory:	EPA Codes
771-38-3	330	00	00	NA	Dry Combustibles RCRA Reg. Chemical Constituents: None Non-RCRA Reg. Chemical Constituents: None	55-Gallon Drum		No	No		
771-38-4	480	00	00	NA	Alkaline Batteries RCRA Reg. Chemical Constituents: None Non-RCRA Reg. Chemical Constituents: None	55-Gallon Drum		No	No		

Process Number	IDC/ WFC No.	CCCs RCRA Reg. Const.	CCCs Non-RCRA Reg. Const.	Comp. Codes	Description RCRA Reg. Chemical Constituents: Non-RCRA Reg. Chemical Constituents:	Collection	LDR Codes	RCRA Haz. Waste	RCRA-Land Disposal Restricted (Part 268)	Wastewater/Non-Wastewater: Debris/Non-Debris: Subcategory:	EPA Codes
771-38-5	337	00	00	NA	Plastics RCRA Reg. Chemical Constituents: None Non-RCRA Reg. Chemical Constituents: None	55-Gallon Drum		No	No		
771-38-6	480	00	00	NA	Bulbs And Fuses RCRA Reg. Chemical Constituents: None Non-RCRA Reg. Chemical Constituents: None	55-Gallon Drum		No	No		

WASTE STREAM AND RESIDUE DESCRIPTION AND CHARACTERIZATION

Process Number: 771-38-1
IDC/WFC: 480

Title: RADIATION INSTRUMENTATION
Description: Electronic Components

- ■ RCRA Hazardous
- □ RCRA Nonhazardous
- □ By Analytical Data
- ■ By Process Knowledge
- ■ LDR Regulated
- □ Not LDR Regulated
- □ Non-Wastewater
- □ Wastewater
- □ Product
- □ High Content Residue
- □ Low Content Residue
- □ Transuranic
- ■ Low-Level
- □ Nonradioactive
- □ Source/Special Nuclear Materials
- ■ Debris
- □ Fuel Blending
- □ Uncontained Gas
- □ RCRA Sample
- □ Recyclable Material
- □ Recycled/Reused
- □ TSCA Reg. Waste
- □ Evaluated in Another Process

EPA Codes:
D008, D011

Description (Material, Type, Size, Color, etc.):
Circuit Boards, Resistors, Capacitors, Detectors, Transistors, And Other Electronic Components, May Contain Lead, Tin, Or Silver Solder

How the Output is Generated:
When Defective Circuit Boards Are Replaced

Generation Rate:
5 Gallons Yearly

How the Output is Managed:
Placed In Satellite Collection Area

Chemicals/Contaminants in or on the Output:
Lead, Silver

Characterization Rationale:
This output is nonline generated in a Radioactive Materials Management Area. According to process knowledge, this output exhibits the characteristic of toxicity due to the presence of lead and silver. This output has been designated a low-level, mixed waste. This output meets the definition of hazardous debris and can be treated by an appropriate technology in 40 CFR 268.45. The concentration-based treatment standard for lead, silver, and cadmium, and the treatment standards for underlying hazardous constituents as defined in 40 CFR 268.48 must be met for treatment residue(s) prior to land disposal. The underlying hazardous constituents associated with this output are listed in Appendix E.

Process Number: 771-38-2 **Title:** RADIATION INSTRUMENTATION
IDC/WFC: 480 **Description:** Light Metal

- ▫ RCRA Hazardous
- ▪ RCRA Nonhazardous
- ▫ By Analytical Data
- ▪ By Process Knowledge
- ▫ LDR Regulated
- ▪ Not LDR Regulated
- ▫ Non-Wastewater
- ▫ Wastewater
- ▫ Product
- ▫ High Content Residue
- ▫ Low Content Residue
- ▫ Transuranic
- ▪ Low-Level
- ▫ Nonradioactive
- ▫ Source/Special Nuclear Materials
- ▫ Debris
- ▫ Fuel Blending
- ▫ Uncontained Gas
- ▫ RCRA Sample
- ▫ Recyclable Material
- ▫ Recycled/Reused
- ▫ TSCA Reg. Waste
- ▫ Evaluated in Another Process

EPA Codes:

Description (Material, Type, Size, Color, etc.):
Aluminum Or Stainless Steel Frames And Housings, Which Include Plastic Components, Copper, Aluminum, And Tin Wire

How the Output is Generated:
From Equipment Maintenance

Generation Rate:
55 Gallons Yearly

How the Output is Managed:
Placed In A 55-Gallon Drum For IDC 480

Chemicals/Contaminants in or on the Output:
None

Characterization Rationale:
This output is nonline generated, in a Radioactive Materials Management Area and is known by the generator to always be low-level waste. According to process knowledge, the output contains no RCRA hazardous constituents and exhibits no RCRA hazardous characteristics. It is designated as low-level, nonhazardous waste.

WASTE STREAM AND RESIDUE DESCRIPTION AND CHARACTERIZATION

Process Number: 771-38-3 **Title:** RADIATION INSTRUMENTATION
IDC/WFC: 330 **Description:** Dry Combustibles

- ☐ RCRA Hazardous
- ■ RCRA Nonhazardous
- ☐ By Analytical Data
- ■ By Process Knowledge
- ☐ LDR Regulated
- ■ Not LDR Regulated
- ☐ Non-Wastewater
- ☐ Wastewater
- ☐ Product
- ☐ High Content Residue
- ☐ Low Content Residue
- ☐ Transuranic
- ■ Low-Level
- ☐ Nonradioactive
- ☐ Source/Special Nuclear Materials
- ☐ Debris
- ☐ Fuel Blending
- ☐ Uncontained Gas
- ☐ RCRA Sample
- ☐ Recyclable Material
- ☐ Recycled/Reused
- ☐ TSCA Reg. Waste
- ☐ Evaluated in Another Process

EPA Codes:

Description (Material, Type, Size, Color, etc.):
Kimwipes, Paper, Mylar, And Tape, Small Amounts Of Isopropyl Alcohol Which Evaporate Prior To Disposal May Be Used On The Kimwipes

How the Output is Generated:
Kimwipes From Cleaning Instruments, Mylar And Tape Are Removed From Probes, Paper Is Generated From Administrative Tasks

Generation Rate:
55 Gallons Yearly

How the Output is Managed:
Placed In A 55-Gallon Drum For IDC 330

Chemicals/Contaminants in or on the Output:
None

Characterization Rationale:
This output is nonline generated, in a Radioactive Materials Management Area and is known by the generator to always be low-level waste. According to process knowledge, the output contains no RCRA hazardous constituents and exhibits no RCRA hazardous characteristics. It is designated as low-level, nonhazardous waste.

WASTE STREAM AND RESIDUE DESCRIPTION AND CHARACTERIZATION

Process Number: 771-38-4
IDC/WFC: 480

Title: RADIATION INSTRUMENTATION
Description: Alkaline Batteries

- ▫ RCRA Hazardous
- ▪ RCRA Nonhazardous
- ▫ By Analytical Data
- ▪ By Process Knowledge
- ▫ LDR Regulated
- ▪ Not LDR Regulated
- ▫ Non-Wastewater
- ▫ Wastewater
- ▫ Product
- ▫ High Content Residue
- ▫ Low Content Residue
- ▫ Transuranic
- ▪ Low-Level
- ▫ Nonradioactive
- ▫ Source/Special Nuclear Materials
- ▫ Debris
- ▫ Fuel Blending
- ▫ Uncontained Gas
- ▫ RCRA Sample
- ▫ Recyclable Material
- ▫ Recycled/Reused
- ▫ TSCA Reg. Waste
- ▫ Evaluated in Another Process

EPA Codes:

Description (Material, Type, Size, Color, etc.):
Alkaline Batteries Used As The Power Supply For Alpha-mets And Combos

How the Output is Generated:
Routine Change Out Or Replacement

Generation Rate:
100 Gallons Yearly

How the Output is Managed:
Placed In A 55-Gallon Drum For IDC 480

Chemicals/Contaminants in or on the Output:
None

Characterization Rationale:
This output is nonline generated, in a Radioactive Materials Management Area and is known by the generator to always be low-level waste. According to process knowledge, the output contains no RCRA hazardous constituents and exhibits no RCRA hazardous characteristics. It is designated as low-level, nonhazardous waste.

WASTE STREAM AND RESIDUE DESCRIPTION AND CHARACTERIZATION

Process Number: 771-38-5 **Title:** RADIATION INSTRUMENTATION
IDC/WFC: 337 **Description:** Plastics

- ▫ RCRA Hazardous
- ▪ RCRA Nonhazardous
- ▫ By Analytical Data
- ▪ By Process Knowledge
- ▫ LDR Regulated
- ▪ Not LDR Regulated
- ▫ Non-Wastewater
- ▫ Wastewater
- ▫ Product
- ▫ High Content Residue
- ▫ Low Content Residue
- ▫ Transuranic
- ▪ Low-Level
- ▫ Nonradioactive
- ▫ Source/Special Nuclear Materials
- ▫ Debris
- ▫ Fuel Blending
- ▫ Uncontained Gas
- ▫ RCRA Sample
- ▫ Recyclable Material
- ▫ Recycled/Reused
- ▫ TSCA Reg. Waste
- ▫ Evaluated in Another Process

EPA Codes:

Description (Material, Type, Size, Color, etc.):
Small Plastic Parts, Meter Faces, Knobs, And Other Plastic Materials, Includes Neoprene O-rings

How the Output is Generated:
From Equipment Maintenance

Generation Rate:
1 Gallon Yearly

How the Output is Managed:
Placed In A 55-Gallon Drum For IDC 337

Chemicals/Contaminants in or on the Output:
None

Characterization Rationale:
This output is nonline generated, in a Radioactive Materials Management Area and is known by the generator to always be low-level waste. According to process knowledge, the output contains no RCRA hazardous constituents and exhibits no RCRA hazardous characteristics. It is designated as low-level, nonhazardous waste.

WASTE STREAM AND RESIDUE DESCRIPTION AND CHARACTERIZATION

Process Number: 771-38-6
IDC/WFC: 480

Title: RADIATION INSTRUMENTATION
Description: Bulbs And Fuses

- ▫ RCRA Hazardous
- ▪ RCRA Nonhazardous
- ▫ By Analytical Data
- ▪ By Process Knowledge
- ▫ LDR Regulated
- ▪ Not LDR Regulated
- ▫ Non-Wastewater
- ▫ Wastewater
- ▫ Product
- ▫ High Content Residue
- ▫ Low Content Residue
- ▫ Transuranic
- ▪ Low-Level
- ▫ Nonradioactive
- ▫ Source/Special Nuclear Materials
- ▫ Debris
- ▫ Fuel Blending
- ▫ Uncontained Gas
- ▫ RCRA Sample
- ▫ Recyclable Material
- ▫ Recycled/Reused
- ▫ TSCA Reg. Waste
- ▫ Evaluated in Another Process

EPA Codes:

Description (Material, Type, Size, Color, etc.):
Plastic Or Glass Bulbs And Fuses With Metal Bases And Contacts

How the Output is Generated:
When The Parts Are Replaced During Equipment Maintenance

Generation Rate:
5 Gallons Yearly

How the Output is Managed:
Placed In A 55-Gallon Drum For IDC 480

Chemicals/Contaminants in or on the Output:
None

Characterization Rationale:
This output is nonline generated, in a Radioactive Materials Management Area and is known by the generator to always be low-level waste. According to process knowledge, the output contains no RCRA hazardous constituents and exhibits no RCRA hazardous characteristics. It is designated as low-level, nonhazardous waste.

THIS PAGE INTENTIONALLY LEFT BLANK

39.0 PROCESS 771-39 SOLUTION PROCESSING

Solution Processing Process activities include solutions in process system low points that were generated and left in place prior to curtailment of production in 1989. These solutions are drained from system low points and collected in 4-liter narrow-mouth bottles or into the Portable Vacuum Liquid Transfer System (PVLTS) by Production Operations under the Liquids Removal Team. Incompatible solutions are retained in the 4-liter bottles for sampling, characterization and appropriate disposition. Compatible solutions are off-loaded from the PVLTS and/or bottles into one of two annular temporary storage tanks D544 or D545 for commingling. The solution contained in the annular tanks will be drained when the tanks are full into 4-liter bottles in Line 13/14 for sampling, characterization and appropriate disposition. Other solutions will be generated from RCRA closure activities. Water drained from fire suppression systems, water drained from water walls, incidental waters and solutions drained from low points (e.g., piping and tanks) that have a neutral pH. Figure 39.1 shows the inputs, process flow, and outputs associated with the Solution Processing Process.

Dry combustibles, wet combustibles, used glovebox HEPA and Ful-Flo filters, glass, light metal and plastics are placed in the appropriate 55-gallon drum. Leaded glovebox gloves are placed in the satellite collection area in Room 114.

Filled solution bottles are sampled in accordance with 1-10000 EWQA, Section 1.6.1, Addendum 13, Sampling and Analysis Plan for Building 771 Tanks. Process Table 771-39 presents the outputs associated with Solution Processing and provides their dispositions and hazardous character.

AutoCAD 12, File Name: 771-39

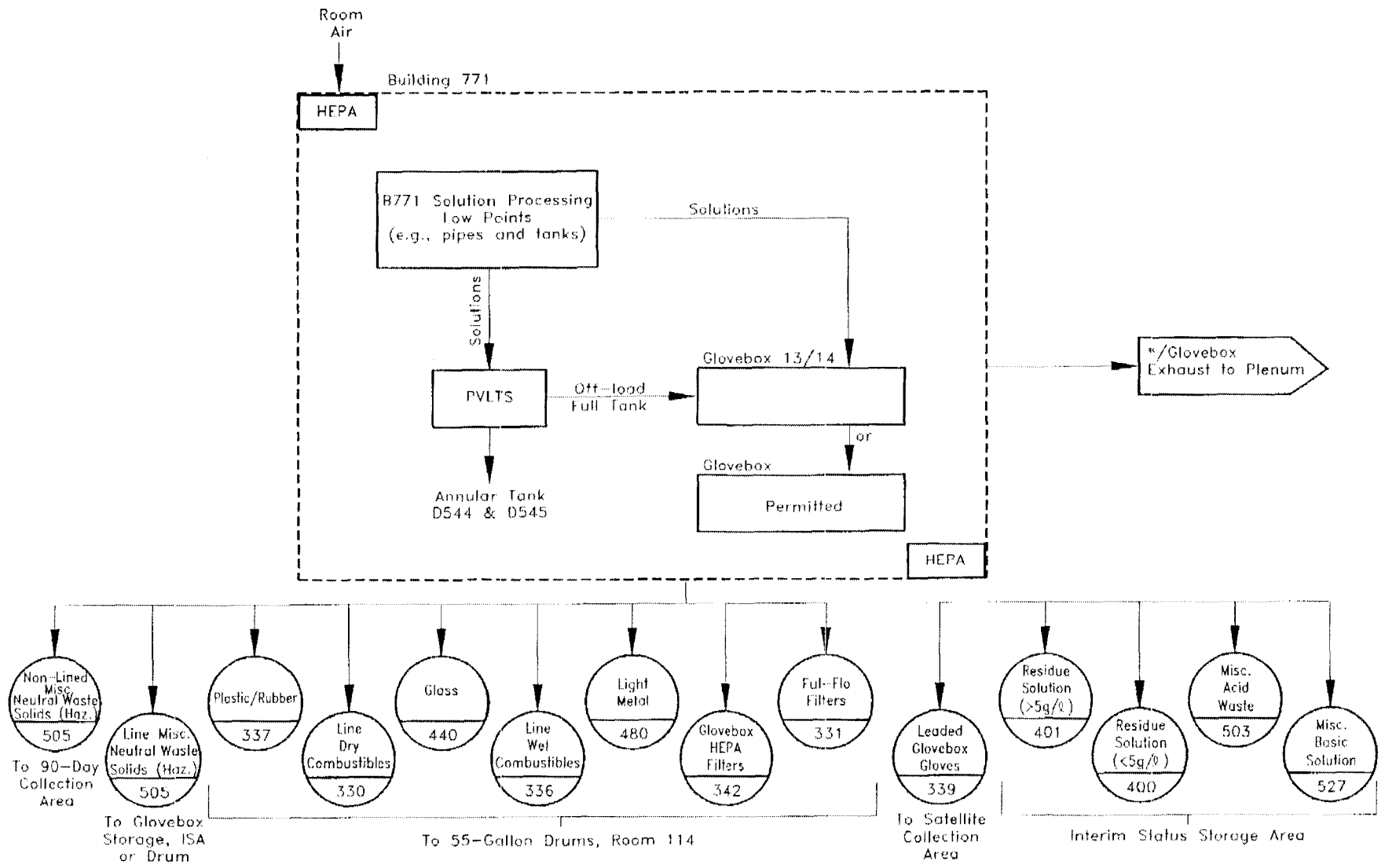

FIGURE 39.1

* Not a Solid Waste

Rocky Flats Environmental Technology Site Waste Stream & Residue Identification & Characterization	BUILDING 771/PROCESS 39 SOLUTION PROCESSING	Task	By	Date
		Designed	J. Schoen	06/09/97
		Drawn	C. Stadt	06/11/97
		Checked	J. Schoen	08/05/98

PROCESS 771-39 SOLUTION PROCESSING

Process Number	IDC/ WFC No.	CCCs RCRA Reg. Const.	CCCs Non-RCRA Reg. Const.	Comp. Codes	Description RCRA Reg. Chemical Constituents: Non-RCRA Reg. Chemical Constituents:	Collection	LDR Codes	RCRA Haz. Waste	RCRA-Land Disposal Restricted (Part 268)	Wastewater/Non-Wastewater: Debris/Non-Debris: Subcategory:	EPA Codes
771-39-1	331	00	00	NA	Ful-Flo Filters RCRA Reg. Chemical Constituents: None Non-RCRA Reg. Chemical Constituents: None	Placed In A 55-Gallon Drum		No	No		
771-39-2	342	00	02	NA	Glovebox Filters, Acid Contaminated RCRA Reg. Chemical Constituents: None Non-RCRA Reg. Chemical Constituents: Acid - General	55-Gallon Drum Then To Drum Counter		No	No		

Process Number	IDC/ WFC No.	CCCs RCRA Reg. Const.	CCCs Non-RCRA Reg. Const.	Comp. Codes	Description RCRA Reg. Chemical Constituents: Non-RCRA Reg. Chemical Constituents:	Collection	LDR Codes	RCRA Haz. Waste	RCRA-Land Disposal Restricted (Part 268)	Wastewater/Non-Wastewater: Debris/Non-Debris: Subcategory:	EPA Codes
771-39-3	330	00	00	NA	Dry Combustibles Line Or Nonline RCRA Reg. Chemical Constituents: None Non-RCRA Reg. Chemical Constituents: None	55-Gallon Drum		No	No		
771-39-4	400	??	??	1B	Miscellaneous Residue Solutions <5 g/ℓ RCRA Reg. Chemical Constituents: Constituents vary and will be determined on a case-by-case basis. Non-RCRA Reg. Chemical Constituents: Constituents vary and will be determined on a case-by-case basis.	Collected In 4-Liter Bottles Or PVLTS In An Interim Status Storage Area	RT WW C1	Yes	Yes Does Not Meet Treatment Standards	Wastewater Corrosive/Non-CW	D002, See Rationale

Process Number	IDC/ WFC No.	CCCs RCRA Reg. Const.	CCCs Non-RCRA Reg. Const.	Comp. Codes	Description RCRA Reg. Chemical Constituents: Non-RCRA Reg. Chemical Constituents:	Collection	LDR Codes	RCRA Haz. Waste	RCRA-Land Disposal Restricted (Part 268)	Wastewater/Non-Wastewater: Debris/Non-Debris: Subcategory:	EPA Codes
771-39-5	336	00	02	NA	Wet Combustibles Line Generated RCRA Reg. Chemical Constituents: None Non-RCRA Reg. Chemical Constituents: Acid - General	55-Gallon Drum		No	No		
771-39-6	336	00	02	NA	Wet Combustibles RCRA Reg. Chemical Constituents: None Non-RCRA Reg. Chemical Constituents: Acid - General	55-Gallon Drum		No	No		

Process Number	IDC/ WFC No.	CCCs RCRA Reg. Const.	CCCs Non-RCRA Reg. Const.	Comp. Codes	Description RCRA Reg. Chemical Constituents: Non-RCRA Reg. Chemical Constituents:	Collection	LDR Codes	RCRA Haz. Waste	RCRA-Land Disposal Restricted (Part 268)	Wastewater/Non-Wastewater: Debris/Non-Debris: Subcategory:	EPA Codes
771-39-7	440	00	00	NA	Glass RCRA Reg. Chemical Constituents: None Non-RCRA Reg. Chemical Constituents: None	55-Gallon Drum		No	No		
771-39-8	339	24	00	NA	Leaded Glovebox Gloves RCRA Reg. Chemical Constituents: Lead Non-RCRA Reg. Chemical Constituents: None	Satellite Collection Area	RT D PB1	Yes	Yes Does Not Meet Treatment Standards	Debris Lead	D008

Process Number	IDC/ WFC No.	CCCs RCRA Reg. Const.	CCCs Non-RCRA Reg. Const.	Comp. Codes	Description RCRA Reg. Chemical Constituents: Non-RCRA Reg. Chemical Constituents:	Collection	LDR Codes	RCRA Haz. Waste	RCRA-Land Disposal Restricted (Part 268)	Wastewater/Non-Wastewater: Debris/Non-Debris: Subcategory:	EPA Codes
771-39-9	337	00	00	NA	Plastics (Line Generated) RCRA Reg. Chemical Constituents: None Non-RCRA Reg. Chemical Constituents: None	55-Gallon Drum		No	No		
771-39-10	480	00	00	NA	Light Metal (Line Generated) RCRA Reg. Chemical Constituents: None Non-RCRA Reg. Chemical Constituents: None	55-Gallon Drum		No	No		

Process Number	IDC/ WFC No.	CCCs RCRA Reg. Const.	CCCs Non-RCRA Reg. Const.	Comp. Codes	Description RCRA Reg. Chemical Constituents: Non-RCRA Reg. Chemical Constituents:	Collection	LDR Codes	RCRA Haz. Waste	RCRA-Land Disposal Restricted (Part 268)	Wastewater/Non-Wastewater: Debris/Non-Debris: Subcategory:	EPA Codes
771-39-11	401	??	??	1B	Miscellaneous Residue Solutions >5 g/ℓ RCRA Reg. Chemical Constituents: Constituents vary and will be determined on a case-by-case basis. Non-RCRA Reg. Chemical Constituents: Constituents vary and will be determined on a case-by-case basis.	Collected In 4-Liter Bottles Or PVLTS In An Interim Status Storage Area	RT WW C1	Yes	Yes Does Not Meet Treatment Standards	Wastewater Corrosive/Non-CW	D002, See Rationale
771-39-12	527	05	00	1A	Miscellaneous Basic Waste Solutions RCRA Reg. Chemical Constituents: Base Non-RCRA Reg. Chemical Constituents: None	Collected In 4-Liter Bottles Or PVLTS In An Interim Status Or Permitted Storage Area	RA WW N/A	Yes	Yes Requires Analysis	Wastewater No Applicable Subcategory	D002

Process Number	IDC/ WFC No.	CCCs RCRA Reg. Const.	CCCs Non-RCRA Reg. Const.	Comp. Codes	Description RCRA Reg. Chemical Constituents: Non-RCRA Reg. Chemical Constituents:	Collection	LDR Codes	RCRA Haz. Waste	RCRA-Land Disposal Restricted (Part 268)	Wastewater/Non-Wastewater: Debris/Non-Debris: Subcategory:	EPA Codes
771-39-13	505	00	00	3A	Miscellaneous Neutral Waste Solutions (Nonline) RCRA Reg. Chemical Constituents: None Non-RCRA Reg. Chemical Constituents: None	Collected In Drums Or 4-Liter Bottles		No	No		
771-39-14	503	02	00	1B	Miscellaneous Acid Waste Solutions RCRA Reg. Chemical Constituents: Acid - General Non-RCRA Reg. Chemical Constituents: None	Collected In 4-Liter Bottles Or PVLTS In An Interim Status Or Permitted Storage Area	RA WW N/A	Yes	Yes Requires Analysis	Wastewater No Applicable Subcategory	D002

Process Number	IDC/ WFC No.	CCCs RCRA Reg. Const.	CCCs Non-RCRA Reg. Const.	Comp. Codes	Description RCRA Reg. Chemical Constituents: Non-RCRA Reg. Chemical Constituents:	Collection	LDR Codes	RCRA Haz. Waste	RCRA-Land Disposal Restricted (Part 268)	Wastewater/Non-Wastewater: Debris/Non-Debris: Subcategory:	EPA Codes
771-39-15	505	2412	00	3A	Miscellaneous Neutral Waste Solutions (Line, Haz) RCRA Reg. Chemical Constituents: Lead Chromium Non-RCRA Reg. Chemical Constituents: None	Collected In Drums Or 4-Liter Bottles In Interim Storage Area Or Permitted Glovebox	RT WW PB1	Yes	Yes Does Not Meet Treatment Standards	Wastewater Lead	D007, D008
771-39-16	505	1224	00	3A	Miscellaneous Neutral Waste Solutions (Nonline, Haz) RCRA Reg. Chemical Constituents: Chromium Lead Non-RCRA Reg. Chemical Constituents: None	Collected In Drums Managed In A 90-Day Collection Area	RT WW PB1	Yes	Yes Does Not Meet Treatment Standards	Wastewater Lead	D007, D008

WASTE STREAM AND RESIDUE DESCRIPTION AND CHARACTERIZATION

Process Number: 771-39-1 **Title:** SOLUTION PROCESSING
IDC/WFC: 331 **Description:** Ful-Flo Filters

- ▫ RCRA Hazardous
- ▪ RCRA Nonhazardous
- ▫ By Analytical Data
- ▪ By Process Knowledge
- ▫ LDR Regulated
- ▪ Not LDR Regulated
- ▫ Non-Wastewater
- ▫ Wastewater
- ▫ Product
- ▫ High Content Residue
- ▪ Low Content Residue
- ▪ Transuranic
- ▪ Low-Level
- ▫ Nonradioactive
- ▫ Source/Special Nuclear Materials
- ▫ Debris
- ▫ Fuel Blending
- ▫ Uncontained Gas
- ▫ RCRA Sample
- ▫ Recyclable Material
- ▫ Recycled/Reused
- ▫ TSCA Reg. Waste
- ▫ Evaluated in Another Process

EPA Codes:

Description (Material, Type, Size, Color, etc.):
Acid Contaminated Ful-Flo Filters

How the Output is Generated:
During Filter Changeout

Generation Rate:
Variable

How the Output is Managed:
Placed In A 55-Gallon Drum, The Acid Filters Are Rinsed To Remove HNO_3 Residue And Dried

Chemicals/Contaminants in or on the Output:
Acid

Characterization Rationale:
Ful-Flo filters are line generated and can be a residue or a waste. Although the output is contaminated with corrosive liquid, the output cannot exhibit the characteristic of corrosivity because the waste form is not liquid. According to process knowledge, Ful-Flo filters do not exhibit D007 the characteristic code for chromium. This output is designated as a nonhazardous, low-content residue, TRU waste or low-level waste. The level or radioactivity to be determined at assay.

WASTE STREAM AND RESIDUE DESCRIPTION AND CHARACTERIZATION

Process Number: 771-39-2
IDC/WFC: 342

Title: SOLUTION PROCESSING
Description: Glovebox Filters, Acid Contaminated

- ▫ RCRA Hazardous
- ▪ RCRA Nonhazardous
- ▫ By Analytical Data
- ▪ By Process Knowledge
- ▫ LDR Regulated
- ▪ Not LDR Regulated
- ▫ Non-Wastewater
- ▫ Wastewater
- ▫ Product
- ▫ High Content Residue
- ▪ Low Content Residue
- ▪ Transuranic
- ▪ Low-Level
- ▫ Nonradioactive
- ▫ Source/Special Nuclear Materials
- ▫ Debris
- ▫ Fuel Blending
- ▫ Uncontained Gas
- ▫ RCRA Sample
- ▫ Recyclable Material
- ▫ Recycled/Reused
- ▫ TSCA Reg. Waste
- ▫ Evaluated in Another Process

EPA Codes:

Description (Material, Type, Size, Color, etc.):
Acid Contaminated HEPA Filters

How the Output is Generated:
During Filter Changeout

Generation Rate:
Variable

How the Output is Managed:
HEPA filters are disposed of in 55-gallon drums. Full drums are taken to the drum counter.

Chemicals/Contaminants in or on the Output:
Acid

Characterization Rationale:
This output is line generated as TRU waste. According to process knowledge, this output contains no RCRA hazardous constituents and exhibits no RCRA hazardous characteristics. Although the output is contaminated by acid vapors and a small amount of nitrate salt crystals can form on filters, this waste form is not considered to ba an oxidizer and does not exhibit the characteristic of corrosivity. The level of radioactivity will be determined by assay.

WASTE STREAM AND RESIDUE DESCRIPTION AND CHARACTERIZATION

Process Number: 771-39-3
IDC/WFC: 330

Title: SOLUTION PROCESSING
Description: Dry Combustibles Line Or Nonline

- ▫ RCRA Hazardous
- ▪ RCRA Nonhazardous
- ▫ By Analytical Data
- ▪ By Process Knowledge
- ▫ LDR Regulated
- ▪ Not LDR Regulated
- ▫ Non-Wastewater
- ▫ Wastewater
- ▫ Product
- ▫ High Content Residue
- ▪ Low Content Residue
- ▪ Transuranic
- ▪ Low-Level
- ▫ Nonradioactive
- ▫ Source/Special Nuclear Materials
- ▫ Debris
- ▫ Fuel Blending
- ▫ Uncontained Gas
- ▫ RCRA Sample
- ▫ Recyclable Material
- ▫ Recycled/Reused
- ▫ TSCA Reg. Waste
- ▫ Evaluated in Another Process

EPA Codes:

Description (Material, Type, Size, Color, etc.):
Dry combustibles may include paper, rags, wipes, etc.

How the Output is Generated:
During Tank Draining

Generation Rate:
Variable

How the Output is Managed:
Dry combustibles are placed in a 55-gallon drum in Room 114. Full drums are taken to the drum counter.

Chemicals/Contaminants in or on the Output:
None

Characterization Rationale:
This output is line or nonline generated in an RMMA. According to process knowledge, this output contains no RCRA hazardous constituents and exhibits no RCRA hazardous characteristics. This output can be a nonhazardous, low-content residue or a nonhazardous, transuranic or low-level waste. The level of radioactivity will be determined by assay of each collection container.

WASTE STREAM AND RESIDUE DESCRIPTION AND CHARACTERIZATION

Process Number: 771-39-4
IDC/WFC: 400

Title: SOLUTION PROCESSING
Description: Miscellaneous Residue Solutions <5 g/ℓ

- ■ RCRA Hazardous
- □ RCRA Nonhazardous
- □ By Analytical Data
- ■ By Process Knowledge
- ■ LDR Regulated
- □ Not LDR Regulated
- □ Non-Wastewater
- ■ Wastewater

- □ Product
- ■ High Content Residue
- ■ Low Content Residue
- ■ Transuranic
- ■ Low-Level
- □ Nonradioactive
- □ Source/Special Nuclear Materials
- □ Debris

- □ Fuel Blending
- □ Uncontained Gas
- □ RCRA Sample
- □ Recyclable Material
- ■ Recycled/Reused
- □ TSCA Reg. Waste
- □ Evaluated in Another Process

EPA Codes:
D002, See Rationale

Description (Material, Type, Size, Color, etc.):
Liquid HNO_3 From Processing System Low Points (e.g., Piping And Tanks)

How the Output is Generated:
Solution is drained from processing system low points (e.g., piping and tanks) and stored in 4-liter bottles or annular tanks.

Generation Rate:
Variable

How the Output is Managed:
Collected In 4-Liter Bottles or PVLTS In An Interim Status Storage Area

Chemicals/Contaminants in or on the Output:
Liquid HNO_3

Characterization Rationale:
By process knowledge, the miscellaneous residue solutions are characterized as hazardous for corrosivity. The EPA Codes have not been identified because the residue solutions vary considerably in composition and characterization. The miscellaneous residue solutions will be sampled and characterized individually as described in the Sampling and Analysis Plan, Addendum 13 (1-10000-EWQA-1.6.1) and the appropriate EPA Codes will be assigned at that time. The chemical constituent code (??) is to be replaced by the actual numerical or alphanumeric constituent code on the drum traveler. This output is line generated, low-content or high content, mixed residue or a low-level or TRU mixed waste. This output does not meet the LDR treatment standards defined in 40 CFR 268.40. The output must be deactivated to remove the characteristic(s) of corrosivity. No underlying hazardous constituents have been identified for this output. Therefore, this output will meet the LDR treatment standards following deactivation.

WASTE STREAM AND RESIDUE DESCRIPTION AND CHARACTERIZATION

Process Number: 771-39-5
IDC/WFC: 336

Title: SOLUTION PROCESSING
Description: Wet Combustibles Line Generated

- ☐ RCRA Hazardous
- ■ RCRA Nonhazardous
- ☐ By Analytical Data
- ■ By Process Knowledge
- ☐ LDR Regulated
- ■ Not LDR Regulated
- ☐ Non-Wastewater
- ☐ Wastewater
- ☐ Product
- ☐ High Content Residue
- ■ Low Content Residue
- ■ Transuranic
- ■ Low-Level
- ☐ Nonradioactive
- ☐ Source/Special Nuclear Materials
- ☐ Debris
- ☐ Fuel Blending
- ☐ Uncontained Gas
- ☐ RCRA Sample
- ☐ Recyclable Material
- ☐ Recycled/Reused
- ☐ TSCA Reg. Waste
- ☐ Evaluated in Another Process

EPA Codes:

Description (Material, Type, Size, Color, etc.):
Wet combustibles may include paper, rags, wipes, etc. contaminated with nitric acid.

How the Output is Generated:
Generated During Tank Draining Activities

Generation Rate:
Variable

How the Output is Managed:
Wet combustibles are disposed of in a 55-gallon Drum. Full drums are taken to the drum counter.

Chemicals/Contaminants in or on the Output:
None

Characterization Rationale:
This output is line generated in an RMMA. According to process knowledge, this output contains no RCRA hazardous constituents and exhibits no RCRA hazardous characteristics. This output can be a nonhazardous, low-content residue or a nonhazardous, transuranic or low-level waste. The level or radioactivity will be determined by assay. Although wipes are exposed to acid they are rinsed and dried and cannot exhibit the corrosive characteristic because they are in solid form.

WASTE STREAM AND RESIDUE DESCRIPTION AND CHARACTERIZATION

Process Number: 771-39-6 **Title:** SOLUTION PROCESSING
IDC/WFC: 336 **Description:** Wet Combustibles

- ▫ RCRA Hazardous
- ▪ RCRA Nonhazardous
- ▫ By Analytical Data
- ▪ By Process Knowledge
- ▫ LDR Regulated
- ▪ Not LDR Regulated
- ▫ Non-Wastewater
- ▫ Wastewater
- ▫ Product
- ▫ High Content Residue
- ▫ Low Content Residue
- ▫ Transuranic
- ▪ Low-Level
- ▫ Nonradioactive
- ▫ Source/Special Nuclear Materials
- ▫ Debris
- ▫ Fuel Blending
- ▫ Uncontained Gas
- ▫ RCRA Sample
- ▫ Recyclable Material
- ▫ Recycled/Reused
- ▫ TSCA Reg. Waste
- ▫ Evaluated in Another Process

EPA Codes:

Description (Material, Type, Size, Color, etc.):
Wipes Contaminated With Nitric Acid

How the Output is Generated:
During Tank Draining Activities To Wipe Up Any Excess Liquid

Generation Rate:
Variable

How the Output is Managed:
The wipes are rinsed and dried to remove the nitric acid. The combustibles are then placed in a 55-gallon drum.

Chemicals/Contaminants in or on the Output:
Wipes Contaminated With Nitric Acid

Characterization Rationale:
This output is nonline generated as low-level waste. According to process knowledge, this output contains no RCRA hazardous constituents and exhibits no RCRA characteristics. Although wipes are exposed to acid they are rinsed and dried and cannot exhibit the corrosive characteristic because they are in solid form. The output is nonhazardous, low-level waste and the level of radioactivity will be determined by assay.

WASTE STREAM AND RESIDUE DESCRIPTION AND CHARACTERIZATION

Process Number: 771-39-7 **Title:** SOLUTION PROCESSING
IDC/WFC: 440 **Description:** Glass

- ☐ RCRA Hazardous
- ■ RCRA Nonhazardous
- ☐ By Analytical Data
- ■ By Process Knowledge
- ☐ LDR Regulated
- ■ Not LDR Regulated
- ☐ Non-Wastewater
- ☐ Wastewater
- ☐ Product
- ☐ High Content Residue
- ■ Low Content Residue
- ■ Transuranic
- ■ Low-Level
- ☐ Nonradioactive
- ☐ Source/Special Nuclear Materials
- ☐ Debris
- ☐ Fuel Blending
- ☐ Uncontained Gas
- ☐ RCRA Sample
- ☐ Recyclable Material
- ☐ Recycled/Reused
- ☐ TSCA Reg. Waste
- ☐ Evaluated in Another Process

EPA Codes:

Description (Material, Type, Size, Color, etc.):
Glassware Or Any Glass Waste (Except For Leaded Glass) Generated During Tank Draining Activities

How the Output is Generated:
Through Replacement Or Breakage Of Glassware

Generation Rate:
Variable

How the Output is Managed:
Glass waste is disposed of in a 55-gallon drum in Room 114. Full drums are taken to the drum counter.

Chemicals/Contaminants in or on the Output:
Glass

Characterization Rationale:
This output is line generated and can be a residue or a waste. According to process knowledge, this output contains no RCRA hazardous constituents and exhibits no RCRA hazardous characteristics. This output can be a nonhazardous, low-content residue or a nonhazardous, transuranic or low-level waste. The level of radioactivity will be determined by assay of each collection container.

WASTE STREAM AND RESIDUE DESCRIPTION AND CHARACTERIZATION

Process Number: 771-39-8
IDC/WFC: 339

Title: SOLUTION PROCESSING
Description: Leaded Glovebox Gloves

- ■ RCRA Hazardous
- □ RCRA Nonhazardous
- ■ By Analytical Data
- □ By Process Knowledge
- ■ LDR Regulated
- □ Not LDR Regulated
- □ Non-Wastewater
- □ Wastewater
- □ Product
- □ High Content Residue
- □ Low Content Residue
- ■ Transuranic
- ■ Low-Level
- □ Nonradioactive
- □ Source/Special Nuclear Materials
- ■ Debris
- □ Fuel Blending
- □ Uncontained Gas
- □ RCRA Sample
- □ Recyclable Material
- □ Recycled/Reused
- □ TSCA Reg. Waste
- □ Evaluated in Another Process

EPA Codes:
D008

Description (Material, Type, Size, Color, etc.):
Leaded glovebox gloves are used for personnel protection and handling plutonium and plutonium containing materials.

How the Output is Generated:
The gloves are replaced when damaged or on an as-needed basis.

Generation Rate:
Variable

How the Output is Managed:
Leaded gloves are collected in a satellite collection area.

Chemicals/Contaminants in or on the Output:
Lead

Characterization Rationale:
This output is line generated as TRU waste. According to process knowledge and supported by analytical data (G910049, 93G0191), the output contains a hazardous constituent, lead, and exhibits a hazardous characteristic of TC toxicity under RCRA and is designated as a TRU or low-level, mixed waste. The output may be contaminated with acid, but cannot exhibit this characteristic because the gloves are rinsed and dried before disposal. This output meets the definition of hazardous debris and can be treated by an appropriate technology in 40 CFR 268.45. The concentration-based treatment standard for lead, and the treatment standards for underlying hazardous constituents as defined in 40 CFR 268.48 must be met for treatment residue(s) prior to land disposal. The underlying hazardous constituents associated with this output are listed in Appendix E.

WASTE STREAM AND RESIDUE DESCRIPTION AND CHARACTERIZATION

Process Number: 771-39-9
IDC/WFC: 337

Title: SOLUTION PROCESSING
Description: Plastics (Line Generated)

- ▫ RCRA Hazardous
- ▪ RCRA Nonhazardous
- ▫ By Analytical Data
- ▪ By Process Knowledge
- ▫ LDR Regulated
- ▪ Not LDR Regulated
- ▫ Non-Wastewater
- ▫ Wastewater
- ▫ Product
- ▫ High Content Residue
- ▪ Low Content Residue
- ▪ Transuranic
- ▫ Low-Level
- ▫ Nonradioactive
- ▫ Source/Special Nuclear Materials
- ▫ Debris
- ▫ Fuel Blending
- ▫ Uncontained Gas
- ▫ RCRA Sample
- ▫ Recyclable Material
- ▫ Recycled/Reused
- ▫ TSCA Reg. Waste
- ▫ Evaluated in Another Process

EPA Codes:

Description (Material, Type, Size, Color, etc.):
Plastic Bottles, Plastic Bags, Etc., Generated During Glovebox Operations

How the Output is Generated:
Generated During Glovebox Operations, When Tank Draining Occurs, Or During Movement Of Waste Containers In Or Out Of Glovebox

Generation Rate:
Variable

How the Output is Managed:
55-Gallon Drum

Chemicals/Contaminants in or on the Output:
Plastic Bottles, Plastic Bags, Etc.

Characterization Rationale:
This output is line generated and can be a low-content residue or a transuranic waste. According to process knowledge, no hazardous constituents are used in this process and the output contains no RCRA hazardous constituents and exhibits no RCRA hazardous characteristics. Therefore, the output can be a nonhazardous, low-content residue or a nonhazardous, transuranic waste. The level of radioactivity will be determined by assay of each container.

WASTE STREAM AND RESIDUE DESCRIPTION AND CHARACTERIZATION

Process Number: 771-39-10
IDC/WFC: 480

Title: SOLUTION PROCESSING
Description: Light Metal (Line Generated)

- ☐ RCRA Hazardous
- ■ RCRA Nonhazardous
- ☐ By Analytical Data
- ■ By Process Knowledge
- ☐ LDR Regulated
- ■ Not LDR Regulated
- ☐ Non-Wastewater
- ☐ Wastewater
- ☐ Product
- ☐ High Content Residue
- ■ Low Content Residue
- ■ Transuranic
- ■ Low-Level
- ☐ Nonradioactive
- ☐ Source/Special Nuclear Materials
- ☐ Debris
- ☐ Fuel Blending
- ☐ Uncontained Gas
- ☐ RCRA Sample
- ☐ Recyclable Material
- ☐ Recycled/Reused
- ☐ TSCA Reg. Waste
- ☐ Evaluated in Another Process

EPA Codes:

Description (Material, Type, Size, Color, etc.):
Light Metal Such As Tools And Metal Parts Generated During Tank Draining Activities

How the Output is Generated:
During Parts Replacement Or Breakage

Generation Rate:
Variable

How the Output is Managed:
Light metal is disposed of in 55-gallon drums. Full drum are taken to the drum counter.

Chemicals/Contaminants in or on the Output:
Metal Parts

Characterization Rationale:
This output is line generated and can be a residue or a waste. According to process knowledge, this output contains no RCRA hazardous constituents and exhibits no RCRA hazardous characteristics. This output can be a nonhazardous, low-content residue or a nonhazardous, transuranic or low-level waste. The level of radioactivity will be determined by assay.

WASTE STREAM AND RESIDUE DESCRIPTION AND CHARACTERIZATION

Process Number: 771-39-11
IDC/WFC: 401

Title: SOLUTION PROCESSING
Description: Miscellaneous Residue Solutions >5 g/ℓ

- ■ RCRA Hazardous
- □ RCRA Nonhazardous
- □ By Analytical Data
- ■ By Process Knowledge
- ■ LDR Regulated
- □ Not LDR Regulated
- □ Non-Wastewater
- ■ Wastewater
- □ Product
- ■ High Content Residue
- ■ Low Content Residue
- ■ Transuranic
- ■ Low-Level
- □ Nonradioactive
- □ Source/Special Nuclear Materials
- □ Debris
- □ Fuel Blending
- □ Uncontained Gas
- □ RCRA Sample
- □ Recyclable Material
- □ Recycled/Reused
- □ TSCA Reg. Waste
- □ Evaluated in Another Process

EPA Codes:
D002, See Rationale

Description (Material, Type, Size, Color, etc.):
Liquid HNO_3 From Processing System Low Points (e.g., Piping And Tanks)

How the Output is Generated:
Solution is drained from processing system low points (e.g., piping and tanks) and stored in 4-liter bottles or annular tanks.

Generation Rate:
Variable

How the Output is Managed:
Collected In 4-Liter Bottles Or PVLTS In An Interim Status Storage Area

Chemicals/Contaminants in or on the Output:
Liquid HNO_3

Characterization Rationale:
By process knowledge, the miscellaneous residue solutions are characterized as hazardous for corrosivity. The EPA Codes have not been identified because the residue solutions vary considerably in composition and characterization. The miscellaneous residue solutions will be sampled and characterized individually as described in the Sampling and Analysis Plan, Addendum 13 (1-10000-EWQA-1.6.1) and the appropriate EPA Codes will be assigned at that time. The chemical constituent code (??) is to be replaced by the actual numerical or alphanumeric constituent code on the drum traveler. This output is line generated, low-content or high-content, mixed residue or a low-level or TRU mixed waste. An evaluation to determine if this output meets the LDR treatment standards defined in 40 CFR 268.40 will be made on a case-by-case basis.

WASTE STREAM AND RESIDUE DESCRIPTION AND CHARACTERIZATION

Process Number: 771-39-12
IDC/WFC: 527

Title: SOLUTION PROCESSING
Description: Miscellaneous Basic Waste Solutions

- ■ RCRA Hazardous
- □ RCRA Nonhazardous
- □ By Analytical Data
- ■ By Process Knowledge
- ■ LDR Regulated
- □ Not LDR Regulated
- □ Non-Wastewater
- ■ Wastewater

- □ Product
- ■ High Content Residue
- ■ Low Content Residue
- □ Transuranic
- □ Low-Level
- □ Nonradioactive
- □ Source/Special Nuclear Materials
- □ Debris

- □ Fuel Blending
- □ Uncontained Gas
- □ RCRA Sample
- □ Recyclable Material
- □ Recycled/Reused
- □ TSCA Reg. Waste
- □ Evaluated in Another Process

EPA Codes:
D002

Description (Material, Type, Size, Color, etc.):
Miscellaneous Basic Waste From Process Lines And Tanks

How the Output is Generated:
Solution is drained from processing system low points (e.g. piping and tanks) and stored in 4-liter bottles or annular tanks.

Generation Rate:
Variable

How the Output is Managed:
Collected In 4-Liter Bottles Or Portable Vacuum Liquid Transfer System (PVLTS) In An Interim Status Or Permitted Storage Area

Chemicals/Contaminants in or on the Output:
Corrosive Miscellaneous Basic Solutions That Could Contain KOH Or NAOH And Other Basic Solutions
Radionuclides: Plutonium

Characterization Rationale:
According to process knowledge and supported by analytical data (ongoing), this output exhibits the RCRA characteristic of corrosivity. This output is line generated in a Radiological Area, and is characterized as a mixed high content or low content residue. This output does not meet the LDR treatment standards defined in 40 CFR 268.40. The output must be deactivated to remove the characteristic of corrosivity. No underlying hazardous constituents have been identified for this output. An evaluation to determine if the treatment residues meet LDR treatment standards defined in 40 CFR 268.40 will be made on a case-by-case basis.

WASTE STREAM AND RESIDUE DESCRIPTION AND CHARACTERIZATION

Process Number: 771-39-13 **Title:** SOLUTION PROCESSING
IDC/WFC: 505 **Description:** Miscellaneous Neutral Waste Solutions (Nonline)

- ☐ RCRA Hazardous
- ■ RCRA Nonhazardous
- ☐ By Analytical Data
- ■ By Process Knowledge
- ☐ LDR Regulated
- ■ Not LDR Regulated
- ☐ Non-Wastewater
- ☐ Wastewater
- ☐ Product
- ☐ High Content Residue
- ☐ Low Content Residue
- ☐ Transuranic
- ■ Low-Level
- ☐ Nonradioactive
- ☐ Source/Special Nuclear Materials
- ☐ Debris
- ☐ Fuel Blending
- ☐ Uncontained Gas
- ☐ RCRA Sample
- ☐ Recyclable Material
- ☐ Recycled/Reused
- ☐ TSCA Reg. Waste
- ☐ Evaluated in Another Process

EPA Codes:

Description (Material, Type, Size, Color, etc.):
Wash Water, Water Drained From Fire Suppression System, Water Wall Liquid, Miscellaneous Neutral Solutions

How the Output is Generated:
This output consists of wash water from RCRA closure activities from washing floors; water drained from fire suppression systems, water drained from water walls, incidental water from roof leaks and solution drained from low points (e.g. piping and tanks) that is neutral pH.

Generation Rate:
Variable

How the Output is Managed:
Collected In Drums Or 4-Liter Bottles

Chemicals/Contaminants in or on the Output:
Water from fire suppression system could contain ethylene glycol.
Radionuclides: Plutonium, Americium

Characterization Rationale:
This output is nonline generated in a Radioactive Materials Management Area, and is known by the generator to always be low-level waste. According to process knowledge, this output contains no RCRA hazardous constituents, and exhibits no RCRA hazardous characteristics. It is designated as low-level, nonhazardous waste.

WASTE STREAM AND RESIDUE DESCRIPTION AND CHARACTERIZATION

Process Number: 771-39-14
IDC/WFC: 503

Title: SOLUTION PROCESSING
Description: Miscellaneous Acid Waste Solutions

- ■ RCRA Hazardous
- □ RCRA Nonhazardous
- □ By Analytical Data
- ■ By Process Knowledge
- ■ LDR Regulated
- □ Not LDR Regulated
- □ Non-Wastewater
- ■ Wastewater

- □ Product
- ■ High Content Residue
- ■ Low Content Residue
- □ Transuranic
- □ Low-Level
- □ Nonradioactive
- □ Source/Special Nuclear Materials
- □ Debris

- □ Fuel Blending
- □ Uncontained Gas
- □ RCRA Sample
- □ Recyclable Material
- □ Recycled/Reused
- □ TSCA Reg. Waste
- □ Evaluated in Another Process

EPA Codes:
D002

Description (Material, Type, Size, Color, etc.):
Miscellaneous Acid Waste From Process Lines And Tanks

How the Output is Generated:
Solution is drained from processing system low points (e.g. piping and tanks) and stored in 4-liter bottles or annular tanks.

Generation Rate:
Variable

How the Output is Managed:
Collected In 4-Liter Bottles Or PVLTS In An Interim Status Or Permitted Storage Area

Chemicals/Contaminants in or on the Output:
Corrosive: Miscellaneous Acid Solutions That Could Contain: Ferric Sulfamate, Sulfamic Acid, HCl, HNO_3, Etc.
Radionuclides: Plutonium

Characterization Rationale:
According to process knowledge and supported by analytical data (ongoing), this output exhibits the RCRA characteristic of corrosivity. This output is line generated in a Radiological Area, and is characterized as a mixed high content or low content residue. This output does not meet the LDR treatment standards defined in 40 CFR 268.40. The output must be deactivated to remove the characteristic of corrosivity. No underlying hazardous constituents have been identified for this output. An evaluation to determine if the treatment residues meet LDR treatment standards defined in 40 CFR 268.40 will be made on a case-by-case basis.

WASTE STREAM AND RESIDUE DESCRIPTION AND CHARACTERIZATION

Process Number: 771-39-15 **Title:** SOLUTION PROCESSING
IDC/WFC: 505 **Description:** Miscellaneous Neutral Waste Solutions (Line, Haz)

- ■ RCRA Hazardous
- □ RCRA Nonhazardous
- □ By Analytical Data
- ■ By Process Knowledge
- ■ LDR Regulated
- □ Not LDR Regulated
- □ Non-Wastewater
- ■ Wastewater
- □ Product
- □ High Content Residue
- ■ Low Content Residue
- ■ Transuranic
- □ Low-Level
- □ Nonradioactive
- □ Source/Special Nuclear Materials
- □ Debris
- □ Fuel Blending
- □ Uncontained Gas
- □ RCRA Sample
- □ Recyclable Material
- □ Recycled/Reused
- □ TSCA Reg. Waste
- □ Evaluated in Another Process

EPA Codes:
D007, D008

Description (Material, Type, Size, Color, etc.):
This output consists of wash water contaminated with lead or chromium, water drained from water walls, neutral solutions drained from low points (e.g. piping and tanks) that is neutral pH.

How the Output is Generated:
This output is generated from wash water from RCRA closure activities from washing floors or gloveboxes; water drained from water walls, solutions drained from low points (e.g. piping and tanks) that is neutral pH.

Generation Rate:
Variable

How the Output is Managed:
Collected In Drums Or 4-Liter Bottles In An Interim Storage Area Or Permitted Glovebox That Is Reasonably Expected To Be Contaminated With Lead And Or Chromium.

Chemicals/Contaminants in or on the Output:
This output could be contaminated with lead and possibly chromium.
Radionuclides: Plutonium, Americium

Characterization Rationale:
According to process knowledge and supported by analytical data (ongoing), this output exhibits the characteristic of toxicity for lead and chromium. This output is line generated in a Radiological Area, and is characterized as a mixed TRU waste or a mixed low content residue. This output does not meet the LDR treatment standards defined in 40 CFR 268.40. This output must meet the concentration-based treatment standards for lead and chromium and the treatment standards for the underlying hazardous constituents. The treatment standards for the underlying hazardous constituents as defined in 40 CFR 268.40 must be met for treatment residue(s) prior to land disposal. The underlying hazardous constituents associated with this output are listed in Appendix E.

WASTE STREAM AND RESIDUE DESCRIPTION AND CHARACTERIZATION

Process Number: 771-39-16 **Title:** SOLUTION PROCESSING
IDC/WFC: 505 **Description:** Miscellaneous Neutral Waste Solutions (Nonline, Haz)

- ■ RCRA Hazardous
- □ RCRA Nonhazardous
- ■ By Analytical Data
- ■ By Process Knowledge
- ■ LDR Regulated
- □ Not LDR Regulated
- □ Non-Wastewater
- ■ Wastewater
- □ Product
- □ High Content Residue
- □ Low Content Residue
- □ Transuranic
- ■ Low-Level
- ■ Nonradioactive
- □ Source/Special Nuclear Materials
- □ Debris
- □ Fuel Blending
- □ Uncontained Gas
- □ RCRA Sample
- □ Recyclable Material
- □ Recycled/Reused
- □ TSCA Reg. Waste
- □ Evaluated in Another Process

EPA Codes:
D007, D008

Description (Material, Type, Size, Color, etc.):
This output consists of wash water from RCRA closure activities, water drained from water walls, solutions drained from low points (e.g. piping and tanks) that is neutral pH that could be reasonably expected to be contaminated with lead or chromium.

How the Output is Generated:
This output is generated from wash water from RCRA closure activities, water drained from water walls, neutral solutions drained from low points (e.g. piping and tanks) that pH is neutral.

Generation Rate:
Variable

How the Output is Managed:
Drums Managed In A 90-Day Collection Area

Chemicals/Contaminants in or on the Output:
Could Reasonably Be Expected To Be Contaminated With Lead And/Or Chromium
Radionuclides: Plutonium, Americium

Characterization Rationale:
According to process knowledge and supported by analytical data (ongoing), this output exhibits the characteristic of toxicity for lead and chromium. This output is nonline generated in a Radiological Area, and is characterized as a mixed, low-level waste. This output does not meet the LDR treatment standards defined in 40 CFR 268.40. This output must meet the concentration-based treatment standards for lead and chromium and the treatment standards for the underlying hazardous constituents. The treatment standards for the underlying hazardous constituents as defined in 40 CFR 268.40 must be met for treatment residue(s) prior to land disposal. The underlying hazardous constituents associated with this output are listed in Appendix E.

40.0 PROCESS 771-40 SET 34, DECONTAMINATION & DECOMMISSIONING

Set 34, Room 148 - During Set 34 Decontamination and Decommissioning (D&D), electrical conduit, external equipment and debris, tanks, and external non-process piping will be removed, size reduced where necessary to facilitate packaging, and disposed of as low-level or TRU waste. This set includes Room 148, Tanks D-1976, D-1977, D-1978, D-1979, D-1984, D-1987, D-1990, D-1991, D-1992 and D-1993. These lead shielded annular tanks were never put into service and should be cold (non-contaminated). Set also includes electrical conduit, ladders, tool boxes, cabinets, welding units, waste containers, miscellaneous furniture, equipment and debris. Radioactive material contamination is known to exist under the stainless steel floor cover. Asbestos is expected to be present in the form of thermal systems insulation on pipes in the area.

THIS PAGE INTENTIONALLY LEFT BLANK

41.0 PROCESS 771-41 SET 37, DECONTAMINATION & DECOMMISSIONING

Set 37, Room 181A - During Set 37 D&D, electrical conduit, external equipment and debris, a glovebox, internal glovebox equipment, tanks, and external non-process piping will be removed, size reduced to facilitate packaging, and disposed of as low-level or TRU waste. This set includes Glovebox SR14, Tanks D-1400, D-1401, D-1402, D-1406, D-1407, D-1409, D-1410, D-1411, D-1414 and D-1415, an electrical panel, a scrubber refrigeration unit and associated valves and piping. The west end of the room contains 55-gallon drums of High-Level Mixed Waste. SR14 contained a solvent extraction process for uranium bearing acidic solutions. Acids and bases were used in the stripper/scrubber and residual amounts are expected to be present. CFC's and chromates are present in the chiller/refrigeration unit. Oils and lubricants are expected to be present on components and equipment reservoirs. Lead plate shielding, leaded glass windows and lead lined gloves are present on the glovebox. Gloveboxes contain pumps, glass pipe, FulFlo filters, piping, valves and debris. Set 37 also contains 2 heat exchangers electrical conduit, a transformer, alarm and control panels, electric motors, drum lifting devices, a chiller unit and cooling water surge tank, cabinets, overhead piping, vacuum traps, chemical pumps, criticality drain, miscellaneous debris, exhaust piping for Glovebox SR-14 and off gas piping for the scrubber. Glovebox SR-14 contains a dissolution column that is listed as Idle equipment #771-0065. Part of Room 181A is permitted unit 771.1 which stores liquid and solid mixed residues. Satellite 771-1935 located in middle of room, collects low-level lead waste.

THIS PAGE INTENTIONALLY LEFT BLANK

42.0 PROCESS 771-42 SET 40, DECONTAMINATION & DECOMMISSIONING

Set 40, Room 183 - During Set 40 D&D, electrical conduit, external equipment and debris, and external non-process piping will be removed, size reduced to facilitate packaging, and disposed of as low-level or TRU waste. This set includes Rooms 183, 184 and 185. Room 183 is a former residue drum storage area. Room 184 is a former residue storage vault containing 183 storage bins. Each of the bins contains a water-filled storage container, a water-filled door and associated framework. Room 185 is a small storage room containing personnel alpha monitors (combos), carts and shelving. Residual fixed radiological contamination from past glovebox operations exists. Insulated piping in the overhead areas is expected to contain asbestos. Room 183 is permitted unit 771.1 used for storing solid mixed residues. 90-Day Unit 2465 is currently active for excess chemicals.

THIS PAGE INTENTIONALLY LEFT BLANK

43.0 PROCESS 771-43 SET 44, DECONTAMINATION & DECOMMISSIONING

Set 44, Room 179 Maintenance Area - During Set 44 D&D, electrical conduit, external equipment and debris, a glovebox, internal glovebox equipment, and external non-process piping will be removed, size reduced to facilitate packaging, and disposed of as low-level or TRU waste. This set includes Rooms 178, 179, 179A and Glovebox 179A. This former maintenance machine shop contains approximately 20 machine tools, including lathes, mills, saws and other maintenance equipment, that may become low-level waste. Asbestos insulation and solid surfacing materials are present. Lead and other metals were machined and formed on the shop tools. Lubricating oils, cutting oils and solvents were used and stored here. Freon was commonly used as a degreaser. The glovebox in Room 179A was primarily used for maintenance of contaminated equipment. Equipment in Set 44 includes 24 cabinets, 5 benches, 2 mills, 4 drill presses, 3 ladders, 7 tool boxes, 4 grinders, 3 lathes, 3 welders and miscellaneous saws, tables, presses, carts, racks, lifting aids, etc. Also included in this set are electrical conduit, debris and overhead non-process piping and valves. Some equipment such as mills and drill presses are listed in the Building 771 Idle Equipment Inventory.

THIS PAGE INTENTIONALLY LEFT BLANK

The Appendix A for this WSRIC Book has been deleted.

PADC-93-01523

THIS PAGE INTENTIONALLY LEFT BLANK

The following sheets describe processes that no longer exist in this building. The process descriptions are given for historical information.

PADC-93-01522

1.0 PROCESS 771-1: HIGH-LEVEL DISSOLUTION

The High-Level Dissolution Process, located in Rooms 114 and 149, dissolves low- and high-purity plutonium content residues (Glovebox 3 high purity, Glovebox 24 low purity). The principal process feed is foundry oxide. Additional sources of feed include dirty out-of-specification or impure oxides and fluorides, and oxide and fluoride dissolution heels (undissolved solids resulting from incomplete dissolution). High-Level Dissolution is also known as "Fast Side" dissolution, since the plutonium nitrate solution from this process is generally pure enough to by-pass the Anion Exchange purification process. Equipment used in this process includes tanks, pumps, pipes, air-lift dissolver pots, various filters, a screw conveyor, a hot plate, and an off-gas condenser. Figure 1.1 gives the inputs, process flow, and outputs associated with the High-Level Dissolution Process.

The process begins when the residues contained in reusable metal cans enter the glovebox by a bag-in procedure, wherein cans of the plutonium oxides, plutonium fluorides, and other plutonium residues are passed through the plastic bag port entry to the glovebox enclosure. The feed materials are screened to remove pieces of nonplutonium metals and oxide too large to pass through the screen, then weighed to determine the amount of calcium fluoride (used as a catalyst to aid dissolution) needed for the process. The feed materials are then placed onto the screw conveyor which feeds the residues into the first dissolution pot at a constant rate (at A, Figure 1.1). In the first dissolution pot, nitric acid is introduced as the digestion medium. Steam is used in a coil for heating the solution in all three digestion pots. The solution flows by gravity into the second and third pots, where a majority of the residues are dissolved in the heated nitric acid. The resulting plutonium nitrate is pulled by vacuum through the R-6 filter for removal of undissolved solids (at B, Figure 1.1), and then through a cartridge Ful-Flo filter to remove the remaining particulates (at C, Figure 1.1). The undissolved solids are stored and then recycled back into the Dissolution Process.

The plutonium nitrate solution is then transferred by process piping to storage tanks, Tanks D-548, D-549, and D-550 (Room 114). Low-purity solutions (nitric acid condensate) are transferred to Tanks D-971 and D-972 before further processing in Batching or Feed Precipitation Evaporation. Undissolved solids, or heels, including impure fluoride heels and low-purity oxide heels are recovered from the dissolver pots, R-6 filter, Ful-Flo filter; pan filtered; dried on a hot plate (at D, Figure 1.1), packaged; bagged-out of the glovebox; and staged for high-level redissolution. Oxide from the initial screening is reincorporated into the process and the nonplutonium metal is placed in a metal container. Off-gas from the dissolvers condenses by cooling in the off-gas condenser (at E, Figure 1.1) and continues on to the fume scrubber. The steam condensate is transferred to the composite steam condensate collection tanks, Tanks D-923 and D-927. Nonline dry combustibles, wet combustibles, leaded gloves—acid contaminated, used Ful-Flo and R-6 pad filters, HEPA filters, glass, and light metal are initially collected in the appropriate holding drum in Room 114 or 149 then taken to the drum counter for assay. Empty reusable cans are returned to operations for reuse. Glovebox and condenser exhaust is vented to the fume scrubber in Room 149. Process Table 771-1 presents the outputs associated with High-Level Dissolution and provides their dispositions and hazardous character.

2.0 PROCESS 771-2: LOW-LEVEL DISSOLUTION

The Low-Level Dissolution Process, located in Room 149, Gloveboxes 23 and 25, dissolves high-impurity low plutonium content residues to recover plutonium in two identical process lines. These two lines are currently dedicated to dissolution of sand, slag, and crucible (SS&C) from the Reduction and Button Break-Out Process. The Low-Level Dissolution Process uses tanks, pumps, pipes, a screw conveyor, air-lift dissolver pots or vessels, various filters, a hot plate, and a condenser. Figure 2.1 shows the inputs, process flow, and outputs associated with the Low-Level Dissolution Process.

The SS&C comes in 2- or 4-liter poly bottles and is bagged into one of the two dissolution lines and fed by screw conveyor into the first dissolver pot. Unlike High-Level Dissolution, calcium fluoride is not added with the feed as the slag is essentially calcium fluoride. Nitric acid is added to the first dissolver pot along with the SS&C (at A, Figure 2.1). The dissolver pots are 6-inch-diameter cylinders, which are geometrically designed to be critically safe for the low-concentration plutonium solution. Steam-heated bayonet coils are used to heat the solution to approximately 100°C. Aluminum nitrate is added to the first dissolver pot as a fluoride-complexing agent to prevent fluoride corrosion of downstream process equipment. The Plutonium nitrate solution flows out of the last dissolver pot to a R-6 filter for removal of undissolved solids (at B, Figure 2.1) and then through a 1-micron cartridge filter for final particulate removal (at C, Figure 2.1). Water is used for washing the heels at the secondary R-6 filter. Undissolved solids, or heels, are collected and dried on a hot plate (at D, Figure 2.1). Off-gas from the dissolver pots condenses by cooling in the off-gas condenser (at E, Figure 2.1). Vapors from the off-gas condenser go to a HEPA filter and then to the fume scrubber (Process 20).

The ion column feed (plutonium nitrate solution) is transferred via process piping to storage Tanks D-971 and D-972 prior to further processing in the Anion Exchange Process. The heels are counted for plutonium content and stored prior to discard or recycling. Most of these heels are below the Economic Discard Limit (EDL). Any heels above the EDL are staged for redissolution. The water condensate from the steam-heated coils is transferred to the composite steam condensate collection tanks, Tanks D-923 and D-927. Potassium hydroxide used for flushing the condenser is first collected in Tank D-928 and then transferred to Caustic Filtration only when dissolving incineration ash. Nonline dry combustibles, wet combustibles, leaded gloves—acid contaminated, HEPA glovebox filters—acid contaminated, glass, and light metal are initially collected in the appropriate holding drum in Room 114 and then sent to the drum counter to be assayed. A RCRA collection area will be established for used Ful-Flo and R-6 pad filters if they are generated. Empty metal reusable cans are returned to production for reuse. Glovebox and condenser off-gas exhausts are vented to the fume scrubber in Room 149. Process Table 771-2 presents the outputs associated with Low-Level Dissolution and provides their dispositions and hazardous character.

Historically, the two process lines currently used for this process have also processed incinerator ash and graphite fines; however, the incineration process is not in operation at this time, and graphite fines are currently stored as backlog residue.

3.0 PROCESS 771-3: CATION EXCHANGE

The Cation Exchange Process, located in Room 149, Glovebox 29, processes chloride solutions from the laboratories in Buildings 371, 559, and 771. These chloride solutions cannot be processed in the other production areas due to chloride corrosion of stainless-steel pipes and equipment. Equipment used in this process consists of ion columns with resin, tanks, pumps, and pipes. Figure 3.1 shows the inputs, process flow, and outputs associated with the Cation Exchange Process.

The chloride solutions, contained in 4-liter plastic bottles, are introduced into the glovebox through the bag-in access port. They are then transferred by vacuum from the bottles to one of two feed tanks (at A Figure 3.1). The solutions are sampled and either nitric acid or water is then added to the tank to adjust process parameters.

Four steps are involved in the Cation Exchange Process (all occur at B, Figure 3.1). The first step, reconditioning, allows the ion exchange columns to be flushed with dilute nitric acid in order to adjust the valence of the resin beads. In the loading step, chloride feed solution is pumped through one or two sets of ion exchange columns; each set includes two columns. The plutonium then loads onto the cation exchange resin while most of the impurities stay in the solution, which is referred to as effluent as it leaves the columns. The third step, washing, uses dilute nitric acid to remove any residual impurities from the cation exchange resin. The eluting step uses concentrated nitric acid to strip the plutonium from the resin. The resulting concentrated plutonium solution (eluate) is now in the nitrate form. This nitric-acid-based solution is compatible with the rest of the Building 771 processing system.

The eluate is transferred via process piping to storage tank for further processing in Anion Exchange. The effluent from loading and washing is transferred via process piping to Storage Tanks D-362 and D-363, where the solution is sampled for plutonium concentration. If the solution is above the Economic Discard Limit (EDL), the solution is recycled through Cation Exchange. However, if the solution is below the EDL, the solution is transferred to Tank 208 and is sampled before it is transferred to Building 774 Waste Treatment. Nonline dry combustibles, wet combustibles, plastic, glass, resin, and light metal are all placed in the appropriate 55-gallon drum in Room 149 or 114 and then taken to the drum counter to be assayed. Leaded gloves and glovebox filters are placed in satellite collection areas. A RCRA collection area will be established for Ful-Flo filters, if they are generated in the future. Glovebox exhaust is directed to the filter plenum. Process Table 771-3 presents the outputs associated with Cation Exchange and defines their dispositions and hazardous character.

Tanks 208, D-362, and D-363 are destined for RCRA closure and there are no plans for further use of these tasks.

4.0 PROCESS 771-4: ANION EXCHANGE

The Anion Exchange process is located in Room 149. Gloveboxes 42 and 43D are cleaned and maintained. Figure 4.1 shows the inputs, process flow, and outputs associated with the Anion Exchange Process.

Line generated wet combustibles, leaded gloves, glovebox HEPA filters, glass, light metal, and resin are all disposed of in the appropriate 55-gallon drums in Room 149, and then taken to the drum counter to be assayed. Glovebox exhaust is vented through the building filter plenum. Process Table 771-4 presents the outputs associated with the Anion Exchange Process and provides their dispositions and hazardous character.

A RCRA collection area has been established for Ful-Flo filters.

5.0 PROCESS 771-5: FEED EVAPORATION

The Feed Evaporation Process, located in Room 114, Glovebox 14, concentrates the plutonium nitrate solution for more efficient precipitation. The feed principally consists of plutonium nitrate product from High-Level Dissolution and Anion Exchange. The process uses tanks, pipes, valves, an evaporator, and a condenser. Figure 5.1 shows the inputs, process flow, and outputs associated with the Feed Evaporation Process.

The feed solution is transferred via internal process piping to the evaporator chamber (at A, Figure 5.1). The evaporator is heated by steam and the vapors are condensed in a water-cooled condenser to become distillate (at B, Figure 5.1).

The steam condensate is transferred to Holding Tanks D-923 and D-927 prior to transfer to Building 774, Waste Treatment. The filtrate recovery nitrate feed (i.e., evaporator bottoms) is transferred to Tanks D-503 through D-506, D546, D547, and then to Precipitation Feed Batching, Process 771-6. The distillate is collected in Tanks D-509 and D-510, transferred to Tanks D-549 and D-951, and then transferred to Building 774, Waste Treatment. Tank D950 is the transfer tank to 774. Tanks D549 and D951 are collection tanks. Liquid is sampled and sent to Tank D950 then to Building 774. Tanks D-503 through D-506, D-509, and D-510 are destined for RCRA closure and there are no plans for further use. Plutonium nitrate solution collected by the floor pick-up is transferred to Tanks D-500 through D-502. Off-gases are directed to the fume scrubber. Nonline dry combustibles, wet combustibles, used Ful-Flo filters, plastic, glass, and light metal are all placed in the appropriate 55-gallon drums in Room 114 and then taken to the drum counter to be assayed. Leaded gloves are placed in a satellite collection area. Glove box filters which have been acid contaminated will be managed as RCRA hazardous waste. Glove box filters which have not been exposed to acids will be managed as nonhazardous. Glovebox exhaust is directed to the filter plenum. Process Table 771-5 presents the outputs associated with the Feed Evaporation Process and defines their dispositions and hazardous character.

6.0 PROCESS 771-6: PRECIPITATION FEED BATCHING

The Precipitation Feed Batching Process, located in Room 114, Glovebox 13, prepares plutonium nitrate feed for the precipitation process. The Precipitation Feed Batching Process adjusts the acid, plutonium, sulfate, and iron concentrations of the feed for further processing. The process uses various tanks, pipes, pumps, and valves. Figure 6.1 shows the inputs, process flow, and outputs associated with the Precipitation Feed Batching Process.

Plutonium solutions from the various feed sources are combined in the batching tank to achieve the desired concentrations for further processing (at A and B, Figure 6.1). Sulfuric acid may be added to adjust the sulfate concentration. Nitrate or ion column eluate, evaporator bottoms, and nitric acid are all inputs to the process. Feeds are batched in Tanks D-544 and D-545 and then transferred to Peroxide Precipitation, Process 771-7.

Outputs, including nonline dry combustibles, wet combustibles, plastic, glass, and light metal, are all placed in the appropriate drums in Room 114, then taken to the drum counter to be assayed. Leaded gloves and glovebox filters are placed in satellite collection areas. Nitrate feed is transferred to Feed Preparation and Evaporation, Process 771-05. Evaporator bottoms are transferred to Peroxide Precipitation. Ion column feed is sent to Anion Exchange, Process 771-4, for recovery. Ful-flo filters are bagged out, placed in clam shell and sent to the drum counter. NDA places containers into drums. Glovebox exhaust is vented through the building filter plenum. Process Table 6.1 presents the outputs associated with the Precipitation Feed Batching Process and defines their dispositions and hazardous character.

7.0 PROCESS 771-7: PRECIPITATION

The Precipitation Process, located in Room 114, Glovebox 15, is both a purification process as well as the process that separates the plutonium from the nitrate solution. This process is the only purification step for solutions from High-Level Dissolution. For solutions from Low-Level (high impurity) Dissolution, purification by precipitation augments ion exchange purification. The process uses tanks, pumps, pipes, various filters, vessels, and a precipitation digester. Figure 7.1 shows the inputs, process flow, and outputs associated with the Precipitation Process.

Batched feed solution is transferred via process piping to the precipitation feed tanks, where the solution is recirculated through a Ful-Flo filter cartridge (at A, Figure 7.1). The solution is then fed into a mechanically agitated, chilled vessel (precipitation pot) where hydrogen peroxide is added (at B, Figure 7.1). The solution then flows into a chilled digester pot, where additional hydrogen peroxide is introduced and further agitation occurs (at C, Figure 7.1). After a set time in the digester, the slurry is passed over a vacuum drum filter and washed with .35N nitric acid (at D, Figure 7.1). As the solid plutonium peroxide cake forms on the vacuum drum it is cut away and collected in boats (cans). Nitrate feed, nitric acid, and sulfuric acid are used in the process.

The filtrate is transferred via process piping to one of two refrigerated receiving vessels, Vessels D-525 and D-526 located in Glovebox 11, which then feed into the Evaporation Process. The plutonium peroxide cake is transferred within the glovebox system to the Calcination Process, Glovebox 16. Floor pick-up liquids are transferred to Slop Pot D-531 which feeds to the Evaporation process. Wet combustibles, dry combustibles, glass, and light metal are all placed in the appropriate 55-gallon drum in Room 114 then taken to the drum counter to be counted. Leaded gloves and glovebox filters are placed in satellite collection areas. A RCRA collection area will be established for Ful-Flo filters if they are generated in the future. Glovebox exhaust is vented to the building filter plenum system. Process Table 771-7 presents the outputs associated with the Precipitation Process and defines their dispositions and hazardous character.

8.0 PROCESS 771-8: PRECIPITATION FILTRATE EVAPORATION

The Precipitation Filtrate Evaporator Process, located in Room 114, Glovebox 11, destroys the hydrogen peroxide in filtrate from the Precipitation Process by heat evaporation. It also concentrates the unrecovered plutonium in the filtrate solution. Equipment used in this process includes tanks, pipes, pumps, an evaporator, and a condenser. Figure 8.1 shows the inputs, process flow, and outputs associated with the Precipitation Filtrate Evaporation Process.

The peroxide precipitation filtrate is transferred from filtrate receiving Vessels D-525 and D-526 via internal process piping to the steam-heated filtrate evaporator (at A, Figure 8.1). As the heat decomposes the peroxide, the solution is concentrated by evaporation. The concentrated evaporator bottoms are transferred to receiving Tanks D-503 through D-506. The distillate is condensed by a water-cooled condenser (at B, Figure 8.1), then flows into distillate receiving Tanks D-529 and D-530 where it is sampled. Floor pick-up from Process 7 and floor pick-up from Glovebox 11 is transferred to Slop Pot D-531. The floor pick-up solution is processed through the evaporator.

The distillate is transferred via process piping to waste processing in Building 774. The evaporator bottoms are sampled in the Batching glovebox and then sent to Anion Exchange for purification processing. Off-gas from the evaporator exhausts through the distillate condenser and continues on to the Fume Scrubber. Steam condensate from the steam-heated filtrate evaporator is piped to Tanks D-923 and D-927. Nonline dry combustibles, line-generated wet combustibles, glass, and light metal are all taken to the appropriate 55-gallon drum in Room 114, then to the drum counter to be assayed. Leaded gloves and glovebox filters are placed in satellite collection areas. A RCRA collection areas will be established for Ful-Flo filters if they are generated in the future. Glovebox exhaust is vented through the building filter plenums. Process Table 771-8 presents the outputs associated with the Precipitation Filtrate Evaporation Process and defines their dispositions and hazardous character.

9.0 PROCESS 771-9: CALCINATION

Calcination, located in Room 114, Gloveboxes 16 and 16A, removes excess nitric acid and moisture from the plutonium peroxide cake formed in the Precipitation Process. The nitric acid must be removed to prevent corrosion of the hydrofluorination equipment. The process uses a screw feeder, rotary tube calciner, scrubber, filter, hot plate, scale, and pneumatic transfer system. Figure 9.1 shows the inputs, process flow, and outputs associated with Calcination.

The calciner consists of a slightly inclined horizontal rotary tube furnace. The plutonium peroxide cake is fed into the furnace via a screw feeder (at A, Figure 9.1). Air, introduced into the calciner (at B, Figure 9.1), carries acid and water vapor to the off-gas system. The Calcination Process converts plutonium peroxide into plutonium green cake. Because some of the plutonium green cake is entrained in off-gas the off-gas passes through a packed-bed nitric acid scrubber to dissolve the green cake (at C, Figure 9.1) from the off-gas stream. The scrubber is loaded with Tellerettes which require occasional replacement.

The plutonium product or calcined peroxide cake (also known as "green cake") is transferred by an enclosed pneumatic transfer line to a storage glovebox, Glovebox 8 or 9, to await transfer to the Hydrofluorination Process. The spent nitric acid scrubber filtrate solution is transferred via enclosed process piping to Tanks D-500, D-501, and D-502, before being processed through Anion Exchange. Other residues produced in the Calcination Process include grease oxide and impure greencake which have been collected from the glovebox floor of the Calcination Process. Both are placed in temporary storage, pending recovery. Boats (empty reusable cans) are returned to Precipitation for reuse. The scrubber off-gas stream continues on through a demister trap to the filter plenum via the calciner vacuum system. Nonline dry combustibles, line-generated wet combustibles, Tellerettes, glovebox filters, glass, and light metal are gram estimated and taken to the appropriate 55-gallon drum in Room 114, then to the drum counter to be assayed. Leaded gloves are placed in a satellite collection area. A RCRA collection area will be created for Ful-Flo filters if they are generated in the future. Glovebox exhaust is vented through the building filter plenums. Process Table 771-9 presents the outputs associated with the Calcination Process and defines their dispositions and hazardous character.

10.0 PROCESS 771-10: HYDROFLUORINATION

The Hydrofluorination Process, located in Building 771, Room 114, Glovebox 7, converts calcinated plutonium peroxide cake, "green cake," into plutonium tetrafluoride in preparation for metal reduction. Equipment used includes tanks, pumps, Glovebox 7A vacuum pump, heat exchanger, scales, screw feeder, rotary tube fluorinator, hot plate, various filters, and a pneumatic transfer system. Figures 10.1 and 10.2 show the inputs, process flow, and outputs associated with Hydrofluorination.

Plutonium oxide is transferred to the hydrofluorination glovebox via an enclosed pneumatic transfer tube. The oxide is manually fed into a hopper (at A, Figure 10.1), from which it is augured into the hydrofluorinator, a slightly inclined, horizontal rotary tube furnace (at B, Figure 10.1). Anhydrous hydrogen fluoride gas is introduced at the discharge zone of the tube. The off gas, which consists of unreacted hydrogen fluoride, water vapor, oxygen, and some entrained plutonium particles, is passed through a potassium hydroxide scrubber, Glovebox 6 (Figure 10.2).

The product, plutonium tetrafluoride, is collected in polypropylene bottles and transferred via pneumatic transfer tube to the Reduction and Button Breakout Process. The sludge (nonspecification fluoride) from the scrubber is picked up on the R-4 Filter in Glovebox 6 and stored for recycling back to the High-Level Dissolution Process. The spent potassium hydroxide or caustic from the scrubber is passed through a cartridge filter and transferred to Caustic Waste Tanks 713 and 714 for sampling and subsequent transfer to Building 774, Waste Treatment. Plutonium oxides and fluorides, including nonspecification fluorides collected as dust from the glovebox floor and process equipment, are placed in a can, weighed, bagged out of the glovebox, and stored temporarily within Building 771 for recycling back to the High-Level Dissolution Process. Line and nonline dry combustibles, line and nonline wet combustibles, leaded gloves, used Ful-Flo filters, Glovebox filters, and light metal are all taken to the appropriate 55-gallon drum in Room 114, then to the drum counter to be assayed. Hydrogen fluoride off gas is transferred to Glovebox 6 and neutralized by the scrubber. Glovebox exhaust is vented through the filter plenum. Process Table 771-10 presents the outputs associated with the Hydrofluorination Process and provides their dispositions and hazardous character.

11.0 PROCESS 771-11: REDUCTION AND BUTTON BREAK-OUT

Reduction and Button Break-out, located in Room 114B, Glovebox 17, is the final step in the plutonium recovery process producing a purified plutonium metal product intended for use in the plutonium foundry operations. The process uses vessels, scales, a bath, and induction furnaces. Figure 11.1 shows the inputs, process flow, and outputs associated with the Reduction and Button Break-Out Process.

To prepare for a reduction operation, a magnesium oxide crucible is placed in the stainless-steel reduction vessel (at A, Figure 11.1). The annulus (the void between the outside of the crucible and the stainless-steel vessel) of the vessel is filled with magnesium oxide sand. The plutonium tetrafluoride is mixed with calcium metal and a pyrotechnic initiator (magnesium metal, sodium peroxide and potassium iodate) and placed in the crucible. The vessel is sealed, placed in an induction furnace (at B, Figure 11.1), purged with argon, and heated until the reaction occurs. Argon is used to purge oxidizers from the atmosphere within the vessel.

In Button Break-out (at C, Figure 11.1), the plutonium metal is manually separated from the crucible and reaction by-products. The sand is screened and reused. The sand is replaced twice a year, at inventory time. The metal button is stamped with an identification number, and then pickled in a water bath to remove any residual calcium (at D, Figure 11.1). Once the button is dried, a drill press is used to take metal turnings from the button for analysis (at E, Figure 11.1). Occasionally, the reduction process fails, and the unused calcium metal is removed from the glovebox.

The metal button is bagged out of the glovebox, placed in a can, and transferred to the foundry. The plutonium samples or metal turnings from the plutonium metal buttons are initially collected in Room 114B, Glovebox 17, then sent to the analytic lab for impurity analysis. The used sand, slag (calcium oxide and pyrotechnic residue), and crucible, which contains recoverable quantities of plutonium, are bagged out. After assay, the used sand, slag, and crucibles continue on to Crushing and Grinding (771-14), before they are processed in Low-Level Dissolution (771-2). The scrap plutonium fines or metal turnings are initially stored in Room 114, Glovebox 17; they are then moved to the Metal Burning Process (771-13) to convert the pyrophoric metal to the noncombustible oxide form, and finally are transferred to the High-Level Dissolution process (771-1). The water from the pickling step is transferred via internal process piping to Storage Tanks D-952, D-953, D-954, and D-955, and then transferred to the Anion Exchange process (771-4). Dirty fluoride is swept up off the floor and sent for processing in High-Level Dissolution (771-1). Sand, removed at inventory time, and unused calcium metal are placed in separate cans and removed from the glovebox for assay. Leaded gloves are placed in a satellite collection area. Nonline dry combustibles, line wet combustibles including paper, rags, wipes, cloth, or plastic, Ful-Flo filters, glovebox filters, MgO crucibles, and light metal are all taken to the appropriate 55-gallon drum in Room 114, then to the drum counter to be assayed. Glovebox exhaust is vented through the building filter plenum. Process Table 771-11 presents the outputs associated with the Reduction and Button Break-out Process and defines their dispositions and hazardous character.

12.0 PROCESS 771-12: MISCELLANEOUS RESIDUE PROCESSING

Miscellaneous Residue Processing, located in Room 114, Glovebox 2, includes HEPA filter processing, pipe reduction, and sludge dissolution. This process is not in operation at this time, but may resume in the future. Equipment used in the process includes a hot plate, power saws, dissolver pots, and storage tanks. Figure 12.1 shows the inputs, process flow, and outputs associated with the Miscellaneous Residue Processing Process.

Glovebox or plenum filters that are above the EDL are disassembled for recovery in HEPA filter processing. First, the filters are manually shaken to loosen dust before they are disassembled and the dust is swept from the floor and placed into cans.

Steam condensate is piped to Tank D-923 or D-927, then transferred to Building 774, Waste Treatment. Line dry and line wet combustibles, Ful-Flo filters, glovebox filters, glass, filter media, and light metal are all taken to the appropriate 55-gallon drums in Room 114, then to the drum counter for assay. Leaded gloves are collected in a satellite collection area. Glovebox exhaust is vented through the building filter plenum. Process Table 771-12 presents the outputs, associated with Miscellaneous Residue Processing and defines their dispositions and hazardous character.

13.0 PROCESS 771-13: METAL BURNING

Metal Burning, located in Room 114, Glovebox 22, is where scrap and off-specification plutonium metal is converted into plutonium oxide. Equipment used in the process consists of a hot plate and a pan. Figure 13.1 shows the inputs, process flow, and outputs associated with Metal Burning.

The scrap or off-specification plutonium metal is heated in a pan on a hotplate to convert the metal into plutonium oxide. No other materials are introduced. Once the metal has oxidized, it is placed into containers and stored temporarily.

The stored oxidized metal is ultimately sent to High-Level Dissolution (771-1) for further recovery processing. Nonline dry combustibles, glovebox filters, moist combustibles, and light metal are all taken to the appropriate 55-gallon drum in Room 114, then to the drum counter to be assayed. Leaded gloves are placed in a satellite collection area. Glovebox exhaust is vented through the building filter plenum. Table 13.1 presents the outputs associated with the Metal Burning Process and defines their dispositions and hazardous character.

14.0 PROCESS 771-14: CRUSHING AND GRINDING

The Crushing and Grinding Process, located in Room 149, Gloveboxes 43B and 43C, pulverizes sand, slag, and crucible (SS&C) from the Reduction and Button Break-Out Process to prepare it for recovery processing in Low-Level Dissolution. Equipment used includes a jaw crusher and a hammermill/pulverizer. Figure 14.1 shows the inputs, process flow, and outputs associated with crushing and grinding.

The SS&C is pulverized using a jaw crusher (at A, Fig 14.1) and a hammermill/pulverizer (at B, Figure 14.1).

The pulverized SS&C is processed in Low-Level Dissolution. Nonline-generated dry combustibles, line-generated dry combustibles, moist combustibles, gloves, filters, reusable cans, and light metal are placed in the appropriate 55-gallon drums in Room 114 and then taken to the drum counter for assay. Pulverized SS&C is transferred to assay. Glovebox exhaust is vented to the filter plenum. Process Table 771-14 presents the outputs associated with the Crushing and Grinding Process and defines their dispositions and hazardous character.

15.0 PROCESS 771-15: SPRAY LEACH

Spray Leach Process (also referred to as Part V Leach), located in Room 114, Glovebox 5, is a process which separates a metal contaminant from plutonium parts or plutonium from foundry fixtures. Equipment used in the process include various tanks, pumps, heat exchangers, vacuum supply, and filters. Figure 15.1 shows the inputs, process flow, and outputs associated with the Spray Leach Process.

The plutonium parts or fixtures are bagged into the glovebox, weighed, and placed in a spray hood. The acids are mixed through glovebox acid supply drops and tank fills for the particular item to be sprayed. Certain parts are pretreated by soaking in a hydrofluoric and sulfuric acid mixture. A nitric and sulfuric acid mixture is used as a leaching agent for parts, whereas a nitric and hydrofluoric acid mixture is the leaching agent used for fixtures. The acid-leached parts or fixtures (at A, Figure 15.1) are subsequently rinsed with steam or water, and then with potassium hydroxide. The acid is recirculated through a Ful-Flo filter (at B, Figure 15.1) and pencil tanks (at C, Figure 15.1). Two floor pickups are used to remove acid spillage in the glovebox.

The leached metal parts are bagged-out of the glovebox and transferred to Building 776 Pyrochemical Operations (776-1). The leached fixtures are returned to the user. The leachate solution, resulting from the acid spray and rinse, is transferred via process piping from the critically safe pencil Tanks D-609 and D-610 to Tanks D-551 through D-552. Miscellaneous acid from the floor pickups and Part VI leach is transferred to Tanks D-551 and D-552. The solutions from Tanks D-551 and D-552 are transferred to Anion Exchange, Process 771-4. Nonline dry combustibles, wet combustibles, glass, and light metal are taken to the appropriate 55-gallon drums in Room 114, then to the drum counter to be counted. Leaded gloves and glovebox filters are placed in a satellite collection area. A RCRA collection area will be created for ful-flo filters if the filters are generated in the future. Steam condensate is deposited in the collection Tanks D-923 and D-927, Caustic Filtration (Process 771-19). Glovebox exhaust is vented through the filter plenum. After the liquid is condensed out of the gas, the leaching off-gas is transferred to the fume scrubber in Room 149 (Process 771-20). Process Table 771-15 presents the outputs associated with the Spray Leach Process and defines their disposition and hazardous characteristics.

16.0 PROCESS 771-16: ORALLOY LEACH

Oralloy (OY) Leach, located in Room 174, Glovebox 53, is a process which removes small amounts of plutonium contamination from uranium parts. Nitric acid, potassium hydroxide, abrasive pads, and water are used in the process. Equipment utilized includes an acid heater, acid evaporator, water evaporator, spray vessel, various filters, tanks, and pipes. Figure 16.1 shows the inputs, process flow, and outputs associated with OY Leach.

Uranium parts are placed into the hood (at A, Figure 16.1). Nitric acid is stored in a tank and heated by steam to 90°C in the acid heater (at B, Figure 16.1). The acid is then sprayed onto the parts. The nitric acid is collected in the spray vessel and is transferred to a steam-heated evaporator in Glovebox 53 (at C, Figure 16.1). Concentrated acid is sent to OY Precipitation (Process 17) for nuclear materials recovery. The distilled acid is reintroduced to the acid tank (at D, Figure 16.1) for recycling within the system. After the acid spray, the parts are rinsed with water. Water is introduced into the system from a tank as with the acid. Air pressure is used to push the fluid to the spray chamber. The water is then collected and evaporated in a steam-heated evaporator (at E, Figure 16.1). Potassium hydroxide is used to neutralize the acid fumes in the scrubber.

Oralloy parts, or uranium parts, are held in temporary storage before being shipped to another Department of Energy facility. The concentrated water solution and the uranyl nitrate bottoms are sent to OY Precipitation for nuclear materials recovery. The water distillate is transferred to a waste tank, Tank 1084; sampled for nuclear materials content; and then piped to Building 774, Waste Treatment. The spent scrubber caustic is collected in a Tank D-921, Caustic Filtration Process. Steam condensate that was used to heat the acid heater, acid evaporator, and water evaporator is piped to Tanks D-923 and D-927, then to Building 774, Waste Treatment. Nonline dry combustibles, wet combustibles, and gloves are deposited in the appropriate drum in Room 174, then taken to the drum counter for assay. Used filters, glass, and light metal are all taken to the appropriate holding drum in Room 114 to be assayed. Scrubber exhaust is vented through the filter plenum. Process Table 771-16 presents the outputs associated with the OY Leach Process and provides their disposition and hazardous character.

17.0 PROCESS 771-17: OY PRECIPITATION

OY Precipitation, located in Room 146, Glovebox MT3, is the process which precipitates plutonium and uranium from an acid solution. The acid solution consists of the concentrated "bottoms" from one of the OY Leach evaporators. Equipment includes a tank, pipes, a reaction vessel, a centrifuge, and a muffle furnace. Figure 17.1 shows the inputs, process flow, and outputs associated with OY Precipitation.

Bottoms from the OY Leach Process evaporators are transferred from a feed tank into a two-liter reaction vessel (at A, Figure 17.1). The bottoms contain uranyl nitrate, small amounts of plutonium nitrate, and dilute acid solution. Water is added to reduce the normality of the acid concentration in order to prevent excessive heat generation from the chemical reaction. Ammonia gas is bubbled into the vessel. The nuclear material (mostly enriched uranium with small amounts of plutonium) precipitates from the fluid to form solid particles in a slurry. The slurry is centrifuged to separate the precipitate solids from the solution (at B, Figure 17.1). The fluid solution is recycled to the feed tank until the solution is completely neutralized. The precipitate is filtered, heated, and calcined in a muffle furnace (at C, Figure 17.1). Ful-flo filters are used in the solution transfer lines. Standard glovebox materials, including gloves, HEPA filters, metal, glass, and combustibles, are used for cleaning and materials handling.

The neutralized solution is sent to Building 774 as a waste. The calcined precipitate, containing mixed plutonium and uranium oxide, is put in temporary storage and eventually shipped to another Department of Energy facility. Nonline dry combustibles, line wet combustibles, used Ful-Flo filters, glovebox filters, and glass are all taken to the appropriate holding drum in Room 146, then to the drum counter to be assayed. Light metal is deposited in a drum in Room 114 and also taken to the drum counter for counting. Leaded glovebox gloves are taken to WMU 1723. Glovebox exhaust is vented through the filter plenum. Process Table 771-17 presents the outputs associated with the OY Precipitation Process and provides their dispositions and hazardous character.

18.0 PROCESS 771-18: SPECIAL RECOVERY ANION EXCHANGE

Special Recovery Anion Exchange is located in Room 146, Glovebox MT-4. Equipment utilized includes ion columns, pumps, feed tanks, flow meters, an evaporator, and filters. Figures 18.1 shows the inputs, process flow, and outputs associated with Special Recovery Anion Exchange.

Line dry combustibles are placed in the appropriate 55-gallon drum in Room 146, then taken to the drum counter for assay. Used resin, wet combustibles, used glovebox HEPA and Ful-Flo filters, glass, and light metal are placed in the appropriate holding 55-gallon drum in Room 114 and then taken to the drum counter for assay. Leaded glovebox gloves are placed in a satellite collection area. Glovebox exhaust is vented to the building filter plenums. Process Table 771-18 presents the outputs associated with the Special Recovery Anion Exchange Process and provides their dispositions and hazardous character.

19.0 PROCESS 771-19: CAUSTIC FILTRATION

Caustic Filtration, located in Room 149, Glovebox 50, filters caustic streams prior to transfer to Building 774 Waste Treatment. Caustic streams are drawn from Tanks D-921 and D-922, which receive spent caustic solutions from the fume scrubber in Room 149 (see Process 771-20). Additionally, when sampling indicates that the condensate is above the Economic Discard Level (EDL) for plutonium content, steam condensate streams are drawn from collection Tanks D-923 and D-927. The filtration unit associated with Glovebox 1 and included with Hydrofluorination, Process 771-10, can be used as a back-up system when maintenance operations are performed on Tanks 921 and 922. Equipment used in the process includes tanks, pumps, valves and cartridge filters. Figure 19.1 shows the inputs, process flow, and outputs associated with Caustic Filtration.

The solutions are pumped from the process tanks to the filtration unit. After passing through Ful-Flo filters, the solution is transferred to Tank D-714, where it is analyzed for plutonium content prior to shipping. Solutions above the EDL are recycled through the filtration unit.

Filtrate below the EDL is transferred to Building 774 Waste Treatment. Wet and dry combustibles, Ful-Flo filters, glovebox filters, glass, and light metal are all put in 55-gallon drums and taken to the drum counter to be assayed. Leaded gloves are placed in a satellite collection area. Glovebox exhaust is directed to the filter plenum. Process Table 771-19 presents the outputs associated with the Caustic Filtration Process and provides their dispositions and hazardous character.

20.0 PROCESS 771-20: FUME SCRUBBER

The Fume Scrubber, located in Room 149, adjacent to Glovebox 26, neutralizes acid fumes from various process off-gas streams as well as glovebox exhaust streams. Specific streams include the dissolution glovebox exhaust, dissolution pot off-gas, exhaust from vacuum mist tanks, and the evaporator distillate off-gas from the evaporator distillate condensers. Equipment used in this process includes a fume scrubber, pumps, heat exchangers, pipes, tanks, valves, and filters. Figure 20.1 shows the inputs, process flow, and outputs associated with the Fume Scrubber Process.

The Fume Scrubber system consists of two scrubber towers packed with Teflon stars or Raschig rings (at A, Figure 20.1). Potassium hydroxide is recirculated within the towers (at B, Figure 20.1) and reacts with and neutralizes acid fumes that pass through the towers.

The spent scrubber solution or potassium hydroxide is transferred via process piping to a holding tank, Tank D-921 or D-922, Caustic Filtration Process (771-19). Wet combustibles, used glovebox filters, Ful-Flo Filters light metal, Teflon stars, Raschig rings, and glass are all put in 55-gallon drums in Room 114, and later taken to the drum counter to be assayed. Dry nonline combustibles are put in a drum in Room 114. Leaded gloves are placed in a satellite collection area. Scrubbed process and glovebox exhaust is vented to the filter plenum. Process Table 771-20 presents the outputs associated with the Fume Scrubber Process and defines their dispositions and hazardous character.

21.0 PROCESS 771-21: VACUUM SYSTEMS

Vacuum Systems, located in Room 114, Glovebox 18, and Room 149, Gloveboxes 40 and 44, is a process that uses one of two sets of liquid-sealed vacuum pumps to support building operations. The house vacuum system in Glovebox 18 services processes located in Room 114. The vacuum system located in Gloveboxes 40 and 44 services processes located in Room 149, chemical laboratories, Pu Metallurgy, and Chemical Technology R&D laboratories. Equipment used includes tanks, vacuum pumps, and heat exchangers. Figure 21.1 shows the inputs, process flow, and outputs associated with the Vacuum Systems Process.

Vacuum pumps create a vacuum on the vacuum header, which serves as a means to transfer fluids on demand by valving arrangements. A vacuum trap is positioned between each point of service and the header to capture entrained fluids. The pumps are not critically safe because of their geometry. Therefore, the header is connected to a receiving tank (at A, Figure 21.1) which collects any existing entrained fluid before the fluid reaches the vacuum pumps. The vacuum pumps use a seal liquid to exert a vacuum on the receiving tank. The vacuum systems use water as the seal liquid. The liquid is centrifugally dispersed within the pump housing (at B, Figure 21.1) and it exits at the pump exhaust as a mist. The pump exhaust is directly piped to a mist tank (at C, Figure 21.1), where the air is separated from the seal liquid.

Seal liquid from the vacuum pumps in Glovebox 18 is transferred to Tanks D-551 and D-552 and eventually processed in Glovebox 42, Anion Exchange (Process 771-04). Seal liquid from vacuum pumps in Gloveboxes 40 and 44 is also sent to Tanks D-551 and D-552. Acid Recycle, used in cleaning the vacuum header receiving tank, is sent to Anion Exchange for further processing. Wet and nonline dry combustibles, used Ful-Flo and glovebox filters, glass, and light metal are put in 55-gallon drums in Room 114 or 149. Leaded gloves are placed in a satellite collection area in Room 114. Fumes from the mist tanks are vented to the Fume Scrubber (Process 771-20). Glovebox exhaust is directed to the filter plenum. Process Table 771-21 presents the outputs associated with the Vacuum Systems Process and defines their dispositions and hazardous character.

22.0 PROCESS 771-22: CHEMICAL MAKE-UP

Chemical Make-Up, located in Rooms 246, 246A, and 247, stores and prepares chemical reagents in tanks, bottles, and drums for the Building 771 processes. Chemical make-up also includes hydrogen fluoride evaporation in the hydrogen fluoride evaporation subsystem. Equipment used in the process includes tanks, heaters, pipes, pumps, an evaporator, and a hydrogen fluoride scrubber. Figures 22.1 and 22.2 show the inputs, process flow, and outputs associated with the Chemical Make-Up Process.

A large variety of chemical reagents, including argon, several different acids, and hydrogen peroxide are prepared and stored in the chemical makeup areas. Numerous types of containers are used to receive or store these chemicals. Potassium hydroxide is prepared in three molar concentrations for various processes within the building.

An important subprocess in Chemical Make-Up is the hydrogen fluoride evaporation system. Empty cylinders of anhydrous hydrogen fluoride are stored in Building 714 (at A, Figure 22.2). The hydrogen fluoride is piped to the evaporator in Room 246A (at B, Figure 22.2); double-walled piping is used to prevent leakage incidents. The hydrogen fluoride is heated until it vaporizes. The outer chase of the piping is purged with nitrogen to remove leaking hydrogen fluoride. The nitrogen is scrubbed with potassium hydroxide for neutralization (at C, Figure 22.2). Once the nitrogen has been neutralized, it is vented to the FU-2 plenum. The hydrogen fluoride gas produced by the hydrogen fluoride evaporation system is piped to Glovebox 7—Hydrofluorination, Process 771-10.

Empty chemical containers including used glass jars, plastic containers, and cardboard cartons are containerized, checked for radioactive contamination, and noncontaminated cartons and containers are eventually removed to the Rocky Flats Environmental Technology Site landfill. Nonline dry or wet combustibles are placed in the appropriate 55-gallon drum, then taken to the drum counter for counting. The rinsate from containers is piped to two 90-day holding tanks in Room 309. Process Table 771-22 presents the outputs associated with the Chemical Make-Up Process and defines their dispositions and hazardous character.

25.0 PROCESS 771-25: CHEMICAL TECHNOLOGY

Chemical Technology Laboratories, located in Rooms 180-A through 180-L and Room 187, were used for aqueous plutonium research and development activities, such as determining the appropriate combinations for production processes. The rooms contain a variety of general purpose gloveboxes. Equipment used in these labs includes balances, small furnaces, mixing equipment, and standard laboratory apparatus and equipment. Figures 25.1 through 25.4 show the inputs, process flow, and outputs for the Chemical Technology Process.

The Chemical Technology process is no longer in use for aqueous plutonium research. Glovebox K-20, in room 180K is being used for storage and sampling of mixed residues, as shown in figure 25.4. General clean-up and maintenance is performed periodically on the gloveboxes in this process. Figure 2501 through 25.4 shows the input, and output for the Chemical Technology process.

Line dry combustibles, line wet combustibles, plastic, glass, glove box filters, and light metal outputs are collected in the appropriate 55-gallon drum in Room 180D, 180F, or 180K. These drums are moved to the drum counter for assay, as required. Leaded gloves are collected in a satellite area in Room 180K. Ful-Flo filters are placed in a plastic bottle which is then placed in a clam shell (Process Residue Container). The filter is assayed at the can counter. Glovebox exhaust is exhausted to the Building Plenum, Process 771-27.

26.0 PROCESS 771-26: PLUTONIUM METALLURGY

Plutonium Metallurgy operations, located in Rooms 180-E, 182, 182-A, and 186 (all containing gloveboxes), include alloy preparation, heat treating, rolling, metal cutting, and metallurgical testing cutting for research and development. The process uses plutonium alloys to simulate various operations currently conducted in Building 707. Equipment utilized includes a burn box; casting apparatus; hand tools; metal-cutting, tensile-testing, and hardness-testing equipment; and furnaces. Figure 26.1 shows the inputs, process flow, and outputs associated with Plutonium Metallurgy.

After the plutonium metal and alloy is prepared and cast, it is transferred to various heat treatment processes or to the rolling mills. The alloys are cast in furnaces using graphite crucibles. Metal fines and skull resulting from casting operations are calcined to an oxide form in a furnace. Dry rags are used to clean gloveboxes occasionally. No hazardous chemicals are employed in any of the metallurgical processes. FC-43 is used as a sealant for the scale passthroughs, but is not generated as a waste.

Plutonium metal, alloys, and pieces of parts are transferred to Building 707 for plutonium recovery. The plutonium oxide is sent to Glovebox 24, High-Level Dissolution Process (771-1). Ingots may be sawed, in which case the metal dust is swept up and burned in a burn-box (on the same day as the sawing). Whole pieces of plutonium are normally sent for sample analysis, so no drilling is involved. Several residues are generated by the metallurgy process. A mixture of oxide and metal (skull) is produced by casting and is later calcined in a furnace in the glovebox. This material is sent to High-Level Dissolution in cans on a cart. After experiments, nonspecification pieces of metal are taken to Module J in Building 707 for casting into ingots to be sent to Electrorefining (Process 776-1). Some oxide is generated by wire brush cleaning of plutonium during inventory cleanup or prior to use in alloy preparation. The oxide is collected and sent to recovery in Building 771. Line and nonline dry combustibles, wet combustibles, oil absorbed on Oil Dri, classified graphite shapes, leaded glovebox gloves, line- and nonline-generated insulation, glovebox filters, line and nonline plastic, glass, and light metal are placed in appropriate 55-gallon drums. Glovebox exhaust is vented to the Building 771 filter plenum. The disposition of hydraulic oil and line and nonline graphite crucibles and molds has not yet been determined. Process Table 771-26 presents the outputs associated with Plutonium Metallurgy and defines their dispositions and hazardous character.

33.0 PROCESS 771-33: NONDESTRUCTIVE ASSAY

The Nondestructive Assay (NDA) Process, located in Building 771 Annex, involves transferring drums and other associated activities. Figure 33.1 shows the inputs, process flow, and outputs associated with Nondestructive Assay.

Drums and cans are received from various sources, primarily production, labs, maintenance, and filter techs, then staged, and transferred for assay. Drums may be rejected prior to receiving primarily for the following reasons: insufficient paperwork, dents, excessive rust, bulging, and improper drum sealing. Rejected drums are returned to the generator. Kimwipes are used for cleanup of containers and excess water associated with safety showers. KW detergent and De-Solv-It are also used for container cleaning. Metal scraps are stored in the process area, awaiting disposal.

Dry combustibles consisting of Kimwipes, office waste, and computer paper are disposed of in an area drum. Wet combustibles and scrap metal are also placed in the appropriate white 55-gallon drums. Assayed drums and cans are taken to the appropriate storage areas. The wastes/residues in these drums and cans are characterized within the specific processes from which they originate. Process Table 771-33 presents the outputs associated with the Nondestructive Assay Process and provides their dispositions and hazardous character.

34.0 PROCESS 771-34: INCINERATOR

The Building 771 Incinerator system, located in Room 149, reduced above discard, Plutonium bearing, solid combustibles into ash for plutonium recovery processing. The system is comprised of a multi-chamber, refractory-lined firebox; a caustic scrubber system; a dedicated vacuum system; heat exchangers; various tanks, pipes, and valves; ball mill; and a filter plenum. Figure 34.1 shows the inputs, process flow, and outputs formerly associated with the Incinerator.

Above discard, plutonium bearing, material entered the glovebox from the drum hoist and bag-in area (at A, Figure 34.1). Material was hand-sorted to segregate combustibles. Noncombustibles (metal, glass, etc.) were removed from the glovebox. Material was fed into the incinerator (at B, Figure 34.1) and reduced in a 12-to-1 ratio, by weight. Plutonium-bearing solid combustibles including paper, PVC and polystyrene bags, polypropylene and Ful-Flo filters, surgical gloves, PVC maintenance tents, and various types of sludge were fed into the incinerator. Incinerated ash was pulverized in the ball mill (at C, Figure 34.1) before storage for recovery processing.

Incinerator off-gas was cooled through two air-to-gas heat exchangers (at D, Figure 34.1) before it passed through the caustic scrubber (at E, Figure 34.1). Cooling air from the heat exchangers was filtered through the incinerator filter plenum and main filter plenum, respectively. The cooled off-gas was filtered in the incinerator filter plenum. Booster fans were used to direct the air flow to the main plenum.

Caustic solution from the scrubber was processed through the drum filter (at F, Figure 34.1); particulate matter was entrained on the filter media. The vacuum system pulled a vacuum on the filter media. Spent caustic was transferred to Caustic Filtration, Process 777-19. Sludge from the drum filter was transferred to storage awaiting cementation. Pulverized ash and tramp metals were transferred to assay.

This description and Figure 34.1 are only included as additional information, as the Building 771 Incinerator System is not in operation at this time and has not been rescheduled for operation. As no outputs are generated from the Incinerator, neither an output table nor output sheets are included.

THIS PAGE INTENTIONALLY LEFT BLANK

Idle equipment in Building 771 has been identified and is listed in this Appendix. This Appendix lists the equipment and potential hold-up materials that are due to be deactivated.

IDLE EQUIPMENT INVENTORY, BUILDING 771

ID #	Loc. (Rm)	Description	Rad ?	Type of Material	Haz Matl	Quantity
771-0011	247	RESIN GRADEER & DROP LINES NDT #1363 & NDT 1364	Yes	WATER	NO	26 LITERS
771-0021		HYDROFLUORIC ACID EVAPORATOR NDT # 1391	Yes	HYDROFLUORIC ACID	YES	OPERATIONALLY EMPTY
771-0022		HYDRAULIC PUMP FOR BARREL COUNTER 2P-15	Yes	OIL/HYDRAULIC FLUID	NO	30 GALLONS
771-0023		HYDRAULIC SYSTEM, LN 17	Yes	OIL/HYDRAULIC FLUID	NO	2 GALLONS
771-0024	114	FLOURINATOR HYDRAULIC PUMP 328-008	Yes	OIL/HYDRAULIC FLUID	NO	30 GALLONS
771-0025	182	ARC DURANCE VACUUM PUMP 771-6073-02507	Yes	OIL/HYDRAULIC FLUID	NO	3 GALLONS
771-0026	182	MICROVAC PUMP CB85128	Yes	OIL/HYDRAULIC FLUID	NO	3 GALLONS
771-0027	182	MICROVAC PUMP CB85003	Yes	OIL/HYDRAULIC FLUID	NO	8 LITERS
771-0028	182	LEAK DETECTOR 254-113	Yes	OIL/HYDRAULIC FLUID	NO	3 GALLONS
771-0029	182	DUO CELL VACUUM PUMP 000000-42-00	Yes	270-439 OIL/HYDRAULIC FLUID	NO	1 GALLON
771-0030	182	DUO CELL VACUUM PUMP 270-053	Yes	270-439 OIL/HYDRAULIC FLUID	NO	1 GALLON
771-0031	182	DUO CELL VACUUM PUMP 143	Yes	270-439 OIL/HYDRAULIC FLUID	NO	1 GALLON

ID #	Loc. (Rm)	Description	Rad ?	Type of Material	Haz Matl	Quantity
771-0032	182	LN 207 VACUUM PUMP 270-34B	Yes	270-439 OIL/HYDRAULIC FLUID	NO	3 GALLONS
771-0033	182	PUMP MOTOR/ATTACHED TO BOX 203 - 2774	Yes	270-439 OIL/HYDRAULIC FLUID	NO	50 GALLONS
771-0034	182	MILL 771-06976-12715	Yes	270-439 OIL/HYDRAULIC FLUID	NO	50 GALLONS
771-0035	182	VACUUM PUMP 270-445	Yes	270-439 OIL/HYDRAULIC FLUID	NO	3 GALLONS
771-0036	182	VACUUM PUMP 270-417	Yes	270-439 OIL/HYDRAULIC FLUID	NO	3 GALLONS
771-0037	182	VACUUM PUMP 270-418	Yes	270-439 OIL/HYDRAULIC FLUID	NO	3 GALLONS
771-0040	179	DO-ALL BANDSAW D-81-6967-91788	Yes	DRY	NO	CHIPS
771-0042		SCANNING ELECTRON MICROSCOPE 000-3168700	Yes	VACUUM OIL	NO	1 GALLON
771-0043		VACUUM COATER 000-3177100	Yes	VACUUM OIL	NO	1 GALLON
771-0044		LAMERT VACUUM PUMP SN317P173	Yes	VACUUM OIL	NO	1 GALLON
771-0045		PELCO CARBON EVAPORATION UNIT 000-3245900	Yes	VACUUM OIL	NO	1 GALLON
771-0046	165	VACUUM PUMP FOR OY SMEAR SN-E4322067	Yes	VACUUM OIL	NO	1 GALLON
771-0047	165	VACUUM PUMP FOR OY SMEAR SN-L3504	Yes	VACUUM OIL	NO	1 GALLON
771-0048	155	VACUUM PUMP (EAST WALL) SN-14022	Yes	VACUUM OIL	NO	1 GALLON
771-0049	155	VACUUM PUMP (EASTWALL)	Yes	VACUUM OIL	NO	1 GALLON

ID #	Loc. (Rm)	Description	Rad ?	Type of Material	Haz Matl	Quantity
771-0062	146	VACUUM RECEIVING TANK	Yes	NITRIC ACID	YES	OPERATIONALLY EMPTY
771-0063	174	FUME SCRUBBER SIGHT GLASS	Y	POTASSIUM HYDROXIDE	YES	2 kg
771-0064	146	HOLDING COLUMN/MT7 D1016	Y	CORROSIVE, D002	YES	13 LITERS
771-0065		DISSOLUTION COLUMN	Y	CORROSIVE, D002	YES	4 LITERS
771-0066		CHEMICAL FEED COLUMN	Y	FERROUS SULFAMATE	YES	10 LITERS
771-0072		HYDRAULIC PRESS #771-3937-45093		OIL	NO	30 GALLONS
771-0073	179	BRIDGEPORT MILL #000-31143-00		OIL	NO	RESIDUE

THIS PAGE INTENTIONALLY LEFT BLANK

This WSRIC Book has no Appendix D.

THIS PAGE INTENTIONALLY LEFT BLANK

APPENDIX E: UHC WORKSHEETS

This Appendix includes the Underlying Hazardous Constituents Worksheets for the listed waste streams.

UNDERLYING HAZARDOUS CONSTITUENTS WORKSHEET

WASTE STREAM # 771-23-4

The following underlying hazardous constituents (indicated by a checkmark in the appropriate box) are reasonably expected to be present in this waste stream:

INORGANIC CONSTITUENTS			
☐ Antimony	☐ Cadmium	■ Lead	☐ Silver
☐ Arsenic	☐ Chromium	☐ Mercury	☐ Sulfide (Wastewater Only)
☐ Barium	☐ Cyanides (Total)	☐ Nickel	☐ Thallium
☐ Beryllium	☐ Cyanides (Amenable)	☐ Selenium	
ORGANIC CONSTITUENTS			
☐ Acenaphthylene	☐ p-CRESOL	☐ ETHYL ACETATE	☐ N-Nitrosopiperidine
☐ Acenaphthene	☐ Cyclohexanone	☐ Ethyl Cyanide (Propanenitrile)	☐ N-Nitrosopyrrolidine
☐ ACETONE	☐ 1,2-Dibromo-3-chloropropane	☐ ETHYL BENZENE	☐ Parathion
☐ Acetonitrile	☐ Ethylene dibromide (1,2-dibromoethane)	☐ ETHYL ETHER	☐ Total PCBs
☐ Acetophenone	☐ Dibromomethane	☐ bis(2-Ethylhexyl) phthalate	☐ Pentachlorobenzene
☐ Acrylamide	☐ 2,4,D(2-4-Dichlorophenoxyacetic acid)	☐ Ethyl methacrylate	☐ Pentachlorodibenzo-p-dioxins (all)
☐ Acrylonitrile	☐ Dibenz(a,h)anthracene	☐ Ethylene oxide	☐ Pentachlorodibenzofurans (all)
☐ Aldrin	☐ Dibenz(a,e)pyrene	☐ Fluoranthene	☐ Pentachloroethane
☐ Aniline	☐ m-Dichlorobenzene	☐ Fluorene	☐ Pentachloronitrobenzene
☐ Anthracene	☐ o-DICHLOROBENZENE	☐ Heptachlor	☐ Pentachlorophenol
☐ BENZENE	☐ p-Dichlorobenzene	☐ Hexachlorobenzene	☐ Phenacetin
☐ Benz(a)anthracene	☐ Dichlorodifluoromethane	☐ Hexachlorobutadiene	☐ Phenanthrene
☐ Benzal chloride	☐ 1,1-Dichloroethane	☐ Hexachlorocyclopentadiene	☐ Phenol
☐ Benzo(b)fluoranthene	☐ 1,2-Dichloroethane	☐ Hexachlorodibenzo-p-dioxins (all)	☐ Phthalic acid
☐ Benzo(k)fluoranthene	☐ 1,1-Dichloroethylene	☐ Hexachlorodibenzofurans (all)	☐ Phthalic anhydride
☐ Benzo(g,h,i)perylene	☐ trans-1,2-Dichloroethylene	☐ Hexachloroethane	☐ Pyrene
☐ Benzo(a)pyrene	☐ 2,4-Dichlorophenol	☐ Hexachloropropylene	☐ PYRIDINE
☐ Bromodichloromethane	☐ 2,6-Dichlorophenol	☐ Indeno (1,2,3-c,d) pyrene	☐ Safrole
☐ Methyl bromide (Bromomethane)	☐ 1,2-Dichloropropane	☐ Iodomethane	☐ Silvex (2,4,5-TP)
☐ 4-Bromophenyl phenyl ether	☐ cis-1,3-Dichloropropylene	☐ ISOBUTYL ALCOHOL	☐ 2,4,5-T(2,4,5-Trichloro phenoxy-acetic acid)
☐ n-BUTYL ALCOHOL	☐ trans-1,3-Dichloropropylene	☐ Isodrin	☐ 1,2,4,5-Tetrachlorobenzene
☐ Butyl benzyl phthalate	☐ Dieldrin	☐ METHANOL	☐ 1,1,1,2-Tetrachloroethane
☐ CARBON DISULFIDE	☐ Diethyl phthalate	☐ Methapyrilene	☐ 1,1,2,2-Tetrachloroethane
☐ CARBON TETRACHLORIDE	☐ 2,4-Dimethyl phenol	☐ Methoxychlor	☐ TETRACHLOROETHYLENE
☐ Chlordane (alpha & gamma isomers)	☐ Dimethyl phthalate	☐ 4,4-Methylene bis(2-chloroaniline)	☐ 2,3,4,6-Tetrachlorophenol
☐ p-Chloroaniline	☐ Di-n-butyl phthalate	☐ METHYLENE CHLORIDE	☐ TOLUENE
☐ CHLOROBENZENE	☐ 1,4-Dinitrobenzene	☐ METHYL ETHYL KETONE	☐ Toxaphene
☐ 2-Chloro-1,3-butadiene	☐ 4,6-Dinitro-o-cresol	☐ METHYL ISOBUTYL KETONE	☐ Bromoform (Tribromomethane)
☐ Chlorodibromomethane	☐ 2,4-Dinitrophenol	☐ Methyl methacrylate	☐ 1,2,4-Trichlorobenzene
☐ Chloroethane	☐ 2,4-Dinitrotoluene	☐ Methyl methansulfonate	☐ 1,1,1-TRICHLOROETHANE
☐ bis(2-chloroethyl)ether	☐ 2,6-Dinitrotoluene	☐ Naphthalene	☐ 1,1,2-TRICHLOROETHANE
☐ Chloroform	☐ Di-n-octyl phthalate	☐ o-Nitroaniline	☐ TRICHLOROETHYLENE
☐ bis(2-Chloroisopropyl)ether	☐ Di-n-propylnitrosamine	☐ p-Nitroaniline	☐ TRICHLOROMONOFLUOROMETHANE
☐ p-Chloro-m-cresol	☐ 1,4-Dioxane	☐ NITROBENZENE	☐ 2,4,5-Trichlorophenol
☐ 2-Chloroethyl vinyl ether	☐ Diphenylamine	☐ 5-Nitro-o-toluidine	☐ 2,4,6-Trichlorophenol
☐ Chloromethane (Methyl chloride)	☐ Diphenylnitrosamine	☐ o-Nitrophenol	☐ 1,2,3-Trichloropropane
☐ 2-Chloronaphthalene	☐ 1,2-Diphenylhydrazine	☐ p-Nitrophenol	☐ 1,1,2-TRICHLORO-1,2,2-TRIFLUOROETHANE
☐ 2-Chlorophenol	☐ Disulfoton	☐ N-Nitrosodiethylamine	☐ tris-(2,3-Dibromopropyl) phosphate
☐ 3-Chloropropylene	☐ Endosulfan I	☐ N-Nitrosodimethylamine	☐ Vinyl chloride
☐ Chrysene	☐ Endosulfan II	☐ N-Nitroso-di-n-butylamine	☐ XYLENES-TOTAL MIXED ISOMERS
☐ o-CRESOL	☐ Endrin	☐ N-Nitrosomethylethylamine	
☐ m-CRESOL	☐ Endrin aldehyde	☐ N-Nitrosomorpholine	

☐ None of the above listed underlying hazardous constituents are reasonably expected to be present in this waste stream.

UNDERLYING HAZARDOUS CONSTITUENTS WORKSHEET

WASTE STREAM # 771-23-15

The following underlying hazardous constituents (indicated by a checkmark in the appropriate box) are reasonably expected to be present in this waste stream:

INORGANIC CONSTITUENTS			
☐ Antimony	■ Cadmium	■ Lead	■ Silver
☐ Arsenic	■ Chromium	☐ Mercury	☐ Sulfide (Wastewater Only)
☐ Barium	☐ Cyanides (Total)	☐ Nickel	☐ Thallium
☐ Beryllium	☐ Cyanides (Amenable)	☐ Selenium	
ORGANIC CONSTITUENTS			
☐ Acenaphthylene	☐ p-CRESOL	☐ ETHYL ACETATE	☐ N-Nitrosopiperidine
☐ Acenaphthene	☐ Cyclohexanone	☐ Ethyl Cyanide (Propanenitrile)	☐ N-Nitrosopyrrolidine
☐ ACETONE	☐ 1,2-Dibromo-3-chloropropane	☐ ETHYL BENZENE	☐ Parathion
☐ Acetonitrile	☐ Ethylene dibromide (1,2-dibromoethane)	☐ ETHYL ETHER	☐ Total PCBs
☐ Acetophenone	☐ Dibromomethane	☐ bis(2-Ethylhexyl) phthalate	☐ Pentachlorobenzene
☐ Acrylamide	☐ 2,4,D(2-4-Dichlorophenoxyacetic acid)	☐ Ethyl methacrylate	☐ Pentachlorodibenzo-p-dioxins (all)
☐ Acrylonitrile	☐ Dibenz(a,h)anthracene	☐ Ethylene oxide	☐ Pentachlorodibenzofurans (all)
☐ Aldrin	☐ Dibenz(a,e)pyrene	☐ Fluoranthene	☐ Pentachloroethane
☐ Aniline	☐ m-Dichlorobenzene	☐ Fluorene	☐ Pentachloronitrobenzene
☐ Anthracene	☐ o-DICHLOROBENZENE	☐ Heptachlor	☐ Pentachlorophenol
☐ BENZENE	☐ p-Dichlorobenzene	☐ Hexachlorobenzene	☐ Phenacetin
☐ Benz(a)anthracene	☐ Dichlorodifluoromethane	☐ Hexachlorobutadiene	☐ Phenanthrene
☐ Benzal chloride	☐ 1,1-Dichloroethane	☐ Hexachlorocyclopentadiene	☐ Phenol
☐ Benzo(b)fluoranthene	☐ 1,2-Dichloroethane	☐ Hexachlorodibenzo-p-dioxins (all)	☐ Phthalic acid
☐ Benzo(k)fluoranthene	☐ 1,1-Dichloroethylene	☐ Hexachlorodibenzofurans (all)	☐ Phthalic anhydride
☐ Benzo(g,h,i)perylene	☐ trans-1,2-Dichloroethylene	☐ Hexachloroethane	☐ Pyrene
☐ Benzo(a)pyrene	☐ 2,4-Dichlorophenol	☐ Hexachloropropylene	☐ PYRIDINE
☐ Bromodichloromethane	☐ 2,6-Dichlorophenol	☐ Indeno (1,2,3-c,d) pyrene	☐ Safrole
☐ Methyl bromide (Bromomethane)	☐ 1,2-Dichloropropane	☐ Iodomethane	☐ Silvex (2,4,5-TP)
☐ 4-Bromophenyl phenyl ether	☐ cis-1,3-Dichloropropylene	☐ ISOBUTYL ALCOHOL	☐ 2,4,5-T(2,4,5-Trichloro phenoxy-acetic acid)
☐ n-BUTYL ALCOHOL	☐ trans-1,3-Dichloropropylene	☐ Isodrin	☐ 1,2,4,5-Tetrachlorobenzene
☐ Butyl benzyl phthalate	☐ Dieldrin	☐ METHANOL	☐ 1,1,1,2-Tetrachloroethane
☐ CARBON DISULFIDE	☐ Diethyl phthalate	☐ Methapyrilene	☐ 1,1,2,2-Tetrachloroethane
☐ CARBON TETRACHLORIDE	☐ 2,4-Dimethyl phenol	☐ Methoxychlor	☐ TETRACHLOROETHYLENE
☐ Chlordane (alpha & gamma isomers)	☐ Dimethyl phthalate	☐ 4,4-Methylene bis(2-chloroaniline)	☐ 2,3,4,6-Tetrachlorophenol
☐ p-Chloroaniline	☐ Di-n-butyl phthalate	☐ METHYLENE CHLORIDE	☐ TOLUENE
☐ CHLOROBENZENE	☐ 1,4-Dinitrobenzene	☐ METHYL ETHYL KETONE	☐ Toxaphene
☐ 2-Chloro-1,3-butadiene	☐ 4,6-Dinitro-o-cresol	☐ METHYL ISOBUTYL KETONE	☐ Bromoform (Tribromomethane)
☐ Chlorodibromomethane	☐ 2,4-Dinitrophenol	☐ Methyl methacrylate	☐ 1,2,4-Trichlorobenzene
☐ Chloroethane	☐ 2,4-Dinitrotoluene	☐ Methyl methansulfonate	☐ 1,1,1-TRICHLOROETHANE
☐ bis(2-chloroethyl)ether	☐ 2,6-Dinitrotoluene	☐ Naphthalene	☐ 1,1,2-TRICHLOROETHANE
☐ Chloroform	☐ Di-n-octyl phthalate	☐ o-Nitroaniline	☐ TRICHLOROETHYLENE
☐ bis(2-Chloroisopropyl)ether	☐ Di-n-propylnitrosamine	☐ p-Nitroaniline	☐ TRICHLOROMONOFLUOROMETHANE
☐ p-Chloro-m-cresol	☐ 1,4-Dioxane	☐ NITROBENZENE	☐ 2,4,5-Trichlorophenol
☐ 2-Chloroethyl vinyl ether	☐ Diphenylamine	☐ 5-Nitro-o-toluidine	☐ 2,4,6-Trichlorophenol
☐ Chloromethane (Methyl chloride)	☐ Diphenylnitrosamine	☐ o-Nitrophenol	☐ 1,2,3-Trichloropropane
☐ 2-Chloronaphthalene	☐ 1,2-Diphenylhydrazine	☐ p-Nitrophenol	☐ 1,1,2-TRICHLORO-1,2,2-TRIFLUOROETHANE
☐ 2-Chlorophenol	☐ Disulfoton	☐ N-Nitrosodiethylamine	☐ tris-(2,3-Dibromopropyl) phosphate
☐ 3-Chloropropylene	☐ Endosulfan I	☐ N-Nitrosodimethylamine	☐ Vinyl chloride
☐ Chrysene	☐ Endosulfan II	☐ N-Nitroso-di-n-butylamine	☐ XYLENES-TOTAL MIXED ISOMERS
☐ o-CRESOL	☐ Endrin	☐ N-Nitrosomethylethylamine	
☐ m-CRESOL	☐ Endrin aldehyde	☐ N-Nitrosomorpholine	

☐ None of the above listed underlying hazardous constituents are reasonably expected to be present in this waste stream.

UNDERLYING HAZARDOUS CONSTITUENTS WORKSHEET

WASTE STREAM # 771-29-4

The following underlying hazardous constituents (indicated by a checkmark in the appropriate box) are reasonably expected to be present in this waste stream:

INORGANIC CONSTITUENTS			
☐ Antimony	☐ Cadmium	■ Lead	☐ Silver
☐ Arsenic	☐ Chromium	☐ Mercury	☐ Sulfide (Wastewater Only)
■ Barium	☐ Cyanides (Total)	☐ Nickel	■ Thallium
☐ Beryllium	☐ Cyanides (Amenable)	☐ Selenium	

ORGANIC CONSTITUENTS			
☐ Acenaphthylene	☐ p-CRESOL	☐ ETHYL ACETATE	☐ N-Nitrosopiperidine
☐ Acenaphthene	☐ Cyclohexanone	☐ Ethyl Cyanide (Propanenitrile)	☐ N-Nitrosopyrrolidine
☐ ACETONE	☐ 1,2-Dibromo-3-chloropropane	☐ ETHYL BENZENE	☐ Parathion
☐ Acetonitrile	☐ Ethylene dibromide (1,2-dibromoethane)	☐ ETHYL ETHER	☐ Total PCBs
☐ Acetophenone	☐ Dibromomethane	☐ bis(2-Ethylhexyl) phthalate	☐ Pentachlorobenzene
☐ Acrylamide	☐ 2,4,D(2-4-Dichlorophenoxyacetic acid)	☐ Ethyl methacrylate	☐ Pentachlorodibenzo-p-dioxins (all)
☐ Acrylonitrile	☐ Dibenz(a,h)anthracene	☐ Ethylene oxide	☐ Pentachlorodibenzofurans (all)
☐ Aldrin	☐ Dibenz(a,e)pyrene	☐ Fluoranthene	☐ Pentachloroethane
☐ Aniline	☐ m-Dichlorobenzene	☐ Fluorene	☐ Pentachloronitrobenzene
☐ Anthracene	☐ o-DICHLOROBENZENE	☐ Heptachlor	☐ Pentachlorophenol
☐ BENZENE	☐ p-Dichlorobenzene	☐ Hexachlorobenzene	☐ Phenacetin
☐ Benz(a)anthracene	☐ Dichlorodifluoromethane	☐ Hexachlorobutadiene	☐ Phenanthrene
☐ Benzal chloride	☐ 1,1-Dichloroethane	☐ Hexachlorocyclopentadiene	☐ Phenol
☐ Benzo(b)fluoranthene	☐ 1,2-Dichloroethane	☐ Hexachlorodibenzo-p-dioxins (all)	☐ Phthalic acid
☐ Benzo(k)fluoranthene	☐ 1,1-Dichloroethylene	☐ Hexachlorodibenzofurans (all)	☐ Phthalic anhydride
☐ Benzo(g,h,i)perylene	☐ trans-1,2-Dichloroethylene	☐ Hexachloroethane	☐ Pyrene
☐ Benzo(a)pyrene	☐ 2,4-Dichlorophenol	☐ Hexachloropropylene	☐ PYRIDINE
☐ Bromodichloromethane	☐ 2,6-Dichlorophenol	☐ Indeno (1,2,3-c,d) pyrene	☐ Safrole
☐ Methyl bromide (Bromomethane)	☐ 1,2-Dichloropropane	☐ Iodomethane	☐ Silvex (2,4,5-TP)
☐ 4-Bromophenyl phenyl ether	☐ cis-1,3-Dichloropropylene	☐ ISOBUTYL ALCOHOL	☐ 2,4,5-T(2,4,5-Trichloro phenoxy-acetic acid)
☐ n-BUTYL ALCOHOL	☐ trans-1,3-Dichloropropylene	☐ Isodrin	☐ 1,2,4,5-Tetrachlorobenzene
☐ Butyl benzyl phthalate	☐ Dieldrin	☐ METHANOL	☐ 1,1,1,2-Tetrachloroethane
☐ CARBON DISULFIDE	☐ Diethyl phthalate	☐ Methapyrilene	☐ 1,1,2,2-Tetrachloroethane
☐ CARBON TETRACHLORIDE	☐ 2,4-Dimethyl phenol	☐ Methoxychlor	☐ TETRACHLOROETHYLENE
☐ Chlordane (alpha & gamma isomers)	☐ Dimethyl phthalate	☐ 4,4-Methylene bis(2-chloroaniline)	☐ 2,3,4,6-Tetrachlorophenol
☐ p-Chloroaniline	☐ Di-n-butyl phthalate	☐ METHYLENE CHLORIDE	☐ TOLUENE
☐ CHLOROBENZENE	☐ 1,4-Dinitrobenzene	☐ METHYL ETHYL KETONE	☐ Toxaphene
☐ 2-Chloro-1,3-butadiene	☐ 4,6-Dinitro-o-cresol	☐ METHYL ISOBUTYL KETONE	☐ Bromoform (Tribromomethane)
☐ Chlorodibromomethane	☐ 2,4-Dinitrophenol	☐ Methyl methacrylate	☐ 1,2,4-Trichlorobenzene
☐ Chloroethane	☐ 2,4-Dinitrotoluene	☐ Methyl methansulfonate	☐ 1,1,1-TRICHLOROETHANE
☐ bis(2-chloroethyl)ether	☐ 2,6-Dinitrotoluene	☐ Naphthalene	☐ 1,1,2-TRICHLOROETHANE
☐ Chloroform	☐ Di-n-octyl phthalate	☐ o-Nitroaniline	☐ TRICHLOROETHYLENE
☐ bis(2-Chloroisopropyl)ether	☐ Di-n-propylnitrosamine	☐ p-Nitroaniline	☐ TRICHLOROMONOFLUOROMETHANE
☐ p-Chloro-m-cresol	☐ 1,4-Dioxane	☐ NITROBENZENE	☐ 2,4,5-Trichlorophenol
☐ 2-Chloroethyl vinyl ether	☐ Diphenylamine	☐ 5-Nitro-o-toluidine	☐ 2,4,6-Trichlorophenol
☐ Chloromethane (Methyl chloride)	☐ Diphenylnitrosamine	☐ o-Nitrophenol	☐ 1,2,3-Trichloropropane
☐ 2-Chloronaphthalene	☐ 1,2-Diphenylhydrazine	☐ p-Nitrophenol	☐ 1,1,2-TRICHLORO-1,2,2-TRIFLUOROETHANE
☐ 2-Chlorophenol	☐ Disulfoton	☐ N-Nitrosodiethylamine	☐ tris-(2,3-Dibromopropyl) phosphate
☐ 3-Chloropropylene	☐ Endosulfan I	☐ N-Nitrosodimethylamine	☐ Vinyl chloride
☐ Chrysene	☐ Endosulfan II	☐ N-Nitroso-di-n-butylamine	☐ XYLENES-TOTAL MIXED ISOMERS
☐ o-CRESOL	☐ Endrin	☐ N-Nitrosomethylethylamine	
☐ m-CRESOL	☐ Endrin aldehyde	☐ N-Nitrosomorpholine	

☐ None of the above listed underlying hazardous constituents are reasonably expected to be present in this waste stream.

UNDERLYING HAZARDOUS CONSTITUENTS WORKSHEET

WASTE STREAM # 771-29-10

The following underlying hazardous constituents (indicated by a checkmark in the appropriate box) are reasonably expected to be present in this waste stream:

INORGANIC CONSTITUENTS			
☐ Antimony	☐ Cadmium	■ Lead	☐ Silver
☐ Arsenic	☐ Chromium	■ Mercury	☐ Sulfide (Wastewater Only)
☐ Barium	☐ Cyanides (Total)	☐ Nickel	☐ Thallium
☐ Beryllium	☐ Cyanides (Amenable)	☐ Selenium	
ORGANIC CONSTITUENTS			
☐ Acenaphthylene	☐ p-CRESOL	☐ ETHYL ACETATE	☐ N-Nitrosopiperidine
☐ Acenaphthene	☐ Cyclohexanone	☐ Ethyl Cyanide (Propanenitrile)	☐ N-Nitrosopyrrolidine
☐ ACETONE	☐ 1,2-Dibromo-3-chloropropane	☐ ETHYL BENZENE	☐ Parathion
☐ Acetonitrile	☐ Ethylene dibromide (1,2-dibromoethane)	☐ ETHYL ETHER	☐ Total PCBs
☐ Acetophenone	☐ Dibromomethane	☐ bis(2-Ethylhexyl) phthalate	☐ Pentachlorobenzene
☐ Acrylamide	☐ 2,4,D(2-4-Dichlorophenoxyacetic acid)	☐ Ethyl methacrylate	☐ Pentachlorodibenzo-p-dioxins (all)
☐ Acrylonitrile	☐ Dibenz(a,h)anthracene	☐ Ethylene oxide	☐ Pentachlorodibenzofurans (all)
☐ Aldrin	☐ Dibenz(a,e)pyrene	☐ Fluoranthene	☐ Pentachloroethane
☐ Aniline	☐ m-Dichlorobenzene	☐ Fluorene	☐ Pentachloronitrobenzene
☐ Anthracene	☐ o-DICHLOROBENZENE	☐ Heptachlor	☐ Pentachlorophenol
☐ BENZENE	☐ p-Dichlorobenzene	☐ Hexachlorobenzene	☐ Phenacetin
☐ Benz(a)anthracene	☐ Dichlorodifluoromethane	☐ Hexachlorobutadiene	☐ Phenanthrene
☐ Benzal chloride	☐ 1,1-Dichloroethane	☐ Hexachlorocyclopentadiene	☐ Phenol
☐ Benzo(b)fluoranthene	☐ 1,2-Dichloroethane	☐ Hexachlorodibenzo-p-dioxins (all)	☐ Phthalic acid
☐ Benzo(k)fluoranthene	☐ 1,1-Dichloroethylene	☐ Hexachlorodibenzofurans (all)	☐ Phthalic anhydride
☐ Benzo(g,h,i)perylene	☐ trans-1,2-Dichloroethylene	☐ Hexachloroethane	☐ Pyrene
☐ Benzo(a)pyrene	☐ 2,4-Dichlorophenol	☐ Hexachloropropylene	☐ PYRIDINE
☐ Bromodichloromethane	☐ 2,6-Dichlorophenol	☐ Indeno (1,2,3-c,d) pyrene	☐ Safrole
☐ Methyl bromide (Bromomethane)	☐ 1,2-Dichloropropane	☐ Iodomethane	☐ Silvex (2,4,5-TP)
☐ 4-Bromophenyl phenyl ether	☐ cis-1,3-Dichloropropylene	☐ ISOBUTYL ALCOHOL	☐ 2,4,5-T(2,4,5-Trichloro phenoxy-acetic acid)
☐ n-BUTYL ALCOHOL	☐ trans-1,3-Dichloropropylene	☐ Isodrin	☐ 1,2,4,5-Tetrachlorobenzene
☐ Butyl benzyl phthalate	☐ Dieldrin	☐ METHANOL	☐ 1,1,1,2-Tetrachloroethane
☐ CARBON DISULFIDE	☐ Diethyl phthalate	☐ Methapyrilene	☐ 1,1,2,2-Tetrachloroethane
☐ CARBON TETRACHLORIDE	☐ 2,4-Dimethyl phenol	☐ Methoxychlor	☐ TETRACHLOROETHYLENE
☐ Chlordane (alpha & gamma isomers)	☐ Dimethyl phthalate	☐ 4,4-Methylene bis(2-chloroaniline)	☐ 2,3,4,6-Tetrachlorophenol
☐ p-Chloroaniline	☐ Di-n-butyl phthalate	☐ METHYLENE CHLORIDE	☐ TOLUENE
☐ CHLOROBENZENE	☐ 1,4-Dinitrobenzene	☐ METHYL ETHYL KETONE	☐ Toxaphene
☐ 2-Chloro-1,3-butadiene	☐ 4,6-Dinitro-o-cresol	☐ METHYL ISOBUTYL KETONE	☐ Bromoform (Tribromomethane)
☐ Chlorodibromomethane	☐ 2,4-Dinitrophenol	☐ Methyl methacrylate	☐ 1,2,4-Trichlorobenzene
☐ Chloroethane	☐ 2,4-Dinitrotoluene	☐ Methyl methansulfonate	☐ 1,1,1-TRICHLOROETHANE
☐ bis(2-chloroethyl)ether	☐ 2,6-Dinitrotoluene	☐ Naphthalene	☐ 1,1,2-TRICHLOROETHANE
☐ Chloroform	☐ Di-n-octyl phthalate	☐ o-Nitroaniline	☐ TRICHLOROETHYLENE
☐ bis(2-Chloroisopropyl)ether	☐ Di-n-propylnitrosamine	☐ p-Nitroaniline	☐ TRICHLOROMONOFLUOROMETHANE
☐ p-Chloro-m-cresol	☐ 1,4-Dioxane	☐ NITROBENZENE	☐ 2,4,5-Trichlorophenol
☐ 2-Chloroethyl vinyl ether	☐ Diphenylamine	☐ 5-Nitro-o-toluidine	☐ 2,4,6-Trichlorophenol
☐ Chloromethane (Methyl chloride)	☐ Diphenylnitrosamine	☐ o-Nitrophenol	☐ 1,2,3-Trichloropropane
☐ 2-Chloronaphthalene	☐ 1,2-Diphenylhydrazine	☐ p-Nitrophenol	☐ 1,1,2-TRICHLORO-1,2,2-TRIFLUOROETHANE
☐ 2-Chlorophenol	☐ Disulfoton	☐ N-Nitrosodiethylamine	☐ tris-(2,3-Dibromopropyl) phosphate
☐ 3-Chloropropylene	☐ Endosulfan I	☐ N-Nitrosodimethylamine	☐ Vinyl chloride
☐ Chrysene	☐ Endosulfan II	☐ N-Nitroso-di-n-butylamine	☐ XYLENES-TOTAL MIXED ISOMERS
☐ o-CRESOL	☐ Endrin	☐ N-Nitrosomethylethylamine	
☐ m-CRESOL	☐ Endrin aldehyde	☐ N-Nitrosomorpholine	

☐ None of the above listed underlying hazardous constituents are reasonably expected to be present in this waste stream.

UNDERLYING HAZARDOUS CONSTITUENTS WORKSHEET

WASTE STREAM # 771-29-33

The following underlying hazardous constituents (indicated by a checkmark in the appropriate box) are reasonably expected to be present in this waste stream:

INORGANIC CONSTITUENTS			
☐ Antimony	☐ Cadmium	■ Lead	☐ Silver
☐ Arsenic	☐ Chromium	■ Mercury	☐ Sulfide (Wastewater Only)
☐ Barium	☐ Cyanides (Total)	☐ Nickel	☐ Thallium
☐ Beryllium	☐ Cyanides (Amenable)	☐ Selenium	
ORGANIC CONSTITUENTS			
☐ Acenaphthylene	☐ p-CRESOL	☐ ETHYL ACETATE	☐ N-Nitrosopiperidine
☐ Acenaphthene	☐ Cyclohexanone	☐ Ethyl Cyanide (Propanenitrile)	☐ N-Nitrosopyrrolidine
☐ ACETONE	☐ 1,2-Dibromo-3-chloropropane	☐ ETHYL BENZENE	☐ Parathion
☐ Acetonitrile	☐ Ethylene dibromide (1,2-dibromoethane)	☐ ETHYL ETHER	☐ Total PCBs
☐ Acetophenone	☐ Dibromomethane	☐ bis(2-Ethylhexyl) phthalate	☐ Pentachlorobenzene
☐ Acrylamide	☐ 2,4,D(2-4-Dichlorophenoxyacetic acid)	☐ Ethyl methacrylate	☐ Pentachlorodibenzo-p-dioxins (all)
☐ Acrylonitrile	☐ Dibenz(a,h)anthracene	☐ Ethylene oxide	☐ Pentachlorodibenzofurans (all)
☐ Aldrin	☐ Dibenz(a,e)pyrene	☐ Fluoranthene	☐ Pentachloroethane
☐ Aniline	☐ m-Dichlorobenzene	☐ Fluorene	☐ Pentachloronitrobenzene
☐ Anthracene	☐ o-DICHLOROBENZENE	☐ Heptachlor	☐ Pentachlorophenol
☐ BENZENE	☐ p-Dichlorobenzene	☐ Hexachlorobenzene	☐ Phenacetin
☐ Benz(a)anthracene	☐ Dichlorodifluoromethane	☐ Hexachlorobutadiene	☐ Phenanthrene
☐ Benzal chloride	☐ 1,1-Dichloroethane	☐ Hexachlorocyclopentadiene	☐ Phenol
☐ Benzo(b)fluoranthene	☐ 1,2-Dichloroethane	☐ Hexachlorodibenzo-p-dioxins (all)	☐ Phthalic acid
☐ Benzo(k)fluoranthene	☐ 1,1-Dichloroethylene	☐ Hexachlorodibenzofurans (all)	☐ Phthalic anhydride
☐ Benzo(g,h,i)perylene	☐ trans-1,2-Dichloroethylene	☐ Hexachloroethane	☐ Pyrene
☐ Benzo(a)pyrene	☐ 2,4-Dichlorophenol	☐ Hexachloropropylene	☐ PYRIDINE
☐ Bromodichloromethane	☐ 2,6-Dichlorophenol	☐ Indeno (1,2,3-c,d) pyrene	☐ Safrole
☐ Methyl bromide (Bromomethane)	☐ 1,2-Dichloropropane	☐ Iodomethane	☐ Silvex (2,4,5-TP)
☐ 4-Bromophenyl phenyl ether	☐ cis-1,3-Dichloropropylene	☐ ISOBUTYL ALCOHOL	☐ 2,4,5-T(2,4,5-Trichloro phenoxy-acetic acid)
☐ n-BUTYL ALCOHOL	☐ trans-1,3-Dichloropropylene	☐ Isodrin	☐ 1,2,4,5-Tetrachlorobenzene
☐ Butyl benzyl phthalate	☐ Dieldrin	☐ METHANOL	☐ 1,1,1,2-Tetrachloroethane
☐ CARBON DISULFIDE	☐ Diethyl phthalate	☐ Methapyrilene	☐ 1,1,2,2-Tetrachloroethane
☐ CARBON TETRACHLORIDE	☐ 2,4-Dimethyl phenol	☐ Methoxychlor	☐ TETRACHLOROETHYLENE
☐ Chlordane (alpha & gamma isomers)	☐ Dimethyl phthalate	☐ 4,4-Methylene bis(2-chloroaniline)	☐ 2,3,4,6-Tetrachlorophenol
☐ p-Chloroaniline	☐ Di-n-butyl phthalate	☐ METHYLENE CHLORIDE	☐ TOLUENE
☐ CHLOROBENZENE	☐ 1,4-Dinitrobenzene	☐ METHYL ETHYL KETONE	☐ Toxaphene
☐ 2-Chloro-1,3-butadiene	☐ 4,6-Dinitro-o-cresol	☐ METHYL ISOBUTYL KETONE	☐ Bromoform (Tribromomethane)
☐ Chlorodibromomethane	☐ 2,4-Dinitrophenol	☐ Methyl methacrylate	☐ 1,2,4-Trichlorobenzene
☐ Chloroethane	☐ 2,4-Dinitrotoluene	☐ Methyl methansulfonate	☐ 1,1,1-TRICHLOROETHANE
☐ bis(2-chloroethyl)ether	☐ 2,6-Dinitrotoluene	☐ Naphthalene	☐ 1,1,2-TRICHLOROETHANE
☐ Chloroform	☐ Di-n-octyl phthalate	☐ o-Nitroaniline	☐ TRICHLOROETHYLENE
☐ bis(2-Chloroisopropyl)ether	☐ Di-n-propylnitrosamine	☐ p-Nitroaniline	☐ TRICHLOROMONOFLUOROMETHANE
☐ p-Chloro-m-cresol	☐ 1,4-Dioxane	☐ NITROBENZENE	☐ 2,4,5-Trichlorophenol
☐ 2-Chloroethyl vinyl ether	☐ Diphenylamine	☐ 5-Nitro-o-toluidine	☐ 2,4,6-Trichlorophenol
☐ Chloromethane (Methyl chloride)	☐ Diphenylnitrosamine	☐ o-Nitrophenol	☐ 1,2,3-Trichloropropane
☐ 2-Chloronaphthalene	☐ 1,2-Diphenylhydrazine	☐ p-Nitrophenol	☐ 1,1,2-TRICHLORO-1,2,2-TRIFLUOROETHANE
☐ 2-Chlorophenol	☐ Disulfoton	☐ N-Nitrosodiethylamine	☐ tris-(2,3-Dibromopropyl) phosphate
☐ 3-Chloropropylene	☐ Endosulfan I	☐ N-Nitrosodimethylamine	☐ Vinyl chloride
☐ Chrysene	☐ Endosulfan II	☐ N-Nitroso-di-n-butylamine	☐ XYLENES-TOTAL MIXED ISOMERS
☐ o-CRESOL	☐ Endrin	☐ N-Nitrosomethylethylamine	
☐ m-CRESOL	☐ Endrin aldehyde	☐ N-Nitrosomorpholine	

☐ None of the above listed underlying hazardous constituents are reasonably expected to be present in this waste stream.

UNDERLYING HAZARDOUS CONSTITUENTS WORKSHEET

WASTE STREAM # 771-29-39A

The following underlying hazardous constituents (indicated by a checkmark in the appropriate box) are reasonably expected to be present in this waste stream:

INORGANIC CONSTITUENTS			
☐ Antimony	■ Cadmium	■ Lead	☐ Silver
☐ Arsenic	☐ Chromium	■ Mercury	☐ Sulfide (Wastewater Only)
☐ Barium	☐ Cyanides (Total)	■ Nickel	☐ Thallium
☐ Beryllium	☐ Cyanides (Amenable)	☐ Selenium	
ORGANIC CONSTITUENTS			
☐ Acenaphthylene	☐ p-CRESOL	☐ ETHYL ACETATE	☐ N-Nitrosopiperidine
☐ Acenaphthene	☐ Cyclohexanone	☐ Ethyl Cyanide (Propanenitrile)	☐ N-Nitrosopyrrolidine
☐ ACETONE	☐ 1,2-Dibromo-3-chloropropane	☐ ETHYL BENZENE	☐ Parathion
☐ Acetonitrile	☐ Ethylene dibromide (1,2-dibromoethane)	☐ ETHYL ETHER	☐ Total PCBs
☐ Acetophenone	☐ Dibromomethane	☐ bis(2-Ethylhexyl) phthalate	☐ Pentachlorobenzene
☐ Acrylamide	☐ 2,4,D(2-4-Dichlorophenoxyacetic acid)	☐ Ethyl methacrylate	☐ Pentachlorodibenzo-p-dioxins (all)
☐ Acrylonitrile	☐ Dibenz(a,h)anthracene	☐ Ethylene oxide	☐ Pentachlorodibenzofurans (all)
☐ Aldrin	☐ Dibenz(a,e)pyrene	☐ Fluoranthene	☐ Pentachloroethane
☐ Aniline	☐ m-Dichlorobenzene	☐ Fluorene	☐ Pentachloronitrobenzene
☐ Anthracene	☐ o-DICHLOROBENZENE	☐ Heptachlor	☐ Pentachlorophenol
☐ BENZENE	☐ p-Dichlorobenzene	☐ Hexachlorobenzene	☐ Phenacetin
☐ Benz(a)anthracene	☐ Dichlorodifluoromethane	☐ Hexachlorobutadiene	☐ Phenanthrene
☐ Benzal chloride	☐ 1,1-Dichloroethane	☐ Hexachlorocyclopentadiene	☐ Phenol
☐ Benzo(b)fluoranthene	☐ 1,2-Dichloroethane	☐ Hexachlorodibenzo-p-dioxins (all)	☐ Phthalic acid
☐ Benzo(k)fluoranthene	☐ 1,1-Dichloroethylene	☐ Hexachlorodibenzofurans (all)	☐ Phthalic anhydride
☐ Benzo(g,h,i)perylene	☐ trans-1,2-Dichloroethylene	☐ Hexachloroethane	☐ Pyrene
☐ Benzo(a)pyrene	☐ 2,4-Dichlorophenol	☐ Hexachloropropylene	☐ PYRIDINE
☐ Bromodichloromethane	☐ 2,6-Dichlorophenol	☐ Indeno (1,2,3-c,d) pyrene	☐ Safrole
☐ Methyl bromide (Bromomethane)	☐ 1,2-Dichloropropane	☐ Iodomethane	☐ Silvex (2,4,5-TP)
☐ 4-Bromophenyl phenyl ether	☐ cis-1,3-Dichloropropylene	☐ ISOBUTYL ALCOHOL	☐ 2,4,5-T(2,4,5-Trichloro phenoxy-acetic acid)
☐ n-BUTYL ALCOHOL	☐ trans-1,3-Dichloropropylene	☐ Isodrin	☐ 1,2,4,5-Tetrachlorobenzene
☐ Butyl benzyl phthalate	☐ Dieldrin	☐ METHANOL	☐ 1,1,1,2-Tetrachloroethane
☐ CARBON DISULFIDE	☐ Diethyl phthalate	☐ Methapyrilene	☐ 1,1,2,2-Tetrachloroethane
☐ CARBON TETRACHLORIDE	☐ 2,4-Dimethyl phenol	☐ Methoxychlor	☐ TETRACHLOROETHYLENE
☐ Chlordane (alpha & gamma isomers)	☐ Dimethyl phthalate	☐ 4,4-Methylene bis(2-chloroaniline)	☐ 2,3,4,6-Tetrachlorophenol
☐ p-Chloroaniline	☐ Di-n-butyl phthalate	☐ METHYLENE CHLORIDE	☐ TOLUENE
☐ CHLOROBENZENE	☐ 1,4-Dinitrobenzene	☐ METHYL ETHYL KETONE	☐ Toxaphene
☐ 2-Chloro-1,3-butadiene	☐ 4,6-Dinitro-o-cresol	☐ METHYL ISOBUTYL KETONE	☐ Bromoform (Tribromomethane)
☐ Chlorodibromomethane	☐ 2,4-Dinitrophenol	☐ Methyl methacrylate	☐ 1,2,4-Trichlorobenzene
☐ Chloroethane	☐ 2,4-Dinitrotoluene	☐ Methyl methansulfonate	☐ 1,1,1-TRICHLOROETHANE
☐ bis(2-chloroethyl)ether	☐ 2,6-Dinitrotoluene	☐ Naphthalene	☐ 1,1,2-TRICHLOROETHANE
☐ Chloroform	☐ Di-n-octyl phthalate	☐ o-Nitroaniline	☐ TRICHLOROETHYLENE
☐ bis(2-Chloroisopropyl)ether	☐ Di-n-propylnitrosamine	☐ p-Nitroaniline	☐ TRICHLOROMONOFLUOROMETHANE
☐ p-Chloro-m-cresol	☐ 1,4-Dioxane	☐ NITROBENZENE	☐ 2,4,5-Trichlorophenol
☐ 2-Chloroethyl vinyl ether	☐ Diphenylamine	☐ 5-Nitro-o-toluidine	☐ 2,4,6-Trichlorophenol
☐ Chloromethane (Methyl chloride)	☐ Diphenylnitrosamine	☐ o-Nitrophenol	☐ 1,2,3-Trichloropropane
☐ 2-Chloronaphthalene	☐ 1,2-Diphenylhydrazine	☐ p-Nitrophenol	☐ 1,1,2-TRICHLORO-1,2,2-TRIFLUOROETHANE
☐ 2-Chlorophenol	☐ Disulfoton	☐ N-Nitrosodiethylamine	☐ tris-(2,3-Dibromopropyl) phosphate
☐ 3-Chloropropylene	☐ Endosulfan I	☐ N-Nitrosodimethylamine	☐ Vinyl chloride
☐ Chrysene	☐ Endosulfan II	☐ N-Nitroso-di-n-butylamine	☐ XYLENES-TOTAL MIXED ISOMERS
☐ o-CRESOL	☐ Endrin	☐ N-Nitrosomethylethylamine	
☐ m-CRESOL	☐ Endrin aldehyde	☐ N-Nitrosomorpholine	

☐ None of the above listed underlying hazardous constituents are reasonably expected to be present in this waste stream.

UNDERLYING HAZARDOUS CONSTITUENTS WORKSHEET

WASTE STREAM # 771-29-40

The following underlying hazardous constituents (indicated by a checkmark in the appropriate box) are reasonably expected to be present in this waste stream:

INORGANIC CONSTITUENTS			
☐ Antimony	☐ Cadmium	☐ Lead	☐ Silver
☐ Arsenic	☐ Chromium	■ Mercury	☐ Sulfide (Wastewater Only)
■ Barium	☐ Cyanides (Total)	☐ Nickel	☐ Thallium
☐ Beryllium	☐ Cyanides (Amenable)	☐ Selenium	
ORGANIC CONSTITUENTS			
☐ Acenaphthylene	☐ p-CRESOL	☐ ETHYL ACETATE	☐ N-Nitrosopiperidine
☐ Acenaphthene	☐ Cyclohexanone	☐ Ethyl Cyanide (Propanenitrile)	☐ N-Nitrosopyrrolidine
☐ ACETONE	☐ 1,2-Dibromo-3-chloropropane	☐ ETHYL BENZENE	☐ Parathion
☐ Acetonitrile	☐ Ethylene dibromide (1,2-dibromoethane)	☐ ETHYL ETHER	☐ Total PCBs
☐ Acetophenone	☐ Dibromomethane	☐ bis(2-Ethylhexyl) phthalate	☐ Pentachlorobenzene
☐ Acrylamide	☐ 2,4,D(2-4-Dichlorophenoxyacetic acid)	☐ Ethyl methacrylate	☐ Pentachlorodibenzo-p-dioxins (all)
☐ Acrylonitrile	☐ Dibenz(a,h)anthracene	☐ Ethylene oxide	☐ Pentachlorodibenzofurans (all)
☐ Aldrin	☐ Dibenz(a,e)pyrene	☐ Fluoranthene	☐ Pentachloroethane
☐ Aniline	☐ m-Dichlorobenzene	☐ Fluorene	☐ Pentachloronitrobenzene
☐ Anthracene	☐ o-DICHLOROBENZENE	☐ Heptachlor	☐ Pentachlorophenol
☐ BENZENE	☐ p-Dichlorobenzene	☐ Hexachlorobenzene	☐ Phenacetin
☐ Benz(a)anthracene	☐ Dichlorodifluoromethane	☐ Hexachlorobutadiene	☐ Phenanthrene
☐ Benzal chloride	☐ 1,1-Dichloroethane	☐ Hexachlorocyclopentadiene	☐ Phenol
☐ Benzo(b)fluoranthene	☐ 1,2-Dichloroethane	☐ Hexachlorodibenzo-p-dioxins (all)	☐ Phthalic acid
☐ Benzo(k)fluoranthene	☐ 1,1-Dichloroethylene	☐ Hexachlorodibenzofurans (all)	☐ Phthalic anhydride
☐ Benzo(g,h,i)perylene	☐ trans-1,2-Dichloroethylene	☐ Hexachloroethane	☐ Pyrene
☐ Benzo(a)pyrene	☐ 2,4-Dichlorophenol	☐ Hexachloropropylene	☐ PYRIDINE
☐ Bromodichloromethane	☐ 2,6-Dichlorophenol	☐ Indeno (1,2,3-c,d) pyrene	☐ Safrole
☐ Methyl bromide (Bromomethane)	☐ 1,2-Dichloropropane	☐ Iodomethane	☐ Silvex (2,4,5-TP)
☐ 4-Bromophenyl phenyl ether	☐ cis-1,3-Dichloropropylene	☐ ISOBUTYL ALCOHOL	☐ 2,4,5-T(2,4,5-Trichloro phenoxy-acetic acid)
☐ n-BUTYL ALCOHOL	☐ trans-1,3-Dichloropropylene	☐ Isodrin	☐ 1,2,4,5-Tetrachlorobenzene
☐ Butyl benzyl phthalate	☐ Dieldrin	☐ METHANOL	☐ 1,1,1,2-Tetrachloroethane
☐ CARBON DISULFIDE	☐ Diethyl phthalate	☐ Methapyrilene	☐ 1,1,2,2-Tetrachloroethane
☐ CARBON TETRACHLORIDE	☐ 2,4-Dimethyl phenol	☐ Methoxychlor	☐ TETRACHLOROETHYLENE
☐ Chlordane (alpha & gamma isomers)	☐ Dimethyl phthalate	☐ 4,4-Methylene bis(2-chloroaniline)	☐ 2,3,4,6-Tetrachlorophenol
☐ p-Chloroaniline	☐ Di-n-butyl phthalate	☐ METHYLENE CHLORIDE	☐ TOLUENE
☐ CHLOROBENZENE	☐ 1,4-Dinitrobenzene	☐ METHYL ETHYL KETONE	☐ Toxaphene
☐ 2-Chloro-1,3-butadiene	☐ 4,6-Dinitro-o-cresol	☐ METHYL ISOBUTYL KETONE	☐ Bromoform (Tribromomethane)
☐ Chlorodibromomethane	☐ 2,4-Dinitrophenol	☐ Methyl methacrylate	☐ 1,2,4-Trichlorobenzene
☐ Chloroethane	☐ 2,4-Dinitrotoluene	☐ Methyl methansulfonate	☐ 1,1,1-TRICHLOROETHANE
☐ bis(2-chloroethyl)ether	☐ 2,6-Dinitrotoluene	☐ Naphthalene	☐ 1,1,2-TRICHLOROETHANE
☐ Chloroform	☐ Di-n-octyl phthalate	☐ o-Nitroaniline	☐ TRICHLOROETHYLENE
☐ bis(2-Chloroisopropyl)ether	☐ Di-n-propylnitrosamine	☐ p-Nitroaniline	☐ TRICHLOROMONOFLUOROMETHANE
☐ p-Chloro-m-cresol	☐ 1,4-Dioxane	☐ NITROBENZENE	☐ 2,4,5-Trichlorophenol
☐ 2-Chloroethyl vinyl ether	☐ Diphenylamine	☐ 5-Nitro-o-toluidine	☐ 2,4,6-Trichlorophenol
☐ Chloromethane (Methyl chloride)	☐ Diphenylnitrosamine	☐ o-Nitrophenol	☐ 1,2,3-Trichloropropane
☐ 2-Chloronaphthalene	☐ 1,2-Diphenylhydrazine	☐ p-Nitrophenol	☐ 1,1,2-TRICHLORO-1,2,2-TRIFLUOROETHANE
☐ 2-Chlorophenol	☐ Disulfoton	☐ N-Nitrosodiethylamine	☐ tris-(2,3-Dibromopropyl) phosphate
☐ 3-Chloropropylene	☐ Endosulfan I	☐ N-Nitrosodimethylamine	☐ Vinyl chloride
☐ Chrysene	☐ Endosulfan II	☐ N-Nitroso-di-n-butylamine	☐ XYLENES-TOTAL MIXED ISOMERS
☐ o-CRESOL	☐ Endrin	☐ N-Nitrosomethylethylamine	
☐ m-CRESOL	☐ Endrin aldehyde	☐ N-Nitrosomorpholine	

☐ None of the above listed underlying hazardous constituents are reasonably expected to be present in this waste stream.

UNDERLYING HAZARDOUS CONSTITUENTS WORKSHEET

WASTE STREAM # 771-29-41

The following underlying hazardous constituents (indicated by a checkmark in the appropriate box) are reasonably expected to be present in this waste stream:

INORGANIC CONSTITUENTS			
☐ Antimony	☐ Cadmium	■ Lead	☐ Silver
☐ Arsenic	☐ Chromium	☐ Mercury	☐ Sulfide (Wastewater Only)
☐ Barium	☐ Cyanides (Total)	☐ Nickel	☐ Thallium
☐ Beryllium	☐ Cyanides (Amenable)	☐ Selenium	
ORGANIC CONSTITUENTS			
☐ Acenaphthylene	☐ p-CRESOL	☐ ETHYL ACETATE	☐ N-Nitrosopiperidine
☐ Acenaphthene	☐ Cyclohexanone	☐ Ethyl Cyanide (Propanenitrile)	☐ N-Nitrosopyrrolidine
☐ ACETONE	☐ 1,2-Dibromo-3-chloropropane	☐ ETHYL BENZENE	☐ Parathion
☐ Acetonitrile	☐ Ethylene dibromide (1,2-dibromoethane)	☐ ETHYL ETHER	☐ Total PCBs
☐ Acetophenone	☐ Dibromomethane	☐ bis(2-Ethylhexyl) phthalate	☐ Pentachlorobenzene
☐ Acrylamide	☐ 2,4,D(2-4-Dichlorophenoxyacetic acid)	☐ Ethyl methacrylate	☐ Pentachlorodibenzo-p-dioxins (all)
☐ Acrylonitrile	☐ Dibenz(a,h)anthracene	☐ Ethylene oxide	☐ Pentachlorodibenzofurans (all)
☐ Aldrin	☐ Dibenz(a,e)pyrene	☐ Fluoranthene	☐ Pentachloroethane
☐ Aniline	☐ m-Dichlorobenzene	☐ Fluorene	☐ Pentachloronitrobenzene
☐ Anthracene	☐ o-DICHLOROBENZENE	☐ Heptachlor	☐ Pentachlorophenol
☐ BENZENE	☐ p-Dichlorobenzene	☐ Hexachlorobenzene	☐ Phenacetin
☐ Benz(a)anthracene	☐ Dichlorodifluoromethane	☐ Hexachlorobutadiene	☐ Phenanthrene
☐ Benzal chloride	☐ 1,1-Dichloroethane	☐ Hexachlorocyclopentadiene	☐ Phenol
☐ Benzo(b)fluoranthene	☐ 1,2-Dichloroethane	☐ Hexachlorodibenzo-p-dioxins (all)	☐ Phthalic acid
☐ Benzo(k)fluoranthene	☐ 1,1-Dichloroethylene	☐ Hexachlorodibenzofurans (all)	☐ Phthalic anhydride
☐ Benzo(g,h,i)perylene	☐ trans-1,2-Dichloroethylene	☐ Hexachloroethane	☐ Pyrene
☐ Benzo(a)pyrene	☐ 2,4-Dichlorophenol	☐ Hexachloropropylene	☐ PYRIDINE
☐ Bromodichloromethane	☐ 2,6-Dichlorophenol	☐ Indeno (1,2,3-c,d) pyrene	☐ Safrole
☐ Methyl bromide (Bromomethane)	☐ 1,2-Dichloropropane	☐ Iodomethane	☐ Silvex (2,4,5-TP)
☐ 4-Bromophenyl phenyl ether	☐ cis-1,3-Dichloropropylene	☐ ISOBUTYL ALCOHOL	☐ 2,4,5-T(2,4,5-Trichloro phenoxy-acetic acid)
☐ n-BUTYL ALCOHOL	☐ trans-1,3-Dichloropropylene	☐ Isodrin	☐ 1,2,4,5-Tetrachlorobenzene
☐ Butyl benzyl phthalate	☐ Dieldrin	☐ METHANOL	☐ 1,1,1,2-Tetrachloroethane
☐ CARBON DISULFIDE	☐ Diethyl phthalate	☐ Methapyrilene	☐ 1,1,2,2-Tetrachloroethane
☐ CARBON TETRACHLORIDE	☐ 2,4-Dimethyl phenol	☐ Methoxychlor	☐ TETRACHLOROETHYLENE
☐ Chlordane (alpha & gamma isomers)	☐ Dimethyl phthalate	☐ 4,4-Methylene bis(2-chloroaniline)	☐ 2,3,4,6-Tetrachlorophenol
☐ p-Chloroaniline	☐ Di-n-butyl phthalate	☐ METHYLENE CHLORIDE	☐ TOLUENE
☐ CHLOROBENZENE	☐ 1,4-Dinitrobenzene	☐ METHYL ETHYL KETONE	☐ Toxaphene
☐ 2-Chloro-1,3-butadiene	☐ 4,6-Dinitro-o-cresol	☐ METHYL ISOBUTYL KETONE	☐ Bromoform (Tribromomethane)
☐ Chlorodibromomethane	☐ 2,4-Dinitrophenol	☐ Methyl methacrylate	☐ 1,2,4-Trichlorobenzene
☐ Chloroethane	☐ 2,4-Dinitrotoluene	☐ Methyl methansulfonate	☐ 1,1,1-TRICHLOROETHANE
☐ bis(2-chloroethyl)ether	☐ 2,6-Dinitrotoluene	☐ Naphthalene	☐ 1,1,2-TRICHLOROETHANE
☐ Chloroform	☐ Di-n-octyl phthalate	☐ o-Nitroaniline	☐ TRICHLOROETHYLENE
☐ bis(2-Chloroisopropyl)ether	☐ Di-n-propylnitrosamine	☐ p-Nitroaniline	☐ TRICHLOROMONOFLUOROMETHANE
☐ p-Chloro-m-cresol	☐ 1,4-Dioxane	☐ NITROBENZENE	☐ 2,4,5-Trichlorophenol
☐ 2-Chloroethyl vinyl ether	☐ Diphenylamine	☐ 5-Nitro-o-toluidine	☐ 2,4,6-Trichlorophenol
☐ Chloromethane (Methyl chloride)	☐ Diphenylnitrosamine	☐ o-Nitrophenol	☐ 1,2,3-Trichloropropane
☐ 2-Chloronaphthalene	☐ 1,2-Diphenylhydrazine	☐ p-Nitrophenol	☐ 1,1,2-TRICHLORO-1,2,2-TRIFLUOROETHANE
☐ 2-Chlorophenol	☐ Disulfoton	☐ N-Nitrosodiethylamine	☐ tris-(2,3-Dibromopropyl) phosphate
☐ 3-Chloropropylene	☐ Endosulfan I	☐ N-Nitrosodimethylamine	☐ Vinyl chloride
☐ Chrysene	☐ Endosulfan II	☐ N-Nitroso-di-n-butylamine	☐ XYLENES-TOTAL MIXED ISOMERS
☐ o-CRESOL	☐ Endrin	☐ N-Nitrosomethylethylamine	
☐ m-CRESOL	☐ Endrin aldehyde	☐ N-Nitrosomorpholine	

☐ None of the above listed underlying hazardous constituents are reasonably expected to be present in this waste stream.

UNDERLYING HAZARDOUS CONSTITUENTS WORKSHEET

WASTE STREAM # 771-31-6

The following underlying hazardous constituents (indicated by a checkmark in the appropriate box) are reasonably expected to be present in this waste stream:

INORGANIC CONSTITUENTS			
☐ Antimony	■ Cadmium	■ Lead	■ Silver
■ Arsenic	☐ Chromium	■ Mercury	☐ Sulfide (Wastewater Only)
■ Barium	☐ Cyanides (Total)	■ Nickel	☐ Thallium
■ Beryllium	☐ Cyanides (Amenable)	■ Selenium	
ORGANIC CONSTITUENTS			
☐ Acenaphthylene	☐ p-CRESOL	☐ ETHYL ACETATE	☐ N-Nitrosopiperidine
☐ Acenaphthene	☐ Cyclohexanone	☐ Ethyl Cyanide (Propanenitrile)	☐ N-Nitrosopyrrolidine
☐ ACETONE	☐ 1,2-Dibromo-3-chloropropane	☐ ETHYL BENZENE	☐ Parathion
☐ Acetonitrile	☐ Ethylene dibromide (1,2-dibromoethane)	☐ ETHYL ETHER	☐ Total PCBs
☐ Acetophenone	☐ Dibromomethane	☐ bis(2-Ethylhexyl) phthalate	☐ Pentachlorobenzene
☐ Acrylamide	☐ 2,4,D(2-4-Dichlorophenoxyacetic acid)	☐ Ethyl methacrylate	☐ Pentachlorodibenzo-p-dioxins (all)
☐ Acrylonitrile	☐ Dibenz(a,h)anthracene	☐ Ethylene oxide	☐ Pentachlorodibenzofurans (all)
☐ Aldrin	☐ Dibenz(a,e)pyrene	☐ Fluoranthene	☐ Pentachloroethane
☐ Aniline	☐ m-Dichlorobenzene	☐ Fluorene	☐ Pentachloronitrobenzene
☐ Anthracene	☐ o-DICHLOROBENZENE	☐ Heptachlor	☐ Pentachlorophenol
☐ BENZENE	☐ p-Dichlorobenzene	☐ Hexachlorobenzene	☐ Phenacetin
☐ Benz(a)anthracene	☐ Dichlorodifluoromethane	☐ Hexachlorobutadiene	☐ Phenanthrene
☐ Benzal chloride	☐ 1,1-Dichloroethane	☐ Hexachlorocyclopentadiene	☐ Phenol
☐ Benzo(b)fluoranthene	☐ 1,2-Dichloroethane	☐ Hexachlorodibenzo-p-dioxins (all)	☐ Phthalic acid
☐ Benzo(k)fluoranthene	☐ 1,1-Dichloroethylene	☐ Hexachlorodibenzofurans (all)	☐ Phthalic anhydride
☐ Benzo(g,h,i)perylene	☐ trans-1,2-Dichloroethylene	☐ Hexachloroethane	☐ Pyrene
☐ Benzo(a)pyrene	☐ 2,4-Dichlorophenol	☐ Hexachloropropylene	☐ PYRIDINE
☐ Bromodichloromethane	☐ 2,6-Dichlorophenol	☐ Indeno (1,2,3-c,d) pyrene	☐ Safrole
☐ Methyl bromide (Bromomethane)	☐ 1,2-Dichloropropane	☐ Iodomethane	☐ Silvex (2,4,5-TP)
☐ 4-Bromophenyl phenyl ether	☐ cis-1,3-Dichloropropylene	☐ ISOBUTYL ALCOHOL	☐ 2,4,5-T(2,4,5-Trichloro phenoxy-acetic acid)
☐ n-BUTYL ALCOHOL	☐ trans-1,3-Dichloropropylene	☐ Isodrin	☐ 1,2,4,5-Tetrachlorobenzene
☐ Butyl benzyl phthalate	☐ Dieldrin	☐ METHANOL	☐ 1,1,1,2-Tetrachloroethane
☐ CARBON DISULFIDE	☐ Diethyl phthalate	☐ Methapyrilene	☐ 1,1,2,2-Tetrachloroethane
☐ CARBON TETRACHLORIDE	☐ 2,4-Dimethyl phenol	☐ Methoxychlor	☐ TETRACHLOROETHYLENE
☐ Chlordane (alpha & gamma isomers)	☐ Dimethyl phthalate	☐ 4,4-Methylene bis(2-chloroaniline)	☐ 2,3,4,6-Tetrachlorophenol
☐ p-Chloroaniline	☐ Di-n-butyl phthalate	☐ METHYLENE CHLORIDE	☐ TOLUENE
☐ CHLOROBENZENE	☐ 1,4-Dinitrobenzene	☐ METHYL ETHYL KETONE	☐ Toxaphene
☐ 2-Chloro-1,3-butadiene	☐ 4,6-Dinitro-o-cresol	☐ METHYL ISOBUTYL KETONE	☐ Bromoform (Tribromomethane)
☐ Chlorodibromomethane	☐ 2,4-Dinitrophenol	☐ Methyl methacrylate	☐ 1,2,4-Trichlorobenzene
☐ Chloroethane	☐ 2,4-Dinitrotoluene	☐ Methyl methansulfonate	☐ 1,1,1-TRICHLOROETHANE
☐ bis(2-chloroethyl)ether	☐ 2,6-Dinitrotoluene	☐ Naphthalene	☐ 1,1,2-TRICHLOROETHANE
☐ Chloroform	☐ Di-n-octyl phthalate	☐ o-Nitroaniline	☐ TRICHLOROETHYLENE
☐ bis(2-Chloroisopropyl)ether	☐ Di-n-propylnitrosamine	☐ p-Nitroaniline	☐ TRICHLOROMONOFLUOROMETHANE
☐ p-Chloro-m-cresol	☐ 1,4-Dioxane	☐ NITROBENZENE	☐ 2,4,5-Trichlorophenol
☐ 2-Chloroethyl vinyl ether	☐ Diphenylamine	☐ 5-Nitro-o-toluidine	☐ 2,4,6-Trichlorophenol
☐ Chloromethane (Methyl chloride)	☐ Diphenylnitrosamine	☐ o-Nitrophenol	☐ 1,2,3-Trichloropropane
☐ 2-Chloronaphthalene	☐ 1,2-Diphenylhydrazine	☐ p-Nitrophenol	☐ 1,1,2-TRICHLORO-1,2,2-TRIFLUOROETHANE
☐ 2-Chlorophenol	☐ Disulfoton	☐ N-Nitrosodiethylamine	☐ tris-(2,3-Dibromopropyl) phosphate
☐ 3-Chloropropylene	☐ Endosulfan I	☐ N-Nitrosodimethylamine	☐ Vinyl chloride
☐ Chrysene	☐ Endosulfan II	☐ N-Nitroso-di-n-butylamine	☐ XYLENES-TOTAL MIXED ISOMERS
☐ o-CRESOL	☐ Endrin	☐ N-Nitrosomethylethylamine	
☐ m-CRESOL	☐ Endrin aldehyde	☐ N-Nitrosomorpholine	

☐ None of the above listed underlying hazardous constituents are reasonably expected to be present in this waste stream.

UNDERLYING HAZARDOUS CONSTITUENTS WORKSHEET

WASTE STREAM # 771-35-7

The following underlying hazardous constituents (indicated by a checkmark in the appropriate box) are reasonably expected to be present in this waste stream:

INORGANIC CONSTITUENTS			
☐ Antimony	☐ Cadmium	■ Lead	☐ Silver
☐ Arsenic	☐ Chromium	☐ Mercury	☐ Sulfide (Wastewater Only)
☐ Barium	☐ Cyanides (Total)	☐ Nickel	☐ Thallium
☐ Beryllium	☐ Cyanides (Amenable)	☐ Selenium	
ORGANIC CONSTITUENTS			
☐ Acenaphthylene	☐ p-CRESOL	☐ ETHYL ACETATE	☐ N-Nitrosopiperidine
☐ Acenaphthene	☐ Cyclohexanone	☐ Ethyl Cyanide (Propanenitrile)	☐ N-Nitrosopyrrolidine
☐ ACETONE	☐ 1,2-Dibromo-3-chloropropane	☐ ETHYL BENZENE	☐ Parathion
☐ Acetonitrile	☐ Ethylene dibromide (1,2-dibromoethane)	☐ ETHYL ETHER	☐ Total PCBs
☐ Acetophenone	☐ Dibromomethane	☐ bis(2-Ethylhexyl) phthalate	☐ Pentachlorobenzene
☐ Acrylamide	☐ 2,4,D(2-4-Dichlorophenoxyacetic acid)	☐ Ethyl methacrylate	☐ Pentachlorodibenzo-p-dioxins (all)
☐ Acrylonitrile	☐ Dibenz(a,h)anthracene	☐ Ethylene oxide	☐ Pentachlorodibenzofurans (all)
☐ Aldrin	☐ Dibenz(a,e)pyrene	☐ Fluoranthene	☐ Pentachloroethane
☐ Aniline	☐ m-Dichlorobenzene	☐ Fluorene	☐ Pentachloronitrobenzene
☐ Anthracene	☐ o-DICHLOROBENZENE	☐ Heptachlor	☐ Pentachlorophenol
☐ BENZENE	☐ p-Dichlorobenzene	☐ Hexachlorobenzene	☐ Phenacetin
☐ Benz(a)anthracene	☐ Dichlorodifluoromethane	☐ Hexachlorobutadiene	☐ Phenanthrene
☐ Benzal chloride	☐ 1,1-Dichloroethane	☐ Hexachlorocyclopentadiene	☐ Phenol
☐ Benzo(b)fluoranthene	☐ 1,2-Dichloroethane	☐ Hexachlorodibenzo-p-dioxins (all)	☐ Phthalic acid
☐ Benzo(k)fluoranthene	☐ 1,1-Dichloroethylene	☐ Hexachlorodibenzofurans (all)	☐ Phthalic anhydride
☐ Benzo(g,h,i)perylene	☐ trans-1,2-Dichloroethylene	☐ Hexachloroethane	☐ Pyrene
☐ Benzo(a)pyrene	☐ 2,4-Dichlorophenol	☐ Hexachloropropylene	☐ PYRIDINE
☐ Bromodichloromethane	☐ 2,6-Dichlorophenol	☐ Indeno (1,2,3-c,d) pyrene	☐ Safrole
☐ Methyl bromide (Bromomethane)	☐ 1,2-Dichloropropane	☐ Iodomethane	☐ Silvex (2,4,5-TP)
☐ 4-Bromophenyl phenyl ether	☐ cis-1,3-Dichloropropylene	☐ ISOBUTYL ALCOHOL	☐ 2,4,5-T(2,4,5-Trichloro phenoxy-acetic acid)
☐ n-BUTYL ALCOHOL	☐ trans-1,3-Dichloropropylene	☐ Isodrin	☐ 1,2,4,5-Tetrachlorobenzene
☐ Butyl benzyl phthalate	☐ Dieldrin	☐ METHANOL	☐ 1,1,1,2-Tetrachloroethane
☐ CARBON DISULFIDE	☐ Diethyl phthalate	☐ Methapyrilene	☐ 1,1,2,2-Tetrachloroethane
☐ CARBON TETRACHLORIDE	☐ 2,4-Dimethyl phenol	☐ Methoxychlor	☐ TETRACHLOROETHYLENE
☐ Chlordane (alpha & gamma isomers)	☐ Dimethyl phthalate	☐ 4,4-Methylene bis(2-chloroaniline)	☐ 2,3,4,6-Tetrachlorophenol
☐ p-Chloroaniline	☐ Di-n-butyl phthalate	☐ METHYLENE CHLORIDE	☐ TOLUENE
☐ CHLOROBENZENE	☐ 1,4-Dinitrobenzene	☐ METHYL ETHYL KETONE	☐ Toxaphene
☐ 2-Chloro-1,3-butadiene	☐ 4,6-Dinitro-o-cresol	☐ METHYL ISOBUTYL KETONE	☐ Bromoform (Tribromomethane)
☐ Chlorodibromomethane	☐ 2,4-Dinitrophenol	☐ Methyl methacrylate	☐ 1,2,4-Trichlorobenzene
☐ Chloroethane	☐ 2,4-Dinitrotoluene	☐ Methyl methansulfonate	☐ 1,1,1-TRICHLOROETHANE
☐ bis(2-chloroethyl)ether	☐ 2,6-Dinitrotoluene	☐ Naphthalene	☐ 1,1,2-TRICHLOROETHANE
☐ Chloroform	☐ Di-n-octyl phthalate	☐ o-Nitroaniline	☐ TRICHLOROETHYLENE
☐ bis(2-Chloroisopropyl)ether	☐ Di-n-propylnitrosamine	☐ p-Nitroaniline	☐ TRICHLOROMONOFLUOROMETHANE
☐ p-Chloro-m-cresol	☐ 1,4-Dioxane	☐ NITROBENZENE	☐ 2,4,5-Trichlorophenol
☐ 2-Chloroethyl vinyl ether	☐ Diphenylamine	☐ 5-Nitro-o-toluidine	☐ 2,4,6-Trichlorophenol
☐ Chloromethane (Methyl chloride)	☐ Diphenylnitrosamine	☐ o-Nitrophenol	☐ 1,2,3-Trichloropropane
☐ 2-Chloronaphthalene	☐ 1,2-Diphenylhydrazine	☐ p-Nitrophenol	☐ 1,1,2-TRICHLORO-1,2,2-TRIFLUOROETHANE
☐ 2-Chlorophenol	☐ Disulfoton	☐ N-Nitrosodiethylamine	☐ tris-(2,3-Dibromopropyl) phosphate
☐ 3-Chloropropylene	☐ Endosulfan I	☐ N-Nitrosodimethylamine	☐ Vinyl chloride
☐ Chrysene	☐ Endosulfan II	☐ N-Nitroso-di-n-butylamine	☐ XYLENES-TOTAL MIXED ISOMERS
☐ o-CRESOL	☐ Endrin	☐ N-Nitrosomethylethylamine	
☐ m-CRESOL	☐ Endrin aldehyde	☐ N-Nitrosomorpholine	

☐ None of the above listed underlying hazardous constituents are reasonably expected to be present in this waste stream.

UNDERLYING HAZARDOUS CONSTITUENTS WORKSHEET

WASTE STREAM # 771-35-35

The following underlying hazardous constituents (indicated by a checkmark in the appropriate box) are reasonably expected to be present in this waste stream:

INORGANIC CONSTITUENTS			
☐ Antimony	☐ Cadmium	■ Lead	☐ Silver
☐ Arsenic	☐ Chromium	☐ Mercury	☐ Sulfide (Wastewater Only)
☐ Barium	☐ Cyanides (Total)	☐ Nickel	☐ Thallium
☐ Beryllium	☐ Cyanides (Amenable)	☐ Selenium	
ORGANIC CONSTITUENTS			
☐ Acenaphthylene	☐ p-CRESOL	☐ ETHYL ACETATE	☐ N-Nitrosopiperidine
☐ Acenaphthene	☐ Cyclohexanone	☐ Ethyl Cyanide (Propanenitrile)	☐ N-Nitrosopyrrolidine
☐ ACETONE	☐ 1,2-Dibromo-3-chloropropane	☐ ETHYL BENZENE	☐ Parathion
☐ Acetonitrile	☐ Ethylene dibromide (1,2-dibromoethane)	☐ ETHYL ETHER	☐ Total PCBs
☐ Acetophenone	☐ Dibromomethane	☐ bis(2-Ethylhexyl) phthalate	☐ Pentachlorobenzene
☐ Acrylamide	☐ 2,4,D(2-4-Dichlorophenoxyacetic acid)	☐ Ethyl methacrylate	☐ Pentachlorodibenzo-p-dioxins (all)
☐ Acrylonitrile	☐ Dibenz(a,h)anthracene	☐ Ethylene oxide	☐ Pentachlorodibenzofurans (all)
☐ Aldrin	☐ Dibenz(a,e)pyrene	☐ Fluoranthene	☐ Pentachloroethane
☐ Aniline	☐ m-Dichlorobenzene	☐ Fluorene	☐ Pentachloronitrobenzene
☐ Anthracene	☐ o-DICHLOROBENZENE	☐ Heptachlor	☐ Pentachlorophenol
☐ BENZENE	☐ p-Dichlorobenzene	☐ Hexachlorobenzene	☐ Phenacetin
☐ Benz(a)anthracene	☐ Dichlorodifluoromethane	☐ Hexachlorobutadiene	☐ Phenanthrene
☐ Benzal chloride	☐ 1,1-Dichloroethane	☐ Hexachlorocyclopentadiene	☐ Phenol
☐ Benzo(b)fluoranthene	☐ 1,2-Dichloroethane	☐ Hexachlorodibenzo-p-dioxins (all)	☐ Phthalic acid
☐ Benzo(k)fluoranthene	☐ 1,1-Dichloroethylene	☐ Hexachlorodibenzofurans (all)	☐ Phthalic anhydride
☐ Benzo(g,h,i)perylene	☐ trans-1,2-Dichloroethylene	☐ Hexachloroethane	☐ Pyrene
☐ Benzo(a)pyrene	☐ 2,4-Dichlorophenol	☐ Hexachloropropylene	☐ PYRIDINE
☐ Bromodichloromethane	☐ 2,6-Dichlorophenol	☐ Indeno (1,2,3-c,d) pyrene	☐ Safrole
☐ Methyl bromide (Bromomethane)	☐ 1,2-Dichloropropane	☐ Iodomethane	☐ Silvex (2,4,5-TP)
☐ 4-Bromophenyl phenyl ether	☐ cis-1,3-Dichloropropylene	☐ ISOBUTYL ALCOHOL	☐ 2,4,5-T(2,4,5-Trichloro phenoxy-acetic acid)
☐ n-BUTYL ALCOHOL	☐ trans-1,3-Dichloropropylene	☐ Isodrin	☐ 1,2,4,5-Tetrachlorobenzene
☐ Butyl benzyl phthalate	☐ Dieldrin	☐ METHANOL	☐ 1,1,1,2-Tetrachloroethane
☐ CARBON DISULFIDE	☐ Diethyl phthalate	☐ Methapyrilene	☐ 1,1,2,2-Tetrachloroethane
☐ CARBON TETRACHLORIDE	☐ 2,4-Dimethyl phenol	☐ Methoxychlor	☐ TETRACHLOROETHYLENE
☐ Chlordane (alpha & gamma isomers)	☐ Dimethyl phthalate	☐ 4,4-Methylene bis(2-chloroaniline)	☐ 2,3,4,6-Tetrachlorophenol
☐ p-Chloroaniline	☐ Di-n-butyl phthalate	☐ METHYLENE CHLORIDE	☐ TOLUENE
☐ CHLOROBENZENE	☐ 1,4-Dinitrobenzene	☐ METHYL ETHYL KETONE	☐ Toxaphene
☐ 2-Chloro-1,3-butadiene	☐ 4,6-Dinitro-o-cresol	☐ METHYL ISOBUTYL KETONE	☐ Bromoform (Tribromomethane)
☐ Chlorodibromomethane	☐ 2,4-Dinitrophenol	☐ Methyl methacrylate	☐ 1,2,4-Trichlorobenzene
☐ Chloroethane	☐ 2,4-Dinitrotoluene	☐ Methyl methansulfonate	☐ 1,1,1-TRICHLOROETHANE
☐ bis(2-chloroethyl)ether	☐ 2,6-Dinitrotoluene	☐ Naphthalene	☐ 1,1,2-TRICHLOROETHANE
☐ Chloroform	☐ Di-n-octyl phthalate	☐ o-Nitroaniline	☐ TRICHLOROETHYLENE
☐ bis(2-Chloroisopropyl)ether	☐ Di-n-propylnitrosamine	☐ p-Nitroaniline	☐ TRICHLOROMONOFLUOROMETHANE
☐ p-Chloro-m-cresol	☐ 1,4-Dioxane	☐ NITROBENZENE	☐ 2,4,5-Trichlorophenol
☐ 2-Chloroethyl vinyl ether	☐ Diphenylamine	☐ 5-Nitro-o-toluidine	☐ 2,4,6-Trichlorophenol
☐ Chloromethane (Methyl chloride)	☐ Diphenylnitrosamine	☐ o-Nitrophenol	☐ 1,2,3-Trichloropropane
☐ 2-Chloronaphthalene	☐ 1,2-Diphenylhydrazine	☐ p-Nitrophenol	☐ 1,1,2-TRICHLORO-1,2,2-TRIFLUOROETHANE
☐ 2-Chlorophenol	☐ Disulfoton	☐ N-Nitrosodiethylamine	☐ tris-(2,3-Dibromopropyl) phosphate
☐ 3-Chloropropylene	☐ Endosulfan I	☐ N-Nitrosodimethylamine	☐ Vinyl chloride
☐ Chrysene	☐ Endosulfan II	☐ N-Nitroso-di-n-butylamine	☐ XYLENES-TOTAL MIXED ISOMERS
☐ o-CRESOL	☐ Endrin	☐ N-Nitrosomethylethylamine	
☐ m-CRESOL	☐ Endrin aldehyde	☐ N-Nitrosomorpholine	

☐ None of the above listed underlying hazardous constituents are reasonably expected to be present in this waste stream.

UNDERLYING HAZARDOUS CONSTITUENTS WORKSHEET

WASTE STREAM # 771-35-42

The following underlying hazardous constituents (indicated by a checkmark in the appropriate box) are reasonably expected to be present in this waste stream:

INORGANIC CONSTITUENTS			
☐ Antimony	☐ Cadmium	☐ Lead	☐ Silver
☐ Arsenic	☐ Chromium	☐ Mercury	☐ Sulfide (Wastewater Only)
☐ Barium	☐ Cyanides (Total)	☐ Nickel	☐ Thallium
☐ Beryllium	☐ Cyanides (Amenable)	☐ Selenium	
ORGANIC CONSTITUENTS			
☐ Acenaphthylene	☐ p-CRESOL	☐ ETHYL ACETATE	☐ N-Nitrosopiperidine
☐ Acenaphthene	☐ Cyclohexanone	☐ Ethyl Cyanide (Propanenitrile)	☐ N-Nitrosopyrrolidine
☐ ACETONE	☐ 1,2-Dibromo-3-chloropropane	☐ ETHYL BENZENE	☐ Parathion
☐ Acetonitrile	☐ Ethylene dibromide (1,2-dibromoethane)	☐ ETHYL ETHER	☐ Total PCBs
☐ Acetophenone	☐ Dibromomethane	☐ bis(2-Ethylhexyl) phthalate	☐ Pentachlorobenzene
☐ Acrylamide	☐ 2,4,D(2-4-Dichlorophenoxyacetic acid)	☐ Ethyl methacrylate	☐ Pentachlorodibenzo-p-dioxins (all)
☐ Acrylonitrile	☐ Dibenz(a,h)anthracene	☐ Ethylene oxide	☐ Pentachlorodibenzofurans (all)
☐ Aldrin	☐ Dibenz(a,e)pyrene	☐ Fluoranthene	☐ Pentachloroethane
☐ Aniline	☐ m-Dichlorobenzene	☐ Fluorene	☐ Pentachloronitrobenzene
☐ Anthracene	☐ o-DICHLOROBENZENE	☐ Heptachlor	☐ Pentachlorophenol
☐ BENZENE	☐ p-Dichlorobenzene	☐ Hexachlorobenzene	☐ Phenacetin
☐ Benz(a)anthracene	☐ Dichlorodifluoromethane	☐ Hexachlorobutadiene	☐ Phenanthrene
☐ Benzal chloride	☐ 1,1-Dichloroethane	☐ Hexachlorocyclopentadiene	☐ Phenol
☐ Benzo(b)fluoranthene	☐ 1,2-Dichloroethane	☐ Hexachlorodibenzo-p-dioxins (all)	☐ Phthalic acid
☐ Benzo(k)fluoranthene	☐ 1,1-Dichloroethylene	☐ Hexachlorodibenzofurans (all)	☐ Phthalic anhydride
☐ Benzo(g,h,i)perylene	☐ trans-1,2-Dichloroethylene	☐ Hexachloroethane	☐ Pyrene
☐ Benzo(a)pyrene	☐ 2,4-Dichlorophenol	☐ Hexachloropropylene	☐ PYRIDINE
☐ Bromodichloromethane	☐ 2,6-Dichlorophenol	☐ Indeno (1,2,3-c,d) pyrene	☐ Safrole
☐ Methyl bromide (Bromomethane)	☐ 1,2-Dichloropropane	☐ Iodomethane	☐ Silvex (2,4,5-TP)
☐ 4-Bromophenyl phenyl ether	☐ cis-1,3-Dichloropropylene	☐ ISOBUTYL ALCOHOL	☐ 2,4,5-T(2,4,5-Trichloro phenoxy-acetic acid)
☐ n-BUTYL ALCOHOL	☐ trans-1,3-Dichloropropylene	☐ Isodrin	☐ 1,2,4,5-Tetrachlorobenzene
☐ Butyl benzyl phthalate	☐ Dieldrin	☐ METHANOL	☐ 1,1,1,2-Tetrachloroethane
☐ CARBON DISULFIDE	☐ Diethyl phthalate	☐ Methapyrilene	☐ 1,1,2,2-Tetrachloroethane
☐ CARBON TETRACHLORIDE	☐ 2,4-Dimethyl phenol	☐ Methoxychlor	☐ TETRACHLOROETHYLENE
☐ Chlordane (alpha & gamma isomers)	☐ Dimethyl phthalate	☐ 4,4-Methylene bis(2-chloroaniline)	☐ 2,3,4,6-Tetrachlorophenol
☐ p-Chloroaniline	☐ Di-n-butyl phthalate	☐ METHYLENE CHLORIDE	☐ TOLUENE
☐ CHLOROBENZENE	☐ 1,4-Dinitrobenzene	☐ METHYL ETHYL KETONE	☐ Toxaphene
☐ 2-Chloro-1,3-butadiene	☐ 4,6-Dinitro-o-cresol	☐ METHYL ISOBUTYL KETONE	☐ Bromoform (Tribromomethane)
☐ Chlorodibromomethane	☐ 2,4-Dinitrophenol	☐ Methyl methacrylate	☐ 1,2,4-Trichlorobenzene
☐ Chloroethane	☐ 2,4-Dinitrotoluene	☐ Methyl methansulfonate	☐ 1,1,1-TRICHLOROETHANE
☐ bis(2-chloroethyl)ether	☐ 2,6-Dinitrotoluene	☐ Naphthalene	☐ 1,1,2-TRICHLOROETHANE
☐ Chloroform	☐ Di-n-octyl phthalate	☐ o-Nitroaniline	☐ TRICHLOROETHYLENE
☐ bis(2-Chloroisopropyl)ether	☐ Di-n-propylnitrosamine	☐ p-Nitroaniline	☐ TRICHLOROMONOFLUOROMETHANE
☐ p-Chloro-m-cresol	☐ 1,4-Dioxane	☐ NITROBENZENE	☐ 2,4,5-Trichlorophenol
☐ 2-Chloroethyl vinyl ether	☐ Diphenylamine	☐ 5-Nitro-o-toluidine	☐ 2,4,6-Trichlorophenol
☐ Chloromethane (Methyl chloride)	☐ Diphenylnitrosamine	☐ o-Nitrophenol	☐ 1,2,3-Trichloropropane
☐ 2-Chloronaphthalene	☐ 1,2-Diphenylhydrazine	☐ p-Nitrophenol	☐ 1,1,2-TRICHLORO-1,2,2-TRIFLUOROETHANE
☐ 2-Chlorophenol	☐ Disulfoton	☐ N-Nitrosodiethylamine	☐ tris-(2,3-Dibromopropyl) phosphate
☐ 3-Chloropropylene	☐ Endosulfan I	☐ N-Nitrosodimethylamine	☐ Vinyl chloride
☐ Chrysene	☐ Endosulfan II	☐ N-Nitroso-di-n-butylamine	☐ XYLENES-TOTAL MIXED ISOMERS
☐ o-CRESOL	☐ Endrin	☐ N-Nitrosomethylethylamine	
☐ m-CRESOL	☐ Endrin aldehyde	☐ N-Nitrosomorpholine	

■ None of the above listed underlying hazardous constituents are reasonably expected to be present in this waste stream.

UNDERLYING HAZARDOUS CONSTITUENTS WORKSHEET

WASTE STREAM # 771-35-43

The following underlying hazardous constituents (indicated by a checkmark in the appropriate box) are reasonably expected to be present in this waste stream:

INORGANIC CONSTITUENTS			
☐ Antimony	☐ Cadmium	☐ Lead	☐ Silver
☐ Arsenic	☐ Chromium	☐ Mercury	☐ Sulfide (Wastewater Only)
☐ Barium	☐ Cyanides (Total)	☐ Nickel	☐ Thallium
☐ Beryllium	☐ Cyanides (Amenable)	☐ Selenium	
ORGANIC CONSTITUENTS			
☐ Acenaphthylene	☐ p-CRESOL	☐ ETHYL ACETATE	☐ N-Nitrosopiperidine
☐ Acenaphthene	☐ Cyclohexanone	☐ Ethyl Cyanide (Propanenitrile)	☐ N-Nitrosopyrrolidine
☐ ACETONE	☐ 1,2-Dibromo-3-chloropropane	☐ ETHYL BENZENE	☐ Parathion
☐ Acetonitrile	☐ Ethylene dibromide (1,2-dibromoethane)	☐ ETHYL ETHER	☐ Total PCBs
☐ Acetophenone	☐ Dibromomethane	☐ bis(2-Ethylhexyl) phthalate	☐ Pentachlorobenzene
☐ Acrylamide	☐ 2,4,D(2-4-Dichlorophenoxyacetic acid)	☐ Ethyl methacrylate	☐ Pentachlorodibenzo-p-dioxins (all)
☐ Acrylonitrile	☐ Dibenz(a,h)anthracene	☐ Ethylene oxide	☐ Pentachlorodibenzofurans (all)
☐ Aldrin	☐ Dibenz(a,e)pyrene	☐ Fluoranthene	☐ Pentachloroethane
☐ Aniline	☐ m-Dichlorobenzene	☐ Fluorene	☐ Pentachloronitrobenzene
☐ Anthracene	☐ o-DICHLOROBENZENE	☐ Heptachlor	☐ Pentachlorophenol
☐ BENZENE	☐ p-Dichlorobenzene	☐ Hexachlorobenzene	☐ Phenacetin
☐ Benz(a)anthracene	☐ Dichlorodifluoromethane	☐ Hexachlorobutadiene	☐ Phenanthrene
☐ Benzal chloride	☐ 1,1-Dichloroethane	☐ Hexachlorocyclopentadiene	☐ Phenol
☐ Benzo(b)fluoranthene	☐ 1,2-Dichloroethane	☐ Hexachlorodibenzo-p-dioxins (all)	☐ Phthalic acid
☐ Benzo(k)fluoranthene	☐ 1,1-Dichloroethylene	☐ Hexachlorodibenzofurans (all)	☐ Phthalic anhydride
☐ Benzo(g,h,i)perylene	☐ trans-1,2-Dichloroethylene	☐ Hexachloroethane	☐ Pyrene
☐ Benzo(a)pyrene	☐ 2,4-Dichlorophenol	☐ Hexachloropropylene	☐ PYRIDINE
☐ Bromodichloromethane	☐ 2,6-Dichlorophenol	☐ Indeno (1,2,3-c,d) pyrene	☐ Safrole
☐ Methyl bromide (Bromomethane)	☐ 1,2-Dichloropropane	☐ Iodomethane	☐ Silvex (2,4,5-TP)
☐ 4-Bromophenyl phenyl ether	☐ cis-1,3-Dichloropropylene	☐ ISOBUTYL ALCOHOL	☐ 2,4,5-T(2,4,5-Trichloro phenoxy-acetic acid)
☐ n-BUTYL ALCOHOL	☐ trans-1,3-Dichloropropylene	☐ Isodrin	☐ 1,2,4,5-Tetrachlorobenzene
☐ Butyl benzyl phthalate	☐ Dieldrin	☐ METHANOL	☐ 1,1,1,2-Tetrachloroethane
☐ CARBON DISULFIDE	☐ Diethyl phthalate	☐ Methapyrilene	☐ 1,1,2,2-Tetrachloroethane
☐ CARBON TETRACHLORIDE	☐ 2,4-Dimethyl phenol	☐ Methoxychlor	☐ TETRACHLOROETHYLENE
☐ Chlordane (alpha & gamma isomers)	☐ Dimethyl phthalate	☐ 4,4-Methylene bis(2-chloroaniline)	☐ 2,3,4,6-Tetrachlorophenol
☐ p-Chloroaniline	☐ Di-n-butyl phthalate	☐ METHYLENE CHLORIDE	☐ TOLUENE
☐ CHLOROBENZENE	☐ 1,4-Dinitrobenzene	☐ METHYL ETHYL KETONE	☐ Toxaphene
☐ 2-Chloro-1,3-butadiene	☐ 4,6-Dinitro-o-cresol	☐ METHYL ISOBUTYL KETONE	☐ Bromoform (Tribromomethane)
☐ Chlorodibromomethane	☐ 2,4-Dinitrophenol	☐ Methyl methacrylate	☐ 1,2,4-Trichlorobenzene
☐ Chloroethane	☐ 2,4-Dinitrotoluene	☐ Methyl methansulfonate	☐ 1,1,1-TRICHLOROETHANE
☐ bis(2-chloroethyl)ether	☐ 2,6-Dinitrotoluene	☐ Naphthalene	☐ 1,1,2-TRICHLOROETHANE
☐ Chloroform	☐ Di-n-octyl phthalate	☐ o-Nitroaniline	☐ TRICHLOROETHYLENE
☐ bis(2-Chloroisopropyl)ether	☐ Di-n-propylnitrosamine	☐ p-Nitroaniline	☐ TRICHLOROMONOFLUOROMETHANE
☐ p-Chloro-m-cresol	☐ 1,4-Dioxane	☐ NITROBENZENE	☐ 2,4,5-Trichlorophenol
☐ 2-Chloroethyl vinyl ether	☐ Diphenylamine	☐ 5-Nitro-o-toluidine	☐ 2,4,6-Trichlorophenol
☐ Chloromethane (Methyl chloride)	☐ Diphenylnitrosamine	☐ o-Nitrophenol	☐ 1,2,3-Trichloropropane
☐ 2-Chloronaphthalene	☐ 1,2-Diphenylhydrazine	☐ p-Nitrophenol	☐ 1,1,2-TRICHLORO-1,2,2-TRIFLUOROETHANE
☐ 2-Chlorophenol	☐ Disulfoton	☐ N-Nitrosodiethylamine	☐ tris-(2,3-Dibromopropyl) phosphate
☐ 3-Chloropropylene	☐ Endosulfan I	☐ N-Nitrosodimethylamine	☐ Vinyl chloride
☐ Chrysene	☐ Endosulfan II	☐ N-Nitroso-di-n-butylamine	☐ XYLENES-TOTAL MIXED ISOMERS
☐ o-CRESOL	☐ Endrin	☐ N-Nitrosomethylethylamine	
☐ m-CRESOL	☐ Endrin aldehyde	☐ N-Nitrosomorpholine	

■ None of the above listed underlying hazardous constituents are reasonably expected to be present in this waste stream.

UNDERLYING HAZARDOUS CONSTITUENTS WORKSHEET

WASTE STREAM # 771-35-56

The following underlying hazardous constituents (indicated by a checkmark in the appropriate box) are reasonably expected to be present in this waste stream:

INORGANIC CONSTITUENTS			
☐ Antimony	☐ Cadmium	■ Lead	☐ Silver
☐ Arsenic	☐ Chromium	☐ Mercury	☐ Sulfide (Wastewater Only)
☐ Barium	☐ Cyanides (Total)	☐ Nickel	☐ Thallium
☐ Beryllium	☐ Cyanides (Amenable)	☐ Selenium	
ORGANIC CONSTITUENTS			
☐ Acenaphthylene	☐ p-CRESOL	☐ ETHYL ACETATE	☐ N-Nitrosopiperidine
☐ Acenaphthene	☐ Cyclohexanone	☐ Ethyl Cyanide (Propanenitrile)	☐ N-Nitrosopyrrolidine
☐ ACETONE	☐ 1,2-Dibromo-3-chloropropane	☐ ETHYL BENZENE	☐ Parathion
☐ Acetonitrile	☐ Ethylene dibromide (1,2-dibromoethane)	☐ ETHYL ETHER	☐ Total PCBs
☐ Acetophenone	☐ Dibromomethane	☐ bis(2-Ethylhexyl) phthalate	☐ Pentachlorobenzene
☐ Acrylamide	☐ 2,4,D(2-4-Dichlorophenoxyacetic acid)	☐ Ethyl methacrylate	☐ Pentachlorodibenzo-p-dioxins (all)
☐ Acrylonitrile	☐ Dibenz(a,h)anthracene	☐ Ethylene oxide	☐ Pentachlorodibenzofurans (all)
☐ Aldrin	☐ Dibenz(a,e)pyrene	☐ Fluoranthene	☐ Pentachloroethane
☐ Aniline	☐ m-Dichlorobenzene	☐ Fluorene	☐ Pentachloronitrobenzene
☐ Anthracene	☐ o-DICHLOROBENZENE	☐ Heptachlor	☐ Pentachlorophenol
☐ BENZENE	☐ p-Dichlorobenzene	☐ Hexachlorobenzene	☐ Phenacetin
☐ Benz(a)anthracene	☐ Dichlorodifluoromethane	☐ Hexachlorobutadiene	☐ Phenanthrene
☐ Benzal chloride	☐ 1,1-Dichloroethane	☐ Hexachlorocyclopentadiene	☐ Phenol
☐ Benzo(b)fluoranthene	☐ 1,2-Dichloroethane	☐ Hexachlorodibenzo-p-dioxins (all)	☐ Phthalic acid
☐ Benzo(k)fluoranthene	☐ 1,1-Dichloroethylene	☐ Hexachlorodibenzofurans (all)	☐ Phthalic anhydride
☐ Benzo(g,h,i)perylene	☐ trans-1,2-Dichloroethylene	☐ Hexachloroethane	☐ Pyrene
☐ Benzo(a)pyrene	☐ 2,4-Dichlorophenol	☐ Hexachloropropylene	☐ PYRIDINE
☐ Bromodichloromethane	☐ 2,6-Dichlorophenol	☐ Indeno (1,2,3-c,d) pyrene	☐ Safrole
☐ Methyl bromide (Bromomethane)	☐ 1,2-Dichloropropane	☐ Iodomethane	☐ Silvex (2,4,5-TP)
☐ 4-Bromophenyl phenyl ether	☐ cis-1,3-Dichloropropylene	☐ ISOBUTYL ALCOHOL	☐ 2,4,5-T(2,4,5-Trichloro phenoxy-acetic acid)
☐ n-BUTYL ALCOHOL	☐ trans-1,3-Dichloropropylene	☐ Isodrin	☐ 1,2,4,5-Tetrachlorobenzene
☐ Butyl benzyl phthalate	☐ Dieldrin	☐ METHANOL	☐ 1,1,1,2-Tetrachloroethane
☐ CARBON DISULFIDE	☐ Diethyl phthalate	☐ Methapyrilene	☐ 1,1,2,2-Tetrachloroethane
☐ CARBON TETRACHLORIDE	☐ 2,4-Dimethyl phenol	☐ Methoxychlor	☐ TETRACHLOROETHYLENE
☐ Chlordane (alpha & gamma isomers)	☐ Dimethyl phthalate	☐ 4,4-Methylene bis(2-chloroaniline)	☐ 2,3,4,6-Tetrachlorophenol
☐ p-Chloroaniline	☐ Di-n-butyl phthalate	☐ METHYLENE CHLORIDE	☐ TOLUENE
☐ CHLOROBENZENE	☐ 1,4-Dinitrobenzene	☐ METHYL ETHYL KETONE	☐ Toxaphene
☐ 2-Chloro-1,3-butadiene	☐ 4,6-Dinitro-o-cresol	☐ METHYL ISOBUTYL KETONE	☐ Bromoform (Tribromomethane)
☐ Chlorodibromomethane	☐ 2,4-Dinitrophenol	☐ Methyl methacrylate	☐ 1,2,4-Trichlorobenzene
☐ Chloroethane	☐ 2,4-Dinitrotoluene	☐ Methyl methansulfonate	☐ 1,1,1-TRICHLOROETHANE
☐ bis(2-chloroethyl)ether	☐ 2,6-Dinitrotoluene	☐ Naphthalene	☐ 1,1,2-TRICHLOROETHANE
☐ Chloroform	☐ Di-n-octyl phthalate	☐ o-Nitroaniline	☐ TRICHLOROETHYLENE
☐ bis(2-Chloroisopropyl)ether	☐ Di-n-propylnitrosamine	☐ p-Nitroaniline	☐ TRICHLOROMONOFLUOROMETHANE
☐ p-Chloro-m-cresol	☐ 1,4-Dioxane	☐ NITROBENZENE	☐ 2,4,5-Trichlorophenol
☐ 2-Chloroethyl vinyl ether	☐ Diphenylamine	☐ 5-Nitro-o-toluidine	☐ 2,4,6-Trichlorophenol
☐ Chloromethane (Methyl chloride)	☐ Diphenylnitrosamine	☐ o-Nitrophenol	☐ 1,2,3-Trichloropropane
☐ 2-Chloronaphthalene	☐ 1,2-Diphenylhydrazine	☐ p-Nitrophenol	☐ 1,1,2-TRICHLORO-1,2,2-TRIFLUOROETHANE
☐ 2-Chlorophenol	☐ Disulfoton	☐ N-Nitrosodiethylamine	☐ tris-(2,3-Dibromopropyl) phosphate
☐ 3-Chloropropylene	☐ Endosulfan I	☐ N-Nitrosodimethylamine	☐ Vinyl chloride
☐ Chrysene	☐ Endosulfan II	☐ N-Nitroso-di-n-butylamine	☐ XYLENES-TOTAL MIXED ISOMERS
☐ o-CRESOL	☐ Endrin	☐ N-Nitrosomethylethylamine	
☐ m-CRESOL	☐ Endrin aldehyde	☐ N-Nitrosomorpholine	

☐ None of the above listed underlying hazardous constituents are reasonably expected to be present in this waste stream.

UNDERLYING HAZARDOUS CONSTITUENTS WORKSHEET

WASTE STREAM # 771-35-57

The following underlying hazardous constituents (indicated by a checkmark in the appropriate box) are reasonably expected to be present in this waste stream:

INORGANIC CONSTITUENTS			
☐ Antimony	☐ Cadmium	■ Lead	☐ Silver
☐ Arsenic	☐ Chromium	■ Mercury	☐ Sulfide (Wastewater Only)
☐ Barium	☐ Cyanides (Total)	☐ Nickel	☐ Thallium
☐ Beryllium	☐ Cyanides (Amenable)	☐ Selenium	
ORGANIC CONSTITUENTS			
☐ Acenaphthylene	☐ p-CRESOL	☐ ETHYL ACETATE	☐ N-Nitrosopiperidine
☐ Acenaphthene	☐ Cyclohexanone	☐ Ethyl Cyanide (Propanenitrile)	☐ N-Nitrosopyrrolidine
☐ ACETONE	☐ 1,2-Dibromo-3-chloropropane	☐ ETHYL BENZENE	☐ Parathion
☐ Acetonitrile	☐ Ethylene dibromide (1,2-dibromoethane)	☐ ETHYL ETHER	☐ Total PCBs
☐ Acetophenone	☐ Dibromomethane	☐ bis(2-Ethylhexyl) phthalate	☐ Pentachlorobenzene
☐ Acrylamide	☐ 2,4,D(2-4-Dichlorophenoxyacetic acid)	☐ Ethyl methacrylate	☐ Pentachlorodibenzo-p-dioxins (all)
☐ Acrylonitrile	☐ Dibenz(a,h)anthracene	☐ Ethylene oxide	☐ Pentachlorodibenzofurans (all)
☐ Aldrin	☐ Dibenz(a,e)pyrene	☐ Fluoranthene	☐ Pentachloroethane
☐ Aniline	☐ m-Dichlorobenzene	☐ Fluorene	☐ Pentachloronitrobenzene
☐ Anthracene	☐ o-DICHLOROBENZENE	☐ Heptachlor	☐ Pentachlorophenol
☐ BENZENE	☐ p-Dichlorobenzene	☐ Hexachlorobenzene	☐ Phenacetin
☐ Benz(a)anthracene	☐ Dichlorodifluoromethane	☐ Hexachlorobutadiene	☐ Phenanthrene
☐ Benzal chloride	☐ 1,1-Dichloroethane	☐ Hexachlorocyclopentadiene	☐ Phenol
☐ Benzo(b)fluoranthene	☐ 1,2-Dichloroethane	☐ Hexachlorodibenzo-p-dioxins (all)	☐ Phthalic acid
☐ Benzo(k)fluoranthene	☐ 1,1-Dichloroethylene	☐ Hexachlorodibenzofurans (all)	☐ Phthalic anhydride
☐ Benzo(g,h,i)perylene	☐ trans-1,2-Dichloroethylene	☐ Hexachloroethane	☐ Pyrene
☐ Benzo(a)pyrene	☐ 2,4-Dichlorophenol	☐ Hexachloropropylene	☐ PYRIDINE
☐ Bromodichloromethane	☐ 2,6-Dichlorophenol	☐ Indeno (1,2,3-c,d) pyrene	☐ Safrole
☐ Methyl bromide (Bromomethane)	☐ 1,2-Dichloropropane	☐ Iodomethane	☐ Silvex (2,4,5-TP)
☐ 4-Bromophenyl phenyl ether	☐ cis-1,3-Dichloropropylene	☐ ISOBUTYL ALCOHOL	☐ 2,4,5-T(2,4,5-Trichloro phenoxy-acetic acid)
☐ n-BUTYL ALCOHOL	☐ trans-1,3-Dichloropropylene	☐ Isodrin	☐ 1,2,4,5-Tetrachlorobenzene
☐ Butyl benzyl phthalate	☐ Dieldrin	☐ METHANOL	☐ 1,1,1,2-Tetrachloroethane
☐ CARBON DISULFIDE	☐ Diethyl phthalate	☐ Methapyrilene	☐ 1,1,2,2-Tetrachloroethane
☐ CARBON TETRACHLORIDE	☐ 2,4-Dimethyl phenol	☐ Methoxychlor	☐ TETRACHLOROETHYLENE
☐ Chlordane (alpha & gamma isomers)	☐ Dimethyl phthalate	☐ 4,4-Methylene bis(2-chloroaniline)	☐ 2,3,4,6-Tetrachlorophenol
☐ p-Chloroaniline	☐ Di-n-butyl phthalate	☐ METHYLENE CHLORIDE	☐ TOLUENE
☐ CHLOROBENZENE	☐ 1,4-Dinitrobenzene	☐ METHYL ETHYL KETONE	☐ Toxaphene
☐ 2-Chloro-1,3-butadiene	☐ 4,6-Dinitro-o-cresol	☐ METHYL ISOBUTYL KETONE	☐ Bromoform (Tribromomethane)
☐ Chlorodibromomethane	☐ 2,4-Dinitrophenol	☐ Methyl methacrylate	☐ 1,2,4-Trichlorobenzene
☐ Chloroethane	☐ 2,4-Dinitrotoluene	☐ Methyl methansulfonate	☐ 1,1,1-TRICHLOROETHANE
☐ bis(2-chloroethyl)ether	☐ 2,6-Dinitrotoluene	☐ Naphthalene	☐ 1,1,2-TRICHLOROETHANE
☐ Chloroform	☐ Di-n-octyl phthalate	☐ o-Nitroaniline	☐ TRICHLOROETHYLENE
☐ bis(2-Chloroisopropyl)ether	☐ Di-n-propylnitrosamine	☐ p-Nitroaniline	☐ TRICHLOROMONOFLUOROMETHANE
☐ p-Chloro-m-cresol	☐ 1,4-Dioxane	☐ NITROBENZENE	☐ 2,4,5-Trichlorophenol
☐ 2-Chloroethyl vinyl ether	☐ Diphenylamine	☐ 5-Nitro-o-toluidine	☐ 2,4,6-Trichlorophenol
☐ Chloromethane (Methyl chloride)	☐ Diphenylnitrosamine	☐ o-Nitrophenol	☐ 1,2,3-Trichloropropane
☐ 2-Chloronaphthalene	☐ 1,2-Diphenylhydrazine	☐ p-Nitrophenol	☐ 1,1,2-TRICHLORO-1,2,2-TRIFLUOROETHANE
☐ 2-Chlorophenol	☐ Disulfoton	☐ N-Nitrosodiethylamine	☐ tris-(2,3-Dibromopropyl) phosphate
☐ 3-Chloropropylene	☐ Endosulfan I	☐ N-Nitrosodimethylamine	☐ Vinyl chloride
☐ Chrysene	☐ Endosulfan II	☐ N-Nitroso-di-n-butylamine	☐ XYLENES-TOTAL MIXED ISOMERS
☐ o-CRESOL	☐ Endrin	☐ N-Nitrosomethylethylamine	
☐ m-CRESOL	☐ Endrin aldehyde	☐ N-Nitrosomorpholine	

☐ None of the above listed underlying hazardous constituents are reasonably expected to be present in this waste stream.

UNDERLYING HAZARDOUS CONSTITUENTS WORKSHEET

WASTE STREAM # 771-35-59

The following underlying hazardous constituents (indicated by a checkmark in the appropriate box) are reasonably expected to be present in this waste stream:

INORGANIC CONSTITUENTS			
☐ Antimony	☐ Cadmium	■ Lead	☐ Silver
☐ Arsenic	☐ Chromium	☐ Mercury	☐ Sulfide (Wastewater Only)
■ Barium	☐ Cyanides (Total)	☐ Nickel	■ Thallium
☐ Beryllium	☐ Cyanides (Amenable)	☐ Selenium	
ORGANIC CONSTITUENTS			
☐ Acenaphthylene	☐ p-CRESOL	☐ ETHYL ACETATE	☐ N-Nitrosopiperidine
☐ Acenaphthene	☐ Cyclohexanone	☐ Ethyl Cyanide (Propanenitrile)	☐ N-Nitrosopyrrolidine
☐ ACETONE	☐ 1,2-Dibromo-3-chloropropane	☐ ETHYL BENZENE	☐ Parathion
☐ Acetonitrile	☐ Ethylene dibromide (1,2-dibromoethane)	☐ ETHYL ETHER	☐ Total PCBs
☐ Acetophenone	☐ Dibromomethane	☐ bis(2-Ethylhexyl) phthalate	☐ Pentachlorobenzene
☐ Acrylamide	☐ 2,4,D(2-4-Dichlorophenoxyacetic acid)	☐ Ethyl methacrylate	☐ Pentachlorodibenzo-p-dioxins (all)
☐ Acrylonitrile	☐ Dibenz(a,h)anthracene	☐ Ethylene oxide	☐ Pentachlorodibenzofurans (all)
☐ Aldrin	☐ Dibenz(a,e)pyrene	☐ Fluoranthene	☐ Pentachloroethane
☐ Aniline	☐ m-Dichlorobenzene	☐ Fluorene	☐ Pentachloronitrobenzene
☐ Anthracene	☐ o-DICHLOROBENZENE	☐ Heptachlor	☐ Pentachlorophenol
☐ BENZENE	☐ p-Dichlorobenzene	☐ Hexachlorobenzene	☐ Phenacetin
☐ Benz(a)anthracene	☐ Dichlorodifluoromethane	☐ Hexachlorobutadiene	☐ Phenanthrene
☐ Benzal chloride	☐ 1,1-Dichloroethane	☐ Hexachlorocyclopentadiene	☐ Phenol
☐ Benzo(b)fluoranthene	☐ 1,2-Dichloroethane	☐ Hexachlorodibenzo-p-dioxins (all)	☐ Phthalic acid
☐ Benzo(k)fluoranthene	☐ 1,1-Dichloroethylene	☐ Hexachlorodibenzofurans (all)	☐ Phthalic anhydride
☐ Benzo(g,h,i)perylene	☐ trans-1,2-Dichloroethylene	☐ Hexachloroethane	☐ Pyrene
☐ Benzo(a)pyrene	☐ 2,4-Dichlorophenol	☐ Hexachloropropylene	☐ PYRIDINE
☐ Bromodichloromethane	☐ 2,6-Dichlorophenol	☐ Indeno (1,2,3-c,d) pyrene	☐ Safrole
☐ Methyl bromide (Bromomethane)	☐ 1,2-Dichloropropane	☐ Iodomethane	☐ Silvex (2,4,5-TP)
☐ 4-Bromophenyl phenyl ether	☐ cis-1,3-Dichloropropylene	☐ ISOBUTYL ALCOHOL	☐ 2,4,5-T(2,4,5-Trichloro phenoxy-acetic acid)
☐ n-BUTYL ALCOHOL	☐ trans-1,3-Dichloropropylene	☐ Isodrin	☐ 1,2,4,5-Tetrachlorobenzene
☐ Butyl benzyl phthalate	☐ Dieldrin	☐ METHANOL	☐ 1,1,1,2-Tetrachloroethane
☐ CARBON DISULFIDE	☐ Diethyl phthalate	☐ Methapyrilene	☐ 1,1,2,2-Tetrachloroethane
☐ CARBON TETRACHLORIDE	☐ 2,4-Dimethyl phenol	☐ Methoxychlor	☐ TETRACHLOROETHYLENE
☐ Chlordane (alpha & gamma isomers)	☐ Dimethyl phthalate	☐ 4,4-Methylene bis(2-chloroaniline)	☐ 2,3,4,6-Tetrachlorophenol
☐ p-Chloroaniline	☐ Di-n-butyl phthalate	☐ METHYLENE CHLORIDE	☐ TOLUENE
☐ CHLOROBENZENE	☐ 1,4-Dinitrobenzene	☐ METHYL ETHYL KETONE	☐ Toxaphene
☐ 2-Chloro-1,3-butadiene	☐ 4,6-Dinitro-o-cresol	☐ METHYL ISOBUTYL KETONE	☐ Bromoform (Tribromomethane)
☐ Chlorodibromomethane	☐ 2,4-Dinitrophenol	☐ Methyl methacrylate	☐ 1,2,4-Trichlorobenzene
☐ Chloroethane	☐ 2,4-Dinitrotoluene	☐ Methyl methansulfonate	☐ 1,1,1-TRICHLOROETHANE
☐ bis(2-chloroethyl)ether	☐ 2,6-Dinitrotoluene	☐ Naphthalene	☐ 1,1,2-TRICHLOROETHANE
☐ Chloroform	☐ Di-n-octyl phthalate	☐ o-Nitroaniline	☐ TRICHLOROETHYLENE
☐ bis(2-Chloroisopropyl)ether	☐ Di-n-propylnitrosamine	☐ p-Nitroaniline	☐ TRICHLOROMONOFLUOROMETHANE
☐ p-Chloro-m-cresol	☐ 1,4-Dioxane	☐ NITROBENZENE	☐ 2,4,5-Trichlorophenol
☐ 2-Chloroethyl vinyl ether	☐ Diphenylamine	☐ 5-Nitro-o-toluidine	☐ 2,4,6-Trichlorophenol
☐ Chloromethane (Methyl chloride)	☐ Diphenylnitrosamine	☐ o-Nitrophenol	☐ 1,2,3-Trichloropropane
☐ 2-Chloronaphthalene	☐ 1,2-Diphenylhydrazine	☐ p-Nitrophenol	☐ 1,1,2-TRICHLORO-1,2,2-TRIFLUOROETHANE
☐ 2-Chlorophenol	☐ Disulfoton	☐ N-Nitrosodiethylamine	☐ tris-(2,3-Dibromopropyl) phosphate
☐ 3-Chloropropylene	☐ Endosulfan I	☐ N-Nitrosodimethylamine	☐ Vinyl chloride
☐ Chrysene	☐ Endosulfan II	☐ N-Nitroso-di-n-butylamine	☐ XYLENES-TOTAL MIXED ISOMERS
☐ o-CRESOL	☐ Endrin	☐ N-Nitrosomethylethylamine	
☐ m-CRESOL	☐ Endrin aldehyde	☐ N-Nitrosomorpholine	

☐ None of the above listed underlying hazardous constituents are reasonably expected to be present in this waste stream.

UNDERLYING HAZARDOUS CONSTITUENTS WORKSHEET

WASTE STREAM # 771-35-60

The following underlying hazardous constituents (indicated by a checkmark in the appropriate box) are reasonably expected to be present in this waste stream:

INORGANIC CONSTITUENTS			
☐ Antimony	■ Cadmium	■ Lead	■ Silver
☐ Arsenic	☐ Chromium	☐ Mercury	☐ Sulfide (Wastewater Only)
☐ Barium	☐ Cyanides (Total)	☐ Nickel	☐ Thallium
☐ Beryllium	☐ Cyanides (Amenable)	☐ Selenium	

ORGANIC CONSTITUENTS			
☐ Acenaphthylene	☐ p-CRESOL	☐ ETHYL ACETATE	☐ N-Nitrosopiperidine
☐ Acenaphthene	☐ Cyclohexanone	☐ Ethyl Cyanide (Propanenitrile)	☐ N-Nitrosopyrrolidine
☐ ACETONE	☐ 1,2-Dibromo-3-chloropropane	☐ ETHYL BENZENE	☐ Parathion
☐ Acetonitrile	☐ Ethylene dibromide (1,2-dibromoethane)	☐ ETHYL ETHER	☐ Total PCBs
☐ Acetophenone	☐ Dibromomethane	☐ bis(2-Ethylhexyl) phthalate	☐ Pentachlorobenzene
☐ Acrylamide	☐ 2,4,D(2-4-Dichlorophenoxyacetic acid)	☐ Ethyl methacrylate	☐ Pentachlorodibenzo-p-dioxins (all)
☐ Acrylonitrile	☐ Dibenz(a,h)anthracene	☐ Ethylene oxide	☐ Pentachlorodibenzofurans (all)
☐ Aldrin	☐ Dibenz(a,e)pyrene	☐ Fluoranthene	☐ Pentachloroethane
☐ Aniline	☐ m-Dichlorobenzene	☐ Fluorene	☐ Pentachloronitrobenzene
☐ Anthracene	☐ o-DICHLOROBENZENE	☐ Heptachlor	☐ Pentachlorophenol
☐ BENZENE	☐ p-Dichlorobenzene	☐ Hexachlorobenzene	☐ Phenacetin
☐ Benz(a)anthracene	☐ Dichlorodifluoromethane	☐ Hexachlorobutadiene	☐ Phenanthrene
☐ Benzal chloride	☐ 1,1-Dichloroethane	☐ Hexachlorocyclopentadiene	☐ Phenol
☐ Benzo(b)fluoranthene	☐ 1,2-Dichloroethane	☐ Hexachlorodibenzo-p-dioxins (all)	☐ Phthalic acid
☐ Benzo(k)fluoranthene	☐ 1,1-Dichloroethylene	☐ Hexachlorodibenzofurans (all)	☐ Phthalic anhydride
☐ Benzo(g,h,i)perylene	☐ trans-1,2-Dichloroethylene	☐ Hexachloroethane	☐ Pyrene
☐ Benzo(a)pyrene	☐ 2,4-Dichlorophenol	☐ Hexachloropropylene	☐ PYRIDINE
☐ Bromodichloromethane	☐ 2,6-Dichlorophenol	☐ Indeno (1,2,3-c,d) pyrene	☐ Safrole
☐ Methyl bromide (Bromomethane)	☐ 1,2-Dichloropropane	☐ Iodomethane	☐ Silvex (2,4,5-TP)
☐ 4-Bromophenyl phenyl ether	☐ cis-1,3-Dichloropropylene	☐ ISOBUTYL ALCOHOL	☐ 2,4,5-T(2,4,5-Trichloro phenoxy-acetic acid)
☐ n-BUTYL ALCOHOL	☐ trans-1,3-Dichloropropylene	☐ Isodrin	☐ 1,2,4,5-Tetrachlorobenzene
☐ Butyl benzyl phthalate	☐ Dieldrin	☐ METHANOL	☐ 1,1,1,2-Tetrachloroethane
☐ CARBON DISULFIDE	☐ Diethyl phthalate	☐ Methapyrilene	☐ 1,1,2,2-Tetrachloroethane
☐ CARBON TETRACHLORIDE	☐ 2,4-Dimethyl phenol	☐ Methoxychlor	☐ TETRACHLOROETHYLENE
☐ Chlordane (alpha & gamma isomers)	☐ Dimethyl phthalate	☐ 4,4-Methylene bis(2-chloroaniline)	☐ 2,3,4,6-Tetrachlorophenol
☐ p-Chloroaniline	☐ Di-n-butyl phthalate	☐ METHYLENE CHLORIDE	☐ TOLUENE
☐ CHLOROBENZENE	☐ 1,4-Dinitrobenzene	☐ METHYL ETHYL KETONE	☐ Toxaphene
☐ 2-Chloro-1,3-butadiene	☐ 4,6-Dinitro-o-cresol	☐ METHYL ISOBUTYL KETONE	☐ Bromoform (Tribromomethane)
☐ Chlorodibromomethane	☐ 2,4-Dinitrophenol	☐ Methyl methacrylate	☐ 1,2,4-Trichlorobenzene
☐ Chloroethane	☐ 2,4-Dinitrotoluene	☐ Methyl methansulfonate	☐ 1,1,1-TRICHLOROETHANE
☐ bis(2-chloroethyl)ether	☐ 2,6-Dinitrotoluene	☐ Naphthalene	☐ 1,1,2-TRICHLOROETHANE
☐ Chloroform	☐ Di-n-octyl phthalate	☐ o-Nitroaniline	☐ TRICHLOROETHYLENE
☐ bis(2-Chloroisopropyl)ether	☐ Di-n-propylnitrosamine	☐ p-Nitroaniline	☐ TRICHLOROMONOFLUOROMETHANE
☐ p-Chloro-m-cresol	☐ 1,4-Dioxane	☐ NITROBENZENE	☐ 2,4,5-Trichlorophenol
☐ 2-Chloroethyl vinyl ether	☐ Diphenylamine	☐ 5-Nitro-o-toluidine	☐ 2,4,6-Trichlorophenol
☐ Chloromethane (Methyl chloride)	☐ Diphenylnitrosamine	☐ o-Nitrophenol	☐ 1,2,3-Trichloropropane
☐ 2-Chloronaphthalene	☐ 1,2-Diphenylhydrazine	☐ p-Nitrophenol	☐ 1,1,2-TRICHLORO-1,2,2-TRIFLUOROETHANE
☐ 2-Chlorophenol	☐ Disulfoton	☐ N-Nitrosodiethylamine	☐ tris-(2,3-Dibromopropyl) phosphate
☐ 3-Chloropropylene	☐ Endosulfan I	☐ N-Nitrosodimethylamine	☐ Vinyl chloride
☐ Chrysene	☐ Endosulfan II	☐ N-Nitroso-di-n-butylamine	☐ XYLENES-TOTAL MIXED ISOMERS
☐ o-CRESOL	☐ Endrin	☐ N-Nitrosomethylethylamine	
☐ m-CRESOL	☐ Endrin aldehyde	☐ N-Nitrosomorpholine	

☐ None of the above listed underlying hazardous constituents are reasonably expected to be present in this waste stream.

UNDERLYING HAZARDOUS CONSTITUENTS WORKSHEET

WASTE STREAM # 771-36-1

The following underlying hazardous constituents (indicated by a checkmark in the appropriate box) are reasonably expected to be present in this waste stream:

INORGANIC CONSTITUENTS			
☐ Antimony	■ Cadmium	■ Lead	☐ Silver
☐ Arsenic	■ Chromium	☐ Mercury	☐ Sulfide (Wastewater Only)
■ Barium	☐ Cyanides (Total)	■ Nickel	☐ Thallium
■ Beryllium	☐ Cyanides (Amenable)	☐ Selenium	
ORGANIC CONSTITUENTS			
☐ Acenaphthylene	☐ p-CRESOL	☐ ETHYL ACETATE	☐ N-Nitrosopiperidine
☐ Acenaphthene	☐ Cyclohexanone	☐ Ethyl Cyanide (Propanenitrile)	☐ N-Nitrosopyrrolidine
☐ ACETONE	☐ 1,2-Dibromo-3-chloropropane	☐ ETHYL BENZENE	☐ Parathion
☐ Acetonitrile	☐ Ethylene dibromide (1,2-dibromoethane)	☐ ETHYL ETHER	☐ Total PCBs
☐ Acetophenone	☐ Dibromomethane	☐ bis(2-Ethylhexyl) phthalate	☐ Pentachlorobenzene
☐ Acrylamide	☐ 2,4,D(2-4-Dichlorophenoxyacetic acid)	☐ Ethyl methacrylate	☐ Pentachlorodibenzo-p-dioxins (all)
☐ Acrylonitrile	☐ Dibenz(a,h)anthracene	☐ Ethylene oxide	☐ Pentachlorodibenzofurans (all)
☐ Aldrin	☐ Dibenz(a,e)pyrene	☐ Fluoranthene	☐ Pentachloroethane
☐ Aniline	☐ m-Dichlorobenzene	☐ Fluorene	☐ Pentachloronitrobenzene
☐ Anthracene	☐ o-DICHLOROBENZENE	☐ Heptachlor	☐ Pentachlorophenol
☐ BENZENE	☐ p-Dichlorobenzene	☐ Hexachlorobenzene	☐ Phenacetin
☐ Benz(a)anthracene	☐ Dichlorodifluoromethane	☐ Hexachlorobutadiene	☐ Phenanthrene
☐ Benzal chloride	☐ 1,1-Dichloroethane	☐ Hexachlorocyclopentadiene	☐ Phenol
☐ Benzo(b)fluoranthene	☐ 1,2-Dichloroethane	☐ Hexachlorodibenzo-p-dioxins (all)	☐ Phthalic acid
☐ Benzo(k)fluoranthene	☐ 1,1-Dichloroethylene	☐ Hexachlorodibenzofurans (all)	☐ Phthalic anhydride
☐ Benzo(g,h,i)perylene	☐ trans-1,2-Dichloroethylene	☐ Hexachloroethane	☐ Pyrene
☐ Benzo(a)pyrene	☐ 2,4-Dichlorophenol	☐ Hexachloropropylene	☐ PYRIDINE
☐ Bromodichloromethane	☐ 2,6-Dichlorophenol	☐ Indeno (1,2,3-c,d) pyrene	☐ Safrole
☐ Methyl bromide (Bromomethane)	☐ 1,2-Dichloropropane	☐ Iodomethane	☐ Silvex (2,4,5-TP)
☐ 4-Bromophenyl phenyl ether	☐ cis-1,3-Dichloropropylene	☐ ISOBUTYL ALCOHOL	☐ 2,4,5-T(2,4,5-Trichloro phenoxy-acetic acid)
☐ n-BUTYL ALCOHOL	☐ trans-1,3-Dichloropropylene	☐ Isodrin	☐ 1,2,4,5-Tetrachlorobenzene
☐ Butyl benzyl phthalate	☐ Dieldrin	☐ METHANOL	☐ 1,1,1,2-Tetrachloroethane
☐ CARBON DISULFIDE	☐ Diethyl phthalate	☐ Methapyrilene	☐ 1,1,2,2-Tetrachloroethane
☐ CARBON TETRACHLORIDE	☐ 2,4-Dimethyl phenol	☐ Methoxychlor	☐ TETRACHLOROETHYLENE
☐ Chlordane (alpha & gamma isomers)	☐ Dimethyl phthalate	☐ 4,4-Methylene bis(2-chloroaniline)	☐ 2,3,4,6-Tetrachlorophenol
☐ p-Chloroaniline	☐ Di-n-butyl phthalate	☐ METHYLENE CHLORIDE	☐ TOLUENE
☐ CHLOROBENZENE	☐ 1,4-Dinitrobenzene	☐ METHYL ETHYL KETONE	☐ Toxaphene
☐ 2-Chloro-1,3-butadiene	☐ 4,6-Dinitro-o-cresol	☐ METHYL ISOBUTYL KETONE	☐ Bromoform (Tribromomethane)
☐ Chlorodibromomethane	☐ 2,4-Dinitrophenol	☐ Methyl methacrylate	☐ 1,2,4-Trichlorobenzene
☐ Chloroethane	☐ 2,4-Dinitrotoluene	☐ Methyl methansulfonate	☐ 1,1,1-TRICHLOROETHANE
☐ bis(2-chloroethyl)ether	☐ 2,6-Dinitrotoluene	☐ Naphthalene	☐ 1,1,2-TRICHLOROETHANE
☐ Chloroform	☐ Di-n-octyl phthalate	☐ o-Nitroaniline	☐ TRICHLOROETHYLENE
☐ bis(2-Chloroisopropyl)ether	☐ Di-n-propylnitrosamine	☐ p-Nitroaniline	☐ TRICHLOROMONOFLUOROMETHANE
☐ p-Chloro-m-cresol	☐ 1,4-Dioxane	☐ NITROBENZENE	☐ 2,4,5-Trichlorophenol
☐ 2-Chloroethyl vinyl ether	☐ Diphenylamine	☐ 5-Nitro-o-toluidine	☐ 2,4,6-Trichlorophenol
☐ Chloromethane (Methyl chloride)	☐ Diphenylnitrosamine	☐ o-Nitrophenol	☐ 1,2,3-Trichloropropane
☐ 2-Chloronaphthalene	☐ 1,2-Diphenylhydrazine	☐ p-Nitrophenol	☐ 1,1,2-TRICHLORO-1,2,2-TRIFLUOROETHANE
☐ 2-Chlorophenol	☐ Disulfoton	☐ N-Nitrosodiethylamine	☐ tris-(2,3-Dibromopropyl) phosphate
☐ 3-Chloropropylene	☐ Endosulfan I	☐ N-Nitrosodimethylamine	☐ Vinyl chloride
☐ Chrysene	☐ Endosulfan II	☐ N-Nitroso-di-n-butylamine	☐ XYLENES-TOTAL MIXED ISOMERS
☐ o-CRESOL	☐ Endrin	☐ N-Nitrosomethylethylamine	
☐ m-CRESOL	☐ Endrin aldehyde	☐ N-Nitrosomorpholine	

☐ None of the above listed underlying hazardous constituents are reasonably expected to be present in this waste stream.

UNDERLYING HAZARDOUS CONSTITUENTS WORKSHEET

WASTE STREAM # 771-36-7

The following underlying hazardous constituents (indicated by a checkmark in the appropriate box) are reasonably expected to be present in this waste stream:

INORGANIC CONSTITUENTS			
☐ Antimony	☐ Cadmium	■ Lead	☐ Silver
☐ Arsenic	☐ Chromium	☐ Mercury	☐ Sulfide (Wastewater Only)
☐ Barium	☐ Cyanides (Total)	☐ Nickel	☐ Thallium
☐ Beryllium	☐ Cyanides (Amenable)	☐ Selenium	
ORGANIC CONSTITUENTS			
☐ Acenaphthylene	☐ p-CRESOL	☐ ETHYL ACETATE	☐ N-Nitrosopiperidine
☐ Acenaphthene	☐ Cyclohexanone	☐ Ethyl Cyanide (Propanenitrile)	☐ N-Nitrosopyrrolidine
☐ ACETONE	☐ 1,2-Dibromo-3-chloropropane	☐ ETHYL BENZENE	☐ Parathion
☐ Acetonitrile	☐ Ethylene dibromide (1,2-dibromoethane)	☐ ETHYL ETHER	☐ Total PCBs
☐ Acetophenone	☐ Dibromomethane	☐ bis(2-Ethylhexyl) phthalate	☐ Pentachlorobenzene
☐ Acrylamide	☐ 2,4,D(2-4-Dichlorophenoxyacetic acid)	☐ Ethyl methacrylate	☐ Pentachlorodibenzo-p-dioxins (all)
☐ Acrylonitrile	☐ Dibenz(a,h)anthracene	☐ Ethylene oxide	☐ Pentachlorodibenzofurans (all)
☐ Aldrin	☐ Dibenz(a,e)pyrene	☐ Fluoranthene	☐ Pentachloroethane
☐ Aniline	☐ m-Dichlorobenzene	☐ Fluorene	☐ Pentachloronitrobenzene
☐ Anthracene	☐ o-DICHLOROBENZENE	☐ Heptachlor	☐ Pentachlorophenol
☐ BENZENE	☐ p-Dichlorobenzene	☐ Hexachlorobenzene	☐ Phenacetin
☐ Benz(a)anthracene	☐ Dichlorodifluoromethane	☐ Hexachlorobutadiene	☐ Phenanthrene
☐ Benzal chloride	☐ 1,1-Dichloroethane	☐ Hexachlorocyclopentadiene	☐ Phenol
☐ Benzo(b)fluoranthene	☐ 1,2-Dichloroethane	☐ Hexachlorodibenzo-p-dioxins (all)	☐ Phthalic acid
☐ Benzo(k)fluoranthene	☐ 1,1-Dichloroethylene	☐ Hexachlorodibenzofurans (all)	☐ Phthalic anhydride
☐ Benzo(g,h,i)perylene	☐ trans-1,2-Dichloroethylene	☐ Hexachloroethane	☐ Pyrene
☐ Benzo(a)pyrene	☐ 2,4-Dichlorophenol	☐ Hexachloropropylene	☐ PYRIDINE
☐ Bromodichloromethane	☐ 2,6-Dichlorophenol	☐ Indeno (1,2,3-c,d) pyrene	☐ Safrole
☐ Methyl bromide (Bromomethane)	☐ 1,2-Dichloropropane	☐ Iodomethane	☐ Silvex (2,4,5-TP)
☐ 4-Bromophenyl phenyl ether	☐ cis-1,3-Dichloropropylene	☐ ISOBUTYL ALCOHOL	☐ 2,4,5-T(2,4,5-Trichloro phenoxy-acetic acid)
☐ n-BUTYL ALCOHOL	☐ trans-1,3-Dichloropropylene	☐ Isodrin	☐ 1,2,4,5-Tetrachlorobenzene
☐ Butyl benzyl phthalate	☐ Dieldrin	☐ METHANOL	☐ 1,1,1,2-Tetrachloroethane
☐ CARBON DISULFIDE	☐ Diethyl phthalate	☐ Methapyrilene	☐ 1,1,2,2-Tetrachloroethane
☐ CARBON TETRACHLORIDE	☐ 2,4-Dimethyl phenol	☐ Methoxychlor	☐ TETRACHLOROETHYLENE
☐ Chlordane (alpha & gamma isomers)	☐ Dimethyl phthalate	☐ 4,4-Methylene bis(2-chloroaniline)	☐ 2,3,4,6-Tetrachlorophenol
☐ p-Chloroaniline	☐ Di-n-butyl phthalate	☐ METHYLENE CHLORIDE	☐ TOLUENE
☐ CHLOROBENZENE	☐ 1,4-Dinitrobenzene	☐ METHYL ETHYL KETONE	☐ Toxaphene
☐ 2-Chloro-1,3-butadiene	☐ 4,6-Dinitro-o-cresol	☐ METHYL ISOBUTYL KETONE	☐ Bromoform (Tribromomethane)
☐ Chlorodibromomethane	☐ 2,4-Dinitrophenol	☐ Methyl methacrylate	☐ 1,2,4-Trichlorobenzene
☐ Chloroethane	☐ 2,4-Dinitrotoluene	☐ Methyl methansulfonate	☐ 1,1,1-TRICHLOROETHANE
☐ bis(2-chloroethyl)ether	☐ 2,6-Dinitrotoluene	☐ Naphthalene	☐ 1,1,2-TRICHLOROETHANE
☐ Chloroform	☐ Di-n-octyl phthalate	☐ o-Nitroaniline	☐ TRICHLOROETHYLENE
☐ bis(2-Chloroisopropyl)ether	☐ Di-n-propylnitrosamine	☐ p-Nitroaniline	☐ TRICHLOROMONOFLUOROMETHANE
☐ p-Chloro-m-cresol	☐ 1,4-Dioxane	☐ NITROBENZENE	☐ 2,4,5-Trichlorophenol
☐ 2-Chloroethyl vinyl ether	☐ Diphenylamine	☐ 5-Nitro-o-toluidine	☐ 2,4,6-Trichlorophenol
☐ Chloromethane (Methyl chloride)	☐ Diphenylnitrosamine	☐ o-Nitrophenol	☐ 1,2,3-Trichloropropane
☐ 2-Chloronaphthalene	☐ 1,2-Diphenylhydrazine	☐ p-Nitrophenol	☐ 1,1,2-TRICHLORO-1,2,2-TRIFLUOROETHANE
☐ 2-Chlorophenol	☐ Disulfoton	☐ N-Nitrosodiethylamine	☐ tris-(2,3-Dibromopropyl) phosphate
☐ 3-Chloropropylene	☐ Endosulfan I	☐ N-Nitrosodimethylamine	☐ Vinyl chloride
☐ Chrysene	☐ Endosulfan II	☐ N-Nitroso-di-n-butylamine	☐ XYLENES-TOTAL MIXED ISOMERS
☐ o-CRESOL	☐ Endrin	☐ N-Nitrosomethylethylamine	
☐ m-CRESOL	☐ Endrin aldehyde	☐ N-Nitrosomorpholine	

☐ None of the above listed underlying hazardous constituents are reasonably expected to be present in this waste stream.

UNDERLYING HAZARDOUS CONSTITUENTS WORKSHEET

WASTE STREAM # 771-37-25

The following underlying hazardous constituents (indicated by a checkmark in the appropriate box) are reasonably expected to be present in this waste stream:

INORGANIC CONSTITUENTS			
☐ Antimony	☐ Cadmium	☐ Lead	☐ Silver
☐ Arsenic	☐ Chromium	■ Mercury	☐ Sulfide (Wastewater Only)
☐ Barium	☐ Cyanides (Total)	☐ Nickel	☐ Thallium
☐ Beryllium	☐ Cyanides (Amenable)	☐ Selenium	
ORGANIC CONSTITUENTS			
☐ Acenaphthylene	☐ p-CRESOL	☐ ETHYL ACETATE	☐ N-Nitrosopiperidine
☐ Acenaphthene	☐ Cyclohexanone	☐ Ethyl Cyanide (Propanenitrile)	☐ N-Nitrosopyrrolidine
☐ ACETONE	☐ 1,2-Dibromo-3-chloropropane	☐ ETHYL BENZENE	☐ Parathion
☐ Acetonitrile	☐ Ethylene dibromide (1,2-dibromoethane)	☐ ETHYL ETHER	☐ Total PCBs
☐ Acetophenone	☐ Dibromomethane	☐ bis(2-Ethylhexyl) phthalate	☐ Pentachlorobenzene
☐ Acrylamide	☐ 2,4,D(2-4-Dichlorophenoxyacetic acid)	☐ Ethyl methacrylate	☐ Pentachlorodibenzo-p-dioxins (all)
☐ Acrylonitrile	☐ Dibenz(a,h)anthracene	☐ Ethylene oxide	☐ Pentachlorodibenzofurans (all)
☐ Aldrin	☐ Dibenz(a,e)pyrene	☐ Fluoranthene	☐ Pentachloroethane
☐ Aniline	☐ m-Dichlorobenzene	☐ Fluorene	☐ Pentachloronitrobenzene
☐ Anthracene	☐ o-DICHLOROBENZENE	☐ Heptachlor	☐ Pentachlorophenol
☐ BENZENE	☐ p-Dichlorobenzene	☐ Hexachlorobenzene	☐ Phenacetin
☐ Benz(a)anthracene	☐ Dichlorodifluoromethane	☐ Hexachlorobutadiene	☐ Phenanthrene
☐ Benzal chloride	☐ 1,1-Dichloroethane	☐ Hexachlorocyclopentadiene	☐ Phenol
☐ Benzo(b)fluoranthene	☐ 1,2-Dichloroethane	☐ Hexachlorodibenzo-p-dioxins (all)	☐ Phthalic acid
☐ Benzo(k)fluoranthene	☐ 1,1-Dichloroethylene	☐ Hexachlorodibenzofurans (all)	☐ Phthalic anhydride
☐ Benzo(g,h,i)perylene	☐ trans-1,2-Dichloroethylene	☐ Hexachloroethane	☐ Pyrene
☐ Benzo(a)pyrene	☐ 2,4-Dichlorophenol	☐ Hexachloropropylene	☐ PYRIDINE
☐ Bromodichloromethane	☐ 2,6-Dichlorophenol	☐ Indeno (1,2,3-c,d) pyrene	☐ Safrole
☐ Methyl bromide (Bromomethane)	☐ 1,2-Dichloropropane	☐ Iodomethane	☐ Silvex (2,4,5-TP)
☐ 4-Bromophenyl phenyl ether	☐ cis-1,3-Dichloropropylene	☐ ISOBUTYL ALCOHOL	☐ 2,4,5-T(2,4,5-Trichloro phenoxy-acetic acid)
☐ n-BUTYL ALCOHOL	☐ trans-1,3-Dichloropropylene	☐ Isodrin	☐ 1,2,4,5-Tetrachlorobenzene
☐ Butyl benzyl phthalate	☐ Dieldrin	☐ METHANOL	☐ 1,1,1,2-Tetrachloroethane
☐ CARBON DISULFIDE	☐ Diethyl phthalate	☐ Methapyrilene	☐ 1,1,2,2-Tetrachloroethane
☐ CARBON TETRACHLORIDE	☐ 2,4-Dimethyl phenol	☐ Methoxychlor	☐ TETRACHLOROETHYLENE
☐ Chlordane (alpha & gamma isomers)	☐ Dimethyl phthalate	☐ 4,4-Methylene bis(2-chloroaniline)	☐ 2,3,4,6-Tetrachlorophenol
☐ p-Chloroaniline	☐ Di-n-butyl phthalate	☐ METHYLENE CHLORIDE	☐ TOLUENE
☐ CHLOROBENZENE	☐ 1,4-Dinitrobenzene	☐ METHYL ETHYL KETONE	☐ Toxaphene
☐ 2-Chloro-1,3-butadiene	☐ 4,6-Dinitro-o-cresol	☐ METHYL ISOBUTYL KETONE	☐ Bromoform (Tribromomethane)
☐ Chlorodibromomethane	☐ 2,4-Dinitrophenol	☐ Methyl methacrylate	☐ 1,2,4-Trichlorobenzene
☐ Chloroethane	☐ 2,4-Dinitrotoluene	☐ Methyl methansulfonate	☐ 1,1,1-TRICHLOROETHANE
☐ bis(2-chloroethyl)ether	☐ 2,6-Dinitrotoluene	☐ Naphthalene	☐ 1,1,2-TRICHLOROETHANE
☐ Chloroform	☐ Di-n-octyl phthalate	☐ o-Nitroaniline	☐ TRICHLOROETHYLENE
☐ bis(2-Chloroisopropyl)ether	☐ Di-n-propylnitrosamine	☐ p-Nitroaniline	☐ TRICHLOROMONOFLUOROMETHANE
☐ p-Chloro-m-cresol	☐ 1,4-Dioxane	☐ NITROBENZENE	☐ 2,4,5-Trichlorophenol
☐ 2-Chloroethyl vinyl ether	☐ Diphenylamine	☐ 5-Nitro-o-toluidine	☐ 2,4,6-Trichlorophenol
☐ Chloromethane (Methyl chloride)	☐ Diphenylnitrosamine	☐ o-Nitrophenol	☐ 1,2,3-Trichloropropane
☐ 2-Chloronaphthalene	☐ 1,2-Diphenylhydrazine	☐ p-Nitrophenol	☐ 1,1,2-TRICHLORO-1,2,2-TRIFLUOROETHANE
☐ 2-Chlorophenol	☐ Disulfoton	☐ N-Nitrosodiethylamine	☐ tris-(2,3-Dibromopropyl) phosphate
☐ 3-Chloropropylene	☐ Endosulfan I	☐ N-Nitrosodimethylamine	☐ Vinyl chloride
☐ Chrysene	☐ Endosulfan II	☐ N-Nitroso-di-n-butylamine	☐ XYLENES-TOTAL MIXED ISOMERS
☐ o-CRESOL	☐ Endrin	☐ N-Nitrosomethylethylamine	
☐ m-CRESOL	☐ Endrin aldehyde	☐ N-Nitrosomorpholine	

☐ None of the above listed underlying hazardous constituents are reasonably expected to be present in this waste stream.

UNDERLYING HAZARDOUS CONSTITUENTS WORKSHEET

WASTE STREAM # 771-39-12

The following underlying hazardous constituents (indicated by a checkmark in the appropriate box) are reasonably expected to be present in this waste stream:

INORGANIC CONSTITUENTS			
☐ Antimony	☐ Cadmium	☐ Lead	☐ Silver
☐ Arsenic	☐ Chromium	☐ Mercury	☐ Sulfide (Wastewater Only)
☐ Barium	☐ Cyanides (Total)	☐ Nickel	☐ Thallium
☐ Beryllium	☐ Cyanides (Amenable)	☐ Selenium	

ORGANIC CONSTITUENTS			
☐ Acenaphthylene	☐ p-CRESOL	☐ ETHYL ACETATE	☐ N-Nitrosopiperidine
☐ Acenaphthene	☐ Cyclohexanone	☐ Ethyl Cyanide (Propanenitrile)	☐ N-Nitrosopyrrolidine
☐ ACETONE	☐ 1,2-Dibromo-3-chloropropane	☐ ETHYL BENZENE	☐ Parathion
☐ Acetonitrile	☐ Ethylene dibromide (1,2-dibromoethane)	☐ ETHYL ETHER	☐ Total PCBs
☐ Acetophenone	☐ Dibromomethane	☐ bis(2-Ethylhexyl) phthalate	☐ Pentachlorobenzene
☐ Acrylamide	☐ 2,4,D(2-4-Dichlorophenoxyacetic acid)	☐ Ethyl methacrylate	☐ Pentachlorodibenzo-p-dioxins (all)
☐ Acrylonitrile	☐ Dibenz(a,h)anthracene	☐ Ethylene oxide	☐ Pentachlorodibenzofurans (all)
☐ Aldrin	☐ Dibenz(a,e)pyrene	☐ Fluoranthene	☐ Pentachloroethane
☐ Aniline	☐ m-Dichlorobenzene	☐ Fluorene	☐ Pentachloronitrobenzene
☐ Anthracene	☐ o-DICHLOROBENZENE	☐ Heptachlor	☐ Pentachlorophenol
☐ BENZENE	☐ p-Dichlorobenzene	☐ Hexachlorobenzene	☐ Phenacetin
☐ Benz(a)anthracene	☐ Dichlorodifluoromethane	☐ Hexachlorobutadiene	☐ Phenanthrene
☐ Benzal chloride	☐ 1,1-Dichloroethane	☐ Hexachlorocyclopentadiene	☐ Phenol
☐ Benzo(b)fluoranthene	☐ 1,2-Dichloroethane	☐ Hexachlorodibenzo-p-dioxins (all)	☐ Phthalic acid
☐ Benzo(k)fluoranthene	☐ 1,1-Dichloroethylene	☐ Hexachlorodibenzofurans (all)	☐ Phthalic anhydride
☐ Benzo(g,h,i)perylene	☐ trans-1,2-Dichloroethylene	☐ Hexachloroethane	☐ Pyrene
☐ Benzo(a)pyrene	☐ 2,4-Dichlorophenol	☐ Hexachloropropylene	☐ PYRIDINE
☐ Bromodichloromethane	☐ 2,6-Dichlorophenol	☐ Indeno (1,2,3-c,d) pyrene	☐ Safrole
☐ Methyl bromide (Bromomethane)	☐ 1,2-Dichloropropane	☐ Iodomethane	☐ Silvex (2,4,5-TP)
☐ 4-Bromophenyl phenyl ether	☐ cis-1,3-Dichloropropylene	☐ ISOBUTYL ALCOHOL	☐ 2,4,5-T(2,4,5-Trichloro phenoxy-acetic acid)
☐ n-BUTYL ALCOHOL	☐ trans-1,3-Dichloropropylene	☐ Isodrin	☐ 1,2,4,5-Tetrachlorobenzene
☐ Butyl benzyl phthalate	☐ Dieldrin	☐ METHANOL	☐ 1,1,1,2-Tetrachloroethane
☐ CARBON DISULFIDE	☐ Diethyl phthalate	☐ Methapyrilene	☐ 1,1,2,2-Tetrachloroethane
☐ CARBON TETRACHLORIDE	☐ 2,4-Dimethyl phenol	☐ Methoxychlor	☐ TETRACHLOROETHYLENE
☐ Chlordane (alpha & gamma isomers)	☐ Dimethyl phthalate	☐ 4,4-Methylene bis(2-chloroaniline)	☐ 2,3,4,6-Tetrachlorophenol
☐ p-Chloroaniline	☐ Di-n-butyl phthalate	☐ METHYLENE CHLORIDE	☐ TOLUENE
☐ CHLOROBENZENE	☐ 1,4-Dinitrobenzene	☐ METHYL ETHYL KETONE	☐ Toxaphene
☐ 2-Chloro-1,3-butadiene	☐ 4,6-Dinitro-o-cresol	☐ METHYL ISOBUTYL KETONE	☐ Bromoform (Tribromomethane)
☐ Chlorodibromomethane	☐ 2,4-Dinitrophenol	☐ Methyl methacrylate	☐ 1,2,4-Trichlorobenzene
☐ Chloroethane	☐ 2,4-Dinitrotoluene	☐ Methyl methansulfonate	☐ 1,1,1-TRICHLOROETHANE
☐ bis(2-chloroethyl)ether	☐ 2,6-Dinitrotoluene	☐ Naphthalene	☐ 1,1,2-TRICHLOROETHANE
☐ Chloroform	☐ Di-n-octyl phthalate	☐ o-Nitroaniline	☐ TRICHLOROETHYLENE
☐ bis(2-Chloroisopropyl)ether	☐ Di-n-propylnitrosamine	☐ p-Nitroaniline	☐ TRICHLOROMONOFLUOROMETHANE
☐ p-Chloro-m-cresol	☐ 1,4-Dioxane	☐ NITROBENZENE	☐ 2,4,5-Trichlorophenol
☐ 2-Chloroethyl vinyl ether	☐ Diphenylamine	☐ 5-Nitro-o-toluidine	☐ 2,4,6-Trichlorophenol
☐ Chloromethane (Methyl chloride)	☐ Diphenylnitrosamine	☐ o-Nitrophenol	☐ 1,2,3-Trichloropropane
☐ 2-Chloronaphthalene	☐ 1,2-Diphenylhydrazine	☐ p-Nitrophenol	☐ 1,1,2-TRICHLORO-1,2,2-TRIFLUOROETHANE
☐ 2-Chlorophenol	☐ Disulfoton	☐ N-Nitrosodiethylamine	☐ tris-(2,3-Dibromopropyl) phosphate
☐ 3-Chloropropylene	☐ Endosulfan I	☐ N-Nitrosodimethylamine	☐ Vinyl chloride
☐ Chrysene	☐ Endosulfan II	☐ N-Nitroso-di-n-butylamine	☐ XYLENES-TOTAL MIXED ISOMERS
☐ o-CRESOL	☐ Endrin	☐ N-Nitrosomethylethylamine	
☐ m-CRESOL	☐ Endrin aldehyde	☐ N-Nitrosomorpholine	

■ None of the above listed underlying hazardous constituents are reasonably expected to be present in this waste stream.

UNDERLYING HAZARDOUS CONSTITUENTS WORKSHEET

WASTE STREAM # 771-39-14

The following underlying hazardous constituents (indicated by a checkmark in the appropriate box) are reasonably expected to be present in this waste stream:

INORGANIC CONSTITUENTS			
☐ Antimony	☐ Cadmium	☐ Lead	☐ Silver
☐ Arsenic	☐ Chromium	☐ Mercury	☐ Sulfide (Wastewater Only)
☐ Barium	☐ Cyanides (Total)	☐ Nickel	☐ Thallium
☐ Beryllium	☐ Cyanides (Amenable)	☐ Selenium	
ORGANIC CONSTITUENTS			
☐ Acenaphthylene	☐ p-CRESOL	☐ ETHYL ACETATE	☐ N-Nitrosopiperidine
☐ Acenaphthene	☐ Cyclohexanone	☐ Ethyl Cyanide (Propanenitrile)	☐ N-Nitrosopyrrolidine
☐ ACETONE	☐ 1,2-Dibromo-3-chloropropane	☐ ETHYL BENZENE	☐ Parathion
☐ Acetonitrile	☐ Ethylene dibromide (1,2-dibromoethane)	☐ ETHYL ETHER	☐ Total PCBs
☐ Acetophenone	☐ Dibromomethane	☐ bis(2-Ethylhexyl) phthalate	☐ Pentachlorobenzene
☐ Acrylamide	☐ 2,4,D(2-4-Dichlorophenoxyacetic acid)	☐ Ethyl methacrylate	☐ Pentachlorodibenzo-p-dioxins (all)
☐ Acrylonitrile	☐ Dibenz(a,h)anthracene	☐ Ethylene oxide	☐ Pentachlorodibenzofurans (all)
☐ Aldrin	☐ Dibenz(a,e)pyrene	☐ Fluoranthene	☐ Pentachloroethane
☐ Aniline	☐ m-Dichlorobenzene	☐ Fluorene	☐ Pentachloronitrobenzene
☐ Anthracene	☐ o-DICHLOROBENZENE	☐ Heptachlor	☐ Pentachlorophenol
☐ BENZENE	☐ p-Dichlorobenzene	☐ Hexachlorobenzene	☐ Phenacetin
☐ Benz(a)anthracene	☐ Dichlorodifluoromethane	☐ Hexachlorobutadiene	☐ Phenanthrene
☐ Benzal chloride	☐ 1,1-Dichloroethane	☐ Hexachlorocyclopentadiene	☐ Phenol
☐ Benzo(b)fluoranthene	☐ 1,2-Dichloroethane	☐ Hexachlorodibenzo-p-dioxins (all)	☐ Phthalic acid
☐ Benzo(k)fluoranthene	☐ 1,1-Dichloroethylene	☐ Hexachlorodibenzofurans (all)	☐ Phthalic anhydride
☐ Benzo(g,h,i)perylene	☐ trans-1,2-Dichloroethylene	☐ Hexachloroethane	☐ Pyrene
☐ Benzo(a)pyrene	☐ 2,4-Dichlorophenol	☐ Hexachloropropylene	☐ PYRIDINE
☐ Bromodichloromethane	☐ 2,6-Dichlorophenol	☐ Indeno (1,2,3-c,d) pyrene	☐ Safrole
☐ Methyl bromide (Bromomethane)	☐ 1,2-Dichloropropane	☐ Iodomethane	☐ Silvex (2,4,5-TP)
☐ 4-Bromophenyl phenyl ether	☐ cis-1,3-Dichloropropylene	☐ ISOBUTYL ALCOHOL	☐ 2,4,5-T(2,4,5-Trichloro phenoxy-acetic acid)
☐ n-BUTYL ALCOHOL	☐ trans-1,3-Dichloropropylene	☐ Isodrin	☐ 1,2,4,5-Tetrachlorobenzene
☐ Butyl benzyl phthalate	☐ Dieldrin	☐ METHANOL	☐ 1,1,1,2-Tetrachloroethane
☐ CARBON DISULFIDE	☐ Diethyl phthalate	☐ Methapyrilene	☐ 1,1,2,2-Tetrachloroethane
☐ CARBON TETRACHLORIDE	☐ 2,4-Dimethyl phenol	☐ Methoxychlor	☐ TETRACHLOROETHYLENE
☐ Chlordane (alpha & gamma isomers)	☐ Dimethyl phthalate	☐ 4,4-Methylene bis(2-chloroaniline)	☐ 2,3,4,6-Tetrachlorophenol
☐ p-Chloroaniline	☐ Di-n-butyl phthalate	☐ METHYLENE CHLORIDE	☐ TOLUENE
☐ CHLOROBENZENE	☐ 1,4-Dinitrobenzene	☐ METHYL ETHYL KETONE	☐ Toxaphene
☐ 2-Chloro-1,3-butadiene	☐ 4,6-Dinitro-o-cresol	☐ METHYL ISOBUTYL KETONE	☐ Bromoform (Tribromomethane)
☐ Chlorodibromomethane	☐ 2,4-Dinitrophenol	☐ Methyl methacrylate	☐ 1,2,4-Trichlorobenzene
☐ Chloroethane	☐ 2,4-Dinitrotoluene	☐ Methyl methansulfonate	☐ 1,1,1-TRICHLOROETHANE
☐ bis(2-chloroethyl)ether	☐ 2,6-Dinitrotoluene	☐ Naphthalene	☐ 1,1,2-TRICHLOROETHANE
☐ Chloroform	☐ Di-n-octyl phthalate	☐ o-Nitroaniline	☐ TRICHLOROETHYLENE
☐ bis(2-Chloroisopropyl)ether	☐ Di-n-propylnitrosamine	☐ p-Nitroaniline	☐ TRICHLOROMONOFLUOROMETHANE
☐ p-Chloro-m-cresol	☐ 1,4-Dioxane	☐ NITROBENZENE	☐ 2,4,5-Trichlorophenol
☐ 2-Chloroethyl vinyl ether	☐ Diphenylamine	☐ 5-Nitro-o-toluidine	☐ 2,4,6-Trichlorophenol
☐ Chloromethane (Methyl chloride)	☐ Diphenylnitrosamine	☐ o-Nitrophenol	☐ 1,2,3-Trichloropropane
☐ 2-Chloronaphthalene	☐ 1,2-Diphenylhydrazine	☐ p-Nitrophenol	☐ 1,1,2-TRICHLORO-1,2,2-TRIFLUOROETHANE
☐ 2-Chlorophenol	☐ Disulfoton	☐ N-Nitrosodiethylamine	☐ tris-(2,3-Dibromopropyl) phosphate
☐ 3-Chloropropylene	☐ Endosulfan I	☐ N-Nitrosodimethylamine	☐ Vinyl chloride
☐ Chrysene	☐ Endosulfan II	☐ N-Nitroso-di-n-butylamine	☐ XYLENES-TOTAL MIXED ISOMERS
☐ o-CRESOL	☐ Endrin	☐ N-Nitrosomethylethylamine	
☐ m-CRESOL	☐ Endrin aldehyde	☐ N-Nitrosomorpholine	

■ None of the above listed underlying hazardous constituents are reasonably expected to be present in this waste stream.

UNDERLYING HAZARDOUS CONSTITUENTS WORKSHEET

WASTE STREAM # 771-39-15

The following underlying hazardous constituents (indicated by a checkmark in the appropriate box) are reasonably expected to be present in this waste stream:

INORGANIC CONSTITUENTS			
☐ Antimony	☐ Cadmium	■ Lead	☐ Silver
☐ Arsenic	■ Chromium	☐ Mercury	☐ Sulfide (Wastewater Only)
☐ Barium	☐ Cyanides (Total)	☐ Nickel	☐ Thallium
☐ Beryllium	☐ Cyanides (Amenable)	☐ Selenium	
ORGANIC CONSTITUENTS			
☐ Acenaphthylene	☐ p-CRESOL	☐ ETHYL ACETATE	☐ N-Nitrosopiperidine
☐ Acenaphthene	☐ Cyclohexanone	☐ Ethyl Cyanide (Propanenitrile)	☐ N-Nitrosopyrrolidine
☐ ACETONE	☐ 1,2-Dibromo-3-chloropropane	☐ ETHYL BENZENE	☐ Parathion
☐ Acetonitrile	☐ Ethylene dibromide (1,2-dibromoethane)	☐ ETHYL ETHER	☐ Total PCBs
☐ Acetophenone	☐ Dibromomethane	☐ bis(2-Ethylhexyl) phthalate	☐ Pentachlorobenzene
☐ Acrylamide	☐ 2,4,D(2-4-Dichlorophenoxyacetic acid)	☐ Ethyl methacrylate	☐ Pentachlorodibenzo-p-dioxins (all)
☐ Acrylonitrile	☐ Dibenz(a,h)anthracene	☐ Ethylene oxide	☐ Pentachlorodibenzofurans (all)
☐ Aldrin	☐ Dibenz(a,e)pyrene	☐ Fluoranthene	☐ Pentachloroethane
☐ Aniline	☐ m-Dichlorobenzene	☐ Fluorene	☐ Pentachloronitrobenzene
☐ Anthracene	☐ o-DICHLOROBENZENE	☐ Heptachlor	☐ Pentachlorophenol
☐ BENZENE	☐ p-Dichlorobenzene	☐ Hexachlorobenzene	☐ Phenacetin
☐ Benz(a)anthracene	☐ Dichlorodifluoromethane	☐ Hexachlorobutadiene	☐ Phenanthrene
☐ Benzal chloride	☐ 1,1-Dichloroethane	☐ Hexachlorocyclopentadiene	☐ Phenol
☐ Benzo(b)fluoranthene	☐ 1,2-Dichloroethane	☐ Hexachlorodibenzo-p-dioxins (all)	☐ Phthalic acid
☐ Benzo(k)fluoranthene	☐ 1,1-Dichloroethylene	☐ Hexachlorodibenzofurans (all)	☐ Phthalic anhydride
☐ Benzo(g,h,i)perylene	☐ trans-1,2-Dichloroethylene	☐ Hexachloroethane	☐ Pyrene
☐ Benzo(a)pyrene	☐ 2,4-Dichlorophenol	☐ Hexachloropropylene	☐ PYRIDINE
☐ Bromodichloromethane	☐ 2,6-Dichlorophenol	☐ Indeno (1,2,3-c,d) pyrene	☐ Safrole
☐ Methyl bromide (Bromomethane)	☐ 1,2-Dichloropropane	☐ Iodomethane	☐ Silvex (2,4,5-TP)
☐ 4-Bromophenyl phenyl ether	☐ cis-1,3-Dichloropropylene	☐ ISOBUTYL ALCOHOL	☐ 2,4,5-T(2,4,5-Trichloro phenoxy-acetic acid)
☐ n-BUTYL ALCOHOL	☐ trans-1,3-Dichloropropylene	☐ Isodrin	☐ 1,2,4,5-Tetrachlorobenzene
☐ Butyl benzyl phthalate	☐ Dieldrin	☐ METHANOL	☐ 1,1,1,2-Tetrachloroethane
☐ CARBON DISULFIDE	☐ Diethyl phthalate	☐ Methapyrilene	☐ 1,1,2,2-Tetrachloroethane
☐ CARBON TETRACHLORIDE	☐ 2,4-Dimethyl phenol	☐ Methoxychlor	☐ TETRACHLOROETHYLENE
☐ Chlordane (alpha & gamma isomers)	☐ Dimethyl phthalate	☐ 4,4-Methylene bis(2-chloroaniline)	☐ 2,3,4,6-Tetrachlorophenol
☐ p-Chloroaniline	☐ Di-n-butyl phthalate	☐ METHYLENE CHLORIDE	☐ TOLUENE
☐ CHLOROBENZENE	☐ 1,4-Dinitrobenzene	☐ METHYL ETHYL KETONE	☐ Toxaphene
☐ 2-Chloro-1,3-butadiene	☐ 4,6-Dinitro-o-cresol	☐ METHYL ISOBUTYL KETONE	☐ Bromoform (Tribromomethane)
☐ Chlorodibromomethane	☐ 2,4-Dinitrophenol	☐ Methyl methacrylate	☐ 1,2,4-Trichlorobenzene
☐ Chloroethane	☐ 2,4-Dinitrotoluene	☐ Methyl methansulfonate	☐ 1,1,1-TRICHLOROETHANE
☐ bis(2-chloroethyl)ether	☐ 2,6-Dinitrotoluene	☐ Naphthalene	☐ 1,1,2-TRICHLOROETHANE
☐ Chloroform	☐ Di-n-octyl phthalate	☐ o-Nitroaniline	☐ TRICHLOROETHYLENE
☐ bis(2-Chloroisopropyl)ether	☐ Di-n-propylnitrosamine	☐ p-Nitroaniline	☐ TRICHLOROMONOFLUOROMETHANE
☐ p-Chloro-m-cresol	☐ 1,4-Dioxane	☐ NITROBENZENE	☐ 2,4,5-Trichlorophenol
☐ 2-Chloroethyl vinyl ether	☐ Diphenylamine	☐ 5-Nitro-o-toluidine	☐ 2,4,6-Trichlorophenol
☐ Chloromethane (Methyl chloride)	☐ Diphenylnitrosamine	☐ o-Nitrophenol	☐ 1,2,3-Trichloropropane
☐ 2-Chloronaphthalene	☐ 1,2-Diphenylhydrazine	☐ p-Nitrophenol	☐ 1,1,2-TRICHLORO-1,2,2-TRIFLUOROETHANE
☐ 2-Chlorophenol	☐ Disulfoton	☐ N-Nitrosodiethylamine	☐ tris-(2,3-Dibromopropyl) phosphate
☐ 3-Chloropropylene	☐ Endosulfan I	☐ N-Nitrosodimethylamine	☐ Vinyl chloride
☐ Chrysene	☐ Endosulfan II	☐ N-Nitroso-di-n-butylamine	☐ XYLENES-TOTAL MIXED ISOMERS
☐ o-CRESOL	☐ Endrin	☐ N-Nitrosomethylethylamine	
☐ m-CRESOL	☐ Endrin aldehyde	☐ N-Nitrosomorpholine	

☐ None of the above listed underlying hazardous constituents are reasonably expected to be present in this waste stream.

UNDERLYING HAZARDOUS CONSTITUENTS WORKSHEET

WASTE STREAM # 771-39-16

The following underlying hazardous constituents (indicated by a checkmark in the appropriate box) are reasonably expected to be present in this waste stream:

INORGANIC CONSTITUENTS			
☐ Antimony	☐ Cadmium	■ Lead	☐ Silver
☐ Arsenic	■ Chromium	☐ Mercury	☐ Sulfide (Wastewater Only)
☐ Barium	☐ Cyanides (Total)	☐ Nickel	☐ Thallium
☐ Beryllium	☐ Cyanides (Amenable)	☐ Selenium	
ORGANIC CONSTITUENTS			
☐ Acenaphthylene	☐ p-CRESOL	☐ ETHYL ACETATE	☐ N-Nitrosopiperidine
☐ Acenaphthene	☐ Cyclohexanone	☐ Ethyl Cyanide (Propanenitrile)	☐ N-Nitrosopyrrolidine
☐ ACETONE	☐ 1,2-Dibromo-3-chloropropane	☐ ETHYL BENZENE	☐ Parathion
☐ Acetonitrile	☐ Ethylene dibromide (1,2-dibromoethane)	☐ ETHYL ETHER	☐ Total PCBs
☐ Acetophenone	☐ Dibromomethane	☐ bis(2-Ethylhexyl) phthalate	☐ Pentachlorobenzene
☐ Acrylamide	☐ 2,4,D(2-4-Dichlorophenoxyacetic acid)	☐ Ethyl methacrylate	☐ Pentachlorodibenzo-p-dioxins (all)
☐ Acrylonitrile	☐ Dibenz(a,h)anthracene	☐ Ethylene oxide	☐ Pentachlorodibenzofurans (all)
☐ Aldrin	☐ Dibenz(a,e)pyrene	☐ Fluoranthene	☐ Pentachloroethane
☐ Aniline	☐ m-Dichlorobenzene	☐ Fluorene	☐ Pentachloronitrobenzene
☐ Anthracene	☐ o-DICHLOROBENZENE	☐ Heptachlor	☐ Pentachlorophenol
☐ BENZENE	☐ p-Dichlorobenzene	☐ Hexachlorobenzene	☐ Phenacetin
☐ Benz(a)anthracene	☐ Dichlorodifluoromethane	☐ Hexachlorobutadiene	☐ Phenanthrene
☐ Benzal chloride	☐ 1,1-Dichloroethane	☐ Hexachlorocyclopentadiene	☐ Phenol
☐ Benzo(b)fluoranthene	☐ 1,2-Dichloroethane	☐ Hexachlorodibenzo-p-dioxins (all)	☐ Phthalic acid
☐ Benzo(k)fluoranthene	☐ 1,1-Dichloroethylene	☐ Hexachlorodibenzofurans (all)	☐ Phthalic anhydride
☐ Benzo(g,h,i)perylene	☐ trans-1,2-Dichloroethylene	☐ Hexachloroethane	☐ Pyrene
☐ Benzo(a)pyrene	☐ 2,4-Dichlorophenol	☐ Hexachloropropylene	☐ PYRIDINE
☐ Bromodichloromethane	☐ 2,6-Dichlorophenol	☐ Indeno (1,2,3-c,d) pyrene	☐ Safrole
☐ Methyl bromide (Bromomethane)	☐ 1,2-Dichloropropane	☐ Iodomethane	☐ Silvex (2,4,5-TP)
☐ 4-Bromophenyl phenyl ether	☐ cis-1,3-Dichloropropylene	☐ ISOBUTYL ALCOHOL	☐ 2,4,5-T(2,4,5-Trichloro phenoxy-acetic acid)
☐ n-BUTYL ALCOHOL	☐ trans-1,3-Dichloropropylene	☐ Isodrin	☐ 1,2,4,5-Tetrachlorobenzene
☐ Butyl benzyl phthalate	☐ Dieldrin	☐ METHANOL	☐ 1,1,1,2-Tetrachloroethane
☐ CARBON DISULFIDE	☐ Diethyl phthalate	☐ Methapyrilene	☐ 1,1,2,2-Tetrachloroethane
☐ CARBON TETRACHLORIDE	☐ 2,4-Dimethyl phenol	☐ Methoxychlor	☐ TETRACHLOROETHYLENE
☐ Chlordane (alpha & gamma isomers)	☐ Dimethyl phthalate	☐ 4,4-Methylene bis(2-chloroaniline)	☐ 2,3,4,6-Tetrachlorophenol
☐ p-Chloroaniline	☐ Di-n-butyl phthalate	☐ METHYLENE CHLORIDE	☐ TOLUENE
☐ CHLOROBENZENE	☐ 1,4-Dinitrobenzene	☐ METHYL ETHYL KETONE	☐ Toxaphene
☐ 2-Chloro-1,3-butadiene	☐ 4,6-Dinitro-o-cresol	☐ METHYL ISOBUTYL KETONE	☐ Bromoform (Tribromomethane)
☐ Chlorodibromomethane	☐ 2,4-Dinitrophenol	☐ Methyl methacrylate	☐ 1,2,4-Trichlorobenzene
☐ Chloroethane	☐ 2,4-Dinitrotoluene	☐ Methyl methansulfonate	☐ 1,1,1-TRICHLOROETHANE
☐ bis(2-chloroethyl)ether	☐ 2,6-Dinitrotoluene	☐ Naphthalene	☐ 1,1,2-TRICHLOROETHANE
☐ Chloroform	☐ Di-n-octyl phthalate	☐ o-Nitroaniline	☐ TRICHLOROETHYLENE
☐ bis(2-Chloroisopropyl)ether	☐ Di-n-propylnitrosamine	☐ p-Nitroaniline	☐ TRICHLOROMONOFLUOROMETHANE
☐ p-Chloro-m-cresol	☐ 1,4-Dioxane	☐ NITROBENZENE	☐ 2,4,5-Trichlorophenol
☐ 2-Chloroethyl vinyl ether	☐ Diphenylamine	☐ 5-Nitro-o-toluidine	☐ 2,4,6-Trichlorophenol
☐ Chloromethane (Methyl chloride)	☐ Diphenylnitrosamine	☐ o-Nitrophenol	☐ 1,2,3-Trichloropropane
☐ 2-Chloronaphthalene	☐ 1,2-Diphenylhydrazine	☐ p-Nitrophenol	☐ 1,1,2-TRICHLORO-1,2,2-TRIFLUOROETHANE
☐ 2-Chlorophenol	☐ Disulfoton	☐ N-Nitrosodiethylamine	☐ tris-(2,3-Dibromopropyl) phosphate
☐ 3-Chloropropylene	☐ Endosulfan I	☐ N-Nitrosodimethylamine	☐ Vinyl chloride
☐ Chrysene	☐ Endosulfan II	☐ N-Nitroso-di-n-butylamine	☐ XYLENES-TOTAL MIXED ISOMERS
☐ o-CRESOL	☐ Endrin	☐ N-Nitrosomethylethylamine	
☐ m-CRESOL	☐ Endrin aldehyde	☐ N-Nitrosomorpholine	

☐ None of the above listed underlying hazardous constituents are reasonably expected to be present in this waste stream.