Solar Evaporation Ponds

Assorted Drawings

Best Available Copy

FEB 2003
RECEIVED
RECORDS CENTER

ADMIN RECORD

1a
29

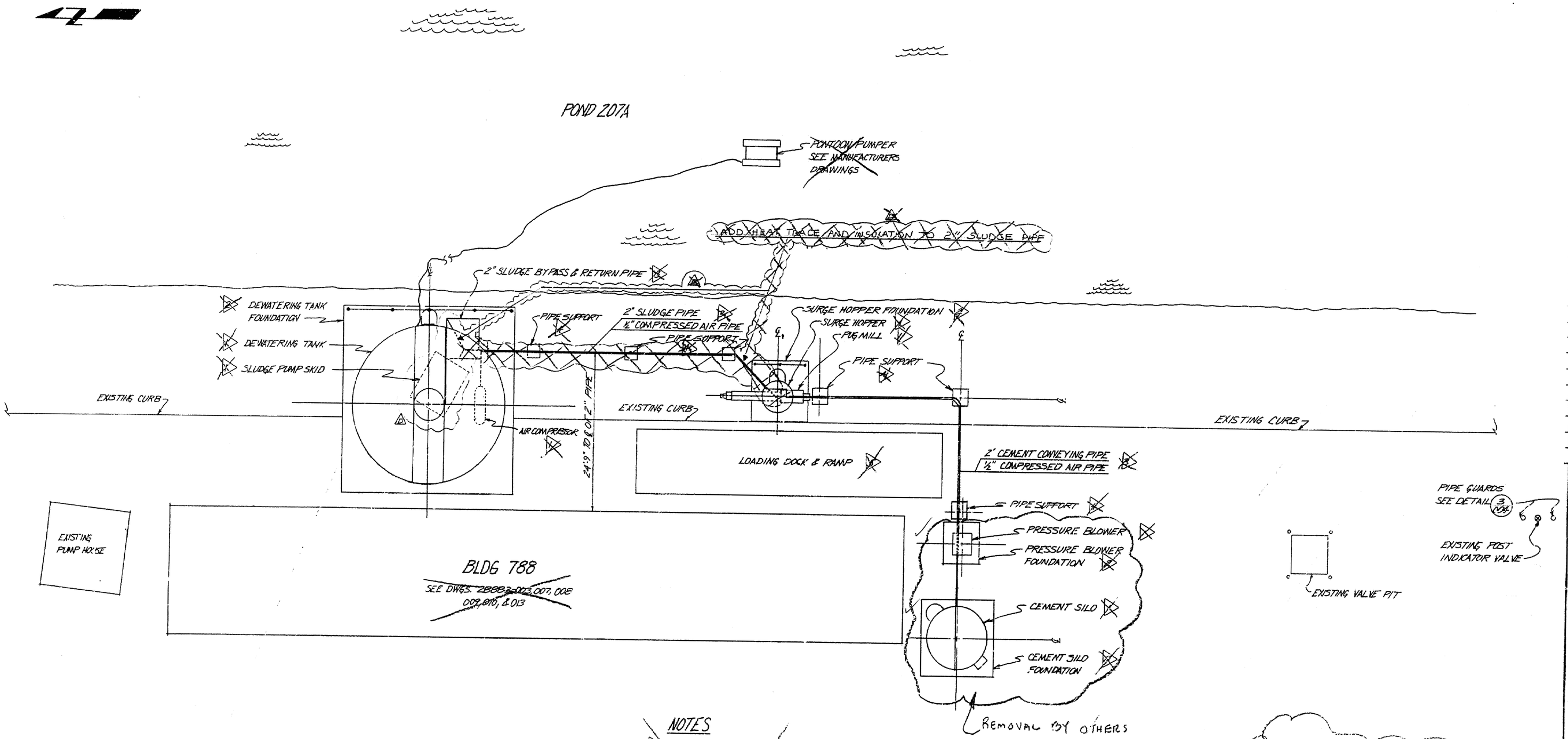

NOTES

1. FOR EQUIPMENT SEE DWGS. 28883-013, 014, 022, & 050.
2. FOR EQUIPMENT FOUNDATIONS SEE DWGS. 28883-013, 020, & 021
3. FOR PIPING SEE DWGS. 28883-013, 014, & 030.
4. FOR PIPE SUPPORTS SEE DWGS. 28883-013, 022, & 023.
5. FOR LOADING DOCK SEE DWGS. 28883-013 & 024.

LEGEND:

INDICATES REMOVAL OF ELECTRICAL HEAT TRACE ONLY

NOTE

PIPING DRAWING INCLUDED TO REFLECT HEAT TRACE SHOWN TO BE REMOVED

INTERIM DRAWING - CONSTRUCTION ONLY

AS-BUILT MASTER DRAWING WHEN CONSTRUCTION IS COMPLETE

RESPONSIBLE GROUP EPE

PART	QUAN.	DESCRIPTION	MATERIAL

ISSUE	DESCRIPTION	DATE	RFP	DOE	CLASS	JOB NO.
A	INTERIM ISSUE BLDG 788 D & D	10-17-94				989621

TOLERANCES: FRACT. ± ANGLE ± DEC. ± UNLESS NOTED OTHERWISE. REMOVE BURRS AND SHARP EDGES. NEXT ASSEMBLY

	BY	DATE
DESIGNED	STANEVICH	9-19-94
DRAWN	STANEVICH	9-19-94
CHECKED		10-13-94
APPROVED	FAUBLE	10-17-94
SUBMITTED		
APPROVED RFP		
APPROVED DOE		

SCALE: NONE

U.S. DEPARTMENT OF ENERGY
ROCKY FLATS AREA OFFICE GOLDEN, COLORADO

Rocky Flats Plant
GOLDEN, COLORADO

SOLAR EVAPORATION POND
BLDG 788
GENERAL PIPING ARRANGEMENT

SIZE	DRAWING NUMBER	ISSUE	SHEET
D	28883-051-020	A	OF

I101-A-000305
p 24

PART	QUAN.	DESCRIPTION	MATERIAL

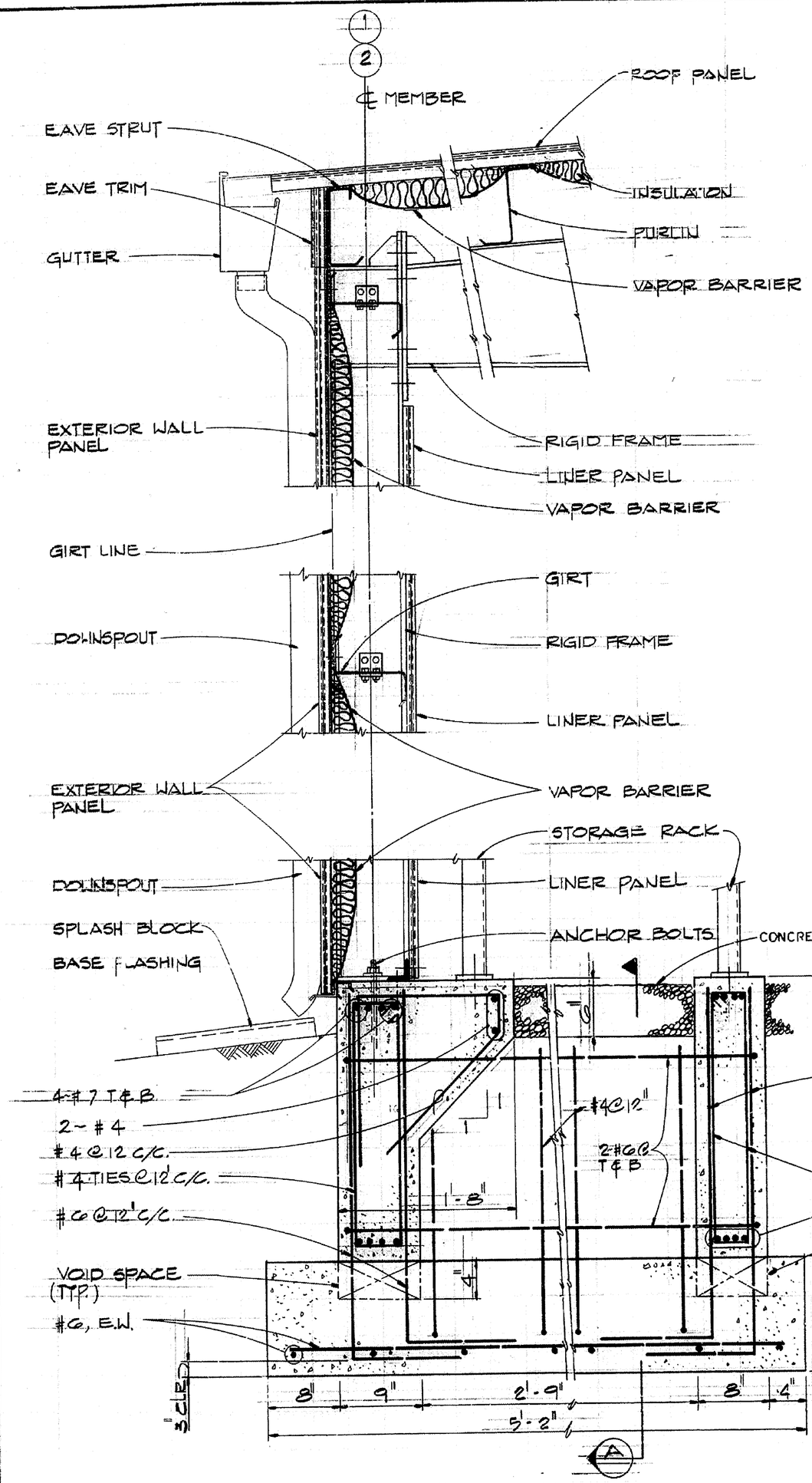

SIDE WALL - TYPICAL SECTION (D) 007

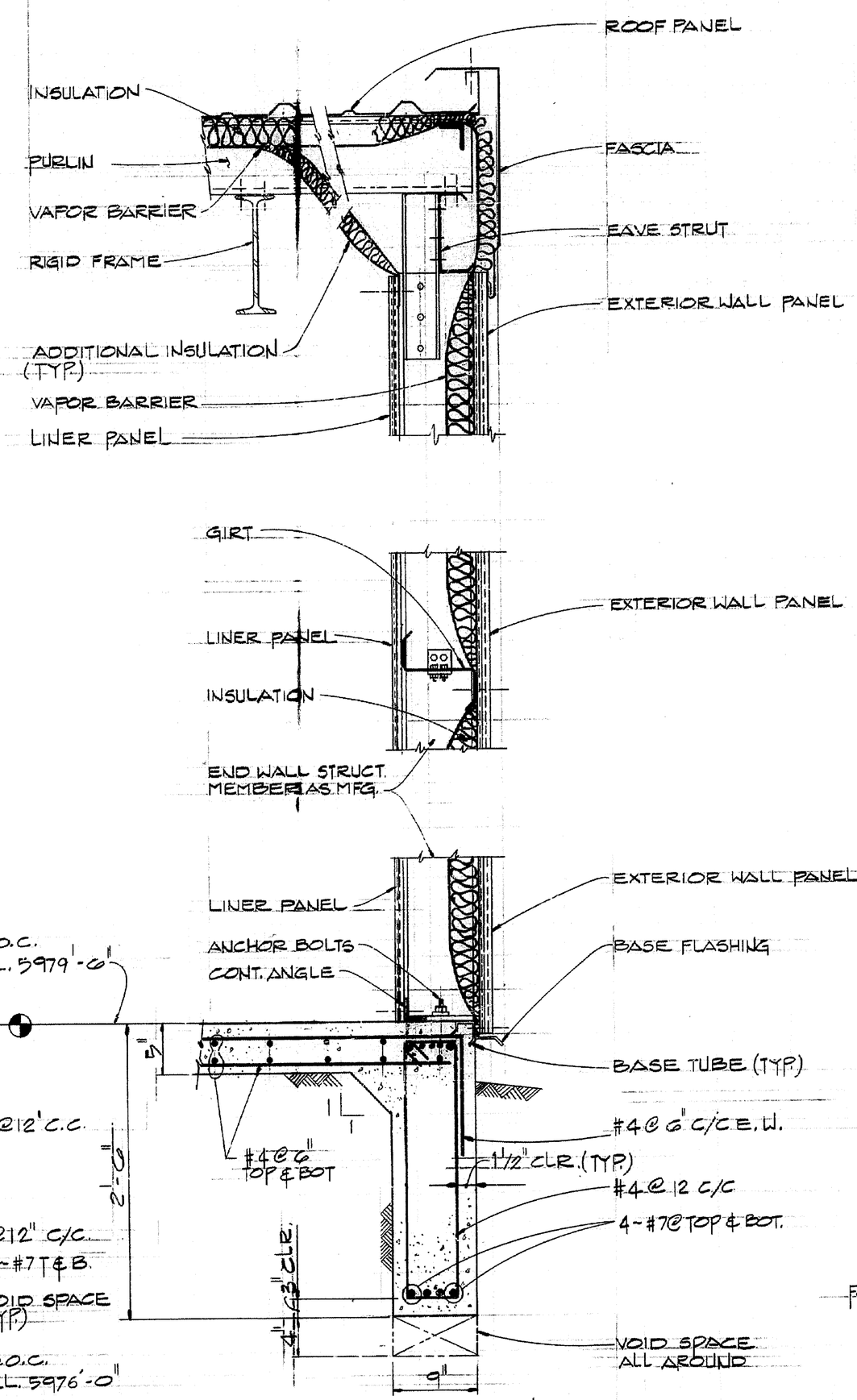

END WALL AND FOUNDATION SECT. (E) 007

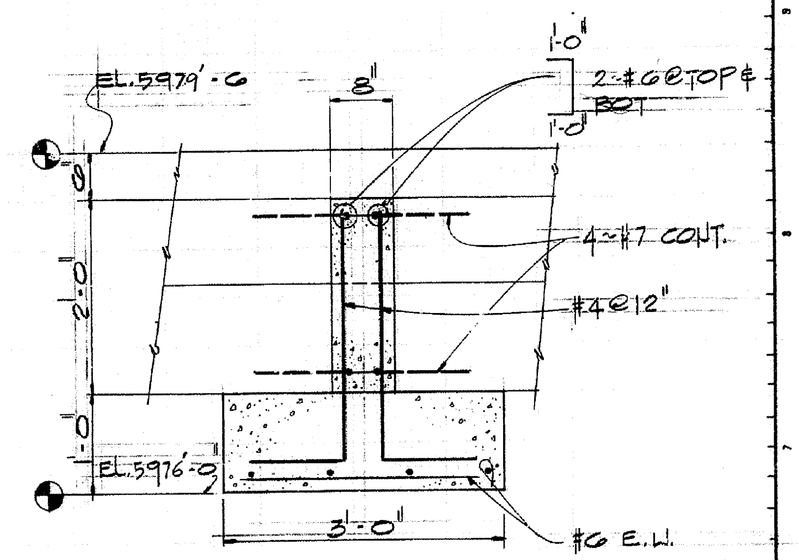

SECTION (A) 007
SCALE: 1" = 1'-0"

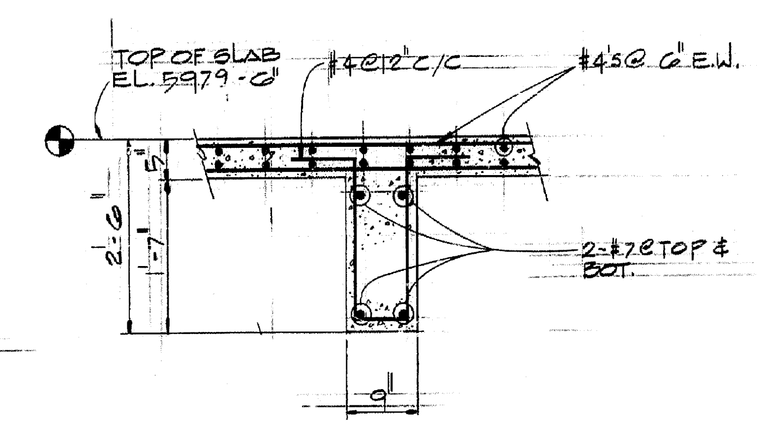

SECTION (F) 007
SCALE: 1" = 1'-0"

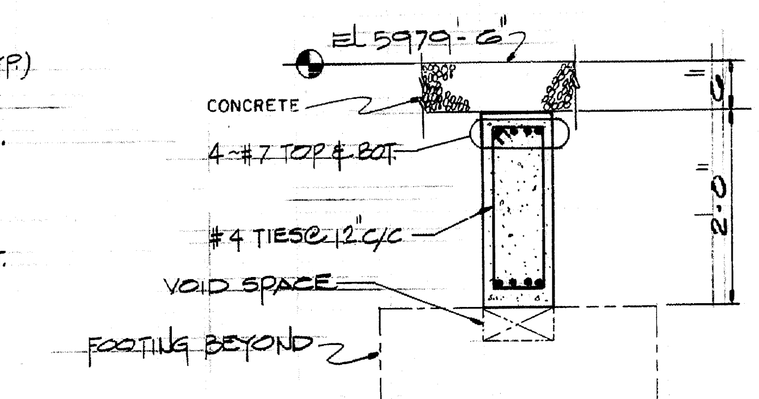

SECTION (G) 007
SCALE: 1" = 1'-0"

C	CONTROLLED DRAWING	1-17-87	NC	RBJ		470601
B	CONCRETE WAS GRAVEL, AS BUILT	1-17-86				440514

ISSUE	DESCRIPTION	DATE	RFP	DOE	CLASS	JOB NO.
A	ORIGINAL ISSUE	7-18-84				84 440514

TOLERANCES		BY	DATE
FRACT. ±	DESIGNED	JOHN	6-7-84
ANGLE ±	DRAWN	Fernandez	6-7-84
DEC. ±	CHECKED	JONES	6-7-84
UNLESS NOTED OTHERWISE	APPROVED	LINES	7-18-84
REMOVE BURRS AND SHARP EDGES			
NEXT ASSEMBLY			
	SUBMITTED		
SCALE: AS NOTED	APPROVED RFP		7-18-84
	APPROVED DOE		

U.S. DEPARTMENT OF ENERGY
ROCKY FLATS AREA OFFICE GOLDEN, COLORADO

Rockwell International
ROCKY FLATS PLANT
GOLDEN, COLORADO 80401

SOLAR EVAPORATION POND
BUILDING 788
SECTIONAL ELEVATIONS

SIZE	DRAWING NUMBER	ISSUE	SHEET
D	28883-009	C	9 OF

CONTROLLED DRAWING
RELEASED & REVISE PER FEDO PROC. DIS.-13
APVD. [illegible] DATE 12-5-86
CONFIGURATION CONTROL COORD.
CONTROL NO. PGS-0048

LEE WAN & ASSOCIATES, INC.
engineers architects surveyors
7950 South Lincoln Street, Suite 106
Littleton, Colorado 80122
(303) 795-7371

CONTROLLED DRAWING

I101-A-000305
Pg 20

PART	QUAN.	DESCRIPTION	MATERIAL

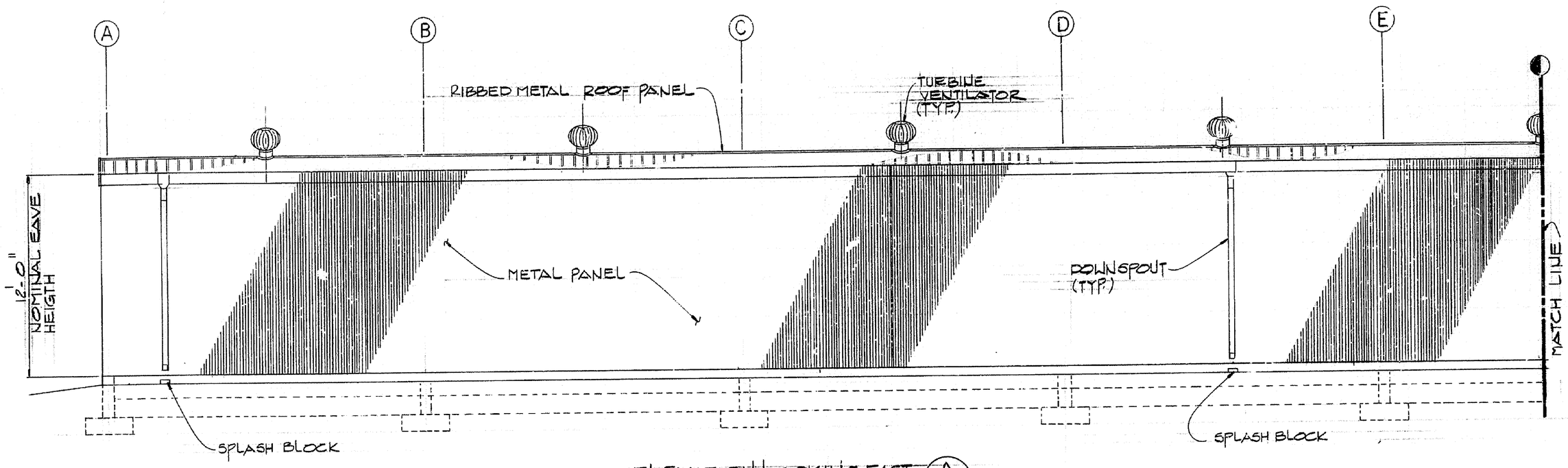

ELEVATION LOOKING EAST (A)
REF. DWG. 1007

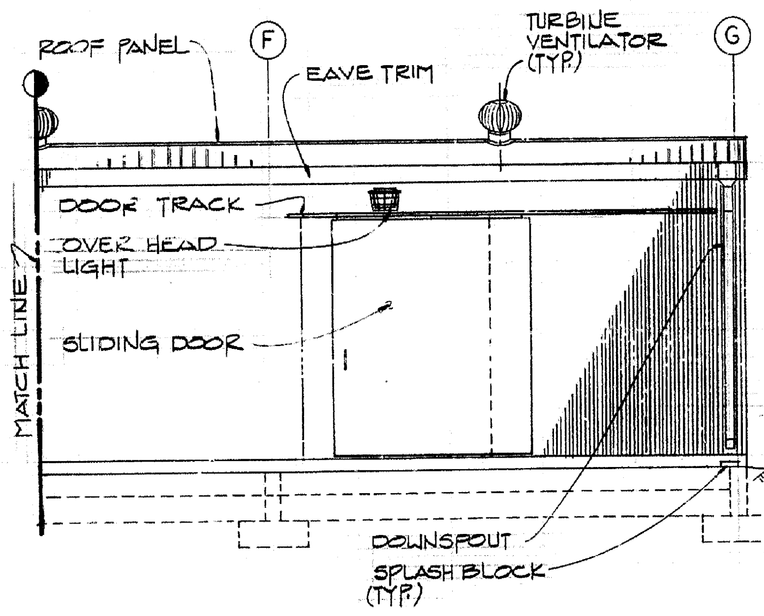

ELEVATION LOOKING EAST (A)
REF. DWG. 1007

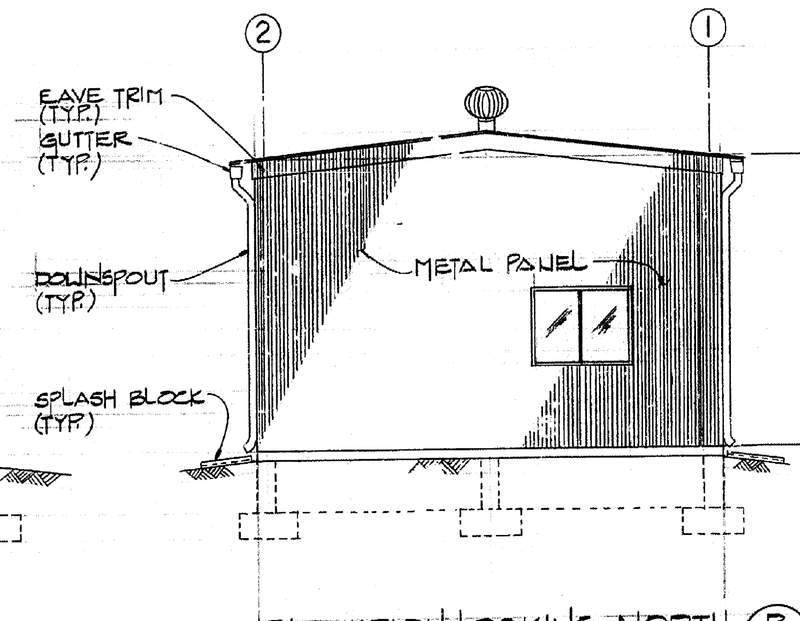

ELEVATION LOOKING NORTH (B)
REF. DWG. 1007

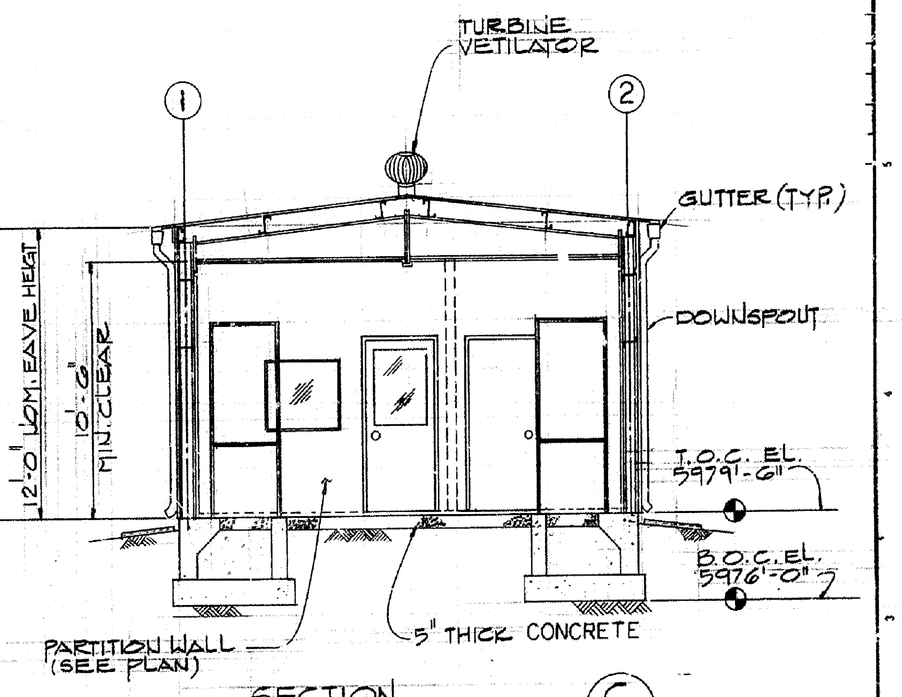

SECTION (C)
REF. DWG. 1007

C	CONTROLLED DRAWING	1-17-87	WC		RM		001	470601
B	CONCRETE WAS GRAVEL, AS BUILT	1-17-86						440514
A	ORIGINAL ISSUE	7-18-84					001	440514
ISSUE	DESCRIPTION	DATE		REF.		DOE	CLASS	JC3 NO.

TOLERANCES UNLESS NOTED OTHERWISE		BY	DATE
FRACT. ±	DESIGNED	LOVEJA	6-7-84
ANGLE ±	DRAWN		6-7-84
DEC. ±	CHECKED	LOVEJA	6-7-84
	APPROVED	LINES	7-13-84
REMOVE BURRS AND SHARP EDGES			
NEXT ASSEMBLY			
	SUBMITTED		
SCALE: 1/4"=1'-0"	APPROVED		7-18-84
	APPROVED DOE		

U.S. DEPARTMENT OF ENERGY
ROCKY FLATS AREA OFFICE GOLDEN, COLORADO

Rockwell International
ROCKY FLATS PLANT
GOLDEN, COLORADO 80401

SOLAR EVAPORATION POND
BUILDING 788
ELEVATIONS & SECTION

SIZE	DRAWING NUMBER	ISSUE	SHEET
D	28883-008	C	8 OF

CONTROLLED DRAWING
RELEASED & REVISE PER F.E.O. PROC. DES.-13
APVD. [illegible] DATE 10-5-84
CONFIGURATION CONTROL DOCRC.
CONTROL NO. PCS-0048

LEE WAN & ASSOCIATES, INC.
engineers architects surveyors
7950 South Lincoln Street, Suite 106
Littleton, Colorado 80122
(303) 795-7371

CONTROLLED DRAWING

I101-A-000305
Pg 19

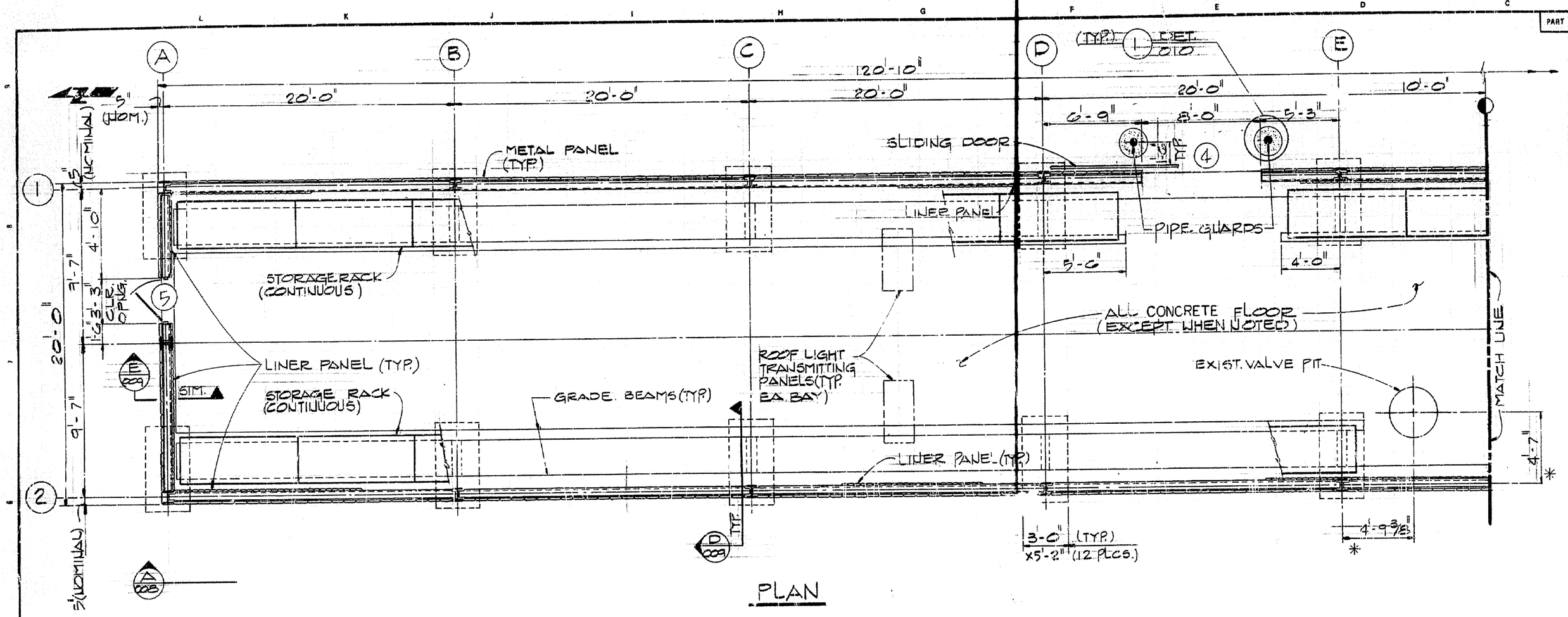

PLAN

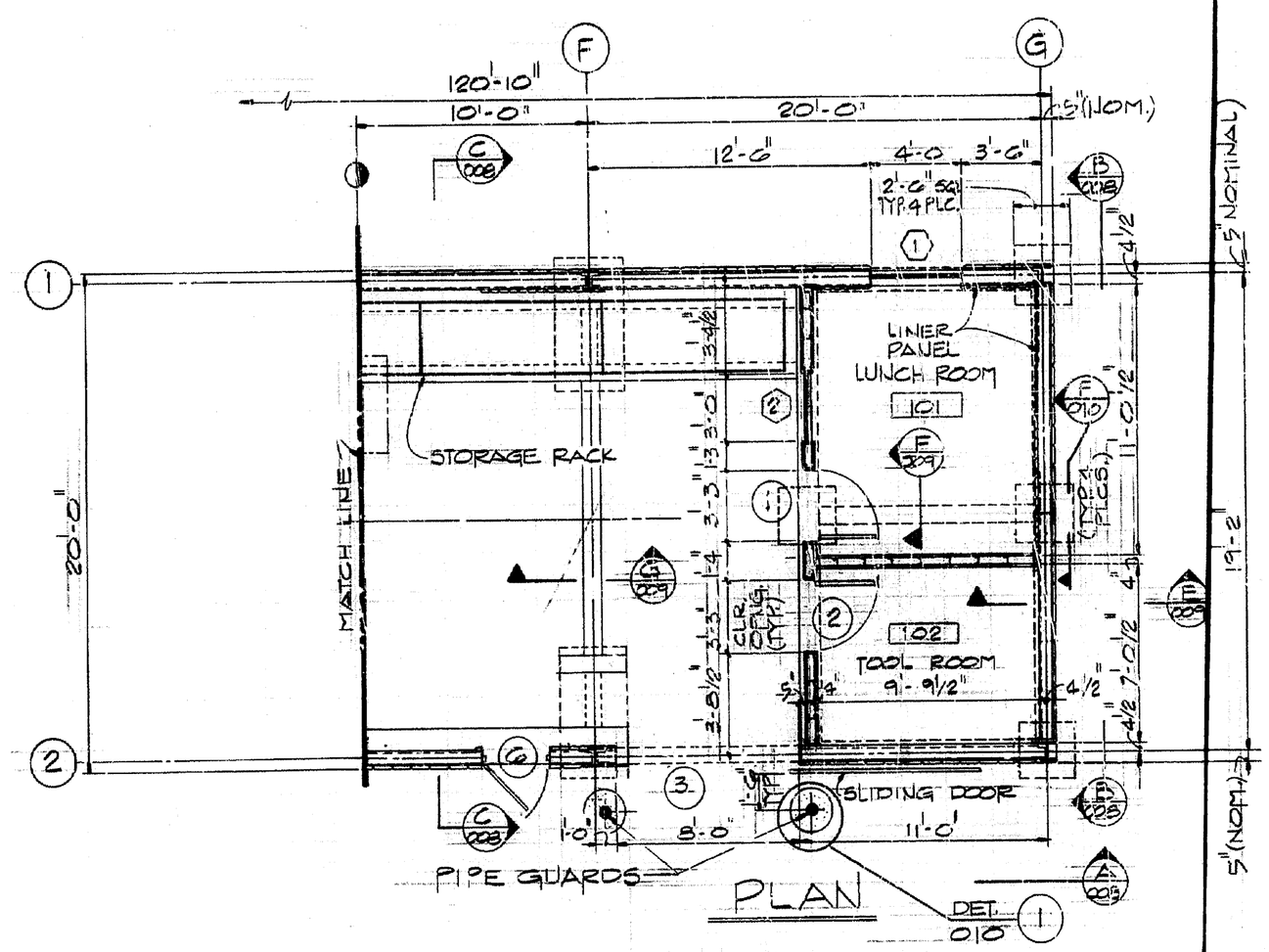

PLAN

PART	QUAN.	DESCRIPTION	MATERIAL

GENERAL NOTES

1. MINIMUM SOIL BEARING PRESSURE = 1000 PSF & MAXIMUM SOIL BEARING PRESSURE = 3000 PSF
2. FLOOR LIVE LOAD 100 PSF
3. NOMINAL DIMENSION MAY VARY AS PER PRE-ENGINEERED BUILDING REQUIREMENTS
4. ALL GRADE BEAMS SHOULD NOT BEAR ON SOIL AND SHALL HAVE MINIMUM 4" VOID SPACE
5. ANCHOR BOLTS SIZE & LOCATION MAY VARY AS PER MANUFACTURER REQUIREMENTS

* DEPICTS:
FIELD TO VERIFY THE LOCATION

ISSUE	DESCRIPTION	DATE	RFP	DOE	CLASS	JOB NO
C	CONTROLLED DRAWING	1-17-87	WC			470601
B	AS BUILT, CONCRETE WAS GRAVEL	1-17-86				440514
A	ORIGINAL ISSUE	7-18-84				440514

TOLERANCES: FRACT. ± ; ANGLE ± ; DEC. ± ; UNLESS NOTED OTHERWISE

REMOVE BURRS AND SHARP EDGES

NEXT ASSEMBLY

	BY	DATE
DESIGNED	JONES	6-7-84
DRAWN	Fernández	6-7-84
CHECKED	JONES	6-7-84
APPROVED	LINES	7-13-84
SUBMITTED		
APPROVED REP		7-18-84
APPROVED DOE		

SCALE: 1/4" = 1'-0"

U.S. DEPARTMENT OF ENERGY
ROCKY FLATS AREA OFFICE — GOLDEN COLORADO

Rockwell International
ROCKY FLATS PLANT
GOLDEN, COLORADO 80401

SOLAR EVAPORATION POND
BUILDING 788
PLAN & FOUNDATIONS

SIZE	DRAWING NUMBER	ISSUE	SHEET
D	28883-007	C	7 OF

LEE WAN & ASSOCIATES, INC.
engineers architects surveyors
7250 South Lincoln Street, Suite 105
Littleton, Colorado 80122
(303) 795-7371

CONTROLLED DRAWING
RELEASED & REVISE PER F.E.I.C. PROC. DEC.-13
APVD. [illegible] DATE 12-5-86
CONFIGURATION CONTROL COORD.
CONTROL NO. 265-2048

CONTROLLED DRAWING

I101-A-000305
pg 18

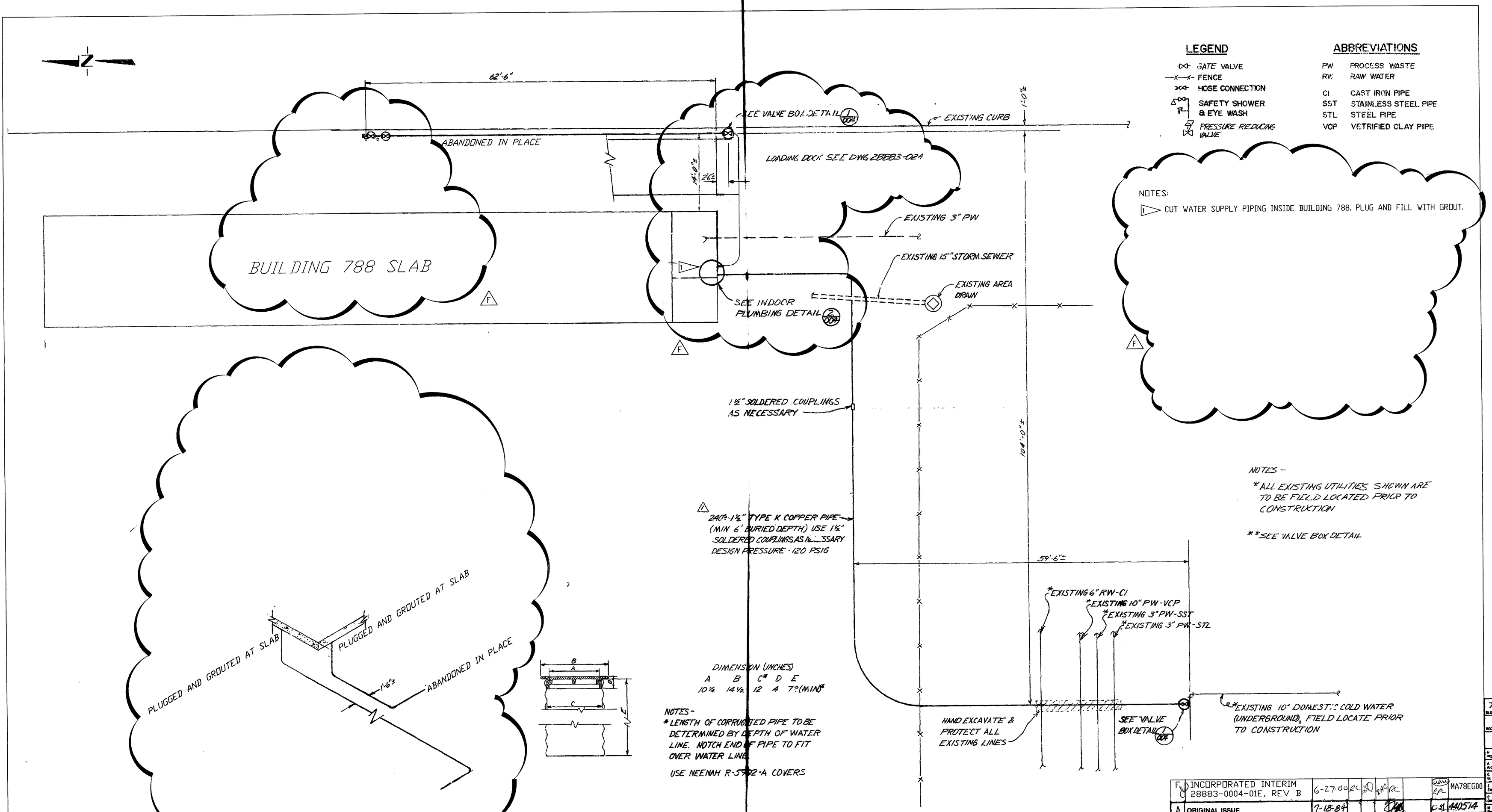

LEGEND

- GATE VALVE
- FENCE
- HOSE CONNECTION
- SAFETY SHOWER & EYE WASH
- PRESSURE REDUCING VALVE

ABBREVIATIONS

PW	PROCESS WASTE
RW	RAW WATER
CI	CAST IRON PIPE
SST	STAINLESS STEEL PIPE
STL	STEEL PIPE
VCP	VETRIFIED CLAY PIPE

NOTES:

1. CUT WATER SUPPLY PIPING INSIDE BUILDING 788. PLUG AND FILL WITH GROUT.

NOTES -

* ALL EXISTING UTILITIES SHOWN ARE TO BE FIELD LOCATED PRIOR TO CONSTRUCTION

** SEE VALVE BOX DETAIL

CONTROLLED DRAWING
RELEASED & REVISE PER FE & C PROC. DES.-13
APVD. [illegible] DATE 12-5-86
CONFIGURATION CONTROL COORD.
CONTROL NO. PCS-0048

LEE WAN & ASSOCIATES, INC.
engineers architects surveyors
7950 South Lincoln Street, Suite 108
Littleton, Colorado 80122
(303) 795-7371

ISSUE	DESCRIPTION	DATE	RFP	DOE	CLASS	JOB NO.
F	INCORPORATED INTERIM 28883-0004-01E, REV B	6-27-00	RC			MA78EG00
A	ORIGINAL ISSUE	7-18-84			U-1	440514

TOLERANCES		BY	DATE
FRACT. ±	DESIGNED	CM LUBEK	6-11-84
ANGLE ±	DRAWN	K CARNAHAN	6-12-84
DEC. ± UNLESS NOTED OTHERWISE	CHECKED	CM LUBEK	6-13-84
	APPROVED	LINES	7-13-84
REMOVE BURRS AND SHARP EDGES			
NEXT ASSEMBLY			
	SUBMITTED		
SCALE: 1/8" = 1'-0"	APPROVED RFP		7-13-84
	APPROVED DOE		

U.S. DEPARTMENT OF ENERGY
ROCKY FLATS AREA OFFICE GOLDEN, COLORADO

SOLAR EVAPORATION POND SLUDGE REMOVAL
UTILITY PLAN

SIZE	DRAWING NUMBER	ISSUE	SHEET
D	28883-0004	F	4 OF

I101-A-000305 Pg 17

CONTROLLED DRAWING

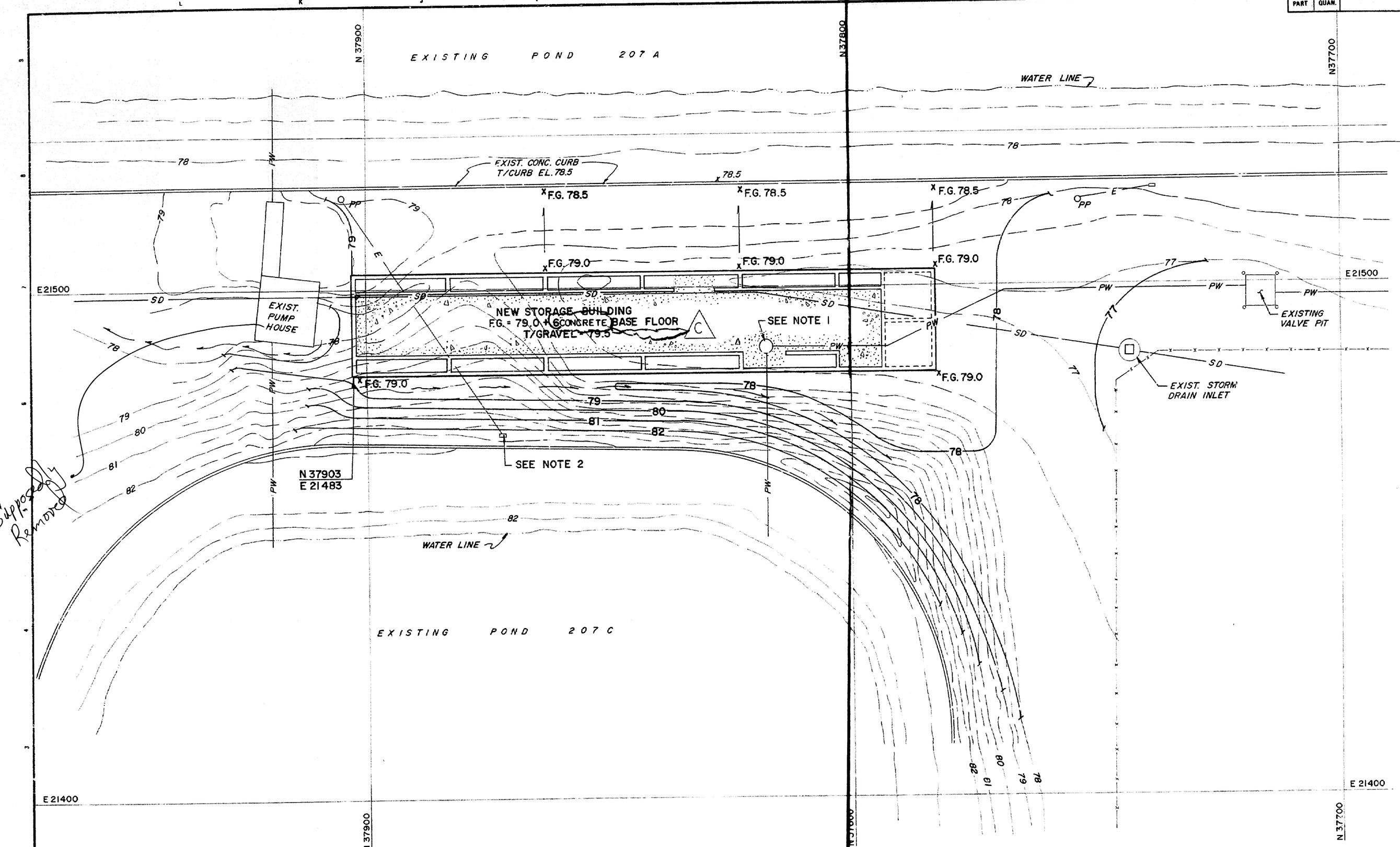

SITE GRADING PLAN

SCALE 1" = 10'

LEGEND

- 79 — EXIST. GRADE CONTOUR
- SD — EXIST. STORM DRAIN
- PW — EXIST. PROCESS WASTE
- E — EXIST. BURIED ELEC. COND
- PP — EXIST. POWER POLE
- 79 — FINISHED GRADE CONTOUR
- F.G. 79.0 — FINISHED GRADE SPOT EL.
- DRAINAGE SWALE

NOTES

1. PROVIDE NEW COVER FOR EXIST. VALVE PIT SEE DETAIL ON DRAWING NO. 28883-10
2. EXIST. ELECTRICAL TO BE REMOVED SEE DRAWING NO. 28883-03
3. SEE DRAWING NO.S 28883-04 28883-05 FOR NEW SITE UTILITIES.
4. ELEVATIONS ARE BASED ON A MEAN SEA LEVEL ELEVATION OF 5,900 FT. (ie - EL. 79.5 = EL. 5,979.5)
5. BENCHMARK 300, ELEV. 5982.33 BRASS CAP FLUSH IN SIDEWALK, FIRST ALARM MARKER WEST OF TENTH STREET, NORTH SIDE OF CENTRAL AVENUE, ADJACENT TO PARKING LOT 50. 36,358N 21,519.9E

PART	QUAN.	DESCRIPTION	MATERIAL

ISSUE	DESCRIPTION	DATE	RFP	DOE	CLASS	JOB NO.
D	CONTROLLED DRAWING	1-17-87	WC			470601
C	AS BUILT, CHANGED GRAVEL TO CONCRETE	1-17-86				440514
B	REV ADD BENCHMARK NOTE	8/29/84				440514
A	ORIGINAL ISSUE	7-18-84				440514

TOLERANCES: FRACT. ± ; ANGLE ± ; DEC. ± ; UNLESS NOTED OTHERWISE ; REMOVE BURRS AND SHARP EDGES ; NEXT ASSEMBLY

	BY	DATE
DESIGNED	JONEJA	6-15-84
DRAWN	MILLER	6-15-84
CHECKED	JONEJA	6-15-84
APPROVED	LINES	7-13-84
SUBMITTED		
APPROVED RFP		7-13-84
APPROVED DOE		

SCALE: 1" = 10'

U.S. DEPARTMENT OF ENERGY
ROCKY FLATS AREA OFFICE GOLDEN, COLORADO

Rockwell International
ROCKY FLATS PLANT
GOLDEN, COLORADO 80401

SOLAR EVAPORATION POND BUILDING 788
SITE GRADING PLAN

SIZE	DRAWING NUMBER	ISSUE	SHEET
D	28883-003	D	3 OF

LEE WAN & ASSOCIATES, INC.
engineers architects surveyors
7950 South Lincoln Street, Suite 108
Aleton, Colorado 80122
(...) 795-7371

GRAPHIC SCALE: 0 5 10 20 30 40 50

CONTROLLED DRAWING
RELEASED FOR USE PER FE & C PROC. DES-13
APVD. B. Dillman DATE 12-5-86
CONFIGURATION CONTROL COORD.
CONTROL NO. PCS-0048

CONTROLLED DRAWING

I101-A-000305
Pg 16

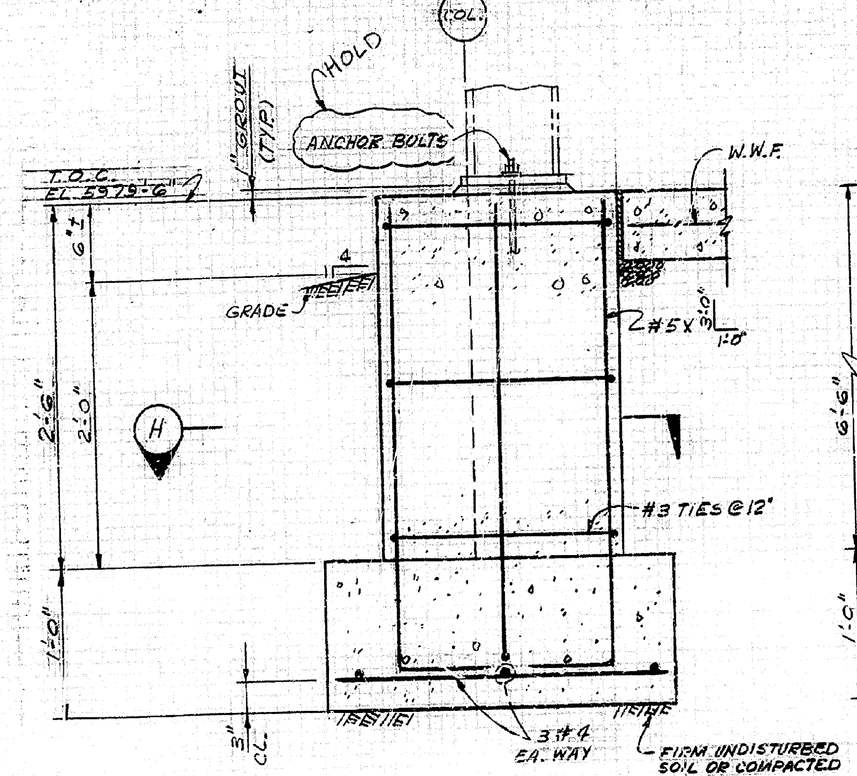

SECTION C
1½"=1'-0"

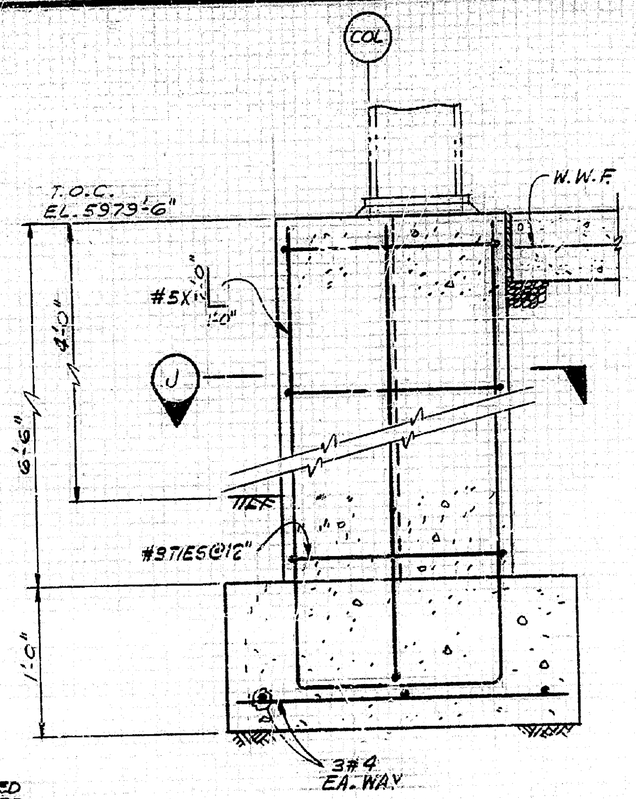

SECTION D
1½"=1'-0"

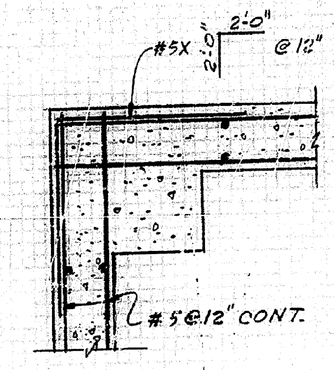

TYP. CORNER BAR DETAIL @ 0.5
N.T.S.
SIM. @ A

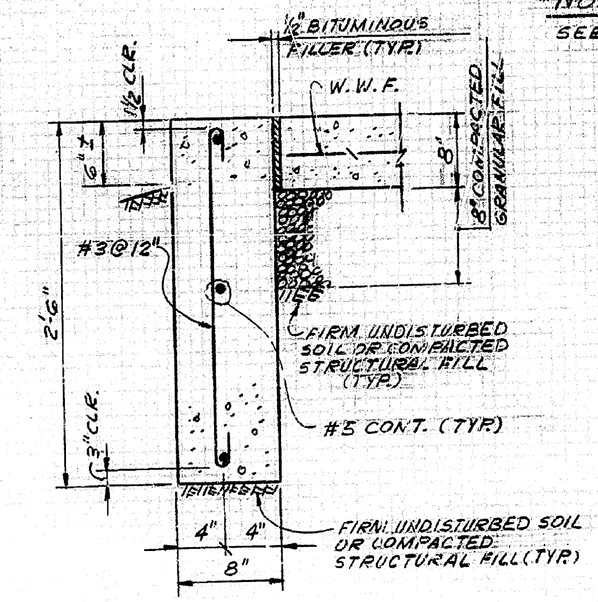

SECTION E
1½"=1'-0"

NOTES:
SEE 37665-040 FOR NOTES.

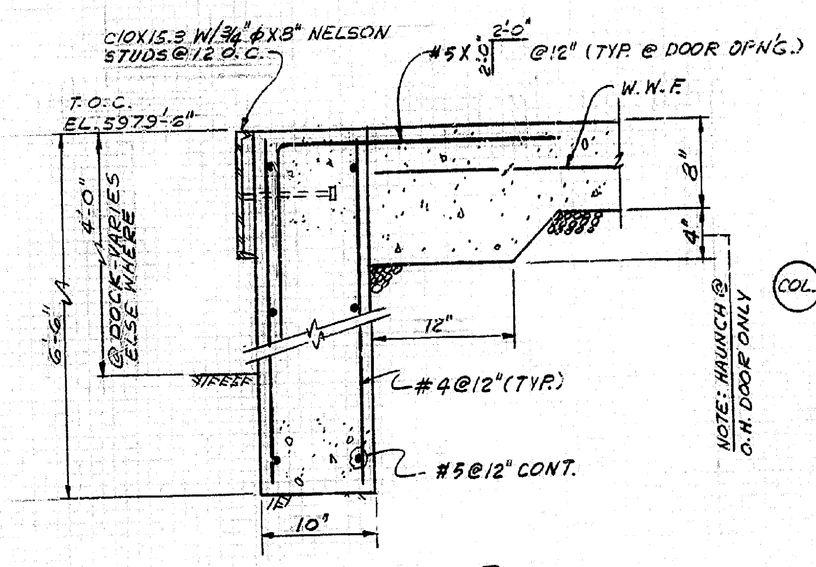

SECTION F
1½"=1'-0"

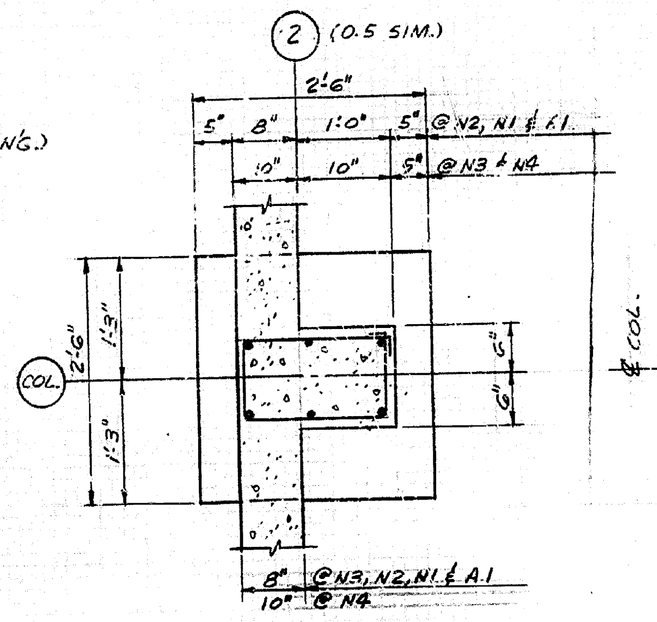

SECTION H
8-THUS 1"=1'-0"

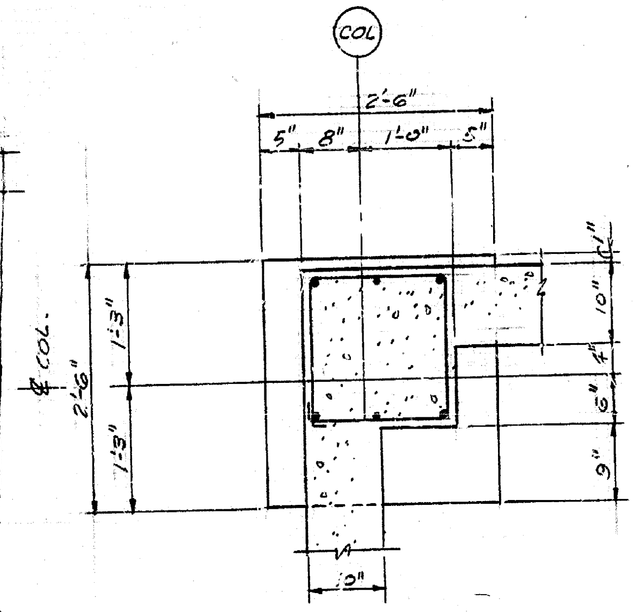

SECTION J
2-THUS 1"=1'-0"

1½"=1'-0" 1 0 1 2

1"=1'-0" 1 0 1 2 3

REV	DESCRIPTION	BY	DATE
A	AS BUILT		6-25-87
1	ORIGINAL ISSUE		8/15/86

TOLERANCES: FRACT. ± ANGLE ± DEC. ± UNLESS NOTED OTHERWISE

REMOVE BURRS AND SHARP EDGES

NEXT ASSEMBLY

	BY	DATE
DESIGNED	McGonigle	8/15/86
DRAWN	VALDEZ	7/15/86
CHECKED	Mele	8/15/86
APPROVED	ASCL	8/15/86
SUBMITTED		
APPROVED		8/15/86
APPROVED		

SCALE AS NOTED

U.S. DEPARTMENT OF ENERGY
ROCKY FLATS AREA OFFICE GOLDEN, COLORADO

Rockwell International
ROCKY FLATS PLANT
GOLDEN, COLORADO 80401

BUILDING 788 EXPANSION
FOUNDATION SECTIONS & DETAILS

SIZE	DRAWING NUMBER	ISSUE	SHEET
D	37665-041	B	7 OF 12

788A

I101-A-000305
Pg 15

PART	QUAN	DESCRIPTION	MATERIAL

NOTE:

1. SEE DWG. 37665-030 PLAN & SECTIONS AND DETAILS.

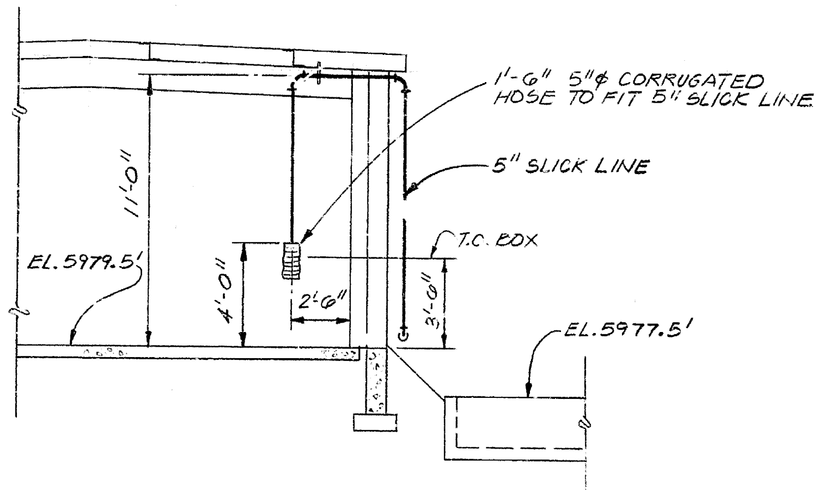

SECTION C
1¼"=1'-0"

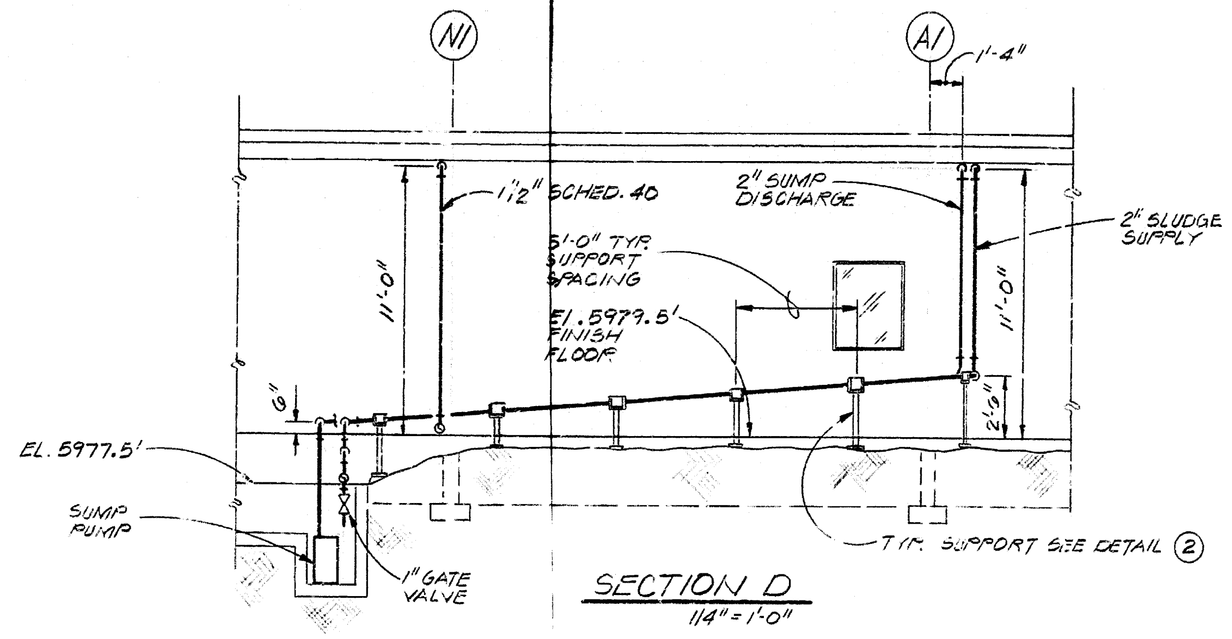

SECTION D
1¼"=1'-0"

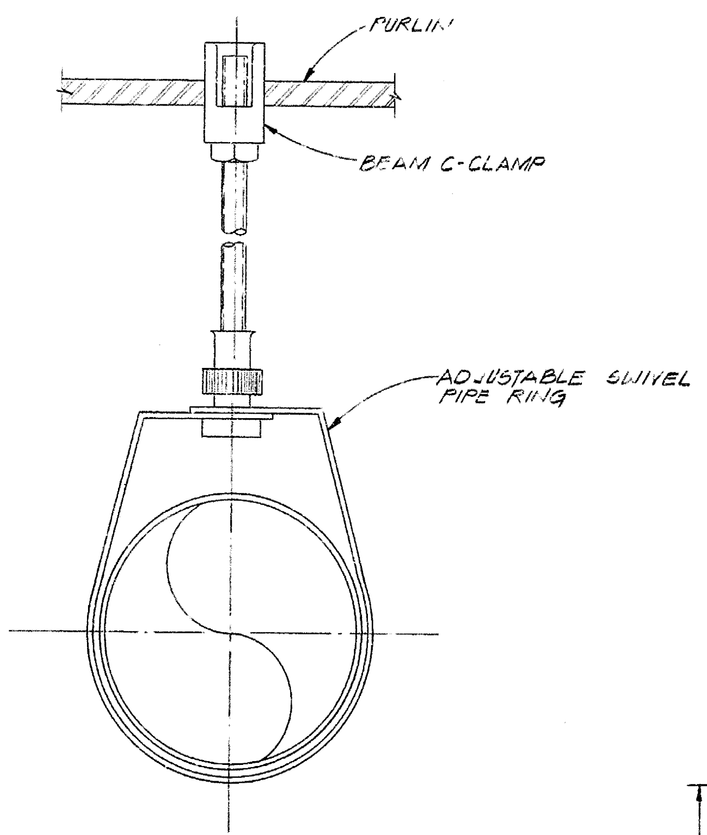

PIPE SUPPORT DETAIL 1
NO SCALE

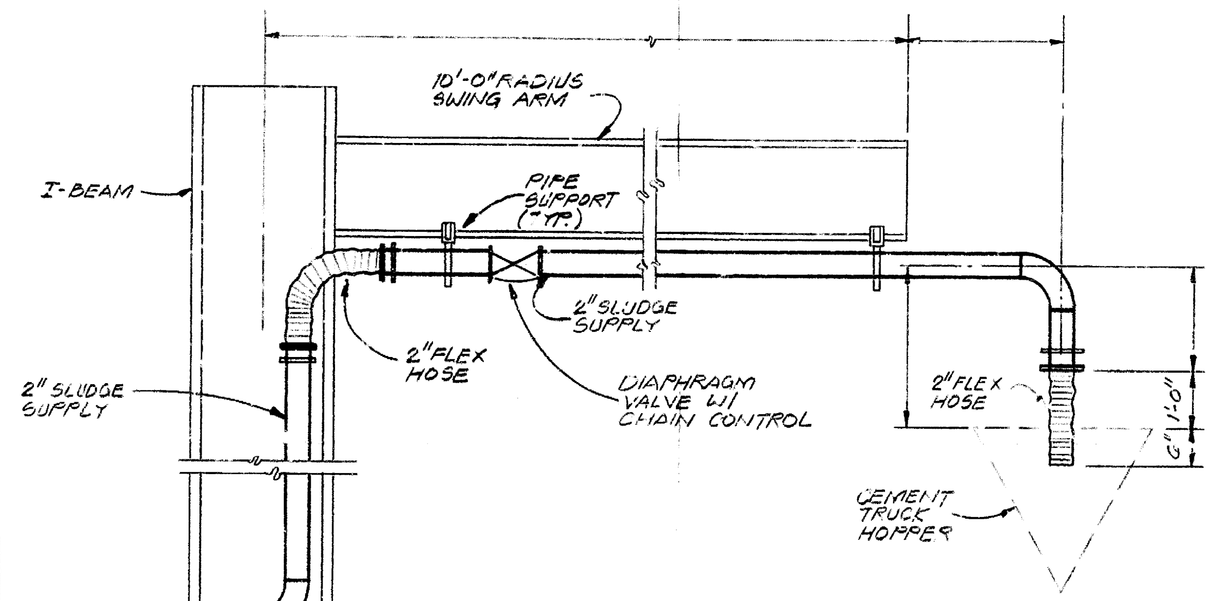

SECTION E
NO SCALE

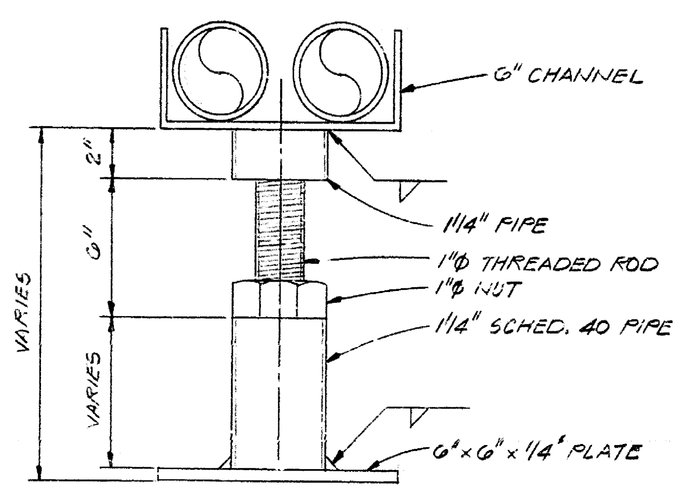

PIPE SUPPORT DETAIL 2
NO SCALE

MASTER DRAWING
AS-BUILT PENDING
RESPONSIBLE GROUP WPDE

ISSUE	DESCRIPTION	DATE	RFP		DOE	CLASS	JOB NO
C	AS BUILT	6-26-87	JL	RM	FHL	FOM	BRT 470602
B	CONTROLLED DRAWING	1-17-87	WC		RJG		BRT 470601
A	ORIGINAL ISSUE	10-22-86	JF	KAP			901729

TOLERANCES		BY	DATE
FRACT. ±	DESIGNED		10/21/86
ANGLE ±	DRAWN	FROWSKI	10/21/86
DEC. ± UNLESS NOTED OTHERWISE	CHECKED		10-22-86
	APPROVED		10/22/86
REMOVE BURRS AND SHARP EDGES			
NEXT ASSEMBLY			
	SUBMITTED		
SCALE: AS NOTED	APPROVED RFP		10/23/86
	APPROVED DOE		

U.S. DEPARTMENT OF ENERGY
ROCKY FLATS AREA OFFICE GOLDEN, COLORADO

Rocky Flats Plant
GOLDEN, COLORADO

BUILDING 788 EXPANSION
POND CRETE EQUIPMENT
PIPING SECTIONS & DETAILS

SIZE	DRAWING NUMBER	ISSUE	SHEET
D	37724-200-M	C	6 OF 6

788

I-W-A-000305
Pg 13

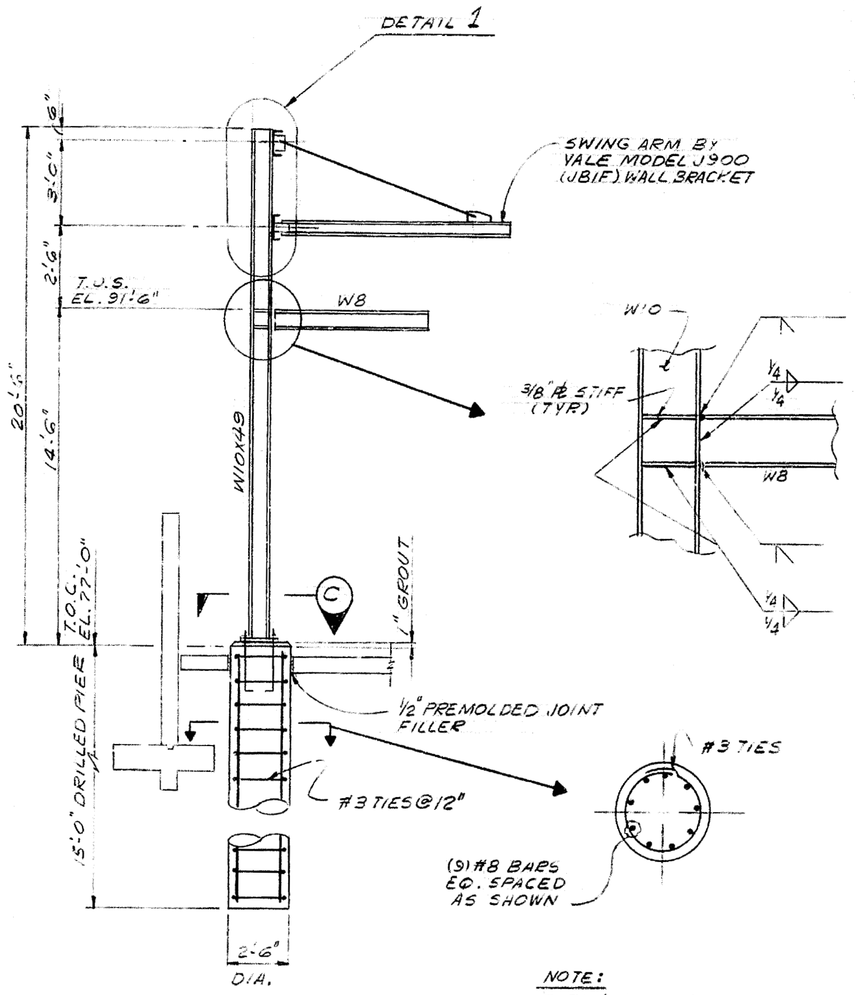

SECTION B
1/4" = 1'-0"

NOTE:
BOT. 5'-0" (MIN.) OF DRILLED PIER SHALL BE IN BEDROCK (SANDSTONE CLAYSTONE)

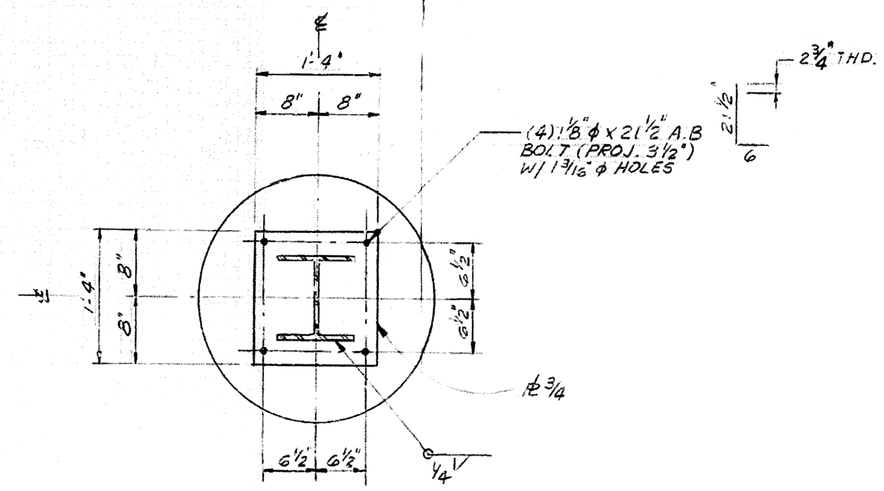

SECTION C
1" = 1'-0"

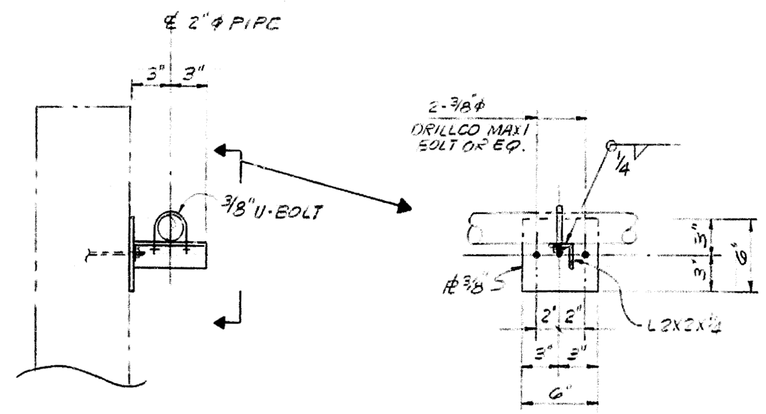

TYP. PIPE SUPPORT
1" = 1'-0"

NOTE:
REFER TO DWG. # D-37665-030 FOR PIPE SUPPORT LOCATION

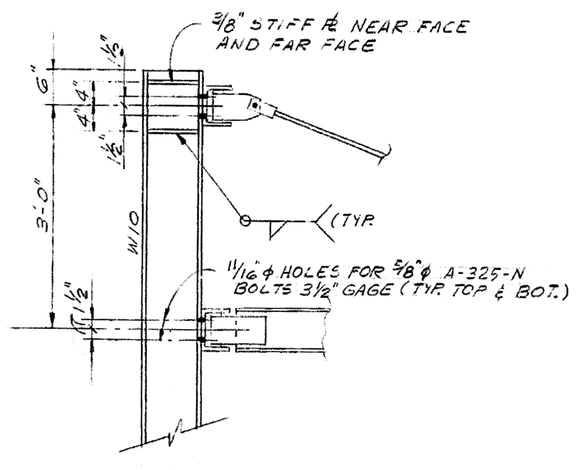

DETAIL 1
3/4" = 1'-0"

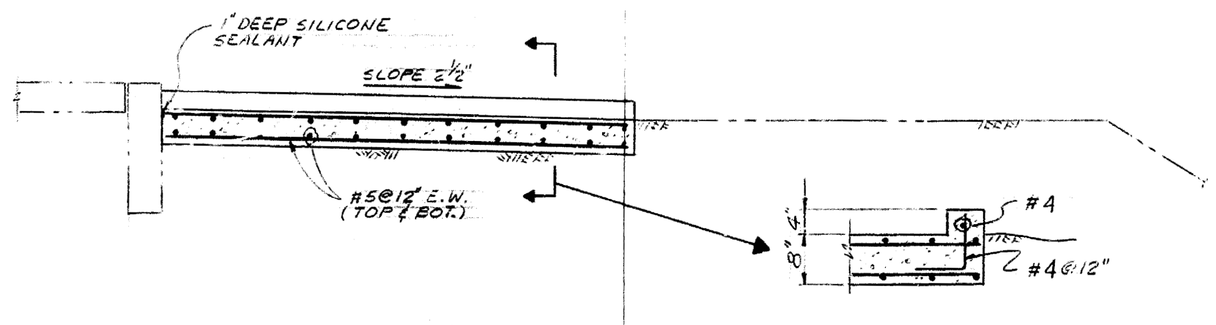

SECTION D
3/4" = 1'-0"

1/8" = 1'-0" 4 0 4 8 12 16 20
1/4" = 1'-0" 4 0 4 8
3/8" = 1'-0" 1 0 1 2 3
1" = 1'-0" 1 0 1 2

MASTER DRAWING
AS-BUILT PENDING
RESPONSIBLE GROUP WPDE

PART	QUAN.	DESCRIPTION	MATERIAL

ISSUE	DESCRIPTION	DATE	RFP	DOE	CLASS	JOB NO.
C	AS BUILT	6-26-87				470602
B	CONTROLLED DRAWING	1-17-87				470601
A	ORIGINAL ISSUE	10/22/86				901729

	BY	DATE
DESIGNED	GUERRERO	10-1-86
DRAWN	VALDEZ	10-9-86
CHECKED	LANGLET	10-17-86
APPROVED		
SUBMITTED		
APPROVED RFP		
APPROVED DOE		

TOLERANCES UNLESS NOTED OTHERWISE: FRACT. ± ; ANGLE ± ; DEC. ± ; REMOVE BURRS AND SHARP EDGES ; NEXT ASSEMBLY

SCALE: AS NOTED

U.S. DEPARTMENT OF ENERGY
ROCKY FLATS AREA OFFICE GOLDEN, COLORADO

Rocky Flats Plant
GOLDEN, COLORADO

BLDG. 788 EXPANSION
PONDCRETE EQUIPMENT
SECTIONS AND DETAILS

SITE	DRAWING NUMBER	ISSUE	SHEET
D	37724-103-M	C	5 OF 6

SITE

I101-A-000305
Pg 12

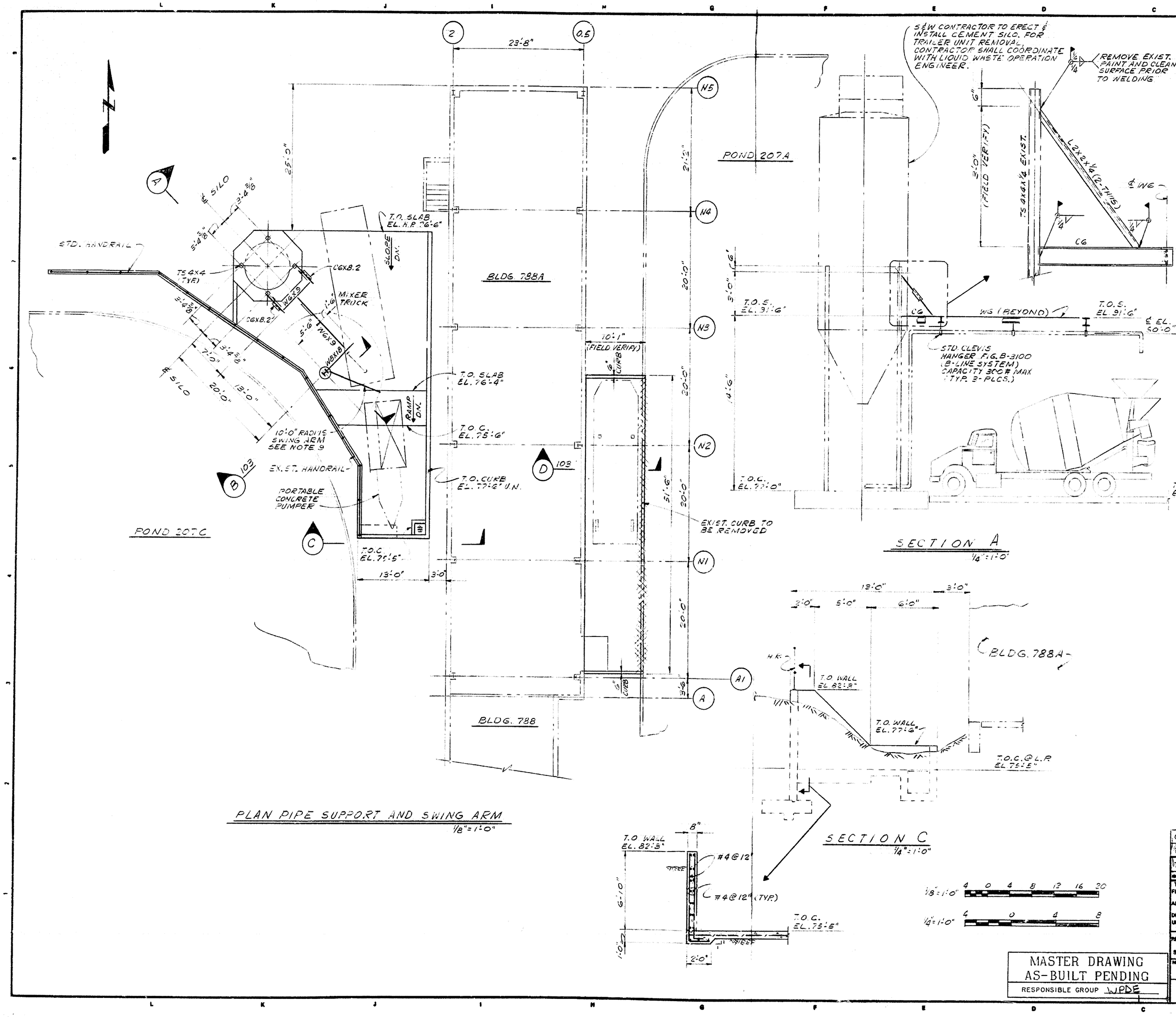

PART	QUAN.	DESCRIPTION	MATERIAL

NOTES:

1. THE DESIGN, DETAILING, FABRICATION, AND ERECTION OF STEELWORK SHALL CONFORM TO AISC "SPEC FOR THE DESIGN, FABRICATION AND ERECTION OF STRUCTURAL STEEL FOR BUILDINGS."
2. WELDING SHALL CONFORM TO AMERICAN WELDING SOCIETY (AWS) "CODE FOR WELDING IN BUILDING CONSTRUCTION," D1.1.
3. WELDING PROCEDURES, WELDERS, WELDING OPERATIONS AND TACKERS SHALL BE QUALIFIED IN ACCORDANCE WITH AWS D1.1.
4. STEEL SHAPES, BARS AND PLATES SHALL CONFORM TO ASTM A-36.
5. METAL ARC ELECTRODES SHALL CONFORM TO ASTM A233, AWS A5.1. CLASSIFICATION E7XXX
6. ANCHOR BOLT SHALL CONFORM TO ASTM A-307.
7. STRUCTURAL BOLTS SHALL BE A325-N.
8. STRUCTURAL STEEL MEMBERS SHALL BE PRIME WITH OIL-BASE-RUST INHIBITIVE METAL PRIMER AND FINISH WITH TWO (2) COATS OF SOLVENT-TYPE ALKYD ENAMEL. COLOR SHALL BE YELLOW (SIMILAR TO PORTABLE CEMENT SILO).
9. SWING ARM SHALL BE BY YALE HOISTING EQUIPMENT MODEL J81F (J900 WALL BRACKET, JB FITTINGS) OR EQUAL.

ISSUE	DESCRIPTION	DATE	RFP	DOE CLASS	JOB NO.
C	AS BUILT	5-26-87			470602
B	CONTROLED DRAWING	1-17-87			470601
A	ORIGINAL ISSUE	10/22/86			901729

TOLERANCES: FRACT. ± ; ANGLE ± ; DEC. ± ; UNLESS NOTED OTHERWISE ; REMOVE BURRS AND SHARP EDGES ; NEXT ASSEMBLY

	BY	DATE
DESIGNED	GUEVARA	10-1-86
DRAWN	VALDEZ	10-1-86
CHECKED	LANGLEY	10-17-86
APPROVED		
SUBMITTED		
APPROVED REP		10/22/86
APPROVED DOE		

SCALE:

U.S. DEPARTMENT OF ENERGY
ROCKY FLATS AREA OFFICE GOLDEN, COLORADO

Rocky Flats Plant
GOLDEN, COLORADO

BLDG. 788 EXPANSION
(POND CRETE EQUIPMENT)
PIPE SUPPORT PLAN, SECT & DETAILS

SIZE	DRAWING NUMBER	ISSUE	SHEET
D	37724-102-M	C	4 OF 16

MASTER DRAWING
AS-BUILT PENDING
RESPONSIBLE GROUP WPDE

SITES

I101-A-000305
Pg 11

PART	QUAN.	DESCRIPTION	MATERIAL

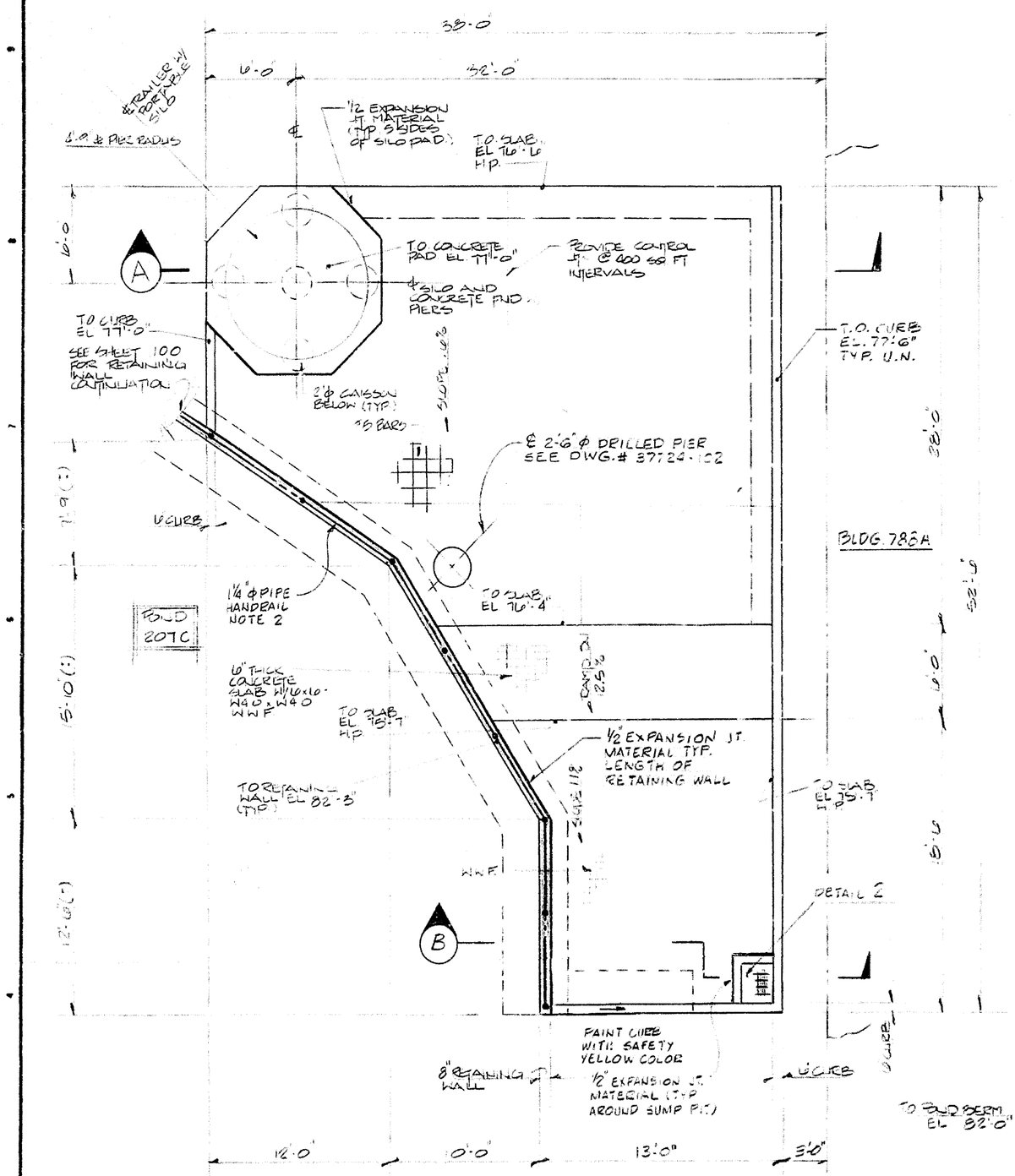

PLAN ~ CONCRETE SLAB & RETAINING WALL
(POND CRETE EQUIPMENT) SCALE:

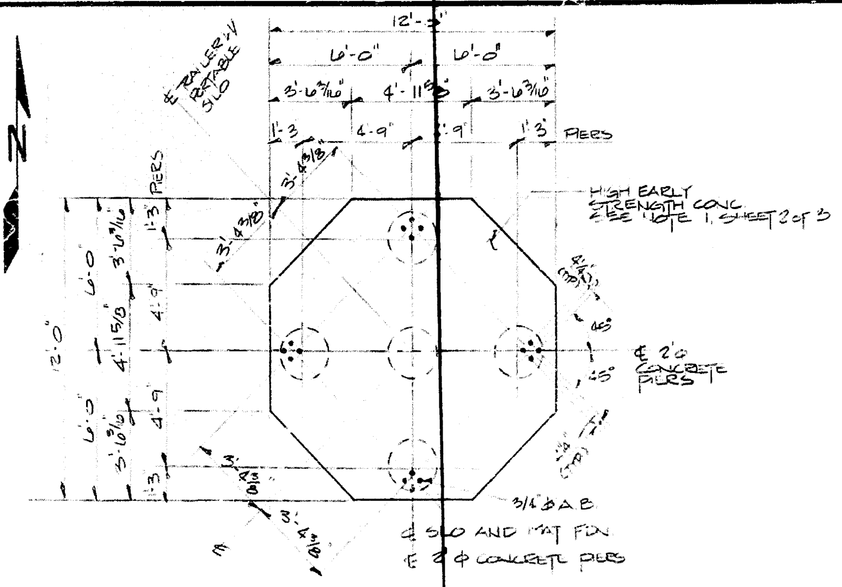

PLAN ~ SILO FND
SCALE: ¼" = 1'-0"

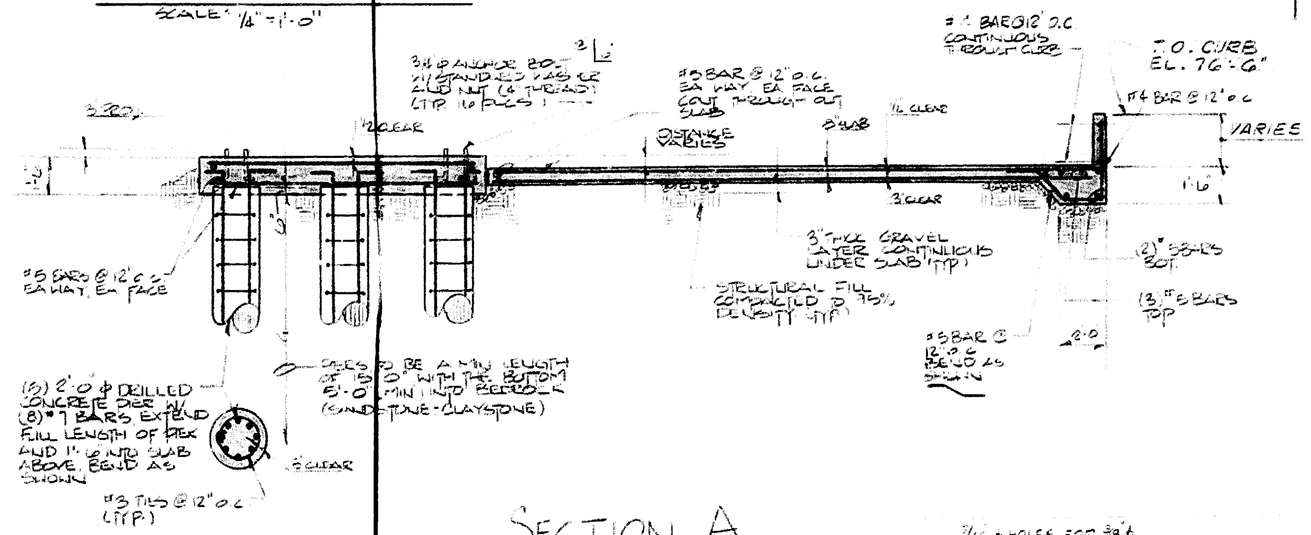

SECTION A
SCALE: ¼" = 1'-0"

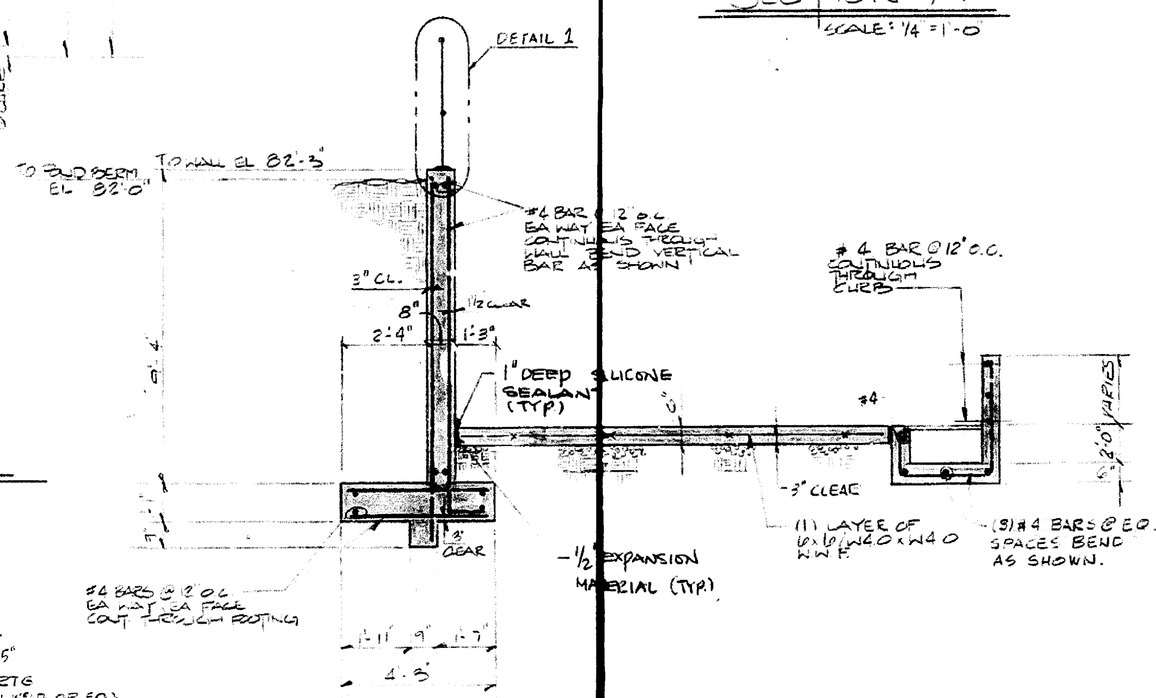

SECTION B
SCALE: 1 3/8" = 1'-0"

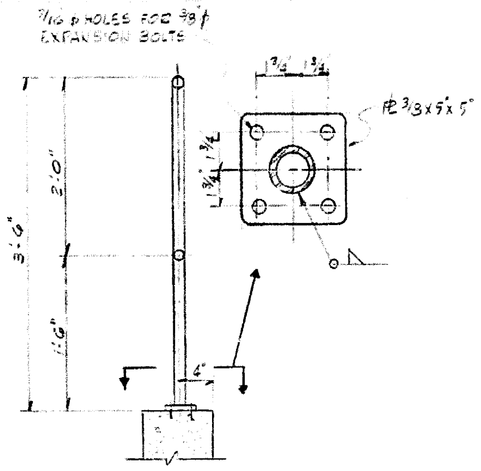

DETAIL 1
N.T.S

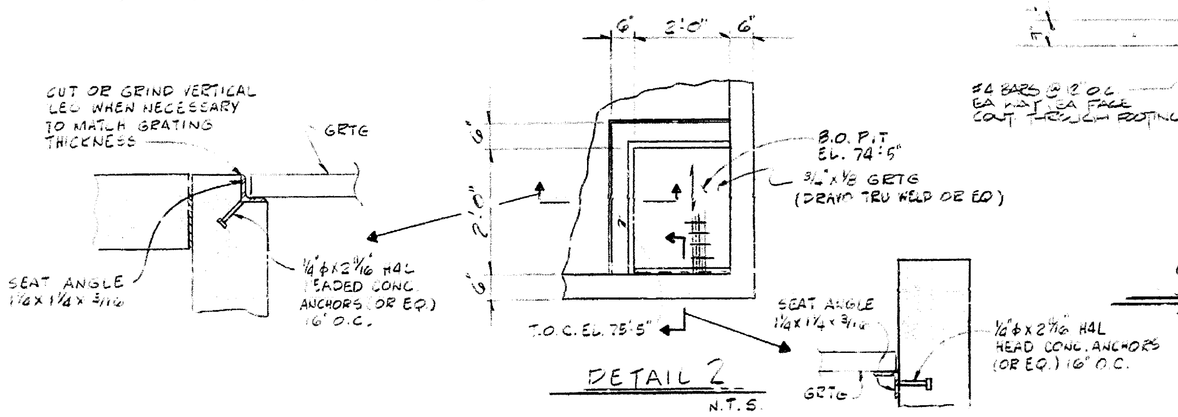

DETAIL 2
N.T.S

NOTES:

1. THE FOLLOWING EQUIPMENT SHALL BE USED ON THIS OPERATION AND ARE ALL GFE ITEMS
   A) 250 BBL CEMENT SILO WITH SELF ERECTING HYDRAULIC SYSTEM
   B) 9 K W PORTABLE GENERATOR WITH TWO (2) SINGLE PHASE OUTLET AND (1) THREE PHASE OUTLET
   C) CONCRETE PUMP WITH 25 YARDS³ HOPPER AND 88 H.P.
   D) 7-12 YARDS³ CONCRETE MIXER.
   E) PORTABLE COMPRESSOR RATED AT 125 CFM 100 PSIG.
   F) TEN FOOT SECTIONS OF HEAVY DUTY STRAIGHT ROLLER 30" WIDE.
2. STANDARD HANDRAIL SHALL BE 1¼" φ PIPE SCHEDULE 40 ASS GRADE B, A501 OR EQUALL, AS APPROVED BY THE ENGINEER WITH WELDED CONNECTIONS. BEND SHALL BE UNIFORM ALL PIPE SHALL BE SMOOTH AND FREE OF BUMPS OR SHARP EDGES. POST SPACING 8'-0" MAX.
3. FOR ELECTRICAL REQUIREMENTS REFER TO DRAWING D-37669-600
4. FOR PUMP AND PIPING PLAN REFER TO DRAWING D-37669-030

REV.	DESCRIPTION	DATE	RFP	DOE	CLASS	JOB NO.
D	AS BUILT	6-26-87				410602
C	CONTROLLED DRAWING	1-17-87				470601
B	REV. SEC "16'-0" TO 18'-0" TOP OF CURB	10/22/86				931739
A	ORIGINAL ISSUE	9/29/86				90-729

TOLERANCES		BY	DATE
FRACT. ±	DESIGNED	S. LEVERA	9-15-86
ANGLE ±	DRAWN	K. QUELLET	9-18-86
DEC. ±	CHECKED	W. CONSTANT	9-21-86
UNLESS NOTED OTHERWISE	APPROVED		
REMOVE BURRS AND SHARP EDGES			
NEXT ASSEMBLY			
SCALE: NOTED	SUBMITTED		
	APPROVED RFP		4/29/86
	APPROVED DOE		

U.S. DEPARTMENT OF ENERGY
ROCKY FLATS AREA OFFICE GOLDEN, COLORADO

Rocky Flats Plant
GOLDEN, COLORADO

788 EXPANSION
(POND CRETE EQUIPMENT)
PLANS AND SECTIONS

SIZE	DRAWING NUMBER	ISSUE	SHEET
D	37724-101-M	D	3 OF 6

MASTER DRAWING
AS-BUILT PENDING
RESPONSIBLE GROUP WPDE

I-01-A-000305
pg 10

PART	QUAN	DESCRIPTION	MATERIAL
8	2	1/2" CONDUIT SEALING BUSHING, FOR (1) CABLE WITH 0.72" DIAMETER, O.Z. GEDNEY # CSBG-150P-1	
9	1	30 AMP RECEPTACLE BACK BOX WITH 1" HUB CROUSE-HINDS # ARRH33	
10	1	15 DEGREE ANGLE ADAPTER FOR 30 AMP RECEPTACLE CROUSE HINDS # AR30	
11	100 FT	4 CONDUCTOR NUMBER 10 AWG, TYPE 'SO' CORD, ALPHA WIRE # 1938/4	

B

PART	QUAN	DESCRIPTION	MATERIAL
1	1	4 POLE, 3 WIRE, 30 AMP, 600 VOLT AC, HEAVY DUTY CIRCUIT BREAKING RECEPTACLE ASSEMBLY, WITH SRING DOOR, STYLE 2, CROUSE-HINDS # AR342	B
2	1	4 POLE, 3 WIRE, 30 AMP, 600 VOLT AC, HEAVY DUTY PLUG, STYLE 1 GROUNDING, CROUSE - HINDS # APJ3475	B
3	1	WIRE MESH CABLE GRIP, CROUSE - HINDS # K075	
4	1	PLUG CAP, CROUSE - HINDS # C -K13	
5	1	30 AMP, 3 POLE, NON FUSED, 600 VOLT AC, HEAVY DUTY ENCLOSED SWITCH, TYPE 'WST', CROUSE - HINDS # WST30354	
6	1	15 HP, 3Ø, STANDARD LINE, PORTABLE SUB-MERSIBLE, PROSSER 9-81500 SERIES PUMP, MOTOR, AND CONTROLLER	
7	1	30 AMP, 3 POLE MOLDED CASE, THERMAL MAGNETIC CIRCUIT BREAKER, STYLE 'FA', SQUARE 'D' ELECTRIC COMPANY # FA36030	

A

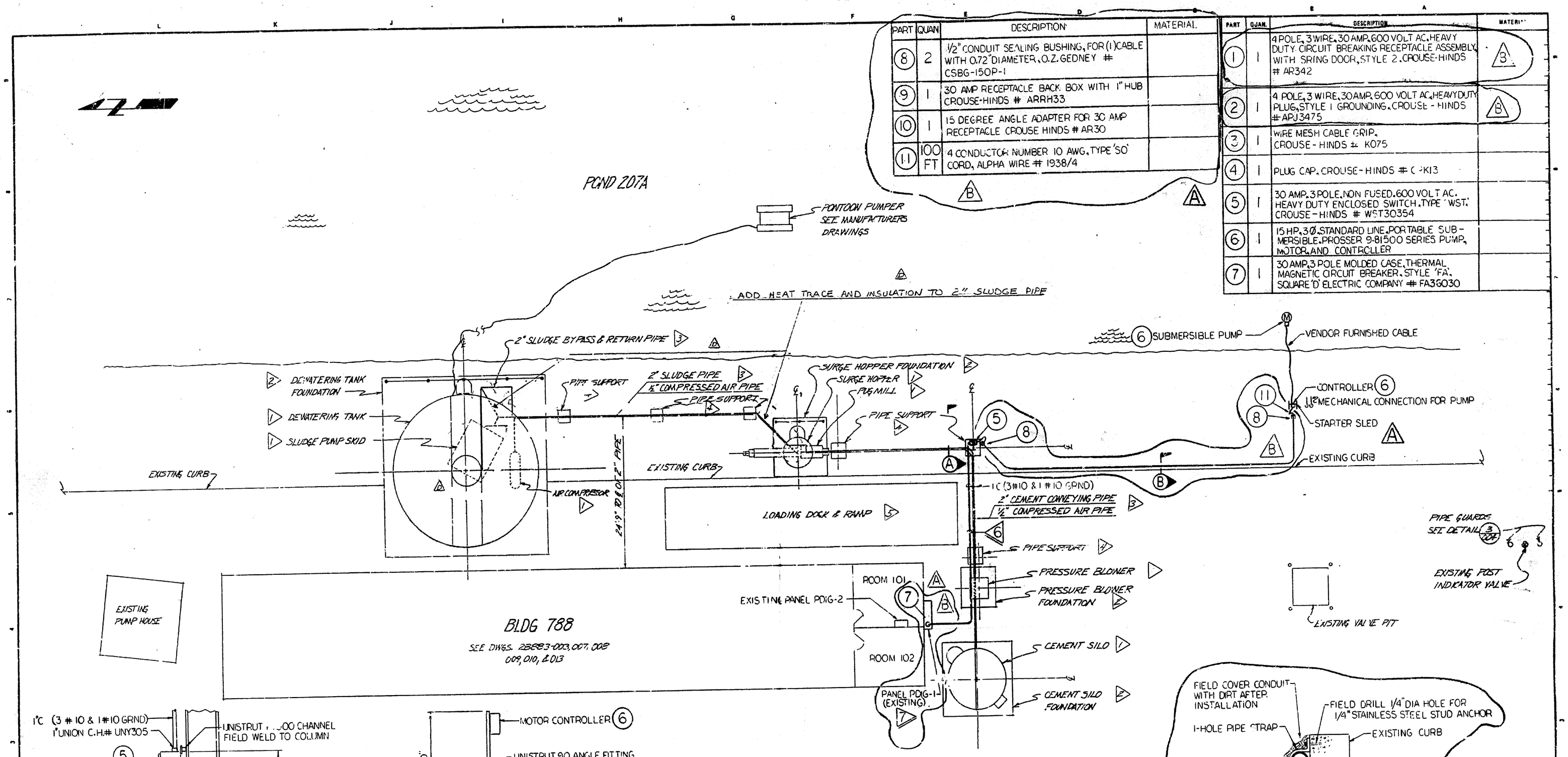

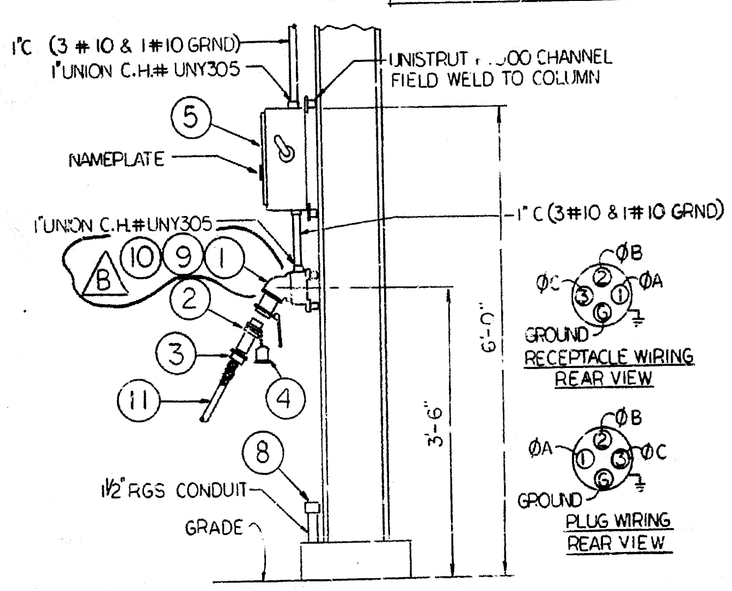

SECTION 'A'
NO SCALE

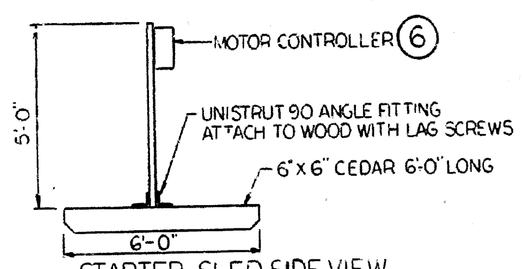

STARTER SLED SIDE VIEW
NO SCALE

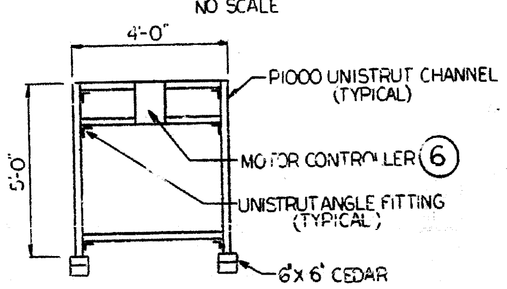

STARTER SLED END VIEW
NO SCALE

NOTES

1. FOR EQUIPMENT SEE DWGS. 28883-010, 014, 022, & 050.
2. FOR EQUIPMENT FOUNDATIONS SEE DWGS. 28883-013, 020, & 021
3. FOR PIPING SEE DWGS. 28883-013, 014, & 030.
4. FOR PIPE SUPPORTS SEE DWGS. 28883-013, 022, & 023.
5. FOR LOADING DOCK SEE DWGS. 28883-013 & 024.
6. FIELD ROUTE NEW CONDUIT UP AND ALONG EXISTING OVERHEAD PIPE RACK TO NEW SWITCH AND RECEPTACLE ASSEMBLIES ADDING ADDITIONAL SUPPORTS AS REQUIRED
7. FIELD TO REMOVE EXISTING FEEDER FROM BREAKER NUMBER 6, TAG SPARE, AND COIL AND TAPE FOR FUTURE USE. FIELD REMOVE EXISTING 60 AMP 3 POLE BREAKER AND REPLACE WITH NEW 30 AMP 3 POLE BREAKER

30 AMP DISC SW POND 207A
480V, 3Ø, 15 HP, 60 HZ
PANEL POIG-1, CKT NO. 6
SUB PUMP POND 207A

NAMEPLATE ENGRAVING

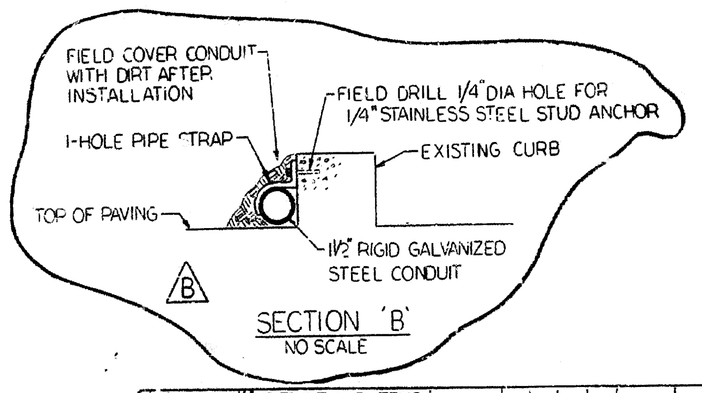

SECTION 'B'
NO SCALE

REVISION	DESCRIPTION	DATE	RFP			DOE	CLASS	JOB NO.
B	ADDED 1 1/2 CONDUIT AND ITEMS 8 9 10 & 11. REVISED ITEMS 1 & 2	4/22/90	TS	TS	JL	RC		643734
A	INTERIM DRAWING ADDED 15 HP SUBMERSIBLE PUMP FOR POND 207A	3/29/90	TS	TS	JL	RC		643734

TOLERANCES		BY	DATE
FRACT. ±	DESIGNED	OREMAN	11/3/84
ANGLE ±	DRAWN	OREMAN	11/3/84
DEC. ±	CHECKED	LINES	11/5/84
UNLESS NOTED OTHERWISE	APPROVED	JAMES	4/4/90
REMOVE BURRS AND SHARP EDGES			
NEXT ASSEMBLY			
SCALE	SUBMITTED		
	APPROVED PER		4-16-84
	APPROVED DOE		

U.S. DEPARTMENT OF ENERGY
ROCKY FLATS AREA OFFICE GOLDEN, COLORADO

Rocky Flats Plant
GOLDEN, COLORADO

SOLAR EVAPORATION POND
BLDG. 788
GENERAL PIPING ARRANGEMENT

SIZE	DRAWING NUMBER	ISSUE	SHEET
D	28883-051-01D	B	26 OF

INTERIM DRAWING - CONSTRUCTION ONLY
AS-BUILT MASTER DRAWING WHEN CONSTRUCTION IS COMPLETE
RESPONSIBLE GROUP WPDE

LEE WAN & ASSOCIATES, INC.
engineers architects surveyors
7300 South Lincoln Street, Suite 108
Littleton, Colorado 80122
(303) 795-7373

I101-A-000305
p 23

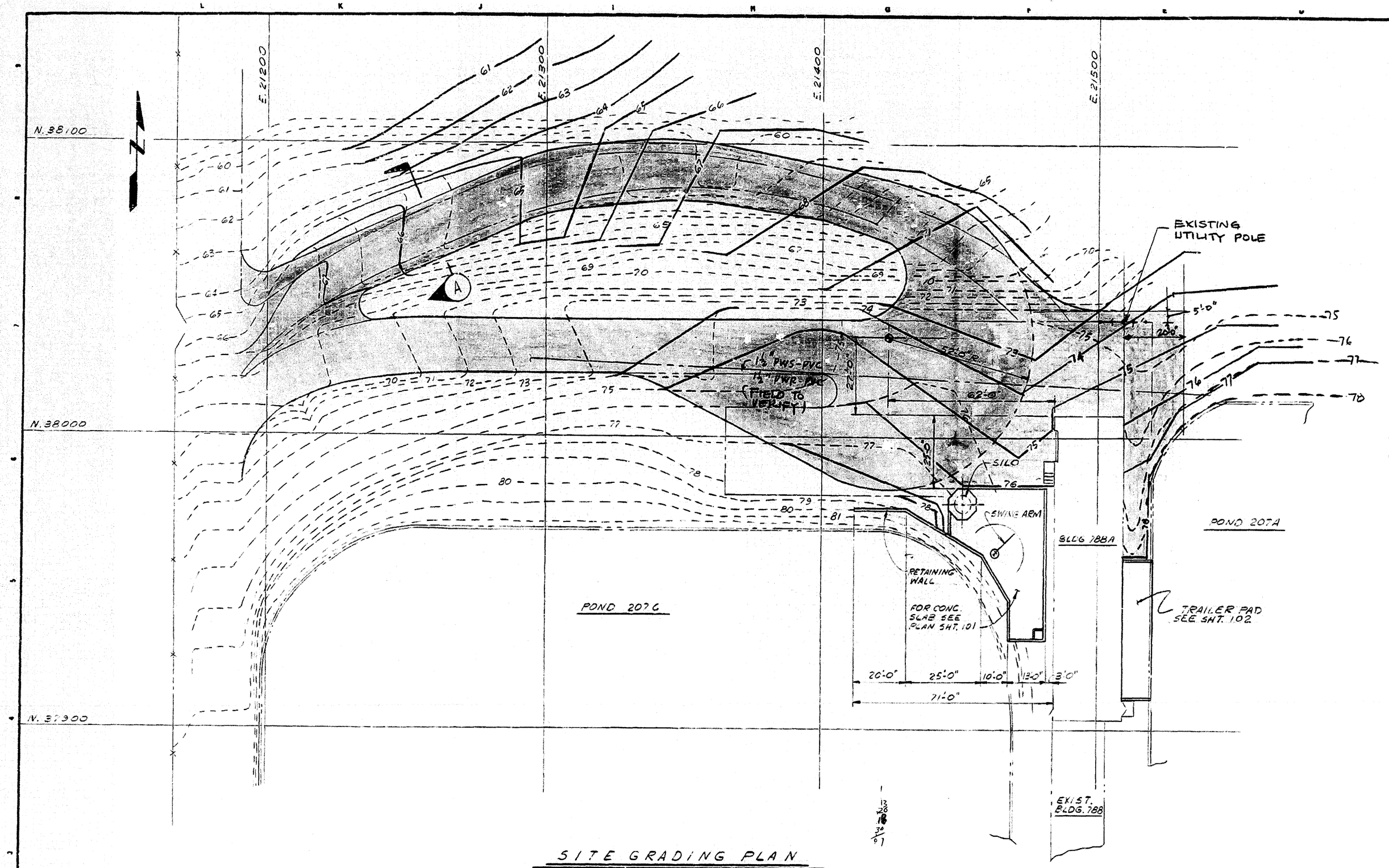

SITE GRADING PLAN
(POND CRETE EQUIPMENT) 1" = 20'

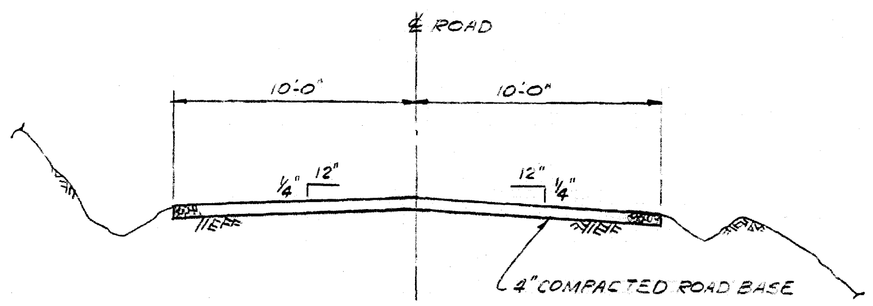

SECTION A

1" = 20' 0 5 10 20 40 60 80

PART	QUAN.	DESCRIPTION	MATERIAL

NOTES:

1. ULTIMATE COMPRESSIVE STRENGTH OF CONCRETE SHALL BE 3,000 PSI IN 48 HRS. OR USE 7 SACKS OF CEMENT PER CU. YD AND ADD NON-CHLORIDE ACCELERATOR OR EQUAL.
2. REINFORCING STEEL BARS SHALL BE ASTM A615 GRADE 60.
3. ANCHOR BOLTS SHALL BE ASTM A307.
4. FOR ADDITIONAL INFORMATION REFER TO SPECIFICATIONS.

SEQUENCE OF OPERATION

1. FILL MIXER TRUCK WITH THICKENED SLUDGE (3 YD³) BY TURNING ON THE EXISTING ODS PUMP AND HAND VALVE.
2. FILL THE MIXER TRUCK WITH PORTLAND CEMENT (25 WT %) BY TURNING ON PNEUMATIC TRANSFER SYSTEMS AT THE CEMENT SILO.
3. MIX THE CEMENT AND SLUDGE FOR 70 ROTATION BY OPERATING THE MIXER TRUCK.
4. DISCHARGE THE MIXTURE INTO THE PUMPER
5. PUMP THE MIXTURE THROUGH THE BUILDING AND INTO THE TRI-WALL BOX.
6. TRANSFER THE FILLED TRI-WALL BOXES TO RACKS FOR CURING.

LEGEND

- DENOTES EXISTING.
- DENOTES NEW
- 81 EXISTING CONTOURS 1'-0" INTERVALS.
- 81 NEW CONTOURS 1'-0" INTERVALS
- DENOTES EXISTING FENCE
- NEW ROAD
- DENOTES REMOVAL

REFERENCE DWG.

IDEAL MFG. INC. DWG. NUMBERS
250 BARREL CEMENT SILO-GENERAL LAYOUT
DWG. NO. NU. 91

ISSUE	DESCRIPTION	DATE	RFP	DOE	CLASS	JOB NO.
D	AS BUILT	6-26-87				470602
C	CONTROLLED DRAWING	1-17-87	WO			470601
B	REVISED WIDTH OF SLAB & NOTE 1	10/22/86				901729
A	ORIGINAL ISSUE	9/29/86				901729

TOLERANCES		BY	DATE
FRACT. ±	DESIGNED		9-17-86
ANGLE ±	DRAWN		9-17-86
DEC. ± UNLESS NOTED OTHERWISE	CHECKED		9-21-86
	APPROVED		9-25-86
REMOVE BURRS AND SHARP EDGES			
NEXT ASSEMBLY			
SCALE: AS NOTED	SUBMITTED		
	APPROVED RFP		9/29/86
	APPROVED DOE		

U.S. DEPARTMENT OF ENERGY
ROCKY FLATS AREA OFFICE GOLDEN, COLORADO

Rocky Flats Plant
GOLDEN, COLORADO

BLDG 788 EXPANSION
(POND CRETE EQUIPMENT)
SITE GRADING & EQUIPMENT PLAN

SIZE	DRAWING NUMBER	ISSUE	SHEET
D	37724-100-M	D	2 OF 6

MASTER DRAWING
AS-BUILT PENDING
RESPONSIBLE GROUP WPDE

I101-A-000305
pg 5

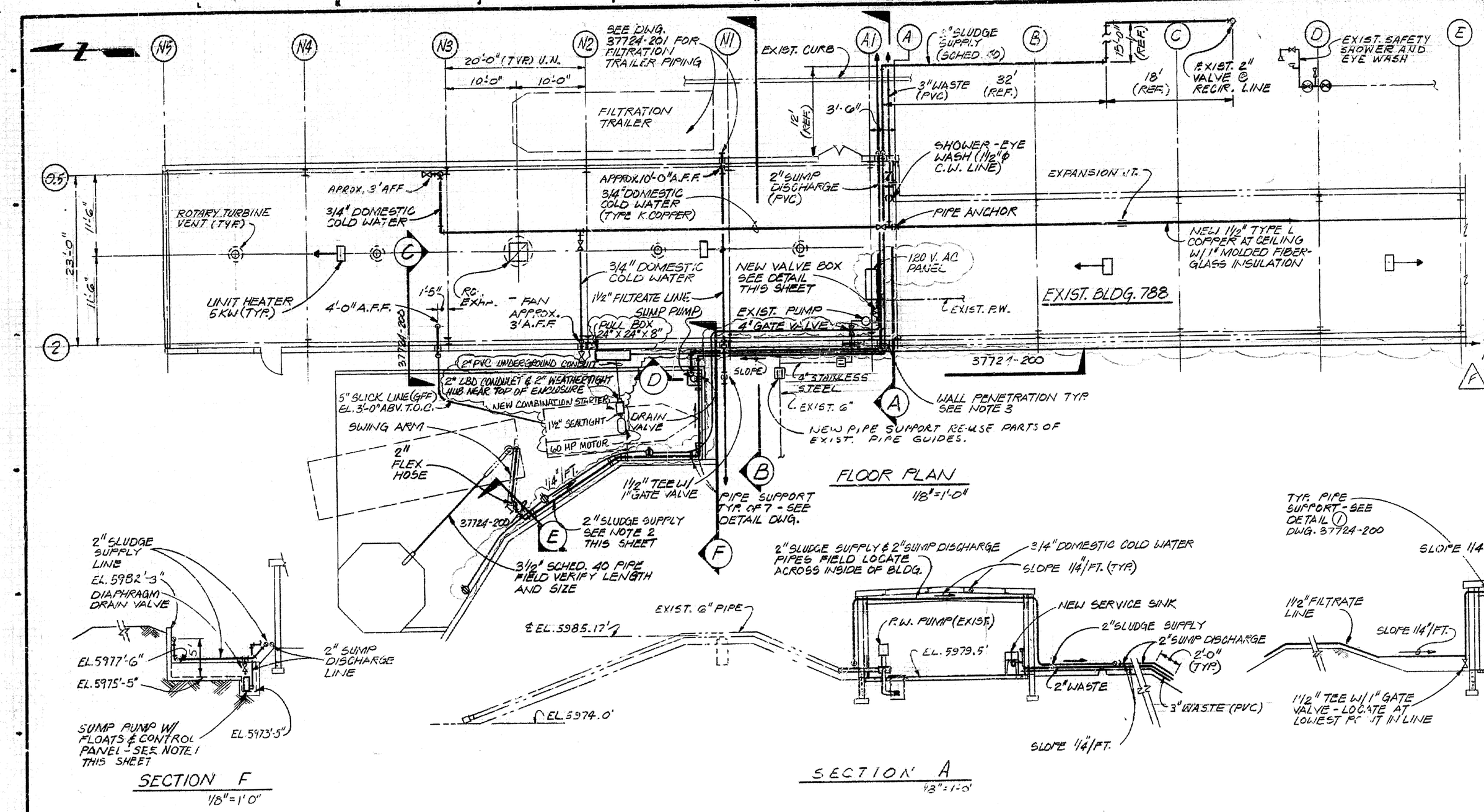

FLOOR PLAN
1/8" = 1'-0"

NOTES:

1. SUMP PUMP
   ONE - PEABODY BARNES SEWAGE PUMP MODEL 3SE74 3/4 HP 460 V. 3PH. W/
   ONE - FLOAT NO. 73613 N.C. (MERCURY CONTACT)
   ONE - FLOAT NO. 73615 N.C. (MERCURY CONTACT)
   ONE - CONTROL PANEL NO. 65424 SIMPLEX WASTE WATER CONTROL PANEL 3PH. 460 V. W/ SHORT CIRCUIT & OVERLOAD PROTECTION & CIRCUIT BREAKER. NEMA 3 ENCLOSURE.
2. SLUDGE LINE - 2" SCHED. 40 WELDED PIPE W/ LONG RADIUS ELBOWS.
3. ALL PIPING DIMENSIONS ARE APPROXIMATE. FIELD VERIFY SIZES OF EXISTING PIPING AND LOCATIONS. FIELD ROUTE PIPING.
4. SUPPORT PIPE AS REQUIRED. SEE TYPICAL PIPE SUPPORT DETAIL (1) & DETAIL (2) DWG. 37724-200.
5. SEE DWG. 37724-200 & 37724-201 FOR SECTIONS AND DETAILS.

SECTION F
1/8" = 1'-0"

SECTION A
1/8" = 1'-0"

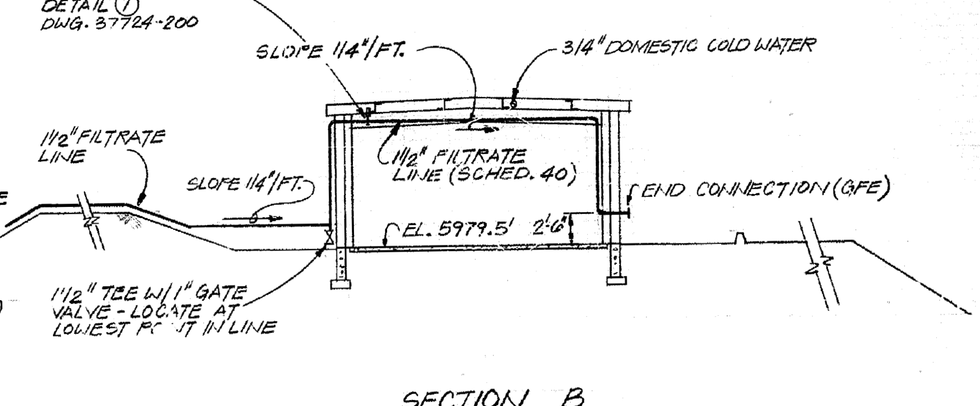

SECTION B
1/8" = 1'-0"

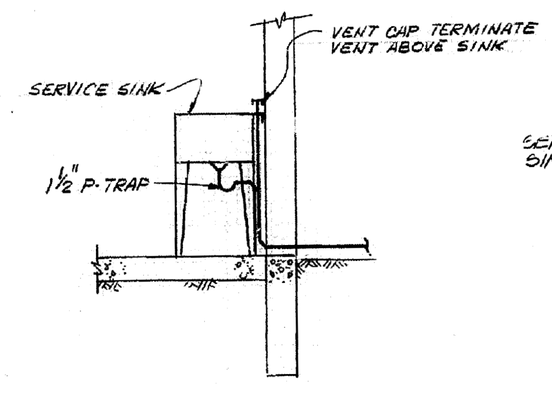

WASTE & VENT OF SERVICE SINK
1/2" = 1'-0"

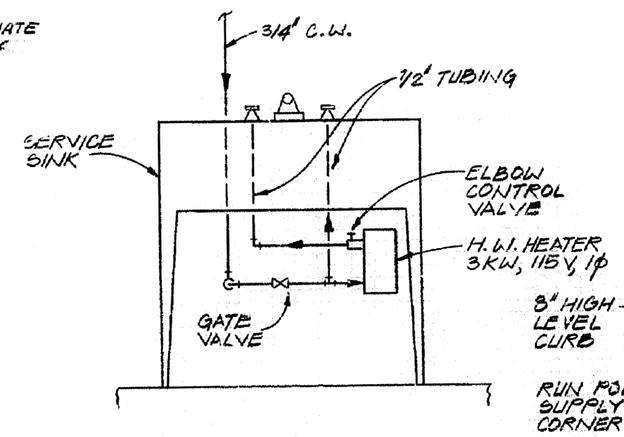

H&C.W. PIPING OF SERVICE SINK
NO SCALE

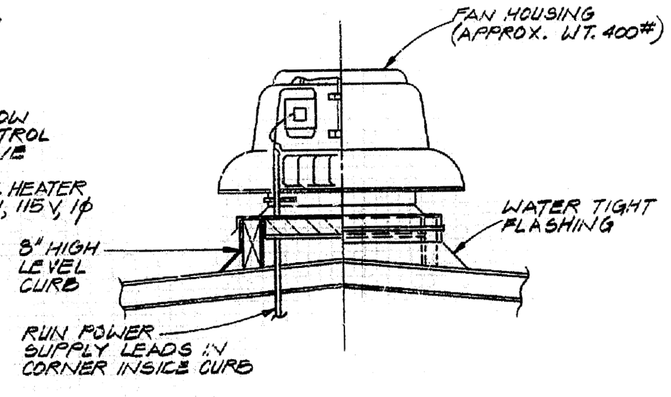

ROOF EXHAUST FAN DETAIL
NO SCALE

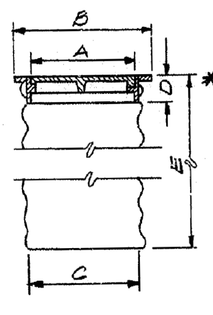

DIMENSION (INCHES)

A	B	C*	D
10¼"	14½"	12"	4' 72"(MIN.)*

NOTES:
*LENGTH OF CORRUGATED PIPE TO BE DETERMINED BY DEPTH OF WATER LINE. NOTCH END OF PIPE TO FIT OVER WATER LINE. USE NEENAH R-5902-A COVERS.

VALVE BOX DETAIL
NO SCALE

PAST	SUBM.	DESCRIPTION	MATERIAL

F	ADDED PANEL & STARTER	[illegible]	[illegible]	[illegible]	[illegible]			SDS	986165
E	AS BUILT	6-26-87	[illegible]	[illegible]	[illegible]	[illegible]		[illegible]	470602
D	CONTROLLED DRAWING	1-17-87	WC			[illegible]		[illegible]	470601
C	ADD. SLUDGE & FILTRATE LINES	10/22/86	JF	KAP	AKA	[illegible]		[illegible]	901729
B	ADD H2O LINES & SUMP PUMP	9/29/86	JF	JF DJC	AKA	AE		[illegible]	901729
A	ORIGINAL ISSUE	8/15/86	FO	RV	JH	[illegible]		[illegible]	901729

REV	DESCRIPTION	DATE	W/P	DOE	CLASS	JOB NO.

TOLERANCES: FRACT. ± ; ANGLE ± ; DEC. ± ; UNLESS NOTED OTHERWISE; REMOVE BURRS AND SHARP EDGES; FIT ASSEMBLY

	BY	DATE
DESIGNED	[illegible]	7-18-86
DRAWN	VALDEZ	7-18-86
CHECKED	[illegible]	8/15/86
APPROVED	[illegible]	8/15/86
SUBMITTED		
APPROVED REP.	[illegible]	8/15/86
APPROVED DOE		

SCALE: AS NOTED

U.S. DEPARTMENT OF ENERGY
ROCKY FLATS AREA OFFICE GOLDEN, COLORADO

Rockwell International
ROCKY FLATS PLANT
GOLDEN, COLORADO 80401

BUILDING 788 EXPANSION
UTILITY PLAN

SIZE	DRAWING NUMBER	ISSUE	SHEET
D	37665-030	F	5 OF 12

CONTROLLED DRAWING
RELEASED & REVISED PER F. E.O. PROD. DES.-13
APVD. [illegible] DATE 12-5-86
CONFIGURATION CONTROL COORD.
CONTROL NO. PCS-0048

788A

CONTROLLED DRAWING

J101-A-000305
pg 8

PART	QUAN.	DESCRIPTION	MATERIAL

NOTES:

1. ELEVATIONS BASED ON 0.0' EQUAL 5900' ABOVE SEA LEVEL.
2. BASE ELEVATIONS TO BE ESTABLISHED USING FF (FIN. FLOOR) OF EXISTING BLDG 788 EQUAL TO 79.5'
3. GRADE TO SLOPE AWAY FROM BLDG. AT A MINIMUM ON 1 FOOT FALL IN 4 (HORIZ) FEET.

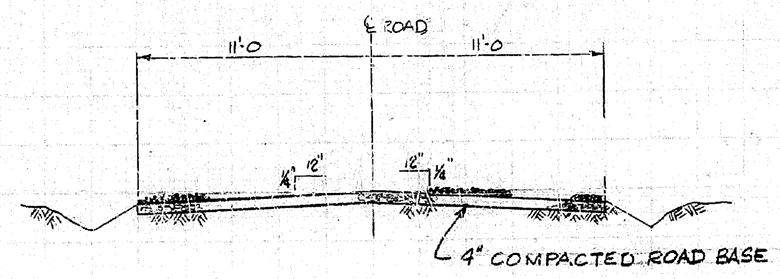

TYPICAL ROADWAY SECTION
N.T.S.

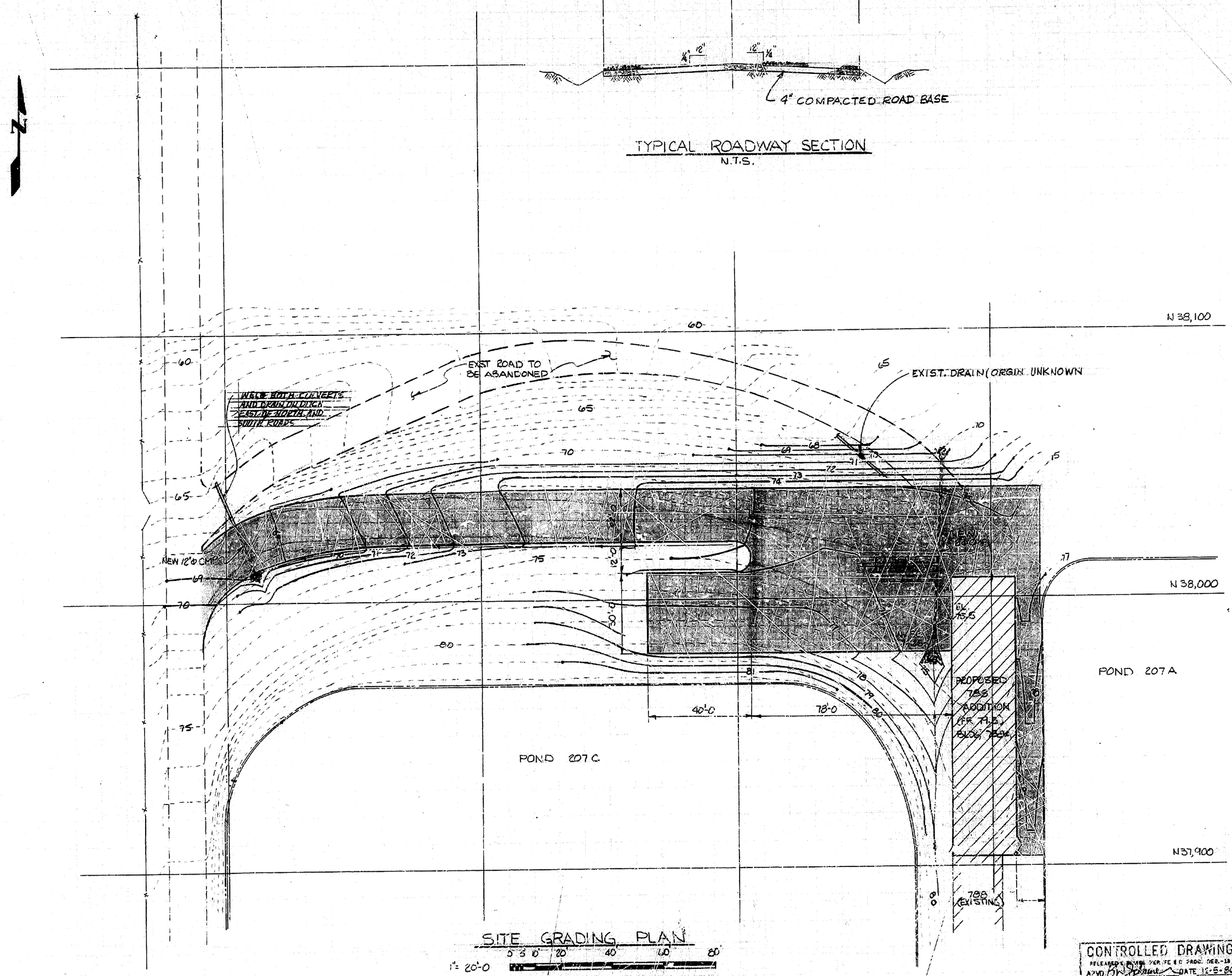

SITE GRADING PLAN
1" = 20'-0
5 5 10 20 40 60 80

LEGEND

————	EXISTING
————	NEW
- - 80' - -	EXISTING CONTOURS 1' INTERVALS
—— 80' ——	NEW CONTOURS 1' INTERVALS
CMP	CORRUGATED METAL PIPE W/ FLARED END SECTIONS
⁘⁘	6" ROCK RIP-RAP

C	AS BUILT	6-26-87	WC	DP	RJG	RJG	470602
B	CONTROLLED DRAWING	1-7-87	WC		RJG	RJG	470601
A	ORIGINAL ISSUE	8/15/86	CM	KM	JAN	CM	791751
REV.	DESCRIPTION	DATE	RFP			DOE	QUAN.	JOB NO.

TOLERANCES
FRACT. ±
ANGLE ±
DEC. ±
WELDING NOTED OTHERWISE
REMOVE BURRS AND SHARP EDGES
PART ASSEMBLY

		DATE
DESIGNED	M. LONEROS	
DRAWN	L. MOSS	7/16/86
CHECKED	J. Moore	8/15/86
APPROVED		8/15/86
SCALE	1" = 20'-0	

U.S. DEPARTMENT OF ENERGY
ROCKY FLATS AREA OFFICE GOLDEN, COLORADO

Rockwell International
ROCKY FLATS PLANT
GOLDEN, COLORADO 80401

BUILDING 788 EXPANSION
SITE GRADING PLAN

SIZE	DRAWING NUMBER	ISSUE	SHEET
D	37665-010	C	4 of 12

CONTROLLED DRAWING
RELEASED BY WRK VERIFIED PROD. DEB-13
APVD. BN Johnson DATE 12-5-86
CONFIGURATION CONTROL COORD.
CONTROL NO. SCS-0048

CONTROLLED DRAWING

788A
SITE

I101-A-000305
pg 7

PART	QUAN.	DESCRIPTION	MATERIAL

NOTES:

1. EXISTING PUMP HOUSE TO BE REMOVED IS A METAL SHED ON APPROXIMATELY A 12" CONCRETE FOUNDATION. ELECTRIC PUMP AND CONTROLS SHALL BE RELOCATED INTO THE NEW BUILDING SEE DWG. 030.

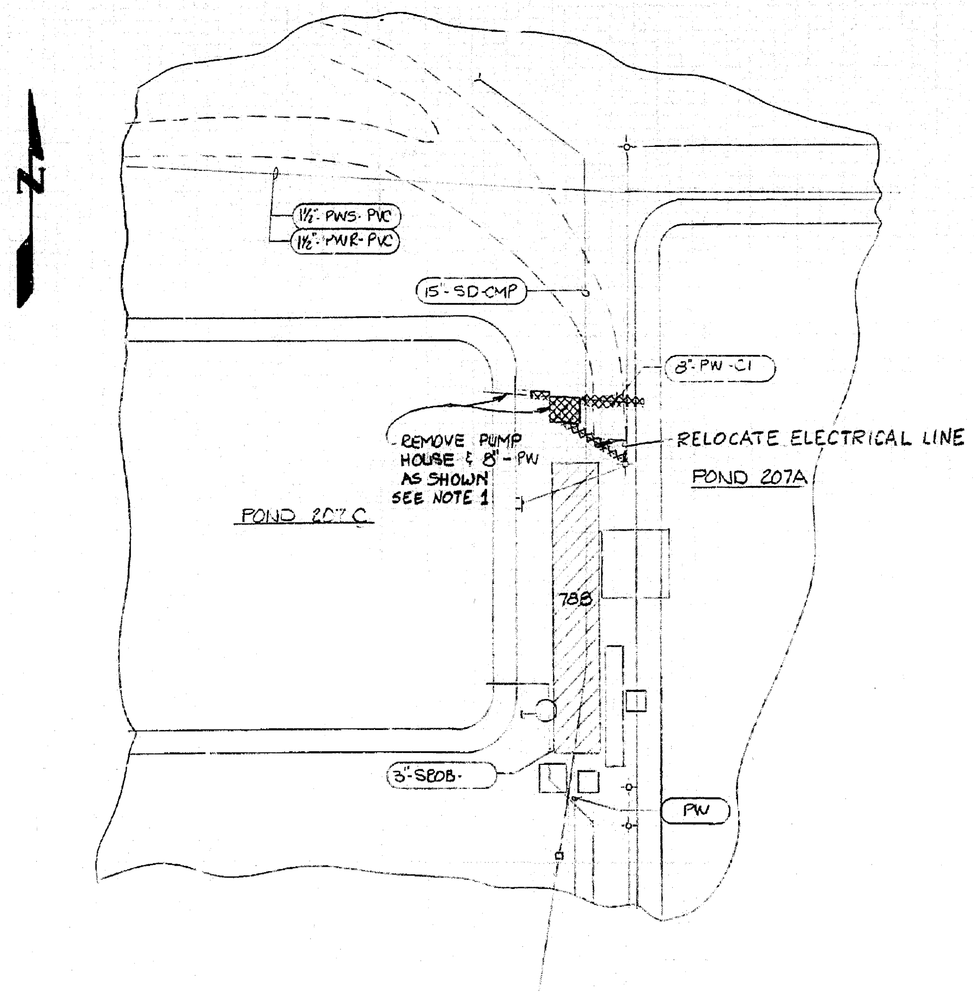

SITE REMOVAL PLAN
1" = 40'-0

LEGEND

(shaded)	UNDERGROUND UTILITY
CI	CAST IRON
SD	STORM DRAIN
PW	PROCESS WASTE
PWR	PROCESS WASTE RETURN
PWS	PROCESS WASTE SUPPLY
SBDB	SECONDARY REVERSE OSMOSIS BRINE
PVC	POLYVINYLCHLORIDE
(hatched)	REMOVAL

1" = 40'-0 0 5' 10' 20' 40' 80' 120'

NO.	DESCRIPTION	BY	DATE
	ORIGINAL ISSUE		8/15/86

DESIGNED McLOVEN
DRAWN L. MOSS 7/23/86
CHECKED Moore 8/15/86
APPROVED 8/15/86
SUBMITTED
APPROVED DOE
APPROVED COR 8/15/86

TOLERANCES UNLESS NOTED OTHERWISE: FRACT. ± ANGLE ± DEC. ±
REMOVE BURRS AND SHARP EDGES
NEXT ASSEMBLY
SCALE: NOTED

DATE | RFP | DOE CLASS | JOB NO.
8/15/86 | LM 8/14/86 | 8/14/86 | 20-1 | 901729

U.S. DEPARTMENT OF ENERGY
ROCKY FLATS AREA OFFICE GOLDEN, COLORADO

Rockwell International
ROCKY FLATS PLANT
GOLDEN, COLORADO 80401

BUILDING 788 EXPANSION
SITE REMOVAL PLAN

SIZE	DRAWING NUMBER	ISSUE	SHEET
D	37665-X03	A	3 of 15

I101-A-000305
Pg 6

PART	QUAN.	DESCRIPTION	MATERIAL
1	1	"EE & MACON" FIG # 145, SLIDING GUIDE, PIPE SUPPORT, W/O LUGS	COMM'L
2	AS REQ'D	"GATES ADAPTAPIPE" #50 HOSE WITH ENLARGED ENDS FOR 6"Φ X 20" LONG PIPE & HOSE CLAMP	COMM'L
3	1	"KITTELL" FLEX CONNECTOR, SIZE 2"Φ X 18" LG, SEAMLESS CORRUGATED SST RATED 1200°F, 2" MPT	COMM'L
4	1	"WORTHINGTON" PUMP MODEL #4 CNE-84, 300 GPM @ 35 FT. HEAD	COMM'L
5	1	"WISCONSIN" GAS ENGINE MODEL #VH4D	COMM'L
6	4	"WORCESTER, DISC-O-SEAL" 6" BUTTERFLY VALVE - BUTT WELD	COMM'L

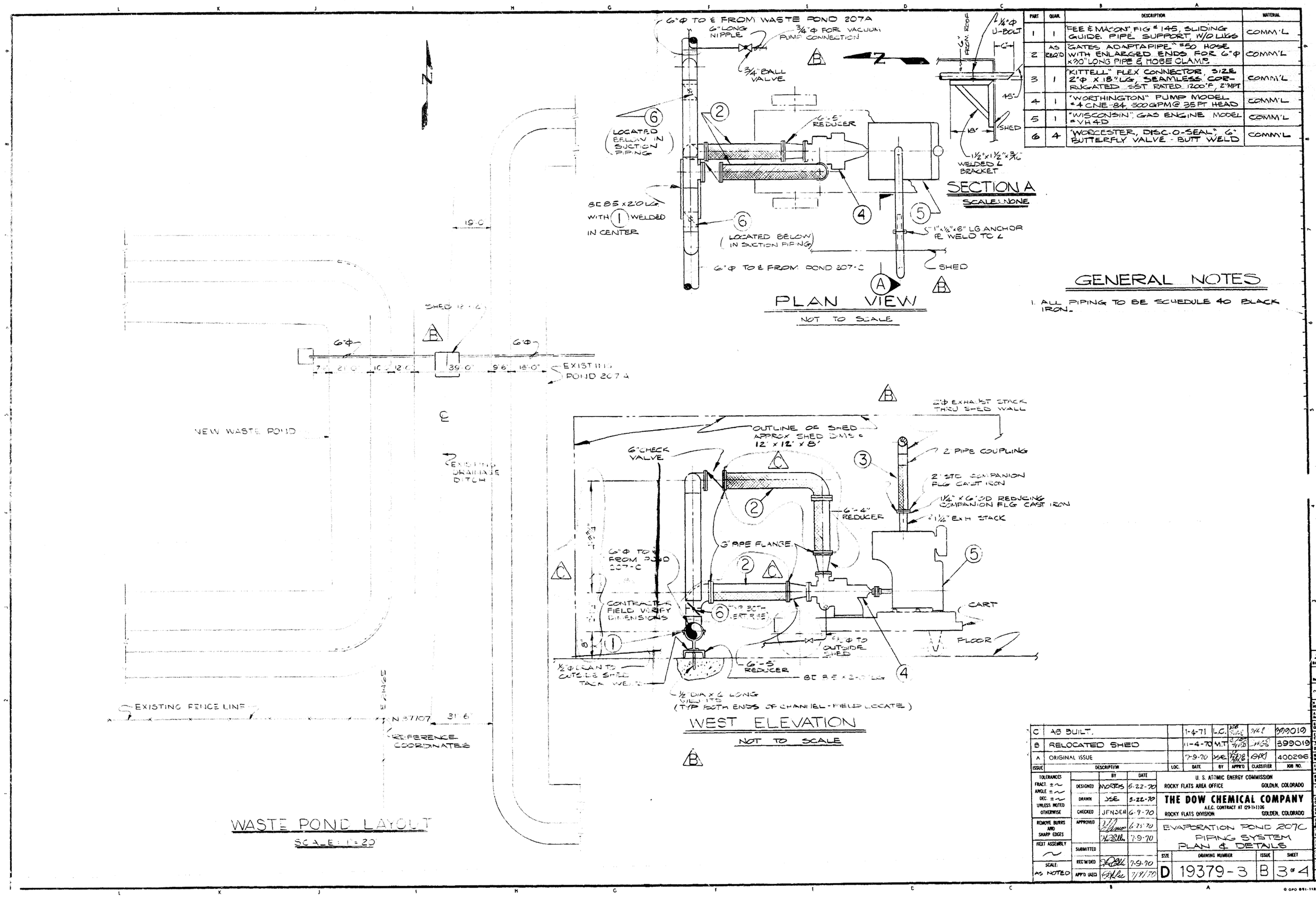

ISSUE	DESCRIPTION	LOC.	DATE	BY	APPR'D	CLASSIFIER	JOB NO.
C	AS BUILT.		1-4-71	L.C.			399019
B	RELOCATED SHED		11-4-70	M.T.			399019
A	ORIGINAL ISSUE		7-9-70	JSE		GHR	400296

		BY	DATE
TOLERANCES FRACT. ± ANGLE ± DEC. ± UNLESS NOTED OTHERWISE	DESIGNED	NORRIS	6-22-70
	DRAWN	JSE	6-22-70
	CHECKED	JENSEN	6-9-70
REMOVE BURRS AND SHARP EDGES	APPROVED		6-23-70
			7-9-70
NEXT ASSEMBLY	SUBMITTED		
SCALE: AS NOTED	REC'M'DED		7-9-70
	APP'D USED		7/8/70

U. S. ATOMIC ENERGY COMMISSION
ROCKY FLATS AREA OFFICE GOLDEN, COLORADO

THE DOW CHEMICAL COMPANY
A.E.C. CONTRACT AT 29-1-1106
ROCKY FLATS DIVISION GOLDEN, COLORADO

EVAPORATION POND 207C
PIPING SYSTEM
PLAN & DETAILS

SIZE	DRAWING NUMBER	ISSUE	SHEET
D	19379-3	B	3 of 4

207

I101-A-000305
Pg 5

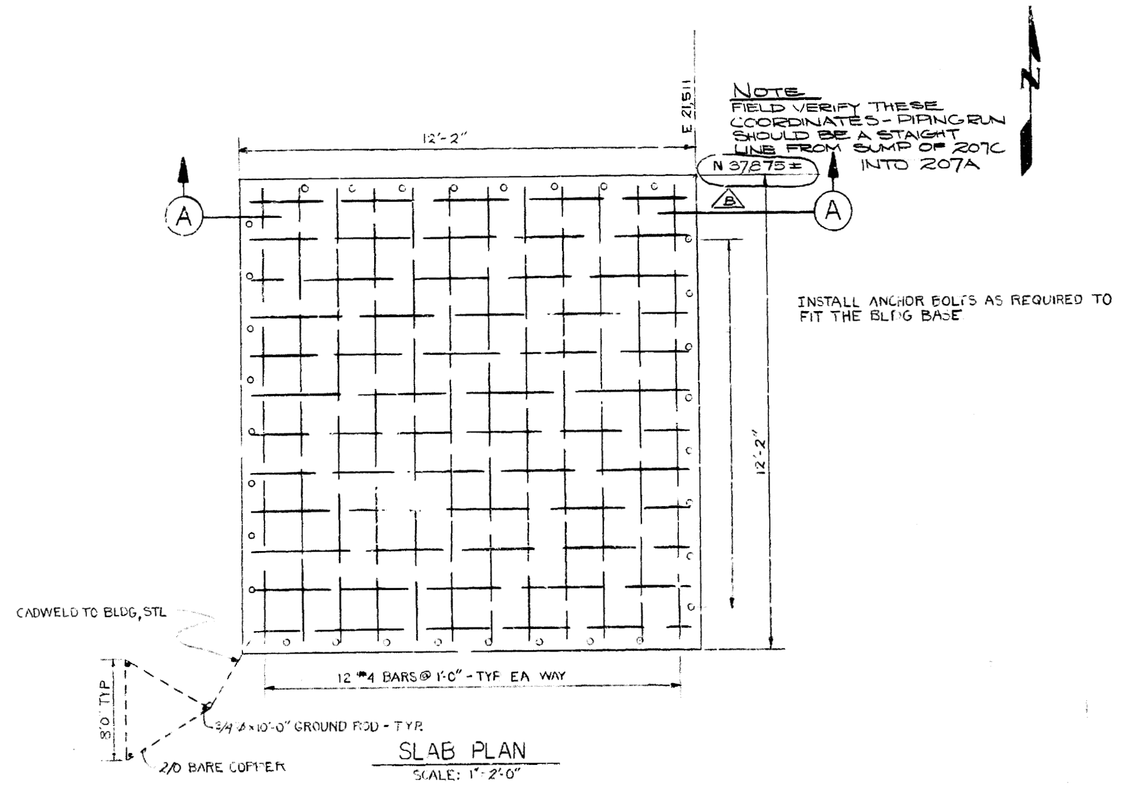

NOTE
FIELD VERIFY THESE COORDINATES - PIPING RUN SHOULD BE A STAIGHT LINE FROM SUMP OF 207C INTO 207A

INSTALL ANCHOR BOLTS AS REQUIRED TO FIT THE BLDG BASE

SLAB PLAN
SCALE: 1" = 2'-0"

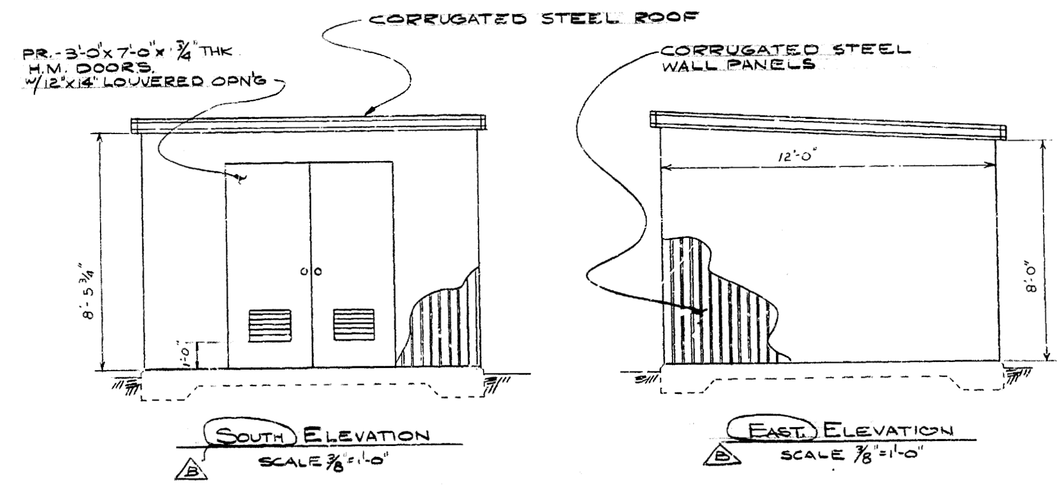

SOUTH ELEVATION
SCALE 3/8" = 1'-0"

EAST ELEVATION
SCALE 3/8" = 1'-0"

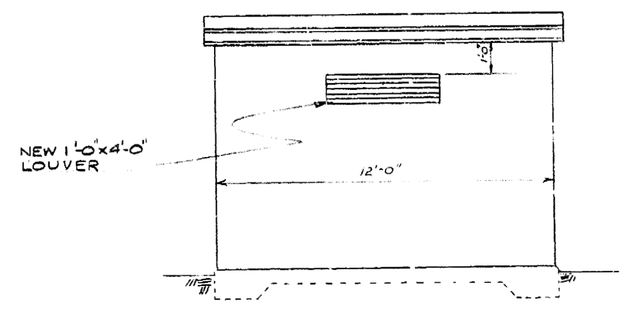

NORTH ELEVATION
SCALE 3/8" = 1'-0"

GENERAL NOTES

1. SLAB WAS DESIGNED FOR "ARMCO" LS-1 BUILDING.
2. ALL CONCRETE SHALL DEVELOP 3,000 P.S.I. COMPRESSIVE STRENGTH IN 28 DAYS.
3. THE BUILDING SHALL BE LOCATED BY THE STATIONING SHOWN ON THIS DWG. SEE DWG 19379-3 FOR REFERENCE COORDINATES

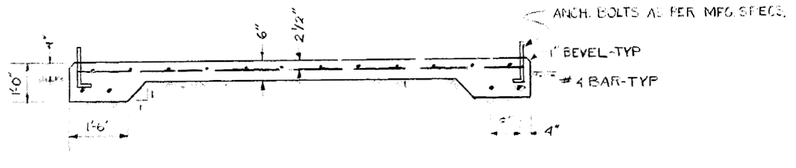

SECTION 2-A
SCALE 1" = 2'-0"

ISSUE	DESCRIPTION	LOC.	DATE	BY	APP'D	CLASSIFIER	JOB NO.
B	CHANGE COORD. & ELEV.	207C	11-4-70	DLS	7/28	7/28	390019
A	ORIGINAL ISSUE	207C	7-9-70	CAG	7/28	7/28	390019

	BY	DATE
DESIGNED	SUNDSTROM	6-9-70
DRAWN	CAG	6-9-70
CHECKED	DLS	7-7-70
APPROVED	Coleman	7-9-70
		7-9-70
SUBMITTED		
RECEIVED		7-9-70
APP'D UNDER		7/9/70

TOLERANCES: FRACT. ± ANGLE ± DEC. ± UNLESS NOTED OTHERWISE
REMOVE BURRS AND SHARP EDGES
NEXT ASSEMBLY
SCALE: AS NOTED

U. S. ATOMIC ENERGY COMMISSION
ROCKY FLATS AREA OFFICE — GOLDEN, COLORADO

THE DOW CHEMICAL COMPANY
A.E.C. CONTRACT AT (29-1)-1106
ROCKY FLATS DIVISION — GOLDEN, COLORADO

EVAPORATION POND 207C
TEMPORARY PUMP SHED
SLAB PLAN & SECT

SIZE	DRAWING NUMBER	ISSUE	SHEET
D	19379-2	B	2 of 4

207-C

D GPO 681-112

I 101-A-000305
pg 4

Item No.	Line Designation	Service	Origin	Destination	Location (N&E Coord) Measured	Status Active or Inactive	Action	Depth	Reference Number(s)	Drawing Number Reference	Remarks	Approximate Length (ft)
26	10"-FD-CAP	Foundation Drain	Bldg 779	Hillside North of Ponds	N38000, E21300	Inactive [2]	Leave	4' to 8'	82,116, 119,122, 126	N.A.		N/A
27	440V-E	Power	Pole @ NW Corner of Bldg 967	North/parallel to West berm 207A to poles SE of Bldg 788	N37452, E21519 North to N37768, E21517	Inactive [2]	Remove/ Relocate	Overhead	N.A.	15501-14-M 15501-22-M		316
28	T	Telephone	Plantwide	Bldg 788	N37443, E21522 NW to N37457, E21508 N NW to N37784, E21500	Inactive [2]	Remove/ Relocate	4' to 8'	N.A.	15501-14-M 15501-22-M		350
29	6"-PW-VCP	Process Waste	Plantwide N37335, E22652	Intercept 10"-PW-VCP @ N37400, E21492 (manhole)	N37400, E22205 East to N37400, E21492	Inactive [2]	Leave	4' to 8'	182	15501-22-M 15501-23-M	P-39 (OU9)	N/A
30	6"-ROPW-PVC	Reverse Osmosis Product Water	Valved Conn. @ 6"SE-CAP (N37396, E22075)	Storage Tank 215D	N37396, E22075 West to N37396, E21711 South to N37320, E20711 East to N37320, E21736	Inactive [2]	Leave	4' to 8'	N.A.	15501-22-M		N/A
31	6"-ROPW-PVC	Reverse Osmosis Product Water	Bldg 910	Ties into East-West 6" Item 30 ROPW-PVC @ N37396, E 21907	N37347, E21907 (North side Bldg 910) North to N37396, E21907	Inactive [2]	Remove	4' to 8'	N.A.	15501-22-M		49
32	8"-ROF-PVC	Reverse Osmosis Feed	Storage Tank 215D	Bldg 910 & continues east as 6"-SE-CAP	N37390, E21714 East to N37390, E21977 South to N37347, E21977	Inactive [2]	Leave	4' to 8'	N.A.	15501-22-M		N/A
33	6"-ROPW-PVC	Reverse Osmosis Product Water	Bldg 910	6"-PW-VCP	N37347, E21902 North to N37365, E21902 West to N37365, E21809 North to N37400, E21809	Inactive [2]	Leave	4' to 8'	N.A.	15501-22-M		N/A
34	3"-SROB-CAP	Secondary Reverse Osmosis Brine	Bldg 910	Pond 207B South	N37347, E21919 North to N37432, E21919 Pond 207B Daylights over south berm	Inactive [2]	Remove	8'	320	15501-22-M 28103-201		85
35	3/4" E-PVC	Liquid Level Sensor Cables	Bldg 910	Pond 207B South	N37347, E21917 North to N37432, E21917 Pond 207B	Inactive [2]	Remove	4' to 8'	N.A.	15501-22-M		85
36	8"-PW-CAP	Process Waste	Bldg 910	Pond 207A	N37347, E21905 North to N37389, E21905 West to N37389, E21818 North to N37952, E21818 West to N37952, E21768 Pond 207A (N.E. Corner)	Inactive [2]	Remove	8'	251,227, 278,280	15501-14-M 15501-22-M		742
37	8"-RW-CAP	Raw water	8"-ROF-PVC	Pond 207A	N37390, E21821 North to N37717, E21821 West to N37717, E21768 Pond 207A	Inactive [2]	Leave	4' to 8'	252,292, 286	15501-14-M 15501-22-M		N/A
38	12"-OS-CMP	Outfall Sewer	Pumphouse	Daylights on North Side of Ponds 207A and 207B	N37976, E21814 North to N38018, E21814	Inactive [2]	Remove	4' to 8'	273,274, 247	15501-14-M		42
39	1-1/2"-DCW-STL	Domestic Cold Water	3"-DCW-STL @ N37245, E21813 (Plantwide)	(2) valve boxes between pond 207A & 207B South	N37245, E21813 North to N37502, E21813 1st Valve Box North to N37560, E21813 2nd Valve Box	Inactive [2]	Remove to Toe at N 37245	4' to 8'	289,299	27452-209		315
40	3"-SROB-CAP 3"-ROPW-CAP 3"-SROP-CAP 6"-SE-CAP	Secondary Reverse Osmosis Brine Reverse Osmosis Product Water Secondary Reverse Osmosis Product Solar Evap ?	Bldg 910	S.E. Corner Pond 207A	N37347, E21900 North to N37364, E21900 West to N37364, E21805 North to N37486, E21805 West to Pond 207A N37486, E21785	Inactive [2]	Leave	4' to 8'	253,294, 290	27452-209 27452-210		254

Item No.	Line Designation	Service	Origin	Destination	Location (N&E Coord) Measured	Status Active or Inactive	Action	Depth	Reference Number(s)	Drawing Number Reference	Remarks	Approximate Length (ft)
41	8"-ROF-CAP	Reverse Osmosis Feed	Bldg 910	Pond 207B Center and Pond 207B South (Via valve boxes between Ponds)	N37347, E21967 North to N37400, E21967 West to N37400, E21810 North to N37616, E21810 East to N37616, E21880 North to Pond 207B Center N37646, E21880 & South to Pond 207B South N37584, E21880	Inactive [2]	Remove	4' to 8'	288,293	27452-209 15501-14-M 15501-22-M	27452-209 15501-14-M 15501-22-M	588
42	3"-PW-PVC	Process Waste	Riser (18" A.G.) at east side Pond 207B (North)	Daylights Towards Walnut Creek	N37900, E22136 North to N38099, E22137 N.W. to N38226, E21945 N.N.E. to N38644, E22140 North to N38740, E22140	Inactive [2]	Leave in Place & Reroute	4' to 8'	327,348, 355,371	27452-209 15501-14-M 15501-15-M 15501-6-M 15501-7-M	Runs parallel to Item 43	N/A
43	3"-PW-PVC	Process Waste	East of Pond 207B (North)	To sump, overflow to daylight towards Walnut Creek	N37830, E22137 North to N38099, E22137 N.W. to N38226, E21946 N.N.E. to N38646, E22146 (sump) North to N38714, E22144 (daylights)	Inactive [2]	Leave in Place & Reroute	4' to 8'	347,354, 365,377, 373	15501-14-M 15501-15-M 15501-6-M 15501-7-M 27452-209	Ties into Item 22 @N37880, E22137	N/A
44	6"-Tile Drain	Ground Water Runoff	Manway at S.E. Corner of Pond 207B South	Daylights N.E. of 207B North to Road Ditch	N37423, E22122 North to N38055, E22144	Inactive [2]	Remove	4' to 8'	N.A.	16887-1		650
45	8"-PW-CI	Process Waste	Pond 207B North	Pump House	N37971, E21834 West to N37971, E21816 (Pump House)	Inactive [2]	Remove	4' to 8'	275	15501-14-M	P-50 (OU9)	20
46	8"-PW-CI (8"-PCWF-CI)	Process Waste	Pump House	Pond 207A	N37961, E21806 (Pump House) South to N37956, E21806 W.S.W. to N37954, E21767 Pond 207A	Inactive [2]	Remove	4' to 8'	276	15501-14-M	P-50 (OU9)	50
47	3" Above Ground Transfer Line	ITS Transfer Line	Valve Pit Between 207A & 207B South	Bldg 374		Active	Relocate	N/A	N/A	N/A		650
48	3" PVC	PUMP DISCHARGE LINE	UNDERGROUND PUMP @ BLDG 910	SROTM SEWER NORTH OF BLDG 910 TRUCK PAD	N37354, E 21909 EAST TO N37354, E21911 NORTH TO N37368, E21911 N.E. TO N37406, E22019 (FRENCH DRAIN)	Active	LEAVE IN PLACE	3' MIN		39365-499 C	BLDG 910 - FRENCH DRAIN U/G PUMP DISCHARGE LINE	130

IE101-A-000305 Pg 3

NOTE:

1. INFORMATION IS ESTIMATED FROM INCOMPLETE HISTORICAL DRAWINGS AND/OR PROCESS KNOWLEDGE.
2. ASSUMED INACTIVE.
3. SEE DRAWING 51045-430 FOR ITEM LOCATIONS.

PRELIMINARY
60% DESIGN REVIEW
NOT FOR CONSTRUCTION

PARSONS ENGINEERING SCIENCE, INC.
Denver, Colorado (303) 831-8100

ISSUE	DESCRIPTION	DATE	RFP	DOE	CLASS	JOB NO.
B	CONCEPTUAL DESIGN	SH	JH	PL	DM	989618

KEYWORDS	TOLERANCES		BY	DATE
UNDERGROUND	FRACT. ±	DESIGNED	HUGHES	1/6/95
UTILITIES	ANGLE ±	DRAWN	HEALY	1/6/95
REMOVAL	DEC. ±	CHECKED	LEMKE	1/6/95
LIST	UNLESS NOTED OTHERWISE	APPROVED	MYERS	1/6/95
	REMOVE BURRS AND SHARP EDGES			
	NEXT ASSEMBLY			
		SUBMITTED		
MASTER ☐ YES ☐ NO	SCALE: NONE	APPROVED RFP		
		APPROVED DOE		

U.S. DEPARTMENT OF ENERGY
ROCKY FLATS OFFICE GOLDEN, COLORADO

ROCKY FLATS ENVIRONMENTAL TECHNOLOGY SITE
GOLDEN, COLORADO 80402

OU4 SOLAR EVAPORATION PONDS IM/IRA
UTILITIES LIST

SIZE	DRAWING NUMBER	ISSUE	SHEET
D	51045-436	B	1 OF 1

Item No.	Line Designation	Service	Origin	Destination	Location (N&E Coord) Measured	Status Active or Inactive	Action	Depth	Reference Number(s)	Drawing Number(s) Reference	Remarks	Approximate Length (ft)
1	1-1/2" PW-SST (PVC) 1-1/2" PWR-SST (PVC)	Process Waste	Bldg. 771	Pond 207A [1]	N38072, E21082 SE to N38032, E21146 E, SE to N38014, E21530 East to N38014, E21730 S, SE to N37950, E21734	Inactive [2]	Remove to Fence	4' to 8'	30,59,78, 115,196, 224,227	15501-14-M 15501-13-M	P-26 (OU9)	628
2	3"-LD-STL	Laundry Discharge	Tank 207 (N. Valve Pit)	Pond 207C	N37798, E21082 East to N37798, E21225	Inactive (AIP)	Remove to Fence	4' to 8'	35,60	15501-13-M	P-35 (OU9)	60
3	3"-LD-STL	Laundry Discharge	Tank 207 (N. Valve Pit)	Pond 207C	N37797, E21082 East to N37797, E21225	Inactive (AIP)	Remove to Fence	4' to 8'	36,61	15501-13-M	P-35 (OU9)	60
4	3"-PW-STL	Process Waste	Tank 207 (N. Valve Pit)	Pond 207C	N37796, E21082 East to N37796, E21225	Inactive (AIP)	Remove to Fence	4' to 8'	37,62	15501-13-M		60
5	10"-DCW-CI	Domestic Cold Water	Plantwide	Plantwide	N38200, E21172 South to N37699, E21172	Inactive [2]	Leave in Place	5' to 8'	29,31,32, 34,41	15501-13-M	Con't to Item 12	N/A
6	4"-PW-VCP	Process Waste	Tank 207	Valve Pit	N37786, E21081 East to N37785, E21134	Inactive [2]	Leave in Place	4' to 8'	38	15501-13-M		47
7	6"-RW-CI	Raw Water	Plantwide	Plantwide	N37722, E21100 East to N37722, E21507	Inactive [2]	Leave in Place	4' to 8'	42,63,81 127	15501-13-M 15501-14-M	Con't to Item 13	N/A
8	3"-PW-PVC (SST)	Process Waste	Tank 207	Pond 207A	N37716, E21100 East to N37716, E21537	Inactive [2]	Remove to Fence	4' to 8'	43,64,83, 128	15501-13-M 15501-14-M	P-37 (OU9)	52
9	3"-PW-PVC (STL)	Process Waste	Tank 207	Pond 207A	N37715, E21100 East to N37715, E21537	Inactive [2]	Remove to Fence	4' to 8'	44,65,84, 129	15501-13-M 15501-14-M	P-36 (OU9)	52
10	10"-PW-PVC (VCP)	Process Waste	Junction Box @ N37785, E21134	Bldg 995	N37785, E21134 SE to N37713, E21205 East to N37713, E21470 (Manhole) South to N37590, E21470 (Manhole) SE to N37573, E21492 South to N37400, E21492	Inactive [2]	Remove North from 6" Connection & West to Fence	4' to 8'	46,66,85, 130,131, 155,169	15501-13-M 15501-14-M 15501-22-M	P-38 (OU9)	180
11	2400V-E	Power	Plantwide	Plantwide	N38223, E21158 South to N37701, E21158 East to N37702, E21358 North to N37736, E21358 East to N37734, E21472 South to N37607, E21472 E, SE to N37598, E21517	Inactive [2]	Remove from N 37607, E 21472, E, SE to N 37598,	Overhead	N.A.	15501-13-M 15501-14-M 15501-22-M		E 21517
12	10"-DCW-CI	Domestic Cold Water (and fire hydrant)	Plantwide	Plantwide	N37699, E21172 East to N37699, E21379 SE to N37651, E21416 South to N37566, E21416 East to N37566, E21481 South to N37349, E21481	Inactive [2]	Leave in Place	4' to 8'	132,152, 164	15501-13-M 15501-14-M 15501-22-M	Con't from Item 5	N/A
13	6"-RW-CI 8"-RW-CI	Raw Water	Plantwide	Plantwide	N37722, E21507 South to N37463, E21507	Inactive [2]	Partial Remove Verify With Bldg 910 Use - Reroute	4' to 8'	200,201, 202	15501-13-M 15501-14-M 15501-22-M	Con't from Item 7, Con't to Item 15. Item 15 Ties in @ N37463, E21507	N/A
14	3"-PW-SST 3"-PW-STL	Process Waste	Bldg 910	Pond 207A (Via Item No 16 and 22)	N37449, E21789 3" PW-STL N37449, E21808 3" PW-SST West to N37449, E21497 North to N37713, E21497 (tie into Items 16 and 22)	Inactive [2]	Remove	4' to 8'	153,207, 226,255, 296,154, 208,227, 256,297	15501-14-M 15501-22-M 27452-209	P-37 (OU9) 3"-PW-STL Ties into Item 22 (3"-PW-PVC) @ N37449, E21789 3"-PW-SST Ties into Item 16 @ N37449, E21808 Check exist valve pit @ N37698, E21497 abandoned?	570
15	6"-RW-CI	Raw Water	Plantwide (valve @ N37463, E21507)	Bldg 910	N37463, E21507 East to N37463, E21806 South to N37362, E21806 East to N37362, E21922 South to N37347, E21922	Inactive [2]	Partial Remove Verify With Bldg 910 Use - Reroute	4' to 8'	206,225, 254,295	15501-22-M 27452-209	Con't from Item 13	550
16	3"-SROB-CAP	Secondary Reverse Osmosis Brine	Bldg 910	Pond 207C (Via item NO. 14 and Valve Pit @ N37800, E21480	N37347, E21929 North to N37364, E21929 West to N37364, E21808 North to N37449, E21808 (ties into 3"-PW-SST)continues @ N37713, E21497 East to N37713, E21503 North to N37755, E21503 N.W. to N37773, E21480 North to N37812, E21480 (thu pit) West to N37812, E21460 (Pond 207C)	Inactive [2]	Remove	4' to 8'	294	15501-14-M 27452-209 15501-22-M	P-47 (OU9) Ties into Item 14 (3"-PW-SST) @ N37449, E21808, then continues N37713, E21497 (Valve Pit) and ties back into 3"SROB-CAP to Pond 207C	310
17	8"PWF-CI	Process Waste Flow	Bldg 788A	Pond 207C	N37930, E21483 West to N37932, E21453	Inactive [2]	Remove	Above Grade (Verify)	120	15501-14-M	P-49 (OU9)	30
18	8"PW-CI	Process Waste	Pond 207A	Bldg 788A	N37926, E21537 West to N37928, E21508	Inactive [2]	Remove	4' to 8'	197	15501-14-M	P-49 (OU9)	30
19	440V-E	Power	N38033, E21517 (Power pole)	Pond 207C	N38033, E21515 South to N37903, E21515 S.W. to N37887, E21469 (Underground)	Inactive [2]	Remove	Overhead and Under ground		15501-14-M	Runs below Bldg 788. Need to Identify use	130 A/G 50 U/G
20	440V-E	Power	Plantwide	Plantwide	N38033, E21515 East to N38033, E22133	Inactive [2]	Remove	Overhead		15501-14-M 15501-15-M	P-48 (OU9)	620
21	15"-SD-CMP	Storm Drain	Bldg 782 2 lines (2" & 6") converge	Daylights North of Bldg 788A	N37560, E21458 NE to N37595, E21477 North to N37684, E21477 N, NE to N37820, E21498 North to N38029, E21498 NW to N38060, E21454	Inactive [2]	Remove	4' to 8'	117,118, 121	15501-14-M 15501-22-M	P-48 (OU9)	520
22	3"-PW-PVC	Process Waste	207B (N) East Side Item 43 ties in @ N37880, E22137	207C Southeast Corner (Via 3"-PW-STL Item 14)	N37860, E21097 Pond 207B East to N37880, E22137 South to N37392, E22137 West to N37392, E21789 North to N37449, E21789 (tie into Item 14) West to N37449, E21497 North to N37693, E21497 (Item 14 tie into 3" PVC) West to N37693, E21481 North to N37771, E21481 NW to N37810, E21442	Inactive [2]	Leave	4' to 8'	124,298	27452-209	Ties into Item 14 (3"-PW-STL) @ N37449, E21789, and ties back into 3"-PW-PVC @ N37693, E21498 then continues to Pond 207C. Check existing valve pit @ N37698, E21497 Abandoned?	N/A
23	3"-PW-(STL)	Process Waste	Bldg 788 (So Side)	207A (via 3"-PW-SST, Item 8)	N37784, E21492 South to N37716, E21492	Inactive [2]	Remove	4' to 8'		15501-14-M 27452-209	May run below Bldg 788	68
24	2 1/2"-E-SST	Power	Pole 8	Bldg 788	N38000, E21300	Inactive [2]	Leave	4' to 8'	79	N.A.		N/A
25	6"-PW-	Process Waste Underdrain	Pond 207C	North to Drum w/ Pump	N37800, E21333 North to N37966, E21333	Inactive [2]	Leave	8" below liner to top of pipe	80	19379-1		166

Not Removing *

Not Removing *

NOTE:

1. INFORMATION IS ESTIMATED FROM INCOMPLETE HISTORICAL DRAWINGS AND/OR PROCESS KNOWLEDGE.
2. ASSUMED INACTIVE.
3. SEE DRAWING 51045-430 FOR ITEM LOCATIONS.

PRELIMINARY
60% DESIGN REVIEW
NOT FOR CONSTRUCTION

PARSONS ENGINEERING SCIENCE, INC.
Denver, Colorado (303) 831-8100

ISSUE	DESCRIPTION						DATE	RFP	DOE	CLASS	JOB NO.
B	CONCEPTUAL DESIGN							TE JH PL DM			989618

KEYWORDS	TOLERANCES		BY	DATE
UNDERGROUND	FRACT. ±	DESIGNED	EVANS	1/6/95
UTILITIES	ANGLE ±	DRAWN	HEALY	1/6/95
REMOVAL	DEC. ±	CHECKED	LEMKE	1/6/95
LIST	UNLESS NOTED OTHERWISE	APPROVED	MYERS	1/6/95
	REMOVE BURRS AND SHARP EDGES			
	NEXT ASSEMBLY	SUBMITTED		
		APPROVED RFP		
MASTER ☐ YES ☐ NO	SCALE: NONE	APPROVED DOE		

U.S. DEPARTMENT OF ENERGY
ROCKY FLATS OFFICE GOLDEN, COLORADO

ROCKY FLATS ENVIRONMENTAL TECHNOLOGY SITE
GOLDEN, COLORADO 80402

OU4 SOLAR EVAPORATION PONDS IM/IRA

UTILITIES LIST

SIZE	DRAWING NUMBER	ISSUE	SHEET
D	51045-435	B	1 OF 1

94DN0022, 1/18/95 at 12:05

Ⓓ101-A-000305 Ag Z

PART	QUAN.	DESCRIPTION	MATERIAL

LEGEND

- SAFETY SHOWER & EYE WASH
- HOSE CONNECTION
- FILTER, REGULATOR, LUBRICATOR ASSEMBLY
- BALL VALVE
- GFE — GOVERNMENT FURNISHED EQUIPMENT

NOTES:

1. FOR PIPING DETAILS SEE DWG. 28883-030
2. FOR STRUCTURAL DETAILS SEE DWGS. 28883-020 THROUGH 023
3. FOR ELECTRICAL DETAILS SEE DWGS 28883-040 THROUGH 045
4. ATTATCH PIPING TO SUPPORTS WITH U-BOLTS AS NECESSARY. FIELD DRILL ALL HOLES IN PLATES AND BEAMS FOR U-BOLTS.
5. COMPRESSED AIR PIPING SHOULD FOLLOW SLUDGE AND CEMENT CONVEYING PIPE WHEREVER POSSIBLE. ATTACH PIPE TO SIDES OF CEMENT SILO AND SURGE HOPPER AS NECESSARY.
6. FILTERS, REGULATORS AND LUBRICATORS SHALL BE PROVIDED FOR THE AIR PAD ASSEMBLY ON THE SURGE HOPPER AND FOR EACH DUST COLLECTOR ON THE CEMENT SILO AND SURGE HOPPER

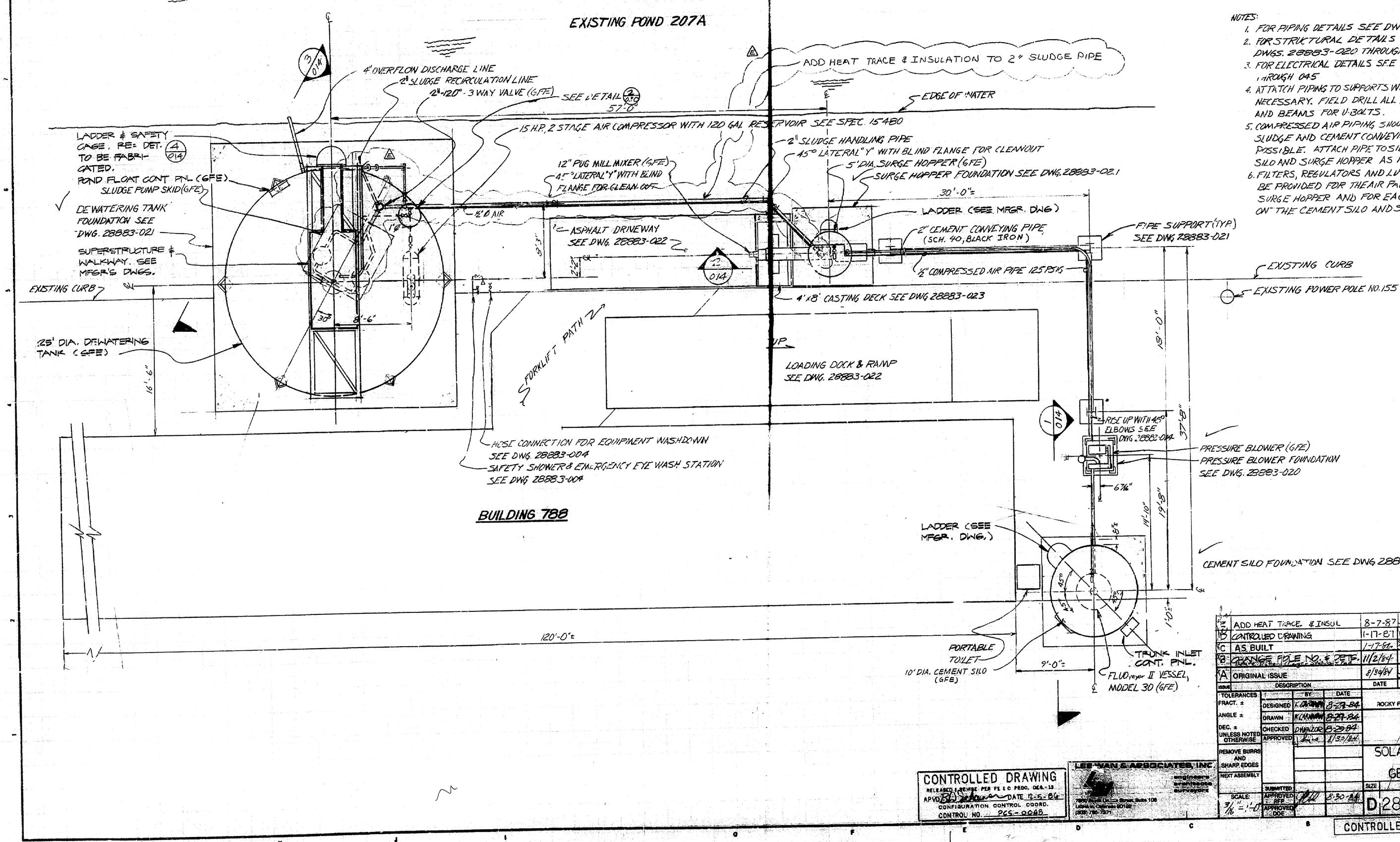

ISSUE	DESCRIPTION	DATE	RFP	DOE	CLASS	JOB NO.
D	ADD HEAT TRACE & INSUL	8-7-87	SS		SDS	576154
B	CONTROLED DRAWING	1-17-87	WC		RWP	470601
C	AS BUILT	1-17-86	JHN		RWP	440514
B	CHANGE FILE NO. & DETS.	11/2/84			RWP	440514
A	ORIGINAL ISSUE	8/29/84			RWP	440514

TOLERANCES		BY	DATE
FRACT. ±	DESIGNED		8-29-84
ANGLE ±	DRAWN		8-29-84
DEC. ±	CHECKED	DWA/JOE	8-29-84
UNLESS NOTED OTHERWISE	APPROVED		11/2/84
REMOVE BURRS AND SHARP EDGES			
NEXT ASSEMBLY			
	SUBMITTED		
	APPROVED RFP		8-30-84
SCALE: 3/16" = 1'-0"	APPROVED DOE		

U.S. DEPARTMENT OF ENERGY
ROCKY FLATS AREA OFFICE GOLDEN, COLORADO

Rockwell International
ROCKY FLATS PLANT
GOLDEN, COLORADO 80401

SOLAR EVAPORATION POND
BUILDING 788
GENERAL ARRANGEMENT

SIZE	DRAWING NUMBER	ISSUE	SHEET
D	28883-013	E	13 OF

788

CONTROLLED DRAWING
RELEASED REVISE PER FE I C PROC. DCN.-13
APVD. DATE 12-5-86
CONFIGURATION CONTROL COORD.
CONTROL NO. RCS-0068

LEE VAN & ASSOCIATES, INC.
ENGINEERS
ARCHITECTS
SURVEYORS
7800 South Clinton Street, Suite 108
Littleton, Colorado 80122
(303) 790-7271

CONTROLLED DRAWING

I101-A-000305
Pg 22

PART	QUAN.	DESCRIPTION	MATERIAL

DOOR SCHEDULE

DOOR NUMBER	DOOR SIZE	DOOR TYPE	DOOR FINISH	DOOR THRESHOLD	DOOR MATERIAL	FRAME TYPE	FRAME MATERIAL	FRAME HEAD	FRAME JAMB
1	3'-0"x7'-0"	B (A)	NOTE 1	WEATHER STRIP ALUMN.	HOLLOW METAL	1	PRESS. ST.	1	2
2	3'-0"x7'-0"	A	NOTE 1	WEATHER STRIP ALUMN.	HOLLOW METAL	1	PRESS. ST.	1	2
3	OPNG. 8'-0"x10'-0"	C	NOTE 2	DOOR GUIDE *	SEE SPECS.	–	–	–	–
4	OPNG. 8'-0"x10'-0"	C	NOTE 2	DOOR GUIDE *	SEE SPECS.	–	–	–	–
5 & 6	3'-0"x7'-0"	A	NOTE 1	WEATHER STRIP ALUMN.	HOLLOW METAL	1	PRESS. ST.	1	2

1. PRE ENGINEERED METAL BUILDING MANUFACTURER'S FINISH SEE SPECS.
2. MANUFACTURER'S STANDARD FINISH TO MATCH BUILDING SEE SPECS.

* DOOR GUIDE AS PER MANUFACTURER

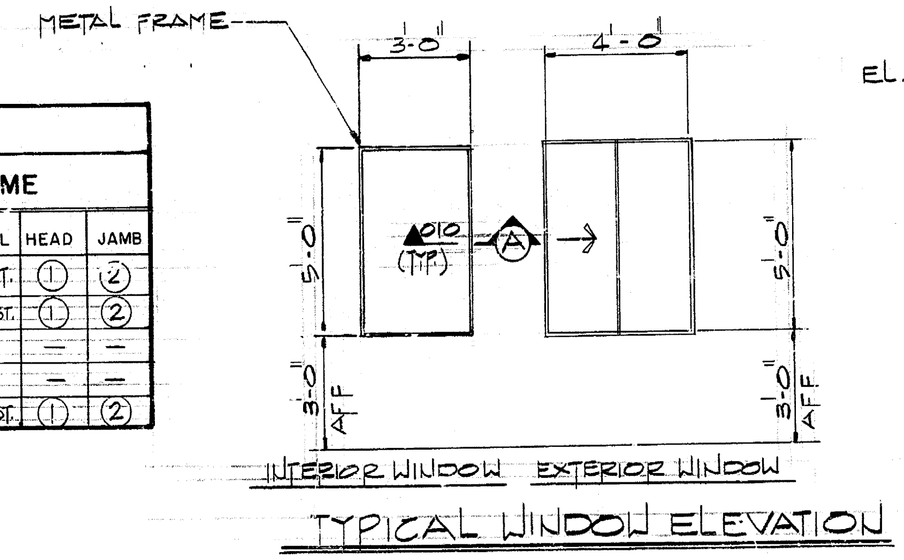

TYPICAL WINDOW ELEVATION

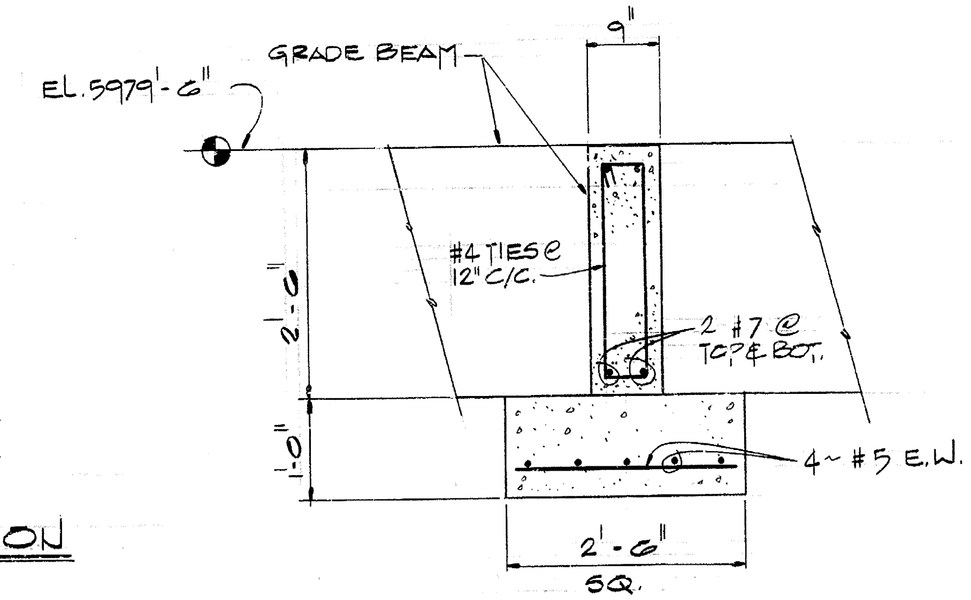

SECTION (F)
SCALE 1" = 1'-0" REF. DWG. 007
(TYP. 4 PLCS.)

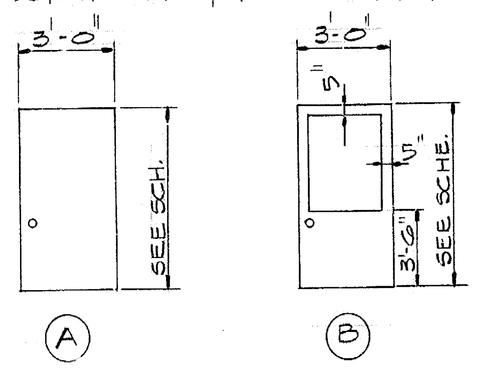

DOOR ELEVATIONS

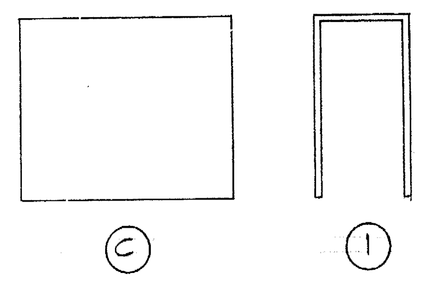

FRAME TYPE

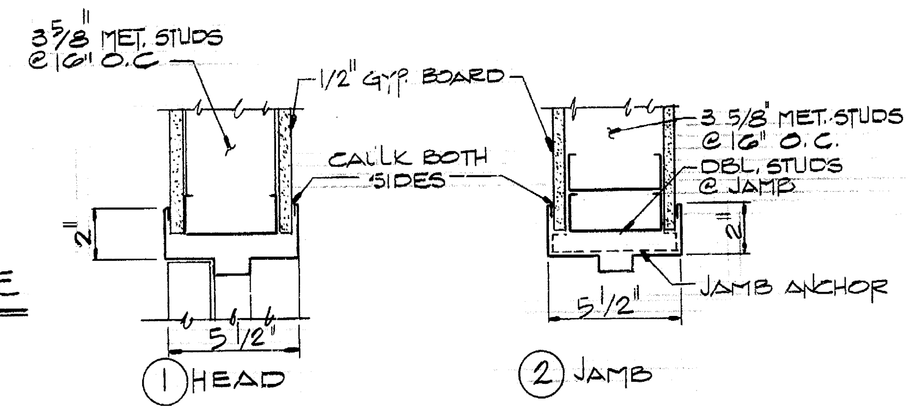

DOOR DETAILS

FINISH SCHEDULE

SPACE	FLOOR	FINISH	BASE	FINISH	WALL	FINISH	REMARKS
101	CONC.	VAT.	COVED	RUBBER	GYP. BD.	PAINT	
102	CONC.	VAT.	COVED	RUBBER	GYP. BD.	PAINT	

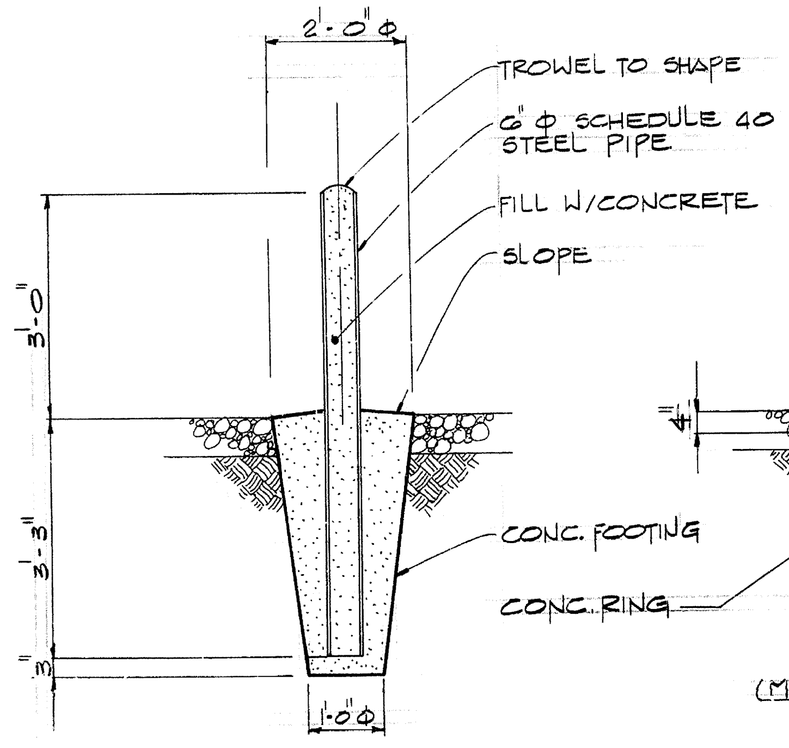

PIPE GUARD DETAIL (1) 007
SCALE: 1" = 1'-0"

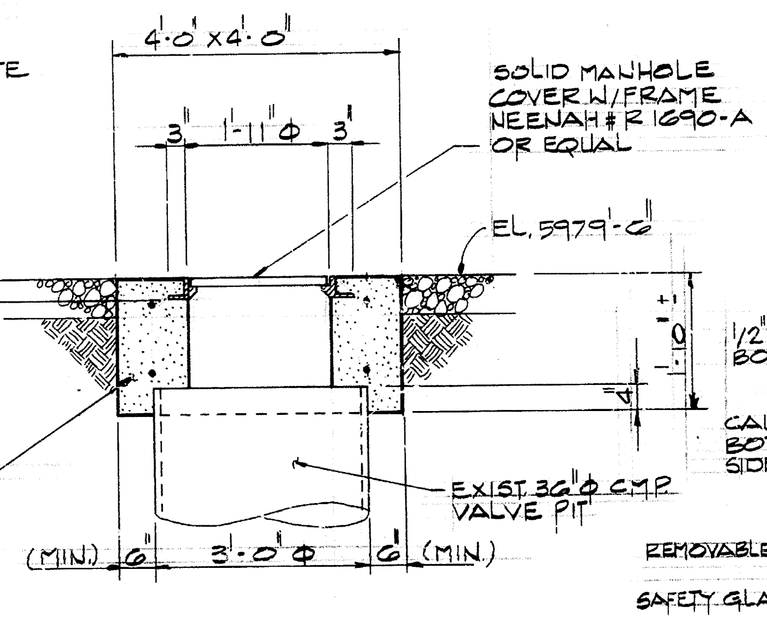

VALVE PIT DETAIL
SCALE: 3/4" = 1'-0"

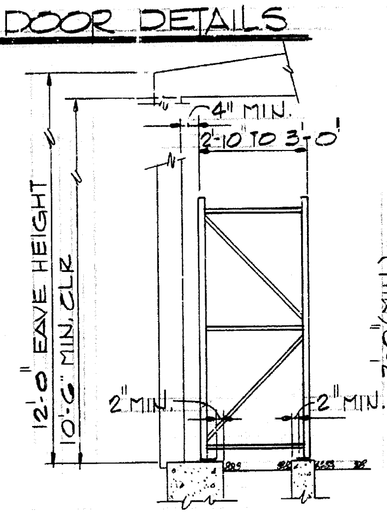

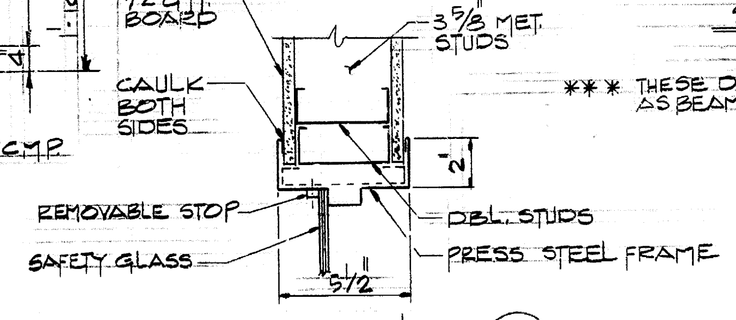

SECTION (A) 010
3" = 1'-0"

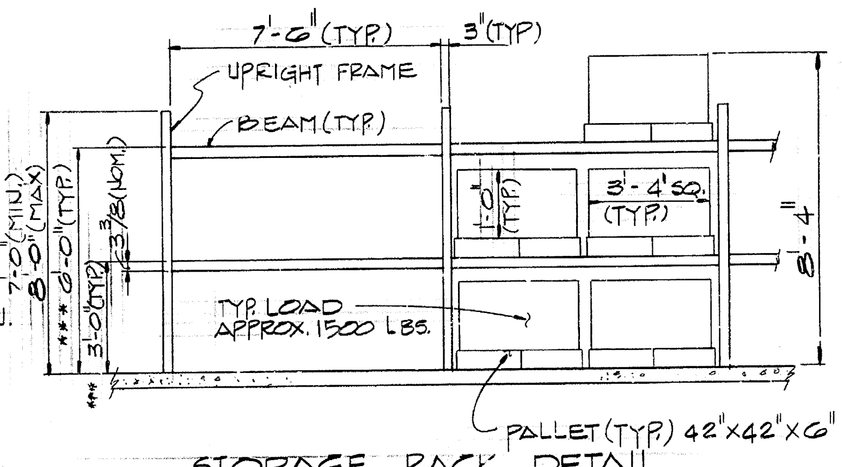

STORAGE RACK DETAIL
3/8" = 1'-0"

*** THESE DIMENSIONS CAN VARY AS BEAMS CAN BE ADJUSTED

LEGEND

VAT. VINYL ASBESTOS TILE
GYP. BD. GYPSUM BOARD
CONC. CONCRETE

ISSUE	DESCRIPTION	DATE	RFP	DOE	CLASS	JOB NO.
C	AS BUILT	1-17-86				440514
B	REVISE #1 DOOR TYPE	10/12/84				440514
A	ORIGINAL ISSUE	7-18-84				440514

TOLERANCES		BY	DATE
FRACT. ±	DESIGNED	JONEJA	6/14/84
ANGLE ±	DRAWN	Fernandez	6/14/84
DEC. ±	CHECKED	Jonaya	6/14/84
UNLESS NOTED OTHERWISE	APPROVED	LINES	7-3-84
REMOVE BURRS AND SHARP EDGES			
NEXT ASSEMBLY			
	SUBMITTED		
SCALE: As Noted	APPROVED RFP		7-18-84
	APPROVED DOE		

LEE WAN & ASSOCIATES, INC.
engineers architects surveyors
7950 South Lincoln Street, Suite 106
Littleton, Colorado 80122
(303) 795-7371

U.S. DEPARTMENT OF ENERGY
ROCKY FLATS AREA OFFICE GOLDEN, COLORADO

Rockwell International
ROCKY FLATS PLANT
GOLDEN, COLORADO 80401

SOLAR EVAPORATION POND BUILDING 788
DOOR SCHEDULE & DETAILS

SIZE	DRAWING NUMBER	ISSUE	SHEET
D	28883-010	C	10 OF

© U.S. GOVERNMENT PRINTING OFFICE: 1984-777-047

I101-A-000305
Pg 21

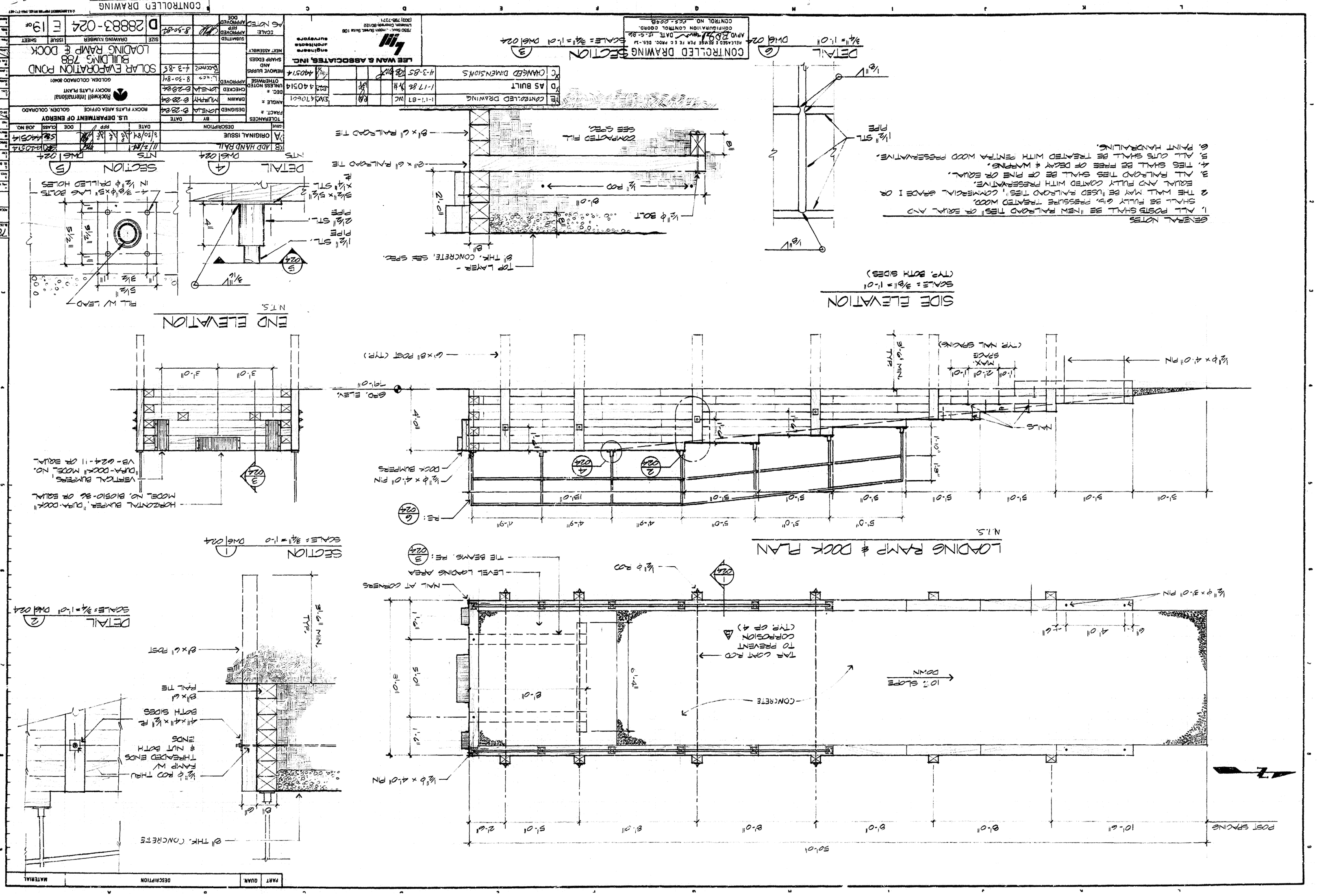
LOADING RAMP & DOCK PLAN
N.T.S.
POST SPACING
50'-0"
10'-6"
8'-0"
8'-0"
8'-0"
5'-0"
2'-6"
8'-0"
10½° SLOPE DOWN
CONCRETE
TAR COAT RCD TO PREVENT CORROSION (TYP. CP 4)
½"ϕ ROD
½"ϕ × 3'-0" PIN
½"ϕ × 4'-0" PIN
NAIL AT CORNERS
LEVEL LOADING AREA
TIE BEAMS, RE: 3/024
SECTION 1/024
SCALE: ¾" = 1'-0"
DETAIL 2/024
SCALE: ¾" = 1'-0"
8" THK. CONCRETE
½"ϕ ROD THRU RAMP W/ THREADED ENDS & NUT BOTH ENDS
4" × 4" × ½" PL BOTH SIDES
8" × 8" RAIL TIE
8" × 8" POST
8'-0" MIN. TYP.
SIDE ELEVATION
SCALE: ¾" = 1'-0"
(TYP. BOTH SIDES)
TOP LAYER - 8" THK. CONCRETE, SEE SPEC.
½"ϕ BOLT
½"ϕ ROD
8" × 8" RAILROAD TIE
COMPACTED FILL SEE SPEC.
DETAIL 3/024
SCALE: ¾" = 1'-0"
½" STL PIPE
DETAIL 4/024
NTS
½" STL PIPE
2½" STL PIPE
¾" × 5½" STL
FILL W/ LEAD
4 - ¾"ϕ × 5" LAG BOLTS IN ½"ϕ DRILLED HOLES
SECTION 5/024
NTS
END ELEVATION
NTS
3'-0"
3'-0"
HORIZONTAL BUMPER, "DURA-DOCK" MODEL NO. B1051O-3G OR EQUAL
VERTICAL BUMPERS, "DURA-DOCK" MODEL NO. VB-G24-11 OR EQUAL
DOCK BUMPERS
½"ϕ × 4'-0" PIN
RE: 6/024
GRD. ELEV. 19'-0"
4'-0"
8" × 8" POST (TYP.)
½"ϕ × 4'-0" PIN
MAX. SPACE 2'-0"
1'-0"
7'-0" MIN. TYP.
NAILS
(TYP. NAIL SPACING)
CONTROLLED DRAWING
SCALE: ¾" = 1'-0"
DWG 024
CONTROLLED DRAWING
SCALE: ¾" = 1'-0"
DWG 024
APPROVED BY: DATE: 12-5-86
CONFIGURATION CONTROL COORD.
CONTROL NO. CES-0048
CONTROLLED DRAWING
I101-A-000 SH 1 of 27
LEE WAN & ASSOCIATES, INC.
engineers architects surveyors
7530 South Lincoln Street, Suite 108
Littleton, Colorado 80122
(303) 795-7371
SOLAR EVAPORATION POND BUILDING 788 LOADING RAMP & DOCK
Rockwell International
ROCKY FLATS PLANT
GOLDEN, COLORADO 80401
U.S. DEPARTMENT OF ENERGY
ROCKY FLATS AREA OFFICE GOLDEN, COLORADO
ORIGINAL ISSUE
ADD HAND RAIL
CONTRACTED DRAWING
AS BUILT
CHANGED DIMENSIONS
D 28883-024 E 19
PART QUAN. DESCRIPTION MATERIAL

PART	QUAN.	DESCRIPTION	MATERIAL

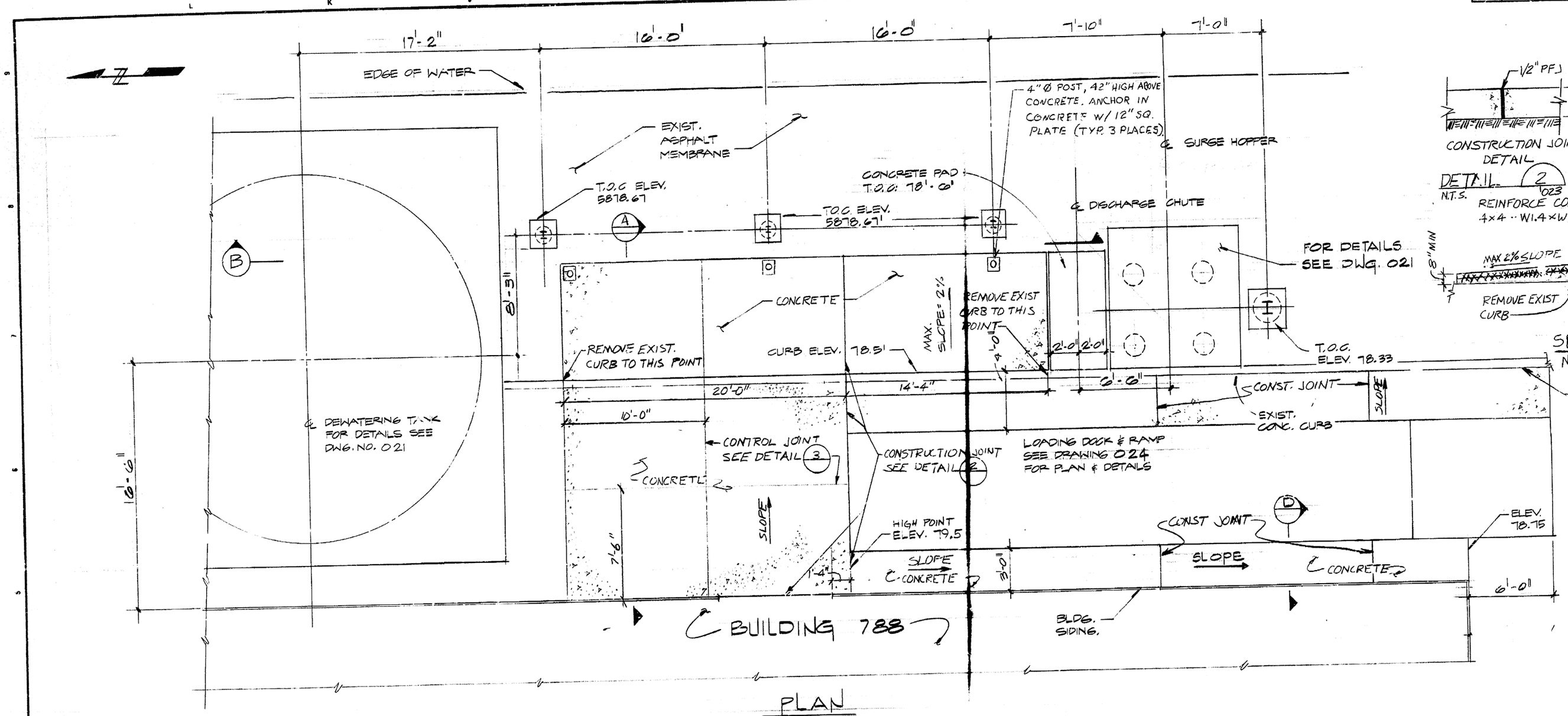

PLAN
1/4" = 1'-0"

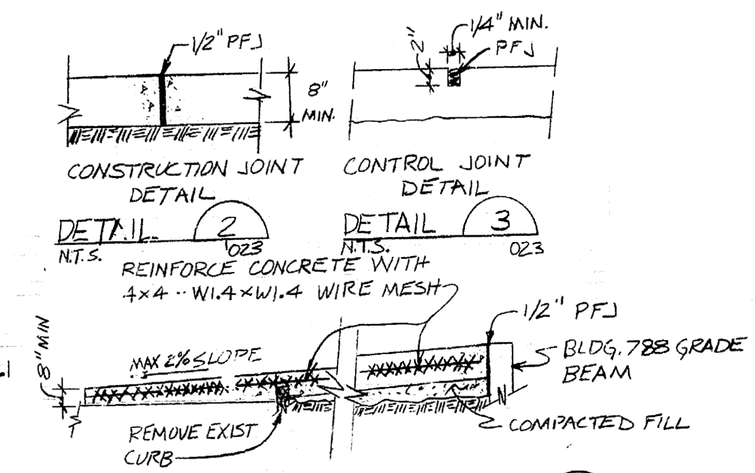

SECTION A 023
N.T.S.

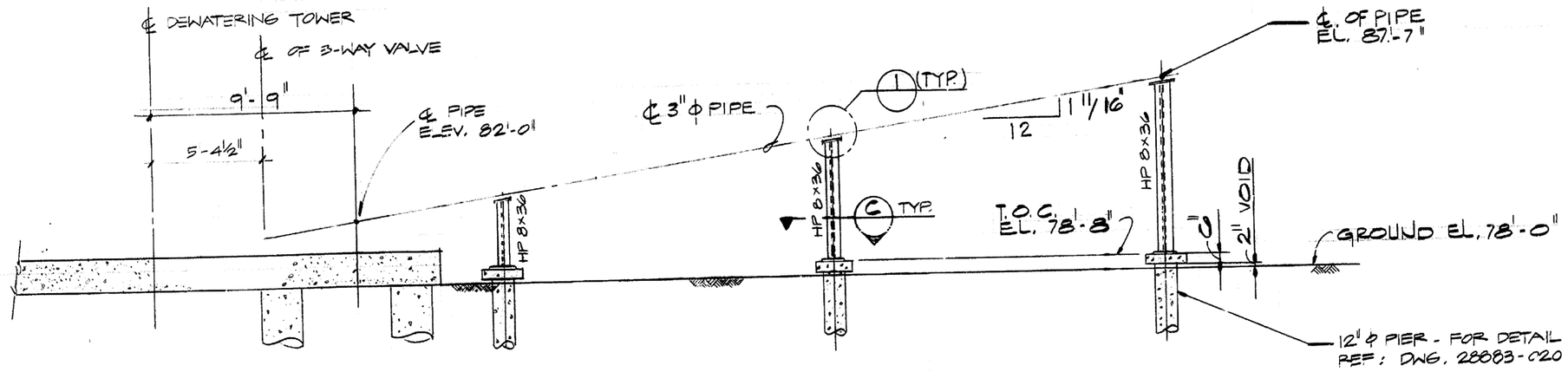

SECTIONAL ELEVATION B 023
1/4" = 1'-0"

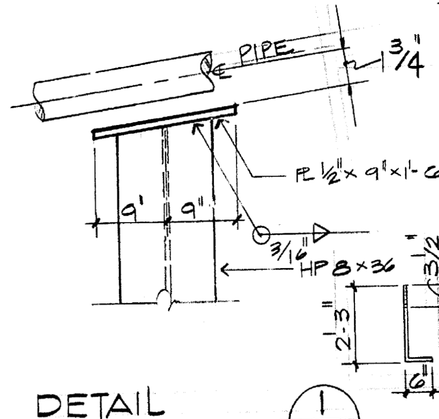

DETAIL 1 023
1 1/2" = 1'-0"

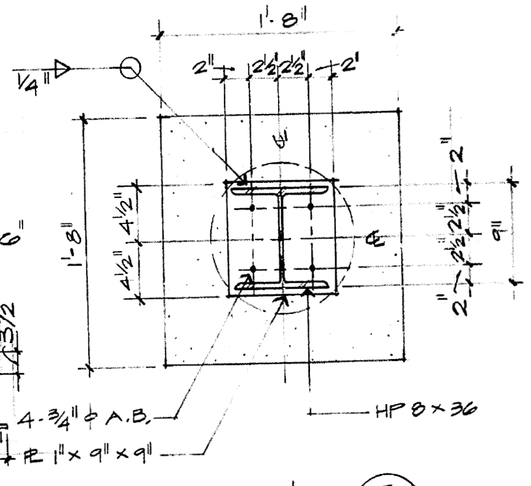

SECTION C 023
1 1/2" = 1'-0"

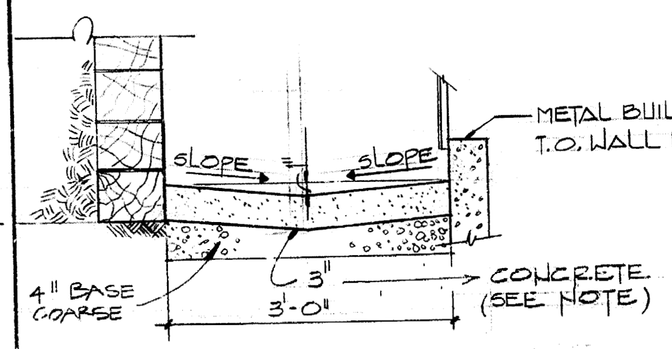

SECTION D 023
1" = 1'-0"

NOTE
1. MAXIMUM CONCRETE THICKNESS SHALL NOT EXCEED 8 INCHES.

ISSUE	DESCRIPTION	DATE	BY							
B	DESIGN BATTER RIB PAT. MAT'L CHANGE DIM. SLOPE ELEV. ETC.	11/1/89							89	440514
A	ORIGINAL ISSUE	8/30/84							84	440514

TOLERANCES	BY	DATE
FRACT. ±	DESIGNED JONES	8-29-84
ANGLE ±	DRAWN TEP	8-29-84
DEC. ± UNLESS NOTED OTHERWISE	CHECKED JONES	8-29-84
REMOVE BURRS AND SHARP EDGES	APPROVED	8/30/84
NEXT ASSEMBLY		4/3/85
	SUBMITTED	
SCALE: AS NOTED	APPROVED RFP	8-30-84
	APPROVED DOE	

U.S. DEPARTMENT OF ENERGY
ROCKY FLATS AREA OFFICE GOLDEN, COLORADO

Rockwell International
ROCKY FLATS PLANT
GOLDEN, COLORADO 80401

SOLAR EVAPORATION POND
BUILDING 788
PIPE SUPPORT & DETAILS

SIZE	DRAWING NUMBER	ISSUE	SHEET
D	28883-023	D	18 OF

D	AS BUILT	1-17-86				86	440514
C	CHANGED ASPHALT + GRAVEL TO CONC. + WIDTH OF RAMP	4/3/85				85	440514

LEE WAN F. ASSOCIATES, INC.
engineers
architects
surveyors
7950 South Lincoln Street, Suite 106
Littleton, Colorado 80122
(303) 795-7371

☆ U.S. GOVERNMENT PRINTING OFFICE: 1984-777-427

I101-A-000305
P 26

PART	QUAN.	DESCRIPTION	MATERIAL

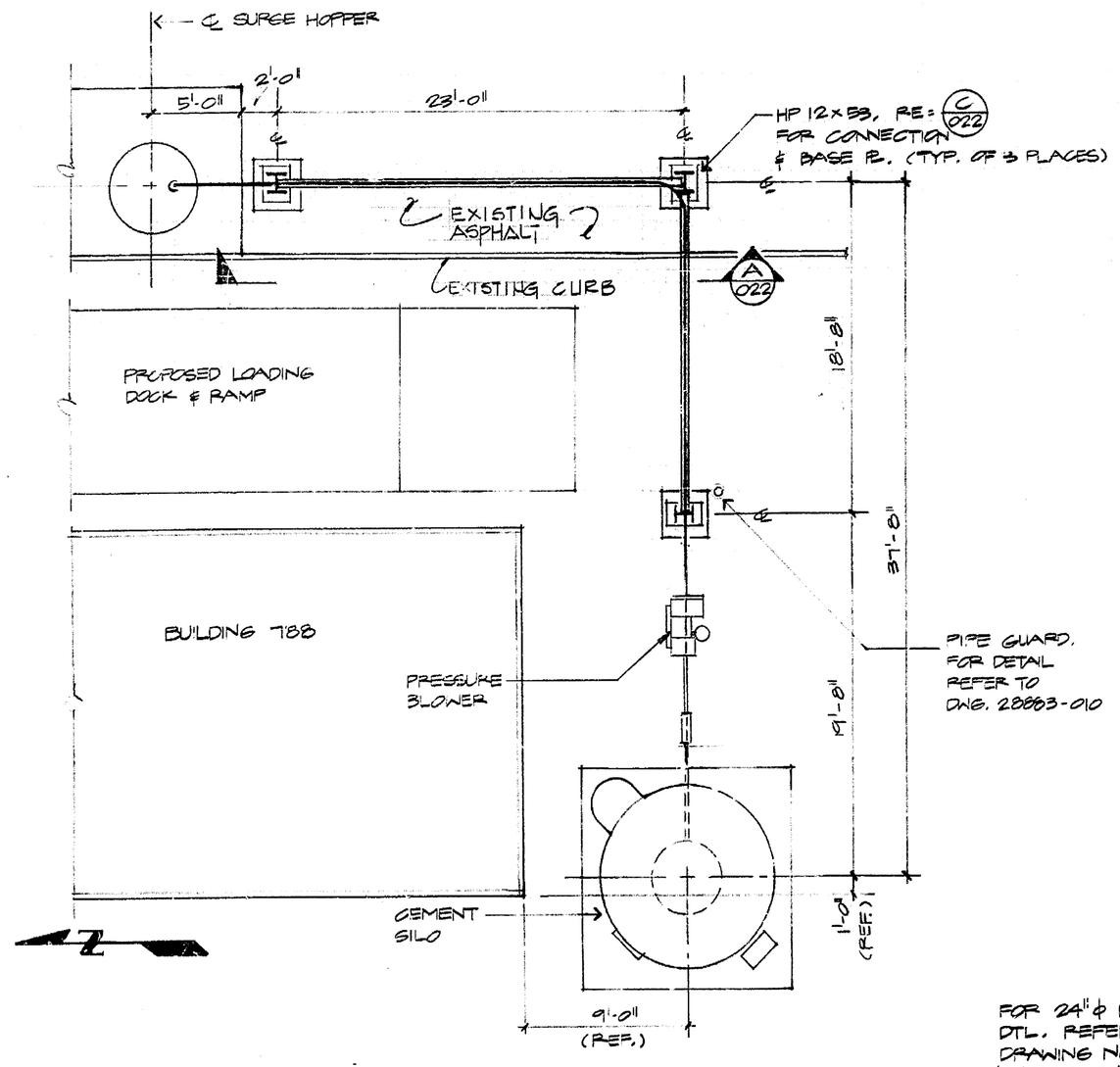

PIPE SUPPORT PLAN

3/16" = 1'-0"

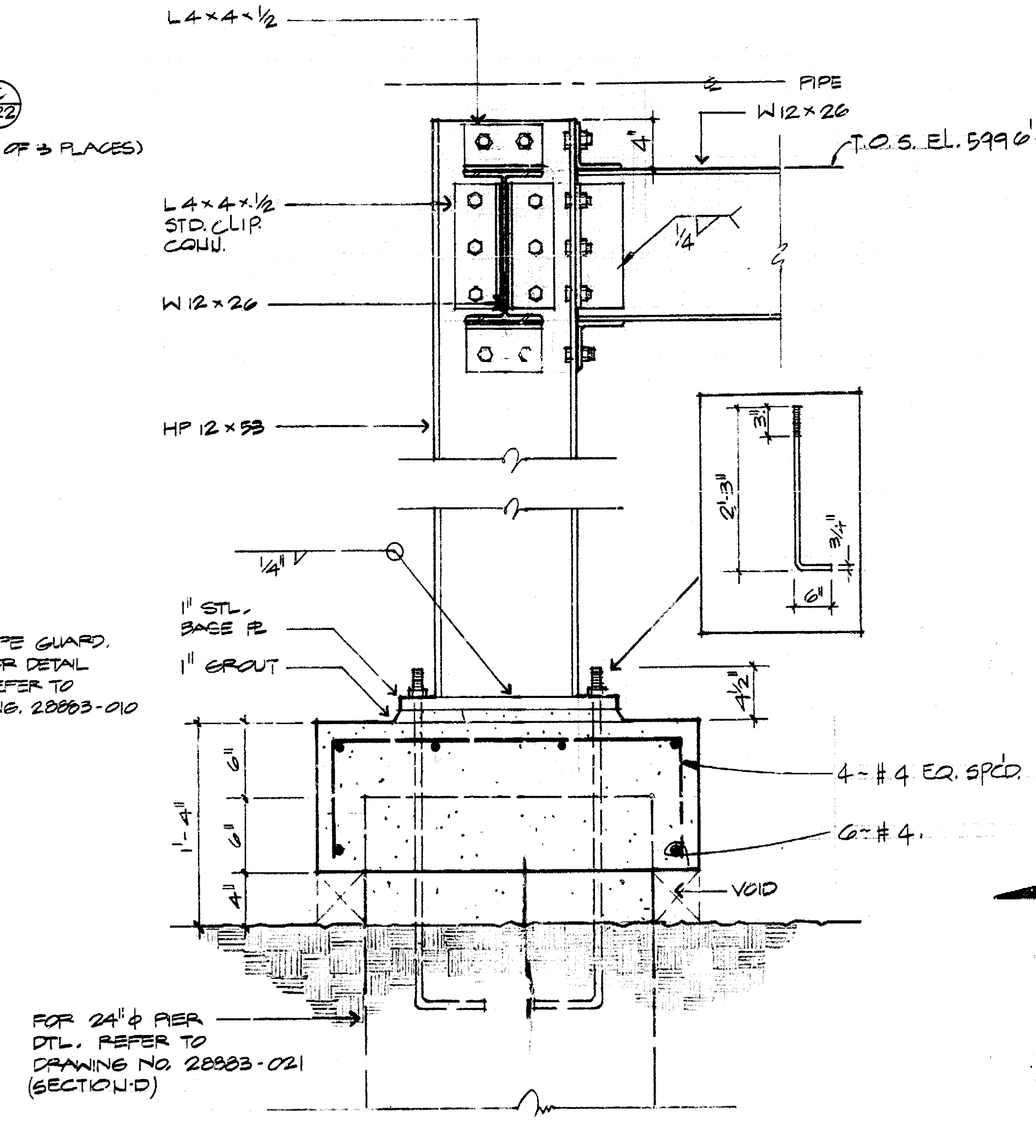

SECTION B

SCALE: 1½" = 1'-0" DWG 022

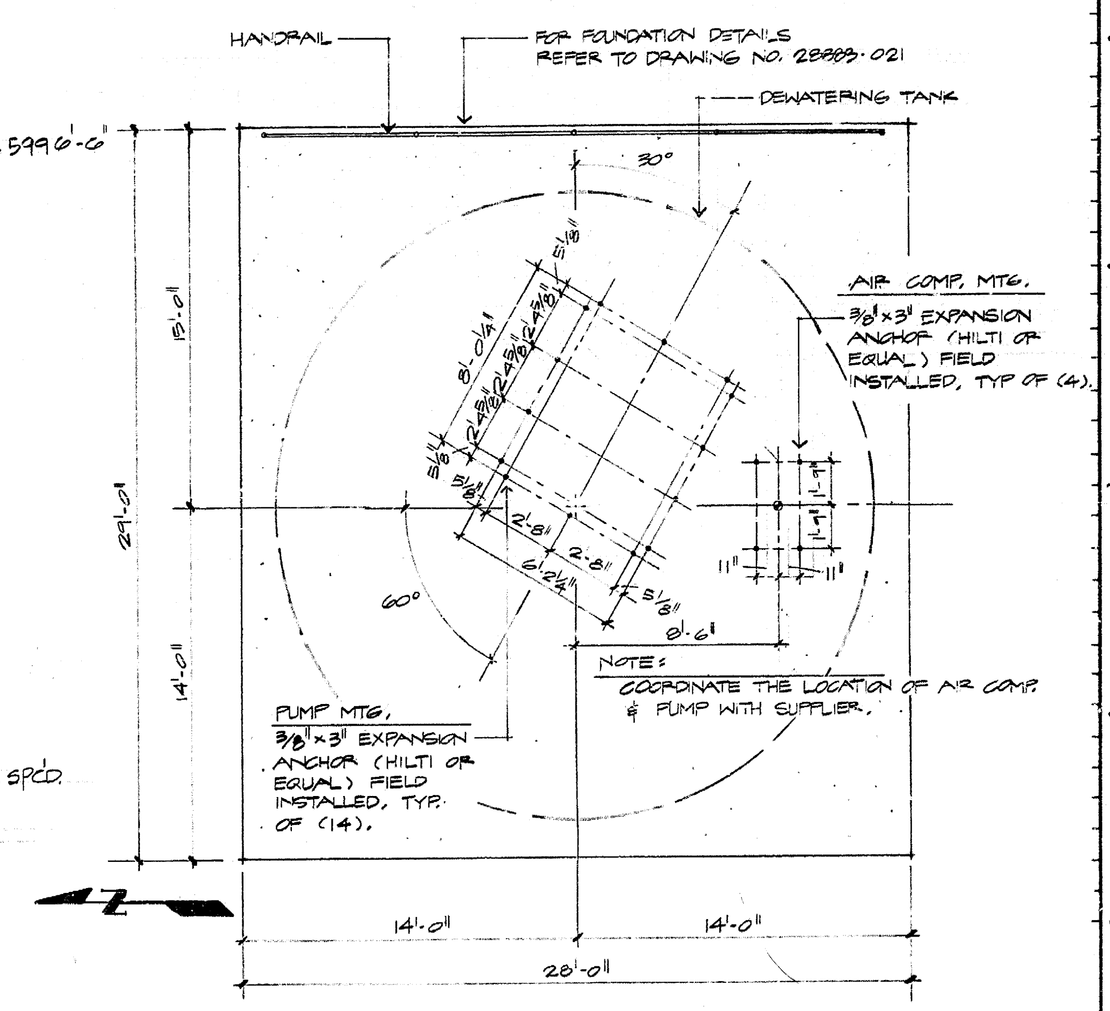

ANCHOR BOLT LOCATIONS FOR SLUDGE PUMP & AIR COMPRESSOR

SCALE = ¼" = 1'-0"

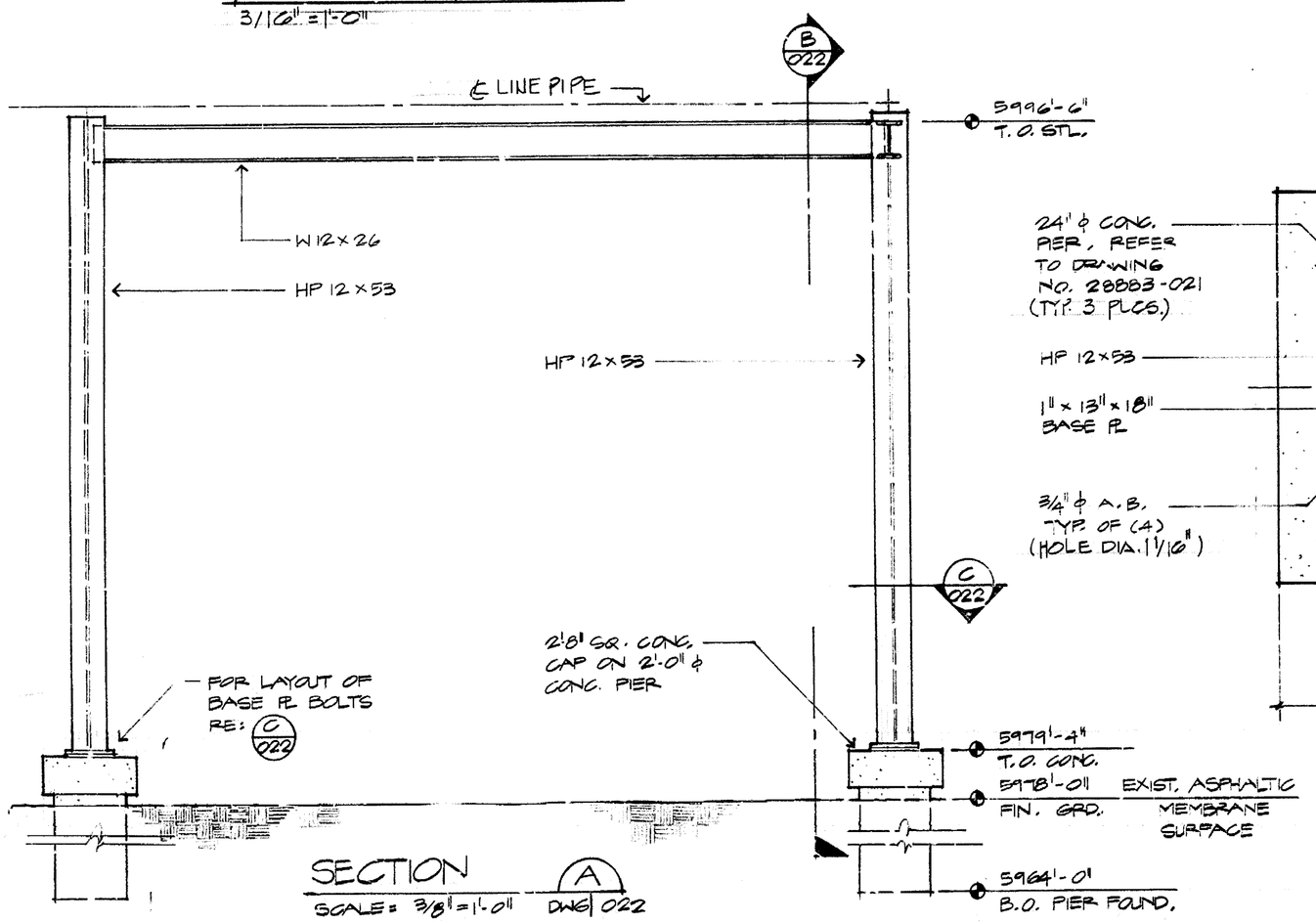

SECTION A

SCALE = 3/8" = 1'-0" DWG 022

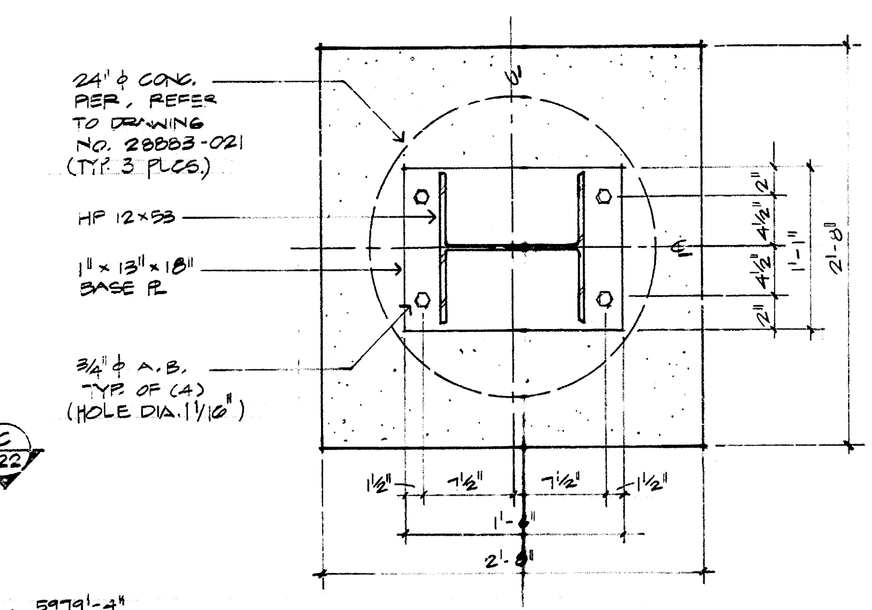

SECTION C

SCALE: 1½" = 1'-0" DWG 022

NOTES:

1. FASTENER SHALL BE OF ¾" ϕ A325 BOLTS.
2. CONNECTION SHALL BE OF BEARING TYPE.
3. ASPHALT MEMBRANE SHALL BE REMOVED PRIOR TO FOUNDATION EXCAVATION
4. ALL CORNERS & EDGES SHALL BE CHAMFERED ¾"
5. PIPE SUPPORTS ARE DESIGNED FOR THE FOLLOWING SEISMIC LOADS:
   HORIZONTAL = 21 g
   VERTICAL = 14 g

ISSUE	DESCRIPTION	DATE	RFP	DOE	CLASS	JOB NO.
D	CONTROLLED DRAWING	1-17-87	WC	RJD	RR	470601
C	AS BUILT	1-17-86	WW	WP	RR	440514
B	REV. NOTES & DETAILS	11/1/84		MM	RR	440514
A	ORIGINAL ISSUE	8/30/84	WP	WP	RR	440514

TOLERANCES		BY	DATE
FRACT ±	DESIGNED	LONELA	8-15-84
ANGLE ±	DRAWN	MURPHY	8-15-84
DEC. ±	CHECKED	LONELA	8-23-84
UNLESS NOTED OTHERWISE	APPROVED	LONELA	8/30/84
REMOVE BURRS AND SHARP EDGES			
NEXT ASSEMBLY			
	SUBMITTED		
SCALE: AS NOTED	APPROVED RFP		8-30-84
	APPROVED DOE		

U.S. DEPARTMENT OF ENERGY
ROCKY FLATS AREA OFFICE GOLDEN, COLORADO

Rockwell International
ROCKY FLATS PLANT
GOLDEN, COLORADO 80401

SOLAR EVAPORATION POND BUILDING 788
PIPE SUPPORT PLAN & DETAILS

SIZE	DRAWING NUMBER	ISSUE	SHEET
D	28883-022	D	17 OF

CONTROLLED DRAWING
RELEASED & REVISE PER FE & O PROC. DES.-13
APVD. B.D. Schauer DATE 12-5-86
CONFIGURATION CONTROL COORD.
CONTROL NO. FCS-0048

LEE WAN & ASSOCIATES, INC.
engineers
architects
surveyors
7950 South Lincoln Street, Suite 106
Littleton, Colorado 80122
(303) 795-7371

CONTROLLED DRAWING

788 BLDG. F.L.
ROCKY AREA

I101-A-000305
Pg 25

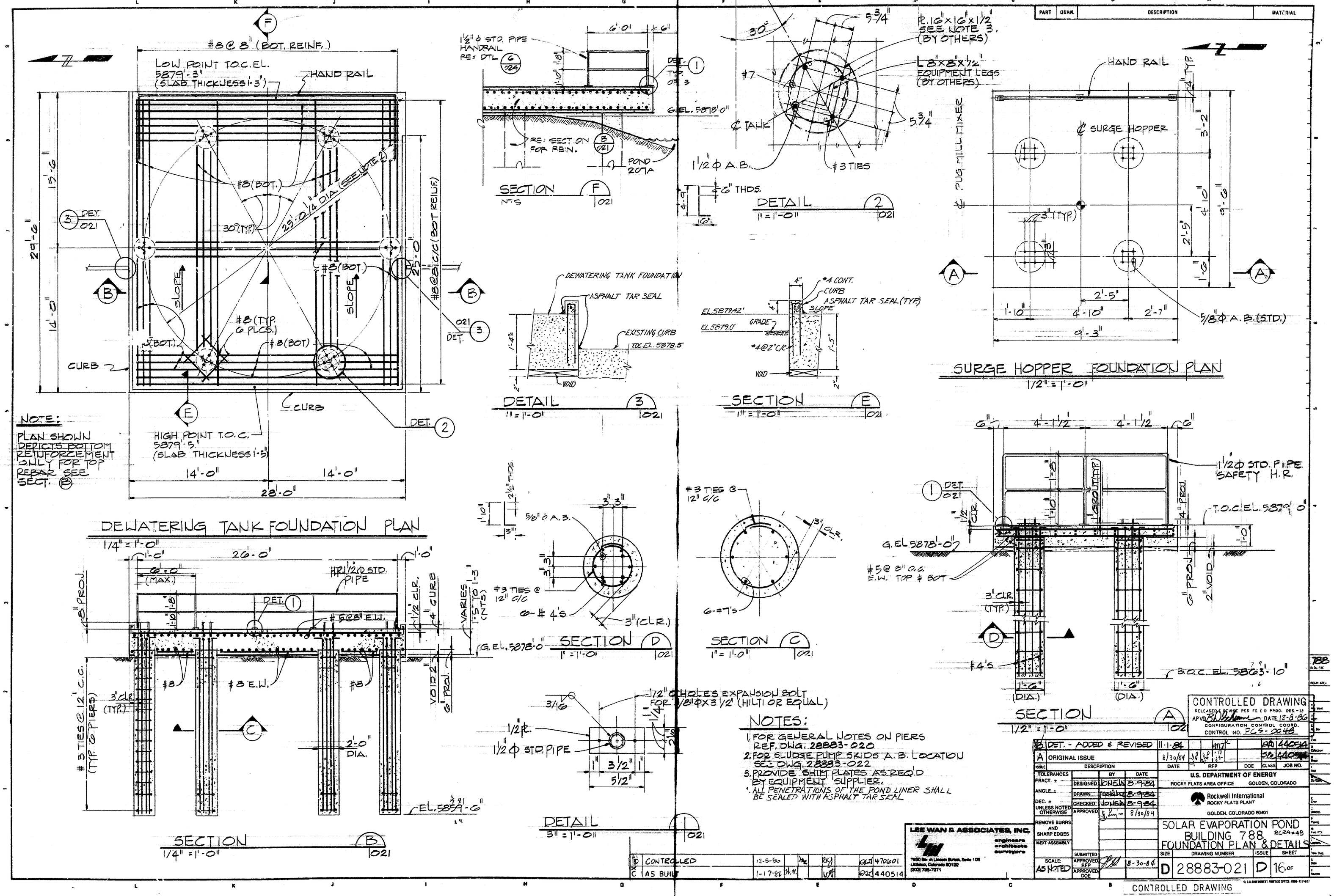

NOTES:

1. FOR GENERAL NOTES ON PIERS REF. DWG. 28883-020
2. FOR SLUDGE PUMP SKIDS A.B. LOCATION SEE DWG. 28883-022
3. PROVIDE SHIM PLATES AS REQ'D BY EQUIPMENT SUPPLIER.
4. ALL PENETRATIONS OF THE POND LINER SHALL BE SEALED WITH ASPHALT TAR SEAL

PART	QUAN.	DESCRIPTION	MATERIAL

REV	DESCRIPTION	DATE	BY	CHK	APV	DATE	CLASS	JOB NO.
C	AS BUILT	1-17-81				12-6-80		440514
B	CONTROLLED	12-6-80						470601

LEE WAN & ASSOCIATES, INC.
engineers architects surveyors
7650 Dry Creek Lincoln Street, Suite 105
Littleton, Colorado 80122
(303) 795-7371

ISSUE	DESCRIPTION	DATE	RFP	DOE	CLASS	JOB NO.
	DET. - ADDED & REVISED	11-1-81				
A	ORIGINAL ISSUE	8/30/84				

TOLERANCES UNLESS NOTED OTHERWISE: FRACT. ± ; ANGLE ± ; DEC. ± ; REMOVE BURRS AND SHARP EDGES ; NEXT ASSEMBLY

	BY	DATE
DESIGNED	JONEIA	8-9-84
DRAWN		8-9-84
CHECKED	JONEIA	8-9-84
APPROVED		8/30/84
SUBMITTED		
APPROVED REP		8-30-84
APPROVED DOE		

SCALE: AS NOTED

U.S. DEPARTMENT OF ENERGY
ROCKY FLATS AREA OFFICE GOLDEN, COLORADO

Rockwell International
ROCKY FLATS PLANT
GOLDEN, COLORADO 80401

SOLAR EVAPORATION POND
BUILDING 788
FOUNDATION PLAN & DETAILS

SIZE	DRAWING NUMBER	ISSUE	SHEET
D	28883-021	D	16 OF

CONTROLLED DRAWING
RELEASED REVISE PER FE E O PROC. DES.-12
APVD DATE 12-8-86
CONFIGURATION CONTROL COORD.
CONTROL NO. PCS-0048

CONTROLLED DRAWING

I101-A-000305
Pg 24

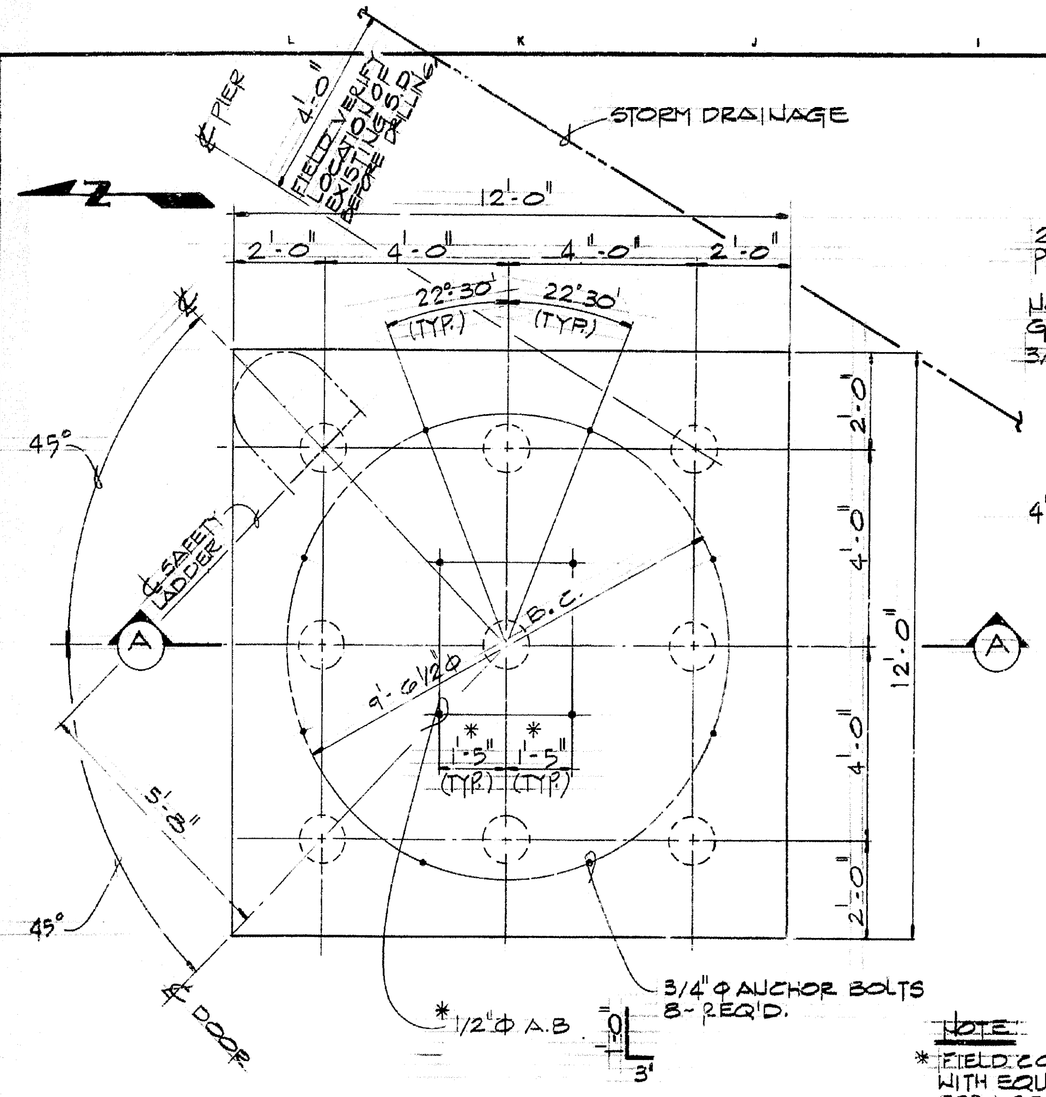

CEMENT SILO FOUNDATION PLAN
SCALE: 1/2" = 1'-0"

NOTE:
* FIELD COORDINATE WITH EQUIPMENT SUPPLIER FOR LOCATION & SIZE OF ANCHOR BOLTS
ALL ANCHOR BOLTS OF MATERIAL ASTM A 307

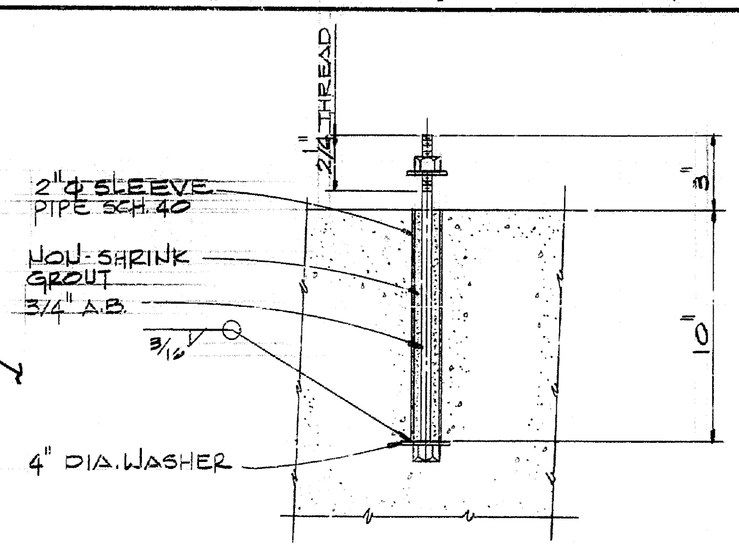

DETAIL 1
SCALE: 3" = 1'-0" 020

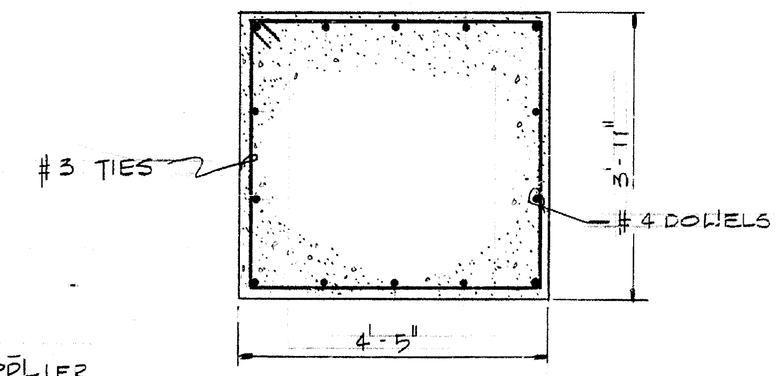

SECTION C
3/4" = 1'-0"

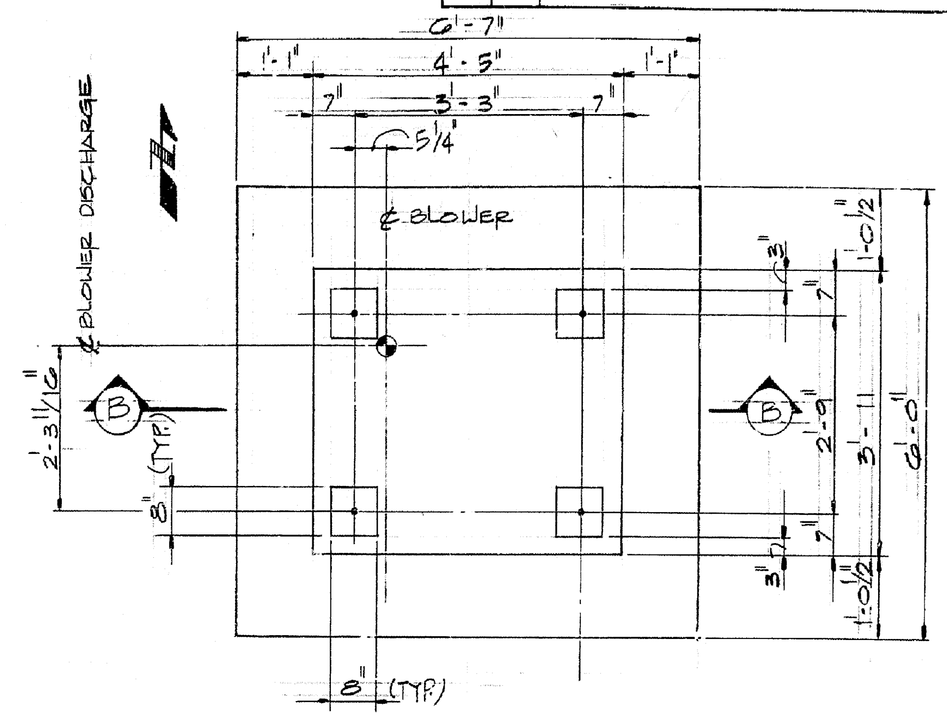

PRESSURE BLOWER FOUNDATION PLAN
3/4" = 1'-0"

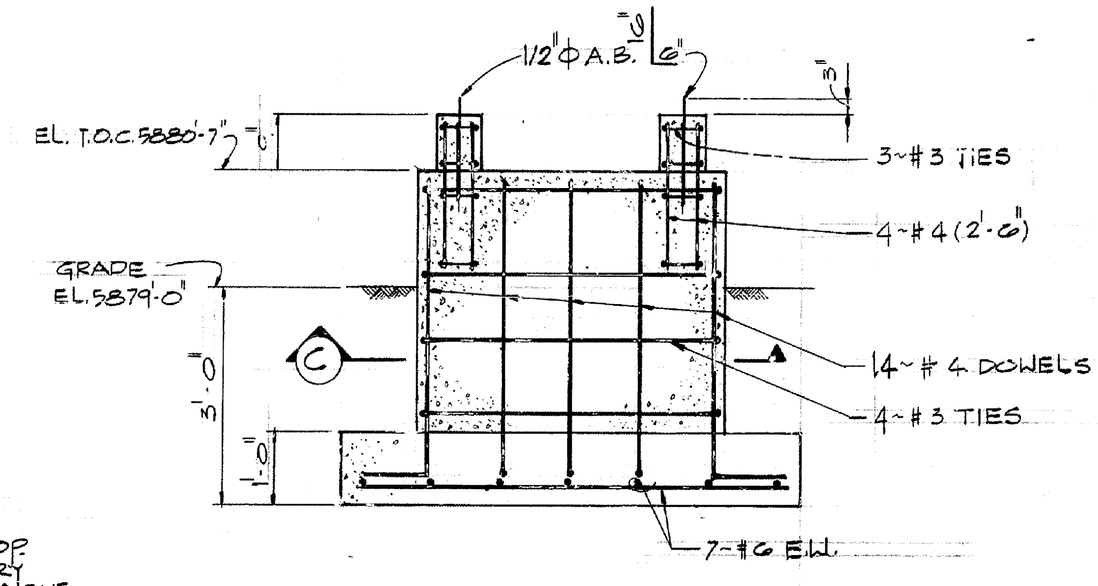

SECTION B
3/4" = 1'-0" 020

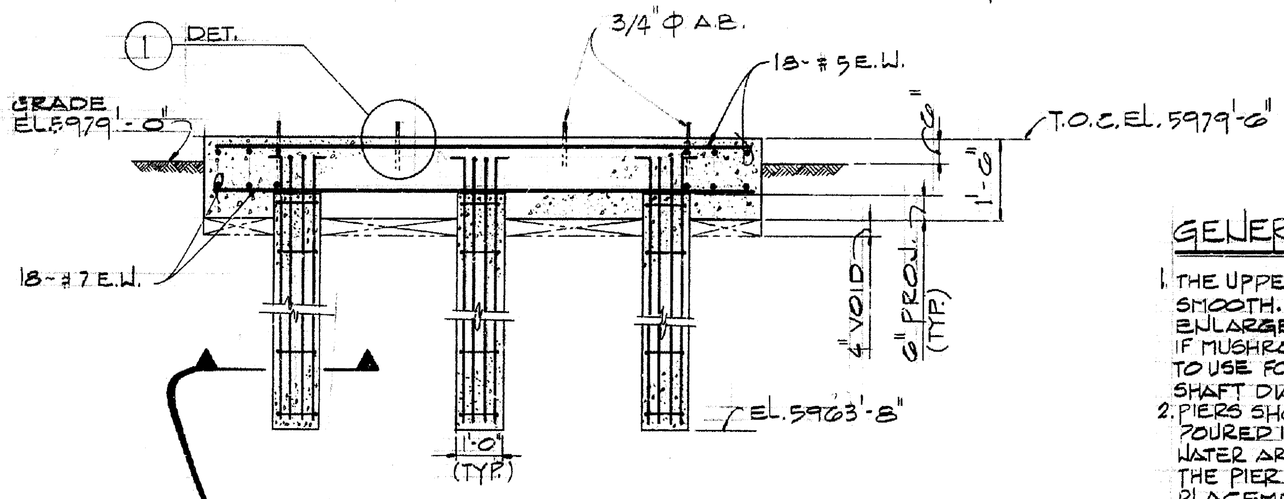

SECTION A
SCALE: 1/2" = 1'-0" 020

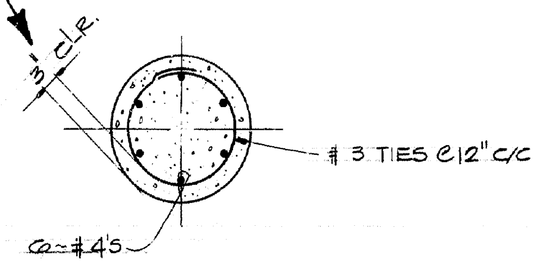

GENERAL NOTES FOR PIERS

1. THE UPPER PORTIONS OF THE PIERS SHOULD BE KEPT SMOOTH. CARE SHOULD BE TAKEN TO AVOID ENLARGEMENT (MUSHROOMING) OF THE PIERS AT THE TOP. IF MUSHROOMING OCCURS, THEN IT WILL BE NECESSARY TO USE FORMS, SUCH AS SONOTUBE, TO CONSTRUCT STRAIGHT SHAFT DIAMETER PIERS.
2. PIERS SHOULD BE CLEANED OF ALL LOOSE MATERIALS AND POURED IMMEDIATLY AFTER DRILLING. IF MORE THAN 2" OF WATER ARE PRESENT AT THE BOTTOM OF THE PIER HOLE, THEN THE PIER SHOULD BE DEWATERED PRIOR TO CONCRETE PLACEMENT.
3. DRILLING OPERATION OF PIERS SHOULD BE INSPECTED BY THE SOIL ENGINEER AND TO FOLLOW THE SOIL RECOMENDATION AS PER SOIL REPORT OF JUNE 14 1984.

PART	QUAN.	DESCRIPTION	MATERIAL

ISSUE	DESCRIPTION	DATE	RFP	DOE	CLASS	JOB NO.
E	CONTROLLED	12-8-86				470601
D	AS BUILT	1-17-86				440514
C	CHANGED NOTES, ADDED SECTION MARK, N-ARROW	11/2/84				440514
B	REV. FOUNDATION					440514
A	ORIGINAL ISSUE	8/30/84				440514

TOLERANCES: FRACT ±, ANGLE ±, DEC. ±, UNLESS NOTED OTHERWISE; REMOVE BURRS AND SHARP EDGES; NEXT ASSEMBLY

	BY	DATE
DESIGNED	D.V.E.	8-7-84
DRAWN	Fernandez	8-7-84
CHECKED	D.V.E.	8-8-84
APPROVED		8/30/84
SUBMITTED		
APPROVED REP		8-30-84
APPROVED DOE		

SCALE: AS NOTED

U.S. DEPARTMENT OF ENERGY
ROCKY FLATS AREA OFFICE GOLDEN, COLORADO

Rockwell International
ROCKY FLATS PLANT
GOLDEN, COLORADO 80401

SOLAR EVAPORATION POND BUILDING 788 FOUNDATION PLAN & DETAILS

SIZE	DRAWING NUMBER	ISSUE	SHEET
D	28883-020	E	15 OF

CONTROLLED DRAWING
RELEASED & REVISE PER FS & C PROC. DES-13
APVD. B. Williams DATE 12-8-86
CONFIGURATION CONTROL COORD.
CONTROL NO. PCS-0048

LEE WAN & ASSOCIATES, INC.
engineers architects surveyors
7950 South Lincoln Street, Suite 106
Littleton, Colorado 80122
(303) 795-7371

CONTROLLED DRAWING

I101-A-000305
A23

PART	QUAN.	DESCRIPTION	MATERIAL

LEGEND

- SAFETY SHOWER & EYE WASH
- HOSE CONNECTION
- FILTER, REGULATOR, LUBRICATOR ASSEMBLY
- BALL VALVE
- GFE — GOVERNMENT FURNISHED EQUIPMENT

NOTES:

1. FOR PIPING DETAILS SEE DWG. 28883-030
2. FOR STRUCTURAL DETAILS SEE DWGS. 28883-020 THROUGH 023
3. FOR ELECTRICAL DETAILS SEE DWGS 28883-040 THROUGH 045
4. ATTATCH PIPING TO SUPPORTS WITH U-BOLTS AS NECESSARY. FIELD DRILL ALL HOLES IN PLATES AND BEAMS FOR U-BOLTS.
5. COMPRESSED AIR PIPING SHOULD FOLLOW SLUDGE AND CEMENT CONVEYING PIPE WHEREVER POSSIBLE. ATTACH PIPE TO SIDES OF CEMENT SILO AND SURGE HOPPER AS NECESSARY.
6. FILTERS, REGULATORS AND LUBRICATORS SHALL BE PROVIDED FOR THE AIR PAD ASSEMBLY ON THE SURGE HOPPER AND FOR EACH DUST COLLECTOR ON THE CEMENT SILO AND SURGE HOPPER

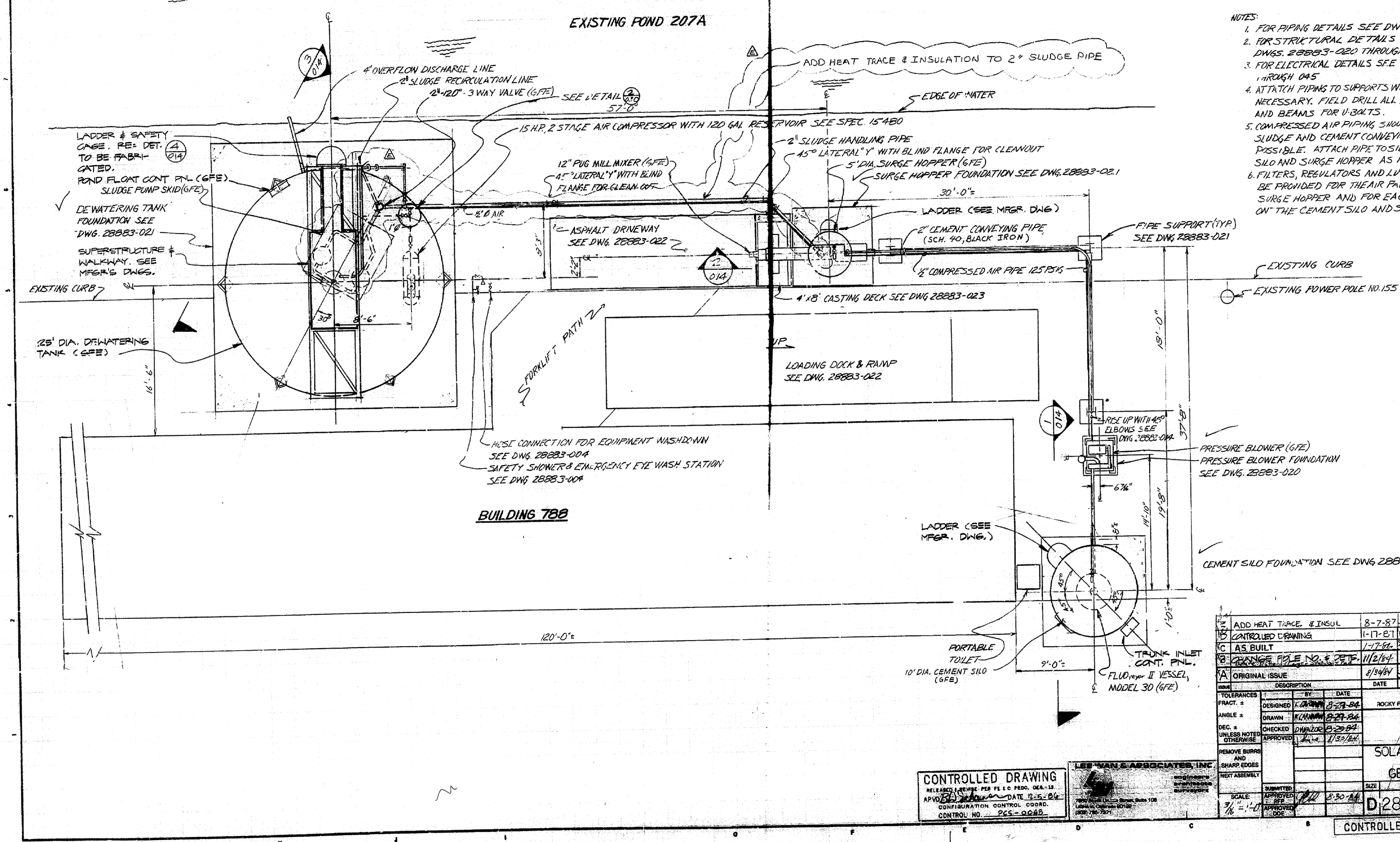

ISSUE	DESCRIPTION	DATE	RFP	DOE	CLASS	JOB NO.
D	ADD HEAT TRACE & INSUL	8-7-87	SS		SDS	576154
B	CONTROLED DRAWING	1-17-87	WC		RWP	470601
C	AS BUILT	1-17-86	JHN		RWP	440514
B	CHANGE FILE NO. & DETS.	11/2/84			RWP	440514
A	ORIGINAL ISSUE	8/29/84			RWP	440514

TOLERANCES		BY	DATE
FRACT. ±	DESIGNED		8-29-84
ANGLE ±	DRAWN		8-29-84
DEC. ±	CHECKED	DWA/JOE	8-29-84
UNLESS NOTED OTHERWISE	APPROVED		11/2/84
REMOVE BURRS AND SHARP EDGES			
NEXT ASSEMBLY			
	SUBMITTED		
	APPROVED RFP		8-30-84
SCALE: 3/16" = 1'-0"	APPROVED DOE		

U.S. DEPARTMENT OF ENERGY
ROCKY FLATS AREA OFFICE GOLDEN, COLORADO

Rockwell International
ROCKY FLATS PLANT
GOLDEN, COLORADO 80401

SOLAR EVAPORATION POND
BUILDING 788
GENERAL ARRANGEMENT

SIZE	DRAWING NUMBER	ISSUE	SHEET
D	28883-013	E	13 OF

788

CONTROLLED DRAWING
RELEASED REVISE PER FE I C PROC. DCN.-13
APVD. DATE 12-5-86
CONFIGURATION CONTROL COORD.
CONTROL NO. RCS-0068

LEE VAN & ASSOCIATES, INC.
ENGINEERS
ARCHITECTS
SURVEYORS
7800 South Clinton Street, Suite 108
Littleton, Colorado 80122
(303) 790-7271

CONTROLLED DRAWING

I101-A-000305
Pg 22

PART	QUAN.	DESCRIPTION	MATERIAL

DOOR SCHEDULE

DOOR NUMBER	DOOR SIZE	DOOR TYPE	DOOR FINISH	DOOR THRESHOLD	DOOR MATERIAL	FRAME TYPE	FRAME MATERIAL	FRAME HEAD	FRAME JAMB
1	3'-0"x7'-0"	B (A)	NOTE 1	WEATHER STRIP ALUMN.	HOLLOW METAL	1	PRESS. ST.	1	2
2	3'-0"x7'-0"	A	NOTE 1	WEATHER STRIP ALUMN.	HOLLOW METAL	1	PRESS. ST.	1	2
3	OPNG. 8'-0"x10'-0"	C	NOTE 2	DOOR GUIDE *	SEE SPECS.	–	–	–	–
4	OPNG. 8'-0"x10'-0"	C	NOTE 2	DOOR GUIDE *	SEE SPECS.	–	–	–	–
5 & 6	3'-0"x7'-0"	A	NOTE 1	WEATHER STRIP ALUMN.	HOLLOW METAL	1	PRESS. ST.	1	2

1. PRE ENGINEERED METAL BUILDING MANUFACTURER'S FINISH SEE SPECS.
2. MANUFACTURER'S STANDARD FINISH TO MATCH BUILDING SEE SPECS.

* DOOR GUIDE AS PER MANUFACTURER

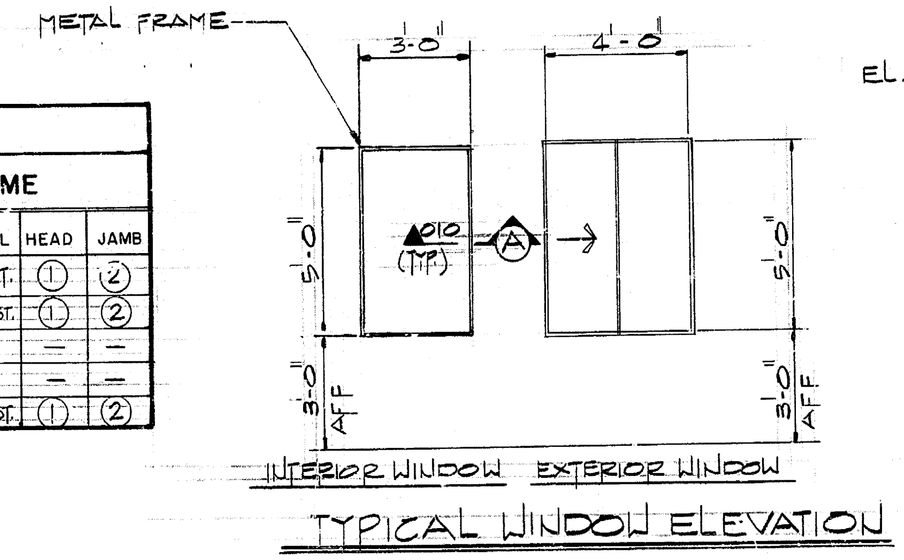

TYPICAL WINDOW ELEVATION

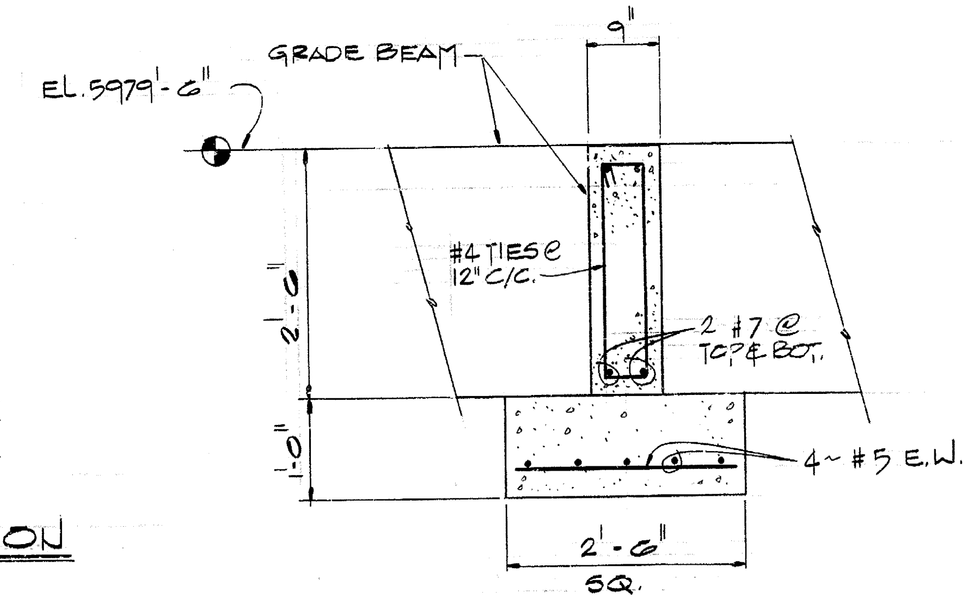

SECTION (F)
SCALE 1" = 1'-0" REF. DWG. 007
(TYP. 4 PLCS.)

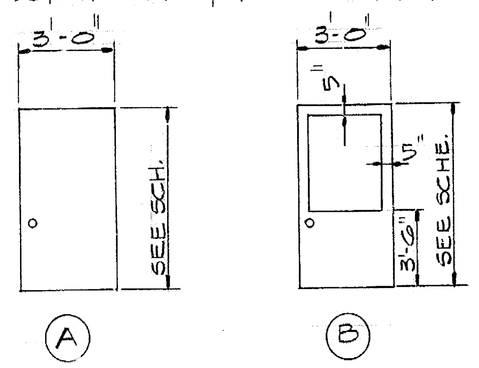

DOOR ELEVATIONS

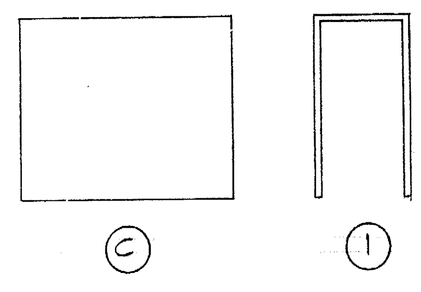

FRAME TYPE

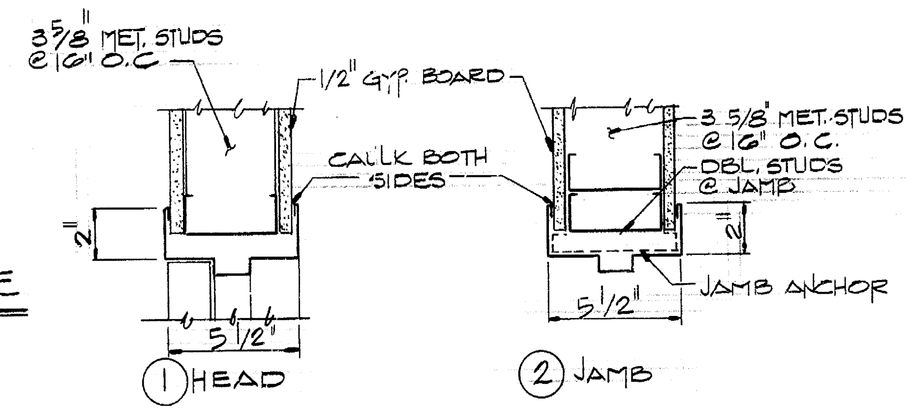

DOOR DETAILS

FINISH SCHEDULE

SPACE	FLOOR	FINISH	BASE	FINISH	WALL	FINISH	REMARKS
101	CONC.	VAT.	COVED	RUBBER	GYP. BD.	PAINT	
102	CONC.	VAT.	COVED	RUBBER	GYP. BD.	PAINT	

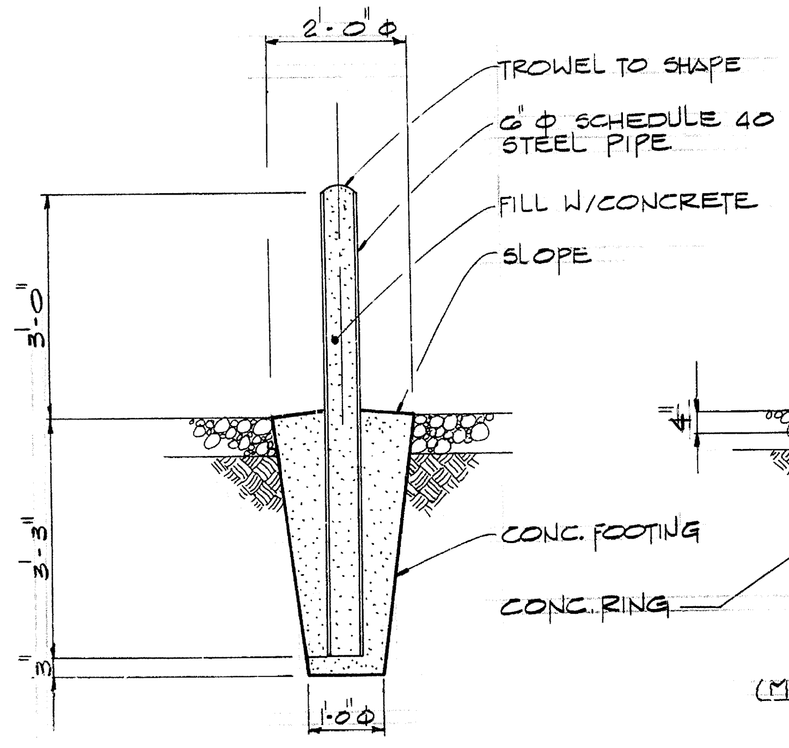

PIPE GUARD DETAIL (1) 007
SCALE: 1" = 1'-0"

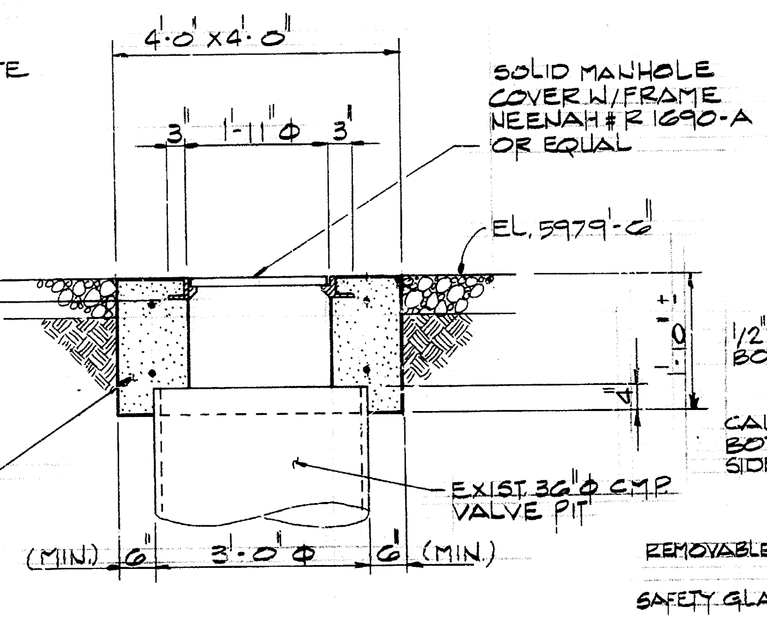

VALVE PIT DETAIL
SCALE: 3/4" = 1'-0"

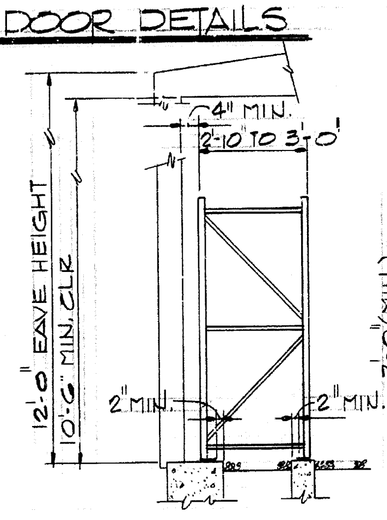

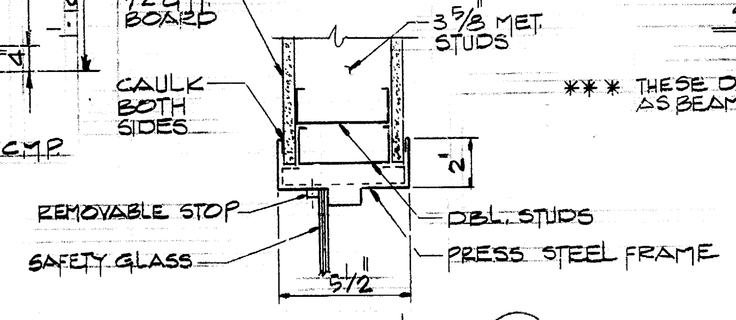

SECTION (A) 010
3" = 1'-0"

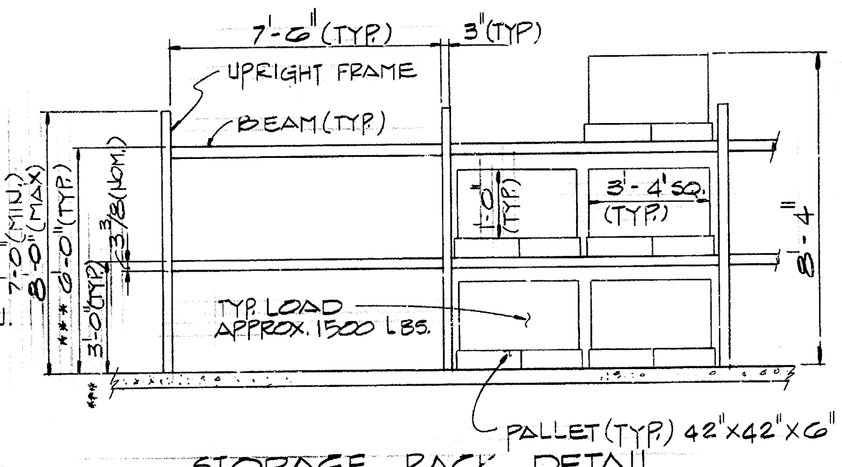

STORAGE RACK DETAIL
3/8" = 1'-0"

*** THESE DIMENSIONS CAN VARY AS BEAMS CAN BE ADJUSTED

LEGEND

VAT. VINYL ASBESTOS TILE
GYP. BD. GYPSUM BOARD
CONC. CONCRETE

ISSUE	DESCRIPTION	DATE	RFP	DOE	CLASS	JOB NO.
C	AS BUILT	1-17-86				440514
B	REVISE #1 DOOR TYPE	10/12/84				440514
A	ORIGINAL ISSUE	7-18-84				440514

TOLERANCES		BY	DATE
FRACT. ±	DESIGNED	JONEJA	6/14/84
ANGLE ±	DRAWN	Fernandez	6/14/84
DEC. ±	CHECKED	Jonaya	6/14/84
UNLESS NOTED OTHERWISE	APPROVED	LINES	7-3-84
REMOVE BURRS AND SHARP EDGES			
NEXT ASSEMBLY			
	SUBMITTED		
SCALE: As Noted	APPROVED RFP		7-18-84
	APPROVED DOE		

LEE WAN & ASSOCIATES, INC.
engineers architects surveyors
7950 South Lincoln Street, Suite 106
Littleton, Colorado 80122
(303) 795-7371

U.S. DEPARTMENT OF ENERGY
ROCKY FLATS AREA OFFICE GOLDEN, COLORADO

Rockwell International
ROCKY FLATS PLANT
GOLDEN, COLORADO 80401

SOLAR EVAPORATION POND BUILDING 788
DOOR SCHEDULE & DETAILS

SIZE	DRAWING NUMBER	ISSUE	SHEET
D	28883-010	C	10 OF

© U.S. GOVERNMENT PRINTING OFFICE: 1984-777-047

I101-A-000305
Pg 21