NOTICE

All drawings located at the end of the document.

DOES NOT CONTAIN
OFFICIAL USE ONLY INFORMATION
Name/Org. J.A. Nesheim EMCA Classifier Date 10/6/08
OK for public release.

I101-A-000306

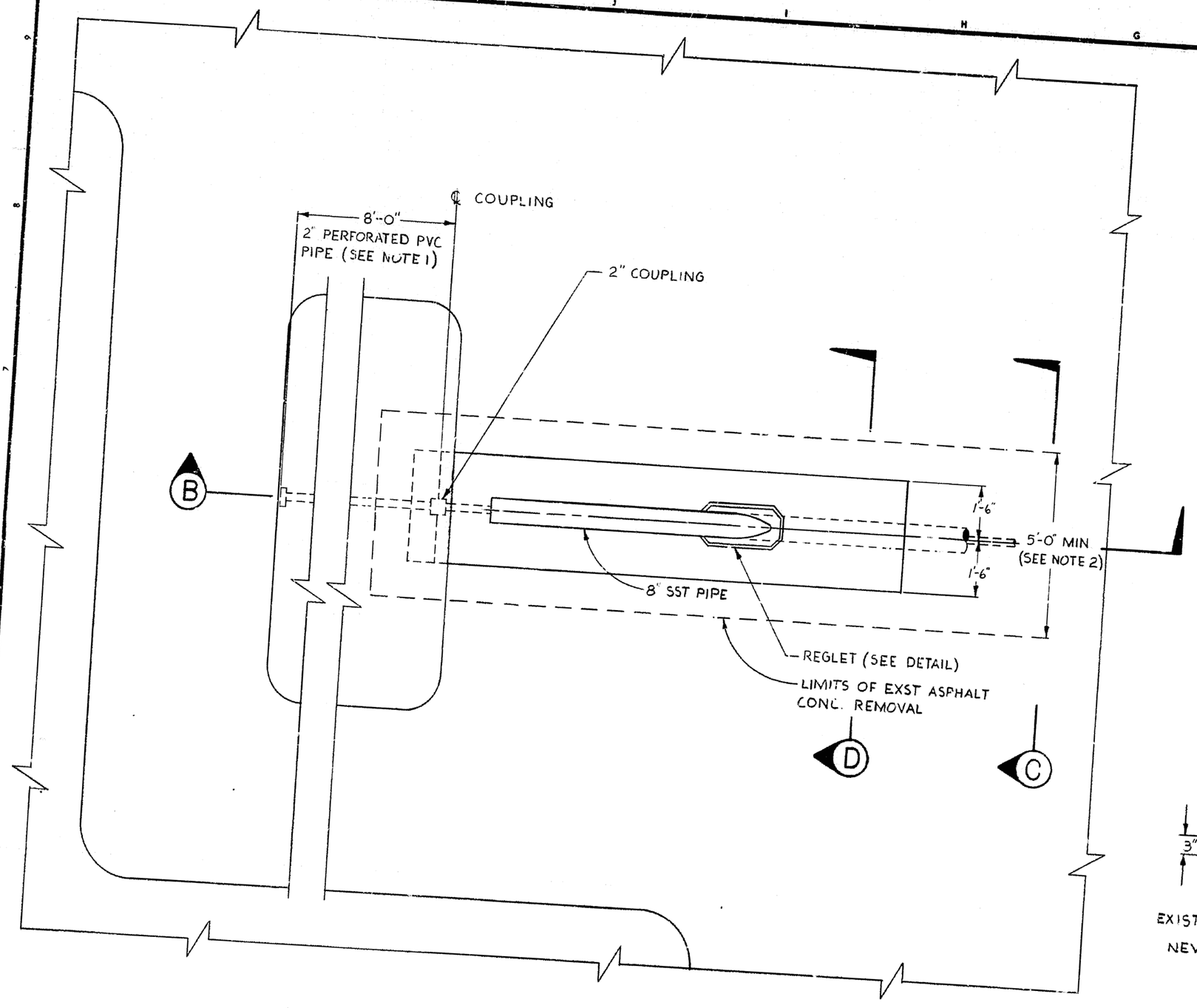

PARTIAL PLAN - SUMP AREA

SCALE: 1/2" = 1'-0"

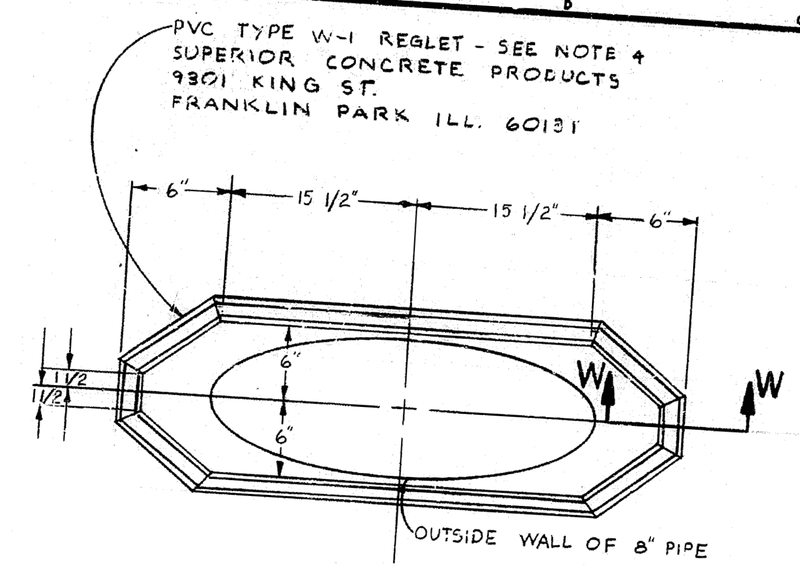

REGLET DETAIL

SCALE: 1 1/2" = 1'

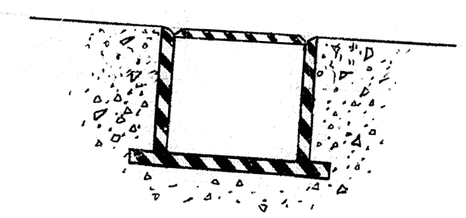

SECTION W-W

NO SCALE

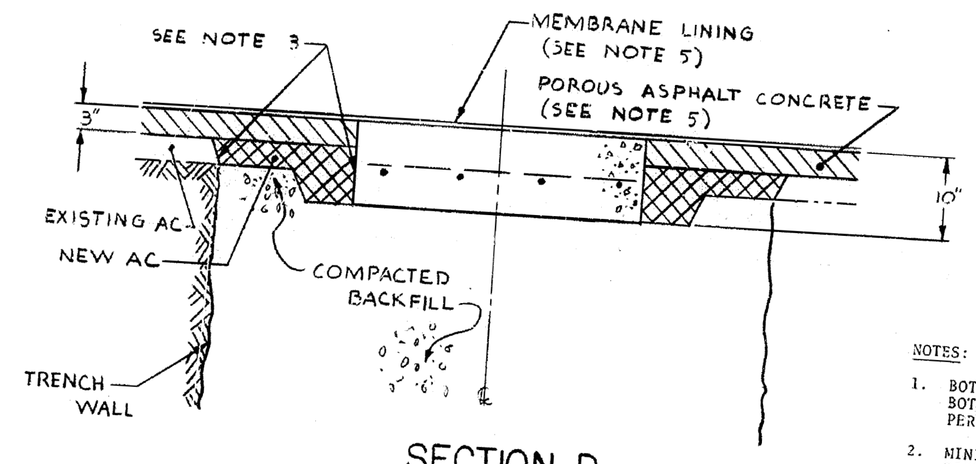

SECTION D

SCALE: 1" = 1'

NOTES:

1. BOTTOM HALF ONLY OF THE 8 FOOT LENGTH OF PVC PIPE ON THE POND BOTTOM IS TO BE PERFORATED WITH 1/4-INCH DRILLED HOLES -- 84 PER LINEAL FEET UNIFORMLY SPACED.
2. MINIMUM WIDTH AT SHORED TRENCH THROUGH POND DIKE FOR PIPE INSTALLATION.
3. APPLY ASPHALT PRIMER FOLLOWED BY ASPHALT CEMENT TO NEW CONCRETE ABUTED BY NEW ASPHALT CONCRETE AND TO EXISTING ASPHALT ABUTED BY NEW ASPHALT CONCRETE.
4. REGLET FRAME IS TO BE PREFABRICATED WITH ALL JOINTS MITERED AND WELDED. INSIDE OF REGLET CHANNEL TO BE SMOOTH AFTER WELDING.
5. MEMBRANE LINER AND POROUS ASPHALT CONCRETE ARE TO BE INSTALLED LATER ON ANOTHER PROJECT.

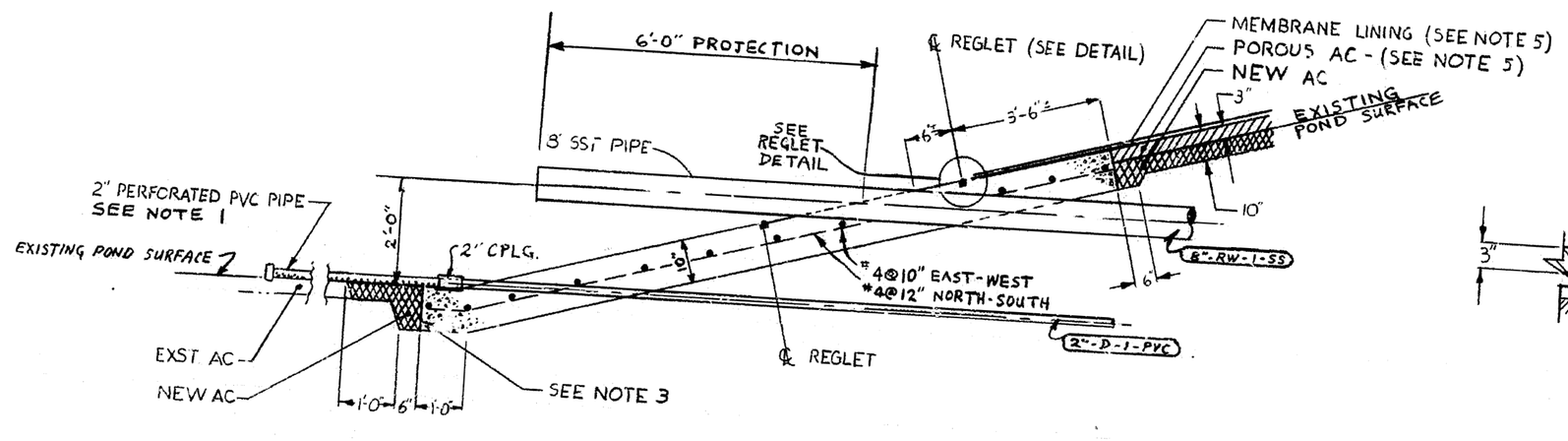

SECTION B

SCALE: 1/2" = 1'-0"

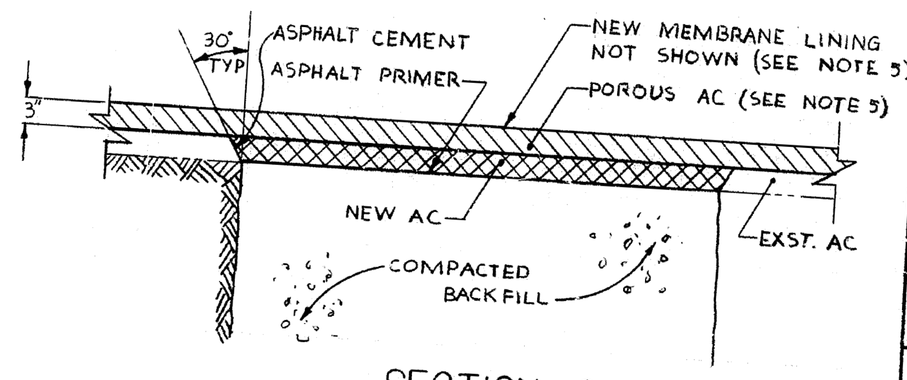

SECTION C

SCALE: 1" = 1'

PART	QUAN.	DESCRIPTION	MATERIAL

A	ORIGINAL ISSUE		7/27/77			
ISSUE	DESCRIPTION		DATE	AI	ERDA	CLASS / JOB NO.

TOLERANCES: FRACT. ± ANGLE ± DEC. ± UNLESS NOTED OTHERWISE

REMOVE BURRS AND SHARP EDGES

NEXT ASSEMBLY

SCALE

	BY	DATE
DESIGNED		
DRAWN	MILLER	7/12/77
CHECKED	KR/2WAH	7/12/77
APPROVED		
SUBMITTED		
APPROVED AI	[illegible]	7/27/77
APPROVED ERDA	[illegible]	7/27/77

U.S. ENERGY RESEARCH AND DEVELOPMENT ADMINISTRATION
ROCKY FLATS AREA OFFICE — GOLDEN, COLORADO

ROCKWELL INTERNATIONAL
ATOMICS INTERNATIONAL DIVISION
ERDA CONTRACT E (29-2)-3533
ROCKY FLATS PLANT — GOLDEN, COLORADO 80401

369005

SURFACE WATER CONTROL
POND 207-A DIKE
PENETRATION DETAILS

SIZE	DRAWING NUMBER	ISSUE	SHEET
D	27452 211	A	24 OF

22 x 34

GPO 677-727

207 Bldg. Plan

Bldg. Area

Bldg. & Wind.

A. Cards

B. Ins. Doc.

C. Chkrs

D. Detection

E. Stack

Lost

Ins-Conc.

F. Cont.

G. Electrical

H. Piping

I. Vers. Proof

J. Lessons

K. Floor Dwg.

L. Date

F 101 A-00036

page 35/36

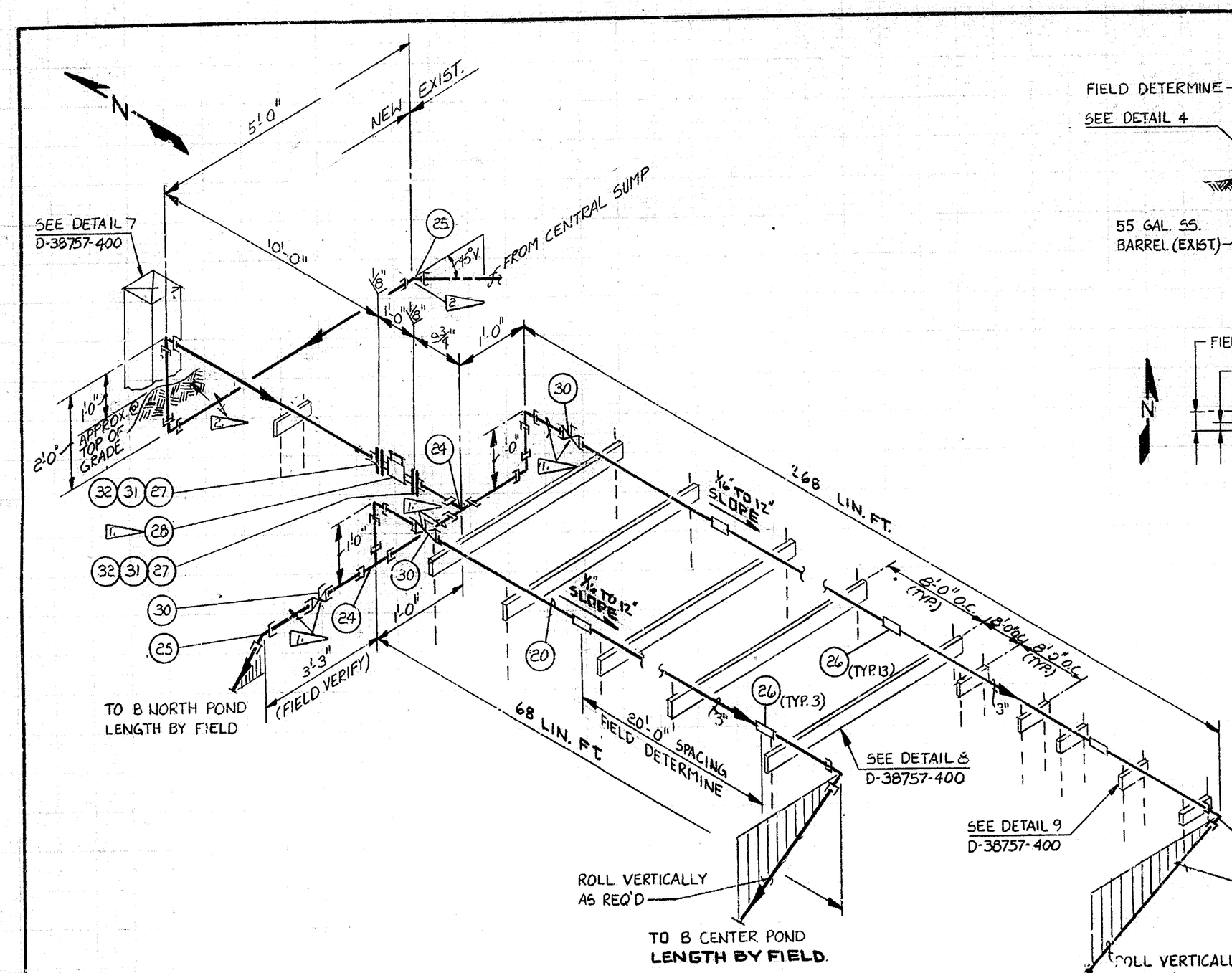

DETAIL 1
SCALE: NONE

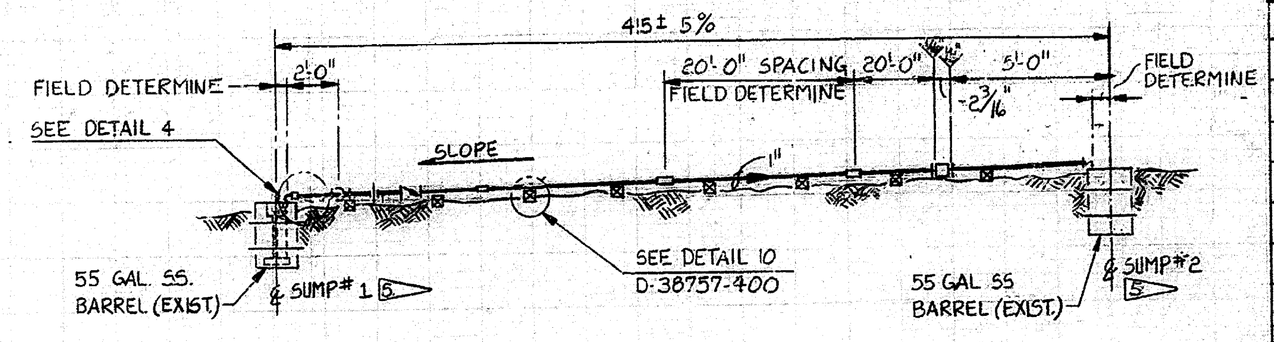

PROFILE
LOOKING NORTH

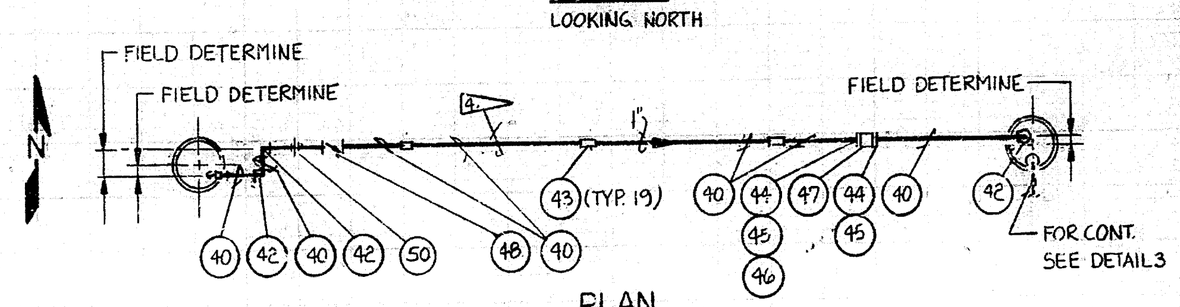

PLAN

DETAIL 2
SCALE: NONE

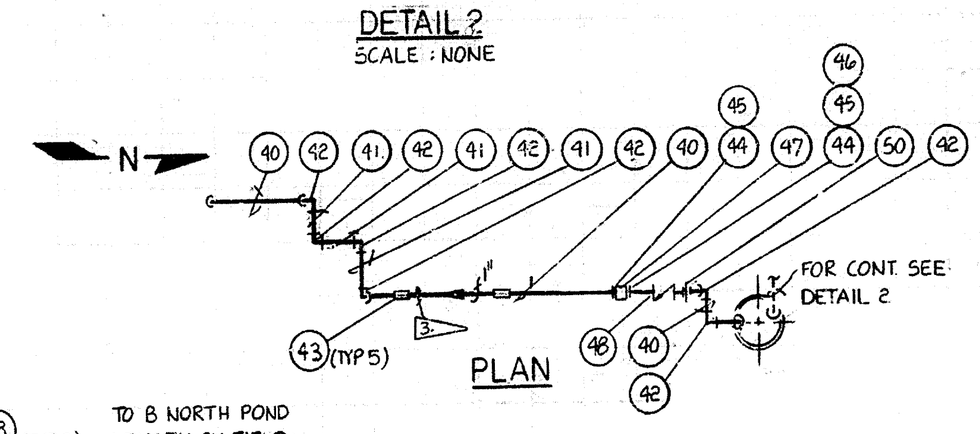

PLAN

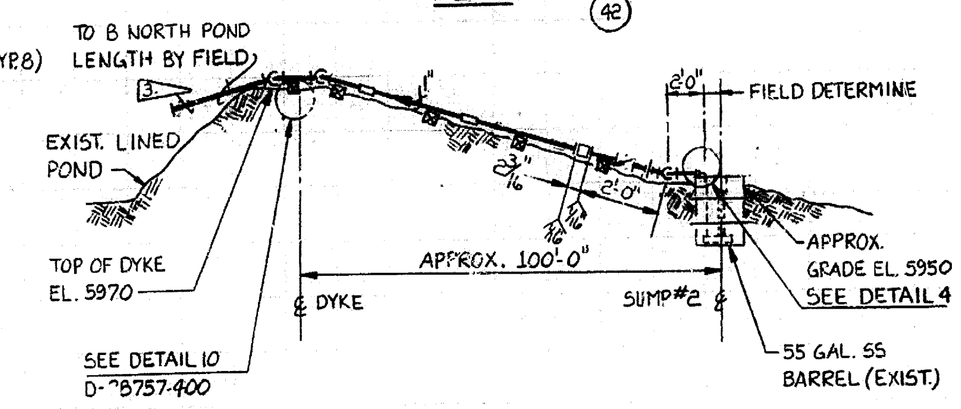

PROFILE
LOOKING WEST

DETAIL 3
SCALE: NONE

PART	QUAN.	DESCRIPTION	MATERIAL
20	400LF	3" PIPE, SCH. 80, SMLS	PVC
21	2	1" HOSE CLAMP	-
22	2	3/4" NIPPLE × 3" LG., T.B.E., SCH. 80	GALV.- STEEL
23	7	3" 90° ELL, SOCKETWELD, SCH. 80	PVC
24	2	3"×3"×3" TEE, SOCKETWELD, SCH. 80	PVC
25	2	3" 45° ELL, SOCKETWELD, SCH. 80	PVC
26	20	3" CPLG., SOCKETWELD, SCH. 80	PVC
27	2	3" 150# FF FLANGE, SCH. 80, SOCKET	PVC
28	1	3" FLOWMETER, "NEPTUNE" TRIDENT TURBINE METER	
29	2	1" × 3/4" RED CPLG. THRD, CLASS 300	GALV. - STEEL
30	3	3" 150# BALL VALVE, SOCKET, V-1021	PVC
31	8	5/8"×3 3/4" STUD BOLTS, ASTM A193, GRADE B7, H/HEAVY HEX NUTS TO A194, GRADE 2H HEAVY WEIGHT & WASH.	SST
32	2	3", 1/8" THK., FF GASKET	VITON
40	540LF	1" PIPE, SCH. 80, T&C	GALV - STEEL
41	3	1" NIPPLE × 6" LG., T.B.E., SCH. 80	GALV. STEEL
42	9	1" 90° ELL, THRD, CLASS 300	GALV- MI
43	26	1" CPLG, THRD, CLASS 300	GALV. MI
44	4	1" 150# FF FLANGE, THRD.	CAST IRON
45	4	1", 1/16" THK FULL FACE GASKET STYLE 3400	GARLOCK
46	16	1/2"×5" STUD BOLTS, ASTM A193, GRADE B7, H/HEAVY HEX NUTS TO A194, GRADE 2H HEAVY WEIGHT & WASH.	SST
47	2.	1" MIN. MAG W/INTEGRAL MOUNTED IND. & GROUNDING RING "FISCHER PORTER" MODEL #10D1475DM09PL 29A011KA23CAABI	
48	2	1" SWING CHECK, THRD, Y-3003	BRONZE
49	6'	1" I.D. TYGON TUBING LENGHT AS REQ(TYP.2)	
50	2	1" UNION, THRD, CLASS 300, BRONZE - TO - IRON SEAT	GALV - MI

NOTES:

1. INSULATE PIPING & VALVES, INSULATION TO EXTEND 6 INCHES BEYOND APPLIED HEAT TRACE
2. EXIST. 3" PVC SUPPLY IS LOCATED ON THE EAST SIDE OF THE B NORTH POND. EXIST. 3" PVC PIPING & VICTAULIC 22 1/2° ELL IS VISIBLE ON TOP OF DIKE. REMOVE & EXCAVATE 3" PIPING W/22 1/2° ELL TO FIRST CPLG. INSTALL 45° ELL @ LOCATION OF REMOVED CPLG, BACKFILL.
3. INSULATE PIPING FROM SUMP#2 TO POND SIDE SHOULDER
4. INSULATE PIPING BETWEEN SUMP#1 & SUMP#2.
5. SUMP PUMPS#1 & #2 PROVIDED BY USER

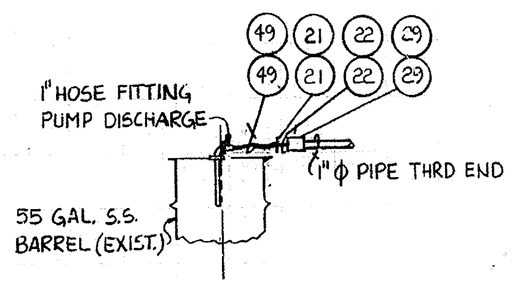

PUMP DISCHARGE
DETAILS 4
SCALE : NONE

KEYWORDS: 1. POND 2. PIPING 3. INSTALLATION 4. DETAIL 5.	REV A	ORIGINAL ISSUE			5/26/89	JM	JBM	JD	RCJ
	REVISIONS	DESCRIPTION			DATE	RFP		DOE	CLASS
	TOLERANCES FRACT. ± ANGLE ± DEC. ± UNLESS NOTED OTHERWISE			BY	DATE				
			DESIGNED	J.M. LAREM	3-16-89				
			DRAWN	M. LAREM L. KERSE	4-10-89				
			CHECKED	D. WYER	5-5-89				
			APPROVED	J. JAMES	5-26-89				
	REMOVE BURRS AND SHARP EDGES								
	NEXT ASSEMBLY								
MASTER YES ☐ NO ☐			SUBMITTED						
	SCALE: NOTED		APPROVED RFP						
			APPROVED DOE						

986166
JOB NO.

U.S. DEPARTMENT OF ENERGY
ROCKY FLATS AREA OFFICE GOLDEN, COLORADO

Rockwell International
ROCKY FLATS PLANT
GOLDEN, COLORADO 80402-0464

POND 207B PIPING
PIPING INSTALLATION DETAILS

SIZE	DRAWING NUMBER	ISSUE	SHEET
D	38757-401	A	3 OF 5

J-101 A-000306 page 26

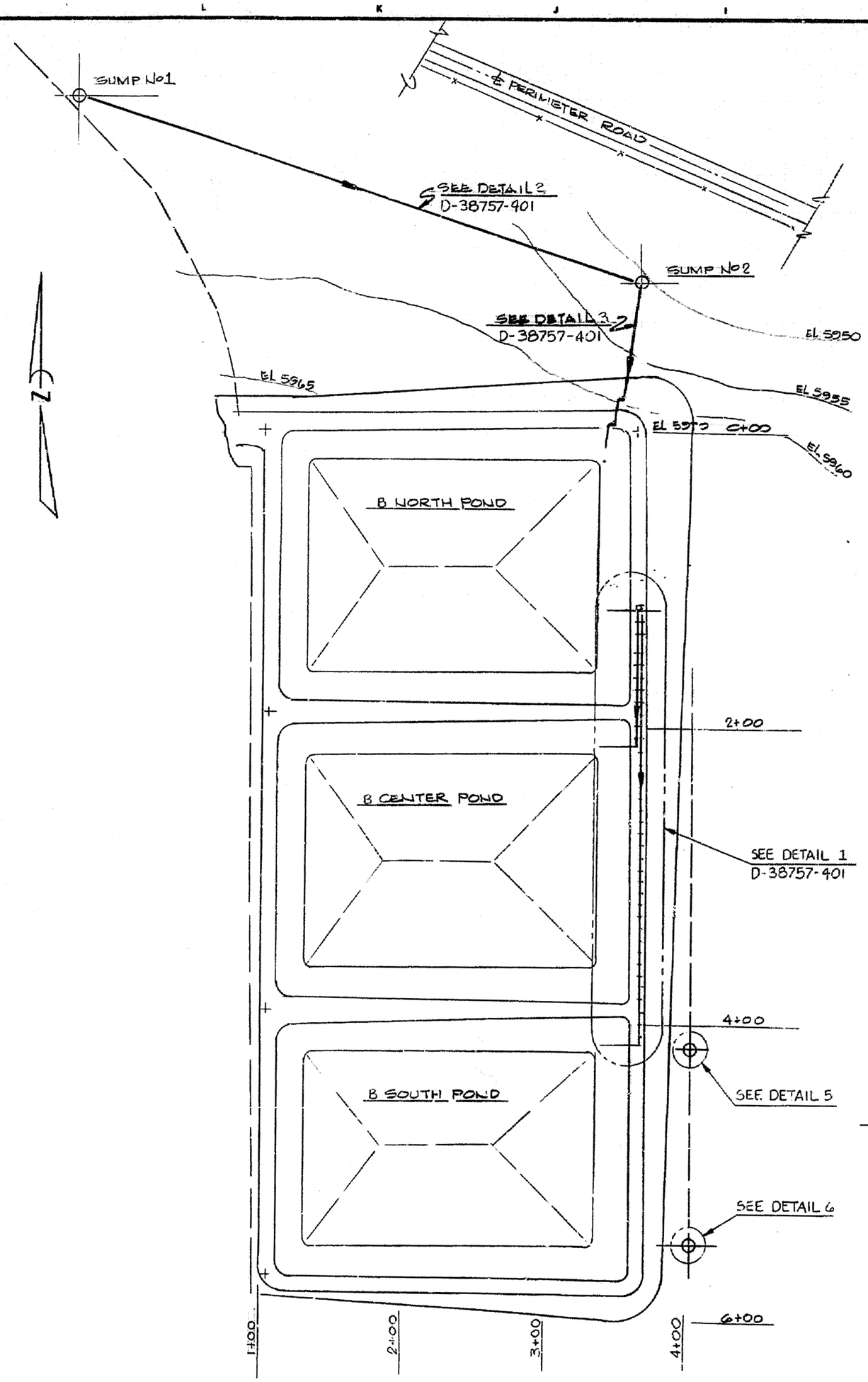

PLOT PLAN
SCALE: 1" = 50'

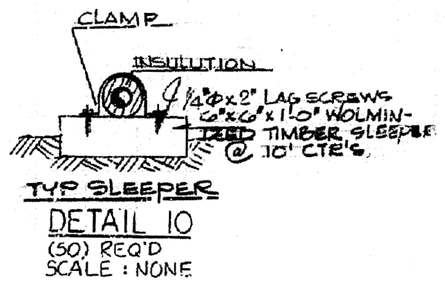

TYP SLEEPER
DETAIL 10
(50) REQ'D
SCALE : NONE

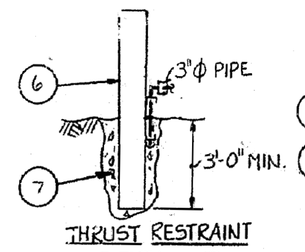

THRUST RESTRAINT
DETAIL 7
SCALE : NONE

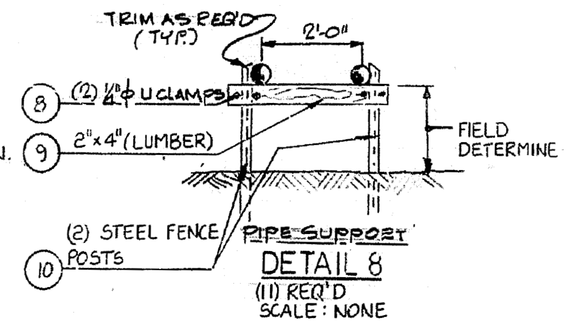

PIPE SUPPORT
DETAIL 8
(11) REQ'D
SCALE : NONE

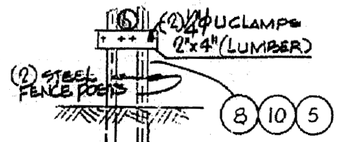

PIPE SUPPORT
DETAIL 9
(25) REQ'D
SCALE : NONE

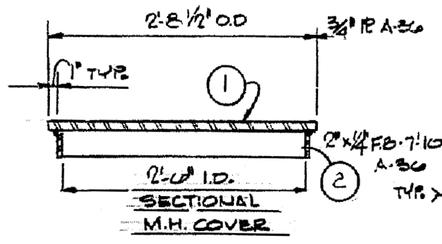

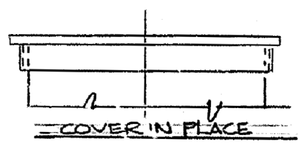

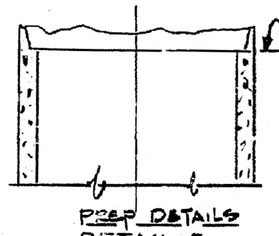

PREP DETAILS
DETAIL 5
24" MANHOLE
(1) REQ'D
SCALE : NONE

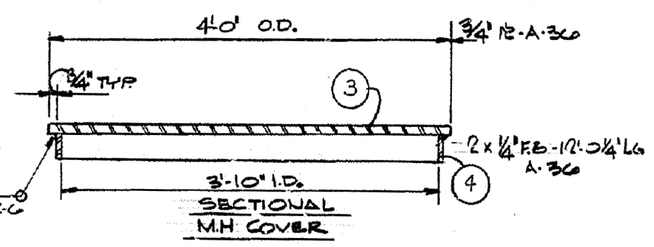

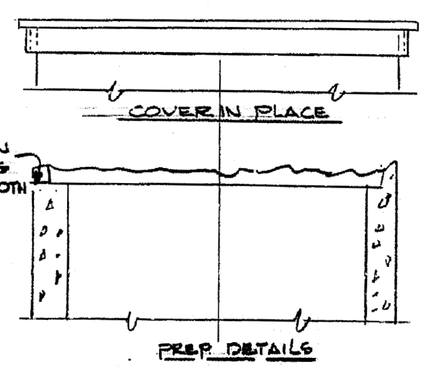

PREP DETAILS
DETAIL 6
36" MANHOLE
(1) REQ'D
SCALE : NONE

PART	QUAN.	DESCRIPTION	MATERIAL
1	1	3/4" PLATE - A-36 - 2'-8 1/2" Φ	
2	1	2" x 1/4" FLAT BAR - 7'-10 1/4" LG	
3	1	3/4" PLATE - A-36 - 4'-0" Φ	
4	1	2" x 1/4" FLAT BAR - 12'-0 1/4" LG	
5	1	2" x 4" x 1'-0" LG (CCA TREATED LUMBER)	LUMBER
6	1	6" x 6" x 5'-0" LG (CCA TREATED LUMBER)	LUMBER
7	1/3	CU. YD - CONCRETE - 2800	
8	72	1/4"Φ x 20 - U CLAMPS W/ HEX-NUTS, "McMASTER" PART # 3043T21, OR EQUAL	
9	11	2" x 4" x 3'-0" LG (CCA TREATED LUMBER)	LUMBER
10	72	5'-0" FENCE POSTS	STEEL

KEYWORDS	REV	DESCRIPTION	DATE	RFP	DOE	CLASS	JOB NO.
1. POND 207B	A	ORIGINAL ISSUE	5/26/89				9861666
2. PLOT							
3. PLAN							
4. PIPING							
5. DETAILS							

TOLERANCES		BY	DATE
FRACT. ±	DESIGNED	K. LARSON	2-2-89
ANGLE ±	DRAWN	K. LARSON	12-19-88
DEC. ±	CHECKED	E. GRILL	2-2-89
UNLESS NOTED OTHERWISE	APPROVED	JAMES	5-26-89
REMOVE BURRS AND SHARP EDGES			
NEXT ASSEMBLY			
	SUBMITTED		
SCALE: NOTED	APPROVED RFP		
	APPROVED DOE		

BLDG./FACILITY — ROOM/AREA — GRID COORD./COL NO. — MASTER YES ☐ NO ☐

U.S. DEPARTMENT OF ENERGY
ROCKY FLATS AREA OFFICE — GOLDEN, COLORADO

Rockwell International
ROCKY FLATS PLANT
GOLDEN, COLORADO 80401

POND 207B PIPING
PLOT PLAN, PIPING SUPPORT & DETAILS

SIZE	DRAWING NUMBER	ISSUE	SHEET
D	38757-400	A	2 OF 5

I-101-A-000306 page 25

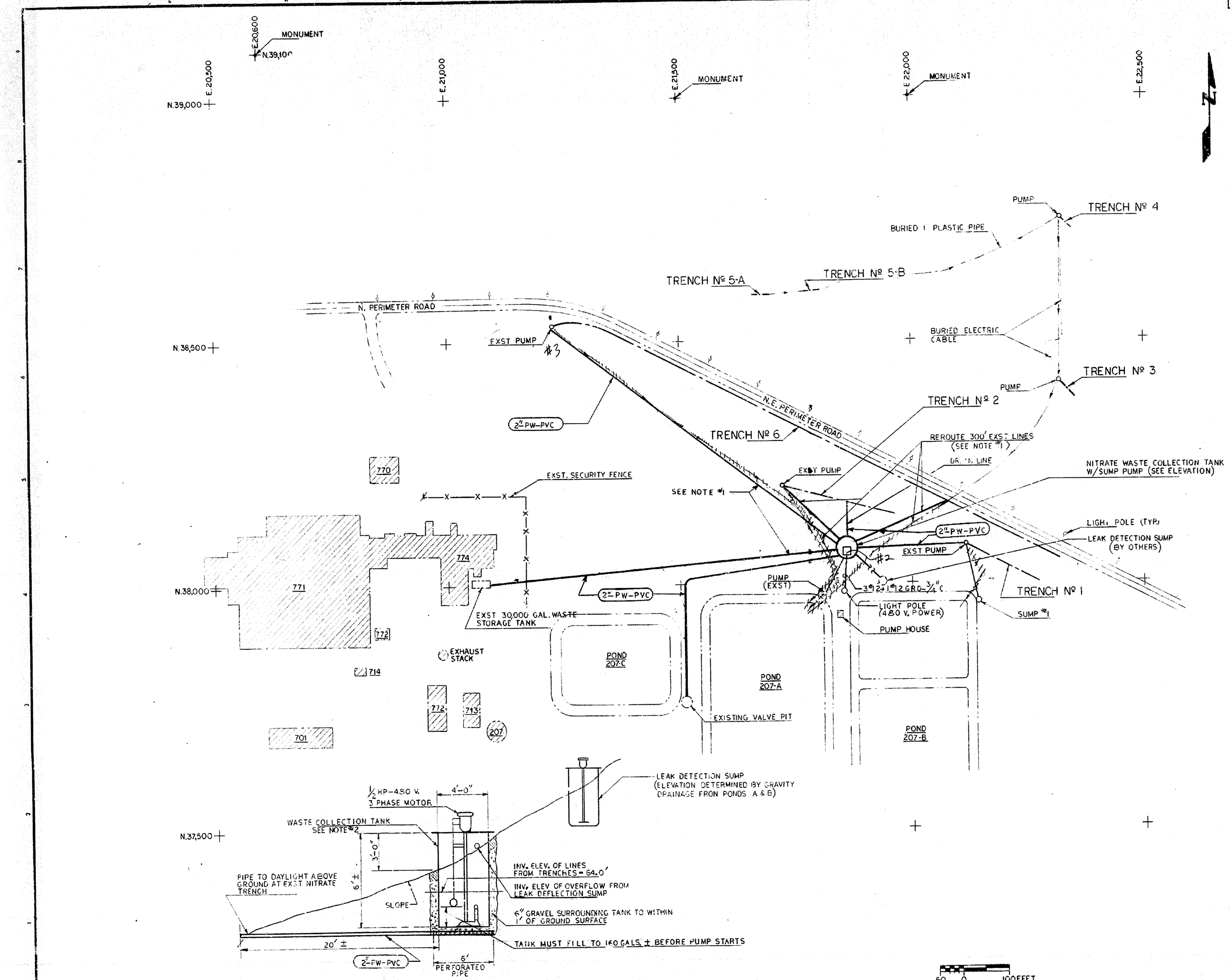

LEGEND:

X-XX-X — MATERIAL; LINE SERVICE; LINE SIZE

REMOVE PIPE LINE (ABOVE GROUND)

NEW PIPE LINE (UNDERGROUND)

PW — PROCESS WASTE

PVC — POLYVINYLCHLORIDE (SCHEDULE 80 ASTM D-1785)

NOTES:

1. ALL UNDERGROUND PIPING SHALL BE BURIED 3' BELOW GRADE MIN.
2. THE WASTE COLLECTION TANK SHALL BE INSTALLED LOW ENOUGH SO THAT THE TANK WILL NOT OVERFILL & BACK UP INTO THE LEAK DETECTION SUMP.

CRITERIA
NOT FOR CONSTRUCTION

ISSUE	DESCRIPTION	LOC.	DATE	BY	APPR'D	CLASSIFIER	JOB NO.
A	ORIGINAL ISSUE-DESIGN CRITERIA	~	[illegible]	JFD	[illegible]	[illegible]	375042

TOLERANCES: FRACT. ± ~; ANGLE ± ~; DEC. ± ~; UNLESS NOTED OTHERW.; REMOVE BURRS AND SHARP EDGES; NEXT ASSEMBLY ~; SCALE: GRAPHIC

	BY	DATE
DESIGNED	FLEWELLING	6-30-77
DRAWN	DELGADO	7-6-77
CHECKED	F.R.	7-7-77
APPROVED	[illegible]	7-24-77
SUBMITTED		
REC'M'DED		
APPR'D (AEC)		

U.S. ENERGY RESEARCH AND DEVELOPMENT ADMINISTRATION
ROCKY FLATS AREA OFFICE — GOLDEN, COLORADO

ROCKWELL INTERNATIONAL
ATOMICS INTERNATIONAL DIVISION
~~E.R.D.A. CONTRACT AT-(29-2)-8663~~
ROCKY FLATS PLANT — GOLDEN, COLORADO 80401

NITRATE WASTE COLLECTION SYSTEM
INSTALLATION PLAN

SIZE	DRAWING NUMBER	ISSUE	SHEET
D	25976-D01	A	2 of 2

207 AREA
~
Fasm. Area
Mtg & Vent
Arch
Ad Bev
Elect
Mech
Pol
Sit-Lum
Civil
Utilities
Piping
Layouts
Plan Diag
Stds

I101-A-000306 page 24

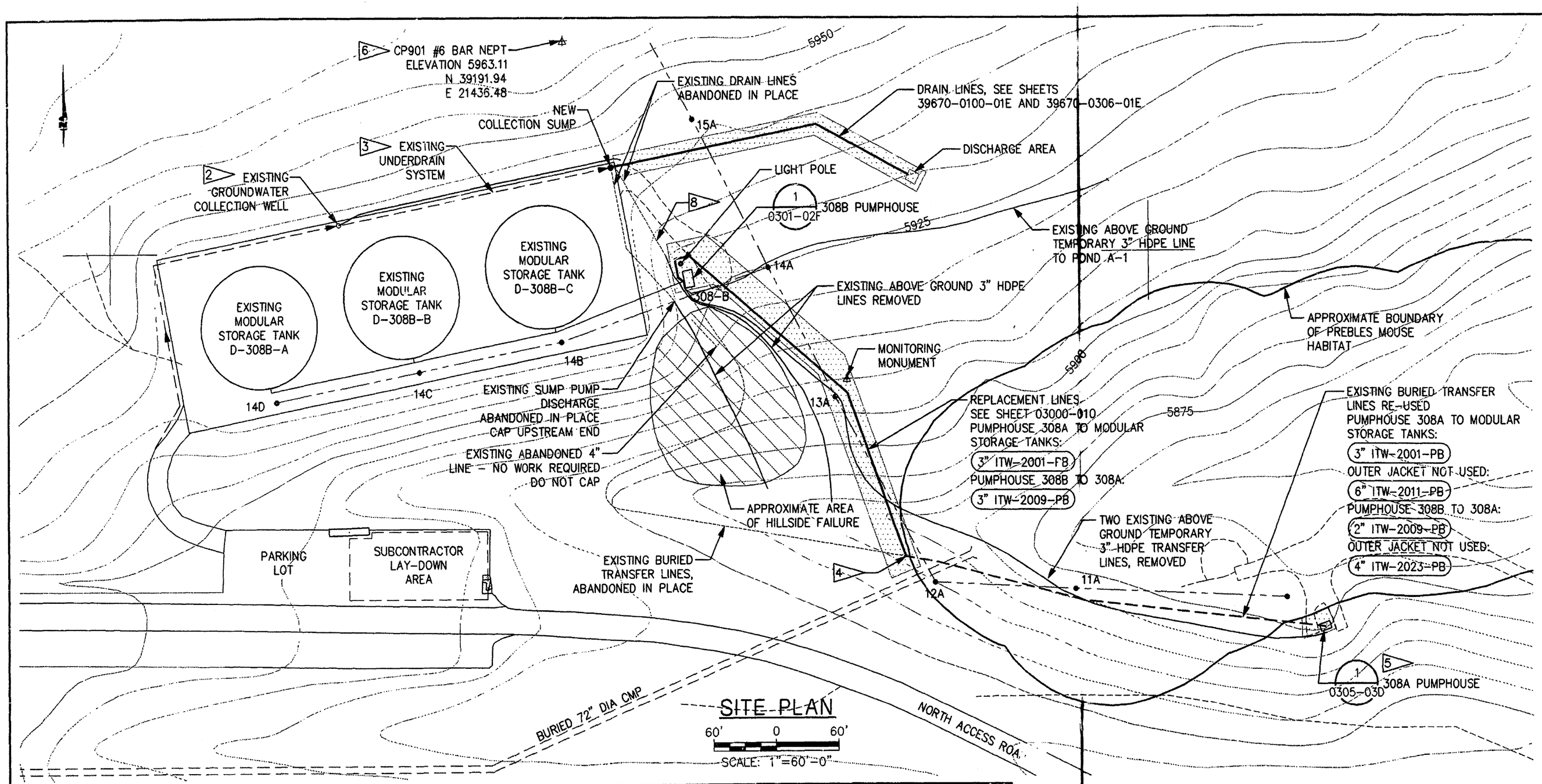

SITE PLAN

60' 0 60'

SCALE: 1"=60'-0"

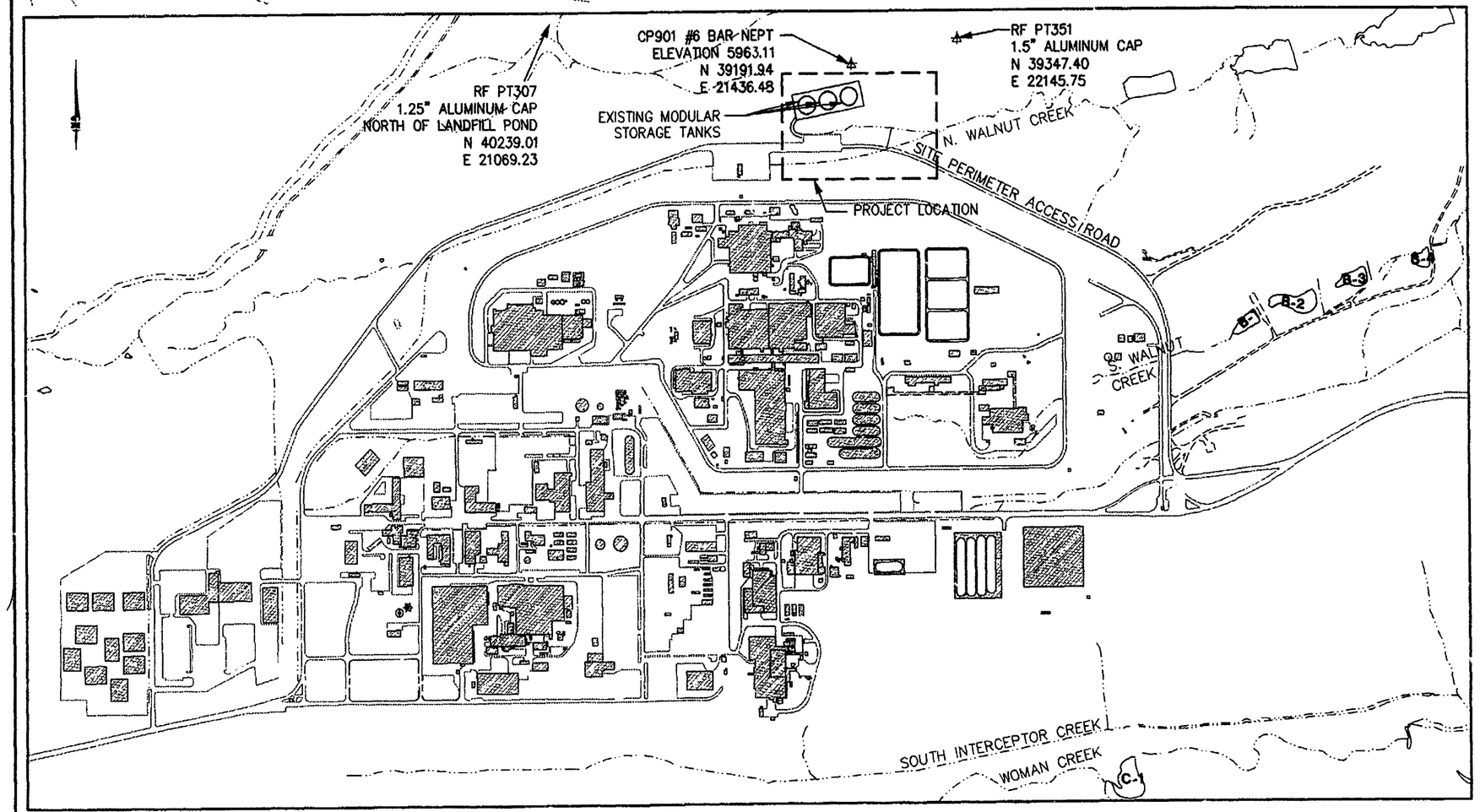

600' 0 600'

SCALE: 1"=600'-0"

PROJECT LOCATION

LEGEND

SURVEY BENCHMARK

PART	QUAN.	DESCRIPTION	MATERIAL

LEGEND

- OVERHEAD UTILITY WITH POLE DESIGNATION
- EXISTING GRAVEL ROAD
- IMPROVED ROAD
- EXISTING TOPOGRAPHIC CONTOUR (feet above mean sea level) CONTOUR INTERVAL = 5ft
- APPROXIMATE LIMITS OF CONSTRUCTION
- SURVEY BENCHMARK

NOTES:

1. TOPOGRAPHY DERIVED FROM RFETS DRAWING 39670-0120. BASED ON 1994 AERIAL DATA.
2. REF DWG 39670-0113, COLLECTION WELL CONSISTS OF GRAVEL FILLED EXCAVATION WITH DISCHARGE OF GROUNDWATER TO 3" DIA PVC PIPE SLOPED AT 1% TO THE EAST AND LOCATED 3' ABOVE UNDERDRAIN PIPE. RECONNECT PVC DISCHARGE PIPE LOCATED WITHIN MANHOLE APPROXIMATELY 7' BELOW GROUND SURFACE.
3. REF DWG 39670-0105 UNDERDRAIN SYSTEM CONSISTS OF PERFORATED 4" DIA PVC PIPE BURIED AT 7' BELOW GROUND SURFACE AT MIDPOINT OF THE NORTH SIDE OF THE TANK PAD, AND SLOPED 1% TO DRAIN TO THE EAST AND WEST. REROUTE EASTERN DISCHARGE ONLY AS SHOWN.
4. CAP ENDS OF EXISTING PIPES.
5. LEAK DETECTION FEATURE FOR PUMPHOUSE 308A PIPING SUMP DELETED.
6. ALL LOCATIONS SHOWN IN ROCKY FLATS COORDINATE SYSTEM.
7. ALL EXCESS PIPE, FITTINGS AND EXCESS MATERIALS STACKED AT EACH PUMPHOUSE AS DIRECTED BY CONTRACTOR.
8. CAP EXISTING 4" DIA PVC UNDERDRAIN DISCHARGE, ABANDONED IN PLACE

INDEX

DRAWING NUMBER	INDEX
39670-0002-01E	PROJECT LOCATION, SITE PLAN AND INDEX
39670-0100-01E	DRAIN LINES PLAN & PROFILE AND DETAILS
39670-0306-02E	DRAIN LINES PLAN & PROFILE AND DETAILS
39670-0300-01D	MST LINES PLAN & PROFILE
39670-0305-03D	PUMP STATION 308A PIPING DETAILS
39670-0301-02F	PUMP STATION 308B PIPING PLANS
39670-0302-03F	PUMP STATION 308A SECTIONS

ISSUE	DESCRIPTION	DATE	DSGN	DWN	CHKD	APVD			PROJECT/WCF NO.
B	FIELD VERIFIED OHM/PARSONS DESIGN COMPANY	03/99	JH	MW	VHF	RW			CK101418
A	ORIGINAL ISSUE								CK101418

KEYWORDS: 1.Modification; 2.Pipeline; 3.Storage; 4.Tank; 5.

TOLERANCES: FRACT. ±; ANGLE ±; DEC. ±; UNLESS NOTED OTHERWISE

REMOVE BURRS AND SHARP EDGES

BLDG./FACILITY: 308; ROOM/AREA: N/A; GRID COORD./COL NO.: N/A; NEXT ASSEMBLY: N/A; SCALE: AS NOTED

DESIGN COMPANY: OHM/Parsons

DESIGNED BY	HEALY	JH 12/28/98
DRAWN BY	WOJCIECHOWSKI	MW 12/28/98
CHECKED BY	FRIESEN	KF 12/28/98
APPROVED BY	WILKINSON	RW 12/28/98
CLASSIFIER	HEALY	DH 1/4/99
LANDLORD	HAYES	WH 12/30/98

U.S. DEPARTMENT OF ENERGY
ROCKY FLATS OFFICE GOLDEN, COLORADO

Rocky Flats Environmental Technology Site
GOLDEN, COLORADO

MODULAR STORAGE TANKS
FREEZE PROTECTION MODIFICATIONS
PROJECT LOCATION, SITE PLAN AND INDEX

SIZE	DRAWING NUMBER	ISSUE
D	39670-0002-01E	B

OHM Energy Services Corporation
A Subsidiary of OHM Corporation

PARSONS
PARSONS ENGINEERING SCIENCE, INC.
Denver, Colorado (303) 831-8100

AUTOCAD COMPUTER GENERATED ~~R:\ACD\INT\39670\0002-01E\B~~ R:\ACD\INT\39670\0002-01E\B
NO MANUAL CHANGES ALLOWED

S:\ES\eed\ROCKFLAT\734766\98DN1181.dwg, ~~03/23/99 at 13:32~~

T Tight/Acd
V Press Vent
H Hto-Vent
A Arch
D Dr. Box
E Elec
D Detection
M Mech
I Inst
B Building
C Civil
R Environmental
U Utilities
P Piping
M Fire Prot.
L Layouts
Flow Diag.
S Struc
Slide
A Alarms

Page 33

PART	QUAN.	DESCRIPTION	MATERIAL

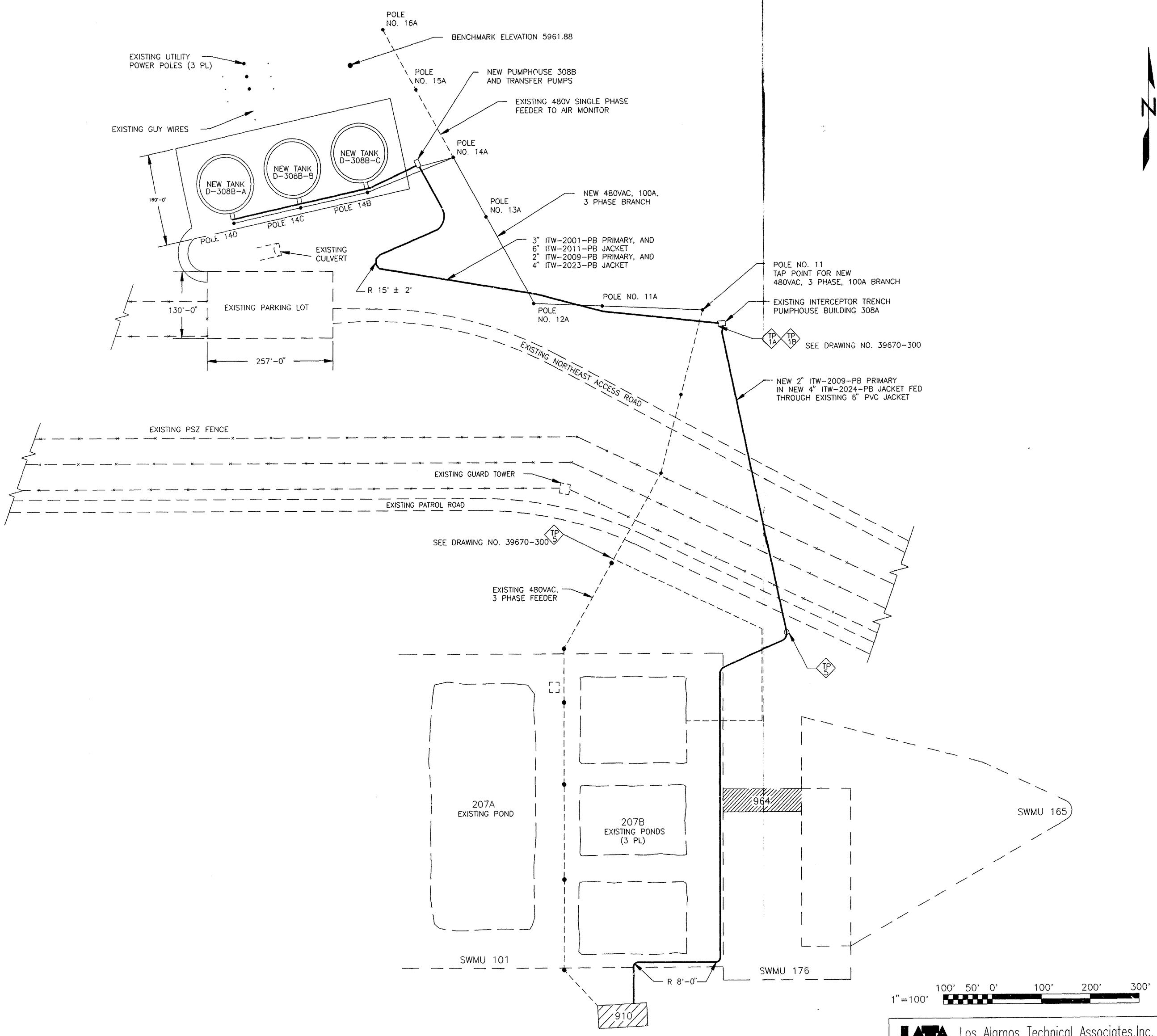

NOTES:

1. FOR CIVIL PLAN SEE DRAWING D-39670-100.
2. FOR MECHANICAL PLAN SEE DRAWING D-39670-300.
3. FOR ELECTRICAL PLAN SEE DRAWING D-39670-500.

ISSUE	DESCRIPTION	DATE	LATA	RFP	DOE	CLASS	JOB NO.
E	AS-BUILT	6/30/95					986819
C	CHANGED PIPE/JACKET SIZE TO MATCH FIELD INSTALL	09/30/93					986819
B	CHANGED SITE SIZE	02/8/92	SD	GD	GP	CB	CDA 986819
A	ORIGINAL ISSUE	07/15/91	MAP	GFD	JAF	CAB	JFJ 986819

KEYWORDS
1. TANK
2. MODULAR
3. INSTALLATION
4.
5.

BLDG./FACILITY: 308
ROOM/AREA: GEN
GRID COORD./COL. NO.: N/A
MASTER: YES ☐ NO ☐

TOLERANCES: FRACT. ± ANGLE ± DEC. ± UNLESS NOTED OTHERWISE
REMOVE BURRS AND SHARP EDGES
NEXT ASSEMBLY: N/A
SCALE: 1"-100'-0"

	BY	DATE
DESIGNED	PETRELLA	05/21/91
DRAWN	DELLAGUARDIA	06/11/91
CHECKED	FREEBURG	06/11/91
APPROVED	BICHER	07/15/91
SUBMITTED		
APPROVED RFP		
APPROVED DOE		

U.S. DEPARTMENT OF ENERGY
ROCKY FLATS AREA OFFICE GOLDEN, COLORADO

Rocky Flats Plant
GOLDEN, COLORADO

TEMPORARY MODULAR TANKS INSTALLATION
GENERAL ARRANGEMENT

SIZE	DRAWING NUMBER	ISSUE	SHEET
D	39670-0002	E	OF

LATA Los Alamos Technical Associates, Inc.
P.O. Box 410 Los Alamos, New Mexico 87544 Telephone (505) 662-9080

COMPUTER GENERATED
NO MANUAL CHANGES ALLOWED

ACAD = \39670\0002E.DWG
ARCHIVE = R.ACD.39670.0002.E

308 BLDG. FAC
GEN ROOM. AREA
H HTG. & VENT
A ARCH.
G GL. BOX
E ELECT.
M MECH.
I INST.
B BUILDING
C CIVIL
U UTILITIES
P PIPING
W FIRE PROT
L LAYOUTS
F FLOW DIAG
S STDS.
X ALARMS

ACAD = \39670\0002E.DWG PLOTTED 06-28-95 09:12 DRAFTING CHECK
ARCHIVE = R.ACD.39670.0002.E SCALE 1 = 1200

I101-A-000306 page 22

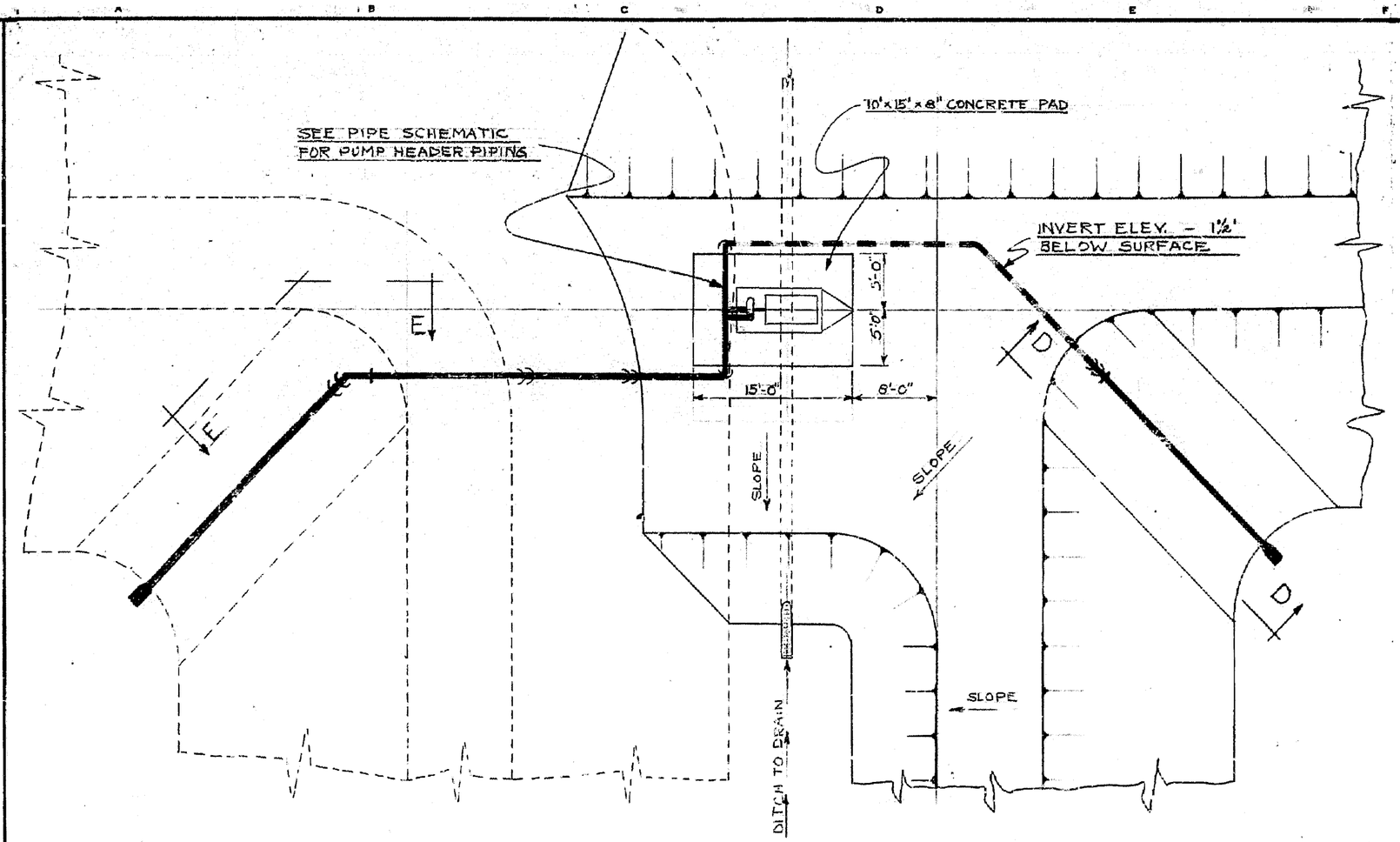

PUMPING STATION PLAN
SCALE: ⅛"=1'-0"

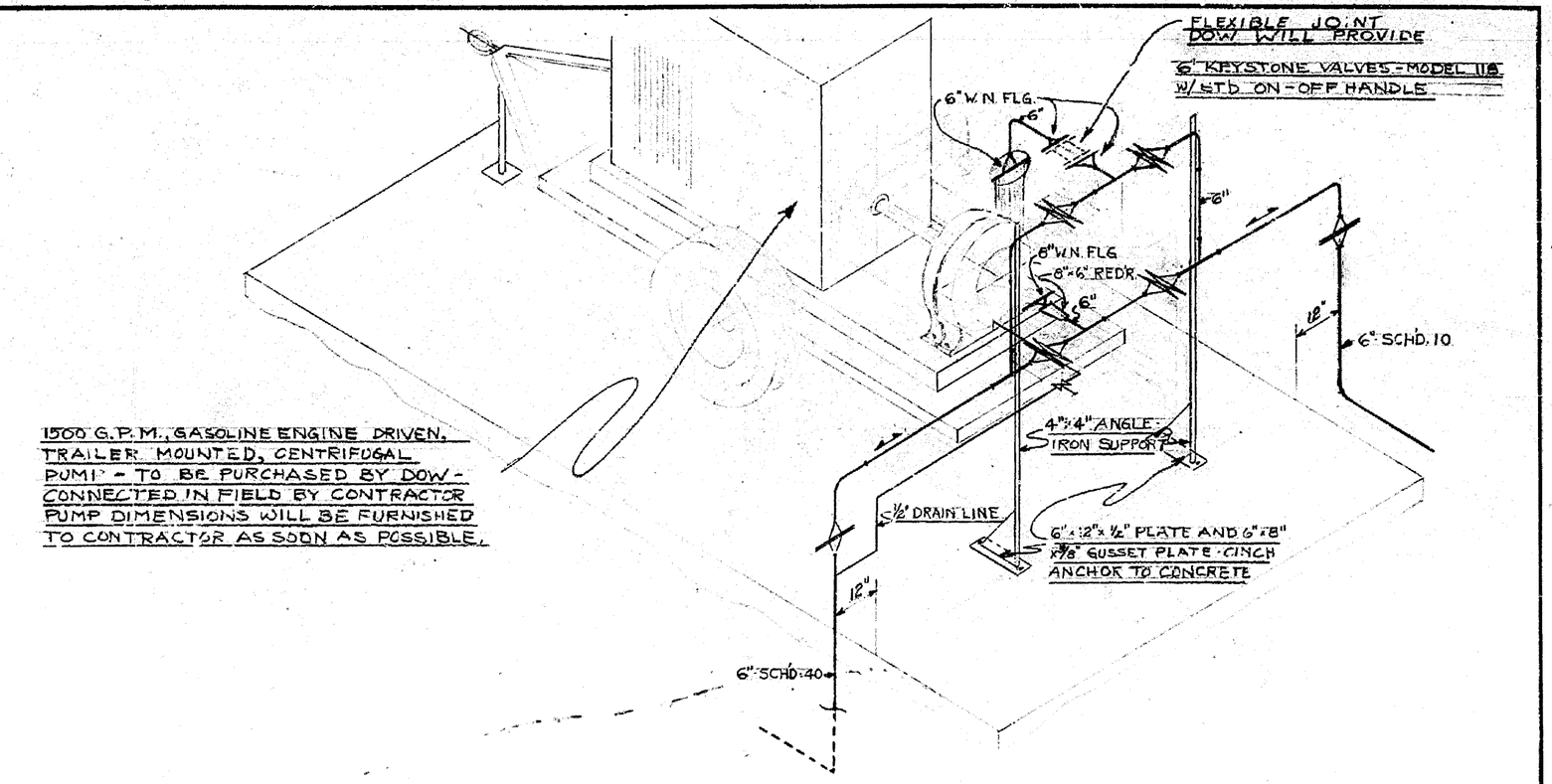

PIPE SCHEMATIC FOR PUMP HEADER

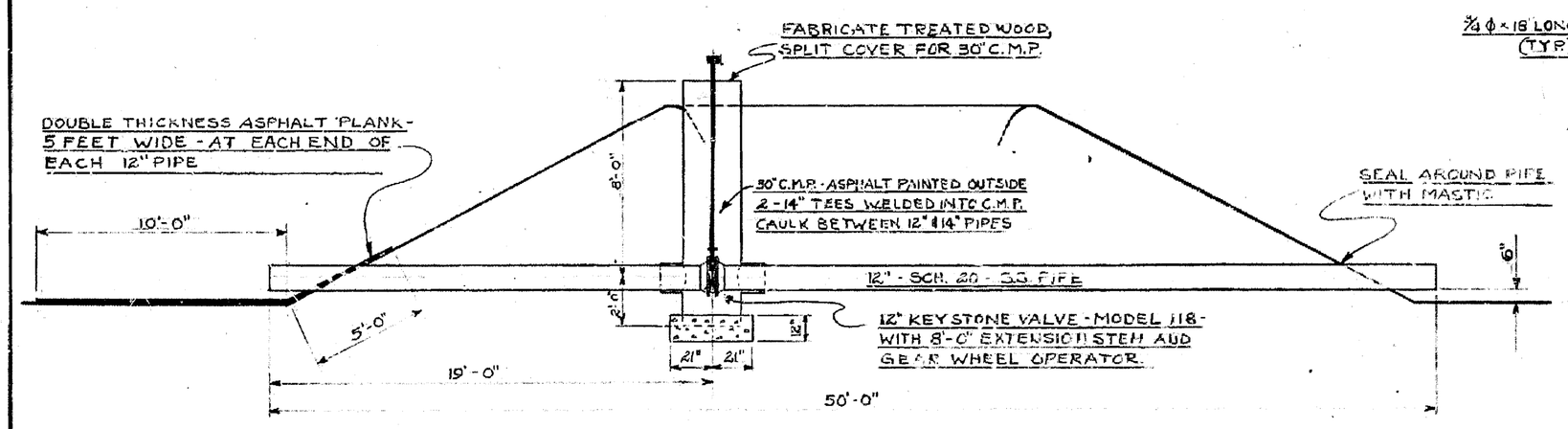

POND CONNECTION PIPE
SCALE: ¼"=1'-0"

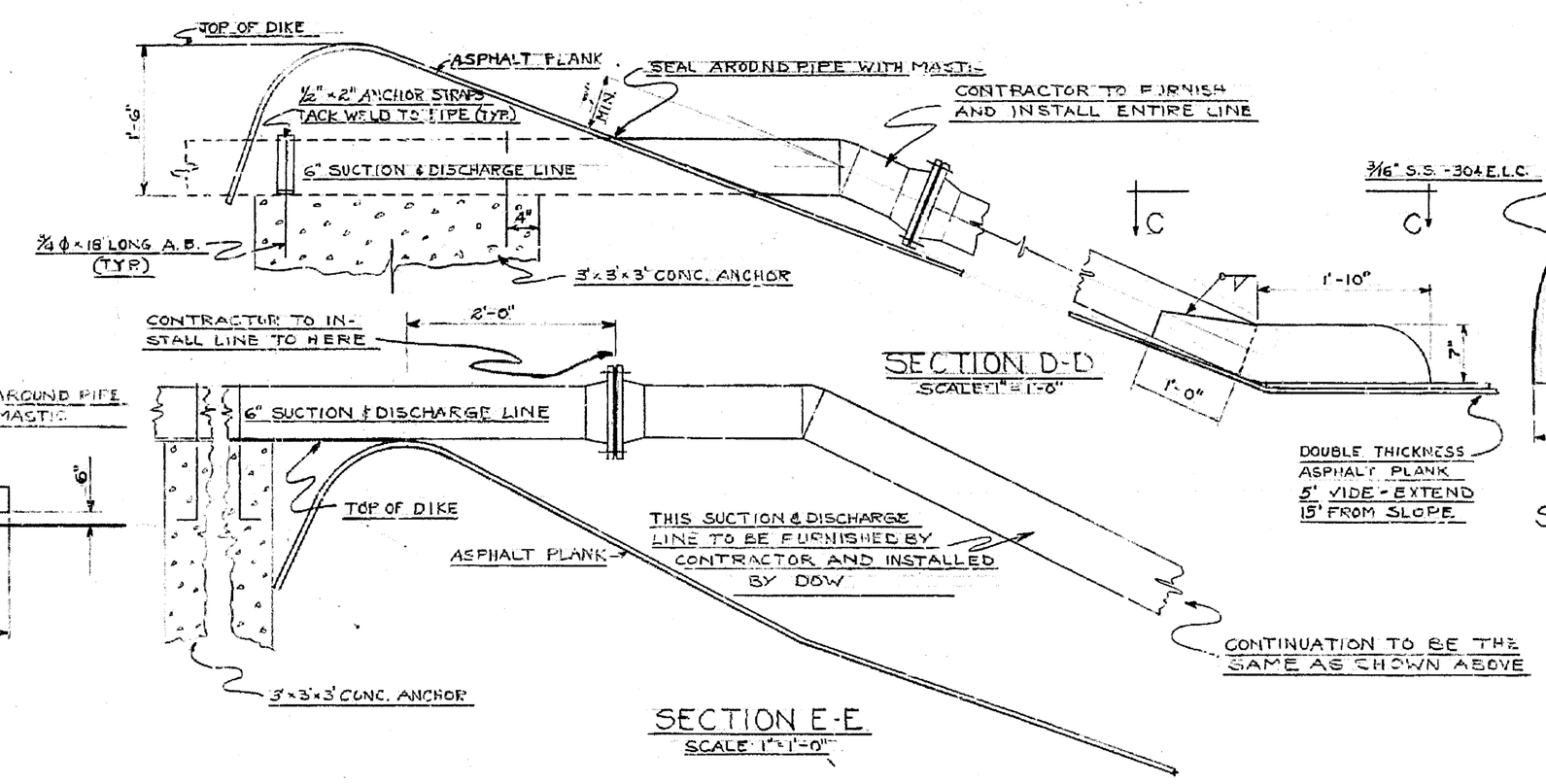

SECTION D-D
SCALE: 1"=1'-0"

SECTION C-C
SCALE: 1"=1'-0"

SECTION E-E
SCALE: 1"=1'-0"

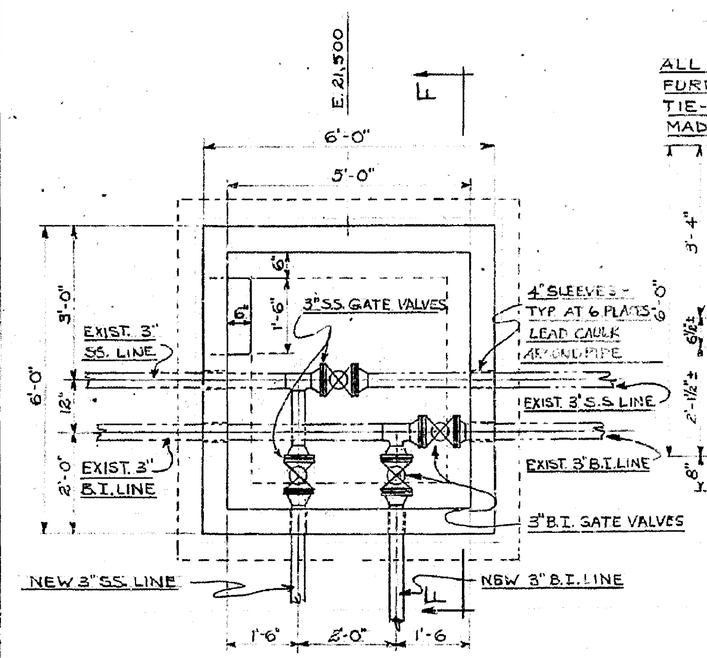

VALVE PIT PLAN
SCALE: ½"=1'-0"

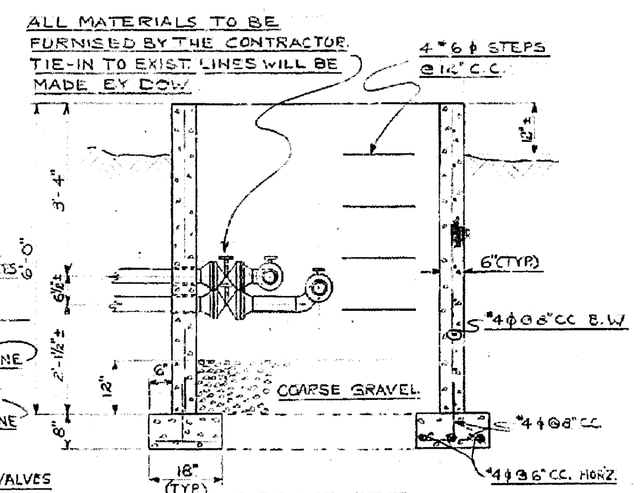

SECTION F-F
SCALE: ½"=1'-0"

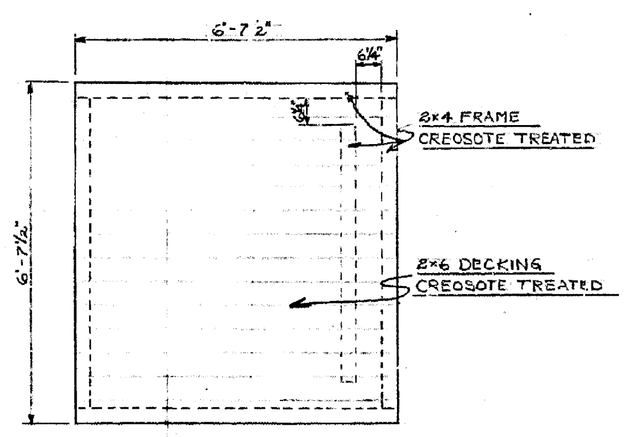

PIT COVER
SCALE: ½"=1'-0"

CHANGE NO.	REVISION	INITIAL	DATE	INITIAL (DOW)	DATE	INITIAL (A.E.C.)	DATE

THE DOW CHEMICAL COMPANY
ROCKY FLATS PLANT
DENVER, COLORADO

A.E.C. CONTRACT NO. AT (29-1)-1106

RECOMMENDED: [signature] 9-11-59 — THE DOW CHEMICAL CO. — DATE
APPROVED: [signature] 9-23-59 — ATOMIC ENERGY COMMISSION — DATE

U. S. ATOMIC ENERGY COMMISSION
ROCKY FLATS AREA OFFICE
DENVER, COLORADO

IND. WASTE FAC. 207
3-1 ACRE EVAPORATION POND ADDITION
DETAILS

DATE 9-22-59	DRAWN ST. JOHN	CHECKED	DWG. NO.
SCALE AS NOTED	[signature]	[signature]	1-6218-207

SHEET OF

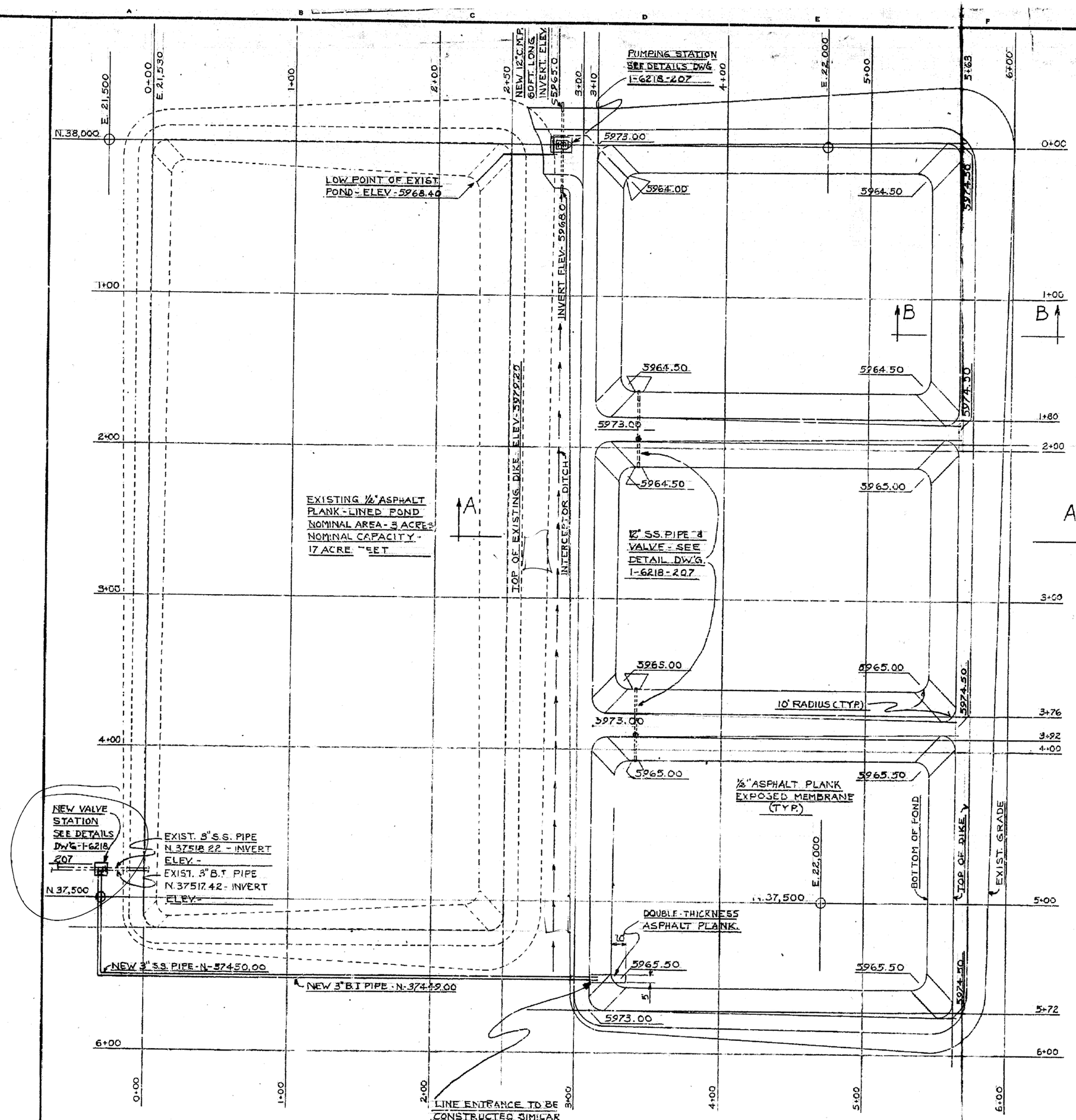

PLAN
SCALE: 1" = 40'

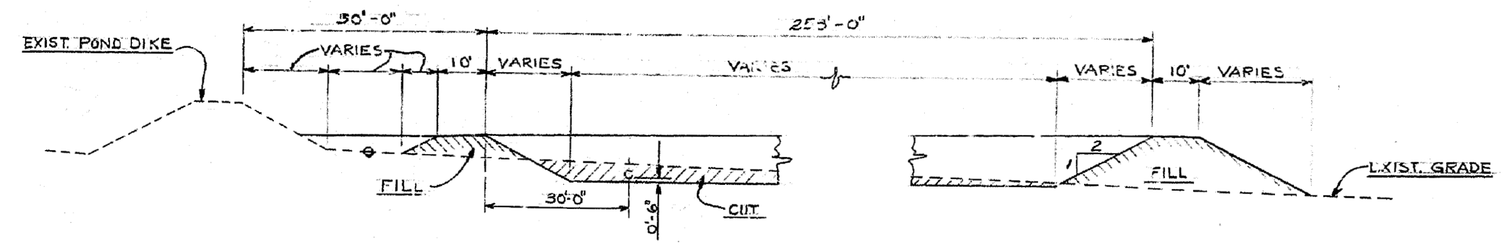

SECTION A-A
SCALE: 1" = 20'

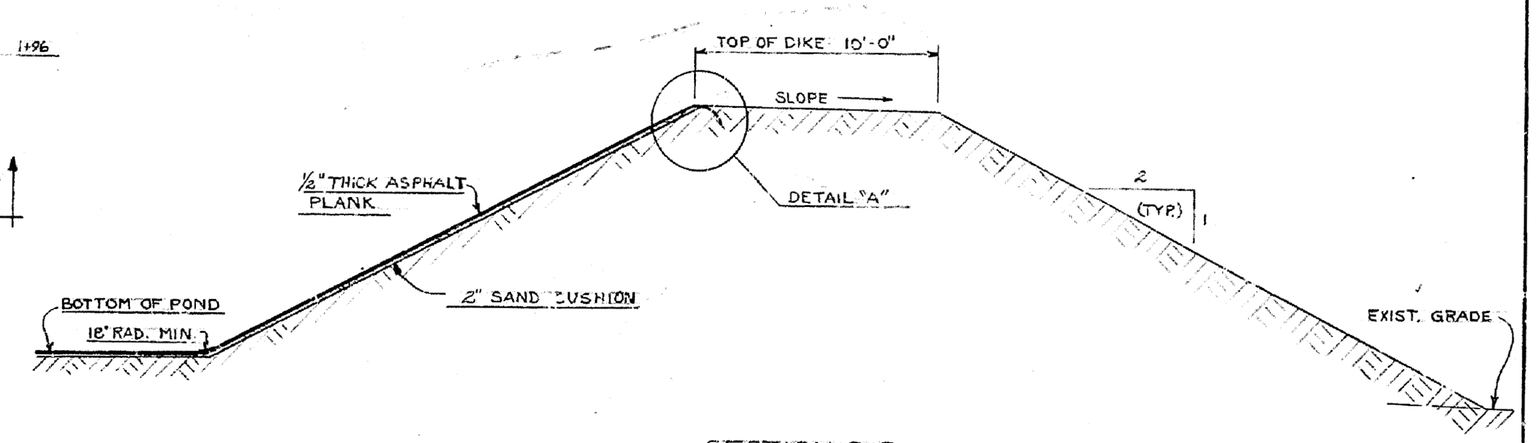

SECTION B-B
SCALE: 1" = 4'-0"

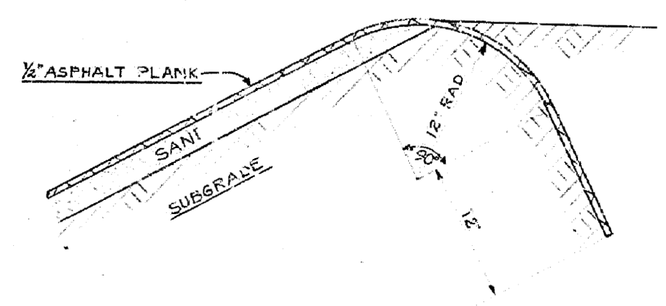

DETAIL "A"
SCALE: ⅛" = 1"

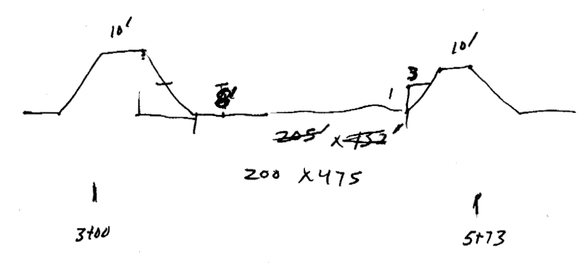

NOTES:

1. EMBANKMENT AND EXCAVATION ARE APPROXIMATELY BALANCED. IF ADDITIONAL EMBANKMENT IS REQUIRED, A BORROW AREA WILL BE DESIGNATED IN THE ADJACENT AREA AND IF EXCAVATION IS GREATER THAN NEEDED, THE SURPLUS SHALL BE DEPOSITED ON THE EXTERIOR SIDE OF THE NORTH AND EAST DIKES.
2. ALL PIPING FOR PUMPING STATION WILL BE STAINLESS STEEL 304 - EL.C.
3. ALL EXPOSED MILD STEEL SHALL BE GIVEN ONE COAT OF SHOP PRIMER AND 2 COATS OF MACHINERY GREY P[illegible]T.

CHANGE NO.	REVISION	INITIAL	DATE	INITIAL	DATE	INITIAL	DATE
				DOW		A.E.C.	

THE DOW CHEMICAL COMPANY
ROCKY FLATS PLANT
DENVER, COLORADO

A.E.C. CONTRACT NO. AT (29-1)-1106

RECOMMENDED [signature] 9-10-59 THE DOW CHEMICAL CO. DATE
APPROVED [signature] 9-23-59 ATOMIC ENERGY COMMISSION DATE

U. S. ATOMIC ENERGY COMMISSION
ROCKY FLATS AREA OFFICE
DENVER, COLORADO

IND. WASTE FAC. 207
3-1 ACRE EVAPORATION POND ADDITION
PLAN, SECTIONS & DETAILS

SHEET OF

DATE 9-10-59 | DRAWN ST. JOHN | CHECKED [illegible] | DWG. NO. 1-6217-207
SCALE AS NOTED | O. K. [illegible]

43560 I 101 A-000306 Page 20

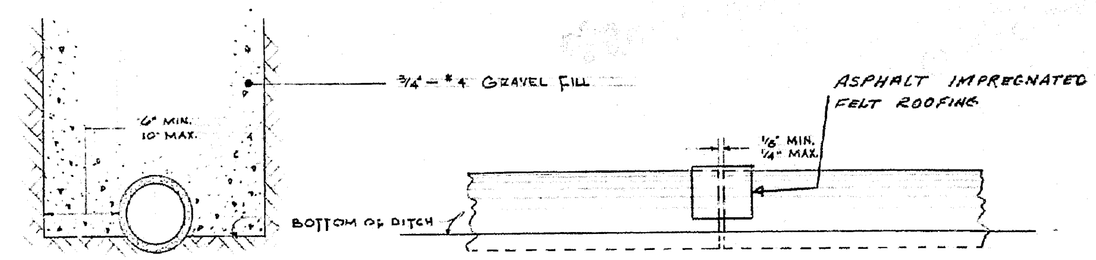

OPEN-END DRAIN TILE DETAIL

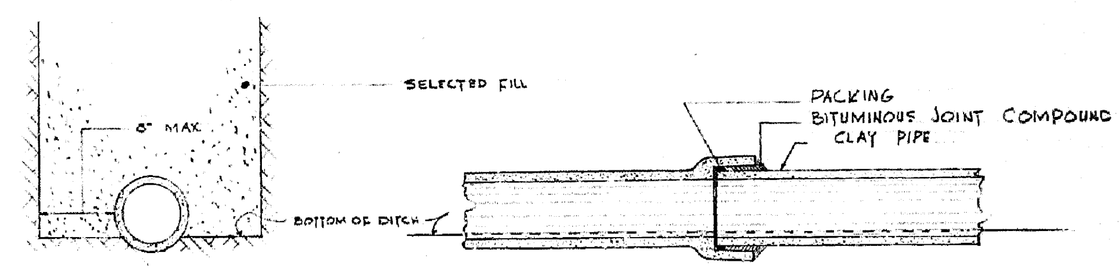

CLOSED DRAIN PIPE SECTION

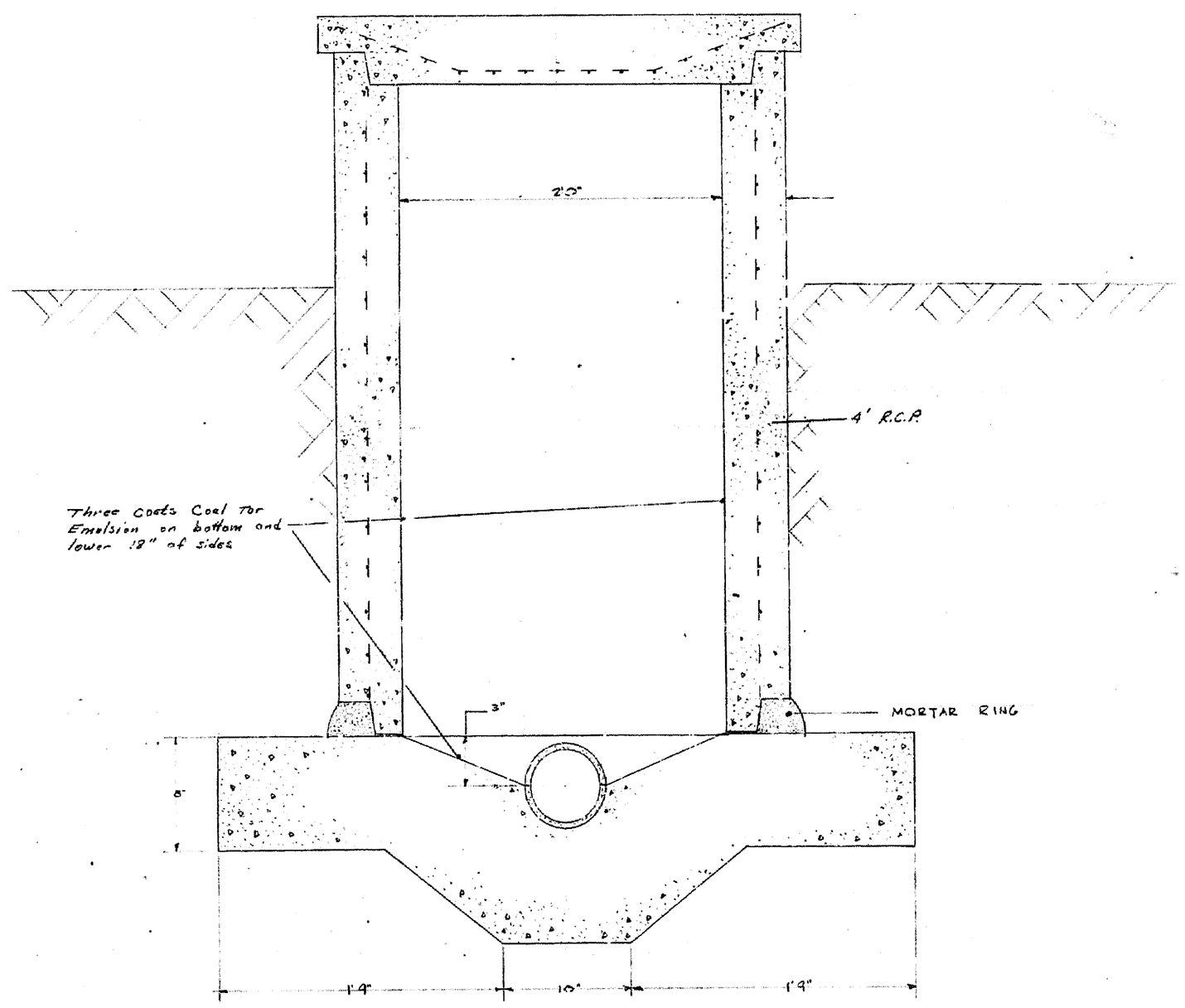

MANHOLE DETAIL
SCALE: 1" = 0.5'

NO.	DATE	REVISIONS	BY	CK	PROJ ENGR.	A.E.C. APP.

U. S. ATOMIC ENERGY COMMISSION
ROCKY FLATS AREA OFFICE

POND LINING DETAIL AND DRAINAGE PLAN

REPAIR OF WASTE DISPOSAL EVAPORATION POND 2-B
ROCKY FLATS PLANT
DENVER COLORADO

CONTRACT NO. (A.E.C.) AT (29-2) 1061
A.E.C. ACCT. NO.
DRAWN E.G.S.
CHECKED J.F.B.
A.E. APPROVED
DESIGN
PROJ ENGR.
CHIEF ENGR.
SCALE AS NOTED
DATE

SUBMITTED: Lewis R. Benson
RECOMMENDED: B. P. Shepherd, THE DOW CHEMICAL CO.
APPROVED: [signature]

BENSON - LORD COMPANY
COCHRAN BLDG.
DENVER COLORADO

DRAWING NO. RF-B/59-2 SHEET 2 OF 2

Dow Dwg. 1-8081-207

I101-A 000306 page 19

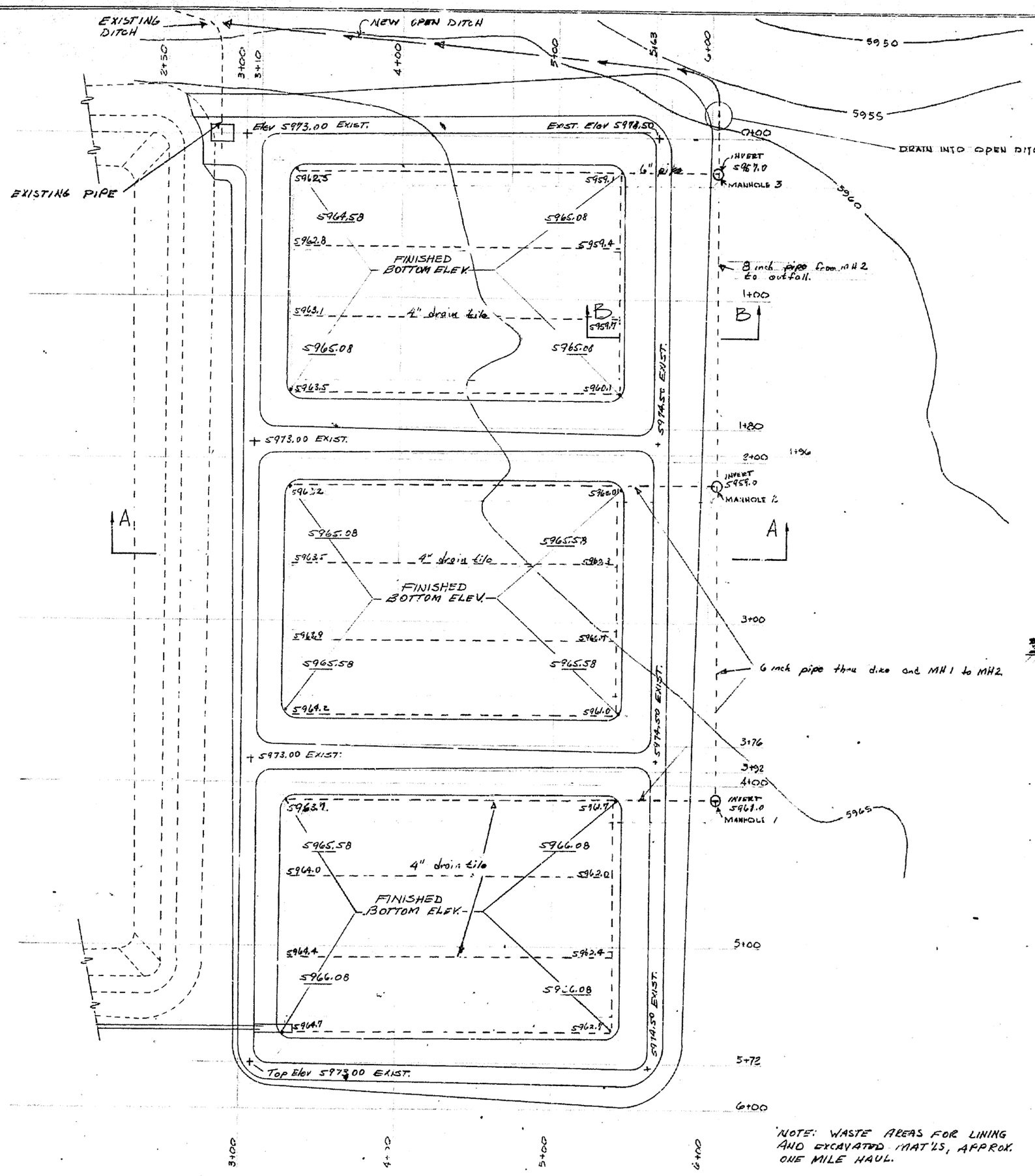

PLAN
SCALE: 1" = 40'

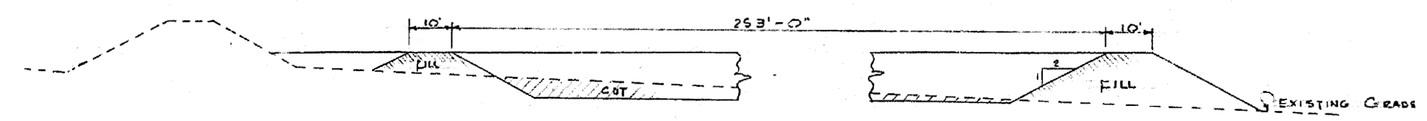

SECTION A-A
SCALE: 1" = 20'

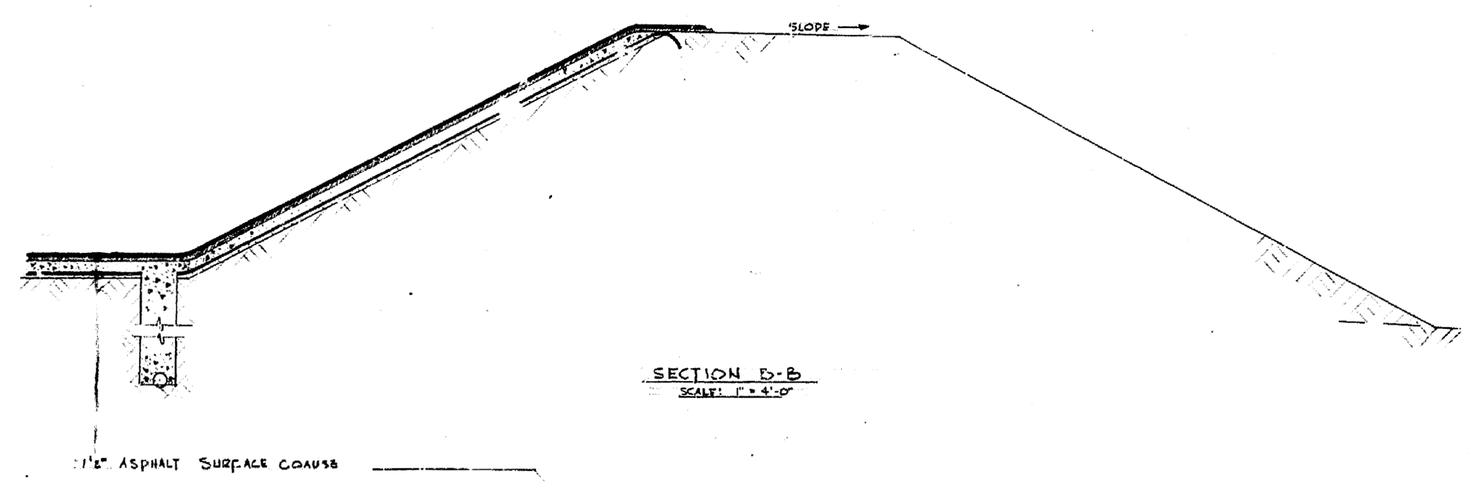

SECTION B-B
SCALE: 1" = 4'-0"

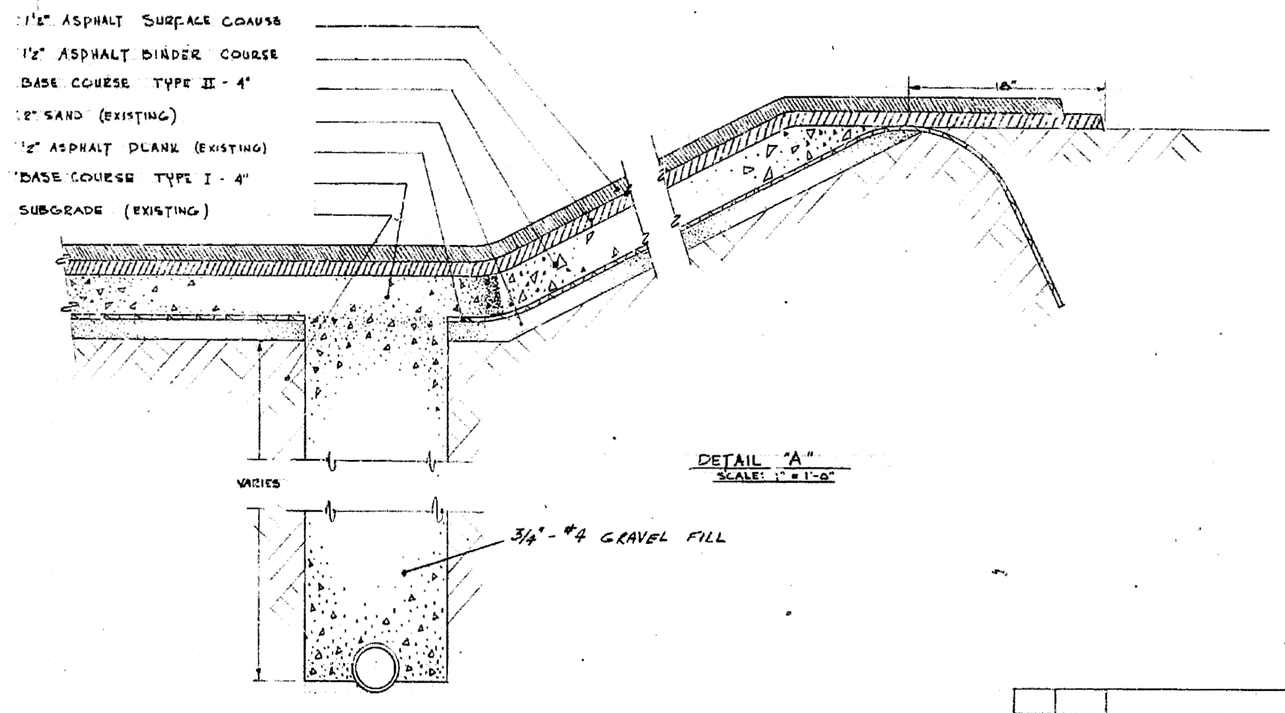

DETAIL "A"
SCALE: 1" = 1'-0"

NO.	DATE	REVISIONS	BY	CK	PROJ. ENGR.	A.E.C. APP.

U. S. ATOMIC ENERGY COMMISSION
ROCKY FLATS AREA OFFICE

POND LINING DETAIL AND DRAINAGE PLAN
REPAIR OF WASTE DISPOSAL EVAPORATION POND 2-6
ROCKY FLATS PLANT
DENVER COLORADO

CONTRACT NO. (S.A.)	A1 SPN 10 WM
ACCT. NO.	
DRAWN	F.G.S.
CHECKED	T.R.B.
A.E. APPROVED	
DESIGN	
PROJ. ENGR.	
CIVIL ENGR.	
SCALE	AS NOTED
DATE	

SUBMITTED: Lowell R. Benson
RECOMMENDED: B. P. Shepherd, THE DOW CHEMICAL CO.
APPROVED:

BENSON-LORD COMPANY
COCHRAN. BLDG
DENVER COLORADO

DRAWING NO. RF-D/59-1 SHEET 1 OF 2

Dow Dwg. 1-8080-207

Good

Jul A 000306 page 18

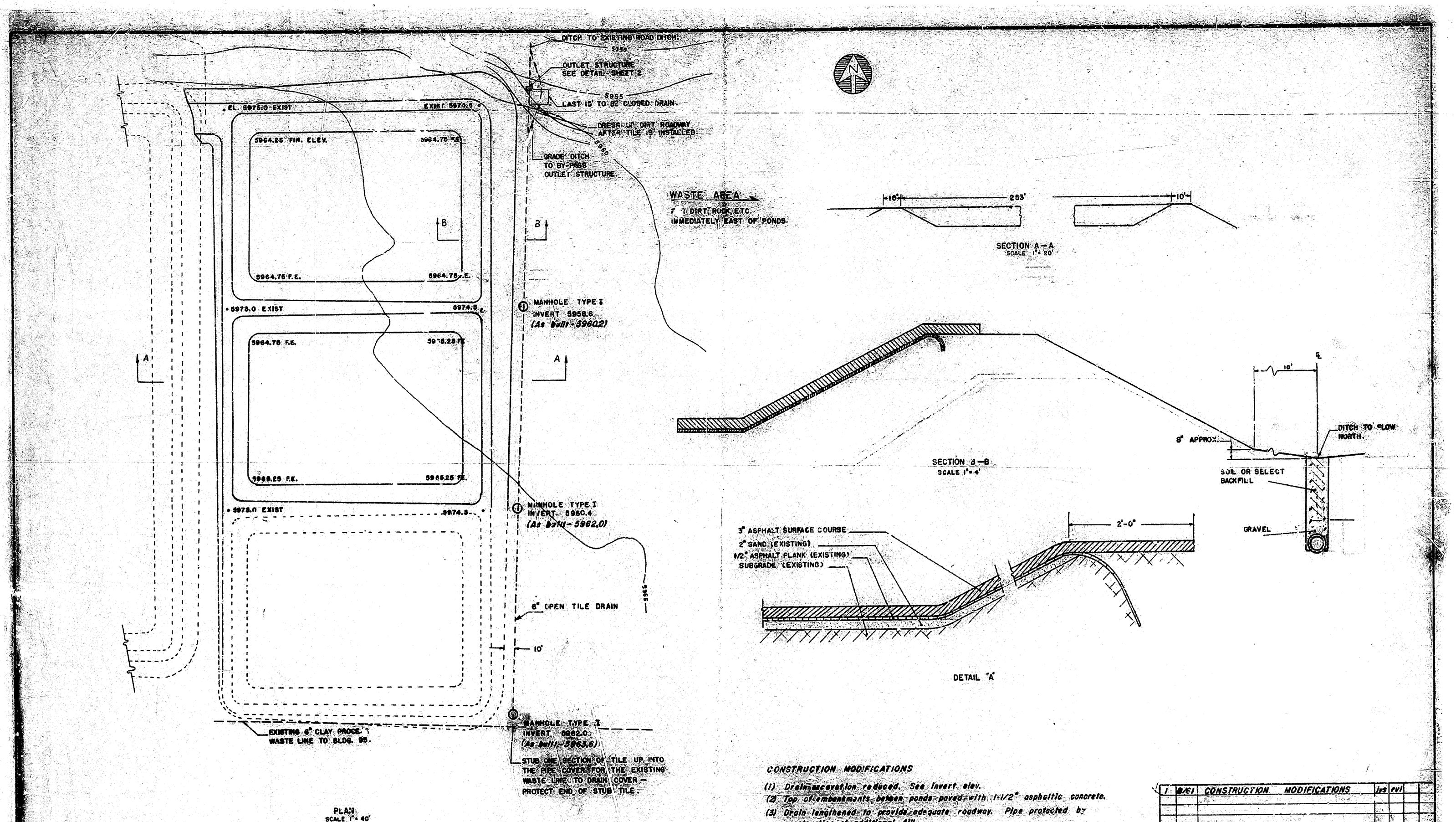

CONSTRUCTION MODIFICATIONS

(1) Drain excavation reduced. See invert elev.
(2) Top of embankments between ponds paved with 1-1/2" asphaltic concrete.
(3) Drain lengthened to provide adequate roadway. Pipe protected by construction of additional fill.

NO.	DATE	REVISIONS	BY	CHK	ENG	AEC
1	8/61	CONSTRUCTION MODIFICATIONS	jys	pvl		

U.S. ATOMIC ENERGY COMMISSION
ROCKY FLATS AREA OFFICE

POND LINING DETAIL AND DRAINAGE PLAN FAC. 207

REPAIR OF WASTE DISPOSAL EVAPORATION POND 2-B ROCKY FLATS PLANT

DENVER COLORADO

DRAWN DHH
CHECKED RKL
DESIGN
PROJ ENGR
CHIEF ENGR
SCALE AS NOTED
DATE

DOW CHEMICAL U.S.A.

DOW DWG 16887-1

I 101 A-000306 page 17

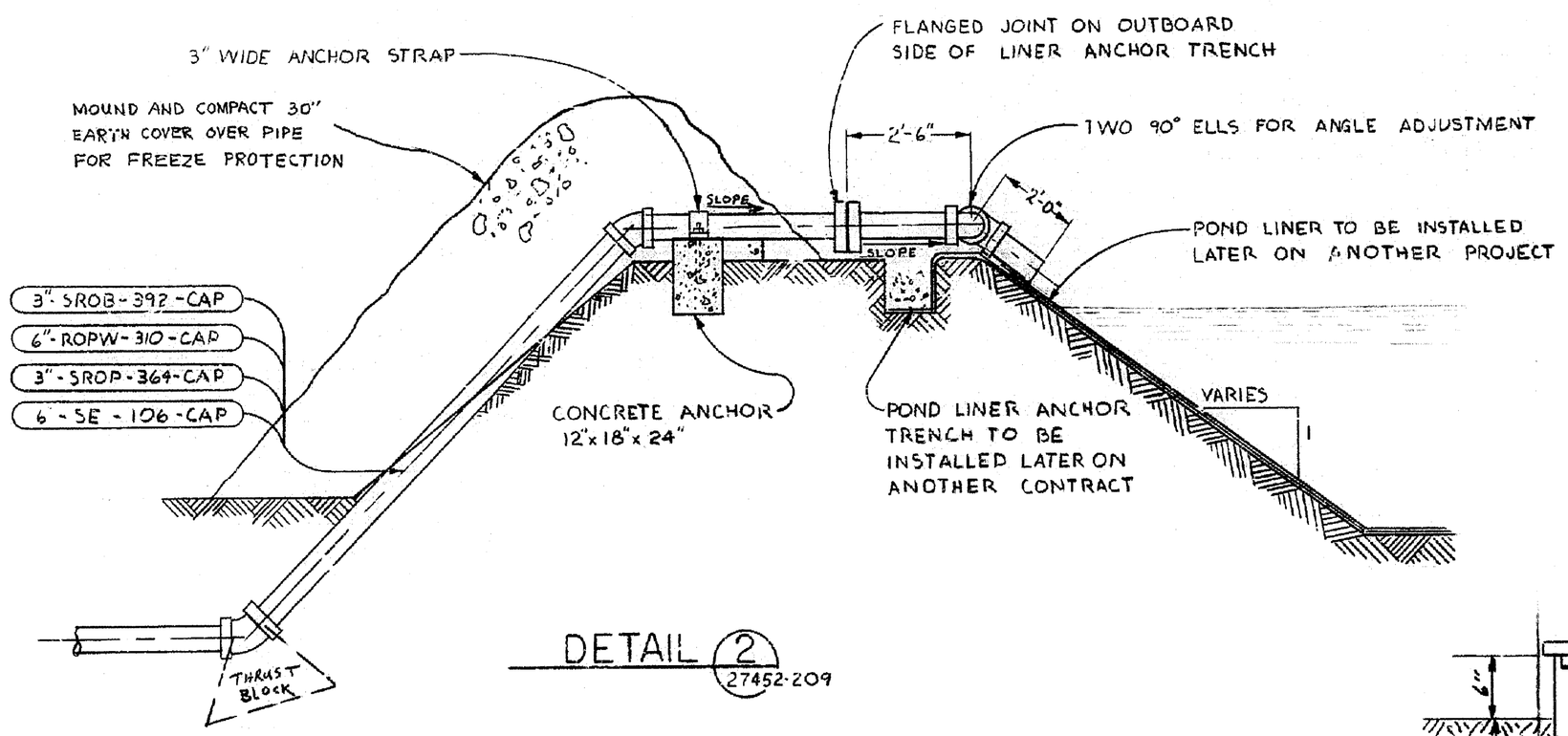

DETAIL 2 27452-209

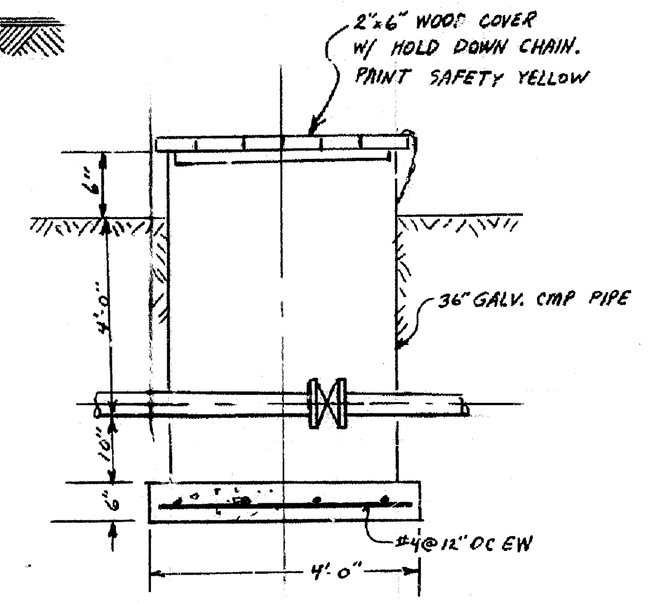

TYPICAL 36" CMP VALVE PIT

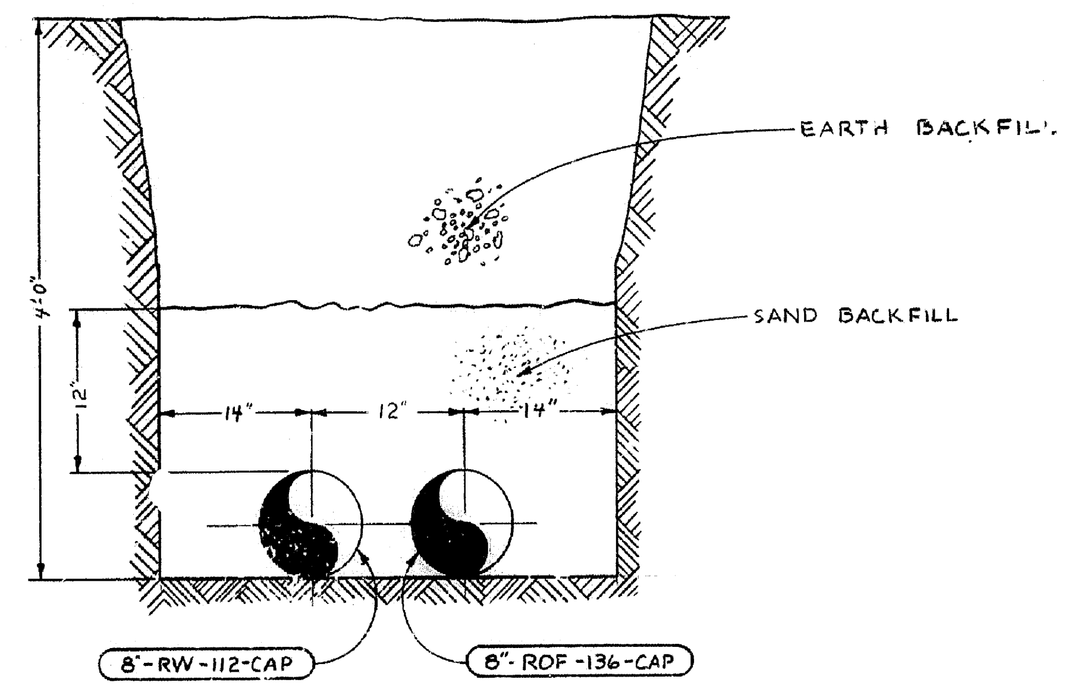

SECTION B
DWG. 27452-209

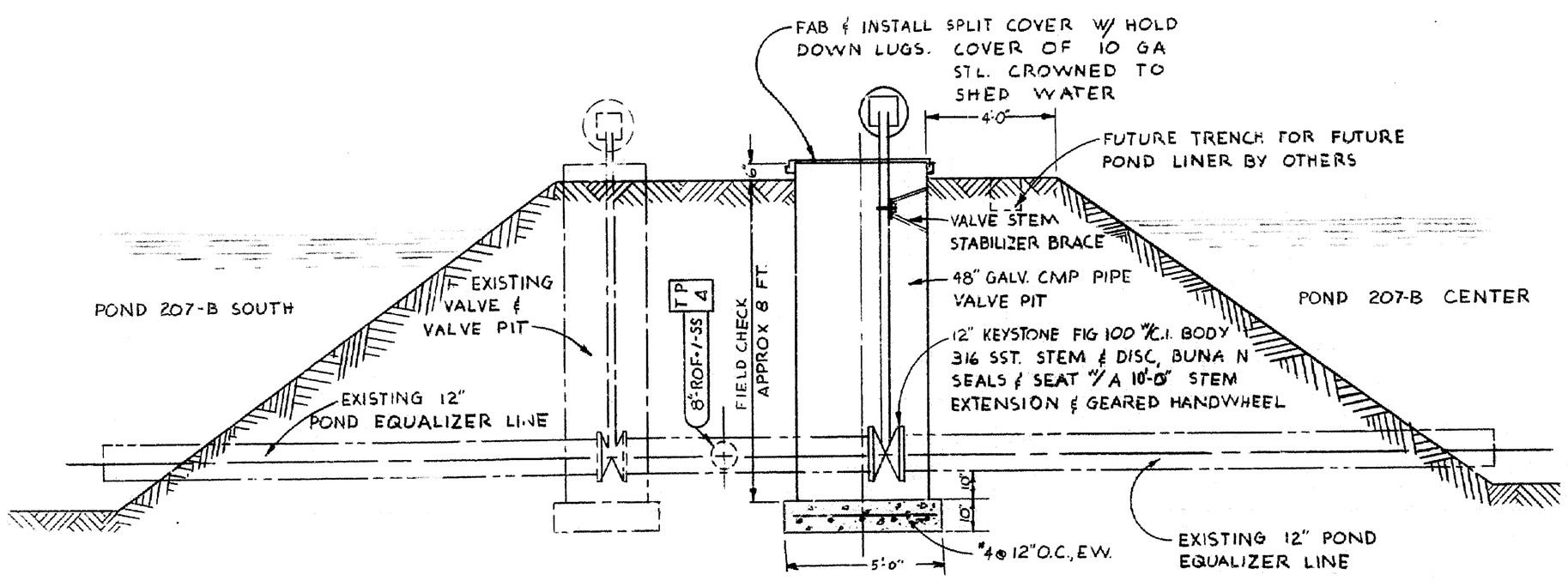

SECTION A-A
DWG 27452-209

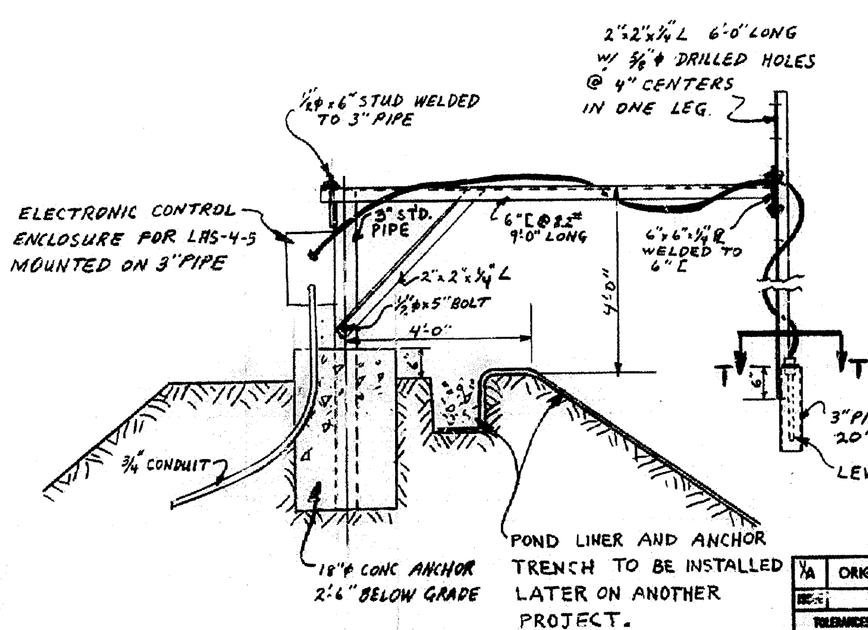

DETAIL 3 27452-209

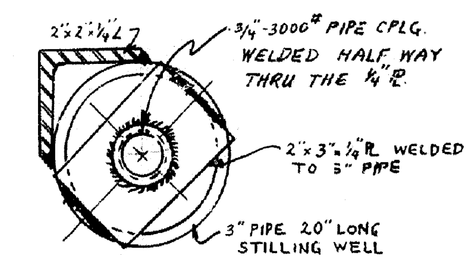

SECTION T-T

REV	DESCRIPTION	DATE					JOB NO.
A	ORIGINAL ISSUE	7/27/77					369005

TOLERANCES: FRACT. ± ; ANGLE ± ; DEC. ± ; UNLESS NOTED OTHERWISE

	BY	DATE
DESIGNED		
DRAWN	MILLER	7-8-77
CHECKED	K.R.	7/14/77
APPROVED		
SUBMITTED		
APPROVED AI		7/27/77
APPROVED ERDA		7/27/77

REMOVE BURRS AND SHARP EDGES

NEXT ASSEMBLY

SCALE: NONE

U.S. ENERGY RESEARCH AND DEVELOPMENT ADMINISTRATION
ROCKY FLATS AREA OFF CE — GOLDEN, COLORADO
ROCKWELL INTERNATIONAL
ATOMICS INTERNATIONAL DIVISION
ERDA CONTRACT E (29-2)-3573
ROCKY FLATS PLANT — GOLDEN, COLORADO 80401

WATER CONTROL & RECYCLE
POND AREA DETAILS

SIZE	DRAWING NUMBER	ISSUE	SHEET
D	27452-210	A	24B OF

207 Bldg. Plot.
Room Area
Bldg. & Vent.
Grab
Gr. Stat.
Toilet
Detection
Comm
Sol
Sil-Conc
Conf
Stairway
Power
Fire Prot.
Laboratory
Piping Diag.
Safe

GPO 877-727

I 101-A-000306 page 34

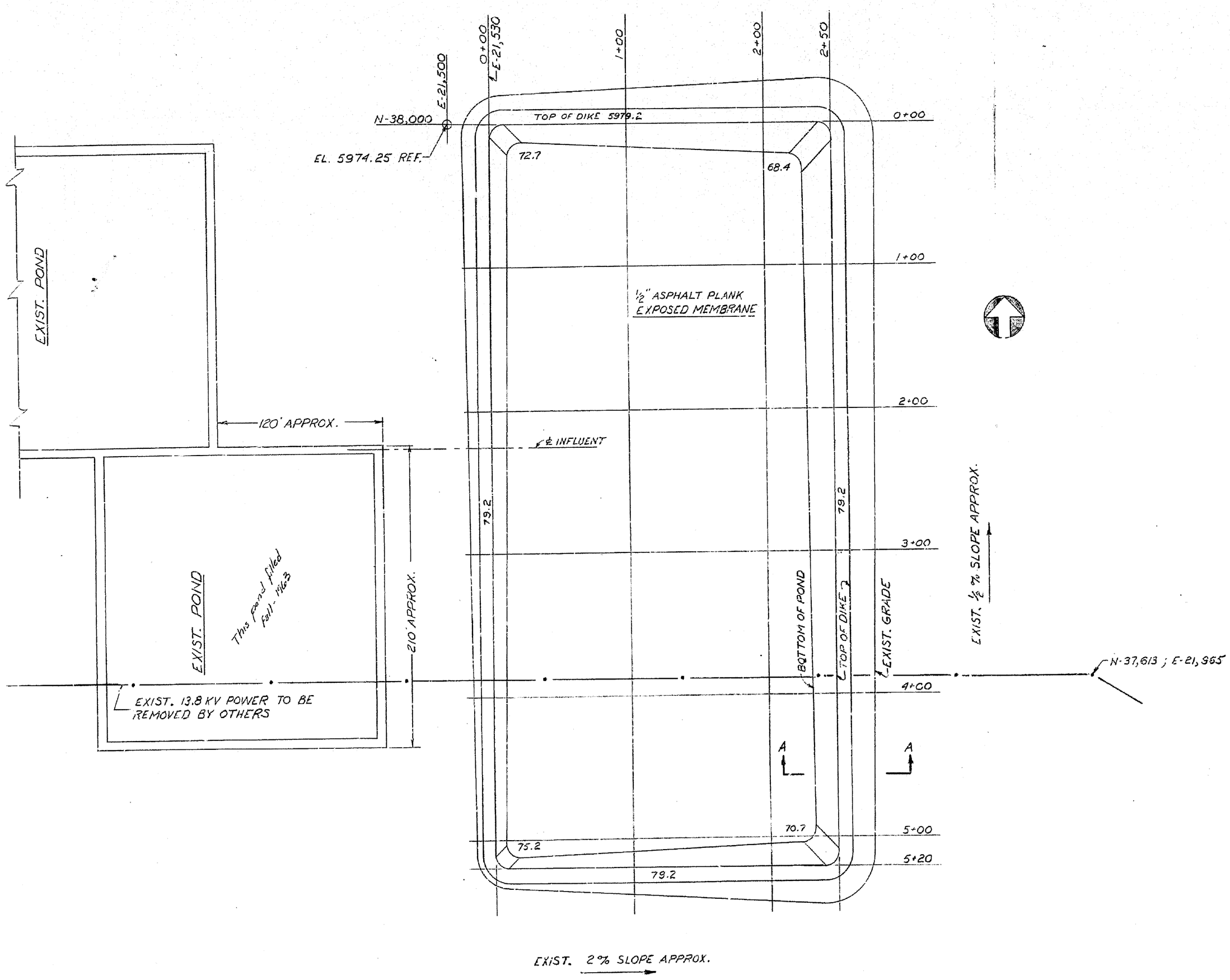

PLAN
SCALE: 1" = 40'

NOMINAL AREA - 3 ACRES
NOMINAL CAP. - 17 ACRE-FEET

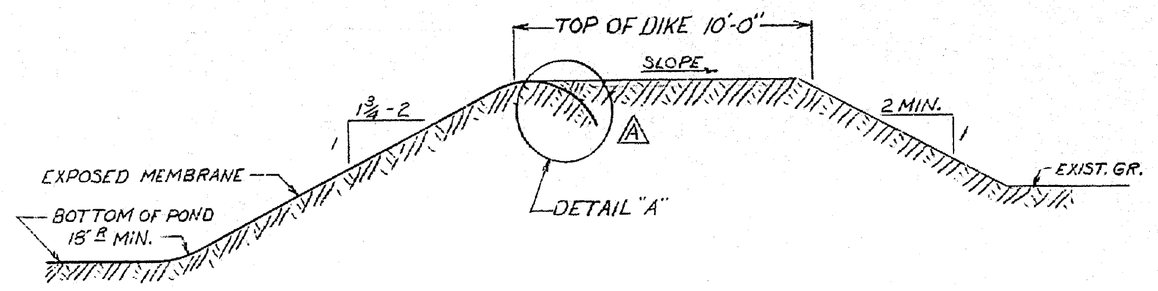

SECTION A-A (TYP.)
NO SCALE

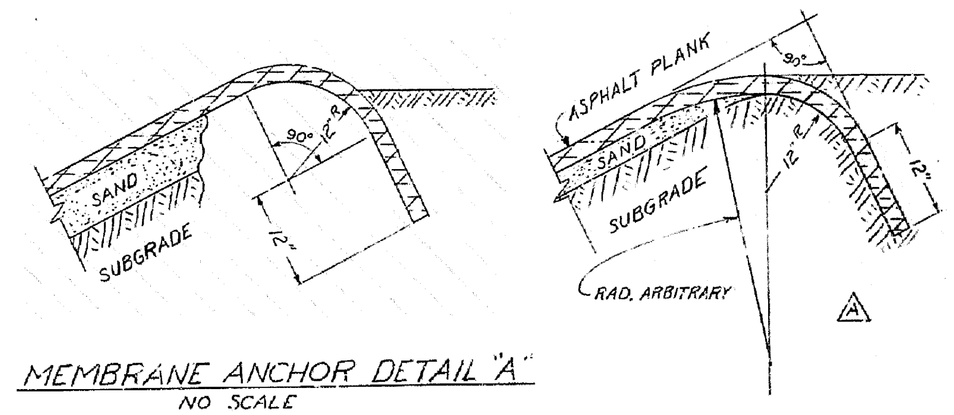

MEMBRANE ANCHOR DETAIL "A"
NO SCALE

NOTES:

1. MAT'LS & CONSTR. TO CONFORM WITH PROVISIONS OF THE SPECS.
2. INSIDE CORNERS OF POND, TOP & BOTTOM OF DIKE, TO BE 10' RAD.
3. A DOUBLE THICKNESS OF ASPHALT PLANK SHALL BE USED AT THE LOCATION OF THE INFLUENT. THE ADDITIONAL LAYER SHALL BE A MIN. OF 3' WIDE & SHALL EXTEND FROM THE TOP OF THE DIKE TO THE BOTTOM OF THE POND & A DISTANCE OF AT LEAST 10' ALONG THE BOTTOM
4. POND INFLUENT LINE FROM 200,000 GAL. STORAGE TANK BY OTHERS.

NO.	LOC'TN	REVISIONS	BY	DATE	O. K.
A	K-4	CHANGED DET. A.	RG	1-26-56	[illegible]

JOB COMPLETE IN SHEETS NUMBERED

THE DOW CHEMICAL COMPANY
A.E.C. CONTRACT AT (29-1)-1196
ROCKY FLATS PLANT — DENVER, COLORADO

IND. WASTE — FAC. 207
3 ACRE EVAPORATION POND
PLAN & SECTION

DRAWN RDG — CHECKED
DATE 12-16-55 — O. K.
SCALE AS SHOWN — 1-3398-207

WORK AND DRAWINGS MUST AGREE
IF CHANGES ARE DESIRED CO-OPERATE
WITH ENG. DEPT. AND HAVE SAME O.K'D.

F161A-000306 Page 16

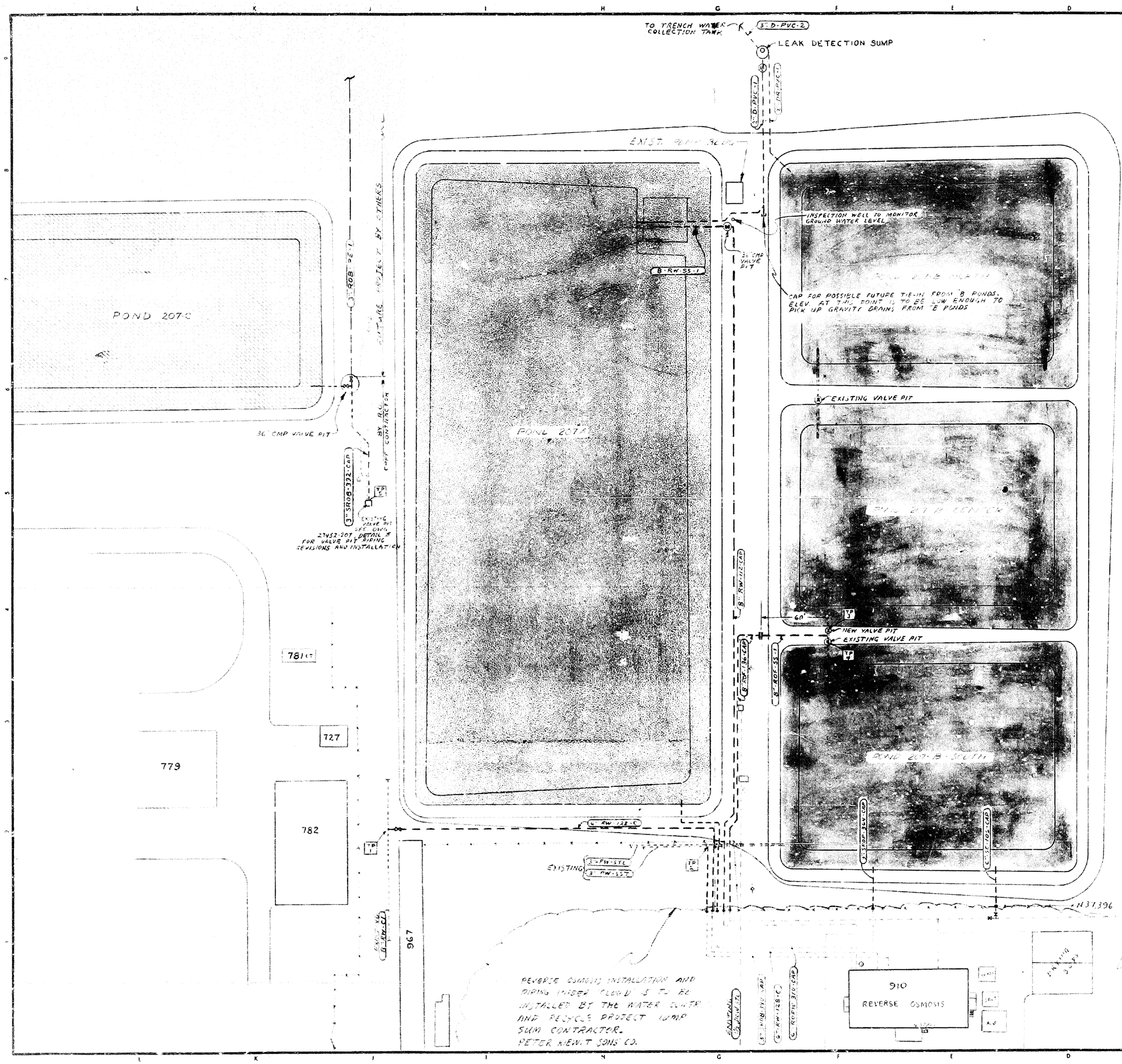

PART	QUAN.	DESCRIPTION	MATERIAL

GRAPHIC SCALE

INDICATES POND AREA TO BE LINED WITH AN IMPERVIOUS LINER OVER A POROUS ASPHALT SUB-LINER DRAIN SYSTEM

INDICATES POND AREA TO BE LINED WITH AN IMPERVIOUS LINER OVER A SPRAYED-ON ASPHALT TACK COAT

INDICATES POND AREA TO RECEIVE A SPRAYED-ON ASPHALT TACK COAT ONLY

ISSUE	DESCRIPTION	LOC	DATE	BY	APPV'D	APPV. CLASSIF.	JOB NO.
C	ADDED R.O. INSTALLATION AND ASSOCIATED PIPING IN THE POND AREA		4-4-77				
B	GENERAL REVISIONS TO MATCH REVISED DESIGN CRITERIA		3-14-77				
A	ORIGINAL ISSUE DESIGN CRITERIA						

	BY	DATE
DESIGNED		
DRAWN		
CHECKED		
APPROVED		
CONT. NO.		
SUBMITTED		
SCALE 1" = 40 FT.		

U.S. ENERGY RESEARCH AND DEVELOPMENT ADMINISTRATION
ROCKY FLATS AREA OFFICE — GOLDEN, COLORADO

ROCKWELL INTERNATIONAL
ATOMICS INTERNATIONAL DIVISION
ERDA CONTRACT E (29-2)-3533
ROCKY FLATS PLANT — GOLDEN, COLORADO 80401

CONSOLIDATION BARRIER
POND AREA PLAN
PHASE I FOR R.O.

SIZE	DRAWING NUMBER	ISSUE	SHEET
D	25786-C01	C	1

I 161 H 000506 page 15

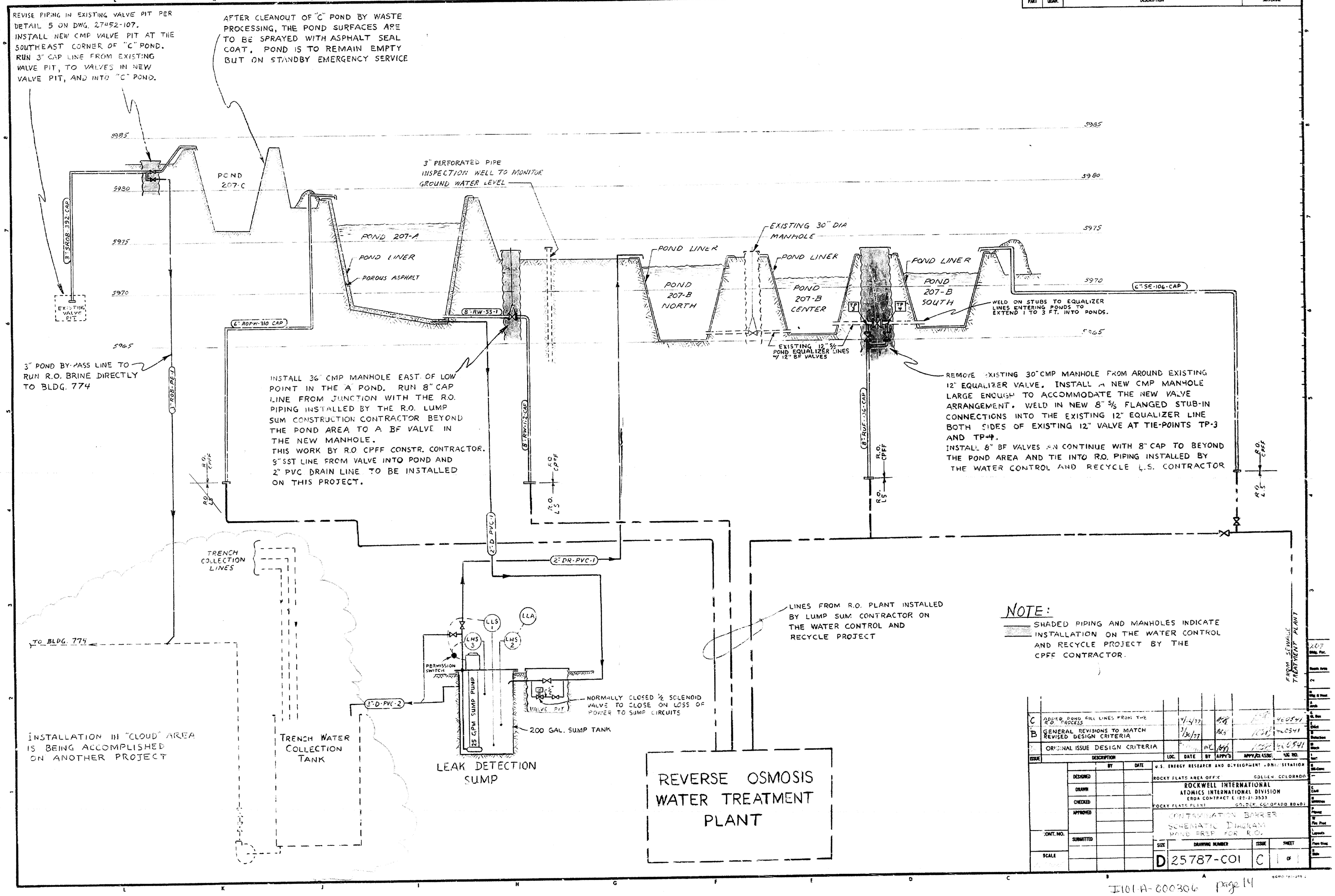

I101A-000306 page 14

DET.	SHT.	NUMBER REQ'D	DESCRIPTION	MATERIAL

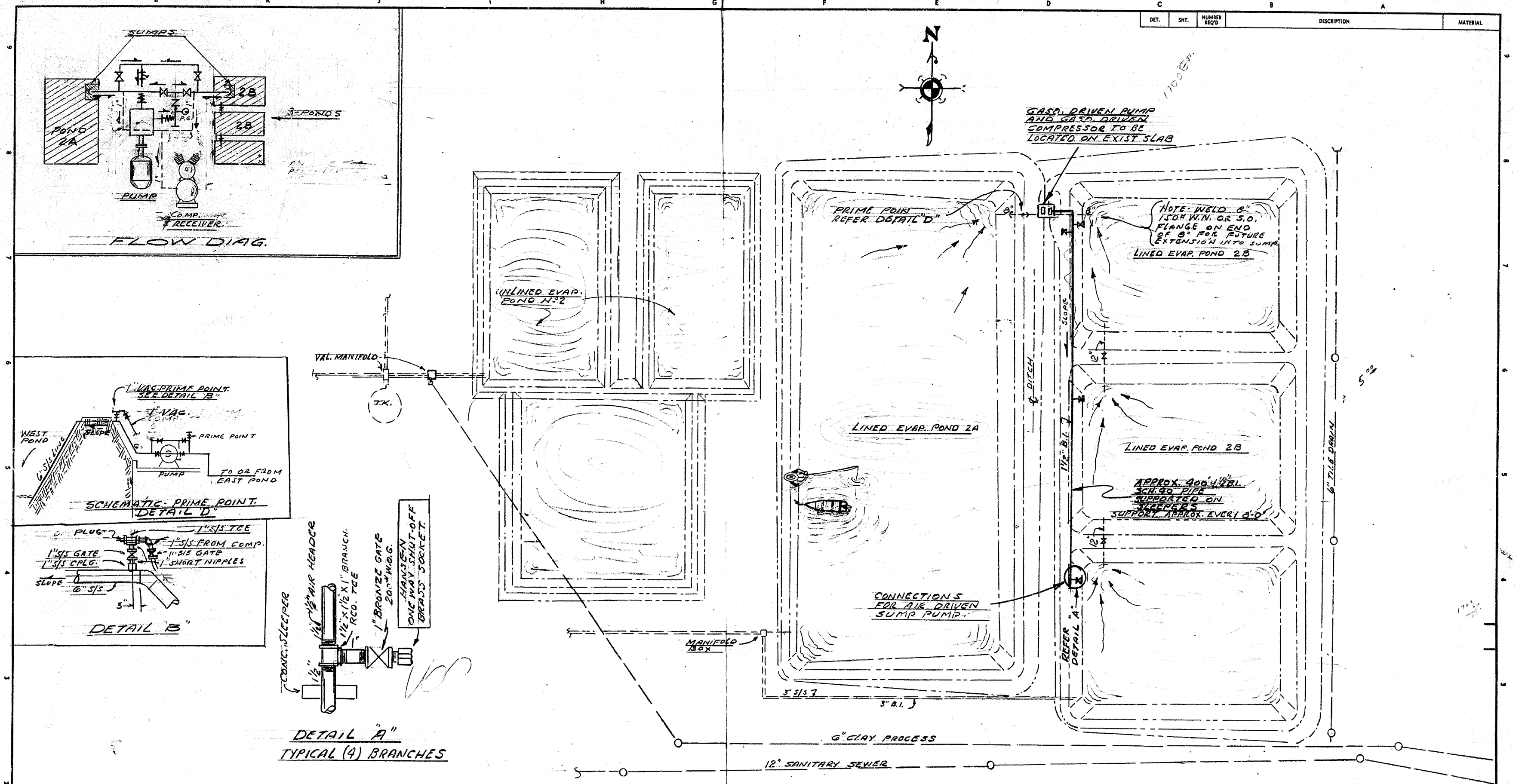

UNITED STATES ATOMIC ENERGY COMMISSION
ROCKY FLATS AREA OFFICE — DENVER, COLORADO

UNLESS OTHERWISE NOTED: FRACT. TOL. ± ANG. TOL. ± DEC. TOL. ± REMOVE BURRS AND SHARP EDGES. NEXT ASSEMBLY. SCALE: DON'T.

	BY	DATE
DESIGNED	CLATE	9/20/63
DRAWN	CLATE	9/20/63
CHECKED		
APPROVED		

THE DOW CHEMICAL COMPANY
A.E.C. CONTRACT AT (29-1)-1106
ROCKY FLATS DIVISION — DENVER, COLORADO

207 FACILITY
TRANSFER PUMP, AIR COMPRESSOR AND AIR LINE FOR WASTE PONDS.

JOB NO.	SIZE	DRAWING NUMBER	REV.	SHEET
W.O. 68710 CHG. 374	D	12131-207		1 OF 2

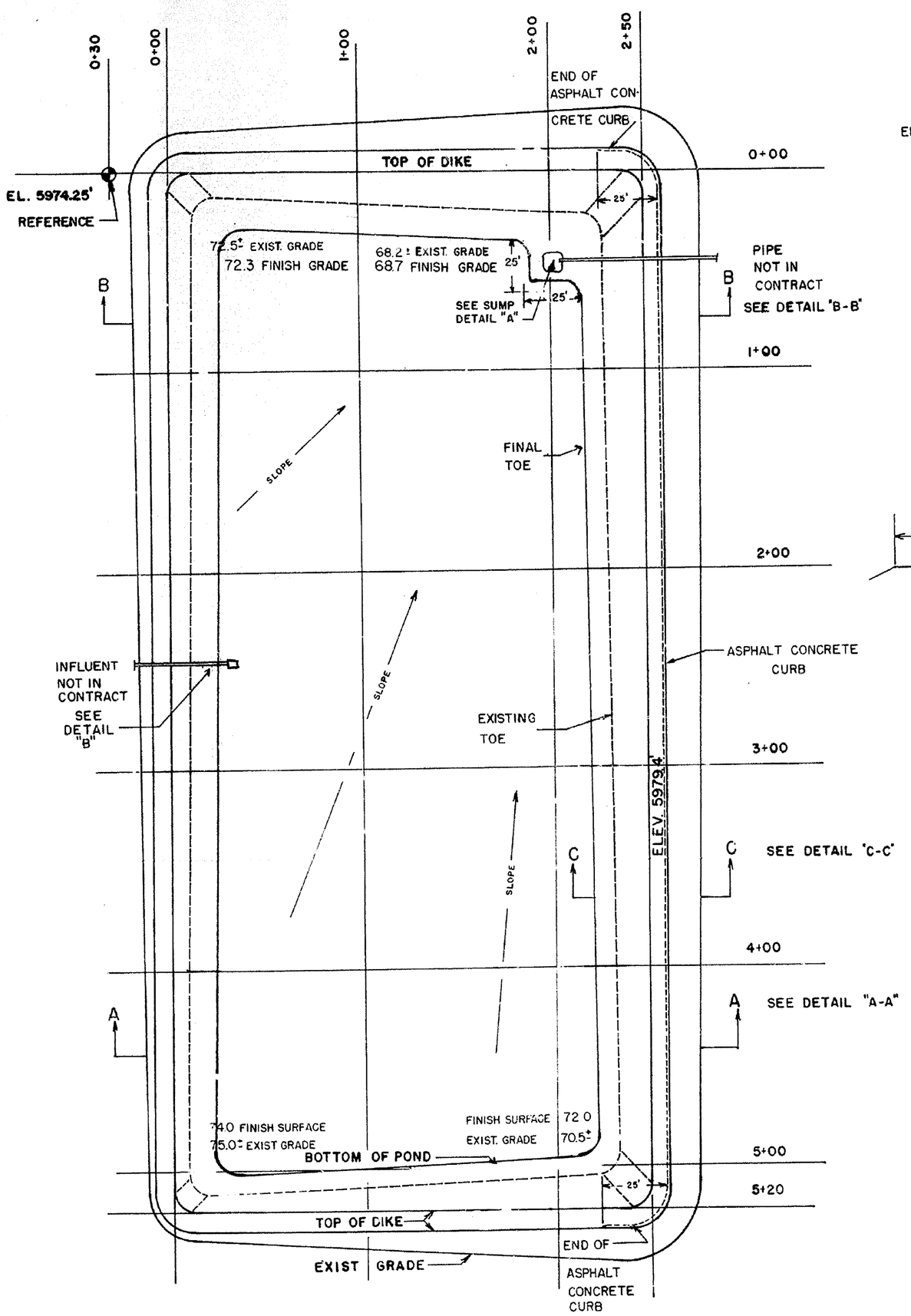

POND 2-A
PLAN

SCALE 1"=40'

N

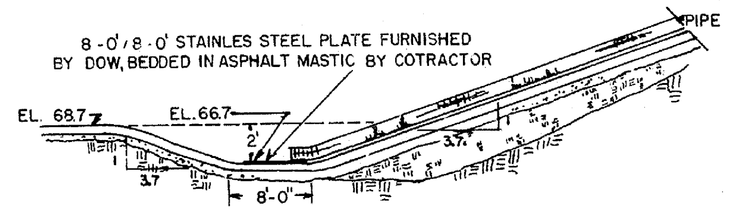

DETAIL "A"
NO SCALE

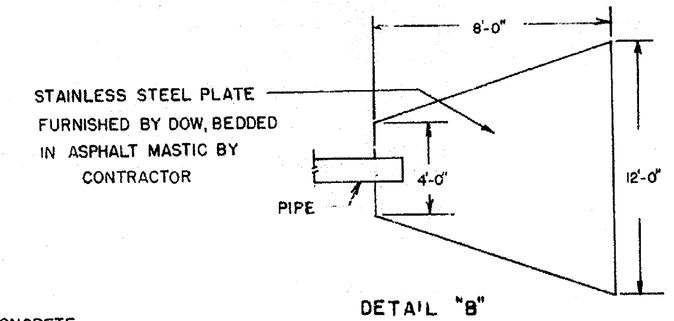

DETAIL "B"
NO SCALE

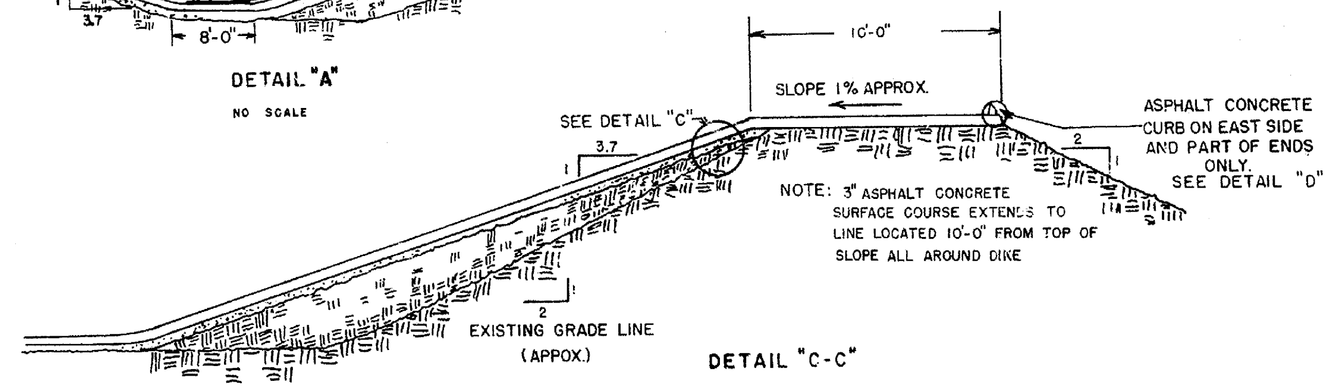

DETAIL "C-C"
SCALE 1"= 4'-0"

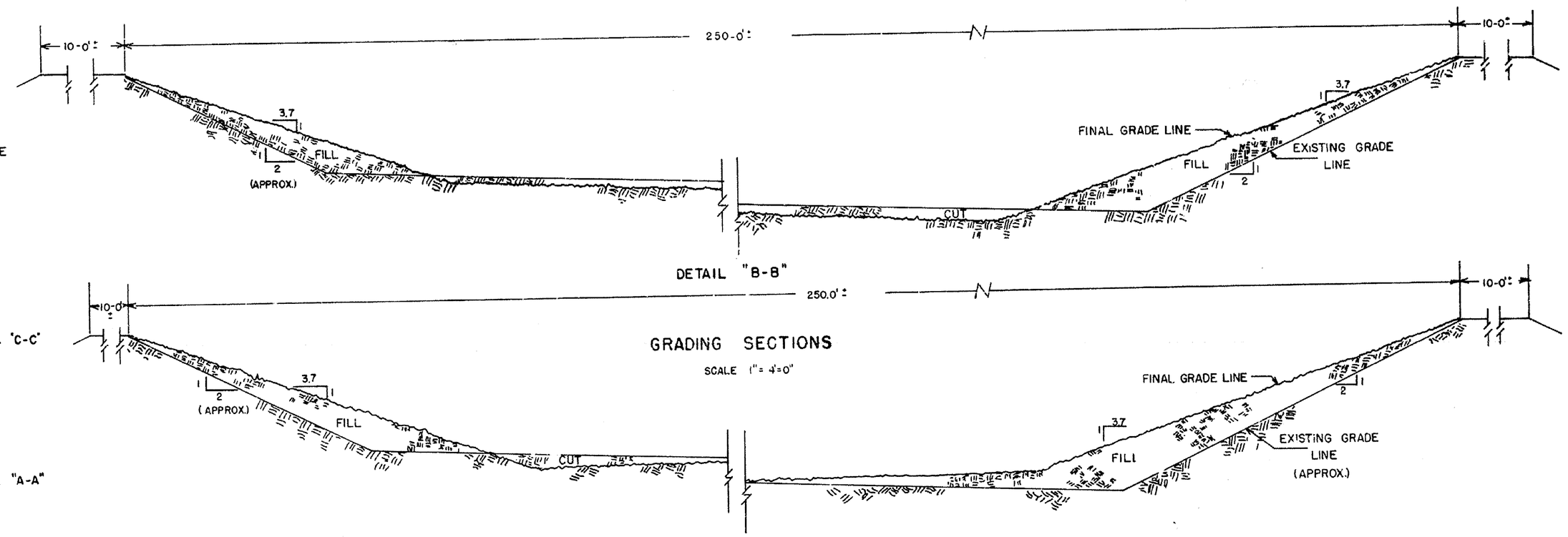

GRADING SECTIONS
SCALE 1"= 4'-0"

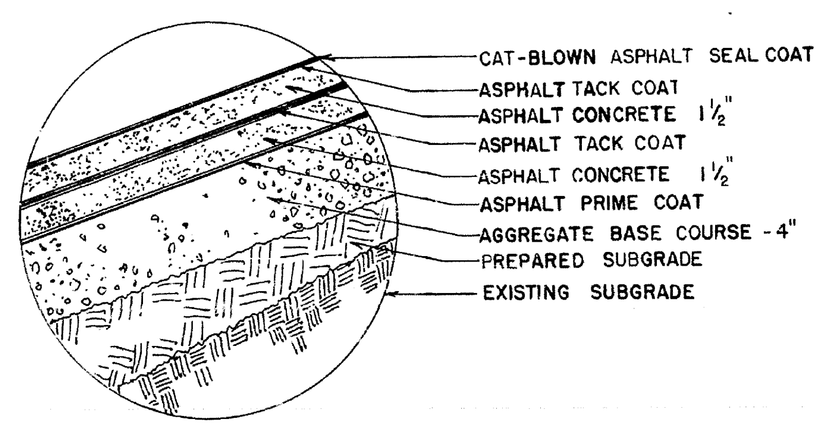

DETAIL "C" SCALE 1"=10"

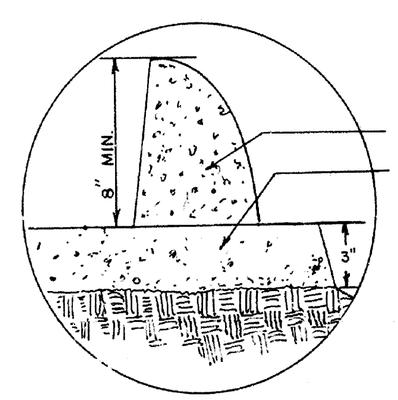

NOTE. ASPHALT CONCRETE PLACED ON EXISTING SUBGRADE

DETAIL "D" NO SCALE

INDEX

GENERAL DETAILS RF-AF/207-C-1

ROBERT V. LUIC REGISTERED PROFESSIONAL ENGINEER 3060 STATE OF COLORADO

REV	LOC	DESCRIPTION			DATE	BY	APPR'D	JOB NO
					8-27-63			

F.A.: 207

CAT. C

	BY	DATE
DESIGNED	RVL	8/28/63
DRAWN	TJ.	8/26/63
CHECKED	RVL	9/3/63
APPROVED		
SUBMITTED	[illegible]	9/3/63
APPROVED	[illegible]	9/3/63

U.S. ATOMIC ENERGY COMMISSION
ROCKY FLATS AREA OFFICE GOLDEN, COLORADO

POND 2-A
RELINING DETAILS

ASPHALT ENGINEERS AND CONSUTANTS, INC.
1031-15TH STREET DENVER, COLORADO

SCALE	SIZE	DRAWING NUMBER	SHEET
VARIES	1	RF-AF/207-C-1	1 OF 1

Dow Dwg. D-11120-1
F101A-000306 page 12

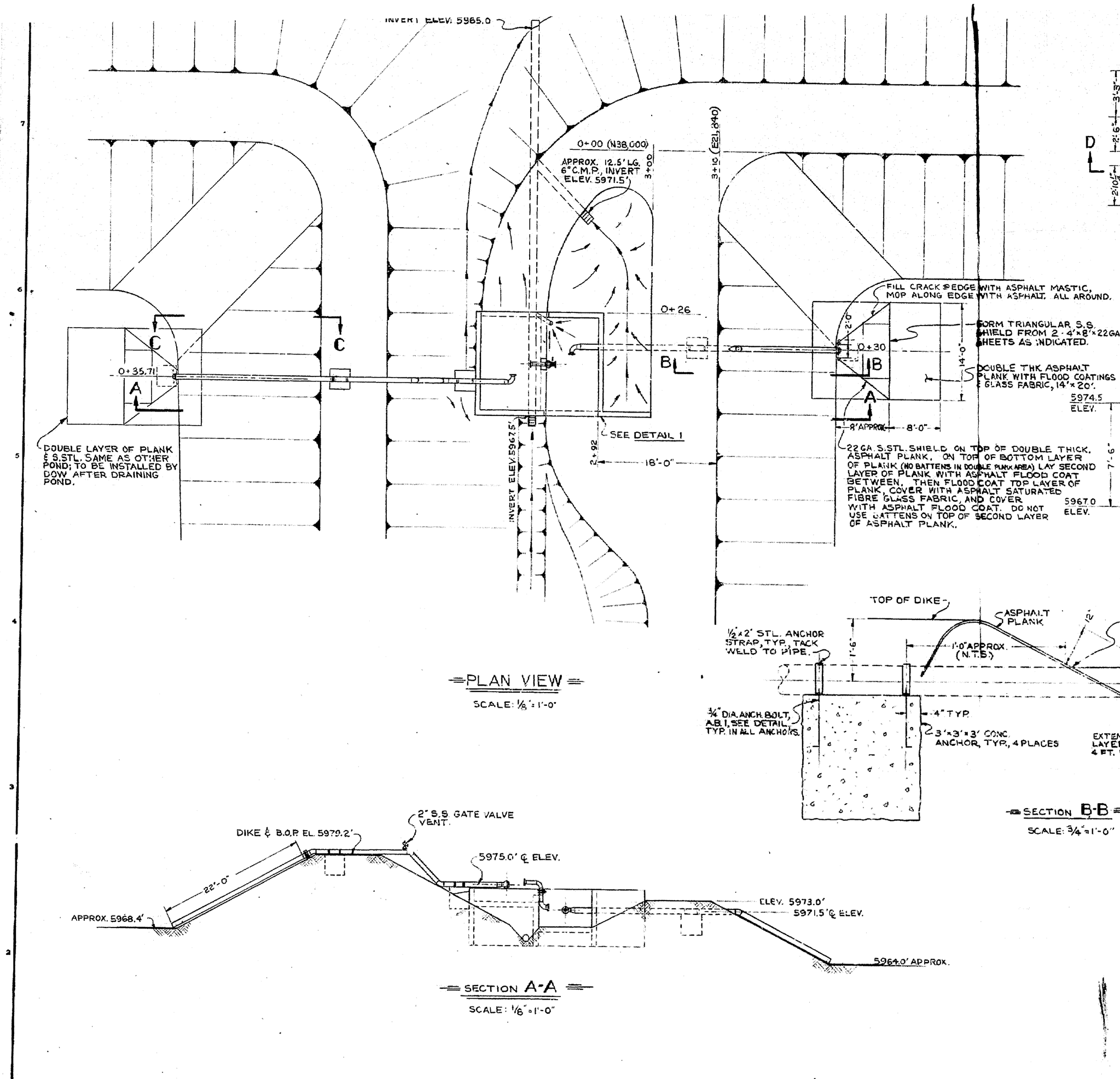

PLAN VIEW

SCALE: 1/8" = 1'-0"

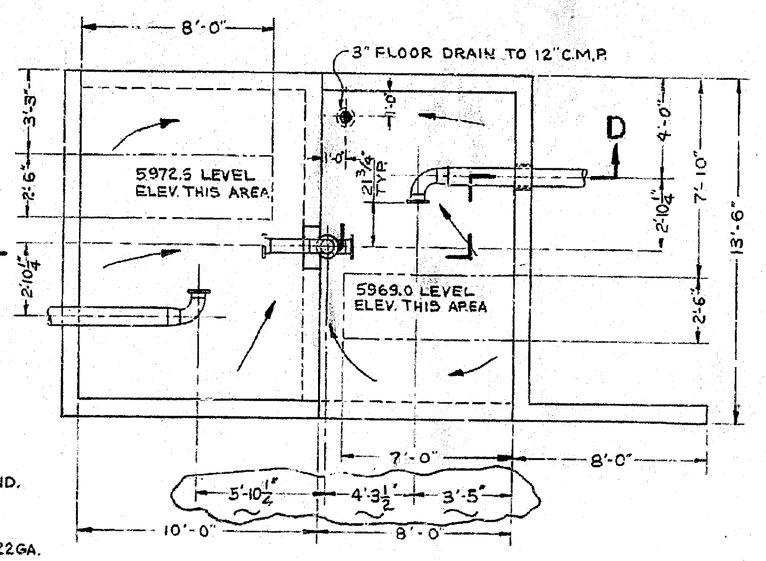

PLAN VIEW

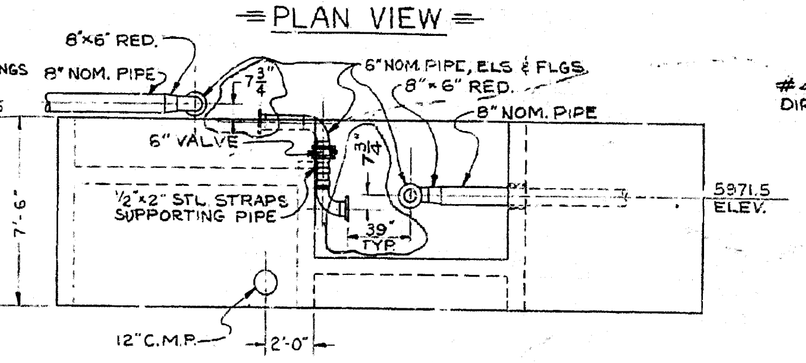

DETAIL 1

SCALE: 1/4" = 1'-0"

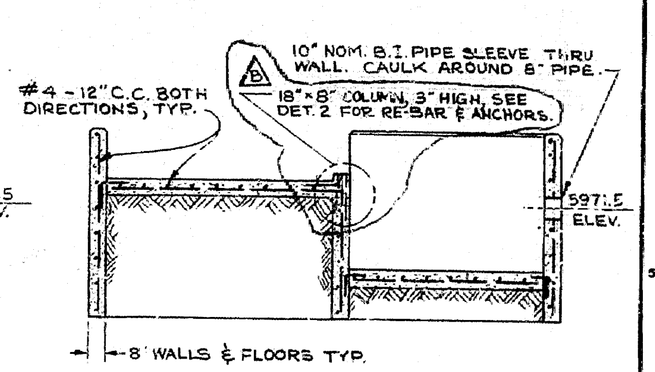

SECTION D-D

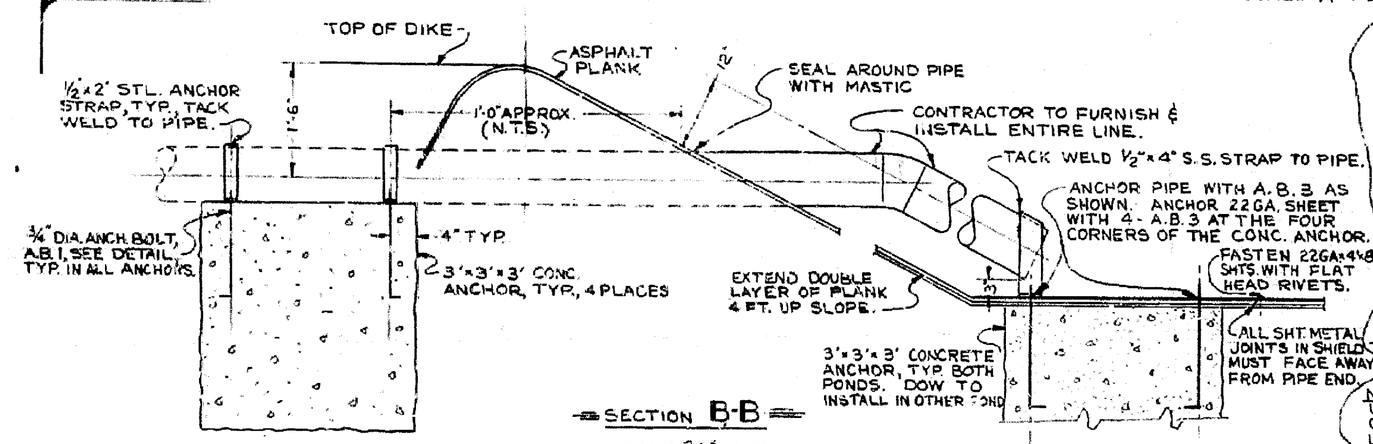

SECTION B-B

SCALE: 3/4" = 1'-0"

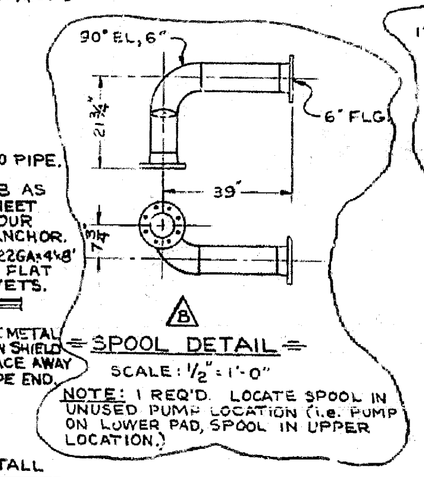

SPOOL DETAIL

SCALE: 1/2" = 1'-0"

NOTE: 1 REQ'D. LOCATE SPOOL IN UNUSED PUMP LOCATION (i.e. PUMP ON LOWER PAD, SPOOL IN UPPER LOCATION.)

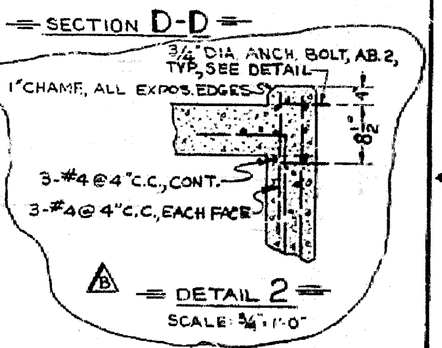

DETAIL 2

SCALE: 3/4" = 1'-0"

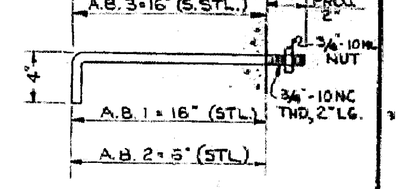

ANCHOR BOLT DETAIL

A.B. 1 - 12 REQ'D.
A.B. 2 - 4 REQ'D.
A.B. 3 - 6 REQ'D. (IN POND)

SECTION A-A

SCALE: 1/8" = 1'-0"

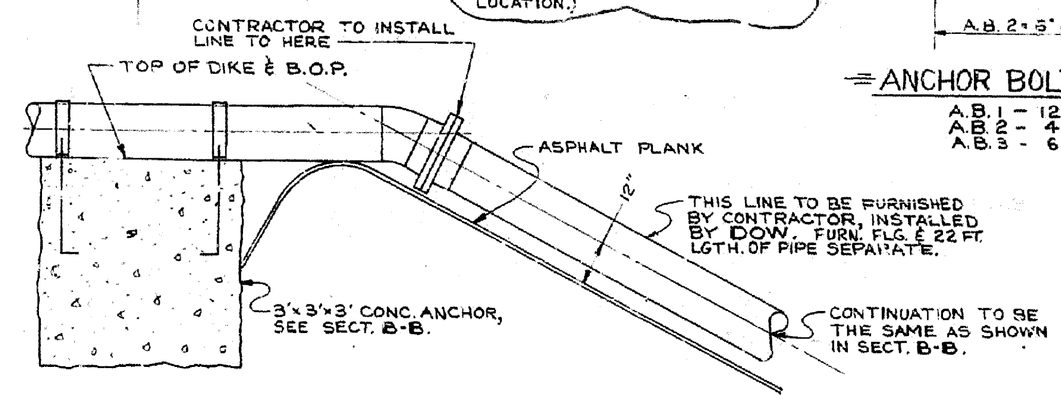

SECTION C-C

SCALE: 3/4" = 1'-0"

(2) 7.5 #B5
(1) 6.5 × 13.5
Slab (2) 13.5 × 8

NOTE:

1. EXPANSION JOINTS MUST BE 15¾" FACE-TO-FACE & ARE TO BE "BADGER" NO. 6-5V3, WITH 304 S.S. FLGS., EXPANSION JOINTS, 6" SIZE, FLANGED, 5 CORRUGATIONS, WITH ST. STL. INTERNAL SLEEVES.
2. ATTACH EXPANSION JOINTS TO SUCTION & DISCHARGE OF PUMP. MOVE JOINTS WITH PUMP WHEN CHANGING PUMP LOCATION.

LIST OF MATERIAL

PART NUMBER	NUMBER REQ'D	DESCRIPTION	MATERIAL
		LIST OF PIPING COMPONENTS	
1	81 FT	8" SCH. 10 PIPE, TYPE 304 ELC OR 316	S.S.
2	5.5 FT	6" SCH. 10 PIPE, TYPE 304 ELC OR 316	"
3	2	2" SCH. 40 PIPE NIPPLE, 304 ELC OR 316	"
4	2	8"-150# WLD. NK. FLANGE	"
5	6	6"-150# WLD. NK. FLANGE	"
6	2	8"-6" CONC. REDUCER, WELDING, STD.	"
7	2	8"-45° WLD. EL., LT. GAUGE, LONG RAD.	"
8	2	8"-SPECIAL EL., APPROX. 26° LG. RAD.	"
9	5	6"-90 WLD. EL., LT. GAUGE, LONG RAD.	"
10	1	6" VALVE, S.S., 150 PSI, #118, HYPALON SEAT	KEYSTONE
11	1	2" GATE VALVE, WELD SOCKET ENDS	S.S.
12	2	SHEET FOR BOT. OF POND, 22GA. TYPE 304	S.S.
13	2	6" SIZE, S.S. EXPAN. JOINT (SEE NOTE)	ZALLEA
14	1	PUMP, TRAILER MOUNTED, 6-CNG-84	WORTHINGTON

NO.	LOC.	REVISIONS	BY	DATE	O.K.
A	1-C	CHANGE EXPAN JOINTS	CB	2-21-60	
B		REV. DET. 1 & 2, AND SPOOL	CB	3-21-60	

JOB COMPLETE IN SHEETS NUMBERED

WORK AND DRAWINGS MUST AGREE IF CHANGES ARE DESIRED CO-OPERATE WITH ENG. DEPT. AND HAVE SAME O.K'D.

THE DOW CHEMICAL COMPANY
A.E.C. CONTRACT AT (29-1)-170
ROCKY FLATS PLANT — DENVER, COLORADO

IND. WASTE — FAC. 207
TRANSFER PUMP PIPING AND PAD
EVAPORATION POND

DRAWN CFB — CHECKED C.S.T.J.
DATE 2-3-60 — O.K.
SCALE AS NOTED — 1-6393-207B

I 101 A 600306 page 11

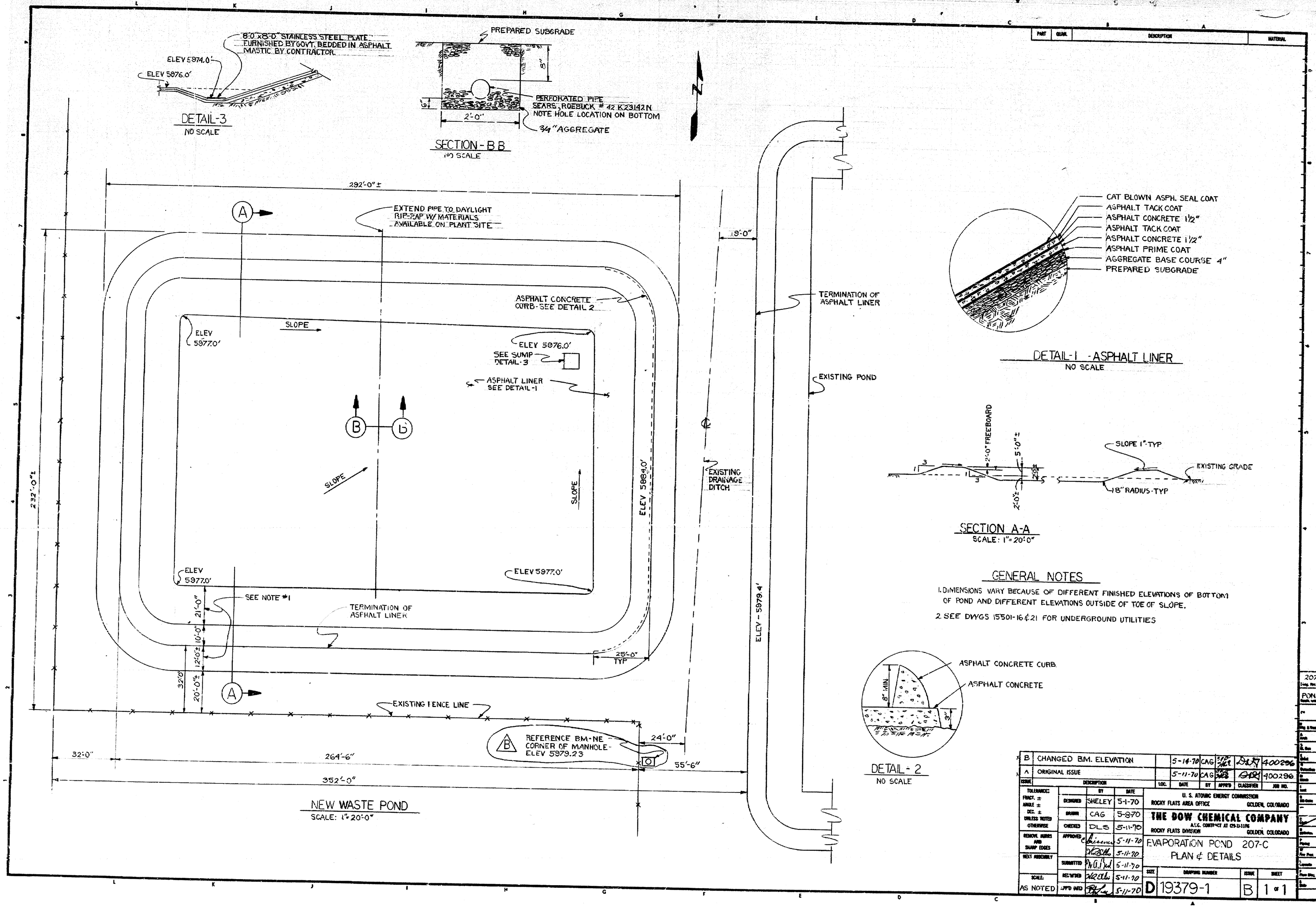

GENERAL NOTES

1. DIMENSIONS VARY BECAUSE OF DIFFERENT FINISHED ELEVATIONS OF BOTTOM OF POND AND DIFFERENT ELEVATIONS OUTSIDE OF TOE OF SLOPE.
2. SEE DWGS 15501-16 & 21 FOR UNDERGROUND UTILITIES

ISSUE	DESCRIPTION	LOC.	DATE	BY	APPR'D	CLASSIFIER	JOB NO.
B	CHANGED B.M. ELEVATION		5-14-70	CAG	[illegible]	[illegible]	400296
A	ORIGINAL ISSUE		5-11-70	CAG	[illegible]	[illegible]	400296

		BY	DATE
TOLERANCES FRACT. ± ANGLE ± DEC. ± UNLESS NOTED OTHERWISE	DESIGNED	SHELEY	5-1-70
	DRAWN	CAG	5-8-70
	CHECKED	DLS	5-11-70
REMOVE BURRS AND SHARP EDGES	APPROVED	[illegible]	5-11-70
NEXT ASSEMBLY		[illegible]	5-11-70
	SUBMITTED	[illegible]	5-11-70
SCALE: AS NOTED	REC'M'DED	[illegible]	5-11-70
	APP'D (AEC)	[illegible]	5-11-70

U. S. ATOMIC ENERGY COMMISSION
ROCKY FLATS AREA OFFICE GOLDEN, COLORADO

THE DOW CHEMICAL COMPANY
A.E.C. CONTRACT AT (29-1)-1106
ROCKY FLATS DIVISION GOLDEN, COLORADO

EVAPORATION POND 207-C
PLAN & DETAILS

SIZE	DRAWING NUMBER	ISSUE	SHEET
D	19379-1	B	1 of 1

207C
POND

I101-A-000306 page 10

PART	QUAN.	DESCRIPTION	MATERIAL

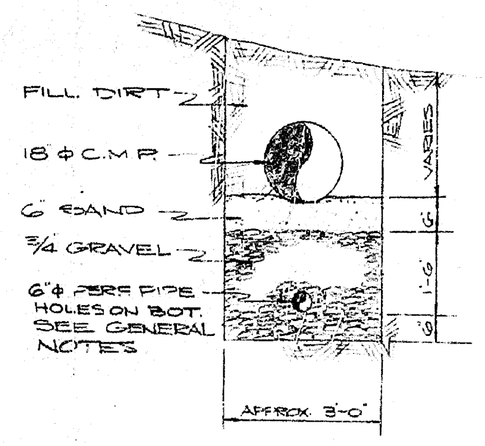

TYPICAL SECTION THRU C.M.P. & PERF PIPE

SCALE 1/2" = 1'-0"

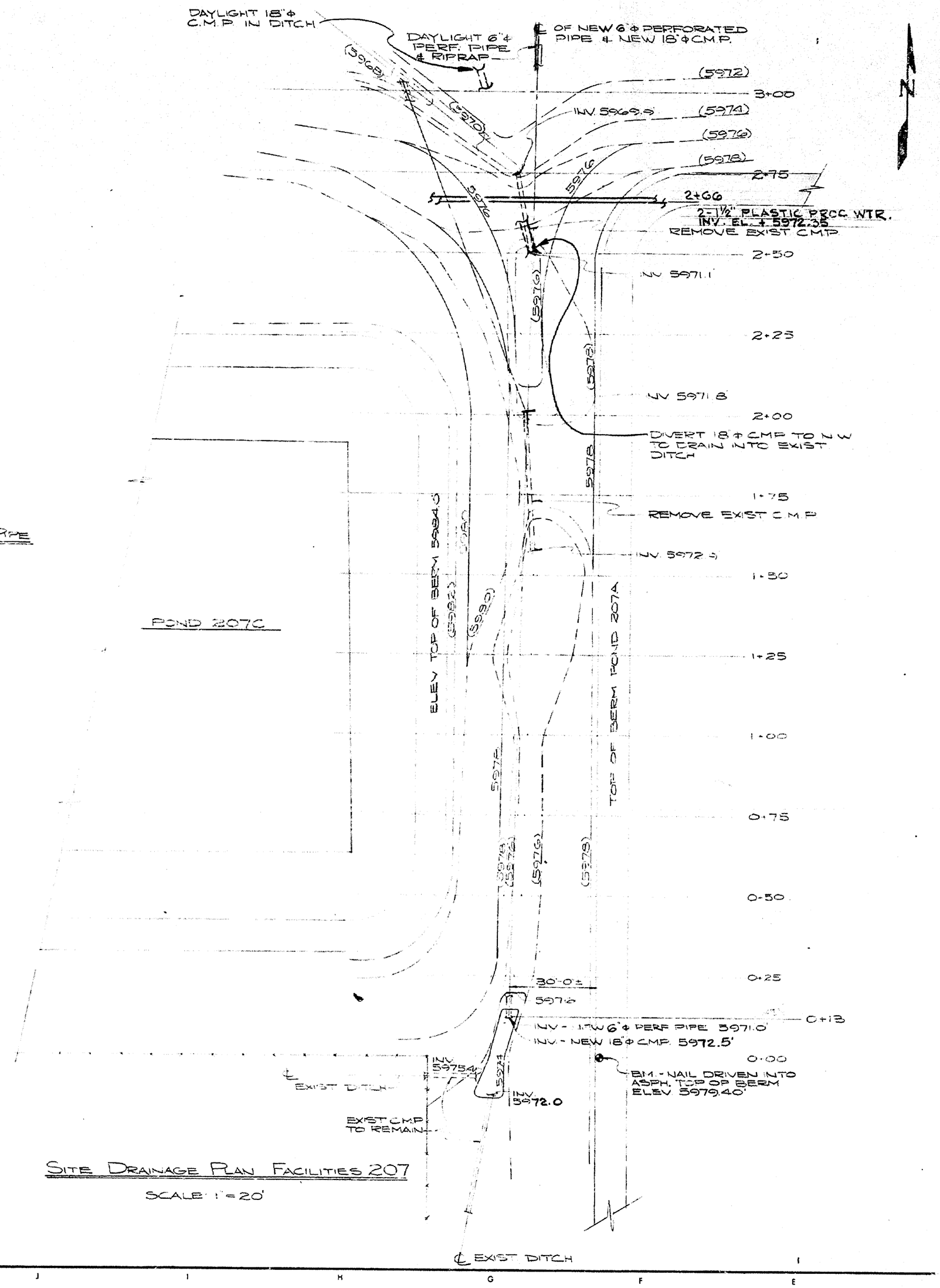

SITE DRAINAGE PLAN FACILITIES 207

SCALE: 1" = 20'

LEGEND

(59XX)	EXISTING CONTOURS
59XX	NEW CONTOURS
	EXISTING ASPHALT BERMS
	EXISTING C.M.P.
⊕	BENCH MARK

GENERAL NOTES

1. THE NEW DRAINAGE SYSTEM BETWEEN POND'S 207A & 207C SHALL CONSIST OF A 6" ϕ PERFORATED PIPE BENEATH AN 18" ϕ CMP. BOTH RUNNING THE ENTIRE LENGTH OF POND 207C AND DAYLIGHTING ON THE SLOPE NORTH OF THE POND AREA.
2. SLOPE OF BOTH LINES SHALL BE 2%.
3. AT STATION 2+00 DIVERT THE 18" ϕ CMP NORTHWEST TO DRAIN INTO EXIST DITCH.
4. REGRADE AREA AS SHOWN ON THIS DWG.
5. PERFORATED PIPE SHALL BE SEARS-ROEBUCK #42K23142N.
6. ON BOTH ENDS OF 18" ϕ CMP PROVIDE END SECTIONS (APRONS).
7. COVER NORTH END OF 6" ϕ PERF PIPE W/ 3/8" METAL HARDWARE CLOTH.

SYM	ISSUE	DESCRIPTION	LOC	DATE	BY	APPR'D	CLASSIFIER	JOB NO.
B	AS BUILT			2-8-72	WGL			399019
A	ORIGINAL ISSUE			9-29-70	DLS			

TOLERANCES: FRACT ± ; ANGLE ± ; DEC. ± ; UNLESS NOTED OTHERWISE

REMOVE BURRS AND SHARP EDGES

NEXT ASSEMBLY

	BY	DATE
DESIGNED	SHELBY	9-28-70
DRAWN	DLS	9-28-70
CHECKED	CAG	9-29-70
APPROVED		9-29-70
		9-29-70
SUBMITTED		
REC'M'DED		
APPR'D (AEC)		9/29/70

SCALE: 1" = 20'

U. S. ATOMIC ENERGY COMMISSION
ROCKY FLATS AREA OFFICE — GOLDEN, COLORADO

THE DOW CHEMICAL COMPANY
A.E.C. CONTRACT AT (29-1)-1105
ROCKY FLATS DIVISION — GOLDEN, COLORADO

EVAPORATION POND 207C
REVISED DRAINAGE PLAN

SIZE	DRAWING NUMBER	ISSUE	SHEET
D	19379-5	B	5 of 5

GPO 888-260

207 Bldg. No.
Room Area
H Inter & Vent
A Arch
G Gl. Sys.
E Elect
M Mech.
I Inst
S Sit Cor.
C Const
U Utilities
P Piping
L Layouts
F Flow Diag
S Strs

I 101-A-200836 page 67

OFFICIAL USE ONLY

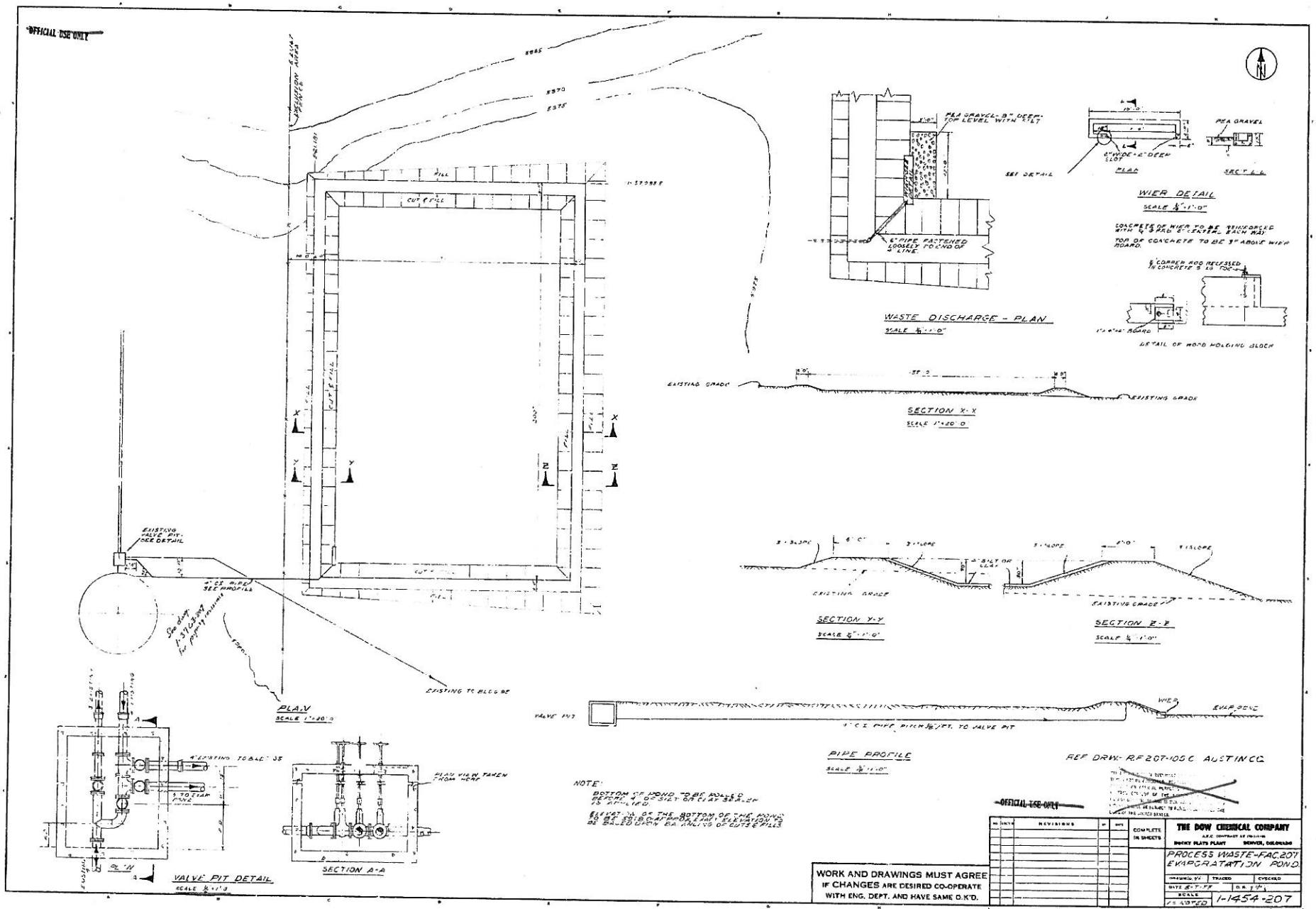

DOES NOT CONTAIN
OFFICIAL USE ONLY INFORMATION

Name/Org: EMCBC Classifier Date: 10/6/08

OK for public release

PART	QUAN.	DESCRIPTION	MATERIAL
100		PUMP ASSEMBLY	
101	1	COVER	
101A	1	HANDLE, 1/4" ROD	C'STL
101B	1	SHEET, 1/8 THK	"
102	1	6" CORRUGATED METAL PIPE, 16GA 24'-0 LG	GALV. STL.
103	6	CLAMP, 11 GA. SHEET	C'STL
104	1	TRW REDA SUBMERGIBLE PUMP-1/2 HP STAGE 9-DSP (BY USER)	COMM.
105	12	1/2" HEX. HD. SCR. 3 1/4" LG W/ NUTS & LOCK WASHER	SST
106	1	15" CORRUGATED METAL PIPE, 16 GA. 15'-0" LG.	GALV STL.
107	1	PLATE, 1/4" THK. 2'-6" SQ.	C'STL.
108	1	SCREEN.	SST
109	1	HOSE CLAMP - 6"	SST

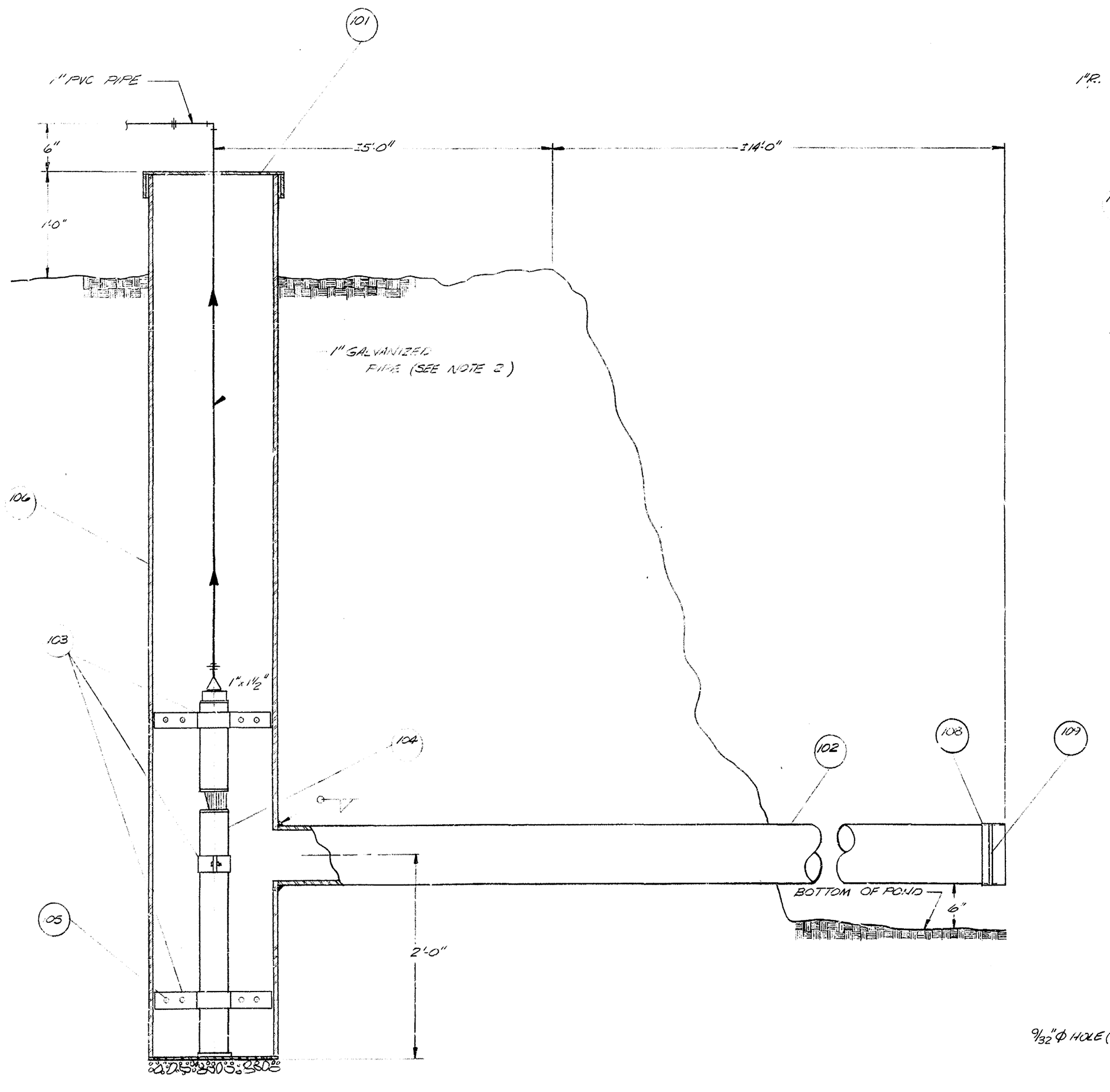

100 PUMP ASSEMBLY
SCALE: 1 1/2" = 1'-0"

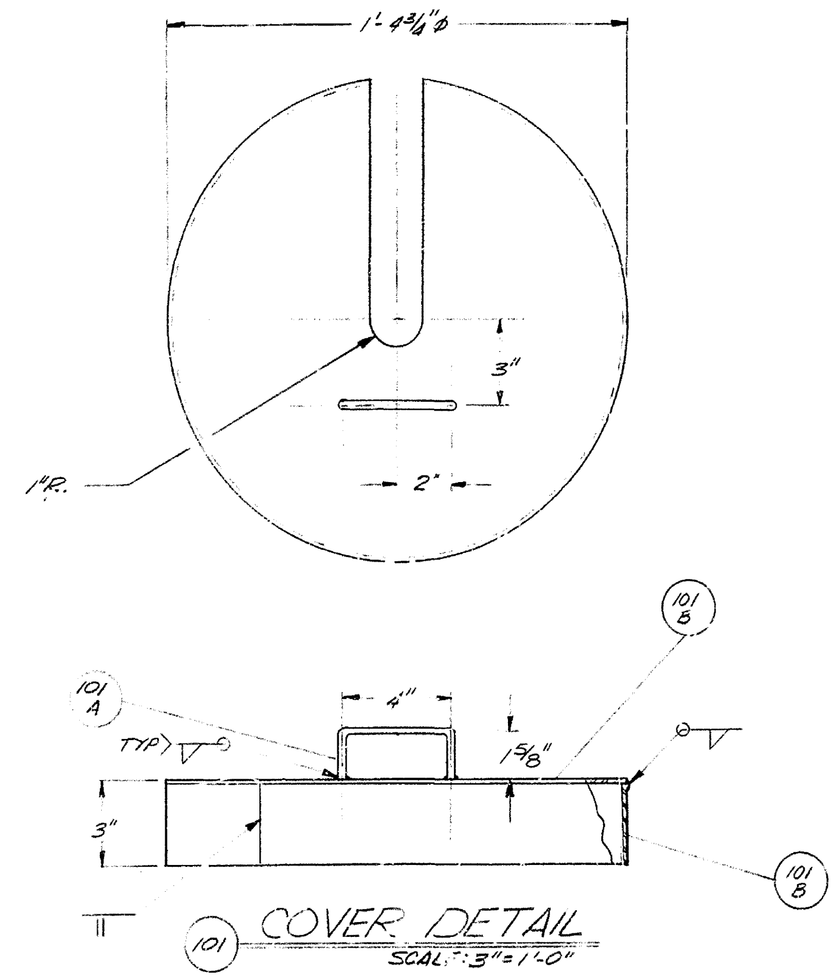

101 COVER DETAIL
SCALE: 3" = 1'-0"

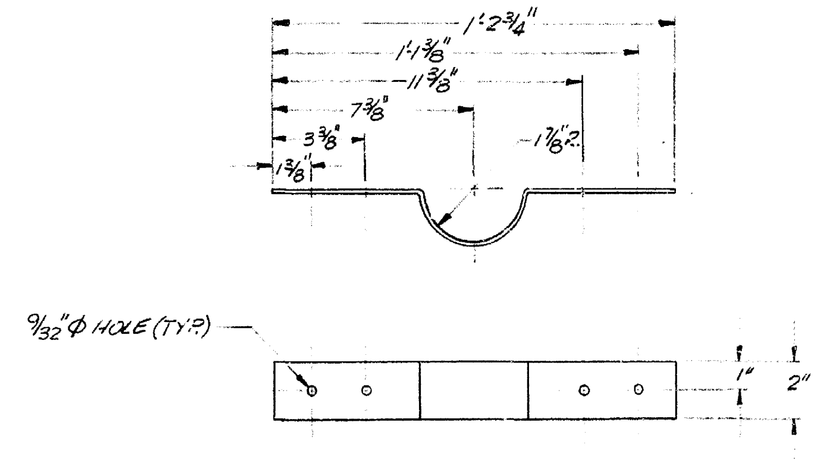

103 CLAMP DETAIL
SCALE: 3" = 1'-0"

NOTE:
(1.) PAINT COVER & PAINT GRAY.
(2.) RUN GALVANIZED PIPE TO 6" ABOVE COVER & BELOW INTO 1" PVC PIPE.
(3.) SEE DWG. NO. SK450173

ISSUE	DESCRIPTION	CODE	DATE	BY	APPR'D	CLASS	JOB NO.
XA	ORIGINAL ISSUE	08		CA		849	450173

TOLERANCES: FRACT. ± 1/16", ANGLE ± 1/2°, DEC. ± ~ UNLESS NOTED OTHERWISE. REMOVE BURRS AND SHARP EDGES. SCALE: NOTED

	BY	DATE
DESIGNED	BORGIOVANNI	4.7.75
DRAWN	ADAMS	4.16.75
CHECKED		
APPROVED		
SUBMITTED		
APPR'D		
APPR'D		

U.S. ENERGY RESEARCH AND DEVELOPMENT ADMINISTRATION
ROCKY FLATS AREA OFFICE — GOLDEN, COLORADO
ROCKWELL INTERNATIONAL
ATOMICS INTERNATIONAL DIVISION
ERDA CONTRACT E (29-2)-3533
ROCKY FLATS PLANT — GOLDEN, COLORADO 80401

POND TRANSFER SYSTEM
PUMP ASSEMBLY

SIZE	DRAWING NUMBER	ISSUE	SHEET
D	29147-2	A	OF

GPO 10-255

I 101 A-C-C-B-C
page 7

DIPE LINE LEGEND

4"-DW-132-PE

LINE SIZE
FLOW MEDIA
LINE NO.
MATERIAL SPEC.

SEE DWG. 27452-211 FOR DETAILS OF POND DIKE PENETRATION AND NEW PIPING INTO POND 207-A

VALVE PIT AND POND PENETRATION WORK DELETED FROM PROJECT BY D.O.E. IN ORDER TO CLOSE OUT THE "WATER CONTROL AND RECYCLE" PROJECT.

TERMINATE 2"-D-1-PVC NORTHEAST OF THE NEW VALVE PIT FOR CONTINUATION ON A FUTURE PROJECT BY OTHERS

FOR CONTINUATION SEE 27550-200

POND 207-C

POND 207-A

POND 207-B NORTH

POND 207-B CENTER

POND 207-B SOUTH

EXISTING VALVE PIT

NEW VALVE PIT

36" CMP VALVE PIT SEE DWG. 27452-210

CAP 3" LINE FOR CONTINUATION ON A FUTURE PROJECT

CONNECT TO EXISTING 3" STL. PIPE

SEE NOTE 4

SEE NOTE 2

CONNECT TO EXISTING 3" STL. PIPE

3" PVC PIPE (160 PSI)

6" PVC PIPE (160 PSI)

RISER WITH BLIND FLANGE 18" ABOVE GRADE AT N 37.800 E 22.136 ELEV. 5970.00

N37.880

LIQUID LEVEL SENSOR LMS-4-5 SEE DETAIL NOTE 7 DWG. 27452-209

910 REVERSE OSMOSIS

781 CT

727

779

782

967

EARTH BACKFILL

SAND BACKFILL

SECTION W-W

SECTION A-A (SECTION AT POND 207-C SIMILAR)

5X5X1 THICK RIP RAP

GRAPHIC SCALE

BILL OF MATERIALS

ALL PIPE & FITTINGS SCHEDULE 80 PVC

2 EA. 3" GATE VALVES
2 EA. 3x3x3 TEES
3 EA. 3" UNIONS

PART	QUAN.	DESCRIPTION	MATERIAL

ISSUE	DESCRIPTION	LOC.	DATE	APP'D	APP'V/CLASSIF.	JOB NO.
E	AS BUILT		5/9/95			363005
D	ADDED [illegible]	SED	3/30/93			363005
D	AS BUILT		9/16/92			363005
C	REV. AT VALVE PIT - ADD NOTE 4 AS BUILT [illegible]	J.S	3/27/92			363005
B	REVISED PIPING NEAR SOUTHEAST CORNER OF POND 207-A. ADDED SECTION W-W DETAIL	G.L	10/24/77			363005
A	ORIGINAL ISSUE		7/27/77			363005

U.S. ENERGY RESEARCH AND DEVELOPMENT ADMINISTRATION
ROCKY FLATS AREA OFFICE GOLDEN, COLORADO

ROCKWELL INTERNATIONAL
ATOMICS INTERNATIONAL DIVISION
ERDA CONTRACT E(29-2)-3533
ROCKY FLATS PLANT GOLDEN, COLORADO 80401

DESIGNED
DRAWN
CHECKED KRIZMAN 7/14/77
APPROVED
SUBMITTED 7/27/77

CONT. NO.
SCALE 1" = 40 FT.

WATER CONTROL & RECYCLE
POND AREA
PIPING AND TIE-INS

SIZE D | DRAWING NUMBER 27452-209 | ISSUE F | SHEET

I 101 H 000306 page 33

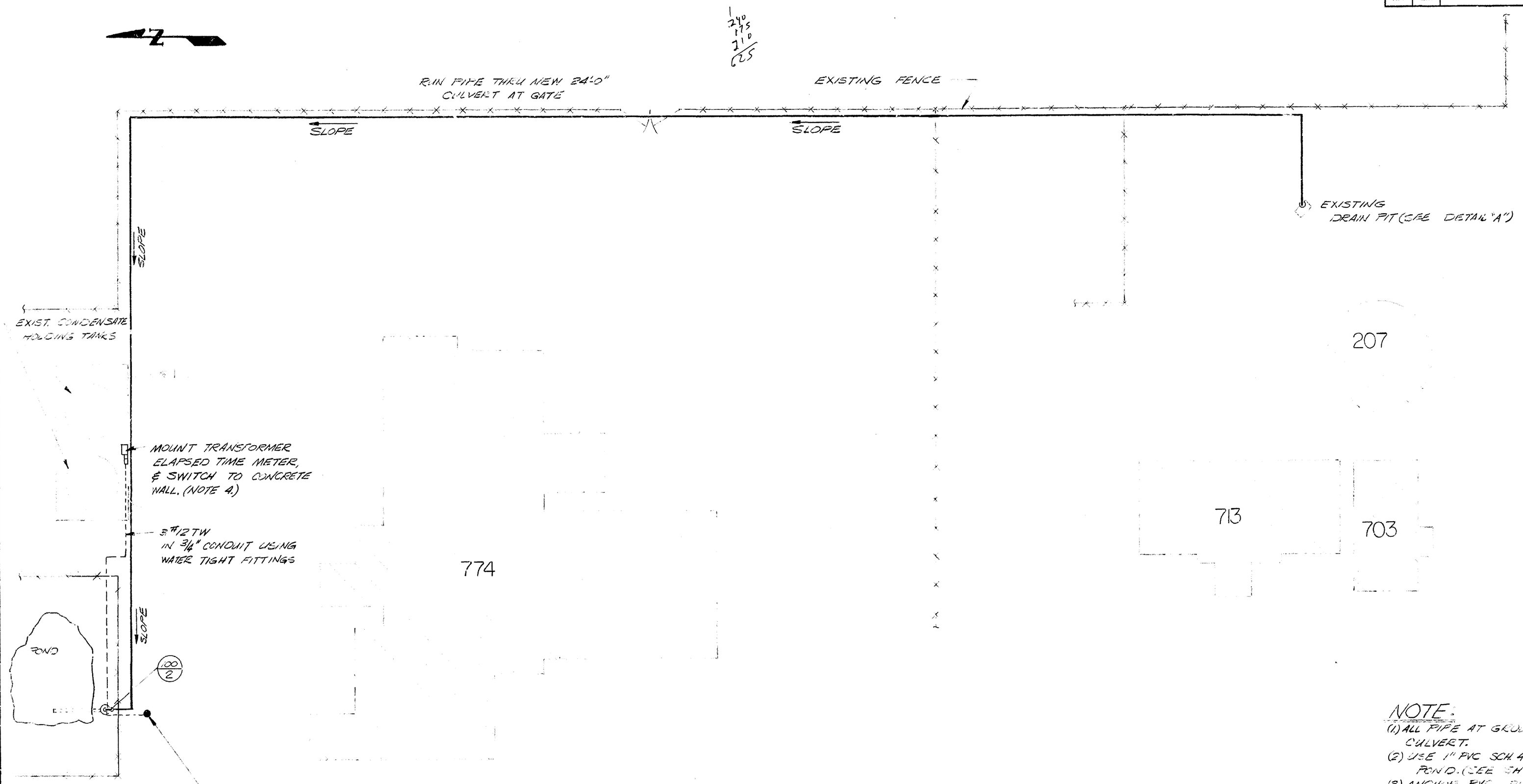

PIPING PLAN
SCALE: 1" = 20'-0"

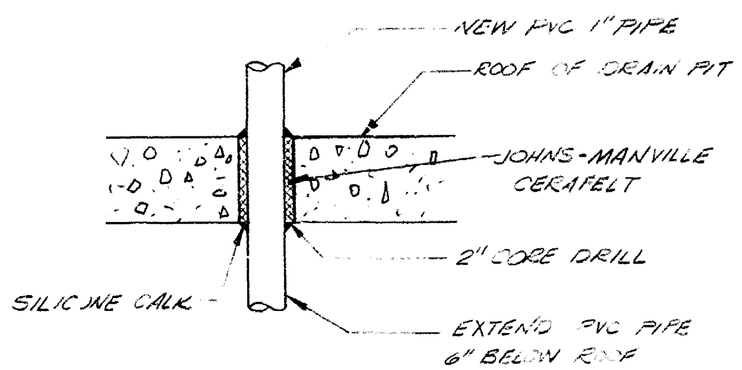

DETAIL "A"
SCALE: 3" = 1'-0"

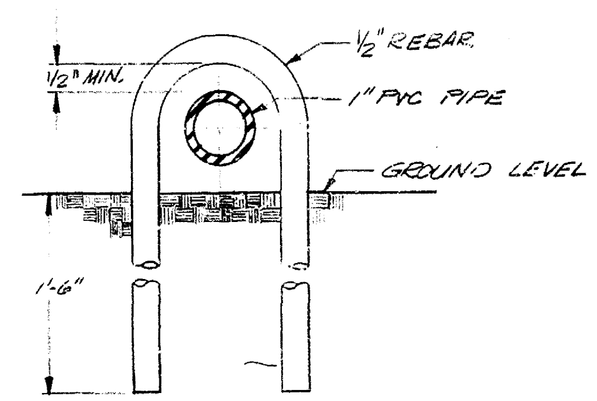

DETAIL "B"
SCALE: HALF SIZE

NOTE:
(1) ALL PIPE AT GROUND LEVEL EXCEPT AT CULVERT.
(2) USE 1" PVC SCH 40 PIPE THROUGHOUT EXCEPT AT POND. (SEE SHT. 2) (FURNISHED BY USER)
(3) ANCHOR PVC PIPE TO GROUND W/REBAR PER DETAIL "B". SPACE @ 20'-0" APART, NO TIES WITHIN 10'-0" OF ELBOWS.
(4) ALL ELECTRICAL FURNISHED BY MAINTENANCE.
(5) USE WATER-TIGHT ELECTRICAL FITTINGS.
(6) OLD DWG NO SK450173-1

PART	QUAN.	DESCRIPTION	MATERIAL

ISSUE	DESCRIPTION	BY	DATE
X/A	ORIGINAL ISSUE	DB	

CA BY APPR'D | SK450173 CLASS | JOB NO.

TOLERANCES: FRACT. ± ~ ; ANGLE ± ~ ; DEC. ± ~ ; UNLESS NOTED OTHERWISE

REMOVE BURRS AND SHARP EDGES

~

SCALE NONE

	BY	DATE
DESIGNED	BOHGESVANNI	4-7-75
DRAWN	ADAMS	4-10-75
CHECKED		
APPROVED		
SUBMITTED		
APPR'D		
APPR'D		

U.S. ENERGY RESEARCH AND DEVELOPMENT ADMINISTRATION
ROCKY FLATS AREA OFFICE — GOLDEN, COLORADO
ROCKWELL INTERNATIONAL
ATOMICS INTERNATIONAL DIVISION
ERDA CONTRACT E (29-2)-3
ROCKY FLATS PLANT — GOLDEN, COLORADO 80401

POND TRANSFER SYSTEM
AREA PLAN

SIZE	DRAWING NUMBER	ISSUE	SHEET
D	29147-1	A	1 of 2

Z1G1A-000506 page 6

PART	SHT	NUMBER REQ'D	DESCRIPTION	MATERIAL

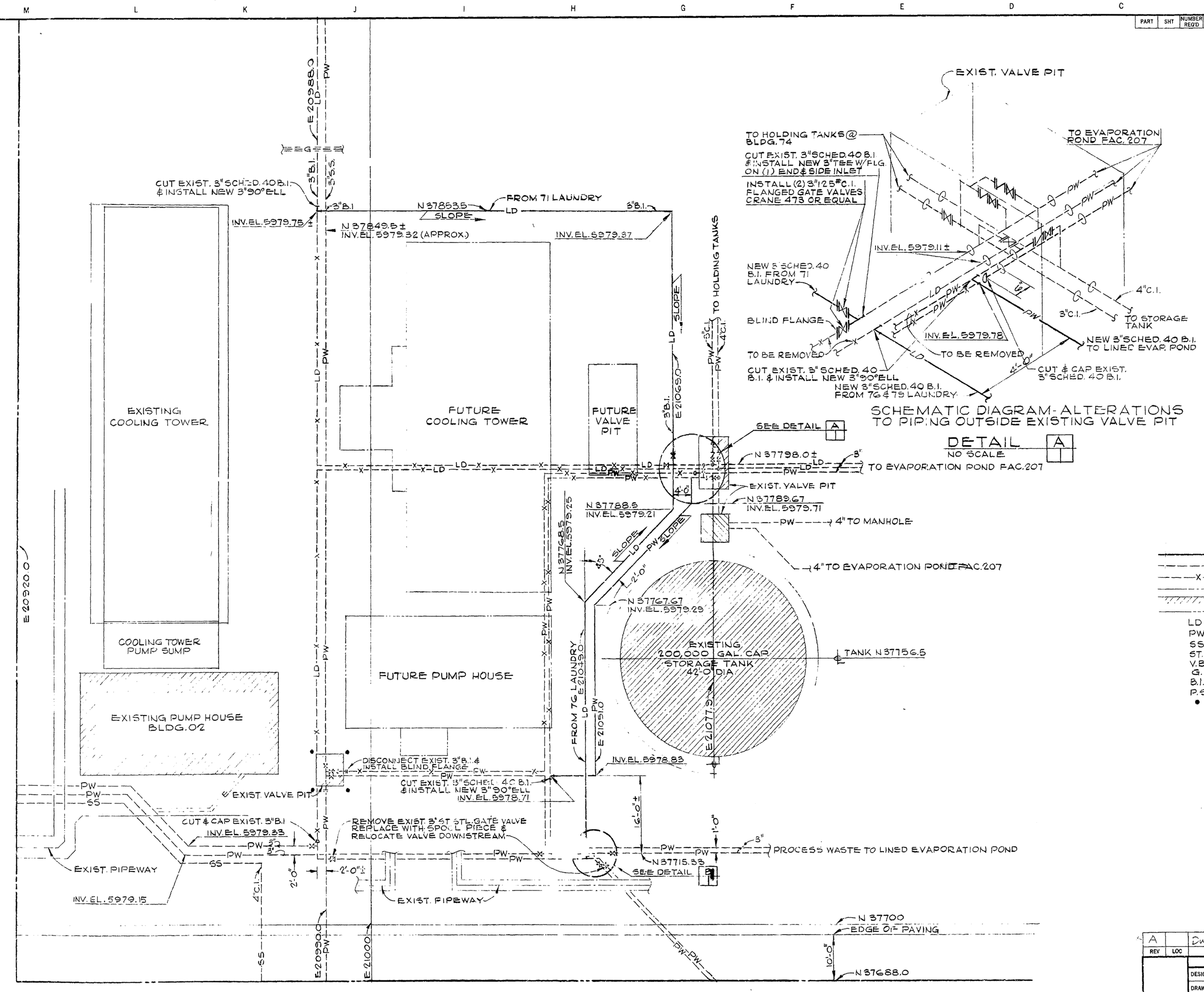

PLAN
SCALE: 1" = 10'-0"

SCHEMATIC DIAGRAM - ALTERATIONS TO PIPING OUTSIDE EXISTING VALVE PIT

DETAIL A
NO SCALE

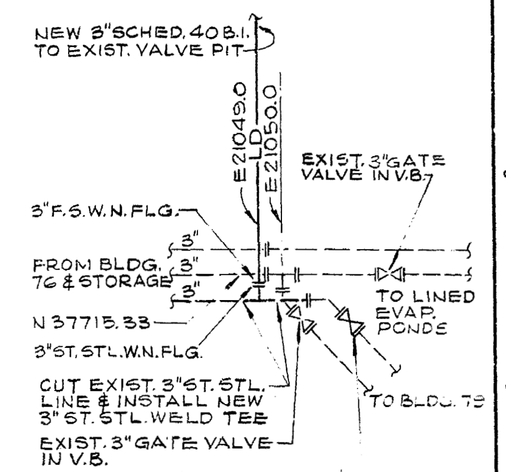

RELOCATION OF 76 & 79 LAUNDRY DRAIN & VALVE

DETAIL B
NO SCALE

LEGEND

———	NEW PIPING
- - - -	EXISTING PIPING (TO REMAIN)
—x—	EXISTING PIPING (TO BE REMOVED)
—·—·—	EXISTING PIPING ABOVE GRADE
	EXISTING STRUCTURE
	FUTURE STRUCTURE
LD	LAUNDRY DRAIN
PW	PROCESS WASTE
SS	SANITARY SEWER
ST. STL.	STAINLESS STEEL
V.B.	VALVE BOX
G.	GAS (PROPANE)
B.I.	BLACK IRON
P.S.	PIPE SUPPORT
•	GUARD POST

REV	LOC	DESCRIPTION	DATE	BY	APPR'D	JOB NO.
A		DWG No. NAS 18267-6	0-1-69	CFB		3503582

	BY	DATE
DESIGNED	W.M. JOHNSON	9-16-65
DRAWN	W.M. JOHNSON	10-6-65
CHECKED	M. MECKLER	10-14-65
APPROVED		
SUBMITTED		
RECOMMENDED		
APPROVED		

U.S. ATOMIC ENERGY COMMISSION
ROCKY FLATS AREA OFFICE GOLDEN, COLORADO

DANIEL, MANN, JOHNSON, & MENDENHALL
PLANNING • ARCHITECTURE • ENGINEERING • SYSTEMS

RELOCATION OF PROCESS WASTE LINES AT NEW COOLING TOWER SITE

AT(29-2)-1777

SCALE: AS NOTED

SIZE	DRAWING NUMBER	REV	SHEET
D	RF- 14267-9	A	OF

BLDG 712

I 101-A-000306

page 5

22X32

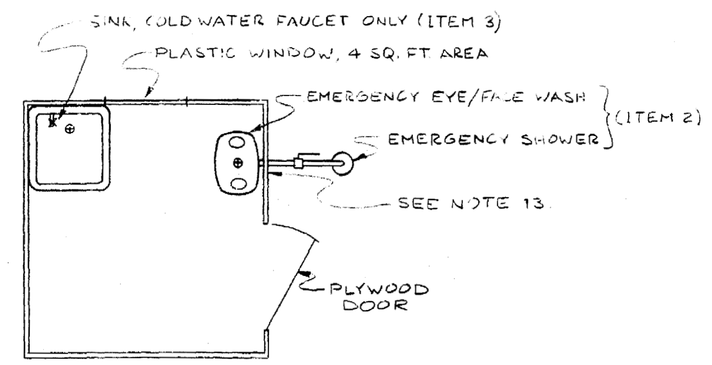

TEMPORARY PORTABLE BLDG. PLAN
SCALE: 1/2" = 1'-0"
(SEE NOTES 3, 6, 7 & 10)

TECHNICAL SPECIFICATIONS FOR POND REPAIR UTILITIES

ALL WORK FOR THE ABOVE SHALL BE DONE IN ACCORDANCE WITH THE FOLLOWING DIVISIONS & SECTIONS OF THE C. F. BRAUN GENERAL PROJECT SPECIFICATIONS.

DIVISION 2 - SITE WORK
SECTION 2 - EARTHWORK
SECTION 5 - WATER DISTRIBUTION

DIVISION 6 - CARPENTER
SECTION 1 - ROUGH CARPENTRY

DIVISION 15 - MECHANICAL
SECTION 1 - PIPING SYSTEMS
SECTION 4 - DOMESTIC & PROCESS WATER SYSTEMS

LEGEND

SYMBOL	DESCRIPTION
———	NEW
— — —	EXISTING
DWC	DOMESTIC COLD WATER
PCW	PROCESS COLD WATER
PW	PROCESS WASTE
VCP	VITRIFIED CLAY PIPE
SS	STAINLESS STEEL
GN	GAS, NATURAL
STL	STEEL

PIPING LEGEND

PIPE SIZE — FLOWING MEDIA
X-XXX-XX — PIPE MAT'L

ITEM	QUAN	DESCRIPTION	MATERIAL
1	1	BACKFLOW PREVENTER "BEECO" MODEL 6-C, 1½" SIZE. W/O GATE VALVES. AVAILABLE FROM KEN SHIRLEY BLDG. 124 DOCK CONTACT JOE SMALL FURNISH GATE VALVES AS REQ'D.	G.F.E.
2	1	SAFETY SHOWER-EYE/FACE WASH COMBINATION - "SPEAKMAN" NE SE-603 - NO SUBSTITUTES. FURNISH & INSTALL AS DETAILED ON DOW STANDARD D-11855-1. AVAILABLE THRU CENTRAL SUPPLY, DENVER COLO. HUT LOCAL STOCK	
3	1	SINK, SINGLE COMPARTMENT, PLASTIC WASH TUB WITH STEEL LEGS & ONE FAUCET W/VACUUM BREAKER, SINK APPROX. 24" x 24". AVAILABLE FROM SEARS LOEBUCK, CAT NO 42K4018N (1966 SPRING & SUMMER CATALOG)	
4	10	1" I.D. x 2-BRAID DURABLE WATER HOSE, 50 FT LENGTH, 125 PSI WORKING PRESSURE, 1" MALE & FEMALE DIXON KING SHANK COUPLINGS ATTACHED, WITH 1½" x 1" REDUCER @ HYDRANT	
5	5	1½" I.D. x 2-BRAID DURABLE WATER HOSE, 100 FT LENGTH, 125 PSI WORKING PRESSURE, 1½" MALE & FEMALE DIXON KING SHANK COUPLINGS ATTACHED, 1½" BRASS FOG NOZZLE W/SOLID STREAM & SHUT-OFF POSITIONS. ONE NOZZLE ONLY REQ'D. NOTE: PART NOS. 4 & 5 AVAILABLE FROM RUBBER, INC 5501 N. PEARL ST. DENVER, COLO., 80216 ATTN: MR. AL DAHNER	TO BE PURCHASED BY CONTRACTOR
6	1	STREET WASHER HYDRANT, 1½ CONNECTIONS UNDERGROUND HOSE, 4 FT. DEPTH OF BURY.	
7	1	SAME AS (6) ABOVE W/1½" CONNECTIONS. NOTE: PART NOS 6 & 7 SHALL BE AS MANUFACTURED BY AMERICAN FOUNDRY, NO 162. AVAILABLE FROM KEENAN PIPE & SUPPLY, 4700 DALIA, DENVER, COLO., 80216 ATTN: MR. HARVIN WEST	

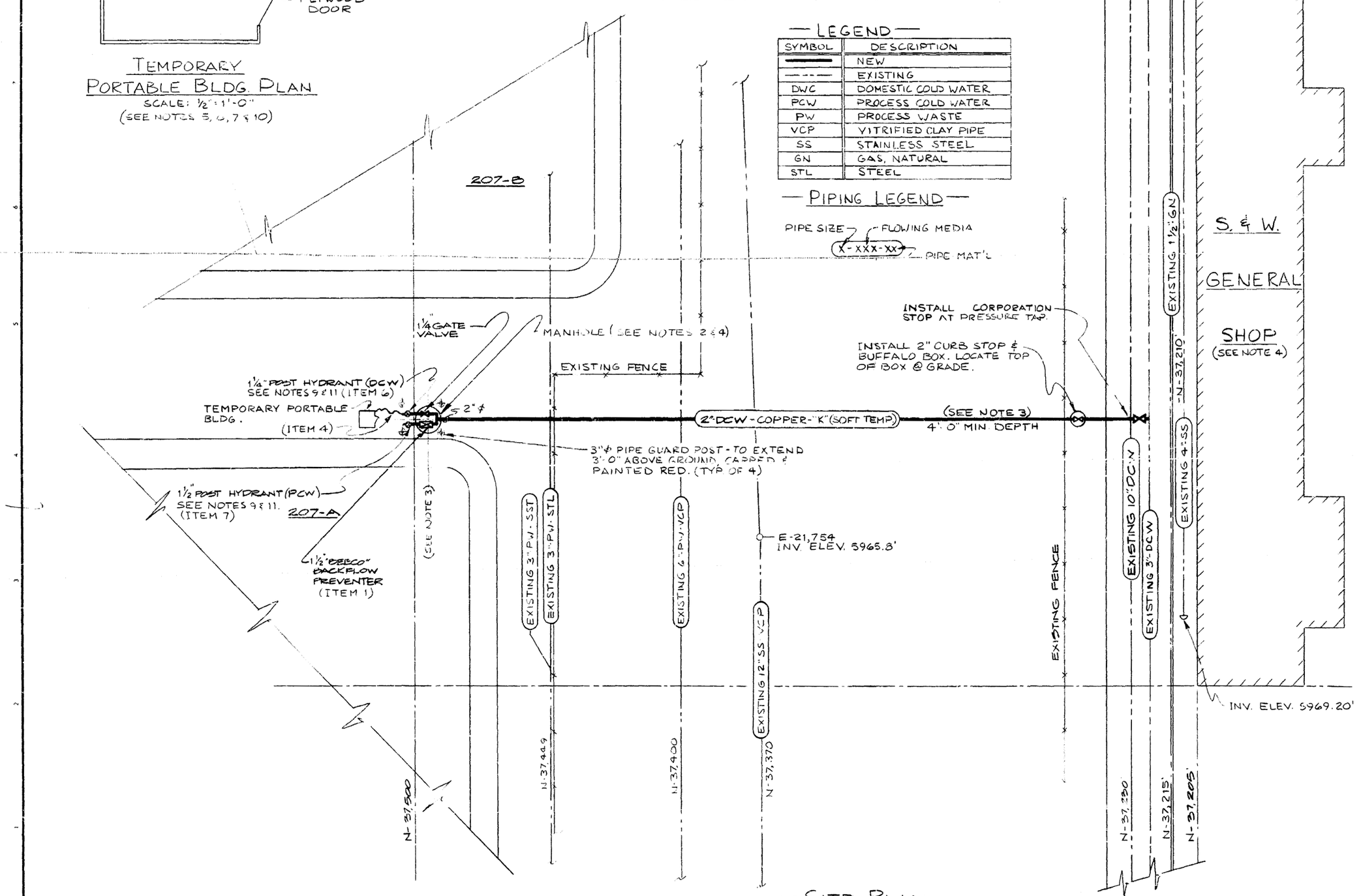

SITE PLAN
SCALE: 1" = 20'

GENERAL NOTES:

1. DRAWING INDICATES LOCATIONS OF KNOWN UTILITIES. CONTRACTOR SHALL DIG WITH CAUTION, AND SHALL REPORT TO CONTRACTING OFFICER ALL UTILITIES DISCOVERED WHICH ARE NOT SHOWN ON DRAWING.
2. CONTRACTOR SHALL CONSTRUCT MANHOLE W/COVER AT BASE OF SLOPE OF WALL OF WEST POND (207-A), WITH TOP OF MANHOLE MINIMUM 12" ABOVE GRADE. LOCATE MANHOLE BEFORE INSTALLING NEW 2" WATER LINE TO ALLOW STRAIGHT RUN OF PIPING. MANHOLE SHALL BE OPEN AT BOTTOM W/MINIMUM 18" GRAVEL.
3. CONTRACTOR SHALL ACCURATELY DETERMINE AND RECORD NEW COORDINATE LOCATIONS.
4. CONTRACTOR SHALL ACCURATELY DETERMINE AND RECORD ELEVATIONS AS NOTED.
5. FROM 1" FEMALE HOSE CONNECTION OUTSIDE BLDG, RUN 1" COPPER PIPE INSIDE TO SAFETY SHOWER COMBINATION, ALSO RUN ½" LINE TO SINK.
6. EXTEND DRAIN PIPING FROM EYE/FACE WASH AND FROM SINK, TO TERMINATE OUTSIDE BLDG.
7. TEMPORARY PORTABLE BUILDING, 2"-4" CONSTRUCTION WITH EXTERIOR GRADE PLYWOOD, INCLUDING FLOOR & ROOF. SIZE APPROX. 6' x 6' x 7' HIGH, ON SKIDS.
8. CONTRACTOR SHALL FURNISH TO CONTRACTING OFFICER "AS-BUILT" PRINTS UPON COMPLETION OF WORK.
9. INSTALL HYDRANTS IN 6" THICK CONCRETE PAD 2'-0" x 6'-0" (TOP OF PAD 3" ABOVE GRADE). PLACE HYDRANTS OVER FRENCH DRAIN ON 4'-0" CENTERS.
10. ARRANGE PIPING IN BLDG. TO GRAVITY DRAIN OR INSTALL DRAIN VALVE AT LOW POINT IN PIPING.
11. SECURE TAG TO STAKE AT EACH HYDRANT. FOR 1¼" SIZE AND 1½" SIZE RESPECTIVELY. LABEL AS FOLLOWS: "DWC - FOR EYE WASH/SHOWER & SINK ONLY" & "PCW-GENERAL CLEANUP"
12. TIE DOWN TEMPORARY PORTABLE BUILDING WITH HURRICANE ANCHOR.
13. CONTRACTOR TO FABRICATE AND INSTALL 16 GA. SHEET METAL SIGN. SIGN TO BE PAINTED WHITE WITH 2½" - 3" HIGH BLACK LETTERS READING "DECON SHOWER". SECURE TO BLDG. @ SHOWER.

ISSUE	DESCRIPTION	LOC	DATE	BY	APPR'D	CLASSIFIER	JOB NO
A	ORIGINAL ISSUE		7-20-71				410320

TOLERANCES: FRACT ± ; ANGLE ± ; DEC ± UNLESS NOTED OTHERWISE. REMOVE BURRS AND SHARP EDGES. NEXT ASSEMBLY. SCALE: AS SHOWN

	BY	DATE
DESIGNED	JENSEN	6/29/71
DRAWN	GRIF	6/29/71
CHECKED	W.E.S.	7-20-71
APPROVED	[illegible]	7-20-71
SUBMITTED	[illegible]	7-21-71
REC'M'DED	[illegible]	7-21-71
APP'D (REC)		

U. S. ATOMIC ENERGY COMMISSION
ROCKY FLATS AREA OFFICE — GOLDEN, COLORADO
THE DOW CHEMICAL COMPANY
A.E.C. CONTRACT AT (05-1)-1106
ROCKY FLATS DIVISION — GOLDEN, COLORADO

FACILITIES 207A & B
POND REPAIR UTILITIES
— PLANS —

SIZE	DRAWING NUMBER	ISSUE	SHEET
D	24463-1	A	OF

207 BLDG. No. — Room Area — Fr — Rig & Vent — Ut — Gl. Box — Unit — Division — Of Mech — Inst — Sit Conc — Cont — Struct — Pipng — Elec — Fire Prot — Layouts — Form Dwg — Sym

I 161 A - CAC506 page 4

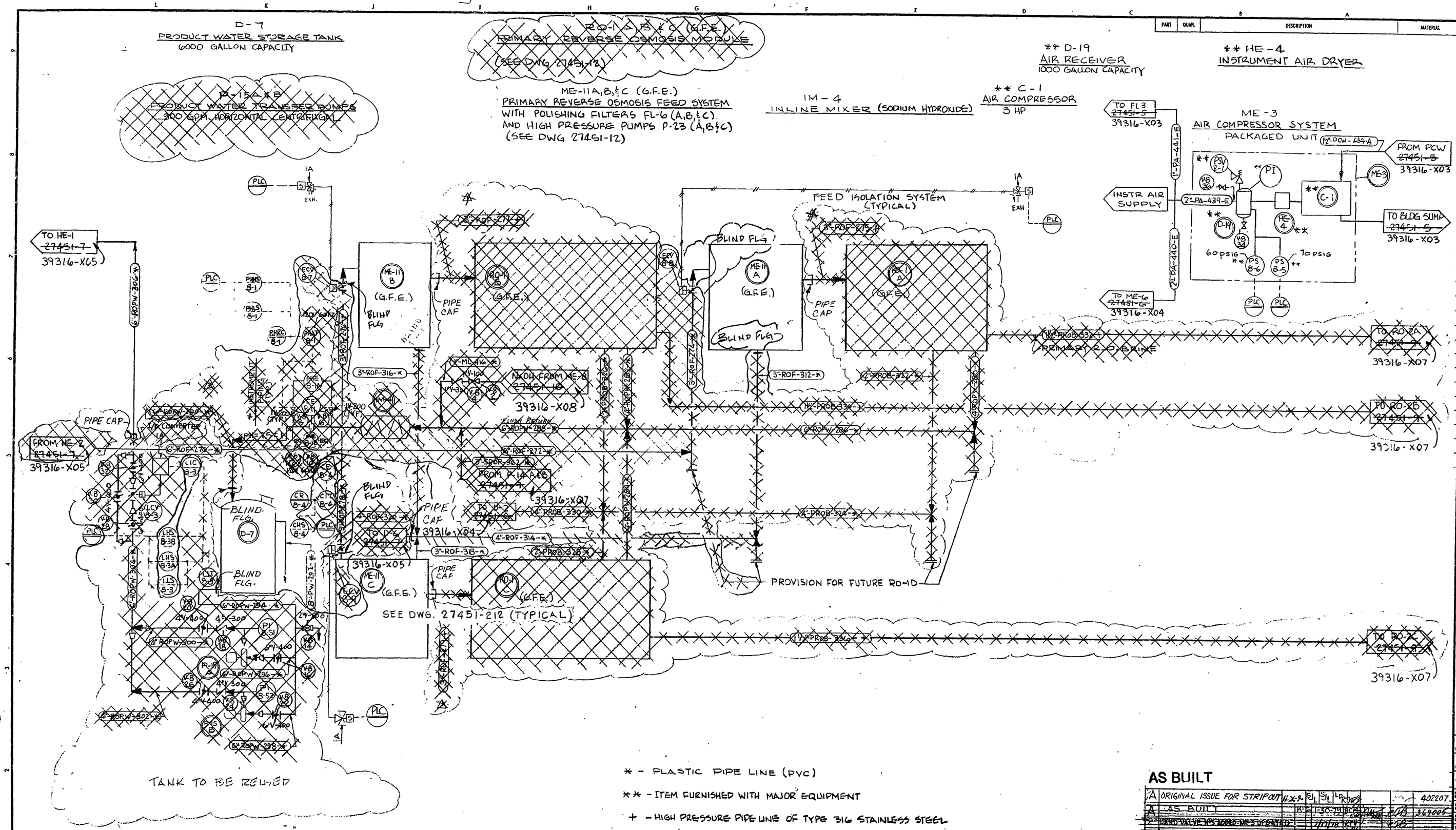

NOTES:

1) SEE DRAWING 27451-12 FOR DETAILS OF RO-1A,B&C (G.F.E.)
2) + - HIGH PRESSURE PIPE - TYPE 316 STAINLESS STEEL.

AS BUILT

ISSUE	DESCRIPTION	DATE	RFP	DOE	CHG NO
A	ORIGINAL ISSUE FOR STRIPOUT	11-26-90	SJL	SJL	402207
A	AS BUILT	1-30-91			369005
2	REVD VALVE NS ADDED, NS UPDATED	7/17/92			
1	CHANGED LINES 236,311,229 10-2-90	3/20/91			
D	ORIGINAL ISSUE FOR CONSTRUCTION	3/14/91			369005

TOLERANCES		BY	DATE
FRACT. ±	DESIGNED	LOPEZ	10-8-90
ANGLE ±	DRAWN	LOPEZ	10-5-90
DEC. ± UNLESS NOTED OTHERWISE	CHECKED	REESE	10-11-90
REMOVE BURRS AND SHARP EDGES	APPROVED		
NEXT ASSEMBLY	SUBMITTED		
SCALE:	APPROVED RFP		
	APPROVED DOE		

U.S. ENERGY RESEARCH AND DEVELOPMENT ADMINISTRATION
ROCKY FLATS AREA OFFICE — GOLDEN, COLORADO

Rocky Flats Plant
GOLDEN, COLORADO

SOLAR POND CLEAN UP / AIP
P&ID STRIP OUT

SIZE	DRAWING NUMBER	ISSUE	SHEET
D	[illegible]	A	OF

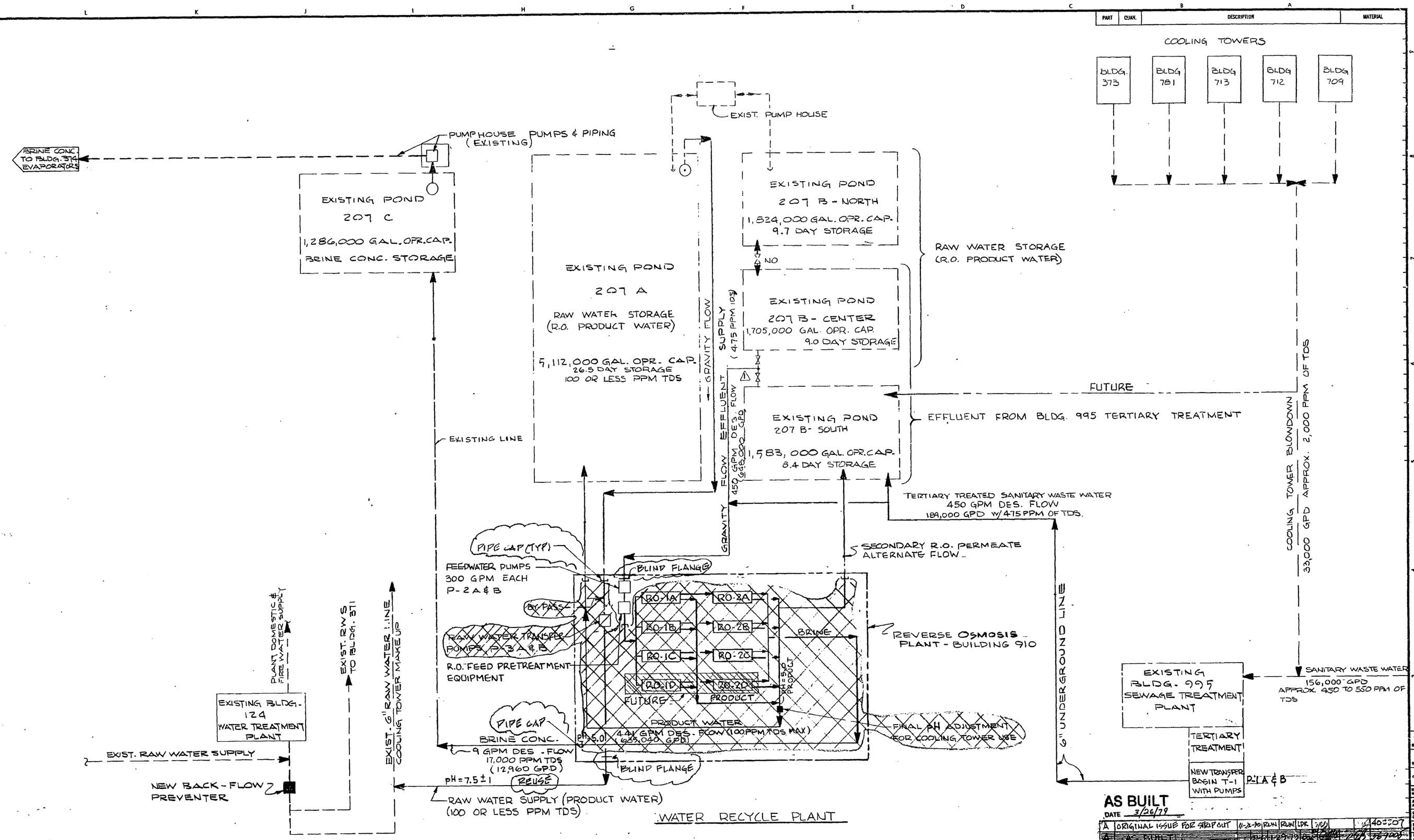

WATER RECYCLE PLANT

NOTES:
1. WATER RECOVERY RATE OF REVERSE OSMOSIS SYSTEM: 98%
2. THIS DRAWING FOR REFERENCE ONLY AND DOES NOT REPRESENT SCOPE OF WORK BY GENERAL CONTRACTOR

HATCHED AREA TO BE REMOVED

NOTE:
1. IN SOME CASES PIPING & EQUIP. REPRESENTION ON DWG MAY NOT DEPICT ACTUAL PHYSICAL CONDITIONS OR SHOW ALL THE PIPING & EQUIP. THAT SHOULD BE STRIPPED OUT. REFER TO THE PROJECT ENGINEER IF FURTHER CLARIFICATION.

AS BUILT
DATE 3/26/79

ISSUE	DESCRIPTION	DATE	RFP	DOE	JOB NO.
A	ORIGINAL ISSUE FOR STRIPOUT	11-2-90	RWN	RWN	LDR 7/10	40-3307
B	AS BUILT	[illegible]	[illegible]	[illegible]	[illegible]	73-7005
D	ORIGINAL ISSUE FOR CONSTRUCTION	[illegible]	[illegible]	[illegible]	[illegible]	96-0005

TOLERANCES: FRACT. ± ~ ; ANGLE ± ~ ; DEC. ± ~ ; UNLESS NOTED OTHERWISE
REMOVE BURRS AND SHARP EDGES
NEXT ASSEMBLY ~
SCALE: ~

	BY	DATE
DESIGNED	WILLIAMS	10-5-90
DRAWN	WILLIAMS	10-5-90
CHECKED	REESE	10-11-90
APPROVED		
SUBMITTED		
APPRO. BY RFP		
APPROVED DOE		

U.S. ENERGY RESEARCH AND DEVELOPMENT ADMINISTRATION
ROCKY FLATS AREA OFFICE — GOLDEN, COLORADO

Rocky Flats Plant
GOLDEN, COLORADO

SOLAR POND CLEANUP/AIP
P-17 STRIPOUT

SIZE	DRAWING NUMBER	ISSUE	SHEET
D	39316-X01	A	OF

FL-1 & FL-2 PRODUCT FILTERS

150 PSI DESIGN
90 GPM
18 - 10" CARTRIDGES

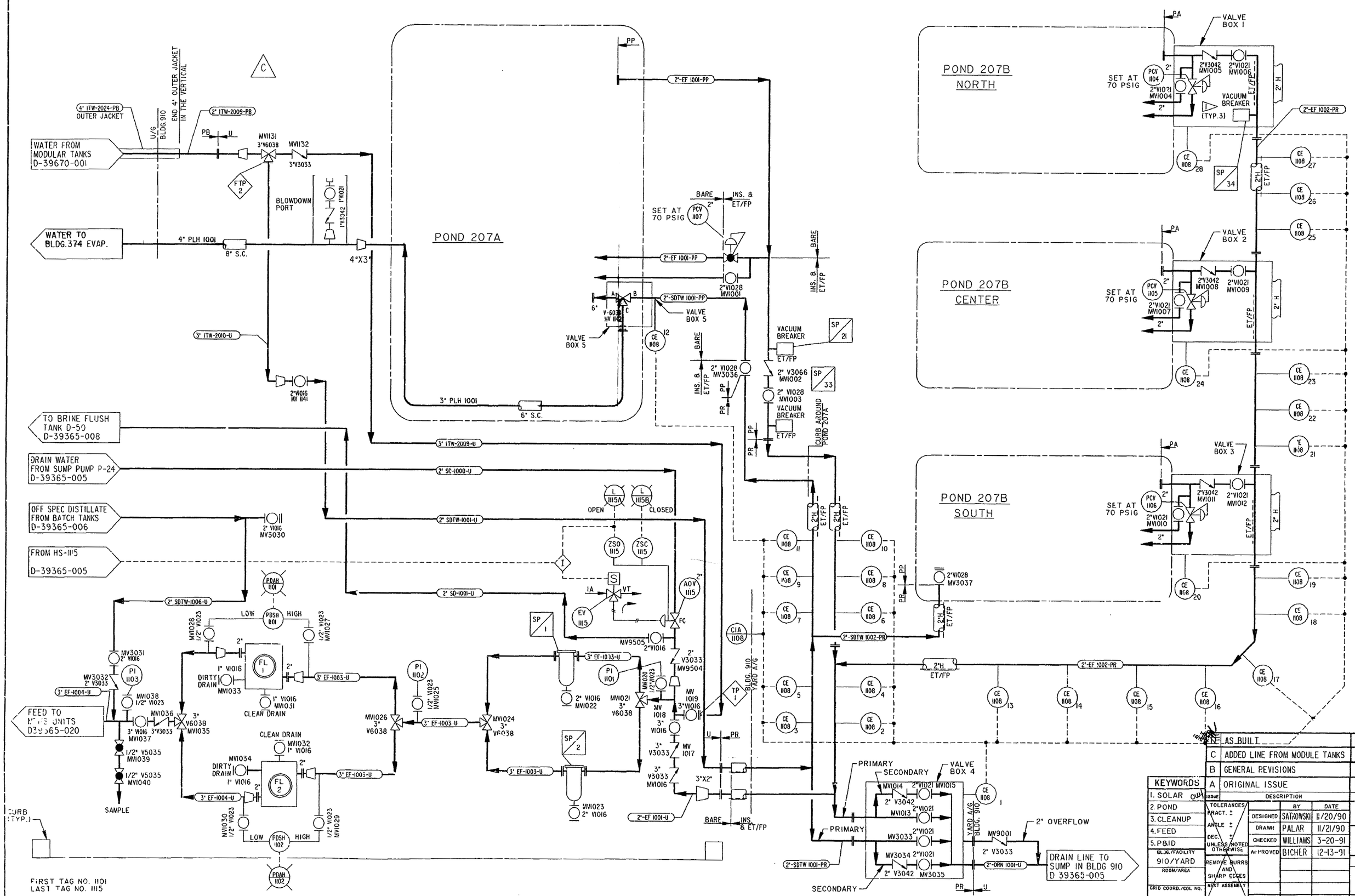

PART	QUAN.	DESCRIPTION	MATERIAL

E	AS BUILT	12-20-94							986818
C	ADDED LINE FROM MODULE TANKS	6-8-92	SEF	SEF	WR	JF		CJBS	986818
B	GENERAL REVISIONS	4-6-92	SEF	SEF	RHP	CB		DEH	986818
A	ORIGINAL ISSUE	12-13-91	TJS	LP	RW	CB		CB	986818
ISSUE	DESCRIPTION	DATE	RFP				DOE	CLASS	JOB NO.

KEYWORDS
1. SOLAR
2. POND
3. CLEANUP
4. FEED
5. P&ID

BLDG./FACILITY 910/YARD
ROOM/AREA
GRID COORD./COL NO.

TOLERANCES UNLESS NOTED OTHERWISE: FRACT. ± ; ANGLE ± ; DEC. ± ; REMOVE BURRS AND SHARP EDGES

	BY	DATE
DESIGNED	SATKOWSKI	11/20/90
DRAWN	PALAR	11/21/90
CHECKED	WILLIAMS	3-20-91
APPROVED	BICHER	12-13-91
SUBMITTED		
APPROVED RFP		
APPROVED DOE		

SCALE: NONE

U.S. DEPARTMENT OF ENERGY
ROCKY FLATS OFFICE GOLDEN, COLORADO

Rocky Flats Plant
GOLDEN, COLORADO

SOLAR POND CLEANUP / AIP

PIPING & INSTRUMENTATION DIAGRAM FEED SYSTEM

SIZE	DRAWING NUMBER	ISSUE	SHEET
D	39365-002	E	OF

D	AS-BUILT		TS	SEF	RRP		986818

2-3-94 SEF

COMPUTER GENERATED
NO MANUAL CHANGES ALLOWED

R.PID.39365.002.D.JRP

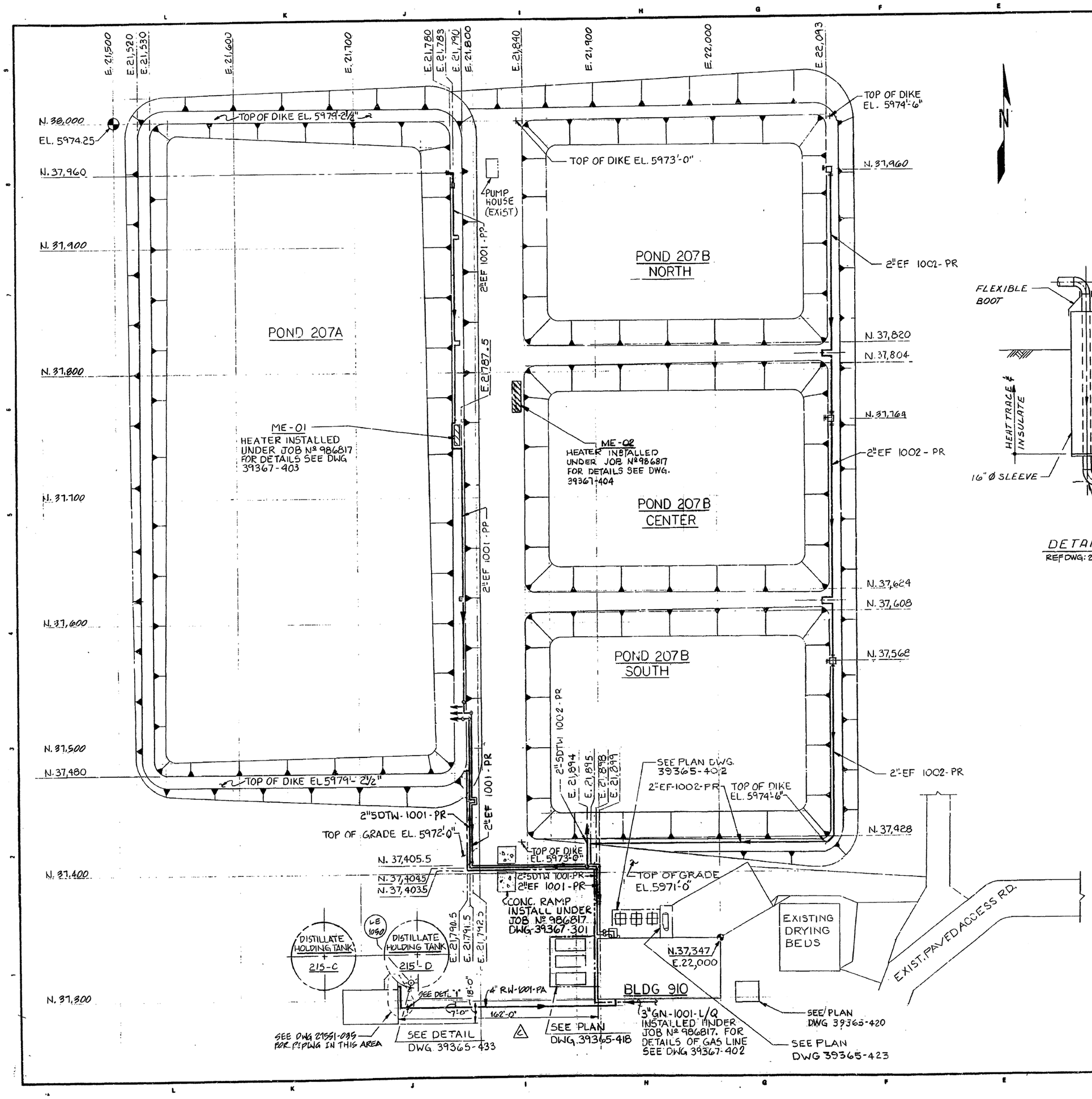

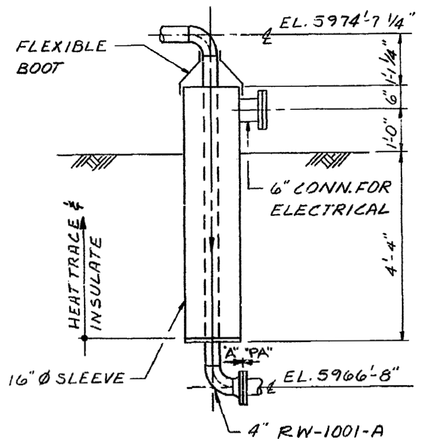

DETAIL 1
REF DWG: 27551-035

NOTES:

1. FOR THE P&ID OF THE FEED SYSTEM SEE DWG. 39365-002.
2. FOR DETAILS OF YARD PIPING SEE DWG'S 39365-429, 430, 431, 432, 433 & 434.
3. FOR DETAILS OF HEAT TRACING FOR THE YARD PIPING SEE DWG 39365-7001.
4. FOR LEAK DETECTION DETAILS FOR YARD PIPING SEE DWG. 39365-433 & -729
5. FOR DETAILS OF THE VALVE BOXES SEE DWG.'S 39365-439 & 440.

PART	QUAN.	DESCRIPTION	MATERIAL

ISSUE	DESCRIPTION	DATE	RFP				DOE	CLASS	JOB NO.
D	AS-BUILT	3-4-94	LL	LL	SS	W			986818
C	ADDED RW-1001	5-20-93	JRP	JRP		CB			986818
B	FIELD CONDITION CHANGE	4-6-92	SEF	SEF	WJR	CB			986818
A	ORIGINAL ISSUE	12-13-91	LR	LR	WJR	CB			986818

KEYWORDS: 1. PIPING 2. SOLAR 3. POND 4. CLEANUP 5. YARD

	BY	DATE
DESIGNED	L. REESE	12/3/90
DRAWN	L. REESE	12/3/90
CHECKED	ROTHGERY	7-23-91
APPROVED		12/13/91

TOLERANCES: FRACT. ± ANGLE ± DEC. ± UNLESS NOTED OTHERWISE; REMOVE BURRS AND SHARP EDGES; NEXT ASSEMBLY

SCALE: 1" = 40'-0"

MASTER YES ☐ NO ☐

U.S. DEPARTMENT OF ENERGY
ROCKY FLATS AREA OFFICE GOLDEN, COLORADO

Rocky Flats Plant
GOLDEN, COLORADO

SOLAR POND CLEANUP/AIP
GENERAL ARRANGEMENT YARD PIPING

SIZE	DRAWING NUMBER	ISSUE	SHEET
D	39365-401	D	OF

910 BLDG FAC.
PROJ. AREA: P X Rocky Flats
Eng. Verif. Arch. Elec. Mech. Struct. Civil Process Piping Layouts Form Dwg. Specs Admin

4-3-92 SEF

2.5x30

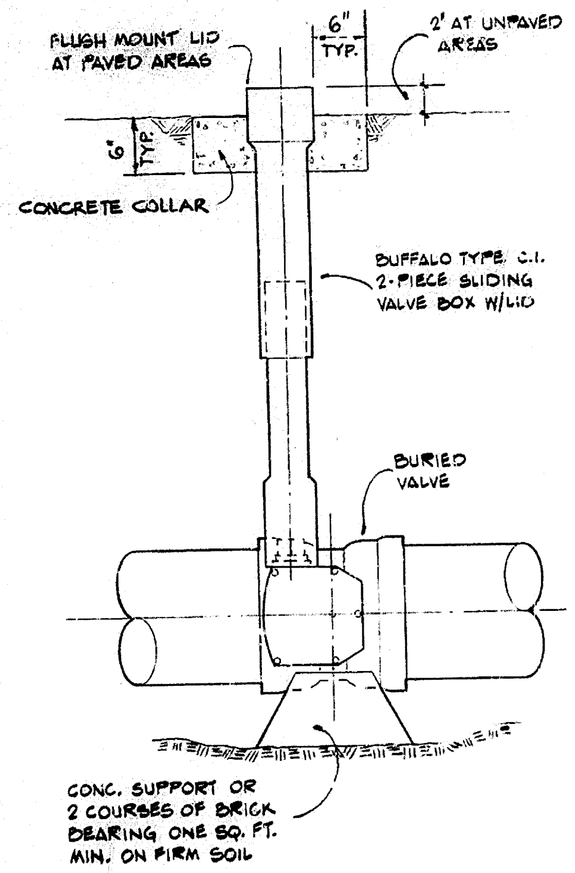

BURIED VALVE SETTING

DETAIL 1 / 27452-204 -209
NTS

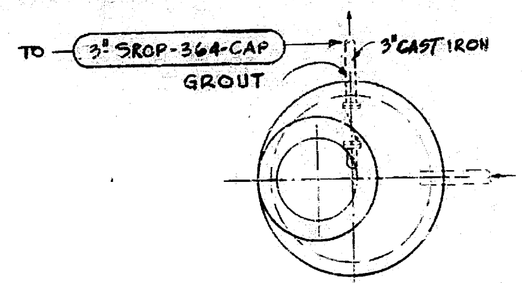

PLAN (FRAME & COVER NOT SHOWN)

NOTE:
FOR LEVEL CONTROL ELEVATIONS SEE INSTRUMENTATION DATA SHEETS

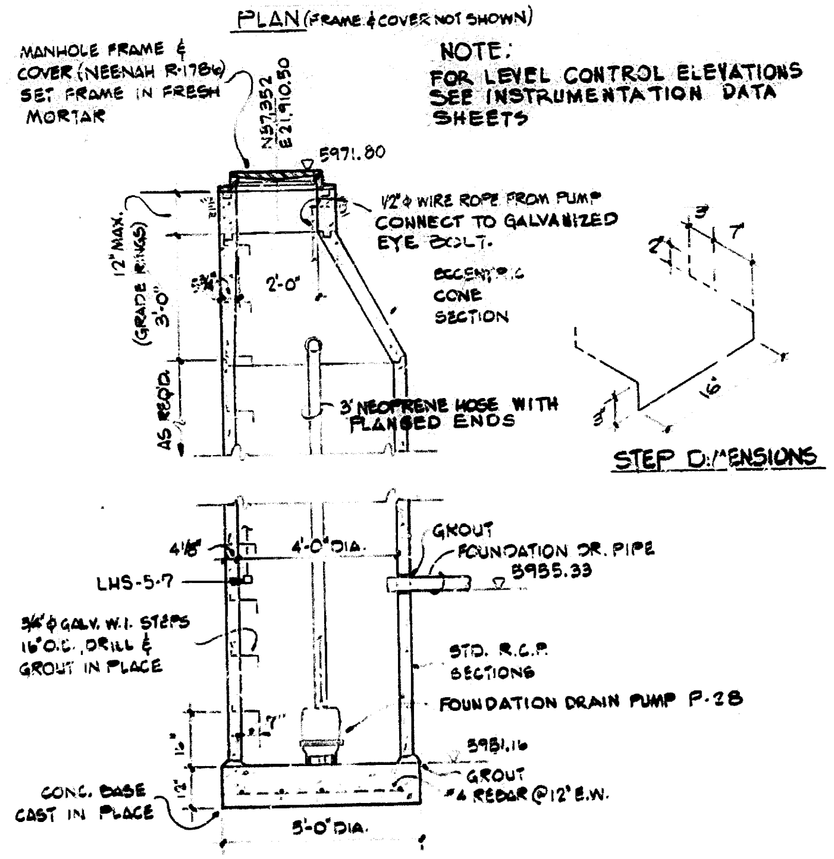

STEP DIMENSIONS

ILLUSTRATIVE SECTION

BUILDING PERIPHERAL DRAIN SUMP-DETAIL 2 / 27452-204 -206
NTS

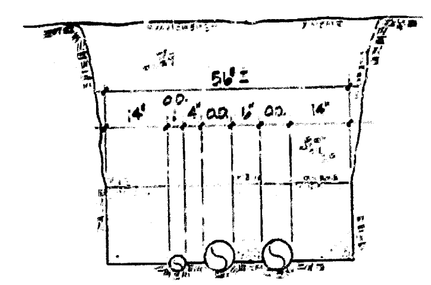

SECTION A
NTS 27452-204

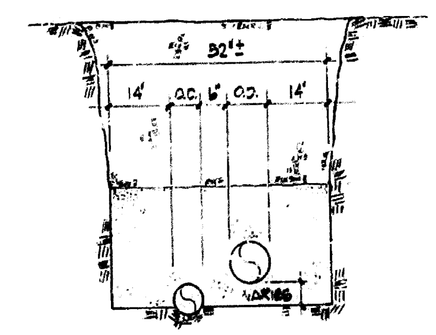

SECTION B
NTS 27452-204

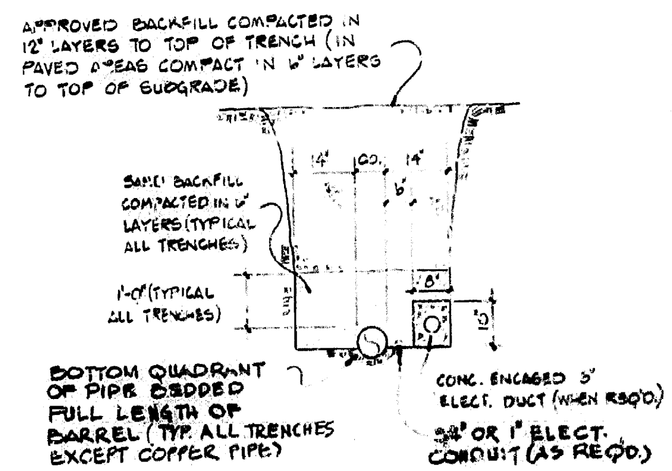

TYPICAL TRENCH SECTION

SECTION C
NTS 27452-202 -203 -204 -205

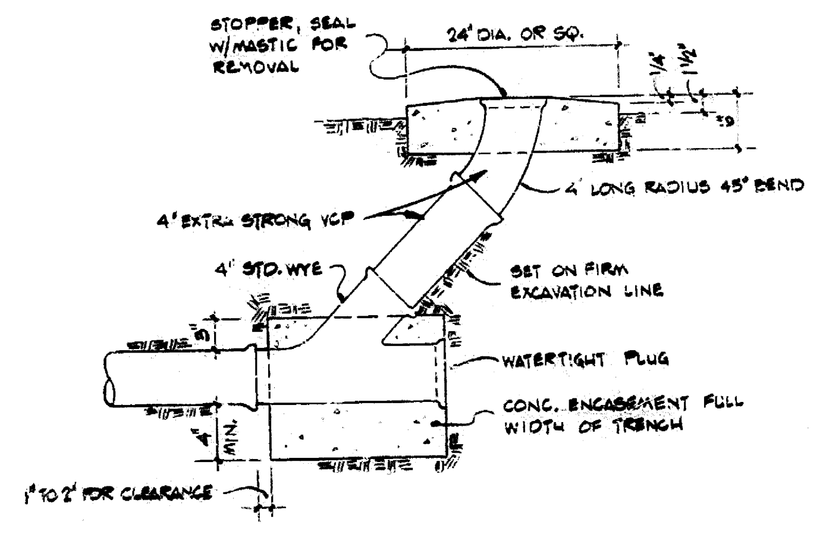

CLEANOUT

DETAIL 4
NTS 27452-204

PIPING SLEEVE & JOINT TABLE

PIPE INSIDE	PIPE OUTSIDE	SIZE	FLUID	JOINT TYPE	WALL SLEEVE NOM SIZE	CMP SLEEVE ϕ x LENGTH
TRANSITION AT BASEMENT WALL						
STEEL	PVC	1½"	DCW (TO SAFETY SHOWER)	SEE DET. 5 DWG 27452-208	3"	8" x 5'
STEEL	COPPER	2"	DCW	SEE DET. 5 DWG 27452-208	3½"	NONE
TRANSITION 10' FROM BASEMENT WALL						
PVC	PVC	3"	MC (NaCl)	—	5"	8" x 5'
PVC	C	6"	RW	SEE DET. 5 DWG 27452-208	8"	12" x 5'
PVC	VCP	4"	SS	SEE DET. 6 DWG 27452-208	6"	12" x 5'
PVC	CAP	3"	SROD	SEE DET. 7 DWG 27452-208	5"	8" x 5'
"	"	3"	SROP	SEE DET. 7 DWG 27452-208	5"	8" x 5'
"	PVC	2½"	PFDW (TO D.B.)	—	4"	8" x 5'
"	CAP	8"	RW	SEE DET. 7 DWG 27452-208	10"	18" x 5'
"	"	6"	ROPW	SEE DET. 7 DWG 27452-208	8"	12" x 5'
"	"	8"	ROF	SEE DET. 7 DWG 27452-208	10"	18" x 5'
"	PVC	1½"	PCW (NaCl)	—	3"	8" x 5'

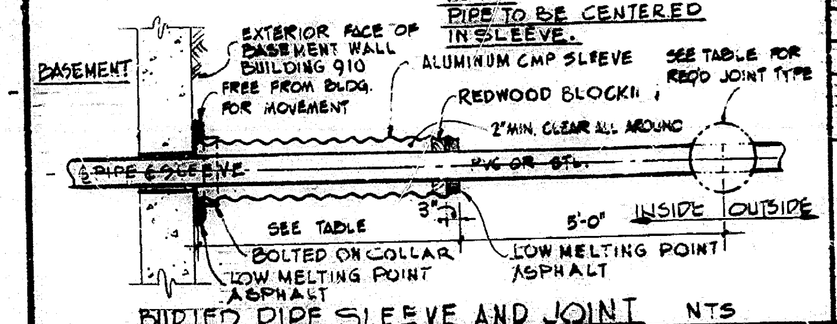

BURIED PIPE SLEEVE AND JOINT NTS

THRUST BLOCK TABLE (BEARING AREA IN SQ. FT.)

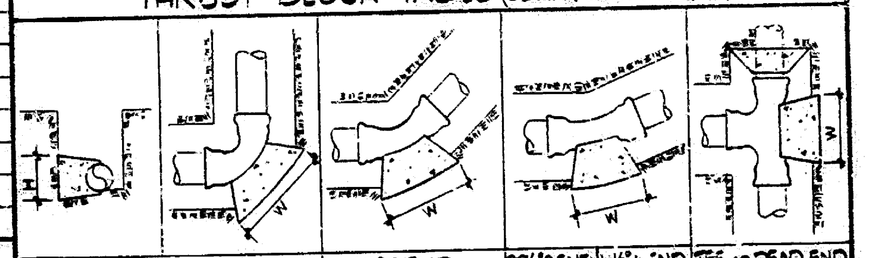

PIPE SIZE	90° BEND	45° BEND	22½° BEND	11¼° BEND	TEE OR DEAD END
2" & 3" (C&P)	1.1	.6	.3	.2	.8
6" (CAP)	3.3	1.8	.9	.5	2.3
8" (CAP)	5.6	3.1	1.6	.8	4.0
6" (C)	5.2	2.9	1.5	.8	3.7

NOTES:
1. THRUST BLOCKS SHALL BE CONCRETE - 2000 PSI MIN. COMPRESSIVE STRENGTH
2. CONCRETE SHALL BE PLACED AGAINST UNDISTURBED SOIL
3. JOINTS & FACES OF PLUGS SHALL BE CLEAR OF CONCRETE
4. AREAS ARE H x W FOR INTERNAL WATER PRESSURE OF 60 PSI FOR CAP AND 125 PSI FOR CAST IRON, 1500 PSI SOIL BEARING CAPACITY AND 1.5 FS.

AS BUILT
DATE 3/26/79

SYM	DESCRIPTION	DATE	BY	CHK	APVD	PROJ ENG	CONST ENG
A	AS BUILT	1/10/79	DH	AP			369005
0	ORIGINAL ISSUE FOR CONSTRUCTION	2/24/77					369005

U.S. ENERGY RESEARCH AND DEVELOPMENT ADMINISTRATION
ROCKY FLATS AREA OFFICE — GOLDEN, COLORADO
ENERGY SYSTEMS GROUP
ROCKWELL INTERNATIONAL
ROCKY FLATS PLANT — GOLDEN, COLORADO 80401

STANDARD 12-30-76
DRAWN DUFFLINE 11-23-76
CHECKED 1-21-77
APPROVED 1-21-77
APPROVED 1-21-77
APVD AI 1/24/77
APVD ENG 3/26/77

WATER CONTROL AND RECYCLE YARD PIPING DETAILS

CONT. NO.
SCALE
SIZE D — DRAWING NUMBER 27452-207 — REV. A — SHEET 23 OF 79

NOTES: (THIS DWG ONLY)

1. BOND RAIN CAP TO REINF PATCH WITH 2" WIDE x 3' LONG FIELD LAP JOINTS.
2. REINF PATCH, RAIN CAP AND MEMBRANE LINING ARE MADE FROM THE SAME MATERIALS.
3. SLOPE SURFACE OF ANCHOR TRENCH 2% AWAY FROM POND ON THE EAST, WEST AND SOUTH POND BANKS.

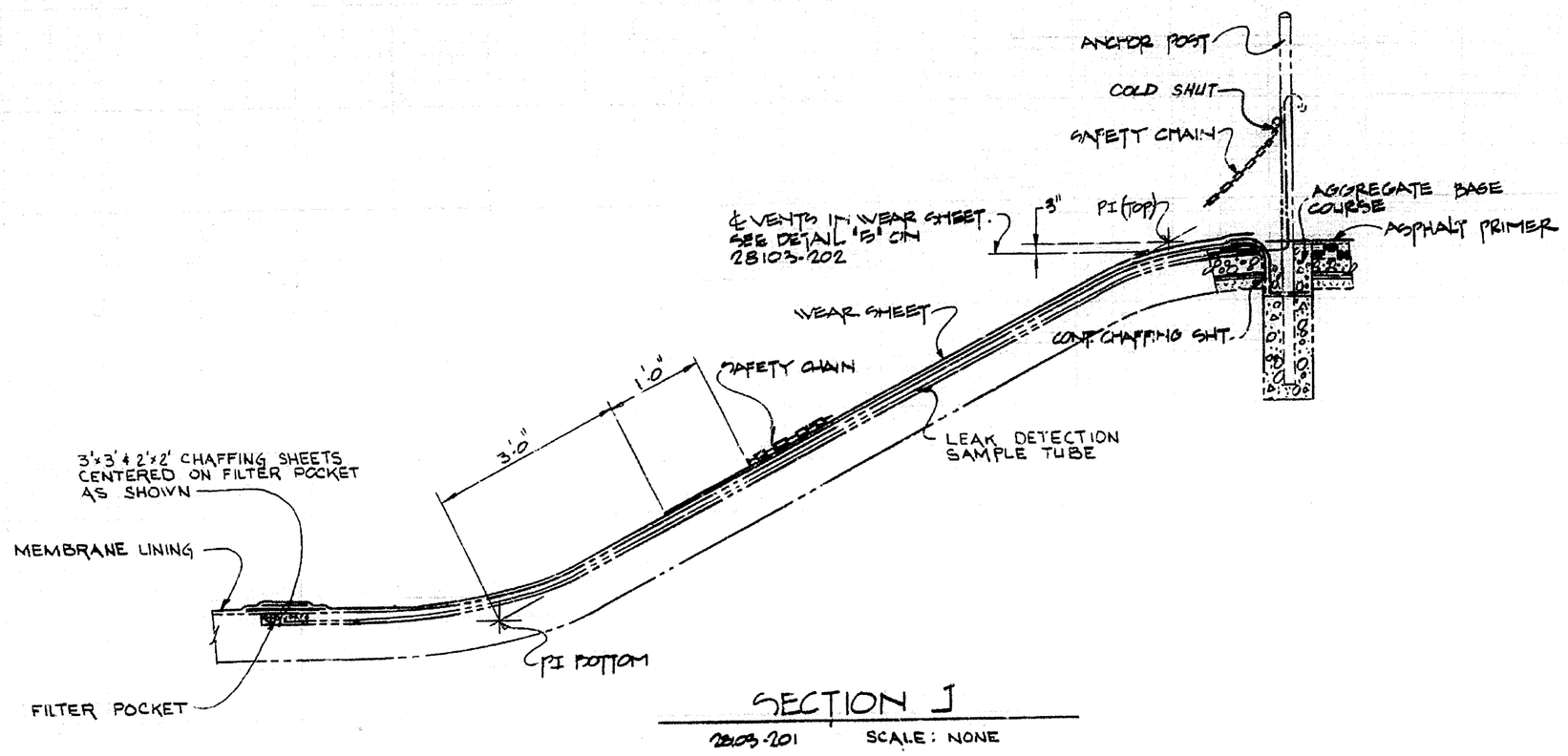

SECTION J
28103-201 SCALE: NONE

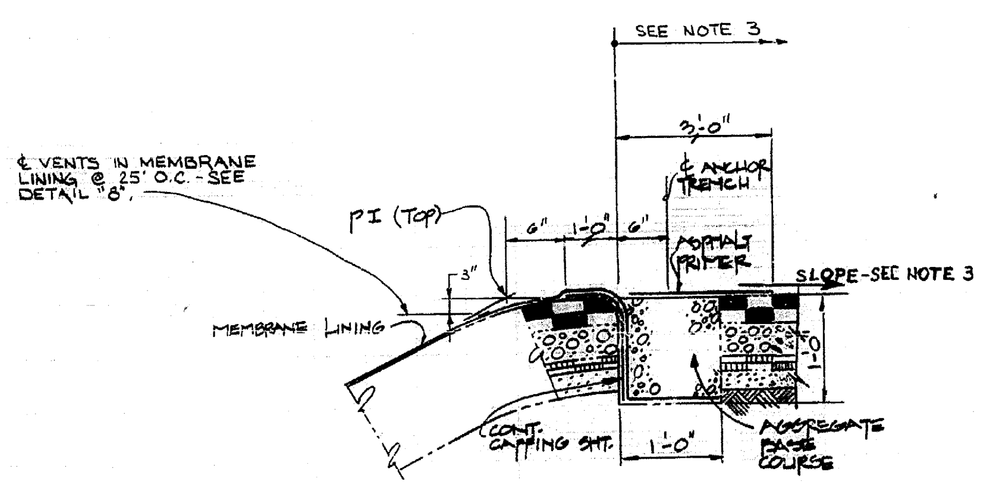

SECTION K
28103-201 SCALE: 1"=1'-0"

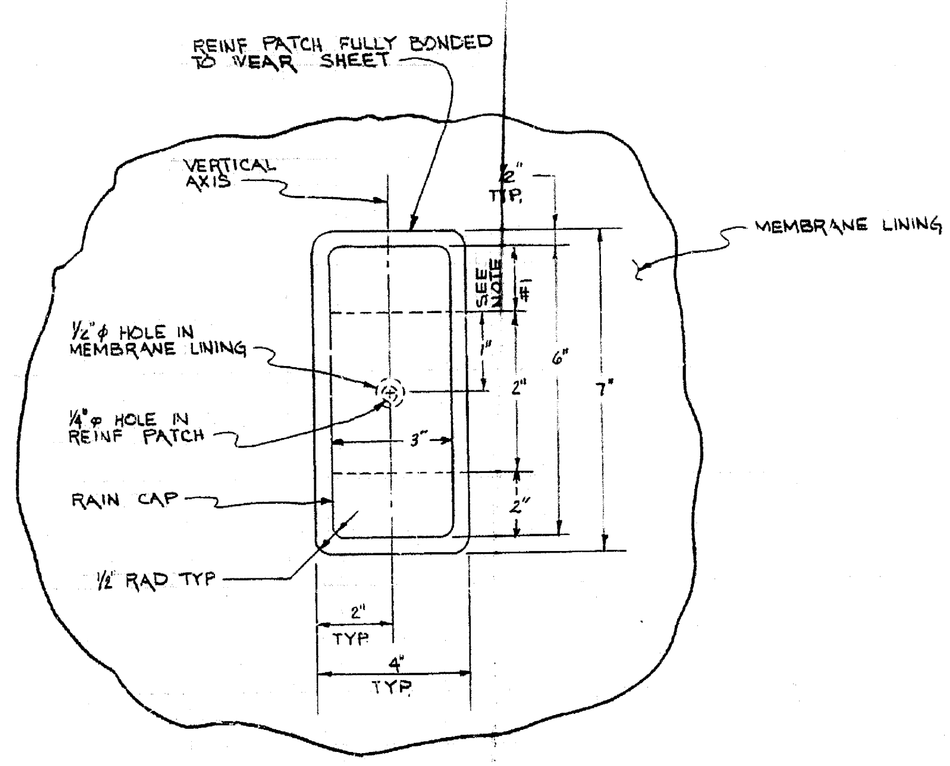

DETAIL "8"
SCALE: NONE
(SEE NOTE 2)

NB	CLASS. REVIEW	06-24-86						900470
A	ORIGINAL ISSUE	3/27/78	KO					
	DESCRIPTION	DATE	AI			DOE	CLASS	JOB NO.

		BY	DATE
TOLERANCES FRACT. ± ANGLE ± DEC. ± UNLESS NOTED OTHERWISE	DESIGNED	HOWTERWAY	1-27-77
	DRAWN	ORTIZ	1-30-77
	CHECKED	OSMUN	2-6-78
	APPROVED		3-13-78
SCALE NOTED	SUBMITTED		
	APPROVED AI		3/13/78
	APPROVED DOE		3/13/78

U. S. DEPARTMENT OF ENERGY
ROCKY FLATS AREA OFFICE GOLDEN, COLORADO
ROCKWELL INTERNATIONAL
ATOMICS INTERNATIONAL DIVISION
ROCKY FLATS PLANT GOLDEN, COLORADO

MEMBRANE POND LINER
PHASE I
SECTIONS AND DETAILS

SIZE	DRAWING NUMBER	CODE	SHEET
D	28103-203	B	6

I101A-000306 page 31

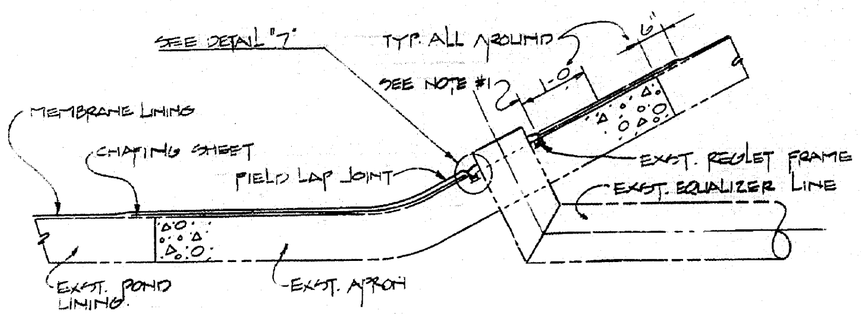

SECTION H

28103-201

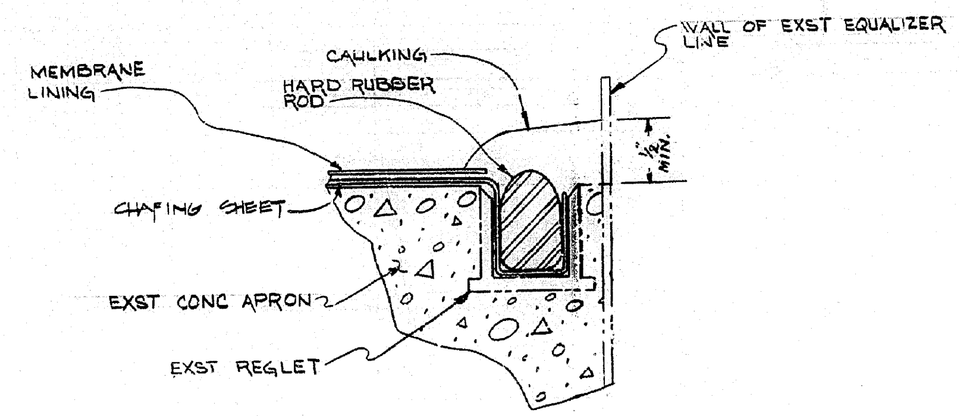

DETAIL "7"

NOTE:

1. APPLY RUBBER TO CONCRETE ADHESIVE BETWEEN CHAFING SHEET AND CONCRETE AS SHOWN.

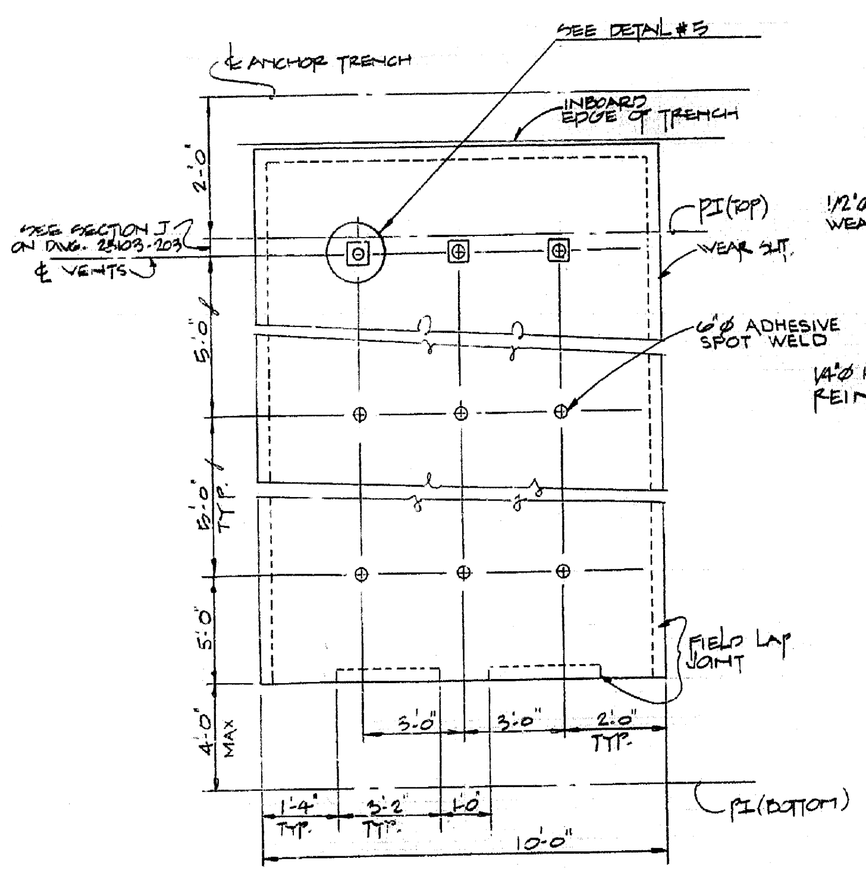

DETAIL "4"

28103-201

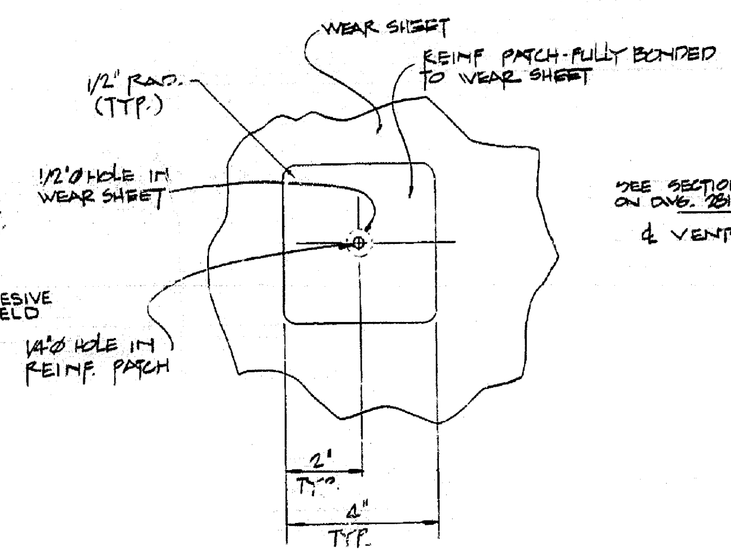

DETAIL "5"

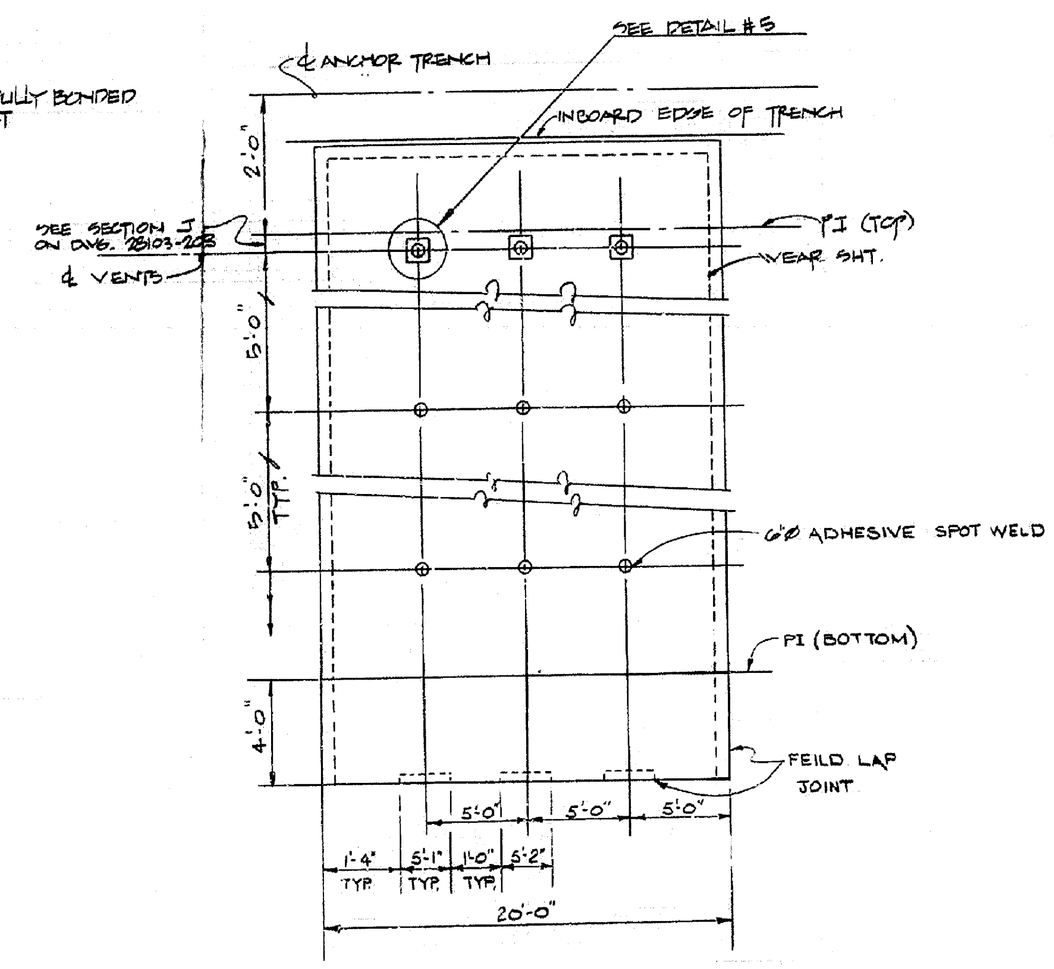

DETAIL "6"

28103-201

A	ORIGINAL ISSUE		3/27/78	KO			
ISSUE	DESCRIPTION		DATE	AI		DOE	CLASS

		BY	DATE
TOLERANCES FRACT. ± ANGLE ± 1/2 ± UNLESS NOTED OTHERWISE	DESIGNED		1-3-77
	DRAWN		12-27-77
	CHECKED		2-6-78
	APPROVED		3-13-78
	SUBMITTED		
SCALE NONE	APPROVED AI		3/13/78
	APPROVED DOE		3/13/78

U.S. ENERGY RESEARCH AND DEVELOPMENT ADMINISTRATION
ROCKY FLATS AREA OFFICE GOLDEN, COLORADO

ROCKWELL INTERNATIONAL
ATOMICS INTERNATIONAL DIVISION
ROCKY FLATS PLANT GOLDEN, COLORADO 80401

MEMBRANE POND LINER
PHASE I
SECTIONS AND DETAILS

SIZE	DRAWING NUMBER	ISSUE	SHEET
D	28103-202	A	5

POND 2078

I101 A-000306 Page 30

PART	QUAN.	DESCRIPTION	MATERIAL

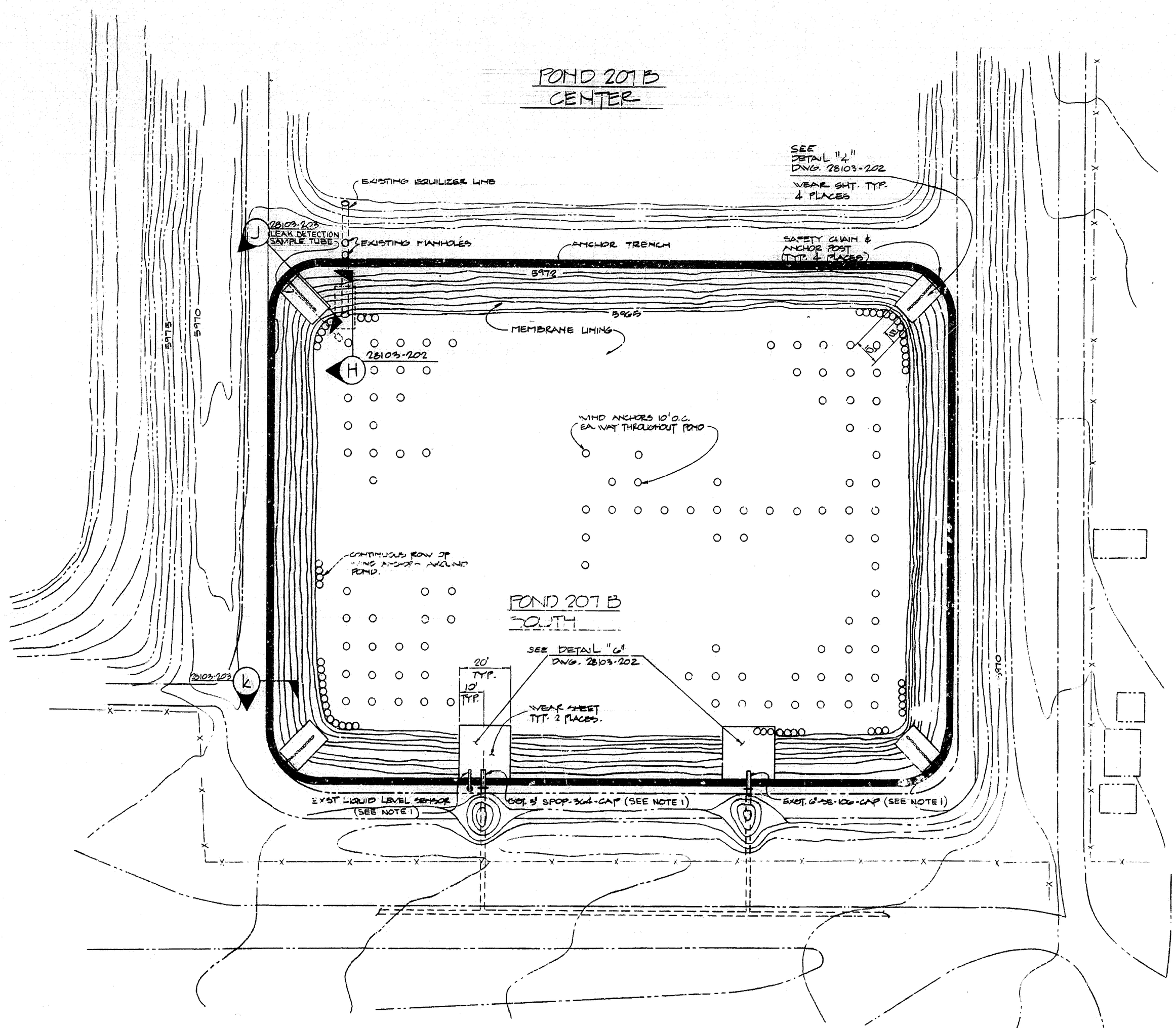

GENERAL NOTES:

1. THE FOLLOWING POND PREPARATION WORK HAS BEEN DONE BY OTHERS:
   - A. INSTALLATION OF PIPING.
   - B. INSTALLATION OF ANCHOR POSTS.
   - C. INSTALLATION OF LEAK DETECTION SAMPLE TUBE.
   - D. PREPARATION OF ANCHOR TRENCH FOR PLACEMENT OF MEMBRANE LINING.
   - E. INSTALLATION OF CONCRETE APRON AROUND EQUALIZER LINE.

NOTES: (THIS DWG ONLY)

1. THE EXISTING LIQUID LEVEL SENSOR AND POND FILL LINES (3"SPOP-364-CAP & 6"SE-106-CAP) MAY BE TEMPORARILY DISCONNECTED AT THEIR FLANGES TO FACILITATE WORK AT THE ANCHOR TRENCH.

ISSUE	DESCRIPTION	DATE				CLASS	JOB NO.
A	ORIGINAL ISSUE	3/27/78	10	Rev 1			AG0541

TOLERANCES		BY	DATE
FRACT. ± ANGLE ± DEC. ± UNLESS NOTED OTHERWISE	DESIGNED		11-8-77
	DRAWN		11-10-77
	CHECKED	OSMUN	2-6-78
REMOVE BURRS AND SHARP EDGES	APPROVED		3-13-78
NEXT ASSEMBLY			
	SUBMITTED		
SCALE 1" = 20'	APPROVED AI		3/13/78
	APPROVED DOE		3/14/78

U. S. DEPARTMENT OF ENERGY
ROCKY FLATS AREA OFFICE — GOLDEN, COLORADO
ROCKWELL INTERNATIONAL
ATOMICS INTERNATIONAL DIVISION
ROCKY FLATS PLANT — GOLDEN, COLORADO 80401

MEMBRANE POND LINER
PHASE I
PLAN

SIZE	DRAWING NUMBER	ISSUE	SHEET
D	28103-201	A	4 OF

FOND 207B DWG. NO.

I 101 A 000306 page 29

PART	CHAR.	DESCRIPTION	MATERIAL

NOTES: (THIS DWG ONLY)

1. LOCATE FILTER POCKET AT LOW POINT OF POND.

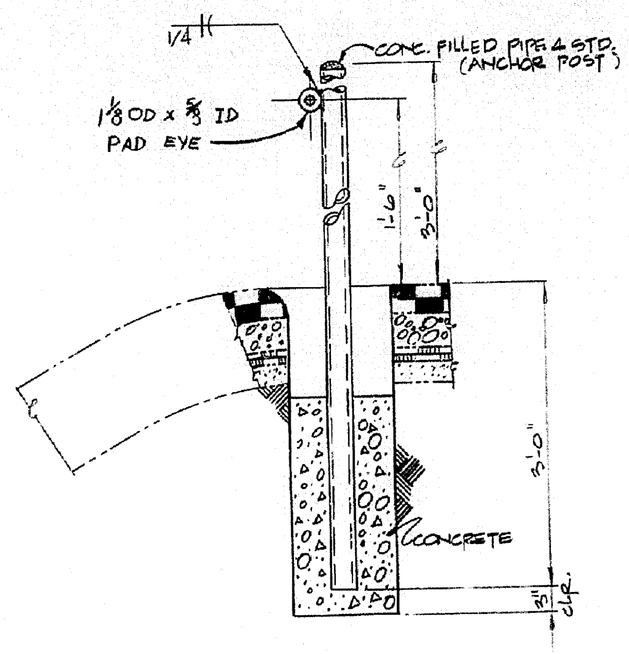

SECTION C

28103-101 SCALE 1" = 1'-0"

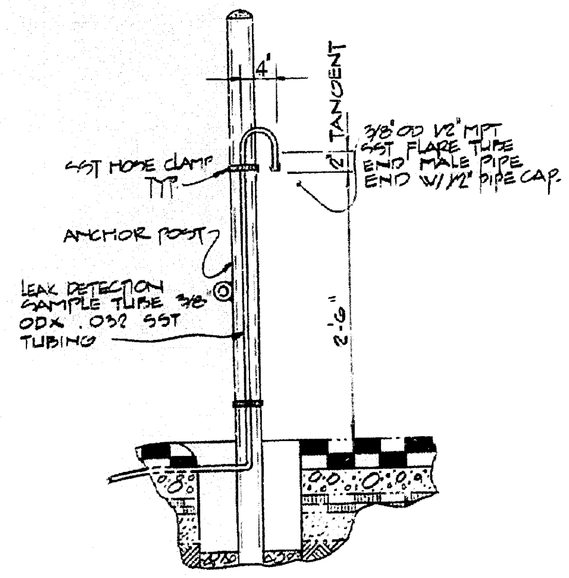

DETAIL "1"

SCALE 1" = 1'-0"

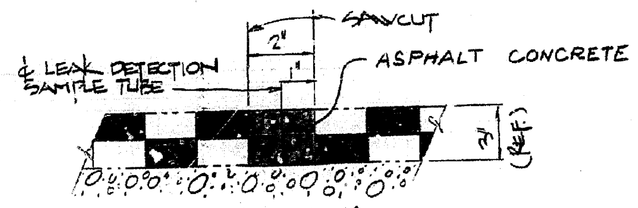

SECTION G

SCALE: NONE

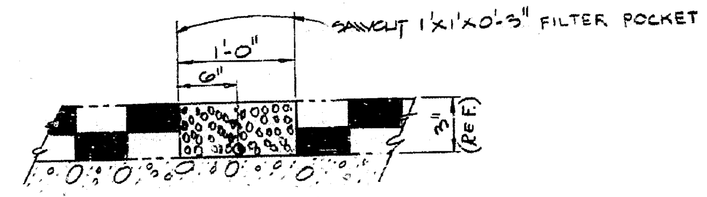

SECTION F

SCALE: NONE

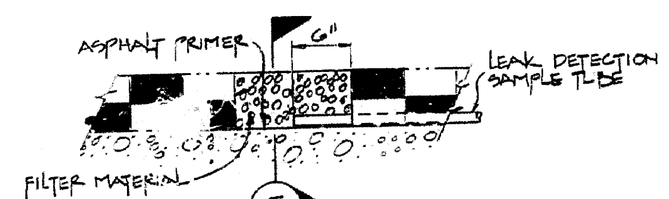

DETAIL "2"

SCALE: NONE

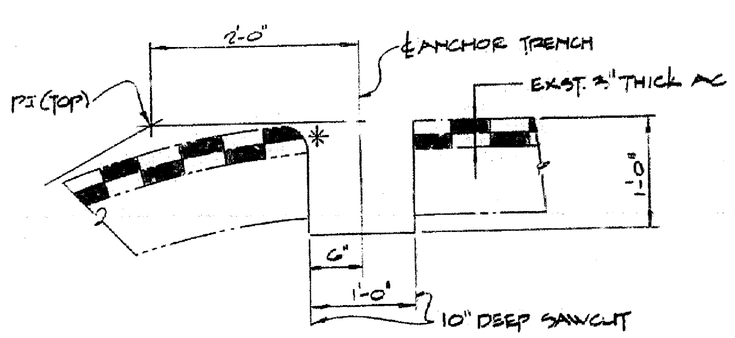

* ROUND CORNER TO A SMOOTH 1" RADIUS

SECTION E

28103-101 SCALE = 1" = 1'-0"

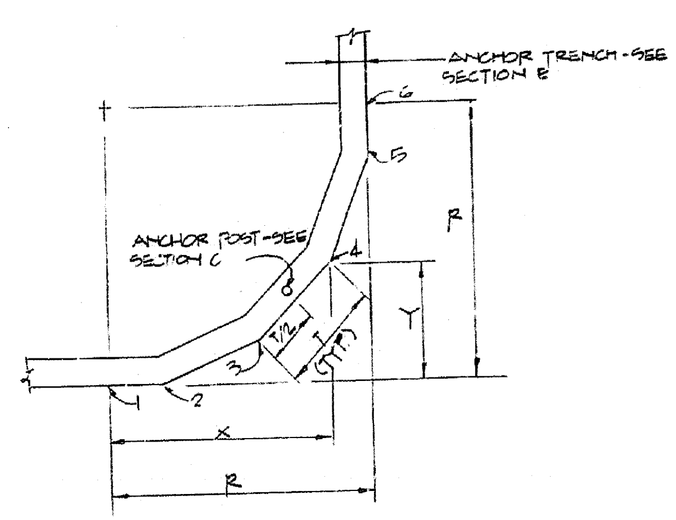

DETAIL "3"

28103-101 SCALE: NONE

(SEE TABLE A FOR DATA)

R	T	POINT	X	Y
10	3.98	1	0	0
		2	1.99	0
		3	5.67	1.52
		4	8.48	4.33
		5	10.00	8.01
		6	10.00	10.00
15	5.97	1	0	0
		2	2.98	0
		3	8.50	2.28
		4	12.72	6.50
		5	15.00	12.02
		6	15.00	15.00
20	7.96	1	0	0
		2	3.98	0
		3	11.33	3.04
		4	16.96	8.67
		5	20.00	16.02
		6	20.00	20.00
25	9.95	1	0	0
		2	4.97	0
		3	14.16	3.80
		4	21.20	10.84
		5	25.00	20.03
		6	25.00	25.00

NOTES: 1. ALL DIMENSIONS ARE IN FEET

2. THE APPROPRIATE RADIUS FOR EACH CORNER WILL BE SELECTED BY THE CONTRACTING OFFICER.

TABLE A

(REF. DETAIL "3")

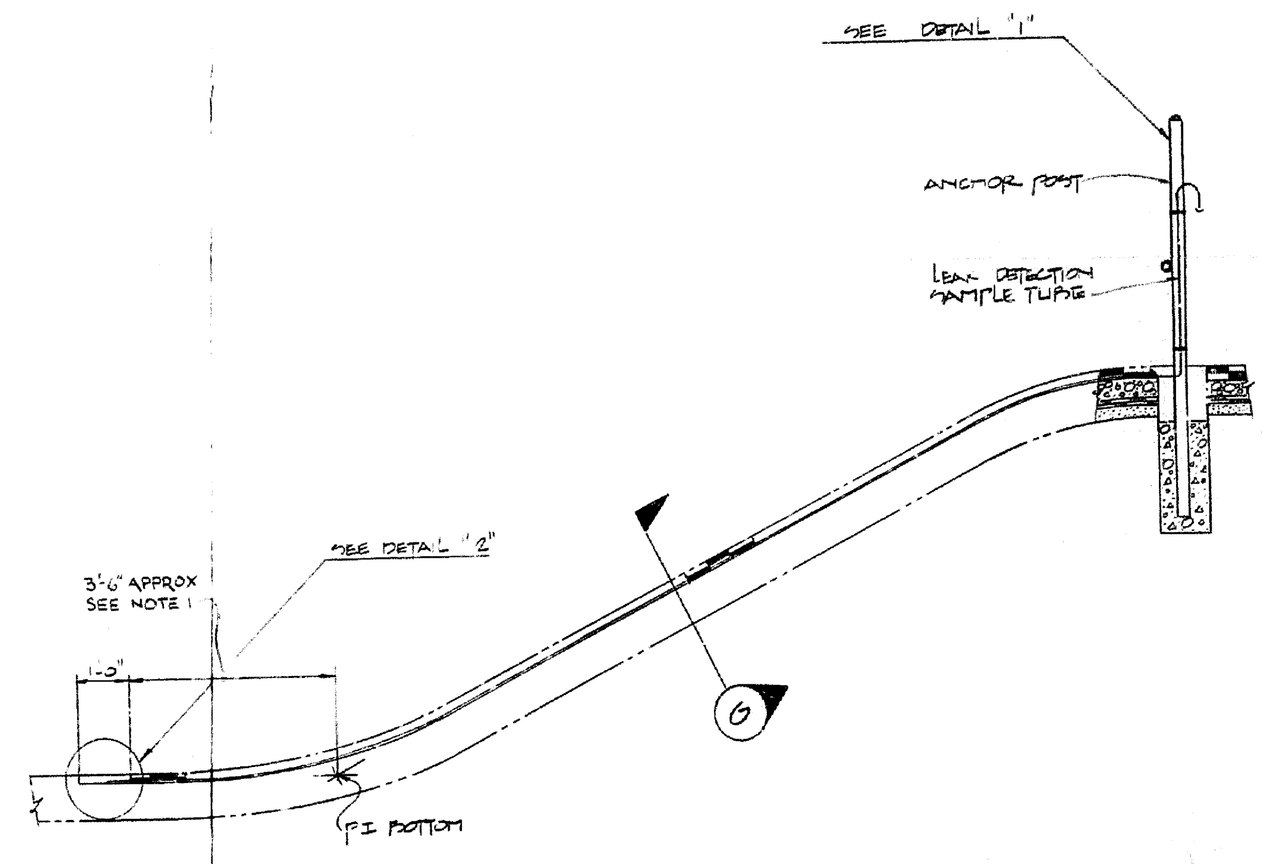

SECTION D

28103-101 SCALE: 1/4" = 1'-0"

REVISIONS							
B	CLASS. REVIEW					3/27/78	900470
A	ORIGINAL ISSUE	3/27/78	KO	RL	3/28/78		
		DATE		A1		DOE CLASS	JOB NO.

	BY	DATE
DESIGNED	KUMPERWAY	1-25-77
DRAWN	BATTIZ	1-26-77
CHECKED	OSMAN	2-6-78
APPROVED	RE Jones	2-13-78
SUBMITTED		
APPROVED A1	A. Hayes	3/13/78
APPROVED DOE		3/15/78

TOLERANCES: FRACT. ± ANGLE ± DEC. ± UNLESS NOTED OTHERWISE

REMOVE BURRS AND SHARP EDGES

NEXT ASSEMBLY

SCALE: NOTED

U.S. DEPARTMENT OF ENERGY

ROCKY FLATS AREA OFFICE GOLDEN, COLORADO

ROCKWELL INTERNATIONAL

ATOMICS INTERNATIONAL DIVISION

ROCKY FLATS PLANT GOLDEN, COLORADO 80401

MEMBRANE POND LINER

PHASE I

SECTIONS AND DETAILS

SIZE	DRAWING NUMBER	ISSUE	SHEET
D	28103-102	B	3 OF

POND 207B

I-01 A1-000306 page 28

GENERAL NOTES:

1. THE EXISTING POND LINING IS CONSTRUCTED AS SHOWN IN SECTION A.

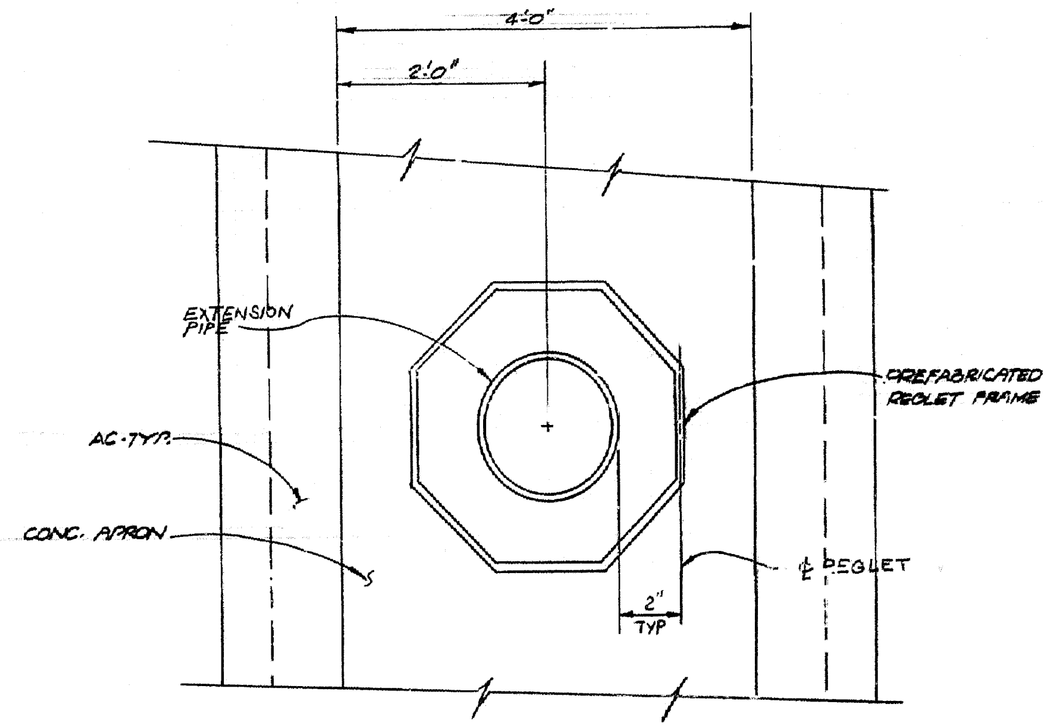

VIEW B

SCALE: NONE

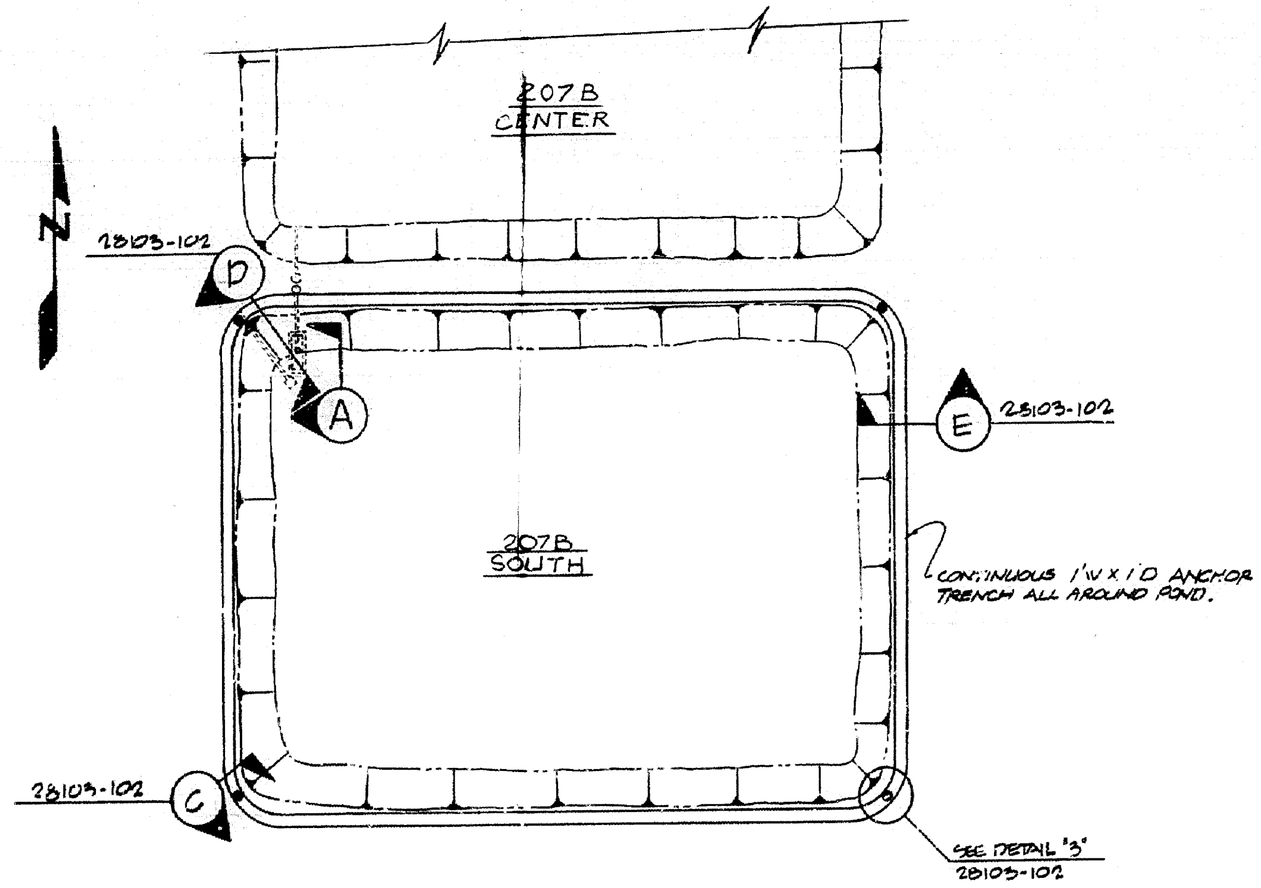

PLAN/POND 207B SOUTH

SCALE: 1" = 40'

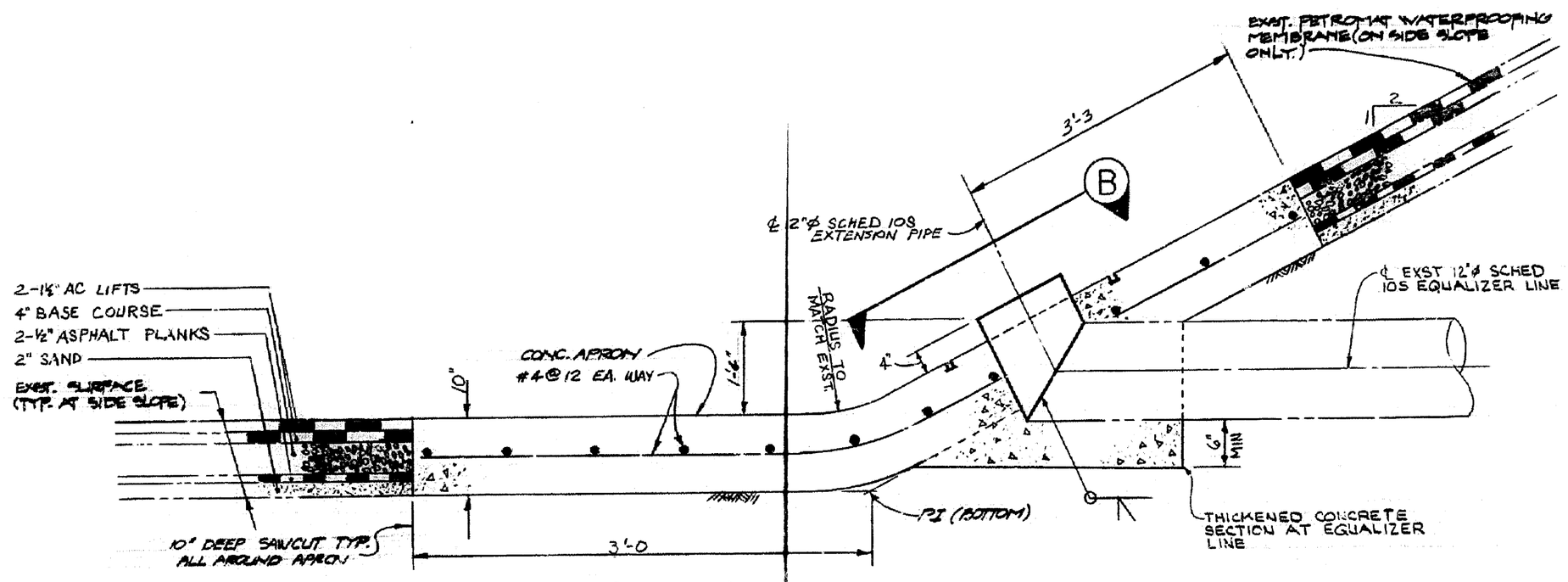

SECTION A

SCALE: NONE

B	CLASS. REVIEW	06-24-86						900470
A	ORIGINAL ISSUE	3/27/78	LO	RE				
ISSUE	DESCRIPTION	DATE	AI			DOE	CLASS	JOB NO.

	BY	DATE
DESIGNED	[illegible]	11-8-77
DRAWN	[illegible]	11-10-77
CHECKED	OSMUN	2-6-78
APPROVED	RE Jensen	3-13-78
SUBMITTED		
APPROVED AI	[illegible]	3/13/78
APPROVED DOE	[illegible]	3/15/78

TOLERANCES: FRACT. ± ANGLE ± DEC. ± UNLESS NOTED OTHERWISE

MATERIAL TOLERANCES AND SHOP NOTES

NEXT ASSEMBLY

SCALE: NOTED

U.S. DEPARTMENT OF ENERGY

ROCKY FLATS AREA OFFICE — GOLDEN, COLORADO

ROCKWELL INTERNATIONAL
ATOMICS INTERNATIONAL DIVISION

ROCKY FLATS PLANT — GOLDEN, COLORADO 80401

MEMBRANE POND LINER
PHASE I
PLAN AND SECTIONS

SIZE	DRAWING NUMBER	ISSUE	SHEET
D	28103-101	B	2

I101 A 000306 page 27