Citizens' Environmental Sampling Committee Report on Soil and Sediment Sampling

Health Advisory Panel
Public Meeting
September 12, 1996

Niels Schonbeck, Ph.D.
Health Advisory Panel
&
Todd Margulies
Citizens' Environmental Sampling Committee

Handouts & Support Materials

ADMIN RECORD

A-OU03-000525

Origins of the Citizens' Environmental Sampling Committee

- Preliminary findings of Phase I (ChemRisk)
- HAP second approach: environmental sampling
- HAP Sampling Task Force, 1991 - 1992
- Invitation to the public to participate in the CESC's first meeting in December, 1992

The Citizens' Environmental Sampling Committee:

- Established goals and objectives
- Selected sampling site locations
- Determined contaminants of concern
- Contracted with a laboratory to perform sample analyses

The Citizens' Environmental Sampling Committee:
(cont'd)

- Selected sampling procedures
- Conducted soil and sediment sampling activities
- Reviewed the quality of the data
- Assessed sampling results
- Prepared the report

Demonstrations and presentations to the Citizens' Environmental Sampling Committee included:

- Analytical methods
- Soil and sediment sampling procedures
- Contaminant transport
- Previous soil, sediment and groundwater studies
- A tour of the CSU Radiological Sciences Laboratory

Laboratory Selection

The following information was provided by 5 candidate laboratories:

- Cost of analyses by type
- Sample preparation
- Detection limits
- Sample turnaround time
- Quality control plan

Laboratory Selection
(cont'd)

The CESC requested the following information from the two finalists:

- Laboratory background information
- Complete data package contents
- National comparison test performance evaluation
- Alpha spectrometry and gamma spectrometry count time
- Soil/sediment sample size requirements
- Extended count time cost
- Internal tracer use
- Cross contamination control protocol
- Standard operating procedures (SOP)

Analytes and Methods

Analyte	Instrumentation	Method
^{241}Am ^{235}U ^{238}U ^{137}Cs ^{90}Sr	Gamma spectrometry	Non-isotopic preparation and analysis per ATI SOP following EPA Method 901.1
^{238}Pu $^{239,240}Pu$ ^{241}Am	Alpha spectrometry	a) Isotope-specific preparation - EPA and DOE approved b) ATI SOP following DOE/Environmental Monitoring Lab (EML) 4.5.2.1 and technology enhancements to EPA 907 and 908
^{90}Sr	Gas proportional count with ICP recovery	EPA 900.0 for gas proportional and EPA 200.7 for ICP

Gamma Spectroscopy

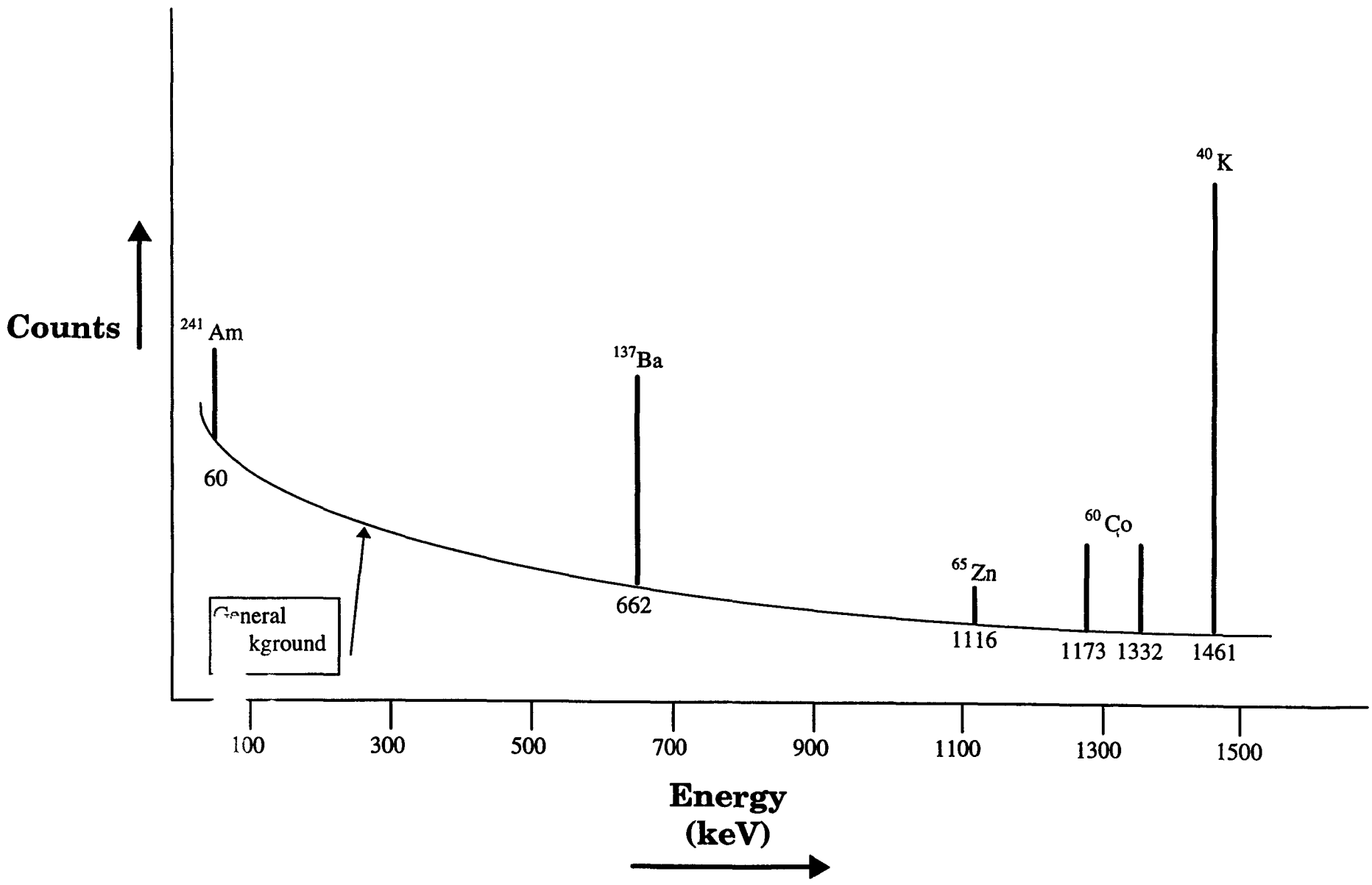

Laboratory report of results included:

- Narrative
- Results summary
- Individual sample results including tracer recovery and detection limits
- QC sample results summary including duplicate sample comparison
- Laboratory control samples (LCS), matrix spikes and blanks
- Instrument calibration data including initial and daily verifications
- Chain of custody documents

The role of the field investigator was to:

- Assess which sites had the least amount of physical disturbance
- Search records in the county assessor's office to determine ownership of prospective sampling locations
- Produce a permission letter packet that would be sent to each landowner
- Conduct the soil and sediment sampling for radionuclides
- Coordinate with laboratory for proper chain of custody procedures, sample containers, delivery of samples and return of analytical results
- Obtain standard reference material (SRM) and sampling methodology samples from CSU

FIGURE 1: CESC SAMPLING LOCATIONS

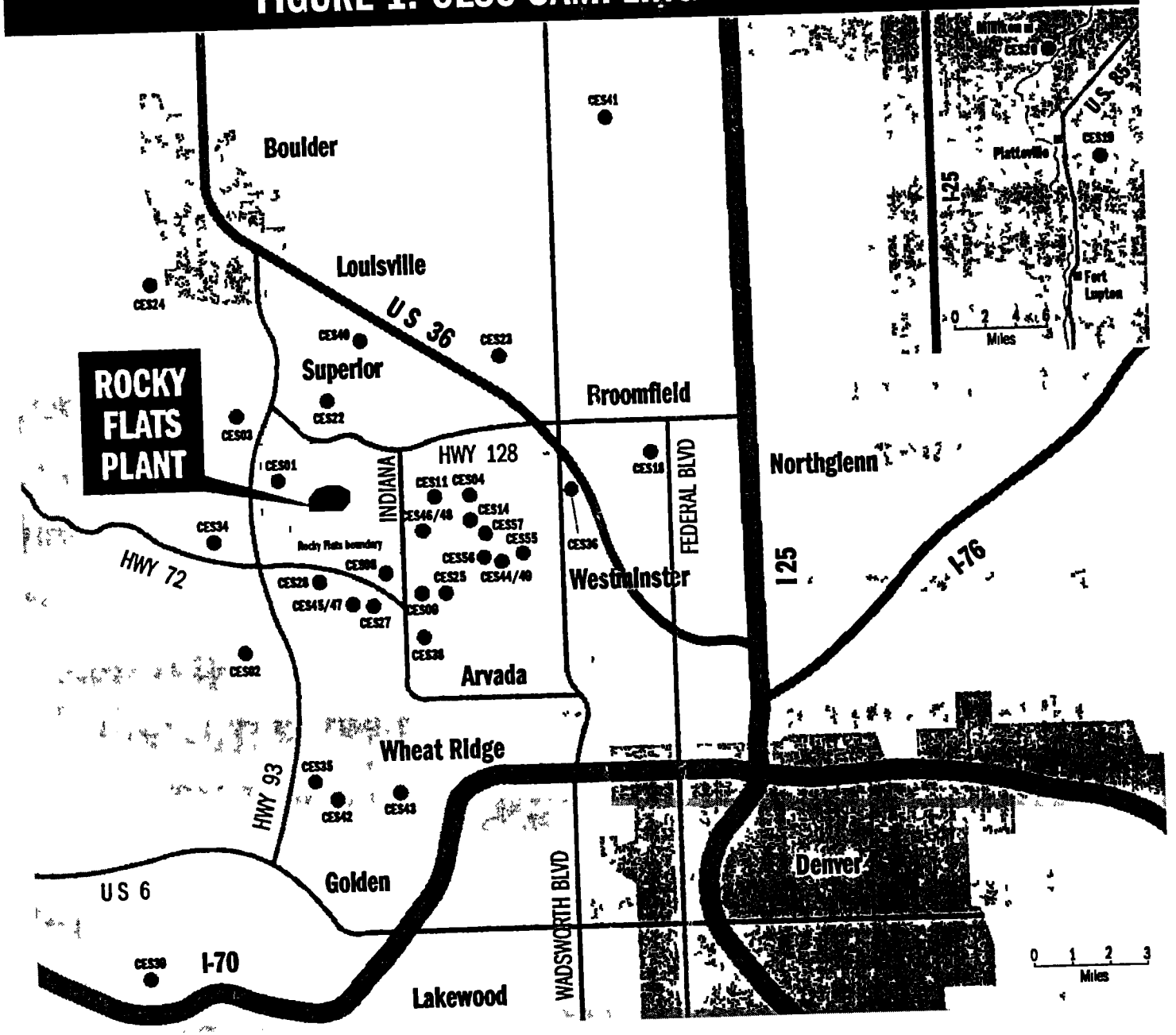

Figure 2:

SOIL SAMPLE DIAGRAM

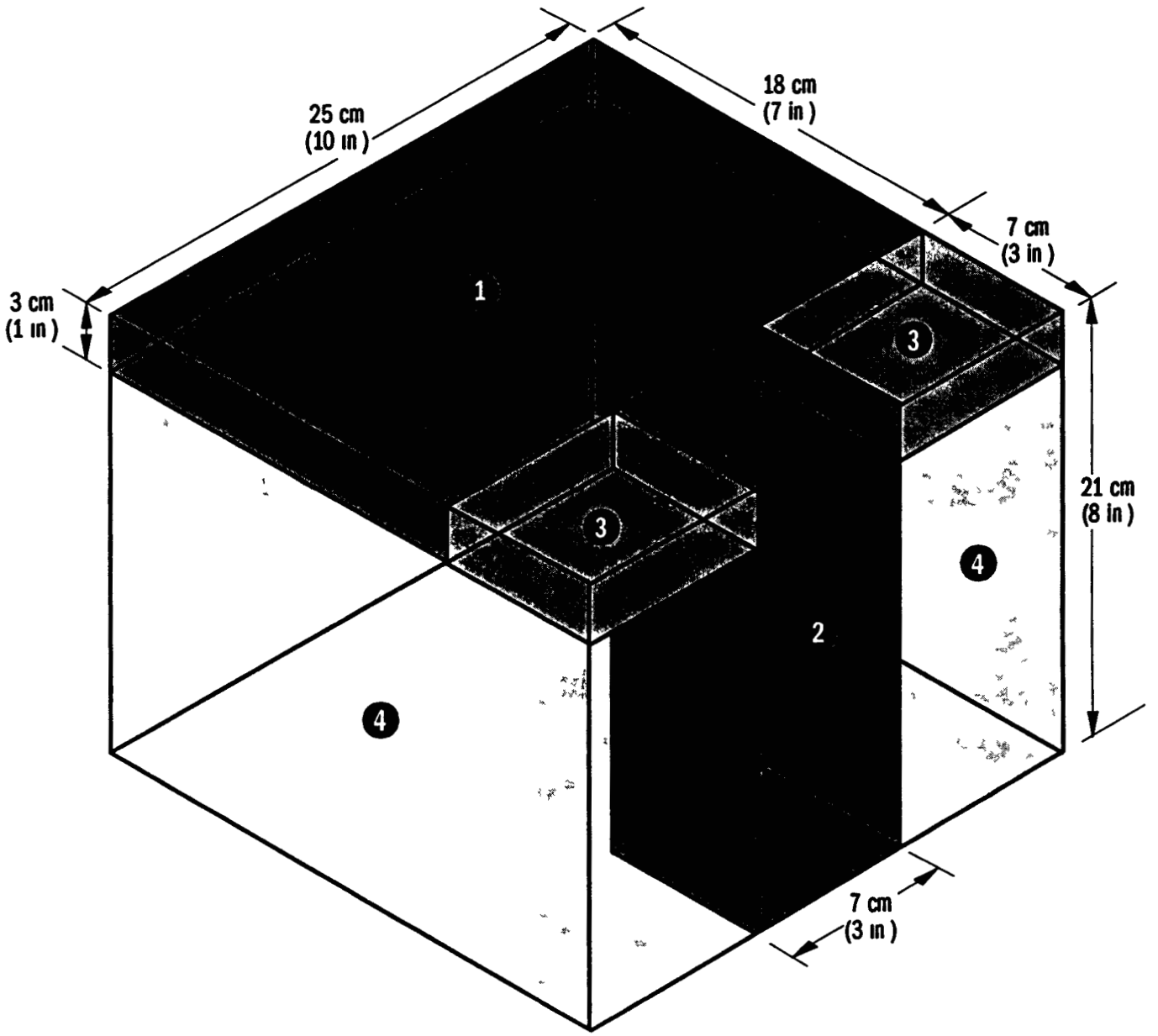

1 3 cm depth in area indicated (sample "A")

2. 21 cm depth core sample in area indicated (sample "B")

3. Volume of soil discarded in order to take sample A

4 Volume of soil not used or disturbed

CESC SITE CHARACTERISTICS

The following information was transcribed from the environmental field investigator's field logbooks.

KEY

Site I.D. #:	CES ##
Veg:	Vegetation type
Slp:	Slope
Cvr:	Percent vegetation cover
Geo:	Geology of excavated site
Msc:	Miscellaneous information

CES 01

Veg:	Buffalo grass, Blue Grama, Sage, Barrel Cactus, Prickly Pear, mixed broad leaf weeds
Slp:	<5%
Cvr:	90+%
Geo:	Light brown sand grading with depth to a brown clay, a lot of rocks to 10 cm.
Msc:	Partly cloudy, slight E wind, 55° F, 10% rocks at surface

CES 03

Veg:	Yucca, Prickly Pear, Buffalo grass, Blue Grama, many different flowers and flowering weeds
Slp:	<2%
Cvr:	70-80%
Geo:	Dark brown sand with reddish tint, 5% clay, moist, heavy root zone 1-7 cm., many rocks in profile
Msc:	Sunny, slight SW wind, 65°F, 20-30% rocks at surface, old cattle grazing area

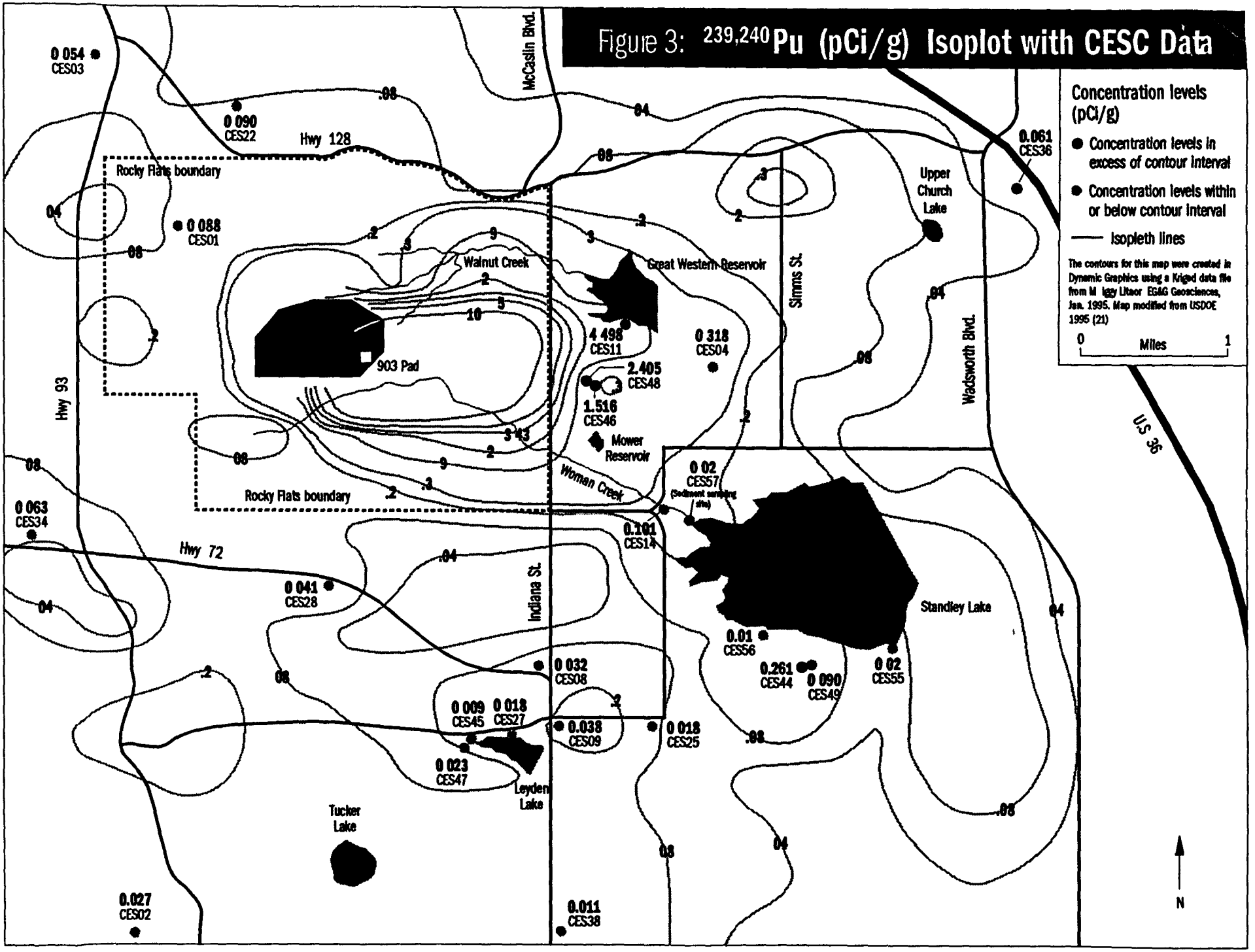
Figure 3: 239,240Pu (pCi/g) Isoplot with CESC Data
Concentration levels (pCi/g)
Concentration levels in excess of contour interval
Concentration levels within or below contour interval
Isopleth lines
The contours for this map were created in Dynamic Graphics using a Kriged data file from M Iggy Litaor EG&G Geosciences, Jan. 1995. Map modified from USDOE 1995 (21)
0 Miles 1
N
McCaslin Blvd.
Hwy 128
Rocky Flats boundary
Walnut Creek
903 Pad
Great Western Reservoir
Mower Reservoir
Woman Creek
Upper Church Lake
Simms St.
Wadsworth Blvd.
U.S 36
Hwy 93
Hwy 72
Indiana St.
Standley Lake
Leyden Lake
Tucker Lake
0 054 CES03
0 090 CES22
0 088 CES01
0.061 CES36
4 498 CES11
0 318 CES04
2.405 CES48
1.516 CES46
0 02 CES57
0.101 CES14
0 063 CES34
0 041 CES28
0 032 CES08
0 009 CES45
0 018 CES27
0.038 CES09
0 018 CES25
0 023 CES47
0.01 CES56
0.261 CES44
0 090 CES49
0 02 CES55
0.027 CES02
0.011 CES38