DRAFT

PHASE I RFI/RI WORK PLAN

ROCKY FLATS PLANT

100 AREA
(Operable Unit No.13)

VOLUME III OF III

U.S. DEPARTMENT OF ENERGY
Rocky Flats Plant
Golden, Colorado

ENVIRONMENTAL RESTORATION PROGRAM

MAY 11, 1992

REVIEWED FOR CLASSIFICATION/UCNI
By
Date 5/20/92

ADMIN RECORD

A-OU13-000016

APPENDIX E

SURFACE WATER AND SEDIMENT DATA

REVIEWED FOR CLASSIFICATION/UCNI
By
Date 5/20/92

ADMIN RECORD

ocation	ST	QC	Sample Number	Smpl Date	D	ID	Group	Chemical	Result	Unit	Error	Qual	D	LMT	VA	RN1	RN2	RN3	RN4	VResult	VQual	VDET
ED118	SD	REAL	SS00127WC	18-SEP-90	N	TRG	SVOCLPTCL	% MOISTURE	12	% MOIS												
ED118	SD	REAL	SS00127WC	18-SEP-90	N	TRG	SVOCLPTCL	1,2,4-TRICHLOROBENZENE	390	UG/KG		U										
ED118	SD	REAL	SS00127WC	18-SEP-90	N	TRG	SVOCLPTCL	1,2-DICHLOROBENZENE	390	UG/KG		U										
ED118	SD	REAL	SS00127WC	18-SEP-90	N	TRG	SVOCLPTCL	1,3-DICHLOROBENZENE	390	UG/KG		U										
ED118	SD	REAL	SS00127WC	18-SEP-90	N	TRG	SVOCLPTCL	1,4-DICHLOROBENZENE	390	UG/KG		U										
ED118	SD	REAL	SS00127WC	18-SEP-90	N	TRG	SVOCLPTCL	2,4,5-TRICHLOROPHENOL	1900	UG/KG		U										
ED118	SD	REAL	SS00127WC	18-SEP-90	N	TRG	SVOCLPTCL	2,4,6-TRICHLOROPHENOL	390	UG/KG		U										
ED118	SD	REAL	SS00127WC	18-SEP-90	N	TRG	SVOCLPTCL	2,4-DICHLOROPHENOL	390	UG/KG		U										
ED118	SD	REAL	SS00127WC	18-SEP-90	N	TRG	SVOCLPTCL	2,4-DIMETHYLPHENOL	390	UG/KG		U										
ED118	SD	REAL	SS00127WC	18-SEP-90	N	TRG	SVOCLPTCL	2,4-DINITROPHENOL	1900	UG/KG		U										
ED118	SD	REAL	SS00127WC	18-SEP-90	N	TRG	SVOCLPTCL	2,4-DINITROTOLUENE	390	UG/KG		U										
ED118	SD	REAL	SS00127WC	18-SEP-90	N	TRG	SVOCLPTCL	2,6-DINITROTOLUENE	390	UG/KG		U										
ED118	SD	REAL	SS00127WC	18-SEP-90	N	TRG	SVOCLPTCL	2-CHLORONAPHTHALENE	390	UG/KG		U										
ED118	SD	REAL	SS00127WC	18-SEP-90	N	TRG	SVOCLPTCL	2-CHLOROPHENOL	390	UG/KG		U										
ED118	SD	REAL	SS00127WC	18-SEP-90	N	TRG	SVOCLPTCL	2-METHYLNAPHTHALENE	390	UG/KG		U										
ED118	SD	REAL	SS00127WC	18-SEP-90	N	TRG	SVOCLPTCL	2-METHYLPHENOL	390	UG/KG		U										
ED118	SD	REAL	SS00127WC	18-SEP-90	N	TRG	SVOCLPTCL	2-NITROANILINE	1900	UG/KG		U										
ED118	SD	REAL	SS00127WC	18-SEP-90	N	TRG	SVOCLPTCL	2-NITROPHENOL	390	UG/KG		U										
ED118	SD	REAL	SS00127WC	18-SEP-90	N	TRG	SVOCLPTCL	3,3'-DICHLOROBENZIDINE	770	UG/KG		U										
ED118	SD	REAL	SS00127WC	18-SEP-90	N	TRG	SVOCLPTCL	3-NITROANILINE	1900	UG/KG		U										
ED118	SD	REAL	SS00127WC	18-SEP-90	N	TRG	SVOCLPTCL	4,6-DINITRO-2-METHYLPHENOL	1900	UG/KG		U										
ED118	SD	REAL	SS00127WC	18-SEP-90	N	TRG	SVOCLPTCL	4-BROMOPHENYL PHENYL ETHER	390	UG/KG		U										
ED118	SD	REAL	SS00127WC	18-SEP-90	N	TRG	SVOCLPTCL	4-CHLORO-3-METHYLPHENOL	390	UG/KG		U										
ED118	SD	REAL	SS00127WC	18-SEP-90	N	TRG	SVOCLPTCL	4-CHLOROANILINE	390	UG/KG		U										
ED118	SD	REAL	SS00127WC	18-SEP-90	N	TRG	SVOCLPTCL	4-CHLOROPHENYL PHENYL ETHER	390	UG/KG		U										
ED118	SD	REAL	SS00127WC	18-SEP-90	N	TRG	SVOCLPTCL	4-METHYLPHENOL	390	UG/KG		U										
ED118	SD	REAL	SS00127WC	18-SEP-90	N	TRG	SVOCLPTCL	4-NITROANILINE	1900	UG/KG		U										
ED118	SD	REAL	SS00127WC	18-SEP-90	N	TRG	SVOCLPTCL	4-NITROPHENOL	1900	UG/KG		U										
ED118	SD	REAL	SS00127WC	18-SEP-90	N	TRG	SVOCLPTCL	ACENAPHTHENE	390	UG/KG		U										
ED118	SD	REAL	SS00127WC	18-SEP-90	N	TRG	SVOCLPTCL	ACENAPHTHYLENE	390	UG/KG		U										
ED118	SD	REAL	SS00127WC	18-SEP-90	N	TRG	SVOCLPTCL	ANTHRACENE	390	UG/KG		U										
ED118	SD	REAL	SS00127WC	18-SEP-90	N	TRG	SVOCLPTCL	BENZO(a)ANTHRACENE	390	UG/KG		U										
ED118	SD	REAL	SS00127WC	18-SEP-90	N	TRG	SVOCLPTCL	BENZO(a)PYRENE	390	UG/KG		U										
ED118	SD	REAL	SS00127WC	18-SEP-90	N	TRG	SVOCLPTCL	BENZO(b)FLUORANTHENE	390	UG/KG		U										
ED118	SD	REAL	SS00127WC	18-SEP-90	N	TRG	SVOCLPTCL	BENZO(ghi)PERYLENE	390	UG/KG		U										
ED118	SD	REAL	SS00127WC	18-SEP-90	N	TRG	SVOCLPTCL	BENZO(k)FLUORANTHENE	390	UG/KG		U										
ED118	SD	REAL	SS00127WC	18-SEP-90	N	TRG	SVOCLPTCL	BENZOIC ACID	1900	UG/KG		U										
ED118	SD	REAL	SS00127WC	18-SEP-90	N	TRG	SVOCLPTCL	BENZYL ALCOHOL	390	UG/KG		U										
ED118	SD	REAL	SS00127WC	18-SEP-90	N	TRG	SVOCLPTCL	BIS(2-CHLOROETHOXY)METHANE	390	UG/KG		U										
ED118	SD	REAL	SS00127WC	18-SEP-90	N	TRG	SVOCLPTCL	BIS(2-CHLOROETHYL)ETHER	390	UG/KG		U										
ED118	SD	REAL	SS00127WC	18-SEP-90	N	TRG	SVOCLPTCL	BIS(2-CHLOROISOPROPYL)ETHER	390	UG/KG		U										
ED118	SD	REAL	SS00127WC	18-SEP-90	N	TRG	SVOCLPTCL	BIS(2-ETHYLHEXYL)PHTHALATE	390	UG/KG		U										
ED118	SD	REAL	SS00127WC	18-SEP-90	N	TRG	SVOCLPTCL	BUTYL BENZYL PHTHALATE	390	UG/KG		U										
ED118	SD	REAL	SS00127WC	18-SEP-90	N	TRG	SVOCLPTCL	CHRYSENE	390	UG/KG		U										
ED118	SD	REAL	SS00127WC	18-SEP-90	N	TRG	SVOCLPTCL	DI-n-BUTYL PHTHALATE	390	UG/KG		U										
ED118	SD	REAL	SS00127WC	18-SEP-90	N	TRG	SVOCLPTCL	DI-n-OCTYL PHTHALATE	390	UG/KG		U										
ED118	SD	REAL	SS00127WC	18-SEP-90	N	TRG	SVOCLPTCL	DIBENZO(a,h)ANTHRACENE	390	UG/KG		U										
ED118	SD	REAL	SS00127WC	18-SEP-90	N	TRG	SVOCLPTCL	DIBENZOFURAN	390	UG/KG		U										
ED118	SD	REAL	SS00127WC	18-SEP-90	N	TRG	SVOCLPTCL	DIETHYL PHTHALATE	390	UG/KG		U										
ED118	SD	REAL	SS00127WC	18-SEP-90	N	TRG	SVOCLPTCL	DIMETHYL PHTHALATE	390	UG/KG		U										
ED118	SD	REAL	SS00127WC	18-SEP-90	N	TRG	SVOCLPTCL	FLUORANTHENE	45	UG/KG		J										
ED118	SD	REAL	SS00127WC	18-SEP-90	N	TRG	SVOCLPTCL	FLUORENE	390	UG/KG		U										
ED118	SD	REAL	SS00127WC	18-SEP-90	N	TRG	SVOCLPTCL	HEXACHLOROBENZENE	390	UG/KG		U										
ED118	SD	REAL	SS00127WC	18-SEP-90	N	TRG	SVOCLPTCL	HEXACHLOROBUTADIENE	390	UG/KG		U										
ED118	SD	REAL	SS00127WC	18-SEP-90	N	TRG	SVOCLPTCL	HEXACHLOROCYCLOPENTADIENE	390	UG/KG		U										
ED118	SD	REAL	SS00127WC	18-SEP-90	N	TRG	SVOCLPTCL	HEXACHLOROETHANE	390	UG/KG		U										
ED118	SD	REAL	SS00127WC	18-SEP-90	N	TRG	SVOCLPTCL	INDENO(1,2,3-cd)PYRENE	390	UG/KG		U										
ED118	SD	REAL	SS00127WC	18-SEP-90	N	TRG	SVOCLPTCL	ISOPHORONE	390	UG/KG		U										
ED118	SD	REAL	SS00127WC	18-SEP-90	N	TRG	SVOCLPTCL	N-NITROSO-DI-n-PROPYLAMINE	390	UG/KG		U										
ED118	SD	REAL	SS00127WC	18-SEP-90	N	TRG	SVOCLPTCL	N-NITROSODIPHENYLAMINE	390	UG/KG		U										
ED118	SD	REAL	SS00127WC	18-SEP-90	N	TRG	SVOCLPTCL	NAPHTHALENE	390	UG/KG		U										
ED118	SD	REAL	SS00127WC	18-SEP-90	N	TRG	SVOCLPTCL	NITROBENZENE	390	UG/KG		U										
ED118	SD	REAL	SS00127WC	18-SEP-90	N	TRG	SVOCLPTCL	PENTACHLOROPHENOL	1900	UG/KG		U										

Location	ST	QC	Sample Number	Smpl Date	D	ID	Group	Chemical	Result	Unit	Error	Qual	D LMT	VA	RN1	RN2	RN3	RN4	VResult	VQual	VDET
SED118	SD	REAL	SS00127WC	18-SEP-90	N	TRG	SVOCLPTCL	PHENANTHRENE	390	UG/KG		U									
SED118	SD	REAL	SS00127WC	18-SEP-90	N	TRG	SVOCLPTCL	PHENOL	390	UG/KG		U									
SED118	SD	REAL	SS00127WC	18-SEP-90	N	TRG	SVOCLPTCL	PYRENE	70	UG/KG		J									
SED118	SD	REAL	SS00127WC	18-SEP-90	N	TRG	VOCCLPTCL	% MOISTURE	12	% MOIS											
SED118	SD	REAL	SS00127WC	18-SEP-90	N	TRG	VOCCLPTCL	1,1,1-TRICHLOROETHANE	6	UG/KG		U		V							
SED118	SD	REAL	SS00127WC	18-SEP-90	N	TRG	VOCCLPTCL	1,1,2,2-TETRACHLOROETHANE	6	UG/KG		U		V							
SED118	SD	REAL	SS00127WC	18-SEP-90	N	TRG	VOCCLPTCL	1,1,2-TRICHLOROETHANE	6	UG/KG		U		V							
SED118	SD	REAL	SS00127WC	18-SEP-90	N	TRG	VOCCLPTCL	1,1-DICHLOROETHANE	6	UG/KG		U		V							
SED118	SD	REAL	SS00127WC	18-SEP-90	N	TRG	VOCCLPTCL	1,1-DICHLOROETHENE	6	UG/KG		U		V							
SED118	SD	REAL	SS00127WC	18-SEP-90	N	TRG	VOCCLPTCL	1,2-DICHLOROETHANE	6	UG/KG		U		V							
SED118	SD	REAL	SS00127WC	18-SEP-90	N	TRG	VOCCLPTCL	1,2-DICHLOROETHENE	6	UG/KG		U		V							
SED118	SD	REAL	SS00127WC	18-SEP-90	N	TRG	VOCCLPTCL	1,2-DICHLOROPROPANE	6	UG/KG		U		V							
SED118	SD	REAL	SS00127WC	18-SEP-90	N	TRG	VOCCLPTCL	2-BUTANONE	4	UG/KG		BJ		JA					11	U	
SED118	SD	REAL	SS00127WC	18-SEP-90	N	TRG	VOCCLPTCL	2-HEXANONE	11	UG/KG		U		V							
SED118	SD	REAL	SS00127WC	18-SEP-90	N	TRG	VOCCLPTCL	4-METHYL-2-PENTANONE	1	UG/KG		BJ		JA					11	U	
SED118	SD	REAL	SS00127WC	18-SEP-90	N	TRG	VOCCLPTCL	ACETONE	2	UG/KG		BJ		JA					11	U	
SED118	SD	REAL	SS00127WC	18-SEP-90	N	TRG	VOCCLPTCL	BENZENE	6	UG/KG		U		V							
SED118	SD	REAL	SS00127WC	18-SEP-90	N	TRG	VOCCLPTCL	BROMODICHLOROMETHANE	6	UG/KG		U		V							
SED118	SD	REAL	SS00127WC	18-SEP-90	N	TRG	VOCCLPTCL	BROMOFORM	6	UG/KG		U		V							
SED118	SD	REAL	SS00127WC	18-SEP-90	N	TRG	VOCCLPTCL	BROMOMETHANE	11	UG/KG		U		R							
SED118	SD	REAL	SS00127WC	18-SEP-90	N	TRG	VOCCLPTCL	CARBON DISULFIDE	2	UG/KG		J		A							
SED118	SD	REAL	SS00127WC	18-SEP-90	N	TRG	VOCCLPTCL	CARBON TETRACHLORIDE	6	UG/KG		U		V							
SED118	SD	REAL	SS00127WC	18-SEP-90	N	TRG	VOCCLPTCL	CHLOROBENZENE	6	UG/KG		U		V							
SED118	SD	REAL	SS00127WC	18-SEP-90	N	TRG	VOCCLPTCL	CHLOROETHANE	11	UG/KG		U		V							
SED118	SD	REAL	SS00127WC	18-SEP-90	N	TRG	VOCCLPTCL	CHLOROFORM	6	UG/KG		U		V							
SED118	SD	REAL	SS00127WC	18-SEP-90	N	TRG	VOCCLPTCL	CHLOROMETHANE	11	UG/KG		U		V							
SED118	SD	REAL	SS00127WC	18-SEP-90	N	TRG	VOCCLPTCL	DIBROMOCHLOROMETHANE	6	UG/KG		U		V							
SED118	SD	REAL	SS00127WC	18-SEP-90	N	TRG	VOCCLPTCL	ETHYLBENZENE	6	UG/KG		U		V							
SED118	SD	REAL	SS00127WC	18-SEP-90	N	TRG	VOCCLPTCL	METHYLENE CHLORIDE	10	UG/KG		B		JA						U	
SED118	SD	REAL	SS00127WC	18-SEP-90	N	TRG	VOCCLPTCL	STYRENE	6	UG/KG		U		V							
SED118	SD	REAL	SS00127WC	18-SEP-90	N	TRG	VOCCLPTCL	TETRACHLOROETHENE	6	UG/KG		U		V							
SED118	SD	REAL	SS00127WC	18-SEP-90	N	TRG	VOCCLPTCL	TOLUENE	2	UG/KG		BJ		JA					6	U	
SED118	SD	REAL	SS00127WC	18-SEP-90	N	TRG	VOCCLPTCL	TOTAL XYLENES	6	UG/KG		U		V							
SED118	SD	REAL	SS00127WC	18-SEP-90	N	TRG	VOCCLPTCL	TRICHLOROETHENE	6	UG/KG		U		V							
SED118	SD	REAL	SS00127WC	18-SEP-90	N	TRG	VOCCLPTCL	VINYL ACETATE	11	UG/KG		U		V							
SED118	SD	REAL	SS00127WC	18-SEP-90	N	TRG	VOCCLPTCL	VINYL CHLORIDE	11	UG/KG		U		V							
SED118	SD	REAL	SS00127WC	18-SEP-90	N	TRG	VOCCLPTCL	cis-1,3-DICHLOROPROPENE	6	UG/KG		U		V							
SED118	SD	REAL	SS00127WC	18-SEP-90	N	TRG	VOCCLPTCL	trans-1,3-DICHLOROPROPENE	6	UG/KG		U		V							
SED118	SD	REAL	SS00161WC	28-NOV-90	N	TRG	SVOCLPTCL	1,2,4-TRICHLOROBENZENE	2400	UG/KG		U	10.00	JA							
SED118	SD	REAL	SS00161WC	28-NOV-90	N	TRG	SVOCLPTCL	1,2-DICHLOROBENZENE	2400	UG/KG		U	10 00	JA							
SED118	SD	REAL	SS00161WC	28-NOV-90	N	TRG	SVOCLPTCL	1,3-DICHLOROBENZENE	2400	UG/KG		U	10 00	JA							
SED118	SD	REAL	SS00161WC	28-NOV-90	N	TRG	SVOCLPTCL	1,4-DICHLOROBENZENE	2400	UG/KG		U	10.00	JA							
SED118	SD	REAL	SS00161WC	28-NOV-90	N	TRG	SVOCLPTCL	2,4,5-TRICHLOROPHENOL	11000	UG/KG		U	50 00	JA							
SED118	SD	REAL	SS00161WC	28-NOV-90	N	TRG	SVOCLPTCL	2,4,6-TRICHLOROPHENOL	2400	UG/KG		U	10 00	JA							
SED118	SD	REAL	SS00161WC	28-NOV-90	N	TRG	SVOCLPTCL	2,4-DICHLOROPHENOL	2400	UG/KG		U	10.00	JA							
SED118	SD	REAL	SS00161WC	28-NOV-90	N	TRG	SVOCLPTCL	2,4-DIMETHYLPHENOL	2400	UG/KG		U	10 00	JA							
SED118	SD	REAL	SS00161WC	28-NOV-90	N	TRG	SVOCLPTCL	2,4-DINITROPHENOL	11000	UG/KG		U	50 00	JA							
SED118	SD	REAL	SS00161WC	28-NOV-90	N	TRG	SVOCLPTCL	2,4-DINITROTOLUENE	2400	UG/KG		U	10.00	JA							
SED118	SD	REAL	SS00161WC	28-NOV-90	N	TRG	SVOCLPTCL	2,6-DINITROTOLUENE	2400	UG/KG		U	10 00	JA							
SED118	SD	REAL	SS00161WC	28-NOV-90	N	TRG	SVOCLPTCL	2-CHLORONAPHTHALENE	2400	UG/KG		U	10.00	JA							
SED118	SD	REAL	SS00161WC	28-NOV-90	N	TRG	SVOCLPTCL	2-CHLOROPHENOL	2400	UG/KG		U	10 00	JA							
SED118	SD	REAL	SS00161WC	28-NOV-90	N	TRG	SVOCLPTCL	2-METHYLNAPHTHALENE	2400	UG/KG		U	10 00	JA							
SED118	SD	REAL	SS00161WC	28-NOV-90	N	TRG	SVOCLPTCL	2-METHYLPHENOL	2400	UG/KG		U	10 00	JA							
SED118	SD	REAL	SS00161WC	28-NOV-90	N	TRG	SVOCLPTCL	2-NITROANILINE	11000	UG/KG		U	50.00	JA							
SED118	SD	REAL	SS00161WC	28-NOV-90	N	TRG	SVOCLPTCL	2-NITROPHENOL	2400	UG/KG		U	10.00	JA							
SED118	SD	REAL	SS00161WC	28-NOV-90	N	TRG	SVOCLPTCL	3,3'-DICHLOROBENZIDINE	4700	UG/KG		U	20 00	JA							
SED118	SD	REAL	SS00161WC	28-NOV-90	N	TRG	SVOCLPTCL	3-NITROANILINE	11000	UG/KG		U	50.00	JA							
SED118	SD	REAL	SS00161WC	28-NOV-90	N	TRG	SVOCLPTCL	4,6-DINITRO-2-METHYLPHENOL	11000	UG/KG		U	50.00	JA							
SED118	SD	REAL	SS00161WC	28-NOV-90	N	TRG	SVOCLPTCL	4-BROMOPHENYL PHENYL ETHER	2400	UG/KG		U	10 00	JA							
SED118	SD	REAL	SS00161WC	28-NOV-90	N	TRG	SVOCLPTCL	4-CHLORO-3-METHYLPHENOL	2400	UG/KG		U	10 00	JA							
SED118	SD	REAL	SS00161WC	28-NOV-90	N	TRG	SVOCLPTCL	4-CHLOROANILINE	2400	UG/KG		U	10.00	JA							
SED118	SD	REAL	SS00161WC	28-NOV-90	N	TRG	SVOCLPTCL	4-CHLOROPHENYL PHENYL ETHER	2400	UG/KG		U	10.00	JA							
SED118	SD	REAL	SS00161WC	28-NOV-90	N	TRG	SVOCLPTCL	4-METHYLPHENOL	2400	UG/KG		U	10.00	JA							

ocation	ST	QC	Sample Number	Smpl Date	D	ID	Group	Chemical	Result	Unit	Error	Qual	D LMT	VA	RN1	RN2	RN3	RN4	VResult	VQual	VDET
ED118	SD	REAL	SS00161WC	28-NOV-90	N	TRG	SVOCLPTCL	4-NITROANILINE	11000	UG/KG		U	50 00	JA							
ED118	SD	REAL	SS00161WC	28-NOV-90	N	TRG	SVOCLPTCL	4-NITROPHENOL	11000	UG/KG		U	50 00	JA							
ED118	SD	REAL	SS00161WC	28-NOV-90	N	TRG	SVOCLPTCL	ACENAPHTHENE	2400	UG/KG		U	10 00	JA							
ED118	SD	REAL	SS00161WC	28-NOV-90	N	TRG	SVOCLPTCL	ACENAPHTHYLENE	2400	UG/KG		U	10 00	JA							
ED118	SD	REAL	SS00161WC	28-NOV-90	N	TRG	SVOCLPTCL	ANTHRACENE	2400	UG/KG		U	10.00	JA							
ED118	SD	REAL	SS00161WC	28-NOV-90	N	TRG	SVOCLPTCL	BENZO(a)ANTHRACENE	2400	UG/KG		U	10 00	JA							
ED118	SD	REAL	SS00161WC	28-NOV-90	N	TRG	SVOCLPTCL	BENZO(a)PYRENE	2400	UG/KG		U	10.00	JA							
ED118	SD	REAL	SS00161WC	28-NOV-90	N	TRG	SVOCLPTCL	BENZO(b)FLUORANTHENE	2400	UG/KG		U	10.00	JA							
ED118	SD	REAL	SS00161WC	28-NOV-90	N	TRG	SVOCLPTCL	BENZO(ghi)PERYLENE	2400	UG/KG		U	10 00	JA							
ED118	SD	REAL	SS00161WC	28-NOV-90	N	TRG	SVOCLPTCL	BENZO(k)FLUORANTHENE	2400	UG/KG		U	10 00	JA							
ED118	SD	REAL	SS00161WC	28-NOV-90	N	TRG	SVOCLPTCL	BENZOIC ACID	11000	UG/KG		U	50 00	R							
ED118	SD	REAL	SS00161WC	28-NOV-90	N	TRG	SVOCLPTCL	BENZYL ALCOHOL	2400	UG/KG		U	10.00	JA							
ED118	SD	REAL	SS00161WC	28-NOV-90	N	TRG	SVOCLPTCL	BIS(2-CHLOROETHOXY)METHANE	2400	UG/KG		U	10 00	JA							
ED118	SD	REAL	SS00161WC	28-NOV-90	N	TRG	SVOCLPTCL	BIS(2-CHLOROETHYL)ETHER	2400	UG/KG		U	10.00	JA							
ED118	SD	REAL	SS00161WC	28-NOV-90	N	TRG	SVOCLPTCL	BIS(2-CHLOROISOPROPYL)ETHER	2400	UG/KG		U	10 00	JA							
ED118	SD	REAL	SS00161WC	28-NOV-90	N	TRG	SVOCLPTCL	BIS(2-ETHYLHEXYL)PHTHALATE	2400	UG/KG		U	10.00	JA							
ED118	SD	REAL	SS00161WC	28-NOV-90	N	TRG	SVOCLPTCL	BUTYL BENZYL PHTHALATE	2400	UG/KG		U	10 00	JA							
ED118	SD	REAL	SS00161WC	28-NOV-90	N	TRG	SVOCLPTCL	CHRYSENE	2400	UG/KG		U	10.00	JA							
ED118	SD	REAL	SS00161WC	28-NOV-90	N	TRG	SVOCLPTCL	DI-n-BUTYL PHTHALATE	2400	UG/KG		U	10 00	JA							
ED118	SD	REAL	SS00161WC	28-NOV-90	N	TRG	SVOCLPTCL	DI-n-OCTYL PHTHALATE	2400	UG/KG		U	10.00	JA							
ED118	SD	REAL	SS00161WC	28-NOV-90	N	TRG	SVOCLPTCL	DIBENZO(a,h)ANTHRACENE	2400	UG/KG		U	10.00	JA							
ED118	SD	REAL	SS00161WC	28-NOV-90	N	TRG	SVOCLPTCL	DIBENZOFURAN	2400	UG/KG		U	10 00	JA							
ED118	SD	REAL	SS00161WC	28-NOV-90	N	TRG	SVOCLPTCL	DIETHYL PHTHALATE	2400	UG/KG		U	10.00	JA							
ED118	SD	REAL	SS00161WC	28-NOV-90	N	TRG	SVOCLPTCL	DIMETHYL PHTHALATE	2400	UG/KG		U	10 00	JA							
ED118	SD	REAL	SS00161WC	28-NOV-90	N	TRG	SVOCLPTCL	FLUORANTHENE	2400	UG/KG		U	10 00	JA							
ED118	SD	REAL	SS00161WC	28-NOV-90	N	TRG	SVOCLPTCL	FLUORENE	2400	UG/KG		U	10 00	JA							
ED118	SD	REAL	SS00161WC	28-NOV-90	N	TRG	SVOCLPTCL	HEXACHLOROBENZENE	2400	UG/KG		U	10 00	JA							
ED118	SD	REAL	SS00161WC	28-NOV-90	N	TRG	SVOCLPTCL	HEXACHLOROBUTADIENE	2400	UG/KG		U	10 00	JA							
ED118	SD	REAL	SS00161WC	28-NOV-90	N	TRG	SVOCLPTCL	HEXACHLOROCYCLOPENTADIENE	2400	UG/KG		U	10 00	JA							
ED118	SD	REAL	SS00161WC	28-NOV-90	N	TRG	SVOCLPTCL	HEXACHLOROETHANE	2400	UG/KG		U	10 00	JA							
ED118	SD	REAL	SS00161WC	28-NOV-90	N	TRG	SVOCLPTCL	INDENO(1,2,3-cd)PYRENE	2400	UG/KG		U	10 00	JA							
ED118	SD	REAL	SS00161WC	28-NOV-90	N	TRG	SVOCLPTCL	ISOPHORONE	2400	UG/KG		U	10 00	JA							
ED118	SD	REAL	SS00161WC	28-NOV-90	N	TRG	SVOCLPTCL	N-NITROSO-DI-n-PROPYLAMINE	2400	UG/KG		U	10 00	JA							
ED118	SD	REAL	SS00161WC	28-NOV-90	N	TRG	SVOCLPTCL	N-NITROSODIPHENYLAMINE	2400	UG/KG		U	10 00	JA							
ED118	SD	REAL	SS00161WC	28-NOV-90	N	TRG	SVOCLPTCL	NAPHTHALENE	2400	UG/KG		U	10 00	JA							
ED118	SD	REAL	SS00161WC	28-NOV-90	N	TRG	SVOCLPTCL	NITROBENZENE	2400	UG/KG		U	10 00	JA							
ED118	SD	REAL	SS00161WC	28-NOV-90	N	TRG	SVOCLPTCL	PENTACHLOROPHENOL	11000	UG/KG		U	50 00	JA							
ED118	SD	REAL	SS00161WC	28-NOV-90	N	TRG	SVOCLPTCL	PHENANTHRENE	2400	UG/KG		U	10 00	JA							
ED118	SD	REAL	SS00161WC	28-NOV-90	N	TRG	SVOCLPTCL	PHENOL	2400	UG/KG		U	10.00	JA							
ED118	SD	REAL	SS00161WC	28-NOV-90	N	TRG	SVOCLPTCL	PYRENE	2400	UG/KG		U	10 00	JA							
ED118	SD	REAL	SS00161WC	28-NOV-90	N	TRG	VOCCLPTCL	1,1,1-TRICHLOROETHANE	18	UG/KG		U	5 000	JA							
ED118	SD	REAL	SS00161WC	28-NOV-90	N	TRG	VOCCLPTCL	1,1,2,2-TETRACHLOROETHANE	18	UG/KG		U	5.000	JA							
ED118	SD	REAL	SS00161WC	28-NOV-90	N	TRG	VOCCLPTCL	1,1,2-TRICHLOROETHANE	18	UG/KG		U	5.000	JA							
ED118	SD	REAL	SS00161WC	28-NOV-90	N	TRG	VOCCLPTCL	1,1-DICHLOROETHANE	18	UG/KG		U	5 000	JA							
ED118	SD	REAL	SS00161WC	28-NOV-90	N	TRG	VOCCLPTCL	1,1-DICHLOROETHENE	18	UG/KG		U	5.000	JA							
ED118	SD	REAL	SS00161WC	28-NOV-90	N	TRG	VOCCLPTCL	1,2-DICHLOROETHANE	18	UG/KG		U	5.000	JA							
ED118	SD	REAL	SS00161WC	28-NOV-90	N	TRG	VOCCLPTCL	1,2-DICHLOROETHENE	18	UG/KG		U	5 000	JA							
ED118	SD	REAL	SS00161WC	28-NOV-90	N	TRG	VOCCLPTCL	1,2-DICHLOROPROPANE	18	UG/KG		U	5.000	JA							
ED118	SD	REAL	SS00161WC	28-NOV-90	N	TRG	VOCCLPTCL	2-BUTANONE	59	UG/KG		B	10 00	JA						U	
ED118	SD	REAL	SS00161WC	28-NOV-90	N	TRG	VOCCLPTCL	2-HEXANONE	36	UG/KG		U	10.00	JA							
ED118	SD	REAL	SS00161WC	28-NOV-90	N	TRG	VOCCLPTCL	4-METHYL-2-PENTANONE	36	UG/KG		U	10 00	JA							
ED118	SD	REAL	SS00161WC	28-NOV-90	N	TRG	VOCCLPTCL	ACETONE	36	UG/KG		U	10 00	JA							
ED118	SD	REAL	SS00161WC	28-NOV-90	N	TRG	VOCCLPTCL	BENZENE	18	UG/KG		U	5.000	JA							
ED118	SD	REAL	SS00161WC	28-NOV-90	N	TRG	VOCCLPTCL	BROMODICHLOROMETHANE	18	UG/KG		U	5.000	JA							
ED118	SD	REAL	SS00161WC	28-NOV-90	N	TRG	VOCCLPTCL	BROMOFORM	18	UG/KG		U	5.000	JA							
ED118	SD	REAL	SS00161WC	28-NOV-90	N	TRG	VOCCLPTCL	BROMOMETHANE	36	UG/KG		U	10.00	JA							
ED118	SD	REAL	SS00161WC	28-NOV-90	N	TRG	VOCCLPTCL	CARBON DISULFIDE	18	UG/KG		U	5 000	JA							
ED118	SD	REAL	SS00161WC	28-NOV-90	N	TRG	VOCCLPTCL	CARBON TETRACHLORIDE	18	UG/KG		U	5 000	JA							
ED118	SD	REAL	SS00161WC	28-NOV-90	N	TRG	VOCCLPTCL	CHLOROBENZENE	18	UG/KG		U	5.000	JA							
ED118	SD	REAL	SS00161WC	28-NOV-90	N	TRG	VOCCLPTCL	CHLOROETHANE	36	UG/KG		U	10.00	JA							
ED118	SD	REAL	SS00161WC	28-NOV-90	N	TRG	VOCCLPTCL	CHLOROFORM	18	UG/KG		U	5.000	JA							
ED118	SD	REAL	SS00161WC	28-NOV-90	N	TRG	VOCCLPTCL	CHLOROMETHANE	36	UG/KG		U	10.00	JA							
ED118	SD	REAL	SS00161WC	28-NOV-90	N	TRG	VOCCLPTCL	DIBROMOCHLOROMETHANE	18	UG/KG		U	5 000	JA							

Location	ST	QC	Sample Number	Smpl Date	D	ID	Group	Chemical	Result	Unit	Error	Qual	D LMT	VA	RN1	RN2	RN3	RN4	VResult	VQual	VDET
[illegible]118	SD	REAL	SS00161WC	28-NOV-90	N	TRG	VOCCLPTCL	ETHYLBENZENE	18	UG/KG		U	5 000	JA							
ED118	SD	REAL	SS00161WC	28-NOV-90	N	TRG	VOCCLPTCL	METHYLENE CHLORIDE	9	UG/KG		BJ\	5 000	JA					18	U	
ED118	SD	REAL	SS00161WC	28-NOV-90	N	TRG	VOCCLPTCL	STYRENE	18	UG/KG		U	5 000	JA							
ED118	SD	REAL	SS00161WC	28-NOV-90	N	TRG	VOCCLPTCL	TETRACHLOROETHENE	18	UG/KG		U	5.000	JA							
ED118	SD	REAL	SS00161WC	28-NOV-90	N	TRG	VOCCLPTCL	TOLUENE	18	UG/KG		U	5.000	JA							
ED118	SD	REAL	SS00161WC	28-NOV-90	N	TRG	VOCCLPTCL	TOTAL XYLENES	18	UG/KG		U	5 000	JA							
ED118	SD	REAL	SS00161WC	28-NOV-90	N	TRG	VOCCLPTCL	TRICHLOROETHENE	18	UG/KG		U	5.000	JA							
ED118	SD	REAL	SS00161WC	28-NOV-90	N	TRG	VOCCLPTCL	VINYL ACETATE	36	UG/KG		U	10 00	JA							
ED118	SD	REAL	SS00161WC	28-NOV-90	N	TRG	VOCCLPTCL	VINYL CHLORIDE	36	UG/KG		U	10 00	JA							
ED118	SD	REAL	SS00161WC	28-NOV-90	N	TRG	VOCCLPTCL	cis-1,3-DICHLOROPROPENE	18	UG/KG		U	5 000	JA							
ED118	SD	REAL	SS00161WC	28-NOV-90	N	TRG	VOCCLPTCL	trans-1,3-DICHLOROPROPENE	18	UG/KG		U	5 000	JA							
W018	SW	REAL	SW00487WC	23-NOV-90	Y																
W022	SW	REAL	SW70001WC	23-JUL-90	N																
W022	SW	REAL	SW70013WC	07-SEP-90	N																
W022	SW	REAL	SW70020WC	24-OCT-90	N																
W022	SW	REAL	SW70027WC	08-NOV-90	N																
W022	SW	REAL	SW70028WC	07-NOV-90	N																
W022	SW	REAL	SW70030WC	08-NOV-90	N																
W023	SW	REAL	SW00443WC	16-OCT-90	N	TRG	SVOCLPTCL	1,2,4-TRICHLOROBENZENE	10	UG/L		U	10	V							
W023	SW	REAL	SW00443WC	16-OCT-90	N	TRG	SVOCLPTCL	1,2-DICHLOROBENZENE	10	UG/L		U	10	V							
W023	SW	REAL	SW00443WC	16-OCT-90	N	TRG	SVOCLPTCL	1,3-DICHLOROBENZENE	10	UG/L		U	10	V							
W023	SW	REAL	SW00443WC	16-OCT-90	N	TRG	SVOCLPTCL	1,4-DICHLOROBENZENE	10	UG/L		U	10	V							
W023	SW	REAL	SW00443WC	16-OCT-90	N	TRG	SVOCLPTCL	2,4,5-TRICHLOROPHENOL	50	UG/L		U	50	V							
W023	SW	REAL	SW00443WC	16-OCT-90	N	TRG	SVOCLPTCL	2,4,6-TRICHLOROPHENOL	10	UG/L		U	10	V							
W023	SW	REAL	SW00443WC	16-OCT-90	N	TRG	SVOCLPTCL	2,4-DICHLOROPHENOL	10	UG/L		U	10	V							
W023	SW	REAL	SW00443WC	16-OCT-90	N	TRG	SVOCLPTCL	2,4-DIMETHYLPHENOL	10	UG/L		U	10	V							
W023	SW	REAL	SW00443WC	16-OCT-90	N	TRG	SVOCLPTCL	2,4-DINITROPHENOL	50	UG/L		U	50	V							
W023	SW	REAL	SW00443WC	16-OCT-90	N	TRG	SVOCLPTCL	2,4-DINITROTOLUENE	10	UG/L		U	10	V							
W023	SW	REAL	SW00443WC	16-OCT-90	N	TRG	SVOCLPTCL	2,6-DINITROTOLUENE	10	UG/L		U	10	V							
W023	SW	REAL	SW00443WC	16-OCT-90	N	TRG	SVOCLPTCL	2-CHLORONAPHTHALENE	10	UG/L		U	10	V							
W023	SW	REAL	SW00443WC	16-OCT-90	N	TRG	SVOCLPTCL	2-CHLOROPHENOL	10	UG/L		U	10	V							
W023	SW	REAL	SW00443WC	16-OCT-90	N	TRG	SVOCLPTCL	2-METHYLNAPHTHALENE	10	UG/L		U	10	V							
W023	SW	REAL	SW00443WC	16-OCT-90	N	TRG	SVOCLPTCL	2-METHYLPHENOL	10	UG/L		U	10	V							
W023	SW	REAL	SW00443WC	16-OCT-90	N	TRG	SVOCLPTCL	2-NITROANILINE	50	UG/L		U	50	V							
W023	SW	REAL	SW00443WC	16-OCT-90	N	TRG	SVOCLPTCL	2-NITROPHENOL	10	UG/L		U	10	V							
W023	SW	REAL	SW00443WC	16-OCT-90	N	TRG	SVOCLPTCL	3,3'-DICHLOROBENZIDINE	20	UG/L		U	20	V							
W023	SW	REAL	SW00443WC	16-OCT-90	N	TRG	SVOCLPTCL	3-NITROANILINE	50	UG/L		U	50	V							
W023	SW	REAL	SW00443WC	16-OCT-90	N	TRG	SVOCLPTCL	4,6-DINITRO-2-METHYLPHENOL	50	UG/L		U	50	V							
W023	SW	REAL	SW00443WC	16-OCT-90	N	TRG	SVOCLPTCL	4-BROMOPHENYL PHENYL ETHER	10	UG/L		U	10	V							
W023	SW	REAL	SW00443WC	16-OCT-90	N	TRG	SVOCLPTCL	4-CHLORO-3-METHYLPHENOL	10	UG/L		U	10	V							
W023	SW	REAL	SW00443WC	16-OCT-90	N	TRG	SVOCLPTCL	4-CHLOROANILINE	10	UG/L		U	10	V							
W023	SW	REAL	SW00443WC	16-OCT-90	N	TRG	SVOCLPTCL	4-CHLOROPHENYL PHENYL ETHER	10	UG/L		U	10	V							
W023	SW	REAL	SW00443WC	16-OCT-90	N	TRG	SVOCLPTCL	4-METHYLPHENOL	10	UG/L		U	10	V							
W023	SW	REAL	SW00443WC	16-OCT-90	N	TRG	SVOCLPTCL	4-NITROANILINE	50	UG/L		U	50	V							
W023	SW	REAL	SW00443WC	16-OCT-90	N	TRG	SVOCLPTCL	4-NITROPHENOL	50	UG/L		U	50	V							
W023	SW	REAL	SW00443WC	16-OCT-90	N	TRG	SVOCLPTCL	ACENAPHTHENE	10	UG/L		U	10	V							
W023	SW	REAL	SW00443WC	16-OCT-90	N	TRG	SVOCLPTCL	ACENAPHTHYLENE	10	UG/L		U	10	V							
W023	SW	REAL	SW00443WC	16-OCT-90	N	TRG	SVOCLPTCL	ANTHRACENE	10	UG/L		U	10	V							
W023	SW	REAL	SW00443WC	16-OCT-90	N	TRG	SVOCLPTCL	BENZO(a)ANTHRACENE	10	UG/L		U	10	V							
W023	SW	REAL	SW00443WC	16-OCT-90	N	TRG	SVOCLPTCL	BENZO(a)PYRENE	10	UG/L		U	10	V							
W023	SW	REAL	SW00443WC	16-OCT-90	N	TRG	SVOCLPTCL	BENZO(b)FLUORANTHENE	10	UG/L		U	10	V							
W023	SW	REAL	SW00443WC	16-OCT-90	N	TRG	SVOCLPTCL	BENZO(ghi)PERYLENE	10	UG/L		U	10	V							
W023	SW	REAL	SW00443WC	16-OCT-90	N	TRG	SVOCLPTCL	BENZO(k)FLUORANTHENE	10	UG/L		U	10	V							
W023	SW	REAL	SW00443WC	16-OCT-90	N	TRG	SVOCLPTCL	BENZOIC ACID	50	UG/L		U	50	V							
W023	SW	REAL	SW00443WC	16-OCT-90	N	TRG	SVOCLPTCL	BENZYL ALCOHOL	10	UG/L		U	10	V							
W023	SW	REAL	SW00443WC	16-OCT-90	N	TRG	SVOCLPTCL	BIS(2-CHLOROETHOXY)METHANE	10	UG/L		U	10	V							
W023	SW	REAL	SW00443WC	16-OCT-90	N	TRG	SVOCLPTCL	BIS(2-CHLOROETHYL)ETHER	10	UG/L		U	10	V							
W023	SW	REAL	SW00443WC	16-OCT-90	N	TRG	SVOCLPTCL	BIS(2-CHLOROISOPROPYL)ETHER	10	UG/L		U	10	V							
W023	SW	REAL	SW00443WC	16-OCT-90	N	TRG	SVOCLPTCL	BIS(2-ETHYLHEXYL)PHTHALATE	10	UG/L		U	10	V							
W023	SW	REAL	SW00443WC	16-OCT-90	N	TRG	SVOCLPTCL	BUTYL BENZYL PHTHALATE	10	UG/L		U	10	V							
W023	SW	REAL	SW00443WC	16-OCT-90	N	TRG	SVOCLPTCL	CHRYSENE	10	UG/L		U	10	V							
W023	SW	REAL	SW00443WC	16-OCT-90	N	TRG	SVOCLPTCL	DI-n-BUTYL PHTHALATE	10	UG/L		U	10	V							
W023	SW	REAL	SW00443WC	16-OCT-90	N	TRG	SVOCLPTCL	DI-n-OCTYL PHTHALATE	10	UG/L		U	10	V							

Location	ST	QC	Sample Number	Smpl Date	D	ID	Group	Chemical	Result	Unit	Error	Qual	D LMT	VA	RN1	RN2	RN3	RN4	VResult	VQual	VDET
[illegible]023	SW	REAL	SW00443WC	16-OCT-90	N	TRG	SVOCLPTCL	DIBENZO(a,h)ANTHRACENE	10	UG/L		U	10	V							
[illegible]023	SW	REAL	SW00443WC	16-OCT-90	N	TRG	SVOCLPTCL	DIBENZOFURAN	10	UG/L		U	10	V							
[illegible]023	SW	REAL	SW00443WC	16-OCT-90	N	TRG	SVOCLPTCL	DIETHYL PHTHALATE	10	UG/L		U	10	V							
[illegible]023	SW	REAL	SW00443WC	16-OCT-90	N	TRG	SVOCLPTCL	DIMETHYL PHTHALATE	10	UG/L		U	10	V							
W023	SW	REAL	SW00443WC	16-OCT-90	N	TRG	SVOCLPTCL	FLUORANTHENE	10	UG/L		U	10	V							
W023	SW	REAL	SW00443WC	16-OCT-90	N	TRG	SVOCLPTCL	FLUORENE	10	UG/L		U	10	V							
W023	SW	REAL	SW00443WC	16-OCT-90	N	TRG	SVOCLPTCL	HEXACHLOROBENZENE	10	UG/L		U	10	V							
W023	SW	REAL	SW00443WC	16-OCT-90	N	TRG	SVOCLPTCL	HEXACHLOROBUTADIENE	10	UG/L		U	10	V							
W023	SW	REAL	SW00443WC	16-OCT-90	N	TRG	SVOCLPTCL	HEXACHLOROCYCLOPENTADIENE	10	UG/L		U	10	V							
W023	SW	REAL	SW00443WC	16-OCT-90	N	TRG	SVOCLPTCL	HEXACHLOROETHANE	10	UG/L		U	10	V							
W023	SW	REAL	SW00443WC	16-OCT-90	N	TRG	SVOCLPTCL	INDENO(1,2,3-cd)PYRENE	10	UG/L		U	10	V							
W023	SW	REAL	SW00443WC	16-OCT-90	N	TRG	SVOCLPTCL	ISOPHORONE	10	UG/L		U	10	V							
W023	SW	REAL	SW00443WC	16-OCT-90	N	TRG	SVOCLPTCL	N-NITROSO-DI-n-PROPYLAMINE	10	UG/L		U	10	V							
W023	SW	REAL	SW00443WC	16-OCT-90	N	TRG	SVOCLPTCL	N-NITROSODIPHENYLAMINE	10	UG/L		U	10	V							
W023	SW	REAL	SW00443WC	16-OCT-90	N	TRG	SVOCLPTCL	NAPHTHALENE	10	UG/L		U	10	V							
W023	SW	REAL	SW00443WC	16-OCT-90	N	TRG	SVOCLPTCL	NITROBENZENE	10	UG/L		U	10	V							
W023	SW	REAL	SW00443WC	16-OCT-90	N	TRG	SVOCLPTCL	PENTACHLOROPHENOL	50	UG/L		U	10	V							
W023	SW	REAL	SW00443WC	16-OCT-90	N	TRG	SVOCLPTCL	PHENANTHRENE	10	UG/L		U	10	V							
W023	SW	REAL	SW00443WC	16-OCT-90	N	TRG	SVOCLPTCL	PHENOL	10	UG/L		U	10	V							
W023	SW	REAL	SW00443WC	16-OCT-90	N	TRG	SVOCLPTCL	PYRENE	10	UG/L		U	10	V							
W023	SW	REAL	SW00443WC	16-OCT-90	N	TRG	VOCCLPTCL	1,1,1-TRICHLOROETHANE	5	UG/L		U	5	V							
W023	SW	REAL	SW00443WC	16-OCT-90	N	TRG	VOCCLPTCL	1,1,2,2-TETRACHLOROETHANE	5	UG/L		U	5	V							
W023	SW	REAL	SW00443WC	16-OCT-90	N	TRG	VOCCLPTCL	1,1,2-TRICHLOROETHANE	5	UG/L		U	5	V							
W023	SW	REAL	SW00443WC	16-OCT-90	N	TRG	VOCCLPTCL	1,1-DICHLOROETHANE	5	UG/L		U	5	V							
W023	SW	REAL	SW00443WC	16-OCT-90	N	TRG	VOCCLPTCL	1,1-DICHLOROETHENE	5	UG/L		U	5	V							
W023	SW	REAL	SW00443WC	16-OCT-90	N	TRG	VOCCLPTCL	1,2-DICHLOROETHANE	5	UG/L		U	5	V							
W023	SW	REAL	SW00443WC	16-OCT-90	N	TRG	VOCCLPTCL	1,2-DICHLOROETHENE	5	UG/L		U	5	V							
W023	SW	REAL	SW00443WC	16-OCT-90	N	TRG	VOCCLPTCL	1,2-DICHLOROPROPANE	5	UG/L		U	5	V							
W023	SW	REAL	SW00443WC	16-OCT-90	N	TRG	VOCCLPTCL	2-BUTANONE	10	UG/L		U	10	V							
W023	SW	REAL	SW00443WC	16-OCT-90	N	TRG	VOCCLPTCL	2-HEXANONE	10	UG/L		U	10	V							
W023	SW	REAL	SW00443WC	16-OCT-90	N	TRG	VOCCLPTCL	4-METHYL-2-PENTANONE	10	UG/L		U	10	V							
W023	SW	REAL	SW00443WC	16-OCT-90	N	TRG	VOCCLPTCL	ACETONE	10	UG/L		U	10	V							
W023	SW	REAL	SW00443WC	16-OCT-90	N	TRG	VOCCLPTCL	BENZENE	5	UG/L		U	5	V							
W023	SW	REAL	SW00443WC	16-OCT-90	N	TRG	VOCCLPTCL	BROMODICHLOROMETHANE	5	UG/L		U	5	V							
W023	SW	REAL	SW00443WC	16-OCT-90	N	TRG	VOCCLPTCL	BROMOFORM	5	UG/L		U	5	V							
W023	SW	REAL	SW00443WC	16-OCT-90	N	TRG	VOCCLPTCL	BROMOMETHANE	10	UG/L		U	10	V							
W023	SW	REAL	SW00443WC	16-OCT-90	N	TRG	VOCCLPTCL	CARBON DISULFIDE	5	UG/L		U	5	V							
W023	SW	REAL	SW00443WC	16-OCT-90	N	TRG	VOCCLPTCL	CARBON TETRACHLORIDE	5	UG/L		U	5	V							
W023	SW	REAL	SW00443WC	16-OCT-90	N	TRG	VOCCLPTCL	CHLOROBENZENE	5	UG/L		U	5	V							
W023	SW	REAL	SW00443WC	16-OCT-90	N	TRG	VOCCLPTCL	CHLOROETHANE	10	UG/L		U	10	V							
W023	SW	REAL	SW00443WC	16-OCT-90	N	TRG	VOCCLPTCL	CHLOROFORM	5	UG/L		U	5	V							
W023	SW	REAL	SW00443WC	16-OCT-90	N	TRG	VOCCLPTCL	CHLOROMETHANE	10	UG/L		U	10	V							
W023	SW	REAL	SW00443WC	16-OCT-90	N	TRG	VOCCLPTCL	DIBROMOCHLOROMETHANE	5	UG/L		U	5	V							
W023	SW	REAL	SW00443WC	16-OCT-90	N	TRG	VOCCLPTCL	ETHYLBENZENE	5	UG/L		U	5	V							
W023	SW	REAL	SW00443WC	16-OCT-90	N	TRG	VOCCLPTCL	METHYLENE CHLORIDE	5	UG/L		U	5	V							
W023	SW	REAL	SW00443WC	16-OCT-90	N	TRG	VOCCLPTCL	STYRENE	5	UG/L		U	5	V							
W023	SW	REAL	SW00443WC	16-OCT-90	N	TRG	VOCCLPTCL	TETRACHLOROETHENE	5	UG/L		U	5	V							
W023	SW	REAL	SW00443WC	16-OCT-90	N	TRG	VOCCLPTCL	TOLUENE	5	UG/L		U	5	V							
W023	SW	REAL	SW00443WC	16-OCT-90	N	TRG	VOCCLPTCL	TOTAL XYLENES	5	UG/L		U	5	V							
W023	SW	REAL	SW00443WC	16-OCT-90	N	TRG	VOCCLPTCL	TRICHLOROETHENE	5	UG/L		U	5	V							
W023	SW	REAL	SW00443WC	16-OCT-90	N	TRG	VOCCLPTCL	VINYL ACETATE	10	UG/L		U	10	V							
W023	SW	REAL	SW00443WC	16-OCT-90	N	TRG	VOCCLPTCL	VINYL CHLORIDE	10	UG/L		U	10	V							
W023	SW	REAL	SW00443WC	16-OCT-90	N	TRG	VOCCLPTCL	cis-1,3-DICHLOROPROPENE	5	UG/L		U	5	V							
W023	SW	REAL	SW00443WC	16-OCT-90	N	TRG	VOCCLPTCL	trans-1,3-DICHLOROPROPENE	5	UG/L		U	5	V							
W023	SW	REAL	SW00544WC	16-NOV-90	N	TRG	VOCCLPTCL	1,1,1-TRICHLOROETHANE	5	UG/L		U	5	V							
W023	SW	REAL	SW00544WC	16-NOV-90	N	TRG	VOCCLPTCL	1,1,2,2-TETRACHLOROETHANE	5	UG/L		U	5	V							
W023	SW	REAL	SW00544WC	16-NOV-90	N	TRG	VOCCLPTCL	1,1,2-TRICHLOROETHANE	5	UG/L		U	5	V							
W023	SW	REAL	SW00544WC	16-NOV-90	N	TRG	VOCCLPTCL	1,1-DICHLOROETHANE	5	UG/L		U	5	V							
W023	SW	REAL	SW00544WC	16-NOV-90	N	TRG	VOCCLPTCL	1,1-DICHLOROETHENE	5	UG/L		U	5	V							
W023	SW	REAL	SW00544WC	16-NOV-90	N	TRG	VOCCLPTCL	1,2-DICHLOROETHANE	5	UG/L		U	5	V							
W023	SW	REAL	SW00544WC	16-NOV-90	N	TRG	VOCCLPTCL	1,2-DICHLOROETHENE	5	UG/L		U	5	V							
W023	SW	REAL	SW00544WC	16-NOV-90	N	TRG	VOCCLPTCL	1,2-DICHLOROPROPANE	5	UG/L		U	5	V							
W023	SW	REAL	SW00544WC	16-NOV-90	N	TRG	VOCCLPTCL	2-BUTANONE	10	UG/L		U	10	V							

ocation	ST	QC	Sample Number	Smpl Date	D	ID	Group	Chemical	Result	Unit	Error	Qual	D LMT	VA	RN1	RN2	RN3	RN4	VResult	VQual	VDET
SW023	SW	REAL	SW00544WC	16-NOV-90	N	TRG	VOCCLPTCL	2-HEXANONE	10	UG/L		U	10	V							
SW023	SW	REAL	SW00544WC	16-NOV-90	N	TRG	VOCCLPTCL	4-METHYL-2-PENTANONE	10	UG/L		U	10	V							
SW023	SW	REAL	SW00544WC	16-NOV-90	N	TRG	VOCCLPTCL	ACETONE	10	UG/L		U	10	V							
SW023	SW	REAL	SW00544WC	16-NOV-90	N	TRG	VOCCLPTCL	BENZENE	5	UG/L		U	5	V							
SW023	SW	REAL	SW00544WC	16-NOV-90	N	TRG	VOCCLPTCL	BROMODICHLOROMETHANE	5	UG/L		U	5	V							
SW023	SW	REAL	SW00544WC	16-NOV-90	N	TRG	VOCCLPTCL	BROMOFORM	5	UG/L		U	5	V							
SW023	SW	REAL	SW00544WC	16-NOV-90	N	TRG	VOCCLPTCL	BROMOMETHANE	10	UG/L		U	10	V							
SW023	SW	REAL	SW00544WC	16-NOV-90	N	TRG	VOCCLPTCL	CARBON DISULFIDE	5	UG/L		U	5	V							
SW023	SW	REAL	SW00544WC	16-NOV-90	N	TRG	VOCCLPTCL	CARBON TETRACHLORIDE	5	UG/L		U	5	V							
SW023	SW	REAL	SW00544WC	16-NOV-90	N	TRG	VOCCLPTCL	CHLOROBENZENE	5	UG/L		U	5	V							
SW023	SW	REAL	SW00544WC	16-NOV-90	N	TRG	VOCCLPTCL	CHLOROETHANE	10	UG/L		U	10	V							
SW023	SW	REAL	SW00544WC	16-NOV-90	N	TRG	VOCCLPTCL	CHLOROFORM	5	UG/L		U	5	V							
SW023	SW	REAL	SW00544WC	16-NOV-90	N	TRG	VOCCLPTCL	CHLOROMETHANE	10	UG/L		U	10	V							
SW023	SW	REAL	SW00544WC	16-NOV-90	N	TRG	VOCCLPTCL	DIBROMOCHLOROMETHANE	5	UG/L		U	5	V							
SW023	SW	REAL	SW00544WC	16-NOV-90	N	TRG	VOCCLPTCL	ETHYLBENZENE	5	UG/L		U	5	V							
SW023	SW	REAL	SW00544WC	16-NOV-90	N	TRG	VOCCLPTCL	METHYLENE CHLORIDE	2	UG/L		BJ	5	JA						5	U	
SW023	SW	REAL	SW00544WC	16-NOV-90	N	TRG	VOCCLPTCL	STYRENE	5	UG/L		U	5	V							
SW023	SW	REAL	SW00544WC	16-NOV-90	N	TRG	VOCCLPTCL	TETRACHLOROETHENE	5	UG/L		U	5	V							
SW023	SW	REAL	SW00544WC	16-NOV-90	N	TRG	VOCCLPTCL	TOLUENE	5	UG/L		U	5	V							
SW023	SW	REAL	SW00544WC	16-NOV-90	N	TRG	VOCCLPTCL	TOTAL XYLENES	5	UG/L		U	5	V							
SW023	SW	REAL	SW00544WC	16-NOV-90	N	TRG	VOCCLPTCL	TRICHLOROETHENE	5	UG/L		U	5	V							
SW023	SW	REAL	SW00544WC	16-NOV-90	N	TRG	VOCCLPTCL	VINYL ACETATE	10	UG/L		U	10	V							
SW023	SW	REAL	SW00544WC	16-NOV-90	N	TRG	VOCCLPTCL	VINYL CHLORIDE	10	UG/L		U	10	V							
SW023	SW	REAL	SW00544WC	16-NOV-90	N	TRG	VOCCLPTCL	cis-1,3-DICHLOROPROPENE	5	UG/L		U	5	V							
SW023	SW	REAL	SW00544WC	16-NOV-90	N	TRG	VOCCLPTCL	trans-1,3-DICHLOROPROPENE	5	UG/L		U	5	V							
SW023	SW	REAL	SW70002WC	23-JUL-90	N																
SW023	SW	REAL	SW70005WC	24-JUL-90	N																
SW023	SW	REAL	SW70015WC	19-SEP-90	N																
SW023	SW	REAL	SW70029WC	08-NOV-90	N																
SW023	SW	REAL	SW70040WC	19-NOV-90	N																
SW023	SW		SW70018WC	11-OCT-90	N																
SW037	SW	REAL	SW00413WC	17-OCT-90	Y																
SW037	SW	REAL	SW00514WC	27-NOV-90	Y																
SW038	SW	REAL	SW00419WC	15-OCT-90	N	TRG	SVOCLPTCL	1,2,4-TRICHLOROBENZENE	10	UG/L		U									
SW038	SW	REAL	SW00419WC	15-OCT-90	N	TRG	SVOCLPTCL	1,2-DICHLOROBENZENE	10	UG/L		U									
SW038	SW	REAL	SW00419WC	15-OCT-90	N	TRG	SVOCLPTCL	1,3-DICHLOROBENZENE	10	UG/L		U									
SW038	SW	REAL	SW00419WC	15-OCT-90	N	TRG	SVOCLPTCL	1,4-DICHLOROBENZENE	10	UG/L		U									
SW038	SW	REAL	SW00419WC	15-OCT-90	N	TRG	SVOCLPTCL	2,4,5-TRICHLOROPHENOL	50	UG/L		U									
SW038	SW	REAL	SW00419WC	15-OCT-90	N	TRG	SVOCLPTCL	2,4,6-TRICHLOROPHENOL	10	UG/L		U									
SW038	SW	REAL	SW00419WC	15-OCT-90	N	TRG	SVOCLPTCL	2,4-DICHLOROPHENOL	10	UG/L		U									
SW038	SW	REAL	SW00419WC	15-OCT-90	N	TRG	SVOCLPTCL	2,4-DIMETHYLPHENOL	10	UG/L		U									
SW038	SW	REAL	SW00419WC	15-OCT-90	N	TRG	SVOCLPTCL	2,4-DINITROPHENOL	50	UG/L		U									
SW038	SW	REAL	SW00419WC	15-OCT-90	N	TRG	SVOCLPTCL	2,4-DINITROTOLUENE	10	UG/L		U									
SW038	SW	REAL	SW00419WC	15-OCT-90	N	TRG	SVOCLPTCL	2,6-DINITROTOLUENE	10	UG/L		U									
SW038	SW	REAL	SW00419WC	15-OCT-90	N	TRG	SVOCLPTCL	2-CHLORONAPHTHALENE	10	UG/L		U									
SW038	SW	REAL	SW00419WC	15-OCT-90	N	TRG	SVOCLPTCL	2-CHLOROPHENOL	10	UG/L		U									
SW038	SW	REAL	SW00419WC	15-OCT-90	N	TRG	SVOCLPTCL	2-METHYLNAPHTHALENE	10	UG/L		U									
SW038	SW	REAL	SW00419WC	15-OCT-90	N	TRG	SVOCLPTCL	2-METHYLPHENOL	10	UG/L		U									
SW038	SW	REAL	SW00419WC	15-OCT-90	N	TRG	SVOCLPTCL	2-NITROANILINE	50	UG/L		U									
SW038	SW	REAL	SW00419WC	15-OCT-90	N	TRG	SVOCLPTCL	2-NITROPHENOL	10	UG/L		U									
SW038	SW	REAL	SW00419WC	15-OCT-90	N	TRG	SVOCLPTCL	3,3'-DICHLOROBENZIDINE	20	UG/L		U									
SW038	SW	REAL	SW00419WC	15-OCT-90	N	TRG	SVOCLPTCL	3-NITROANILINE	50	UG/L		U									
SW038	SW	REAL	SW00419WC	15-OCT-90	N	TRG	SVOCLPTCL	4,6-DINITRO-2-METHYLPHENOL	50	UG/L		U									
SW038	SW	REAL	SW00419WC	15-OCT-90	N	TRG	SVOCLPTCL	4-BROMOPHENYL PHENYL ETHER	10	UG/L		U									
SW038	SW	REAL	SW00419WC	15-OCT-90	N	TRG	SVOCLPTCL	4-CHLORO-3-METHYLPHENOL	10	UG/L		U									
SW038	SW	REAL	SW00419WC	15-OCT-90	N	TRG	SVOCLPTCL	4-CHLOROANILINE	10	UG/L		U									
SW038	SW	REAL	SW00419WC	15-OCT-90	N	TRG	SVOCLPTCL	4-CHLOROPHENYL PHENYL ETHER	10	UG/L		U									
SW038	SW	REAL	SW00419WC	15-OCT-90	N	TRG	SVOCLPTCL	4-METHYLPHENOL	10	UG/L		U									
SW038	SW	REAL	SW00419WC	15-OCT-90	N	TRG	SVOCLPTCL	4-NITROANILINE	50	UG/L		U									
SW038	SW	REAL	SW00419WC	15-OCT-90	N	TRG	SVOCLPTCL	4-NITROPHENOL	50	UG/L		U									
SW038	SW	REAL	SW00419WC	15-OCT-90	N	TRG	SVOCLPTCL	ACENAPHTHENE	10	UG/L		U									
SW038	SW	REAL	SW00419WC	15-OCT-90	N	TRG	SVOCLPTCL	ACENAPHTHYLENE	10	UG/L		U									
SW038	SW	REAL	SW00419WC	15-OCT-90	N	TRG	SVOCLPTCL	ANTHRACENE	10	UG/L		U									

location	ST	QC	Sample Number	Smpl Date	D	ID	Group	Chemical	Result	Unit	Error	Qual	D LMT	VA	RN1	RN2	RN3	RN4	VResult	VQual	VDET
SW038	SW	REAL	SW00419WC	15-OCT-90	N	TRG	SVOCLPTCL	BENZO(a)ANTHRACENE	10	UG/L		U									
SW038	SW	REAL	SW00419WC	15-OCT-90	N	TRG	SVOCLPTCL	BENZO(a)PYRENE	10	UG/L		U									
SW038	SW	REAL	SW00419WC	15-OCT-90	N	TRG	SVOCLPTCL	BENZO(b)FLUORANTHENE	10	UG/L		U									
SW038	SW	REAL	SW00419WC	15-OCT-90	N	TRG	SVOCLPTCL	BENZO(ghi)PERYLENE	10	UG/L		U									
SW038	SW	REAL	SW00419WC	15-OCT-90	N	TRG	SVOCLPTCL	BENZO(k)FLUORANTHENE	10	UG/L		U									
SW038	SW	REAL	SW00419WC	15-OCT-90	N	TRG	SVOCLPTCL	BENZOIC ACID	50	UG/L		U									
SW038	SW	REAL	SW00419WC	15-OCT-90	N	TRG	SVOCLPTCL	BENZYL ALCOHOL	10	UG/L		U									
SW038	SW	REAL	SW00419WC	15-OCT-90	N	TRG	SVOCLPTCL	BIS(2-CHLOROETHOXY)METHANE	10	UG/L		U									
SW038	SW	REAL	SW00419WC	15-OCT-90	N	TRG	SVOCLPTCL	BIS(2-CHLOROETHYL)ETHER	10	UG/L		U									
SW038	SW	REAL	SW00419WC	15-OCT-90	N	TRG	SVOCLPTCL	BIS(2-CHLOROISOPROPYL)ETHER	10	UG/L		U									
SW038	SW	REAL	SW00419WC	15-OCT-90	N	TRG	SVOCLPTCL	BIS(2-ETHYLHEXYL)PHTHALATE	10	UG/L		U									
SW038	SW	REAL	SW00419WC	15-OCT-90	N	TRG	SVOCLPTCL	BUTYL BENZYL PHTHALATE	10	UG/L		U									
SW038	SW	REAL	SW00419WC	15-OCT-90	N	TRG	SVOCLPTCL	CHRYSENE	10	UG/L		U									
SW038	SW	REAL	SW00419WC	15-OCT-90	N	TRG	SVOCLPTCL	DI-n-BUTYL PHTHALATE	10	UG/L		U									
SW038	SW	REAL	SW00419WC	15-OCT-90	N	TRG	SVOCLPTCL	DI-n-OCTYL PHTHALATE	10	UG/L		U									
SW038	SW	REAL	SW00419WC	15-OCT-90	N	TRG	SVOCLPTCL	DIBENZO(a,h)ANTHRACENE	10	UG/L		U									
SW038	SW	REAL	SW00419WC	15-OCT-90	N	TRG	SVOCLPTCL	DIBENZOFURAN	10	UG/L		U									
SW038	SW	REAL	SW00419WC	15-OCT-90	N	TRG	SVOCLPTCL	DIETHYL PHTHALATE	10	UG/L		U									
SW038	SW	REAL	SW00419WC	15-OCT-90	N	TRG	SVOCLPTCL	DIMETHYL PHTHALATE	10	UG/L		U									
SW038	SW	REAL	SW00419WC	15-OCT-90	N	TRG	SVOCLPTCL	FLUORANTHENE	10	UG/L		U									
SW038	SW	REAL	SW00419WC	15-OCT-90	N	TRG	SVOCLPTCL	FLUORENE	10	UG/L		U									
SW038	SW	REAL	SW00419WC	15-OCT-90	N	TRG	SVOCLPTCL	HEXACHLOROBENZENE	10	UG/L		U									
SW038	SW	REAL	SW00419WC	15-OCT-90	N	TRG	SVOCLPTCL	HEXACHLOROBUTADIENE	10	UG/L		U									
SW038	SW	REAL	SW00419WC	15-OCT-90	N	TRG	SVOCLPTCL	HEXACHLOROCYCLOPENTADIENE	10	UG/L		U									
SW038	SW	REAL	SW00419WC	15-OCT-90	N	TRG	SVOCLPTCL	HEXACHLOROETHANE	10	UG/L		U									
SW038	SW	REAL	SW00419WC	15-OCT-90	N	TRG	SVOCLPTCL	INDENO(1,2,3-cd)PYRENE	10	UG/L		U									
SW038	SW	REAL	SW00419WC	15-OCT-90	N	TRG	SVOCLPTCL	ISOPHORONE	10	UG/L		U									
SW038	SW	REAL	SW00419WC	15-OCT-90	N	TRG	SVOCLPTCL	N-NITROSO-DI-n-PROPYLAMINE	10	UG/L		U									
SW038	SW	REAL	SW00419WC	15-OCT-90	N	TRG	SVOCLPTCL	N-NITROSODIPHENYLAMINE	10	UG/L		U									
SW038	SW	REAL	SW00419WC	15-OCT-90	N	TRG	SVOCLPTCL	NAPHTHALENE	10	UG/L		U									
SW038	SW	REAL	SW00419WC	15-OCT-90	N	TRG	SVOCLPTCL	NITROBENZENE	10	UG/L		U									
SW038	SW	REAL	SW00419WC	15-OCT-90	N	TRG	SVOCLPTCL	PENTACHLOROPHENOL	50	UG/L		U									
SW038	SW	REAL	SW00419WC	15-OCT-90	N	TRG	SVOCLPTCL	PHENANTHRENE	10	UG/L		U									
SW038	SW	REAL	SW00419WC	15-OCT-90	N	TRG	SVOCLPTCL	PHENOL	10	UG/L		U									
SW038	SW	REAL	SW00419WC	15-OCT-90	N	TRG	SVOCLPTCL	PYRENE	10	UG/L		U									
SW038	SW	REAL	SW00419WC	15-OCT-90	N	TRG	VOCCLPTCL	1,1,1-TRICHLOROETHANE	5	UG/L		U		V							
SW038	SW	REAL	SW00419WC	15-OCT-90	N	TRG	VOCCLPTCL	1,1,2,2-TETRACHLOROETHANE	5	UG/L		U		V							
SW038	SW	REAL	SW00419WC	15-OCT-90	N	TRG	VOCCLPTCL	1,1,2-TRICHLOROETHANE	5	UG/L		U		V							
SW038	SW	REAL	SW00419WC	15-OCT-90	N	TRG	VOCCLPTCL	1,1-DICHLOROETHANE	5	UG/L		U		V							
SW038	SW	REAL	SW00419WC	15-OCT-90	N	TRG	VOCCLPTCL	1,1-DICHLOROETHENE	5	UG/L		U		V							
SW038	SW	REAL	SW00419WC	15-OCT-90	N	TRG	VOCCLPTCL	1,2-DICHLOROETHANE	5	UG/L		U		V							
SW038	SW	REAL	SW00419WC	15-OCT-90	N	TRG	VOCCLPTCL	1,2-DICHLOROETHENE	5	UG/L		U		V							
SW038	SW	REAL	SW00419WC	15-OCT-90	N	TRG	VOCCLPTCL	1,2-DICHLOROPROPANE	5	UG/L		U		V							
SW038	SW	REAL	SW00419WC	15-OCT-90	N	TRG	VOCCLPTCL	2-BUTANONE	5	UG/L		J		R						10	U
SW038	SW	REAL	SW00419WC	15-OCT-90	N	TRG	VOCCLPTCL	2-HEXANONE	10	UG/L		U		V							
SW038	SW	REAL	SW00419WC	15-OCT-90	N	TRG	VOCCLPTCL	4-METHYL-2-PENTANONE	10	UG/L		U		V							
SW038	SW	REAL	SW00419WC	15-OCT-90	N	TRG	VOCCLPTCL	ACETONE	3	UG/L		BJ		JA						10	U
SW038	SW	REAL	SW00419WC	15-OCT-90	N	TRG	VOCCLPTCL	BENZENE	5	UG/L		U		JA							
SW038	SW	REAL	SW00419WC	15-OCT-90	N	TRG	VOCCLPTCL	BROMODICHLOROMETHANE	5	UG/L		U		V							
SW038	SW	REAL	SW00419WC	15-OCT-90	N	TRG	VOCCLPTCL	BROMOFORM	5	UG/L		U		V							
SW038	SW	REAL	SW00419WC	15-OCT-90	N	TRG	VOCCLPTCL	BROMOMETHANE	10	UG/L		U		V							
SW038	SW	REAL	SW00419WC	15-OCT-90	N	TRG	VOCCLPTCL	CARBON DISULFIDE	5	UG/L		U		V							
SW038	SW	REAL	SW00419WC	15-OCT-90	N	TRG	VOCCLPTCL	CARBON TETRACHLORIDE	5	UG/L		U		V							
SW038	SW	REAL	SW00419WC	15-OCT-90	N	TRG	VOCCLPTCL	CHLOROBENZENE	5	UG/L		U		JA							
SW038	SW	REAL	SW00419WC	15-OCT-90	N	TRG	VOCCLPTCL	CHLOROETHANE	10	UG/L		U		V							
SW038	SW	REAL	SW00419WC	15-OCT-90	N	TRG	VOCCLPTCL	CHLOROFORM	5	UG/L		U		V							
SW038	SW	REAL	SW00419WC	15-OCT-90	N	TRG	VOCCLPTCL	CHLOROMETHANE	10	UG/L		U		V							
SW038	SW	REAL	SW00419WC	15-OCT-90	N	TRG	VOCCLPTCL	DIBROMOCHLOROMETHANE	5	UG/L		U		V							
SW038	SW	REAL	SW00419WC	15-OCT-90	N	TRG	VOCCLPTCL	ETHYLBENZENE	5	UG/L		U		JA							
SW038	SW	REAL	SW00419WC	15-OCT-90	N	TRG	VOCCLPTCL	METHYLENE CHLORIDE	2	UG/L		BJ		JA						5	U
SW038	SW	REAL	SW00419WC	15-OCT-90	N	TRG	VOCCLPTCL	STYRENE	5	UG/L		U		JA							
SW038	SW	REAL	SW00419WC	15-OCT-90	N	TRG	VOCCLPTCL	TETRACHLOROETHENE	5	UG/L		U		V							
SW038	SW	REAL	SW00419WC	15-OCT-90	N	TRG	VOCCLPTCL	TOLUENE	5	UG/L		U		JA							

Location	ST	QC	Sample Number	Smpl Date	D	ID	Group	Chemical	Result	Unit	Error	Qual	D LMT	VA	RN1	RN2	RN3	RN4	VResult	VQual	VDET
SW038	SW	REAL	SW00419WC	15-OCT-90	N	TRG	VOCCLPTCL	TOTAL XYLENES	5	UG/L		U		JA							
SW038	SW	REAL	SW00419WC	15-OCT-90	N	TRG	VOCCLPTCL	TRICHLOROETHENE	5	UG/L		U		V							
SW038	SW	REAL	SW00419WC	15-OCT-90	N	TRG	VOCCLPTCL	VINYL ACETATE	10	UG/L		U		V							
SW038	SW	REAL	SW00419WC	15-OCT-90	N	TRG	VOCCLPTCL	VINYL CHLORIDE	10	UG/L		U		V							
SW038	SW	REAL	SW00419WC	15-OCT-90	N	TRG	VOCCLPTCL	cis-1,3-DICHLOROPROPENE	5	UG/L		U		V							
SW038	SW	REAL	SW00419WC	15-OCT-90	N	TRG	VOCCLPTCL	trans-1,3-DICHLOROPROPENE	5	UG/L		U		V							
SW038	SW	REAL	SW00520WC	05-NOV-90	N	TRG	VOCCLPTCL	1,1,1-TRICHLOROETHANE	5	UG/L		U	5	V							
SW038	SW	REAL	SW00520WC	05-NOV-90	N	TRG	VOCCLPTCL	1,1,2,2-TETRACHLOROETHANE	5	UG/L		U	5	V							
SW038	SW	REAL	SW00520WC	05-NOV-90	N	TRG	VOCCLPTCL	1,1,2-TRICHLOROETHANE	5	UG/L		U	5	V							
SW038	SW	REAL	SW00520WC	05-NOV-90	N	TRG	VOCCLPTCL	1,1-DICHLOROETHANE	5	UG/L		U	5	V							
SW038	SW	REAL	SW00520WC	05-NOV-90	N	TRG	VOCCLPTCL	1,1-DICHLOROETHENE	5	UG/L		U	5	V							
SW038	SW	REAL	SW00520WC	05-NOV-90	N	TRG	VOCCLPTCL	1,2-DICHLOROETHANE	5	UG/L		U	5	V							
SW038	SW	REAL	SW00520WC	05-NOV-90	N	TRG	VOCCLPTCL	1,2-DICHLOROETHENE	5	UG/L		U	5	V							
SW038	SW	REAL	SW00520WC	05-NOV-90	N	TRG	VOCCLPTCL	1,2-DICHLOROPROPANE	5	UG/L		U	5	V							
SW038	SW	REAL	SW00520WC	05-NOV-90	N	TRG	VOCCLPTCL	2-BUTANONE	10	UG/L		U	10	V							
SW038	SW	REAL	SW00520WC	05-NOV-90	N	TRG	VOCCLPTCL	2-HEXANONE	10	UG/L		U	10	V							
SW038	SW	REAL	SW00520WC	05-NOV-90	N	TRG	VOCCLPTCL	4-METHYL-2-PENTANONE	10	UG/L		U	10	V							
SW038	SW	REAL	SW00520WC	05-NOV-90	N	TRG	VOCCLPTCL	ACETONE	3	UG/L		BJ	10	JA					10	U	
SW038	SW	REAL	SW00520WC	05-NOV-90	N	TRG	VOCCLPTCL	BENZENE	5	UG/L		U	5	V							
SW038	SW	REAL	SW00520WC	05-NOV-90	N	TRG	VOCCLPTCL	BROMODICHLOROMETHANE	5	UG/L		U	5	V							
SW038	SW	REAL	SW00520WC	05-NOV-90	N	TRG	VOCCLPTCL	BROMOFORM	5	UG/L		U	5	V							
SW038	SW	REAL	SW00520WC	05-NOV-90	N	TRG	VOCCLPTCL	BROMOMETHANE	10	UG/L		U	10	V							
SW038	SW	REAL	SW00520WC	05-NOV-90	N	TRG	VOCCLPTCL	CARBON DISULFIDE	5	UG/L		U	5	V							
SW038	SW	REAL	SW00520WC	05-NOV-90	N	TRG	VOCCLPTCL	CARBON TETRACHLORIDE	5	UG/L		U	5	V							
SW038	SW	REAL	SW00520WC	05-NOV-90	N	TRG	VOCCLPTCL	CHLOROBENZENE	5	UG/L		U	5	V							
SW038	SW	REAL	SW00520WC	05-NOV-90	N	TRG	VOCCLPTCL	CHLOROETHANE	10	UG/L		U	10	V							
SW038	SW	REAL	SW00520WC	05-NOV-90	N	TRG	VOCCLPTCL	CHLOROFORM	5	UG/L		U	5	V							
SW038	SW	REAL	SW00520WC	05-NOV-90	N	TRG	VOCCLPTCL	CHLOROMETHANE	10	UG/L		U	10	V							
SW038	SW	REAL	SW00520WC	05-NOV-90	N	TRG	VOCCLPTCL	DIBROMOCHLOROMETHANE	5	UG/L		U	5	V							
SW038	SW	REAL	SW00520WC	05-NOV-90	N	TRG	VOCCLPTCL	ETHYLBENZENE	5	UG/L		U	5	V							
SW038	SW	REAL	SW00520WC	05-NOV-90	N	TRG	VOCCLPTCL	METHYLENE CHLORIDE	3	UG/L		BJ	5	JA					5	U	
SW038	SW	REAL	SW00520WC	05-NOV-90	N	TRG	VOCCLPTCL	STYRENE	5	UG/L		U	5	V							
SW038	SW	REAL	SW00520WC	05-NOV-90	N	TRG	VOCCLPTCL	TETRACHLOROETHENE	5	UG/L		U	5	V							
SW038	SW	REAL	SW00520WC	05-NOV-90	N	TRG	VOCCLPTCL	TOLUENE	5	UG/L		U	5	V							
SW038	SW	REAL	SW00520WC	05-NOV-90	N	TRG	VOCCLPTCL	TOTAL XYLENES	5	UG/L		U	5	V							
SW038	SW	REAL	SW00520WC	05-NOV-90	N	TRG	VOCCLPTCL	TRICHLOROETHENE	5	UG/L		U	5	V							
SW038	SW	REAL	SW00520WC	05-NOV-90	N	TRG	VOCCLPTCL	VINYL ACETATE	10	UG/L		U	10	V							
SW038	SW	REAL	SW00520WC	05-NOV-90	N	TRG	VOCCLPTCL	VINYL CHLORIDE	10	UG/L		U	10	V							
SW038	SW	REAL	SW00520WC	05-NOV-90	N	TRG	VOCCLPTCL	cis-1,3-DICHLOROPROPENE	5	UG/L		U	5	V							
SW038	SW	REAL	SW00520WC	05-NOV-90	N	TRG	VOCCLPTCL	trans-1,3-DICHLOROPROPENE	5	UG/L		U	5	V							
SW093	SW	MS	SW093W052990M	~~29-MAY-90~~	N																
SW093	SW	MS	SW80023WC	30-JUL-90	N	TRG	VOCCLPTCL	1,1,1-TRICHLOROETHANE	2	UG/L		J	5								
SW093	SW	MS	SW80023WC	30-JUL-90	N	TRG	VOCCLPTCL	1,1,2,2-TETRACHLOROETHANE	5	UG/L		U	5								
SW093	SW	MS	SW80023WC	30-JUL-90	N	TRG	VOCCLPTCL	1,1,2-TRICHLOROETHANE	5	UG/L		U	5								
SW093	SW	MS	SW80023WC	30-JUL-90	N	TRG	VOCCLPTCL	1,1-DICHLOROETHANE	3	UG/L		J	5								
SW093	SW	MS	SW80023WC	30-JUL-90	N	TRG	VOCCLPTCL	1,1-DICHLOROETHENE	5	UG/L		U	5								
SW093	SW	MS	SW80023WC	30-JUL-90	N	TRG	VOCCLPTCL	1,2-DICHLOROETHANE	5	UG/L		U	5								
SW093	SW	MS	SW80023WC	30-JUL-90	N	TRG	VOCCLPTCL	1,2-DICHLOROETHENE	5	UG/L		U	5								
SW093	SW	MS	SW80023WC	30-JUL-90	N	TRG	VOCCLPTCL	1,2-DICHLOROPROPANE	5	UG/L		U	5								
SW093	SW	MS	SW80023WC	30-JUL-90	N	TRG	VOCCLPTCL	2-BUTANONE	10	UG/L		U	10								
SW093	SW	MS	SW80023WC	30-JUL-90	N	TRG	VOCCLPTCL	2-HEXANONE	10	UG/L		U	10								
SW093	SW	MS	SW80023WC	30-JUL-90	N	TRG	VOCCLPTCL	4-METHYL-2-PENTANONE	10	UG/L		U	10								
SW093	SW	MS	SW80023WC	30-JUL-90	N	TRG	VOCCLPTCL	ACETONE	10	UG/L		U	10								
SW093	SW	MS	SW80023WC	30-JUL-90	N	TRG	VOCCLPTCL	BENZENE	5	UG/L		U	5								
SW093	SW	MS	SW80023WC	30-JUL-90	N	TRG	VOCCLPTCL	BROMODICHLOROMETHANE	5	UG/L		U	5								
SW093	SW	MS	SW80023WC	30-JUL-90	N	TRG	VOCCLPTCL	BROMOFORM	5	UG/L		U	5								
SW093	SW	MS	SW80023WC	30-JUL-90	N	TRG	VOCCLPTCL	BROMOMETHANE	10	UG/L		U	10								
SW093	SW	MS	SW80023WC	30-JUL-90	N	TRG	VOCCLPTCL	CARBON DISULFIDE	5	UG/L		U	5								
SW093	SW	MS	SW80023WC	30-JUL-90	N	TRG	VOCCLPTCL	CARBON TETRACHLORIDE	5	UG/L		U	5								
SW093	SW	MS	SW80023WC	30-JUL-90	N	TRG	VOCCLPTCL	CHLOROBENZENE	5	UG/L		U	5								
SW093	SW	MS	SW80023WC	30-JUL-90	N	TRG	VOCCLPTCL	CHLOROETHANE	10	UG/L		U	10								
SW093	SW	MS	SW80023WC	30-JUL-90	N	TRG	VOCCLPTCL	CHLOROFORM	5	UG/L		U	5								
SW093	SW	MS	SW80023WC	30-JUL-90	N	TRG	VOCCLPTCL	CHLOROMETHANE	10	UG/L		U	10								

Location	ST	QC	Sample Number	Smpl Date	D	ID	Group	Chemical	Result	Unit	Error	Qual	D	LMT	VA	RN1	RN2	RN3	RN4	VResult	VQual	VDET
SW093	SW	MS	SW80023WC	30-JUL-90	N	TRG	VOCCLPTCL	DIBROMOCHLOROMETHANE	5	UG/L		U	5									
SW093	SW	MS	SW80023WC	30-JUL-90	N	TRG	VOCCLPTCL	ETHYLBENZENE	5	UG/L		U	5									
SW093	SW	MS	SW80023WC	30-JUL-90	N	TRG	VOCCLPTCL	METHYLENE CHLORIDE	4	UG/L		BJ	5									
SW093	SW	MS	SW80023WC	30-JUL-90	N	TRG	VOCCLPTCL	STYRENE	5	UG/L		U	5									
SW093	SW	MS	SW80023WC	30-JUL-90	N	TRG	VOCCLPTCL	TETRACHLOROETHENE	5	UG/L		U	5									
SW093	SW	MS	SW80023WC	30-JUL-90	N	TRG	VOCCLPTCL	TOLUENE	5	UG/L		U	5									
SW093	SW	MS	SW80023WC	30-JUL-90	N	TRG	VOCCLPTCL	TOTAL XYLENES	5	UG/L		U	5									
SW093	SW	MS	SW80023WC	30-JUL-90	N	TRG	VOCCLPTCL	TRICHLOROETHENE	5	UG/L		U	5									
SW093	SW	MS	SW80023WC	30-JUL-90	N	TRG	VOCCLPTCL	VINYL ACETATE	10	UG/L		U	10									
SW093	SW	MS	SW80023WC	30-JUL-90	N	TRG	VOCCLPTCL	VINYL CHLORIDE	10	UG/L		U	10									
SW093	SW	MS	SW80023WC	30-JUL-90	N	TRG	VOCCLPTCL	cis-1,3-DICHLOROPROPENE	5	UG/L		U	5									
SW093	SW	MS	SW80023WC	30-JUL-90	N	TRG	VOCCLPTCL	trans-1,3-DICHLOROPROPENE	5	UG/L		U	5									
SW093	SW	MSD	SW093W0529990S	29-MAY-90	N																	
SW093	SW	MSD	SW80024WC	30-JUL-90	N	TRG	VOCCLPTCL	1,1,1-TRICHLOROETHANE	2	UG/L		J	5									
SW093	SW	MSD	SW80024WC	30-JUL-90	N	TRG	VOCCLPTCL	1,1,2,2-TETRACHLOROETHANE	5	UG/L		U	5									
SW093	SW	MSD	SW80024WC	30-JUL-90	N	TRG	VOCCLPTCL	1,1,2-TRICHLOROETHANE	5	UG/L		U	5									
SW093	SW	MSD	SW80024WC	30-JUL-90	N	TRG	VOCCLPTCL	1,1-DICHLOROETHANE	2	UG/L		J	5									
SW093	SW	MSD	SW80024WC	30-JUL-90	N	TRG	VOCCLPTCL	1,1-DICHLOROETHENE	5	UG/L		U	5									
SW093	SW	MSD	SW80024WC	30-JUL-90	N	TRG	VOCCLPTCL	1,2-DICHLOROETHANE	5	UG/L		U	5									
SW093	SW	MSD	SW80024WC	30-JUL-90	N	TRG	VOCCLPTCL	1,2-DICHLOROETHENE	5	UG/L		U	5									
SW093	SW	MSD	SW80024WC	30-JUL-90	N	TRG	VOCCLPTCL	1,2-DICHLOROPROPANE	5	UG/L		U	5									
SW093	SW	MSD	SW80024WC	30-JUL-90	N	TRG	VOCCLPTCL	2-BUTANONE	10	UG/L		U	10									
SW093	SW	MSD	SW80024WC	30-JUL-90	N	TRG	VOCCLPTCL	2 HEXANONE	10	UG/L		U	10									
SW093	SW	MSD	SW80024WC	30-JUL-90	N	TRG	VOCCLPTCL	4-METHYL-2-PENTANONE	10	UG/L		U	10									
SW093	SW	MSD	SW80024WC	30-JUL-90	N	TRG	VOCCLPTCL	ACETONE	10	UG/L		U	10									
SW093	SW	MSD	SW80024WC	30-JUL-90	N	TRG	VOCCLPTCL	BENZENE	5	UG/L		U	5									
SW093	SW	MSD	SW80024WC	30-JUL-90	N	TRG	VOCCLPTCL	BROMODICHLOROMETHANE	5	UG/L		U	5									
SW093	SW	MSD	SW80024WC	30-JUL-90	N	TRG	VOCCLPTCL	BROMOFORM	5	UG/L		U	5									
SW093	SW	MSD	SW80024WC	30-JUL-90	N	TRG	VOCCLPTCL	BROMOMETHANE	10	UG/L		U	10									
SW093	SW	MSD	SW80024WC	30-JUL-90	N	TRG	VOCCLPTCL	CARBON DISULFIDE	5	UG/L		U	5									
SW093	SW	MSD	SW80024WC	30-JUL-90	N	TRG	VOCCLPTCL	CARBON TETRACHLORIDE	5	UG/L		U	5									
SW093	SW	MSD	SW80024WC	30-JUL-90	N	TRG	VOCCLPTCL	CHLOROBENZENE	5	UG/L		U	5									
SW093	SW	MSD	SW80024WC	30-JUL-90	N	TRG	VOCCLPTCL	CHLOROETHANE	10	UG/L		U	10									
SW093	SW	MSD	SW80024WC	30-JUL-90	N	TRG	VOCCLPTCL	CHLOROFORM	5	UG/L		U	5									
SW093	SW	MSD	SW80024WC	30-JUL-90	N	TRG	VOCCLPTCL	CHLOROMETHANE	10	UG/L		U	10									
SW093	SW	MSD	SW80024WC	30-JUL-90	N	TRG	VOCCLPTCL	DIBROMOCHLOROMETHANE	5	UG/L		U	5									
SW093	SW	MSD	SW80024WC	30-JUL-90	N	TRG	VOCCLPTCL	ETHYLBENZENE	5	UG/L		U	5									
SW093	SW	MSD	SW80024WC	30-JUL-90	N	TRG	VOCCLPTCL	METHYLENE CHLORIDE	9	UG/L		B	5									
SW093	SW	MSD	SW80024WC	30-JUL-90	N	TRG	VOCCLPTCL	STYRENE	5	UG/L		U	5									
SW093	SW	MSD	SW80024WC	30-JUL-90	N	TRG	VOCCLPTCL	TETRACHLOROETHENE	5	UG/L		U	5									
SW093	SW	MSD	SW80024WC	30-JUL-90	N	TRG	VOCCLPTCL	TOLUENE	5	UG/L		U	5									
SW093	SW	MSD	SW80024WC	30-JUL-90	N	TRG	VOCCLPTCL	TOTAL XYLENES	5	UG/L		U	5									
SW093	SW	MSD	SW80024WC	30-JUL-90	N	TRG	VOCCLPTCL	TRICHLOROETHENE	5	UG/L		U	5									
SW093	SW	MSD	SW80024WC	30-JUL-90	N	TRG	VOCCLPTCL	VINYL ACETATE	10	UG/L		U	10									
SW093	SW	MSD	SW80024WC	30-JUL-90	N	TRG	VOCCLPTCL	VINYL CHLORIDE	10	UG/L		U	10									
SW093	SW	MSD	SW80024WC	30-JUL-90	N	TRG	VOCCLPTCL	cis-1,3-DICHLOROPROPENE	5	UG/L		U	5									
SW093	SW	MSD	SW80024WC	30-JUL-90	N	TRG	VOCCLPTCL	trans-1,3-DICHLOROPROPENE	5	UG/L		U	5									
SW093	SW	REAL	SW00096WC	22-JUN-90	N	TRG	VOCCLPTCL	1,1,1-TRICHLOROETHANE	5	UG/L		U	5									
SW093	SW	REAL	SW00096WC	22-JUN-90	N	TRG	VOCCLPTCL	1,1,2,2-TETRACHLOROETHANE	5	UG/L		U	5									
SW093	SW	REAL	SW00096WC	22-JUN-90	N	TRG	VOCCLPTCL	1,1,2-TRICHLOROETHANE	5	UG/L		U	5									
SW093	SW	REAL	SW00096WC	22-JUN-90	N	TRG	VOCCLPTCL	1,1-DICHLOROETHANE	4	UG/L		J	5									
SW093	SW	REAL	SW00096WC	22-JUN-90	N	TRG	VOCCLPTCL	1,1-DICHLOROETHENE	5	UG/L		U	5									
SW093	SW	REAL	SW00096WC	22-JUN-90	N	TRG	VOCCLPTCL	1,2-DICHLOROETHANE	5	UG/L		U	5									
SW093	SW	REAL	SW00096WC	22-JUN-90	N	TRG	VOCCLPTCL	1,2-DICHLOROETHENE	5	UG/L		U	5									
SW093	SW	REAL	SW00096WC	22-JUN-90	N	TRG	VOCCLPTCL	1,2-DICHLOROPROPANE	5	UG/L		U	5									
SW093	SW	REAL	SW00096WC	22-JUN-90	N	TRG	VOCCLPTCL	1,2-DIMETHYLBENZENE	5	UG/L		U	5									
SW093	SW	REAL	SW00096WC	22-JUN-90	N	TRG	VOCCLPTCL	2-BUTANONE	10	UG/L		U	10									
SW093	SW	REAL	SW00096WC	22-JUN-90	N	TRG	VOCCLPTCL	2-CHLOROETHYL VINYL ETHER	10	UG/L		U	10									
SW093	SW	REAL	SW00096WC	22-JUN-90	N	TRG	VOCCLPTCL	2-HEXANONE	10	UG/L		U	10									
SW093	SW	REAL	SW00096WC	22-JUN-90	N	TRG	VOCCLPTCL	4-METHYL-2-PENTANONE	10	UG/L		U	10									
SW093	SW	REAL	SW00096WC	22-JUN-90	N	TRG	VOCCLPTCL	ACETONE	3	UG/L		JB	10									
SW093	SW	REAL	SW00096WC	22-JUN-90	N	TRG	VOCCLPTCL	BENZENE	5	UG/L		U	5									
SW093	SW	REAL	SW00096WC	22-JUN-90	N	TRG	VOCCLPTCL	BROMODICHLOROMETHANE	5	UG/L		U	5									

ocation	ST	QC	Sample Number	Smpl Date	D	ID	Group	Chemical	Result	Unit	Error	Qual	D	LMT	VA	RN1	RN2	RN3	RN4	VResult	VQual	VDET
W093	SW	REAL	SW00096WC	22-JUN-90	N	TRG	VOCCLPTCL	BROMOFORM	5	UG/L		U		5								
W093	SW	REAL	SW00096WC	22-JUN-90	N	TRG	VOCCLPTCL	BROMOMETHANE	10	UG/L		U		10								
W093	SW	REAL	SW00096WC	22-JUN-90	N	TRG	VOCCLPTCL	CARBON DISULFIDE	5	UG/L		U		5								
W093	SW	REAL	SW00096WC	22-JUN-90	N	TRG	VOCCLPTCL	CARBON TETRACHLORIDE	5	UG/L		U		5								
W093	SW	REAL	SW00096WC	22-JUN-90	N	TRG	VOCCLPTCL	CHLOROBENZENE	5	UG/L		U		5								
W093	SW	REAL	SW00096WC	22-JUN-90	N	TRG	VOCCLPTCL	CHLOROETHANE	10	UG/L		U		10								
W093	SW	REAL	SW00096WC	22-JUN-90	N	TRG	VOCCLPTCL	CHLOROFORM	5	UG/L		U		5								
W093	SW	REAL	SW00096WC	22-JUN-90	N	TRG	VOCCLPTCL	CHLOROMETHANE	10	UG/L		U		10								
W093	SW	REAL	SW00096WC	22-JUN-90	N	TRG	VOCCLPTCL	DIBROMOCHLOROMETHANE	5	UG/L		U		5								
W093	SW	REAL	SW00096WC	22-JUN-90	N	TRG	VOCCLPTCL	ETHYLBENZENE	5	UG/L		U		5								
W093	SW	REAL	SW00096WC	22-JUN-90	N	TRG	VOCCLPTCL	METHYLENE CHLORIDE	1	UG/L		JB		5								
W093	SW	REAL	SW00096WC	22-JUN-90	N	TRG	VOCCLPTCL	STYRENE	5	UG/L		U		5								
W093	SW	REAL	SW00096WC	22-JUN-90	N	TRG	VOCCLPTCL	TETRACHLOROETHENE	5	UG/L		U		5								
W093	SW	REAL	SW00096WC	22-JUN-90	N	TRG	VOCCLPTCL	TOLUENE	5	UG/L		U		5								
W093	SW	REAL	SW00096WC	22-JUN-90	N	TRG	VOCCLPTCL	TOTAL XYLENES	5	UG/L		U		5								
W093	SW	REAL	SW00096WC	22-JUN-90	N	TRG	VOCCLPTCL	TRICHLOROETHENE	5	UG/L		U		5								
W093	SW	REAL	SW00096WC	22-JUN-90	N	TRG	VOCCLPTCL	VINYL ACETATE	10	UG/L		U		10								
W093	SW	REAL	SW00096WC	22-JUN-90	N	TRG	VOCCLPTCL	VINYL CHLORIDE	10	UG/L		U		10								
W093	SW	REAL	SW00096WC	22-JUN-90	N	TRG	VOCCLPTCL	cis-1,3-DICHLOROPROPENE	5	UG/L		U		5								
W093	SW	REAL	SW00096WC	22-JUN-90	N	TRG	VOCCLPTCL	trans-1,3-DICHLOROPROPENE	5	UG/L		U		5								
W093	SW	REAL	SW00197WC	30-JUL-90	N	TRG	VOCCLPTCL	1,1,1-TRICHLOROETHANE	2	UG/L		J		5								
W093	SW	REAL	SW00197WC	30-JUL-90	N	TRG	VOCCLPTCL	1,1,2,2-TETRACHLOROETHANE	5	UG/L		U		5								
W093	SW	REAL	SW00197WC	30-JUL-90	N	TRG	VOCCLPTCL	1,1,2-TRICHLOROETHANE	5	UG/L		U		5								
W093	SW	REAL	SW00197WC	30-JUL-90	N	TRG	VOCCLPTCL	1,1-DICHLOROETHANE	2	UG/L		J		5								
W093	SW	REAL	SW00197WC	30-JUL-90	N	TRG	VOCCLPTCL	1,1-DICHLOROETHENE	5	UG/L		U		5								
W093	SW	REAL	SW00197WC	30-JUL-90	N	TRG	VOCCLPTCL	1,2-DICHLOROETHANE	5	UG/L		U		5								
W093	SW	REAL	SW00197WC	30-JUL-90	N	TRG	VOCCLPTCL	1,2-DICHLOROETHENE	5	UG/L		U		5								
W093	SW	REAL	SW00197WC	30-JUL-90	N	TRG	VOCCLPTCL	1,2-DICHLOROPROPANE	5	UG/L		U		5								
W093	SW	REAL	SW00197WC	30-JUL-90	N	TRG	VOCCLPTCL	2-BUTANONE	10	UG/L		U		10								
W093	SW	REAL	SW00197WC	30-JUL-90	N	TRG	VOCCLPTCL	2-HEXANONE	10	UG/L		U		10								
W093	SW	REAL	SW00197WC	30-JUL-90	N	TRG	VOCCLPTCL	4-METHYL-2-PENTANONE	10	UG/L		U		10								
W093	SW	REAL	SW00197WC	30-JUL-90	N	TRG	VOCCLPTCL	ACETONE	10	UG/L		U		10								
W093	SW	REAL	SW00197WC	30-JUL-90	N	TRG	VOCCLPTCL	BENZENE	5	UG/L		U		5								
W093	SW	REAL	SW00197WC	30-JUL-90	N	TRG	VOCCLPTCL	BROMODICHLOROMETHANE	5	UG/L		U		5								
W093	SW	REAL	SW00197WC	30-JUL-90	N	TRG	VOCCLPTCL	BROMOFORM	5	UG/L		U		5								
W093	SW	REAL	SW00197WC	30-JUL-90	N	TRG	VOCCLPTCL	BROMOMETHANE	10	UG/L		U		10								
W093	SW	REAL	SW00197WC	30-JUL-90	N	TRG	VOCCLPTCL	CARBON DISULFIDE	5	UG/L		U		5								
W093	SW	REAL	SW00197WC	30-JUL-90	N	TRG	VOCCLPTCL	CARBON TETRACHLORIDE	5	UG/L		U		5								
W093	SW	REAL	SW00197WC	30-JUL-90	N	TRG	VOCCLPTCL	CHLOROBENZENE	5	UG/L		U		5								
W093	SW	REAL	SW00197WC	30-JUL-90	N	TRG	VOCCLPTCL	CHLOROETHANE	10	UG/L		U		10								
W093	SW	REAL	SW00197WC	30-JUL-90	N	TRG	VOCCLPTCL	CHLOROFORM	5	UG/L		U		5								
W093	SW	REAL	SW00197WC	30-JUL-90	N	TRG	VOCCLPTCL	CHLOROMETHANE	10	UG/L		U		10								
W093	SW	REAL	SW00197WC	30-JUL-90	N	TRG	VOCCLPTCL	DIBROMOCHLOROMETHANE	5	UG/L		U		5								
W093	SW	REAL	SW00197WC	30-JUL-90	N	TRG	VOCCLPTCL	ETHYLBENZENE	5	UG/L		U		5								
W093	SW	REAL	SW00197WC	30-JUL-90	N	TRG	VOCCLPTCL	METHYLENE CHLORIDE	4	UG/L		BJ		5								
W093	SW	REAL	SW00197WC	30-JUL-90	N	TRG	VOCCLPTCL	STYRENE	5	UG/L		U		5								
W093	SW	REAL	SW00197WC	30-JUL-90	N	TRG	VOCCLPTCL	TETRACHLOROETHENE	5	UG/L		U		5								
W093	SW	REAL	SW00197WC	30-JUL-90	N	TRG	VOCCLPTCL	TOLUENE	5	UG/L		U		5								
W093	SW	REAL	SW00197WC	30-JUL-90	N	TRG	VOCCLPTCL	TOTAL XYLENES	5	UG/L		U		5								
W093	SW	REAL	SW00197WC	30-JUL-90	N	TRG	VOCCLPTCL	TRICHLOROETHENE	5	UG/L		U		5								
W093	SW	REAL	SW00197WC	30-JUL-90	N	TRG	VOCCLPTCL	VINYL ACETATE	10	UG/L		U		10								
W093	SW	REAL	SW00197WC	30-JUL-90	N	TRG	VOCCLPTCL	VINYL CHLORIDE	10	UG/L		U		10								
W093	SW	REAL	SW00197WC	30-JUL-90	N	TRG	VOCCLPTCL	cis-1,3-DICHLOROPROPENE	5	UG/L		U		5								
W093	SW	REAL	SW00197WC	30-JUL-90	N	TRG	VOCCLPTCL	trans-1,3-DICHLOROPROPENE	5	UG/L		U		5								
W093	SW	REAL	SW00275WC	30-AUG-90	N	TRG	VOCCLPTCL	1,1,1-TRICHLOROETHANE	2	UG/L		J		5.000								
W093	SW	REAL	SW00275WC	30-AUG-90	N	TRG	VOCCLPTCL	1,1,2,2-TETRACHLOROETHANE	5	UG/L		U		5.000								
W093	SW	REAL	SW00275WC	30-AUG-90	N	TRG	VOCCLPTCL	1,1,2-TRICHLOROETHANE	5	UG/L		U		5.000								
W093	SW	REAL	SW00275WC	30-AUG-90	N	TRG	VOCCLPTCL	1,1-DICHLOROETHANE	2	UG/L		J		5.000								
W093	SW	REAL	SW00275WC	30-AUG-90	N	TRG	VOCCLPTCL	1,1-DICHLOROETHENE	5	UG/L		U		5.000								
W093	SW	REAL	SW00275WC	30-AUG-90	N	TRG	VOCCLPTCL	1,2-DICHLOROETHANE	5	UG/L		U		5.000								
W093	SW	REAL	SW00275WC	30-AUG-90	N	TRG	VOCCLPTCL	1,2-DICHLOROETHENE	2	UG/L		J		5.000								
W093	SW	REAL	SW00275WC	30-AUG-90	N	TRG	VOCCLPTCL	1,2-DICHLOROPROPANE	5	UG/L		U		5.000								
W093	SW	REAL	SW00275WC	30-AUG-90	N	TRG	VOCCLPTCL	2-BUTANONE	10	UG/L		U		10.00								

Location	ST	QC	Sample Number	Smpl Date	D	ID	Group	Chemical	Result	Unit	Error	Qual	D LMT	VA	RN1	RN2	RN3	RN4	VResult	VQual	VDET
SW093	SW	REAL	SW00275WC	30-AUG-90	N	TRG	VOCCLPTCL	2-HEXANONE	10	UG/L		U	10 00								
SW093	SW	REAL	SW00275WC	30-AUG-90	N	TRG	VOCCLPTCL	4-METHYL-2-PENTANONE	10	UG/L		U	10 00								
SW093	SW	REAL	SW00275WC	30-AUG-90	N	TRG	VOCCLPTCL	ACETONE	10	UG/L		U	10 00								
SW093	SW	REAL	SW00275WC	30-AUG-90	N	TRG	VOCCLPTCL	BENZENE	5	UG/L		U	5.000								
SW093	SW	REAL	SW00275WC	30-AUG-90	N	TRG	VOCCLPTCL	BROMODICHLOROMETHANE	5	UG/L		U	5.000								
SW093	SW	REAL	SW00275WC	30-AUG-90	N	TRG	VOCCLPTCL	BROMOFORM	5	UG/L		U	5 000								
SW093	SW	REAL	SW00275WC	30-AUG-90	N	TRG	VOCCLPTCL	BROMOMETHANE	10	UG/L		U	10 00								
SW093	SW	REAL	SW00275WC	30-AUG-90	N	TRG	VOCCLPTCL	CARBON DISULFIDE	5	UG/L		U	5.000								
SW093	SW	REAL	SW00275WC	30-AUG-90	N	TRG	VOCCLPTCL	CARBON TETRACHLORIDE	5	UG/L		U	5.000								
SW093	SW	REAL	SW00275WC	30-AUG-90	N	TRG	VOCCLPTCL	CHLOROBENZENE	5	UG/L		U	5.000								
SW093	SW	REAL	SW00275WC	30-AUG-90	N	TRG	VOCCLPTCL	CHLOROETHANE	10	UG/L		U	10 00								
SW093	SW	REAL	SW00275WC	30-AUG-90	N	TRG	VOCCLPTCL	CHLOROFORM	5	UG/L		U	5.000								
SW093	SW	REAL	SW00275WC	30-AUG-90	N	TRG	VOCCLPTCL	CHLOROMETHANE	10	UG/L		U	10 00								
SW093	SW	REAL	SW00275WC	30-AUG-90	N	TRG	VOCCLPTCL	DIBROMOCHLOROMETHANE	5	UG/L		U	5.000								
SW093	SW	REAL	SW00275WC	30-AUG-90	N	TRG	VOCCLPTCL	ETHYLBENZENE	5	UG/L		U	5.000								
SW093	SW	REAL	SW00275WC	30-AUG-90	N	TRG	VOCCLPTCL	METHYLENE CHLORIDE	5	UG/L		U	5 000								
SW093	SW	REAL	SW00275WC	30-AUG-90	N	TRG	VOCCLPTCL	STYRENE	5	UG/L		U	5 000								
SW093	SW	REAL	SW00275WC	30-AUG-90	N	TRG	VOCCLPTCL	TETRACHLOROETHENE	5	UG/L		U	5 000								
SW093	SW	REAL	SW00275WC	30-AUG-90	N	TRG	VOCCLPTCL	TOLUENE	5	UG/L		U	5 000								
SW093	SW	REAL	SW00275WC	30-AUG-90	N	TRG	VOCCLPTCL	TOTAL XYLENES	5	UG/L		U	5 000								
SW093	SW	REAL	SW00275WC	30-AUG-90	N	TRG	VOCCLPTCL	TRICHLOROETHENE	5	UG/L		U	5 000								
SW093	SW	REAL	SW00275WC	30-AUG-90	N	TRG	VOCCLPTCL	VINYL ACETATE	10	UG/L		U	10.00								
SW093	SW	REAL	SW00275WC	30-AUG-90	N	TRG	VOCCLPTCL	VINYL CHLORIDE	10	UG/L		U	10 00								
SW093	SW	REAL	SW00275WC	30-AUG-90	N	TRG	VOCCLPTCL	cis-1,3-DICHLOROPROPENE	5	UG/L		U	5 000								
SW093	SW	REAL	SW00275WC	30-AUG-90	N	TRG	VOCCLPTCL	trans-1,3-DICHLOROPROPENE	5	UG/L		U	5 000								
SW093	SW	REAL	SW00353WC	25-SEP-90	N	TRG	VOCCLPTCL	1,1,1-TRICHLOROETHANE	2	UG/L		J	5.000								
SW093	SW	REAL	SW00353WC	25-SEP-90	N	TRG	VOCCLPTCL	1,1,2,2-TETRACHLOROETHANE	5	UG/L		U	5.000								
SW093	SW	REAL	SW00353WC	25-SEP-90	N	TRG	VOCCLPTCL	1,1,2 TRICHLOROETHANE	5	UG/L		U	5 000								
SW093	SW	REAL	SW00353WC	25-SEP-90	N	TRG	VOCCLPTCL	1,1-DICHLOROETHANE	2	UG/L		J	5 000								
SW093	SW	REAL	SW00353WC	25-SEP-90	N	TRG	VOCCLPTCL	1,1-DICHLOROETHENE	5	UG/L		U	5 000								
SW093	SW	REAL	SW00353WC	25-SEP-90	N	TRG	VOCCLPTCL	1,2-DICHLOROETHANE	5	UG/L		U	5.000								
SW093	SW	REAL	SW00353WC	25-SEP-90	N	TRG	VOCCLPTCL	1,2-DICHLOROETHENE	5	UG/L		U	5 000								
SW093	SW	REAL	SW00353WC	25-SEP-90	N	TRG	VOCCLPTCL	1,2-DICHLOROPROPANE	5	UG/L		U	5 000								
SW093	SW	REAL	SW00353WC	25-SEP-90	N	TRG	VOCCLPTCL	2-BUTANONE	10	UG/L		U	10.00								
SW093	SW	REAL	SW00353WC	25-SEP-90	N	TRG	VOCCLPTCL	2-HEXANONE	10	UG/L		U	10.00								
SW093	SW	REAL	SW00353WC	25-SEP-90	N	TRG	VOCCLPTCL	4-METHYL-2-PENTANONE	10	UG/L		U	10.00								
SW093	SW	REAL	SW00353WC	25-SEP-90	N	TRG	VOCCLPTCL	ACETONE	10	UG/L		U	10.00								
SW093	SW	REAL	SW00353WC	25-SEP-90	N	TRG	VOCCLPTCL	BENZENE	5	UG/L		U	5 000								
SW093	SW	REAL	SW00353WC	25-SEP-90	N	TRG	VOCCLPTCL	BROMODICHLOROMETHANE	5	UG/L		U	5 000								
SW093	SW	REAL	SW00353WC	25-SEP-90	N	TRG	VOCCLPTCL	BROMOFORM	5	UG/L		U	5 000								
SW093	SW	REAL	SW00353WC	25-SEP-90	N	TRG	VOCCLPTCL	BROMOMETHANE	10	UG/L		U	10 00								
SW093	SW	REAL	SW00353WC	25-SEP-90	N	TRG	VOCCLPTCL	CARBON DISULFIDE	5	UG/L		U	5 000								
SW093	SW	REAL	SW00353WC	25-SEP-90	N	TRG	VOCCLPTCL	CARBON TETRACHLORIDE	5	UG/L		U	5 000								
SW093	SW	REAL	SW00353WC	25-SEP-90	N	TRG	VOCCLPTCL	CHLOROBENZENE	5	UG/L		U	5 000								
SW093	SW	REAL	SW00353WC	25-SEP-90	N	TRG	VOCCLPTCL	CHLOROETHANE	10	UG/L		U	10 00								
SW093	SW	REAL	SW00353WC	25-SEP-90	N	TRG	VOCCLPTCL	CHLOROFORM	5	UG/L		U	5 000								
SW093	SW	REAL	SW00353WC	25-SEP-90	N	TRG	VOCCLPTCL	CHLOROMETHANE	10	UG/L		U	10 00								
SW093	SW	REAL	SW00353WC	25-SEP-90	N	TRG	VOCCLPTCL	DIBROMOCHLOROMETHANE	5	UG/L		U	5.000								
SW093	SW	REAL	SW00353WC	25-SEP-90	N	TRG	VOCCLPTCL	ETHYLBENZENE	5	UG/L		U	5 000								
SW093	SW	REAL	SW00353WC	25-SEP-90	N	TRG	VOCCLPTCL	METHYLENE CHLORIDE	5	UG/L		U	5 000								
SW093	SW	REAL	SW00353WC	25-SEP-90	N	TRG	VOCCLPTCL	STYRENE	5	UG/L		U	5.000								
SW093	SW	REAL	SW00353WC	25-SEP-90	N	TRG	VOCCLPTCL	TETRACHLOROETHENE	5	UG/L		U	5 000								
SW093	SW	REAL	SW00353WC	25-SEP-90	N	TRG	VOCCLPTCL	TOLUENE	5	UG/L		U	5 000								
SW093	SW	REAL	SW00353WC	25-SEP-90	N	TRG	VOCCLPTCL	TOTAL XYLENES	5	UG/L		U	5.000								
SW093	SW	REAL	SW00353WC	25-SEP-90	N	TRG	VOCCLPTCL	TRICHLOROETHENE	5	UG/L		U	5 000								
SW093	SW	REAL	SW00353WC	25-SEP-90	N	TRG	VOCCLPTCL	VINYL ACETATE	10	UG/L		U	10.00								
SW093	SW	REAL	SW00353WC	25-SEP-90	N	TRG	VOCCLPTCL	VINYL CHLORIDE	10	UG/L		U	10 00								
SW093	SW	REAL	SW00353WC	25-SEP-90	N	TRG	VOCCLPTCL	cis-1,3-DICHLOROPROPENE	5	UG/L		U	5 000								
SW093	SW	REAL	SW00353WC	25-SEP-90	N	TRG	VOCCLPTCL	trans-1,3-DICHLOROPROPENE	5	UG/L		U	5 000								
SW093	SW	REAL	SW00448WC	17-OCT-90	N	TRG	SVOCLPTCL	1,2,4-TRICHLOROBENZENE	10	UG/L		U	10	V							
SW093	SW	REAL	SW00448WC	17-OCT-90	N	TRG	SVOCLPTCL	1,2-DICHLOROBENZENE	10	UG/L		U	10	V							
SW093	SW	REAL	SW00448WC	17-OCT-90	N	TRG	SVOCLPTCL	1,3-DICHLOROBENZENE	10	UG/L		U	10	V							
SW093	SW	REAL	SW00448WC	17-OCT-90	N	TRG	SVOCLPTCL	1,4-DICHLOROBENZENE	10	UG/L		U	10	V							

Location	ST	QC	Sample Number	Smpl Date	D	ID	Group	Chemical	Result	Unit	Error	Qual	D LMT	VA	RN1	RN2	RN3	RN4	VResult	VQual	VDET
SW093	SW	REAL	SW00448WC	17-OCT-90	N	TRG	SVOCLPTCL	2,4,5-TRICHLOROPHENOL	50	UG/L		U	50	V							
SW093	SW	REAL	SW00448WC	17-OCT-90	N	TRG	SVOCLPTCL	2,4,6-TRICHLOROPHENOL	10	UG/L		U	10	V							
SW093	SW	REAL	SW00448WC	17-OCT-90	N	TRG	SVOCLPTCL	2,4-DICHLOROPHENOL	10	UG/L		U	10	V							
SW093	SW	REAL	SW00448WC	17-OCT-90	N	TRG	SVOCLPTCL	2,4-DIMETHYLPHENOL	10	UG/L		U	10	V							
SW093	SW	REAL	SW00448WC	17-OCT-90	N	TRG	SVOCLPTCL	2,4-DINITROPHENOL	50	UG/L		U	50	V							
SW093	SW	REAL	SW00448WC	17-OCT-90	N	TRG	SVOCLPTCL	2,4-DINITROTOLUENE	10	UG/L		U	10	V							
SW093	SW	REAL	SW00448WC	17-OCT-90	N	TRG	SVOCLPTCL	2,6-DINITROTOLUENE	10	UG/L		U	10	V							
SW093	SW	REAL	SW00448WC	17-OCT-90	N	TRG	SVOCLPTCL	2-CHLORONAPHTHALENE	10	UG/L		U	10	V							
SW093	SW	REAL	SW00448WC	17-OCT-90	N	TRG	SVOCLPTCL	2-CHLOROPHENOL	10	UG/L		U	10	V							
SW093	SW	REAL	SW00448WC	17-OCT-90	N	TRG	SVOCLPTCL	2-METHYLNAPHTHALENE	10	UG/L		U	10	V							
SW093	SW	REAL	SW00448WC	17-OCT-90	N	TRG	SVOCLPTCL	2-METHYLPHENOL	10	UG/L		U	10	V							
SW093	SW	REAL	SW00448WC	17-OCT-90	N	TRG	SVOCLPTCL	2-NITROANILINE	50	UG/L		U	50	V							
SW093	SW	REAL	SW00448WC	17-OCT-90	N	TRG	SVOCLPTCL	2-NITROPHENOL	10	UG/L		U	10	V							
SW093	SW	REAL	SW00448WC	17-OCT-90	N	TRG	SVOCLPTCL	3,3'-DICHLOROBENZIDINE	20	UG/L		U	20	V							
SW093	SW	REAL	SW00448WC	17-OCT-90	N	TRG	SVOCLPTCL	3-NITROANILINE	50	UG/L		U	50	V							
SW093	SW	REAL	SW00448WC	17-OCT-90	N	TRG	SVOCLPTCL	4,6-DINITRO-2-METHYLPHENOL	50	UG/L		U	50	V							
SW093	SW	REAL	SW00448WC	17-OCT-90	N	TRG	SVOCLPTCL	4-BROMOPHENYL PHENYL ETHER	10	UG/L		U	10	V							
SW093	SW	REAL	SW00448WC	17-OCT-90	N	TRG	SVOCLPTCL	4-CHLORO-3-METHYLPHENOL	10	UG/L		U	10	V							
SW093	SW	REAL	SW00448WC	17-OCT-90	N	TRG	SVOCLPTCL	4-CHLOROANILINE	10	UG/L		U	10	V							
SW093	SW	REAL	SW00448WC	17-OCT-90	N	TRG	SVOCLPTCL	4 CHLOROPHENYL PHENYL ETHER	10	UG/L		U	10	V							
SW093	SW	REAL	SW00448WC	17-OCT-90	N	TRG	SVOCLPTCL	4-METHYLPHENOL	10	UG/L		U	10	V							
SW093	SW	REAL	SW00448WC	17-OCT-90	N	TRG	SVOCLPTCL	4-NITROANILINE	50	UG/L		U	50	V							
SW093	SW	REAL	SW00448WC	17-OCT-90	N	TRG	SVOCLPTCL	4-NITROPHENOL	50	UG/L		U	50	V							
SW093	SW	REAL	SW00448WC	17-OCT-90	N	TRG	SVOCLPTCL	ACENAPHTHENE	10	UG/L		U	10	V							
SW093	SW	REAL	SW00448WC	17-OCT-90	N	TRG	SVOCLPTCL	ACENAPHTHYLENE	10	UG/L		U	10	V							
SW093	SW	REAL	SW00448WC	17-OCT-90	N	TRG	SVOCLPTCL	ANTHRACENE	10	UG/L		U	10	V							
SW093	SW	REAL	SW00448WC	17-OCT-90	N	TRG	SVOCLPTCL	BENZO(a)ANTHRACENE	10	UG/L		U	10	V							
SW093	SW	REAL	SW00448WC	17-OCT-90	N	TRG	SVOCLPTCL	BENZO(a)PYRENE	10	UG/L		U	10	V							
SW093	SW	REAL	SW00448WC	17-OCT-90	N	TRG	SVOCLPTCL	BENZO(b)FLUORANTHENE	10	UG/L		U	10	V							
SW093	SW	REAL	SW00448WC	17-OCT-90	N	TRG	SVOCLPTCL	BENZO(ghi)PERYLENE	10	UG/L		U	10	V							
SW093	SW	REAL	SW00448WC	17-OCT-90	N	TRG	SVOCLPTCL	BENZO(k)FLUORANTHENE	10	UG/L		U	10	V							
SW093	SW	REAL	SW00448WC	17-OCT-90	N	TRG	SVOCLPTCL	BENZOIC ACID	50	UG/L		U	50	V							
SW093	SW	REAL	SW00448WC	17-OCT-90	N	TRG	SVOCLPTCL	BENZYL ALCOHOL	10	UG/L		U	10	V							
SW093	SW	REAL	SW00448WC	17-OCT-90	N	TRG	SVOCLPTCL	BIS(2-CHLOROETHOXY)METHANE	10	UG/L		U	10	V							
SW093	SW	REAL	SW00448WC	17-OCT-90	N	TRG	SVOCLPTCL	BIS(2-CHLOROETHYL)ETHER	10	UG/L		U	10	V							
SW093	SW	REAL	SW00448WC	17-OCT-90	N	TRG	SVOCLPTCL	BIS(2-CHLOROISOPROPYL)ETHER	10	UG/L		U	10	V							
SW093	SW	REAL	SW00448WC	17-OCT-90	N	TRG	SVOCLPTCL	BIS(2-ETHYLHEXYL)PHTHALATE	10	UG/L		U	10	V							
SW093	SW	REAL	SW00448WC	17-OCT-90	N	TRG	SVOCLPTCL	BUTYL BENZYL PHTHALATE	10	UG/L		U	10	V							
SW093	SW	REAL	SW00448WC	17-OCT-90	N	TRG	SVOCLPTCL	CHRYSENE	10	UG/L		U	10	V							
SW093	SW	REAL	SW00448WC	17-OCT-90	N	TRG	SVOCLPTCL	DI-n-BUTYL PHTHALATE	10	UG/L		U	10	V							
SW093	SW	REAL	SW00448WC	17-OCT-90	N	TRG	SVOCLPTCL	DI-n-OCTYL PHTHALATE	10	UG/L		U	10	V							
SW093	SW	REAL	SW00448WC	17-OCT-90	N	TRG	SVOCLPTCL	DIBENZO(a,h)ANTHRACENE	10	UG/L		U	10	V							
SW093	SW	REAL	SW00448WC	17-OCT-90	N	TRG	SVOCLPTCL	DIBENZOFURAN	10	UG/L		U	10	V							
SW093	SW	REAL	SW00448WC	17-OCT-90	N	TRG	SVOCLPTCL	DIETHYL PHTHALATE	10	UG/L		U	10	V							
SW093	SW	REAL	SW00448WC	17-OCT-90	N	TRG	SVOCLPTCL	DIMETHYL PHTHALATE	10	UG/L		U	10	V							
SW093	SW	REAL	SW00448WC	17-OCT-90	N	TRG	SVOCLPTCL	FLUORANTHENE	10	UG/L		U	10	V							
SW093	SW	REAL	SW00448WC	17-OCT-90	N	TRG	SVOCLPTCL	FLUORENE	10	UG/L		U	10	V							
SW093	SW	REAL	SW00448WC	17-OCT-90	N	TRG	SVOCLPTCL	HEXACHLOROBENZENE	10	UG/L		U	10	V							
SW093	SW	REAL	SW00448WC	17-OCT-90	N	TRG	SVOCLPTCL	HEXACHLOROBUTADIENE	10	UG/L		U	10	V							
SW093	SW	REAL	SW00448WC	17-OCT-90	N	TRG	SVOCLPTCL	HEXACHLOROCYCLOPENTADIENE	10	UG/L		U	10	V							
SW093	SW	REAL	SW00448WC	17-OCT-90	N	TRG	SVOCLPTCL	HEXACHLOROETHANE	10	UG/L		U	10	V							
SW093	SW	REAL	SW00448WC	17-OCT-90	N	TRG	SVOCLPTCL	INDENO(1,2,3-cd)PYRENE	10	UG/L		U	10	V							
SW093	SW	REAL	SW00448WC	17-OCT-90	N	TRG	SVOCLPTCL	ISOPHORONE	10	UG/L		U	10	V							
SW093	SW	REAL	SW00448WC	17-OCT-90	N	TRG	SVOCLPTCL	N-NITROSO-DI-n-PROPYLAMINE	10	UG/L		U	10	V							
SW093	SW	REAL	SW00448WC	17-OCT-90	N	TRG	SVOCLPTCL	N-NITROSODIPHENYLAMINE	10	UG/L		U	10	V							
SW093	SW	REAL	SW00448WC	17-OCT-90	N	TRG	SVOCLPTCL	NAPHTHALENE	10	UG/L		U	10	V							
SW093	SW	REAL	SW00448WC	17-OCT-90	N	TRG	SVOCLPTCL	NITROBENZENE	10	UG/L		U	10	V							
SW093	SW	REAL	SW00448WC	17-OCT-90	N	TRG	SVOCLPTCL	PENTACHLOROPHENOL	50	UG/L		U	10	V							
SW093	SW	REAL	SW00448WC	17-OCT-90	N	TRG	SVOCLPTCL	PHENANTHRENE	10	UG/L		U	10	V							
SW093	SW	REAL	SW00448WC	17-OCT-90	N	TRG	SVOCLPTCL	PHENOL	10	UG/L		U	10	V							
SW093	SW	REAL	SW00448WC	17-OCT-90	N	TRG	SVOCLPTCL	PYRENE	10	UG/L		U	10	V							
SW093	SW	REAL	SW00448WC	17-OCT-90	N	TRG	VOCCLPTCL	1,1,1-TRICHLOROETHANE	2	UG/L		U	5	A							
SW093	SW	REAL	SW00448WC	17-OCT-90	N	TRG	VOCCLPTCL	1,1,2,2-TETRACHLOROETHANE	5	UG/L		U	5	V							

Location	ST	QC	Sample Number	Smpl Date	D	ID	Group	Chemical	Result	Unit	Error	Qual	D LMT	VA	RN1	RN2	RN3	RN4	VResult	VQual	VDET
SW093	SW	REAL	SW00448WC	17-OCT-90	N	TRG	VOCCLPTCL	1,1,2-TRICHLOROETHANE	5	UG/L		U	5	V							
SW093	SW	REAL	SW00448WC	17-OCT-90	N	TRG	VOCCLPTCL	1,1-DICHLOROETHANE	2	UG/L		J	5	A							
SW093	SW	REAL	SW00448WC	17-OCT-90	N	TRG	VOCCLPTCL	1,1-DICHLOROETHENE	5	UG/L		U	5	V							
SW093	SW	REAL	SW00448WC	17-OCT-90	N	TRG	VOCCLPTCL	1,2-DICHLOROETHANE	5	UG/L		U	5	V							
SW093	SW	REAL	SW00448WC	17-OCT-90	N	TRG	VOCCLPTCL	1,2-DICHLOROETHENE	5	UG/L		U	5	V							
SW093	SW	REAL	SW00448WC	17-OCT-90	N	TRG	VOCCLPTCL	1,2-DICHLOROPROPANE	5	UG/L		U	5	V							
SW093	SW	REAL	SW00448WC	17-OCT-90	N	TRG	VOCCLPTCL	2-BUTANONE	10	UG/L		U	10	V							
SW093	SW	REAL	SW00448WC	17-OCT-90	N	TRG	VOCCLPTCL	2-HEXANONE	10	UG/L		U	10	V							
SW093	SW	REAL	SW00448WC	17-OCT-90	N	TRG	VOCCLPTCL	4-METHYL-2-PENTANONE	10	UG/L		U	10	V							
SW093	SW	REAL	SW00448WC	17-OCT-90	N	TRG	VOCCLPTCL	ACETONE	10	UG/L		U	10	V							
SW093	SW	REAL	SW00448WC	17-OCT-90	N	TRG	VOCCLPTCL	BENZENE	5	UG/L		U	5	V							
SW093	SW	REAL	SW00448WC	17-OCT-90	N	TRG	VOCCLPTCL	BROMODICHLOROMETHANE	5	UG/L		U	5	V							
SW093	SW	REAL	SW00448WC	17-OCT-90	N	TRG	VOCCLPTCL	BROMOFORM	5	UG/L		U	5	V							
SW093	SW	REAL	SW00448WC	17-OCT-90	N	TRG	VOCCLPTCL	BROMOMETHANE	10	UG/L		U	10	V							
SW093	SW	REAL	SW00448WC	17-OCT-90	N	TRG	VOCCLPTCL	CARBON DISULFIDE	5	UG/L		U	5	V							
SW093	SW	REAL	SW00448WC	17-OCT-90	N	TRG	VOCCLPTCL	CARBON TETRACHLORIDE	5	UG/L		U	5	V							
SW093	SW	REAL	SW00448WC	17-OCT-90	N	TRG	VOCCLPTCL	CHLOROBENZENE	5	UG/L		U	5	V							
SW093	SW	REAL	SW00448WC	17-OCT-90	N	TRG	VOCCLPTCL	CHLOROETHANE	10	UG/L		U	10	V							
SW093	SW	REAL	SW00448WC	17-OCT-90	N	TRG	VOCCLPTCL	CHLOROFORM	5	UG/L		U	5	V							
SW093	SW	REAL	SW00448WC	17-OCT-90	N	TRG	VOCCLPTCL	CHLOROMETHANE	10	UG/L		U	10	V							
SW093	SW	REAL	SW00448WC	17-OCT-90	N	TRG	VOCCLPTCL	DIBROMOCHLOROMETHANE	5	UG/L		U	5	V							
SW093	SW	REAL	SW00448WC	17-OCT-90	N	TRG	VOCCLPTCL	ETHYLBENZENE	5	UG/L		U	5	V							
SW093	SW	REAL	SW00448WC	17-OCT-90	N	TRG	VOCCLPTCL	METHYLENE CHLORIDE	5	UG/L		U	5	V							
SW093	SW	REAL	SW00448WC	17-OCT-90	N	TRG	VOCCLPTCL	STYRENE	5	UG/L		U	5	V							
SW093	SW	REAL	SW00448WC	17-OCT-90	N	TRG	VOCCLPTCL	TETRACHLOROETHENE	5	UG/L		U	5	V							
SW093	SW	REAL	SW00448WC	17-OCT-90	N	TRG	VOCCLPTCL	TOLUENE	5	UG/L		U	5	V							
SW093	SW	REAL	SW00448WC	17-OCT-90	N	TRG	VOCCLPTCL	TOTAL XYLENES	5	UG/L		U	5	V							
SW093	SW	REAL	SW00448WC	17-OCT-90	N	TRG	VOCCLPTCL	TRICHLOROETHENE	5	UG/L		U	5	V							
SW093	SW	REAL	SW00448WC	17-OCT-90	N	TRG	VOCCLPTCL	VINYL ACETATE	10	UG/L		U	10	V							
SW093	SW	REAL	SW00448WC	17-OCT-90	N	TRG	VOCCLPTCL	VINYL CHLORIDE	10	UG/L		U	10	V							
SW093	SW	REAL	SW00448WC	17-OCT-90	N	TRG	VOCCLPTCL	cis-1,3-DICHLOROPROPENE	5	UG/L		U	5	V							
SW093	SW	REAL	SW00448WC	17-OCT-90	N	TRG	VOCCLPTCL	trans-1,3-DICHLOROPROPENE	5	UG/L		U	5	V							
SW093	SW	REAL	SW00549WC	19-NOV-90	N	TRG	VOCCLPTCL	1,1,1-TRICHLOROETHANE	5	UG/L		U	5 000	V							
SW093	SW	REAL	SW00549WC	19-NOV-90	N	TRG	VOCCLPTCL	1,1,2,2-TETRACHLOROETHANE	5	UG/L		U	5 000	V							
SW093	SW	REAL	SW00549WC	19-NOV-90	N	TRG	VOCCLPTCL	1,1,2-TRICHLOROETHANE	5	UG/L		U	5.000	V							
SW093	SW	REAL	SW00549WC	19-NOV-90	N	TRG	VOCCLPTCL	1,1-DICHLOROETHANE	5	UG/L		U	5 000	V							
SW093	SW	REAL	SW00549WC	19-NOV-90	N	TRG	VOCCLPTCL	1,1-DICHLOROETHENE	5	UG/L		U	5 000	V							
SW093	SW	REAL	SW00549WC	19-NOV-90	N	TRG	VOCCLPTCL	1,2-DICHLOROETHANE	5	UG/L		U	5 000	V							
SW093	SW	REAL	SW00549WC	19-NOV-90	N	TRG	VOCCLPTCL	1,2-DICHLOROETHENE	5	UG/L		U	5 000	V							
SW093	SW	REAL	SW00549WC	19-NOV-90	N	TRG	VOCCLPTCL	1,2-DICHLOROPROPANE	5	UG/L		U	5 000	V							
SW093	SW	REAL	SW00549WC	19-NOV-90	N	TRG	VOCCLPTCL	2-BUTANONE	10	UG/L		U	10 00	V							
SW093	SW	REAL	SW00549WC	19-NOV-90	N	TRG	VOCCLPTCL	2-HEXANONE	10	UG/L		U	10 00	V							
SW093	SW	REAL	SW00549WC	19-NOV-90	N	TRG	VOCCLPTCL	4-METHYL-2-PENTANONE	10	UG/L		U	10 00	V							
SW093	SW	REAL	SW00549WC	19-NOV-90	N	TRG	VOCCLPTCL	ACETONE	10	UG/L		U	10.00	V							
SW093	SW	REAL	SW00549WC	19-NOV-90	N	TRG	VOCCLPTCL	BENZENE	5	UG/L		U	5 000	V							
SW093	SW	REAL	SW00549WC	19-NOV-90	N	TRG	VOCCLPTCL	BROMODICHLOROMETHANE	5	UG/L		U	5 000	V							
SW093	SW	REAL	SW00549WC	19-NOV-90	N	TRG	VOCCLPTCL	BROMOFORM	5	UG/L		U	5 000	V							
SW093	SW	REAL	SW00549WC	19-NOV-90	N	TRG	VOCCLPTCL	BROMOMETHANE	10	UG/L		U	10 00	V							
SW093	SW	REAL	SW00549WC	19-NOV-90	N	TRG	VOCCLPTCL	CARBON DISULFIDE	5	UG/L		U	5.000	V							
SW093	SW	REAL	SW00549WC	19-NOV-90	N	TRG	VOCCLPTCL	CARBON TETRACHLORIDE	5	UG/L		U	5 000	V							
SW093	SW	REAL	SW00549WC	19-NOV-90	N	TRG	VOCCLPTCL	CHLOROBENZENE	5	UG/L		U	5 000	V							
SW093	SW	REAL	SW00549WC	19-NOV-90	N	TRG	VOCCLPTCL	CHLOROETHANE	10	UG/L		U	10.00	V							
SW093	SW	REAL	SW00549WC	19-NOV-90	N	TRG	VOCCLPTCL	CHLOROFORM	5	UG/L		U	5.000	V							
SW093	SW	REAL	SW00549WC	19-NOV-90	N	TRG	VOCCLPTCL	CHLOROMETHANE	10	UG/L		U	10 00	V							
SW093	SW	REAL	SW00549WC	19-NOV-90	N	TRG	VOCCLPTCL	DIBROMOCHLOROMETHANE	5	UG/L		U	5.000	V							
SW093	SW	REAL	SW00549WC	19-NOV-90	N	TRG	VOCCLPTCL	ETHYLBENZENE	5	UG/L		U	5.000	V							
SW093	SW	REAL	SW00549WC	19-NOV-90	N	TRG	VOCCLPTCL	METHYLENE CHLORIDE	5	UG/L		U	5.000	V							
SW093	SW	REAL	SW00549WC	19-NOV-90	N	TRG	VOCCLPTCL	STYRENE	5	UG/L		U	5.000	V							
SW093	SW	REAL	SW00549WC	19-NOV-90	N	TRG	VOCCLPTCL	TETRACHLOROETHENE	5	UG/L		U	5.000	V							
SW093	SW	REAL	SW00549WC	19-NOV-90	N	TRG	VOCCLPTCL	TOLUENE	5	UG/L		U	5.000	V							
SW093	SW	REAL	SW00549WC	19-NOV-90	N	TRG	VOCCLPTCL	TOTAL XYLENES	5	UG/L		U	5.000	V							
SW093	SW	REAL	SW00549WC	19-NOV-90	N	TRG	VOCCLPTCL	TRICHLOROETHENE	5	UG/L		U	5.000	V							
SW093	SW	REAL	SW00549WC	19-NOV-90	N	TRG	VOCCLPTCL	VINYL ACETATE	10	UG/L		U	10.00	V							

Location	ST	QC	Sample Number	Smpl Date	D	ID	Group	Chemical	Result	Unit	Error	Qual	D LMT	VA	RN1	RN2	RN3	RN4	VResult	VQual	VDET
SW093	SW	REAL	SW00549WC	19-NOV-90	N	TRG	VOCCLPTCL	VINYL CHLORIDE	10	UG/L		U	10.00	V							
SW093	SW	REAL	SW00549WC	19-NOV-90	N	TRG	VOCCLPTCL	cis-1,3-DICHLOROPROPENE	5	UG/L		U	5 000	V							
SW093	SW	REAL	SW00549WC	19-NOV-90	N	TRG	VOCCLPTCL	trans-1,3-DICHLOROPROPENE	5	UG/L		U	5 000	V							
SW093	SW	REAL	SW09390001	29-JAN-90	N	MS	VOCCLPTCL	1,1,1-TRICHLOROETHANE	10	UG/L		U									
SW093	SW	REAL	SW09390001	29-JAN-90	N	MS	VOCCLPTCL	1,1,2,2-TETRACHLOROETHANE	5	UG/L		U									
SW093	SW	REAL	SW09390001	29-JAN-90	N	MS	VOCCLPTCL	1,1,2-TRICHLOROETHANE	5	UG/L		U									
SW093	SW	REAL	SW09390001	29-JAN-90	N	MS	VOCCLPTCL	1,1-DICHLOROETHANE		UG/L		J									
SW093	SW	REAL	SW09390001	29-JAN-90	N	MS	VOCCLPTCL	1,1-DICHLOROETHENE		UG/L											
SW093	SW	REAL	SW09390001	29-JAN-90	N	MS	VOCCLPTCL	1,2-DICHLOROETHANE	5	UG/L		U									
SW093	SW	REAL	SW09390001	29-JAN-90	N	MS	VOCCLPTCL	1,2-DICHLOROETHENE	1	UG/L		J									
SW093	SW	REAL	SW09390001	29-JAN-90	N	MS	VOCCLPTCL	1,2-DICHLOROPROPANE	5	UG/L		U									
SW093	SW	REAL	SW09390001	29-JAN-90	N	MS	VOCCLPTCL	2-BUTANONE	5	UG/L		U									
SW093	SW	REAL	SW09390001	29-JAN-90	N	MS	VOCCLPTCL	2-HEXANONE	10	UG/L		U									
SW093	SW	REAL	SW09390001	29-JAN-90	N	MS	VOCCLPTCL	4-METHYL-2-PENTANONE	5	UG/L		U									
SW093	SW	REAL	SW09390001	29-JAN-90	N	MS	VOCCLPTCL	ACETONE	10	UG/L		U									
SW093	SW	REAL	SW09390001	29-JAN-90	N	MS	VOCCLPTCL	BENZENE	5	UG/L											
SW093	SW	REAL	SW09390001	29-JAN-90	N	MS	VOCCLPTCL	BROMODICHLOROMETHANE	10	UG/L		U									
SW093	SW	REAL	SW09390001	29-JAN-90	N	MS	VOCCLPTCL	BROMOFORM	5	UG/L		U									
SW093	SW	REAL	SW09390001	29-JAN-90	N	MS	VOCCLPTCL	BROMOMETHANE	10	UG/L		U									
SW093	SW	REAL	SW09390001	29-JAN-90	N	MS	VOCCLPTCL	CARBON DISULFIDE	5	UG/L		U									
SW093	SW	REAL	SW09390001	29-JAN-90	N	MS	VOCCLPTCL	CARBON TETRACHLORIDE	5	UG/L		U									
SW093	SW	REAL	SW09390001	29-JAN-90	N	MS	VOCCLPTCL	CHLOROBENZENE		UG/L											
SW093	SW	REAL	SW09390001	29-JAN-90	N	MS	VOCCLPTCL	CHLOROETHANE	10	UG/L		U									
SW093	SW	REAL	SW09390001	29-JAN-90	N	MS	VOCCLPTCL	CHLOROFORM	1	UG/L		U									
SW093	SW	REAL	SW09390001	29-JAN-90	N	MS	VOCCLPTCL	CHLOROMETHANE	10	UG/L		U									
SW093	SW	REAL	SW09390001	29-JAN-90	N	MS	VOCCLPTCL	DIBROMOCHLOROMETHANE		UG/L		U									
SW093	SW	REAL	SW09390001	29-JAN-90	N	MS	VOCCLPTCL	ETHYLBENZENE	5	UG/L		U									
SW093	SW	REAL	SW09390001	29-JAN-90	N	MS	VOCCLPTCL	METHYLENE CHLORIDE	6	UG/L											
SW093	SW	REAL	SW09390001	29-JAN-90	N	MS	VOCCLPTCL	STYRENE	5	UG/L		U									
SW093	SW	REAL	SW09390001	29-JAN-90	N	MS	VOCCLPTCL	TETRACHLOROETHENE	10	UG/L		U									
SW093	SW	REAL	SW09390001	29-JAN-90	N	MS	VOCCLPTCL	TOLUENE	5	UG/L											
SW093	SW	REAL	SW09390001	29-JAN-90	N	MS	VOCCLPTCL	TOTAL XYLENES	5	UG/L		U									
SW093	SW	REAL	SW09390001	29-JAN-90	N	MS	VOCCLPTCL	TRICHLOROETHENE	5	UG/L											
SW093	SW	REAL	SW09390001	29-JAN-90	N	MS	VOCCLPTCL	VINYL ACETATE	5	UG/L		U									
SW093	SW	REAL	SW09390001	29-JAN-90	N	MS	VOCCLPTCL	VINYL CHLORIDE	10	UG/L		U									
SW093	SW	REAL	SW09390001	29-JAN-90	N	MS	VOCCLPTCL	cis-1,3-DICHLOROPROPENE	5	UG/L		U									
SW093	SW	REAL	SW09390001	29-JAN-90	N	MS	VOCCLPTCL	trans-1,3-DICHLOROPROPENE		UG/L		U									
SW093	SW	REAL	SW09390001	29-JAN-90	N	MSD	VOCCLPTCL	1,1,1-TRICHLOROETHANE	5	UG/L		U									
SW093	SW	REAL	SW09390001	29-JAN-90	N	MSD	VOCCLPTCL	1,1,2,2-TETRACHLOROETHANE	5	UG/L		U									
SW093	SW	REAL	SW09390001	29-JAN-90	N	MSD	VOCCLPTCL	1,1,2-TRICHLOROETHANE	5	UG/L		U									
SW093	SW	REAL	SW09390001	29-JAN-90	N	MSD	VOCCLPTCL	1,1-DICHLOROETHANE	1	UG/L		J									
SW093	SW	REAL	SW09390001	29-JAN-90	N	MSD	VOCCLPTCL	1,1-DICHLOROETHENE	90	UG/L		%									
SW093	SW	REAL	SW09390001	29-JAN-90	N	MSD	VOCCLPTCL	1,2-DICHLOROETHANE	5	UG/L		U									
SW093	SW	REAL	SW09390001	29-JAN-90	N	MSD	VOCCLPTCL	1,2-DICHLOROETHENE	5	UG/L		U									
SW093	SW	REAL	SW09390001	29-JAN-90	N	MSD	VOCCLPTCL	1,2-DICHLOROPROPANE	5	UG/L		U									
SW093	SW	REAL	SW09390001	29-JAN-90	N	MSD	VOCCLPTCL	2-BUTANONE	10	UG/L		U									
SW093	SW	REAL	SW09390001	29-JAN-90	N	MSD	VOCCLPTCL	2-HEXANONE	10	UG/L		U									
SW093	SW	REAL	SW09390001	29-JAN-90	N	MSD	VOCCLPTCL	4-METHYL-2-PENTANONE	10	UG/L		U									
SW093	SW	REAL	SW09390001	29-JAN-90	N	MSD	VOCCLPTCL	ACETONE	10	UG/L		U									
SW093	SW	REAL	SW09390001	29-JAN-90	N	MSD	VOCCLPTCL	BENZENE	108	UG/L		%									
SW093	SW	REAL	SW09390001	29-JAN-90	N	MSD	VOCCLPTCL	BROMODICHLOROMETHANE	5	UG/L		U									
SW093	SW	REAL	SW09390001	29-JAN-90	N	MSD	VOCCLPTCL	BROMOFORM	5	UG/L		U									
SW093	SW	REAL	SW09390001	29-JAN-90	N	MSD	VOCCLPTCL	BROMOMETHANE	10	UG/L		U									
SW093	SW	REAL	SW09390001	29-JAN-90	N	MSD	VOCCLPTCL	CARBON DISULFIDE	5	UG/L		U									
SW093	SW	REAL	SW09390001	29-JAN-90	N	MSD	VOCCLPTCL	CARBON TETRACHLORIDE	5	UG/L		U									
SW093	SW	REAL	SW09390001	29-JAN-90	N	MSD	VOCCLPTCL	CHLOROBENZENE	103	UG/L		%									
SW093	SW	REAL	SW09390001	29-JAN-90	N	MSD	VOCCLPTCL	CHLOROETHANE	10	UG/L		U									
SW093	SW	REAL	SW09390001	29-JAN-90	N	MSD	VOCCLPTCL	CHLOROFORM	5	UG/L		U									
SW093	SW	REAL	SW09390001	29-JAN-90	N	MSD	VOCCLPTCL	CHLOROMETHANE	10	UG/L		U									
SW093	SW	REAL	SW09390001	29-JAN-90	N	MSD	VOCCLPTCL	DIBROMOCHLOROMETHANE	5	UG/L		U									
SW093	SW	REAL	SW09390001	29-JAN-90	N	MSD	VOCCLPTCL	ETHYLBENZENE	5	UG/L		U									
SW093	SW	REAL	SW09390001	29-JAN-90	N	MSD	VOCCLPTCL	METHYLENE CHLORIDE	6	UG/L											
SW093	SW	REAL	SW09390001	29-JAN-90	N	MSD	VOCCLPTCL	STYRENE	5	UG/L		U									

Location	ST	QC	Sample Number	Smpl Date	D	ID	Group	Chemical	Result	Unit	Error	Qual	D	LMT	VA	RN1	RN2	RN3	RN4	VResult	VQual	VDET
SW093	SW	REAL	SW09390001	29-JAN-90	N	MSD	VOCCLPTCL	TETRACHLOROETHENE	5	UG/L		U										
SW093	SW	REAL	SW09390001	29-JAN-90	N	MSD	VOCCLPTCL	TOLUENE	96	UG/L		X										
SW093	SW	REAL	SW09390001	29-JAN-90	N	MSD	VOCCLPTCL	TOTAL XYLENES	5	UG/L		U										
SW093	SW	REAL	SW09390001	29-JAN-90	N	MSD	VOCCLPTCL	TRICHLOROETHENE	112	UG/L		X										
SW093	SW	REAL	SW09390001	29-JAN-90	N	MSD	VOCCLPTCL	VINYL ACETATE	10	UG/L		U										
SW093	SW	REAL	SW09390001	29-JAN-90	N	MSD	VOCCLPTCL	VINYL CHLORIDE	10	UG/L		U										
SW093	SW	REAL	SW09390001	29-JAN-90	N	MSD	VOCCLPTCL	cis-1,3-DICHLOROPROPENE	5	UG/L		U										
SW093	SW	REAL	SW09390001	29-JAN-90	N	MSD	VOCCLPTCL	trans-1,3-DICHLOROPROPENE	5	UG/L		U										
SW093	SW	REAL	SW09390001	29-JAN-90	N	TRG	VOCCLPTCL	1,1,1-TRICHLOROETHANE	5	UG/L		U	5									
SW093	SW	REAL	SW09390001	29-JAN-90	N	TRG	VOCCLPTCL	1,1,2,2-TETRACHLOROETHANE	5	UG/L		U	5									
SW093	SW	REAL	SW09390001	29-JAN-90	N	TRG	VOCCLPTCL	1,1,2-TRICHLOROETHANE	5	UG/L		U	5									
SW093	SW	REAL	SW09390001	29-JAN-90	N	TRG	VOCCLPTCL	1,1-DICHLOROETHANE	1	UG/L		J	5									
SW093	SW	REAL	SW09390001	29-JAN-90	N	TRG	VOCCLPTCL	1,1-DICHLOROETHENE	5	UG/L		U	5									
SW093	SW	REAL	SW09390001	29-JAN-90	N	TRG	VOCCLPTCL	1,2-DICHLOROETHANE	5	UG/L		U	5									
SW093	SW	REAL	SW09390001	29-JAN-90	N	TRG	VOCCLPTCL	1,2-DICHLOROETHENE	5	UG/L		U	5									
SW093	SW	REAL	SW09390001	29-JAN-90	N	TRG	VOCCLPTCL	1,2-DICHLOROPROPANE	5	UG/L		U	5									
SW093	SW	REAL	SW09390001	29-JAN-90	N	TRG	VOCCLPTCL	2-BUTANONE	10	UG/L		U	10									
SW093	SW	REAL	SW09390001	29-JAN-90	N	TRG	VOCCLPTCL	2-HEXANONE	10	UG/L		U	10									
SW093	SW	REAL	SW09390001	29-JAN-90	N	TRG	VOCCLPTCL	4-METHYL-2-PENTANONE	10	UG/L		U	10									
SW093	SW	REAL	SW09390001	29-JAN-90	N	TRG	VOCCLPTCL	ACETONE	10	UG/L		U	10									
SW093	SW	REAL	SW09390001	29-JAN-90	N	TRG	VOCCLPTCL	BENZENE	5	UG/L		U	5									
SW093	SW	REAL	SW09390001	29-JAN-90	N	TRG	VOCCLPTCL	BROMODICHLOROMETHANE	5	UG/L		U	5									
SW093	SW	REAL	SW09390001	29-JAN-90	N	TRG	VOCCLPTCL	BROMOFORM	5	UG/L		U	5									
SW093	SW	REAL	SW09390001	29-JAN-90	N	TRG	VOCCLPTCL	BROMOMETHANE	10	UG/L		U	10									
SW093	SW	REAL	SW09390001	29-JAN-90	N	TRG	VOCCLPTCL	CARBON DISULFIDE	5	UG/L		U	5									
SW093	SW	REAL	SW09390001	29-JAN-90	N	TRG	VOCCLPTCL	CARBON TETRACHLORIDE	5	UG/L		U	5									
SW093	SW	REAL	SW09390001	29-JAN-90	N	TRG	VOCCLPTCL	CHLOROBENZENE	5	UG/L		U	5									
SW093	SW	REAL	SW09390001	29-JAN-90	N	TRG	VOCCLPTCL	CHLOROETHANE	10	UG/L		U	10									
SW093	SW	REAL	SW09390001	29-JAN-90	N	TRG	VOCCLPTCL	CHLOROFORM	5	UG/L		U	5									
SW093	SW	REAL	SW09390001	29-JAN-90	N	TRG	VOCCLPTCL	CHLOROMETHANE	10	UG/L		U	10									
SW093	SW	REAL	SW09390001	29-JAN-90	N	TRG	VOCCLPTCL	DIBROMOCHLOROMETHANE	5	UG/L		U	5									
SW093	SW	REAL	SW09390001	29-JAN-90	N	TRG	VOCCLPTCL	ETHYLBENZENE	5	UG/L		U	5									
SW093	SW	REAL	SW09390001	29-JAN-90	N	TRG	VOCCLPTCL	METHYLENE CHLORIDE	7	UG/L		B	5									
SW093	SW	REAL	SW09390001	29-JAN-90	N	TRG	VOCCLPTCL	STYRENE	5	UG/L		U	5									
SW093	SW	REAL	SW09390001	29-JAN-90	N	TRG	VOCCLPTCL	TETRACHLOROETHENE	5	UG/L		U	5									
SW093	SW	REAL	SW09390001	29-JAN-90	N	TRG	VOCCLPTCL	TOLUENE	5	UG/L		U	5									
SW093	SW	REAL	SW09390001	29-JAN-90	N	TRG	VOCCLPTCL	TOTAL XYLENES	5	UG/L		U	5									
SW093	SW	REAL	SW09390001	29-JAN-90	N	TRG	VOCCLPTCL	TRICHLOROETHENE	5	UG/L		U	5									
SW093	SW	REAL	SW09390001	29-JAN-90	N	TRG	VOCCLPTCL	VINYL ACETATE	10	UG/L		U	10									
SW093	SW	REAL	SW09390001	29-JAN-90	N	TRG	VOCCLPTCL	VINYL CHLORIDE	10	UG/L		U	10									
SW093	SW	REAL	SW09390001	29-JAN-90	N	TRG	VOCCLPTCL	cis-1,3-DICHLOROPROPENE	5	UG/L		U	5									
SW093	SW	REAL	SW09390001	29-JAN-90	N	TRG	VOCCLPTCL	trans-1,3-DICHLOROPROPENE	5	UG/L		U	5									
SW093	SW	REAL	SW09390002	21-FEB-90	N	TRG	VOCCLPTCL	1,1,1-TRICHLOROETHANE	5	UG/L		U										
SW093	SW	REAL	SW09390002	21-FEB-90	N	TRG	VOCCLPTCL	1,1,2,2-TETRACHLOROETHANE	5	UG/L		U										
SW093	SW	REAL	SW09390002	21-FEB-90	N	TRG	VOCCLPTCL	1,1,2-TRICHLOROETHANE	5	UG/L		U										
SW093	SW	REAL	SW09390002	21-FEB-90	N	TRG	VOCCLPTCL	1,1-DICHLOROETHANE	5	UG/L		U										
SW093	SW	REAL	SW09390002	21-FEB-90	N	TRG	VOCCLPTCL	1,1-DICHLOROETHENE	5	UG/L		U										
SW093	SW	REAL	SW09390002	21-FEB-90	N	TRG	VOCCLPTCL	1,2-DICHLOROETHANE	5	UG/L		U										
SW093	SW	REAL	SW09390002	21-FEB-90	N	TRG	VOCCLPTCL	1,2-DICHLOROETHENE	5	UG/L		U										
SW093	SW	REAL	SW09390002	21-FEB-90	N	TRG	VOCCLPTCL	1,2-DICHLOROPROPANE	5	UG/L		U										
SW093	SW	REAL	SW09390002	21-FEB-90	N	TRG	VOCCLPTCL	2-BUTANONE	10	UG/L		U										
SW093	SW	REAL	SW09390002	21-FEB-90	N	TRG	VOCCLPTCL	2-HEXANONE	10	UG/L		U										
SW093	SW	REAL	SW09390002	21-FEB-90	N	TRG	VOCCLPTCL	4-METHYL-2-PENTANONE	10	UG/L		U										
SW093	SW	REAL	SW09390002	21-FEB-90	N	TRG	VOCCLPTCL	ACETONE	10	UG/L		U										
SW093	SW	REAL	SW09390002	21-FEB-90	N	TRG	VOCCLPTCL	BENZENE	5	UG/L		U										
SW093	SW	REAL	SW09390002	21-FEB-90	N	TRG	VOCCLPTCL	BROMODICHLOROMETHANE	5	UG/L		U										
SW093	SW	REAL	SW09390002	21-FEB-90	N	TRG	VOCCLPTCL	BROMOFORM	5	UG/L		U										
SW093	SW	REAL	SW09390002	21-FEB-90	N	TRG	VOCCLPTCL	BROMOMETHANE	10	UG/L		U										
SW093	SW	REAL	SW09390002	21-FEB-90	N	TRG	VOCCLPTCL	CARBON DISULFIDE	5	UG/L		U										
SW093	SW	REAL	SW09390002	21-FEB-90	N	TRG	VOCCLPTCL	CARBON TETRACHLORIDE	5	UG/L		U										
SW093	SW	REAL	SW09390002	21-FEB-90	N	TRG	VOCCLPTCL	CHLOROBENZENE	5	UG/L		U										
SW093	SW	REAL	SW09390002	21-FEB-90	N	TRG	VOCCLPTCL	CHLOROETHANE	10	UG/L		U										
SW093	SW	REAL	SW09390002	21-FEB-90	N	TRG	VOCCLPTCL	CHLOROFORM	5	UG/L		U										

Location	ST	QC	Sample Number	Smpl Date	D	ID	Group	Chemical	Result	Unit	Error	Qual	D LMT	VA	RN1	RN2	RN3	RN4	VResult	VQual	VDET
[illegible]	SW	REAL	SW09390002	21-FEB-90	N	TRG	VOCCLPTCL	CHLOROMETHANE	10	UG/L		U									
[illegible]	SW	REAL	SW09390002	21-FEB-90	N	TRG	VOCCLPTCL	DIBROMOCHLOROMETHANE	5	UG/L		U									
[illegible]	SW	REAL	SW09390002	21-FEB-90	N	TRG	VOCCLPTCL	ETHYLBENZENE	5	UG/L		U									
SW093	SW	REAL	SW09390002	21-FEB-90	N	TRG	VOCCLPTCL	METHYLENE CHLORIDE	4	UG/L		JB									
SW093	SW	REAL	SW09390002	21-FEB-90	N	TRG	VOCCLPTCL	STYRENE	5	UG/L		U									
SW093	SW	REAL	SW09390002	21-FEB-90	N	TRG	VOCCLPTCL	TETRACHLOROETHENE	5	UG/L		U									
SW093	SW	REAL	SW09390002	21-FEB-90	N	TRG	VOCCLPTCL	TOLUENE	5	UG/L		U									
SW093	SW	REAL	SW09390002	21-FEB-90	N	TRG	VOCCLPTCL	TOTAL XYLENES	5	UG/L		U									
SW093	SW	REAL	SW09390002	21-FEB-90	N	TRG	VOCCLPTCL	TRICHLOROETHENE	5	UG/L		U									
SW093	SW	REAL	SW09390002	21-FEB-90	N	TRG	VOCCLPTCL	VINYL ACETATE	10	UG/L		U									
SW093	SW	REAL	SW09390002	21-FEB-90	N	TRG	VOCCLPTCL	VINYL CHLORIDE	10	UG/L		U									
SW093	SW	REAL	SW09390002	21-FEB-90	N	TRG	VOCCLPTCL	cis-1,3-DICHLOROPROPENE	5	UG/L		U									
SW093	SW	REAL	SW09390002	21-FEB-90	N	TRG	VOCCLPTCL	trans-1,3-DICHLOROPROPENE	5	UG/L		U									
SW093	SW	REAL	SW09390003	16-MAR-90	N	TRG	VOCCLPTCL	1,1,1-TRICHLOROETHANE	5	UG/L		U									
SW093	SW	REAL	SW09390003	16-MAR-90	N	TRG	VOCCLPTCL	1,1,1-TRICHLOROETHANE					5								
SW093	SW	REAL	SW09390003	16-MAR-90	N	TRG	VOCCLPTCL	1,1,2,2-TETRACHLOROETHANE	5	UG/L		U									
SW093	SW	REAL	SW09390003	16-MAR-90	N	TRG	VOCCLPTCL	1,1,2,2-TETRACHLOROETHANE					5								
SW093	SW	REAL	SW09390003	16-MAR-90	N	TRG	VOCCLPTCL	1,1,2-TRICHLOROETHANE	5	UG/L		U									
SW093	SW	REAL	SW09390003	16-MAR-90	N	TRG	VOCCLPTCL	1,1,2-TRICHLOROETHANE					5								
SW093	SW	REAL	SW09390003	16-MAR-90	N	TRG	VOCCLPTCL	1,1-DICHLOROETHANE	5	UG/L		U									
SW093	SW	REAL	SW09390003	16-MAR-90	N	TRG	VOCCLPTCL	1,1-DICHLOROETHANE					5								
SW093	SW	REAL	SW09390003	16-MAR-90	N	TRG	VOCCLPTCL	1,1-DICHLOROETHENE	5	UG/L		U									
SW093	SW	REAL	SW09390003	16-MAR-90	N	TRG	VOCCLPTCL	1,1-DICHLOROETHENE					5								
SW093	SW	REAL	SW09390003	16-MAR-90	N	TRG	VOCCLPTCL	1,2-DICHLOROETHANE	5	UG/L		U									
SW093	SW	REAL	SW09390003	16-MAR-90	N	TRG	VOCCLPTCL	1,2-DICHLOROETHANE					5								
SW093	SW	REAL	SW09390003	16-MAR-90	N	TRG	VOCCLPTCL	1,2-DICHLOROETHENE	5	UG/L		U									
SW093	SW	REAL	SW09390003	16-MAR-90	N	TRG	VOCCLPTCL	1,2-DICHLOROETHENE					5								
SW093	SW	REAL	SW09390003	16-MAR-90	N	TRG	VOCCLPTCL	1,2-DICHLOROPROPANE	5	UG/L		U									
SW093	SW	REAL	SW09390003	16-MAR-90	N	TRG	VOCCLPTCL	1,2-DICHLOROPROPANE					5								
SW093	SW	REAL	SW09390003	16-MAR-90	N	TRG	VOCCLPTCL	2-BUTANONE	10	UG/L		U									
SW093	SW	REAL	SW09390003	16-MAR-90	N	TRG	VOCCLPTCL	2-BUTANONE					10								
SW093	SW	REAL	SW09390003	16-MAR-90	N	TRG	VOCCLPTCL	2-HEXANONE	10	UG/L		U									
SW093	SW	REAL	SW09390003	16-MAR-90	N	TRG	VOCCLPTCL	2-HEXANONE					10								
SW093	SW	REAL	SW09390003	16-MAR-90	N	TRG	VOCCLPTCL	4-METHYL-2-PENTANONE	10	UG/L		U									
SW093	SW	REAL	SW09390003	16-MAR-90	N	TRG	VOCCLPTCL	4-METHYL-2-PENTANONE					10								
SW093	SW	REAL	SW09390003	16-MAR-90	N	TRG	VOCCLPTCL	ACETONE	10	UG/L		U									
SW093	SW	REAL	SW09390003	16-MAR-90	N	TRG	VOCCLPTCL	ACETONE					10								
SW093	SW	REAL	SW09390003	16-MAR-90	N	TRG	VOCCLPTCL	BENZENE	5	UG/L		U									
SW093	SW	REAL	SW09390003	16-MAR-90	N	TRG	VOCCLPTCL	BENZENE					5								
SW093	SW	REAL	SW09390003	16-MAR-90	N	TRG	VOCCLPTCL	BROMODICHLOROMETHANE	5	UG/L		U									
SW093	SW	REAL	SW09390003	16-MAR-90	N	TRG	VOCCLPTCL	BROMODICHLOROMETHANE					5								
SW093	SW	REAL	SW09390003	16-MAR-90	N	TRG	VOCCLPTCL	BROMOFORM	5	UG/L		U									
SW093	SW	REAL	SW09390003	16-MAR-90	N	TRG	VOCCLPTCL	BROMOFORM					5								
SW093	SW	REAL	SW09390003	16-MAR-90	N	TRG	VOCCLPTCL	BROMOMETHANE	10	UG/L		U									
SW093	SW	REAL	SW09390003	16-MAR-90	N	TRG	VOCCLPTCL	BROMOMETHANE					10								
SW093	SW	REAL	SW09390003	16-MAR-90	N	TRG	VOCCLPTCL	CARBON DISULFIDE	5	UG/L		U									
SW093	SW	REAL	SW09390003	16-MAR-90	N	TRG	VOCCLPTCL	CARBON DISULFIDE					5								
SW093	SW	REAL	SW09390003	16-MAR-90	N	TRG	VOCCLPTCL	CARBON TETRACHLORIDE	5	UG/L		U									
SW093	SW	REAL	SW09390003	16-MAR-90	N	TRG	VOCCLPTCL	CARBON TETRACHLORIDE					5								
SW093	SW	REAL	SW09390003	16-MAR-90	N	TRG	VOCCLPTCL	CHLOROBENZENE	5	UG/L		U									
SW093	SW	REAL	SW09390003	16-MAR-90	N	TRG	VOCCLPTCL	CHLOROBENZENE					5								
SW093	SW	REAL	SW09390003	16-MAR-90	N	TRG	VOCCLPTCL	CHLOROETHANE	10	UG/L		U									
SW093	SW	REAL	SW09390003	16-MAR-90	N	TRG	VOCCLPTCL	CHLOROETHANE					10								
SW093	SW	REAL	SW09390003	16-MAR-90	N	TRG	VOCCLPTCL	CHLOROFORM	5	UG/L		U									
SW093	SW	REAL	SW09390003	16-MAR-90	N	TRG	VOCCLPTCL	CHLOROFORM					5								
SW093	SW	REAL	SW09390003	16-MAR-90	N	TRG	VOCCLPTCL	CHLOROMETHANE	10	UG/L		U									
SW093	SW	REAL	SW09390003	16-MAR-90	N	TRG	VOCCLPTCL	CHLOROMETHANE					10								
SW093	SW	REAL	SW09390003	16-MAR-90	N	TRG	VOCCLPTCL	DIBROMOCHLOROMETHANE	5	UG/L		U									
SW093	SW	REAL	SW09390003	16-MAR-90	N	TRG	VOCCLPTCL	DIBROMOCHLOROMETHANE					5								
SW093	SW	REAL	SW09390003	16-MAR-90	N	TRG	VOCCLPTCL	ETHYLBENZENE	5	UG/L		U									
SW093	SW	REAL	SW09390003	16-MAR-90	N	TRG	VOCCLPTCL	ETHYLBENZENE					5								
SW093	SW	REAL	SW09390003	16-MAR-90	N	TRG	VOCCLPTCL	METHYLENE CHLORIDE	5	UG/L		U									
SW093	SW	REAL	SW09390003	16-MAR-90	N	TRG	VOCCLPTCL	METHYLENE CHLORIDE					5								

ocation	ST	QC	Sample Number	Smpl Date	D	ID	Group	Chemical	Result	Unit	Error	Qual	D LMT	VA	RN1	RN2	RN3	RN4	VResult	VQual	VDET
W093	SW	REAL	SW09390003	16-MAR-90	N	TRG	VOCCLPTCL	STYRENE	5	UG/L		U									
W093	SW	REAL	SW09390003	16-MAR-90	N	TRG	VOCCLPTCL	STYRENE					5								
W093	SW	REAL	SW09390003	16-MAR-90	N	TRG	VOCCLPTCL	TETRACHLOROETHENE	5	UG/L		U									
W093	SW	REAL	SW09390003	16-MAR-90	N	TRG	VOCCLPTCL	TETRACHLOROETHENE					5								
W093	SW	REAL	SW09390003	16-MAR-90	N	TRG	VOCCLPTCL	TOLUENE	5	UG/L		U									
W093	SW	REAL	SW09390003	16-MAR-90	N	TRG	VOCCLPTCL	TOLUENE					5								
W093	SW	REAL	SW09390003	16-MAR-90	N	TRG	VOCCLPTCL	TOTAL XYLENES	5	UG/L		U									
W093	SW	REAL	SW09390003	16-MAR-90	N	TRG	VOCCLPTCL	TOTAL XYLENES					5								
W093	SW	REAL	SW09390003	16-MAR-90	N	TRG	VOCCLPTCL	TRICHLOROETHENE	5	UG/L		U									
W093	SW	REAL	SW09390003	16-MAR-90	N	TRG	VOCCLPTCL	TRICHLOROETHENE					5								
W093	SW	REAL	SW09390003	16-MAR-90	N	TRG	VOCCLPTCL	VINYL ACETATE	10	UG/L		U									
W093	SW	REAL	SW09390003	16-MAR-90	N	TRG	VOCCLPTCL	VINYL ACETATE					10								
W093	SW	REAL	SW09390003	16-MAR-90	N	TRG	VOCCLPTCL	VINYL CHLORIDE	10	UG/L		U									
W093	SW	REAL	SW09390003	16-MAR-90	N	TRG	VOCCLPTCL	VINYL CHLORIDE					10								
W093	SW	REAL	SW09390003	16-MAR-90	N	TRG	VOCCLPTCL	cis-1,3-DICHLOROPROPENE	5	UG/L		U									
W093	SW	REAL	SW09390003	16-MAR-90	N	TRG	VOCCLPTCL	cis-1,3-DICHLOROPROPENE					5								
W093	SW	REAL	SW09390003	16-MAR-90	N	TRG	VOCCLPTCL	trans-1,3-DICHLOROPROPENE	5	UG/L		U									
W093	SW	REAL	SW09390003	16-MAR-90	N	TRG	VOCCLPTCL	trans-1,3-DICHLOROPROPENE					5								
W093	SW	REAL	SW093W052990A	29-MAY-90	N																
W093	SW	REAL	SW70003WC	23-JUL-90	N																
W093	SW	REAL	SW70006WC	24-JUL-90	N																
W093	SW	REAL	SW70007WC	31-JUL-90	N																
W093	SW	REAL	SW70012WC	06-SEP-90	N																
W093	SW	REAL	SW70014WC	06-SEP-90	N																
W093	SW	REAL	SW70017WC	19-SEP-90	N																
W093	SW	REAL	SW70022WC	24-OCT-90	N																
W093	SW	REAL	SW70041WC	19-NOV-90	N																
W093	SW		SW093W043090	30-APR-90	N																
W118	SW	REAL	SW00458WC	29-OCT-90	N	TRG	SVOCLPTCL	1,2,4-TRICHLOROBENZENE	10	UG/L		U	10 00	JA							
W118	SW	REAL	SW00458WC	29-OCT-90	N	TRG	SVOCLPTCL	1,2-DICHLOROBENZENE	10	UG/L		U	10 00	JA							
W118	SW	REAL	SW00458WC	29-OCT-90	N	TRG	SVOCLPTCL	1,3-DICHLOROBENZENE	10	UG/L		U	10 00	JA							
W118	SW	REAL	SW00458WC	29-OCT-90	N	TRG	SVOCLPTCL	1,4-DICHLOROBENZENE	10	UG/L		U	10 00	JA							
W118	SW	REAL	SW00458WC	29-OCT-90	N	TRG	SVOCLPTCL	2,4,5-TRICHLOROPHENOL	50	UG/L		U	50.00	JA							
W118	SW	REAL	SW00458WC	29-OCT-90	N	TRG	SVOCLPTCL	2,4,6-TRICHLOROPHENOL	10	UG/L		U	10 00	JA							
W118	SW	REAL	SW00458WC	29-OCT-90	N	TRG	SVOCLPTCL	2,4-DICHLOROPHENOL	10	UG/L		U	10 00	JA							
W118	SW	REAL	SW00458WC	29-OCT-90	N	TRG	SVOCLPTCL	2,4-DIMETHYLPHENOL	10	UG/L		U	10.00	JA							
W118	SW	REAL	SW00458WC	29-OCT-90	N	TRG	SVOCLPTCL	2,4-DINITROPHENOL	50	UG/L		U	50 00	JA							
W118	SW	REAL	SW00458WC	29-OCT-90	N	TRG	SVOCLPTCL	2,4-DINITROTOLUENE	10	UG/L		U	10 00	JA							
W118	SW	REAL	SW00458WC	29-OCT-90	N	TRG	SVOCLPTCL	2,6-DINITROTOLUENE	10	UG/L		U	10.00	JA							
W118	SW	REAL	SW00458WC	29-OCT-90	N	TRG	SVOCLPTCL	2-CHLORONAPHTHALENE	10	UG/L		U	10 00	JA							
W118	SW	REAL	SW00458WC	29-OCT-90	N	TRG	SVOCLPTCL	2-CHLOROPHENOL	10	UG/L		U	10 00	JA							
W118	SW	REAL	SW00458WC	29-OCT-90	N	TRG	SVOCLPTCL	2-METHYLNAPHTHALENE	10	UG/L		U	10 00	JA							
W118	SW	REAL	SW00458WC	29-OCT-90	N	TRG	SVOCLPTCL	2-METHYLPHENOL	10	UG/L		U	10 00	JA							
W118	SW	REAL	SW00458WC	29-OCT-90	N	TRG	SVOCLPTCL	2-NITROANILINE	50	UG/L		U	50 00	JA							
W118	SW	REAL	SW00458WC	29-OCT-90	N	TRG	SVOCLPTCL	2-NITROPHENOL	10	UG/L		U	10 00	JA							
W118	SW	REAL	SW00458WC	29-OCT-90	N	TRG	SVOCLPTCL	3,3'-DICHLOROBENZIDINE	20	UG/L		U	20 00	R							
W118	SW	REAL	SW00458WC	29-OCT-90	N	TRG	SVOCLPTCL	3-NITROANILINE	50	UG/L		U	50 00	JA							
W118	SW	REAL	SW00458WC	29-OCT-90	N	TRG	SVOCLPTCL	4,6-DINITRO-2-METHYLPHENOL	50	UG/L		U	50 00	JA							
W118	SW	REAL	SW00458WC	29-OCT-90	N	TRG	SVOCLPTCL	4-BROMOPHENYL PHENYL ETHER	10	UG/L		U	10 00	JA							
W118	SW	REAL	SW00458WC	29-OCT-90	N	TRG	SVOCLPTCL	4-CHLORO-3-METHYLPHENOL	10	UG/L		U	10 00	JA							
W118	SW	REAL	SW00458WC	29-OCT-90	N	TRG	SVOCLPTCL	4-CHLOROANILINE	10	UG/L		U	10 00	JA							
W118	SW	REAL	SW00458WC	29-OCT-90	N	TRG	SVOCLPTCL	4-CHLOROPHENYL PHENYL ETHER	10	UG/L		U	10.00	JA							
W118	SW	REAL	SW00458WC	29-OCT-90	N	TRG	SVOCLPTCL	4-METHYLPHENOL	10	UG/L		U	10.00	JA							
W118	SW	REAL	SW00458WC	29-OCT-90	N	TRG	SVOCLPTCL	4-NITROANILINE	50	UG/L		U	50 00	JA							
W118	SW	REAL	SW00458WC	29-OCT-90	N	TRG	SVOCLPTCL	4-NITROPHENOL	50	UG/L		U	50 00	JA							
W118	SW	REAL	SW00458WC	29-OCT-90	N	TRG	SVOCLPTCL	ACENAPHTHENE	10	UG/L		U	10 00	JA							
W118	SW	REAL	SW00458WC	29-OCT-90	N	TRG	SVOCLPTCL	ACENAPHTHYLENE	10	UG/L		U	10.00	JA							
W118	SW	REAL	SW00458WC	29-OCT-90	N	TRG	SVOCLPTCL	ANTHRACENE	10	UG/L		U	10 00	JA							
W118	SW	REAL	SW00458WC	29-OCT-90	N	TRG	SVOCLPTCL	BENZO(a)ANTHRACENE	10	UG/L		U	10.00	JA							
W118	SW	REAL	SW00458WC	29-OCT-90	N	TRG	SVOCLPTCL	BENZO(a)PYRENE	10	UG/L		U	10.00	JA							
W118	SW	REAL	SW00458WC	29-OCT-90	N	TRG	SVOCLPTCL	BENZO(b)FLUORANTHENE	10	UG/L		U	10 00	JA							
W118	SW	REAL	SW00458WC	29-OCT-90	N	TRG	SVOCLPTCL	BENZO(ghi)PERYLENE	10	UG/L		U	10.00	JA							
W118	SW	REAL	SW00458WC	29-OCT-90	N	TRG	SVOCLPTCL	BENZO(k)FLUORANTHENE	10	UG/L		U	10 00	JA							

ocation	ST	QC	Sample Number	Smpl Date	D	ID	Group	Chemical	Result	Unit	Error	Qual	D LMT	VA	RN1	RN2	RN3	RN4	VResult	VQual	VDET
W118	SW	REAL	SW00458WC	29-OCT-90	N	TRG	SVOCLPTCL	BENZOIC ACID	50	UG/L		U	50 00	JA							
W118	SW	REAL	SW00458WC	29-OCT-90	N	TRG	SVOCLPTCL	BENZYL ALCOHOL	10	UG/L		U	10 00	JA							
W118	SW	REAL	SW00458WC	29-OCT-90	N	TRG	SVOCLPTCL	BIS(2-CHLOROETHOXY)METHANE	10	UG/L		U	10 00	JA							
W118	SW	REAL	SW00458WC	29-OCT-90	N	TRG	SVOCLPTCL	BIS(2-CHLOROETHYL)ETHER	10	UG/L		U	10 00	JA							
W118	SW	REAL	SW00458WC	29-OCT-90	N	TRG	SVOCLPTCL	BIS(2-CHLOROISOPROPYL)ETHER	10	UG/L		U	10 00	JA							
W118	SW	REAL	SW00458WC	29-OCT-90	N	TRG	SVOCLPTCL	BIS(2-ETHYLHEXYL)PHTHALATE	10	UG/L		U	10 00	JA							
W118	SW	REAL	SW00458WC	29-OCT-90	N	TRG	SVOCLPTCL	BUTYL BENZYL PHTHALATE	10	UG/L		U	10 00	JA							
W118	SW	REAL	SW00458WC	29-OCT-90	N	TRG	SVOCLPTCL	CHRYSENE	10	UG/L		U	10 00	JA							
W118	SW	REAL	SW00458WC	29-OCT-90	N	TRG	SVOCLPTCL	DI-n-BUTYL PHTHALATE	2	UG/L		J	10.00	A							
W118	SW	REAL	SW00458WC	29-OCT-90	N	TRG	SVOCLPTCL	DI-n OCTYL PHTHALATE	10	UG/L		U	10.00	JA							
W118	SW	REAL	SW00458WC	29-OCT-90	N	TRG	SVOCLPTCL	DIBENZO(a,h)ANTHRACENE	10	UG/L		U	10.00	JA							
W118	SW	REAL	SW00458WC	29-OCT-90	N	TRG	SVOCLPTCL	DIBENZOFURAN	10	UG/L		U	10.00	JA							
W118	SW	REAL	SW00458WC	29-OCT-90	N	TRG	SVOCLPTCL	DIETHYL PHTHALATE	10	UG/L		U	10 00	JA							
W118	SW	REAL	SW00458WC	29-OCT-90	N	TRG	SVOCLPTCL	DIMETHYL PHTHALATE	10	UG/L		U	10 00	JA							
W118	SW	REAL	SW00458WC	29-OCT-90	N	TRG	SVOCLPTCL	FLUORANTHENE	10	UG/L		U	10 00	JA							
W118	SW	REAL	SW00458WC	29-OCT-90	N	TRG	SVOCLPTCL	FLUORENE	10	UG/L		U	10 00	JA							
W118	SW	REAL	SW00458WC	29-OCT-90	N	TRG	SVOCLPTCL	HEXACHLOROBENZENE	10	UG/L		U	10 00	JA							
W118	SW	REAL	SW00458WC	29-OCT-90	N	TRG	SVOCLPTCL	HEXACHLOROBUTADIENE	10	UG/L		U	10 00	JA							
W118	SW	REAL	SW00458WC	29-OCT-90	N	TRG	SVOCLPTCL	HEXACHLOROCYCLOPENTADIENE	10	UG/L		U	10 00	JA							
W118	SW	REAL	SW00458WC	29-OCT-90	N	TRG	SVOCLPTCL	HEXACHLOROETHANE	10	UG/L		U	10 00	JA							
W118	SW	REAL	SW00458WC	29-OCT-90	N	TRG	SVOCLPTCL	INDENO(1,2,3-cd)PYRENE	10	UG/L		U	10 00	JA							
W118	SW	REAL	SW00458WC	29-OCT-90	N	TRG	SVOCLPTCL	ISOPHORONE	10	UG/L		U	10 00	JA							
W118	SW	REAL	SW00458WC	29-OCT-90	N	TRG	SVOCLPTCL	N-NITROSO-DI-n-PROPYLAMINE	10	UG/L		U	10 00	JA							
W118	SW	REAL	SW00458WC	29-OCT-90	N	TRG	SVOCLPTCL	N-NITROSODIPHENYLAMINE	10	UG/L		U	10.00	JA							
W118	SW	REAL	SW00458WC	29-OCT-90	N	TRG	SVOCLPTCL	NAPHTHALENE	10	UG/L		U	10 00	JA							
W118	SW	REAL	SW00458WC	29-OCT-90	N	TRG	SVOCLPTCL	PENTACHLOROPHENOL	50	UG/L		U	50 00	JA							
W118	SW	REAL	SW00458WC	29-OCT-90	N	TRG	SVOCLPTCL	PHENANTHRENE	10	UG/L		U	10 00	JA							
W118	SW	REAL	SW00458WC	29-OCT-90	N	TRG	SVOCLPTCL	PHENOL	10	UG/L		U	10 00	JA							
W118	SW	REAL	SW00458WC	29-OCT-90	N	TRG	SVOCLPTCL	PYRENE	10	UG/L		U	10.00	JA							
W118	SW	REAL	SW00458WC	29-OCT-90	N	TRG	VOCCLPTCL	1,1,1-TRICHLOROETHANE	5	UG/L		U	5 000	V							
W118	SW	REAL	SW00458WC	29-OCT-90	N	TRG	VOCCLPTCL	1,1,2,2-TETRACHLOROETHANE	5	UG/L		U	5 000	V							
W118	SW	REAL	SW00458WC	29-OCT-90	N	TRG	VOCCLPTCL	1,1,2-TRICHLOROETHANE	5	UG/L		U	5 000	V							
W118	SW	REAL	SW00458WC	29-OCT-90	N	TRG	VOCCLPTCL	1,1-DICHLOROETHANE	5	UG/L		U	5.000	V							
W118	SW	REAL	SW00458WC	29-OCT-90	N	TRG	VOCCLPTCL	1,1-DICHLOROETHENE	5	UG/L		U	5.000	V							
W118	SW	REAL	SW00458WC	29-OCT-90	N	TRG	VOCCLPTCL	1,2-DICHLOROETHANE	5	UG/L		U	5.000	V							
W118	SW	REAL	SW00458WC	29-OCT-90	N	TRG	VOCCLPTCL	1,2-DICHLOROETHENE	5	UG/L		U	5 000	V							
W118	SW	REAL	SW00458WC	29-OCT-90	N	TRG	VOCCLPTCL	1,2-DICHLOROPROPANE	5	UG/L		U	5.000	V							
W118	SW	REAL	SW00458WC	29-OCT-90	N	TRG	VOCCLPTCL	2-BUTANONE	10	UG/L		U	10 00	R							
W118	SW	REAL	SW00458WC	29-OCT-90	N	TRG	VOCCLPTCL	2-HEXANONE	10	UG/L		U	10.00	V							
W118	SW	REAL	SW00458WC	29-OCT-90	N	TRG	VOCCLPTCL	4-METHYL-2-PENTANONE	10	UG/L		U	10 00	V							
W118	SW	REAL	SW00458WC	29-OCT-90	N	TRG	VOCCLPTCL	ACETONE	10	UG/L		U	10 00	V							
W118	SW	REAL	SW00458WC	29-OCT-90	N	TRG	VOCCLPTCL	BENZENE	5	UG/L		U	5 000	JA							
W118	SW	REAL	SW00458WC	29-OCT-90	N	TRG	VOCCLPTCL	BROMODICHLOROMETHANE	5	UG/L		U	5 000	V							
W118	SW	REAL	SW00458WC	29-OCT-90	N	TRG	VOCCLPTCL	BROMOFORM	5	UG/L		U	5.000	V							
W118	SW	REAL	SW00458WC	29-OCT-90	N	TRG	VOCCLPTCL	BROMOMETHANE	10	UG/L		U	10 00	V							
W118	SW	REAL	SW00458WC	29-OCT-90	N	TRG	VOCCLPTCL	CARBON DISULFIDE	5	UG/L		U	5.000	V							
W118	SW	REAL	SW00458WC	29-OCT-90	N	TRG	VOCCLPTCL	CARBON TETRACHLORIDE	5	UG/L		U	5.000	V							
W118	SW	REAL	SW00458WC	29-OCT-90	N	TRG	VOCCLPTCL	CHLOROBENZENE	5	UG/L		U	5.000	JA							
W118	SW	REAL	SW00458WC	29-OCT-90	N	TRG	VOCCLPTCL	CHLOROETHANE	10	UG/L		U	10 00	V							
W118	SW	REAL	SW00458WC	29-OCT-90	N	TRG	VOCCLPTCL	CHLOROFORM	5	UG/L		U	5 000	V							
W118	SW	REAL	SW00458WC	29-OCT-90	N	TRG	VOCCLPTCL	CHLOROMETHANE	10	UG/L		U	10 00	V							
W118	SW	REAL	SW00458WC	29-OCT-90	N	TRG	VOCCLPTCL	DIBROMOCHLOROMETHANE	5	UG/L		U	5.000	V							
W118	SW	REAL	SW00458WC	29-OCT-90	N	TRG	VOCCLPTCL	ETHYLBENZENE	5	UG/L		U	5.000	JA							
W118	SW	REAL	SW00458WC	29-OCT-90	N	TRG	VOCCLPTCL	METHYLENE CHLORIDE	6	UG/L		B	5.000	JA						U	
W118	SW	REAL	SW00458WC	29-OCT-90	N	TRG	VOCCLPTCL	STYRENE	5	UG/L		U	5.000	JA							
W118	SW	REAL	SW00458WC	29-OCT-90	N	TRG	VOCCLPTCL	TETRACHLOROETHENE	5	UG/L		U	5.000	V							
W118	SW	REAL	SW00458WC	29-OCT-90	N	TRG	VOCCLPTCL	TOLUENE	5	UG/L		U	5.000	JA							
W118	SW	REAL	SW00458WC	29-OCT-90	N	TRG	VOCCLPTCL	TOTAL XYLENES	5	UG/L		U	5.000	JA							
W118	SW	REAL	SW00458WC	29-OCT-90	N	TRG	VOCCLPTCL	TRICHLOROETHENE	5	UG/L		U	5.000	V							
W118	SW	REAL	SW00458WC	29-OCT-90	N	TRG	VOCCLPTCL	VINYL ACETATE	10	UG/L		U	10.00	V							
W118	SW	REAL	SW00458WC	29-OCT-90	N	TRG	VOCCLPTCL	VINYL CHLORIDE	10	UG/L		U	10.00	V							
W118	SW	REAL	SW00458WC	29-OCT-90	N	TRG	VOCCLPTCL	cis-1,3-DICHLOROPROPENE	5	UG/L		U	5.000	V							
W118	SW	REAL	SW00458WC	29-OCT-90	N	TRG	VOCCLPTCL	trans-1,3-DICHLOROPROPENE	5	UG/L		U	5.000	V							

Location	ST	QC	Sample Number	Smpl Date	D	ID	Group	Chemical	Result	Unit	Error	Qual	D LMT	VA	RN1	RN2	RN3	RN4	VResult	VQual	VDET
SW118	SW	REAL	SW00559WC	27-NOV-90	N	TRG	VOCCLPTCL	1,1,1-TRICHLOROETHANE	5	UG/L		U	5 000	V							
SW118	SW	REAL	SW00559WC	27-NOV-90	N	TRG	VOCCLPTCL	1,1,2,2-TETRACHLOROETHANE	5	UG/L		U	5 000	V							
SW118	SW	REAL	SW00559WC	27-NOV-90	N	TRG	VOCCLPTCL	1,1,2-TRICHLOROETHANE	5	UG/L		U	5.000	V							
SW118	SW	REAL	SW00559WC	27-NOV-90	N	TRG	VOCCLPTCL	1,1-DICHLOROETHANE	5	UG/L		U	5.000	V							
SW118	SW	REAL	SW00559WC	27-NOV-90	N	TRG	VOCCLPTCL	1,1-DICHLOROETHENE	5	UG/L		U	5 000	V							
SW118	SW	REAL	SW00559WC	27-NOV-90	N	TRG	VOCCLPTCL	1,2-DICHLOROETHANE	5	UG/L		U	5 000	V							
SW118	SW	REAL	SW00559WC	27-NOV-90	N	TRG	VOCCLPTCL	1,2-DICHLOROETHENE	5	UG/L		U	5 000	V							
SW118	SW	REAL	SW00559WC	27-NOV-90	N	TRG	VOCCLPTCL	1,2-DICHLOROPROPANE	5	UG/L		U	5 000	V							
SW118	SW	REAL	SW00559WC	27-NOV-90	N	TRG	VOCCLPTCL	2-BUTANONE	10	UG/L		U	10.00	V							
SW118	SW	REAL	SW00559WC	27-NOV-90	N	TRG	VOCCLPTCL	2-HEXANONE	10	UG/L		U	10 00	V							
SW118	SW	REAL	SW00559WC	27-NOV-90	N	TRG	VOCCLPTCL	4-METHYL-2-PENTANONE	10	UG/L		U	10.00	V							
SW118	SW	REAL	SW00559WC	27-NOV-90	N	TRG	VOCCLPTCL	ACETONE	10	UG/L		U	10 00	V							
SW118	SW	REAL	SW00559WC	27-NOV-90	N	TRG	VOCCLPTCL	BENZENE	5	UG/L		U	5.000	V							
SW118	SW	REAL	SW00559WC	27-NOV-90	N	TRG	VOCCLPTCL	BROMODICHLOROMETHANE	5	UG/L		U	5 000	V							
SW118	SW	REAL	SW00559WC	27-NOV-90	N	TRG	VOCCLPTCL	BROMOFORM	5	UG/L		U	5.000	V							
SW118	SW	REAL	SW00559WC	27-NOV-90	N	TRG	VOCCLPTCL	BROMOMETHANE	10	UG/L		U	10 00	V							
SW118	SW	REAL	SW00559WC	27-NOV-90	N	TRG	VOCCLPTCL	CARBON DISULFIDE	5	UG/L		U	5.000	V							
SW118	SW	REAL	SW00559WC	27-NOV-90	N	TRG	VOCCLPTCL	CARBON TETRACHLORIDE	5	UG/L		U	5 000	V							
SW118	SW	REAL	SW00559WC	27-NOV-90	N	TRG	VOCCLPTCL	CHLOROBENZENE	5	UG/L		U	5 000	V							
SW118	SW	REAL	SW00559WC	27-NOV-90	N	TRG	VOCCLPTCL	CHLOROETHANE	10	UG/L		U	10 00	V							
SW118	SW	REAL	SW00559WC	27-NOV-90	N	TRG	VOCCLPTCL	CHLOROFORM	5	UG/L		U	5 000	V							
SW118	SW	REAL	SW00559WC	27-NOV-90	N	TRG	VOCCLPTCL	CHLOROMETHANE	10	UG/L		U	10 00	V							
SW118	SW	REAL	SW00559WC	27-NOV-90	N	TRG	VOCCLPTCL	DIBROMOCHLOROMETHANE	5	UG/L		U	5.000	V							
SW118	SW	REAL	SW00559WC	27-NOV-90	N	TRG	VOCCLPTCL	ETHYLBENZENE	5	UG/L		U	5 000	V							
SW118	SW	REAL	SW00559WC	27-NOV-90	N	TRG	VOCCLPTCL	METHYLENE CHLORIDE	5	UG/L		U	5 000	V							
SW118	SW	REAL	SW00559WC	27-NOV-90	N	TRG	VOCCLPTCL	STYRENE	5	UG/L		U	5 000	V							
SW118	SW	REAL	SW00559WC	27-NOV-90	N	TRG	VOCCLPTCL	TETRACHLOROETHENE	5	UG/L		U	5 000	V							
SW118	SW	REAL	SW00559WC	27-NOV-90	N	TRG	VOCCLPTCL	TOLUENE	5	UG/L		U	5 000	V							
SW118	SW	REAL	SW00559WC	27-NOV-90	N	TRG	VOCCLPTCL	TOTAL XYLENES	5	UG/L		U	5 000	V							
SW118	SW	REAL	SW00559WC	27-NOV-90	N	TRG	VOCCLPTCL	TRICHLOROETHENE	5	UG/L		U	5 000	V							
SW118	SW	REAL	SW00559WC	27-NOV-90	N	TRG	VOCCLPTCL	VINYL ACETATE	10	UG/L		U	10 00	V							
SW118	SW	REAL	SW00559WC	27-NOV-90	N	TRG	VOCCLPTCL	VINYL CHLORIDE	10	UG/L		U	10 00	V							
SW118	SW	REAL	SW00559WC	27-NOV-90	N	TRG	VOCCLPTCL	cis-1,3-DICHLOROPROPENE	5	UG/L		U	5 000	V							
SW118	SW	REAL	SW00559WC	27-NOV-90	N	TRG	VOCCLPTCL	trans-1,3-DICHLOROPROPENE	5	UG/L		U	5 000	V							
SW129	SW	MSD	SW00464WC	05-NOV-90	N	TRG	VOCCLPTCL	1,1,1-TRICHLOROETHANE	5	UG/L		U	5	JA							
SW129	SW	MSD	SW00464WC	05-NOV-90	N	TRG	VOCCLPTCL	1,1,2,2-TETRACHLOROETHANE	5	UG/L		U	5	JA							
SW129	SW	MSD	SW00464WC	05-NOV-90	N	TRG	VOCCLPTCL	1,1,2-TRICHLOROETHANE	5	UG/L		U	5	JA							
SW129	SW	MSD	SW00464WC	05-NOV-90	N	TRG	VOCCLPTCL	1,1-DICHLOROETHANE	5	UG/L		U	5	JA							
SW129	SW	MSD	SW00464WC	05-NOV-90	N	TRG	VOCCLPTCL	1,1-DICHLOROETHENE	5	UG/L		U	5	JA							
SW129	SW	MSD	SW00464WC	05-NOV-90	N	TRG	VOCCLPTCL	1,2-DICHLOROETHANE	5	UG/L		U	5	JA							
SW129	SW	MSD	SW00464WC	05-NOV-90	N	TRG	VOCCLPTCL	1,2 DICHLOROETHENE	5	UG/L		U	5	JA							
SW129	SW	MSD	SW00464WC	05-NOV-90	N	TRG	VOCCLPTCL	1,2-DICHLOROPROPANE	5	UG/L		U	5	JA							
SW129	SW	MSD	SW00464WC	05-NOV-90	N	TRG	VOCCLPTCL	2-BUTANONE	10	UG/L		U	10	JA							
SW129	SW	MSD	SW00464WC	05-NOV-90	N	TRG	VOCCLPTCL	2-HEXANONE	10	UG/L		U	10	JA							
SW129	SW	MSD	SW00464WC	05-NOV-90	N	TRG	VOCCLPTCL	4-METHYL-2-PENTANONE	10	UG/L		U	10	JA							
SW129	SW	MSD	SW00464WC	05-NOV-90	N	TRG	VOCCLPTCL	ACETONE	10	UG/L		U	10	JA							
SW129	SW	MSD	SW00464WC	05-NOV-90	N	TRG	VOCCLPTCL	BENZENE	5	UG/L		U	5	JA							
SW129	SW	MSD	SW00464WC	05-NOV-90	N	TRG	VOCCLPTCL	BROMODICHLOROMETHANE	5	UG/L		U	5	JA							
SW129	SW	MSD	SW00464WC	05-NOV-90	N	TRG	VOCCLPTCL	BROMOFORM	5	UG/L		U	5	JA							
SW129	SW	MSD	SW00464WC	05-NOV-90	N	TRG	VOCCLPTCL	BROMOMETHANE	10	UG/L		U	10	JA							
SW129	SW	MSD	SW00464WC	05-NOV-90	N	TRG	VOCCLPTCL	CARBON DISULFIDE	5	UG/L		U	5	JA							
SW129	SW	MSD	SW00464WC	05-NOV-90	N	TRG	VOCCLPTCL	CARBON TETRACHLORIDE	5	UG/L		U	5	JA							
SW129	SW	MSD	SW00464WC	05-NOV-90	N	TRG	VOCCLPTCL	CHLOROBENZENE	5	UG/L		U	5	JA							
SW129	SW	MSD	SW00464WC	05-NOV-90	N	TRG	VOCCLPTCL	CHLOROETHANE	10	UG/L		U	10	JA							
SW129	SW	MSD	SW00464WC	05-NOV-90	N	TRG	VOCCLPTCL	CHLOROFORM	5	UG/L		U	5	JA							
SW129	SW	MSD	SW00464WC	05-NOV-90	N	TRG	VOCCLPTCL	CHLOROMETHANE	10	UG/L		U	10	JA							
SW129	SW	MSD	SW00464WC	05-NOV-90	N	TRG	VOCCLPTCL	DIBROMOCHLOROMETHANE	5	UG/L		U	5	JA							
SW129	SW	MSD	SW00464WC	05-NOV-90	N	TRG	VOCCLPTCL	ETHYLBENZENE	5	UG/L		U	5	JA							
SW129	SW	MSD	SW00464WC	05-NOV-90	N	TRG	VOCCLPTCL	METHYLENE CHLORIDE	5	UG/L		U	5	JA							
SW129	SW	MSD	SW00464WC	05-NOV-90	N	TRG	VOCCLPTCL	STYRENE	5	UG/L		U	5	JA							
SW129	SW	MSD	SW00464WC	05-NOV-90	N	TRG	VOCCLPTCL	TETRACHLOROETHENE	5	UG/L		U	5	JA							
SW129	SW	MSD	SW00464WC	05-NOV-90	N	TRG	VOCCLPTCL	TOLUENE	5	UG/L		U	5	JA							
SW129	SW	MSD	SW00464WC	05-NOV-90	N	TRG	VOCCLPTCL	TOTAL XYLENES	5	UG/L		U	5	JA							

Location	ST	QC	Sample Number	Smpl Date	D	ID	Group	Chemical	Result	Unit	Error	Qual	D	LMT	VA	RN1	RN2	RN3	RN4	VResult	VQual	VDET
SW129	SW	MSD	SW00464WC	05-NOV-90	N	TRG	VOCCLPTCL	TRICHLOROETHENE	5	UG/L		U		5	JA							
SW129	SW	MSD	SW00464WC	05-NOV-90	N	TRG	VOCCLPTCL	VINYL ACETATE	10	UG/L		U		10	JA							
SW129	SW	MSD	SW00464WC	05-NOV-90	N	TRG	VOCCLPTCL	VINYL CHLORIDE	10	UG/L		U		10	JA							
SW129	SW	MSD	SW00464WC	05-NOV-90	N	TRG	VOCCLPTCL	cis-1,3-DICHLOROPROPENE	5	UG/L		U		5	JA							
SW129	SW	MSD	SW00464WC	05-NOV-90	N	TRG	VOCCLPTCL	trans-1,3-DICHLOROPROPENE	5	UG/L		U		5	JA							
SW129	SW	REAL	SW00421WC	15-OCT-90	N	TRG	SVOCLPTCL	1,2,4-TRICHLOROBENZENE	20	UG/L		U										
SW129	SW	REAL	SW00421WC	15-OCT-90	N	TRG	SVOCLPTCL	1,2-DICHLOROBENZENE	20	UG/L		U										
SW129	SW	REAL	SW00421WC	15-OCT-90	N	TRG	SVOCLPTCL	1,3-DICHLOROBENZENE	20	UG/L		U										
SW129	SW	REAL	SW00421WC	15-OCT-90	N	TRG	SVOCLPTCL	1,4-DICHLOROBENZENE	20	UG/L		U										
SW129	SW	REAL	SW00421WC	15-OCT-90	N	TRG	SVOCLPTCL	2,4,5-TRICHLOROPHENOL	100	UG/L		U										
SW129	SW	REAL	SW00421WC	15-OCT-90	N	TRG	SVOCLPTCL	2,4,6-TRICHLOROPHENOL	20	UG/L		U										
SW129	SW	REAL	SW00421WC	15-OCT-90	N	TRG	SVOCLPTCL	2,4-DICHLOROPHENOL	20	UG/L		U										
SW129	SW	REAL	SW00421WC	15-OCT-90	N	TRG	SVOCLPTCL	2,4-DIMETHYLPHENOL	20	UG/L		U										
SW129	SW	REAL	SW00421WC	15-OCT-90	N	TRG	SVOCLPTCL	2,4-DINITROPHENOL	100	UG/L		U										
SW129	SW	REAL	SW00421WC	15-OCT-90	N	TRG	SVOCLPTCL	2,4-DINITROTOLUENE	20	UG/L		U										
SW129	SW	REAL	SW00421WC	15-OCT-90	N	TRG	SVOCLPTCL	2,6-DINITROTOLUENE	20	UG/L		U										
SW129	SW	REAL	SW00421WC	15-OCT-90	N	TRG	SVOCLPTCL	2-CHLORONAPHTHALENE	20	UG/L		U										
SW129	SW	REAL	SW00421WC	15-OCT-90	N	TRG	SVOCLPTCL	2-CHLOROPHENOL	20	UG/L		U										
SW129	SW	REAL	SW00421WC	15-OCT-90	N	TRG	SVOCLPTCL	2-METHYLNAPHTHALENE	20	UG/L		U										
SW129	SW	REAL	SW00421WC	15-OCT-90	N	TRG	SVOCLPTCL	2-METHYLPHENOL	20	UG/L		U										
SW129	SW	REAL	SW00421WC	15-OCT-90	N	TRG	SVOCLPTCL	2-NITROANILINE	100	UG/L		U										
SW129	SW	REAL	SW00421WC	15-OCT-90	N	TRG	SVOCLPTCL	2-NITROPHENOL	20	UG/L		U										
SW129	SW	REAL	SW00421WC	15-OCT-90	N	TRG	SVOCLPTCL	3,3'-DICHLOROBENZIDINE	40	UG/L		U										
SW129	SW	REAL	SW00421WC	15-OCT-90	N	TRG	SVOCLPTCL	3-NITROANILINE	100	UG/L		U										
SW129	SW	REAL	SW00421WC	15-OCT-90	N	TRG	SVOCLPTCL	4,6-DINITRO-2-METHYLPHENOL	100	UG/L		U										
SW129	SW	REAL	SW00421WC	15-OCT-90	N	TRG	SVOCLPTCL	4-BROMOPHENYL PHENYL ETHER	20	UG/L		U										
SW129	SW	REAL	SW00421WC	15-OCT-90	N	TRG	SVOCLPTCL	4-CHLORO-3-METHYLPHENOL	20	UG/L		U										
SW129	SW	REAL	SW00421WC	15-OCT-90	N	TRG	SVOCLPTCL	4-CHLOROANILINE	20	UG/L		U										
SW129	SW	REAL	SW00421WC	15-OCT-90	N	TRG	SVOCLPTCL	4-CHLOROPHENYL PHENYL ETHER	20	UG/L		U										
SW129	SW	REAL	SW00421WC	15-OCT-90	N	TRG	SVOCLPTCL	4-METHYLPHENOL	20	UG/L		U										
SW129	SW	REAL	SW00421WC	15-OCT-90	N	TRG	SVOCLPTCL	4-NITROANILINE	100	UG/L		U										
SW129	SW	REAL	SW00421WC	15-OCT-90	N	TRG	SVOCLPTCL	4-NITROPHENOL	100	UG/L		U										
SW129	SW	REAL	SW00421WC	15-OCT-90	N	TRG	SVOCLPTCL	ACENAPHTHENE	20	UG/L		U										
SW129	SW	REAL	SW00421WC	15-OCT-90	N	TRG	SVOCLPTCL	ACENAPHTHYLENE	20	UG/L		U										
SW129	SW	REAL	SW00421WC	15-OCT-90	N	TRG	SVOCLPTCL	ANTHRACENE	20	UG/L		U										
SW129	SW	REAL	SW00421WC	15-OCT-90	N	TRG	SVOCLPTCL	BENZO(a)ANTHRACENE	20	UG/L		U										
SW129	SW	REAL	SW00421WC	15-OCT-90	N	TRG	SVOCLPTCL	BENZO(a)PYRENE	20	UG/L		U										
SW129	SW	REAL	SW00421WC	15-OCT-90	N	TRG	SVOCLPTCL	BENZO(b)FLUORANTHENE	20	UG/L		U										
SW129	SW	REAL	SW00421WC	15-OCT-90	N	TRG	SVOCLPTCL	BENZO(ghi)PERYLENE	20	UG/L		U										
SW129	SW	REAL	SW00421WC	15-OCT-90	N	TRG	SVOCLPTCL	BENZO(k)FLUORANTHENE	20	UG/L		U										
SW129	SW	REAL	SW00421WC	15-OCT-90	N	TRG	SVOCLPTCL	BENZOIC ACID	100	UG/L		U										
SW129	SW	REAL	SW00421WC	15-OCT-90	N	TRG	SVOCLPTCL	BENZYL ALCOHOL	20	UG/L		U										
SW129	SW	REAL	SW00421WC	15-OCT-90	N	TRG	SVOCLPTCL	BIS(2-CHLOROETHOXY)METHANE	20	UG/L		U										
SW129	SW	REAL	SW00421WC	15-OCT-90	N	TRG	SVOCLPTCL	BIS(2-CHLOROETHYL)ETHER	20	UG/L		U										
SW129	SW	REAL	SW00421WC	15-OCT-90	N	TRG	SVOCLPTCL	BIS(2-CHLOROISOPROPYL)ETHER	20	UG/L		U										
SW129	SW	REAL	SW00421WC	15-OCT-90	N	TRG	SVOCLPTCL	BIS(2-ETHYLHEXYL)PHTHALATE	20	UG/L		U										
SW129	SW	REAL	SW00421WC	15-OCT-90	N	TRG	SVOCLPTCL	BUTYL BENZYL PHTHALATE	20	UG/L		U										
SW129	SW	REAL	SW00421WC	15-OCT-90	N	TRG	SVOCLPTCL	CHRYSENE	20	UG/L		U										
SW129	SW	REAL	SW00421WC	15-OCT-90	N	TRG	SVOCLPTCL	DI-n-BUTYL PHTHALATE	20	UG/L		U										
SW129	SW	REAL	SW00421WC	15-OCT-90	N	TRG	SVOCLPTCL	DI-n-OCTYL PHTHALATE	20	UG/L		U										
SW129	SW	REAL	SW00421WC	15-OCT-90	N	TRG	SVOCLPTCL	DIBENZO(a,h)ANTHRACENE	20	UG/L		U										
SW129	SW	REAL	SW00421WC	15-OCT-90	N	TRG	SVOCLPTCL	DIBENZOFURAN	20	UG/L		U										
SW129	SW	REAL	SW00421WC	15-OCT-90	N	TRG	SVOCLPTCL	DIETHYL PHTHALATE	20	UG/L		U										
SW129	SW	REAL	SW00421WC	15-OCT-90	N	TRG	SVOCLPTCL	DIMETHYL PHTHALATE	20	UG/L		U										
SW129	SW	REAL	SW00421WC	15-OCT-90	N	TRG	SVOCLPTCL	FLUORANTHENE	20	UG/L		U										
SW129	SW	REAL	SW00421WC	15-OCT-90	N	TRG	SVOCLPTCL	FLUORENE	20	UG/L		U										
SW129	SW	REAL	SW00421WC	15-OCT-90	N	TRG	SVOCLPTCL	HEXACHLOROBENZENE	20	UG/L		U										
SW129	SW	REAL	SW00421WC	15-OCT-90	N	TRG	SVOCLPTCL	HEXACHLOROBUTADIENE	20	UG/L		U										
SW129	SW	REAL	SW00421WC	15-OCT-90	N	TRG	SVOCLPTCL	HEXACHLOROCYCLOPENTADIENE	20	UG/L		U										
SW129	SW	REAL	SW00421WC	15-OCT-90	N	TRG	SVOCLPTCL	HEXACHLOROETHANE	20	UG/L		U										
SW129	SW	REAL	SW00421WC	15-OCT-90	N	TRG	SVOCLPTCL	INDENO(1,2,3-cd)PYRENE	20	UG/L		U										
SW129	SW	REAL	SW00421WC	15-OCT-90	N	TRG	SVOCLPTCL	ISOPHORONE	20	UG/L		U										
SW129	SW	REAL	SW00421WC	15-OCT-90	N	TRG	SVOCLPTCL	N-NITROSO-DI-n-PROPYLAMINE	20	UG/L		U										

ocation	ST	QC	Sample Number	Smpl Date	D	ID	Group	Chemical	Result	Unit	Error	Qual	D	LMT	VA	RN1	RN2	RN3	RN4	VResult	VQual	VDET
W129	SW	REAL	SW00421WC	15-OCT-90	N	TRG	SVOCLPTCL	N-NITROSODIPHENYLAMINE	20	UG/L		U										
W129	SW	REAL	SW00421WC	15-OCT-90	N	TRG	SVOCLPTCL	NAPHTHALENE	20	UG/L		U										
W129	SW	REAL	SW00421WC	15-OCT-90	N	TRG	SVOCLPTCL	NITROBENZENE	20	UG/L		U										
W129	SW	REAL	SW00421WC	15-OCT-90	N	TRG	SVOCLPTCL	PENTACHLOROPHENOL	100	UG/L		U										
W129	SW	REAL	SW00421WC	15-OCT-90	N	TRG	SVOCLPTCL	PHENANTHRENE	20	UG/L		U										
W129	SW	REAL	SW00421WC	15-OCT-90	N	TRG	SVOCLPTCL	PHENOL	20	UG/L		U										
W129	SW	REAL	SW00421WC	15-OCT-90	N	TRG	SVOCLPTCL	PYRENE	20	UG/L		U										
W129	SW	REAL	SW00421WC	15-OCT-90	N	TRG	VOCCLPTCL	1,1,1-TRICHLOROETHANE	5	UG/L		U			V							
W129	SW	REAL	SW00421WC	15-OCT-90	N	TRG	VOCCLPTCL	1,1,2,2-TETRACHLOROETHANE	5	UG/L		U			V							
W129	SW	REAL	SW00421WC	15-OCT-90	N	TRG	VOCCLPTCL	1,1,2-TRICHLOROETHANE	5	UG/L		U			V							
W129	SW	REAL	SW00421WC	15-OCT-90	N	TRG	VOCCLPTCL	1,1-DICHLOROETHANE	5	UG/L		U			V							
W129	SW	REAL	SW00421WC	15-OCT-90	N	TRG	VOCCLPTCL	1,1-DICHLOROETHENE	5	UG/L		U			V							
W129	SW	REAL	SW00421WC	15-OCT-90	N	TRG	VOCCLPTCL	1,2-DICHLOROETHANE	5	UG/L		U			V							
W129	SW	REAL	SW00421WC	15-OCT-90	N	TRG	VOCCLPTCL	1,2-DICHLOROETHENE	5	UG/L		U			V							
W129	SW	REAL	SW00421WC	15-OCT-90	N	TRG	VOCCLPTCL	1,2-DICHLOROPROPANE	5	UG/L		U			V							
W129	SW	REAL	SW00421WC	15-OCT-90	N	TRG	VOCCLPTCL	2-BUTANONE	4	UG/L		J			R						10	U
W129	SW	REAL	SW00421WC	15-OCT-90	N	TRG	VOCCLPTCL	2-HEXANONE	10	UG/L		U			V							
W129	SW	REAL	SW00421WC	15-OCT-90	N	TRG	VOCCLPTCL	4-METHYL-2-PENTANONE	10	UG/L		U			V							
W129	SW	REAL	SW00421WC	15-OCT-90	N	TRG	VOCCLPTCL	ACETONE	5	UG/L		BJ			JA						10	U
W129	SW	REAL	SW00421WC	15-OCT-90	N	TRG	VOCCLPTCL	BENZENE	5	UG/L		U			JA							
W129	SW	REAL	SW00421WC	15-OCT-90	N	TRG	VOCCLPTCL	BROMODICHLOROMETHANE	5	UG/L		U			V							
W129	SW	REAL	SW00421WC	15-OCT-90	N	TRG	VOCCLPTCL	BROMOFORM	5	UG/L		U			V							
W129	SW	REAL	SW00421WC	15-OCT-90	N	TRG	VOCCLPTCL	BROMOMETHANE	10	UG/L		U			V							
W129	SW	REAL	SW00421WC	15-OCT-90	N	TRG	VOCCLPTCL	CARBON DISULFIDE	5	UG/L		U			V							
W129	SW	REAL	SW00421WC	15-OCT-90	N	TRG	VOCCLPTCL	CARBON TETRACHLORIDE	5	UG/L		U			V							
W129	SW	REAL	SW00421WC	15-OCT-90	N	TRG	VOCCLPTCL	CHLOROBENZENE	5	UG/L		U			JA							
W129	SW	REAL	SW00421WC	15-OCT-90	N	TRG	VOCCLPTCL	CHLOROETHANE	10	UG/L		U			V							
W129	SW	REAL	SW00421WC	15-OCT-90	N	TRG	VOCCLPTCL	CHLOROFORM	5	UG/L		U			V							
W129	SW	REAL	SW00421WC	15-OCT-90	N	TRG	VOCCLPTCL	CHLOROMETHANE	10	UG/L		U			V							
W129	SW	REAL	SW00421WC	15-OCT-90	N	TRG	VOCCLPTCL	DIBROMOCHLOROMETHANE	5	UG/L		U			V							
W129	SW	REAL	SW00421WC	15-OCT-90	N	TRG	VOCCLPTCL	ETHYLBENZENE	5	UG/L		U			JA							
W129	SW	REAL	SW00421WC	15-OCT-90	N	TRG	VOCCLPTCL	METHYLENE CHLORIDE	4	UG/L		BJ			JA						5	U
W129	SW	REAL	SW00421WC	15-OCT-90	N	TRG	VOCCLPTCL	STYRENE	5	UG/L		U			JA							
W129	SW	REAL	SW00421WC	15-OCT-90	N	TRG	VOCCLPTCL	TETRACHLOROETHENE	5	UG/L		U			V							
W129	SW	REAL	SW00421WC	15-OCT-90	N	TRG	VOCCLPTCL	TOLUENE	5	UG/L		U			JA							
W129	SW	REAL	SW00421WC	15-OCT-90	N	TRG	VOCCLPTCL	TOTAL XYLENES	5	UG/L		U			JA							
W129	SW	REAL	SW00421WC	15-OCT-90	N	TRG	VOCCLPTCL	TRICHLOROETHENE	5	UG/L		U			V							
W129	SW	REAL	SW00421WC	15-OCT-90	N	TRG	VOCCLPTCL	VINYL ACETATE	10	UG/L		U			V							
W129	SW	REAL	SW00421WC	15-OCT-90	N	TRG	VOCCLPTCL	VINYL CHLORIDE	10	UG/L		U			V							
W129	SW	REAL	SW00421WC	15-OCT-90	N	TRG	VOCCLPTCL	cis-1,3-DICHLOROPROPENE	5	UG/L		U			V							
W129	SW	REAL	SW00421WC	15-OCT-90	N	TRG	VOCCLPTCL	trans-1,3-DICHLOROPROPENE	5	UG/L		U			V							

ocation	ST	QC	Sample Number	Smpl Date	D	ID	Group	Chemical	Result	Unit	Error	Qual	D LMT	VA	RN1	RN2	RN3	RN4	VResult	VQual	VDET
ED118	SD	REAL	SD00229WC	21-MAY-91	N	TRG	SVOCLPTCL	1,2,4 TRICHLOROBENZENE	510	UG/KG		U	510								
ED118	SD	REAL	SD00229WC	21-MAY-91	N	TRG	SVOCLPTCL	1,2-DICHLOROBENZENE	510	UG/KG		U	510								
ED118	SD	REAL	SD00229WC	21-MAY-91	N	TRG	SVOCLPTCL	1,3-DICHLOROBENZENE	510	UG/KG		U	510								
ED118	SD	REAL	SD00229WC	21-MAY-91	N	TRG	SVOCLPTCL	1,4-DICHLOROBENZENE	510	UG/KG		U	510								
ED118	SD	REAL	SD00229WC	21-MAY-91	N	TRG	SVOCLPTCL	2,4,5-TRICHLOROPHENOL	2500	UG/KG		U	2500								
ED118	SD	REAL	SD00229WC	21-MAY-91	N	TRG	SVOCLPTCL	2,4,6-TRICHLOROPHENOL	510	UG/KG		U	510								
ED118	SD	REAL	SD00229WC	21-MAY-91	N	TRG	SVOCLPTCL	2,4-DICHLOROPHENOL	510	UG/KG		U	510								
ED118	SD	REAL	SD00229WC	21-MAY-91	N	TRG	SVOCLPTCL	2,4-DIMETHYLPHENOL	510	UG/KG		U	510								
ED118	SD	REAL	SD00229WC	21-MAY-91	N	TRG	SVOCLPTCL	2,4-DINITROPHENOL	2500	UG/KG		U	2500								
ED118	SD	REAL	SD00229WC	21-MAY-91	N	TRG	SVOCLPTCL	2,4-DINITROTOLUENE	510	UG/KG		U	510								
ED118	SD	REAL	SD00229WC	21-MAY-91	N	TRG	SVOCLPTCL	2,6-DINITROTOLUENE	510	UG/KG		U	510								
ED118	SD	REAL	SD00229WC	21-MAY-91	N	TRG	SVOCLPTCL	2-CHLORONAPHTHALENE	510	UG/KG		U	510								
ED118	SD	REAL	SD00229WC	21-MAY-91	N	TRG	SVOCLPTCL	2-CHLOROPHENOL	510	UG/KG		U	510								
ED118	SD	REAL	SD00229WC	21-MAY-91	N	TRG	SVOCLPTCL	2-METHYLNAPHTHALENE	510	UG/KG		U	510								
ED118	SD	REAL	SD00229WC	21-MAY-91	N	TRG	SVOCLPTCL	2-METHYLPHENOL	510	UG/KG		U	510								
ED118	SD	REAL	SD00229WC	21-MAY-91	N	TRG	SVOCLPTCL	2-NITROANILINE	2500	UG/KG		U	2500								
ED118	SD	REAL	SD00229WC	21-MAY-91	N	TRG	SVOCLPTCL	2-NITROPHENOL	510	UG/KG		U	510								
ED118	SD	REAL	SD00229WC	21-MAY-91	N	TRG	SVOCLPTCL	3,3'-DICHLOROBENZIDINE	1000	UG/KG		U	1000								
ED118	SD	REAL	SD00229WC	21-MAY-91	N	TRG	SVOCLPTCL	3-NITROANILINE	2500	UG/KG		U	2500								
ED118	SD	REAL	SD00229WC	21-MAY-91	N	TRG	SVOCLPTCL	4,6-DINITRO-2-METHYLPHENOL	2500	UG/KG		U	2500								
ED118	SD	REAL	SD00229WC	21-MAY-91	N	TRG	SVOCLPTCL	4-BROMOPHENYL PHENYL ETHER	510	UG/KG		U	510								
ED118	SD	REAL	SD00229WC	21-MAY-91	N	TRG	SVOCLPTCL	4-CHLORO-3-METHYLPHENOL	510	UG/KG		U	510								
ED118	SD	REAL	SD00229WC	21-MAY-91	N	TRG	SVOCLPTCL	4-CHLOROANILINE	510	UG/KG		U	510								
ED118	SD	REAL	SD00229WC	21-MAY-91	N	TRG	SVOCLPTCL	4-CHLOROPHENYL PHENYL ETHER	510	UG/KG		U	510								
ED118	SD	REAL	SD00229WC	21-MAY-91	N	TRG	SVOCLPTCL	4-METHYLPHENOL	510	UG/KG		U	510								
ED118	SD	REAL	SD00229WC	21-MAY-91	N	TRG	SVOCLPTCL	4-NITROANILINE	2500	UG/KG		U	2500								
ED118	SD	REAL	SD00229WC	21-MAY-91	N	TRG	SVOCLPTCL	4-NITROPHENOL	2500	UG/KG		U	2500								
ED118	SD	REAL	SD00229WC	21-MAY-91	N	TRG	SVOCLPTCL	ACENAPHTHENE	510	UG/KG		U	510								
ED118	SD	REAL	SD00229WC	21-MAY-91	N	TRG	SVOCLPTCL	ACENAPHTHYLENE	510	UG/KG		U	510								
ED118	SD	REAL	SD00229WC	21-MAY-91	N	TRG	SVOCLPTCL	ANTHRACENE	510	UG/KG		U	510								
ED118	SD	REAL	SD00229WC	21-MAY-91	N	TRG	SVOCLPTCL	BENZO(a)ANTHRACENE	51	UG/KG		J	510								
ED118	SD	REAL	SD00229WC	21-MAY-91	N	TRG	SVOCLPTCL	BENZO(a)PYRENE	510	UG/KG		U	510								
ED118	SD	REAL	SD00229WC	21-MAY-91	N	TRG	SVOCLPTCL	BENZO(b)FLUORANTHENE	62	UG/KG		J	510								
ED118	SD	REAL	SD00229WC	21-MAY-91	N	TRG	SVOCLPTCL	BENZO(ghi)PERYLENE	510	UG/KG		U	510								
ED118	SD	REAL	SD00229WC	21-MAY-91	N	TRG	SVOCLPTCL	BENZO(k)FLUORANTHENE	510	UG/KG		U	510								
ED118	SD	REAL	SD00229WC	21-MAY-91	N	TRG	SVOCLPTCL	BENZOIC ACID	2500	UG/KG		U	2500								
ED118	SD	REAL	SD00229WC	21-MAY-91	N	TRG	SVOCLPTCL	BENZYL ALCOHOL	510	UG/KG		U	510								
ED118	SD	REAL	SD00229WC	21-MAY-91	N	TRG	SVOCLPTCL	BIS(2-CHLOROETHOXY)METHANE	510	UG/KG		U	510								
ED118	SD	REAL	SD00229WC	21-MAY-91	N	TRG	SVOCLPTCL	BIS(2-CHLOROETHYL)ETHER	510	UG/KG		U	510								
ED118	SD	REAL	SD00229WC	21-MAY-91	N	TRG	SVOCLPTCL	BIS(2-CHLOROISOPROPYL)ETHER	510	UG/KG		U	510								
ED118	SD	REAL	SD00229WC	21-MAY-91	N	TRG	SVOCLPTCL	BIS(2-ETHYLHEXYL)PHTHALATE	510	UG/KG		U	510								
ED118	SD	REAL	SD00229WC	21-MAY-91	N	TRG	SVOCLPTCL	BUTYL BENZYL PHTHALATE	510	UG/KG		U	510								
ED118	SD	REAL	SD00229WC	21-MAY-91	N	TRG	SVOCLPTCL	CHRYSENE	53	UG/KG		J	510								
ED118	SD	REAL	SD00229WC	21-MAY-91	N	TRG	SVOCLPTCL	DI-n-BUTYL PHTHALATE	510	UG/KG		U	510								
ED118	SD	REAL	SD00229WC	21-MAY-91	N	TRG	SVOCLPTCL	DI-n-OCTYL PHTHALATE	510	UG/KG		U	510								
ED118	SD	REAL	SD00229WC	21-MAY-91	N	TRG	SVOCLPTCL	DIBENZO(a,h)ANTHRACENE	510	UG/KG		U	510								
ED118	SD	REAL	SD00229WC	21-MAY-91	N	TRG	SVOCLPTCL	DIBENZOFURAN	510	UG/KG		U	510								
ED118	SD	REAL	SD00229WC	21-MAY-91	N	TRG	SVOCLPTCL	DIETHYL PHTHALATE	510	UG/KG		U	510								
ED118	SD	REAL	SD00229WC	21-MAY-91	N	TRG	SVOCLPTCL	DIMETHYL PHTHALATE	510	UG/KG		U	510								
ED118	SD	REAL	SD00229WC	21-MAY-91	N	TRG	SVOCLPTCL	FLUORANTHENE	99	UG/KG		J	510								
ED118	SD	REAL	SD00229WC	21-MAY-91	N	TRG	SVOCLPTCL	FLUORENE	510	UG/KG		U	510								
ED118	SD	REAL	SD00229WC	21-MAY-91	N	TRG	SVOCLPTCL	HEXACHLOROBENZENE	510	UG/KG		U	510								
ED118	SD	REAL	SD00229WC	21-MAY-91	N	TRG	SVOCLPTCL	HEXACHLOROBUTADIENE	510	UG/KG		U	510								
ED118	SD	REAL	SD00229WC	21-MAY-91	N	TRG	SVOCLPTCL	HEXACHLOROCYCLOPENTADIENE	510	UG/KG		U	510								
ED118	SD	REAL	SD00229WC	21-MAY-91	N	TRG	SVOCLPTCL	HEXACHLOROETHANE	510	UG/KG		U	510								
ED118	SD	REAL	SD00229WC	21-MAY-91	N	TRG	SVOCLPTCL	INDENO(1,2,3-cd)PYRENE	510	UG/KG		U	510								
ED118	SD	REAL	SD00229WC	21-MAY-91	N	TRG	SVOCLPTCL	ISOPHORONE	510	UG/KG		U	510								
ED118	SD	REAL	SD00229WC	21-MAY-91	N	TRG	SVOCLPTCL	N-NITROSO-DI-n-PROPYLAMINE	510	UG/KG		U	510								
ED118	SD	REAL	SD00229WC	21-MAY-91	N	TRG	SVOCLPTCL	N-NITROSODIPHENYLAMINE	510	UG/KG		U	510								
ED118	SD	REAL	SD00229WC	21-MAY-91	N	TRG	SVOCLPTCL	NAPHTHALENE	510	UG/KG		U	510								
ED118	SD	REAL	SD00229WC	21-MAY-91	N	TRG	SVOCLPTCL	NITROBENZENE	510	UG/KG		U	510								
ED118	SD	REAL	SD00229WC	21-MAY-91	N	TRG	SVOCLPTCL	PENTACHLOROPHENOL	2500	UG/KG		U	2500								
ED118	SD	REAL	SD00229WC	21-MAY-91	N	TRG	SVOCLPTCL	PHENANTHRENE	71	UG/KG		J	510								

ation	ST	QC	Sample Number	Smpl Date	D	ID	Group	Chemical	Result	Unit	Error	Qual	D LMT	VA	RN1	RN2	RN3	RN4	VResult	VQual	VDET
D118	SD	REAL	SD00229WC	21-MAY-91	N	TRG	SVOCLPTCL	PHENOL	510	UG/KG		U	510								
D118	SD	REAL	SD00229WC	21-MAY-91	N	TRG	SVOCLPTCL	PYRENE	92	UG/KG		J	510								
D118	SD	REAL	SD00229WC	21-MAY-91	N	TRG	VOCCLPTCL	1,1,1-TRICHLOROETHANE	8	UG/KG		U	8								
D118	SD	REAL	SD00229WC	21-MAY-91	N	TRG	VOCCLPTCL	1,1,2,2-TETRACHLOROETHANE	8	UG/KG		U	8								
D118	SD	REAL	SD00229WC	21-MAY-91	N	TRG	VOCCLPTCL	1,1,2-TRICHLOROETHANE	8	UG/KG		U	8								
D118	SD	REAL	SD00229WC	21-MAY-91	N	TRG	VOCCLPTCL	1,1-DICHLOROETHANE	8	UG/KG		U	8								
D118	SD	REAL	SD00229WC	21-MAY-91	N	TRG	VOCCLPTCL	1,1-DICHLOROETHENE	8	UG/KG		U	8								
D118	SD	REAL	SD00229WC	21-MAY-91	N	TRG	VOCCLPTCL	1,2-DICHLOROETHANE	8	UG/KG		U	8								
D118	SD	REAL	SD00229WC	21-MAY-91	N	TRG	VOCCLPTCL	1,2-DICHLOROETHENE	8	UG/KG		U	8								
D118	SD	REAL	SD00229WC	21-MAY-91	N	TRG	VOCCLPTCL	1,2-DICHLOROPROPANE	8	UG/KG		U	8								
D118	SD	REAL	SD00229WC	21-MAY-91	N	TRG	VOCCLPTCL	2-BUTANONE	16	UG/KG		U	16								
D118	SD	REAL	SD00229WC	21-MAY-91	N	TRG	VOCCLPTCL	2-HEXANONE	16	UG/KG		U	16								
D118	SD	REAL	SD00229WC	21-MAY-91	N	TRG	VOCCLPTCL	4-METHYL-2-PENTANONE	16	UG/KG		U	16								
D118	SD	REAL	SD00229WC	21-MAY-91	N	TRG	VOCCLPTCL	ACETONE	16	UG/KG		U	16								
D118	SD	REAL	SD00229WC	21-MAY-91	N	TRG	VOCCLPTCL	BENZENE	8	UG/KG		U	8								
D118	SD	REAL	SD00229WC	21-MAY-91	N	TRG	VOCCLPTCL	BROMODICHLOROMETHANE	8	UG/KG		U	8								
D118	SD	REAL	SD00229WC	21-MAY-91	N	TRG	VOCCLPTCL	BROMOFORM	8	UG/KG		U	8								
D118	SD	REAL	SD00229WC	21-MAY-91	N	TRG	VOCCLPTCL	BROMOMETHANE	16	UG/KG		U	16								
D118	SD	REAL	SD00229WC	21-MAY-91	N	TRG	VOCCLPTCL	CARBON DISULFIDE	8	UG/KG		U	8								
D118	SD	REAL	SD00229WC	21-MAY-91	N	TRG	VOCCLPTCL	CARBON TETRACHLORIDE	8	UG/KG		U	8								
D118	SD	REAL	SD00229WC	21-MAY-91	N	TRG	VOCCLPTCL	CHLOROBENZENE	8	UG/KG		U	8								
D118	SD	REAL	SD00229WC	21-MAY-91	N	TRG	VOCCLPTCL	CHLOROETHANE	16	UG/KG		U	16								
D118	SD	REAL	SD00229WC	21-MAY-91	N	TRG	VOCCLPTCL	CHLOROFORM	8	UG/KG		U	8								
D118	SD	REAL	SD00229WC	21-MAY-91	N	TRG	VOCCLPTCL	CHLOROMETHANE	16	UG/KG		U	16								
D118	SD	REAL	SD00229WC	21-MAY-91	N	TRG	VOCCLPTCL	DIBROMOCHLOROMETHANE	8	UG/KG		U	8								
D118	SD	REAL	SD00229WC	21-MAY-91	N	TRG	VOCCLPTCL	ETHYLBENZENE	8	UG/KG		U	8								
D118	SD	REAL	SD00229WC	21-MAY-91	N	TRG	VOCCLPTCL	METHYLENE CHLORIDE	110	UG/KG		B	7	8							
D118	SD	REAL	SD00229WC	21-MAY-91	N	TRG	VOCCLPTCL	STYRENE	8	UG/KG		U	8								
D118	SD	REAL	SD00229WC	21-MAY-91	N	TRG	VOCCLPTCL	TETRACHLOROETHENE	8	UG/KG		U	8								
D118	SD	REAL	SD00229WC	21-MAY-91	N	TRG	VOCCLPTCL	TOLUENE	8	UG/KG		U	8								
D118	SD	REAL	SD00229WC	21-MAY-91	N	TRG	VOCCLPTCL	TOTAL XYLENES	8	UG/KG		U	8								
D118	SD	REAL	SD00229WC	21-MAY-91	N	TRG	VOCCLPTCL	TRICHLOROETHENE	8	UG/KG		U	8								
D118	SD	REAL	SD00229WC	21-MAY-91	N	TRG	VOCCLPTCL	VINYL ACETATE	16	UG/KG		U	16								
D118	SD	REAL	SD00229WC	21-MAY-91	N	TRG	VOCCLPTCL	VINYL CHLORIDE	16	UG/KG		U	16								
D118	SD	REAL	SD00229WC	21-MAY-91	N	TRG	VOCCLPTCL	cis-1,3-DICHLOROPROPENE	8	UG/KG		U	8								
D118	SD	REAL	SD00229WC	21-MAY-91	N	TRG	VOCCLPTCL	trans-1,3-DICHLOROPROPENE	8	UG/KG		U	8								
D118	SD	REAL	SD00263WC	13-AUG-91	N	TRG	SVOCLPTCL	1,2,4-TRICHLOROBENZENE	480	UG/KG		U	480								
D118	SD	REAL	SD00263WC	13-AUG-91	N	TRG	SVOCLPTCL	1,2-DICHLOROBENZENE	480	UG/KG		U	480								
D118	SD	REAL	SD00263WC	13-AUG-91	N	TRG	SVOCLPTCL	1,3-DICHLOROBENZENE	480	UG/KG		U	480								
D118	SD	REAL	SD00263WC	13-AUG-91	N	TRG	SVOCLPTCL	1,4-DICHLOROBENZENE	480	UG/KG		U	480								
D118	SD	REAL	SD00263WC	13-AUG-91	N	TRG	SVOCLPTCL	2,4,5-TRICHLOROPHENOL	2400	UG/KG		U	2400								
D118	SD	REAL	SD00263WC	13-AUG-91	N	TRG	SVOCLPTCL	2,4,6-TRICHLOROPHENOL	480	UG/KG		U	480								
D118	SD	REAL	SD00263WC	13-AUG-91	N	TRG	SVOCLPTCL	2,4-DICHLOROPHENOL	480	UG/KG		U	480								
D118	SD	REAL	SD00263WC	13-AUG-91	N	TRG	SVOCLPTCL	2,4-DIMETHYLPHENOL	480	UG/KG		U	480								
D118	SD	REAL	SD00263WC	13-AUG-91	N	TRG	SVOCLPTCL	2,4-DINITROPHENOL	2400	UG/KG		U	2400								
D118	SD	REAL	SD00263WC	13-AUG-91	N	TRG	SVOCLPTCL	2,4-DINITROTOLUENE	480	UG/KG		U	480								
D118	SD	REAL	SD00263WC	13-AUG-91	N	TRG	SVOCLPTCL	2,6-DINITROTOLUENE	480	UG/KG		U	480								
D118	SD	REAL	SD00263WC	13-AUG-91	N	TRG	SVOCLPTCL	2-CHLORONAPHTHALENE	480	UG/KG		U	480								
D118	SD	REAL	SD00263WC	13-AUG-91	N	TRG	SVOCLPTCL	2-CHLOROPHENOL	480	UG/KG		U	480								
D118	SD	REAL	SD00263WC	13-AUG-91	N	TRG	SVOCLPTCL	2-METHYLNAPHTHALENE	480	UG/KG		U	480								
D118	SD	REAL	SD00263WC	13-AUG-91	N	TRG	SVOCLPTCL	2-METHYLPHENOL	480	UG/KG		U	480								
D118	SD	REAL	SD00263WC	13-AUG-91	N	TRG	SVOCLPTCL	2-NITROANILINE	2400	UG/KG		U	2400								
D118	SD	REAL	SD00263WC	13-AUG-91	N	TRG	SVOCLPTCL	2-NITROPHENOL	480	UG/KG		U	480								
D118	SD	REAL	SD00263WC	13-AUG-91	N	TRG	SVOCLPTCL	3,3'-DICHLOROBENZIDINE	960	UG/KG		U	960								
D118	SD	REAL	SD00263WC	13-AUG-91	N	TRG	SVOCLPTCL	3-NITROANILINE	2400	UG/KG		U	2400								
D118	SD	REAL	SD00263WC	13-AUG-91	N	TRG	SVOCLPTCL	4,6-DINITRO-2-METHYLPHENOL	2400	UG/KG		U	2400								
D118	SD	REAL	SD00263WC	13-AUG-91	N	TRG	SVOCLPTCL	4-BROMOPHENYL PHENYL ETHER	480	UG/KG		U	480								
D118	SD	REAL	SD00263WC	13-AUG-91	N	TRG	SVOCLPTCL	4-CHLORO-3-METHYLPHENOL	480	UG/KG		U	480								
D118	SD	REAL	SD00263WC	13-AUG-91	N	TRG	SVOCLPTCL	4-CHLOROANILINE	480	UG/KG		U	480								
D118	SD	REAL	SD00263WC	13-AUG-91	N	TRG	SVOCLPTCL	4-CHLOROPHENYL PHENYL ETHER	480	UG/KG		U	480								
D118	SD	REAL	SD00263WC	13-AUG-91	N	TRG	SVOCLPTCL	4-METHYLPHENOL	480	UG/KG		U	480								
D118	SD	REAL	SD00263WC	13-AUG-91	N	TRG	SVOCLPTCL	4-NITROANILINE	2400	UG/KG		U	2400								
D118	SD	REAL	SD00263WC	13-AUG-91	N	TRG	SVOCLPTCL	4-NITROPHENOL	2400	UG/KG		U	2400								

cation	ST	QC	Sample Number	Smpl Date	D	ID	Group	Chemical	Result	Unit	Error	Qual	D LMT	VA	RN1	RN2	RN3	RN4	VResult	VQual	VDET
D118	SD	REAL	SD00263WC	13-AUG-91	N	TRG	SVOCLPTCL	ACENAPHTHENE	480	UG/KG		U	480								
D118	SD	REAL	SD00263WC	13-AUG-91	N	TRG	SVOCLPTCL	ACENAPHTHYLENE	480	UG/KG		U	480								
D118	SD	REAL	SD00263WC	13-AUG-91	N	TRG	SVOCLPTCL	ANTHRACENE	480	UG/KG		U	480								
D118	SD	REAL	SD00263WC	13-AUG-91	N	TRG	SVOCLPTCL	BENZO(a)ANTHRACENE	49	UG/KG		J	480								
D118	SD	REAL	SD00263WC	13-AUG-91	N	TRG	SVOCLPTCL	BENZO(a)PYRENE	480	UG/KG		U	480								
D118	SD	REAL	SD00263WC	13-AUG-91	N	TRG	SVOCLPTCL	BENZO(b)FLUORANTHENE	61	UG/KG		J	480								
D118	SD	REAL	SD00263WC	13-AUG-91	N	TRG	SVOCLPTCL	BENZO(ghi)PERYLENE	480	UG/KG		U	480								
D118	SD	REAL	SD00263WC	13-AUG-91	N	TRG	SVOCLPTCL	BENZO(k)FLUORANTHENE	480	UG/KG		U	480								
D118	SD	REAL	SD00263WC	13-AUG-91	N	TRG	SVOCLPTCL	BENZOIC ACID	2400	UG/KG		U	2400								
D118	SD	REAL	SD00263WC	13-AUG-91	N	TRG	SVOCLPTCL	BENZYL ALCOHOL	480	UG/KG		U	480								
D118	SD	REAL	SD00263WC	13-AUG-91	N	TRG	SVOCLPTCL	BIS(2-CHLOROETHOXY)METHANE	480	UG/KG		U	480								
D118	SD	REAL	SD00263WC	13-AUG-91	N	TRG	SVOCLPTCL	BIS(2-CHLOROETHYL)ETHER	480	UG/KG		U	480								
D118	SD	REAL	SD00263WC	13-AUG-91	N	TRG	SVOCLPTCL	BIS(2-CHLOROISOPROPYL)ETHER	480	UG/KG		U	480								
D118	SD	REAL	SD00263WC	13-AUG-91	N	TRG	SVOCLPTCL	BIS(2-ETHYLHEXYL)PHTHALATE	96	UG/KG		JB	480								
D118	SD	REAL	SD00263WC	13-AUG-91	N	TRG	SVOCLPTCL	BUTYL BENZYL PHTHALATE	480	UG/KG		U	480								
D118	SD	REAL	SD00263WC	13-AUG-91	N	TRG	SVOCLPTCL	CHRYSENE	51	UG/KG		J	480								
D118	SD	REAL	SD00263WC	13-AUG-91	N	TRG	SVOCLPTCL	DI-n-BUTYL PHTHALATE	480	UG/KG		U	480								
D118	SD	REAL	SD00263WC	13-AUG-91	N	TRG	SVOCLPTCL	DI-n-OCTYL PHTHALATE	480	UG/KG		U	480								
D118	SD	REAL	SD00263WC	13-AUG-91	N	TRG	SVOCLPTCL	DIBENZO(a,h)ANTHRACENE	480	UG/KG		U	480								
D118	SD	REAL	SD00263WC	13-AUG-91	N	TRG	SVOCLPTCL	DIBENZOFURAN	480	UG/KG		U	480								
D118	SD	REAL	SD00263WC	13-AUG-91	N	TRG	SVOCLPTCL	DIETHYL PHTHALATE	480	UG/KG		U	480								
D118	SD	REAL	SD00263WC	13-AUG-91	N	TRG	SVOCLPTCL	DIMETHYL PHTHALATE	480	UG/KG		U	480								
D118	SD	REAL	SD00263WC	13-AUG-91	N	TRG	SVOCLPTCL	FLUORANTHENE	110	UG/KG		J	480								
D118	SD	REAL	SD00263WC	13-AUG-91	N	TRG	SVOCLPTCL	FLUORENE	480	UG/KG		U	480								
D118	SD	REAL	SD00263WC	13-AUG-91	N	TRG	SVOCLPTCL	HEXACHLOROBENZENE	480	UG/KG		U	480								
D118	SD	REAL	SD00263WC	13-AUG-91	N	TRG	SVOCLPTCL	HEXACHLOROBUTADIENE	480	UG/KG		U	480								
D118	SD	REAL	SD00263WC	13-AUG-91	N	TRG	SVOCLPTCL	HEXACHLOROCYCLOPENTADIENE	480	UG/KG		U	480								
D118	SD	REAL	SD00263WC	13-AUG-91	N	TRG	SVOCLPTCL	HEXACHLOROETHANE	480	UG/KG		U	480								
D118	SD	REAL	SD00263WC	13-AUG-91	N	TRG	SVOCLPTCL	INDENO(1,2,3-cd)PYRENE	480	UG/KG		U	480								
D118	SD	REAL	SD00263WC	13-AUG-91	N	TRG	SVOCLPTCL	ISOPHORONE	480	UG/KG		U	480								
D118	SD	REAL	SD00263WC	13-AUG-91	N	TRG	SVOCLPTCL	N-NITROSO-DI-n-PROPYLAMINE	480	UG/KG		U	480								
D118	SD	REAL	SD00263WC	13-AUG-91	N	TRG	SVOCLPTCL	N-NITROSODIPHENYLAMINE	480	UG/KG		U	480								
D118	SD	REAL	SD00263WC	13-AUG-91	N	TRG	SVOCLPTCL	NAPHTHALENE	480	UG/KG		U	480								
D118	SD	REAL	SD00263WC	13-AUG-91	N	TRG	SVOCLPTCL	NITROBENZENE	480	UG/KG		U	480								
D118	SD	REAL	SD00263WC	13-AUG-91	N	TRG	SVOCLPTCL	PENTACHLOROPHENOL	2400	UG/KG		U	2400								
D118	SD	REAL	SD00263WC	13-AUG-91	N	TRG	SVOCLPTCL	PHENANTHRENE	95	UG/KG		J	480								
D118	SD	REAL	SD00263WC	13-AUG-91	N	TRG	SVOCLPTCL	PHENOL	480	UG/KG		U	480								
D118	SD	REAL	SD00263WC	13-AUG-91	N	TRG	SVOCLPTCL	PYRENE	120	UG/KG		J	480								
D118	SD	REAL	SD00263WC	13-AUG-91	N	TRG	VOCCLPTCL	1,1,1-TRICHLOROETHANE	7	UG/KG		U	7								
D118	SD	REAL	SD00263WC	13-AUG-91	N	TRG	VOCCLPTCL	1,1,2,2-TETRACHLOROETHANE	7	UG/KG		U	7								
D118	SD	REAL	SD00263WC	13-AUG-91	N	TRG	VOCCLPTCL	1,1,2-TRICHLOROETHANE	7	UG/KG		U	7								
D118	SD	REAL	SD00263WC	13-AUG-91	N	TRG	VOCCLPTCL	1,1-DICHLOROETHANE	7	UG/KG		U	7								
D118	SD	REAL	SD00263WC	13-AUG-91	N	TRG	VOCCLPTCL	1,1-DICHLOROETHENE	7	UG/KG		U	7								
D118	SD	REAL	SD00263WC	13-AUG-91	N	TRG	VOCCLPTCL	1,2-DICHLOROETHANE	7	UG/KG		U	7								
D118	SD	REAL	SD00263WC	13-AUG-91	N	TRG	VOCCLPTCL	1,2-DICHLOROETHENE	7	UG/KG		U	7								
D118	SD	REAL	SD00263WC	13-AUG-91	N	TRG	VOCCLPTCL	1,2-DICHLOROPROPANE	7	UG/KG		U	7								
D118	SD	REAL	SD00263WC	13-AUG-91	N	TRG	VOCCLPTCL	2-BUTANONE	14	UG/KG		U	14								
D118	SD	REAL	SD00263WC	13-AUG-91	N	TRG	VOCCLPTCL	2-HEXANONE	14	UG/KG		U	14								
D118	SD	REAL	SD00263WC	13-AUG-91	N	TRG	VOCCLPTCL	4-METHYL-2-PENTANONE	14	UG/KG		U	14								
D118	SD	REAL	SD00263WC	13-AUG-91	N	TRG	VOCCLPTCL	ACETONE	21	UG/KG		B	14								
D118	SD	REAL	SD00263WC	13-AUG-91	N	TRG	VOCCLPTCL	BENZENE	7	UG/KG		U	7								
D118	SD	REAL	SD00263WC	13-AUG-91	N	TRG	VOCCLPTCL	BROMODICHLOROMETHANE	7	UG/KG		U	7								
D118	SD	REAL	SD00263WC	13-AUG-91	N	TRG	VOCCLPTCL	BROMOFORM	7	UG/KG		U	7								
D118	SD	REAL	SD00263WC	13-AUG-91	N	TRG	VOCCLPTCL	BROMOMETHANE	14	UG/KG		U	14								
D118	SD	REAL	SD00263WC	13-AUG-91	N	TRG	VOCCLPTCL	CARBON DISULFIDE	7	UG/KG		U	7								
D118	SD	REAL	SD00263WC	13-AUG-91	N	TRG	VOCCLPTCL	CARBON TETRACHLORIDE	7	UG/KG		U	7								
D118	SD	REAL	SD00263WC	13-AUG-91	N	TRG	VOCCLPTCL	CHLOROBENZENE	7	UG/KG		U	7								
D118	SD	REAL	SD00263WC	13-AUG-91	N	TRG	VOCCLPTCL	CHLOROETHANE	14	UG/KG		U	14								
D118	SD	REAL	SD00263WC	13-AUG-91	N	TRG	VOCCLPTCL	CHLOROFORM	7	UG/KG		U	7								
D118	SD	REAL	SD00263WC	13-AUG-91	N	TRG	VOCCLPTCL	CHLOROMETHANE	14	UG/KG		U	14								
D118	SD	REAL	SD00263WC	13-AUG-91	N	TRG	VOCCLPTCL	DIBROMOCHLOROMETHANE	7	UG/KG		U	7								
D118	SD	REAL	SD00263WC	13-AUG-91	N	TRG	VOCCLPTCL	ETHYLBENZENE	7	UG/KG		U	7								
D118	SD	REAL	SD00263WC	13-AUG-91	N	TRG	VOCCLPTCL	METHYLENE CHLORIDE	23	UG/KG		B	7	2							

ocation	ST	QC	Sample Number	Smpl Date	D	ID	Group	Chemical	Result	Unit	Error	Qual	D LMT	VA	RN1	RN2	RN3	RN4	VResult	VQual	VDET
ED118	SD	REAL	SD00263WC	13-AUG-91	N	TRG	VOCCLPTCL	STYRENE	7	UG/KG		U	7								
ED118	SD	REAL	SD00263WC	13-AUG-91	N	TRG	VOCCLPTCL	TETRACHLOROETHENE	7	UG/KG		U	7								
ED118	SD	REAL	SD00263WC	13-AUG-91	N	TRG	VOCCLPTCL	TOLUENE	7	UG/KG		U	7								
ED118	SD	REAL	SD00263WC	13-AUG-91	N	TRG	VOCCLPTCL	TOTAL XYLENES	7	UG/KG		U	7								
ED118	SD	REAL	SD00263WC	13-AUG-91	N	TRG	VOCCLPTCL	TRICHLOROETHENE	7	UG/KG		U	7								
ED118	SD	REAL	SD00263WC	13-AUG-91	N	TRG	VOCCLPTCL	VINYL ACETATE	14	UG/KG		U	14								
ED118	SD	REAL	SD00263WC	13-AUG-91	N	TRG	VOCCLPTCL	VINYL CHLORIDE	14	UG/KG		U	14								
ED118	SD	REAL	SD00263WC	13-AUG-91	N	TRG	VOCCLPTCL	cis-1,3-DICHLOROPROPENE	7	UG/KG		U	7								
ED118	SD	REAL	SD00263WC	13-AUG-91	N	TRG	VOCCLPTCL	trans-1,3-DICHLOROPROPENE	7	UG/KG		U	7								
ED118	SD	REAL	SS00195WC	27-MAR-91	N	TRG	SVOCLPTCL	1,2,4-TRICHLOROBENZENE	530	UG/KG		U	530								
ED118	SD	REAL	SS00195WC	27-MAR-91	N	TRG	SVOCLPTCL	1,2-DICHLOROBENZENE	530	UG/KG		U	530								
ED118	SD	REAL	SS00195WC	27-MAR-91	N	TRG	SVOCLPTCL	1,3-DICHLOROBENZENE	530	UG/KG		U	530								
ED118	SD	REAL	SS00195WC	27-MAR-91	N	TRG	SVOCLPTCL	1,4-DICHLOROBENZENE	530	UG/KG		U	530								
ED118	SD	REAL	SS00195WC	27-MAR-91	N	TRG	SVOCLPTCL	2,4,5-TRICHLOROPHENOL	2600	UG/KG		U	2600								
ED118	SD	REAL	SS00195WC	27-MAR-91	N	TRG	SVOCLPTCL	2,4,6-TRICHLOROPHENOL	530	UG/KG		U	530								
ED118	SD	REAL	SS00195WC	27-MAR-91	N	TRG	SVOCLPTCL	2,4-DICHLOROPHENOL	530	UG/KG		U	530								
ED118	SD	REAL	SS00195WC	27-MAR-91	N	TRG	SVOCLPTCL	2,4-DIMETHYLPHENOL	530	UG/KG		U	530								
ED118	SD	REAL	SS00195WC	27-MAR-91	N	TRG	SVOCLPTCL	2,4-DINITROPHENOL	2600	UG/KG		U	2600								
ED118	SD	REAL	SS00195WC	27-MAR-91	N	TRG	SVOCLPTCL	2,4-DINITROTOLUENE	530	UG/KG		U	530								
ED118	SD	REAL	SS00195WC	27-MAR-91	N	TRG	SVOCLPTCL	2,6-DINITROTOLUENE	530	UG/KG		U	530								
ED118	SD	REAL	SS00195WC	27-MAR-91	N	TRG	SVOCLPTCL	2-CHLORONAPHTHALENE	530	UG/KG		U	530								
ED118	SD	REAL	SS00195WC	27-MAR-91	N	TRG	SVOCLPTCL	2-CHLOROPHENOL	530	UG/KG		U	530								
ED118	SD	REAL	SS00195WC	27-MAR-91	N	TRG	SVOCLPTCL	2-METHYLNAPHTHALENE	530	UG/KG		U	530								
ED118	SD	REAL	SS00195WC	27-MAR-91	N	TRG	SVOCLPTCL	2-METHYLPHENOL	530	UG/KG		U	530								
ED118	SD	REAL	SS00195WC	27-MAR-91	N	TRG	SVOCLPTCL	2-NITROANILINE	2600	UG/KG		U	2600								
ED118	SD	REAL	SS00195WC	27-MAR-91	N	TRG	SVOCLPTCL	2 NITROPHENOL	530	UG/KG		U	530								
ED118	SD	REAL	SS00195WC	27-MAR-91	N	TRG	SVOCLPTCL	3,3'-DICHLOROBENZIDINE	1100	UG/KG		U	1100								
ED118	SD	REAL	SS00195WC	27-MAR-91	N	TRG	SVOCLPTCL	3-NITROANILINE	2600	UG/KG		U	2600								
ED118	SD	REAL	SS00195WC	27-MAR-91	N	TRG	SVOCLPTCL	4,6-DINITRO-2-METHYLPHENOL	2600	UG/KG		U	2600								
ED118	SD	REAL	SS00195WC	27-MAR-91	N	TRG	SVOCLPTCL	4-BROMOPHENYL PHENYL ETHER	530	UG/KG		U	530								
ED118	SD	REAL	SS00195WC	27-MAR-91	N	TRG	SVOCLPTCL	4-CHLORO-3-METHYLPHENOL	530	UG/KG		U	530								
ED118	SD	REAL	SS00195WC	27-MAR-91	N	TRG	SVOCLPTCL	4-CHLOROANILINE	530	UG/KG		U	530								
ED118	SD	REAL	SS00195WC	27-MAR-91	N	TRG	SVOCLPTCL	4-CHLOROPHENYL PHENYL ETHER	530	UG/KG		U	530								
ED118	SD	REAL	SS00195WC	27-MAR-91	N	TRG	SVOCLPTCL	4-METHYLPHENOL	530	UG/KG		U	530								
ED118	SD	REAL	SS00195WC	27-MAR-91	N	TRG	SVOCLPTCL	4-NITROANILINE	2600	UG/KG		U	2600								
ED118	SD	REAL	SS00195WC	27-MAR-91	N	TRG	SVOCLPTCL	4-NITROPHENOL	2600	UG/KG		U	2600								
ED118	SD	REAL	SS00195WC	27-MAR-91	N	TRG	SVOCLPTCL	ACENAPHTHENE	530	UG/KG		U	530								
ED118	SD	REAL	SS00195WC	27-MAR-91	N	TRG	SVOCLPTCL	ACENAPHTHYLENE	530	UG/KG		U	530								
ED118	SD	REAL	SS00195WC	27-MAR-91	N	TRG	SVOCLPTCL	ANTHRACENE	530	UG/KG		U	530								
ED118	SD	REAL	SS00195WC	27-MAR-91	N	TRG	SVOCLPTCL	BENZO(a)ANTHRACENE	530	UG/KG		U	530								
ED118	SD	REAL	SS00195WC	27-MAR-91	N	TRG	SVOCLPTCL	BENZO(a)PYRENE	530	UG/KG		U	530								
ED118	SD	REAL	SS00195WC	27-MAR-91	N	TRG	SVOCLPTCL	BENZO(b)FLUORANTHENE	530	UG/KG		U	530								
ED118	SD	REAL	SS00195WC	27-MAR-91	N	TRG	SVOCLPTCL	BENZO(ghi)PERYLENE	530	UG/KG		U	530								
ED118	SD	REAL	SS00195WC	27-MAR-91	N	TRG	SVOCLPTCL	BENZO(k)FLUORANTHENE	530	UG/KG		U	530								
ED118	SD	REAL	SS00195WC	27-MAR-91	N	TRG	SVOCLPTCL	BENZOIC ACID	2600	UG/KG		U	2600								
ED118	SD	REAL	SS00195WC	27-MAR-91	N	TRG	SVOCLPTCL	BENZYL ALCOHOL	530	UG/KG		U	530								
ED118	SD	REAL	SS00195WC	27-MAR-91	N	TRG	SVOCLPTCL	BIS(2-CHLOROETHOXY)METHANE	530	UG/KG		U	530								
ED118	SD	REAL	SS00195WC	27-MAR-91	N	TRG	SVOCLPTCL	BIS(2-CHLOROETHYL)ETHER	530	UG/KG		U	530								
ED118	SD	REAL	SS00195WC	27-MAR-91	N	TRG	SVOCLPTCL	BIS(2-CHLOROISOPROPYL)ETHER	530	UG/KG		U	530								
ED118	SD	REAL	SS00195WC	27-MAR-91	N	TRG	SVOCLPTCL	BIS(2-ETHYLHEXYL)PHTHALATE	110	UG/KG		J	530								
ED118	SD	REAL	SS00195WC	27-MAR-91	N	TRG	SVOCLPTCL	BUTYL BENZYL PHTHALATE	530	UG/KG		U	530								
ED118	SD	REAL	SS00195WC	27-MAR-91	N	TRG	SVOCLPTCL	CHRYSENE	530	UG/KG		U	530								
ED118	SD	REAL	SS00195WC	27-MAR-91	N	TRG	SVOCLPTCL	DI-n-BUTYL PHTHALATE	54	UG/KG		J	530								
ED118	SD	REAL	SS00195WC	27-MAR-91	N	TRG	SVOCLPTCL	DI-n-OCTYL PHTHALATE	530	UG/KG		U	530								
ED118	SD	REAL	SS00195WC	27-MAR-91	N	TRG	SVOCLPTCL	DIBENZO(a,h)ANTHRACENE	530	UG/KG		U	530								
ED118	SD	REAL	SS00195WC	27-MAR-91	N	TRG	SVOCLPTCL	DIBENZOFURAN	530	UG/KG		U	530								
ED118	SD	REAL	SS00195WC	27-MAR-91	N	TRG	SVOCLPTCL	DIETHYL PHTHALATE	530	UG/KG		U	530								
ED118	SD	REAL	SS00195WC	27-MAR-91	N	TRG	SVOCLPTCL	DIMETHYL PHTHALATE	530	UG/KG		U	530								
ED118	SD	REAL	SS00195WC	27-MAR-91	N	TRG	SVOCLPTCL	FLUORANTHENE	70	UG/KG		J	530								
ED118	SD	REAL	SS00195WC	27-MAR-91	N	TRG	SVOCLPTCL	FLUORENE	530	UG/KG		U	530								
ED118	SD	REAL	SS00195WC	27-MAR-91	N	TRG	SVOCLPTCL	HEXACHLOROBENZENE	530	UG/KG		U	530								
ED118	SD	REAL	SS00195WC	27-MAR-91	N	TRG	SVOCLPTCL	HEXACHLOROBUTADIENE	530	UG/KG		U	530								
ED118	SD	REAL	SS00195WC	27-MAR-91	N	TRG	SVOCLPTCL	HEXACHLOROCYCLOPENTADIENE	530	UG/KG		U	530								

Location	ST	QC	Sample Number	Smpl Date	D	ID	Group	Chemical	Result	Unit	Error	Qual	D LMT	VA	RN1	RN2	RN3	RN4	VResult	VQual	VDET
[illegible]D118	SD	REAL	SS00195WC	27-MAR-91	N	TRG	SVOCLPTCL	HEXACHLOROETHANE	530	UG/KG		U	530								
[illegible]D118	SD	REAL	SS00195WC	27-MAR-91	N	TRG	SVOCLPTCL	INDENO(1,2,3-cd)PYRENE	530	UG/KG		U	530								
[illegible]D118	SD	REAL	SS00195WC	27-MAR-91	N	TRG	SVOCLPTCL	ISOPHORONE	530	UG/KG		U	530								
[illegible]D118	SD	REAL	SS00195WC	27-MAR-91	N	TRG	SVOCLPTCL	N-NITROSO-DI-n-PROPYLAMINE	530	UG/KG		U	530								
[illegible]D118	SD	REAL	SS00195WC	27-MAR-91	N	TRG	SVOCLPTCL	N-NITROSODIPHENYLAMINE	530	UG/KG		U	530								
[illegible]D118	SD	REAL	SS00195WC	27-MAR-91	N	TRG	SVOCLPTCL	NAPHTHALENE	530	UG/KG		U	530								
[illegible]D118	SD	REAL	SS00195WC	27-MAR-91	N	TRG	SVOCLPTCL	NITROBENZENE	530	UG/KG		U	530								
[illegible]D118	SD	REAL	SS00195WC	27-MAR-91	N	TRG	SVOCLPTCL	PENTACHLOROPHENOL	2600	UG/KG		U	2600								
[illegible]D118	SD	REAL	SS00195WC	27-MAR-91	N	TRG	SVOCLPTCL	PHENANTHRENE	530	UG/KG		U	530								
[illegible]D118	SD	REAL	SS00195WC	27-MAR-91	N	TRG	SVOCLPTCL	PHENOL	530	UG/KG		U	530								
[illegible]D118	SD	REAL	SS00195WC	27-MAR-91	N	TRG	SVOCLPTCL	PYRENE	86	UG/KG		J	530								
[illegible]D118	SD	REAL	SS00195WC	27-MAR-91	N	TRG	VOCCLPTCL	1,1,1-TRICHLOROETHANE	8	UG/KG		U	8								
[illegible]D118	SD	REAL	SS00195WC	27-MAR-91	N	TRG	VOCCLPTCL	1,1,2,2-TETRACHLOROETHANE	8	UG/KG		U	8								
[illegible]D118	SD	REAL	SS00195WC	27-MAR-91	N	TRG	VOCCLPTCL	1,1,2-TRICHLOROETHANE	8	UG/KG		U	8								
[illegible]D118	SD	REAL	SS00195WC	27-MAR-91	N	TRG	VOCCLPTCL	1,1-DICHLOROETHANE	8	UG/KG		U	8								
[illegible]D118	SD	REAL	SS00195WC	27-MAR-91	N	TRG	VOCCLPTCL	1,1-DICHLOROETHENE	8	UG/KG		U	8								
[illegible]D118	SD	REAL	SS00195WC	27-MAR-91	N	TRG	VOCCLPTCL	1,2-DICHLOROETHANE	8	UG/KG		U	8								
[illegible]D118	SD	REAL	SS00195WC	27-MAR-91	N	TRG	VOCCLPTCL	1,2-DICHLOROETHENE	8	UG/KG		U	8								
[illegible]D118	SD	REAL	SS00195WC	27-MAR-91	N	TRG	VOCCLPTCL	1,2-DICHLOROPROPANE	8	UG/KG		U	8								
[illegible]D118	SD	REAL	SS00195WC	27-MAR-91	N	TRG	VOCCLPTCL	2-BUTANONE	16	UG/KG		U	16								
[illegible]D118	SD	REAL	SS00195WC	27-MAR-91	N	TRG	VOCCLPTCL	2-HEXANONE	16	UG/KG		U	16								
[illegible]D118	SD	REAL	SS00195WC	27-MAR-91	N	TRG	VOCCLPTCL	4-METHYL-2-PENTANONE	16	UG/KG		U	16								
[illegible]D118	SD	REAL	SS00195WC	27-MAR-91	N	TRG	VOCCLPTCL	ACETONE	16	UG/KG		U	16								
[illegible]D118	SD	REAL	SS00195WC	27-MAR-91	N	TRG	VOCCLPTCL	BENZENE	8	UG/KG		U	8								
[illegible]D118	SD	REAL	SS00195WC	27-MAR-91	N	TRG	VOCCLPTCL	BROMODICHLOROMETHANE	8	UG/KG		U	8								
[illegible]D118	SD	REAL	SS00195WC	27-MAR-91	N	TRG	VOCCLPTCL	BROMOFORM	8	UG/KG		U	8								
[illegible]D118	SD	REAL	SS00195WC	27-MAR-91	N	TRG	VOCCLPTCL	BROMOMETHANE	16	UG/KG		U	16								
[illegible]D118	SD	REAL	SS00195WC	27-MAR-91	N	TRG	VOCCLPTCL	CARBON DISULFIDE	8	UG/KG		U	8								
[illegible]D118	SD	REAL	SS00195WC	27-MAR-91	N	TRG	VOCCLPTCL	CARBON TETRACHLORIDE	8	UG/KG		U	8								
[illegible]D118	SD	REAL	SS00195WC	27-MAR-91	N	TRG	VOCCLPTCL	CHLOROBENZENE	8	UG/KG		U	8								
[illegible]D118	SD	REAL	SS00195WC	27-MAR-91	N	TRG	VOCCLPTCL	CHLOROETHANE	16	UG/KG		U	16								
[illegible]D118	SD	REAL	SS00195WC	27-MAR-91	N	TRG	VOCCLPTCL	CHLOROFORM	8	UG/KG		U	8								
[illegible]D118	SD	REAL	SS00195WC	27-MAR-91	N	TRG	VOCCLPTCL	CHLOROMETHANE	16	UG/KG		U	16								
[illegible]D118	SD	REAL	SS00195WC	27-MAR-91	N	TRG	VOCCLPTCL	DIBROMOCHLOROMETHANE	8	UG/KG		U	8								
[illegible]D118	SD	REAL	SS00195WC	27-MAR-91	N	TRG	VOCCLPTCL	ETHYLBENZENE	8	UG/KG		U	8								
[illegible]D118	SD	REAL	SS00195WC	27-MAR-91	N	TRG	VOCCLPTCL	METHYLENE CHLORIDE	8	UG/KG		U	8								
[illegible]D118	SD	REAL	SS00195WC	27-MAR-91	N	TRG	VOCCLPTCL	STYRENE	8	UG/KG		U	8								
[illegible]D118	SD	REAL	SS00195WC	27-MAR-91	N	TRG	VOCCLPTCL	TETRACHLOROETHENE	8	UG/KG		U	8								
[illegible]D118	SD	REAL	SS00195WC	27-MAR-91	N	TRG	VOCCLPTCL	TOLUENE	8	UG/KG		U	8								
[illegible]D118	SD	REAL	SS00195WC	27-MAR-91	N	TRG	VOCCLPTCL	TOTAL XYLENES	8	UG/KG		U	8								
[illegible]D118	SD	REAL	SS00195WC	27-MAR-91	N	TRG	VOCCLPTCL	TRICHLOROETHENE	8	UG/KG		U	8								
[illegible]D118	SD	REAL	SS00195WC	27-MAR-91	N	TRG	VOCCLPTCL	VINYL ACETATE	16	UG/KG		U	16								
[illegible]D118	SD	REAL	SS00195WC	27-MAR-91	N	TRG	VOCCLPTCL	VINYL CHLORIDE	16	UG/KG		U	16								
[illegible]D118	SD	REAL	SS00195WC	27-MAR-91	N	TRG	VOCCLPTCL	cis-1,3-DICHLOROPROPENE	8	UG/KG		U	8								
[illegible]D118	SD	REAL	SS00195WC	27-MAR-91	N	TRG	VOCCLPTCL	trans-1,3-DICHLOROPROPENE	8	UG/KG		U	8								
[illegible]	SW	REAL	SW00693WC	30-JAN-91	N																
[illegible]	SW	REAL	SW00899WC	25-MAR-91	N	TRG	VOCCLPTCL	1,1,1-TRICHLOROETHANE	5	UG/L		U	5								
[illegible]	SW	REAL	SW00899WC	25-MAR-91	N	TRG	VOCCLPTCL	1,1,2,2-TETRACHLOROETHANE	5	UG/L		U	5								
[illegible]	SW	REAL	SW00899WC	25-MAR-91	N	TRG	VOCCLPTCL	1,1,2-TRICHLOROETHANE	5	UG/L		U	5								
[illegible]	SW	REAL	SW00899WC	25-MAR-91	N	TRG	VOCCLPTCL	1,1-DICHLOROETHANE	5	UG/L		U	5								
[illegible]	SW	REAL	SW00899WC	25-MAR-91	N	TRG	VOCCLPTCL	1,1-DICHLOROETHENE	5	UG/L		U	5								
[illegible]	SW	REAL	SW00899WC	25-MAR-91	N	TRG	VOCCLPTCL	1,2-DICHLOROETHANE	5	UG/L		U	5								
[illegible]	SW	REAL	SW00899WC	25-MAR-91	N	TRG	VOCCLPTCL	1,2-DICHLOROETHENE	5	UG/L		U	5								
[illegible]	SW	REAL	SW00899WC	25-MAR-91	N	TRG	VOCCLPTCL	1,2-DICHLOROPROPANE	5	UG/L		U	5								
[illegible]	SW	REAL	SW00899WC	25-MAR-91	N	TRG	VOCCLPTCL	2-BUTANONE	10	UG/L		U	10								
[illegible]	SW	REAL	SW00899WC	25-MAR-91	N	TRG	VOCCLPTCL	2-HEXANONE	10	UG/L		U	10								
[illegible]	SW	REAL	SW00899WC	25-MAR-91	N	TRG	VOCCLPTCL	4-METHYL-2-PENTANONE	10	UG/L		U	10								
[illegible]	SW	REAL	SW00899WC	25-MAR-91	N	TRG	VOCCLPTCL	ACETONE	10	UG/L		U	10								
[illegible]	SW	REAL	SW00899WC	25-MAR-91	N	TRG	VOCCLPTCL	BENZENE	5	UG/L		U	5								
[illegible]	SW	REAL	SW00899WC	25-MAR-91	N	TRG	VOCCLPTCL	BROMODICHLOROMETHANE	5	UG/L		U	5								
[illegible]	SW	REAL	SW00899WC	25-MAR-91	N	TRG	VOCCLPTCL	BROMOFORM	5	UG/L		U	5								
[illegible]	SW	REAL	SW00899WC	25-MAR-91	N	TRG	VOCCLPTCL	BROMOMETHANE	10	UG/L		U	10								
[illegible]	SW	REAL	SW00899WC	25-MAR-91	N	TRG	VOCCLPTCL	CARBON DISULFIDE	5	UG/L		U	5								

ocation	ST	QC	Sample Number	Smpl Date	D	ID	Group	Chemical	Result	Unit	Error	Qual	D LMT	VA	RN1	RN2	RN3	RN4	VResult	VQual	VDET
0018	SW	REAL	SW00899WC	25-MAR-91	N	TRG	VOCCLPTCL	CARBON TETRACHLORIDE	5	UG/L		U	5								
0018	SW	REAL	SW00899WC	25-MAR-91	N	TRG	VOCCLPTCL	CHLOROBENZENE	5	UG/L		U	5								
0018	SW	REAL	SW00899WC	25-MAR-91	N	TRG	VOCCLPTCL	CHLOROETHANE	10	UG/L		U	10								
0018	SW	REAL	SW00899WC	25-MAR-91	N	TRG	VOCCLPTCL	CHLOROFORM	5	UG/L		U	5								
0018	SW	REAL	SW00899WC	25-MAR-91	N	TRG	VOCCLPTCL	CHLOROMETHANE	10	UG/L		U	10								
0018	SW	REAL	SW00899WC	25-MAR-91	N	TRG	VOCCLPTCL	DIBROMOCHLOROMETHANE	5	UG/L		U	5								
0018	SW	REAL	SW00899WC	25-MAR-91	N	TRG	VOCCLPTCL	ETHYLBENZENE	5	UG/L		U	5								
0018	SW	REAL	SW00899WC	25-MAR-91	N	TRG	VOCCLPTCL	METHYLENE CHLORIDE	5	UG/L		U	5								
0018	SW	REAL	SW00899WC	25-MAR-91	N	TRG	VOCCLPTCL	STYRENE	5	UG/L		U	5								
0018	SW	REAL	SW00899WC	25-MAR-91	N	TRG	VOCCLPTCL	TETRACHLOROETHENE	5	UG/L		U	5								
0018	SW	REAL	SW00899WC	25-MAR-91	N	TRG	VOCCLPTCL	TOLUENE	5	UG/L		U	5								
0018	SW	REAL	SW00899WC	25-MAR-91	N	TRG	VOCCLPTCL	TOTAL XYLENES	5	UG/L		U	5								
0018	SW	REAL	SW00899WC	25-MAR-91	N	TRG	VOCCLPTCL	TRICHLOROETHENE	5	UG/L		U	5								
0018	SW	REAL	SW00899WC	25-MAR-91	N	TRG	VOCCLPTCL	VINYL ACETATE	10	UG/L		U	10								
0018	SW	REAL	SW00899WC	25-MAR-91	N	TRG	VOCCLPTCL	VINYL CHLORIDE	10	UG/L		U	10								
0018	SW	REAL	SW00899WC	25-MAR-91	N	TRG	VOCCLPTCL	cis-1,3-DICHLOROPROPENE	5	UG/L		U	5								
0018	SW	REAL	SW00899WC	25-MAR-91	N	TRG	VOCCLPTCL	trans-1,3-DICHLOROPROPENE	5	UG/L		U	5								
0018	SW	REAL	SW01002WC	16-APR-91	Y	TRG	SVOCLPTCL	1,2,4-TRICHLOROBENZENE	10	UG/L		U	10								
0018	SW	REAL	SW01002WC	16-APR-91	Y	TRG	SVOCLPTCL	1,2-DICHLOROBENZENE	10	UG/L		U	10								
0018	SW	REAL	SW01002WC	16-APR-91	Y	TRG	SVOCLPTCL	1,3-DICHLOROBENZENE	10	UG/L		U	10								
0018	SW	REAL	SW01002WC	16-APR-91	Y	TRG	SVOCLPTCL	1,4-DICHLOROBENZENE	10	UG/L		U	10								
0018	SW	REAL	SW01002WC	16-APR-91	Y	TRG	SVOCLPTCL	2,4,5-TRICHLOROPHENOL	50	UG/L		U	50								
0018	SW	REAL	SW01002WC	16-APR-91	Y	TRG	SVOCLPTCL	2,4,6-TRICHLOROPHENOL	10	UG/L		U	10								
0018	SW	REAL	SW01002WC	16-APR-91	Y	TRG	SVOCLPTCL	2,4-DICHLOROPHENOL	10	UG/L		U	10								
0018	SW	REAL	SW01002WC	16-APR-91	Y	TRG	SVOCLPTCL	2,4-DIMETHYLPHENOL	10	UG/L		U	10								
0018	SW	REAL	SW01002WC	16-APR-91	Y	TRG	SVOCLPTCL	2,4-DINITROPHENOL	50	UG/L		U	50								
0018	SW	REAL	SW01002WC	16-APR-91	Y	TRG	SVOCLPTCL	2,4-DINITROTOLUENE	10	UG/L		U	10								
0018	SW	REAL	SW01002WC	16-APR-91	Y	TRG	SVOCLPTCL	2,6-DINITROTOLUENE	10	UG/L		U	10								
0018	SW	REAL	SW01002WC	16-APR-91	Y	TRG	SVOCLPTCL	2-CHLORONAPHTHALENE	10	UG/L		U	10								
0018	SW	REAL	SW01002WC	16-APR-91	Y	TRG	SVOCLPTCL	2-CHLOROPHENOL	10	UG/L		U	10								
0018	SW	REAL	SW01002WC	16-APR-91	Y	TRG	SVOCLPTCL	2-METHYLNAPHTHALENE	10	UG/L		U	10								
0018	SW	REAL	SW01002WC	16-APR-91	Y	TRG	SVOCLPTCL	2-METHYLPHENOL	10	UG/L		U	10								
0018	SW	REAL	SW01002WC	16-APR-91	Y	TRG	SVOCLPTCL	2-NITROANILINE	50	UG/L		U	50								
0018	SW	REAL	SW01002WC	16-APR-91	Y	TRG	SVOCLPTCL	2-NITROPHENOL	10	UG/L		U	10								
0018	SW	REAL	SW01002WC	16-APR-91	Y	TRG	SVOCLPTCL	3,3'-DICHLOROBENZIDINE	20	UG/L		U	20								
0018	SW	REAL	SW01002WC	16-APR-91	Y	TRG	SVOCLPTCL	3-NITROANILINE	50	UG/L		U	50								
0018	SW	REAL	SW01002WC	16-APR-91	Y	TRG	SVOCLPTCL	4,6-DINITRO-2-METHYLPHENOL	50	UG/L		U	50								
0018	SW	REAL	SW01002WC	16-APR-91	Y	TRG	SVOCLPTCL	4-BROMOPHENYL PHENYL ETHER	10	UG/L		U	10								
0018	SW	REAL	SW01002WC	16-APR-91	Y	TRG	SVOCLPTCL	4-CHLORO-3-METHYLPHENOL	10	UG/L		U	10								
0018	SW	REAL	SW01002WC	16-APR-91	Y	TRG	SVOCLPTCL	4-CHLOROANILINE	10	UG/L		U	10								
0018	SW	REAL	SW01002WC	16-APR-91	Y	TRG	SVOCLPTCL	4-CHLOROPHENYL PHENYL ETHER	10	UG/L		U	10								
0018	SW	REAL	SW01002WC	16-APR-91	Y	TRG	SVOCLPTCL	4-METHYLPHENOL	10	UG/L		U	10								
0018	SW	REAL	SW01002WC	16-APR-91	Y	TRG	SVOCLPTCL	4-NITROANILINE	50	UG/L		U	50								
0018	SW	REAL	SW01002WC	16-APR-91	Y	TRG	SVOCLPTCL	4-NITROPHENOL	50	UG/L		U	50								
0018	SW	REAL	SW01002WC	16-APR-91	Y	TRG	SVOCLPTCL	ACENAPHTHENE	10	UG/L		U	10								
0018	SW	REAL	SW01002WC	16-APR-91	Y	TRG	SVOCLPTCL	ACENAPHTHYLENE	10	UG/L		U	10								
0018	SW	REAL	SW01002WC	16-APR-91	Y	TRG	SVOCLPTCL	ANTHRACENE	10	UG/L		U	10								
0018	SW	REAL	SW01002WC	16-APR-91	Y	TRG	SVOCLPTCL	BENZO(a)ANTHRACENE	10	UG/L		U	10								
0018	SW	REAL	SW01002WC	16-APR-91	Y	TRG	SVOCLPTCL	BENZO(a)PYRENE	10	UG/L		U	10								
0018	SW	REAL	SW01002WC	16-APR-91	Y	TRG	SVOCLPTCL	BENZO(b)FLUORANTHENE	10	UG/L		U	10								
0018	SW	REAL	SW01002WC	16-APR-91	Y	TRG	SVOCLPTCL	BENZO(ghi)PERYLENE	10	UG/L		U	10								
0018	SW	REAL	SW01002WC	16-APR-91	Y	TRG	SVOCLPTCL	BENZO(k)FLUORANTHENE	10	UG/L		U	10								
0018	SW	REAL	SW01002WC	16-APR-91	Y	TRG	SVOCLPTCL	BENZOIC ACID	50	UG/L		U	50								
0018	SW	REAL	SW01002WC	16-APR-91	Y	TRG	SVOCLPTCL	BENZYL ALCOHOL	10	UG/L		U	10								
0018	SW	REAL	SW01002WC	16-APR-91	Y	TRG	SVOCLPTCL	BIS(2-CHLOROETHOXY)METHANE	10	UG/L		U	10								
0018	SW	REAL	SW01002WC	16-APR-91	Y	TRG	SVOCLPTCL	BIS(2-CHLOROETHYL)ETHER	10	UG/L		U	10								
0018	SW	REAL	SW01002WC	16-APR-91	Y	TRG	SVOCLPTCL	BIS(2-CHLOROISOPROPYL)ETHER	10	UG/L		U	10								
0018	SW	REAL	SW01002WC	16-APR-91	Y	TRG	SVOCLPTCL	BIS(2-ETHYLHEXYL)PHTHALATE	10	UG/L		U	10								
0018	SW	REAL	SW01002WC	16-APR-91	Y	TRG	SVOCLPTCL	BUTYL BENZYL PHTHALATE	10	UG/L		U	10								
0018	SW	REAL	SW01002WC	16-APR-91	Y	TRG	SVOCLPTCL	CHRYSENE	10	UG/L		U	10								
0018	SW	REAL	SW01002WC	16-APR-91	Y	TRG	SVOCLPTCL	DI-n-BUTYL PHTHALATE	10	UG/L		U	10								
0018	SW	REAL	SW01002WC	16-APR-91	Y	TRG	SVOCLPTCL	DI-n-OCTYL PHTHALATE	10	UG/L		U	10								
0018	SW	REAL	SW01002WC	16-APR-91	Y	TRG	SVOCLPTCL	DIBENZO(a,h)ANTHRACENE	10	UG/L		U	10								

ocation	ST	QC	Sample Number	Smpl Date	D	ID	Group	Chemical	Result	Unit	Error	Qual	D LMT	VA	RN1	RN2	RN3	RN4	VResult	VQual	VDET
W018	SW	REAL	SW01002WC	16-APR-91	Y	TRG	SVOCLPTCL	DIBENZOFURAN	10	UG/L		U	10								
W018	SW	REAL	SW01002WC	16-APR-91	Y	TRG	SVOCLPTCL	DIETHYL PHTHALATE	10	UG/L		U	10								
W018	SW	REAL	SW01002WC	16-APR-91	Y	TRG	SVOCLPTCL	DIMETHYL PHTHALATE	10	UG/L		U	10								
W018	SW	REAL	SW01002WC	16-APR-91	Y	TRG	SVOCLPTCL	FLUORANTHENE	10	UG/L		U	10								
W018	SW	REAL	SW01002WC	16-APR-91	Y	TRG	SVOCLPTCL	FLUORENE	10	UG/L		U	10								
W018	SW	REAL	SW01002WC	16-APR-91	Y	TRG	SVOCLPTCL	HEXACHLOROBENZENE	10	UG/L		U	10								
W018	SW	REAL	SW01002WC	16-APR-91	Y	TRG	SVOCLPTCL	HEXACHLOROBUTADIENE	10	UG/L		U	10								
W018	SW	REAL	SW01002WC	16-APR-91	Y	TRG	SVOCLPTCL	HEXACHLOROCYCLOPENTADIENE	10	UG/L		U	10								
W018	SW	REAL	SW01002WC	16-APR-91	Y	TRG	SVOCLPTCL	HEXACHLOROETHANE	10	UG/L		U	10								
W018	SW	REAL	SW01002WC	16-APR-91	Y	TRG	SVOCLPTCL	INDENO(1,2,3-cd)PYRENE	10	UG/L		U	10								
W018	SW	REAL	SW01002WC	16-APR-91	Y	TRG	SVOCLPTCL	ISOPHORONE	10	UG/L		U	10								
W018	SW	REAL	SW01002WC	16-APR-91	Y	TRG	SVOCLPTCL	N-NITROSO-DI-n-PROPYLAMINE	10	UG/L		U	10								
W018	SW	REAL	SW01002WC	16-APR-91	Y	TRG	SVOCLPTCL	N-NITROSODIPHENYLAMINE	10	UG/L		U	10								
W018	SW	REAL	SW01002WC	16-APR-91	Y	TRG	SVOCLPTCL	NAPHTHALENE	10	UG/L		U	10								
W018	SW	REAL	SW01002WC	16-APR-91	Y	TRG	SVOCLPTCL	NITROBENZENE	10	UG/L		U	10								
W018	SW	REAL	SW01002WC	16-APR-91	Y	TRG	SVOCLPTCL	PENTACHLOROPHENOL	50	UG/L		U	50								
W018	SW	REAL	SW01002WC	16-APR-91	Y	TRG	SVOCLPTCL	PHENANTHRENE	10	UG/L		U	10								
W018	SW	REAL	SW01002WC	16-APR-91	Y	TRG	SVOCLPTCL	PHENOL	10	UG/L		U	10								
W018	SW	REAL	SW01002WC	16-APR-91	Y	TRG	SVOCLPTCL	PYRENE	10	UG/L		U	10								
W018	SW	REAL	SW01002WC	16-APR-91	Y	TRG	VOCCLPTCL	1,1,1-TRICHLOROETHANE	5	UG/L		U	5								
W018	SW	REAL	SW01002WC	16-APR-91	Y	TRG	VOCCLPTCL	1,1,2,2-TETRACHLOROETHANE	5	UG/L		U	5								
W018	SW	REAL	SW01002WC	16-APR-91	Y	TRG	VOCCLPTCL	1,1,2-TRICHLOROETHANE	5	UG/L		U	5								
W018	SW	REAL	SW01002WC	16-APR-91	Y	TRG	VOCCLPTCL	1,1 DICHLOROETHANE	5	UG/L		U	5								
W018	SW	REAL	SW01002WC	16-APR-91	Y	TRG	VOCCLPTCL	1,1-DICHLOROETHENE	5	UG/L		U	5								
W018	SW	REAL	SW01002WC	16-APR-91	Y	TRG	VOCCLPTCL	1,2-DICHLOROETHANE	5	UG/L		U	5								
W018	SW	REAL	SW01002WC	16-APR-91	Y	TRG	VOCCLPTCL	1,2-DICHLOROETHENE	5	UG/L		U	5								
W018	SW	REAL	SW01002WC	16-APR-91	Y	TRG	VOCCLPTCL	1,2-DICHLOROPROPANE	5	UG/L		U	5								
W018	SW	REAL	SW01002WC	16-APR-91	Y	TRG	VOCCLPTCL	2-BUTANONE	10	UG/L		U	10								
W018	SW	REAL	SW01002WC	16-APR 91	Y	TRG	VOCCLPTCL	2-HEXANONE	10	UG/L		U	10								
W018	SW	REAL	SW01002WC	16-APR-91	Y	TRG	VOCCLPTCL	4-METHYL-2-PENTANONE	10	UG/L		U	10								
W018	SW	REAL	SW01002WC	16-APR-91	Y	TRG	VOCCLPTCL	ACETONE	10	UG/L		U	10								
W018	SW	REAL	SW01002WC	16-APR-91	Y	TRG	VOCCLPTCL	BENZENE	5	UG/L		U	5								
W018	SW	REAL	SW01002WC	16-APR-91	Y	TRG	VOCCLPTCL	BROMODICHLOROMETHANE	5	UG/L		U	5								
W018	SW	REAL	SW01002WC	16-APR-91	Y	TRG	VOCCLPTCL	BROMOFORM	5	UG/L		U	5								
W018	SW	REAL	SW01002WC	16-APR-91	Y	TRG	VOCCLPTCL	BROMOMETHANE	10	UG/L		U	10								
W018	SW	REAL	SW01002WC	16-APR-91	Y	TRG	VOCCLPTCL	CARBON DISULFIDE	5	UG/L		U	5								
W018	SW	REAL	SW01002WC	16-APR-91	Y	TRG	VOCCLPTCL	CARBON TETRACHLORIDE	5	UG/L		U	5								
W018	SW	REAL	SW01002WC	16-APR-91	Y	TRG	VOCCLPTCL	CHLOROBENZENE	5	UG/L		U	5								
W018	SW	REAL	SW01002WC	16-APR-91	Y	TRG	VOCCLPTCL	CHLOROETHANE	10	UG/L		U	10								
W018	SW	REAL	SW01002WC	16-APR-91	Y	TRG	VOCCLPTCL	CHLOROFORM	5	UG/L		U	5								
W018	SW	REAL	SW01002WC	16-APR-91	Y	TRG	VOCCLPTCL	CHLOROMETHANE	10	UG/L		U	10								
W018	SW	REAL	SW01002WC	16-APR-91	Y	TRG	VOCCLPTCL	DIBROMOCHLOROMETHANE	5	UG/L		U	5								
W018	SW	REAL	SW01002WC	16-APR-91	Y	TRG	VOCCLPTCL	ETHYLBENZENE	5	UG/L		U	5								
W018	SW	REAL	SW01002WC	16-APR-91	Y	TRG	VOCCLPTCL	METHYLENE CHLORIDE	5	UG/L		U	5								
W018	SW	REAL	SW01002WC	16-APR-91	Y	TRG	VOCCLPTCL	STYRENE	5	UG/L		U	5								
W018	SW	REAL	SW01002WC	16-APR-91	Y	TRG	VOCCLPTCL	TETRACHLOROETHENE	5	UG/L		U	5								
W018	SW	REAL	SW01002WC	16-APR-91	Y	TRG	VOCCLPTCL	TOLUENE	5	UG/L		U	5								
W018	SW	REAL	SW01002WC	16-APR-91	Y	TRG	VOCCLPTCL	TOTAL XYLENES	5	UG/L		U	5								
W018	SW	REAL	SW01002WC	16-APR-91	Y	TRG	VOCCLPTCL	TRICHLOROETHENE	5	UG/L		U	5								
W018	SW	REAL	SW01002WC	16-APR-91	Y	TRG	VOCCLPTCL	VINYL ACETATE	10	UG/L		U	10								
W018	SW	REAL	SW01002WC	16-APR-91	Y	TRG	VOCCLPTCL	VINYL CHLORIDE	10	UG/L		U	10								
W018	SW	REAL	SW01002WC	16-APR-91	Y	TRG	VOCCLPTCL	cis-1,3-DICHLOROPROPENE	5	UG/L		U	5								
W018	SW	REAL	SW01002WC	16-APR-91	Y	TRG	VOCCLPTCL	trans-1,3-DICHLOROPROPENE	5	UG/L		U	5								
W018	SW	REAL	SW01109WC	30-MAY-91	N	TRG	VOCCLPTCL	1,1,1-TRICHLOROETHANE	5	UG/L		U	5								
W018	SW	REAL	SW01109WC	30-MAY-91	N	TRG	VOCCLPTCL	1,1,2,2-TETRACHLOROETHANE	5	UG/L		U	5								
W018	SW	REAL	SW01109WC	30-MAY-91	N	TRG	VOCCLPTCL	1,1,2-TRICHLOROETHANE	5	UG/L		U	5								
W018	SW	REAL	SW01109WC	30-MAY-91	N	TRG	VOCCLPTCL	1,1-DICHLOROETHANE	5	UG/L		U	5								
W018	SW	REAL	SW01109WC	30-MAY-91	N	TRG	VOCCLPTCL	1,1-DICHLOROETHENE	5	UG/L		U	5								
W018	SW	REAL	SW01109WC	30-MAY-91	N	TRG	VOCCLPTCL	1,2-DICHLOROETHANE	5	UG/L		U	5								
W018	SW	REAL	SW01109WC	30-MAY-91	N	TRG	VOCCLPTCL	1,2-DICHLOROETHENE	5	UG/L		U	5								
W018	SW	REAL	SW01109WC	30-MAY-91	N	TRG	VOCCLPTCL	1,2-DICHLOROPROPANE	5	UG/L		U	5								
W018	SW	REAL	SW01109WC	30-MAY-91	N	TRG	VOCCLPTCL	2-BUTANONE	10	UG/L		U	10								
W018	SW	REAL	SW01109WC	30-MAY-91	N	TRG	VOCCLPTCL	2-HEXANONE	10	UG/L		U	10								

ocation	ST	QC	Sample Number	Smpl Date	D	ID	Group	Chemical	Result	Unit	Error	Qual	D	LMT	VA	RN1	RN2	RN3	RN4	VResult	VQual	VDET
018	SW	REAL	SW01109WC	30-MAY-91	N	TRG	VOCCLPTCL	4-METHYL-2-PENTANONE	10	UG/L		U		10								
018	SW	REAL	SW01109WC	30-MAY-91	N	TRG	VOCCLPTCL	ACETONE	10	UG/L		U		10								
018	SW	REAL	SW01109WC	30-MAY-91	N	TRG	VOCCLPTCL	BENZENE	5	UG/L		U		5								
018	SW	REAL	SW01109WC	30-MAY-91	N	TRG	VOCCLPTCL	BROMODICHLOROMETHANE	5	UG/L		U		5								
018	SW	REAL	SW01109WC	30-MAY-91	N	TRG	VOCCLPTCL	BROMOFORM	5	UG/L		U		5								
018	SW	REAL	SW01109WC	30-MAY-91	N	TRG	VOCCLPTCL	BROMOMETHANE	10	UG/L		U		10								
018	SW	REAL	SW01109WC	30-MAY-91	N	TRG	VOCCLPTCL	CARBON DISULFIDE	5	UG/L		U		5								
018	SW	REAL	SW01109WC	30-MAY-91	N	TRG	VOCCLPTCL	CARBON TETRACHLORIDE	4	UG/L		J		5								
018	SW	REAL	SW01109WC	30-MAY-91	N	TRG	VOCCLPTCL	CHLOROBENZENE	5	UG/L		U		5								
018	SW	REAL	SW01109WC	30-MAY 91	N	TRG	VOCCLPTCL	CHLOROETHANE	10	UG/L		U		10								
018	SW	REAL	SW01109WC	30-MAY-91	N	TRG	VOCCLPTCL	CHLOROFORM	5	UG/L		U		5								
018	SW	REAL	SW01109WC	30-MAY-91	N	TRG	VOCCLPTCL	CHLOROMETHANE	10	UG/L		U		10								
018	SW	REAL	SW01109WC	30-MAY-91	N	TRG	VOCCLPTCL	DIBROMOCHLOROMETHANE	5	UG/L		U		5								
018	SW	REAL	SW01109WC	30-MAY-91	N	TRG	VOCCLPTCL	ETHYLBENZENE	5	UG/L		U		5								
018	SW	REAL	SW01109WC	30-MAY-91	N	TRG	VOCCLPTCL	METHYLENE CHLORIDE	6)	UG/L		B)		5								
018	SW	REAL	SW01109WC	30-MAY-91	N	TRG	VOCCLPTCL	STYRENE	5	UG/L		U		5								
018	SW	REAL	SW01109WC	30-MAY-91	N	TRG	VOCCLPTCL	TETRACHLOROETHENE	5	UG/L		U		5								
018	SW	REAL	SW01109WC	30-MAY-91	N	TRG	VOCCLPTCL	TOLUENE	5	UG/L		U		5								
018	SW	REAL	SW01109WC	30-MAY-91	N	TRG	VOCCLPTCL	TOTAL XYLENES	5	UG/L		U		5								
018	SW	REAL	SW01109WC	30-MAY-91	N	TRG	VOCCLPTCL	TRICHLOROETHENE	5	UG/L		U		5								
018	SW	REAL	SW01109WC	30-MAY-91	N	TRG	VOCCLPTCL	VINYL ACETATE	10	UG/L		U		10								
018	SW	REAL	SW01109WC	30-MAY-91	N	TRG	VOCCLPTCL	VINYL CHLORIDE	10	UG/L		U		10								
018	SW	REAL	SW01109WC	30-MAY-91	N	TRG	VOCCLPTCL	cis-1,3-DICHLOROPROPENE	5	UG/L		U		5								
018	SW	REAL	SW01109WC	30-MAY-91	N	TRG	VOCCLPTCL	trans-1,3-DICHLOROPROPENE	5	UG/L		U		5								
018	SW	REAL	SW01212WC	17-JUN-91	N	TRG	VOACLP	1,1,1-TRICHLOROETHANE	5	UG/L		U		5								
018	SW	REAL	SW01212WC	17-JUN-91	N	TRG	VOACLP	1,1,2,2-TETRACHLOROETHANE	5	UG/L		U		5								
018	SW	REAL	SW01212WC	17-JUN-91	N	TRG	VOACLP	1,1,2-TRICHLOROETHANE	5	UG/L		U		5								
018	SW	REAL	SW01212WC	17-JUN-91	N	TRG	VOACLP	1,1-DICHLOROETHANE	5	UG/L		U		5								
018	SW	REAL	SW01212WC	17-JUN-91	N	TRG	VOACLP	1,1-DICHLOROETHENE	5	UG/L		U		5								
018	SW	REAL	SW01212WC	17-JUN-91	N	TRG	VOACLP	1,2-DICHLOROETHANE	5	UG/L		U		5								
018	SW	REAL	SW01212WC	17-JUN-91	N	TRG	VOACLP	1,2-DICHLOROETHENE	5	UG/L		U		5								
018	SW	REAL	SW01212WC	17-JUN-91	N	TRG	VOACLP	1,2-DICHLOROPROPANE	5	UG/L		U		5								
018	SW	REAL	SW01212WC	17-JUN-91	N	TRG	VOACLP	2-BUTANONE	10	UG/L		U		10								
018	SW	REAL	SW01212WC	17-JUN-91	N	TRG	VOACLP	2-HEXANONE	10	UG/L		U		10								
018	SW	REAL	SW01212WC	17-JUN-91	N	TRG	VOACLP	4-METHYL-2-PENTANONE	10	UG/L		U		10								
018	SW	REAL	SW01212WC	17-JUN-91	N	TRG	VOACLP	ACETONE	10	UG/L		U		10								
018	SW	REAL	SW01212WC	17-JUN-91	N	TRG	VOACLP	BENZENE	5	UG/L		U		5								
018	SW	REAL	SW01212WC	17-JUN-91	N	TRG	VOACLP	BROMODICHLOROMETHANE	5	UG/L		U		5								
018	SW	REAL	SW01212WC	17-JUN-91	N	TRG	VOACLP	BROMOFORM	5	UG/L		U		5								
018	SW	REAL	SW01212WC	17-JUN-91	N	TRG	VOACLP	BROMOMETHANE	10	UG/L		U		10								
018	SW	REAL	SW01212WC	17-JUN-91	N	TRG	VOACLP	CARBON DISULFIDE	5	UG/L		U		5								
018	SW	REAL	SW01212WC	17-JUN-91	N	TRG	VOACLP	CARBON TETRACHLORIDE	8	UG/L		)		5								
018	SW	REAL	SW01212WC	17-JUN-91	N	TRG	VOACLP	CHLOROBENZENE	5	UG/L		U		5								
018	SW	REAL	SW01212WC	17-JUN-91	N	TRG	VOACLP	CHLOROETHANE	10	UG/L		U		10								
018	SW	REAL	SW01212WC	17-JUN-91	N	TRG	VOACLP	CHLOROFORM	5	UG/L		U		5								
018	SW	REAL	SW01212WC	17-JUN-91	N	TRG	VOACLP	CHLOROMETHANE	130)	UG/L		)		10								
018	SW	REAL	SW01212WC	17-JUN-91	N	TRG	VOACLP	DIBROMOCHLOROMETHANE	5	UG/L		U		5								
018	SW	REAL	SW01212WC	17-JUN-91	N	TRG	VOACLP	ETHYLBENZENE	5	UG/L		U		5								
018	SW	REAL	SW01212WC	17-JUN-91	N	TRG	VOACLP	METHYLENE CHLORIDE	36	UG/L		B		5	0							
018	SW	REAL	SW01212WC	17-JUN-91	N	TRG	VOACLP	STYRENE	5	UG/L		U		5								
018	SW	REAL	SW01212WC	17-JUN-91	N	TRG	VOACLP	TETRACHLOROETHENE	5	UG/L		U		5								
018	SW	REAL	SW01212WC	17-JUN-91	N	TRG	VOACLP	TOLUENE	5	UG/L		U		5								
018	SW	REAL	SW01212WC	17-JUN-91	N	TRG	VOACLP	TOTAL XYLENES	5	UG/L		U		5								
018	SW	REAL	SW01212WC	17-JUN-91	N	TRG	VOACLP	TRICHLOROETHENE	5	UG/L		U		5								
018	SW	REAL	SW01212WC	17-JUN-91	N	TRG	VOACLP	VINYL ACETATE	10	UG/L		U		10								
018	SW	REAL	SW01212WC	17-JUN-91	N	TRG	VOACLP	VINYL CHLORIDE	10	UG/L		U		10								
018	SW	REAL	SW01212WC	17-JUN-91	N	TRG	VOACLP	cis-1,3-DICHLOROPROPENE	5	UG/L		U		5								
018	SW	REAL	SW01212WC	17-JUN-91	N	TRG	VOACLP	trans-1,3-DICHLOROPROPENE	5	UG/L		U		5								
	SW	REAL	SW01315WC	~~15-JUL-91~~	~~N~~																	
	SW	REAL	SW01421WC	19-AUG-91	N	TRG	VOCCLPTCL	1,1,1-TRICHLOROETHANE	5	UG/L		U		5								
	SW	REAL	SW01421WC	19-AUG-91	N	TRG	VOCCLPTCL	1,1,2,2-TETRACHLOROETHANE	5	UG/L		U		5								
	SW	REAL	SW01421WC	19-AUG-91	N	TRG	VOCCLPTCL	1,1,2-TRICHLOROETHANE	5	UG/L		U		5								
	SW	REAL	SW01421WC	19-AUG-91	N	TRG	VOCCLPTCL	1,1-DICHLOROETHANE	5	UG/L		U		5								

ocation	ST	QC	Sample Number	Smpl Date	D	ID	Group	Chemical	Result	Unit	Error	Qual	D LMT	VA	RN1	RN2	RN3	RN4	VResult	VQual	VDET
W018	SW	REAL	SW01421WC	19-AUG-91	N	TRG	VOCCLPTCL	1,1-DICHLOROETHENE	5	UG/L		U	5								
W018	SW	REAL	SW01421WC	19-AUG-91	N	TRG	VOCCLPTCL	1,2-DICHLOROETHANE	5	UG/L		U	5								
W018	SW	REAL	SW01421WC	19-AUG-91	N	TRG	VOCCLPTCL	1,2-DICHLOROETHENE	5	UG/L		U	5								
W018	SW	REAL	SW01421WC	19-AUG-91	N	TRG	VOCCLPTCL	1,2 DICHLOROPROPANE	5	UG/L		U	5								
W018	SW	REAL	SW01421WC	19-AUG-91	N	TRG	VOCCLPTCL	2-BUTANONE	10	UG/L		U	10								
W018	SW	REAL	SW01421WC	19-AUG-91	N	TRG	VOCCLPTCL	2-HEXANONE	10	UG/L		U	10								
W018	SW	REAL	SW01421WC	19-AUG-91	N	TRG	VOCCLPTCL	4-METHYL-2-PENTANONE	10	UG/L		U	10								
W018	SW	REAL	SW01421WC	19-AUG-91	N	TRG	VOCCLPTCL	ACETONE	10	UG/L		U	10								
W018	SW	REAL	SW01421WC	19-AUG-91	N	TRG	VOCCLPTCL	BENZENE	5	UG/L		U	5								
W018	SW	REAL	SW01421WC	19-AUG-91	N	TRG	VOCCLPTCL	BROMODICHLOROMETHANE	5	UG/L		U	5								
W018	SW	REAL	SW01421WC	19-AUG-91	N	TRG	VOCCLPTCL	BROMOFORM	5	UG/L		U	5								
W018	SW	REAL	SW01421WC	19-AUG-91	N	TRG	VOCCLPTCL	BROMOMETHANE	10	UG/L		U	10								
W018	SW	REAL	SW01421WC	19-AUG-91	N	TRG	VOCCLPTCL	CARBON DISULFIDE	5	UG/L		U	5								
W018	SW	REAL	SW01421WC	19-AUG-91	N	TRG	VOCCLPTCL	CARBON TETRACHLORIDE	5	UG/L		U	5								
W018	SW	REAL	SW01421WC	19-AUG-91	N	TRG	VOCCLPTCL	CHLOROBENZENE	5	UG/L		U	5								
W018	SW	REAL	SW01421WC	19-AUG-91	N	TRG	VOCCLPTCL	CHLOROETHANE	10	UG/L		U	10								
W018	SW	REAL	SW01421WC	19-AUG-91	N	TRG	VOCCLPTCL	CHLOROFORM	5	UG/L		U	5								
W018	SW	REAL	SW01421WC	19-AUG-91	N	TRG	VOCCLPTCL	CHLOROMETHANE	10	UG/L		U	10								
W018	SW	REAL	SW01421WC	19-AUG-91	N	TRG	VOCCLPTCL	DIBROMOCHLOROMETHANE	5	UG/L		U	5								
W018	SW	REAL	SW01421WC	19-AUG-91	N	TRG	VOCCLPTCL	ETHYLBENZENE	5	UG/L		U	5								
W018	SW	REAL	SW01421WC	19-AUG-91	N	TRG	VOCCLPTCL	METHYLENE CHLORIDE	5	UG/L		U	5								
W018	SW	REAL	SW01421WC	19-AUG-91	N	TRG	VOCCLPTCL	STYRENE	5	UG/L		U	5								
W018	SW	REAL	SW01421WC	19-AUG-91	N	TRG	VOCCLPTCL	TETRACHLOROETHENE	5	UG/L		U	5								
W018	SW	REAL	SW01421WC	19-AUG-91	N	TRG	VOCCLPTCL	TOLUENE	5	UG/L		U	5								
W018	SW	REAL	SW01421WC	19-AUG-91	N	TRG	VOCCLPTCL	TOTAL XYLENES	5	UG/L		U	5								
W018	SW	REAL	SW01421WC	19-AUG-91	N	TRG	VOCCLPTCL	TRICHLOROETHENE	5	UG/L		U	5								
W018	SW	REAL	SW01421WC	19-AUG-91	N	TRG	VOCCLPTCL	VINYL ACETATE	10	UG/L		U	10								
W018	SW	REAL	SW01421WC	19-AUG-91	N	TRG	VOCCLPTCL	VINYL CHLORIDE	10	UG/L		U	10								
W018	SW	REAL	SW01421WC	19-AUG-91	N	TRG	VOCCLPTCL	cis-1,3-DICHLOROPROPENE	5	UG/L		U	5								
W018	SW	REAL	SW01421WC	19-AUG-91	N	TRG	VOCCLPTCL	trans-1,3-DICHLOROPROPENE	5	UG/L		U	5								
W018	SW	REAL	SW01527WC	09-SEP-91	N	TRG	VOACLP	1,1,1-TRICHLOROETHANE	5	UG/L		U	5								
W018	SW	REAL	SW01527WC	09-SEP-91	N	TRG	VOACLP	1,1,2,2-TETRACHLOROETHANE	5	UG/L		U	5								
W018	SW	REAL	SW01527WC	09-SEP-91	N	TRG	VOACLP	1,1,2-TRICHLOROETHANE	5	UG/L		U	5								
W018	SW	REAL	SW01527WC	09-SEP-91	N	TRG	VOACLP	1,1-DICHLOROETHANE	5	UG/L		U	5								
W018	SW	REAL	SW01527WC	09-SEP-91	N	TRG	VOACLP	1,1-DICHLOROETHENE	5	UG/L		U	5								
W018	SW	REAL	SW01527WC	09-SEP-91	N	TRG	VOACLP	1,2-DICHLOROETHANE	5	UG/L		U	5								
W018	SW	REAL	SW01527WC	09-SEP-91	N	TRG	VOACLP	1,2-DICHLOROETHENE	5	UG/L		U	5								
W018	SW	REAL	SW01527WC	09-SEP-91	N	TRG	VOACLP	1,2-DICHLOROPROPANE	5	UG/L		U	5								
W018	SW	REAL	SW01527WC	09-SEP-91	N	TRG	VOACLP	2-BUTANONE	10	UG/L		U	10								
W018	SW	REAL	SW01527WC	09-SEP-91	N	TRG	VOACLP	2-HEXANONE	10	UG/L		U	10								
W018	SW	REAL	SW01527WC	09-SEP-91	N	TRG	VOACLP	4-METHYL-2-PENTANONE	10	UG/L		U	10								
W018	SW	REAL	SW01527WC	09-SEP-91	N	TRG	VOACLP	ACETONE	10	UG/L		U	10								
W018	SW	REAL	SW01527WC	09-SEP-91	N	TRG	VOACLP	BENZENE	5	UG/L		U	5								
W018	SW	REAL	SW01527WC	09-SEP-91	N	TRG	VOACLP	BROMODICHLOROMETHANE	5	UG/L		U	5								
W018	SW	REAL	SW01527WC	09-SEP-91	N	TRG	VOACLP	BROMOFORM	5	UG/L		U	5								
W018	SW	REAL	SW01527WC	09-SEP-91	N	TRG	VOACLP	BROMOMETHANE	10	UG/L		U	10								
W018	SW	REAL	SW01527WC	09-SEP-91	N	TRG	VOACLP	CARBON DISULFIDE	5	UG/L		U	5								
W018	SW	REAL	SW01527WC	09-SEP-91	N	TRG	VOACLP	CARBON TETRACHLORIDE	5	UG/L		U	5								
W018	SW	REAL	SW01527WC	09-SEP-91	N	TRG	VOACLP	CHLOROBENZENE	5	UG/L		U	5								
W018	SW	REAL	SW01527WC	09-SEP-91	N	TRG	VOACLP	CHLOROETHANE	10	UG/L		U	10								
W018	SW	REAL	SW01527WC	09-SEP-91	N	TRG	VOACLP	CHLOROFORM	5	UG/L		U	5								
W018	SW	REAL	SW01527WC	09-SEP-91	N	TRG	VOACLP	CHLOROMETHANE	10	UG/L		U	10								
W018	SW	REAL	SW01527WC	09-SEP-91	N	TRG	VOACLP	DIBROMOCHLOROMETHANE	5	UG/L		U	5								
W018	SW	REAL	SW01527WC	09-SEP-91	N	TRG	VOACLP	ETHYLBENZENE	5	UG/L		U	5								
W018	SW	REAL	SW01527WC	09-SEP-91	N	TRG	VOACLP	METHYLENE CHLORIDE	9	UG/L		B	5								
W018	SW	REAL	SW01527WC	09-SEP-91	N	TRG	VOACLP	STYRENE	5	UG/L		U	5								
W018	SW	REAL	SW01527WC	09-SEP-91	N	TRG	VOACLP	TETRACHLOROETHENE	5	UG/L		U	5								
W018	SW	REAL	SW01527WC	09-SEP-91	N	TRG	VOACLP	TOLUENE	5	UG/L		U	5								
W018	SW	REAL	SW01527WC	09-SEP-91	N	TRG	VOACLP	TOTAL XYLENES	5	UG/L		U	5								
W018	SW	REAL	SW01527WC	09-SEP-91	N	TRG	VOACLP	TRICHLOROETHENE	5	UG/L		U	5								
W018	SW	REAL	SW01527WC	09-SEP-91	N	TRG	VOACLP	VINYL ACETATE	10	UG/L		U	10								
W018	SW	REAL	SW01527WC	09-SEP-91	N	TRG	VOACLP	VINYL CHLORIDE	10	UG/L		U	10								
W018	SW	REAL	SW01527WC	09-SEP-91	N	TRG	VOACLP	cis-1,3-DICHLOROPROPENE	5	UG/L		U	5								

cation	ST	QC	Sample Number	Smpl Date	D	ID	Group	Chemical	Result	Unit	Error	Qual	D	LMT	VA	RN1	RN2	RN3	RN4	VResult	VQual	VDET
018	SW	REAL	SW01527WC	09-SEP-91	N	TRG	VOACLP	trans-1,3-DICHLOROPROPENE	5	UG/L		U		5								
018	SW	REAL	SW01633WC	07-OCT-91	N																	
019	SW	REAL	SW01076WC	12-APR-91	N	TRG	SVOCLPTCL	1,2,4-TRICHLOROBENZENE	10	UG/L		U		10								
019	SW	REAL	SW01076WC	12-APR-91	N	TRG	SVOCLPTCL	1,2-DICHLOROBENZENE	10	UG/L		U		10								
019	SW	REAL	SW01076WC	12-APR-91	N	TRG	SVOCLPTCL	1,3-DICHLOROBENZENE	10	UG/L		U		10								
019	SW	REAL	SW01076WC	12-APR-91	N	TRG	SVOCLPTCL	1,4-DICHLOROBENZENE	10	UG/L		U		10								
019	SW	REAL	SW01076WC	12-APR-91	N	TRG	SVOCLPTCL	2,4,5-TRICHLOROPHENOL	50	UG/L		U		50								
019	SW	REAL	SW01076WC	12-APR-91	N	TRG	SVOCLPTCL	2,4,6-TRICHLOROPHENOL	10	UG/L		U		10								
019	SW	REAL	SW01076WC	12-APR-91	N	TRG	SVOCLPTCL	2,4-DICHLOROPHENOL	10	UG/L		U		10								
019	SW	REAL	SW01076WC	12-APR-91	N	TRG	SVOCLPTCL	2,4-DIMETHYLPHENOL	10	UG/L		U		10								
019	SW	REAL	SW01076WC	12-APR-91	N	TRG	SVOCLPTCL	2,4-DINITROPHENOL	50	UG/L		U		50								
019	SW	REAL	SW01076WC	12-APR-91	N	TRG	SVOCLPTCL	2,4-DINITROTOLUENE	10	UG/L		U		10								
019	SW	REAL	SW01076WC	12-APR-91	N	TRG	SVOCLPTCL	2,6-DINITROTOLUENE	10	UG/L		U		10								
019	SW	REAL	SW01076WC	12-APR-91	N	TRG	SVOCLPTCL	2-CHLORONAPHTHALENE	10	UG/L		U		10								
019	SW	REAL	SW01076WC	12-APR-91	N	TRG	SVOCLPTCL	2-CHLOROPHENOL	10	UG/L		U		10								
019	SW	REAL	SW01076WC	12-APR-91	N	TRG	SVOCLPTCL	2-METHYLNAPHTHALENE	10	UG/L		U		10								
019	SW	REAL	SW01076WC	12-APR-91	N	TRG	SVOCLPTCL	2-METHYLPHENOL	10	UG/L		U		10								
019	SW	REAL	SW01076WC	12-APR-91	N	TRG	SVOCLPTCL	2-NITROANILINE	50	UG/L		U		50								
019	SW	REAL	SW01076WC	12-APR-91	N	TRG	SVOCLPTCL	2-NITROPHENOL	10	UG/L		U		10								
019	SW	REAL	SW01076WC	12-APR-91	N	TRG	SVOCLPTCL	3,3'-DICHLOROBENZIDINE	20	UG/L		U		20								
019	SW	REAL	SW01076WC	12-APR-91	N	TRG	SVOCLPTCL	3-NITROANILINE	50	UG/L		U		50								
019	SW	REAL	SW01076WC	12-APR-91	N	TRG	SVOCLPTCL	4,6-DINITRO-2-METHYLPHENOL	50	UG/L		U		50								
019	SW	REAL	SW01076WC	12-APR-91	N	TRG	SVOCLPTCL	4-BROMOPHENYL PHENYL ETHER	10	UG/L		U		10								
019	SW	REAL	SW01076WC	12-APR-91	N	TRG	SVOCLPTCL	4-CHLORO-3-METHYLPHENOL	10	UG/L		U		10								
019	SW	REAL	SW01076WC	12-APR-91	N	TRG	SVOCLPTCL	4-CHLOROANILINE	10	UG/L		U		10								
019	SW	REAL	SW01076WC	12-APR-91	N	TRG	SVOCLPTCL	4-CHLOROPHENYL PHENYL ETHER	10	UG/L		U		10								
019	SW	REAL	SW01076WC	12-APR-91	N	TRG	SVOCLPTCL	4-METHYLPHENOL	10	UG/L		U		10								
019	SW	REAL	SW01076WC	12-APR-91	N	TRG	SVOCLPTCL	4-NITROANILINE	50	UG/L		U		50								
019	SW	REAL	SW01076WC	12-APR-91	N	TRG	SVOCLPTCL	4-NITROPHENOL	50	UG/L		U		50								
019	SW	REAL	SW01076WC	12-APR-91	N	TRG	SVOCLPTCL	ACENAPHTHENE	10	UG/L		U		10								
019	SW	REAL	SW01076WC	12-APR-91	N	TRG	SVOCLPTCL	ACENAPHTHYLENE	10	UG/L		U		10								
019	SW	REAL	SW01076WC	12-APR-91	N	TRG	SVOCLPTCL	ANTHRACENE	10	UG/L		U		10								
019	SW	REAL	SW01076WC	12-APR-91	N	TRG	SVOCLPTCL	BENZO(a)ANTHRACENE	10	UG/L		U		10								
019	SW	REAL	SW01076WC	12-APR-91	N	TRG	SVOCLPTCL	BENZO(a)PYRENE	10	UG/L		U		10								
019	SW	REAL	SW01076WC	12-APR-91	N	TRG	SVOCLPTCL	BENZO(b)FLUORANTHENE	10	UG/L		U		10								
019	SW	REAL	SW01076WC	12-APR-91	N	TRG	SVOCLPTCL	BENZO(ghi)PERYLENE	10	UG/L		U		10								
019	SW	REAL	SW01076WC	12-APR-91	N	TRG	SVOCLPTCL	BENZO(k)FLUORANTHENE	10	UG/L		U		10								
019	SW	REAL	SW01076WC	12-APR-91	N	TRG	SVOCLPTCL	BENZOIC ACID	50	UG/L		U		50								
019	SW	REAL	SW01076WC	12-APR-91	N	TRG	SVOCLPTCL	BENZYL ALCOHOL	10	UG/L		U		10								
019	SW	REAL	SW01076WC	12-APR-91	N	TRG	SVOCLPTCL	BIS(2-CHLOROETHOXY)METHANE	10	UG/L		U		10								
019	SW	REAL	SW01076WC	12-APR-91	N	TRG	SVOCLPTCL	BIS(2-CHLOROETHYL)ETHER	10	UG/L		U		10								
19	SW	REAL	SW01076WC	12-APR-91	N	TRG	SVOCLPTCL	BIS(2-CHLOROISOPROPYL)ETHER	10	UG/L		U		10								
19	SW	REAL	SW01076WC	12-APR-91	N	TRG	SVOCLPTCL	BIS(2-ETHYLHEXYL)PHTHALATE	2	UG/L		J		10								
19	SW	REAL	SW01076WC	12-APR-91	N	TRG	SVOCLPTCL	BUTYL BENZYL PHTHALATE	10	UG/L		U		10								
19	SW	REAL	SW01076WC	12-APR-91	N	TRG	SVOCLPTCL	CHRYSENE	10	UG/L		U		10								
19	SW	REAL	SW01076WC	12-APR-91	N	TRG	SVOCLPTCL	DI-n-BUTYL PHTHALATE	10	UG/L		U		10								
19	SW	REAL	SW01076WC	12-APR-91	N	TRG	SVOCLPTCL	DI-n-OCTYL PHTHALATE	10	UG/L		U		10								
9	SW	REAL	SW01076WC	12-APR-91	N	TRG	SVOCLPTCL	DIBENZO(a,h)ANTHRACENE	10	UG/L		U		10								
9	SW	REAL	SW01076WC	12-APR-91	N	TRG	SVOCLPTCL	DIBENZOFURAN	10	UG/L		U		10								
9	SW	REAL	SW01076WC	12-APR-91	N	TRG	SVOCLPTCL	DIETHYL PHTHALATE	10	UG/L		U		10								
9	SW	REAL	SW01076WC	12-APR-91	N	TRG	SVOCLPTCL	DIMETHYL PHTHALATE	10	UG/L		U		10								
9	SW	REAL	SW01076WC	12-APR-91	N	TRG	SVOCLPTCL	FLUORANTHENE	10	UG/L		U		10								
9	SW	REAL	SW01076WC	12-APR-91	N	TRG	SVOCLPTCL	FLUORENE	10	UG/L		U		10								
9	SW	REAL	SW01076WC	12-APR-91	N	TRG	SVOCLPTCL	HEXACHLOROBENZENE	10	UG/L		U		10								
1	SW	REAL	SW01076WC	12-APR-91	N	TRG	SVOCLPTCL	HEXACHLOROBUTADIENE	10	UG/L		U		10								
1	SW	REAL	SW01076WC	12-APR-91	N	TRG	SVOCLPTCL	HEXACHLOROCYCLOPENTADIENE	10	UG/L		U		10								
1	SW	REAL	SW01076WC	12-APR-91	N	TRG	SVOCLPTCL	HEXACHLOROETHANE	10	UG/L		U		10								
	SW	REAL	SW01076WC	12-APR-91	N	TRG	SVOCLPTCL	INDENO(1,2,3-cd)PYRENE	10	UG/L		U		10								
	SW	REAL	SW01076WC	12-APR-91	N	TRG	SVOCLPTCL	ISOPHORONE	10	UG/L		U		10								
	SW	REAL	SW01076WC	12-APR-91	N	TRG	SVOCLPTCL	N-NITROSO-DI-n-PROPYLAMINE	10	UG/L		U		10								
	SW	REAL	SW01076WC	12-APR-91	N	TRG	SVOCLPTCL	N-NITROSODIPHENYLAMINE	10	UG/L		U		10								
	SW	REAL	SW01076WC	12-APR-91	N	TRG	SVOCLPTCL	NAPHTHALENE	10	UG/L		U		10								
	SW	REAL	SW01076WC	12-APR-91	N	TRG	SVOCLPTCL	NITROBENZENE	10	UG/L		U		10								

ocation	ST	QC	Sample Number	Smpl Date	D	ID	Group	Chemical	Result	Unit	Error	Qual	D LMT	VA	RN1	RN2	RN3	RN4	VResult	VQual	VDET
W019	SW	REAL	SW01076WC	12-APR-91	N	TRG	SVOCLPTCL	PENTACHLOROPHENOL	50	UG/L		U	50								
W019	SW	REAL	SW01076WC	12-APR-91	N	TRG	SVOCLPTCL	PHENANTHRENE	10	UG/L		U	10								
W019	SW	REAL	SW01076WC	12-APR-91	N	TRG	SVOCLPTCL	PHENOL	10	UG/L		U	10								
W019	SW	REAL	SW01076WC	12-APR-91	N	TRG	SVOCLPTCL	PYRENE	10	UG/L		U	10								
W019	SW	REAL	SW01076WC	12-APR-91	N	TRG	VOCCLPTCL	1,1,1-TRICHLOROETHANE	5	UG/L		U	5								
W019	SW	REAL	SW01076WC	12-APR-91	N	TRG	VOCCLPTCL	1,1,2,2-TETRACHLOROETHANE	5	UG/L		U	5								
W019	SW	REAL	SW01076WC	12-APR-91	N	TRG	VOCCLPTCL	1,1,2-TRICHLOROETHANE	5	UG/L		U	5								
W019	SW	REAL	SW01076WC	12-APR-91	N	TRG	VOCCLPTCL	1,1-DICHLOROETHANE	5	UG/L		U	5								
W019	SW	REAL	SW01076WC	12-APR-91	N	TRG	VOCCLPTCL	1,1-DICHLOROETHENE	5	UG/L		U	5								
W019	SW	REAL	SW01076WC	12-APR-91	N	TRG	VOCCLPTCL	1,2-DICHLOROETHANE	5	UG/L		U	5								
W019	SW	REAL	SW01076WC	12-APR-91	N	TRG	VOCCLPTCL	1,2-DICHLOROETHENE	5	UG/L		U	5								
W019	SW	REAL	SW01076WC	12-APR-91	N	TRG	VOCCLPTCL	1,2-DICHLOROPROPANE	5	UG/L		U	5								
W019	SW	REAL	SW01076WC	12-APR-91	N	TRG	VOCCLPTCL	2-BUTANONE	10	UG/L		U	10								
W019	SW	REAL	SW01076WC	12-APR-91	N	TRG	VOCCLPTCL	2-HEXANONE	10	UG/L		U	10								
W019	SW	REAL	SW01076WC	12-APR-91	N	TRG	VOCCLPTCL	4-METHYL-2-PENTANONE	10	UG/L		U	10								
W019	SW	REAL	SW01076WC	12-APR-91	N	TRG	VOCCLPTCL	ACETONE	10	UG/L		U	10								
W019	SW	REAL	SW01076WC	12-APR-91	N	TRG	VOCCLPTCL	BENZENE	5	UG/L		U	5								
W019	SW	REAL	SW01076WC	12-APR-91	N	TRG	VOCCLPTCL	BROMODICHLOROMETHANE	5	UG/L		U	5								
W019	SW	REAL	SW01076WC	12-APR-91	N	TRG	VOCCLPTCL	BROMOFORM	5	UG/L		U	5								
W019	SW	REAL	SW01076WC	12-APR-91	N	TRG	VOCCLPTCL	BROMOMETHANE	10	UG/L		U	10								
W019	SW	REAL	SW01076WC	12-APR-91	N	TRG	VOCCLPTCL	CARBON DISULFIDE	5	UG/L		U	5								
W019	SW	REAL	SW01076WC	12-APR-91	N	TRG	VOCCLPTCL	CARBON TETRACHLORIDE	5	UG/L		U	5								
W019	SW	REAL	SW01076WC	12-APR-91	N	TRG	VOCCLPTCL	CHLOROBENZENE	5	UG/L		U	5								
W019	SW	REAL	SW01076WC	12-APR-91	N	TRG	VOCCLPTCL	CHLOROETHANE	10	UG/L		U	10								
W019	SW	REAL	SW01076WC	12-APR-91	N	TRG	VOCCLPTCL	CHLOROFORM	5	UG/L		U	5								
W019	SW	REAL	SW01076WC	12-APR-91	N	TRG	VOCCLPTCL	CHLOROMETHANE	10	UG/L		U	10								
W019	SW	REAL	SW01076WC	12-APR-91	N	TRG	VOCCLPTCL	DIBROMOCHLOROMETHANE	5	UG/L		U	5								
W019	SW	REAL	SW01076WC	12-APR-91	N	TRG	VOCCLPTCL	ETHYLBENZENE	5	UG/L		U	5								
W019	SW	REAL	SW01076WC	12-APR-91	N	TRG	VOCCLPTCL	METHYLENE CHLORIDE	5	UG/L		U	5								
W019	SW	REAL	SW01076WC	12-APR-91	N	TRG	VOCCLPTCL	STYRENE	5	UG/L		U	5								
W019	SW	REAL	SW01076WC	12-APR-91	N	TRG	VOCCLPTCL	TETRACHLOROETHENE	5	UG/L		U	5								
W019	SW	REAL	SW01076WC	12-APR-91	N	TRG	VOCCLPTCL	TOLUENE	5	UG/L		U	5								
W019	SW	REAL	SW01076WC	12-APR-91	N	TRG	VOCCLPTCL	TOTAL XYLENES	5	UG/L		U	5								
W019	SW	REAL	SW01076WC	12-APR-91	N	TRG	VOCCLPTCL	TRICHLOROETHENE	5	UG/L		U	5								
W019	SW	REAL	SW01076WC	12-APR-91	N	TRG	VOCCLPTCL	VINYL ACETATE	10	UG/L		U	10								
W019	SW	REAL	SW01076WC	12-APR-91	N	TRG	VOCCLPTCL	VINYL CHLORIDE	10	UG/L		U	10								
W019	SW	REAL	SW01076WC	12-APR-91	N	TRG	VOCCLPTCL	cis-1,3-DICHLOROPROPENE	5	UG/L		U	5								
W019	SW	REAL	SW01076WC	12-APR-91	N	TRG	VOCCLPTCL	trans-1,3-DICHLOROPROPENE	5	UG/L		U	5								
W019	SW	REAL	SW01389WC	23-JUL-91	N	TRG	VOCCLPTCL	1,1,1-TRICHLOROETHANE	5	UG/L		U	5								
W019	SW	REAL	SW01389WC	23-JUL-91	N	TRG	VOCCLPTCL	1,1,2,2-TETRACHLOROETHANE	5	UG/L		U	5								
W019	SW	REAL	SW01389WC	23-JUL-91	N	TRG	VOCCLPTCL	1,1,2-TRICHLOROETHANE	5	UG/L		U	5								
W019	SW	REAL	SW01389WC	23-JUL-91	N	TRG	VOCCLPTCL	1,1-DICHLOROETHANE	5	UG/L		U	5								
W019	SW	REAL	SW01389WC	23-JUL-91	N	TRG	VOCCLPTCL	1,1-DICHLOROETHENE	5	UG/L		U	5								
W019	SW	REAL	SW01389WC	23-JUL-91	N	TRG	VOCCLPTCL	1,2-DICHLOROETHANE	5	UG/L		U	5								
W019	SW	REAL	SW01389WC	23-JUL-91	N	TRG	VOCCLPTCL	1,2-DICHLOROETHENE	5	UG/L		U	5								
W019	SW	REAL	SW01389WC	23-JUL-91	N	TRG	VOCCLPTCL	1,2-DICHLOROPROPANE	5	UG/L		U	5								
W019	SW	REAL	SW01389WC	23-JUL-91	N	TRG	VOCCLPTCL	2-BUTANONE	10	UG/L		U	10								
W019	SW	REAL	SW01389WC	23-JUL-91	N	TRG	VOCCLPTCL	2-HEXANONE	10	UG/L		U	10								
W019	SW	REAL	SW01389WC	23-JUL-91	N	TRG	VOCCLPTCL	4-METHYL-2-PENTANONE	10	UG/L		U	10								
W019	SW	REAL	SW01389WC	23-JUL-91	N	TRG	VOCCLPTCL	ACETONE	10	UG/L		U	10								
W019	SW	REAL	SW01389WC	23-JUL-91	N	TRG	VOCCLPTCL	BENZENE	5	UG/L		U	5								
W019	SW	REAL	SW01389WC	23-JUL-91	N	TRG	VOCCLPTCL	BROMODICHLOROMETHANE	5	UG/L		U	5								
W019	SW	REAL	SW01389WC	23-JUL-91	N	TRG	VOCCLPTCL	BROMOFORM	5	UG/L		U	5								
W019	SW	REAL	SW01389WC	23-JUL-91	N	TRG	VOCCLPTCL	BROMOMETHANE	10	UG/L		U	10								
W019	SW	REAL	SW01389WC	23-JUL-91	N	TRG	VOCCLPTCL	CARBON DISULFIDE	5	UG/L		U	5								
W019	SW	REAL	SW01389WC	23-JUL-91	N	TRG	VOCCLPTCL	CARBON TETRACHLORIDE	5	UG/L		U	5								
W019	SW	REAL	SW01389WC	23-JUL-91	N	TRG	VOCCLPTCL	CHLOROBENZENE	5	UG/L		U	5								
W019	SW	REAL	SW01389WC	23-JUL-91	N	TRG	VOCCLPTCL	CHLOROETHANE	10	UG/L		U	10								
W019	SW	REAL	SW01389WC	23-JUL-91	N	TRG	VOCCLPTCL	CHLOROFORM	5	UG/L		U	5								
W019	SW	REAL	SW01389WC	23-JUL-91	N	TRG	VOCCLPTCL	CHLOROMETHANE	10	UG/L		U	10								
W019	SW	REAL	SW01389WC	23-JUL-91	N	TRG	VOCCLPTCL	DIBROMOCHLOROMETHANE	5	UG/L		U	5								
W019	SW	REAL	SW01389WC	23-JUL-91	N	TRG	VOCCLPTCL	ETHYLBENZENE	5	UG/L		U	5								
W019	SW	REAL	SW01389WC	23-JUL-91	N	TRG	VOCCLPTCL	METHYLENE CHLORIDE	5	UG/L		U	5								

ocation	ST	QC	Sample Number	Smpl Date	D	ID	Group	Chemical	Result	Unit	Error	Qual	D	LMT	VA	RN1	RN2	RN3	RN4	VResult	VQual	VDET
019	SW	REAL	SW01389WC	23-JUL-91	N	TRG	VOCCLPTCL	STYRENE	5	UG/L		U		5								
019	SW	REAL	SW01389WC	23-JUL-91	N	TRG	VOCCLPTCL	TETRACHLOROETHENE	5	UG/L		U		5								
019	SW	REAL	SW01389WC	23-JUL-91	N	TRG	VOCCLPTCL	TOLUENE	5	UG/L		U		5								
019	SW	REAL	SW01389WC	23-JUL-91	N	TRG	VOCCLPTCL	TOTAL XYLENES	5	UG/L		U		5								
019	SW	REAL	SW01389WC	23-JUL-91	N	TRG	VOCCLPTCL	TRICHLOROETHENE	5	UG/L		U		5								
019	SW	REAL	SW01389WC	23-JUL-91	N	TRG	VOCCLPTCL	VINYL ACETATE	10	UG/L		U		10								
019	SW	REAL	SW01389WC	23-JUL-91	N	TRG	VOCCLPTCL	VINYL CHLORIDE	10	UG/L		U		10								
019	SW	REAL	SW01389WC	23-JUL-91	N	TRG	VOCCLPTCL	cis-1,3-DICHLOROPROPENE	5	UG/L		U		5								
019	SW	REAL	SW01389WC	23-JUL-91	N	TRG	VOCCLPTCL	trans-1,3-DICHLOROPROPENE	5	UG/L		U		5								
019	SW	REAL	SW01495WC	22-AUG-91	Y																	
019	SW	REAL	SW01601WC	23-SEP-91	Y																	
019	SW	REAL	SW01707WC	31-OCT-91	Y																	
020	SW	REAL	SW01077WC	12-APR-91	N	TRG	SVOCLPTCL	1,2,4-TRICHLOROBENZENE	10	UG/L		U		10								
020	SW	REAL	SW01077WC	12-APR-91	N	TRG	SVOCLPTCL	1,2-DICHLOROBENZENE	10	UG/L		U		10								
020	SW	REAL	SW01077WC	12-APR-91	N	TRG	SVOCLPTCL	1,3-DICHLOROBENZENE	10	UG/L		U		10								
020	SW	REAL	SW01077WC	12-APR-91	N	TRG	SVOCLPTCL	1,4-DICHLOROBENZENE	10	UG/L		U		10								
020	SW	REAL	SW01077WC	12-APR-91	N	TRG	SVOCLPTCL	2,4,5-TRICHLOROPHENOL	50	UG/L		U		50								
020	SW	REAL	SW01077WC	12-APR-91	N	TRG	SVOCLPTCL	2,4,6-TRICHLOROPHENOL	10	UG/L		U		10								
020	SW	REAL	SW01077WC	12-APR-91	N	TRG	SVOCLPTCL	2,4-DICHLOROPHENOL	10	UG/L		U		10								
020	SW	REAL	SW01077WC	12-APR-91	N	TRG	SVOCLPTCL	2,4-DIMETHYLPHENOL	10	UG/L		U		10								
020	SW	REAL	SW01077WC	12-APR-91	N	TRG	SVOCLPTCL	2,4-DINITROPHENOL	50	UG/L		U		50								
020	SW	REAL	SW01077WC	12-APR-91	N	TRG	SVOCLPTCL	2,4-DINITROTOLUENE	10	UG/L		U		10								
020	SW	REAL	SW01077WC	12-APR-91	N	TRG	SVOCLPTCL	2,6-DINITROTOLUENE	10	UG/L		U		10								
020	SW	REAL	SW01077WC	12-APR-91	N	TRG	SVOCLPTCL	2-CHLORONAPHTHALENE	10	UG/L		U		10								
020	SW	REAL	SW01077WC	12-APR-91	N	TRG	SVOCLPTCL	2-CHLOROPHENOL	10	UG/L		U		10								
020	SW	REAL	SW01077WC	12-APR-91	N	TRG	SVOCLPTCL	2-METHYLNAPHTHALENE	10	UG/L		U		10								
020	SW	REAL	SW01077WC	12-APR-91	N	TRG	SVOCLPTCL	2-METHYLPHENOL	10	UG/L		U		10								
020	SW	REAL	SW01077WC	12-APR-91	N	TRG	SVOCLPTCL	2-NITROANILINE	50	UG/L		U		50								
020	SW	REAL	SW01077WC	12-APR-91	N	TRG	SVOCLPTCL	2-NITROPHENOL	10	UG/L		U		10								
020	SW	REAL	SW01077WC	12-APR-91	N	TRG	SVOCLPTCL	3,3'-DICHLOROBENZIDINE	20	UG/L		U		20								
020	SW	REAL	SW01077WC	12-APR-91	N	TRG	SVOCLPTCL	3-NITROANILINE	50	UG/L		U		50								
020	SW	REAL	SW01077WC	12-APR-91	N	TRG	SVOCLPTCL	4,6-DINITRO-2-METHYLPHENOL	50	UG/L		U		50								
020	SW	REAL	SW01077WC	12-APR-91	N	TRG	SVOCLPTCL	4-BROMOPHENYL PHENYL ETHER	10	UG/L		U		10								
020	SW	REAL	SW01077WC	12-APR-91	N	TRG	SVOCLPTCL	4-CHLORO-3-METHYLPHENOL	10	UG/L		U		10								
020	SW	REAL	SW01077WC	12-APR-91	N	TRG	SVOCLPTCL	4-CHLOROANILINE	10	UG/L		U		10								
020	SW	REAL	SW01077WC	12-APR-91	N	TRG	SVOCLPTCL	4-CHLOROPHENYL PHENYL ETHER	10	UG/L		U		10								
020	SW	REAL	SW01077WC	12-APR-91	N	TRG	SVOCLPTCL	4-METHYLPHENOL	10	UG/L		U		10								
020	SW	REAL	SW01077WC	12-APR-91	N	TRG	SVOCLPTCL	4-NITROANILINE	50	UG/L		U		50								
020	SW	REAL	SW01077WC	12-APR-91	N	TRG	SVOCLPTCL	4-NITROPHENOL	50	UG/L		U		50								
020	SW	REAL	SW01077WC	12-APR-91	N	TRG	SVOCLPTCL	ACENAPHTHENE	10	UG/L		U		10								
020	SW	REAL	SW01077WC	12-APR-91	N	TRG	SVOCLPTCL	ACENAPHTHYLENE	10	UG/L		U		10								
020	SW	REAL	SW01077WC	12-APR-91	N	TRG	SVOCLPTCL	ANTHRACENE	10	UG/L		U		10								
020	SW	REAL	SW01077WC	12-APR-91	N	TRG	SVOCLPTCL	BENZO(a)ANTHRACENE	10	UG/L		U		10								
020	SW	REAL	SW01077WC	12-APR-91	N	TRG	SVOCLPTCL	BENZO(a)PYRENE	10	UG/L		U		10								
020	SW	REAL	SW01077WC	12-APR-91	N	TRG	SVOCLPTCL	BENZO(b)FLUORANTHENE	10	UG/L		U		10								
020	SW	REAL	SW01077WC	12-APR-91	N	TRG	SVOCLPTCL	BENZO(ghi)PERYLENE	10	UG/L		U		10								
020	SW	REAL	SW01077WC	12-APR-91	N	TRG	SVOCLPTCL	BENZO(k)FLUORANTHENE	10	UG/L		U		10								
020	SW	REAL	SW01077WC	12-APR-91	N	TRG	SVOCLPTCL	BENZOIC ACID	50	UG/L		U		50								
020	SW	REAL	SW01077WC	12-APR-91	N	TRG	SVOCLPTCL	BENZYL ALCOHOL	10	UG/L		U		10								
20	SW	REAL	SW01077WC	12-APR-91	N	TRG	SVOCLPTCL	BIS(2-CHLOROETHOXY)METHANE	10	UG/L		U		10								
20	SW	REAL	SW01077WC	12-APR-91	N	TRG	SVOCLPTCL	BIS(2-CHLOROETHYL)ETHER	10	UG/L		U		10								
20	SW	REAL	SW01077WC	12-APR-91	N	TRG	SVOCLPTCL	BIS(2-CHLOROISOPROPYL)ETHER	10	UG/L		U		10								
20	SW	REAL	SW01077WC	12-APR-91	N	TRG	SVOCLPTCL	BIS(2-ETHYLHEXYL)PHTHALATE	2	UG/L		J		10								
20	SW	REAL	SW01077WC	12-APR-91	N	TRG	SVOCLPTCL	BUTYL BENZYL PHTHALATE	10	UG/L		U		10								
20	SW	REAL	SW01077WC	12-APR-91	N	TRG	SVOCLPTCL	CHRYSENE	10	UG/L		U		10								
20	SW	REAL	SW01077WC	12-APR-91	N	TRG	SVOCLPTCL	DI-n-BUTYL PHTHALATE	10	UG/L		U		10								
20	SW	REAL	SW01077WC	12-APR-91	N	TRG	SVOCLPTCL	DI-n-OCTYL PHTHALATE	10	UG/L		U		10								
20	SW	REAL	SW01077WC	12-APR-91	N	TRG	SVOCLPTCL	DIBENZO(a,h)ANTHRACENE	10	UG/L		U		10								
20	SW	REAL	SW01077WC	12-APR-91	N	TRG	SVOCLPTCL	DIBENZOFURAN	10	UG/L		U		10								
0	SW	REAL	SW01077WC	12-APR-91	N	TRG	SVOCLPTCL	DIETHYL PHTHALATE	10	UG/L		U		10								
0	SW	REAL	SW01077WC	12-APR-91	N	TRG	SVOCLPTCL	DIMETHYL PHTHALATE	10	UG/L		U		10								
0	SW	REAL	SW01077WC	12-APR-91	N	TRG	SVOCLPTCL	FLUORANTHENE	10	UG/L		U		10								
0	SW	REAL	SW01077WC	12-APR-91	N	TRG	SVOCLPTCL	FLUORENE	10	UG/L		U		10								

ocation	ST	QC	Sample Number	Smpl Date	D	ID	Group	Chemical	Result	Unit	Error	Qual	D LMT	VA	RN1	RN2	RN3	RN4	VResult	VQual	VDET
W020	SW	REAL	SW01077WC	12-APR-91	N	TRG	SVOCLPTCL	HEXACHLOROBENZENE	10	UG/L		U	10								
W020	SW	REAL	SW01077WC	12-APR-91	N	TRG	SVOCLPTCL	HEXACHLOROBUTADIENE	10	UG/L		U	10								
W020	SW	REAL	SW01077WC	12-APR-91	N	TRG	SVOCLPTCL	HEXACHLOROCYCLOPENTADIENE	10	UG/L		U	10								
W020	SW	REAL	SW01077WC	12-APR-91	N	TRG	SVOCLPTCL	HEXACHLOROETHANE	10	UG/L		U	10								
W020	SW	REAL	SW01077WC	12-APR-91	N	TRG	SVOCLPTCL	INDENO(1,2,3-cd)PYRENE	10	UG/L		U	10								
W020	SW	REAL	SW01077WC	12-APR-91	N	TRG	SVOCLPTCL	ISOPHORONE	10	UG/L		U	10								
W020	SW	REAL	SW01077WC	12-APR-91	N	TRG	SVOCLPTCL	N-NITROSO-DI-n-PROPYLAMINE	10	UG/L		U	10								
W020	SW	REAL	SW01077WC	12-APR-91	N	TRG	SVOCLPTCL	N-NITROSODIPHENYLAMINE	10	UG/L		U	10								
W020	SW	REAL	SW01077WC	12-APR-91	N	TRG	SVOCLPTCL	NAPHTHALENE	10	UG/L		U	10								
W020	SW	REAL	SW01077WC	12-APR-91	N	TRG	SVOCLPTCL	NITROBENZENE	10	UG/L		U	10								
W020	SW	REAL	SW01077WC	12-APR-91	N	TRG	SVOCLPTCL	PENTACHLOROPHENOL	50	UG/L		U	50								
W020	SW	REAL	SW01077WC	12-APR-91	N	TRG	SVOCLPTCL	PHENANTHRENE	10	UG/L		U	10								
W020	SW	REAL	SW01077WC	12-APR-91	N	TRG	SVOCLPTCL	PHENOL	10	UG/L		U	10								
W020	SW	REAL	SW01077WC	12-APR-91	N	TRG	SVOCLPTCL	PYRENE	10	UG/L		U	10								
W020	SW	REAL	SW01077WC	12-APR-91	N	TRG	VOCCLPTCL	1,1,1-TRICHLOROETHANE	5	UG/L		U	5								
W020	SW	REAL	SW01077WC	12-APR-91	N	TRG	VOCCLPTCL	1,1,2,2-TETRACHLOROETHANE	5	UG/L		U	5								
W020	SW	REAL	SW01077WC	12-APR-91	N	TRG	VOCCLPTCL	1,1,2-TRICHLOROETHANE	5	UG/L		U	5								
W020	SW	REAL	SW01077WC	12-APR-91	N	TRG	VOCCLPTCL	1,1-DICHLOROETHANE	5	UG/L		U	5								
W020	SW	REAL	SW01077WC	12-APR-91	N	TRG	VOCCLPTCL	1,1-DICHLOROETHENE	5	UG/L		U	5								
W020	SW	REAL	SW01077WC	12-APR-91	N	TRG	VOCCLPTCL	1,2-DICHLOROETHANE	5	UG/L		U	5								
W020	SW	REAL	SW01077WC	12-APR-91	N	TRG	VOCCLPTCL	1,2-DICHLOROETHENE	5	UG/L		U	5								
W020	SW	REAL	SW01077WC	12-APR-91	N	TRG	VOCCLPTCL	1,2-DICHLOROPROPANE	5	UG/L		U	5								
W020	SW	REAL	SW01077WC	12-APR-91	N	TRG	VOCCLPTCL	2-BUTANONE	10	UG/L		U	10								
W020	SW	REAL	SW01077WC	12-APR-91	N	TRG	VOCCLPTCL	2-HEXANONE	10	UG/L		U	10								
W020	SW	REAL	SW01077WC	12-APR-91	N	TRG	VOCCLPTCL	4-METHYL-2-PENTANONE	10	UG/L		U	10								
W020	SW	REAL	SW01077WC	12-APR-91	N	TRG	VOCCLPTCL	ACETONE	10	UG/L		U	10								
W020	SW	REAL	SW01077WC	12-APR-91	N	TRG	VOCCLPTCL	BENZENE	5	UG/L		U	5								
W020	SW	REAL	SW01077WC	12-APR-91	N	TRG	VOCCLPTCL	BROMODICHLOROMETHANE	5	UG/L		U	5								
W020	SW	REAL	SW01077WC	12-APR-91	N	TRG	VOCCLPTCL	BROMOFORM	5	UG/L		U	5								
W020	SW	REAL	SW01077WC	12-APR-91	N	TRG	VOCCLPTCL	BROMOMETHANE	10	UG/L		U	10								
W020	SW	REAL	SW01077WC	12-APR-91	N	TRG	VOCCLPTCL	CARBON DISULFIDE	5	UG/L		U	5								
W020	SW	REAL	SW01077WC	12-APR-91	N	TRG	VOCCLPTCL	CARBON TETRACHLORIDE	5	UG/L		U	5								
W020	SW	REAL	SW01077WC	12-APR-91	N	TRG	VOCCLPTCL	CHLOROBENZENE	5	UG/L		U	5								
W020	SW	REAL	SW01077WC	12-APR-91	N	TRG	VOCCLPTCL	CHLOROETHANE	10	UG/L		U	10								
W020	SW	REAL	SW01077WC	12-APR-91	N	TRG	VOCCLPTCL	CHLOROFORM	5	UG/L		U	5								
W020	SW	REAL	SW01077WC	12-APR-91	N	TRG	VOCCLPTCL	CHLOROMETHANE	10	UG/L		U	10								
W020	SW	REAL	SW01077WC	12-APR-91	N	TRG	VOCCLPTCL	DIBROMOCHLOROMETHANE	5	UG/L		U	5								
W020	SW	REAL	SW01077WC	12-APR-91	N	TRG	VOCCLPTCL	ETHYLBENZENE	5	UG/L		U	5								
W020	SW	REAL	SW01077WC	12-APR-91	N	TRG	VOCCLPTCL	METHYLENE CHLORIDE	5	UG/L		U	5								
W020	SW	REAL	SW01077WC	12-APR-91	N	TRG	VOCCLPTCL	STYRENE	5	UG/L		U	5								
W020	SW	REAL	SW01077WC	12-APR-91	N	TRG	VOCCLPTCL	TETRACHLOROETHENE	5	UG/L		U	5								
W020	SW	REAL	SW01077WC	12-APR-91	N	TRG	VOCCLPTCL	TOLUENE	5	UG/L		U	5								
W020	SW	REAL	SW01077WC	12-APR-91	N	TRG	VOCCLPTCL	TOTAL XYLENES	5	UG/L		U	5								
W020	SW	REAL	SW01077WC	12-APR-91	N	TRG	VOCCLPTCL	TRICHLOROETHENE	5	UG/L		U	5								
W020	SW	REAL	SW01077WC	12-APR-91	N	TRG	VOCCLPTCL	VINYL ACETATE	10	UG/L		U	10								
W020	SW	REAL	SW01077WC	12-APR-91	N	TRG	VOCCLPTCL	VINYL CHLORIDE	10	UG/L		U	10								
W020	SW	REAL	SW01077WC	12-APR-91	N	TRG	VOCCLPTCL	cis-1,3-DICHLOROPROPENE	5	UG/L		U	5								
W020	SW	REAL	SW01077WC	12-APR-91	N	TRG	VOCCLPTCL	trans-1,3-DICHLOROPROPENE	5	UG/L		U	5								
W020	SW	REAL	SW01390WC	23-JUL-91	N	TRG	VOCCLPTCL	1,1,1-TRICHLOROETHANE	5	UG/L		U	5								
W020	SW	REAL	SW01390WC	23-JUL-91	N	TRG	VOCCLPTCL	1,1,2,2-TETRACHLOROETHANE	5	UG/L		U	5								
W020	SW	REAL	SW01390WC	23-JUL-91	N	TRG	VOCCLPTCL	1,1,2-TRICHLOROETHANE	5	UG/L		U	5								
W020	SW	REAL	SW01390WC	23-JUL-91	N	TRG	VOCCLPTCL	1,1-DICHLOROETHANE	5	UG/L		U	5								
W020	SW	REAL	SW01390WC	23-JUL-91	N	TRG	VOCCLPTCL	1,1-DICHLOROETHENE	5	UG/L		U	5								
W020	SW	REAL	SW01390WC	23-JUL-91	N	TRG	VOCCLPTCL	1,2-DICHLOROETHANE	5	UG/L		U	5								
W020	SW	REAL	SW01390WC	23-JUL-91	N	TRG	VOCCLPTCL	1,2-DICHLOROETHENE	5	UG/L		U	5								
W020	SW	REAL	SW01390WC	23-JUL-91	N	TRG	VOCCLPTCL	1,2-DICHLOROPROPANE	5	UG/L		U	5								
W020	SW	REAL	SW01390WC	23-JUL-91	N	TRG	VOCCLPTCL	2-BUTANONE	10	UG/L		U	10								
W020	SW	REAL	SW01390WC	23-JUL-91	N	TRG	VOCCLPTCL	2-HEXANONE	10	UG/L		U	10								
W020	SW	REAL	SW01390WC	23-JUL-91	N	TRG	VOCCLPTCL	4-METHYL-2-PENTANONE	10	UG/L		U	10								
W020	SW	REAL	SW01390WC	23-JUL-91	N	TRG	VOCCLPTCL	ACETONE	10	UG/L		U	10								
W020	SW	REAL	SW01390WC	23-JUL-91	N	TRG	VOCCLPTCL	BENZENE	5	UG/L		U	5								
W020	SW	REAL	SW01390WC	23-JUL-91	N	TRG	VOCCLPTCL	BROMODICHLOROMETHANE	5	UG/L		U	5								
W020	SW	REAL	SW01390WC	23-JUL-91	N	TRG	VOCCLPTCL	BROMOFORM	5	UG/L		U	5								

Location	ST	QC	Sample Number	Smpl Date	D	ID	Group	Chemical	Result	Unit	Error	Qual	D	LMT	VA	RN1	RN2	RN3	RN4	VResult	VQual	VDET
SW020	SW	REAL	SW01390WC	23-JUL-91	N	TRG	VOCCLPTCL	BROMOMETHANE	10	UG/L		U		10								
SW020	SW	REAL	SW01390WC	23-JUL-91	N	TRG	VOCCLPTCL	CARBON DISULFIDE	5	UG/L		U		5								
SW020	SW	REAL	SW01390WC	23-JUL-91	N	TRG	VOCCLPTCL	CARBON TETRACHLORIDE	5	UG/L		U		5								
SW020	SW	REAL	SW01390WC	23-JUL-91	N	TRG	VOCCLPTCL	CHLOROBENZENE	5	UG/L		U		5								
SW020	SW	REAL	SW01390WC	23-JUL-91	N	TRG	VOCCLPTCL	CHLOROETHANE	10	UG/L		U		10								
SW020	SW	REAL	SW01390WC	23-JUL-91	N	TRG	VOCCLPTCL	CHLOROFORM	5	UG/L		U		5								
SW020	SW	REAL	SW01390WC	23-JUL-91	N	TRG	VOCCLPTCL	CHLOROMETHANE	10	UG/L		U		10								
SW020	SW	REAL	SW01390WC	23-JUL-91	N	TRG	VOCCLPTCL	DIBROMOCHLOROMETHANE	5	UG/L		U		5								
SW020	SW	REAL	SW01390WC	23-JUL-91	N	TRG	VOCCLPTCL	ETHYLBENZENE	5	UG/L		U		5								
SW020	SW	REAL	SW01390WC	23-JUL-91	N	TRG	VOCCLPTCL	METHYLENE CHLORIDE	5	UG/L		U		5								
SW020	SW	REAL	SW01390WC	23-JUL-91	N	TRG	VOCCLPTCL	STYRENE	5	UG/L		U		5								
SW020	SW	REAL	SW01390WC	23-JUL-91	N	TRG	VOCCLPTCL	TETRACHLOROETHENE	5	UG/L		U		5								
SW020	SW	REAL	SW01390WC	23-JUL-91	N	TRG	VOCCLPTCL	TOLUENE	5	UG/L		U		5								
SW020	SW	REAL	SW01390WC	23-JUL-91	N	TRG	VOCCLPTCL	TOTAL XYLENES	5	UG/L		U		5								
SW020	SW	REAL	SW01390WC	23-JUL-91	N	TRG	VOCCLPTCL	TRICHLOROETHENE	5	UG/L		U		5								
SW020	SW	REAL	SW01390WC	23-JUL-91	N	TRG	VOCCLPTCL	VINYL ACETATE	10	UG/L		U		10								
SW020	SW	REAL	SW01390WC	23-JUL-91	N	TRG	VOCCLPTCL	VINYL CHLORIDE	10	UG/L		U		10								
SW020	SW	REAL	SW01390WC	23-JUL-91	N	TRG	VOCCLPTCL	cis-1,3-DICHLOROPROPENE	5	UG/L		U		5								
SW020	SW	REAL	SW01390WC	23-JUL-91	N	TRG	VOCCLPTCL	trans-1,3-DICHLOROPROPENE	5	UG/L		U		5								
SW020	SW	REAL	SW01496WC	22-AUG-91	Y																	
SW020	SW	REAL	SW01602WC	23-SEP-91	Y																	
SW020	SW	REAL	SW01708WC	31-OCT-91	Y																	
SW022	SW	REAL	SW01078WC	12-APR-91	Y																	
SW022	SW	REAL	SW01391WC	23-JUL-91	N	TRG	VOCCLPTCL	1,1,1-TRICHLOROETHANE	5	UG/L		U		5								
SW022	SW	REAL	SW01391WC	23-JUL-91	N	TRG	VOCCLPTCL	1,1,2,2-TETRACHLOROETHANE	5	UG/L		U		5								
SW022	SW	REAL	SW01391WC	23-JUL-91	N	TRG	VOCCLPTCL	1,1,2-TRICHLOROETHANE	5	UG/L		U		5								
SW022	SW	REAL	SW01391WC	23-JUL-91	N	TRG	VOCCLPTCL	1,1-DICHLOROETHANE	5	UG/L		U		5								
SW022	SW	REAL	SW01391WC	23-JUL-91	N	TRG	VOCCLPTCL	1,1-DICHLOROETHENE	5	UG/L		U		5								
SW022	SW	REAL	SW01391WC	23-JUL-91	N	TRG	VOCCLPTCL	1,2-DICHLOROETHANE	5	UG/L		U		5								
SW022	SW	REAL	SW01391WC	23-JUL-91	N	TRG	VOCCLPTCL	1,2-DICHLOROETHENE	5	UG/L		U		5								
SW022	SW	REAL	SW01391WC	23-JUL-91	N	TRG	VOCCLPTCL	1,2-DICHLOROPROPANE	5	UG/L		U		5								
SW022	SW	REAL	SW01391WC	23-JUL-91	N	TRG	VOCCLPTCL	2-BUTANONE	10	UG/L		U		10								
SW022	SW	REAL	SW01391WC	23-JUL-91	N	TRG	VOCCLPTCL	2-HEXANONE	10	UG/L		U		10								
SW022	SW	REAL	SW01391WC	23-JUL-91	N	TRG	VOCCLPTCL	4-METHYL-2-PENTANONE	10	UG/L		U		10								
SW022	SW	REAL	SW01391WC	23-JUL-91	N	TRG	VOCCLPTCL	ACETONE	10	UG/L		U		10								
SW022	SW	REAL	SW01391WC	23-JUL-91	N	TRG	VOCCLPTCL	BENZENE	5	UG/L		U		5								
SW022	SW	REAL	SW01391WC	23-JUL-91	N	TRG	VOCCLPTCL	BROMODICHLOROMETHANE	5	UG/L		U		5								
SW022	SW	REAL	SW01391WC	23-JUL-91	N	TRG	VOCCLPTCL	BROMOFORM	5	UG/L		U		5								
SW022	SW	REAL	SW01391WC	23-JUL-91	N	TRG	VOCCLPTCL	BROMOMETHANE	10	UG/L		U		10								
SW022	SW	REAL	SW01391WC	23-JUL-91	N	TRG	VOCCLPTCL	CARBON DISULFIDE	5	UG/L		U		5								
SW022	SW	REAL	SW01391WC	23-JUL-91	N	TRG	VOCCLPTCL	CARBON TETRACHLORIDE	5	UG/L		U		5								
SW022	SW	REAL	SW01391WC	23-JUL-91	N	TRG	VOCCLPTCL	CHLOROBENZENE	5	UG/L		U		5								
SW022	SW	REAL	SW01391WC	23-JUL-91	N	TRG	VOCCLPTCL	CHLOROETHANE	10	UG/L		U		10								
SW022	SW	REAL	SW01391WC	23-JUL-91	N	TRG	VOCCLPTCL	CHLOROFORM	5	UG/L		U		5								
SW022	SW	REAL	SW01391WC	23-JUL-91	N	TRG	VOCCLPTCL	CHLOROMETHANE	10	UG/L		U		10								
SW022	SW	REAL	SW01391WC	23-JUL-91	N	TRG	VOCCLPTCL	DIBROMOCHLOROMETHANE	5	UG/L		U		5								
SW022	SW	REAL	SW01391WC	23-JUL-91	N	TRG	VOCCLPTCL	ETHYLBENZENE	5	UG/L		U		5								
SW022	SW	REAL	SW01391WC	23-JUL-91	N	TRG	VOCCLPTCL	METHYLENE CHLORIDE	5	UG/L		U		5								
SW022	SW	REAL	SW01391WC	23-JUL-91	N	TRG	VOCCLPTCL	STYRENE	5	UG/L		U		5								
SW022	SW	REAL	SW01391WC	23-JUL-91	N	TRG	VOCCLPTCL	TETRACHLOROETHENE	5	UG/L		U		5								
SW022	SW	REAL	SW01391WC	23-JUL-91	N	TRG	VOCCLPTCL	TOLUENE	5	UG/L		U		5								
SW022	SW	REAL	SW01391WC	23-JUL-91	N	TRG	VOCCLPTCL	TOTAL XYLENES	5	UG/L		U		5								
SW022	SW	REAL	SW01391WC	23-JUL-91	N	TRG	VOCCLPTCL	TRICHLOROETHENE	5	UG/L		U		5								
SW022	SW	REAL	SW01391WC	23-JUL-91	N	TRG	VOCCLPTCL	VINYL ACETATE	10	UG/L		U		10								
SW022	SW	REAL	SW01391WC	23-JUL-91	N	TRG	VOCCLPTCL	VINYL CHLORIDE	10	UG/L		U		10								
SW022	SW	REAL	SW01391WC	23-JUL-91	N	TRG	VOCCLPTCL	cis-1,3-DICHLOROPROPENE	5	UG/L		U		5								
SW022	SW	REAL	SW01391WC	23-JUL-91	N	TRG	VOCCLPTCL	trans-1,3-DICHLOROPROPENE	5	UG/L		U		5								
SW022	SW	REAL	SW01497WC	22-AUG-91	Y																	
SW022	SW	REAL	SW01603WC	23-SEP-91	Y																	
SW022	SW	REAL	SW01709WC	31-OCT-91	Y																	
SW022	SW	REAL	SW60067WCA	15-MAR-91	N																	
SW022	SW	REAL	SW60070WC	10-APR-91	N																	
SW022	SW	REAL	SW60071WC	15-APR-91	N																	

ocation	ST	QC	Sample Number	Smpl Date	D	ID	Group	Chemical	Result	Unit	Error	Qual	D LMT	VA	RN1	RN2	RN3	RN4	VResult	VQual	VDET
W022	SW	REAL	SW60074WC	15-APR-91	N																
W022	SW	REAL	SW60078WC	01-MAY-91	N																
W022	SW	REAL	SW60082WC	01-MAY-91	N																
W022	SW	REAL	SW60087WC	06-MAY-91	N																
W022	SW	REAL	SW60088WC	17-MAY-91	N																
W022	SW	REAL	SW60089WC	17-MAY-91	N																
W022	SW	REAL	SW60098WC	23-MAY-91	N																
W022	SW	REAL	SW60102WC	03-JUN-91	N																
W022	SW	REAL	SW60103WC	03-JUN-91	N																
W022	SW	REAL	SW60112WC	11-JUN-91	N																
W022	SW	REAL	SW60114WC	25-JUN-91	N																
W022	SW	REAL	SW60117WC	10-JUL-91	N																
W022	SW	REAL	SW60120WC	10-JUL-91	N																
W022	SW	REAL	SW60125WC	23-JUL-91	N																
W022	SW	REAL	SW60129WC	24-JUL-91	N																
W022	SW	REAL	SW60130WC	29-JUL-91	N																
W022	SW	REAL	SW60132WC	05-AUG-91	N																
W022	SW	REAL	SW60136WC	05-AUG-91	N																
W022	SW	REAL	SW60140WC	07-AUG-91	N																
W022	SW	REAL	SW60145WC	12-AUG-91	N																
W022	SW	REAL	SW60148WC	12-AUG-91	N																
W022	SW	REAL	SW60156WC	19-AUG-91	N																
W023	SW	DUP	SW80113WC	17-APR-91	N	TRG	SVOCLPTCL	1,2,4-TRICHLOROBENZENE	10	UG/L		U	10								
W023	SW	DUP	SW80113WC	17-APR-91	N	TRG	SVOCLPTCL	1,2-DICHLOROBENZENE	10	UG/L		U	10								
W023	SW	DUP	SW80113WC	17-APR-91	N	TRG	SVOCLPTCL	1,3-DICHLOROBENZENE	10	UG/L		U	10								
W023	SW	DUP	SW80113WC	17-APR-91	N	TRG	SVOCLPTCL	1,4-DICHLOROBENZENE	10	UG/L		U	10								
W023	SW	DUP	SW80113WC	17-APR-91	N	TRG	SVOCLPTCL	2,4,5-TRICHLOROPHENOL	50	UG/L		U	50								
W023	SW	DUP	SW80113WC	17-APR-91	N	TRG	SVOCLPTCL	2,4,6-TRICHLOROPHENOL	10	UG/L		U	10								
W023	SW	DUP	SW80113WC	17-APR-91	N	TRG	SVOCLPTCL	2,4-DICHLOROPHENOL	10	UG/L		U	10								
W023	SW	DUP	SW80113WC	17-APR-91	N	TRG	SVOCLPTCL	2,4-DIMETHYLPHENOL	10	UG/L		U	10								
W023	SW	DUP	SW80113WC	17-APR-91	N	TRG	SVOCLPTCL	2,4-DINITROPHENOL	50	UG/L		U	50								
W023	SW	DUP	SW80113WC	17-APR-91	N	TRG	SVOCLPTCL	2,4-DINITROTOLUENE	10	UG/L		U	10								
W023	SW	DUP	SW80113WC	17-APR-91	N	TRG	SVOCLPTCL	2,6-DINITROTOLUENE	10	UG/L		U	10								
W023	SW	DUP	SW80113WC	17-APR-91	N	TRG	SVOCLPTCL	2-CHLORONAPHTHALENE	10	UG/L		U	10								
W023	SW	DUP	SW80113WC	17-APR-91	N	TRG	SVOCLPTCL	2-CHLOROPHENOL	10	UG/L		U	10								
W023	SW	DUP	SW80113WC	17-APR-91	N	TRG	SVOCLPTCL	2-METHYLNAPHTHALENE	10	UG/L		U	10								
W023	SW	DUP	SW80113WC	17-APR-91	N	TRG	SVOCLPTCL	2-METHYLPHENOL	10	UG/L		U	10								
W023	SW	DUP	SW80113WC	17-APR-91	N	TRG	SVOCLPTCL	2-NITROANILINE	50	UG/L		U	50								
W023	SW	DUP	SW80113WC	17-APR-91	N	TRG	SVOCLPTCL	2-NITROPHENOL	10	UG/L		U	10								
W023	SW	DUP	SW80113WC	17-APR-91	N	TRG	SVOCLPTCL	3,3'-DICHLOROBENZIDINE	20	UG/L		U	20								
W023	SW	DUP	SW80113WC	17-APR-91	N	TRG	SVOCLPTCL	3-NITROANILINE	50	UG/L		U	50								
W023	SW	DUP	SW80113WC	17-APR-91	N	TRG	SVOCLPTCL	4,6-DINITRO-2-METHYLPHENOL	50	UG/L		U	50								
W023	SW	DUP	SW80113WC	17-APR-91	N	TRG	SVOCLPTCL	4-BROMOPHENYL PHENYL ETHER	10	UG/L		U	10								
W023	SW	DUP	SW80113WC	17-APR-91	N	TRG	SVOCLPTCL	4-CHLORO-3-METHYLPHENOL	10	UG/L		U	10								
W023	SW	DUP	SW80113WC	17-APR-91	N	TRG	SVOCLPTCL	4-CHLOROANILINE	10	UG/L		U	10								
W023	SW	DUP	SW80113WC	17-APR-91	N	TRG	SVOCLPTCL	4-CHLOROPHENYL PHENYL ETHER	10	UG/L		U	10								
W023	SW	DUP	SW80113WC	17-APR-91	N	TRG	SVOCLPTCL	4-METHYLPHENOL	10	UG/L		U	10								
W023	SW	DUP	SW80113WC	17-APR-91	N	TRG	SVOCLPTCL	4-NITROANILINE	50	UG/L		U	50								
W023	SW	DUP	SW80113WC	17-APR-91	N	TRG	SVOCLPTCL	4-NITROPHENOL	50	UG/L		U	50								
W023	SW	DUP	SW80113WC	17-APR-91	N	TRG	SVOCLPTCL	ACENAPHTHENE	10	UG/L		U	10								
W023	SW	DUP	SW80113WC	17-APR-91	N	TRG	SVOCLPTCL	ACENAPHTHYLENE	10	UG/L		U	10								
W023	SW	DUP	SW80113WC	17-APR-91	N	TRG	SVOCLPTCL	ANTHRACENE	10	UG/L		U	10								
W023	SW	DUP	SW80113WC	17-APR-91	N	TRG	SVOCLPTCL	BENZO(a)ANTHRACENE	10	UG/L		U	10								
W023	SW	DUP	SW80113WC	17-APR-91	N	TRG	SVOCLPTCL	BENZO(a)PYRENE	10	UG/L		U	10								
W023	SW	DUP	SW80113WC	17-APR-91	N	TRG	SVOCLPTCL	BENZO(b)FLUORANTHENE	10	UG/L		U	10								
W023	SW	DUP	SW80113WC	17-APR-91	N	TRG	SVOCLPTCL	BENZO(ghi)PERYLENE	10	UG/L		U	10								
W023	SW	DUP	SW80113WC	17-APR-91	N	TRG	SVOCLPTCL	BENZO(k)FLUORANTHENE	10	UG/L		U	10								
W023	SW	DUP	SW80113WC	17-APR-91	N	TRG	SVOCLPTCL	BENZOIC ACID	50	UG/L		U	50								
W023	SW	DUP	SW80113WC	17-APR-91	N	TRG	SVOCLPTCL	BENZYL ALCOHOL	10	UG/L		U	10								
W023	SW	DUP	SW80113WC	17-APR-91	N	TRG	SVOCLPTCL	BIS(2-CHLOROETHOXY)METHANE	10	UG/L		U	10								
W023	SW	DUP	SW80113WC	17-APR-91	N	TRG	SVOCLPTCL	BIS(2-CHLOROETHYL)ETHER	10	UG/L		U	10								
W023	SW	DUP	SW80113WC	17-APR-91	N	TRG	SVOCLPTCL	BIS(2-CHLOROISOPROPYL)ETHER	10	UG/L		U	10								
W023	SW	DUP	SW80113WC	17-APR-91	N	TRG	SVOCLPTCL	BIS(2-ETHYLHEXYL)PHTHALATE	10	UG/L		U	10								

Location	ST	QC	Sample Number	Smpl Date	D	ID	Group	Chemical	Result	Unit	Error	Qual	D LMT	VA	RN1	RN2	RN3	RN4	VResult	VQual	VDET
SW023	SW	DUP	SW80113WC	17-APR-91	N	TRG	SVOCLPTCL	BUTYL BENZYL PHTHALATE	10	UG/L		U	10								
SW023	SW	DUP	SW80113WC	17-APR-91	N	TRG	SVOCLPTCL	CHRYSENE	10	UG/L		U	10								
SW023	SW	DUP	SW80113WC	17-APR-91	N	TRG	SVOCLPTCL	DI-n-BUTYL PHTHALATE	10	UG/L		U	10								
SW023	SW	DUP	SW80113WC	17-APR-91	N	TRG	SVOCLPTCL	DI-n OCTYL PHTHALATE	10	UG/L		U	10								
SW023	SW	DUP	SW80113WC	17-APR-91	N	TRG	SVOCLPTCL	DIBENZO(a,h)ANTHRACENE	10	UG/L		U	10								
SW023	SW	DUP	SW80113WC	17-APR-91	N	TRG	SVOCLPTCL	DIBENZOFURAN	10	UG/L		U	10								
SW023	SW	DUP	SW80113WC	17-APR-91	N	TRG	SVOCLPTCL	DIETHYL PHTHALATE	10	UG/L		U	10								
SW023	SW	DUP	SW80113WC	17-APR-91	N	TRG	SVOCLPTCL	DIMETHYL PHTHALATE	10	UG/L		U	10								
SW023	SW	DUP	SW80113WC	17-APR-91	N	TRG	SVOCLPTCL	FLUORANTHENE	10	UG/L		U	10								
SW023	SW	DUP	SW80113WC	17-APR-91	N	TRG	SVOCLPTCL	FLUORENE	10	UG/L		U	10								
SW023	SW	DUP	SW80113WC	17-APR-91	N	TRG	SVOCLPTCL	HEXACHLOROBENZENE	10	UG/L		U	10								
SW023	SW	DUP	SW80113WC	17-APR-91	N	TRG	SVOCLPTCL	HEXACHLOROBUTADIENE	10	UG/L		U	10								
SW023	SW	DUP	SW80113WC	17-APR-91	N	TRG	SVOCLPTCL	HEXACHLOROCYCLOPENTADIENE	10	UG/L		U	10								
SW023	SW	DUP	SW80113WC	17-APR-91	N	TRG	SVOCLPTCL	HEXACHLOROETHANE	10	UG/L		U	10								
SW023	SW	DUP	SW80113WC	17-APR-91	N	TRG	SVOCLPTCL	INDENO(1,2,3-cd)PYRENE	10	UG/L		U	10								
SW023	SW	DUP	SW80113WC	17-APR-91	N	TRG	SVOCLPTCL	ISOPHORONE	10	UG/L		U	10								
SW023	SW	DUP	SW80113WC	17-APR-91	N	TRG	SVOCLPTCL	N-NITROSO-DI-n-PROPYLAMINE	10	UG/L		U	10								
SW023	SW	DUP	SW80113WC	17-APR-91	N	TRG	SVOCLPTCL	N-NITROSODIPHENYLAMINE	10	UG/L		U	10								
SW023	SW	DUP	SW80113WC	17-APR-91	N	TRG	SVOCLPTCL	NAPHTHALENE	10	UG/L		U	10								
SW023	SW	DUP	SW80113WC	17-APR-91	N	TRG	SVOCLPTCL	NITROBENZENE	10	UG/L		U	10								
SW023	SW	DUP	SW80113WC	17-APR-91	N	TRG	SVOCLPTCL	PENTACHLOROPHENOL	50	UG/L		U	50								
SW023	SW	DUP	SW80113WC	17-APR-91	N	TRG	SVOCLPTCL	PHENANTHRENE	10	UG/L		U	10								
SW023	SW	DUP	SW80113WC	17-APR-91	N	TRG	SVOCLPTCL	PHENOL	10	UG/L		U	10								
SW023	SW	DUP	SW80113WC	17-APR-91	N	TRG	SVOCLPTCL	PYRENE	10	UG/L		U	10								
SW023	SW	DUP	SW80113WC	17-APR-91	N	TRG	VOCCLPTCL	1,1,1-TRICHLOROETHANE	5	UG/L		U	5								
SW023	SW	DUP	SW80113WC	17-APR-91	N	TRG	VOCCLPTCL	1,1,2,2-TETRACHLOROETHANE	5	UG/L		U	5								
SW023	SW	DUP	SW80113WC	17-APR-91	N	TRG	VOCCLPTCL	1,1,2-TRICHLOROETHANE	5	UG/L		U	5								
SW023	SW	DUP	SW80113WC	17-APR-91	N	TRG	VOCCLPTCL	1,1-DICHLOROETHANE	5	UG/L		U	5								
SW023	SW	DUP	SW80113WC	17-APR-91	N	TRG	VOCCLPTCL	1,1-DICHLOROETHENE	5	UG/L		U	5								
SW023	SW	DUP	SW80113WC	17-APR-91	N	TRG	VOCCLPTCL	1,2-DICHLOROETHANE	5	UG/L		U	5								
SW023	SW	DUP	SW80113WC	17-APR-91	N	TRG	VOCCLPTCL	1,2-DICHLOROETHENE	5	UG/L		U	5								
SW023	SW	DUP	SW80113WC	17-APR-91	N	TRG	VOCCLPTCL	1,2-DICHLOROPROPANE	5	UG/L		U	5								
SW023	SW	DUP	SW80113WC	17-APR-91	N	TRG	VOCCLPTCL	2-BUTANONE	10	UG/L		U	10								
SW023	SW	DUP	SW80113WC	17-APR-91	N	TRG	VOCCLPTCL	2-HEXANONE	10	UG/L		U	10								
SW023	SW	DUP	SW80113WC	17-APR-91	N	TRG	VOCCLPTCL	4-METHYL-2-PENTANONE	10	UG/L		U	10								
SW023	SW	DUP	SW80113WC	17-APR-91	N	TRG	VOCCLPTCL	ACETONE	10	UG/L		U	10								
SW023	SW	DUP	SW80113WC	17-APR-91	N	TRG	VOCCLPTCL	BENZENE	5	UG/L		U	5								
SW023	SW	DUP	SW80113WC	17-APR-91	N	TRG	VOCCLPTCL	BROMODICHLOROMETHANE	5	UG/L		U	5								
SW023	SW	DUP	SW80113WC	17-APR-91	N	TRG	VOCCLPTCL	BROMOFORM	5	UG/L		U	5								
SW023	SW	DUP	SW80113WC	17-APR-91	N	TRG	VOCCLPTCL	BROMOMETHANE	10	UG/L		U	10								
SW023	SW	DUP	SW80113WC	17-APR-91	N	TRG	VOCCLPTCL	CARBON DISULFIDE	5	UG/L		U	5								
SW023	SW	DUP	SW80113WC	17-APR-91	N	TRG	VOCCLPTCL	CARBON TETRACHLORIDE	5	UG/L		U	5								
SW023	SW	DUP	SW80113WC	17-APR-91	N	TRG	VOCCLPTCL	CHLOROBENZENE	5	UG/L		U	5								
SW023	SW	DUP	SW80113WC	17-APR-91	N	TRG	VOCCLPTCL	CHLOROETHANE	10	UG/L		U	10								
SW023	SW	DUP	SW80113WC	17-APR-91	N	TRG	VOCCLPTCL	CHLOROFORM	5	UG/L		U	5								
SW023	SW	DUP	SW80113WC	17-APR-91	N	TRG	VOCCLPTCL	CHLOROMETHANE	10	UG/L		U	10								
SW023	SW	DUP	SW80113WC	17-APR-91	N	TRG	VOCCLPTCL	DIBROMOCHLOROMETHANE	5	UG/L		U	5								
SW023	SW	DUP	SW80113WC	17-APR-91	N	TRG	VOCCLPTCL	ETHYLBENZENE	5	UG/L		U	5								
SW023	SW	DUP	SW80113WC	17-APR-91	N	TRG	VOCCLPTCL	METHYLENE CHLORIDE	5	UG/L		U	5								
SW023	SW	DUP	SW80113WC	17-APR-91	N	TRG	VOCCLPTCL	STYRENE	5	UG/L		U	5								
SW023	SW	DUP	SW80113WC	17-APR-91	N	TRG	VOCCLPTCL	TETRACHLOROETHENE	5	UG/L		U	5								
SW023	SW	DUP	SW80113WC	17-APR-91	N	TRG	VOCCLPTCL	TOLUENE	5	UG/L		U	5								
SW023	SW	DUP	SW80113WC	17-APR-91	N	TRG	VOCCLPTCL	TOTAL XYLENES	5	UG/L		U	5								
SW023	SW	DUP	SW80113WC	17-APR-91	N	TRG	VOCCLPTCL	TRICHLOROETHENE	5	UG/L		U	5								
SW023	SW	DUP	SW80113WC	17-APR-91	N	TRG	VOCCLPTCL	VINYL ACETATE	10	UG/L		U	10								
SW023	SW	DUP	SW80113WC	17-APR-91	N	TRG	VOCCLPTCL	VINYL CHLORIDE	10	UG/L		U	10								
SW023	SW	DUP	SW80113WC	17-APR-91	N	TRG	VOCCLPTCL	cis-1,3-DICHLOROPROPENE	5	UG/L		U	5								
SW023	SW	DUP	SW80113WC	17-APR-91	N	TRG	VOCCLPTCL	trans-1,3-DICHLOROPROPENE	5	UG/L		U	5								
SW023	SW	DUP	SW80159WC	16-SEP-91	N	TRG	VOACLP	1,1,1-TRICHLOROETHANE	5	UG/L		U	5								
SW023	SW	DUP	SW80159WC	16-SEP-91	N	TRG	VOACLP	1,1,2,2-TETRACHLOROETHANE	5	UG/L		U	5								
SW023	SW	DUP	SW80159WC	16-SEP-91	N	TRG	VOACLP	1,1,2-TRICHLOROETHANE	5	UG/L		U	5								
SW023	SW	DUP	SW80159WC	16-SEP-91	N	TRG	VOACLP	1,1-DICHLOROETHANE	5	UG/L		U	5								
SW023	SW	DUP	SW80159WC	16-SEP-91	N	TRG	VOACLP	1,1-DICHLOROETHENE	5	UG/L		U	5								

ocation	ST	QC	Sample Number	Smpl Date	D	ID	Group	Chemical	Result	Unit	Error	Qual	D LMT	VA	RN1	RN2	RN3	RN4	VResult	VQual	VDET
023	SW	DUP	SW80159WC	16-SEP-91	N	TRG	VOACLP	1,2-DICHLOROETHANE	5	UG/L		U	5								
023	SW	DUP	SW80159WC	16-SEP-91	N	TRG	VOACLP	1,2-DICHLOROETHENE	5	UG/L		U	5								
023	SW	DUP	SW80159WC	16-SEP-91	N	TRG	VOACLP	1,2-DICHLOROPROPANE	5	UG/L		U	5								
023	SW	DUP	SW80159WC	16-SEP-91	N	TRG	VOACLP	2-BUTANONE	10	UG/L		U	10								
023	SW	DUP	SW80159WC	16-SEP-91	N	TRG	VOACLP	2-HEXANONE	10	UG/L		U	10								
023	SW	DUP	SW80159WC	16-SEP-91	N	TRG	VOACLP	4-METHYL-2-PENTANONE	10	UG/L		U	10								
023	SW	DUP	SW80159WC	16-SEP-91	N	TRG	VOACLP	ACETONE	10	UG/L		U	10								
023	SW	DUP	SW80159WC	16-SEP-91	N	TRG	VOACLP	BENZENE	5	UG/L		U	5								
023	SW	DUP	SW80159WC	16-SEP-91	N	TRG	VOACLP	BROMODICHLOROMETHANE	5	UG/L		U	5								
023	SW	DUP	SW80159WC	16-SEP-91	N	TRG	VOACLP	BROMOFORM	5	UG/L		U	5								
023	SW	DUP	SW80159WC	16-SEP-91	N	TRG	VOACLP	BROMOMETHANE	10	UG/L		U	10								
023	SW	DUP	SW80159WC	16-SEP-91	N	TRG	VOACLP	CARBON DISULFIDE	5	UG/L		U	5								
023	SW	DUP	SW80159WC	16-SEP-91	N	TRG	VOACLP	CARBON TETRACHLORIDE	5	UG/L		U	5								
023	SW	DUP	SW80159WC	16-SEP-91	N	TRG	VOACLP	CHLOROBENZENE	5	UG/L		U	5								
023	SW	DUP	SW80159WC	16-SEP-91	N	TRG	VOACLP	CHLOROETHANE	10	UG/L		U	10								
023	SW	DUP	SW80159WC	16-SEP-91	N	TRG	VOACLP	CHLOROFORM	5	UG/L		U	5								
023	SW	DUP	SW80159WC	16-SEP-91	N	TRG	VOACLP	CHLOROMETHANE	10	UG/L		U	10								
023	SW	DUP	SW80159WC	16-SEP-91	N	TRG	VOACLP	DIBROMOCHLOROMETHANE	5	UG/L		U	5								
023	SW	DUP	SW80159WC	16-SEP-91	N	TRG	VOACLP	ETHYLBENZENE	5	UG/L		U	5								
023	SW	DUP	SW80159WC	16-SEP-91	N	TRG	VOACLP	METHYLENE CHLORIDE	8	UG/L		B	5								
023	SW	DUP	SW80159WC	16-SEP-91	N	TRG	VOACLP	STYRENE	5	UG/L		U	5								
023	SW	DUP	SW80159WC	16-SEP-91	N	TRG	VOACLP	TETRACHLOROETHENE	5	UG/L		U	5								
023	SW	DUP	SW80159WC	16-SEP-91	N	TRG	VOACLP	TOLUENE	5	UG/L		U	5								
023	SW	DUP	SW80159WC	16-SEP-91	N	TRG	VOACLP	TOTAL XYLENES	5	UG/L		U	5								
023	SW	DUP	SW80159WC	16-SEP-91	N	TRG	VOACLP	TRICHLOROETHENE	5	UG/L		U	5								
023	SW	DUP	SW80159WC	16-SEP-91	N	TRG	VOACLP	VINYL ACETATE	10	UG/L		U	10								
023	SW	DUP	SW80159WC	16-SEP-91	N	TRG	VOACLP	VINYL CHLORIDE	10	UG/L		U	10								
023	SW	DUP	SW80159WC	16-SEP-91	N	TRG	VOACLP	cis-1,3-DICHLOROPROPENE	5	UG/L		U	5								
023	SW	DUP	SW80159WC	16-SEP-91	N	TRG	VOACLP	trans-1,3-DICHLOROPROPENE	5	UG/L		U	5								
023	SW	LR	SW01583WCLR	16-SEP-91	N																
023	SW	MS	SW01058WCMSD	17-APR-91	N																
023	SW	MS	SW01583WCMS	16-SEP-91	N																
023	SW	MSD	SW01058WCMS	17-APR-91	N																
023	SW	MSD	SW01583WCMSD	16-SEP-91	N																
023	SW	REAL	SW00750WC	14-JAN-91	N	TRG	VOCCLPTCL	1,1,1-TRICHLOROETHANE	5	UG/L		U	5 000	V							
023	SW	REAL	SW00750WC	14-JAN-91	N	TRG	VOCCLPTCL	1,1,2,2-TETRACHLOROETHANE	5	UG/L		U	5.000	V							
023	SW	REAL	SW00750WC	14-JAN-91	N	TRG	VOCCLPTCL	1,1,2-TRICHLOROETHANE	5	UG/L		U	5.000	V							
023	SW	REAL	SW00750WC	14-JAN-91	N	TRG	VOCCLPTCL	1,1-DICHLOROETHANE	5	UG/L		U	5 000	V							
023	SW	REAL	SW00750WC	14-JAN-91	N	TRG	VOCCLPTCL	1,1-DICHLOROETHENE	5	UG/L		U	5 000	V							
023	SW	REAL	SW00750WC	14-JAN-91	N	TRG	VOCCLPTCL	1,2-DICHLOROETHANE	5	UG/L		U	5.000	V							
023	SW	REAL	SW00750WC	14-JAN-91	N	TRG	VOCCLPTCL	1,2-DICHLOROETHENE	5	UG/L		U	5.000	V							
023	SW	REAL	SW00750WC	14-JAN-91	N	TRG	VOCCLPTCL	1,2-DICHLOROPROPANE	5	UG/L		U	5.000	V							
023	SW	REAL	SW00750WC	14-JAN-91	N	TRG	VOCCLPTCL	2-BUTANONE	10	UG/L		U	10.00	V							
023	SW	REAL	SW00750WC	14-JAN-91	N	TRG	VOCCLPTCL	2-HEXANONE	10	UG/L		U	10.00	V							
023	SW	REAL	SW00750WC	14-JAN-91	N	TRG	VOCCLPTCL	4 METHYL-2-PENTANONE	10	UG/L		U	10 00	V							
023	SW	REAL	SW00750WC	14-JAN-91	N	TRG	VOCCLPTCL	ACETONE	10	UG/L		U	10.00	V							
023	SW	REAL	SW00750WC	14-JAN-91	N	TRG	VOCCLPTCL	BENZENE	5	UG/L		U	5 000	JA							
023	SW	REAL	SW00750WC	14-JAN-91	N	TRG	VOCCLPTCL	BROMODICHLOROMETHANE	5	UG/L		U	5.000	V							
023	SW	REAL	SW00750WC	14-JAN-91	N	TRG	VOCCLPTCL	BROMOFORM	5	UG/L		U	5 000	V							
023	SW	REAL	SW00750WC	14-JAN-91	N	TRG	VOCCLPTCL	BROMOMETHANE	10	UG/L		U	10.00	V							
023	SW	REAL	SW00750WC	14-JAN-91	N	TRG	VOCCLPTCL	CARBON DISULFIDE	5	UG/L		U	5 000	V							
023	SW	REAL	SW00750WC	14-JAN-91	N	TRG	VOCCLPTCL	CARBON TETRACHLORIDE	5	UG/L		U	5.000	V							
023	SW	REAL	SW00750WC	14-JAN-91	N	TRG	VOCCLPTCL	CHLOROBENZENE	5	UG/L		U	5.000	JA							
023	SW	REAL	SW00750WC	14-JAN-91	N	TRG	VOCCLPTCL	CHLOROETHANE	10	UG/L		U	10.00	V							
023	SW	REAL	SW00750WC	14-JAN-91	N	TRG	VOCCLPTCL	CHLOROFORM	5	UG/L		U	5.000	V							
023	SW	REAL	SW00750WC	14-JAN-91	N	TRG	VOCCLPTCL	CHLOROMETHANE	10	UG/L		U	10 00	V							
023	SW	REAL	SW00750WC	14-JAN-91	N	TRG	VOCCLPTCL	DIBROMOCHLOROMETHANE	5	UG/L		U	5.000	V							
023	SW	REAL	SW00750WC	14-JAN-91	N	TRG	VOCCLPTCL	ETHYLBENZENE	5	UG/L		U	5 000	JA							
023	SW	REAL	SW00750WC	14-JAN-91	N	TRG	VOCCLPTCL	METHYLENE CHLORIDE	5	UG/L		U	5.000	V							
023	SW	REAL	SW00750WC	14-JAN-91	N	TRG	VOCCLPTCL	STYRENE	5	UG/L		U	5 000	JA							
023	SW	REAL	SW00750WC	14-JAN-91	N	TRG	VOCCLPTCL	TETRACHLOROETHENE	5	UG/L		U	5 000	V							
023	SW	REAL	SW00750WC	14-JAN-91	N	TRG	VOCCLPTCL	TOLUENE	5	UG/L		U	5.000	JA							
023	SW	REAL	SW00750WC	14-JAN-91	N	TRG	VOCCLPTCL	TOTAL XYLENES	5	UG/L		U	5 000	JA							

ation	ST	QC	Sample Number	Smpl Date	D	ID	Group	Chemical	Result	Unit	Error	Qual	D LMT	VA	RN1	RN2	RN3	RN4	VResult	VQual	VDET
W023	SW	REAL	SW00750WC	14-JAN-91	N	TRG	VOCCLPTCL	TRICHLOROETHENE	5	UG/L		U	5 000	V							
W023	SW	REAL	SW00750WC	14-JAN-91	N	TRG	VOCCLPTCL	VINYL ACETATE	10	UG/L		U	10.00	V							
W023	SW	REAL	SW00750WC	14-JAN-91	N	TRG	VOCCLPTCL	VINYL CHLORIDE	10	UG/L		U	10 00	V							
W023	SW	REAL	SW00750WC	14-JAN-91	N	TRG	VOCCLPTCL	cis-1,3-DICHLOROPROPENE	5	UG/L		U	5 000	V							
W023	SW	REAL	SW00750WC	14-JAN-91	N	TRG	VOCCLPTCL	trans-1,3-DICHLOROPROPENE	5	UG/L		U	5 000	V							
W023	SW	REAL	SW00853WC	~~28-FEB-91~~	~~N~~																
W023	SW	REAL	SW00956WC	28-MAR-91	N	TRG	VOCCLPTCL	1,1,1-TRICHLOROETHANE	5	UG/L		U	5								
W023	SW	REAL	SW00956WC	28-MAR-91	N	TRG	VOCCLPTCL	1,1,2,2-TETRACHLOROETHANE	5	UG/L		U	5								
W023	SW	REAL	SW00956WC	28-MAR-91	N	TRG	VOCCLPTCL	1,1,2 TRICHLOROETHANE	5	UG/L		U	5								
W023	SW	REAL	SW00956WC	28-MAR-91	N	TRG	VOCCLPTCL	1,1-DICHLOROETHANE	5	UG/L		U	5								
W023	SW	REAL	SW00956WC	28-MAR-91	N	TRG	VOCCLPTCL	1,1-DICHLOROETHENE	5	UG/L		U	5								
W023	SW	REAL	SW00956WC	28-MAR-91	N	TRG	VOCCLPTCL	1,2-DICHLOROETHANE	5	UG/L		U	5								
W023	SW	REAL	SW00956WC	28-MAR-91	N	TRG	VOCCLPTCL	1,2-DICHLOROETHENE	5	UG/L		U	5								
W023	SW	REAL	SW00956WC	28-MAR-91	N	TRG	VOCCLPTCL	1,2-DICHLOROPROPANE	5	UG/L		U	5								
W023	SW	REAL	SW00956WC	28-MAR-91	N	TRG	VOCCLPTCL	2-BUTANONE	10	UG/L		U	10								
W023	SW	REAL	SW00956WC	28-MAR-91	N	TRG	VOCCLPTCL	2-HEXANONE	10	UG/L		U	10								
W023	SW	REAL	SW00956WC	28-MAR-91	N	TRG	VOCCLPTCL	4-METHYL-2-PENTANONE	10	UG/L		U	10								
W023	SW	REAL	SW00956WC	28-MAR-91	N	TRG	VOCCLPTCL	ACETONE	10	UG/L		U	10								
W023	SW	REAL	SW00956WC	28-MAR-91	N	TRG	VOCCLPTCL	BENZENE	5	UG/L		U	5								
W023	SW	REAL	SW00956WC	28-MAR-91	N	TRG	VOCCLPTCL	BROMODICHLOROMETHANE	5	UG/L		U	5								
W023	SW	REAL	SW00956WC	28-MAR-91	N	TRG	VOCCLPTCL	BROMOFORM	5	UG/L		U	5								
W023	SW	REAL	SW00956WC	28-MAR-91	N	TRG	VOCCLPTCL	BROMOMETHANE	10	UG/L		U	10								
W023	SW	REAL	SW00956WC	28-MAR-91	N	TRG	VOCCLPTCL	CARBON DISULFIDE	5	UG/L		U	5								
W023	SW	REAL	SW00956WC	28-MAR-91	N	TRG	VOCCLPTCL	CARBON TETRACHLORIDE	5	UG/L		U	5								
W023	SW	REAL	SW00956WC	28-MAR-91	N	TRG	VOCCLPTCL	CHLOROBENZENE	5	UG/L		U	5								
W023	SW	REAL	SW00956WC	28-MAR-91	N	TRG	VOCCLPTCL	CHLOROETHANE	10	UG/L		U	10								
W023	SW	REAL	SW00956WC	28-MAR-91	N	TRG	VOCCLPTCL	CHLOROFORM	5	UG/L		U	5								
W023	SW	REAL	SW00956WC	28-MAR-91	N	TRG	VOCCLPTCL	CHLOROMETHANE	10	UG/L		U	10								
W023	SW	REAL	SW00956WC	28-MAR-91	N	TRG	VOCCLPTCL	DIBROMOCHLOROMETHANE	5	UG/L		U	5								
W023	SW	REAL	SW00956WC	28-MAR-91	N	TRG	VOCCLPTCL	ETHYLBENZENE	5	UG/L		U	5								
W023	SW	REAL	SW00956WC	28-MAR-91	N	TRG	VOCCLPTCL	METHYLENE CHLORIDE	5	UG/L		U	5								
W023	SW	REAL	SW00956WC	28-MAR-91	N	TRG	VOCCLPTCL	STYRENE	5	UG/L		U	5								
W023	SW	REAL	SW00956WC	28-MAR-91	N	TRG	VOCCLPTCL	TETRACHLOROETHENE	5	UG/L		U	5								
W023	SW	REAL	SW00956WC	28-MAR-91	N	TRG	VOCCLPTCL	TOLUENE	5	UG/L		U	5								
W023	SW	REAL	SW00956WC	28-MAR-91	N	TRG	VOCCLPTCL	TOTAL XYLENES	5	UG/L		U	5								
W023	SW	REAL	SW00956WC	28-MAR-91	N	TRG	VOCCLPTCL	TRICHLOROETHENE	5	UG/L		U	5								
W023	SW	REAL	SW00956WC	28-MAR-91	N	TRG	VOCCLPTCL	VINYL ACETATE	10	UG/L		U	10								
W023	SW	REAL	SW00956WC	28-MAR-91	N	TRG	VOCCLPTCL	VINYL CHLORIDE	10	UG/L		U	10								
W023	SW	REAL	SW00956WC	28-MAR-91	N	TRG	VOCCLPTCL	cis-1,3-DICHLOROPROPENE	5	UG/L		U	5								
W023	SW	REAL	SW00956WC	28-MAR-91	N	TRG	VOCCLPTCL	trans-1,3-DICHLOROPROPENE	5	UG/L		U	5								
W023	SW	REAL	SW01058WC	17-APR-91	N	TRG	SVOCLPTCL	1,2,4-TRICHLOROBENZENE	10	UG/L		U	10								
W023	SW	REAL	SW01058WC	17-APR-91	N	TRG	SVOCLPTCL	1,2-DICHLOROBENZENE	10	UG/L		U	10								
W023	SW	REAL	SW01058WC	17-APR-91	N	TRG	SVOCLPTCL	1,3-DICHLOROBENZENE	10	UG/L		U	10								
W023	SW	REAL	SW01058WC	17-APR-91	N	TRG	SVOCLPTCL	1,4-DICHLOROBENZENE	10	UG/L		U	10								
W023	SW	REAL	SW01058WC	17-APR-91	N	TRG	SVOCLPTCL	2,4,5-TRICHLOROPHENOL	50	UG/L		U	50								
W023	SW	REAL	SW01058WC	17-APR-91	N	TRG	SVOCLPTCL	2,4,6-TRICHLOROPHENOL	10	UG/L		U	10								
W023	SW	REAL	SW01058WC	17-APR-91	N	TRG	SVOCLPTCL	2,4-DICHLOROPHENOL	10	UG/L		U	10								
W023	SW	REAL	SW01058WC	17-APR-91	N	TRG	SVOCLPTCL	2,4-DIMETHYLPHENOL	10	UG/L		U	10								
W023	SW	REAL	SW01058WC	17-APR-91	N	TRG	SVOCLPTCL	2,4-DINITROPHENOL	50	UG/L		U	50								
W023	SW	REAL	SW01058WC	17-APR-91	N	TRG	SVOCLPTCL	2,4-DINITROTOLUENE	10	UG/L		U	10								
W023	SW	REAL	SW01058WC	17-APR-91	N	TRG	SVOCLPTCL	2,6-DINITROTOLUENE	10	UG/L		U	10								
W023	SW	REAL	SW01058WC	17-APR-91	N	TRG	SVOCLPTCL	2-CHLORONAPHTHALENE	10	UG/L		U	10								
W023	SW	REAL	SW01058WC	17-APR-91	N	TRG	SVOCLPTCL	2-CHLOROPHENOL	10	UG/L		U	10								
W023	SW	REAL	SW01058WC	17-APR-91	N	TRG	SVOCLPTCL	2-METHYLNAPHTHALENE	10	UG/L		U	10								
W023	SW	REAL	SW01058WC	17-APR-91	N	TRG	SVOCLPTCL	2-METHYLPHENOL	10	UG/L		U	10								
W023	SW	REAL	SW01058WC	17-APR-91	N	TRG	SVOCLPTCL	2-NITROANILINE	50	UG/L		U	50								
W023	SW	REAL	SW01058WC	17-APR-91	N	TRG	SVOCLPTCL	2-NITROPHENOL	10	UG/L		U	10								
W023	SW	REAL	SW01058WC	17-APR-91	N	TRG	SVOCLPTCL	3,3'-DICHLOROBENZIDINE	20	UG/L		U	20								
W023	SW	REAL	SW01058WC	17-APR-91	N	TRG	SVOCLPTCL	3-NITROANILINE	50	UG/L		U	50								
W023	SW	REAL	SW01058WC	17-APR-91	N	TRG	SVOCLPTCL	4,6-DINITRO-2-METHYLPHENOL	50	UG/L		U	50								
W023	SW	REAL	SW01058WC	17-APR-91	N	TRG	SVOCLPTCL	4-BROMOPHENYL PHENYL ETHER	10	UG/L		U	10								
W023	SW	REAL	SW01058WC	17-APR-91	N	TRG	SVOCLPTCL	4-CHLORO-3-METHYLPHENOL	10	UG/L		U	10								
W023	SW	REAL	SW01058WC	17-APR-91	N	TRG	SVOCLPTCL	4-CHLOROANILINE	10	UG/L		U	10								

Location	ST	QC	Sample Number	Smpl Date	D	ID	Group	Chemical	Result	Unit	Error	Qual	D LMT	VA	RN1	RN2	RN3	RN4	VResult	VQual	VDET
SW023	SW	REAL	SW01058WC	17-APR-91	N	TRG	SVOCLPTCL	4-CHLOROPHENYL PHENYL ETHER	10	UG/L		U	10								
SW023	SW	REAL	SW01058WC	17-APR-91	N	TRG	SVOCLPTCL	4-METHYLPHENOL	10	UG/L		U	10								
SW023	SW	REAL	SW01058WC	17-APR-91	N	TRG	SVOCLPTCL	4-NITROANILINE	50	UG/L		U	50								
SW023	SW	REAL	SW01058WC	17-APR-91	N	TRG	SVOCLPTCL	4-NITROPHENOL	50	UG/L		U	50								
SW023	SW	REAL	SW01058WC	17-APR-91	N	TRG	SVOCLPTCL	ACENAPHTHENE	10	UG/L		U	10								
SW023	SW	REAL	SW01058WC	17-APR-91	N	TRG	SVOCLPTCL	ACENAPHTHYLENE	10	UG/L		U	10								
SW023	SW	REAL	SW01058WC	17-APR-91	N	TRG	SVOCLPTCL	ANTHRACENE	10	UG/L		U	10								
SW023	SW	REAL	SW01058WC	17-APR-91	N	TRG	SVOCLPTCL	BENZO(a)ANTHRACENE	10	UG/L		U	10								
SW023	SW	REAL	SW01058WC	17-APR-91	N	TRG	SVOCLPTCL	BENZO(a)PYRENE	10	UG/L		U	10								
SW023	SW	REAL	SW01058WC	17-APR-91	N	TRG	SVOCLPTCL	BENZO(b)FLUORANTHENE	10	UG/L		U	10								
SW023	SW	REAL	SW01058WC	17-APR-91	N	TRG	SVOCLPTCL	BENZO(ghi)PERYLENE	10	UG/L		U	10								
SW023	SW	REAL	SW01058WC	17-APR-91	N	TRG	SVOCLPTCL	BENZO(k)FLUORANTHENE	10	UG/L		U	10								
SW023	SW	REAL	SW01058WC	17-APR-91	N	TRG	SVOCLPTCL	BENZOIC ACID	50	UG/L		U	50								
SW023	SW	REAL	SW01058WC	17-APR-91	N	TRG	SVOCLPTCL	BENZYL ALCOHOL	10	UG/L		U	10								
SW023	SW	REAL	SW01058WC	17-APR-91	N	TRG	SVOCLPTCL	BIS(2-CHLOROETHOXY)METHANE	10	UG/L		U	10								
SW023	SW	REAL	SW01058WC	17-APR-91	N	TRG	SVOCLPTCL	BIS(2-CHLOROETHYL)ETHER	10	UG/L		U	10								
SW023	SW	REAL	SW01058WC	17-APR-91	N	TRG	SVOCLPTCL	BIS(2-CHLOROISOPROPYL)ETHER	10	UG/L		U	10								
SW023	SW	REAL	SW01058WC	17-APR-91	N	TRG	SVOCLPTCL	BIS(2-ETHYLHEXYL)PHTHALATE	10	UG/L		U	10								
SW023	SW	REAL	SW01058WC	17-APR-91	N	TRG	SVOCLPTCL	BUTYL BENZYL PHTHALATE	10	UG/L		U	10								
SW023	SW	REAL	SW01058WC	17-APR-91	N	TRG	SVOCLPTCL	CHRYSENE	10	UG/L		U	10								
SW023	SW	REAL	SW01058WC	17-APR-91	N	TRG	SVOCLPTCL	DI-n-BUTYL PHTHALATE	10	UG/L		U	10								
SW023	SW	REAL	SW01058WC	17-APR-91	N	TRG	SVOCLPTCL	DI-n-OCTYL PHTHALATE	10	UG/L		U	10								
SW023	SW	REAL	SW01058WC	17-APR-91	N	TRG	SVOCLPTCL	DIBENZO(a,h)ANTHRACENE	10	UG/L		U	10								
SW023	SW	REAL	SW01058WC	17-APR-91	N	TRG	SVOCLPTCL	DIBENZOFURAN	10	UG/L		U	10								
SW023	SW	REAL	SW01058WC	17-APR-91	N	TRG	SVOCLPTCL	DIETHYL PHTHALATE	10	UG/L		U	10								
SW023	SW	REAL	SW01058WC	17-APR-91	N	TRG	SVOCLPTCL	DIMETHYL PHTHALATE	10	UG/L		U	10								
SW023	SW	REAL	SW01058WC	17-APR-91	N	TRG	SVOCLPTCL	FLUORANTHENE	10	UG/L		U	10								
SW023	SW	REAL	SW01058WC	17-APR-91	N	TRG	SVOCLPTCL	FLUORENE	10	UG/L		U	10								
SW023	SW	REAL	SW01058WC	17-APR-91	N	TRG	SVOCLPTCL	HEXACHLOROBENZENE	10	UG/L		U	10								
SW023	SW	REAL	SW01058WC	17-APR-91	N	TRG	SVOCLPTCL	HEXACHLOROBUTADIENE	10	UG/L		U	10								
SW023	SW	REAL	SW01058WC	17-APR-91	N	TRG	SVOCLPTCL	HEXACHLOROCYCLOPENTADIENE	10	UG/L		U	10								
SW023	SW	REAL	SW01058WC	17-APR-91	N	TRG	SVOCLPTCL	HEXACHLOROETHANE	10	UG/L		U	10								
SW023	SW	REAL	SW01058WC	17-APR-91	N	TRG	SVOCLPTCL	INDENO(1,2,3-cd)PYRENE	10	UG/L		U	10								
SW023	SW	REAL	SW01058WC	17-APR-91	N	TRG	SVOCLPTCL	ISOPHORONE	10	UG/L		U	10								
SW023	SW	REAL	SW01058WC	17-APR-91	N	TRG	SVOCLPTCL	N-NITROSO-DI-n-PROPYLAMINE	10	UG/L		U	10								
SW023	SW	REAL	SW01058WC	17-APR-91	N	TRG	SVOCLPTCL	N-NITROSODIPHENYLAMINE	10	UG/L		U	10								
SW023	SW	REAL	SW01058WC	17-APR-91	N	TRG	SVOCLPTCL	NAPHTHALENE	10	UG/L		U	10								
SW023	SW	REAL	SW01058WC	17-APR-91	N	TRG	SVOCLPTCL	NITROBENZENE	10	UG/L		U	10								
SW023	SW	REAL	SW01058WC	17-APR-91	N	TRG	SVOCLPTCL	PENTACHLOROPHENOL	50	UG/L		U	50								
SW023	SW	REAL	SW01058WC	17-APR-91	N	TRG	SVOCLPTCL	PHENANTHRENE	10	UG/L		U	10								
SW023	SW	REAL	SW01058WC	17-APR-91	N	TRG	SVOCLPTCL	PHENOL	10	UG/L		U	10								
SW023	SW	REAL	SW01058WC	17-APR-91	N	TRG	SVOCLPTCL	PYRENE	10	UG/L		U	10								
SW023	SW	REAL	SW01058WC	17-APR-91	N	TRG	VOCCLPTCL	1,1,1-TRICHLOROETHANE	5	UG/L		U	5								
SW023	SW	REAL	SW01058WC	17-APR-91	N	TRG	VOCCLPTCL	1,1,2,2-TETRACHLOROETHANE	5	UG/L		U	5								
SW023	SW	REAL	SW01058WC	17-APR-91	N	TRG	VOCCLPTCL	1,1,2-TRICHLOROETHANE	5	UG/L		U	5								
SW023	SW	REAL	SW01058WC	17-APR-91	N	TRG	VOCCLPTCL	1,1-DICHLOROETHANE	5	UG/L		U	5								
SW023	SW	REAL	SW01058WC	17-APR-91	N	TRG	VOCCLPTCL	1,1-DICHLOROETHENE	5	UG/L		U	5								
SW023	SW	REAL	SW01058WC	17-APR-91	N	TRG	VOCCLPTCL	1,2-DICHLOROETHANE	5	UG/L		U	5								
SW023	SW	REAL	SW01058WC	17-APR-91	N	TRG	VOCCLPTCL	1,2-DICHLOROETHENE	5	UG/L		U	5								
SW023	SW	REAL	SW01058WC	17-APR-91	N	TRG	VOCCLPTCL	1,2-DICHLOROPROPANE	5	UG/L		U	5								
SW023	SW	REAL	SW01058WC	17-APR-91	N	TRG	VOCCLPTCL	2-BUTANONE	10	UG/L		U	10								
SW023	SW	REAL	SW01058WC	17-APR-91	N	TRG	VOCCLPTCL	2-HEXANONE	10	UG/L		U	10								
SW023	SW	REAL	SW01058WC	17-APR-91	N	TRG	VOCCLPTCL	4-METHYL-2-PENTANONE	10	UG/L		U	10								
SW023	SW	REAL	SW01058WC	17-APR-91	N	TRG	VOCCLPTCL	ACETONE	10	UG/L		U	10								
SW023	SW	REAL	SW01058WC	17-APR-91	N	TRG	VOCCLPTCL	BENZENE	5	UG/L		U	5								
SW023	SW	REAL	SW01058WC	17-APR-91	N	TRG	VOCCLPTCL	BROMODICHLOROMETHANE	5	UG/L		U	5								
SW023	SW	REAL	SW01058WC	17-APR-91	N	TRG	VOCCLPTCL	BROMOFORM	5	UG/L		U	5								
SW023	SW	REAL	SW01058WC	17-APR-91	N	TRG	VOCCLPTCL	BROMOMETHANE	10	UG/L		U	10								
SW023	SW	REAL	SW01058WC	17-APR-91	N	TRG	VOCCLPTCL	CARBON DISULFIDE	5	UG/L		U	5								
SW023	SW	REAL	SW01058WC	17-APR-91	N	TRG	VOCCLPTCL	CARBON TETRACHLORIDE	5	UG/L		U	5								
SW023	SW	REAL	SW01058WC	17-APR-91	N	TRG	VOCCLPTCL	CHLOROBENZENE	5	UG/L		U	5								
SW023	SW	REAL	SW01058WC	17-APR-91	N	TRG	VOCCLPTCL	CHLOROETHANE	10	UG/L		U	10								
SW023	SW	REAL	SW01058WC	17-APR-91	N	TRG	VOCCLPTCL	CHLOROFORM	5	UG/L		U	5								

Location	ST	QC	Sample Number	Smpl Date	D	ID	Group	Chemical	Result	Unit	Error	Qual	D LMT	VA	RN1	RN2	RN3	RN4	VResult	VQual	VDET
SW023	SW	REAL	SW01058WC	17-APR-91	N	TRG	VOCCLPTCL	CHLOROMETHANE	10	UG/L		U	10								
SW023	SW	REAL	SW01058WC	17-APR-91	N	TRG	VOCCLPTCL	DIBROMOCHLOROMETHANE	5	UG/L		U	5								
SW023	SW	REAL	SW01058WC	17-APR-91	N	TRG	VOCCLPTCL	ETHYLBENZENE	5	UG/L		U	5								
SW023	SW	REAL	SW01058WC	17-APR-91	N	TRG	VOCCLPTCL	METHYLENE CHLORIDE	5	UG/L		U	5								
SW023	SW	REAL	SW01058WC	17-APR-91	N	TRG	VOCCLPTCL	STYRENE	5	UG/L		U	5								
SW023	SW	REAL	SW01058WC	17-APR-91	N	TRG	VOCCLPTCL	TETRACHLOROETHENE	5	UG/L		U	5								
SW023	SW	REAL	SW01058WC	17-APR-91	N	TRG	VOCCLPTCL	TOLUENE	5	UG/L		U	5								
SW023	SW	REAL	SW01058WC	17-APR-91	N	TRG	VOCCLPTCL	TOTAL XYLENES	5	UG/L		U	5								
SW023	SW	REAL	SW01058WC	17-APR-91	N	TRG	VOCCLPTCL	TRICHLOROETHENE	5	UG/L		U	5								
SW023	SW	REAL	SW01058WC	17-APR-91	N	TRG	VOCCLPTCL	VINYL ACETATE	10	UG/L		U	10								
SW023	SW	REAL	SW01058WC	17-APR-91	N	TRG	VOCCLPTCL	VINYL CHLORIDE	10	UG/L		U	10								
SW023	SW	REAL	SW01058WC	17-APR-91	N	TRG	VOCCLPTCL	cis-1,3-DICHLOROPROPENE	5	UG/L		U	5								
SW023	SW	REAL	SW01058WC	17-APR-91	N	TRG	VOCCLPTCL	trans 1,3-DICHLOROPROPENE	5	UG/L		U	5								
SW023	SW	REAL	SW01165WC	28-MAY-91	N																
SW023	SW	REAL	SW01268WC	25-JUN-91	N	TRG	VOCCLPTCL	1,1,1-TRICHLOROETHANE	5	UG/L		U	5								
SW023	SW	REAL	SW01268WC	25-JUN-91	N	TRG	VOCCLPTCL	1,1,2,2-TETRACHLOROETHANE	5	UG/L		U	5								
SW023	SW	REAL	SW01268WC	25-JUN-91	N	TRG	VOCCLPTCL	1,1,2-TRICHLOROETHANE	5	UG/L		U	5								
SW023	SW	REAL	SW01268WC	25-JUN-91	N	TRG	VOCCLPTCL	1,1-DICHLOROETHANE	5	UG/L		U	5								
SW023	SW	REAL	SW01268WC	25-JUN-91	N	TRG	VOCCLPTCL	1,1-DICHLOROETHENE	5	UG/L		U	5								
SW023	SW	REAL	SW01268WC	25-JUN-91	N	TRG	VOCCLPTCL	1,2-DICHLOROETHANE	5	UG/L		U	5								
SW023	SW	REAL	SW01268WC	25-JUN-91	N	TRG	VOCCLPTCL	1,2-DICHLOROETHENE	5	UG/L		U	5								
SW023	SW	REAL	SW01268WC	25-JUN-91	N	TRG	VOCCLPTCL	1,2-DICHLOROPROPANE	5	UG/L		U	5								
SW023	SW	REAL	SW01268WC	25-JUN-91	N	TRG	VOCCLPTCL	2-BUTANONE	10	UG/L		U	10								
SW023	SW	REAL	SW01268WC	25-JUN-91	N	TRG	VOCCLPTCL	2-HEXANONE	10	UG/L		U	10								
SW023	SW	REAL	SW01268WC	25-JUN-91	N	TRG	VOCCLPTCL	4-METHYL-2-PENTANONE	10	UG/L		U	10								
SW023	SW	REAL	SW01268WC	25-JUN-91	N	TRG	VOCCLPTCL	ACETONE	10	UG/L		U	10								
SW023	SW	REAL	SW01268WC	25-JUN-91	N	TRG	VOCCLPTCL	BENZENE	5	UG/L		U	5								
SW023	SW	REAL	SW01268WC	25-JUN-91	N	TRG	VOCCLPTCL	BROMODICHLOROMETHANE	5	UG/L		U	5								
SW023	SW	REAL	SW01268WC	25-JUN-91	N	TRG	VOCCLPTCL	BROMOFORM	5	UG/L		U	5								
SW023	SW	REAL	SW01268WC	25-JUN-91	N	TRG	VOCCLPTCL	BROMOMETHANE	10	UG/L		U	10								
SW023	SW	REAL	SW01268WC	25-JUN-91	N	TRG	VOCCLPTCL	CARBON DISULFIDE	5	UG/L		U	5								
SW023	SW	REAL	SW01268WC	25-JUN-91	N	TRG	VOCCLPTCL	CARBON TETRACHLORIDE	5	UG/L		U	5								
SW023	SW	REAL	SW01268WC	25-JUN-91	N	TRG	VOCCLPTCL	CHLOROBENZENE	5	UG/L		U	5								
SW023	SW	REAL	SW01268WC	25-JUN-91	N	TRG	VOCCLPTCL	CHLOROETHANE	10	UG/L		U	10								
SW023	SW	REAL	SW01268WC	25-JUN-91	N	TRG	VOCCLPTCL	CHLOROFORM	5	UG/L		U	5								
SW023	SW	REAL	SW01268WC	25-JUN-91	N	TRG	VOCCLPTCL	CHLOROMETHANE	10	UG/L		U	10								
SW023	SW	REAL	SW01268WC	25-JUN-91	N	TRG	VOCCLPTCL	DIBROMOCHLOROMETHANE	5	UG/L		U	5								
SW023	SW	REAL	SW01268WC	25-JUN-91	N	TRG	VOCCLPTCL	ETHYLBENZENE	5	UG/L		U	5								
SW023	SW	REAL	SW01268WC	25-JUN-91	N	TRG	VOCCLPTCL	METHYLENE CHLORIDE	5	UG/L		U	5								
SW023	SW	REAL	SW01268WC	25-JUN-91	N	TRG	VOCCLPTCL	STYRENE	5	UG/L		U	5								
SW023	SW	REAL	SW01268WC	25-JUN-91	N	TRG	VOCCLPTCL	TETRACHLOROETHENE	5	UG/L		U	5								
SW023	SW	REAL	SW01268WC	25-JUN-91	N	TRG	VOCCLPTCL	TOLUENE	5	UG/L		U	5								
SW023	SW	REAL	SW01268WC	25-JUN-91	N	TRG	VOCCLPTCL	TOTAL XYLENES	5	UG/L		U	5								
SW023	SW	REAL	SW01268WC	25-JUN-91	N	TRG	VOCCLPTCL	TRICHLOROETHENE	5	UG/L		U	5								
SW023	SW	REAL	SW01268WC	25-JUN-91	N	TRG	VOCCLPTCL	VINYL ACETATE	10	UG/L		U	10								
SW023	SW	REAL	SW01268WC	25-JUN-91	N	TRG	VOCCLPTCL	VINYL CHLORIDE	10	UG/L		U	10								
SW023	SW	REAL	SW01268WC	25-JUN-91	N	TRG	VOCCLPTCL	cis-1,3-DICHLOROPROPENE	5	UG/L		U	5								
SW023	SW	REAL	SW01268WC	25-JUN-91	N	TRG	VOCCLPTCL	trans-1,3-DICHLOROPROPENE	5	UG/L		U	5								
SW023	SW	REAL	SW01371WC	17-JUL-91	N	TRG	VOCCLPTCL	1,1,1-TRICHLOROETHANE	5	UG/L		U	5 000								
SW023	SW	REAL	SW01371WC	17-JUL-91	N	TRG	VOCCLPTCL	1,1,2,2-TETRACHLOROETHANE	5	UG/L		U	5.000								
SW023	SW	REAL	SW01371WC	17-JUL-91	N	TRG	VOCCLPTCL	1,1,2-TRICHLOROETHANE	5	UG/L		U	5 000								
SW023	SW	REAL	SW01371WC	17-JUL-91	N	TRG	VOCCLPTCL	1,1-DICHLOROETHANE	5	UG/L		U	5 000								
SW023	SW	REAL	SW01371WC	17-JUL-91	N	TRG	VOCCLPTCL	1,1-DICHLOROETHENE	5	UG/L		U	5.000								
SW023	SW	REAL	SW01371WC	17-JUL-91	N	TRG	VOCCLPTCL	1,2-DICHLOROETHANE	5	UG/L		U	5.000								
SW023	SW	REAL	SW01371WC	17-JUL-91	N	TRG	VOCCLPTCL	1,2-DICHLOROETHENE	5	UG/L		U	5 000								
SW023	SW	REAL	SW01371WC	17-JUL-91	N	TRG	VOCCLPTCL	1,2-DICHLOROPROPANE	5	UG/L		U	5.000								
SW023	SW	REAL	SW01371WC	17-JUL-91	N	TRG	VOCCLPTCL	2-BUTANONE	10	UG/L		U	10 00								
SW023	SW	REAL	SW01371WC	17-JUL-91	N	TRG	VOCCLPTCL	2-HEXANONE	10	UG/L		U	10 00								
SW023	SW	REAL	SW01371WC	17-JUL-91	N	TRG	VOCCLPTCL	4-METHYL-2-PENTANONE	10	UG/L		U	10 00								
SW023	SW	REAL	SW01371WC	17-JUL-91	N	TRG	VOCCLPTCL	ACETONE	10	UG/L		U	10.00								
SW023	SW	REAL	SW01371WC	17-JUL-91	N	TRG	VOCCLPTCL	BENZENE	5	UG/L		U	5.000								
SW023	SW	REAL	SW01371WC	17-JUL-91	N	TRG	VOCCLPTCL	BROMODICHLOROMETHANE	5	UG/L		U	5.000								
SW023	SW	REAL	SW01371WC	17-JUL-91	N	TRG	VOCCLPTCL	BROMOFORM	5	UG/L		U	5.000								

Location	ST	QC	Sample Number	Smpl Date	D	ID	Group	Chemical	Result	Unit	Error	Qual	D LMT	VA	RN1	RN2	RN3	RN4	VResult	VQual	VDET
SW023	SW	REAL	SW01371WC	17-JUL-91	N	TRG	VOCCLPTCL	BROMOMETHANE	10	UG/L		U	10 00								
SW023	SW	REAL	SW01371WC	17-JUL-91	N	TRG	VOCCLPTCL	CARBON DISULFIDE	5	UG/L		U	5 000								
SW023	SW	REAL	SW01371WC	17-JUL-91	N	TRG	VOCCLPTCL	CARBON TETRACHLORIDE	5	UG/L		U	5 000								
SW023	SW	REAL	SW01371WC	17-JUL-91	N	TRG	VOCCLPTCL	CHLOROBENZENE	5	UG/L		U	5 000								
SW023	SW	REAL	SW01371WC	17-JUL-91	N	TRG	VOCCLPTCL	CHLOROETHANE	10	UG/L		U	10 00								
SW023	SW	REAL	SW01371WC	17-JUL-91	N	TRG	VOCCLPTCL	CHLOROFORM	5	UG/L		U	5 000								
SW023	SW	REAL	SW01371WC	17-JUL-91	N	TRG	VOCCLPTCL	CHLOROMETHANE	10	UG/L		U	10.00								
SW023	SW	REAL	SW01371WC	17-JUL-91	N	TRG	VOCCLPTCL	DIBROMOCHLOROMETHANE	5	UG/L		U	5.000								
SW023	SW	REAL	SW01371WC	17-JUL-91	N	TRG	VOCCLPTCL	ETHYLBENZENE	5	UG/L		U	5 000								
SW023	SW	REAL	SW01371WC	17-JUL-91	N	TRG	VOCCLPTCL	METHYLENE CHLORIDE	2	UG/L		J	5.000								
SW023	SW	REAL	SW01371WC	17-JUL-91	N	TRG	VOCCLPTCL	STYRENE	5	UG/L		U	5 000								
SW023	SW	REAL	SW01371WC	17-JUL-91	N	TRG	VOCCLPTCL	TETRACHLOROETHENE	5	UG/L		U	5 000								
SW023	SW	REAL	SW01371WC	17-JUL-91	N	TRG	VOCCLPTCL	TOLUENE	5	UG/L		U	5 000								
SW023	SW	REAL	SW01371WC	17-JUL-91	N	TRG	VOCCLPTCL	TOTAL XYLENES	5	UG/L		U	5 000								
SW023	SW	REAL	SW01371WC	17-JUL-91	N	TRG	VOCCLPTCL	TRICHLOROETHENE	5	UG/L		U	10.00								
SW023	SW	REAL	SW01371WC	17-JUL-91	N	TRG	VOCCLPTCL	VINYL ACETATE	10	UG/L		U	10 00								
SW023	SW	REAL	SW01371WC	17-JUL-91	N	TRG	VOCCLPTCL	VINYL CHLORIDE	10	UG/L		U	5 000								
SW023	SW	REAL	SW01371WC	17-JUL-91	N	TRG	VOCCLPTCL	cis-1,3-DICHLOROPROPENE	5	UG/L		U	5 000								
SW023	SW	REAL	SW01371WC	17-JUL-91	N	TRG	VOCCLPTCL	trans-1,3-DICHLOROPROPENE	5	UG/L		U	5 000								
SW023	SW	REAL	SW01477WC	06-AUG-91	N	TRG	VOACLP	1,1,1-TRICHLOROETHANE	5	UG/L		U	5								
SW023	SW	REAL	SW01477WC	06-AUG-91	N	TRG	VOACLP	1,1,2,2-TETRACHLOROETHANE	5	UG/L		U	5								
SW023	SW	REAL	SW01477WC	06-AUG-91	N	TRG	VOACLP	1,1,2-TRICHLOROETHANE	5	UG/L		U	5								
SW023	SW	REAL	SW01477WC	06-AUG-91	N	TRG	VOACLP	1,1-DICHLOROETHANE	5	UG/L		U	5								
SW023	SW	REAL	SW01477WC	06-AUG-91	N	TRG	VOACLP	1,1-DICHLOROETHENE	5	UG/L		U	5								
SW023	SW	REAL	SW01477WC	06-AUG-91	N	TRG	VOACLP	1,2-DICHLOROETHANE	5	UG/L		U	5								
SW023	SW	REAL	SW01477WC	06-AUG-91	N	TRG	VOACLP	1,2 DICHLOROETHENE	5	UG/L		U	5								
SW023	SW	REAL	SW01477WC	06-AUG-91	N	TRG	VOACLP	1,2-DICHLOROPROPANE	5	UG/L		U	5								
SW023	SW	REAL	SW01477WC	06-AUG-91	N	TRG	VOACLP	2-BUTANONE	10	UG/L		U	10								
SW023	SW	REAL	SW01477WC	06-AUG-91	N	TRG	VOACLP	2-HEXANONE	10	UG/L		U	10								
SW023	SW	REAL	SW01477WC	06-AUG-91	N	TRG	VOACLP	4-METHYL-2-PENTANONE	10	UG/L		U	10								
SW023	SW	REAL	SW01477WC	06-AUG-91	N	TRG	VOACLP	ACETONE	15	UG/L		B	10								
SW023	SW	REAL	SW01477WC	06-AUG-91	N	TRG	VOACLP	BENZENE	5	UG/L		U	5								
SW023	SW	REAL	SW01477WC	06-AUG-91	N	TRG	VOACLP	BROMODICHLOROMETHANE	5	UG/L		U	5								
SW023	SW	REAL	SW01477WC	06-AUG-91	N	TRG	VOACLP	BROMOFORM	5	UG/L		U	5								
SW023	SW	REAL	SW01477WC	06-AUG-91	N	TRG	VOACLP	BROMOMETHANE	10	UG/L		U	10								
SW023	SW	REAL	SW01477WC	06-AUG-91	N	TRG	VOACLP	CARBON DISULFIDE	5	UG/L		U	5								
SW023	SW	REAL	SW01477WC	06-AUG-91	N	TRG	VOACLP	CARBON TETRACHLORIDE	5	UG/L		U	5								
SW023	SW	REAL	SW01477WC	06-AUG-91	N	TRG	VOACLP	CHLOROBENZENE	5	UG/L		U	5								
SW023	SW	REAL	SW01477WC	06-AUG-91	N	TRG	VOACLP	CHLOROETHANE	10	UG/L		U	10								
SW023	SW	REAL	SW01477WC	06-AUG-91	N	TRG	VOACLP	CHLOROFORM	5	UG/L		U	5								
SW023	SW	REAL	SW01477WC	06-AUG-91	N	TRG	VOACLP	CHLOROMETHANE	10	UG/L		U	10								
SW023	SW	REAL	SW01477WC	06-AUG-91	N	TRG	VOACLP	DIBROMOCHLOROMETHANE	5	UG/L		U	5								
SW023	SW	REAL	SW01477WC	06-AUG-91	N	TRG	VOACLP	ETHYLBENZENE	5	UG/L		U	5								
SW023	SW	REAL	SW01477WC	06-AUG-91	N	TRG	VOACLP	METHYLENE CHLORIDE	9	UG/L		B	5								
SW023	SW	REAL	SW01477WC	06-AUG-91	N	TRG	VOACLP	STYRENE	5	UG/L		U	5								
SW023	SW	REAL	SW01477WC	06-AUG-91	N	TRG	VOACLP	TETRACHLOROETHENE	5	UG/L		U	5								
SW023	SW	REAL	SW01477WC	06-AUG-91	N	TRG	VOACLP	TOLUENE	5	UG/L		U	5								
SW023	SW	REAL	SW01477WC	06-AUG-91	N	TRG	VOACLP	TOTAL XYLENES	5	UG/L		U	5								
SW023	SW	REAL	SW01477WC	06-AUG-91	N	TRG	VOACLP	TRICHLOROETHENE	5	UG/L		U	5								
SW023	SW	REAL	SW01477WC	06-AUG-91	N	TRG	VOACLP	VINYL ACETATE	10	UG/L		U	10								
SW023	SW	REAL	SW01477WC	06-AUG-91	N	TRG	VOACLP	VINYL CHLORIDE	10	UG/L		U	10								
SW023	SW	REAL	SW01477WC	06-AUG-91	N	TRG	VOACLP	cis-1,3-DICHLOROPROPENE	5	UG/L		U	5								
SW023	SW	REAL	SW01477WC	06-AUG-91	N	TRG	VOACLP	trans-1,3-DICHLOROPROPENE	5	UG/L		U	5								
SW023	SW	REAL	SW01583WC	16-SEP-91	N	TRG	VOACLP	1,1,1-TRICHLOROETHANE	5	UG/L		U	5								
SW023	SW	REAL	SW01583WC	16-SEP-91	N	TRG	VOACLP	1,1,2,2-TETRACHLOROETHANE	5	UG/L		U	5								
SW023	SW	REAL	SW01583WC	16-SEP-91	N	TRG	VOACLP	1,1,2-TRICHLOROETHANE	5	UG/L		U	5								
SW023	SW	REAL	SW01583WC	16-SEP-91	N	TRG	VOACLP	1,1-DICHLOROETHANE	5	UG/L		U	5								
SW023	SW	REAL	SW01583WC	16-SEP-91	N	TRG	VOACLP	1,1-DICHLOROETHENE	5	UG/L		U	5								
SW023	SW	REAL	SW01583WC	16-SEP-91	N	TRG	VOACLP	1,2-DICHLOROETHANE	5	UG/L		U	5								
SW023	SW	REAL	SW01583WC	16-SEP-91	N	TRG	VOACLP	1,2-DICHLOROETHENE	5	UG/L		U	5								
SW023	SW	REAL	SW01583WC	16-SEP-91	N	TRG	VOACLP	1,2-DICHLOROPROPANE	5	UG/L		U	5								
SW023	SW	REAL	SW01583WC	16-SEP-91	N	TRG	VOACLP	2-BUTANONE	10	UG/L		U	10								
SW023	SW	REAL	SW01583WC	16-SEP-91	N	TRG	VOACLP	2-HEXANONE	10	UG/L		U	10								

Location	ST	QC	Sample Number	Smpl Date	D	ID	Group	Chemical	Result	Unit	Error	Qual	D LMT	VA	RN1	RN2	RN3	RN4	VResult	VQual	VDET
SW023	SW	REAL	SW01583WC	16-SEP-91	N	TRG	VOACLP	4-METHYL-2-PENTANONE	10	UG/L		U	10								
SW023	SW	REAL	SW01583WC	16-SEP-91	N	TRG	VOACLP	ACETONE	5	UG/L		JB	10								
SW023	SW	REAL	SW01583WC	16-SEP-91	N	TRG	VOACLP	BENZENE	5	UG/L		U	5								
SW023	SW	REAL	SW01583WC	16-SEP-91	N	TRG	VOACLP	BROMODICHLOROMETHANE	5	UG/L		U	5								
SW023	SW	REAL	SW01583WC	16-SEP-91	N	TRG	VOACLP	BROMOFORM	5	UG/L		U	5								
SW023	SW	REAL	SW01583WC	16-SEP-91	N	TRG	VOACLP	BROMOMETHANE	10	UG/L		U	10								
SW023	SW	REAL	SW01583WC	16-SEP-91	N	TRG	VOACLP	CARBON DISULFIDE	5	UG/L		U	5								
SW023	SW	REAL	SW01583WC	16-SEP-91	N	TRG	VOACLP	CARBON TETRACHLORIDE	5	UG/L		U	5								
SW023	SW	REAL	SW01583WC	16-SEP-91	N	TRG	VOACLP	CHLOROBENZENE	5	UG/L		U	5								
SW023	SW	REAL	SW01583WC	16-SEP-91	N	TRG	VOACLP	CHLOROETHANE	10	UG/L		U	10								
SW023	SW	REAL	SW01583WC	16-SEP-91	N	TRG	VOACLP	CHLOROFORM	5	UG/L		U	5								
SW023	SW	REAL	SW01583WC	16-SEP-91	N	TRG	VOACLP	CHLOROMETHANE	10	UG/L		U	10								
SW023	SW	REAL	SW01583WC	16-SEP-91	N	TRG	VOACLP	DIBROMOCHLOROMETHANE	5	UG/L		U	5								
SW023	SW	REAL	SW01583WC	16-SEP-91	N	TRG	VOACLP	ETHYLBENZENE	5	UG/L		U	5								
SW023	SW	REAL	SW01583WC	16-SEP-91	N	TRG	VOACLP	METHYLENE CHLORIDE	7	UG/L		B	5								
SW023	SW	REAL	SW01583WC	16-SEP-91	N	TRG	VOACLP	STYRENE	5	UG/L		U	5								
SW023	SW	REAL	SW01583WC	16-SEP-91	N	TRG	VOACLP	TETRACHLOROETHENE	5	UG/L		U	5								
SW023	SW	REAL	SW01583WC	16-SEP-91	N	TRG	VOACLP	TOLUENE	5	UG/L		U	5								
SW023	SW	REAL	SW01583WC	16-SEP-91	N	TRG	VOACLP	TOTAL XYLENES	5	UG/L		U	5								
SW023	SW	REAL	SW01583WC	16-SEP-91	N	TRG	VOACLP	TRICHLOROETHENE	5	UG/L		U	5								
SW023	SW	REAL	SW01583WC	16-SEP-91	N	TRG	VOACLP	VINYL ACETATE	10	UG/L		U	10								
SW023	SW	REAL	SW01583WC	16-SEP-91	N	TRG	VOACLP	VINYL CHLORIDE	10	UG/L		U	10								
SW023	SW	REAL	SW01583WC	16-SEP-91	N	TRG	VOACLP	cis-1,3-DICHLOROPROPENE	5	UG/L		U	5								
SW023	SW	REAL	SW01583WC	16-SEP-91	N	TRG	VOACLP	trans-1,3-DICHLOROPROPENE	5	UG/L		U	5								
SW023	SW	REAL	SW01689WC	15-OCT-91	N	TRG	SVOCLPTCL	1,2,4-TRICHLOROBENZENE	10	UG/L		U	10								
SW023	SW	REAL	SW01689WC	15-OCT-91	N	TRG	SVOCLPTCL	1,2-DICHLOROBENZENE	10	UG/L		U	10								
SW023	SW	REAL	SW01689WC	15-OCT-91	N	TRG	SVOCLPTCL	1,3-DICHLOROBENZENE	10	UG/L		U	10								
SW023	SW	REAL	SW01689WC	15-OCT-91	N	TRG	SVOCLPTCL	1,4-DICHLOROBENZENE	10	UG/L		U	10								
SW023	SW	REAL	SW01689WC	15-OCT-91	N	TRG	SVOCLPTCL	2,4,5-TRICHLOROPHENOL	52	UG/L		U	52								
SW023	SW	REAL	SW01689WC	15-OCT-91	N	TRG	SVOCLPTCL	2,4,6-TRICHLOROPHENOL	10	UG/L		U	10								
SW023	SW	REAL	SW01689WC	15-OCT-91	N	TRG	SVOCLPTCL	2,4-DICHLOROPHENOL	10	UG/L		U	10								
SW023	SW	REAL	SW01689WC	15-OCT-91	N	TRG	SVOCLPTCL	2,4-DIMETHYLPHENOL	10	UG/L		U	10								
SW023	SW	REAL	SW01689WC	15-OCT-91	N	TRG	SVOCLPTCL	2,4-DINITROPHENOL	52	UG/L		U	52								
SW023	SW	REAL	SW01689WC	15-OCT-91	N	TRG	SVOCLPTCL	2,4-DINITROTOLUENE	10	UG/L		U	10								
SW023	SW	REAL	SW01689WC	15-OCT-91	N	TRG	SVOCLPTCL	2,6-DINITROTOLUENE	10	UG/L		U	10								
SW023	SW	REAL	SW01689WC	15-OCT-91	N	TRG	SVOCLPTCL	2-CHLORONAPHTHALENE	10	UG/L		U	10								
SW023	SW	REAL	SW01689WC	15-OCT-91	N	TRG	SVOCLPTCL	2-CHLOROPHENOL	10	UG/L		U	10								
SW023	SW	REAL	SW01689WC	15-OCT-91	N	TRG	SVOCLPTCL	2-METHYLNAPHTHALENE	10	UG/L		U	10								
SW023	SW	REAL	SW01689WC	15-OCT-91	N	TRG	SVOCLPTCL	2-METHYLPHENOL	10	UG/L		U	10								
SW023	SW	REAL	SW01689WC	15-OCT-91	N	TRG	SVOCLPTCL	2-NITROANILINE	52	UG/L		U	52								
SW023	SW	REAL	SW01689WC	15-OCT-91	N	TRG	SVOCLPTCL	2-NITROPHENOL	10	UG/L		U	10								
SW023	SW	REAL	SW01689WC	15-OCT-91	N	TRG	SVOCLPTCL	3,3'-DICHLOROBENZIDINE	21	UG/L		U	21								
SW023	SW	REAL	SW01689WC	15-OCT-91	N	TRG	SVOCLPTCL	3-NITROANILINE	52	UG/L		U	52								
SW023	SW	REAL	SW01689WC	15-OCT-91	N	TRG	SVOCLPTCL	4,6-DINITRO-2-METHYLPHENOL	52	UG/L		U	52								
SW023	SW	REAL	SW01689WC	15-OCT-91	N	TRG	SVOCLPTCL	4-BROMOPHENYL PHENYL ETHER	10	UG/L		U	10								
SW023	SW	REAL	SW01689WC	15-OCT-91	N	TRG	SVOCLPTCL	4-CHLORO-3-METHYLPHENOL	10	UG/L		U	10								
SW023	SW	REAL	SW01689WC	15-OCT-91	N	TRG	SVOCLPTCL	4-CHLOROANILINE	10	UG/L		U	10								
SW023	SW	REAL	SW01689WC	15-OCT-91	N	TRG	SVOCLPTCL	4-CHLOROPHENYL PHENYL ETHER	10	UG/L		U	10								
SW023	SW	REAL	SW01689WC	15-OCT-91	N	TRG	SVOCLPTCL	4-METHYLPHENOL	10	UG/L		U	10								
SW023	SW	REAL	SW01689WC	15-OCT-91	N	TRG	SVOCLPTCL	4-NITROANILINE	52	UG/L		U	52								
SW023	SW	REAL	SW01689WC	15-OCT-91	N	TRG	SVOCLPTCL	4-NITROPHENOL	52	UG/L		U	52								
SW023	SW	REAL	SW01689WC	15-OCT-91	N	TRG	SVOCLPTCL	ACENAPHTHENE	10	UG/L		U	10								
SW023	SW	REAL	SW01689WC	15-OCT-91	N	TRG	SVOCLPTCL	ACENAPHTHYLENE	10	UG/L		U	10								
SW023	SW	REAL	SW01689WC	15-OCT-91	N	TRG	SVOCLPTCL	ANTHRACENE	10	UG/L		U	10								
SW023	SW	REAL	SW01689WC	15-OCT-91	N	TRG	SVOCLPTCL	BENZO(a)ANTHRACENE	10	UG/L		U	10								
SW023	SW	REAL	SW01689WC	15-OCT-91	N	TRG	SVOCLPTCL	BENZO(a)PYRENE	10	UG/L		U	10								
SW023	SW	REAL	SW01689WC	15-OCT-91	N	TRG	SVOCLPTCL	BENZO(b)FLUORANTHENE	10	UG/L		U	10								
SW023	SW	REAL	SW01689WC	15-OCT-91	N	TRG	SVOCLPTCL	BENZO(ghi)PERYLENE	10	UG/L		U	10								
SW023	SW	REAL	SW01689WC	15-OCT-91	N	TRG	SVOCLPTCL	BENZO(k)FLUORANTHENE	10	UG/L		U	10								
SW023	SW	REAL	SW01689WC	15-OCT-91	N	TRG	SVOCLPTCL	BENZOIC ACID	52	UG/L		U	52								
SW023	SW	REAL	SW01689WC	15-OCT-91	N	TRG	SVOCLPTCL	BENZYL ALCOHOL	10	UG/L		U	10								
SW023	SW	REAL	SW01689WC	15-OCT-91	N	TRG	SVOCLPTCL	BIS(2-CHLOROETHOXY)METHANE	10	UG/L		U	10								
SW023	SW	REAL	SW01689WC	15-OCT-91	N	TRG	SVOCLPTCL	BIS(2-CHLOROETHYL)ETHER	10	UG/L		U	10								

ocation	ST	QC	Sample Number	Smpl Date	D	ID	Group	Chemical	Result	Unit	Error	Qual	D	LMT	VA	RN1	RN2	RN3	RN4	VResult	VQual	VDET
W023	SW	REAL	SW01689WC	15-OCT-91	N	TRG	SVOCLPTCL	BIS(2-CHLOROISOPROPYL)ETHER	10	UG/L		U	10									
W023	SW	REAL	SW01689WC	15-OCT-91	N	TRG	SVOCLPTCL	BIS(2 ETHYLHEXYL)PHTHALATE	10	UG/L		U	10									
W023	SW	REAL	SW01689WC	15-OCT-91	N	TRG	SVOCLPTCL	BUTYL BENZYL PHTHALATE	10	UG/L		U	10									
W023	SW	REAL	SW01689WC	15-OCT-91	N	TRG	SVOCLPTCL	CHRYSENE	10	UG/L		U	10									
W023	SW	REAL	SW01689WC	15-OCT-91	N	TRG	SVOCLPTCL	DI-n-BUTYL PHTHALATE	10	UG/L		U	10									
W023	SW	REAL	SW01689WC	15-OCT-91	N	TRG	SVOCLPTCL	DI-n-OCTYL PHTHALATE	10	UG/L		U	10									
W023	SW	REAL	SW01689WC	15-OCT-91	N	TRG	SVOCLPTCL	DIBENZO(a,h)ANTHRACENE	10	UG/L		U	10									
W023	SW	REAL	SW01689WC	15-OCT-91	N	TRG	SVOCLPTCL	DIBENZOFURAN	10	UG/L		U	10									
W023	SW	REAL	SW01689WC	15-OCT-91	N	TRG	SVOCLPTCL	DIETHYL PHTHALATE	10	UG/L		U	10									
W023	SW	REAL	SW01689WC	15-OCT-91	N	TRG	SVOCLPTCL	DIMETHYL PHTHALATE	10	UG/L		U	10									
W023	SW	REAL	SW01689WC	15-OCT-91	N	TRG	SVOCLPTCL	FLUORANTHENE	10	UG/L		U	10									
W023	SW	REAL	SW01689WC	15-OCT-91	N	TRG	SVOCLPTCL	FLUORENE	10	UG/L		U	10									
W023	SW	REAL	SW01689WC	15-OCT-91	N	TRG	SVOCLPTCL	HEXACHLOROBENZENE	10	UG/L		U	10									
W023	SW	REAL	SW01689WC	15-OCT-91	N	TRG	SVOCLPTCL	HEXACHLOROBUTADIENE	10	UG/L		U	10									
W023	SW	REAL	SW01689WC	15-OCT-91	N	TRG	SVOCLPTCL	HEXACHLOROCYCLOPENTADIENE	10	UG/L		U	10									
W023	SW	REAL	SW01689WC	15-OCT-91	N	TRG	SVOCLPTCL	HEXACHLOROETHANE	10	UG/L		U	10									
W023	SW	REAL	SW01689WC	15-OCT-91	N	TRG	SVOCLPTCL	INDENO(1,2,3-cd)PYRENE	10	UG/L		U	10									
W023	SW	REAL	SW01689WC	15-OCT-91	N	TRG	SVOCLPTCL	ISOPHORONE	10	UG/L		U	10									
W023	SW	REAL	SW01689WC	15-OCT-91	N	TRG	SVOCLPTCL	N-NITROSO-DI-n-PROPYLAMINE	10	UG/L		U	10									
W023	SW	REAL	SW01689WC	15-OCT-91	N	TRG	SVOCLPTCL	N-NITROSODIPHENYLAMINE	10	UG/L		U	10									
W023	SW	REAL	SW01689WC	15-OCT-91	N	TRG	SVOCLPTCL	NAPHTHALENE	10	UG/L		U	10									
W023	SW	REAL	SW01689WC	15-OCT-91	N	TRG	SVOCLPTCL	NITROBENZENE	10	UG/L		U	10									
W023	SW	REAL	SW01689WC	15-OCT-91	N	TRG	SVOCLPTCL	PENTACHLOROPHENOL	52	UG/L		U	52									
W023	SW	REAL	SW01689WC	15-OCT-91	N	TRG	SVOCLPTCL	PHENANTHRENE	10	UG/L		U	10									
W023	SW	REAL	SW01689WC	15-OCT-91	N	TRG	SVOCLPTCL	PHENOL	10	UG/L		U	10									
W023	SW	REAL	SW01689WC	15-OCT-91	N	TRG	SVOCLPTCL	PYRENE	10	UG/L		U	10									
W023	SW	REAL	SW01689WC	15-OCT-91	N	TRG	VOCCLPTCL	1,1,1-TRICHLOROETHANE	5	UG/L		U	5									
W023	SW	REAL	SW01689WC	15-OCT-91	N	TRG	VOCCLPTCL	1,1,2,2-TETRACHLOROETHANE	5	UG/L		U	5									
W023	SW	REAL	SW01689WC	15-OCT-91	N	TRG	VOCCLPTCL	1,1,2-TRICHLOROETHANE	5	UG/L		U	5									
W023	SW	REAL	SW01689WC	15-OCT-91	N	TRG	VOCCLPTCL	1,1-DICHLOROETHANE	5	UG/L		U	5									
W023	SW	REAL	SW01689WC	15-OCT-91	N	TRG	VOCCLPTCL	1,1-DICHLOROETHENE	5	UG/L		U	5									
W023	SW	REAL	SW01689WC	15-OCT-91	N	TRG	VOCCLPTCL	1,2-DICHLOROETHANE	5	UG/L		U	5									
W023	SW	REAL	SW01689WC	15-OCT-91	N	TRG	VOCCLPTCL	1,2-DICHLOROETHENE	5	UG/L		U	5									
W023	SW	REAL	SW01689WC	15-OCT-91	N	TRG	VOCCLPTCL	1,2-DICHLOROPROPANE	5	UG/L		U	5									
W023	SW	REAL	SW01689WC	15-OCT-91	N	TRG	VOCCLPTCL	2-BUTANONE	10	UG/L		U	10									
W023	SW	REAL	SW01689WC	15-OCT-91	N	TRG	VOCCLPTCL	2-HEXANONE	10	UG/L		U	10									
W023	SW	REAL	SW01689WC	15-OCT-91	N	TRG	VOCCLPTCL	4-METHYL-2-PENTANONE	10	UG/L		U	10									
W023	SW	REAL	SW01689WC	15-OCT-91	N	TRG	VOCCLPTCL	ACETONE	10	UG/L		U	10									
W023	SW	REAL	SW01689WC	15-OCT-91	N	TRG	VOCCLPTCL	BENZENE	5	UG/L		U	5									
W023	SW	REAL	SW01689WC	15-OCT-91	N	TRG	VOCCLPTCL	BROMODICHLOROMETHANE	5	UG/L		U	5									
W023	SW	REAL	SW01689WC	15-OCT-91	N	TRG	VOCCLPTCL	BROMOFORM	5	UG/L		U	5									
W023	SW	REAL	SW01689WC	15-OCT-91	N	TRG	VOCCLPTCL	BROMOMETHANE	10	UG/L		U	10									
W023	SW	REAL	SW01689WC	15-OCT-91	N	TRG	VOCCLPTCL	CARBON DISULFIDE	5	UG/L		U	5									
W023	SW	REAL	SW01689WC	15-OCT-91	N	TRG	VOCCLPTCL	CARBON TETRACHLORIDE	5	UG/L		U	5									
W023	SW	REAL	SW01689WC	15-OCT-91	N	TRG	VOCCLPTCL	CHLOROBENZENE	5	UG/L		U	5									
W023	SW	REAL	SW01689WC	15-OCT-91	N	TRG	VOCCLPTCL	CHLOROETHANE	10	UG/L		U	10									
W023	SW	REAL	SW01689WC	15-OCT-91	N	TRG	VOCCLPTCL	CHLOROFORM	5	UG/L		U	5									
W023	SW	REAL	SW01689WC	15-OCT-91	N	TRG	VOCCLPTCL	CHLOROMETHANE	10	UG/L		U	10									
W023	SW	REAL	SW01689WC	15-OCT-91	N	TRG	VOCCLPTCL	DIBROMOCHLOROMETHANE	5	UG/L		U	5									
W023	SW	REAL	SW01689WC	15-OCT-91	N	TRG	VOCCLPTCL	ETHYLBENZENE	5	UG/L		U	5									
W023	SW	REAL	SW01689WC	15-OCT-91	N	TRG	VOCCLPTCL	METHYLENE CHLORIDE	5	UG/L		U	5									
W023	SW	REAL	SW01689WC	15-OCT-91	N	TRG	VOCCLPTCL	STYRENE	5	UG/L		U	5									
W023	SW	REAL	SW01689WC	15-OCT-91	N	TRG	VOCCLPTCL	TETRACHLOROETHENE	5	UG/L		U	5									
W023	SW	REAL	SW01689WC	15-OCT-91	N	TRG	VOCCLPTCL	TOLUENE	5	UG/L		U	5									
W023	SW	REAL	SW01689WC	15-OCT-91	N	TRG	VOCCLPTCL	TOTAL XYLENES	5	UG/L		U	5									
W023	SW	REAL	SW01689WC	15-OCT-91	N	TRG	VOCCLPTCL	TRICHLOROETHENE	5	UG/L		U	5									
W023	SW	REAL	SW01689WC	15-OCT-91	N	TRG	VOCCLPTCL	VINYL ACETATE	10	UG/L		U	10									
W023	SW	REAL	SW01689WC	15-OCT-91	N	TRG	VOCCLPTCL	VINYL CHLORIDE	10	UG/L		U	10									
W023	SW	REAL	SW01689WC	15-OCT-91	N	TRG	VOCCLPTCL	cis-1,3-DICHLOROPROPENE	5	UG/L		U	5									
W023	SW	REAL	SW01689WC	15-OCT-91	N	TRG	VOCCLPTCL	trans-1,3-DICHLOROPROPENE	5	UG/L		U	5									
W023	SW	REAL	SW60062WC	22-FEB-91	N																	
W023	SW	REAL	SW60063WC	22-FEB-91	N																	
W023	SW	REAL	SW60066WCB	02-APR-91	N																	

Location	ST	QC	Sample Number	Smpl Date	D	ID	Group	Chemical	Result	Unit	Error	Qual	D LMT	VA	RN1	RN2	RN3	RN4	VResult	VQual	VDET
SW023	SW	REAL	SW60068WC	10-APR-91	N																
SW023	SW	REAL	SW60069WC	15-APR-91	N																
SW023	SW	REAL	SW60075WC	23-APR-91	N																
SW023	SW	REAL	SW60083WC	01-MAY-91	N																
SW023	SW	REAL	SW60090WC	12-MAY-91	N																
SW023	SW	REAL	SW60100WC	23-MAY-91	N																
SW023	SW	REAL	SW60101WC	28-MAY-91	N																
SW023	SW	REAL	SW60124WC	23-JUL-91	N																
SW023	SW	REAL	SW60133WC	05-AUG-91	N																
SW023	SW	REAL	SW60141WC	07-AUG-91	N																
SW023	SW	REAL	SW60149WC	12-AUG-91	N																
SW023	SW	REAL	SW60157WC	19-AUG-91	N																
SW023	SW	RNS	SW80112WC	17-APR-91	N	TRG	SVOCLPTCL	1,2,4-TRICHLOROBENZENE	10	UG/L		U	10								
SW023	SW	RNS	SW80112WC	17-APR-91	N	TRG	SVOCLPTCL	1,2-DICHLOROBENZENE	10	UG/L		U	10								
SW023	SW	RNS	SW80112WC	17-APR-91	N	TRG	SVOCLPTCL	1,3-DICHLOROBENZENE	10	UG/L		U	10								
SW023	SW	RNS	SW80112WC	17-APR-91	N	TRG	SVOCLPTCL	1,4-DICHLOROBENZENE	10	UG/L		U	10								
SW023	SW	RNS	SW80112WC	17-APR-91	N	TRG	SVOCLPTCL	2,4,5-TRICHLOROPHENOL	52	UG/L		U	52								
SW023	SW	RNS	SW80112WC	17-APR-91	N	TRG	SVOCLPTCL	2,4,6-TRICHLOROPHENOL	10	UG/L		U	10								
SW023	SW	RNS	SW80112WC	17-APR-91	N	TRG	SVOCLPTCL	2,4-DICHLOROPHENOL	10	UG/L		U	10								
SW023	SW	RNS	SW80112WC	17-APR-91	N	TRG	SVOCLPTCL	2,4-DIMETHYLPHENOL	10	UG/L		U	10								
SW023	SW	RNS	SW80112WC	17-APR-91	N	TRG	SVOCLPTCL	2,4-DINITROPHENOL	52	UG/L		U	52								
SW023	SW	RNS	SW80112WC	17-APR-91	N	TRG	SVOCLPTCL	2,4-DINITROTOLUENE	10	UG/L		U	10								
SW023	SW	RNS	SW80112WC	17-APR-91	N	TRG	SVOCLPTCL	2,6-DINITROTOLUENE	10	UG/L		U	10								
SW023	SW	RNS	SW80112WC	17-APR-91	N	TRG	SVOCLPTCL	2-CHLORONAPHTHALENE	10	UG/L		U	10								
SW023	SW	RNS	SW80112WC	17-APR-91	N	TRG	SVOCLPTCL	2-CHLOROPHENOL	10	UG/L		U	10								
SW023	SW	RNS	SW80112WC	17-APR-91	N	TRG	SVOCLPTCL	2-METHYLNAPHTHALENE	10	UG/L		U	10								
SW023	SW	RNS	SW80112WC	17-APR-91	N	TRG	SVOCLPTCL	2-METHYLPHENOL	10	UG/L		U	10								
SW023	SW	RNS	SW80112WC	17-APR-91	N	TRG	SVOCLPTCL	2-NITROANILINE	52	UG/L		U	52								
SW023	SW	RNS	SW80112WC	17-APR-91	N	TRG	SVOCLPTCL	2-NITROPHENOL	10	UG/L		U	10								
SW023	SW	RNS	SW80112WC	17-APR-91	N	TRG	SVOCLPTCL	3,3'-DICHLOROBENZIDINE	21	UG/L		U	21								
SW023	SW	RNS	SW80112WC	17-APR-91	N	TRG	SVOCLPTCL	3-NITROANILINE	52	UG/L		U	52								
SW023	SW	RNS	SW80112WC	17-APR-91	N	TRG	SVOCLPTCL	4,6-DINITRO-2-METHYLPHENOL	52	UG/L		U	52								
SW023	SW	RNS	SW80112WC	17-APR-91	N	TRG	SVOCLPTCL	4-BROMOPHENYL PHENYL ETHER	10	UG/L		U	10								
SW023	SW	RNS	SW80112WC	17-APR-91	N	TRG	SVOCLPTCL	4-CHLORO-3-METHYLPHENOL	10	UG/L		U	10								
SW023	SW	RNS	SW80112WC	17-APR-91	N	TRG	SVOCLPTCL	4-CHLOROANILINE	10	UG/L		U	10								
SW023	SW	RNS	SW80112WC	17-APR-91	N	TRG	SVOCLPTCL	4-CHLOROPHENYL PHENYL ETHER	10	UG/L		U	10								
SW023	SW	RNS	SW80112WC	17-APR-91	N	TRG	SVOCLPTCL	4-METHYLPHENOL	10	UG/L		U	10								
SW023	SW	RNS	SW80112WC	17-APR-91	N	TRG	SVOCLPTCL	4-NITROANILINE	52	UG/L		U	52								
SW023	SW	RNS	SW80112WC	17-APR-91	N	TRG	SVOCLPTCL	4-NITROPHENOL	52	UG/L		U	52								
SW023	SW	RNS	SW80112WC	17-APR-91	N	TRG	SVOCLPTCL	ACENAPHTHENE	10	UG/L		U	10								
SW023	SW	RNS	SW80112WC	17-APR-91	N	TRG	SVOCLPTCL	ACENAPHTHYLENE	10	UG/L		U	10								
SW023	SW	RNS	SW80112WC	17-APR-91	N	TRG	SVOCLPTCL	ANTHRACENE	10	UG/L		U	10								
SW023	SW	RNS	SW80112WC	17-APR-91	N	TRG	SVOCLPTCL	BENZO(a)ANTHRACENE	10	UG/L		U	10								
SW023	SW	RNS	SW80112WC	17-APR-91	N	TRG	SVOCLPTCL	BENZO(a)PYRENE	10	UG/L		U	10								
SW023	SW	RNS	SW80112WC	17-APR-91	N	TRG	SVOCLPTCL	BENZO(b)FLUORANTHENE	10	UG/L		U	10								
SW023	SW	RNS	SW80112WC	17-APR-91	N	TRG	SVOCLPTCL	BENZO(ghi)PERYLENE	10	UG/L		U	10								
SW023	SW	RNS	SW80112WC	17-APR-91	N	TRG	SVOCLPTCL	BENZO(k)FLUORANTHENE	10	UG/L		U	10								
SW023	SW	RNS	SW80112WC	17-APR-91	N	TRG	SVOCLPTCL	BENZOIC ACID	52	UG/L		U	52								
SW023	SW	RNS	SW80112WC	17-APR-91	N	TRG	SVOCLPTCL	BENZYL ALCOHOL	10	UG/L		U	10								
SW023	SW	RNS	SW80112WC	17-APR-91	N	TRG	SVOCLPTCL	BIS(2-CHLOROETHOXY)METHANE	10	UG/L		U	10								
SW023	SW	RNS	SW80112WC	17-APR-91	N	TRG	SVOCLPTCL	BIS(2-CHLOROETHYL)ETHER	10	UG/L		U	10								
SW023	SW	RNS	SW80112WC	17-APR-91	N	TRG	SVOCLPTCL	BIS(2-CHLOROISOPROPYL)ETHER	10	UG/L		U	10								
SW023	SW	RNS	SW80112WC	17-APR-91	N	TRG	SVOCLPTCL	BIS(2-ETHYLHEXYL)PHTHALATE	10	UG/L		U	10								
SW023	SW	RNS	SW80112WC	17-APR-91	N	TRG	SVOCLPTCL	BUTYL BENZYL PHTHALATE	10	UG/L		U	10								
SW023	SW	RNS	SW80112WC	17-APR-91	N	TRG	SVOCLPTCL	CHRYSENE	10	UG/L		U	10								
SW023	SW	RNS	SW80112WC	17-APR-91	N	TRG	SVOCLPTCL	DI-n-BUTYL PHTHALATE	10	UG/L		U	10								
SW023	SW	RNS	SW80112WC	17-APR-91	N	TRG	SVOCLPTCL	DI-n-OCTYL PHTHALATE	10	UG/L		U	10								
SW023	SW	RNS	SW80112WC	17-APR-91	N	TRG	SVOCLPTCL	DIBENZO(a,h)ANTHRACENE	10	UG/L		U	10								
SW023	SW	RNS	SW80112WC	17-APR-91	N	TRG	SVOCLPTCL	DIBENZOFURAN	10	UG/L		U	10								
SW023	SW	RNS	SW80112WC	17-APR-91	N	TRG	SVOCLPTCL	DIETHYL PHTHALATE	10	UG/L		U	10								
SW023	SW	RNS	SW80112WC	17-APR-91	N	TRG	SVOCLPTCL	DIMETHYL PHTHALATE	10	UG/L		U	10								
SW023	SW	RNS	SW80112WC	17-APR-91	N	TRG	SVOCLPTCL	FLUORANTHENE	10	UG/L		U	10								
SW023	SW	RNS	SW80112WC	17-APR-91	N	TRG	SVOCLPTCL	FLUORENE	10	UG/L		U	10								

location	ST	QC	Sample Number	Smpl Date	D	ID	Group	Chemical	Result	Unit	Error	Qual	D	LMT	VA	RN1	RN2	RN3	RN4	VResult	VQual	VDET
W023	SW	RNS	SW80112WC	17-APR-91	N	TRG	SVOCLPTCL	HEXACHLOROBENZENE	10	UG/L		U		10								
W023	SW	RNS	SW80112WC	17-APR-91	N	TRG	SVOCLPTCL	HEXACHLOROBUTADIENE	10	UG/L		U		10								
W023	SW	RNS	SW80112WC	17-APR-91	N	TRG	SVOCLPTCL	HEXACHLOROCYCLOPENTADIENE	10	UG/L		U		10								
W023	SW	RNS	SW80112WC	17-APR-91	N	TRG	SVOCLPTCL	HEXACHLOROETHANE	10	UG/L		U		10								
W023	SW	RNS	SW80112WC	17-APR-91	N	TRG	SVOCLPTCL	INDENO(1,2,3-cd)PYRENE	10	UG/L		U		10								
W023	SW	RNS	SW80112WC	17-APR-91	N	TRG	SVOCLPTCL	ISOPHORONE	10	UG/L		U		10								
W023	SW	RNS	SW80112WC	17-APR-91	N	TRG	SVOCLPTCL	N-NITROSO-DI-n-PROPYLAMINE	10	UG/L		U		10								
W023	SW	RNS	SW80112WC	17-APR-91	N	TRG	SVOCLPTCL	N-NITROSODIPHENYLAMINE	10	UG/L		U		10								
W023	SW	RNS	SW80112WC	17-APR-91	N	TRG	SVOCLPTCL	NAPHTHALENE	10	UG/L		U		10								
W023	SW	RNS	SW80112WC	17-APR-91	N	TRG	SVOCLPTCL	NITROBENZENE	10	UG/L		U		10								
W023	SW	RNS	SW80112WC	17-APR-91	N	TRG	SVOCLPTCL	PENTACHLOROPHENOL	52	UG/L		U		52								
W023	SW	RNS	SW80112WC	17-APR-91	N	TRG	SVOCLPTCL	PHENANTHRENE	10	UG/L		U		10								
W023	SW	RNS	SW80112WC	17-APR-91	N	TRG	SVOCLPTCL	PHENOL	10	UG/L		U		10								
W023	SW	RNS	SW80112WC	17-APR-91	N	TRG	SVOCLPTCL	PYRENE	10	UG/L		U		10								
W023	SW	RNS	SW80112WC	17-APR-91	N	TRG	VOCCLPTCL	1,1,1-TRICHLOROETHANE	5	UG/L		U		5								
W023	SW	RNS	SW80112WC	17-APR-91	N	TRG	VOCCLPTCL	1,1,2,2-TETRACHLOROETHANE	5	UG/L		U		5								
W023	SW	RNS	SW80112WC	17-APR-91	N	TRG	VOCCLPTCL	1,1,2 TRICHLOROETHANE	5	UG/L		U		5								
W023	SW	RNS	SW80112WC	17-APR-91	N	TRG	VOCCLPTCL	1,1-DICHLOROETHANE	5	UG/L		U		5								
W023	SW	RNS	SW80112WC	17-APR-91	N	TRG	VOCCLPTCL	1,1-DICHLOROETHENE	5	UG/L		U		5								
W023	SW	RNS	SW80112WC	17-APR-91	N	TRG	VOCCLPTCL	1,2-DICHLOROETHANE	5	UG/L		U		5								
W023	SW	RNS	SW80112WC	17-APR-91	N	TRG	VOCCLPTCL	1,2-DICHLOROETHENE	5	UG/L		U		5								
W023	SW	RNS	SW80112WC	17-APR-91	N	TRG	VOCCLPTCL	1,2-DICHLOROPROPANE	5	UG/L		U		5								
W023	SW	RNS	SW80112WC	17-APR-91	N	TRG	VOCCLPTCL	2-BUTANONE	10	UG/L		U		10								
W023	SW	RNS	SW80112WC	17-APR-91	N	TRG	VOCCLPTCL	2-HEXANONE	10	UG/L		U		10								
W023	SW	RNS	SW80112WC	17-APR-91	N	TRG	VOCCLPTCL	4-METHYL-2-PENTANONE	10	UG/L		U		10								
W023	SW	RNS	SW80112WC	17-APR-91	N	TRG	VOCCLPTCL	ACETONE	10	UG/L		U		10								
W023	SW	RNS	SW80112WC	17-APR-91	N	TRG	VOCCLPTCL	BENZENE	5	UG/L		U		5								
W023	SW	RNS	SW80112WC	17-APR-91	N	TRG	VOCCLPTCL	BROMODICHLOROMETHANE	5	UG/L		U		5								
W023	SW	RNS	SW80112WC	17-APR-91	N	TRG	VOCCLPTCL	BROMOFORM	5	UG/L		U		5								
W023	SW	RNS	SW80112WC	17-APR-91	N	TRG	VOCCLPTCL	BROMOMETHANE	10	UG/L		U		10								
W023	SW	RNS	SW80112WC	17-APR-91	N	TRG	VOCCLPTCL	CARBON DISULFIDE	5	UG/L		U		5								
W023	SW	RNS	SW80112WC	17-APR-91	N	TRG	VOCCLPTCL	CARBON TETRACHLORIDE	5	UG/L		U		5								
W023	SW	RNS	SW80112WC	17-APR-91	N	TRG	VOCCLPTCL	CHLOROBENZENE	5	UG/L		U		5								
W023	SW	RNS	SW80112WC	17-APR-91	N	TRG	VOCCLPTCL	CHLOROETHANE	10	UG/L		U		10								
W023	SW	RNS	SW80112WC	17-APR-91	N	TRG	VOCCLPTCL	CHLOROFORM	5	UG/L		U		5								
W023	SW	RNS	SW80112WC	17-APR-91	N	TRG	VOCCLPTCL	CHLOROMETHANE	10	UG/L		U		10								
W023	SW	RNS	SW80112WC	17-APR-91	N	TRG	VOCCLPTCL	DIBROMOCHLOROMETHANE	5	UG/L		U		5								
W023	SW	RNS	SW80112WC	17-APR-91	N	TRG	VOCCLPTCL	ETHYLBENZENE	5	UG/L		U		5								
W023	SW	RNS	SW80112WC	17-APR-91	N	TRG	VOCCLPTCL	METHYLENE CHLORIDE	5	UG/L		U		5								
W023	SW	RNS	SW80112WC	17-APR-91	N	TRG	VOCCLPTCL	STYRENE	5	UG/L		U		5								
W023	SW	RNS	SW80112WC	17-APR-91	N	TRG	VOCCLPTCL	TETRACHLOROETHENE	5	UG/L		U		5								
W023	SW	RNS	SW80112WC	17-APR-91	N	TRG	VOCCLPTCL	TOLUENE	5	UG/L		U		5								
W023	SW	RNS	SW80112WC	17-APR-91	N	TRG	VOCCLPTCL	TOTAL XYLENES	5	UG/L		U		5								
W023	SW	RNS	SW80112WC	17-APR-91	N	TRG	VOCCLPTCL	TRICHLOROETHENE	5	UG/L		U		5								
W023	SW	RNS	SW80112WC	17-APR-91	N	TRG	VOCCLPTCL	VINYL ACETATE	10	UG/L		U		10								
W023	SW	RNS	SW80112WC	17-APR-91	N	TRG	VOCCLPTCL	VINYL CHLORIDE	10	UG/L		U		10								
W023	SW	RNS	SW80112WC	17-APR-91	N	TRG	VOCCLPTCL	cis-1,3-DICHLOROPROPENE	5	UG/L		U		5								
W023	SW	RNS	SW80112WC	17-APR-91	N	TRG	VOCCLPTCL	trans-1,3-DICHLOROPROPENE	5	UG/L		U		5								
W023	SW	RNS	SW80158WC	16-SEP-91	N	TRG	VOACLP	1,1,1-TRICHLOROETHANE	5	UG/L		U		5								
W023	SW	RNS	SW80158WC	16-SEP-91	N	TRG	VOACLP	1,1,2,2-TETRACHLOROETHANE	5	UG/L		U		5								
W023	SW	RNS	SW80158WC	16-SEP-91	N	TRG	VOACLP	1,1,2-TRICHLOROETHANE	5	UG/L		U		5								
W023	SW	RNS	SW80158WC	16-SEP-91	N	TRG	VOACLP	1,1-DICHLOROETHANE	5	UG/L		U		5								
W023	SW	RNS	SW80158WC	16-SEP-91	N	TRG	VOACLP	1,1-DICHLOROETHENE	5	UG/L		U		5								
W023	SW	RNS	SW80158WC	16-SEP-91	N	TRG	VOACLP	1,2-DICHLOROETHANE	5	UG/L		U		5								
W023	SW	RNS	SW80158WC	16-SEP-91	N	TRG	VOACLP	1,2-DICHLOROETHENE	5	UG/L		U		5								
W023	SW	RNS	SW80158WC	16-SEP-91	N	TRG	VOACLP	1,2-DICHLOROPROPANE	5	UG/L		U		5								
W023	SW	RNS	SW80158WC	16-SEP-91	N	TRG	VOACLP	2-BUTANONE	10	UG/L		U		10								
W023	SW	RNS	SW80158WC	16-SEP-91	N	TRG	VOACLP	2-HEXANONE	10	UG/L		U		10								
W023	SW	RNS	SW80158WC	16-SEP-91	N	TRG	VOACLP	4-METHYL-2-PENTANONE	10	UG/L		U		10								
W023	SW	RNS	SW80158WC	16-SEP-91	N	TRG	VOACLP	ACETONE	9	UG/L		JB		10								
W023	SW	RNS	SW80158WC	16-SEP-91	N	TRG	VOACLP	BENZENE	5	UG/L		U		5								
W023	SW	RNS	SW80158WC	16-SEP-91	N	TRG	VOACLP	BROMODICHLOROMETHANE	5	UG/L		U		5								
W023	SW	RNS	SW80158WC	16-SEP-91	N	TRG	VOACLP	BROMOFORM	5	UG/L		U		5								

Location	ST	QC	Sample Number	Smpl Date	D	ID	Group	Chemical	Result	Unit	Error	Qual	D LMT	VA	RN1	RN2	RN3	RN4	VResult	VQual	VDET
SW023	SW	RNS	SW80158WC	16-SEP-91	N	TRG	VOACLP	BROMOMETHANE	10	UG/L		U	10								
SW023	SW	RNS	SW80158WC	16-SEP-91	N	TRG	VOACLP	CARBON DISULFIDE	5	UG/L		U	5								
SW023	SW	RNS	SW80158WC	16-SEP-91	N	TRG	VOACLP	CARBON TETRACHLORIDE	5	UG/L		U	5								
SW023	SW	RNS	SW80158WC	16-SEP-91	N	TRG	VOACLP	CHLOROBENZENE	5	UG/L		U	5								
SW023	SW	RNS	SW80158WC	16-SEP-91	N	TRG	VOACLP	CHLOROETHANE	10	UG/L		U	10								
SW023	SW	RNS	SW80158WC	16-SEP-91	N	TRG	VOACLP	CHLOROFORM	5	UG/L		U	5								
SW023	SW	RNS	SW80158WC	16-SEP-91	N	TRG	VOACLP	CHLOROMETHANE	10	UG/L		U	10								
SW023	SW	RNS	SW80158WC	16-SEP-91	N	TRG	VOACLP	DIBROMOCHLOROMETHANE	5	UG/L		U	5								
SW023	SW	RNS	SW80158WC	16-SEP-91	N	TRG	VOACLP	ETHYLBENZENE	5	UG/L		U	5								
SW023	SW	RNS	SW80158WC	16-SEP-91	N	TRG	VOACLP	METHYLENE CHLORIDE	7	UG/L		B	5								
SW023	SW	RNS	SW80158WC	16-SEP-91	N	TRG	VOACLP	STYRENE	5	UG/L		U	5								
SW023	SW	RNS	SW80158WC	16-SEP-91	N	TRG	VOACLP	TETRACHLOROETHENE	5	UG/L		U	5								
SW023	SW	RNS	SW80158WC	16-SEP-91	N	TRG	VOACLP	TOLUENE	5	UG/L		U	5								
SW023	SW	RNS	SW80158WC	16-SEP-91	N	TRG	VOACLP	TOTAL XYLENES	5	UG/L		U	5								
SW023	SW	RNS	SW80158WC	16-SEP-91	N	TRG	VOACLP	TRICHLOROETHENE	5	UG/L		U	5								
SW023	SW	RNS	SW80158WC	16-SEP-91	N	TRG	VOACLP	VINYL ACETATE	10	UG/L		U	10								
SW023	SW	RNS	SW80158WC	16-SEP-91	N	TRG	VOACLP	VINYL CHLORIDE	10	UG/L		U	10								
SW023	SW	RNS	SW80158WC	16-SEP-91	N	TRG	VOACLP	cis-1,3-DICHLOROPROPENE	5	UG/L		U	5								
SW023	SW	RNS	SW80158WC	16-SEP-91	N	TRG	VOACLP	trans 1,3-DICHLOROPROPENE	5	UG/L		U	5								
SW023	SW		SW60066WC	08-APR-91	N																
SW037	SW	REAL	SW00720WC	08-JAN-91	Y																
SW037	SW	REAL	SW00823WC	20-FEB-91	N																
SW037	SW	REAL	SW00926WC	21-MAR-91	Y																
SW037	SW	REAL	SW01028WC	09-APR-91	Y																
SW037	SW	REAL	SW01135WC	16-MAY-91	Y																
SW037	SW	REAL	SW01238WC	20-JUN-91	Y																
SW037	SW	REAL	SW01341WC	25-JUL-91	Y																
SW037	SW	REAL	SW01447WC	28-AUG-91	Y																
SW037	SW	REAL	SW01553WC	18-SEP-91	Y																
SW037	SW	REAL	SW01659WC	23-OCT-91	Y																
SW038	SW	REAL	SW00726WC	08-JAN-91	N																
SW038	SW	REAL	SW00829WC	20-FEB-91	N																
SW038	SW	REAL	SW00932WC	28-MAR-91	N	TRG	VOCCLPTCL	1,1,1-TRICHLOROETHANE	5	UG/L		U	5 000	V							
SW038	SW	REAL	SW00932WC	28-MAR-91	N	TRG	VOCCLPTCL	1,1,2,2-TETRACHLOROETHANE	5	UG/L		U	5.000	V							
SW038	SW	REAL	SW00932WC	28-MAR-91	N	TRG	VOCCLPTCL	1,1,2-TRICHLOROETHANE	5	UG/L		U	5 000	V							
SW038	SW	REAL	SW00932WC	28-MAR-91	N	TRG	VOCCLPTCL	1,1-DICHLOROETHANE	5	UG/L		U	5 000	V							
SW038	SW	REAL	SW00932WC	28-MAR-91	N	TRG	VOCCLPTCL	1,1-DICHLOROETHENE	5	UG/L		U	5 000	V							
SW038	SW	REAL	SW00932WC	28-MAR-91	N	TRG	VOCCLPTCL	1,2-DICHLOROETHANE	5	UG/L		U	5 000	V							
SW038	SW	REAL	SW00932WC	28-MAR-91	N	TRG	VOCCLPTCL	1,2-DICHLOROETHENE	5	UG/L		U	5 000	V							
SW038	SW	REAL	SW00932WC	28-MAR-91	N	TRG	VOCCLPTCL	1,2-DICHLOROPROPANE	5	UG/L		U	5.000	V							
SW038	SW	REAL	SW00932WC	28-MAR-91	N	TRG	VOCCLPTCL	2-BUTANONE	10	UG/L		U	10 00	V							
SW038	SW	REAL	SW00932WC	28-MAR-91	N	TRG	VOCCLPTCL	2-HEXANONE	10	UG/L		U	10 00	V							
SW038	SW	REAL	SW00932WC	28-MAR-91	N	TRG	VOCCLPTCL	4-METHYL-2 PENTANONE	10	UG/L		U	10 00	V							
SW038	SW	REAL	SW00932WC	28-MAR-91	N	TRG	VOCCLPTCL	ACETONE	10	UG/L		U	10 00	V							
SW038	SW	REAL	SW00932WC	28-MAR-91	N	TRG	VOCCLPTCL	BENZENE	5	UG/L		U	5 000	V							
SW038	SW	REAL	SW00932WC	28-MAR-91	N	TRG	VOCCLPTCL	BROMODICHLOROMETHANE	5	UG/L		U	5 000	V							
SW038	SW	REAL	SW00932WC	28-MAR-91	N	TRG	VOCCLPTCL	BROMOFORM	5	UG/L		U	5 000	V							
SW038	SW	REAL	SW00932WC	28-MAR-91	N	TRG	VOCCLPTCL	BROMOMETHANE	10	UG/L		U	10.00	V							
SW038	SW	REAL	SW00932WC	28-MAR-91	N	TRG	VOCCLPTCL	CARBON DISULFIDE	5	UG/L		U	5.000	V							
SW038	SW	REAL	SW00932WC	28-MAR-91	N	TRG	VOCCLPTCL	CARBON TETRACHLORIDE	5	UG/L		U	5 000	V							
SW038	SW	REAL	SW00932WC	28-MAR-91	N	TRG	VOCCLPTCL	CHLOROBENZENE	5	UG/L		U	5 000	V							
SW038	SW	REAL	SW00932WC	28-MAR-91	N	TRG	VOCCLPTCL	CHLOROETHANE	10	UG/L		U	10 00	V							
SW038	SW	REAL	SW00932WC	28-MAR-91	N	TRG	VOCCLPTCL	CHLOROFORM	5	UG/L		U	5 000	V							
SW038	SW	REAL	SW00932WC	28-MAR-91	N	TRG	VOCCLPTCL	CHLOROMETHANE	10	UG/L		U	10.00	V							
SW038	SW	REAL	SW00932WC	28-MAR-91	N	TRG	VOCCLPTCL	DIBROMOCHLOROMETHANE	5	UG/L		U	5.000	V							
SW038	SW	REAL	SW00932WC	28-MAR-91	N	TRG	VOCCLPTCL	ETHYLBENZENE	5	UG/L		U	5.000	V							
SW038	SW	REAL	SW00932WC	28-MAR-91	N	TRG	VOCCLPTCL	METHYLENE CHLORIDE	5	UG/L		U	5 000	V							
SW038	SW	REAL	SW00932WC	28-MAR-91	N	TRG	VOCCLPTCL	STYRENE	5	UG/L		U	5 000	V							
SW038	SW	REAL	SW00932WC	28-MAR-91	N	TRG	VOCCLPTCL	TETRACHLOROETHENE	5	UG/L		U	5 000	V							
SW038	SW	REAL	SW00932WC	28-MAR-91	N	TRG	VOCCLPTCL	TOLUENE	5	UG/L		U	5.000	V							
SW038	SW	REAL	SW00932WC	28-MAR-91	N	TRG	VOCCLPTCL	TOTAL XYLENES	5	UG/L		U	5 000	V							
SW038	SW	REAL	SW00932WC	28-MAR-91	N	TRG	VOCCLPTCL	TRICHLOROETHENE	5	UG/L		U	5.000	V							
SW038	SW	REAL	SW00932WC	28-MAR-91	N	TRG	VOCCLPTCL	VINYL ACETATE	10	UG/L		U	10 00	V							

Location	ST	QC	Sample Number	Smpl Date	D	ID	Group	Chemical	Result	Unit	Error	Qual	D LMT	VA	RN1	RN2	RN3	RN4	VResult	VQual	VDET
SW038	SW	REAL	SW00932WC	28-MAR-91	N	TRG	VOCCLPTCL	VINYL CHLORIDE	10	UG/L		U	10 00	V							
SW038	SW	REAL	SW00932WC	28-MAR-91	N	TRG	VOCCLPTCL	cis-1,3-DICHLOROPROPENE	5	UG/L		U	5 000	V							
SW038	SW	REAL	SW00932WC	28-MAR-91	N	TRG	VOCCLPTCL	trans-1,3-DICHLOROPROPENE	5	UG/L		U	5 000	V							
SW038	SW	REAL	SW01034WC	09-APR-91	N	TRG	SVOCLPTCL	1,2,4-TRICHLOROBENZENE	10	UG/L		U	10								
SW038	SW	REAL	SW01034WC	09-APR-91	N	TRG	SVOCLPTCL	1,2-DICHLOROBENZENE	10	UG/L		U	10								
SW038	SW	REAL	SW01034WC	09-APR-91	N	TRG	SVOCLPTCL	1,3-DICHLOROBENZENE	10	UG/L		U	10								
SW038	SW	REAL	SW01034WC	09-APR-91	N	TRG	SVOCLPTCL	1,4-DICHLOROBENZENE	10	UG/L		U	10								
SW038	SW	REAL	SW01034WC	09-APR-91	N	TRG	SVOCLPTCL	2,4,5-TRICHLOROPHENOL	52	UG/L		U	52								
SW038	SW	REAL	SW01034WC	09-APR 91	N	TRG	SVOCLPTCL	2,4,6-TRICHLOROPHENOL	10	UG/L		U	10								
SW038	SW	REAL	SW01034WC	09-APR-91	N	TRG	SVOCLPTCL	2,4-DICHLOROPHENOL	10	UG/L		U	10								
SW038	SW	REAL	SW01034WC	09-APR-91	N	TRG	SVOCLPTCL	2,4-DIMETHYLPHENOL	10	UG/L		U	10								
SW038	SW	REAL	SW01034WC	09-APR-91	N	TRG	SVOCLPTCL	2,4-DINITROPHENOL	52	UG/L		U	52								
SW038	SW	REAL	SW01034WC	09-APR-91	N	TRG	SVOCLPTCL	2,4-DINITROTOLUENE	10	UG/L		U	10								
SW038	SW	REAL	SW01034WC	09-APR-91	N	TRG	SVOCLPTCL	2,6-DINITROTOLUENE	10	UG/L		U	10								
SW038	SW	REAL	SW01034WC	09-APR-91	N	TRG	SVOCLPTCL	2-CHLORONAPHTHALENE	10	UG/L		U	10								
SW038	SW	REAL	SW01034WC	09-APR-91	N	TRG	SVOCLPTCL	2-CHLOROPHENOL	10	UG/L		U	10								
SW038	SW	REAL	SW01034WC	09-APR-91	N	TRG	SVOCLPTCL	2-METHYLNAPHTHALENE	10	UG/L		U	10								
SW038	SW	REAL	SW01034WC	09-APR-91	N	TRG	SVOCLPTCL	2-METHYLPHENOL	10	UG/L		U	10								
SW038	SW	REAL	SW01034WC	09-APR-91	N	TRG	SVOCLPTCL	2-NITROANILINE	52	UG/L		U	52								
SW038	SW	REAL	SW01034WC	09-APR-91	N	TRG	SVOCLPTCL	2-NITROPHENOL	10	UG/L		U	10								
SW038	SW	REAL	SW01034WC	09-APR-91	N	TRG	SVOCLPTCL	3,3'-DICHLOROBENZIDINE	21	UG/L		U	21								
SW038	SW	REAL	SW01034WC	09-APR-91	N	TRG	SVOCLPTCL	3-NITROANILINE	52	UG/L		U	52								
SW038	SW	REAL	SW01034WC	09-APR-91	N	TRG	SVOCLPTCL	4,6-DINITRO-2-METHYLPHENOL	52	UG/L		U	52								
SW038	SW	REAL	SW01034WC	09-APR-91	N	TRG	SVOCLPTCL	4-BROMOPHENYL PHENYL ETHER	10	UG/L		U	10								
SW038	SW	REAL	SW01034WC	09-APR-91	N	TRG	SVOCLPTCL	4-CHLORO-3-METHYLPHENOL	10	UG/L		U	10								
SW038	SW	REAL	SW01034WC	09-APR-91	N	TRG	SVOCLPTCL	4-CHLOROANILINE	10	UG/L		U	10								
SW038	SW	REAL	SW01034WC	09-APR-91	N	TRG	SVOCLPTCL	4-CHLOROPHENYL PHENYL ETHER	10	UG/L		U	10								
SW038	SW	REAL	SW01034WC	09-APR-91	N	TRG	SVOCLPTCL	4-METHYLPHENOL	10	UG/L		U	10								
SW038	SW	REAL	SW01034WC	09-APR-91	N	TRG	SVOCLPTCL	4-NITROANILINE	52	UG/L		U	52								
SW038	SW	REAL	SW01034WC	09-APR-91	N	TRG	SVOCLPTCL	4-NITROPHENOL	52	UG/L		U	52								
SW038	SW	REAL	SW01034WC	09-APR-91	N	TRG	SVOCLPTCL	ACENAPHTHENE	10	UG/L		U	10								
SW038	SW	REAL	SW01034WC	09-APR-91	N	TRG	SVOCLPTCL	ACENAPHTHYLENE	10	UG/L		U	10								
SW038	SW	REAL	SW01034WC	09-APR-91	N	TRG	SVOCLPTCL	ANTHRACENE	10	UG/L		U	10								
SW038	SW	REAL	SW01034WC	09-APR-91	N	TRG	SVOCLPTCL	BENZO(a)ANTHRACENE	10	UG/L		U	10								
SW038	SW	REAL	SW01034WC	09-APR-91	N	TRG	SVOCLPTCL	BENZO(a)PYRENE	10	UG/L		U	10								
SW038	SW	REAL	SW01034WC	09-APR-91	N	TRG	SVOCLPTCL	BENZO(b)FLUORANTHENE	10	UG/L		U	10								
SW038	SW	REAL	SW01034WC	09-APR-91	N	TRG	SVOCLPTCL	BENZO(ghi)PERYLENE	10	UG/L		U	10								
SW038	SW	REAL	SW01034WC	09-APR-91	N	TRG	SVOCLPTCL	BENZO(k)FLUORANTHENE	10	UG/L		U	10								
SW038	SW	REAL	SW01034WC	09-APR-91	N	TRG	SVOCLPTCL	BENZOIC ACID	52	UG/L		U	52								
SW038	SW	REAL	SW01034WC	09-APR-91	N	TRG	SVOCLPTCL	BENZYL ALCOHOL	10	UG/L		U	10								
SW038	SW	REAL	SW01034WC	09-APR-91	N	TRG	SVOCLPTCL	BIS(2-CHLOROETHOXY)METHANE	10	UG/L		U	10								
SW038	SW	REAL	SW01034WC	09-APR-91	N	TRG	SVOCLPTCL	BIS(2-CHLOROETHYL)ETHER	10	UG/L		U	10								
SW038	SW	REAL	SW01034WC	09-APR-91	N	TRG	SVOCLPTCL	BIS(2-CHLOROISOPROPYL)ETHER	10	UG/L		U	10								
SW038	SW	REAL	SW01034WC	09-APR-91	N	TRG	SVOCLPTCL	BIS(2-ETHYLHEXYL)PHTHALATE	10	UG/L		U	10								
SW038	SW	REAL	SW01034WC	09-APR-91	N	TRG	SVOCLPTCL	BUTYL BENZYL PHTHALATE	10	UG/L		U	10								
SW038	SW	REAL	SW01034WC	09-APR-91	N	TRG	SVOCLPTCL	CHRYSENE	10	UG/L		U	10								
SW038	SW	REAL	SW01034WC	09-APR-91	N	TRG	SVOCLPTCL	DI-n-BUTYL PHTHALATE	10	UG/L		U	10								
SW038	SW	REAL	SW01034WC	09-APR-91	N	TRG	SVOCLPTCL	DI-n-OCTYL PHTHALATE	10	UG/L		U	10								
SW038	SW	REAL	SW01034WC	09-APR-91	N	TRG	SVOCLPTCL	DIBENZO(a,h)ANTHRACENE	10	UG/L		U	10								
SW038	SW	REAL	SW01034WC	09-APR-91	N	TRG	SVOCLPTCL	DIBENZOFURAN	10	UG/L		U	10								
SW038	SW	REAL	SW01034WC	09-APR-91	N	TRG	SVOCLPTCL	DIETHYL PHTHALATE	10	UG/L		U	10								
SW038	SW	REAL	SW01034WC	09-APR-91	N	TRG	SVOCLPTCL	DIMETHYL PHTHALATE	10	UG/L		U	10								
SW038	SW	REAL	SW01034WC	09-APR-91	N	TRG	SVOCLPTCL	FLUORANTHENE	10	UG/L		U	10								
SW038	SW	REAL	SW01034WC	09-APR-91	N	TRG	SVOCLPTCL	FLUORENE	10	UG/L		U	10								
SW038	SW	REAL	SW01034WC	09-APR-91	N	TRG	SVOCLPTCL	HEXACHLOROBENZENE	10	UG/L		U	10								
SW038	SW	REAL	SW01034WC	09-APR-91	N	TRG	SVOCLPTCL	HEXACHLOROBUTADIENE	10	UG/L		U	10								
SW038	SW	REAL	SW01034WC	09-APR-91	N	TRG	SVOCLPTCL	HEXACHLOROCYCLOPENTADIENE	10	UG/L		U	10								
SW038	SW	REAL	SW01034WC	09-APR-91	N	TRG	SVOCLPTCL	HEXACHLOROETHANE	10	UG/L		U	10								
SW038	SW	REAL	SW01034WC	09-APR-91	N	TRG	SVOCLPTCL	INDENO(1,2,3-cd)PYRENE	10	UG/L		U	10								
SW038	SW	REAL	SW01034WC	09-APR-91	N	TRG	SVOCLPTCL	ISOPHORONE	10	UG/L		U	10								
SW038	SW	REAL	SW01034WC	09-APR-91	N	TRG	SVOCLPTCL	N-NITROSO-DI-n-PROPYLAMINE	10	UG/L		U	10								
SW038	SW	REAL	SW01034WC	09-APR-91	N	TRG	SVOCLPTCL	N-NITROSODIPHENYLAMINE	10	UG/L		U	10								
SW038	SW	REAL	SW01034WC	09-APR-91	N	TRG	SVOCLPTCL	NAPHTHALENE	10	UG/L		U	10								

Location	ST	QC	Sample Number	Smpl Date	D	ID	Group	Chemical	Result	Unit	Error	Qual	D LMT	VA	RN1	RN2	RN3	RN4	VResult	VQual	VDET
SW038	SW	REAL	SW01034WC	09-APR-91	N	TRG	SVOCLPTCL	NITROBENZENE	10	UG/L		U	10								
SW038	SW	REAL	SW01034WC	09-APR-91	N	TRG	SVOCLPTCL	PENTACHLOROPHENOL	52	UG/L		U	52								
SW038	SW	REAL	SW01034WC	09-APR-91	N	TRG	SVOCLPTCL	PHENANTHRENE	10	UG/L		U	10								
SW038	SW	REAL	SW01034WC	09-APR-91	N	TRG	SVOCLPTCL	PHENOL	10	UG/L		U	10								
SW038	SW	REAL	SW01034WC	09-APR-91	N	TRG	SVOCLPTCL	PYRENE	10	UG/L		U	10								
SW038	SW	REAL	SW01034WC	09-APR-91	N	TRG	VOCCLPTCL	1,1,1-TRICHLOROETHANE	5	UG/L		U	5								
SW038	SW	REAL	SW01034WC	09-APR-91	N	TRG	VOCCLPTCL	1,1,2,2-TETRACHLOROETHANE	5	UG/L		U	5								
SW038	SW	REAL	SW01034WC	09-APR-91	N	TRG	VOCCLPTCL	1,1,2-TRICHLOROETHANE	5	UG/L		U	5								
SW038	SW	REAL	SW01034WC	09-APR-91	N	TRG	VOCCLPTCL	1,1-DICHLOROETHANE	5	UG/L		U	5								
SW038	SW	REAL	SW01034WC	09-APR-91	N	TRG	VOCCLPTCL	1,1-DICHLOROETHENE	5	UG/L		U	5								
SW038	SW	REAL	SW01034WC	09-APR-91	N	TRG	VOCCLPTCL	1,2-DICHLOROETHANE	5	UG/L		U	5								
SW038	SW	REAL	SW01034WC	09-APR-91	N	TRG	VOCCLPTCL	1,2-DICHLOROETHENE	5	UG/L		U	5								
SW038	SW	REAL	SW01034WC	09-APR-91	N	TRG	VOCCLPTCL	1,2-DICHLOROPROPANE	5	UG/L		U	5								
SW038	SW	REAL	SW01034WC	09-APR-91	N	TRG	VOCCLPTCL	2 BUTANONE	10	UG/L		U	10								
SW038	SW	REAL	SW01034WC	09-APR-91	N	TRG	VOCCLPTCL	2-HEXANONE	10	UG/L		U	10								
SW038	SW	REAL	SW01034WC	09-APR-91	N	TRG	VOCCLPTCL	4-METHYL-2 PENTANONE	10	UG/L		U	10								
SW038	SW	REAL	SW01034WC	09-APR-91	N	TRG	VOCCLPTCL	ACETONE	10	UG/L		U	10								
SW038	SW	REAL	SW01034WC	09-APR-91	N	TRG	VOCCLPTCL	BENZENE	5	UG/L		U	5								
SW038	SW	REAL	SW01034WC	09-APR-91	N	TRG	VOCCLPTCL	BROMODICHLOROMETHANE	5	UG/L		U	5								
SW038	SW	REAL	SW01034WC	09-APR-91	N	TRG	VOCCLPTCL	BROMOFORM	5	UG/L		U	5								
SW038	SW	REAL	SW01034WC	09-APR-91	N	TRG	VOCCLPTCL	BROMOMETHANE	10	UG/L		U	10								
SW038	SW	REAL	SW01034WC	09-APR-91	N	TRG	VOCCLPTCL	CARBON DISULFIDE	5	UG/L		U	5								
SW038	SW	REAL	SW01034WC	09-APR-91	N	TRG	VOCCLPTCL	CARBON TETRACHLORIDE	5	UG/L		U	5								
SW038	SW	REAL	SW01034WC	09-APR-91	N	TRG	VOCCLPTCL	CHLOROBENZENE	5	UG/L		U	5								
SW038	SW	REAL	SW01034WC	09-APR-91	N	TRG	VOCCLPTCL	CHLOROETHANE	10	UG/L		U	10								
SW038	SW	REAL	SW01034WC	09-APR-91	N	TRG	VOCCLPTCL	CHLOROFORM	5	UG/L		U	5								
SW038	SW	REAL	SW01034WC	09-APR-91	N	TRG	VOCCLPTCL	CHLOROMETHANE	10	UG/L		U	10								
SW038	SW	REAL	SW01034WC	09-APR-91	N	TRG	VOCCLPTCL	DIBROMOCHLOROMETHANE	5	UG/L		U	5								
SW038	SW	REAL	SW01034WC	09-APR-91	N	TRG	VOCCLPTCL	ETHYLBENZENE	5	UG/L		U	5								
SW038	SW	REAL	SW01034WC	09-APR-91	N	TRG	VOCCLPTCL	METHYLENE CHLORIDE	5	UG/L		U	5								
SW038	SW	REAL	SW01034WC	09-APR-91	N	TRG	VOCCLPTCL	STYRENE	5	UG/L		U	5								
SW038	SW	REAL	SW01034WC	09-APR-91	N	TRG	VOCCLPTCL	TETRACHLOROETHENE	5	UG/L		U	5								
SW038	SW	REAL	SW01034WC	09-APR-91	N	TRG	VOCCLPTCL	TOLUENE	5	UG/L		U	5								
SW038	SW	REAL	SW01034WC	09-APR-91	N	TRG	VOCCLPTCL	TOTAL XYLENES	5	UG/L		U	5								
SW038	SW	REAL	SW01034WC	09-APR-91	N	TRG	VOCCLPTCL	TRICHLOROETHENE	5	UG/L		U	5								
SW038	SW	REAL	SW01034WC	09-APR-91	N	TRG	VOCCLPTCL	VINYL ACETATE	10	UG/L		U	10								
SW038	SW	REAL	SW01034WC	09-APR-91	N	TRG	VOCCLPTCL	VINYL CHLORIDE	10	UG/L		U	10								
SW038	SW	REAL	SW01034WC	09-APR-91	N	TRG	VOCCLPTCL	cis-1,3-DICHLOROPROPENE	5	UG/L		U	5								
SW038	SW	REAL	SW01034WC	09-APR-91	N	TRG	VOCCLPTCL	trans-1,3-DICHLOROPROPENE	5	UG/L		U	5								
SW038	SW	REAL	SW01141WC	16-MAY-91	N	TRG	VOCCLPTCL	1,1,1-TRICHLOROETHANE	5	UG/L		U	5								
SW038	SW	REAL	SW01141WC	16-MAY-91	N	TRG	VOCCLPTCL	1,1,2,2-TETRACHLOROETHANE	5	UG/L		U	5								
SW038	SW	REAL	SW01141WC	16-MAY-91	N	TRG	VOCCLPTCL	1,1,2-TRICHLOROETHANE	5	UG/L		U	5								
SW038	SW	REAL	SW01141WC	16-MAY-91	N	TRG	VOCCLPTCL	1,1-DICHLOROETHANE	5	UG/L		U	5								
SW038	SW	REAL	SW01141WC	16-MAY-91	N	TRG	VOCCLPTCL	1,1-DICHLOROETHENE	5	UG/L		U	5								
SW038	SW	REAL	SW01141WC	16-MAY-91	N	TRG	VOCCLPTCL	1,2-DICHLOROETHANE	5	UG/L		U	5								
SW038	SW	REAL	SW01141WC	16-MAY-91	N	TRG	VOCCLPTCL	1,2-DICHLOROETHENE	5	UG/L		U	5								
SW038	SW	REAL	SW01141WC	16-MAY-91	N	TRG	VOCCLPTCL	1,2-DICHLOROPROPANE	5	UG/L		U	5								
SW038	SW	REAL	SW01141WC	16-MAY-91	N	TRG	VOCCLPTCL	2-BUTANONE	10	UG/L		U	10								
SW038	SW	REAL	SW01141WC	16-MAY-91	N	TRG	VOCCLPTCL	2-HEXANONE	10	UG/L		U	10								
SW038	SW	REAL	SW01141WC	16-MAY-91	N	TRG	VOCCLPTCL	4-METHYL-2-PENTANONE	10	UG/L		U	10								
SW038	SW	REAL	SW01141WC	16-MAY-91	N	TRG	VOCCLPTCL	ACETONE	10	UG/L		U	10								
SW038	SW	REAL	SW01141WC	16-MAY-91	N	TRG	VOCCLPTCL	BENZENE	5	UG/L		U	5								
SW038	SW	REAL	SW01141WC	16-MAY-91	N	TRG	VOCCLPTCL	BROMODICHLOROMETHANE	5	UG/L		U	5								
SW038	SW	REAL	SW01141WC	16-MAY-91	N	TRG	VOCCLPTCL	BROMOFORM	5	UG/L		U	5								
SW038	SW	REAL	SW01141WC	16-MAY-91	N	TRG	VOCCLPTCL	BROMOMETHANE	10	UG/L		U	10								
SW038	SW	REAL	SW01141WC	16-MAY-91	N	TRG	VOCCLPTCL	CARBON DISULFIDE	5	UG/L		U	5								
SW038	SW	REAL	SW01141WC	16-MAY-91	N	TRG	VOCCLPTCL	CARBON TETRACHLORIDE	5	UG/L		U	5								
SW038	SW	REAL	SW01141WC	16-MAY-91	N	TRG	VOCCLPTCL	CHLOROBENZENE	5	UG/L		U	5								
SW038	SW	REAL	SW01141WC	16-MAY-91	N	TRG	VOCCLPTCL	CHLOROETHANE	10	UG/L		U	10								
SW038	SW	REAL	SW01141WC	16-MAY-91	N	TRG	VOCCLPTCL	CHLOROFORM	5	UG/L		U	5								
SW038	SW	REAL	SW01141WC	16-MAY-91	N	TRG	VOCCLPTCL	CHLOROMETHANE	10	UG/L		U	10								
SW038	SW	REAL	SW01141WC	16-MAY-91	N	TRG	VOCCLPTCL	DIBROMOCHLOROMETHANE	5	UG/L		U	5								
SW038	SW	REAL	SW01141WC	16-MAY-91	N	TRG	VOCCLPTCL	ETHYLBENZENE	5	UG/L		U	5								

Location	ST	QC	Sample Number	Smpl Date	D	ID	Group	Chemical	Result	Unit	Error	Qual	D LMT	VA	RN1	RN2	RN3	RN4	VResult	VQual	VDET
SW038	SW	REAL	SW01141WC	16-MAY-91	N	TRG	VOCCLPTCL	METHYLENE CHLORIDE	5	UG/L		U	5								
SW038	SW	REAL	SW01141WC	16-MAY-91	N	TRG	VOCCLPTCL	STYRENE	5	UG/L		U	5								
SW038	SW	REAL	SW01141WC	16-MAY-91	N	TRG	VOCCLPTCL	TETRACHLOROETHENE	5	UG/L		U	5								
SW038	SW	REAL	SW01141WC	16-MAY-91	N	TRG	VOCCLPTCL	TOLUENE	5	UG/L		U	5								
SW038	SW	REAL	SW01141WC	16-MAY-91	N	TRG	VOCCLPTCL	TOTAL XYLENES	5	UG/L		U	5								
SW038	SW	REAL	SW01141WC	16-MAY-91	N	TRG	VOCCLPTCL	TRICHLOROETHENE	5	UG/L		U	5								
SW038	SW	REAL	SW01141WC	16-MAY-91	N	TRG	VOCCLPTCL	VINYL ACETATE	10	UG/L		U	10								
SW038	SW	REAL	SW01141WC	16-MAY-91	N	TRG	VOCCLPTCL	VINYL CHLORIDE	10	UG/L		U	10								
SW038	SW	REAL	SW01141WC	16-MAY-91	N	TRG	VOCCLPTCL	cis-1,3-DICHLOROPROPENE	5	UG/L		U	5								
SW038	SW	REAL	SW01141WC	16-MAY-91	N	TRG	VOCCLPTCL	trans-1,3-DICHLOROPROPENE	5	UG/L		U	5								
SW038	SW	REAL	SW01244WC	20-JUN-91	N	TRG	VOACLP	1,1,1-TRICHLOROETHANE	5	UG/L		U	5								
SW038	SW	REAL	SW01244WC	20-JUN-91	N	TRG	VOACLP	1,1,2,2-TETRACHLOROETHANE	5	UG/L		U	5								
SW038	SW	REAL	SW01244WC	20-JUN-91	N	TRG	VOACLP	1,1,2-TRICHLOROETHANE	5	UG/L		U	5								
SW038	SW	REAL	SW01244WC	20-JUN-91	N	TRG	VOACLP	1,1-DICHLOROETHANE	5	UG/L		U	5								
SW038	SW	REAL	SW01244WC	20-JUN-91	N	TRG	VOACLP	1,1-DICHLOROETHENE	5	UG/L		U	5								
SW038	SW	REAL	SW01244WC	20-JUN-91	N	TRG	VOACLP	1,2-DICHLOROETHANE	5	UG/L		U	5								
SW038	SW	REAL	SW01244WC	20-JUN-91	N	TRG	VOACLP	1,2-DICHLOROETHENE	5	UG/L		U	5								
SW038	SW	REAL	SW01244WC	20-JUN-91	N	TRG	VOACLP	1,2-DICHLOROPROPANE	5	UG/L		U	5								
SW038	SW	REAL	SW01244WC	20-JUN-91	N	TRG	VOACLP	2-BUTANONE	10	UG/L		U	10								
SW038	SW	REAL	SW01244WC	20-JUN-91	N	TRG	VOACLP	2-HEXANONE	10	UG/L		U	10								
SW038	SW	REAL	SW01244WC	20-JUN-91	N	TRG	VOACLP	4-METHYL-2-PENTANONE	10	UG/L		U	10								
SW038	SW	REAL	SW01244WC	20-JUN-91	N	TRG	VOACLP	ACETONE	10	UG/L		U	10								
SW038	SW	REAL	SW01244WC	20-JUN-91	N	TRG	VOACLP	BENZENE	5	UG/L		U	5								
SW038	SW	REAL	SW01244WC	20-JUN-91	N	TRG	VOACLP	BROMODICHLOROMETHANE	5	UG/L		U	5								
SW038	SW	REAL	SW01244WC	20-JUN-91	N	TRG	VOACLP	BROMOFORM	5	UG/L		U	5								
SW038	SW	REAL	SW01244WC	20-JUN-91	N	TRG	VOACLP	BROMOMETHANE	10	UG/L		U	10								
SW038	SW	REAL	SW01244WC	20-JUN-91	N	TRG	VOACLP	CARBON DISULFIDE	5	UG/L		U	5								
SW038	SW	REAL	SW01244WC	20-JUN-91	N	TRG	VOACLP	CARBON TETRACHLORIDE	5	UG/L		U	5								
SW038	SW	REAL	SW01244WC	20-JUN-91	N	TRG	VOACLP	CHLOROBENZENE	5	UG/L		U	5								
SW038	SW	REAL	SW01244WC	20-JUN-91	N	TRG	VOACLP	CHLOROETHANE	10	UG/L		U	10								
SW038	SW	REAL	SW01244WC	20-JUN-91	N	TRG	VOACLP	CHLOROFORM	5	UG/L		U	5								
SW038	SW	REAL	SW01244WC	20-JUN-91	N	TRG	VOACLP	CHLOROMETHANE	10	UG/L		U	10								
SW038	SW	REAL	SW01244WC	20-JUN-91	N	TRG	VOACLP	DIBROMOCHLOROMETHANE	5	UG/L		U	5								
SW038	SW	REAL	SW01244WC	20-JUN-91	N	TRG	VOACLP	ETHYLBENZENE	5	UG/L		U	5								
SW038	SW	REAL	SW01244WC	20-JUN-91	N	TRG	VOACLP	METHYLENE CHLORIDE	5	UG/L		U	5								
SW038	SW	REAL	SW01244WC	20-JUN-91	N	TRG	VOACLP	STYRENE	5	UG/L		U	5								
SW038	SW	REAL	SW01244WC	20-JUN-91	N	TRG	VOACLP	TETRACHLOROETHENE	5	UG/L		U	5								
SW038	SW	REAL	SW01244WC	20-JUN-91	N	TRG	VOACLP	TOLUENE	5	UG/L		U	5								
SW038	SW	REAL	SW01244WC	20-JUN-91	N	TRG	VOACLP	TOTAL XYLENES	5	UG/L		U	5								
SW038	SW	REAL	SW01244WC	20-JUN-91	N	TRG	VOACLP	TRICHLOROETHENE	5	UG/L		U	5								
SW038	SW	REAL	SW01244WC	20-JUN-91	N	TRG	VOACLP	VINYL ACETATE	10	UG/L		U	10								
SW038	SW	REAL	SW01244WC	20-JUN-91	N	TRG	VOACLP	VINYL CHLORIDE	10	UG/L		U	10								
SW038	SW	REAL	SW01244WC	20-JUN-91	N	TRG	VOACLP	cis-1,3-DICHLOROPROPENE	5	UG/L		U	5								
SW038	SW	REAL	SW01244WC	20-JUN-91	N	TRG	VOACLP	trans-1,3-DICHLOROPROPENE	5	UG/L		U	5								
SW038	SW	REAL	SW01347WC	25-JUL-91	N	TRG	VOCCLPTCL	1,1,1-TRICHLOROETHANE	5	UG/L		U	5								
SW038	SW	REAL	SW01347WC	25-JUL-91	N	TRG	VOCCLPTCL	1,1,2,2-TETRACHLOROETHANE	5	UG/L		U	5								
SW038	SW	REAL	SW01347WC	25-JUL-91	N	TRG	VOCCLPTCL	1,1,2-TRICHLOROETHANE	5	UG/L		U	5								
SW038	SW	REAL	SW01347WC	25-JUL-91	N	TRG	VOCCLPTCL	1,1-DICHLOROETHANE	5	UG/L		U	5								
SW038	SW	REAL	SW01347WC	25-JUL-91	N	TRG	VOCCLPTCL	1,1-DICHLOROETHENE	5	UG/L		U	5								
SW038	SW	REAL	SW01347WC	25-JUL-91	N	TRG	VOCCLPTCL	1,2-DICHLOROETHANE	5	UG/L		U	5								
SW038	SW	REAL	SW01347WC	25-JUL-91	N	TRG	VOCCLPTCL	1,2-DICHLOROETHENE	5	UG/L		U	5								
SW038	SW	REAL	SW01347WC	25-JUL-91	N	TRG	VOCCLPTCL	1,2-DICHLOROPROPANE	5	UG/L		U	5								
SW038	SW	REAL	SW01347WC	25-JUL-91	N	TRG	VOCCLPTCL	2-BUTANONE	10	UG/L		U	10								
SW038	SW	REAL	SW01347WC	25-JUL-91	N	TRG	VOCCLPTCL	2-HEXANONE	10	UG/L		U	10								
SW038	SW	REAL	SW01347WC	25-JUL-91	N	TRG	VOCCLPTCL	4-METHYL-2-PENTANONE	10	UG/L		U	10								
SW038	SW	REAL	SW01347WC	25-JUL-91	N	TRG	VOCCLPTCL	ACETONE	10	UG/L		U	10								
SW038	SW	REAL	SW01347WC	25-JUL-91	N	TRG	VOCCLPTCL	BENZENE	5	UG/L		U	5								
SW038	SW	REAL	SW01347WC	25-JUL-91	N	TRG	VOCCLPTCL	BROMODICHLOROMETHANE	5	UG/L		U	5								
SW038	SW	REAL	SW01347WC	25-JUL-91	N	TRG	VOCCLPTCL	BROMOFORM	5	UG/L		U	5								
SW038	SW	REAL	SW01347WC	25-JUL-91	N	TRG	VOCCLPTCL	BROMOMETHANE	10	UG/L		U	10								
SW038	SW	REAL	SW01347WC	25-JUL-91	N	TRG	VOCCLPTCL	CARBON DISULFIDE	5	UG/L		U	5								
SW038	SW	REAL	SW01347WC	25-JUL-91	N	TRG	VOCCLPTCL	CARBON TETRACHLORIDE	5	UG/L		U	5								
SW038	SW	REAL	SW01347WC	25-JUL-91	N	TRG	VOCCLPTCL	CHLOROBENZENE	5	UG/L		U	5								

Location	ST	QC	Sample Number	Smpl Date	D	ID	Group	Chemical	Result	Unit	Error	Qual	D	LMT	VA	RN1	RN2	RN3	RN4	VResult	VQual	VDET
SW038	SW	REAL	SW01347WC	25-JUL-91	N	TRG	VOCCLPTCL	CHLOROETHANE	10	UG/L		U		10								
SW038	SW	REAL	SW01347WC	25-JUL-91	N	TRG	VOCCLPTCL	CHLOROFORM	5	UG/L		U		5								
SW038	SW	REAL	SW01347WC	25-JUL-91	N	TRG	VOCCLPTCL	CHLOROMETHANE	10	UG/L		U		10								
SW038	SW	REAL	SW01347WC	25-JUL-91	N	TRG	VOCCLPTCL	DIBROMOCHLOROMETHANE	5	UG/L		U		5								
SW038	SW	REAL	SW01347WC	25-JUL-91	N	TRG	VOCCLPTCL	ETHYLBENZENE	5	UG/L		U		5								
SW038	SW	REAL	SW01347WC	25-JUL-91	N	TRG	VOCCLPTCL	METHYLENE CHLORIDE	4	UG/L		JB		5								
SW038	SW	REAL	SW01347WC	25-JUL-91	N	TRG	VOCCLPTCL	STYRENE	5	UG/L		U		5								
SW038	SW	REAL	SW01347WC	25-JUL-91	N	TRG	VOCCLPTCL	TETRACHLOROETHENE	5	UG/L		U		5								
SW038	SW	REAL	SW01347WC	25-JUL-91	N	TRG	VOCCLPTCL	TOLUENE	5	UG/L		U		5								
SW038	SW	REAL	SW01347WC	25-JUL-91	N	TRG	VOCCLPTCL	TOTAL XYLENES	5	UG/L		U		5								
SW038	SW	REAL	SW01347WC	25-JUL-91	N	TRG	VOCCLPTCL	TRICHLOROETHENE	5	UG/L		U		5								
SW038	SW	REAL	SW01347WC	25-JUL-91	N	TRG	VOCCLPTCL	VINYL ACETATE	10	UG/L		U		10								
SW038	SW	REAL	SW01347WC	25-JUL-91	N	TRG	VOCCLPTCL	VINYL CHLORIDE	10	UG/L		U		10								
SW038	SW	REAL	SW01347WC	25-JUL-91	N	TRG	VOCCLPTCL	cis-1,3-DICHLOROPROPENE	5	UG/L		U		5								
SW038	SW	REAL	SW01347WC	25-JUL-91	N	TRG	VOCCLPTCL	trans-1,3-DICHLOROPROPENE	5	UG/L		U		5								
SW038	SW	REAL	SW01453WC	28-AUG-91	N	TRG	VOACLP	1,1,1-TRICHLOROETHANE	5	UG/L		U		5								
SW038	SW	REAL	SW01453WC	28-AUG-91	N	TRG	VOACLP	1,1,2,2-TETRACHLOROETHANE	5	UG/L		U		5								
SW038	SW	REAL	SW01453WC	28-AUG-91	N	TRG	VOACLP	1,1,2-TRICHLOROETHANE	5	UG/L		U		5								
SW038	SW	REAL	SW01453WC	28-AUG-91	N	TRG	VOACLP	1,1-DICHLOROETHANE	5	UG/L		U		5								
SW038	SW	REAL	SW01453WC	28-AUG-91	N	TRG	VOACLP	1,1-DICHLOROETHENE	5	UG/L		U		5								
SW038	SW	REAL	SW01453WC	28-AUG-91	N	TRG	VOACLP	1,2-DICHLOROETHANE	5	UG/L		U		5								
SW038	SW	REAL	SW01453WC	28-AUG-91	N	TRG	VOACLP	1,2-DICHLOROETHENE	5	UG/L		U		5								
SW038	SW	REAL	SW01453WC	28-AUG-91	N	TRG	VOACLP	1,2-DICHLOROPROPANE	5	UG/L		U		5								
SW038	SW	REAL	SW01453WC	28-AUG-91	N	TRG	VOACLP	2-BUTANONE	10	UG/L		U		10								
SW038	SW	REAL	SW01453WC	28-AUG-91	N	TRG	VOACLP	2-HEXANONE	10	UG/L		U		10								
SW038	SW	REAL	SW01453WC	28-AUG-91	N	TRG	VOACLP	4-METHYL-2 PENTANONE	10	UG/L		U		10								
SW038	SW	REAL	SW01453WC	28-AUG-91	N	TRG	VOACLP	ACETONE	9	UG/L		JB		10								
SW038	SW	REAL	SW01453WC	28-AUG-91	N	TRG	VOACLP	BENZENE	5	UG/L		U		5								
SW038	SW	REAL	SW01453WC	28-AUG-91	N	TRG	VOACLP	BROMODICHLOROMETHANE	5	UG/L		U		5								
SW038	SW	REAL	SW01453WC	28-AUG-91	N	TRG	VOACLP	BROMOFORM	5	UG/L		U		5								
SW038	SW	REAL	SW01453WC	28-AUG-91	N	TRG	VOACLP	BROMOMETHANE	10	UG/L		U		10								
SW038	SW	REAL	SW01453WC	28-AUG-91	N	TRG	VOACLP	CARBON DISULFIDE	5	UG/L		U		5								
SW038	SW	REAL	SW01453WC	28-AUG-91	N	TRG	VOACLP	CARBON TETRACHLORIDE	5	UG/L		U		5								
SW038	SW	REAL	SW01453WC	28-AUG-91	N	TRG	VOACLP	CHLOROBENZENE	5	UG/L		U		5								
SW038	SW	REAL	SW01453WC	28-AUG-91	N	TRG	VOACLP	CHLOROETHANE	10	UG/L		U		10								
SW038	SW	REAL	SW01453WC	28-AUG-91	N	TRG	VOACLP	CHLOROFORM	5	UG/L		U		5								
SW038	SW	REAL	SW01453WC	28-AUG-91	N	TRG	VOACLP	CHLOROMETHANE	10	UG/L		U		10								
SW038	SW	REAL	SW01453WC	28-AUG-91	N	TRG	VOACLP	DIBROMOCHLOROMETHANE	5	UG/L		U		5								
SW038	SW	REAL	SW01453WC	28-AUG-91	N	TRG	VOACLP	ETHYLBENZENE	5	UG/L		U		5								
SW038	SW	REAL	SW01453WC	28-AUG-91	N	TRG	VOACLP	METHYLENE CHLORIDE	20	UG/L		B		5	0							
SW038	SW	REAL	SW01453WC	28-AUG-91	N	TRG	VOACLP	STYRENE	5	UG/L		U		5								
SW038	SW	REAL	SW01453WC	28-AUG-91	N	TRG	VOACLP	TETRACHLOROETHENE	5	UG/L		U		5								
SW038	SW	REAL	SW01453WC	28-AUG-91	N	TRG	VOACLP	TOLUENE	5	UG/L		U		5								
SW038	SW	REAL	SW01453WC	28-AUG-91	N	TRG	VOACLP	TOTAL XYLENES	5	UG/L		U		5								
SW038	SW	REAL	SW01453WC	28-AUG-91	N	TRG	VOACLP	TRICHLOROETHENE	5	UG/L		U		5								
SW038	SW	REAL	SW01453WC	28-AUG-91	N	TRG	VOACLP	VINYL ACETATE	10	UG/L		U		10								
SW038	SW	REAL	SW01453WC	28-AUG-91	N	TRG	VOACLP	VINYL CHLORIDE	10	UG/L		U		10								
SW038	SW	REAL	SW01453WC	28-AUG-91	N	TRG	VOACLP	cis-1,3-DICHLOROPROPENE	5	UG/L		U		5								
SW038	SW	REAL	SW01453WC	28-AUG-91	N	TRG	VOACLP	trans-1,3-DICHLOROPROPENE	5	UG/L		U		5								
SW038	SW	REAL	SW01453WC	28-AUG-91	N	TRG	VOCCLPTCL	1,1,1-TRICHLOROETHANE	5	UG/L		U		5								
SW038	SW	REAL	SW01453WC	28-AUG-91	N	TRG	VOCCLPTCL	1,1,2,2-TETRACHLOROETHANE	5	UG/L		U		5								
SW038	SW	REAL	SW01453WC	28-AUG-91	N	TRG	VOCCLPTCL	1,1,2-TRICHLOROETHANE	5	UG/L		U		5								
SW038	SW	REAL	SW01453WC	28-AUG-91	N	TRG	VOCCLPTCL	1,1-DICHLOROETHANE	5	UG/L		U		5								
SW038	SW	REAL	SW01453WC	28-AUG-91	N	TRG	VOCCLPTCL	1,1-DICHLOROETHENE	5	UG/L		U		5								
SW038	SW	REAL	SW01453WC	28-AUG-91	N	TRG	VOCCLPTCL	1,2-DICHLOROETHANE	5	UG/L		U		5								
SW038	SW	REAL	SW01453WC	28-AUG-91	N	TRG	VOCCLPTCL	1,2-DICHLOROETHENE	5	UG/L		U		5								
SW038	SW	REAL	SW01453WC	28-AUG-91	N	TRG	VOCCLPTCL	1,2-DICHLOROPROPANE	5	UG/L		U		5								
SW038	SW	REAL	SW01453WC	28-AUG-91	N	TRG	VOCCLPTCL	2-BUTANONE	10	UG/L		U		10								
SW038	SW	REAL	SW01453WC	28-AUG-91	N	TRG	VOCCLPTCL	2-HEXANONE	10	UG/L		U		10								
SW038	SW	REAL	SW01453WC	28-AUG-91	N	TRG	VOCCLPTCL	4-METHYL-2-PENTANONE	10	UG/L		U		10								
SW038	SW	REAL	SW01453WC	28-AUG-91	N	TRG	VOCCLPTCL	ACETONE	9	UG/L		JB		10								
SW038	SW	REAL	SW01453WC	28-AUG-91	N	TRG	VOCCLPTCL	BENZENE	5	UG/L		U		5								
SW038	SW	REAL	SW01453WC	28-AUG-91	N	TRG	VOCCLPTCL	BROMODICHLOROMETHANE	5	UG/L		U		5								

Location	ST	QC	Sample Number	Smpl Date	D	ID	Group	Chemical	Result	Unit	Error	Qual	D	LMT	VA	RN1	RN2	RN3	RN4	VResult	VQual	VDET
SW038	SW	REAL	SW01453WC	28-AUG-91	N	TRG	VOCCLPTCL	BROMOFORM	5	UG/L		U		5								
SW038	SW	REAL	SW01453WC	28-AUG-91	N	TRG	VOCCLPTCL	BROMOMETHANE	10	UG/L		U		10								
SW038	SW	REAL	SW01453WC	28-AUG-91	N	TRG	VOCCLPTCL	CARBON DISULFIDE	5	UG/L		U		5								
SW038	SW	REAL	SW01453WC	28-AUG-91	N	TRG	VOCCLPTCL	CARBON TETRACHLORIDE	5	UG/L		U		5								
SW038	SW	REAL	SW01453WC	28-AUG-91	N	TRG	VOCCLPTCL	CHLOROBENZENE	5	UG/L		U		5								
SW038	SW	REAL	SW01453WC	28-AUG-91	N	TRG	VOCCLPTCL	CHLOROETHANE	10	UG/L		U		10								
SW038	SW	REAL	SW01453WC	28-AUG-91	N	TRG	VOCCLPTCL	CHLOROFORM	5	UG/L		U		5								
SW038	SW	REAL	SW01453WC	28-AUG-91	N	TRG	VOCCLPTCL	CHLOROMETHANE	10	UG/L		U		10								
SW038	SW	REAL	SW01453WC	28-AUG-91	N	TRG	VOCCLPTCL	DIBROMOCHLOROMETHANE	5	UG/L		U		5								
SW038	SW	REAL	SW01453WC	28-AUG-91	N	TRG	VOCCLPTCL	ETHYLBENZENE	5	UG/L		U		5								
SW038	SW	REAL	SW01453WC	28-AUG-91	N	TRG	VOCCLPTCL	METHYLENE CHLORIDE	20	UG/L		B		5.0								
SW038	SW	REAL	SW01453WC	28-AUG-91	N	TRG	VOCCLPTCL	STYRENE	5	UG/L		U		5								
SW038	SW	REAL	SW01453WC	28-AUG-91	N	TRG	VOCCLPTCL	TETRACHLOROETHENE	5	UG/L		U		5								
SW038	SW	REAL	SW01453WC	28-AUG-91	N	TRG	VOCCLPTCL	TOLUENE	5	UG/L		U		5								
SW038	SW	REAL	SW01453WC	28-AUG-91	N	TRG	VOCCLPTCL	TOTAL XYLENES	5	UG/L		U		5								
SW038	SW	REAL	SW01453WC	28-AUG-91	N	TRG	VOCCLPTCL	TRICHLOROETHENE	5	UG/L		U		5								
SW038	SW	REAL	SW01453WC	28-AUG-91	N	TRG	VOCCLPTCL	VINYL ACETATE	10	UG/L		U		10								
SW038	SW	REAL	SW01453WC	28-AUG-91	N	TRG	VOCCLPTCL	VINYL CHLORIDE	10	UG/L		U		10								
SW038	SW	REAL	SW01453WC	28-AUG-91	N	TRG	VOCCLPTCL	cis-1,3-DICHLOROPROPENE	5	UG/L		U		5								
SW038	SW	REAL	SW01453WC	28-AUG-91	N	TRG	VOCCLPTCL	trans-1,3-DICHLOROPROPENE	5	UG/L		U		5								
SW038	SW	REAL	SW01559WC	18-SEP-91	N	TRG	VOACLP	1,1,1 TRICHLOROETHANE	5	UG/L		U		5								
SW038	SW	REAL	SW01559WC	18-SEP-91	N	TRG	VOACLP	1,1,2,2-TETRACHLOROETHANE	5	UG/L		U		5								
SW038	SW	REAL	SW01559WC	18-SEP-91	N	TRG	VOACLP	1,1,2 TRICHLOROETHANE	5	UG/L		U		5								
SW038	SW	REAL	SW01559WC	18-SEP-91	N	TRG	VOACLP	1,1-DICHLOROETHANE	5	UG/L		U		5								
SW038	SW	REAL	SW01559WC	18-SEP-91	N	TRG	VOACLP	1,1-DICHLOROETHENE	5	UG/L		U		5								
SW038	SW	REAL	SW01559WC	18-SEP-91	N	TRG	VOACLP	1,2-DICHLOROETHANE	5	UG/L		U		5								
SW038	SW	REAL	SW01559WC	18-SEP-91	N	TRG	VOACLP	1,2-DICHLOROETHENE	5	UG/L		U		5								
SW038	SW	REAL	SW01559WC	18-SEP-91	N	TRG	VOACLP	1,2-DICHLOROPROPANE	5	UG/L		U		5								
SW038	SW	REAL	SW01559WC	18-SEP-91	N	TRG	VOACLP	2-BUTANONE	10	UG/L		U		10								
SW038	SW	REAL	SW01559WC	18-SEP-91	N	TRG	VOACLP	2-HEXANONE	10	UG/L		U		10								
SW038	SW	REAL	SW01559WC	18-SEP-91	N	TRG	VOACLP	4-METHYL-2-PENTANONE	10	UG/L		U		10								
SW038	SW	REAL	SW01559WC	18-SEP-91	N	TRG	VOACLP	ACETONE	2	UG/L		JB		10								
SW038	SW	REAL	SW01559WC	18-SEP-91	N	TRG	VOACLP	BENZENE	5	UG/L		U		5								
SW038	SW	REAL	SW01559WC	18-SEP-91	N	TRG	VOACLP	BROMODICHLOROMETHANE	5	UG/L		U		5								
SW038	SW	REAL	SW01559WC	18-SEP-91	N	TRG	VOACLP	BROMOFORM	5	UG/L		U		5								
SW038	SW	REAL	SW01559WC	18-SEP-91	N	TRG	VOACLP	BROMOMETHANE	10	UG/L		U		10								
SW038	SW	REAL	SW01559WC	18-SEP-91	N	TRG	VOACLP	CARBON DISULFIDE	5	UG/L		U		5								
SW038	SW	REAL	SW01559WC	18-SEP-91	N	TRG	VOACLP	CARBON TETRACHLORIDE	5	UG/L		U		5								
SW038	SW	REAL	SW01559WC	18-SEP-91	N	TRG	VOACLP	CHLOROBENZENE	5	UG/L		U		5								
SW038	SW	REAL	SW01559WC	18-SEP-91	N	TRG	VOACLP	CHLOROETHANE	10	UG/L		U		10								
SW038	SW	REAL	SW01559WC	18-SEP-91	N	TRG	VOACLP	CHLOROFORM	5	UG/L		U		5								
SW038	SW	REAL	SW01559WC	18-SEP-91	N	TRG	VOACLP	CHLOROMETHANE	10	UG/L		U		10								
SW038	SW	REAL	SW01559WC	18-SEP-91	N	TRG	VOACLP	DIBROMOCHLOROMETHANE	5	UG/L		U		5								
SW038	SW	REAL	SW01559WC	18-SEP-91	N	TRG	VOACLP	ETHYLBENZENE	5	UG/L		U		5								
SW038	SW	REAL	SW01559WC	18-SEP-91	N	TRG	VOACLP	METHYLENE CHLORIDE	5	UG/L		B		5								
SW038	SW	REAL	SW01559WC	18-SEP-91	N	TRG	VOACLP	STYRENE	5	UG/L		U		5								
SW038	SW	REAL	SW01559WC	18-SEP-91	N	TRG	VOACLP	TETRACHLOROETHENE	5	UG/L		U		5								
SW038	SW	REAL	SW01559WC	18-SEP-91	N	TRG	VOACLP	TOLUENE	5	UG/L		U		5								
SW038	SW	REAL	SW01559WC	18-SEP-91	N	TRG	VOACLP	TOTAL XYLENES	5	UG/L		U		5								
SW038	SW	REAL	SW01559WC	18-SEP-91	N	TRG	VOACLP	TRICHLOROETHENE	5	UG/L		U		5								
SW038	SW	REAL	SW01559WC	18-SEP-91	N	TRG	VOACLP	VINYL ACETATE	10	UG/L		U		10								
SW038	SW	REAL	SW01559WC	18-SEP-91	N	TRG	VOACLP	VINYL CHLORIDE	10	UG/L		U		10								
SW038	SW	REAL	SW01559WC	18-SEP-91	N	TRG	VOACLP	cis-1,3-DICHLOROPROPENE	5	UG/L		U		5								
SW038	SW	REAL	SW01559WC	18-SEP-91	N	TRG	VOACLP	trans-1,3-DICHLOROPROPENE	5	UG/L		U		5								
SW038	SW	REAL	SW01665WC	23-OCT-91	N	TRG	SVOCLPTCL	1,2,4-TRICHLOROBENZENE	10	UG/L		U		10 00								
SW038	SW	REAL	SW01665WC	23-OCT-91	N	TRG	SVOCLPTCL	1,2-DICHLOROBENZENE	10	UG/L		U		10.00								
SW038	SW	REAL	SW01665WC	23-OCT-91	N	TRG	SVOCLPTCL	1,3-DICHLOROBENZENE	10	UG/L		U		10.00								
SW038	SW	REAL	SW01665WC	23-OCT-91	N	TRG	SVOCLPTCL	1,4-DICHLOROBENZENE	10	UG/L		U		10 00								
SW038	SW	REAL	SW01665WC	23-OCT-91	N	TRG	SVOCLPTCL	2,4,5-TRICHLOROPHENOL	50	UG/L		U		50.00								
SW038	SW	REAL	SW01665WC	23-OCT-91	N	TRG	SVOCLPTCL	2,4,6-TRICHLOROPHENOL	10	UG/L		U		10.00								
SW038	SW	REAL	SW01665WC	23-OCT-91	N	TRG	SVOCLPTCL	2,4-DICHLOROPHENOL	10	UG/L		U		10 00								
SW038	SW	REAL	SW01665WC	23-OCT-91	N	TRG	SVOCLPTCL	2,4-DIMETHYLPHENOL	10	UG/L		U		10.00								
SW038	SW	REAL	SW01665WC	23-OCT-91	N	TRG	SVOCLPTCL	2,4-DINITROPHENOL	50	UG/L		U		50.00								

ation	ST	QC	Sample Number	Smpl Date	D	ID	Group	Chemical	Result	Unit	Error	Qual	D LMT	VA	RN1	RN2	RN3	RN4	VResult	VQual	VDET
038	SW	REAL	SW01665WC	23-OCT-91	N	TRG	SVOCLPTCL	2,4-DINITROTOLUENE	10	UG/L		U	10 00								
038	SW	REAL	SW01665WC	23-OCT-91	N	TRG	SVOCLPTCL	2,6 DINITROTOLUENE	10	UG/L		U	10 00								
038	SW	REAL	SW01665WC	23-OCT-91	N	TRG	SVOCLPTCL	2-CHLORONAPHTHALENE	10	UG/L		U	10 00								
038	SW	REAL	SW01665WC	23-OCT-91	N	TRG	SVOCLPTCL	2-CHLOROPHENOL	10	UG/L		U	10 00								
038	SW	REAL	SW01665WC	23-OCT-91	N	TRG	SVOCLPTCL	2-METHYLNAPHTHALENE	10	UG/L		U	10 00								
038	SW	REAL	SW01665WC	23-OCT-91	N	TRG	SVOCLPTCL	2-METHYLPHENOL	10	UG/L		U	10 00								
038	SW	REAL	SW01665WC	23-OCT-91	N	TRG	SVOCLPTCL	2-NITROANILINE	50	UG/L		U	50 00								
038	SW	REAL	SW01665WC	23-OCT-91	N	TRG	SVOCLPTCL	2-NITROPHENOL	10	UG/L		U	10 00								
038	SW	REAL	SW01665WC	23-OCT-91	N	TRG	SVOCLPTCL	3,3'-DICHLOROBENZIDINE	20	UG/L		U	20.00								
038	SW	REAL	SW01665WC	23-OCT-91	N	TRG	SVOCLPTCL	3-NITROANILINE	50	UG/L		U	50 00								
038	SW	REAL	SW01665WC	23-OCT-91	N	TRG	SVOCLPTCL	4,6 DINITRO-2-METHYLPHENOL	50	UG/L		U	50.00								
038	SW	REAL	SW01665WC	23-OCT-91	N	TRG	SVOCLPTCL	4-BROMOPHENYL PHENYL ETHER	10	UG/L		U	10.00								
038	SW	REAL	SW01665WC	23-OCT-91	N	TRG	SVOCLPTCL	4-CHLORO-3-METHYLPHENOL	10	UG/L		U	10 00								
038	SW	REAL	SW01665WC	23-OCT-91	N	TRG	SVOCLPTCL	4-CHLOROANILINE	10	UG/L		U	10 00								
038	SW	REAL	SW01665WC	23-OCT-91	N	TRG	SVOCLPTCL	4-CHLOROPHENYL PHENYL ETHER	10	UG/L		U	10 00								
038	SW	REAL	SW01665WC	23-OCT-91	N	TRG	SVOCLPTCL	4-METHYLPHENOL	10	UG/L		U	10 00								
038	SW	REAL	SW01665WC	23-OCT-91	N	TRG	SVOCLPTCL	4-NITROANILINE	50	UG/L		U	50 00								
038	SW	REAL	SW01665WC	23-OCT-91	N	TRG	SVOCLPTCL	4-NITROPHENOL	50	UG/L		U	50 00								
038	SW	REAL	SW01665WC	23-OCT-91	N	TRG	SVOCLPTCL	ACENAPHTHENE	10	UG/L		U	10.00								
038	SW	REAL	SW01665WC	23-OCT-91	N	TRG	SVOCLPTCL	ACENAPHTHYLENE	10	UG/L		U	10.00								
038	SW	REAL	SW01665WC	23-OCT-91	N	TRG	SVOCLPTCL	ANTHRACENE	10	UG/L		U	10 00								
038	SW	REAL	SW01665WC	23-OCT-91	N	TRG	SVOCLPTCL	BENZO(a)ANTHRACENE	10	UG/L		U	10 00								
038	SW	REAL	SW01665WC	23-OCT-91	N	TRG	SVOCLPTCL	BENZO(a)PYRENE	10	UG/L		U	10 00								
038	SW	REAL	SW01665WC	23-OCT-91	N	TRG	SVOCLPTCL	BENZO(b)FLUORANTHENE	10	UG/L		U	10 00								
038	SW	REAL	SW01665WC	23-OCT-91	N	TRG	SVOCLPTCL	BENZO(ghi)PERYLENE	10	UG/L		U	10 00								
038	SW	REAL	SW01665WC	23-OCT-91	N	TRG	SVOCLPTCL	BENZO(k)FLUORANTHENE	10	UG/L		U	10.00								
038	SW	REAL	SW01665WC	23-OCT-91	N	TRG	SVOCLPTCL	BENZOIC ACID	50	UG/L		U	50.00								
038	SW	REAL	SW01665WC	23-OCT-91	N	TRG	SVOCLPTCL	BENZYL ALCOHOL	10	UG/L		U	10 00								
038	SW	REAL	SW01665WC	23-OCT-91	N	TRG	SVOCLPTCL	BIS(2-CHLOROETHOXY)METHANE	10	UG/L		U	10 00								
038	SW	REAL	SW01665WC	23-OCT-91	N	TRG	SVOCLPTCL	BIS(2-CHLOROETHYL)ETHER	10	UG/L		U	10.00								
038	SW	REAL	SW01665WC	23-OCT-91	N	TRG	SVOCLPTCL	BIS(2-CHLORODISOPROPYL)ETHER	10	UG/L		U	10 00								
038	SW	REAL	SW01665WC	23-OCT-91	N	TRG	SVOCLPTCL	BIS(2-ETHYLHEXYL)PHTHALATE	10	UG/L		U	10 00								
038	SW	REAL	SW01665WC	23-OCT-91	N	TRG	SVOCLPTCL	BUTYL BENZYL PHTHALATE	10	UG/L		U	10 00								
038	SW	REAL	SW01665WC	23-OCT-91	N	TRG	SVOCLPTCL	CHRYSENE	10	UG/L		U	10 00								
038	SW	REAL	SW01665WC	23-OCT-91	N	TRG	SVOCLPTCL	DI-n-BUTYL PHTHALATE	10	UG/L		U	10 00								
038	SW	REAL	SW01665WC	23-OCT-91	N	TRG	SVOCLPTCL	DI-n-OCTYL PHTHALATE	10	UG/L		U	10 00								
038	SW	REAL	SW01665WC	23-OCT-91	N	TRG	SVOCLPTCL	DIBENZO(a,h)ANTHRACENE	10	UG/L		U	10 00								
038	SW	REAL	SW01665WC	23-OCT-91	N	TRG	SVOCLPTCL	DIBENZOFURAN	10	UG/L		U	10.00								
038	SW	REAL	SW01665WC	23-OCT-91	N	TRG	SVOCLPTCL	DIETHYL PHTHALATE	10	UG/L		U	10 00								
038	SW	REAL	SW01665WC	23-OCT-91	N	TRG	SVOCLPTCL	DIMETHYL PHTHALATE	10	UG/L		U	10.00								
038	SW	REAL	SW01665WC	23-OCT-91	N	TRG	SVOCLPTCL	FLUORANTHENE	10	UG/L		U	10.00								
038	SW	REAL	SW01665WC	23-OCT-91	N	TRG	SVOCLPTCL	FLUORENE	10	UG/L		U	10 00								
038	SW	REAL	SW01665WC	23-OCT-91	N	TRG	SVOCLPTCL	HEXACHLOROBENZENE	10	UG/L		U	10 00								
038	SW	REAL	SW01665WC	23-OCT-91	N	TRG	SVOCLPTCL	HEXACHLOROBUTADIENE	10	UG/L		U	10 00								
038	SW	REAL	SW01665WC	23-OCT-91	N	TRG	SVOCLPTCL	HEXACHLOROCYCLOPENTADIENE	10	UG/L		U	10 00								
038	SW	REAL	SW01665WC	23-OCT-91	N	TRG	SVOCLPTCL	HEXACHLOROETHANE	10	UG/L		U	10 00								
038	SW	REAL	SW01665WC	23-OCT-91	N	TRG	SVOCLPTCL	INDENO(1,2,3-cd)PYRENE	10	UG/L		U	10 00								
038	SW	REAL	SW01665WC	23-OCT-91	N	TRG	SVOCLPTCL	ISOPHORONE	10	UG/L		U	10 00								
038	SW	REAL	SW01665WC	23-OCT-91	N	TRG	SVOCLPTCL	N-NITROSO-DI-n-PROPYLAMINE	10	UG/L		U	10 00								
038	SW	REAL	SW01665WC	23-OCT-91	N	TRG	SVOCLPTCL	N-NITROSODIPHENYLAMINE	10	UG/L		U	10 00								
038	SW	REAL	SW01665WC	23-OCT-91	N	TRG	SVOCLPTCL	NAPHTHALENE	10	UG/L		U	10 00								
038	SW	REAL	SW01665WC	23-OCT-91	N	TRG	SVOCLPTCL	NITROBENZENE	10	UG/L		U	10 00								
038	SW	REAL	SW01665WC	23-OCT-91	N	TRG	SVOCLPTCL	PENTACHLOROPHENOL	50	UG/L		U	50 00								
038	SW	REAL	SW01665WC	23-OCT-91	N	TRG	SVOCLPTCL	PHENANTHRENE	10	UG/L		U	10.00								
038	SW	REAL	SW01665WC	23-OCT-91	N	TRG	SVOCLPTCL	PHENOL	10	UG/L		U	10 00								
038	SW	REAL	SW01665WC	23-OCT-91	N	TRG	SVOCLPTCL	PYRENE	10	UG/L		U	10.00								
038	SW	REAL	SW01665WC	23-OCT-91	N	TRG	VOCCLPTCL	1,1,1-TRICHLOROETHANE	5	UG/L		U	5.000								
038	SW	REAL	SW01665WC	23-OCT-91	N	TRG	VOCCLPTCL	1,1,2,2-TETRACHLOROETHANE	5	UG/L		U	5 000								
038	SW	REAL	SW01665WC	23-OCT-91	N	TRG	VOCCLPTCL	1,1,2-TRICHLOROETHANE	5	UG/L		U	5.000								
038	SW	REAL	SW01665WC	23-OCT-91	N	TRG	VOCCLPTCL	1,1-DICHLOROETHANE	5	UG/L		U	5.000								
038	SW	REAL	SW01665WC	23-OCT-91	N	TRG	VOCCLPTCL	1,1-DICHLOROETHENE	5	UG/L		U	5 000								
038	SW	REAL	SW01665WC	23-OCT-91	N	TRG	VOCCLPTCL	1,2-DICHLOROETHANE	5	UG/L		U	5 000								
038	SW	REAL	SW01665WC	23-OCT-91	N	TRG	VOCCLPTCL	1,2-DICHLOROETHENE	5	UG/L		U	5 000								

ocation	ST	QC	Sample Number	Smpl Date	D	ID	Group	Chemical	Result	Unit	Error	Qual	D LMT	VA	RN1	RN2	RN3	RN4	VResult	VQual	VDET
W038	SW	REAL	SW01665WC	23-OCT-91	N	TRG	VOCCLPTCL	1,2-DICHLOROPROPANE	5	UG/L		U	5 000								
W038	SW	REAL	SW01665WC	23-OCT-91	N	TRG	VOCCLPTCL	2-BUTANONE	10	UG/L		U	10 00								
W038	SW	REAL	SW01665WC	23-OCT-91	N	TRG	VOCCLPTCL	2-HEXANONE	10	UG/L		U	10.00								
W038	SW	REAL	SW01665WC	23-OCT-91	N	TRG	VOCCLPTCL	4-METHYL-2-PENTANONE	10	UG/L		U	10.00								
W038	SW	REAL	SW01665WC	23-OCT-91	N	TRG	VOCCLPTCL	ACETONE	10	UG/L		U	10 00								
W038	SW	REAL	SW01665WC	23-OCT-91	N	TRG	VOCCLPTCL	BENZENE	5	UG/L		U	5 000								
W038	SW	REAL	SW01665WC	23-OCT-91	N	TRG	VOCCLPTCL	BROMODICHLOROMETHANE	5	UG/L		U	5 000								
W038	SW	REAL	SW01665WC	23-OCT-91	N	TRG	VOCCLPTCL	BROMOFORM	5	UG/L		U	5 000								
W038	SW	REAL	SW01665WC	23-OCT-91	N	TRG	VOCCLPTCL	BROMOMETHANE	10	UG/L		U	10 00								
W038	SW	REAL	SW01665WC	23-OCT-91	N	TRG	VOCCLPTCL	CARBON DISULFIDE	5	UG/L		U	5.000								
W038	SW	REAL	SW01665WC	23-OCT-91	N	TRG	VOCCLPTCL	CARBON TETRACHLORIDE	5	UG/L		U	5.000								
W038	SW	REAL	SW01665WC	23-OCT-91	N	TRG	VOCCLPTCL	CHLOROBENZENE	5	UG/L		U	5.000								
W038	SW	REAL	SW01665WC	23-OCT-91	N	TRG	VOCCLPTCL	CHLOROETHANE	10	UG/L		U	10.00								
W038	SW	REAL	SW01665WC	23-OCT-91	N	TRG	VOCCLPTCL	CHLOROFORM	5	UG/L		U	5 000								
W038	SW	REAL	SW01665WC	23-OCT-91	N	TRG	VOCCLPTCL	CHLOROMETHANE	10	UG/L		U	10 00								
W038	SW	REAL	SW01665WC	23-OCT-91	N	TRG	VOCCLPTCL	DIBROMOCHLOROMETHANE	5	UG/L		U	5 000								
W038	SW	REAL	SW01665WC	23-OCT-91	N	TRG	VOCCLPTCL	ETHYLBENZENE	5	UG/L		U	5 000								
W038	SW	REAL	SW01665WC	23-OCT-91	N	TRG	VOCCLPTCL	METHYLENE CHLORIDE	2	UG/L		J	5 000								
W038	SW	REAL	SW01665WC	23-OCT-91	N	TRG	VOCCLPTCL	STYRENE	5	UG/L		U	5 000								
W038	SW	REAL	SW01665WC	23-OCT-91	N	TRG	VOCCLPTCL	TETRACHLOROETHENE	5	UG/L		U	5 000								
W038	SW	REAL	SW01665WC	23-OCT-91	N	TRG	VOCCLPTCL	TOLUENE	5	UG/L		U	5.000								
W038	SW	REAL	SW01665WC	23-OCT-91	N	TRG	VOCCLPTCL	TOTAL XYLENES	5	UG/L		U	5.000								
W038	SW	REAL	SW01665WC	23-OCT-91	N	TRG	VOCCLPTCL	TRICHLOROETHENE	5	UG/L		U	5 000								
W038	SW	REAL	SW01665WC	23-OCT-91	N	TRG	VOCCLPTCL	VINYL ACETATE	10	UG/L		U	10 00								
W038	SW	REAL	SW01665WC	23-OCT-91	N	TRG	VOCCLPTCL	VINYL CHLORIDE	10	UG/L		U	10 00								
W038	SW	REAL	SW01665WC	23-OCT-91	N	TRG	VOCCLPTCL	cis-1,3-DICHLOROPROPENE	5	UG/L		U	5.000								
W038	SW	REAL	SW01665WC	23-OCT-91	N	TRG	VOCCLPTCL	trans-1,3-DICHLOROPROPENE	5	UG/L		U	5.000								
W038	SW	REAL	SW01716WC	07-NOV-91	N																
W093	SW	LR	SW00961WCLR	14-MAR-91	N																
W093	SW	REAL	SW00755WC	30-JAN-91	N																
W093	SW	REAL	SW00858WC	20-FEB-91	N																
W093	SW	REAL	SW00961WC	14-MAR-91	N																
W093	SW	REAL	SW01063WC	15-APR-91	N	TRG	SVOCLPTCL	1,2,4-TRICHLOROBENZENE	10	UG/L		U	10								
W093	SW	REAL	SW01063WC	15-APR-91	N	TRG	SVOCLPTCL	1,2-DICHLOROBENZENE	10	UG/L		U	10								
W093	SW	REAL	SW01063WC	15-APR-91	N	TRG	SVOCLPTCL	1,3-DICHLOROBENZENE	10	UG/L		U	10								
W093	SW	REAL	SW01063WC	15-APR-91	N	TRG	SVOCLPTCL	1,4-DICHLOROBENZENE	10	UG/L		U	10								
W093	SW	REAL	SW01063WC	15-APR-91	N	TRG	SVOCLPTCL	2,4,5-TRICHLOROPHENOL	50	UG/L		U	50								
W093	SW	REAL	SW01063WC	15-APR-91	N	TRG	SVOCLPTCL	2,4,6-TRICHLOROPHENOL	10	UG/L		U	10								
W093	SW	REAL	SW01063WC	15-APR-91	N	TRG	SVOCLPTCL	2,4-DICHLOROPHENOL	10	UG/L		U	10								
W093	SW	REAL	SW01063WC	15-APR-91	N	TRG	SVOCLPTCL	2,4-DIMETHYLPHENOL	10	UG/L		U	10								
W093	SW	REAL	SW01063WC	15-APR-91	N	TRG	SVOCLPTCL	2,4-DINITROPHENOL	50	UG/L		U	50								
W093	SW	REAL	SW01063WC	15-APR-91	N	TRG	SVOCLPTCL	2,4-DINITROTOLUENE	10	UG/L		U	10								
W093	SW	REAL	SW01063WC	15-APR-91	N	TRG	SVOCLPTCL	2,6-DINITROTOLUENE	10	UG/L		U	10								
W093	SW	REAL	SW01063WC	15-APR-91	N	TRG	SVOCLPTCL	2-CHLORONAPHTHALENE	10	UG/L		U	10								
W093	SW	REAL	SW01063WC	15-APR-91	N	TRG	SVOCLPTCL	2-CHLOROPHENOL	10	UG/L		U	10								
W093	SW	REAL	SW01063WC	15-APR-91	N	TRG	SVOCLPTCL	2-METHYLNAPHTHALENE	10	UG/L		U	10								
W093	SW	REAL	SW01063WC	15-APR-91	N	TRG	SVOCLPTCL	2-METHYLPHENOL	10	UG/L		U	10								
W093	SW	REAL	SW01063WC	15-APR-91	N	TRG	SVOCLPTCL	2-NITROANILINE	50	UG/L		U	50								
W093	SW	REAL	SW01063WC	15-APR-91	N	TRG	SVOCLPTCL	2-NITROPHENOL	10	UG/L		U	10								
W093	SW	REAL	SW01063WC	15-APR-91	N	TRG	SVOCLPTCL	3,3'-DICHLOROBENZIDINE	20	UG/L		U	20								
W093	SW	REAL	SW01063WC	15-APR-91	N	TRG	SVOCLPTCL	3-NITROANILINE	50	UG/L		U	50								
W093	SW	REAL	SW01063WC	15-APR-91	N	TRG	SVOCLPTCL	4,6-DINITRO-2-METHYLPHENOL	50	UG/L		U	50								
W093	SW	REAL	SW01063WC	15-APR-91	N	TRG	SVOCLPTCL	4-BROMOPHENYL PHENYL ETHER	10	UG/L		U	10								
W093	SW	REAL	SW01063WC	15-APR-91	N	TRG	SVOCLPTCL	4-CHLORO-3-METHYLPHENOL	10	UG/L		U	10								
W093	SW	REAL	SW01063WC	15-APR-91	N	TRG	SVOCLPTCL	4-CHLOROANILINE	10	UG/L		U	10								
W093	SW	REAL	SW01063WC	15-APR-91	N	TRG	SVOCLPTCL	4-CHLOROPHENYL PHENYL ETHER	10	UG/L		U	10								
W093	SW	REAL	SW01063WC	15-APR-91	N	TRG	SVOCLPTCL	4-METHYLPHENOL	10	UG/L		U	10								
W093	SW	REAL	SW01063WC	15-APR-91	N	TRG	SVOCLPTCL	4-NITROANILINE	50	UG/L		U	50								
W093	SW	REAL	SW01063WC	15-APR-91	N	TRG	SVOCLPTCL	4-NITROPHENOL	50	UG/L		U	50								
W093	SW	REAL	SW01063WC	15-APR-91	N	TRG	SVOCLPTCL	ACENAPHTHENE	10	UG/L		U	10								
W093	SW	REAL	SW01063WC	15-APR-91	N	TRG	SVOCLPTCL	ACENAPHTHYLENE	10	UG/L		U	10								
W093	SW	REAL	SW01063WC	15-APR-91	N	TRG	SVOCLPTCL	ANTHRACENE	10	UG/L		U	10								
W093	SW	REAL	SW01063WC	15-APR-91	N	TRG	SVOCLPTCL	BENZO(a)ANTHRACENE	10	UG/L		U	10								

cation	ST	QC	Sample Number	Smpl Date	D	ID	Group	Chemical	Result	Unit	Error	Qual	D LMT	VA	RN1	RN2	RN3	RN4	VResult	VQual	VDET
1093	SW	REAL	SW01063WC	15-APR-91	N	TRG	SVOCLPTCL	BENZO(a)PYRENE	10	UG/L		U	10								
1093	SW	REAL	SW01063WC	15-APR-91	N	TRG	SVOCLPTCL	BENZO(b)FLUORANTHENE	10	UG/L		U	10								
1093	SW	REAL	SW01063WC	15-APR-91	N	TRG	SVOCLPTCL	BENZO(ghi)PERYLENE	10	UG/L		U	10								
1093	SW	REAL	SW01063WC	15-APR-91	N	TRG	SVOCLPTCL	BENZO(k)FLUORANTHENE	10	UG/L		U	10								
1093	SW	REAL	SW01063WC	15-APR-91	N	TRG	SVOCLPTCL	BENZOIC ACID	50	UG/L		U	50								
1093	SW	REAL	SW01063WC	15-APR-91	N	TRG	SVOCLPTCL	BENZYL ALCOHOL	10	UG/L		U	10								
1093	SW	REAL	SW01063WC	15-APR-91	N	TRG	SVOCLPTCL	BIS(2-CHLOROETHOXY)METHANE	10	UG/L		U	10								
1093	SW	REAL	SW01063WC	15-APR-91	N	TRG	SVOCLPTCL	BIS(2-CHLOROETHYL)ETHER	10	UG/L		U	10								
1093	SW	REAL	SW01063WC	15-APR-91	N	TRG	SVOCLPTCL	BIS(2-CHLOROISOPROPYL)ETHER	10	UG/L		U	10								
1093	SW	REAL	SW01063WC	15-APR-91	N	TRG	SVOCLPTCL	BIS(2-ETHYLHEXYL)PHTHALATE	10	UG/L		U	10								
1093	SW	REAL	SW01063WC	15-APR-91	N	TRG	SVOCLPTCL	BUTYL BENZYL PHTHALATE	10	UG/L		U	10								
1093	SW	REAL	SW01063WC	15-APR-91	N	TRG	SVOCLPTCL	CHRYSENE	10	UG/L		U	10								
1093	SW	REAL	SW01063WC	15-APR-91	N	TRG	SVOCLPTCL	DI-n-BUTYL PHTHALATE	10	UG/L		U	10								
1093	SW	REAL	SW01063WC	15-APR-91	N	TRG	SVOCLPTCL	DI-n-OCTYL PHTHALATE	10	UG/L		U	10								
1093	SW	REAL	SW01063WC	15-APR-91	N	TRG	SVOCLPTCL	DIBENZO(a,h)ANTHRACENE	10	UG/L		U	10								
1093	SW	REAL	SW01063WC	15-APR-91	N	TRG	SVOCLPTCL	DIBENZOFURAN	10	UG/L		U	10								
1093	SW	REAL	SW01063WC	15-APR-91	N	TRG	SVOCLPTCL	DIETHYL PHTHALATE	10	UG/L		U	10								
1093	SW	REAL	SW01063WC	15-APR-91	N	TRG	SVOCLPTCL	DIMETHYL PHTHALATE	10	UG/L		U	10								
1093	SW	REAL	SW01063WC	15-APR-91	N	TRG	SVOCLPTCL	FLUORANTHENE	10	UG/L		U	10								
1093	SW	REAL	SW01063WC	15-APR-91	N	TRG	SVOCLPTCL	FLUORENE	10	UG/L		U	10								
1093	SW	REAL	SW01063WC	15-APR-91	N	TRG	SVOCLPTCL	HEXACHLOROBENZENE	10	UG/L		U	10								
1093	SW	REAL	SW01063WC	15-APR-91	N	TRG	SVOCLPTCL	HEXACHLOROBUTADIENE	10	UG/L		U	10								
1093	SW	REAL	SW01063WC	15-APR-91	N	TRG	SVOCLPTCL	HEXACHLOROCYCLOPENTADIENE	10	UG/L		U	10								
1093	SW	REAL	SW01063WC	15-APR-91	N	TRG	SVOCLPTCL	HEXACHLOROETHANE	10	UG/L		U	10								
1093	SW	REAL	SW01063WC	15-APR-91	N	TRG	SVOCLPTCL	INDENO(1,2,3-cd)PYRENE	10	UG/L		U	10								
1093	SW	REAL	SW01063WC	15-APR-91	N	TRG	SVOCLPTCL	ISOPHORONE	10	UG/L		U	10								
1093	SW	REAL	SW01063WC	15-APR-91	N	TRG	SVOCLPTCL	N-NITROSO-DI-n-PROPYLAMINE	10	UG/L		U	10								
1093	SW	REAL	SW01063WC	15-APR-91	N	TRG	SVOCLPTCL	N-NITROSODIPHENYLAMINE	10	UG/L		U	10								
1093	SW	REAL	SW01063WC	15-APR-91	N	TRG	SVOCLPTCL	NAPHTHALENE	10	UG/L		U	10								
1093	SW	REAL	SW01063WC	15-APR-91	N	TRG	SVOCLPTCL	NITROBENZENE	10	UG/L		U	10								
1093	SW	REAL	SW01063WC	15-APR-91	N	TRG	SVOCLPTCL	PENTACHLOROPHENOL	50	UG/L		U	50								
1093	SW	REAL	SW01063WC	15-APR-91	N	TRG	SVOCLPTCL	PHENANTHRENE	10	UG/L		U	10								
1093	SW	REAL	SW01063WC	15-APR-91	N	TRG	SVOCLPTCL	PHENOL	10	UG/L		U	10								
1093	SW	REAL	SW01063WC	15-APR-91	N	TRG	SVOCLPTCL	PYRENE	10	UG/L		U	10								
1093	SW	REAL	SW01063WC	15-APR-91	N	TRG	VOCCLPTCL	1,1,1-TRICHLOROETHANE	5	UG/L		U	5								
1093	SW	REAL	SW01063WC	15-APR-91	N	TRG	VOCCLPTCL	1,1,2,2-TETRACHLOROETHANE	5	UG/L		U	5								
1093	SW	REAL	SW01063WC	15-APR-91	N	TRG	VOCCLPTCL	1,1,2-TRICHLOROETHANE	5	UG/L		U	5								
1093	SW	REAL	SW01063WC	15-APR-91	N	TRG	VOCCLPTCL	1,1-DICHLOROETHANE	5	UG/L		U	5								
1093	SW	REAL	SW01063WC	15-APR-91	N	TRG	VOCCLPTCL	1,1-DICHLOROETHENE	5	UG/L		U	5								
1093	SW	REAL	SW01063WC	15-APR-91	N	TRG	VOCCLPTCL	1,2-DICHLOROETHANE	5	UG/L		U	5								
1093	SW	REAL	SW01063WC	15-APR-91	N	TRG	VOCCLPTCL	1,2-DICHLOROETHENE	5	UG/L		U	5								
1093	SW	REAL	SW01063WC	15-APR-91	N	TRG	VOCCLPTCL	1,2-DICHLOROPROPANE	5	UG/L		U	5								
1093	SW	REAL	SW01063WC	15-APR-91	N	TRG	VOCCLPTCL	2-BUTANONE	10	UG/L		U	10								
1093	SW	REAL	SW01063WC	15-APR-91	N	TRG	VOCCLPTCL	2-HEXANONE	10	UG/L		U	10								
1093	SW	REAL	SW01063WC	15-APR-91	N	TRG	VOCCLPTCL	4-METHYL-2-PENTANONE	10	UG/L		U	10								
1093	SW	REAL	SW01063WC	15-APR-91	N	TRG	VOCCLPTCL	ACETONE	10	UG/L		U	10								
1093	SW	REAL	SW01063WC	15-APR-91	N	TRG	VOCCLPTCL	BENZENE	5	UG/L		U	5								
1093	SW	REAL	SW01063WC	15-APR-91	N	TRG	VOCCLPTCL	BROMODICHLOROMETHANE	5	UG/L		U	5								
1093	SW	REAL	SW01063WC	15-APR-91	N	TRG	VOCCLPTCL	BROMOFORM	5	UG/L		U	5								
1093	SW	REAL	SW01063WC	15-APR-91	N	TRG	VOCCLPTCL	BROMOMETHANE	10	UG/L		U	10								
1093	SW	REAL	SW01063WC	15-APR-91	N	TRG	VOCCLPTCL	CARBON DISULFIDE	5	UG/L		U	5								
1093	SW	REAL	SW01063WC	15-APR-91	N	TRG	VOCCLPTCL	CARBON TETRACHLORIDE	5	UG/L		U	5								
1093	SW	REAL	SW01063WC	15-APR-91	N	TRG	VOCCLPTCL	CHLOROBENZENE	5	UG/L		U	5								
1093	SW	REAL	SW01063WC	15-APR-91	N	TRG	VOCCLPTCL	CHLOROETHANE	10	UG/L		U	10								
1093	SW	REAL	SW01063WC	15-APR-91	N	TRG	VOCCLPTCL	CHLOROFORM	5	UG/L		U	5								
1093	SW	REAL	SW01063WC	15-APR-91	N	TRG	VOCCLPTCL	CHLOROMETHANE	10	UG/L		U	10								
1093	SW	REAL	SW01063WC	15-APR-91	N	TRG	VOCCLPTCL	DIBROMOCHLOROMETHANE	5	UG/L		U	5								
1093	SW	REAL	SW01063WC	15-APR-91	N	TRG	VOCCLPTCL	ETHYLBENZENE	5	UG/L		U	5								
1093	SW	REAL	SW01063WC	15-APR-91	N	TRG	VOCCLPTCL	METHYLENE CHLORIDE	19	UG/L			5	0							
1093	SW	REAL	SW01063WC	15-APR-91	N	TRG	VOCCLPTCL	STYRENE	5	UG/L		U	5								
1093	SW	REAL	SW01063WC	15-APR-91	N	TRG	VOCCLPTCL	TETRACHLOROETHENE	5	UG/L		U	5								
1093	SW	REAL	SW01063WC	15-APR-91	N	TRG	VOCCLPTCL	TOLUENE	5	UG/L		U	5								
1093	SW	REAL	SW01063WC	15-APR-91	N	TRG	VOCCLPTCL	TOTAL XYLENES	5	UG/L		U	5								

ocation	ST	QC	Sample Number	Smpl Date	D	ID	Group	Chemical	Result	Unit	Error	Qual	D LMT	VA	RN1	RN2	RN3	RN4	VResult	VQual	VDET
SW093	SW	REAL	SW01063WC	15-APR-91	N	TRG	VOCCLPTCL	TRICHLOROETHENE	5	UG/L		U	5								
SW093	SW	REAL	SW01063WC	15-APR-91	N	TRG	VOCCLPTCL	VINYL ACETATE	10	UG/L		U	10								
SW093	SW	REAL	SW01063WC	15-APR-91	N	TRG	VOCCLPTCL	VINYL CHLORIDE	10	UG/L		U	10								
SW093	SW	REAL	SW01063WC	15-APR-91	N	TRG	VOCCLPTCL	cis-1,3-DICHLOROPROPENE	5	UG/L		U	5								
SW093	SW	REAL	SW01063WC	15-APR-91	N	TRG	VOCCLPTCL	trans-1,3-DICHLOROPROPENE	5	UG/L		U	5								
SW093	SW	REAL	SW01170WC	~~22-MAY-91~~	N																
SW093	SW	REAL	SW01273WC	26-JUN-91	N	TRG	VOCCLPTCL	1,1,1-TRICHLOROETHANE	5	UG/L		U	5								
SW093	SW	REAL	SW01273WC	26-JUN-91	N	TRG	VOCCLPTCL	1,1,2,2-TETRACHLOROETHANE	5	UG/L		U	5								
SW093	SW	REAL	SW01273WC	26-JUN-91	N	TRG	VOCCLPTCL	1,1,2-TRICHLOROETHANE	5	UG/L		U	5								
SW093	SW	REAL	SW01273WC	26-JUN-91	N	TRG	VOCCLPTCL	1,1-DICHLOROETHANE	2	UG/L		J	5								
SW093	SW	REAL	SW01273WC	26-JUN-91	N	TRG	VOCCLPTCL	1,1-DICHLOROETHENE	5	UG/L		U	5								
SW093	SW	REAL	SW01273WC	26-JUN-91	N	TRG	VOCCLPTCL	1,2-DICHLOROETHANE	5	UG/L		U	5								
SW093	SW	REAL	SW01273WC	26-JUN-91	N	TRG	VOCCLPTCL	1,2-DICHLOROETHENE	5	UG/L		U	5								
SW093	SW	REAL	SW01273WC	26-JUN-91	N	TRG	VOCCLPTCL	1,2-DICHLOROPROPANE	5	UG/L		U	5								
SW093	SW	REAL	SW01273WC	26-JUN-91	N	TRG	VOCCLPTCL	2-BUTANONE	10	UG/L		U	10								
SW093	SW	REAL	SW01273WC	26-JUN-91	N	TRG	VOCCLPTCL	2-HEXANONE	10	UG/L		U	10								
SW093	SW	REAL	SW01273WC	26-JUN-91	N	TRG	VOCCLPTCL	4-METHYL-2-PENTANONE	10	UG/L		U	10								
SW093	SW	REAL	SW01273WC	26-JUN-91	N	TRG	VOCCLPTCL	ACETONE	10	UG/L		U	10								
SW093	SW	REAL	SW01273WC	26-JUN-91	N	TRG	VOCCLPTCL	BENZENE	5	UG/L		U	5								
SW093	SW	REAL	SW01273WC	26-JUN-91	N	TRG	VOCCLPTCL	BROMODICHLOROMETHANE	5	UG/L		U	5								
SW093	SW	REAL	SW01273WC	26-JUN-91	N	TRG	VOCCLPTCL	BROMOFORM	5	UG/L		U	5								
SW093	SW	REAL	SW01273WC	26-JUN-91	N	TRG	VOCCLPTCL	BROMOMETHANE	10	UG/L		U	10								
SW093	SW	REAL	SW01273WC	26-JUN-91	N	TRG	VOCCLPTCL	CARBON DISULFIDE	5	UG/L		U	5								
SW093	SW	REAL	SW01273WC	26-JUN-91	N	TRG	VOCCLPTCL	CARBON TETRACHLORIDE	5	UG/L		U	5								
SW093	SW	REAL	SW01273WC	26-JUN-91	N	TRG	VOCCLPTCL	CHLOROBENZENE	5	UG/L		U	5								
SW093	SW	REAL	SW01273WC	26-JUN-91	N	TRG	VOCCLPTCL	CHLOROETHANE	10	UG/L		U	10								
SW093	SW	REAL	SW01273WC	26-JUN-91	N	TRG	VOCCLPTCL	CHLOROFORM	5	UG/L		U	5								
SW093	SW	REAL	SW01273WC	26-JUN-91	N	TRG	VOCCLPTCL	CHLOROMETHANE	10	UG/L		U	10								
SW093	SW	REAL	SW01273WC	26-JUN-91	N	TRG	VOCCLPTCL	DIBROMOCHLOROMETHANE	5	UG/L		U	5								
SW093	SW	REAL	SW01273WC	26-JUN-91	N	TRG	VOCCLPTCL	ETHYLBENZENE	5	UG/L		U	5								
SW093	SW	REAL	SW01273WC	26-JUN-91	N	TRG	VOCCLPTCL	METHYLENE CHLORIDE	5	UG/L		U	5								
SW093	SW	REAL	SW01273WC	26-JUN-91	N	TRG	VOCCLPTCL	STYRENE	5	UG/L		U	5								
SW093	SW	REAL	SW01273WC	26-JUN-91	N	TRG	VOCCLPTCL	TETRACHLOROETHENE	5	UG/L		U	5								
SW093	SW	REAL	SW01273WC	26-JUN-91	N	TRG	VOCCLPTCL	TOLUENE	5	UG/L		U	5								
SW093	SW	REAL	SW01273WC	26-JUN-91	N	TRG	VOCCLPTCL	TOTAL XYLENES	5	UG/L		U	5								
SW093	SW	REAL	SW01273WC	26-JUN-91	N	TRG	VOCCLPTCL	TRICHLOROETHENE	5	UG/L		U	5								
SW093	SW	REAL	SW01273WC	26-JUN-91	N	TRG	VOCCLPTCL	VINYL ACETATE	10	UG/L		U	10								
SW093	SW	REAL	SW01273WC	26-JUN-91	N	TRG	VOCCLPTCL	VINYL CHLORIDE	10	UG/L		U	10								
SW093	SW	REAL	SW01273WC	26-JUN-91	N	TRG	VOCCLPTCL	cis-1,3-DICHLOROPROPENE	5	UG/L		U	5								
SW093	SW	REAL	SW01273WC	26-JUN-91	N	TRG	VOCCLPTCL	trans-1,3-DICHLOROPROPENE	5	UG/L		U	5								
SW093	SW	REAL	SW01376WC	29-JUL-91	N	TRG	VOCCLPTCL	1,1,1-TRICHLOROETHANE	5	UG/L		U	5								
SW093	SW	REAL	SW01376WC	29-JUL-91	N	TRG	VOCCLPTCL	1,1,2,2-TETRACHLOROETHANE	5	UG/L		U	5								
SW093	SW	REAL	SW01376WC	29-JUL-91	N	TRG	VOCCLPTCL	1,1,2-TRICHLOROETHANE	5	UG/L		U	5								
SW093	SW	REAL	SW01376WC	29-JUL-91	N	TRG	VOCCLPTCL	1,1-DICHLOROETHANE	5	UG/L		U	5								
SW093	SW	REAL	SW01376WC	29-JUL-91	N	TRG	VOCCLPTCL	1,1-DICHLOROETHENE	5	UG/L		U	5								
SW093	SW	REAL	SW01376WC	29-JUL-91	N	TRG	VOCCLPTCL	1,2-DICHLOROETHANE	5	UG/L		U	5								
SW093	SW	REAL	SW01376WC	29-JUL-91	N	TRG	VOCCLPTCL	1,2-DICHLOROETHENE	5	UG/L		U	5								
SW093	SW	REAL	SW01376WC	29-JUL-91	N	TRG	VOCCLPTCL	1,2-DICHLOROPROPANE	5	UG/L		U	5								
SW093	SW	REAL	SW01376WC	29-JUL-91	N	TRG	VOCCLPTCL	2-BUTANONE	10	UG/L		U	10								
SW093	SW	REAL	SW01376WC	29-JUL-91	N	TRG	VOCCLPTCL	2-HEXANONE	10	UG/L		U	10								
SW093	SW	REAL	SW01376WC	29-JUL-91	N	TRG	VOCCLPTCL	4-METHYL-2-PENTANONE	10	UG/L		U	10								
SW093	SW	REAL	SW01376WC	29-JUL-91	N	TRG	VOCCLPTCL	ACETONE	10	UG/L		U	10								
SW093	SW	REAL	SW01376WC	29-JUL-91	N	TRG	VOCCLPTCL	BENZENE	5	UG/L		U	5								
SW093	SW	REAL	SW01376WC	29-JUL-91	N	TRG	VOCCLPTCL	BROMODICHLOROMETHANE	5	UG/L		U	5								
SW093	SW	REAL	SW01376WC	29-JUL-91	N	TRG	VOCCLPTCL	BROMOFORM	5	UG/L		U	5								
SW093	SW	REAL	SW01376WC	29-JUL-91	N	TRG	VOCCLPTCL	BROMOMETHANE	10	UG/L		U	10								
SW093	SW	REAL	SW01376WC	29-JUL-91	N	TRG	VOCCLPTCL	CARBON DISULFIDE	5	UG/L		U	5								
SW093	SW	REAL	SW01376WC	29-JUL-91	N	TRG	VOCCLPTCL	CARBON TETRACHLORIDE	5	UG/L		U	5								
SW093	SW	REAL	SW01376WC	29-JUL-91	N	TRG	VOCCLPTCL	CHLOROBENZENE	5	UG/L		U	5								
SW093	SW	REAL	SW01376WC	29-JUL-91	N	TRG	VOCCLPTCL	CHLOROETHANE	10	UG/L		U	10								
SW093	SW	REAL	SW01376WC	29-JUL-91	N	TRG	VOCCLPTCL	CHLOROFORM	5	UG/L		U	5								
SW093	SW	REAL	SW01376WC	29-JUL-91	N	TRG	VOCCLPTCL	CHLOROMETHANE	10	UG/L		U	10								
SW093	SW	REAL	SW01376WC	29-JUL-91	N	TRG	VOCCLPTCL	DIBROMOCHLOROMETHANE	5	UG/L		U	5								

Location	ST	QC	Sample Number	Smpl Date	D	ID	Group	Chemical	Result	Unit	Error	Qual	D	LMT	VA	RN1	RN2	RN3	RN4	VResult	VQual	VDET
SW093	SW	REAL	SW01376WC	29-JUL-91	N	TRG	VOCCLPTCL	ETHYLBENZENE	5	UG/L		U		5								
SW093	SW	REAL	SW01376WC	29-JUL-91	N	TRG	VOCCLPTCL	METHYLENE CHLORIDE	5	UG/L		U		5								
SW093	SW	REAL	SW01376WC	29-JUL-91	N	TRG	VOCCLPTCL	STYRENE	5	UG/L		U		5								
SW093	SW	REAL	SW01376WC	29-JUL-91	N	TRG	VOCCLPTCL	TETRACHLOROETHENE	5	UG/L		U		5								
SW093	SW	REAL	SW01376WC	29-JUL-91	N	TRG	VOCCLPTCL	TOLUENE	5	UG/L		U		5								
SW093	SW	REAL	SW01376WC	29-JUL-91	N	TRG	VOCCLPTCL	TOTAL XYLENES	5	UG/L		U		5								
SW093	SW	REAL	SW01376WC	29-JUL-91	N	TRG	VOCCLPTCL	TRICHLOROETHENE	5	UG/L		U		5								
SW093	SW	REAL	SW01376WC	29-JUL-91	N	TRG	VOCCLPTCL	VINYL ACETATE	10	UG/L		U		10								
SW093	SW	REAL	SW01376WC	29-JUL-91	N	TRG	VOCCLPTCL	VINYL CHLORIDE	10	UG/L		U		10								
SW093	SW	REAL	SW01376WC	29-JUL-91	N	TRG	VOCCLPTCL	cis-1,3-DICHLOROPROPENE	5	UG/L		U		5								
SW093	SW	REAL	SW01376WC	29-JUL-91	N	TRG	VOCCLPTCL	trans-1,3-DICHLOROPROPENE	5	UG/L		U		5								
SW093	SW	REAL	SW01482WC	14-AUG-91	N	TRG	VOCCLPTCL	1,1,1-TRICHLOROETHANE	5	UG/L		U		5								
SW093	SW	REAL	SW01482WC	14-AUG-91	N	TRG	VOCCLPTCL	1,1,2,2-TETRACHLOROETHANE	5	UG/L		U		5								
SW093	SW	REAL	SW01482WC	14-AUG 91	N	TRG	VOCCLPTCL	1,1,2-TRICHLOROETHANE	5	UG/L		U		5								
SW093	SW	REAL	SW01482WC	14-AUG-91	N	TRG	VOCCLPTCL	1,1-DICHLOROETHANE	5	UG/L		U		5								
SW093	SW	REAL	SW01482WC	14-AUG-91	N	TRG	VOCCLPTCL	1,1-DICHLOROETHENE	5	UG/L		U		5								
SW093	SW	REAL	SW01482WC	14-AUG 91	N	TRG	VOCCLPTCL	1,2-DICHLOROETHANE	5	UG/L		U		5								
SW093	SW	REAL	SW01482WC	14-AUG-91	N	TRG	VOCCLPTCL	1,2-DICHLOROETHENE	5	UG/L		U		5								
SW093	SW	REAL	SW01482WC	14-AUG-91	N	TRG	VOCCLPTCL	1,2-DICHLOROPROPANE	5	UG/L		U		5								
SW093	SW	REAL	SW01482WC	14-AUG-91	N	TRG	VOCCLPTCL	2 BUTANONE	10	UG/L		U		10								
SW093	SW	REAL	SW01482WC	14-AUG-91	N	TRG	VOCCLPTCL	2-HEXANONE	10	UG/L		U		10								
SW093	SW	REAL	SW01482WC	14-AUG-91	N	TRG	VOCCLPTCL	4 METHYL-2-PENTANONE	10	UG/L		U		10								
SW093	SW	REAL	SW01482WC	14-AUG-91	N	TRG	VOCCLPTCL	ACETONE	7	UG/L		JB		10								
SW093	SW	REAL	SW01482WC	14-AUG-91	N	TRG	VOCCLPTCL	BENZENE	5	UG/L		U		5								
SW093	SW	REAL	SW01482WC	14-AUG-91	N	TRG	VOCCLPTCL	BROMODICHLOROMETHANE	5	UG/L		U		5								
SW093	SW	REAL	SW01482WC	14-AUG-91	N	TRG	VOCCLPTCL	BROMOFORM	5	UG/L		U		5								
SW093	SW	REAL	SW01482WC	14-AUG-91	N	TRG	VOCCLPTCL	BROMOMETHANE	10	UG/L		U		10								
SW093	SW	REAL	SW01482WC	14-AUG-91	N	TRG	VOCCLPTCL	CARBON DISULFIDE	5	UG/L		U		5								
SW093	SW	REAL	SW01482WC	14-AUG-91	N	TRG	VOCCLPTCL	CARBON TETRACHLORIDE	5	UG/L		U		5								
SW093	SW	REAL	SW01482WC	14-AUG-91	N	TRG	VOCCLPTCL	CHLOROBENZENE	5	UG/L		U		5								
SW093	SW	REAL	SW01482WC	14-AUG-91	N	TRG	VOCCLPTCL	CHLOROETHANE	10	UG/L		U		10								
SW093	SW	REAL	SW01482WC	14-AUG-91	N	TRG	VOCCLPTCL	CHLOROFORM	5	UG/L		U		5								
SW093	SW	REAL	SW01482WC	14-AUG-91	N	TRG	VOCCLPTCL	CHLOROMETHANE	10	UG/L		U		10								
SW093	SW	REAL	SW01482WC	14-AUG-91	N	TRG	VOCCLPTCL	DIBROMOCHLOROMETHANE	5	UG/L		U		5								
SW093	SW	REAL	SW01482WC	14-AUG-91	N	TRG	VOCCLPTCL	ETHYLBENZENE	5	UG/L		U		5								
SW093	SW	REAL	SW01482WC	14-AUG-91	N	TRG	VOCCLPTCL	METHYLENE CHLORIDE	(38	UG/L		B)		5	0							
SW093	SW	REAL	SW01482WC	14-AUG-91	N	TRG	VOCCLPTCL	STYRENE	5	UG/L		U		5								
SW093	SW	REAL	SW01482WC	14-AUG-91	N	TRG	VOCCLPTCL	TETRACHLOROETHENE	5	UG/L		U		5								
SW093	SW	REAL	SW01482WC	14-AUG-91	N	TRG	VOCCLPTCL	TOLUENE	5	UG/L		U		5								
SW093	SW	REAL	SW01482WC	14-AUG-91	N	TRG	VOCCLPTCL	TOTAL XYLENES	5	UG/L		U		5								
SW093	SW	REAL	SW01482WC	14-AUG-91	N	TRG	VOCCLPTCL	TRICHLOROETHENE	5	UG/L		U		5								
SW093	SW	REAL	SW01482WC	14-AUG-91	N	TRG	VOCCLPTCL	VINYL ACETATE	10	UG/L		U		10								
SW093	SW	REAL	SW01482WC	14-AUG-91	N	TRG	VOCCLPTCL	VINYL CHLORIDE	10	UG/L		U		10								
SW093	SW	REAL	SW01482WC	14-AUG-91	N	TRG	VOCCLPTCL	cis-1,3-DICHLOROPROPENE	5	UG/L		U		5								
SW093	SW	REAL	SW01482WC	14-AUG-91	N	TRG	VOCCLPTCL	trans-1,3-DICHLOROPROPENE	5	UG/L		U		5								
SW093	SW	REAL	SW01588WC	19-SEP-91	N	TRG	VOACLP	1,1,1-TRICHLOROETHANE	5	UG/L		U		5								
SW093	SW	REAL	SW01588WC	19-SEP-91	N	TRG	VOACLP	1,1,2,2-TETRACHLOROETHANE	5	UG/L		U		5								
SW093	SW	REAL	SW01588WC	19-SEP-91	N	TRG	VOACLP	1,1,2-TRICHLOROETHANE	5	UG/L		U		5								
SW093	SW	REAL	SW01588WC	19-SEP-91	N	TRG	VOACLP	1,1-DICHLOROETHANE	5	UG/L		U		5								
SW093	SW	REAL	SW01588WC	19-SEP-91	N	TRG	VOACLP	1,1-DICHLOROETHENE	5	UG/L		U		5								
SW093	SW	REAL	SW01588WC	19-SEP-91	N	TRG	VOACLP	1,2-DICHLOROETHANE	5	UG/L		U		5								
SW093	SW	REAL	SW01588WC	19-SEP-91	N	TRG	VOACLP	1,2-DICHLOROETHENE	5	UG/L		U		5								
SW093	SW	REAL	SW01588WC	19-SEP-91	N	TRG	VOACLP	1,2-DICHLOROPROPANE	5	UG/L		U		5								
SW093	SW	REAL	SW01588WC	19-SEP-91	N	TRG	VOACLP	2-BUTANONE	10	UG/L		U		10								
SW093	SW	REAL	SW01588WC	19-SEP-91	N	TRG	VOACLP	2-HEXANONE	10	UG/L		U		10								
SW093	SW	REAL	SW01588WC	19-SEP-91	N	TRG	VOACLP	4-METHYL-2-PENTANONE	10	UG/L		U		10								
SW093	SW	REAL	SW01588WC	19-SEP-91	N	TRG	VOACLP	ACETONE	7	UG/L		JB		10								
SW093	SW	REAL	SW01588WC	19-SEP-91	N	TRG	VOACLP	BENZENE	5	UG/L		U		5								
SW093	SW	REAL	SW01588WC	19-SEP-91	N	TRG	VOACLP	BROMODICHLOROMETHANE	5	UG/L		U		5								
SW093	SW	REAL	SW01588WC	19-SEP-91	N	TRG	VOACLP	BROMOFORM	5	UG/L		U		5								
SW093	SW	REAL	SW01588WC	19-SEP-91	N	TRG	VOACLP	BROMOMETHANE	10	UG/L		U		10								
SW093	SW	REAL	SW01588WC	19-SEP-91	N	TRG	VOACLP	CARBON DISULFIDE	5	UG/L		U		5								
SW093	SW	REAL	SW01588WC	19-SEP-91	N	TRG	VOACLP	CARBON TETRACHLORIDE	5	UG/L		U		5								

Location	ST	QC	Sample Number	Smpl Date	D	ID	Group	Chemical	Result	Unit	Error	Qual	D	LMT	VA	RN1	RN2	RN3	RN4	VResult	VQual	VDET
SW093	SW	REAL	SW01588WC	19-SEP-91	N	TRG	VOACLP	CHLOROBENZENE	5	UG/L		U	5									
SW093	SW	REAL	SW01588WC	19-SEP-91	N	TRG	VOACLP	CHLOROETHANE	10	UG/L		U	10									
SW093	SW	REAL	SW01588WC	19-SEP-91	N	TRG	VOACLP	CHLOROFORM	5	UG/L		U	5									
SW093	SW	REAL	SW01588WC	19-SEP-91	N	TRG	VOACLP	CHLOROMETHANE	10	UG/L		U	10									
SW093	SW	REAL	SW01588WC	19-SEP-91	N	TRG	VOACLP	DIBROMOCHLOROMETHANE	5	UG/L		U	5									
SW093	SW	REAL	SW01588WC	19-SEP-91	N	TRG	VOACLP	ETHYLBENZENE	5	UG/L		U	5									
SW093	SW	REAL	SW01588WC	19-SEP-91	N	TRG	VOACLP	METHYLENE CHLORIDE	8	UG/L		B	5									
SW093	SW	REAL	SW01588WC	19-SEP-91	N	TRG	VOACLP	STYRENE	5	UG/L		U	5									
SW093	SW	REAL	SW01588WC	19-SEP-91	N	TRG	VOACLP	TETRACHLOROETHENE	6	UG/L		[illegible]	5									
SW093	SW	REAL	SW01588WC	19-SEP-91	N	TRG	VOACLP	TOLUENE	5	UG/L		U	5									
SW093	SW	REAL	SW01588WC	19-SEP-91	N	TRG	VOACLP	TOTAL XYLENES	5	UG/L		U	5									
SW093	SW	REAL	SW01588WC	19-SEP-91	N	TRG	VOACLP	TRICHLOROETHENE	5	UG/L		U	5									
SW093	SW	REAL	SW01588WC	19-SEP-91	N	TRG	VOACLP	VINYL ACETATE	10	UG/L		U	10									
SW093	SW	REAL	SW01588WC	19-SEP-91	N	TRG	VOACLP	VINYL CHLORIDE	10	UG/L		U	10									
SW093	SW	REAL	SW01588WC	19-SEP-91	N	TRG	VOACLP	cis-1,3-DICHLOROPROPENE	5	UG/L		U	5									
SW093	SW	REAL	SW01588WC	19-SEP-91	N	TRG	VOACLP	trans-1,3-DICHLOROPROPENE	5	UG/L		U	5									
SW093	SW	REAL	SW01694WC	28-OCT-91	N																	
SW093	SW	REAL	SW60065WC	19-MAR-91	N																	
SW093	SW	REAL	SW60093WC	17-MAY-91	N																	
SW093	SW	REAL	SW60110WC	11-JUN-91	N																	
SW093	SW	REAL	SW60118WC	10-JUL-91	N																	
SW093	SW	REAL	SW60123WC	23-JUL-91	N																	
SW093	SW	REAL	SW60131WC	29-JUL-91	N																	
SW093	SW	REAL	SW60135WC	05-AUG-91	N																	
SW093	SW	REAL	SW60143WC	07-AUG-91	N																	
SW093	SW	REAL	SW60150WC	12-AUG-91	N																	
SW093	SW	REAL	SW60158WC	19-AUG-91	N																	
SW093	SW		SW01694WC	28-OCT-91	N																	
SW118	SW	REAL	SW00765WC	30-JAN-91	N																	
SW118	SW	REAL	SW00868WC	20-FEB-91	N																	
SW118	SW	REAL	SW00971WC	21-MAR-91	N	TRG	VOCCLPTCL	1,1,1-TRICHLOROETHANE	5	UG/L		U	5									
SW118	SW	REAL	SW00971WC	21-MAR-91	N	TRG	VOCCLPTCL	1,1,2,2-TETRACHLOROETHANE	5	UG/L		U	5									
SW118	SW	REAL	SW00971WC	21-MAR-91	N	TRG	VOCCLPTCL	1,1,2-TRICHLOROETHANE	5	UG/L		U	5									
SW118	SW	REAL	SW00971WC	21-MAR-91	N	TRG	VOCCLPTCL	1,1-DICHLOROETHANE	5	UG/L		U	5									
SW118	SW	REAL	SW00971WC	21-MAR-91	N	TRG	VOCCLPTCL	1,1-DICHLOROETHENE	5	UG/L		U	5									
SW118	SW	REAL	SW00971WC	21-MAR-91	N	TRG	VOCCLPTCL	1,2-DICHLOROETHANE	5	UG/L		U	5									
SW118	SW	REAL	SW00971WC	21-MAR-91	N	TRG	VOCCLPTCL	1,2-DICHLOROETHENE	5	UG/L		U	5									
SW118	SW	REAL	SW00971WC	21-MAR-91	N	TRG	VOCCLPTCL	1,2-DICHLOROPROPANE	5	UG/L		U	5									
SW118	SW	REAL	SW00971WC	21-MAR-91	N	TRG	VOCCLPTCL	2-BUTANONE	10	UG/L		U	10									
SW118	SW	REAL	SW00971WC	21-MAR-91	N	TRG	VOCCLPTCL	2-HEXANONE	10	UG/L		U	10									
SW118	SW	REAL	SW00971WC	21-MAR-91	N	TRG	VOCCLPTCL	4-METHYL-2-PENTANONE	10	UG/L		U	10									
SW118	SW	REAL	SW00971WC	21-MAR-91	N	TRG	VOCCLPTCL	ACETONE	10	UG/L		U	10									
SW118	SW	REAL	SW00971WC	21-MAR-91	N	TRG	VOCCLPTCL	BENZENE	5	UG/L		U	5									
SW118	SW	REAL	SW00971WC	21-MAR-91	N	TRG	VOCCLPTCL	BROMODICHLOROMETHANE	5	UG/L		U	5									
SW118	SW	REAL	SW00971WC	21-MAR-91	N	TRG	VOCCLPTCL	BROMOFORM	5	UG/L		U	5									
SW118	SW	REAL	SW00971WC	21-MAR-91	N	TRG	VOCCLPTCL	BROMOMETHANE	10	UG/L		U	10									
SW118	SW	REAL	SW00971WC	21-MAR-91	N	TRG	VOCCLPTCL	CARBON DISULFIDE	5	UG/L		U	5									
SW118	SW	REAL	SW00971WC	21-MAR-91	N	TRG	VOCCLPTCL	CARBON TETRACHLORIDE	5	UG/L		U	5									
SW118	SW	REAL	SW00971WC	21-MAR-91	N	TRG	VOCCLPTCL	CHLOROBENZENE	5	UG/L		U	5									
SW118	SW	REAL	SW00971WC	21-MAR-91	N	TRG	VOCCLPTCL	CHLOROETHANE	10	UG/L		U	10									
SW118	SW	REAL	SW00971WC	21-MAR-91	N	TRG	VOCCLPTCL	CHLOROFORM	5	UG/L		U	5									
SW118	SW	REAL	SW00971WC	21-MAR-91	N	TRG	VOCCLPTCL	CHLOROMETHANE	10	UG/L		U	10									
SW118	SW	REAL	SW00971WC	21-MAR-91	N	TRG	VOCCLPTCL	DIBROMOCHLOROMETHANE	5	UG/L		U	5									
SW118	SW	REAL	SW00971WC	21-MAR-91	N	TRG	VOCCLPTCL	ETHYLBENZENE	5	UG/L		U	5									
SW118	SW	REAL	SW00971WC	21-MAR-91	N	TRG	VOCCLPTCL	METHYLENE CHLORIDE	3	UG/L		JB	5									
SW118	SW	REAL	SW00971WC	21-MAR-91	N	TRG	VOCCLPTCL	STYRENE	5	UG/L		U	5									
SW118	SW	REAL	SW00971WC	21-MAR-91	N	TRG	VOCCLPTCL	TETRACHLOROETHENE	5	UG/L		U	5									
SW118	SW	REAL	SW00971WC	21-MAR-91	N	TRG	VOCCLPTCL	TOLUENE	5	UG/L		U	5									
SW118	SW	REAL	SW00971WC	21-MAR-91	N	TRG	VOCCLPTCL	TOTAL XYLENES	5	UG/L		U	5									
SW118	SW	REAL	SW00971WC	21-MAR-91	N	TRG	VOCCLPTCL	TRICHLOROETHENE	5	UG/L		U	5									
SW118	SW	REAL	SW00971WC	21-MAR-91	N	TRG	VOCCLPTCL	VINYL ACETATE	10	UG/L		U	10									
SW118	SW	REAL	SW00971WC	21-MAR-91	N	TRG	VOCCLPTCL	VINYL CHLORIDE	10	UG/L		U	10									
SW118	SW	REAL	SW00971WC	21-MAR-91	N	TRG	VOCCLPTCL	cis-1,3-DICHLOROPROPENE	5	UG/L		U	5									

Location	ST	QC	Sample Number	Smpl Date	D	ID	Group	Chemical	Result	Unit	Error	Qual	D LMT	VA	RN1	RN2	RN3	RN4	VResult	VQual	VDET
SW118	SW	REAL	SW00971WC	21-MAR-91	N	TRG	VOCCLPTCL	trans-1,3-DICHLOROPROPENE	5	UG/L		U	5								
SW118	SW	REAL	SW01073WC	10-APR-91	N	TRG	SVOCLPTCL	1,2,4-TRICHLOROBENZENE	10	UG/L		U	10								
SW118	SW	REAL	SW01073WC	10-APR-91	N	TRG	SVOCLPTCL	1,2 DICHLOROBENZENE	10	UG/L		U	10								
SW118	SW	REAL	SW01073WC	10-APR-91	N	TRG	SVOCLPTCL	1,3-DICHLOROBENZENE	10	UG/L		U	10								
SW118	SW	REAL	SW01073WC	10-APR-91	N	TRG	SVOCLPTCL	1,4-DICHLOROBENZENE	10	UG/L		U	10								
SW118	SW	REAL	SW01073WC	10-APR-91	N	TRG	SVOCLPTCL	2,4,5-TRICHLOROPHENOL	50	UG/L		U	50								
SW118	SW	REAL	SW01073WC	10-APR-91	N	TRG	SVOCLPTCL	2,4,6-TRICHLOROPHENOL	10	UG/L		U	10								
SW118	SW	REAL	SW01073WC	10-APR-91	N	TRG	SVOCLPTCL	2,4-DICHLOROPHENOL	10	UG/L		U	10								
SW118	SW	REAL	SW01073WC	10-APR-91	N	TRG	SVOCLPTCL	2,4-DIMETHYLPHENOL	10	UG/L		U	10								
SW118	SW	REAL	SW01073WC	10-APR-91	N	TRG	SVOCLPTCL	2,4-DINITROPHENOL	50	UG/L		U	50								
SW118	SW	REAL	SW01073WC	10-APR-91	N	TRG	SVOCLPTCL	2,4-DINITROTOLUENE	10	UG/L		U	10								
SW118	SW	REAL	SW01073WC	10-APR-91	N	TRG	SVOCLPTCL	2,6-DINITROTOLUENE	10	UG/L		U	10								
SW118	SW	REAL	SW01073WC	10-APR-91	N	TRG	SVOCLPTCL	2-CHLORONAPHTHALENE	10	UG/L		U	10								
SW118	SW	REAL	SW01073WC	10-APR-91	N	TRG	SVOCLPTCL	2-CHLOROPHENOL	10	UG/L		U	10								
SW118	SW	REAL	SW01073WC	10-APR-91	N	TRG	SVOCLPTCL	2-METHYLNAPHTHALENE	10	UG/L		U	10								
SW118	SW	REAL	SW01073WC	10-APR-91	N	TRG	SVOCLPTCL	2-METHYLPHENOL	10	UG/L		U	10								
SW118	SW	REAL	SW01073WC	10-APR-91	N	TRG	SVOCLPTCL	2-NITROANILINE	50	UG/L		U	50								
SW118	SW	REAL	SW01073WC	10-APR-91	N	TRG	SVOCLPTCL	2-NITROPHENOL	10	UG/L		U	10								
SW118	SW	REAL	SW01073WC	10-APR-91	N	TRG	SVOCLPTCL	3,3'-DICHLOROBENZIDINE	20	UG/L		U	20								
SW118	SW	REAL	SW01073WC	10-APR-91	N	TRG	SVOCLPTCL	3-NITROANILINE	50	UG/L		U	50								
SW118	SW	REAL	SW01073WC	10-APR-91	N	TRG	SVOCLPTCL	4,6-DINITRO-2-METHYLPHENOL	50	UG/L		U	50								
SW118	SW	REAL	SW01073WC	10-APR-91	N	TRG	SVOCLPTCL	4-BROMOPHENYL PHENYL ETHER	10	UG/L		U	10								
SW118	SW	REAL	SW01073WC	10-APR-91	N	TRG	SVOCLPTCL	4-CHLORO-3-METHYLPHENOL	10	UG/L		U	10								
SW118	SW	REAL	SW01073WC	10-APR-91	N	TRG	SVOCLPTCL	4-CHLOROANILINE	10	UG/L		U	10								
SW118	SW	REAL	SW01073WC	10-APR-91	N	TRG	SVOCLPTCL	4-CHLOROPHENYL PHENYL ETHER	10	UG/L		U	10								
SW118	SW	REAL	SW01073WC	10-APR-91	N	TRG	SVOCLPTCL	4-METHYLPHENOL	10	UG/L		U	10								
SW118	SW	REAL	SW01073WC	10-APR-91	N	TRG	SVOCLPTCL	4-NITROANILINE	50	UG/L		U	50								
SW118	SW	REAL	SW01073WC	10-APR-91	N	TRG	SVOCLPTCL	4-NITROPHENOL	50	UG/L		U	50								
SW118	SW	REAL	SW01073WC	10-APR-91	N	TRG	SVOCLPTCL	ACENAPHTHENE	10	UG/L		U	10								
SW118	SW	REAL	SW01073WC	10-APR-91	N	TRG	SVOCLPTCL	ACENAPHTHYLENE	10	UG/L		U	10								
SW118	SW	REAL	SW01073WC	10-APR-91	N	TRG	SVOCLPTCL	ANTHRACENE	10	UG/L		U	10								
SW118	SW	REAL	SW01073WC	10-APR-91	N	TRG	SVOCLPTCL	BENZO(a)ANTHRACENE	10	UG/L		U	10								
SW118	SW	REAL	SW01073WC	10-APR-91	N	TRG	SVOCLPTCL	BENZO(a)PYRENE	10	UG/L		U	10								
SW118	SW	REAL	SW01073WC	10-APR-91	N	TRG	SVOCLPTCL	BENZO(b)FLUORANTHENE	10	UG/L		U	10								
SW118	SW	REAL	SW01073WC	10-APR-91	N	TRG	SVOCLPTCL	BENZO(ghi)PERYLENE	10	UG/L		U	10								
SW118	SW	REAL	SW01073WC	10-APR-91	N	TRG	SVOCLPTCL	BENZO(k)FLUORANTHENE	10	UG/L		U	10								
SW118	SW	REAL	SW01073WC	10-APR-91	N	TRG	SVOCLPTCL	BENZOIC ACID	50	UG/L		U	50								
SW118	SW	REAL	SW01073WC	10-APR-91	N	TRG	SVOCLPTCL	BENZYL ALCOHOL	10	UG/L		U	10								
SW118	SW	REAL	SW01073WC	10-APR-91	N	TRG	SVOCLPTCL	BIS(2-CHLOROETHOXY)METHANE	10	UG/L		U	10								
SW118	SW	REAL	SW01073WC	10-APR-91	N	TRG	SVOCLPTCL	BIS(2-CHLOROETHYL)ETHER	10	UG/L		U	10								
SW118	SW	REAL	SW01073WC	10-APR-91	N	TRG	SVOCLPTCL	BIS(2-CHLOROISOPROPYL)ETHER	10	UG/L		U	10								
SW118	SW	REAL	SW01073WC	10-APR-91	N	TRG	SVOCLPTCL	BIS(2-ETHYLHEXYL)PHTHALATE	10	UG/L		U	10								
SW118	SW	REAL	SW01073WC	10-APR-91	N	TRG	SVOCLPTCL	BUTYL BENZYL PHTHALATE	10	UG/L		U	10								
SW118	SW	REAL	SW01073WC	10-APR-91	N	TRG	SVOCLPTCL	CHRYSENE	10	UG/L		U	10								
SW118	SW	REAL	SW01073WC	10-APR-91	N	TRG	SVOCLPTCL	DI-n-BUTYL PHTHALATE	10	UG/L		U	10								
SW118	SW	REAL	SW01073WC	10-APR-91	N	TRG	SVOCLPTCL	DI-n-OCTYL PHTHALATE	10	UG/L		U	10								
SW118	SW	REAL	SW01073WC	10-APR-91	N	TRG	SVOCLPTCL	DIBENZO(a,h)ANTHRACENE	10	UG/L		U	10								
SW118	SW	REAL	SW01073WC	10-APR-91	N	TRG	SVOCLPTCL	DIBENZOFURAN	10	UG/L		U	10								
SW118	SW	REAL	SW01073WC	10-APR-91	N	TRG	SVOCLPTCL	DIETHYL PHTHALATE	10	UG/L		U	10								
SW118	SW	REAL	SW01073WC	10-APR-91	N	TRG	SVOCLPTCL	DIMETHYL PHTHALATE	10	UG/L		U	10								
SW118	SW	REAL	SW01073WC	10-APR-91	N	TRG	SVOCLPTCL	FLUORANTHENE	10	UG/L		U	10								
SW118	SW	REAL	SW01073WC	10-APR-91	N	TRG	SVOCLPTCL	FLUORENE	10	UG/L		U	10								
SW118	SW	REAL	SW01073WC	10-APR-91	N	TRG	SVOCLPTCL	HEXACHLOROBENZENE	10	UG/L		U	10								
SW118	SW	REAL	SW01073WC	10-APR-91	N	TRG	SVOCLPTCL	HEXACHLOROBUTADIENE	10	UG/L		U	10								
SW118	SW	REAL	SW01073WC	10-APR-91	N	TRG	SVOCLPTCL	HEXACHLOROCYCLOPENTADIENE	10	UG/L		U	10								
SW118	SW	REAL	SW01073WC	10-APR-91	N	TRG	SVOCLPTCL	HEXACHLOROETHANE	10	UG/L		U	10								
SW118	SW	REAL	SW01073WC	10-APR-91	N	TRG	SVOCLPTCL	INDENO(1,2,3-cd)PYRENE	10	UG/L		U	10								
SW118	SW	REAL	SW01073WC	10-APR-91	N	TRG	SVOCLPTCL	ISOPHORONE	10	UG/L		U	10								
SW118	SW	REAL	SW01073WC	10-APR-91	N	TRG	SVOCLPTCL	N-NITROSO-DI-n-PROPYLAMINE	10	UG/L		U	10								
SW118	SW	REAL	SW01073WC	10-APR-91	N	TRG	SVOCLPTCL	N-NITROSODIPHENYLAMINE	10	UG/L		U	10								
SW118	SW	REAL	SW01073WC	10-APR-91	N	TRG	SVOCLPTCL	NAPHTHALENE	10	UG/L		U	10								
SW118	SW	REAL	SW01073WC	10-APR-91	N	TRG	SVOCLPTCL	NITROBENZENE	10	UG/L		U	10								
SW118	SW	REAL	SW01073WC	10-APR-91	N	TRG	SVOCLPTCL	PENTACHLOROPHENOL	50	UG/L		U	50								

Location	ST	QC	Sample Number	Smpl Date	D	ID	Group	Chemical	Result	Unit	Error	Qual	D LMT	VA	RN1	RN2	RN3	RN4	VResult	VQual	VDET
SW118	SW	REAL	SW01073WC	10-APR-91	N	TRG	SVOCLPTCL	PHENANTHRENE	10	UG/L		U	10								
SW118	SW	REAL	SW01073WC	10-APR-91	N	TRG	SVOCLPTCL	PHENOL	10	UG/L		U	10								
SW118	SW	REAL	SW01073WC	10-APR-91	N	TRG	SVOCLPTCL	PYRENE	10	UG/L		U	10								
SW118	SW	REAL	SW01073WC	10-APR-91	N	TRG	VOCCLPTCL	1,1,1-TRICHLOROETHANE	5	UG/L		U	5								
SW118	SW	REAL	SW01073WC	10-APR-91	N	TRG	VOCCLPTCL	1,1,2,2-TETRACHLOROETHANE	5	UG/L		U	5								
SW118	SW	REAL	SW01073WC	10-APR-91	N	TRG	VOCCLPTCL	1,1,2-TRICHLOROETHANE	5	UG/L		U	5								
SW118	SW	REAL	SW01073WC	10-APR-91	N	TRG	VOCCLPTCL	1,1-DICHLOROETHANE	5	UG/L		U	5								
SW118	SW	REAL	SW01073WC	10-APR-91	N	TRG	VOCCLPTCL	1,1-DICHLOROETHENE	5	UG/L		U	5								
SW118	SW	REAL	SW01073WC	10-APR-91	N	TRG	VOCCLPTCL	1,2-DICHLOROETHANE	5	UG/L		U	5								
SW118	SW	REAL	SW01073WC	10-APR-91	N	TRG	VOCCLPTCL	1,2-DICHLOROETHENE	5	UG/L		U	5								
SW118	SW	REAL	SW01073WC	10-APR-91	N	TRG	VOCCLPTCL	1,2-DICHLOROPROPANE	5	UG/L		U	5								
SW118	SW	REAL	SW01073WC	10-APR-91	N	TRG	VOCCLPTCL	2-BUTANONE	10	UG/L		U	10								
SW118	SW	REAL	SW01073WC	10-APR-91	N	TRG	VOCCLPTCL	2-HEXANONE	10	UG/L		U	10								
SW118	SW	REAL	SW01073WC	10-APR-91	N	TRG	VOCCLPTCL	4-METHYL-2 PENTANONE	10	UG/L		U	10								
SW118	SW	REAL	SW01073WC	10-APR-91	N	TRG	VOCCLPTCL	ACETONE	10	UG/L		U	10								
SW118	SW	REAL	SW01073WC	10-APR-91	N	TRG	VOCCLPTCL	BENZENE	5	UG/L		U	5								
SW118	SW	REAL	SW01073WC	10-APR-91	N	TRG	VOCCLPTCL	BROMODICHLOROMETHANE	5	UG/L		U	5								
SW118	SW	REAL	SW01073WC	10-APR-91	N	TRG	VOCCLPTCL	BROMOFORM	5	UG/L		U	5								
SW118	SW	REAL	SW01073WC	10-APR-91	N	TRG	VOCCLPTCL	BROMOMETHANE	10	UG/L		U	10								
SW118	SW	REAL	SW01073WC	10-APR-91	N	TRG	VOCCLPTCL	CARBON DISULFIDE	5	UG/L		U	5								
SW118	SW	REAL	SW01073WC	10-APR-91	N	TRG	VOCCLPTCL	CARBON TETRACHLORIDE	5	UG/L		U	5								
SW118	SW	REAL	SW01073WC	10-APR-91	N	TRG	VOCCLPTCL	CHLOROBENZENE	5	UG/L		U	5								
SW118	SW	REAL	SW01073WC	10-APR-91	N	TRG	VOCCLPTCL	CHLOROETHANE	10	UG/L		U	10								
SW118	SW	REAL	SW01073WC	10-APR-91	N	TRG	VOCCLPTCL	CHLOROFORM	5	UG/L		U	5								
SW118	SW	REAL	SW01073WC	10-APR-91	N	TRG	VOCCLPTCL	CHLOROMETHANE	10	UG/L		U	10								
SW118	SW	REAL	SW01073WC	10-APR-91	N	TRG	VOCCLPTCL	DIBROMOCHLOROMETHANE	5	UG/L		U	5								
SW118	SW	REAL	SW01073WC	10-APR-91	N	TRG	VOCCLPTCL	ETHYLBENZENE	5	UG/L		U	5								
SW118	SW	REAL	SW01073WC	10-APR-91	N	TRG	VOCCLPTCL	METHYLENE CHLORIDE	5	UG/L		U	5								
SW118	SW	REAL	SW01073WC	10-APR-91	N	TRG	VOCCLPTCL	STYRENE	5	UG/L		U	5								
SW118	SW	REAL	SW01073WC	10-APR-91	N	TRG	VOCCLPTCL	TETRACHLOROETHENE	5	UG/L		U	5								
SW118	SW	REAL	SW01073WC	10-APR-91	N	TRG	VOCCLPTCL	TOLUENE	5	UG/L		U	5								
SW118	SW	REAL	SW01073WC	10-APR-91	N	TRG	VOCCLPTCL	TOTAL XYLENES	5	UG/L		U	5								
SW118	SW	REAL	SW01073WC	10-APR-91	N	TRG	VOCCLPTCL	TRICHLOROETHENE	5	UG/L		U	5								
SW118	SW	REAL	SW01073WC	10-APR-91	N	TRG	VOCCLPTCL	VINYL ACETATE	10	UG/L		U	10								
SW118	SW	REAL	SW01073WC	10-APR-91	N	TRG	VOCCLPTCL	VINYL CHLORIDE	10	UG/L		U	10								
SW118	SW	REAL	SW01073WC	10-APR-91	N	TRG	VOCCLPTCL	cis-1,3-DICHLOROPROPENE	5	UG/L		U	5								
SW118	SW	REAL	SW01073WC	10-APR-91	N	TRG	VOCCLPTCL	trans-1,3-DICHLOROPROPENE	5	UG/L		U	5								
SW118	SW	REAL	SW01180WC	09-MAY-91	N	TRG	VOCCLPTCL	1,1,1-TRICHLOROETHANE	5	UG/L		U	5								
SW118	SW	REAL	SW01180WC	09-MAY-91	N	TRG	VOCCLPTCL	1,1,2,2-TETRACHLOROETHANE	5	UG/L		U	5								
SW118	SW	REAL	SW01180WC	09-MAY-91	N	TRG	VOCCLPTCL	1,1,2-TRICHLOROETHANE	5	UG/L		U	5								
SW118	SW	REAL	SW01180WC	09-MAY-91	N	TRG	VOCCLPTCL	1,1-DICHLOROETHANE	5	UG/L		U	5								
SW118	SW	REAL	SW01180WC	09-MAY-91	N	TRG	VOCCLPTCL	1,1-DICHLOROETHENE	5	UG/L		U	5								
SW118	SW	REAL	SW01180WC	09-MAY-91	N	TRG	VOCCLPTCL	1,2-DICHLOROETHANE	5	UG/L		U	5								
SW118	SW	REAL	SW01180WC	09-MAY-91	N	TRG	VOCCLPTCL	1,2-DICHLOROETHENE	5	UG/L		U	5								
SW118	SW	REAL	SW01180WC	09-MAY-91	N	TRG	VOCCLPTCL	1,2-DICHLOROPROPANE	5	UG/L		U	5								
SW118	SW	REAL	SW01180WC	09-MAY-91	N	TRG	VOCCLPTCL	2-BUTANONE	10	UG/L		U	10								
SW118	SW	REAL	SW01180WC	09-MAY-91	N	TRG	VOCCLPTCL	2-HEXANONE	10	UG/L		U	10								
SW118	SW	REAL	SW01180WC	09-MAY-91	N	TRG	VOCCLPTCL	4-METHYL-2-PENTANONE	10	UG/L		U	10								
SW118	SW	REAL	SW01180WC	09-MAY-91	N	TRG	VOCCLPTCL	ACETONE	10	UG/L		U	10								
SW118	SW	REAL	SW01180WC	09-MAY-91	N	TRG	VOCCLPTCL	BENZENE	5	UG/L		U	5								
SW118	SW	REAL	SW01180WC	09-MAY-91	N	TRG	VOCCLPTCL	BROMODICHLOROMETHANE	5	UG/L		U	5								
SW118	SW	REAL	SW01180WC	09-MAY-91	N	TRG	VOCCLPTCL	BROMOFORM	5	UG/L		U	5								
SW118	SW	REAL	SW01180WC	09-MAY-91	N	TRG	VOCCLPTCL	BROMOMETHANE	10	UG/L		U	10								
SW118	SW	REAL	SW01180WC	09-MAY-91	N	TRG	VOCCLPTCL	CARBON DISULFIDE	5	UG/L		U	5								
SW118	SW	REAL	SW01180WC	09-MAY-91	N	TRG	VOCCLPTCL	CARBON TETRACHLORIDE	5	UG/L		U	5								
SW118	SW	REAL	SW01180WC	09-MAY-91	N	TRG	VOCCLPTCL	CHLOROBENZENE	5	UG/L		U	5								
SW118	SW	REAL	SW01180WC	09-MAY-91	N	TRG	VOCCLPTCL	CHLOROETHANE	10	UG/L		U	10								
SW118	SW	REAL	SW01180WC	09-MAY-91	N	TRG	VOCCLPTCL	CHLOROFORM	5	UG/L		U	5								
SW118	SW	REAL	SW01180WC	09-MAY-91	N	TRG	VOCCLPTCL	CHLOROMETHANE	10	UG/L		U	10								
SW118	SW	REAL	SW01180WC	09-MAY-91	N	TRG	VOCCLPTCL	DIBROMOCHLOROMETHANE	5	UG/L		U	5								
SW118	SW	REAL	SW01180WC	09-MAY-91	N	TRG	VOCCLPTCL	ETHYLBENZENE	5	UG/L		U	5								
SW118	SW	REAL	SW01180WC	09-MAY-91	N	TRG	VOCCLPTCL	METHYLENE CHLORIDE	5	UG/L		U	5								
SW118	SW	REAL	SW01180WC	09-MAY-91	N	TRG	VOCCLPTCL	STYRENE	5	UG/L		U	5								

ocation	ST	QC	Sample Number	Smpl Date	D	ID	Group	Chemical	Result	Unit	Error	Qual	D	LMT	VA	RN1	RN2	RN3	RN4	VResult	VQual	VDET
W118	SW	REAL	SW01180WC	09-MAY-91	N	TRG	VOCCLPTCL	TETRACHLOROETHENE	5	UG/L		U		5								
W118	SW	REAL	SW01180WC	09-MAY-91	N	TRG	VOCCLPTCL	TOLUENE	5	UG/L		U		5								
W118	SW	REAL	SW01180WC	09-MAY-91	N	TRG	VOCCLPTCL	TOTAL XYLENES	5	UG/L		U		5								
W118	SW	REAL	SW01180WC	09-MAY-91	N	TRG	VOCCLPTCL	TRICHLOROETHENE	5	UG/L		U		5								
W118	SW	REAL	SW01180WC	09-MAY-91	N	TRG	VOCCLPTCL	VINYL ACETATE	10	UG/L		U		10								
W118	SW	REAL	SW01180WC	09-MAY-91	N	TRG	VOCCLPTCL	VINYL CHLORIDE	10	UG/L		U		10								
W118	SW	REAL	SW01180WC	09-MAY-91	N	TRG	VOCCLPTCL	cis-1,3-DICHLOROPROPENE	5	UG/L		U		5								
W118	SW	REAL	SW01180WC	09-MAY-91	N	TRG	VOCCLPTCL	trans-1,3-DICHLOROPROPENE	5	UG/L		U		5								
W118	SW	REAL	SW01283WC	26-JUN-91	N	TRG	VOCCLPTCL	1,1,1-TRICHLOROETHANE	5	UG/L		U		5								
W118	SW	REAL	SW01283WC	26-JUN-91	N	TRG	VOCCLPTCL	1,1,2,2-TETRACHLOROETHANE	5	UG/L		U		5								
W118	SW	REAL	SW01283WC	26-JUN-91	N	TRG	VOCCLPTCL	1,1,2-TRICHLOROETHANE	5	UG/L		U		5								
W118	SW	REAL	SW01283WC	26-JUN-91	N	TRG	VOCCLPTCL	1,1-DICHLOROETHANE	5	UG/L		U		5								
W118	SW	REAL	SW01283WC	26-JUN-91	N	TRG	VOCCLPTCL	1,1-DICHLOROETHENE	5	UG/L		U		5								
W118	SW	REAL	SW01283WC	26-JUN-91	N	TRG	VOCCLPTCL	1,2-DICHLOROETHANE	5	UG/L		U		5								
W118	SW	REAL	SW01283WC	26-JUN-91	N	TRG	VOCCLPTCL	1,2-DICHLOROETHENE	5	UG/L		U		5								
W118	SW	REAL	SW01283WC	26-JUN-91	N	TRG	VOCCLPTCL	1,2-DICHLOROPROPANE	5	UG/L		U		5								
W118	SW	REAL	SW01283WC	26-JUN-91	N	TRG	VOCCLPTCL	2-BUTANONE	10	UG/L		U		10								
W118	SW	REAL	SW01283WC	26-JUN-91	N	TRG	VOCCLPTCL	2-HEXANONE	10	UG/L		U		10								
W118	SW	REAL	SW01283WC	26-JUN-91	N	TRG	VOCCLPTCL	4-METHYL-2-PENTANONE	10	UG/L		U		10								
W118	SW	REAL	SW01283WC	26-JUN-91	N	TRG	VOCCLPTCL	ACETONE	10	UG/L		U		10								
W118	SW	REAL	SW01283WC	26-JUN-91	N	TRG	VOCCLPTCL	BENZENE	5	UG/L		U		5								
W118	SW	REAL	SW01283WC	26-JUN-91	N	TRG	VOCCLPTCL	BROMODICHLOROMETHANE	5	UG/L		U		5								
W118	SW	REAL	SW01283WC	26-JUN-91	N	TRG	VOCCLPTCL	BROMOFORM	5	UG/L		U		5								
W118	SW	REAL	SW01283WC	26-JUN-91	N	TRG	VOCCLPTCL	BROMOMETHANE	10	UG/L		U		10								
W118	SW	REAL	SW01283WC	26-JUN-91	N	TRG	VOCCLPTCL	CARBON DISULFIDE	5	UG/L		U		5								
W118	SW	REAL	SW01283WC	26-JUN-91	N	TRG	VOCCLPTCL	CARBON TETRACHLORIDE	5	UG/L		U		5								
W118	SW	REAL	SW01283WC	26-JUN-91	N	TRG	VOCCLPTCL	CHLOROBENZENE	5	UG/L		U		5								
W118	SW	REAL	SW01283WC	26-JUN-91	N	TRG	VOCCLPTCL	CHLOROETHANE	10	UG/L		U		10								
W118	SW	REAL	SW01283WC	26-JUN-91	N	TRG	VOCCLPTCL	CHLOROFORM	5	UG/L		U		5								
W118	SW	REAL	SW01283WC	26-JUN-91	N	TRG	VOCCLPTCL	CHLOROMETHANE	10	UG/L		U		10								
W118	SW	REAL	SW01283WC	26-JUN-91	N	TRG	VOCCLPTCL	DIBROMOCHLOROMETHANE	5	UG/L		U		5								
W118	SW	REAL	SW01283WC	26-JUN-91	N	TRG	VOCCLPTCL	ETHYLBENZENE	5	UG/L		U		5								
W118	SW	REAL	SW01283WC	26-JUN-91	N	TRG	VOCCLPTCL	METHYLENE CHLORIDE	5	UG/L		U		5								
W118	SW	REAL	SW01283WC	26-JUN-91	N	TRG	VOCCLPTCL	STYRENE	5	UG/L		U		5								
W118	SW	REAL	SW01283WC	26-JUN-91	N	TRG	VOCCLPTCL	TETRACHLOROETHENE	5	UG/L		U		5								
W118	SW	REAL	SW01283WC	26-JUN-91	N	TRG	VOCCLPTCL	TOLUENE	5	UG/L		U		5								
W118	SW	REAL	SW01283WC	26-JUN-91	N	TRG	VOCCLPTCL	TOTAL XYLENES	5	UG/L		U		5								
W118	SW	REAL	SW01283WC	26-JUN-91	N	TRG	VOCCLPTCL	TRICHLOROETHENE	5	UG/L		U		5								
W118	SW	REAL	SW01283WC	26-JUN-91	N	TRG	VOCCLPTCL	VINYL ACETATE	10	UG/L		U		10								
W118	SW	REAL	SW01283WC	26-JUN-91	N	TRG	VOCCLPTCL	VINYL CHLORIDE	10	UG/L		U		10								
W118	SW	REAL	SW01283WC	26-JUN-91	N	TRG	VOCCLPTCL	cis-1,3-DICHLOROPROPENE	5	UG/L		U		5								
W118	SW	REAL	SW01283WC	26-JUN-91	N	TRG	VOCCLPTCL	trans-1,3-DICHLOROPROPENE	5	UG/L		U		5								
W118	SW	REAL	SW01386WC	24-JUL-91	N	TRG	VOCCLPTCL	1,1,1-TRICHLOROETHANE	5	UG/L		U		5								
W118	SW	REAL	SW01386WC	24-JUL-91	N	TRG	VOCCLPTCL	1,1,2,2-TETRACHLOROETHANE	5	UG/L		U		5								
W118	SW	REAL	SW01386WC	24-JUL-91	N	TRG	VOCCLPTCL	1,1,2-TRICHLOROETHANE	5	UG/L		U		5								
W118	SW	REAL	SW01386WC	24-JUL-91	N	TRG	VOCCLPTCL	1,1-DICHLOROETHANE	5	UG/L		U		5								
W118	SW	REAL	SW01386WC	24-JUL-91	N	TRG	VOCCLPTCL	1,1-DICHLOROETHENE	5	UG/L		U		5								
W118	SW	REAL	SW01386WC	24-JUL-91	N	TRG	VOCCLPTCL	1,2-DICHLOROETHANE	5	UG/L		U		5								
W118	SW	REAL	SW01386WC	24-JUL-91	N	TRG	VOCCLPTCL	1,2-DICHLOROETHENE	5	UG/L		U		5								
W118	SW	REAL	SW01386WC	24-JUL-91	N	TRG	VOCCLPTCL	1,2-DICHLOROPROPANE	5	UG/L		U		5								
W118	SW	REAL	SW01386WC	24-JUL-91	N	TRG	VOCCLPTCL	2-BUTANONE	10	UG/L		U		10								
W118	SW	REAL	SW01386WC	24-JUL-91	N	TRG	VOCCLPTCL	2-HEXANONE	10	UG/L		U		10								
W118	SW	REAL	SW01386WC	24-JUL-91	N	TRG	VOCCLPTCL	4-METHYL-2-PENTANONE	10	UG/L		U		10								
W118	SW	REAL	SW01386WC	24-JUL-91	N	TRG	VOCCLPTCL	ACETONE	10	UG/L		U		10								
W118	SW	REAL	SW01386WC	24-JUL-91	N	TRG	VOCCLPTCL	BENZENE	5	UG/L		U		5								
W118	SW	REAL	SW01386WC	24-JUL-91	N	TRG	VOCCLPTCL	BROMODICHLOROMETHANE	5	UG/L		U		5								
W118	SW	REAL	SW01386WC	24-JUL-91	N	TRG	VOCCLPTCL	BROMOFORM	5	UG/L		U		5								
W118	SW	REAL	SW01386WC	24-JUL-91	N	TRG	VOCCLPTCL	BROMOMETHANE	10	UG/L		U		10								
W118	SW	REAL	SW01386WC	24-JUL-91	N	TRG	VOCCLPTCL	CARBON DISULFIDE	5	UG/L		U		5								
W118	SW	REAL	SW01386WC	24-JUL-91	N	TRG	VOCCLPTCL	CARBON TETRACHLORIDE	5	UG/L		U		5								
W118	SW	REAL	SW01386WC	24-JUL-91	N	TRG	VOCCLPTCL	CHLOROBENZENE	5	UG/L		U		5								
W118	SW	REAL	SW01386WC	24-JUL-91	N	TRG	VOCCLPTCL	CHLOROETHANE	10	UG/L		U		10								
W118	SW	REAL	SW01386WC	24-JUL-91	N	TRG	VOCCLPTCL	CHLOROFORM	5	UG/L		U		5								

ocation	ST	QC	Sample Number	Smpl Date	D	ID	Group	Chemical	Result	Unit	Error	Qual	D	LMT	VA	RN1	RN2	RN3	RN4	VResult	VQual	VDET
W118	SW	REAL	SW01386WC	24-JUL-91	N	TRG	VOCCLPTCL	CHLOROMETHANE	10	UG/L		U		10								
W118	SW	REAL	SW01386WC	24-JUL-91	N	TRG	VOCCLPTCL	DIBROMOCHLOROMETHANE	5	UG/L		U		5								
W118	SW	REAL	SW01386WC	24-JUL-91	N	TRG	VOCCLPTCL	ETHYLBENZENE	5	UG/L		U		5								
W118	SW	REAL	SW01386WC	24-JUL-91	N	TRG	VOCCLPTCL	METHYLENE CHLORIDE	5	UG/L		U		5								
W118	SW	REAL	SW01386WC	24-JUL-91	N	TRG	VOCCLPTCL	STYRENE	5	UG/L		U		5								
W118	SW	REAL	SW01386WC	24-JUL-91	N	TRG	VOCCLPTCL	TETRACHLOROETHENE	5	UG/L		U		5								
W118	SW	REAL	SW01386WC	24-JUL-91	N	TRG	VOCCLPTCL	TOLUENE	5	UG/L		U		5								
W118	SW	REAL	SW01386WC	24-JUL-91	N	TRG	VOCCLPTCL	TOTAL XYLENES	5	UG/L		U		5								
W118	SW	REAL	SW01386WC	24-JUL-91	N	TRG	VOCCLPTCL	TRICHLOROETHENE	5	UG/L		U		5								
W118	SW	REAL	SW01386WC	24-JUL-91	N	TRG	VOCCLPTCL	VINYL ACETATE	10	UG/L		U		10								
W118	SW	REAL	SW01386WC	24-JUL-91	N	TRG	VOCCLPTCL	VINYL CHLORIDE	10	UG/L		U		10								
W118	SW	REAL	SW01386WC	24-JUL-91	N	TRG	VOCCLPTCL	cis-1,3-DICHLOROPROPENE	5	UG/L		U		5								
W118	SW	REAL	SW01386WC	24-JUL-91	N	TRG	VOCCLPTCL	trans-1,3-DICHLOROPROPENE	5	UG/L		U		5								
W118	SW	REAL	SW01492WC	07-AUG-91	N	TRG	VOACLP	1,1,1-TRICHLOROETHANE	5	UG/L		U		5								
W118	SW	REAL	SW01492WC	07-AUG-91	N	TRG	VOACLP	1,1,2,2-TETRACHLOROETHANE	5	UG/L		U		5								
W118	SW	REAL	SW01492WC	07-AUG-91	N	TRG	VOACLP	1,1,2-TRICHLOROETHANE	5	UG/L		U		5								
W118	SW	REAL	SW01492WC	07-AUG-91	N	TRG	VOACLP	1,1-DICHLOROETHANE	5	UG/L		U		5								
W118	SW	REAL	SW01492WC	07-AUG-91	N	TRG	VOACLP	1,1 DICHLOROETHENE	5	UG/L		U		5								
W118	SW	REAL	SW01492WC	07-AUG-91	N	TRG	VOACLP	1,2-DICHLOROETHANE	5	UG/L		U		5								
W118	SW	REAL	SW01492WC	07-AUG-91	N	TRG	VOACLP	1,2-DICHLOROETHENE	5	UG/L		U		5								
W118	SW	REAL	SW01492WC	07-AUG-91	N	TRG	VOACLP	1,2-DICHLOROPROPANE	5	UG/L		U		5								
W118	SW	REAL	SW01492WC	07-AUG-91	N	TRG	VOACLP	2-BUTANONE	10	UG/L		U		10								
W118	SW	REAL	SW01492WC	07-AUG-91	N	TRG	VOACLP	2-HEXANONE	10	UG/L		U		10								
W118	SW	REAL	SW01492WC	07-AUG-91	N	TRG	VOACLP	4-METHYL-2 PENTANONE	10	UG/L		U		10								
W118	SW	REAL	SW01492WC	07-AUG-91	N	TRG	VOACLP	ACETONE	15	UG/L		B		10								
W118	SW	REAL	SW01492WC	07-AUG-91	N	TRG	VOACLP	BENZENE	5	UG/L		U		5								
W118	SW	REAL	SW01492WC	07-AUG-91	N	TRG	VOACLP	BROMODICHLOROMETHANE	5	UG/L		U		5								
W118	SW	REAL	SW01492WC	07-AUG-91	N	TRG	VOACLP	BROMOFORM	5	UG/L		U		5								
W118	SW	REAL	SW01492WC	07-AUG-91	N	TRG	VOACLP	BROMOMETHANE	10	UG/L		U		10								
W118	SW	REAL	SW01492WC	07-AUG-91	N	TRG	VOACLP	CARBON DISULFIDE	5	UG/L		U		5								
W118	SW	REAL	SW01492WC	07-AUG-91	N	TRG	VOACLP	CARBON TETRACHLORIDE	5	UG/L		U		5								
W118	SW	REAL	SW01492WC	07-AUG-91	N	TRG	VOACLP	CHLOROBENZENE	5	UG/L		U		5								
W118	SW	REAL	SW01492WC	07-AUG-91	N	TRG	VOACLP	CHLOROETHANE	10	UG/L		U		10								
W118	SW	REAL	SW01492WC	07-AUG-91	N	TRG	VOACLP	CHLOROFORM	5	UG/L		U		5								
W118	SW	REAL	SW01492WC	07-AUG-91	N	TRG	VOACLP	CHLOROMETHANE	10	UG/L		U		10								
W118	SW	REAL	SW01492WC	07-AUG-91	N	TRG	VOACLP	DIBROMOCHLOROMETHANE	5	UG/L		U		5								
W118	SW	REAL	SW01492WC	07-AUG-91	N	TRG	VOACLP	ETHYLBENZENE	5	UG/L		U		5								
W118	SW	REAL	SW01492WC	07-AUG-91	N	TRG	VOACLP	METHYLENE CHLORIDE	12	UG/L		B		5	0							
W118	SW	REAL	SW01492WC	07-AUG-91	N	TRG	VOACLP	STYRENE	5	UG/L		U		5								
W118	SW	REAL	SW01492WC	07-AUG-91	N	TRG	VOACLP	TETRACHLOROETHENE	5	UG/L		U		5								
W118	SW	REAL	SW01492WC	07-AUG-91	N	TRG	VOACLP	TOLUENE	5	UG/L		U		5								
W118	SW	REAL	SW01492WC	07-AUG-91	N	TRG	VOACLP	TOTAL XYLENES	5	UG/L		U		5								
W118	SW	REAL	SW01492WC	07-AUG-91	N	TRG	VOACLP	TRICHLOROETHENE	5	UG/L		U		5								
W118	SW	REAL	SW01492WC	07-AUG-91	N	TRG	VOACLP	VINYL ACETATE	10	UG/L		U		10								
W118	SW	REAL	SW01492WC	07-AUG-91	N	TRG	VOACLP	VINYL CHLORIDE	10	UG/L		U		10								
W118	SW	REAL	SW01492WC	07-AUG-91	N	TRG	VOACLP	cis-1,3-DICHLOROPROPENE	5	UG/L		U		5								
W118	SW	REAL	SW01492WC	07-AUG-91	N	TRG	VOACLP	trans-1,3-DICHLOROPROPENE	5	UG/L		U		5								
W118	SW	REAL	SW01598WC	25-SEP-91	Y																	
W118	SW	REAL	SW01704WC	23-OCT-91	Y																	
W118	SW	REAL	SW60066WCA	15-MAR-91	N																	
W118	SW	REAL	SW60067WCB	02-APR-91	N																	
W118	SW	REAL	SW60073WC	15-APR-91	N																	
W118	SW	REAL	SW60077WC	01-MAY-91	N																	
W118	SW	REAL	SW60080WC	01-MAY-91	N																	
W118	SW	REAL	SW60084WC	06-MAY-91	N																	
W118	SW	REAL	SW60085WC	06-MAY-91	N																	
W118	SW	REAL	SW60094WC	17-MAY-91	N																	
W118	SW	REAL	SW60095WC	17-MAY-91	N																	
W118	SW	REAL	SW60099WC	23-MAY-91	N																	
W118	SW	REAL	SW60106WC	03-JUN-91	N																	
W118	SW	REAL	SW60107WC	03-JUN-91	N																	
W118	SW	REAL	SW60111WC	11-JUN-91	N																	
W118	SW	REAL	SW60115WC	25-JUN-91	N																	

Location	ST	QC	Sample Number	Smpl Date	D	ID	Group	Chemical	Result	Unit	Error	Qual	D LMT	VA	RN1	RN2	RN3	RN4	VResult	VQual	VDET
MW118	SW	REAL	SW60122WC	10-JUL-91	N																
MW118	SW	REAL	SW60128WC	24-JUL-91	N																
MW118	SW	REAL	SW60138WC	05-AUG-91	N																
MW118	SW	REAL	SW60147WC	12-AUG-91	N																
MW118	SW	____	SW60067WC	08-APR-91	N																
MW129	SW	REAL	SW00728WC	08-JAN-91	N																
MW129	SW	REAL	SW00831WC	20-FEB-91	N																
MW129	SW	REAL	SW00934WC	28-MAR-91	N	TRG	VOCCLPTCL	1,1,1-TRICHLOROETHANE	5	UG/L		U	5								
MW129	SW	REAL	SW00934WC	28-MAR-91	N	TRG	VOCCLPTCL	1,1,2,2-TETRACHLOROETHANE	5	UG/L		U	5								
MW129	SW	REAL	SW00934WC	28-MAR-91	N	TRG	VOCCLPTCL	1,1,2-TRICHLOROETHANE	5	UG/L		U	5								
MW129	SW	REAL	SW00934WC	28-MAR-91	N	TRG	VOCCLPTCL	1,1-DICHLOROETHANE	5	UG/L		U	5								
MW129	SW	REAL	SW00934WC	28-MAR-91	N	TRG	VOCCLPTCL	1,1-DICHLOROETHENE	5	UG/L		U	5								
MW129	SW	REAL	SW00934WC	28-MAR-91	N	TRG	VOCCLPTCL	1,2-DICHLOROETHANE	5	UG/L		U	5								
MW129	SW	REAL	SW00934WC	28-MAR-91	N	TRG	VOCCLPTCL	1,2-DICHLOROETHENE	5	UG/L		U	5								
MW129	SW	REAL	SW00934WC	28-MAR-91	N	TRG	VOCCLPTCL	1,2-DICHLOROPROPANE	5	UG/L		U	5								
MW129	SW	REAL	SW00934WC	28-MAR-91	N	TRG	VOCCLPTCL	2-BUTANONE	10	UG/L		U	10								
MW129	SW	REAL	SW00934WC	28-MAR-91	N	TRG	VOCCLPTCL	2-HEXANONE	10	UG/L		U	10								
MW129	SW	REAL	SW00934WC	28-MAR-91	N	TRG	VOCCLPTCL	4-METHYL-2-PENTANONE	10	UG/L		U	10								
MW129	SW	REAL	SW00934WC	28-MAR-91	N	TRG	VOCCLPTCL	ACETONE	10	UG/L		U	10								
MW129	SW	REAL	SW00934WC	28-MAR-91	N	TRG	VOCCLPTCL	BENZENE	5	UG/L		U	5								
MW129	SW	REAL	SW00934WC	28-MAR-91	N	TRG	VOCCLPTCL	BROMODICHLOROMETHANE	5	UG/L		U	5								
MW129	SW	REAL	SW00934WC	28-MAR-91	N	TRG	VOCCLPTCL	BROMOFORM	5	UG/L		U	5								
MW129	SW	REAL	SW00934WC	28-MAR-91	N	TRG	VOCCLPTCL	BROMOMETHANE	10	UG/L		U	10								
MW129	SW	REAL	SW00934WC	28-MAR-91	N	TRG	VOCCLPTCL	CARBON DISULFIDE	5	UG/L		U	5								
MW129	SW	REAL	SW00934WC	28-MAR-91	N	TRG	VOCCLPTCL	CARBON TETRACHLORIDE	5	UG/L		U	5								
MW129	SW	REAL	SW00934WC	28-MAR-91	N	TRG	VOCCLPTCL	CHLOROBENZENE	5	UG/L		U	5								
MW129	SW	REAL	SW00934WC	28-MAR-91	N	TRG	VOCCLPTCL	CHLOROETHANE	10	UG/L		U	10								
MW129	SW	REAL	SW00934WC	28-MAR-91	N	TRG	VOCCLPTCL	CHLOROFORM	5	UG/L		U	5								
MW129	SW	REAL	SW00934WC	28-MAR-91	N	TRG	VOCCLPTCL	CHLOROMETHANE	10	UG/L		U	10								
MW129	SW	REAL	SW00934WC	28-MAR-91	N	TRG	VOCCLPTCL	DIBROMOCHLOROMETHANE	5	UG/L		U	5								
MW129	SW	REAL	SW00934WC	28-MAR-91	N	TRG	VOCCLPTCL	ETHYLBENZENE	5	UG/L		U	5								
MW129	SW	REAL	SW00934WC	28-MAR-91	N	TRG	VOCCLPTCL	METHYLENE CHLORIDE	5	UG/L		U	5								
MW129	SW	REAL	SW00934WC	28-MAR-91	N	TRG	VOCCLPTCL	STYRENE	5	UG/L		U	5								
MW129	SW	REAL	SW00934WC	28-MAR-91	N	TRG	VOCCLPTCL	TETRACHLOROETHENE	5	UG/L		U	5								
MW129	SW	REAL	SW00934WC	28-MAR-91	N	TRG	VOCCLPTCL	TOLUENE	5	UG/L		U	5								
MW129	SW	REAL	SW00934WC	28-MAR-91	N	TRG	VOCCLPTCL	TOTAL XYLENES	5	UG/L		U	5								
MW129	SW	REAL	SW00934WC	28-MAR-91	N	TRG	VOCCLPTCL	TRICHLOROETHENE	5	UG/L		U	5								
MW129	SW	REAL	SW00934WC	28-MAR-91	N	TRG	VOCCLPTCL	VINYL ACETATE	10	UG/L		U	10								
MW129	SW	REAL	SW00934WC	28-MAR-91	N	TRG	VOCCLPTCL	VINYL CHLORIDE	10	UG/L		U	10								
MW129	SW	REAL	SW00934WC	28-MAR-91	N	TRG	VOCCLPTCL	cis-1,3-DICHLOROPROPENE	5	UG/L		U	5								
MW129	SW	REAL	SW00934WC	28-MAR-91	N	TRG	VOCCLPTCL	trans-1,3-DICHLOROPROPENE	5	UG/L		U	5								
MW129	SW	REAL	SW01036WC	09-APR-91	N	TRG	SVOCLPTCL	1,2,4-TRICHLOROBENZENE	11	UG/L		U	11								
MW129	SW	REAL	SW01036WC	09-APR-91	N	TRG	SVOCLPTCL	1,2-DICHLOROBENZENE	11	UG/L		U	11								
MW129	SW	REAL	SW01036WC	09-APR-91	N	TRG	SVOCLPTCL	1,3-DICHLOROBENZENE	11	UG/L		U	11								
MW129	SW	REAL	SW01036WC	09-APR-91	N	TRG	SVOCLPTCL	1,4-DICHLOROBENZENE	11	UG/L		U	11								
MW129	SW	REAL	SW01036WC	09-APR-91	N	TRG	SVOCLPTCL	2,4,5-TRICHLOROPHENOL	55	UG/L		U	55								
MW129	SW	REAL	SW01036WC	09-APR-91	N	TRG	SVOCLPTCL	2,4,6-TRICHLOROPHENOL	11	UG/L		U	11								
MW129	SW	REAL	SW01036WC	09-APR-91	N	TRG	SVOCLPTCL	2,4-DICHLOROPHENOL	11	UG/L		U	11								
MW129	SW	REAL	SW01036WC	09-APR-91	N	TRG	SVOCLPTCL	2,4-DIMETHYLPHENOL	11	UG/L		U	11								
MW129	SW	REAL	SW01036WC	09-APR-91	N	TRG	SVOCLPTCL	2,4-DINITROPHENOL	55	UG/L		U	55								
MW129	SW	REAL	SW01036WC	09-APR-91	N	TRG	SVOCLPTCL	2,4-DINITROTOLUENE	11	UG/L		U	11								
MW129	SW	REAL	SW01036WC	09-APR-91	N	TRG	SVOCLPTCL	2,6-DINITROTOLUENE	11	UG/L		U	11								
MW129	SW	REAL	SW01036WC	09-APR-91	N	TRG	SVOCLPTCL	2-CHLORONAPHTHALENE	11	UG/L		U	11								
MW129	SW	REAL	SW01036WC	09-APR-91	N	TRG	SVOCLPTCL	2-CHLOROPHENOL	11	UG/L		U	11								
MW129	SW	REAL	SW01036WC	09-APR-91	N	TRG	SVOCLPTCL	2-METHYLNAPHTHALENE	11	UG/L		U	11								
MW129	SW	REAL	SW01036WC	09-APR-91	N	TRG	SVOCLPTCL	2-METHYLPHENOL	11	UG/L		U	11								
MW129	SW	REAL	SW01036WC	09-APR-91	N	TRG	SVOCLPTCL	2-NITROANILINE	55	UG/L		U	55								
MW129	SW	REAL	SW01036WC	09-APR-91	N	TRG	SVOCLPTCL	2-NITROPHENOL	11	UG/L		U	11								
MW129	SW	REAL	SW01036WC	09-APR-91	N	TRG	SVOCLPTCL	3,3'-DICHLOROBENZIDINE	22	UG/L		U	22								
MW129	SW	REAL	SW01036WC	09-APR-91	N	TRG	SVOCLPTCL	3-NITROANILINE	55	UG/L		U	55								
MW129	SW	REAL	SW01036WC	09-APR-91	N	TRG	SVOCLPTCL	4,6-DINITRO-2-METHYLPHENOL	55	UG/L		U	55								
MW129	SW	REAL	SW01036WC	09-APR-91	N	TRG	SVOCLPTCL	4-BROMOPHENYL PHENYL ETHER	11	UG/L		U	11								
MW129	SW	REAL	SW01036WC	09-APR-91	N	TRG	SVOCLPTCL	4-CHLORO-3-METHYLPHENOL	11	UG/L		U	11								

Location	ST	QC	Sample Number	Smpl Date	D	ID	Group	Chemical	Result	Unit	Error	Qual	D LMT	VA	RN1	RN2	RN3	RN4	VResult	VQual	VDET
SW129	SW	REAL	SW01036WC	09-APR-91	N	TRG	SVOCLPTCL	4-CHLOROANILINE	11	UG/L		U	11								
SW129	SW	REAL	SW01036WC	09-APR-91	N	TRG	SVOCLPTCL	4-CHLOROPHENYL PHENYL ETHER	11	UG/L		U	11								
SW129	SW	REAL	SW01036WC	09-APR-91	N	TRG	SVOCLPTCL	4-METHYLPHENOL	11	UG/L		U	11								
SW129	SW	REAL	SW01036WC	09-APR-91	N	TRG	SVOCLPTCL	4-NITROANILINE	55	UG/L		U	55								
SW129	SW	REAL	SW01036WC	09-APR-91	N	TRG	SVOCLPTCL	4-NITROPHENOL	55	UG/L		U	55								
SW129	SW	REAL	SW01036WC	09-APR-91	N	TRG	SVOCLPTCL	ACENAPHTHENE	11	UG/L		U	11								
SW129	SW	REAL	SW01036WC	09-APR-91	N	TRG	SVOCLPTCL	ACENAPHTHYLENE	11	UG/L		U	11								
SW129	SW	REAL	SW01036WC	09-APR-91	N	TRG	SVOCLPTCL	ANTHRACENE	11	UG/L		U	11								
SW129	SW	REAL	SW01036WC	09-APR-91	N	TRG	SVOCLPTCL	BENZO(a)ANTHRACENE	11	UG/L		U	11								
SW129	SW	REAL	SW01036WC	09-APR-91	N	TRG	SVOCLPTCL	BENZO(a)PYRENE	11	UG/L		U	11								
SW129	SW	REAL	SW01036WC	09-APR-91	N	TRG	SVOCLPTCL	BENZO(b)FLUORANTHENE	11	UG/L		U	11								
SW129	SW	REAL	SW01036WC	09-APR-91	N	TRG	SVOCLPTCL	BENZO(ghi)PERYLENE	11	UG/L		U	11								
SW129	SW	REAL	SW01036WC	09-APR-91	N	TRG	SVOCLPTCL	BENZO(k)FLUORANTHENE	11	UG/L		U	11								
SW129	SW	REAL	SW01036WC	09-APR-91	N	TRG	SVOCLPTCL	BENZOIC ACID	55	UG/L		U	55								
SW129	SW	REAL	SW01036WC	09-APR-91	N	TRG	SVOCLPTCL	BENZYL ALCOHOL	11	UG/L		U	11								
SW129	SW	REAL	SW01036WC	09-APR-91	N	TRG	SVOCLPTCL	BIS(2-CHLOROETHOXY)METHANE	11	UG/L		U	11								
SW129	SW	REAL	SW01036WC	09-APR-91	N	TRG	SVOCLPTCL	BIS(2-CHLOROETHYL)ETHER	11	UG/L		U	11								
SW129	SW	REAL	SW01036WC	09-APR-91	N	TRG	SVOCLPTCL	BIS(2-CHLOROISOPROPYL)ETHER	11	UG/L		U	11								
SW129	SW	REAL	SW01036WC	09-APR-91	N	TRG	SVOCLPTCL	BIS(2-ETHYLHEXYL)PHTHALATE	11	UG/L		U	11								
SW129	SW	REAL	SW01036WC	09-APR-91	N	TRG	SVOCLPTCL	BUTYL BENZYL PHTHALATE	11	UG/L		U	11								
SW129	SW	REAL	SW01036WC	09-APR-91	N	TRG	SVOCLPTCL	CHRYSENE	11	UG/L		U	11								
SW129	SW	REAL	SW01036WC	09-APR-91	N	TRG	SVOCLPTCL	DI-n-BUTYL PHTHALATE	11	UG/L		U	11								
SW129	SW	REAL	SW01036WC	09-APR-91	N	TRG	SVOCLPTCL	DI-n-OCTYL PHTHALATE	11	UG/L		U	11								
SW129	SW	REAL	SW01036WC	09-APR-91	N	TRG	SVOCLPTCL	DIBENZO(a,h)ANTHRACENE	11	UG/L		U	11								
SW129	SW	REAL	SW01036WC	09-APR-91	N	TRG	SVOCLPTCL	DIBENZOFURAN	11	UG/L		U	11								
SW129	SW	REAL	SW01036WC	09-APR-91	N	TRG	SVOCLPTCL	DIETHYL PHTHALATE	11	UG/L		U	11								
SW129	SW	REAL	SW01036WC	09-APR-91	N	TRG	SVOCLPTCL	DIMETHYL PHTHALATE	11	UG/L		U	11								
SW129	SW	REAL	SW01036WC	09-APR-91	N	TRG	SVOCLPTCL	FLUORANTHENE	11	UG/L		U	11								
SW129	SW	REAL	SW01036WC	09-APR-91	N	TRG	SVOCLPTCL	FLUORENE	11	UG/L		U	11								
SW129	SW	REAL	SW01036WC	09-APR-91	N	TRG	SVOCLPTCL	HEXACHLOROBENZENE	11	UG/L		U	11								
SW129	SW	REAL	SW01036WC	09-APR-91	N	TRG	SVOCLPTCL	HEXACHLOROBUTADIENE	11	UG/L		U	11								
SW129	SW	REAL	SW01036WC	09-APR-91	N	TRG	SVOCLPTCL	HEXACHLOROCYCLOPENTADIENE	11	UG/L		U	11								
SW129	SW	REAL	SW01036WC	09-APR-91	N	TRG	SVOCLPTCL	HEXACHLOROETHANE	11	UG/L		U	11								
SW129	SW	REAL	SW01036WC	09-APR-91	N	TRG	SVOCLPTCL	INDENO(1,2,3-cd)PYRENE	11	UG/L		U	11								
SW129	SW	REAL	SW01036WC	09-APR-91	N	TRG	SVOCLPTCL	ISOPHORONE	11	UG/L		U	11								
SW129	SW	REAL	SW01036WC	09-APR-91	N	TRG	SVOCLPTCL	N-NITROSO-DI-n-PROPYLAMINE	11	UG/L		U	11								
SW129	SW	REAL	SW01036WC	09-APR-91	N	TRG	SVOCLPTCL	N-NITROSODIPHENYLAMINE	11	UG/L		U	11								
SW129	SW	REAL	SW01036WC	09-APR-91	N	TRG	SVOCLPTCL	NAPHTHALENE	11	UG/L		U	11								
SW129	SW	REAL	SW01036WC	09-APR-91	N	TRG	SVOCLPTCL	NITROBENZENE	11	UG/L		U	11								
SW129	SW	REAL	SW01036WC	09-APR-91	N	TRG	SVOCLPTCL	PENTACHLOROPHENOL	55	UG/L		U	55								
SW129	SW	REAL	SW01036WC	09-APR-91	N	TRG	SVOCLPTCL	PHENANTHRENE	11	UG/L		U	11								
SW129	SW	REAL	SW01036WC	09-APR-91	N	TRG	SVOCLPTCL	PHENOL	11	UG/L		U	11								
SW129	SW	REAL	SW01036WC	09-APR-91	N	TRG	SVOCLPTCL	PYRENE	11	UG/L		U	11								
SW129	SW	REAL	SW01036WC	09-APR-91	N	TRG	VOCCLPTCL	1,1,1-TRICHLOROETHANE	5	UG/L		U	5								
SW129	SW	REAL	SW01036WC	09-APR-91	N	TRG	VOCCLPTCL	1,1,2,2-TETRACHLOROETHANE	5	UG/L		U	5								
SW129	SW	REAL	SW01036WC	09-APR-91	N	TRG	VOCCLPTCL	1,1,2-TRICHLOROETHANE	5	UG/L		U	5								
SW129	SW	REAL	SW01036WC	09-APR-91	N	TRG	VOCCLPTCL	1,1-DICHLOROETHANE	5	UG/L		U	5								
SW129	SW	REAL	SW01036WC	09-APR-91	N	TRG	VOCCLPTCL	1,1-DICHLOROETHENE	5	UG/L		U	5								
SW129	SW	REAL	SW01036WC	09-APR-91	N	TRG	VOCCLPTCL	1,2-DICHLOROETHANE	5	UG/L		U	5								
SW129	SW	REAL	SW01036WC	09-APR-91	N	TRG	VOCCLPTCL	1,2-DICHLOROETHENE	5	UG/L		U	5								
SW129	SW	REAL	SW01036WC	09-APR-91	N	TRG	VOCCLPTCL	1,2-DICHLOROPROPANE	5	UG/L		U	5								
SW129	SW	REAL	SW01036WC	09-APR-91	N	TRG	VOCCLPTCL	2-BUTANONE	10	UG/L		U	10								
SW129	SW	REAL	SW01036WC	09-APR-91	N	TRG	VOCCLPTCL	2-HEXANONE	10	UG/L		U	10								
SW129	SW	REAL	SW01036WC	09-APR-91	N	TRG	VOCCLPTCL	4-METHYL-2-PENTANONE	10	UG/L		U	10								
SW129	SW	REAL	SW01036WC	09-APR-91	N	TRG	VOCCLPTCL	ACETONE	10	UG/L		U	10								
SW129	SW	REAL	SW01036WC	09-APR-91	N	TRG	VOCCLPTCL	BENZENE	5	UG/L		U	5								
SW129	SW	REAL	SW01036WC	09-APR-91	N	TRG	VOCCLPTCL	BROMODICHLOROMETHANE	5	UG/L		U	5								
SW129	SW	REAL	SW01036WC	09-APR-91	N	TRG	VOCCLPTCL	BROMOFORM	5	UG/L		U	5								
SW129	SW	REAL	SW01036WC	09-APR-91	N	TRG	VOCCLPTCL	BROMOMETHANE	10	UG/L		U	10								
SW129	SW	REAL	SW01036WC	09-APR-91	N	TRG	VOCCLPTCL	CARBON DISULFIDE	5	UG/L		U	5								
SW129	SW	REAL	SW01036WC	09-APR-91	N	TRG	VOCCLPTCL	CARBON TETRACHLORIDE	5	UG/L		U	5								
SW129	SW	REAL	SW01036WC	09-APR-91	N	TRG	VOCCLPTCL	CHLOROBENZENE	5	UG/L		U	5								
SW129	SW	REAL	SW01036WC	09-APR-91	N	TRG	VOCCLPTCL	CHLOROETHANE	10	UG/L		U	10								

Location	ST	QC	Sample Number	Smpl Date	D	ID	Group	Chemical	Result	Unit	Error	Qual	D LMT	VA	RN1	RN2	RN3	RN4	VResult	VQual	VDET
SW129	SW	REAL	SW01036WC	09-APR-91	N	TRG	VOCCLPTCL	CHLOROFORM	5	UG/L		U	5								
SW129	SW	REAL	SW01036WC	09-APR-91	N	TRG	VOCCLPTCL	CHLOROMETHANE	10	UG/L		U	10								
SW129	SW	REAL	SW01036WC	09-APR-91	N	TRG	VOCCLPTCL	DIBROMOCHLOROMETHANE	5	UG/L		U	5								
SW129	SW	REAL	SW01036WC	09-APR-91	N	TRG	VOCCLPTCL	ETHYLBENZENE	5	UG/L		U	5								
SW129	SW	REAL	SW01036WC	09-APR-91	N	TRG	VOCCLPTCL	METHYLENE CHLORIDE	5	UG/L		U	5								
SW129	SW	REAL	SW01036WC	09-APR-91	N	TRG	VOCCLPTCL	STYRENE	5	UG/L		U	5								
SW129	SW	REAL	SW01036WC	09-APR-91	N	TRG	VOCCLPTCL	TETRACHLOROETHENE	5	UG/L		U	5								
SW129	SW	REAL	SW01036WC	09-APR-91	N	TRG	VOCCLPTCL	TOLUENE	5	UG/L		U	5								
SW129	SW	REAL	SW01036WC	09-APR-91	N	TRG	VOCCLPTCL	TOTAL XYLENES	5	UG/L		U	5								
SW129	SW	REAL	SW01036WC	09-APR-91	N	TRG	VOCCLPTCL	TRICHLOROETHENE	5	UG/L		U	5								
SW129	SW	REAL	SW01036WC	09-APR-91	N	TRG	VOCCLPTCL	VINYL ACETATE	10	UG/L		U	10								
SW129	SW	REAL	SW01036WC	09-APR-91	N	TRG	VOCCLPTCL	VINYL CHLORIDE	10	UG/L		U	10								
SW129	SW	REAL	SW01036WC	09-APR-91	N	TRG	VOCCLPTCL	cis-1,3-DICHLOROPROPENE	5	UG/L		U	5								
SW129	SW	REAL	SW01036WC	09-APR-91	N	TRG	VOCCLPTCL	trans-1,3-DICHLOROPROPENE	5	UG/L		U	5								
SW129	SW	REAL	SW01143WC	16-MAY-91	N	TRG	VOCCLPTCL	1,1,1-TRICHLOROETHANE	5	UG/L		U	5								
SW129	SW	REAL	SW01143WC	16-MAY-91	N	TRG	VOCCLPTCL	1,1,2,2-TETRACHLOROETHANE	5	UG/L		U	5								
SW129	SW	REAL	SW01143WC	16-MAY-91	N	TRG	VOCCLPTCL	1,1,2-TRICHLOROETHANE	5	UG/L		U	5								
SW129	SW	REAL	SW01143WC	16-MAY-91	N	TRG	VOCCLPTCL	1,1-DICHLOROETHANE	5	UG/L		U	5								
SW129	SW	REAL	SW01143WC	16-MAY-91	N	TRG	VOCCLPTCL	1,1-DICHLOROETHENE	5	UG/L		U	5								
SW129	SW	REAL	SW01143WC	16-MAY-91	N	TRG	VOCCLPTCL	1,2-DICHLOROETHANE	5	UG/L		U	5								
SW129	SW	REAL	SW01143WC	16-MAY-91	N	TRG	VOCCLPTCL	1,2-DICHLOROETHENE	5	UG/L		U	5								
SW129	SW	REAL	SW01143WC	16-MAY-91	N	TRG	VOCCLPTCL	1,2-DICHLOROPROPANE	5	UG/L		U	5								
SW129	SW	REAL	SW01143WC	16-MAY-91	N	TRG	VOCCLPTCL	2-BUTANONE	10	UG/L		U	10								
SW129	SW	REAL	SW01143WC	16-MAY-91	N	TRG	VOCCLPTCL	2-HEXANONE	10	UG/L		U	10								
SW129	SW	REAL	SW01143WC	16-MAY-91	N	TRG	VOCCLPTCL	4-METHYL-2 PENTANONE	10	UG/L		U	10								
SW129	SW	REAL	SW01143WC	16-MAY-91	N	TRG	VOCCLPTCL	ACETONE	10	UG/L		U	10								
SW129	SW	REAL	SW01143WC	16-MAY-91	N	TRG	VOCCLPTCL	BENZENE	5	UG/L		U	5								
SW129	SW	REAL	SW01143WC	16-MAY-91	N	TRG	VOCCLPTCL	BROMODICHLOROMETHANE	5	UG/L		U	5								
SW129	SW	REAL	SW01143WC	16-MAY-91	N	TRG	VOCCLPTCL	BROMOFORM	5	UG/L		U	5								
SW129	SW	REAL	SW01143WC	16-MAY-91	N	TRG	VOCCLPTCL	BROMOMETHANE	10	UG/L		U	10								
SW129	SW	REAL	SW01143WC	16-MAY-91	N	TRG	VOCCLPTCL	CARBON DISULFIDE	5	UG/L		U	5								
SW129	SW	REAL	SW01143WC	16-MAY-91	N	TRG	VOCCLPTCL	CARBON TETRACHLORIDE	5	UG/L		U	5								
SW129	SW	REAL	SW01143WC	16-MAY-91	N	TRG	VOCCLPTCL	CHLOROBENZENE	5	UG/L		U	5								
SW129	SW	REAL	SW01143WC	16-MAY-91	N	TRG	VOCCLPTCL	CHLOROETHANE	10	UG/L		U	10								
SW129	SW	REAL	SW01143WC	16-MAY-91	N	TRG	VOCCLPTCL	CHLOROFORM	5	UG/L		U	5								
SW129	SW	REAL	SW01143WC	16-MAY-91	N	TRG	VOCCLPTCL	CHLOROMETHANE	10	UG/L		U	10								
SW129	SW	REAL	SW01143WC	16-MAY-91	N	TRG	VOCCLPTCL	DIBROMOCHLOROMETHANE	5	UG/L		U	5								
SW129	SW	REAL	SW01143WC	16-MAY-91	N	TRG	VOCCLPTCL	ETHYLBENZENE	5	UG/L		U	5								
SW129	SW	REAL	SW01143WC	16-MAY-91	N	TRG	VOCCLPTCL	METHYLENE CHLORIDE	5	UG/L		U	5								
SW129	SW	REAL	SW01143WC	16-MAY-91	N	TRG	VOCCLPTCL	STYRENE	5	UG/L		U	5								
SW129	SW	REAL	SW01143WC	16-MAY-91	N	TRG	VOCCLPTCL	TETRACHLOROETHENE	5	UG/L		U	5								
SW129	SW	REAL	SW01143WC	16-MAY-91	N	TRG	VOCCLPTCL	TOLUENE	5	UG/L		U	5								
SW129	SW	REAL	SW01143WC	16-MAY-91	N	TRG	VOCCLPTCL	TOTAL XYLENES	5	UG/L		U	5								
SW129	SW	REAL	SW01143WC	16-MAY-91	N	TRG	VOCCLPTCL	TRICHLOROETHENE	5	UG/L		U	5								
SW129	SW	REAL	SW01143WC	16-MAY-91	N	TRG	VOCCLPTCL	VINYL ACETATE	10	UG/L		U	10								
SW129	SW	REAL	SW01143WC	16-MAY-91	N	TRG	VOCCLPTCL	VINYL CHLORIDE	10	UG/L		U	10								
SW129	SW	REAL	SW01143WC	16-MAY-91	N	TRG	VOCCLPTCL	cis-1,3-DICHLOROPROPENE	5	UG/L		U	5								
SW129	SW	REAL	SW01143WC	16-MAY-91	N	TRG	VOCCLPTCL	trans-1,3-DICHLOROPROPENE	5	UG/L		U	5								
SW129	SW	REAL	SW01246WC	26-JUN-91	N	TRG	VOCCLPTCL	1,1,1-TRICHLOROETHANE	5	UG/L		U	5								
SW129	SW	REAL	SW01246WC	26-JUN-91	N	TRG	VOCCLPTCL	1,1,2,2-TETRACHLOROETHANE	5	UG/L		U	5								
SW129	SW	REAL	SW01246WC	26-JUN-91	N	TRG	VOCCLPTCL	1,1,2-TRICHLOROETHANE	5	UG/L		U	5								
SW129	SW	REAL	SW01246WC	26-JUN-91	N	TRG	VOCCLPTCL	1,1-DICHLOROETHANE	5	UG/L		U	5								
SW129	SW	REAL	SW01246WC	26-JUN-91	N	TRG	VOCCLPTCL	1,1-DICHLOROETHENE	5	UG/L		U	5								
SW129	SW	REAL	SW01246WC	26-JUN-91	N	TRG	VOCCLPTCL	1,2-DICHLOROETHANE	5	UG/L		U	5								
SW129	SW	REAL	SW01246WC	26-JUN-91	N	TRG	VOCCLPTCL	1,2-DICHLOROETHENE	5	UG/L		U	5								
SW129	SW	REAL	SW01246WC	26-JUN-91	N	TRG	VOCCLPTCL	1,2-DICHLOROPROPANE	5	UG/L		U	5								
SW129	SW	REAL	SW01246WC	26-JUN-91	N	TRG	VOCCLPTCL	2-BUTANONE	10	UG/L		U	10								
SW129	SW	REAL	SW01246WC	26-JUN-91	N	TRG	VOCCLPTCL	2-HEXANONE	10	UG/L		U	10								
SW129	SW	REAL	SW01246WC	26-JUN-91	N	TRG	VOCCLPTCL	4-METHYL-2-PENTANONE	10	UG/L		U	10								
SW129	SW	REAL	SW01246WC	26-JUN-91	N	TRG	VOCCLPTCL	ACETONE	10	UG/L		U	10								
SW129	SW	REAL	SW01246WC	26-JUN-91	N	TRG	VOCCLPTCL	BENZENE	5	UG/L		U	5								
SW129	SW	REAL	SW01246WC	26-JUN-91	N	TRG	VOCCLPTCL	BROMODICHLOROMETHANE	5	UG/L		U	5								
SW129	SW	REAL	SW01246WC	26-JUN-91	N	TRG	VOCCLPTCL	BROMOFORM	5	UG/L		U	5								

Location	ST	QC	Sample Number	Smpl Date	D	ID	Group	Chemical	Result	Unit	Error	Qual	D	LMT	VA	RN1	RN2	RN3	RN4	VResult	VQual	VDET
MW129	SW	REAL	SW01246WC	26-JUN-91	N	TRG	VOCCLPTCL	BROMOMETHANE	10	UG/L		U		10								
MW129	SW	REAL	SW01246WC	26-JUN-91	N	TRG	VOCCLPTCL	CARBON DISULFIDE	5	UG/L		U		5								
MW129	SW	REAL	SW01246WC	26-JUN-91	N	TRG	VOCCLPTCL	CARBON TETRACHLORIDE	5	UG/L		U		5								
MW129	SW	REAL	SW01246WC	26-JUN-91	N	TRG	VOCCLPTCL	CHLOROBENZENE	5	UG/L		U		5								
MW129	SW	REAL	SW01246WC	26-JUN-91	N	TRG	VOCCLPTCL	CHLOROETHANE	10	UG/L		U		10								
MW129	SW	REAL	SW01246WC	26-JUN-91	N	TRG	VOCCLPTCL	CHLOROFORM	5	UG/L		U		5								
MW129	SW	REAL	SW01246WC	26-JUN-91	N	TRG	VOCCLPTCL	CHLOROMETHANE	10	UG/L		U		10								
MW129	SW	REAL	SW01246WC	26-JUN-91	N	TRG	VOCCLPTCL	DIBROMOCHLOROMETHANE	5	UG/L		U		5								
MW129	SW	REAL	SW01246WC	26-JUN-91	N	TRG	VOCCLPTCL	ETHYLBENZENE	5	UG/L		U		5								
MW129	SW	REAL	SW01246WC	26-JUN-91	N	TRG	VOCCLPTCL	METHYLENE CHLORIDE	5	UG/L		U		5								
MW129	SW	REAL	SW01246WC	26-JUN-91	N	TRG	VOCCLPTCL	STYRENE	5	UG/L		U		5								
MW129	SW	REAL	SW01246WC	26-JUN-91	N	TRG	VOCCLPTCL	TETRACHLOROETHENE	5	UG/L		U		5								
MW129	SW	REAL	SW01246WC	26-JUN-91	N	TRG	VOCCLPTCL	TOLUENE	5	UG/L		U		5								
MW129	SW	REAL	SW01246WC	26-JUN-91	N	TRG	VOCCLPTCL	TOTAL XYLENES	5	UG/L		U		5								
MW129	SW	REAL	SW01246WC	26-JUN-91	N	TRG	VOCCLPTCL	TRICHLOROETHENE	5	UG/L		U		5								
MW129	SW	REAL	SW01246WC	26-JUN-91	N	TRG	VOCCLPTCL	VINYL ACETATE	10	UG/L		U		10								
MW129	SW	REAL	SW01246WC	26-JUN-91	N	TRG	VOCCLPTCL	VINYL CHLORIDE	10	UG/L		U		10								
MW129	SW	REAL	SW01246WC	26-JUN-91	N	TRG	VOCCLPTCL	cis-1,3-DICHLOROPROPENE	5	UG/L		U		5								
MW129	SW	REAL	SW01246WC	26-JUN-91	N	TRG	VOCCLPTCL	trans-1,3-DICHLOROPROPENE	5	UG/L		U		5								
MW129	SW	REAL	SW01349WC	22-JUL-91	N																	
MW129	SW	REAL	SW01455WC	13-AUG-91	N	TRG	VOCCLPTCL	1,1,1-TRICHLOROETHANE	5	UG/L		U		5								
MW129	SW	REAL	SW01455WC	13-AUG-91	N	TRG	VOCCLPTCL	1,1,2,2-TETRACHLOROETHANE	5	UG/L		U		5								
MW129	SW	REAL	SW01455WC	13-AUG-91	N	TRG	VOCCLPTCL	1,1,2-TRICHLOROETHANE	5	UG/L		U		5								
MW129	SW	REAL	SW01455WC	13-AUG-91	N	TRG	VOCCLPTCL	1,1-DICHLOROETHANE	5	UG/L		U		5								
MW129	SW	REAL	SW01455WC	13-AUG-91	N	TRG	VOCCLPTCL	1,1-DICHLOROETHENE	5	UG/L		U		5								
MW129	SW	REAL	SW01455WC	13-AUG-91	N	TRG	VOCCLPTCL	1,2-DICHLOROETHANE	5	UG/L		U		5								
MW129	SW	REAL	SW01455WC	13-AUG-91	N	TRG	VOCCLPTCL	1,2-DICHLOROETHENE	5	UG/L		U		5								
MW129	SW	REAL	SW01455WC	13-AUG-91	N	TRG	VOCCLPTCL	1,2-DICHLOROPROPANE	5	UG/L		U		5								
MW129	SW	REAL	SW01455WC	13-AUG-91	N	TRG	VOCCLPTCL	2-BUTANONE	10	UG/L		U		10								
MW129	SW	REAL	SW01455WC	13-AUG-91	N	TRG	VOCCLPTCL	2-HEXANONE	10	UG/L		U		10								
MW129	SW	REAL	SW01455WC	13-AUG-91	N	TRG	VOCCLPTCL	4-METHYL-2-PENTANONE	10	UG/L		U		10								
MW129	SW	REAL	SW01455WC	13-AUG-91	N	TRG	VOCCLPTCL	ACETONE	10	UG/L		U		10								
MW129	SW	REAL	SW01455WC	13-AUG-91	N	TRG	VOCCLPTCL	BENZENE	5	UG/L		U		5								
MW129	SW	REAL	SW01455WC	13-AUG-91	N	TRG	VOCCLPTCL	BROMODICHLOROMETHANE	5	UG/L		U		5								
MW129	SW	REAL	SW01455WC	13-AUG-91	N	TRG	VOCCLPTCL	BROMOFORM	5	UG/L		U		5								
MW129	SW	REAL	SW01455WC	13-AUG-91	N	TRG	VOCCLPTCL	BROMOMETHANE	10	UG/L		U		10								
MW129	SW	REAL	SW01455WC	13-AUG-91	N	TRG	VOCCLPTCL	CARBON DISULFIDE	5	UG/L		U		5								
MW129	SW	REAL	SW01455WC	13-AUG-91	N	TRG	VOCCLPTCL	CARBON TETRACHLORIDE	5	UG/L		U		5								
MW129	SW	REAL	SW01455WC	13-AUG-91	N	TRG	VOCCLPTCL	CHLOROBENZENE	5	UG/L		U		5								
MW129	SW	REAL	SW01455WC	13-AUG-91	N	TRG	VOCCLPTCL	CHLOROETHANE	10	UG/L		U		10								
MW129	SW	REAL	SW01455WC	13-AUG-91	N	TRG	VOCCLPTCL	CHLOROFORM	5	UG/L		U		5								
MW129	SW	REAL	SW01455WC	13-AUG-91	N	TRG	VOCCLPTCL	CHLOROMETHANE	10	UG/L		U		10								
MW129	SW	REAL	SW01455WC	13-AUG-91	N	TRG	VOCCLPTCL	DIBROMOCHLOROMETHANE	5	UG/L		U		5								
MW129	SW	REAL	SW01455WC	13-AUG-91	N	TRG	VOCCLPTCL	ETHYLBENZENE	5	UG/L		U		5								
MW129	SW	REAL	SW01455WC	13-AUG-91	N	TRG	VOCCLPTCL	METHYLENE CHLORIDE	2	UG/L		JB		5								
MW129	SW	REAL	SW01455WC	13-AUG-91	N	TRG	VOCCLPTCL	STYRENE	5	UG/L		U		5								
MW129	SW	REAL	SW01455WC	13-AUG-91	N	TRG	VOCCLPTCL	TETRACHLOROETHENE	5	UG/L		U		5								
MW129	SW	REAL	SW01455WC	13-AUG-91	N	TRG	VOCCLPTCL	TOLUENE	5	UG/L		U		5								
MW129	SW	REAL	SW01455WC	13-AUG-91	N	TRG	VOCCLPTCL	TOTAL XYLENES	5	UG/L		U		5								
MW129	SW	REAL	SW01455WC	13-AUG-91	N	TRG	VOCCLPTCL	TRICHLOROETHENE	5	UG/L		U		5								
MW129	SW	REAL	SW01455WC	13-AUG-91	N	TRG	VOCCLPTCL	VINYL ACETATE	10	UG/L		U		10								
MW129	SW	REAL	SW01455WC	13-AUG-91	N	TRG	VOCCLPTCL	VINYL CHLORIDE	10	UG/L		U		10								
MW129	SW	REAL	SW01455WC	13-AUG-91	N	TRG	VOCCLPTCL	cis-1,3-DICHLOROPROPENE	5	UG/L		U		5								
MW129	SW	REAL	SW01455WC	13-AUG-91	N	TRG	VOCCLPTCL	trans-1,3-DICHLOROPROPENE	5	UG/L		U		5								
MW129	SW	REAL	SW01561WC	18-SEP-91	N	TRG	VOACLP	1,1,1-TRICHLOROETHANE	5	UG/L		U		5								
MW129	SW	REAL	SW01561WC	18-SEP-91	N	TRG	VOACLP	1,1,2,2-TETRACHLOROETHANE	5	UG/L		U		5								
MW129	SW	REAL	SW01561WC	18-SEP-91	N	TRG	VOACLP	1,1,2-TRICHLOROETHANE	5	UG/L		U		5								
MW129	SW	REAL	SW01561WC	18-SEP-91	N	TRG	VOACLP	1,1-DICHLOROETHANE	5	UG/L		U		5								
MW129	SW	REAL	SW01561WC	18-SEP-91	N	TRG	VOACLP	1,1-DICHLOROETHENE	5	UG/L		U		5								
MW129	SW	REAL	SW01561WC	18-SEP-91	N	TRG	VOACLP	1,2-DICHLOROETHANE	5	UG/L		U		5								
MW129	SW	REAL	SW01561WC	18-SEP-91	N	TRG	VOACLP	1,2-DICHLOROETHENE	5	UG/L		U		5								
MW129	SW	REAL	SW01561WC	18-SEP-91	N	TRG	VOACLP	1,2-DICHLOROPROPANE	5	UG/L		U		5								
MW129	SW	REAL	SW01561WC	18-SEP-91	N	TRG	VOACLP	2-BUTANONE	10	UG/L		U		10								

Location	ST	QC	Sample Number	Smpl Date	D	ID	Group	Chemical	Result	Unit	Error	Qual	D LMT	VA	RN1	RN2	RN3	RN4	VResult	VQual	VDET
SW129	SW	REAL	SW01561WC	18-SEP-91	N	TRG	VOACLP	2-HEXANONE	10	UG/L		U	10								
SW129	SW	REAL	SW01561WC	18-SEP-91	N	TRG	VOACLP	4-METHYL-2-PENTANONE	10	UG/L		U	10								
SW129	SW	REAL	SW01561WC	18-SEP-91	N	TRG	VOACLP	ACETONE	2	UG/L		JB	10								
SW129	SW	REAL	SW01561WC	18-SEP-91	N	TRG	VOACLP	BENZENE	5	UG/L		U	5								
SW129	SW	REAL	SW01561WC	18-SEP-91	N	TRG	VOACLP	BROMODICHLOROMETHANE	5	UG/L		U	5								
SW129	SW	REAL	SW01561WC	18-SEP-91	N	TRG	VOACLP	BROMOFORM	5	UG/L		U	5								
SW129	SW	REAL	SW01561WC	18-SEP-91	N	TRG	VOACLP	BROMOMETHANE	10	UG/L		U	10								
SW129	SW	REAL	SW01561WC	18-SEP-91	N	TRG	VOACLP	CARBON DISULFIDE	5	UG/L		U	5								
SW129	SW	REAL	SW01561WC	18-SEP-91	N	TRG	VOACLP	CARBON TETRACHLORIDE	5	UG/L		U	5								
SW129	SW	REAL	SW01561WC	18-SEP-91	N	TRG	VOACLP	CHLOROBENZENE	5	UG/L		U	5								
SW129	SW	REAL	SW01561WC	18-SEP-91	N	TRG	VOACLP	CHLOROETHANE	10	UG/L		U	10								
SW129	SW	REAL	SW01561WC	18-SEP-91	N	TRG	VOACLP	CHLOROFORM	5	UG/L		U	5								
SW129	SW	REAL	SW01561WC	18-SEP-91	N	TRG	VOACLP	CHLOROMETHANE	10	UG/L		U	10								
SW129	SW	REAL	SW01561WC	18-SEP-91	N	TRG	VOACLP	DIBROMOCHLOROMETHANE	5	UG/L		U	5								
SW129	SW	REAL	SW01561WC	18-SEP-91	N	TRG	VOACLP	ETHYLBENZENE	5	UG/L		U	5								
SW129	SW	REAL	SW01561WC	18-SEP-91	N	TRG	VOACLP	METHYLENE CHLORIDE	6	UG/L		B	5								
SW129	SW	REAL	SW01561WC	18-SEP-91	N	TRG	VOACLP	STYRENE	5	UG/L		U	5								
SW129	SW	REAL	SW01561WC	18-SEP-91	N	TRG	VOACLP	TETRACHLOROETHENE	5	UG/L		U	5								
SW129	SW	REAL	SW01561WC	18-SEP-91	N	TRG	VOACLP	TOLUENE	5	UG/L		U	5								
SW129	SW	REAL	SW01561WC	18-SEP-91	N	TRG	VOACLP	TOTAL XYLENES	5	UG/L		U	5								
SW129	SW	REAL	SW01561WC	18-SEP-91	N	TRG	VOACLP	TRICHLOROETHENE	5	UG/L		U	5								
SW129	SW	REAL	SW01561WC	18-SEP-91	N	TRG	VOACLP	VINYL ACETATE	10	UG/L		U	10								
SW129	SW	REAL	SW01561WC	18-SEP-91	N	TRG	VOACLP	VINYL CHLORIDE	10	UG/L		U	10								
SW129	SW	REAL	SW01561WC	18-SEP-91	N	TRG	VOACLP	cis-1,3-DICHLOROPROPENE	5	UG/L		U	5								
SW129	SW	REAL	SW01561WC	18-SEP-91	N	TRG	VOACLP	trans-1,3-DICHLOROPROPENE	5	UG/L		U	5								
SW129	SW	REAL	SW01667WC	23-OCT-91	N	TRG	SVOCLPTCL	1,2,4-TRICHLOROBENZENE	10	UG/L		U	10 00								
SW129	SW	REAL	SW01667WC	23-OCT-91	N	TRG	SVOCLPTCL	1,2-DICHLOROBENZENE	10	UG/L		U	10 00								
SW129	SW	REAL	SW01667WC	23-OCT-91	N	TRG	SVOCLPTCL	1,3-DICHLOROBENZENE	10	UG/L		U	10 00								
SW129	SW	REAL	SW01667WC	23-OCT-91	N	TRG	SVOCLPTCL	1,4-DICHLOROBENZENE	10	UG/L		U	10 00								
SW129	SW	REAL	SW01667WC	23-OCT-91	N	TRG	SVOCLPTCL	2,4,5-TRICHLOROPHENOL	50	UG/L		U	50 00								
SW129	SW	REAL	SW01667WC	23-OCT-91	N	TRG	SVOCLPTCL	2,4,6-TRICHLOROPHENOL	10	UG/L		U	10 00								
SW129	SW	REAL	SW01667WC	23-OCT-91	N	TRG	SVOCLPTCL	2,4-DICHLOROPHENOL	10	UG/L		U	10 00								
SW129	SW	REAL	SW01667WC	23-OCT-91	N	TRG	SVOCLPTCL	2,4-DIMETHYLPHENOL	10	UG/L		U	10 00								
SW129	SW	REAL	SW01667WC	23-OCT-91	N	TRG	SVOCLPTCL	2,4-DINITROPHENOL	50	UG/L		U	50 00								
SW129	SW	REAL	SW01667WC	23-OCT-91	N	TRG	SVOCLPTCL	2,4-DINITROTOLUENE	10	UG/L		U	10 00								
SW129	SW	REAL	SW01667WC	23-OCT-91	N	TRG	SVOCLPTCL	2,6-DINITROTOLUENE	10	UG/L		U	10 00								
SW129	SW	REAL	SW01667WC	23-OCT-91	N	TRG	SVOCLPTCL	2-CHLORONAPHTHALENE	10	UG/L		U	10 00								
SW129	SW	REAL	SW01667WC	23-OCT-91	N	TRG	SVOCLPTCL	2-CHLOROPHENOL	10	UG/L		U	10 00								
SW129	SW	REAL	SW01667WC	23-OCT-91	N	TRG	SVOCLPTCL	2-METHYLNAPHTHALENE	10	UG/L		U	10 00								
SW129	SW	REAL	SW01667WC	23-OCT-91	N	TRG	SVOCLPTCL	2-METHYLPHENOL	10	UG/L		U	10 00								
SW129	SW	REAL	SW01667WC	23-OCT-91	N	TRG	SVOCLPTCL	2-NITROANILINE	50	UG/L		U	50 00								
SW129	SW	REAL	SW01667WC	23-OCT-91	N	TRG	SVOCLPTCL	2-NITROPHENOL	10	UG/L		U	10.00								
SW129	SW	REAL	SW01667WC	23-OCT-91	N	TRG	SVOCLPTCL	3,3'-DICHLOROBENZIDINE	20	UG/L		U	20 00								
SW129	SW	REAL	SW01667WC	23-OCT-91	N	TRG	SVOCLPTCL	3-NITROANILINE	50	UG/L		U	50 00								
SW129	SW	REAL	SW01667WC	23-OCT-91	N	TRG	SVOCLPTCL	4,6-DINITRO-2-METHYLPHENOL	50	UG/L		U	50 00								
SW129	SW	REAL	SW01667WC	23-OCT-91	N	TRG	SVOCLPTCL	4-BROMOPHENYL PHENYL ETHER	10	UG/L		U	10 00								
SW129	SW	REAL	SW01667WC	23-OCT-91	N	TRG	SVOCLPTCL	4-CHLORO-3-METHYLPHENOL	10	UG/L		U	10 00								
SW129	SW	REAL	SW01667WC	23-OCT-91	N	TRG	SVOCLPTCL	4-CHLOROANILINE	10	UG/L		U	10 00								
SW129	SW	REAL	SW01667WC	23-OCT-91	N	TRG	SVOCLPTCL	4-CHLOROPHENYL PHENYL ETHER	10	UG/L		U	10 00								
SW129	SW	REAL	SW01667WC	23-OCT-91	N	TRG	SVOCLPTCL	4-METHYLPHENOL	10	UG/L		U	10.00								
SW129	SW	REAL	SW01667WC	23-OCT-91	N	TRG	SVOCLPTCL	4-NITROANILINE	50	UG/L		U	50 00								
SW129	SW	REAL	SW01667WC	23-OCT-91	N	TRG	SVOCLPTCL	4-NITROPHENOL	50	UG/L		U	50 00								
SW129	SW	REAL	SW01667WC	23-OCT-91	N	TRG	SVOCLPTCL	ACENAPHTHENE	10	UG/L		U	10 00								
SW129	SW	REAL	SW01667WC	23-OCT-91	N	TRG	SVOCLPTCL	ACENAPHTHYLENE	10	UG/L		U	10 00								
SW129	SW	REAL	SW01667WC	23-OCT-91	N	TRG	SVOCLPTCL	ANTHRACENE	10	UG/L		U	10 00								
SW129	SW	REAL	SW01667WC	23-OCT-91	N	TRG	SVOCLPTCL	BENZO(a)ANTHRACENE	10	UG/L		U	10.00								
SW129	SW	REAL	SW01667WC	23-OCT-91	N	TRG	SVOCLPTCL	BENZO(a)PYRENE	10	UG/L		U	10.00								
SW129	SW	REAL	SW01667WC	23-OCT-91	N	TRG	SVOCLPTCL	BENZO(b)FLUORANTHENE	10	UG/L		U	10 00								
SW129	SW	REAL	SW01667WC	23-OCT-91	N	TRG	SVOCLPTCL	BENZO(ghi)PERYLENE	10	UG/L		U	10.00								
SW129	SW	REAL	SW01667WC	23-OCT-91	N	TRG	SVOCLPTCL	BENZO(k)FLUORANTHENE	10	UG/L		U	10 00								
SW129	SW	REAL	SW01667WC	23-OCT-91	N	TRG	SVOCLPTCL	BENZOIC ACID	50	UG/L		U	50 00								
SW129	SW	REAL	SW01667WC	23-OCT-91	N	TRG	SVOCLPTCL	BENZYL ALCOHOL	10	UG/L		U	10.00								
SW129	SW	REAL	SW01667WC	23-OCT-91	N	TRG	SVOCLPTCL	BIS(2-CHLOROETHOXY)METHANE	10	UG/L		U	10 00								

Location	ST	QC	Sample Number	Smpl Date	D	ID	Group	Chemical	Result	Unit	Error	Qual	D LMT	VA	RN1	RN2	RN3	RN4	VResult	VQual	VDET
SW129	SW	REAL	SW01667WC	23-OCT-91	N	TRG	SVOCLPTCL	BIS(2-CHLOROETHYL)ETHER	10	UG/L		U	10 00								
SW129	SW	REAL	SW01667WC	23-OCT-91	N	TRG	SVOCLPTCL	BIS(2-CHLOROISOPROPYL)ETHER	10	UG/L		U	10 00								
SW129	SW	REAL	SW01667WC	23-OCT-91	N	TRG	SVOCLPTCL	BIS(2-ETHYLHEXYL)PHTHALATE	10	UG/L		U	10 00								
SW129	SW	REAL	SW01667WC	23-OCT-91	N	TRG	SVOCLPTCL	BUTYL BENZYL PHTHALATE	10	UG/L		U	10 00								
SW129	SW	REAL	SW01667WC	23-OCT-91	N	TRG	SVOCLPTCL	CHRYSENE	10	UG/L		U	10 00								
SW129	SW	REAL	SW01667WC	23-OCT-91	N	TRG	SVOCLPTCL	DI-n-BUTYL PHTHALATE	10	UG/L		U	10 00								
SW129	SW	REAL	SW01667WC	23-OCT-91	N	TRG	SVOCLPTCL	DI n-OCTYL PHTHALATE	10	UG/L		U	10 00								
SW129	SW	REAL	SW01667WC	23-OCT-91	N	TRG	SVOCLPTCL	DIBENZO(a,h)ANTHRACENE	10	UG/L		U	10 00								
SW129	SW	REAL	SW01667WC	23-OCT-91	N	TRG	SVOCLPTCL	DIBENZOFURAN	10	UG/L		U	10 00								
SW129	SW	REAL	SW01667WC	23-OCT-91	N	TRG	SVOCLPTCL	DIETHYL PHTHALATE	10	UG/L		U	10 00								
SW129	SW	REAL	SW01667WC	23-OCT-91	N	TRG	SVOCLPTCL	DIMETHYL PHTHALATE	10	UG/L		U	10 00								
SW129	SW	REAL	SW01667WC	23-OCT-91	N	TRG	SVOCLPTCL	FLUORANTHENE	10	UG/L		U	10 00								
SW129	SW	REAL	SW01667WC	23-OCT-91	N	TRG	SVOCLPTCL	FLUORENE	10	UG/L		U	10 00								
SW129	SW	REAL	SW01667WC	23-OCT-91	N	TRG	SVOCLPTCL	HEXACHLOROBENZENE	10	UG/L		U	10 00								
SW129	SW	REAL	SW01667WC	23 OCT 91	N	TRG	SVOCLPTCL	HEXACHLOROBUTADIENE	10	UG/L		U	10 00								
SW129	SW	REAL	SW01667WC	23-OCT 91	N	TRG	SVOCLPTCL	HEXACHLOROCYCLOPENTADIENE	10	UG/L		U	10 00								
SW129	SW	REAL	SW01667WC	23-OCT-91	N	TRG	SVOCLPTCL	HEXACHLOROETHANE	10	UG/L		U	10 00								
SW129	SW	REAL	SW01667WC	23-OCT-91	N	TRG	SVOCLPTCL	INDENO(1,2,3-cd)PYRENE	10	UG/L		U	10 00								
SW129	SW	REAL	SW01667WC	23-OCT-91	N	TRG	SVOCLPTCL	ISOPHORONE	10	UG/L		U	10 00								
SW129	SW	REAL	SW01667WC	23-OCT-91	N	TRG	SVOCLPTCL	N-NITROSO-DI-n-PROPYLAMINE	10	UG/L		U	10 00								
SW129	SW	REAL	SW01667WC	23-OCT-91	N	TRG	SVOCLPTCL	N-NITROSODIPHENYLAMINE	10	UG/L		U	10 00								
SW129	SW	REAL	SW01667WC	23-OCT-91	N	TRG	SVOCLPTCL	NAPHTHALENE	10	UG/L		U	10 00								
SW129	SW	REAL	SW01667WC	23-OCT-91	N	TRG	SVOCLPTCL	NITROBENZENE	10	UG/L		U	10 00								
SW129	SW	REAL	SW01667WC	23-OCT-91	N	TRG	SVOCLPTCL	PENTACHLOROPHENOL	50	UG/L		U	50 00								
SW129	SW	REAL	SW01667WC	23-OCT-91	N	TRG	SVOCLPTCL	PHENANTHRENE	10	UG/L		U	10 00								
SW129	SW	REAL	SW01667WC	23-OCT-91	N	TRG	SVOCLPTCL	PHENOL	10	UG/L		U	10 00								
SW129	SW	REAL	SW01667WC	23-OCT-91	N	TRG	SVOCLPTCL	PYRENE	10	UG/L		U	10 00								
SW129	SW	REAL	SW01667WC	23-OCT-91	N	TRG	VOCCLPTCL	1,1,1-TRICHLOROETHANE	5	UG/L		U	5.000								
SW129	SW	REAL	SW01667WC	23-OCT-91	N	TRG	VOCCLPTCL	1,1,2,2-TETRACHLOROETHANE	5	UG/L		U	5 000								
SW129	SW	REAL	SW01667WC	23-OCT-91	N	TRG	VOCCLPTCL	1,1,2 TRICHLOROETHANE	5	UG/L		U	5 000								
SW129	SW	REAL	SW01667WC	23-OCT-91	N	TRG	VOCCLPTCL	1,1-DICHLOROETHANE	5	UG/L		U	5 000								
SW129	SW	REAL	SW01667WC	23-OCT-91	N	TRG	VOCCLPTCL	1,1-DICHLOROETHENE	5	UG/L		U	5 000								
SW129	SW	REAL	SW01667WC	23-OCT-91	N	TRG	VOCCLPTCL	1,2-DICHLOROETHANE	5	UG/L		U	5 000								
SW129	SW	REAL	SW01667WC	23-OCT-91	N	TRG	VOCCLPTCL	1,2-DICHLOROETHENE	5	UG/L		U	5 000								
SW129	SW	REAL	SW01667WC	23-OCT-91	N	TRG	VOCCLPTCL	1,2 DICHLOROPROPANE	5	UG/L		U	5 000								
SW129	SW	REAL	SW01667WC	23-OCT-91	N	TRG	VOCCLPTCL	2-BUTANONE	10	UG/L		U	10 00								
SW129	SW	REAL	SW01667WC	23-OCT-91	N	TRG	VOCCLPTCL	2-HEXANONE	10	UG/L		U	10 00								
SW129	SW	REAL	SW01667WC	23-OCT-91	N	TRG	VOCCLPTCL	4-METHYL-2-PENTANONE	10	UG/L		U	10.00								
SW129	SW	REAL	SW01667WC	23-OCT-91	N	TRG	VOCCLPTCL	ACETONE	10	UG/L		U	10 00								
SW129	SW	REAL	SW01667WC	23-OCT-91	N	TRG	VOCCLPTCL	BENZENE	5	UG/L		U	5 000								
SW129	SW	REAL	SW01667WC	23-OCT-91	N	TRG	VOCCLPTCL	BROMODICHLOROMETHANE	5	UG/L		U	5 000								
SW129	SW	REAL	SW01667WC	23-OCT-91	N	TRG	VOCCLPTCL	BROMOFORM	5	UG/L		U	5 000								
SW129	SW	REAL	SW01667WC	23-OCT-91	N	TRG	VOCCLPTCL	BROMOMETHANE	10	UG/L		U	10 00								
SW129	SW	REAL	SW01667WC	23-OCT-91	N	TRG	VOCCLPTCL	CARBON DISULFIDE	5	UG/L		U	5 000								
SW129	SW	REAL	SW01667WC	23-OCT-91	N	TRG	VOCCLPTCL	CARBON TETRACHLORIDE	5	UG/L		U	5 000								
SW129	SW	REAL	SW01667WC	23-OCT-91	N	TRG	VOCCLPTCL	CHLOROBENZENE	5	UG/L		U	5 000								
SW129	SW	REAL	SW01667WC	23-OCT-91	N	TRG	VOCCLPTCL	CHLOROETHANE	10	UG/L		U	10 00								
SW129	SW	REAL	SW01667WC	23-OCT-91	N	TRG	VOCCLPTCL	CHLOROFORM	5	UG/L		U	5 000								
SW129	SW	REAL	SW01667WC	23-OCT-91	N	TRG	VOCCLPTCL	CHLOROMETHANE	10	UG/L		U	10 00								
SW129	SW	REAL	SW01667WC	23-OCT-91	N	TRG	VOCCLPTCL	DIBROMOCHLOROMETHANE	5	UG/L		U	5 000								
SW129	SW	REAL	SW01667WC	23-OCT-91	N	TRG	VOCCLPTCL	ETHYLBENZENE	5	UG/L		U	5 000								
SW129	SW	REAL	SW01667WC	23-OCT-91	N	TRG	VOCCLPTCL	METHYLENE CHLORIDE	5	UG/L		U	5 000								
SW129	SW	REAL	SW01667WC	23-OCT-91	N	TRG	VOCCLPTCL	STYRENE	5	UG/L		U	5 000								
SW129	SW	REAL	SW01667WC	23-OCT-91	N	TRG	VOCCLPTCL	TETRACHLOROETHENE	5	UG/L		U	5 000								
SW129	SW	REAL	SW01667WC	23-OCT-91	N	TRG	VOCCLPTCL	TOLUENE	5	UG/L		U	5.000								
SW129	SW	REAL	SW01667WC	23-OCT-91	N	TRG	VOCCLPTCL	TOTAL XYLENES	5	UG/L		U	5 000								
SW129	SW	REAL	SW01667WC	23-OCT-91	N	TRG	VOCCLPTCL	TRICHLOROETHENE	5	UG/L		U	5 000								
SW129	SW	REAL	SW01667WC	23-OCT-91	N	TRG	VOCCLPTCL	VINYL ACETATE	10	UG/L		U	10.00								
SW129	SW	REAL	SW01667WC	23-OCT-91	N	TRG	VOCCLPTCL	VINYL CHLORIDE	10	UG/L		U	10 00								
SW129	SW	REAL	SW01667WC	23-OCT-91	N	TRG	VOCCLPTCL	cis-1,3-DICHLOROPROPENE	5	UG/L		U	5 000								
SW129	SW	REAL	SW01667WC	23-OCT-91	N	TRG	VOCCLPTCL	trans-1,3-DICHLOROPROPENE	5	UG/L		U	5 000								

Trace Metals & Cations & Silicon

3-23-92

990

Location	ST	QC	Sample Number	Smpl Date	D	ID	Group	Chemical	Result	Unit	Error	Qual	D LMT	VA	RN1	RN2	RN3	RN4	VResult	VQual	VDET
SED118	SD	REAL	SS00127WC	18-SEP-90	N	TRG	SMETCLPTCL	% SOLIDS	87.2	% SOLI											
SED118	SD	REAL	SS00127WC	18-SEP-90	N	TRG	SMETCLPTCL	ALUMINUM	6250	MG/KG		*									
SED118	SD	REAL	SS00127WC	18-SEP 90	N	TRG	SMETCLPTCL	ANTIMONY	6 8	MG/KG		UN									
SED118	SD	REAL	SS00127WC	18-SEP-90	N	TRG	SMETCLPTCL	ARSENIC	5	MG/KG		N									
SED118	SD	REAL	SS00127WC	18-SEP-90	N	TRG	SMETCLPTCL	BARIUM	105	MG/KG											
SED118	SD	REAL	SS00127WC	18-SEP-90	N	TRG	SMETCLPTCL	BERYLLIUM	1	MG/KG		B									
SED118	SD	REAL	SS00127WC	18-SEP-90	N	TRG	SMETCLPTCL	CADMIUM	1.1	MG/KG		B									
SED118	SD	REAL	SS00127WC	18-SEP-90	N	TRG	SMETCLPTCL	CALCIUM	7970	MG/KG											
SED118	SD	REAL	SS00127WC	18-SEP 90	N	TRG	SMETCLPTCL	CESIUM	2 6	MG/KG		WN*									
SED118	SD	REAL	SS00127WC	18-SEP-90	N	TRG	SMETCLPTCL	CHROMIUM	8	MG/KG											
SED118	SD	REAL	SS00127WC	18-SEP-90	N	TRG	SMETCLPTCL	COBALT	8 1	MG/KG		B									
SED118	SD	REAL	SS00127WC	18-SEP-90	N	TRG	SMETCLPTCL	COPPER	13 8	MG/KG											
SED118	SD	REAL	SS00127WC	18-SEP-90	N	TRG	SMETCLPTCL	IRON	10800	MG/KG		*									
SED118	SD	REAL	SS00127WC	18-SEP-90	N	TRG	SMETCLPTCL	LEAD	14 9	MG/KG		N									
SED118	SD	REAL	SS00127WC	18-SEP-90	N	TRG	SMETCLPTCL	LITHIUM	11 2	MG/KG		U									
SED118	SD	REAL	SS00127WC	18-SEP-90	N	TRG	SMETCLPTCL	MAGNESIUM	2420	MG/KG											
SED118	SD	REAL	SS00127WC	18-SEP-90	N	TRG	SMETCLPTCL	MANGANESE	244	MG/KG											
SED118	SD	REAL	SS00127WC	18-SEP-90	N	TRG	SMETCLPTCL	MERCURY	1	MG/KG		U									
SED118	SD	REAL	SS00127WC	18-SEP-90	N	TRG	SMETCLPTCL	MOLYBDENUM	2.5	MG/KG											
SED118	SD	REAL	SS00127WC	18-SEP-90	N	TRG	SMETCLPTCL	NICKEL	14 7	MG/KG											
SED118	SD	REAL	SS00127WC	18-SEP-90	N	TRG	SMETCLPTCL	POTASSIUM	1050	MG/KG		B									
SED118	SD	REAL	SS00127WC	18-SEP-90	N	TRG	SMETCLPTCL	SELENIUM	46	MG/KG		UWN									
SED118	SD	REAL	SS00127WC	18-SEP-90	N	TRG	SMETCLPTCL	SILICON	1040	MG/KG		*									
SED118	SD	REAL	SS00127WC	18-SEP-90	N	TRG	SMETCLPTCL	SILVER	2 3	MG/KG		U									
SED118	SD	REAL	SS00127WC	18-SEP-90	N	TRG	SMETCLPTCL	SODIUM	343	MG/KG		B									
SED118	SD	REAL	SS00127WC	18-SEP-90	N	TRG	SMETCLPTCL	STRONTIUM	42 2	MG/KG											
SED118	SD	REAL	SS00127WC	18-SEP-90	N	TRG	SMETCLPTCL	THALLIUM	46	MG/KG		U									
SED118	SD	REAL	SS00127WC	18-SEP-90	N	TRG	SMETCLPTCL	TIN	11 2	MG/KG		U									
SED118	SD	REAL	SS00127WC	18-SEP-90	N	TRG	SMETCLPTCL	VANADIUM	21 2	MG/KG											
SED118	SD	REAL	SS00127WC	18-SEP-90	N	TRG	SMETCLPTCL	ZINC	71 1	MG/KG		E									
SED118	SD	REAL	SS00161WC	28-NOV-90	N	TRG	SMETCLPTCL	ALUMINUM	14300 00	MG/KG			200 0								
SED118	SD	REAL	SS00161WC	28-NOV-90	N	TRG	SMETCLPTCL	ANTIMONY	13.30	MG/KG		BN	60 00								
SED118	SD	REAL	SS00161WC	28-NOV-90	N	TRG	SMETCLPTCL	ARSENIC	10 20	MG/KG			10 00								
SED118	SD	REAL	SS00161WC	28-NOV-90	N	TRG	SMETCLPTCL	BARIUM	188.00	MG/KG			200 0								
SED118	SD	REAL	SS00161WC	28-NOV-90	N	TRG	SMETCLPTCL	BERYLLIUM	1.20	MG/KG		B	5 000								
SED118	SD	REAL	SS00161WC	28-NOV-90	N	TRG	SMETCLPTCL	CADMIUM	1 50	MG/KG		B	5 000								
SED118	SD	REAL	SS00161WC	28-NOV-90	N	TRG	SMETCLPTCL	CALCIUM	12000 00	MG/KG		E	5000								
SED118	SD	REAL	SS00161WC	28-NOV-90	N	TRG	SMETCLPTCL	CHROMIUM	11 30	MG/KG			10 00								
SED118	SD	REAL	SS00161WC	28-NOV-90	N	TRG	SMETCLPTCL	COBALT	15.00	MG/KG		B	50 00								
SED118	SD	REAL	SS00161WC	28-NOV-90	N	TRG	SMETCLPTCL	COPPER	35 90	MG/KG		*	25 00								
SED118	SD	REAL	SS00161WC	28-NOV-90	N	TRG	SMETCLPTCL	IRON	21700 00	MG/KG			100 0								
SED118	SD	REAL	SS00161WC	28-NOV-90	N	TRG	SMETCLPTCL	LEAD	21 60	MG/KG			3 000								
SED118	SD	REAL	SS00161WC	28-NOV-90	N	TRG	SMETCLPTCL	MAGNESIUM	4270 00	MG/KG		E	5000.								
SED118	SD	REAL	SS00161WC	28-NOV-90	N	TRG	SMETCLPTCL	MANGANESE	457 00	MG/KG			15 00								
SED118	SD	REAL	SS00161WC	28-NOV-90	N	TRG	SMETCLPTCL	MERCURY	0 35	MG/KG		U	0 200								
SED118	SD	REAL	SS00161WC	28-NOV-90	N	TRG	SMETCLPTCL	MERCURY	0 50	MG/KG			0 200								
SED118	SD	REAL	SS00161WC	28-NOV-90	N	TRG	SMETCLPTCL	NICKEL	24 30	MG/KG		B	40 00								
SED118	SD	REAL	SS00161WC	28-NOV-90	N	TRG	SMETCLPTCL	POTASSIUM	2130.00	MG/KG		BE	5000.								
SED118	SD	REAL	SS00161WC	28-NOV-90	N	TRG	SMETCLPTCL	SELENIUM	0 68	MG/KG		B	5 000								
SED118	SD	REAL	SS00161WC	28-NOV-90	N	TRG	SMETCLPTCL	SILVER	2 10	MG/KG		B	10 00								
SED118	SD	REAL	SS00161WC	28-NOV-90	N	TRG	SMETCLPTCL	SODIUM	402 00	MG/KG		BE	5000.								
SED118	SD	REAL	SS00161WC	28-NOV-90	N	TRG	SMETCLPTCL	THALLIUM	1.40	MG/KG		UW	10 00								
SED118	SD	REAL	SS00161WC	28-NOV-90	N	TRG	SMETCLPTCL	VANADIUM	42.40	MG/KG			50 00								
SED118	SD	REAL	SS00161WC	28-NOV-90	N	TRG	SMETCLPTCL	ZINC	111.00	MG/KG		E	20 00								
SED118	SD	REAL	SS00161WC	28-NOV-90	N	TRG	SMETNOCLP	CESIUM	52.00	MG/KG		U	1000								
SED118	SD	REAL	SS00161WC	28-NOV-90	N	TRG	SMETNOCLP	LITHIUM	10.10	MG/KG		B	100.0								
SED118	SD	REAL	SS00161WC	28-NOV-90	N	TRG	SMETNOCLP	MOLYBDENUM	7.20	MG/KG		B	200 0								
SED118	SD	REAL	SS00161WC	28-NOV-90	N	TRG	SMETNOCLP	STRONTIUM	74.80	MG/KG		B	200 0								
SED118	SD	REAL	SS00161WC	28-NOV-90	N	TRG	SMETNOCLP	TIN	24.90	MG/KG		B	200 0								
~~SED118~~	~~SW~~	~~REAL~~	~~SW00487WC~~	~~23-NOV-90~~	~~T~~																
SW022	SW	REAL	SW70001WC	23-JUL-90	N	DL	SMETCLPTCL	ALUMINUM	46400	UG/L		N									
SW022	SW	REAL	SW70001WC	23-JUL-90	N	DL	SMETCLPTCL	ANTIMONY	37.0	UG/L		U									
SW022	SW	REAL	SW70001WC	23-JUL-90	N	DL	SMETCLPTCL	ARSENIC	5 5	UG/L		B									

Location	ST	QC	Sample Number	Smpl Date	D	ID	Group	Chemical	Result	Unit	Error	Qual	D LMT	VA	RN1	RN2	RN3	RN4	VResult	VQual	VDET
SW022	SW	REAL	SW70001WC	23-JUL-90	N	DL	SMETCLPTCL	BARIUM	486	UG/L											
SW022	SW	REAL	SW70001WC	23-JUL-90	N	DL	SMETCLPTCL	BERYLLIUM	3.2	UG/L		B									
SW022	SW	REAL	SW70001WC	23-JUL-90	N	DL	SMETCLPTCL	CADMIUM	5 5	UG/L											
SW022	SW	REAL	SW70001WC	23-JUL-90	N	DL	SMETCLPTCL	CALCIUM	74000	UG/L											
SW022	SW	REAL	SW70001WC	23-JUL-90	N	DL	SMETCLPTCL	CHROMIUM	62 2	UG/L											
SW022	SW	REAL	SW70001WC	23-JUL-90	N	DL	SMETCLPTCL	COBALT	24 4	UG/L		B									
SW022	SW	REAL	SW70001WC	23-JUL-90	N	DL	SMETCLPTCL	COPPER	109	UG/L											
SW022	SW	REAL	SW70001WC	23-JUL-90	N	DL	SMETCLPTCL	IRON	49800	UG/L											
SW022	SW	REAL	SW70001WC	23-JUL-90	N	DL	SMETCLPTCL	LEAD	128	UG/L											
SW022	SW	REAL	SW70001WC	23-JUL-90	N	DL	SMETCLPTCL	MAGNESIUM	17700	UG/L											
SW022	SW	REAL	SW70001WC	23-JUL-90	N	DL	SMETCLPTCL	MANGANESE	942	UG/L											
SW022	SW	REAL	SW70001WC	23-JUL-90	N	DL	SMETCLPTCL	MERCURY	0.4	UG/L		U									
SW022	SW	REAL	SW70001WC	23-JUL-90	N	DL	SMETCLPTCL	NICKEL	56 4	UG/L											
SW022	SW	REAL	SW70001WC	23-JUL-90	N	DL	SMETCLPTCL	POTASSIUM	10100	UG/L											
SW022	SW	REAL	SW70001WC	23-JUL-90	N	DL	SMETCLPTCL	SELENIUM	1 0	UG/L		UW									
SW022	SW	REAL	SW70001WC	23-JUL-90	N	DL	SMETCLPTCL	SILVER	8.2	UG/L		BN									
SW022	SW	REAL	SW70001WC	23-JUL-90	N	DL	SMETCLPTCL	SODIUM	7290	UG/L											
SW022	SW	REAL	SW70001WC	23-JUL-90	N	DL	SMETCLPTCL	THALLIUM	1.0	UG/L		UN									
SW022	SW	REAL	SW70001WC	23-JUL-90	N	DL	SMETCLPTCL	VANADIUM	124	UG/L											
SW022	SW	REAL	SW70001WC	23-JUL-90	N	DL	SMETCLPTCL	ZINC	592	UG/L											
SW022	SW	REAL	SW70001WC	23-JUL-90	N	TRG	SMETCLPTCL	ALUMINUM	46400	UG/L		N									
SW022	SW	REAL	SW70001WC	23-JUL-90	N	TRG	SMETCLPTCL	ANTIMONY	37 0	UG/L		U									
SW022	SW	REAL	SW70001WC	23-JUL-90	N	TRG	SMETCLPTCL	ARSENIC	5.5	UG/L		B									
SW022	SW	REAL	SW70001WC	23-JUL-90	N	TRG	SMETCLPTCL	BARIUM	486	UG/L											
SW022	SW	REAL	SW70001WC	23-JUL-90	N	TRG	SMETCLPTCL	BERYLLIUM	3.2	UG/L		B									
SW022	SW	REAL	SW70001WC	23-JUL-90	N	TRG	SMETCLPTCL	CADMIUM	5.5	UG/L											
SW022	SW	REAL	SW70001WC	23-JUL-90	N	TRG	SMETCLPTCL	CALCIUM	74000	UG/L											
SW022	SW	REAL	SW70001WC	23-JUL-90	N	TRG	SMETCLPTCL	CHROMIUM	62 2	UG/L											
SW022	SW	REAL	SW70001WC	23-JUL-90	N	TRG	SMETCLPTCL	COBALT	24.4	UG/L		B									
SW022	SW	REAL	SW70001WC	23-JUL-90	N	TRG	SMETCLPTCL	COPPER	109	UG/L											
SW022	SW	REAL	SW70001WC	23-JUL-90	N	TRG	SMETCLPTCL	IRON	49800	UG/L											
SW022	SW	REAL	SW70001WC	23-JUL-90	N	TRG	SMETCLPTCL	MAGNESIUM	17700	UG/L											
SW022	SW	REAL	SW70001WC	23-JUL-90	N	TRG	SMETCLPTCL	MANGANESE	942	UG/L											
SW022	SW	REAL	SW70001WC	23-JUL-90	N	TRG	SMETCLPTCL	NICKEL	56.4	UG/L											
SW022	SW	REAL	SW70001WC	23-JUL-90	N	TRG	SMETCLPTCL	POTASSIUM	10100	UG/L											
SW022	SW	REAL	SW70001WC	23-JUL-90	N	TRG	SMETCLPTCL	SELENIUM	1 0	UG/L		UW									
SW022	SW	REAL	SW70001WC	23-JUL-90	N	TRG	SMETCLPTCL	SILVER	8 2	UG/L		BN									
SW022	SW	REAL	SW70001WC	23-JUL-90	N	TRG	SMETCLPTCL	SODIUM	7290	UG/L											
SW022	SW	REAL	SW70001WC	23-JUL-90	N	TRG	SMETCLPTCL	THALLIUM	1 0	UG/L		UN									
SW022	SW	REAL	SW70001WC	23-JUL-90	N	TRG	SMETCLPTCL	VANADIUM	124	UG/L											
SW022	SW	REAL	SW70001WC	23-JUL-90	N	TRG	SMETCLPTCL	ZINC	592	UG/L											
SW022	SW	REAL	SW70013WC	07-SEP-90	N	TRG	SMETCLPTCL	ALUMINUM	8790	UG/L											
SW022	SW	REAL	SW70013WC	07-SEP-90	N	TRG	SMETCLPTCL	ANTIMONY	35.0	UG/L		U									
SW022	SW	REAL	SW70013WC	07-SEP-90	N	TRG	SMETCLPTCL	ARSENIC	9 0	UG/L		BN									
SW022	SW	REAL	SW70013WC	07-SEP-90	N	TRG	SMETCLPTCL	BARIUM	127	UG/L		B									
SW022	SW	REAL	SW70013WC	07-SEP-90	N	TRG	SMETCLPTCL	BERYLLIUM	1.0	UG/L		U									
SW022	SW	REAL	SW70013WC	07-SEP-90	N	TRG	SMETCLPTCL	CADMIUM	5 0	UG/L		B									
SW022	SW	REAL	SW70013WC	07-SEP-90	N	TRG	SMETCLPTCL	CALCIUM	34800	UG/L											
SW022	SW	REAL	SW70013WC	07-SEP-90	N	TRG	SMETCLPTCL	CHROMIUM	9 2	UG/L		B									
SW022	SW	REAL	SW70013WC	07-SEP-90	N	TRG	SMETCLPTCL	COBALT	6 0	UG/L		U									
SW022	SW	REAL	SW70013WC	07-SEP-90	N	TRG	SMETCLPTCL	COPPER	34.7	UG/L											
SW022	SW	REAL	SW70013WC	07-SEP-90	N	TRG	SMETCLPTCL	IRON	10600	UG/L											
SW022	SW	REAL	SW70013WC	07-SEP-90	N	TRG	SMETCLPTCL	LEAD	32.2	UG/L		N									
SW022	SW	REAL	SW70013WC	07-SEP-90	N	TRG	SMETCLPTCL	MAGNESIUM	5930	UG/L											
SW022	SW	REAL	SW70013WC	07-SEP-90	N	TRG	SMETCLPTCL	MANGANESE	192	UG/L											
SW022	SW	REAL	SW70013WC	07-SEP-90	N	TRG	SMETCLPTCL	MERCURY	0 2	UG/L		U									
SW022	SW	REAL	SW70013WC	07-SEP-90	N	TRG	SMETCLPTCL	NICKEL	14.0	UG/L		B									
SW022	SW	REAL	SW70013WC	07-SEP-90	N	TRG	SMETCLPTCL	POTASSIUM	53300	UG/L											
SW022	SW	REAL	SW70013WC	07-SEP-90	N	TRG	SMETCLPTCL	SELENIUM	10 0	UG/L		UN									
SW022	SW	REAL	SW70013WC	07-SEP-90	N	TRG	SMETCLPTCL	SILVER	4 6	UG/L		B									
SW022	SW	REAL	SW70013WC	07-SEP-90	N	TRG	SMETCLPTCL	SODIUM	3660	UG/L		B									
SW022	SW	REAL	SW70013WC	07-SEP-90	N	TRG	SMETCLPTCL	THALLIUM	1.0	UG/L		UWN									
SW022	SW	REAL	SW70013WC	07-SEP-90	N	TRG	SMETCLPTCL	VANADIUM	670	UG/L											

Location	ST	QC	Sample Number	Smpl Date	D	ID	Group	Chemical	Result	Unit	Error	Qual	D LMT	VA	RN1	RN2	RN3	RN4	VResult	VQual	VDET
SW022	SW	REAL	SW70013WC	07-SEP-90	N	TRG	SMETCLPTCL	ZINC	141	UG/L											
SW022	SW	REAL	SW70020WC	24-OCT-90	N																
SW022	SW	REAL	SW70027WC	08-NOV-90	N	TRG	SMETCLPTCL	ALUMINUM	27400	UG/L			200								
SW022	SW	REAL	SW70027WC	08-NOV-90	N	TRG	SMETCLPTCL	ANTIMONY	22 0	UG/L		U	60								
SW022	SW	REAL	SW70027WC	08-NOV-90	N	TRG	SMETCLPTCL	ARSENIC	3 2	UG/L		B	10								
SW022	SW	REAL	SW70027WC	08-NOV-90	N	TRG	SMETCLPTCL	BARIUM	342	UG/L			200								
SW022	SW	REAL	SW70027WC	08-NOV-90	N	TRG	SMETCLPTCL	BERYLLIUM	2.4	UG/L		B	5								
SW022	SW	REAL	SW70027WC	08-NOV-90	N	TRG	SMETCLPTCL	CADMIUM	5 0	UG/L		U	5								
SW022	SW	REAL	SW70027WC	08-NOV-90	N	TRG	SMETCLPTCL	CALCIUM	74200	UG/L			5000								
SW022	SW	REAL	SW70027WC	08-NOV-90	N	TRG	SMETCLPTCL	CHROMIUM	21 8	UG/L			10								
SW022	SW	REAL	SW70027WC	08-NOV-90	N	TRG	SMETCLPTCL	COBALT	12 3	UG/L		B	50								
SW022	SW	REAL	SW70027WC	08-NOV-90	N	TRG	SMETCLPTCL	COPPER	69 0	UG/L			25								
SW022	SW	REAL	SW70027WC	08-NOV-90	N	TRG	SMETCLPTCL	IRON	31000	UG/L			100								
SW022	SW	REAL	SW70027WC	08-NOV-90	N	TRG	SMETCLPTCL	LEAD	45.7	UG/L			3								
SW022	SW	REAL	SW70027WC	08-NOV-90	N	TRG	SMETCLPTCL	MAGNESIUM	20800	UG/L			5000								
SW022	SW	REAL	SW70027WC	08-NOV-90	N	TRG	SMETCLPTCL	MANGANESE	660	UG/L			15								
SW022	SW	REAL	SW70027WC	08-NOV-90	N	TRG	SMETCLPTCL	MERCURY	0.20	UG/L		U	0 2								
SW022	SW	REAL	SW70027WC	08-NOV-90	N	TRG	SMETCLPTCL	NICKEL	33 6	UG/L		B	40								
SW022	SW	REAL	SW70027WC	08-NOV-90	N	TRG	SMETCLPTCL	POTASSIUM	29100	UG/L			5000								
SW022	SW	REAL	SW70027WC	08-NOV-90	N	TRG	SMETCLPTCL	SELENIUM	2 0	UG/L		U	5								
SW022	SW	REAL	SW70027WC	08-NOV-90	N	TRG	SMETCLPTCL	SILVER	3 0	UG/L		U	10								
SW022	SW	REAL	SW70027WC	08-NOV-90	N	TRG	SMETCLPTCL	SODIUM	96900	UG/L			5000								
SW022	SW	REAL	SW70027WC	08-NOV-90	N	TRG	SMETCLPTCL	THALLIUM	2 0	UG/L		U	10								
SW022	SW	REAL	SW70027WC	08-NOV-90	N	TRG	SMETCLPTCL	VANADIUM	69 0	UG/L			50								
SW022	SW	REAL	SW70027WC	08-NOV-90	N	TRG	SMETCLPTCL	ZINC	198	UG/L			20								
SW022	SW	REAL	SW70027WC	08-NOV-90	N	TRG	SMETNOCLP	CESIUM	500	UG/L		U	1000								
SW022	SW	REAL	SW70027WC	08-NOV-90	N	TRG	SMETNOCLP	LITHIUM	21 6	UG/L		B	100								
SW022	SW	REAL	SW70027WC	08-NOV-90	N	TRG	SMETNOCLP	MOLYBDENUM	9 0	UG/L		U	200								
SW022	SW	REAL	SW70027WC	08-NOV-90	N	TRG	SMETNOCLP	STRONTIUM	331	UG/L			200								
SW022	SW	REAL	SW70027WC	08-NOV-90	N	TRG	SMETNOCLP	TIN	85.4	UG/L		B	200								
SW022	SW	REAL	SW70028WC	07-NOV-90	N	TRG	SMETCLPTCL	ALUMINUM	4710	UG/L			200								
SW022	SW	REAL	SW70028WC	07-NOV-90	N	TRG	SMETCLPTCL	ANTIMONY	22.0	UG/L		U	60								
SW022	SW	REAL	SW70028WC	07-NOV-90	N	TRG	SMETCLPTCL	ARSENIC	1.3	UG/L		B	10								
SW022	SW	REAL	SW70028WC	07-NOV-90	N	TRG	SMETCLPTCL	BARIUM	93.5	UG/L		B	200								
SW022	SW	REAL	SW70028WC	07-NOV-90	N	TRG	SMETCLPTCL	BERYLLIUM	1.0	UG/L		U	5								
SW022	SW	REAL	SW70028WC	07-NOV-90	N	TRG	SMETCLPTCL	CADMIUM	5.0	UG/L		U	5								
SW022	SW	REAL	SW70028WC	07-NOV-90	N	TRG	SMETCLPTCL	CALCIUM	24500	UG/L			5000								
SW022	SW	REAL	SW70028WC	07-NOV-90	N	TRG	SMETCLPTCL	CHROMIUM	7.3	UG/L		B	10								
SW022	SW	REAL	SW70028WC	07-NOV-90	N	TRG	SMETCLPTCL	COBALT	4 0	UG/L		U	50								
SW022	SW	REAL	SW70028WC	07-NOV-90	N	TRG	SMETCLPTCL	COPPER	16 0	UG/L		B	25								
SW022	SW	REAL	SW70028WC	07-NOV-90	N	TRG	SMETCLPTCL	IRON	5280	UG/L			100								
SW022	SW	REAL	SW70028WC	07-NOV-90	N	TRG	SMETCLPTCL	LEAD	24.5	UG/L			3								
SW022	SW	REAL	SW70028WC	07-NOV-90	N	TRG	SMETCLPTCL	MAGNESIUM	4940	UG/L		B	5000								
SW022	SW	REAL	SW70028WC	07-NOV-90	N	TRG	SMETCLPTCL	MANGANESE	106	UG/L			15								
SW022	SW	REAL	SW70028WC	07-NOV-90	N	TRG	SMETCLPTCL	MERCURY	0 20	UG/L		U	0 2								
SW022	SW	REAL	SW70028WC	07-NOV-90	N	TRG	SMETCLPTCL	NICKEL	9.0	UG/L		U	40								
SW022	SW	REAL	SW70028WC	07-NOV-90	N	TRG	SMETCLPTCL	POTASSIUM	13100	UG/L			5000								
SW022	SW	REAL	SW70028WC	07-NOV-90	N	TRG	SMETCLPTCL	SELENIUM	2.0	UG/L		U	5								
SW022	SW	REAL	SW70028WC	07-NOV-90	N	TRG	SMETCLPTCL	SILVER	3.0	UG/L		U	10								
SW022	SW	REAL	SW70028WC	07-NOV-90	N	TRG	SMETCLPTCL	SODIUM	36000	UG/L			5000								
SW022	SW	REAL	SW70028WC	07-NOV-90	N	TRG	SMETCLPTCL	THALLIUM	2.0	UG/L		U	10								
SW022	SW	REAL	SW70028WC	07-NOV-90	N	TRG	SMETCLPTCL	VANADIUM	16.0	UG/L		B	50								
SW022	SW	REAL	SW70028WC	07-NOV-90	N	TRG	SMETCLPTCL	ZINC	98.4	UG/L			20								
SW022	SW	REAL	SW70028WC	07-NOV-90	N	TRG	SMETNOCLP	CESIUM	500	UG/L		U	1000								
SW022	SW	REAL	SW70028WC	07-NOV-90	N	TRG	SMETNOCLP	LITHIUM	10.0	UG/L		U	100								
SW022	SW	REAL	SW70028WC	07-NOV-90	N	TRG	SMETNOCLP	MOLYBDENUM	9 0	UG/L		U	200								
SW022	SW	REAL	SW70028WC	07-NOV-90	N	TRG	SMETNOCLP	STRONTIUM	124	UG/L		B	200								
SW022	SW	REAL	SW70028WC	07-NOV-90	N	TRG	SMETNOCLP	TIN	30.0	UG/L		U	200								
SW022	SW	REAL	SW70030WC	08-NOV-90	N																
SW023	SW	REAL	SW00443WC	16-OCT-90	N	TRG	DMETCLPTAL	ALUMINUM	35 7	UG/L		B	200								
SW023	SW	REAL	SW00443WC	16-OCT-90	N	TRG	DMETCLPTAL	ANTIMONY	26.0	UG/L		U	60								
SW023	SW	REAL	SW00443WC	16-OCT-90	N	TRG	DMETCLPTAL	ARSENIC	1.1	UG/L		U	10								
SW023	SW	REAL	SW00443WC	16-OCT-90	N	TRG	DMETCLPTAL	BARIUM	154	UG/L		B	200								

Location	ST	QC	Sample Number	Smpl Date	D	ID	Group	Chemical	Result	Unit	Error	Qual	D LMT	VA	RN1	RN2	RN3	RN4	VResult	VQual	VDET
SW023	SW	REAL	SW00443WC	16-OCT-90	N	TRG	DMETCLPTAL	BERYLLIUM	0 60	UG/L		U	5								
SW023	SW	REAL	SW00443WC	16-OCT-90	N	TRG	DMETCLPTAL	CADMIUM	2 9	UG/L		U	5								
SW023	SW	REAL	SW00443WC	16-OCT-90	N	TRG	DMETCLPTAL	CALCIUM	97600	UG/L			5000								
SW023	SW	REAL	SW00443WC	16-OCT-90	N	TRG	DMETCLPTAL	CHROMIUM	4.0	UG/L		U	10								
SW023	SW	REAL	SW00443WC	16-OCT-90	N	TRG	DMETCLPTAL	COBALT	4 0	UG/L		U	50								
SW023	SW	REAL	SW00443WC	16-OCT-90	N	TRG	DMETCLPTAL	COPPER	4.4	UG/L		B	25								
SW023	SW	REAL	SW00443WC	16-OCT-90	N	TRG	DMETCLPTAL	IRON	7 7	UG/L		B	100								
SW023	SW	REAL	SW00443WC	16-OCT-90	N	TRG	DMETCLPTAL	LEAD	0.40	UG/L		U	5								
SW023	SW	REAL	SW00443WC	16-OCT-90	N	TRG	DMETCLPTAL	MAGNESIUM	24900	UG/L			5000								
SW023	SW	REAL	SW00443WC	16-OCT-90	N	TRG	DMETCLPTAL	MANGANESE	5 0	UG/L		B	15								
SW023	SW	REAL	SW00443WC	16-OCT-90	N	TRG	DMETCLPTAL	MERCURY	0 10	UG/L		U	0 2								
SW023	SW	REAL	SW00443WC	16-OCT-90	N	TRG	DMETCLPTAL	NICKEL	12 0	UG/L		U	40								
SW023	SW	REAL	SW00443WC	16-OCT-90	N	TRG	DMETCLPTAL	POTASSIUM	4720	UG/L		B	5000								
SW023	SW	REAL	SW00443WC	16-OCT-90	N	TRG	DMETCLPTAL	SELENIUM	1 4	UG/L		B	5								
SW023	SW	REAL	SW00443WC	16-OCT-90	N	TRG	DMETCLPTAL	SILVER	6 9	UG/L		B	10								
SW023	SW	REAL	SW00443WC	16-OCT-90	N	TRG	DMETCLPTAL	SODIUM	49000	UG/L			5000								
SW023	SW	REAL	SW00443WC	16-OCT-90	N	TRG	DMETCLPTAL	THALLIUM	0 60	UG/L		U	10								
SW023	SW	REAL	SW00443WC	16-OCT-90	N	TRG	DMETCLPTAL	VANADIUM	9.1	UG/L		B	50								
SW023	SW	REAL	SW00443WC	16-OCT-90	N	TRG	DMETCLPTAL	ZINC	5 1	UG/L		B	20								
SW023	SW	REAL	SW00443WC	16-OCT-90	N	TRG	DMETNOCLP	CESIUM	55 0	UG/L		U	1000								
SW023	SW	REAL	SW00443WC	16-OCT-90	N	TRG	DMETNOCLP	LITHIUM	26 0	UG/L		U	100								
SW023	SW	REAL	SW00443WC	16-OCT-90	N	TRG	DMETNOCLP	MOLYBDENUM	13 0	UG/L		U	200								
SW023	SW	REAL	SW00443WC	16-OCT-90	N	TRG	DMETNOCLP	PHOSPHORUS	931	UG/L		B	1000								
SW023	SW	REAL	SW00443WC	16-OCT-90	N	TRG	DMETNOCLP	SILICON	6450	UG/L			1000								
SW023	SW	REAL	SW00443WC	16-OCT-90	N	TRG	DMETNOCLP	STRONTIUM	690	UG/L			200								
SW023	SW	REAL	SW00443WC	16-OCT-90	N	TRG	DMETNOCLP	TIN	18.3	UG/L		B	200								
SW023	SW	REAL	SW00443WC	16-OCT-90	N	TRG	SMETCLPTCL	ALUMINUM	160	UG/L		B	200								
SW023	SW	REAL	SW00443WC	16-OCT-90	N	TRG	SMETCLPTCL	ANTIMONY	26 0	UG/L		U	60								
SW023	SW	REAL	SW00443WC	16-OCT-90	N	TRG	SMETCLPTCL	ARSENIC	1.1	UG/L		U	10								
SW023	SW	REAL	SW00443WC	16-OCT-90	N	TRG	SMETCLPTCL	BARIUM	150	UG/L		B	200								
SW023	SW	REAL	SW00443WC	16-OCT-90	N	TRG	SMETCLPTCL	BERYLLIUM	0.60	UG/L		U	5								
SW023	SW	REAL	SW00443WC	16-OCT-90	N	TRG	SMETCLPTCL	CADMIUM	2 9	UG/L		U	5								
SW023	SW	REAL	SW00443WC	16-OCT-90	N	TRG	SMETCLPTCL	CALCIUM	93400	UG/L			5000								
SW023	SW	REAL	SW00443WC	16-OCT-90	N	TRG	SMETCLPTCL	CHROMIUM	4.0	UG/L		U	10								
SW023	SW	REAL	SW00443WC	16-OCT-90	N	TRG	SMETCLPTCL	COBALT	4 0	UG/L		U	50								
SW023	SW	REAL	SW00443WC	16-OCT-90	N	TRG	SMETCLPTCL	COPPER	5 2	UG/L		B	25								
SW023	SW	REAL	SW00443WC	16-OCT-90	N	TRG	SMETCLPTCL	IRON	242	UG/L			100								
SW023	SW	REAL	SW00443WC	16-OCT-90	N	TRG	SMETCLPTCL	LEAD	1.5	UG/L		B	5								
SW023	SW	REAL	SW00443WC	16-OCT-90	N	TRG	SMETCLPTCL	MAGNESIUM	23000	UG/L			5000								
SW023	SW	REAL	SW00443WC	16-OCT-90	N	TRG	SMETCLPTCL	MANGANESE	5.3	UG/L		B	15								
SW023	SW	REAL	SW00443WC	16-OCT-90	N	TRG	SMETCLPTCL	MERCURY	0.10	UG/L		U	0 2								
SW023	SW	REAL	SW00443WC	16-OCT-90	N	TRG	SMETCLPTCL	NICKEL	12 0	UG/L		U	40								
SW023	SW	REAL	SW00443WC	16-OCT-90	N	TRG	SMETCLPTCL	POTASSIUM	2610	UG/L		B	5000								
SW023	SW	REAL	SW00443WC	16-OCT-90	N	TRG	SMETCLPTCL	SELENIUM	2.1	UG/L		B	5								
SW023	SW	REAL	SW00443WC	16-OCT-90	N	TRG	SMETCLPTCL	SILVER	7.0	UG/L		B	10								
SW023	SW	REAL	SW00443WC	16-OCT-90	N	TRG	SMETCLPTCL	SODIUM	44800	UG/L			5000								
SW023	SW	REAL	SW00443WC	16-OCT-90	N	TRG	SMETCLPTCL	THALLIUM	2 9	UG/L		U	10								
SW023	SW	REAL	SW00443WC	16-OCT-90	N	TRG	SMETCLPTCL	VANADIUM	4.7	UG/L		B	50								
SW023	SW	REAL	SW00443WC	16-OCT-90	N	TRG	SMETCLPTCL	ZINC	41 3	UG/L			20								
SW023	SW	REAL	SW00443WC	16-OCT-90	N	TRG	SMETNOCLP	CESIUM	500	UG/L		U	1000								
SW023	SW	REAL	SW00443WC	16-OCT-90	N	TRG	SMETNOCLP	LITHIUM	26.0	UG/L		U	100								
SW023	SW	REAL	SW00443WC	16-OCT-90	N	TRG	SMETNOCLP	MOLYBDENUM	13.0	UG/L		U	200								
SW023	SW	REAL	SW00443WC	16-OCT-90	N	TRG	SMETNOCLP	PHOSPHORUS	107	UG/L		B	1000								
SW023	SW	REAL	SW00443WC	16-OCT-90	N	TRG	SMETNOCLP	STRONTIUM	663	UG/L			200								
SW023	SW	REAL	SW00443WC	16-OCT-90	N	TRG	SMETNOCLP	TIN	17.0	UG/L		U	200								
SW023	SW	REAL	SW00544WC	16-NOV-90	N	TRG	DMETCLPTAL	ALUMINUM	26 0	UG/L		B	200								
SW023	SW	REAL	SW00544WC	16-NOV-90	N	TRG	DMETCLPTAL	ANTIMONY	22 0	UG/L		U	60								
SW023	SW	REAL	SW00544WC	16-NOV-90	N	TRG	DMETCLPTAL	ARSENIC	1.6	UG/L		B	10								
SW023	SW	REAL	SW00544WC	16-NOV-90	N	TRG	DMETCLPTAL	BARIUM	138	UG/L		B	200								
SW023	SW	REAL	SW00544WC	16-NOV-90	N	TRG	DMETCLPTAL	BERYLLIUM	1.0	UG/L		U	5								
SW023	SW	REAL	SW00544WC	16-NOV-90	N	TRG	DMETCLPTAL	CADMIUM	5.0	UG/L		U	5								
SW023	SW	REAL	SW00544WC	16-NOV-90	N	TRG	DMETCLPTAL	CALCIUM	99700	UG/L			5000								
SW023	SW	REAL	SW00544WC	16-NOV-90	N	TRG	DMETCLPTAL	CHROMIUM	4.0	UG/L		U	10								

Location	ST	QC	Sample Number	Smpl Date	D	ID	Group	Chemical	Result	Unit	Error	Qual	D LMT	VA	RN1	RN2	RN3	RN4	VResult	VQual	VDET
SW023	SW	REAL	SW00544WC	16-NOV-90	N	TRG	DMETCLPTAL	COBALT	4 0	UG/L		U	50								
SW023	SW	REAL	SW00544WC	16-NOV-90	N	TRG	DMETCLPTAL	COPPER	9 6	UG/L		B	25								
SW023	SW	REAL	SW00544WC	16-NOV-90	N	TRG	DMETCLPTAL	IRON	3 0	UG/L		U	100								
SW023	SW	REAL	SW00544WC	16-NOV-90	N	TRG	DMETCLPTAL	LEAD	1 0	UG/L		U	3								
SW023	SW	REAL	SW00544WC	16-NOV-90	N	TRG	DMETCLPTAL	MAGNESIUM	25000	UG/L			5000								
SW023	SW	REAL	SW00544WC	16-NOV-90	N	TRG	DMETCLPTAL	MANGANESE	75	UG/L			15								
SW023	SW	REAL	SW00544WC	16-NOV-90	N	TRG	DMETCLPTAL	MERCURY	0 20	UG/L		U	0 2								
SW023	SW	REAL	SW00544WC	16-NOV-90	N	TRG	DMETCLPTAL	NICKEL	9.0	UG/L		U	40								
SW023	SW	REAL	SW00544WC	16-NOV-90	N	TRG	DMETCLPTAL	POTASSIUM	3240	UG/L		B	5000								
SW023	SW	REAL	SW00544WC	16-NOV-90	N	TRG	DMETCLPTAL	SELENIUM	3.5	UG/L		B	5								
SW023	SW	REAL	SW00544WC	16-NOV-90	N	TRG	DMETCLPTAL	SILVER	3 5	UG/L		B	10								
SW023	SW	REAL	SW00544WC	16-NOV-90	N	TRG	DMETCLPTAL	SODIUM	60800	UG/L			5000								
SW023	SW	REAL	SW00544WC	16-NOV-90	N	TRG	DMETCLPTAL	THALLIUM	2 0	UG/L		U	10								
SW023	SW	REAL	SW00544WC	16-NOV-90	N	TRG	DMETCLPTAL	VANADIUM	6 4	UG/L		B	50								
SW023	SW	REAL	SW00544WC	16-NOV-90	N	TRG	DMETCLPTAL	ZINC	3 1	UG/L		B	20								
SW023	SW	REAL	SW00544WC	16-NOV-90	N	TRG	DMETNOCLP	CESIUM	500	UG/L		U	1000								
SW023	SW	REAL	SW00544WC	16-NOV-90	N	TRG	DMETNOCLP	LITHIUM	12 8	UG/L		B	100								
SW023	SW	REAL	SW00544WC	16-NOV-90	N	TRG	DMETNOCLP	MOLYBDENUM	9.0	UG/L		U	200								
SW023	SW	REAL	SW00544WC	16-NOV-90	N	TRG	DMETNOCLP	PHOSPHORUS	605	UG/L		B	1000								
SW023	SW	REAL	SW00544WC	16-NOV-90	N	TRG	DMETNOCLP	SILICON	5360	UG/L			1000								
SW023	SW	REAL	SW00544WC	16-NOV-90	N	TRG	DMETNOCLP	STRONTIUM	631	UG/L			200								
SW023	SW	REAL	SW00544WC	16-NOV-90	N	TRG	DMETNOCLP	TIN	30 0	UG/L		U	200								
SW023	SW	REAL	SW00544WC	16-NOV-90	N	TRG	SMETCLPTCL	ALUMINUM	56 4	UG/L		B	200								
SW023	SW	REAL	SW00544WC	16-NOV-90	N	TRG	SMETCLPTCL	ANTIMONY	22 0	UG/L		U	60								
SW023	SW	REAL	SW00544WC	16-NOV-90	N	TRG	SMETCLPTCL	ARSENIC	1 0	UG/L		U	10								
SW023	SW	REAL	SW00544WC	16-NOV-90	N	TRG	SMETCLPTCL	BARIUM	133	UG/L		B	200								
SW023	SW	REAL	SW00544WC	16-NOV-90	N	TRG	SMETCLPTCL	BERYLLIUM	1 0	UG/L		U	5								
SW023	SW	REAL	SW00544WC	16-NOV-90	N	TRG	SMETCLPTCL	CADMIUM	5 0	UG/L		U	5								
SW023	SW	REAL	SW00544WC	16-NOV-90	N	TRG	SMETCLPTCL	CALCIUM	88400	UG/L			5000								
SW023	SW	REAL	SW00544WC	16-NOV-90	N	TRG	SMETCLPTCL	CHROMIUM	4.0	UG/L		U	10								
SW023	SW	REAL	SW00544WC	16-NOV-90	N	TRG	SMETCLPTCL	COBALT	4.0	UG/L		U	50								
SW023	SW	REAL	SW00544WC	16-NOV-90	N	TRG	SMETCLPTCL	COPPER	5.0	UG/L		U	25								
SW023	SW	REAL	SW00544WC	16-NOV-90	N	TRG	SMETCLPTCL	IRON	321	UG/L			100								
SW023	SW	REAL	SW00544WC	16-NOV-90	N	TRG	SMETCLPTCL	LEAD	1.0	UG/L		U	3								
SW023	SW	REAL	SW00544WC	16-NOV-90	N	TRG	SMETCLPTCL	MAGNESIUM	22200	UG/L			5000								
SW023	SW	REAL	SW00544WC	16-NOV-90	N	TRG	SMETCLPTCL	MANGANESE	70 5	UG/L			15								
SW023	SW	REAL	SW00544WC	16-NOV-90	N	TRG	SMETCLPTCL	MERCURY	0.20	UG/L		U	0 2								
SW023	SW	REAL	SW00544WC	16-NOV-90	N	TRG	SMETCLPTCL	NICKEL	9 0	UG/L		U	40								
SW023	SW	REAL	SW00544WC	16-NOV-90	N	TRG	SMETCLPTCL	POTASSIUM	2730	UG/L		B	5000								
SW023	SW	REAL	SW00544WC	16-NOV-90	N	TRG	SMETCLPTCL	SELENIUM	2 0	UG/L		U	5								
SW023	SW	REAL	SW00544WC	16-NOV-90	N	TRG	SMETCLPTCL	SILVER	3.6	UG/L		B	10								
SW023	SW	REAL	SW00544WC	16-NOV-90	N	TRG	SMETCLPTCL	SODIUM	54900	UG/L			5000								
SW023	SW	REAL	SW00544WC	16-NOV-90	N	TRG	SMETCLPTCL	THALLIUM	2 0	UG/L		U	10								
SW023	SW	REAL	SW00544WC	16-NOV-90	N	TRG	SMETCLPTCL	VANADIUM	3 5	UG/L		B	50								
SW023	SW	REAL	SW00544WC	16-NOV-90	N	TRG	SMETCLPTCL	ZINC	60.0	UG/L			20								
SW023	SW	REAL	SW00544WC	16-NOV-90	N	TRG	SMETNOCLP	CESIUM	500	UG/L		U	1000								
SW023	SW	REAL	SW00544WC	16-NOV-90	N	TRG	SMETNOCLP	LITHIUM	15 3	UG/L		B	100								
SW023	SW	REAL	SW00544WC	16-NOV-90	N	TRG	SMETNOCLP	MOLYBDENUM	9 0	UG/L		U	200								
SW023	SW	REAL	SW00544WC	16-NOV-90	N	TRG	SMETNOCLP	PHOSPHORUS	179	UG/L		B	1000								
SW023	SW	REAL	SW00544WC	16-NOV-90	N	TRG	SMETNOCLP	STRONTIUM	563	UG/L			200								
SW023	SW	REAL	SW00544WC	16-NOV-90	N	TRG	SMETNOCLP	TIN	30.0	UG/L		U	200								
SW023	SW	REAL	SW70002WC	23-JUL-90	N	DL	SMETCLPTCL	ALUMINUM	73900	UG/L		N									
SW023	SW	REAL	SW70002WC	23-JUL-90	N	DL	SMETCLPTCL	ANTIMONY	37.0	UG/L		U									
SW023	SW	REAL	SW70002WC	23-JUL-90	N	DL	SMETCLPTCL	ARSENIC	6.1	UG/L		B									
SW023	SW	REAL	SW70002WC	23-JUL-90	N	DL	SMETCLPTCL	BARIUM	742	UG/L											
SW023	SW	REAL	SW70002WC	23-JUL-90	N	DL	SMETCLPTCL	BERYLLIUM	5.2	UG/L											
SW023	SW	REAL	SW70002WC	23-JUL-90	N	DL	SMETCLPTCL	CADMIUM	11.3	UG/L											
SW023	SW	REAL	SW70002WC	23-JUL-90	N	DL	SMETCLPTCL	CALCIUM	94900	UG/L											
SW023	SW	REAL	SW70002WC	23-JUL-90	N	DL	SMETCLPTCL	CHROMIUM	95 0	UG/L											
SW023	SW	REAL	SW70002WC	23-JUL-90	N	DL	SMETCLPTCL	COBALT	36.7	UG/L		B									
SW023	SW	REAL	SW70002WC	23-JUL-90	N	DL	SMETCLPTCL	COPPER	128	UG/L											
SW023	SW	REAL	SW70002WC	23-JUL-90	N	DL	SMETCLPTCL	IRON	77200	UG/L											
SW023	SW	REAL	SW70002WC	23-JUL-90	N	DL	SMETCLPTCL	LEAD	130	UG/L											

Location	ST	QC	Sample Number	Smpl Date	D	ID	Group	Chemical	Result	Unit	Error	Qual	D	LMT	VA	RN1	RN2	RN3	RN4	VResult	VQual	VDET
SW023	SW	REAL	SW70002WC	23-JUL-90	N	DL	SMETCLPTCL	MAGNESIUM	20300	UG/L												
SW023	SW	REAL	SW70002WC	23-JUL-90	N	DL	SMETCLPTCL	MANGANESE	1270	UG/L												
SW023	SW	REAL	SW70002WC	23-JUL-90	N	DL	SMETCLPTCL	MERCURY	0.4	UG/L		U										
SW023	SW	REAL	SW70002WC	23-JUL-90	N	DL	SMETCLPTCL	NICKEL	86 6	UG/L												
SW023	SW	REAL	SW70002WC	23-JUL-90	N	DL	SMETCLPTCL	POTASSIUM	12200	UG/L												
SW023	SW	REAL	SW70002WC	23-JUL-90	N	DL	SMETCLPTCL	SELENIUM	2 0	UG/L		UW										
SW023	SW	REAL	SW70002WC	23-JUL-90	N	DL	SMETCLPTCL	SILVER	6 4	UG/L		BN										
SW023	SW	REAL	SW70002WC	23-JUL-90	N	DL	SMETCLPTCL	SODIUM	9300	UG/L												
SW023	SW	REAL	SW70002WC	23-JUL-90	N	DL	SMETCLPTCL	THALLIUM	1 0	UG/L		UN										
SW023	SW	REAL	SW70002WC	23-JUL-90	N	DL	SMETCLPTCL	VANADIUM	206	UG/L												
SW023	SW	REAL	SW70002WC	23-JUL-90	N	DL	SMETCLPTCL	ZINC	1120	UG/L												
SW023	SW	REAL	SW70002WC	23-JUL-90	N	TRG	SMETCLPTCL	ALUMINUM	73900	UG/L		N										
SW023	SW	REAL	SW70002WC	23-JUL-90	N	TRG	SMETCLPTCL	ANTIMONY	37.0	UG/L		U										
SW023	SW	REAL	SW70002WC	23-JUL 90	N	TRG	SMETCLPTCL	ARSENIC	6 1	UG/L		B										
SW023	SW	REAL	SW70002WC	23-JUL-90	N	TRG	SMETCLPTCL	BARIUM	742	UG/L												
SW023	SW	REAL	SW70002WC	23-JUL-90	N	TRG	SMETCLPTCL	BERYLLIUM	5 2	UG/L												
SW023	SW	REAL	SW70002WC	23-JUL-90	N	TRG	SMETCLPTCL	CADMIUM	11 3	UG/L												
SW023	SW	REAL	SW70002WC	23-JUL-90	N	TRG	SMETCLPTCL	CALCIUM	94900	UG/L												
SW023	SW	REAL	SW70002WC	23-JUL-90	N	TRG	SMETCLPTCL	CHROMIUM	95 0	UG/L												
SW023	SW	REAL	SW70002WC	23-JUL-90	N	TRG	SMETCLPTCL	COBALT	36 7	UG/L		B										
SW023	SW	REAL	SW70002WC	23-JUL-90	N	TRG	SMETCLPTCL	COPPER	128	UG/L												
SW023	SW	REAL	SW70002WC	23-JUL-90	N	TRG	SMETCLPTCL	IRON	77200	UG/L												
SW023	SW	REAL	SW70002WC	23-JUL-90	N	TRG	SMETCLPTCL	MAGNESIUM	20300	UG/L												
SW023	SW	REAL	SW70002WC	23-JUL-90	N	TRG	SMETCLPTCL	MANGANESE	1270	UG/L												
SW023	SW	REAL	SW70002WC	23-JUL-90	N	TRG	SMETCLPTCL	NICKEL	86.6	UG/L												
SW023	SW	REAL	SW70002WC	23-JUL-90	N	TRG	SMETCLPTCL	POTASSIUM	12200	UG/L												
SW023	SW	REAL	SW70002WC	23-JUL-90	N	TRG	SMETCLPTCL	SILVER	6 4	UG/L		BN										
SW023	SW	REAL	SW70002WC	23-JUL-90	N	TRG	SMETCLPTCL	SODIUM	9300	UG/L												
SW023	SW	REAL	SW70002WC	23-JUL-90	N	TRG	SMETCLPTCL	THALLIUM	1.0	UG/L		UN										
SW023	SW	REAL	SW70002WC	23-JUL-90	N	TRG	SMETCLPTCL	VANADIUM	206	UG/L												
SW023	SW	REAL	SW70002WC	23-JUL-90	N	TRG	SMETCLPTCL	ZINC	1120	UG/L												
SW023	SW	REAL	SW70005WC	24-JUL-90	N	DL	SMETCLPTCL	ALUMINUM	4900	UG/L		N										
SW023	SW	REAL	SW70005WC	24-JUL-90	N	DL	SMETCLPTCL	ANTIMONY	37 0	UG/L		U										
SW023	SW	REAL	SW70005WC	24-JUL-90	N	DL	SMETCLPTCL	ARSENIC	2 4	UG/L		B										
SW023	SW	REAL	SW70005WC	24-JUL-90	N	DL	SMETCLPTCL	BARIUM	137	UG/L		B										
SW023	SW	REAL	SW70005WC	24-JUL-90	N	DL	SMETCLPTCL	BERYLLIUM	1 0	UG/L		B										
SW023	SW	REAL	SW70005WC	24-JUL-90	N	DL	SMETCLPTCL	CADMIUM	11 2	UG/L												
SW023	SW	REAL	SW70005WC	24-JUL-90	N	DL	SMETCLPTCL	CALCIUM	45800	UG/L												
SW023	SW	REAL	SW70005WC	24-JUL-90	N	DL	SMETCLPTCL	CHROMIUM	9.6	UG/L		B										
SW023	SW	REAL	SW70005WC	24-JUL-90	N	DL	SMETCLPTCL	COBALT	8 0	UG/L		U										
SW023	SW	REAL	SW70005WC	24-JUL-90	N	DL	SMETCLPTCL	COPPER	21 0	UG/L		B										
SW023	SW	REAL	SW70005WC	24-JUL-90	N	DL	SMETCLPTCL	IRON	4980	UG/L												
SW023	SW	REAL	SW70005WC	24-JUL-90	N	DL	SMETCLPTCL	LEAD	14.7	UG/L												
SW023	SW	REAL	SW70005WC	24-JUL-90	N	DL	SMETCLPTCL	MAGNESIUM	9800	UG/L												
SW023	SW	REAL	SW70005WC	24-JUL-90	N	DL	SMETCLPTCL	MANGANESE	94.9	UG/L												
SW023	SW	REAL	SW70005WC	24-JUL-90	N	DL	SMETCLPTCL	MERCURY	0.4	UG/L		U										
SW023	SW	REAL	SW70005WC	24-JUL-90	N	DL	SMETCLPTCL	NICKEL	23 0	UG/L		U										
SW023	SW	REAL	SW70005WC	24-JUL-90	N	DL	SMETCLPTCL	POTASSIUM	3670	UG/L		B										
SW023	SW	REAL	SW70005WC	24-JUL-90	N	DL	SMETCLPTCL	SELENIUM	1 0	UG/L		U										
SW023	SW	REAL	SW70005WC	24-JUL-90	N	DL	SMETCLPTCL	SILVER	6 2	UG/L		BN										
SW023	SW	REAL	SW70005WC	24-JUL-90	N	DL	SMETCLPTCL	SODIUM	31000	UG/L												
SW023	SW	REAL	SW70005WC	24-JUL-90	N	DL	SMETCLPTCL	THALLIUM	1 0	UG/L		UWN										
SW023	SW	REAL	SW70005WC	24-JUL-90	N	DL	SMETCLPTCL	VANADIUM	17 9	UG/L		B										
SW023	SW	REAL	SW70005WC	24-JUL-90	N	DL	SMETCLPTCL	ZINC	225	UG/L												
SW023	SW	REAL	SW70005WC	24-JUL-90	N	TRG	SMETCLPTCL	ALUMINUM	4900	UG/L		N										
SW023	SW	REAL	SW70005WC	24-JUL-90	N	TRG	SMETCLPTCL	ANTIMONY	37.0	UG/L		U										
SW023	SW	REAL	SW70005WC	24-JUL-90	N	TRG	SMETCLPTCL	ARSENIC	2 4	UG/L		B										
SW023	SW	REAL	SW70005WC	24-JUL-90	N	TRG	SMETCLPTCL	BARIUM	137	UG/L		B										
SW023	SW	REAL	SW70005WC	24-JUL-90	N	TRG	SMETCLPTCL	BERYLLIUM	1 0	UG/L		B										
SW023	SW	REAL	SW70005WC	24-JUL-90	N	TRG	SMETCLPTCL	CADMIUM	11 2	UG/L												
SW023	SW	REAL	SW70005WC	24-JUL-90	N	TRG	SMETCLPTCL	CALCIUM	45800	UG/L												
SW023	SW	REAL	SW70005WC	24-JUL-90	N	TRG	SMETCLPTCL	CHROMIUM	9.6	UG/L		B										
SW023	SW	REAL	SW70005WC	24-JUL-90	N	TRG	SMETCLPTCL	COBALT	8 0	UG/L		U										

Location	ST	QC	Sample Number	Smpl Date	D	ID	Group	Chemical	Result	Unit	Error	Qual	D LMT	VA	RN1	RN2	RN3	RN4	VResult	VQual	VDET
SW023	SW	REAL	SW70005WC	24-JUL-90	N	TRG	SMETCLPTCL	COPPER	21 0	UG/L		B									
SW023	SW	REAL	SW70005WC	24-JUL-90	N	TRG	SMETCLPTCL	IRON	4980	UG/L											
SW023	SW	REAL	SW70005WC	24-JUL-90	N	TRG	SMETCLPTCL	LEAD	14.7	UG/L											
SW023	SW	REAL	SW70005WC	24-JUL-90	N	TRG	SMETCLPTCL	MAGNESIUM	9800	UG/L											
SW023	SW	REAL	SW70005WC	24-JUL-90	N	TRG	SMETCLPTCL	MANGANESE	94 9	UG/L											
SW023	SW	REAL	SW70005WC	24-JUL-90	N	TRG	SMETCLPTCL	NICKEL	23 0	UG/L		U									
SW023	SW	REAL	SW70005WC	24-JUL-90	N	TRG	SMETCLPTCL	POTASSIUM	3670	UG/L		B									
SW023	SW	REAL	SW70005WC	24-JUL-90	N	TRG	SMETCLPTCL	SELENIUM	1.0	UG/L		U									
SW023	SW	REAL	SW70005WC	24-JUL-90	N	TRG	SMETCLPTCL	SILVER	6.2	UG/L		BN									
SW023	SW	REAL	SW70005WC	24-JUL-90	N	TRG	SMETCLPTCL	SODIUM	31000	UG/L											
SW023	SW	REAL	SW70005WC	24-JUL-90	N	TRG	SMETCLPTCL	THALLIUM	1 0	UG/L		UWN									
SW023	SW	REAL	SW70005WC	24-JUL-90	N	TRG	SMETCLPTCL	VANADIUM	17.9	UG/L		B									
SW023	SW	REAL	SW70005WC	24-JUL-90	N	TRG	SMETCLPTCL	ZINC	225	UG/L											
SW023	SW	REAL	SW70015WC	~~19-SEP-90~~	~~N~~																
SW023	SW	REAL	SW70029WC	08-NOV-90	N	TRG	SMETCLPTCL	ALUMINUM	3540	UG/L											
SW023	SW	REAL	SW70029WC	08-NOV-90	N	TRG	SMETCLPTCL	ANTIMONY	30	UG/L		U									
SW023	SW	REAL	SW70029WC	08-NOV-90	N	TRG	SMETCLPTCL	ARSENIC	2	UG/L		UW									
SW023	SW	REAL	SW70029WC	08-NOV-90	N	TRG	SMETCLPTCL	BARIUM	207	UG/L											
SW023	SW	REAL	SW70029WC	08-NOV-90	N	TRG	SMETCLPTCL	BERYLLIUM	1	UG/L		U									
SW023	SW	REAL	SW70029WC	08-NOV-90	N	TRG	SMETCLPTCL	CADMIUM	5 4	UG/L											
SW023	SW	REAL	SW70029WC	08-NOV-90	N	TRG	SMETCLPTCL	CALCIUM	53200	UG/L											
SW023	SW	REAL	SW70029WC	08-NOV-90	N	TRG	SMETCLPTCL	CESIUM	200	UG/L		U									
SW023	SW	REAL	SW70029WC	08-NOV-90	N	TRG	SMETCLPTCL	CHROMIUM	10	UG/L		U									
SW023	SW	REAL	SW70029WC	08-NOV-90	N	TRG	SMETCLPTCL	COBALT	20	UG/L		U									
SW023	SW	REAL	SW70029WC	08-NOV-90	N	TRG	SMETCLPTCL	COPPER	31 6	UG/L											
SW023	SW	REAL	SW70029WC	08-NOV-90	N	TRG	SMETCLPTCL	IRON	4690	UG/L											
SW023	SW	REAL	SW70029WC	08-NOV-90	N	TRG	SMETCLPTCL	LEAD	11 9	UG/L											
SW023	SW	REAL	SW70029WC	08-NOV-90	N	TRG	SMETCLPTCL	LITHIUM	6 5	UG/L											
SW023	SW	REAL	SW70029WC	08-NOV-90	N	TRG	SMETCLPTCL	MAGNESIUM	9490	UG/L											
SW023	SW	REAL	SW70029WC	08-NOV-90	N	TRG	SMETCLPTCL	MANGANESE	125	UG/L											
SW023	SW	REAL	SW70029WC	08-NOV-90	N	TRG	SMETCLPTCL	MERCURY	.2	UG/L		U									
SW023	SW	REAL	SW70029WC	08-NOV-90	N	TRG	SMETCLPTCL	MOLYBDENUM	10	UG/L		U									
SW023	SW	REAL	SW70029WC	08-NOV-90	N	TRG	SMETCLPTCL	NICKEL	20	UG/L		U									
SW023	SW	REAL	SW70029WC	08-NOV-90	N	TRG	SMETCLPTCL	POTASSIUM	53400	UG/L											
SW023	SW	REAL	SW70029WC	08-NOV-90	N	TRG	SMETCLPTCL	SELENIUM	2	UG/L		UW									
SW023	SW	REAL	SW70029WC	08-NOV-90	N	TRG	SMETCLPTCL	SILICON	10500	UG/L											
SW023	SW	REAL	SW70029WC	08-NOV-90	N	TRG	SMETCLPTCL	SILVER	5	UG/L		U									
SW023	SW	REAL	SW70029WC	08-NOV-90	N	TRG	SMETCLPTCL	SODIUM	149000	UG/L											
SW023	SW	REAL	SW70029WC	08-NOV-90	N	TRG	SMETCLPTCL	STRONTIUM	327	UG/L		E									
SW023	SW	REAL	SW70029WC	08-NOV-90	N	TRG	SMETCLPTCL	THALLIUM	2	UG/L		UW									
SW023	SW	REAL	SW70029WC	08-NOV-90	N	TRG	SMETCLPTCL	TIN	20 2	UG/L											
SW023	SW	REAL	SW70029WC	08-NOV-90	N	TRG	SMETCLPTCL	VANADIUM	10 7	UG/L		B									
SW023	SW	REAL	SW70029WC	08-NOV-90	N	TRG	SMETCLPTCL	ZINC	308	UG/L											
SW023	SW	REAL	SW70040WC	19-NOV-90	N	TRG	SMETCLPTCL	ALUMINUM	1830	UG/L			200								
SW023	SW	REAL	SW70040WC	19-NOV-90	N	TRG	SMETCLPTCL	ANTIMONY	22.0	UG/L		U	60								
SW023	SW	REAL	SW70040WC	19-NOV-90	N	TRG	SMETCLPTCL	ARSENIC	1.3	UG/L		B	10								
SW023	SW	REAL	SW70040WC	19-NOV-90	N	TRG	SMETCLPTCL	BARIUM	98 5	UG/L		B	200								
SW023	SW	REAL	SW70040WC	19-NOV-90	N	TRG	SMETCLPTCL	BERYLLIUM	1.0	UG/L		U	5								
SW023	SW	REAL	SW70040WC	19-NOV-90	N	TRG	SMETCLPTCL	CADMIUM	5.0	UG/L		U	5								
SW023	SW	REAL	SW70040WC	19-NOV-90	N	TRG	SMETCLPTCL	CALCIUM	36300	UG/L			5000								
SW023	SW	REAL	SW70040WC	19-NOV-90	N	TRG	SMETCLPTCL	CHROMIUM	4.0	UG/L		U	10								
SW023	SW	REAL	SW70040WC	19-NOV-90	N	TRG	SMETCLPTCL	COBALT	4 0	UG/L		U	50								
SW023	SW	REAL	SW70040WC	19-NOV-90	N	TRG	SMETCLPTCL	COPPER	16 2	UG/L		B	25								
SW023	SW	REAL	SW70040WC	19-NOV-90	N	TRG	SMETCLPTCL	IRON	2670	UG/L			100								
SW023	SW	REAL	SW70040WC	19-NOV-90	N	TRG	SMETCLPTCL	LEAD	7.0	UG/L			3								
SW023	SW	REAL	SW70040WC	19-NOV-90	N	TRG	SMETCLPTCL	MAGNESIUM	8150	UG/L			5000								
SW023	SW	REAL	SW70040WC	19-NOV-90	N	TRG	SMETCLPTCL	MANGANESE	117	UG/L			15								
SW023	SW	REAL	SW70040WC	19-NOV-90	N	TRG	SMETCLPTCL	MERCURY	0.20	UG/L		U	0 2								
SW023	SW	REAL	SW70040WC	19-NOV-90	N	TRG	SMETCLPTCL	NICKEL	9.0	UG/L		U	40								
SW023	SW	REAL	SW70040WC	19-NOV-90	N	TRG	SMETCLPTCL	POTASSIUM	12200	UG/L			5000								
SW023	SW	REAL	SW70040WC	19-NOV-90	N	TRG	SMETCLPTCL	SELENIUM	2.0	UG/L		U	5								
SW023	SW	REAL	SW70040WC	19-NOV-90	N	TRG	SMETCLPTCL	SILVER	3.0	UG/L		U	10								
SW023	SW	REAL	SW70040WC	19-NOV-90	N	TRG	SMETCLPTCL	SODIUM	56500	UG/L			5000								

Location	ST	QC	Sample Number	Smpl Date	D	ID	Group	Chemical	Result	Unit	Error	Qual	D LMT	VA	RN1	RN2	RN3	RN4	VResult	VQual	VDET
SW023	SW	REAL	SW70040WC	19-NOV-90	N	TRG	SMETCLPTCL	THALLIUM	2 0	UG/L		U	10								
SW023	SW	REAL	SW70040WC	19-NOV-90	N	TRG	SMETCLPTCL	VANADIUM	8 6	UG/L		B	50								
SW023	SW	REAL	SW70040WC	19-NOV-90	N	TRG	SMETCLPTCL	ZINC	203	UG/L			20								
SW023	SW	REAL	SW70040WC	19-NOV-90	N	TRG	SMETNOCLP	CESIUM	500	UG/L		U	1000								
SW023	SW	REAL	SW70040WC	19-NOV-90	N	TRG	SMETNOCLP	LITHIUM	12.1	UG/L		B	100								
SW023	SW	REAL	SW70040WC	19-NOV-90	N	TRG	SMETNOCLP	MOLYBDENUM	9.0	UG/L		U	200								
SW023	SW	REAL	SW70040WC	19-NOV-90	N	TRG	SMETNOCLP	STRONTIUM	238	UG/L			200								
SW023	SW	REAL	SW70040WC	19-NOV-90	N	TRG	SMETNOCLP	TIN	30.0	UG/L		U	200								
SW023	SW		SW70018WC	11-OCT-90	N																
SW037	SW	REAL	SW00413WC	17-OCT-90	Y																
SW037	SW	REAL	SW00514WC	27-NOV-90	Y																
SW038	SW	REAL	SW00419WC	15-OCT-90	N	TRG	SMETCLPTCL	ALUMINUM	60	UG/L		U									
SW038	SW	REAL	SW00419WC	15-OCT-90	N	TRG	SMETCLPTCL	ANTIMONY	30	UG/L		U									
SW038	SW	REAL	SW00419WC	15-OCT-90	N	TRG	SMETCLPTCL	ARSENIC	2	UG/L		U									
SW038	SW	REAL	SW00419WC	15-OCT-90	N	TRG	SMETCLPTCL	BARIUM	143	UG/L		B									
SW038	SW	REAL	SW00419WC	15-OCT-90	N	TRG	SMETCLPTCL	BERYLLIUM	2	UG/L		U									
SW038	SW	REAL	SW00419WC	15-OCT-90	N	TRG	SMETCLPTCL	CADMIUM	2	UG/L		U									
SW038	SW	REAL	SW00419WC	15-OCT-90	N	TRG	SMETCLPTCL	CALCIUM	79600	UG/L											
SW038	SW	REAL	SW00419WC	15-OCT-90	N	TRG	SMETCLPTCL	CESIUM	2	UG/L		UWN									
SW038	SW	REAL	SW00419WC	15-OCT-90	N	TRG	SMETCLPTCL	CHROMIUM	10	UG/L		U									
SW038	SW	REAL	SW00419WC	15-OCT-90	N	TRG	SMETCLPTCL	COBALT	10	UG/L		U									
SW038	SW	REAL	SW00419WC	15-OCT-90	N	TRG	SMETCLPTCL	COPPER	10	UG/L		U									
SW038	SW	REAL	SW00419WC	15-OCT-90	N	TRG	SMETCLPTCL	IRON	68.8	UG/L		B									
SW038	SW	REAL	SW00419WC	15-OCT-90	N	TRG	SMETCLPTCL	LEAD	2	UG/L		U									
SW038	SW	REAL	SW00419WC	15-OCT-90	N	TRG	SMETCLPTCL	LITHIUM	50	UG/L		U									
SW038	SW	REAL	SW00419WC	15-OCT-90	N	TRG	SMETCLPTCL	MAGNESIUM	18200	UG/L											
SW038	SW	REAL	SW00419WC	15-OCT-90	N	TRG	SMETCLPTCL	MANGANESE	29.3	UG/L											
SW038	SW	REAL	SW00419WC	15-OCT-90	N	TRG	SMETCLPTCL	MERCURY	.2	UG/L		U									
SW038	SW	REAL	SW00419WC	15-OCT-90	N	TRG	SMETCLPTCL	MOLYBDENUM	10	UG/L		U									
SW038	SW	REAL	SW00419WC	15-OCT-90	N	TRG	SMETCLPTCL	NICKEL	20	UG/L		U									
SW038	SW	REAL	SW00419WC	15-OCT-90	N	TRG	SMETCLPTCL	POTASSIUM	774	UG/L		B									
SW038	SW	REAL	SW00419WC	15-OCT-90	N	TRG	SMETCLPTCL	SELENIUM	2	UG/L		UW									
SW038	SW	REAL	SW00419WC	15-OCT-90	N	TRG	SMETCLPTCL	SILICON	9920	UG/L											
SW038	SW	REAL	SW00419WC	15-OCT-90	N	TRG	SMETCLPTCL	SILVER	12.8	UG/L											
SW038	SW	REAL	SW00419WC	15-OCT-90	N	TRG	SMETCLPTCL	SODIUM	14400	UG/L											
SW038	SW	REAL	SW00419WC	15-OCT-90	N	TRG	SMETCLPTCL	STRONTIUM	487	UG/L											
SW038	SW	REAL	SW00419WC	15-OCT-90	N	TRG	SMETCLPTCL	THALLIUM	2	UG/L		U									
SW038	SW	REAL	SW00419WC	15-OCT-90	N	TRG	SMETCLPTCL	TIN	50	UG/L		U									
SW038	SW	REAL	SW00419WC	15-OCT-90	N	TRG	SMETCLPTCL	VANADIUM	10	UG/L		U									
SW038	SW	REAL	SW00419WC	15-OCT-90	N	TRG	SMETCLPTCL	ZINC	5	UG/L		U									
SW038	SW	REAL	SW00520WC	05-NOV-90	N	TRG	DMETCLPTAL	ALUMINUM	43 6	UG/L		B	200								
SW038	SW	REAL	SW00520WC	05-NOV-90	N	TRG	DMETCLPTAL	ANTIMONY	22.0	UG/L		U	60								
SW038	SW	REAL	SW00520WC	05-NOV-90	N	TRG	DMETCLPTAL	ARSENIC	1.0	UG/L		U	10								
SW038	SW	REAL	SW00520WC	05-NOV-90	N	TRG	DMETCLPTAL	BARIUM	155	UG/L		B	200								
SW038	SW	REAL	SW00520WC	05-NOV-90	N	TRG	DMETCLPTAL	BERYLLIUM	1.0	UG/L		U	5								
SW038	SW	REAL	SW00520WC	05-NOV-90	N	TRG	DMETCLPTAL	CADMIUM	5.0	UG/L		U	5								
SW038	SW	REAL	SW00520WC	05-NOV-90	N	TRG	DMETCLPTAL	CALCIUM	85500	UG/L			5000								
SW038	SW	REAL	SW00520WC	05-NOV-90	N	TRG	DMETCLPTAL	CHROMIUM	4.0	UG/L		U	10								
SW038	SW	REAL	SW00520WC	05-NOV-90	N	TRG	DMETCLPTAL	COBALT	4.0	UG/L		U	50								
SW038	SW	REAL	SW00520WC	05-NOV-90	N	TRG	DMETCLPTAL	COPPER	5.0	UG/L		U	25								
SW038	SW	REAL	SW00520WC	05-NOV-90	N	TRG	DMETCLPTAL	IRON	3.0	UG/L		U	100								
SW038	SW	REAL	SW00520WC	05-NOV-90	N	TRG	DMETCLPTAL	LEAD	1 0	UG/L		U	3								
SW038	SW	REAL	SW00520WC	05-NOV-90	N	TRG	DMETCLPTAL	MAGNESIUM	17700	UG/L			5000								
SW038	SW	REAL	SW00520WC	05-NOV-90	N	TRG	DMETCLPTAL	MANGANESE	7.0	UG/L		B	15								
SW038	SW	REAL	SW00520WC	05-NOV-90	N	TRG	DMETCLPTAL	MERCURY	0.20	UG/L		U	0.2								
SW038	SW	REAL	SW00520WC	05-NOV-90	N	TRG	DMETCLPTAL	NICKEL	9.0	UG/L		U	40								
SW038	SW	REAL	SW00520WC	05-NOV-90	N	TRG	DMETCLPTAL	POTASSIUM	1430	UG/L		B	5000								
SW038	SW	REAL	SW00520WC	05-NOV-90	N	TRG	DMETCLPTAL	SELENIUM	2.0	UG/L		U	5								
SW038	SW	REAL	SW00520WC	05-NOV-90	N	TRG	DMETCLPTAL	SILVER	3.9	UG/L		B	10								
SW038	SW	REAL	SW00520WC	05-NOV-90	N	TRG	DMETCLPTAL	SODIUM	14800	UG/L			5000								
SW038	SW	REAL	SW00520WC	05-NOV-90	N	TRG	DMETCLPTAL	THALLIUM	2.0	UG/L		U	10								
SW038	SW	REAL	SW00520WC	05-NOV-90	N	TRG	DMETCLPTAL	VANADIUM	7.5	UG/L		B	50								
SW038	SW	REAL	SW00520WC	05-NOV-90	N	TRG	DMETCLPTAL	ZINC	5.0	UG/L		B	20								

19 75

Location	ST	QC	Sample Number	Smpl Date	D	ID	Group	Chemical	Result	Unit	Error	Qual	D LMT	VA	RN1	RN2	RN3	RN4	VResult	VQual	VDET
SW038	SW	REAL	SW00520WC	05-NOV-90	N	TRG	DMETNOCLP	CESIUM	500	UG/L		U	1000								
SW038	SW	REAL	SW00520WC	05-NOV-90	N	TRG	DMETNOCLP	LITHIUM	10 0	UG/L		U	100								
SW038	SW	REAL	SW00520WC	05-NOV-90	N	TRG	DMETNOCLP	MOLYBDENUM	9 0	UG/L		U	200								
SW038	SW	REAL	SW00520WC	05-NOV-90	N	TRG	DMETNOCLP	PHOSPHORUS	349	UG/L		B	1000								
SW038	SW	REAL	SW00520WC	05-NOV-90	N	TRG	DMETNOCLP	SILICON	8740	UG/L			5000								
SW038	SW	REAL	SW00520WC	05-NOV-90	N	TRG	DMETNOCLP	STRONTIUM	458	UG/L			200								
SW038	SW	REAL	SW00520WC	05-NOV-90	N	TRG	DMETNOCLP	TIN	75 7	UG/L		B	200								
SW038	SW	REAL	SW00520WC	05-NOV-90	N	TRG	SMETCLPTCL	ALUMINUM	96 5	UG/L		B	200								
SW038	SW	REAL	SW00520WC	05-NOV-90	N	TRG	SMETCLPTCL	ANTIMONY	22 0	UG/L		U	60								
SW038	SW	REAL	SW00520WC	05-NOV-90	N	TRG	SMETCLPTCL	ARSENIC	1 0	UG/L		U	10								
SW038	SW	REAL	SW00520WC	05-NOV-90	N	TRG	SMETCLPTCL	BARIUM	144	UG/L		B	200								
SW038	SW	REAL	SW00520WC	05-NOV-90	N	TRG	SMETCLPTCL	BERYLLIUM	1 0	UG/L		U	5								
SW038	SW	REAL	SW00520WC	05-NOV-90	N	TRG	SMETCLPTCL	CADMIUM	5 0	UG/L		U	5								
SW038	SW	REAL	SW00520WC	05-NOV-90	N	TRG	SMETCLPTCL	CALCIUM	78600	UG/L			5000								
SW038	SW	REAL	SW00520WC	05-NOV-90	N	TRG	SMETCLPTCL	CHROMIUM	4.0	UG/L		U	10								
SW038	SW	REAL	SW00520WC	05-NOV-90	N	TRG	SMETCLPTCL	COBALT	4 0	UG/L		U	50								
SW038	SW	REAL	SW00520WC	05-NOV-90	N	TRG	SMETCLPTCL	COPPER	5 0	UG/L		U	25								
SW038	SW	REAL	SW00520WC	05-NOV-90	N	TRG	SMETCLPTCL	IRON	168	UG/L			100								
SW038	SW	REAL	SW00520WC	05-NOV-90	N	TRG	SMETCLPTCL	LEAD	1 8	UG/L		B	3								
SW038	SW	REAL	SW00520WC	05-NOV-90	N	TRG	SMETCLPTCL	MAGNESIUM	16600	UG/L			5000								
SW038	SW	REAL	SW00520WC	05-NOV-90	N	TRG	SMETCLPTCL	MANGANESE	11 6	UG/L		B	15								
SW038	SW	REAL	SW00520WC	05-NOV-90	N	TRG	SMETCLPTCL	MERCURY	0 20	UG/L		U	0 2								
SW038	SW	REAL	SW00520WC	05-NOV-90	N	TRG	SMETCLPTCL	NICKEL	9 0	UG/L		U	40								
SW038	SW	REAL	SW00520WC	05-NOV-90	N	TRG	SMETCLPTCL	POTASSIUM	1120	UG/L		B	5000								
SW038	SW	REAL	SW00520WC	05-NOV-90	N	TRG	SMETCLPTCL	SELENIUM	2 0	UG/L		U	5								
SW038	SW	REAL	SW00520WC	05-NOV-90	N	TRG	SMETCLPTCL	SILVER	6 7	UG/L		B	10								
SW038	SW	REAL	SW00520WC	05-NOV-90	N	TRG	SMETCLPTCL	SODIUM	14400	UG/L			5000								
SW038	SW	REAL	SW00520WC	05-NOV-90	N	TRG	SMETCLPTCL	THALLIUM	2 0	UG/L		U	10								
SW038	SW	REAL	SW00520WC	05-NOV-90	N	TRG	SMETCLPTCL	VANADIUM	9.3	UG/L		B	50								
SW038	SW	REAL	SW00520WC	05-NOV-90	N	TRG	SMETCLPTCL	ZINC	59.2	UG/L			20								
SW038	SW	REAL	SW00520WC	05-NOV-90	N	TRG	SMETNOCLP	CESIUM	500	UG/L		U	1000								
SW038	SW	REAL	SW00520WC	05-NOV-90	N	TRG	SMETNOCLP	LITHIUM	10.0	UG/L		U	100								
SW038	SW	REAL	SW00520WC	05-NOV-90	N	TRG	SMETNOCLP	MOLYBDENUM	9.0	UG/L		U	200								
SW038	SW	REAL	SW00520WC	05-NOV-90	N	TRG	SMETNOCLP	PHOSPHORUS	224	UG/L		B	1000								
SW038	SW	REAL	SW00520WC	05-NOV-90	N	TRG	SMETNOCLP	STRONTIUM	429	UG/L			200								
SW038	SW	REAL	SW00520WC	05-NOV-90	N	TRG	SMETNOCLP	TIN	30.0	UG/L		U	200								
SW093	SW	MS	SW093W052990M	30-MAY-90	N																
SW093	SW	MS	SW80023WC	30-JUL-90	N	TRG	DMETCLPTAL	ALUMINUM	47.4	UG/L		B	200								
SW093	SW	MS	SW80023WC	30-JUL-90	N	TRG	DMETCLPTAL	ANTIMONY	12.0	UG/L		U	60								
SW093	SW	MS	SW80023WC	30-JUL-90	N	TRG	DMETCLPTAL	ARSENIC	0 90	UG/L		B	10								
SW093	SW	MS	SW80023WC	30-JUL-90	N	TRG	DMETCLPTAL	BARIUM	155	UG/L		B	200								
SW093	SW	MS	SW80023WC	30-JUL-90	N	TRG	DMETCLPTAL	BERYLLIUM	2 0	UG/L		U	5								
SW093	SW	MS	SW80023WC	30-JUL-90	N	TRG	DMETCLPTAL	CADMIUM	2 0	UG/L		U	5								
SW093	SW	MS	SW80023WC	30-JUL-90	N	TRG	DMETCLPTAL	CALCIUM	92200	UG/L			5000								
SW093	SW	MS	SW80023WC	30-JUL-90	N	TRG	DMETCLPTAL	CHROMIUM	4 0	UG/L		U	10								
SW093	SW	MS	SW80023WC	30-JUL-90	N	TRG	DMETCLPTAL	COBALT	4 0	UG/L		U	50								
SW093	SW	MS	SW80023WC	30-JUL-90	N	TRG	DMETCLPTAL	COPPER	3 0	UG/L		U	25								
SW093	SW	MS	SW80023WC	30-JUL-90	N	TRG	DMETCLPTAL	IRON	89.1	UG/L		B	100								
SW093	SW	MS	SW80023WC	30-JUL-90	N	TRG	DMETCLPTAL	LEAD	0 60	UG/L		U	3								
SW093	SW	MS	SW80023WC	30-JUL-90	N	TRG	DMETCLPTAL	MAGNESIUM	22700	UG/L			5000								
SW093	SW	MS	SW80023WC	30-JUL-90	N	TRG	DMETCLPTAL	MANGANESE	682	UG/L			15								
SW093	SW	MS	SW80023WC	30-JUL-90	N	TRG	DMETCLPTAL	MERCURY	0.10	UG/L		U	0 2								
SW093	SW	MS	SW80023WC	30-JUL-90	N	TRG	DMETCLPTAL	NICKEL	10	UG/L		U	40								
SW093	SW	MS	SW80023WC	30-JUL-90	N	TRG	DMETCLPTAL	POTASSIUM	4570	UG/L		B	1000								
SW093	SW	MS	SW80023WC	30-JUL-90	N	TRG	DMETCLPTAL	SELENIUM	3.0	UG/L		B	5								
SW093	SW	MS	SW80023WC	30-JUL-90	N	TRG	DMETCLPTAL	SILVER	2.0	UG/L		U	10								
SW093	SW	MS	SW80023WC	30-JUL-90	N	TRG	DMETCLPTAL	SODIUM	44400	UG/L			5000								
SW093	SW	MS	SW80023WC	30-JUL-90	N	TRG	DMETCLPTAL	THALLIUM	2.0	UG/L		U	10								
SW093	SW	MS	SW80023WC	30-JUL-90	N	TRG	DMETCLPTAL	VANADIUM	7 8	UG/L		B	50								
SW093	SW	MS	SW80023WC	30-JUL-90	N	TRG	DMETCLPTAL	ZINC	14.9	UG/L		B	20								
SW093	SW	MS	SW80023WC	30-JUL-90	N	TRG	DMETNOCLP	CESIUM	55.0	UG/L		U	1000								
SW093	SW	MS	SW80023WC	30-JUL-90	N	TRG	DMETNOCLP	LITHIUM	35 0	UG/L		U	100								
SW093	SW	MS	SW80023WC	30-JUL-90	N	TRG	DMETNOCLP	MOLYBDENUM	70 0	UG/L		U	200								

Location	ST	QC	Sample Number	Smpl Date	D	ID	Group	Chemical	Result	Unit	Error	Qual	D LMT	VA	RN1	RN2	RN3	RN4	VResult	VQual	VDET
SW093	SW	MS	SW80023WC	30-JUL-90	N	TRG	DMETNOCLP	PHOSPHORUS	467	UG/L		B	1000								
SW093	SW	MS	SW80023WC	30-JUL-90	N	TRG	DMETNOCLP	SILICON	5960	UG/L			5000								
SW093	SW	MS	SW80023WC	30-JUL-90	N	TRG	DMETNOCLP	STRONTIUM	588	UG/L			200								
SW093	SW	MS	SW80023WC	30-JUL-90	N	TRG	DMETNOCLP	TIN	24 0	UG/L		U	200								
SW093	SW	MS	SW80023WC	30-JUL-90	N	TRG	SMETCLPTCL	ALUMINUM	165	UG/L		B	200								
SW093	SW	MS	SW80023WC	30-JUL-90	N	TRG	SMETCLPTCL	ANTIMONY	15.9	UG/L		B	60								
SW093	SW	MS	SW80023WC	30-JUL-90	N	TRG	SMETCLPTCL	ARSENIC	1.6	UG/L		B	10								
SW093	SW	MS	SW80023WC	30-JUL-90	N	TRG	SMETCLPTCL	BARIUM	143	UG/L		B	200								
SW093	SW	MS	SW80023WC	30-JUL-90	N	TRG	SMETCLPTCL	BERYLLIUM	2 0	UG/L		U	5								
SW093	SW	MS	SW80023WC	30-JUL-90	N	TRG	SMETCLPTCL	CADMIUM	2.0	UG/L		U	5								
SW093	SW	MS	SW80023WC	30-JUL-90	N	TRG	SMETCLPTCL	CALCIUM	86000	UG/L			5000								
SW093	SW	MS	SW80023WC	30-JUL-90	N	TRG	SMETCLPTCL	CHROMIUM	4 0	UG/L		U	10								
SW093	SW	MS	SW80023WC	30-JUL-90	N	TRG	SMETCLPTCL	COBALT	6 6	UG/L		B	50								
SW093	SW	MS	SW80023WC	30-JUL-90	N	TRG	SMETCLPTCL	COPPER	21.7	UG/L			25								
SW093	SW	MS	SW80023WC	30-JUL-90	N	TRG	SMETCLPTCL	IRON	1020	UG/L			100								
SW093	SW	MS	SW80023WC	30-JUL-90	N	TRG	SMETCLPTCL	LEAD	2 4	UG/L		B	3								
SW093	SW	MS	SW80023WC	30-JUL-90	N	TRG	SMETCLPTCL	MAGNESIUM	21200	UG/L			5000								
SW093	SW	MS	SW80023WC	30-JUL-90	N	TRG	SMETCLPTCL	MANGANESE	583	UG/L			15								
SW093	SW	MS	SW80023WC	30-JUL-90	N	TRG	SMETCLPTCL	MERCURY	0.10	UG/L		U	0.2								
SW093	SW	MS	SW80023WC	30-JUL-90	N	TRG	SMETCLPTCL	NICKEL	10	UG/L		U	40								
SW093	SW	MS	SW80023WC	30-JUL-90	N	TRG	SMETCLPTCL	POTASSIUM	3740	UG/L		B	5000								
SW093	SW	MS	SW80023WC	30-JUL-90	N	TRG	SMETCLPTCL	SELENIUM	1 0	UG/L		U	5								
SW093	SW	MS	SW80023WC	30-JUL-90	N	TRG	SMETCLPTCL	SILVER	2 4	UG/L		B	10								
SW093	SW	MS	SW80023WC	30-JUL-90	N	TRG	SMETCLPTCL	SODIUM	44300	UG/L			5000								
SW093	SW	MS	SW80023WC	30-JUL-90	N	TRG	SMETCLPTCL	THALLIUM	2 0	UG/L		U	10								
SW093	SW	MS	SW80023WC	30-JUL-90	N	TRG	SMETCLPTCL	VANADIUM	5 4	UG/L		B	50								
SW093	SW	MS	SW80023WC	30-JUL-90	N	TRG	SMETCLPTCL	ZINC	85.8	UG/L			20								
SW093	SW	MS	SW80023WC	30-JUL-90	N	TRG	SMETNOCLP	CESIUM	55.0	UG/L		U	1000								
SW093	SW	MS	SW80023WC	30-JUL-90	N	TRG	SMETNOCLP	LITHIUM	35 0	UG/L		U	100								
SW093	SW	MS	SW80023WC	30-JUL-90	N	TRG	SMETNOCLP	MOLYBDENUM	70 0	UG/L		U	200								
SW093	SW	MS	SW80023WC	30-JUL-90	N	TRG	SMETNOCLP	PHOSPHORUS	242	UG/L		B	1000								
SW093	SW	MS	SW80023WC	30-JUL-90	N	TRG	SMETNOCLP	STRONTIUM	534	UG/L			200								
SW093	SW	MS	SW80023WC	30-JUL-90	N	TRG	SMETNOCLP	TIN	24.0	UG/L		U	200								
SW093	SW	MSD	SW093W0529990S	29-MAY-90	N																
SW093	SW	MSD	SW80024WC	30-JUL-90	R																
SW093	SW	REAL	SW00096WC	22-JUN-90	N	TRG	DMETCLPTAL	ALUMINUM	200	UG/L		U	200								
SW093	SW	REAL	SW00096WC	22-JUN-90	N	TRG	DMETCLPTAL	ANTIMONY	60 0	UG/L		U	60.0								
SW093	SW	REAL	SW00096WC	22-JUN-90	N	TRG	DMETCLPTAL	ARSENIC	10.0	UG/L		U	10 0								
SW093	SW	REAL	SW00096WC	22-JUN-90	N	TRG	DMETCLPTAL	BARIUM	200	UG/L		U	200								
SW093	SW	REAL	SW00096WC	22-JUN-90	N	TRG	DMETCLPTAL	BERYLLIUM	5.0	UG/L		U	5 0								
SW093	SW	REAL	SW00096WC	22-JUN-90	N	TRG	DMETCLPTAL	CADMIUM	5 0	UG/L		U	5 0								
SW093	SW	REAL	SW00096WC	22-JUN-90	N	TRG	DMETCLPTAL	CALCIUM	98000	UG/L			5000								
SW093	SW	REAL	SW00096WC	22-JUN-90	N	TRG	DMETCLPTAL	CHROMIUM	10 0	UG/L		U	10 0								
SW093	SW	REAL	SW00096WC	22-JUN-90	N	TRG	DMETCLPTAL	COBALT	50 0	UG/L		U	50 0								
SW093	SW	REAL	SW00096WC	22-JUN-90	N	TRG	DMETCLPTAL	COPPER	25 0	UG/L		U	25 0								
SW093	SW	REAL	SW00096WC	22-JUN-90	N	TRG	DMETCLPTAL	IRON	100	UG/L		U	100								
SW093	SW	REAL	SW00096WC	22-JUN-90	N	TRG	DMETCLPTAL	LEAD	3.0	UG/L		U	3 0								
SW093	SW	REAL	SW00096WC	22-JUN-90	N	TRG	DMETCLPTAL	MAGNESIUM	23300	UG/L			5000								
SW093	SW	REAL	SW00096WC	22-JUN-90	N	TRG	DMETCLPTAL	MANGANESE	863	UG/L			15.0								
SW093	SW	REAL	SW00096WC	22-JUN-90	N	TRG	DMETCLPTAL	MERCURY	0.20	UG/L		U	0 20								
SW093	SW	REAL	SW00096WC	22-JUN-90	N	TRG	DMETCLPTAL	NICKEL	40 0	UG/L		U	40 0								
SW093	SW	REAL	SW00096WC	22-JUN-90	N	TRG	DMETCLPTAL	POTASSIUM	5000	UG/L		U	5000								
SW093	SW	REAL	SW00096WC	22-JUN-90	N	TRG	DMETCLPTAL	SELENIUM	5 0	UG/L		U	5.0								
SW093	SW	REAL	SW00096WC	22-JUN-90	N	TRG	DMETCLPTAL	SILVER	10.0	UG/L		U	10 0								
SW093	SW	REAL	SW00096WC	22-JUN-90	N	TRG	DMETCLPTAL	SODIUM	49100	UG/L			5000								
SW093	SW	REAL	SW00096WC	22-JUN-90	N	TRG	DMETCLPTAL	THALLIUM	10.0	UG/L		U	10 0								
SW093	SW	REAL	SW00096WC	22-JUN-90	N	TRG	DMETCLPTAL	VANADIUM	50 0	UG/L		U	50.0								
SW093	SW	REAL	SW00096WC	22-JUN-90	N	TRG	DMETCLPTAL	ZINC	30 9	UG/L			20 0								
SW093	SW	REAL	SW00096WC	22-JUN-90	N	TRG	DMETNOCLP	CESIUM	1000	UG/L		U	1000								
SW093	SW	REAL	SW00096WC	22-JUN-90	N	TRG	DMETNOCLP	LITHIUM	100	UG/L		U	100								
SW093	SW	REAL	SW00096WC	22-JUN-90	N	TRG	DMETNOCLP	MOLYBDENUM	100	UG/L		U	100								
SW093	SW	REAL	SW00096WC	22-JUN-90	N	TRG	DMETNOCLP	STRONTIUM	1000	UG/L		U	1000								
SW093	SW	REAL	SW00096WC	22-JUN-90	N	TRG	DMETNOCLP	TIN	100	UG/L		U	100								

Location	ST	QC	Sample Number	Smpl Date	D	ID	Group	Chemical	Result	Unit	Error	Qual	D LMT	VA	RN1	RN2	RN3	RN4	VResult	VQual	VDET
SW093	SW	REAL	SW00096WC	22-JUN-90	N	TRG	SMETCLPTCL	ALUMINUM	200	UG/L		U	200								
SW093	SW	REAL	SW00096WC	22-JUN-90	N	TRG	SMETCLPTCL	ANTIMONY	60 0	UG/L		U	60 0								
SW093	SW	REAL	SW00096WC	22-JUN-90	N	TRG	SMETCLPTCL	ARSENIC	10 0	UG/L		U	10 0								
SW093	SW	REAL	SW00096WC	22-JUN-90	N	TRG	SMETCLPTCL	BARIUM	200	UG/L		U	200								
SW093	SW	REAL	SW00096WC	22-JUN-90	N	TRG	SMETCLPTCL	BERYLLIUM	5 0	UG/L		U	5 0								
SW093	SW	REAL	SW00096WC	22-JUN-90	N	TRG	SMETCLPTCL	CADMIUM	5 0	UG/L		U	5 0								
SW093	SW	REAL	SW00096WC	22-JUN-90	N	TRG	SMETCLPTCL	CALCIUM	78800	UG/L			5000								
SW093	SW	REAL	SW00096WC	22-JUN-90	N	TRG	SMETCLPTCL	CHROMIUM	10 0	UG/L		U	10.0								
SW093	SW	REAL	SW00096WC	22-JUN-90	N	TRG	SMETCLPTCL	COBALT	50 0	UG/L		U	50 0								
SW093	SW	REAL	SW00096WC	22-JUN-90	N	TRG	SMETCLPTCL	COPPER	25 0	UG/L		U	25 0								
SW093	SW	REAL	SW00096WC	22-JUN-90	N	TRG	SMETCLPTCL	IRON	823	UG/L			100								
SW093	SW	REAL	SW00096WC	22-JUN-90	N	TRG	SMETCLPTCL	LEAD	3 0	UG/L		U	3 0								
SW093	SW	REAL	SW00096WC	22-JUN-90	N	TRG	SMETCLPTCL	MAGNESIUM	18700	UG/L			5000								
SW093	SW	REAL	SW00096WC	22-JUN-90	N	TRG	SMETCLPTCL	MANGANESE	715	UG/L			15 0								
SW093	SW	REAL	SW00096WC	22-JUN-90	N	TRG	SMETCLPTCL	MERCURY	0 20	UG/L		U	0 20								
SW093	SW	REAL	SW00096WC	22-JUN-90	N	TRG	SMETCLPTCL	NICKEL	40.0	UG/L		U	40 0								
SW093	SW	REAL	SW00096WC	22-JUN-90	N	TRG	SMETCLPTCL	POTASSIUM	5000	UG/L		U	5000								
SW093	SW	REAL	SW00096WC	22-JUN-90	N	TRG	SMETCLPTCL	SELENIUM	5 0	UG/L		U	5 0								
SW093	SW	REAL	SW00096WC	22-JUN-90	N	TRG	SMETCLPTCL	SILVER	10 0	UG/L		U	10 0								
SW093	SW	REAL	SW00096WC	22-JUN-90	N	TRG	SMETCLPTCL	SODIUM	38700	UG/L			5000								
SW093	SW	REAL	SW00096WC	22-JUN-90	N	TRG	SMETCLPTCL	THALLIUM	10 0	UG/L		U	10 0								
SW093	SW	REAL	SW00096WC	22-JUN-90	N	TRG	SMETCLPTCL	VANADIUM	50 0	UG/L		U	50 0								
SW093	SW	REAL	SW00096WC	22-JUN-90	N	TRG	SMETCLPTCL	ZINC	54 4	UG/L			20 0								
SW093	SW	REAL	SW00096WC	22-JUN-90	N	TRG	SMETNOCLP	CESIUM	1000	UG/L		U	1000								
SW093	SW	REAL	SW00096WC	22-JUN-90	N	TRG	SMETNOCLP	LITHIUM	100	UG/L		U	100								
SW093	SW	REAL	SW00096WC	22-JUN-90	N	TRG	SMETNOCLP	MOLYBDENUM	100	UG/L		U	100								
SW093	SW	REAL	SW00096WC	22-JUN-90	N	TRG	SMETNOCLP	STRONTIUM	1000	UG/L		U	1000								
SW093	SW	REAL	SW00096WC	22-JUN-90	N	TRG	SMETNOCLP	TIN	100	UG/L		U	100								
SW093	SW	REAL	SW00197WC	30-JUL-90	N	TRG	DMETCLPTAL	ALUMINUM	18.7	UG/L		B	200								
SW093	SW	REAL	SW00197WC	30-JUL-90	N	TRG	DMETCLPTAL	ANTIMONY	12 0	UG/L		U	60								
SW093	SW	REAL	SW00197WC	30-JUL-90	N	TRG	DMETCLPTAL	ARSENIC	0,90	UG/L		U	10								
SW093	SW	REAL	SW00197WC	30-JUL-90	N	TRG	DMETCLPTAL	BARIUM	162	UG/L		B	200								
SW093	SW	REAL	SW00197WC	30-JUL-90	N	TRG	DMETCLPTAL	BERYLLIUM	2.0	UG/L		U	5								
SW093	SW	REAL	SW00197WC	30-JUL-90	N	TRG	DMETCLPTAL	CADMIUM	2 0	UG/L		U	5								
SW093	SW	REAL	SW00197WC	30-JUL-90	N	TRG	DMETCLPTAL	CALCIUM	92900	UG/L			5000								
SW093	SW	REAL	SW00197WC	30-JUL-90	N	TRG	DMETCLPTAL	CHROMIUM	4 0	UG/L		U	10								
SW093	SW	REAL	SW00197WC	30-JUL-90	N	TRG	DMETCLPTAL	COBALT	4 0	UG/L		U	50								
SW093	SW	REAL	SW00197WC	30-JUL-90	N	TRG	DMETCLPTAL	COPPER	3 0	UG/L		U	25								
SW093	SW	REAL	SW00197WC	30-JUL-90	N	TRG	DMETCLPTAL	IRON	6 0	UG/L		U	100								
SW093	SW	REAL	SW00197WC	30-JUL-90	N	TRG	DMETCLPTAL	LEAD	0.60	UG/L		U	3								
SW093	SW	REAL	SW00197WC	30-JUL-90	N	TRG	DMETCLPTAL	MAGNESIUM	22600	UG/L			5000								
SW093	SW	REAL	SW00197WC	30-JUL-90	N	TRG	DMETCLPTAL	MANGANESE	689	UG/L			15								
SW093	SW	REAL	SW00197WC	30-JUL-90	N	TRG	DMETCLPTAL	MERCURY	0.10	UG/L		U	0 2								
SW093	SW	REAL	SW00197WC	30-JUL-90	N	TRG	DMETCLPTAL	NICKEL	10	UG/L		U	40								
SW093	SW	REAL	SW00197WC	30-JUL-90	N	TRG	DMETCLPTAL	POTASSIUM	4260	UG/L		B	5000								
SW093	SW	REAL	SW00197WC	30-JUL-90	N	TRG	DMETCLPTAL	SELENIUM	3 0	UG/L		U	5								
SW093	SW	REAL	SW00197WC	30-JUL-90	N	TRG	DMETCLPTAL	SILVER	2 0	UG/L		U	10								
SW093	SW	REAL	SW00197WC	30-JUL-90	N	TRG	DMETCLPTAL	SODIUM	44400	UG/L			5000								
SW093	SW	REAL	SW00197WC	30-JUL-90	N	TRG	DMETCLPTAL	THALLIUM	2 0	UG/L		U	10								
SW093	SW	REAL	SW00197WC	30-JUL-90	N	TRG	DMETCLPTAL	VANADIUM	7 0	UG/L		B	50								
SW093	SW	REAL	SW00197WC	30-JUL-90	N	TRG	DMETCLPTAL	ZINC	12 8	UG/L		B	20								
SW093	SW	REAL	SW00197WC	30-JUL-90	N	TRG	DMETNOCLP	CESIUM	55 0	UG/L		U	1000								
SW093	SW	REAL	SW00197WC	30-JUL-90	N	TRG	DMETNOCLP	LITHIUM	35 0	UG/L		U	100								
SW093	SW	REAL	SW00197WC	30-JUL-90	N	TRG	DMETNOCLP	MOLYBDENUM	70 0	UG/L		U	200								
SW093	SW	REAL	SW00197WC	30-JUL-90	N	TRG	DMETNOCLP	PHOSPHORUS	525	UG/L		B	1000								
SW093	SW	REAL	SW00197WC	30-JUL-90	N	TRG	DMETNOCLP	SILICON	5850	UG/L			5000								
SW093	SW	REAL	SW00197WC	30-JUL-90	N	TRG	DMETNOCLP	STRONTIUM	593	UG/L			200								
SW093	SW	REAL	SW00197WC	30-JUL-90	N	TRG	DMETNOCLP	TIN	37.3	UG/L		B	200								
SW093	SW	REAL	SW00197WC	30-JUL-90	N	TRG	SMETCLPTCL	ALUMINUM	82 6	UG/L		B	200								
SW093	SW	REAL	SW00197WC	30-JUL-90	N	TRG	SMETCLPTCL	ANTIMONY	15.7	UG/L		B	60								
SW093	SW	REAL	SW00197WC	30-JUL-90	N	TRG	SMETCLPTCL	ARSENIC	0.80	UG/L		U	10								
SW093	SW	REAL	SW00197WC	30-JUL-90	N	TRG	SMETCLPTCL	BARIUM	139	UG/L		B	200								
SW093	SW	REAL	SW00197WC	30-JUL-90	N	TRG	SMETCLPTCL	BERYLLIUM	2.0	UG/L		U	5								

Location	ST	QC	Sample Number	Smpl Date	D	ID	Group	Chemical	Result	Unit	Error	Qual	D LMT	VA	RN1	RN2	RN3	RN4	VResult	VQual	VDET
SW093	SW	REAL	SW00197WC	30-JUL-90	N	TRG	SMETCLPTCL	CADMIUM	2 0	UG/L		U	5								
SW093	SW	REAL	SW00197WC	30-JUL-90	N	TRG	SMETCLPTCL	CALCIUM	83400	UG/L			5000								
SW093	SW	REAL	SW00197WC	30-JUL-90	N	TRG	SMETCLPTCL	CHROMIUM	4.0	UG/L		U	10								
SW093	SW	REAL	SW00197WC	30-JUL-90	N	TRG	SMETCLPTCL	COBALT	4 4	UG/L		B	50								
SW093	SW	REAL	SW00197WC	30-JUL-90	N	TRG	SMETCLPTCL	COPPER	6.7	UG/L		B	25								
SW093	SW	REAL	SW00197WC	30-JUL-90	N	TRG	SMETCLPTCL	IRON	1170	UG/L			100								
SW093	SW	REAL	SW00197WC	30-JUL-90	N	TRG	SMETCLPTCL	LEAD	3 3	UG/L			3								
SW093	SW	REAL	SW00197WC	30-JUL-90	N	TRG	SMETCLPTCL	MAGNESIUM	20400	UG/L			5000								
SW093	SW	REAL	SW00197WC	30-JUL-90	N	TRG	SMETCLPTCL	MANGANESE	571	UG/L			15								
SW093	SW	REAL	SW00197WC	30-JUL-90	N	TRG	SMETCLPTCL	MERCURY	0 10	UG/L		U	0.2								
SW093	SW	REAL	SW00197WC	30-JUL 90	N	TRG	SMETCLPTCL	NICKEL	10	UG/L		U	40								
SW093	SW	REAL	SW00197WC	30-JUL-90	N	TRG	SMETCLPTCL	POTASSIUM	3670	UG/L		B	5000								
SW093	SW	REAL	SW00197WC	30-JUL-90	N	TRG	SMETCLPTCL	SELENIUM	1.0	UG/L		U	5								
SW093	SW	REAL	SW00197WC	30-JUL-90	N	TRG	SMETCLPTCL	SILVER	3.0	UG/L		B	10								
SW093	SW	REAL	SW00197WC	30-JUL-90	N	TRG	SMETCLPTCL	SODIUM	42600	UG/L			5000								
SW093	SW	REAL	SW00197WC	30-JUL-90	N	TRG	SMETCLPTCL	THALLIUM	2.0	UG/L		U	10								
SW093	SW	REAL	SW00197WC	30-JUL-90	N	TRG	SMETCLPTCL	VANADIUM	5 4	UG/L		B	50								
SW093	SW	REAL	SW00197WC	30-JUL-90	N	TRG	SMETCLPTCL	ZINC	48 2	UG/L			20								
SW093	SW	REAL	SW00197WC	30-JUL-90	N	TRG	SMETNOCLP	CESIUM	60.0	UG/L		U	1000								
SW093	SW	REAL	SW00197WC	30-JUL-90	N	TRG	SMETNOCLP	LITHIUM	35 0	UG/L		U	100								
SW093	SW	REAL	SW00197WC	30-JUL-90	N	TRG	SMETNOCLP	MOLYBDENUM	70 0	UG/L		U	200								
SW093	SW	REAL	SW00197WC	30-JUL-90	N	TRG	SMETNOCLP	PHOSPHORUS	226	UG/L		B	1000								
SW093	SW	REAL	SW00197WC	30-JUL-90	N	TRG	SMETNOCLP	STRONTIUM	516	UG/L			200								
SW093	SW	REAL	SW00197WC	30-JUL-90	N	TRG	SMETNOCLP	TIN	24.0	UG/L		U	200								
SW093	SW	REAL	SW00275WC	30-AUG-90	N	TRG	DMETCLPTAL	ALUMINUM	25 80	UG/L		B	200 0								
SW093	SW	REAL	SW00275WC	30-AUG-90	N	TRG	DMETCLPTAL	ANTIMONY	10 00	UG/L		U	60 00								
SW093	SW	REAL	SW00275WC	30-AUG-90	N	TRG	DMETCLPTAL	ARSENIC	1 00	UG/L		B	10 00								
SW093	SW	REAL	SW00275WC	30-AUG-90	N	TRG	DMETCLPTAL	BARIUM	162.00	UG/L		B	200 0								
SW093	SW	REAL	SW00275WC	30-AUG-90	N	TRG	DMETCLPTAL	BERYLLIUM	1.00	UG/L		U	5.000								
SW093	SW	REAL	SW00275WC	30-AUG-90	N	TRG	DMETCLPTAL	CADMIUM	2 00	UG/L		U	5 000								
SW093	SW	REAL	SW00275WC	30-AUG-90	N	TRG	DMETCLPTAL	CALCIUM	103000 00	UG/L		E	5000								
SW093	SW	REAL	SW00275WC	30-AUG-90	N	TRG	DMETCLPTAL	CHROMIUM	19 40	UG/L			10 00								
SW093	SW	REAL	SW00275WC	30-AUG-90	N	TRG	DMETCLPTAL	COBALT	4.00	UG/L		U	50 00								
SW093	SW	REAL	SW00275WC	30-AUG-90	N	TRG	DMETCLPTAL	COPPER	3 00	UG/L		U	25 00								
SW093	SW	REAL	SW00275WC	30-AUG-90	N	TRG	DMETCLPTAL	IRON	250.00	UG/L			100 0								
SW093	SW	REAL	SW00275WC	30-AUG-90	N	TRG	DMETCLPTAL	LEAD	1.00	UG/L		U	3 000								
SW093	SW	REAL	SW00275WC	30-AUG-90	N	TRG	DMETCLPTAL	MAGNESIUM	27100 00	UG/L		E	5000.								
SW093	SW	REAL	SW00275WC	30-AUG-90	N	TRG	DMETCLPTAL	MANGANESE	1420 00	UG/L			15 00								
SW093	SW	REAL	SW00275WC	30-AUG-90	N	TRG	DMETCLPTAL	MERCURY	0 20	UG/L		U	0.200								
SW093	SW	REAL	SW00275WC	30-AUG-90	N	TRG	DMETCLPTAL	NICKEL	4 00	UG/L		U	40.00								
SW093	SW	REAL	SW00275WC	30-AUG-90	N	TRG	DMETCLPTAL	POTASSIUM	3380 00	UG/L		B	5000								
SW093	SW	REAL	SW00275WC	30-AUG-90	N	TRG	DMETCLPTAL	SELENIUM	2.00	UG/L		B	5.000								
SW093	SW	REAL	SW00275WC	30-AUG-90	N	TRG	DMETCLPTAL	SILVER	2 00	UG/L		U	10 00								
SW093	SW	REAL	SW00275WC	30-AUG-90	N	TRG	DMETCLPTAL	SODIUM	54000 00	UG/L		E	5000								
SW093	SW	REAL	SW00275WC	30-AUG-90	N	TRG	DMETCLPTAL	THALLIUM	3 00	UG/L		U	10 00								
SW093	SW	REAL	SW00275WC	30-AUG-90	N	TRG	DMETCLPTAL	VANADIUM	5 30	UG/L		B	50 00								
SW093	SW	REAL	SW00275WC	30-AUG-90	N	TRG	DMETCLPTAL	ZINC	33.30	UG/L			20 00								
SW093	SW	REAL	SW00275WC	30-AUG-90	N	TRG	DMETNOCLP	CESIUM	147.00	UG/L		U	1000								
SW093	SW	REAL	SW00275WC	30-AUG-90	N	TRG	DMETNOCLP	LITHIUM	16 20	UG/L		B	100.0								
SW093	SW	REAL	SW00275WC	30-AUG-90	N	TRG	DMETNOCLP	MOLYBDENUM	17 80	UG/L		B	200 0								
SW093	SW	REAL	SW00275WC	30-AUG-90	N	TRG	DMETNOCLP	STRONTIUM	687.00	UG/L			200 0								
SW093	SW	REAL	SW00275WC	30-AUG-90	N	TRG	DMETNOCLP	TIN	17.50	UG/L		B	200.0								
SW093	SW	REAL	SW00275WC	30-AUG-90	N	TRG	SMETCLPTCL	ALUMINUM	71.00	UG/L		B	200.0								
SW093	SW	REAL	SW00275WC	30-AUG-90	N	TRG	SMETCLPTCL	ANTIMONY	19.50	UG/L		B	60.00								
SW093	SW	REAL	SW00275WC	30-AUG-90	N	TRG	SMETCLPTCL	ARSENIC	1.00	UG/L		B	10 00								
SW093	SW	REAL	SW00275WC	30-AUG-90	N	TRG	SMETCLPTCL	BARIUM	154.00	UG/L		BE	200.0								
SW093	SW	REAL	SW00275WC	30-AUG-90	N	TRG	SMETCLPTCL	BERYLLIUM	1.00	UG/L		U	5.000								
SW093	SW	REAL	SW00275WC	30-AUG-90	N	TRG	SMETCLPTCL	CADMIUM	2.00	UG/L		U	5.000								
SW093	SW	REAL	SW00275WC	30-AUG-90	N	TRG	SMETCLPTCL	CALCIUM	104000.00	UG/L		E	5000.								
SW093	SW	REAL	SW00275WC	30-AUG-90	N	TRG	SMETCLPTCL	CHROMIUM	21.00	UG/L			10 00								
SW093	SW	REAL	SW00275WC	30-AUG-90	N	TRG	SMETCLPTCL	COBALT	5.50	UG/L		B	50.00								
SW093	SW	REAL	SW00275WC	30-AUG-90	N	TRG	SMETCLPTCL	COPPER	7.20	UG/L		B	25.00								
SW093	SW	REAL	SW00275WC	30-AUG-90	N	TRG	SMETCLPTCL	CYANIDE	1 50	UG/L		U	10 00								

Location	ST	QC	Sample Number	Smpl Date	D	ID	Group	Chemical	Result	Unit	Error	Qual	D LMT	VA	RN1	RN2	RN3	RN4	VResult	VQual	VDET
SW093	SW	REAL	SW00275WC	30-AUG-90	N	TRG	SMETCLPTCL	IRON	1990 00	UG/L			100 0								
SW093	SW	REAL	SW00275WC	30-AUG-90	N	TRG	SMETCLPTCL	LEAD	1 00	UG/L		U	3 000								
SW093	SW	REAL	SW00275WC	30-AUG-90	N	TRG	SMETCLPTCL	MAGNESIUM	26000 00	UG/L		E	5000								
SW093	SW	REAL	SW00275WC	30-AUG-90	N	TRG	SMETCLPTCL	MANGANESE	1400 00	UG/L		E	15 00								
SW093	SW	REAL	SW00275WC	30-AUG-90	N	TRG	SMETCLPTCL	MERCURY	0 20	UG/L		U	0 200								
SW093	SW	REAL	SW00275WC	30-AUG-90	N	TRG	SMETCLPTCL	NICKEL	4 20	UG/L		B	40 00								
SW093	SW	REAL	SW00275WC	30-AUG-90	N	TRG	SMETCLPTCL	POTASSIUM	3200 00	UG/L		BE	5000								
SW093	SW	REAL	SW00275WC	30-AUG-90	N	TRG	SMETCLPTCL	SELENIUM	2 00	UG/L		B	5 000								
SW093	SW	REAL	SW00275WC	30-AUG-90	N	TRG	SMETCLPTCL	SILVER	8.00	UG/L		B	10 00								
SW093	SW	REAL	SW00275WC	30-AUG-90	N	TRG	SMETCLPTCL	SODIUM	50200 00	UG/L		E	5000								
SW093	SW	REAL	SW00275WC	30-AUG-90	N	TRG	SMETCLPTCL	THALLIUM	3 00	UG/L		U	10 00								
SW093	SW	REAL	SW00275WC	30-AUG-90	N	TRG	SMETCLPTCL	VANADIUM	12 10	UG/L		B	50 00								
SW093	SW	REAL	SW00275WC	30-AUG-90	N	TRG	SMETCLPTCL	ZINC	109 00	UG/L			20 00								
SW093	SW	REAL	SW00275WC	30-AUG-90	N	TRG	SMETNOCLP	CESIUM	147 00	UG/L		U	1000								
SW093	SW	REAL	SW00275WC	30-AUG-90	N	TRG	SMETNOCLP	LITHIUM	15 40	UG/L		B	100 0								
SW093	SW	REAL	SW00275WC	30-AUG-90	N	TRG	SMETNOCLP	MOLYBDENUM	16 90	UG/L		B	200 0								
SW093	SW	REAL	SW00275WC	30-AUG-90	N	TRG	SMETNOCLP	STRONTIUM	642 00	UG/L			200 0								
SW093	SW	REAL	SW00275WC	30-AUG-90	N	TRG	SMETNOCLP	TIN	36 30	UG/L		B	200 0								
SW093	SW	REAL	SW00353WC	25-SEP-90	N	TRG	DMETCLPTAL	ALUMINUM	13 70	UG/L		B	200 0								
SW093	SW	REAL	SW00353WC	25-SEP-90	N	TRG	DMETCLPTAL	ANTIMONY	11 70	UG/L		B	60 00								
SW093	SW	REAL	SW00353WC	25-SEP-90	N	TRG	DMETCLPTAL	ARSENIC	1 00	UG/L		B	10 00								
SW093	SW	REAL	SW00353WC	25-SEP-90	N	TRG	DMETCLPTAL	BARIUM	136 00	UG/L		B	200 0								
SW093	SW	REAL	SW00353WC	25-SEP-90	N	TRG	DMETCLPTAL	BERYLLIUM	1.00	UG/L		U	5 000								
SW093	SW	REAL	SW00353WC	25-SEP-90	N	TRG	DMETCLPTAL	CADMIUM	2.00	UG/L		U	5 000								
SW093	SW	REAL	SW00353WC	25-SEP-90	N	TRG	DMETCLPTAL	CALCIUM	87800 00	UG/L			5000								
SW093	SW	REAL	SW00353WC	25-SEP-90	N	TRG	DMETCLPTAL	CHROMIUM	5 00	UG/L		U	10 00								
SW093	SW	REAL	SW00353WC	25-SEP-90	N	TRG	DMETCLPTAL	COBALT	3 00	UG/L		U	50 00								
SW093	SW	REAL	SW00353WC	25-SEP-90	N	TRG	DMETCLPTAL	COPPER	2 00	UG/L		U	25 00								
SW093	SW	REAL	SW00353WC	25-SEP-90	N	TRG	DMETCLPTAL	IRON	64 10	UG/L		B	100 0								
SW093	SW	REAL	SW00353WC	25-SEP-90	N	TRG	DMETCLPTAL	LEAD	1.00	UG/L		U	3 000								
SW093	SW	REAL	SW00353WC	25-SEP-90	N	TRG	DMETCLPTAL	MAGNESIUM	23300 00	UG/L			5000								
SW093	SW	REAL	SW00353WC	25-SEP-90	N	TRG	DMETCLPTAL	MANGANESE	741 00	UG/L			15.00								
SW093	SW	REAL	SW00353WC	25-SEP-90	N	TRG	DMETCLPTAL	MERCURY	0.20	UG/L		U	0 200								
SW093	SW	REAL	SW00353WC	25-SEP-90	N	TRG	DMETCLPTAL	NICKEL	4.00	UG/L		U	40.00								
SW093	SW	REAL	SW00353WC	25-SEP-90	N	TRG	DMETCLPTAL	POTASSIUM	2950 00	UG/L		B	5000								
SW093	SW	REAL	SW00353WC	25-SEP-90	N	TRG	DMETCLPTAL	SELENIUM	2.00	UG/L		U*	5 000								
SW093	SW	REAL	SW00353WC	25-SEP-90	N	TRG	DMETCLPTAL	SILVER	3 00	UG/L		U	10 00								
SW093	SW	REAL	SW00353WC	25-SEP-90	N	TRG	DMETCLPTAL	SODIUM	46200 00	UG/L			5000								
SW093	SW	REAL	SW00353WC	25-SEP-90	N	TRG	DMETCLPTAL	THALLIUM	2.00	UG/L		UWN	10 00								
SW093	SW	REAL	SW00353WC	25-SEP-90	N	TRG	DMETCLPTAL	VANADIUM	2 20	UG/L		B	50 00								
SW093	SW	REAL	SW00353WC	25-SEP-90	N	TRG	DMETCLPTAL	ZINC	13.10	UG/L		B	20 00								
SW093	SW	REAL	SW00353WC	25-SEP-90	N	TRG	DMETNOCLP	CESIUM	92.00	UG/L		U	1000								
SW093	SW	REAL	SW00353WC	25-SEP-90	N	TRG	DMETNOCLP	LITHIUM	13.90	UG/L		B	100 0								
SW093	SW	REAL	SW00353WC	25-SEP-90	N	TRG	DMETNOCLP	MOLYBDENUM	4.10	UG/L		B	200 0								
SW093	SW	REAL	SW00353WC	25-SEP-90	N	TRG	DMETNOCLP	STRONTIUM	563 00	UG/L			200 0								
SW093	SW	REAL	SW00353WC	25-SEP-90	N	TRG	DMETNOCLP	TIN	21.60	UG/L		B	200 0								
SW093	SW	REAL	SW00353WC	25-SEP-90	N	TRG	SMETCLPTCL	ALUMINUM	111.00	UG/L		B	200 0								
SW093	SW	REAL	SW00353WC	25-SEP-90	N	TRG	SMETCLPTCL	ANTIMONY	11 00	UG/L		B	60 00								
SW093	SW	REAL	SW00353WC	25-SEP-90	N	TRG	SMETCLPTCL	ARSENIC	2 00	UG/L		U	10 00								
SW093	SW	REAL	SW00353WC	25-SEP-90	N	TRG	SMETCLPTCL	BARIUM	143 00	UG/L		B	200 0								
SW093	SW	REAL	SW00353WC	25-SEP-90	N	TRG	SMETCLPTCL	BERYLLIUM	1.00	UG/L		U	5 000								
SW093	SW	REAL	SW00353WC	25-SEP-90	N	TRG	SMETCLPTCL	CADMIUM	2.00	UG/L		U	5 000								
SW093	SW	REAL	SW00353WC	25-SEP-90	N	TRG	SMETCLPTCL	CALCIUM	90200.00	UG/L			5000								
SW093	SW	REAL	SW00353WC	25-SEP-90	N	TRG	SMETCLPTCL	CHROMIUM	7.60	UG/L		B	10.00								
SW093	SW	REAL	SW00353WC	25-SEP-90	N	TRG	SMETCLPTCL	COBALT	3.00	UG/L		U	50.00								
SW093	SW	REAL	SW00353WC	25-SEP-90	N	TRG	SMETCLPTCL	COPPER	2.00	UG/L		U	25 00								
SW093	SW	REAL	SW00353WC	25-SEP-90	N	TRG	SMETCLPTCL	CYANIDE	2.00	UG/L		U	10 00								
SW093	SW	REAL	SW00353WC	25-SEP-90	N	TRG	SMETCLPTCL	IRON	1290.00	UG/L			100 0								
SW093	SW	REAL	SW00353WC	25-SEP-90	N	TRG	SMETCLPTCL	LEAD	1.00	UG/L		U	3.000								
SW093	SW	REAL	SW00353WC	25-SEP-90	N	TRG	SMETCLPTCL	MAGNESIUM	23200.00	UG/L			5000								
SW093	SW	REAL	SW00353WC	25-SEP-90	N	TRG	SMETCLPTCL	MANGANESE	773.00	UG/L			15.00								
SW093	SW	REAL	SW00353WC	25-SEP-90	N	TRG	SMETCLPTCL	MERCURY	0.20	UG/L		U	0.200								
SW093	SW	REAL	SW00353WC	25-SEP-90	N	TRG	SMETCLPTCL	NICKEL	4.00	UG/L		U	40.00								

Location	ST	QC	Sample Number	Smpl Date	D	ID	Group	Chemical	Result	Unit	Error	Qual	D LMT	VA	RN1	RN2	RN3	RN4	VResult	VQual	VDET
SW093	SW	REAL	SW00353WC	25-SEP-90	N	TRG	SMETCLPTCL	POTASSIUM	2970 00	UG/L		B	5000								
SW093	SW	REAL	SW00353WC	25-SEP-90	N	TRG	SMETCLPTCL	SELENIUM	2.00	UG/L		UN	5 000								
SW093	SW	REAL	SW00353WC	25-SEP-90	N	TRG	SMETCLPTCL	SILVER	3 00	UG/L		U	10 00								
SW093	SW	REAL	SW00353WC	25-SEP-90	N	TRG	SMETCLPTCL	SODIUM	45100 00	UG/L			5000								
SW093	SW	REAL	SW00353WC	25-SEP-90	N	TRG	SMETCLPTCL	THALLIUM	2 00	UG/L		UWN	10 00								
SW093	SW	REAL	SW00353WC	25-SEP-90	N	TRG	SMETCLPTCL	VANADIUM	6 10	UG/L		B	50 00								
SW093	SW	REAL	SW00353WC	25-SEP-90	N	TRG	SMETCLPTCL	ZINC	31.40	UG/L		E	20 00								
SW093	SW	REAL	SW00353WC	25-SEP-90	N	TRG	SMETNOCLP	CESIUM	92.00	UG/L		U	1000								
SW093	SW	REAL	SW00353WC	25-SEP-90	N	TRG	SMETNOCLP	LITHIUM	14.50	UG/L		B	100 0								
SW093	SW	REAL	SW00353WC	25-SEP-90	N	TRG	SMETNOCLP	MOLYBDENUM	6 80	UG/L		B	200 0								
SW093	SW	REAL	SW00353WC	25-SEP-90	N	TRG	SMETNOCLP	STRONTIUM	570.00	UG/L			200 0								
SW093	SW	REAL	SW00353WC	25-SEP-90	N	TRG	SMETNOCLP	TIN	33.80	UG/L		B	200 0								
SW093	SW	REAL	SW00448WC	17-OCT-90	N	TRG	DMETCLPTAL	ALUMINUM	43.7	UG/L		B	200								
SW093	SW	REAL	SW00448WC	17-OCT-90	N	TRG	DMETCLPTAL	ANTIMONY	26 0	UG/L		U	60								
SW093	SW	REAL	SW00448WC	17-OCT-90	N	TRG	DMETCLPTAL	ARSENIC	1 1	UG/L		U	10								
SW093	SW	REAL	SW00448WC	17-OCT-90	N	TRG	DMETCLPTAL	BARIUM	148	UG/L		B	200								
SW093	SW	REAL	SW00448WC	17-OCT-90	N	TRG	DMETCLPTAL	BERYLLIUM	0 69	UG/L		B	5								
SW093	SW	REAL	SW00448WC	17-OCT-90	N	TRG	DMETCLPTAL	CADMIUM	2.9	UG/L		U	5								
SW093	SW	REAL	SW00448WC	17-OCT-90	N	TRG	DMETCLPTAL	CALCIUM	99700	UG/L			5000								
SW093	SW	REAL	SW00448WC	17-OCT-90	N	TRG	DMETCLPTAL	CHROMIUM	4.0	UG/L		U	10								
SW093	SW	REAL	SW00448WC	17-OCT-90	N	TRG	DMETCLPTAL	COBALT	4 0	UG/L		U	50								
SW093	SW	REAL	SW00448WC	17-OCT-90	N	TRG	DMETCLPTAL	COPPER	3 0	UG/L		U	25								
SW093	SW	REAL	SW00448WC	17-OCT-90	N	TRG	DMETCLPTAL	IRON	626	UG/L			100								
SW093	SW	REAL	SW00448WC	17-OCT-90	N	TRG	DMETCLPTAL	LEAD	0 40	UG/L		U	5								
SW093	SW	REAL	SW00448WC	17-OCT-90	N	TRG	DMETCLPTAL	MAGNESIUM	25600	UG/L			5000								
SW093	SW	REAL	SW00448WC	17-OCT-90	N	TRG	DMETCLPTAL	MANGANESE	1050	UG/L			15								
SW093	SW	REAL	SW00448WC	17-OCT-90	N	TRG	DMETCLPTAL	MERCURY	0 10	UG/L		U	0 2								
SW093	SW	REAL	SW00448WC	17-OCT-90	N	TRG	DMETCLPTAL	NICKEL	12.0	UG/L		U	40								
SW093	SW	REAL	SW00448WC	17-OCT-90	N	TRG	DMETCLPTAL	POTASSIUM	3780	UG/L		B	5000								
SW093	SW	REAL	SW00448WC	17-OCT-90	N	TRG	DMETCLPTAL	SELENIUM	1 2	UG/L		U	5								
SW093	SW	REAL	SW00448WC	17-OCT-90	N	TRG	DMETCLPTAL	SILVER	6 3	UG/L		B	10								
SW093	SW	REAL	SW00448WC	17-OCT-90	N	TRG	DMETCLPTAL	SODIUM	51900	UG/L			5000								
SW093	SW	REAL	SW00448WC	17-OCT-90	N	TRG	DMETCLPTAL	THALLIUM	0 60	UG/L		U	10								
SW093	SW	REAL	SW00448WC	17-OCT-90	N	TRG	DMETCLPTAL	VANADIUM	8.2	UG/L		B	50								
SW093	SW	REAL	SW00448WC	17-OCT-90	N	TRG	DMETCLPTAL	ZINC	9.2	UG/L		B	20								
SW093	SW	REAL	SW00448WC	17-OCT-90	N	TRG	DMETNOCLP	CESIUM	55.0	UG/L		U	1000								
SW093	SW	REAL	SW00448WC	17-OCT-90	N	TRG	DMETNOCLP	LITHIUM	26.0	UG/L		U	100								
SW093	SW	REAL	SW00448WC	17-OCT-90	N	TRG	DMETNOCLP	MOLYBDENUM	13 0	UG/L		U	200								
SW093	SW	REAL	SW00448WC	17-OCT-90	N	TRG	DMETNOCLP	PHOSPHORUS	466	UG/L		B	1000								
SW093	SW	REAL	SW00448WC	17-OCT-90	N	TRG	DMETNOCLP	SILICON	6360	UG/L			1000								
SW093	SW	REAL	SW00448WC	17-OCT-90	N	TRG	DMETNOCLP	STRONTIUM	599	UG/L			200								
SW093	SW	REAL	SW00448WC	17-OCT-90	N	TRG	DMETNOCLP	TIN	18 0	UG/L		B	200								
SW093	SW	REAL	SW00448WC	17-OCT-90	N	TRG	SMETCLPTCL	ALUMINUM	105	UG/L		B	200								
SW093	SW	REAL	SW00448WC	17-OCT-90	N	TRG	SMETCLPTCL	ANTIMONY	26.0	UG/L		U	60								
SW093	SW	REAL	SW00448WC	17-OCT-90	N	TRG	SMETCLPTCL	ARSENIC	1 1	UG/L		U	10								
SW093	SW	REAL	SW00448WC	17-OCT-90	N	TRG	SMETCLPTCL	BARIUM	134	UG/L		B	200								
SW093	SW	REAL	SW00448WC	17-OCT-90	N	TRG	SMETCLPTCL	BERYLLIUM	0 60	UG/L		U	5								
SW093	SW	REAL	SW00448WC	17-OCT-90	N	TRG	SMETCLPTCL	CADMIUM	2 9	UG/L		U	5								
SW093	SW	REAL	SW00448WC	17-OCT-90	N	TRG	SMETCLPTCL	CALCIUM	89300	UG/L			5000								
SW093	SW	REAL	SW00448WC	17-OCT-90	N	TRG	SMETCLPTCL	CHROMIUM	4 0	UG/L		U	10								
SW093	SW	REAL	SW00448WC	17-OCT-90	N	TRG	SMETCLPTCL	COBALT	4 0	UG/L		U	50								
SW093	SW	REAL	SW00448WC	17-OCT-90	N	TRG	SMETCLPTCL	COPPER	6 1	UG/L		B	25								
SW093	SW	REAL	SW00448WC	17-OCT-90	N	TRG	SMETCLPTCL	IRON	1490	UG/L			100								
SW093	SW	REAL	SW00448WC	17-OCT-90	N	TRG	SMETCLPTCL	LEAD	0.70	UG/L		B	5								
SW093	SW	REAL	SW00448WC	17-OCT-90	N	TRG	SMETCLPTCL	MAGNESIUM	22800	UG/L			5000								
SW093	SW	REAL	SW00448WC	17-OCT-90	N	TRG	SMETCLPTCL	MANGANESE	967	UG/L			15								
SW093	SW	REAL	SW00448WC	17-OCT-90	N	TRG	SMETCLPTCL	MERCURY	0.10	UG/L		U	0 2								
SW093	SW	REAL	SW00448WC	17-OCT-90	N	TRG	SMETCLPTCL	NICKEL	12.0	UG/L		U	40								
SW093	SW	REAL	SW00448WC	17-OCT-90	N	TRG	SMETCLPTCL	POTASSIUM	1620	UG/L		B	5000								
SW093	SW	REAL	SW00448WC	17-OCT-90	N	TRG	SMETCLPTCL	SELENIUM	1.2	UG/L		U	5								
SW093	SW	REAL	SW00448WC	17-OCT-90	N	TRG	SMETCLPTCL	SILVER	2.2	UG/L		B	10								
SW093	SW	REAL	SW00448WC	17-OCT-90	N	TRG	SMETCLPTCL	SODIUM	45300	UG/L			5000								
SW093	SW	REAL	SW00448WC	17-OCT-90	N	TRG	SMETCLPTCL	THALLIUM	2.9	UG/L		U	10								

Location	ST	QC	Sample Number	Smpl Date	D	ID	Group	Chemical	Result	Unit	Error	Qual	D LMT	VA	RN1	RN2	RN3	RN4	VResult	VQual	VDET
SW093	SW	REAL	SW00448WC	17-OCT-90	N	TRG	SMETCLPTCL	VANADIUM	3 9	UG/L		B	50								
SW093	SW	REAL	SW00448WC	17-OCT-90	N	TRG	SMETCLPTCL	ZINC	44.5	UG/L			20								
SW093	SW	REAL	SW00448WC	17-OCT-90	N	TRG	SMETNOCLP	CESIUM	500	UG/L		U	1000								
SW093	SW	REAL	SW00448WC	17-OCT-90	N	TRG	SMETNOCLP	LITHIUM	26.0	UG/L		U	100								
SW093	SW	REAL	SW00448WC	17-OCT-90	N	TRG	SMETNOCLP	MOLYBDENUM	13.0	UG/L		U	200								
SW093	SW	REAL	SW00448WC	17-OCT-90	N	TRG	SMETNOCLP	PHOSPHORUS	224	UG/L		B	1000								
SW093	SW	REAL	SW00448WC	17-OCT-90	N	TRG	SMETNOCLP	STRONTIUM	555	UG/L			200								
SW093	SW	REAL	SW00448WC	17-OCT-90	N	TRG	SMETNOCLP	TIN	17.0	UG/L		U	200								
SW093	SW	REAL	SW00549WC	19-NOV-90	N	TRG	DMETCLPTAL	ALUMINUM	49.00	UG/L		B	200 0								
SW093	SW	REAL	SW00549WC	19-NOV-90	N	TRG	DMETCLPTAL	ANTIMONY	7 00	UG/L		U	60.00								
SW093	SW	REAL	SW00549WC	19-NOV-90	N	TRG	DMETCLPTAL	ARSENIC	2 00	UG/L		U	10 00								
SW093	SW	REAL	SW00549WC	19-NOV-90	N	TRG	DMETCLPTAL	BARIUM	135.00	UG/L		B	200 0								
SW093	SW	REAL	SW00549WC	19-NOV-90	N	TRG	DMETCLPTAL	BERYLLIUM	1.80	UG/L		B	5 000								
SW093	SW	REAL	SW00549WC	19-NOV-90	N	TRG	DMETCLPTAL	CADMIUM	2 00	UG/L		U	5 000								
SW093	SW	REAL	SW00549WC	19-NOV-90	N	TRG	DMETCLPTAL	CALCIUM	89400 00	UG/L			5000.								
SW093	SW	REAL	SW00549WC	19-NOV-90	N	TRG	DMETCLPTAL	CHROMIUM	8 80	UG/L		B	10 00								
SW093	SW	REAL	SW00549WC	19-NOV-90	N	TRG	DMETCLPTAL	COBALT	3 00	UG/L		U	50 00								
SW093	SW	REAL	SW00549WC	19-NOV-90	N	TRG	DMETCLPTAL	COPPER	3 50	UG/L		B	25 00								
SW093	SW	REAL	SW00549WC	19-NOV-90	N	TRG	DMETCLPTAL	IRON	285 00	UG/L		N*	100 0								
SW093	SW	REAL	SW00549WC	19-NOV-90	N	TRG	DMETCLPTAL	LEAD	1 00	UG/L		U	3 000								
SW093	SW	REAL	SW00549WC	19-NOV-90	N	TRG	DMETCLPTAL	MAGNESIUM	18800 00	UG/L			5000								
SW093	SW	REAL	SW00549WC	19-NOV-90	N	TRG	DMETCLPTAL	MANGANESE	292 00	UG/L			15 00								
SW093	SW	REAL	SW00549WC	19-NOV-90	N	TRG	DMETCLPTAL	MERCURY	0 20	UG/L		U	0 200								
SW093	SW	REAL	SW00549WC	19-NOV-90	N	TRG	DMETCLPTAL	NICKEL	4.30	UG/L		B	40 00								
SW093	SW	REAL	SW00549WC	19-NOV-90	N	TRG	DMETCLPTAL	POTASSIUM	3640 00	UG/L		B	5000								
SW093	SW	REAL	SW00549WC	19-NOV-90	N	TRG	DMETCLPTAL	SELENIUM	1 00	UG/L		U	5 000								
SW093	SW	REAL	SW00549WC	19-NOV-90	N	TRG	DMETCLPTAL	SILVER	4 10	UG/L		B	10.00								
SW093	SW	REAL	SW00549WC	19-NOV-90	N	TRG	DMETCLPTAL	SODIUM	34600 00	UG/L			5000								
SW093	SW	REAL	SW00549WC	19-NOV-90	N	TRG	DMETCLPTAL	THALLIUM	2 00	UG/L		UW	10.00								
SW093	SW	REAL	SW00549WC	19-NOV-90	N	TRG	DMETCLPTAL	VANADIUM	6 70	UG/L		B	50 00								
SW093	SW	REAL	SW00549WC	19-NOV-90	N	TRG	DMETCLPTAL	ZINC	17 30	UG/L		B	20 00								
SW093	SW	REAL	SW00549WC	19-NOV-90	N	TRG	DMETNOCLP	CESIUM	200.00	UG/L		B	1000.								
SW093	SW	REAL	SW00549WC	19-NOV-90	N	TRG	DMETNOCLP	LITHIUM	8 60	UG/L		B	100 0								
SW093	SW	REAL	SW00549WC	19-NOV-90	N	TRG	DMETNOCLP	MOLYBDENUM	6.40	UG/L		B	200 0								
SW093	SW	REAL	SW00549WC	19-NOV-90	N	TRG	DMETNOCLP	STRONTIUM	519 00	UG/L			200.0								
SW093	SW	REAL	SW00549WC	19-NOV-90	N	TRG	DMETNOCLP	TIN	16.90	UG/L		B	200 0								
SW093	SW	REAL	SW00549WC	19-NOV-90	N	TRG	SMETCLPTCL	ALUMINUM	134.00	UG/L		B	200 0								
SW093	SW	REAL	SW00549WC	19-NOV-90	N	TRG	SMETCLPTCL	ANTIMONY	13 30	UG/L		B	60.00								
SW093	SW	REAL	SW00549WC	19-NOV-90	N	TRG	SMETCLPTCL	ARSENIC	2.00	UG/L		U	10 00								
SW093	SW	REAL	SW00549WC	19-NOV-90	N	TRG	SMETCLPTCL	BARIUM	131 00	UG/L		B	200.0								
SW093	SW	REAL	SW00549WC	19-NOV-90	N	TRG	SMETCLPTCL	BERYLLIUM	1.00	UG/L		U	5 000								
SW093	SW	REAL	SW00549WC	19-NOV-90	N	TRG	SMETCLPTCL	CADMIUM	2.00	UG/L		U	5.000								
SW093	SW	REAL	SW00549WC	19-NOV-90	N	TRG	SMETCLPTCL	CALCIUM	87700 00	UG/L			5000								
SW093	SW	REAL	SW00549WC	19-NOV-90	N	TRG	SMETCLPTCL	CHROMIUM	16 70	UG/L			10 00								
SW093	SW	REAL	SW00549WC	19-NOV-90	N	TRG	SMETCLPTCL	COBALT	5.30	UG/L		B	50 00								
SW093	SW	REAL	SW00549WC	19-NOV-90	N	TRG	SMETCLPTCL	COPPER	4.60	UG/L		B	25.00								
SW093	SW	REAL	SW00549WC	19-NOV-90	N	TRG	SMETCLPTCL	CYANIDE	2.00	UG/L		U	10.00								
SW093	SW	REAL	SW00549WC	19-NOV-90	N	TRG	SMETCLPTCL	IRON	1120 00	UG/L		N*	100.0								
SW093	SW	REAL	SW00549WC	19-NOV-90	N	TRG	SMETCLPTCL	LEAD	1 00	UG/L		UW	3.000								
SW093	SW	REAL	SW00549WC	19-NOV-90	N	TRG	SMETCLPTCL	MAGNESIUM	18500 00	UG/L			5000								
SW093	SW	REAL	SW00549WC	19-NOV-90	N	TRG	SMETCLPTCL	MANGANESE	308.00	UG/L			15.00								
SW093	SW	REAL	SW00549WC	19-NOV-90	N	TRG	SMETCLPTCL	MERCURY	0.20	UG/L		U	0 200								
SW093	SW	REAL	SW00549WC	19-NOV-90	N	TRG	SMETCLPTCL	NICKEL	8 60	UG/L		B	40 00								
SW093	SW	REAL	SW00549WC	19-NOV-90	N	TRG	SMETCLPTCL	POTASSIUM	3250.00	UG/L		BE	5000.								
SW093	SW	REAL	SW00549WC	19-NOV-90	N	TRG	SMETCLPTCL	SELENIUM	1.00	UG/L		U	5.000								
SW093	SW	REAL	SW00549WC	19-NOV-90	N	TRG	SMETCLPTCL	SILVER	7 00	UG/L		B	10.00								
SW093	SW	REAL	SW00549WC	19-NOV-90	N	TRG	SMETCLPTCL	SODIUM	33700 00	UG/L			5000.								
SW093	SW	REAL	SW00549WC	19-NOV-90	N	TRG	SMETCLPTCL	THALLIUM	2.00	UG/L		U	10 00								
SW093	SW	REAL	SW00549WC	19-NOV-90	N	TRG	SMETCLPTCL	VANADIUM	8.50	UG/L		B	50 00								
SW093	SW	REAL	SW00549WC	19-NOV-90	N	TRG	SMETCLPTCL	ZINC	40.80	UG/L			20.00								
SW093	SW	REAL	SW00549WC	19-NOV-90	N	TRG	SMETNOCLP	CESIUM	300 00	UG/L		B	1000.								
SW093	SW	REAL	SW00549WC	19-NOV-90	N	TRG	SMETNOCLP	LITHIUM	11.10	UG/L		B	100 0								
SW093	SW	REAL	SW00549WC	19-NOV-90	N	TRG	SMETNOCLP	MOLYBDENUM	6 60	UG/L		B	200 0								

Location	ST	QC	Sample Number	Smpl Date	D	ID	Group	Chemical	Result	Unit	Error	Qual	D LMT	VA	RN1	RN2	RN3	RN4	VResult	VQual	VDET
SW093	SW	REAL	SW00549WC	19-NOV-90	N	TRG	SMETNOCLP	STRONTIUM	492 00	UG/L			200 0								
SW093	SW	REAL	SW00549WC	19-NOV-90	N	TRG	SMETNOCLP	TIN	23 60	UG/L		B	200 0								
SW093	SW	REAL	SW09390001	29-JAN-90	N	TRG	DMETCLPTAL	ALUMINUM	200	UG/L		U	200								
SW093	SW	REAL	SW09390001	29-JAN-90	N	TRG	DMETCLPTAL	ANTIMONY	60 0	UG/L		U	60 0								
SW093	SW	REAL	SW09390001	29-JAN-90	N	TRG	DMETCLPTAL	ARSENIC	10 0	UG/L		U	10 0								
SW093	SW	REAL	SW09390001	29-JAN-90	N	TRG	DMETCLPTAL	BARIUM	200	UG/L		U	200								
SW093	SW	REAL	SW09390001	29-JAN-90	N	TRG	DMETCLPTAL	BERYLLIUM	5 0	UG/L		U	5 0								
SW093	SW	REAL	SW09390001	29-JAN-90	N	TRG	DMETCLPTAL	CADMIUM	5 0	UG/L		U	5 0								
SW093	SW	REAL	SW09390001	29-JAN-90	N	TRG	DMETCLPTAL	CALCIUM	116000	UG/L			5000								
SW093	SW	REAL	SW09390001	29-JAN-90	N	TRG	DMETCLPTAL	CHROMIUM	10 0	UG/L		U	10 0								
SW093	SW	REAL	SW09390001	29-JAN-90	N	TRG	DMETCLPTAL	COBALT	50 0	UG/L		U	50 0								
SW093	SW	REAL	SW09390001	29-JAN-90	N	TRG	DMETCLPTAL	COPPER	25 0	UG/L		U	25 0								
SW093	SW	REAL	SW09390001	29-JAN-90	N	TRG	DMETCLPTAL	IRON	418	UG/L			100								
SW093	SW	REAL	SW09390001	29-JAN-90	N	TRG	DMETCLPTAL	LEAD	3.0	UG/L		U	3 0								
SW093	SW	REAL	SW09390001	29-JAN-90	N	TRG	DMETCLPTAL	MAGNESIUM	26000	UG/L			5000								
SW093	SW	REAL	SW09390001	29-JAN-90	N	TRG	DMETCLPTAL	MANGANESE	1190	UG/L			15 0								
SW093	SW	REAL	SW09390001	29-JAN-90	N	TRG	DMETCLPTAL	MERCURY	0.20	UG/L		U	0 20								
SW093	SW	REAL	SW09390001	29-JAN-90	N	TRG	DMETCLPTAL	NICKEL	40.0	UG/L		U	40 0								
SW093	SW	REAL	SW09390001	29-JAN-90	N	TRG	DMETCLPTAL	POTASSIUM	5000	UG/L		U	5000								
SW093	SW	REAL	SW09390001	29-JAN-90	N	TRG	DMETCLPTAL	SELENIUM	5 0	UG/L		U	5 0								
SW093	SW	REAL	SW09390001	29-JAN-90	N	TRG	DMETCLPTAL	SILVER	10 0	UG/L		U	10 0								
SW093	SW	REAL	SW09390001	29-JAN-90	N	TRG	DMETCLPTAL	SODIUM	57800	UG/L			5000								
SW093	SW	REAL	SW09390001	29-JAN-90	N	TRG	DMETCLPTAL	THALLIUM	10 0	UG/L		U	10 0								
SW093	SW	REAL	SW09390001	29-JAN-90	N	TRG	DMETCLPTAL	VANADIUM	50 0	UG/L		U	50 0								
SW093	SW	REAL	SW09390001	29-JAN-90	N	TRG	DMETCLPTAL	ZINC	61 3	UG/L			20 0								
SW093	SW	REAL	SW09390001	29-JAN-90	N	TRG	DMETNOCLP	CESIUM	2500	UG/L		U	2500								
SW093	SW	REAL	SW09390001	29-JAN-90	N	TRG	DMETNOCLP	LITHIUM	100	UG/L		U	100								
SW093	SW	REAL	SW09390001	29-JAN-90	N	TRG	DMETNOCLP	MOLYBDENUM	100	UG/L		U	100								
SW093	SW	REAL	SW09390001	29-JAN-90	N	TRG	DMETNOCLP	STRONTIUM	651	UG/L			100								
SW093	SW	REAL	SW09390001	29-JAN-90	N	TRG	DMETNOCLP	TIN	100	UG/L		U	100								
SW093	SW	REAL	SW09390001	29-JAN-90	N	TRG	SMETCLPTCL	ALUMINUM	225	UG/L			200								
SW093	SW	REAL	SW09390001	29-JAN-90	N	TRG	SMETCLPTCL	ANTIMONY	60.0	UG/L		U	60 0								
SW093	SW	REAL	SW09390001	29-JAN-90	N	TRG	SMETCLPTCL	ARSENIC	10 0	UG/L		U	10 0								
SW093	SW	REAL	SW09390001	29-JAN-90	N	TRG	SMETCLPTCL	BARIUM	200	UG/L		U	200								
SW093	SW	REAL	SW09390001	29-JAN-90	N	TRG	SMETCLPTCL	BERYLLIUM	5.0	UG/L		U	5.0								
SW093	SW	REAL	SW09390001	29-JAN-90	N	TRG	SMETCLPTCL	CADMIUM	5 0	UG/L		U	5 0								
SW093	SW	REAL	SW09390001	29-JAN-90	N	TRG	SMETCLPTCL	CALCIUM	108000	UG/L			5000								
SW093	SW	REAL	SW09390001	29-JAN-90	N	TRG	SMETCLPTCL	CHROMIUM	10.0	UG/L		U	10 0								
SW093	SW	REAL	SW09390001	29-JAN-90	N	TRG	SMETCLPTCL	COBALT	50.0	UG/L		U	50 0								
SW093	SW	REAL	SW09390001	29-JAN-90	N	TRG	SMETCLPTCL	COPPER	25 0	UG/L		U	25 0								
SW093	SW	REAL	SW09390001	29-JAN-90	N	TRG	SMETCLPTCL	CYANIDE					10								
SW093	SW	REAL	SW09390001	29-JAN-90	N	TRG	SMETCLPTCL	IRON	1970	UG/L			100								
SW093	SW	REAL	SW09390001	29-JAN-90	N	TRG	SMETCLPTCL	LEAD	3 0	UG/L		U	3 0								
SW093	SW	REAL	SW09390001	29-JAN-90	N	TRG	SMETCLPTCL	MAGNESIUM	24500	UG/L			5000								
SW093	SW	REAL	SW09390001	29-JAN-90	N	TRG	SMETCLPTCL	MANGANESE	977	UG/L			15 0								
SW093	SW	REAL	SW09390001	29-JAN-90	N	TRG	SMETCLPTCL	MERCURY	0.20	UG/L		U	0 20								
SW093	SW	REAL	SW09390001	29-JAN-90	N	TRG	SMETCLPTCL	NICKEL	40 0	UG/L		U	40 0								
SW093	SW	REAL	SW09390001	29-JAN-90	N	TRG	SMETCLPTCL	POTASSIUM	5000	UG/L		U	5000								
SW093	SW	REAL	SW09390001	29-JAN-90	N	TRG	SMETCLPTCL	SELENIUM	5.0	UG/L		U	5 0								
SW093	SW	REAL	SW09390001	29-JAN-90	N	TRG	SMETCLPTCL	SILVER	10 0	UG/L		U	10 0								
SW093	SW	REAL	SW09390001	29-JAN-90	N	TRG	SMETCLPTCL	SODIUM	55200	UG/L			5000								
SW093	SW	REAL	SW09390001	29-JAN-90	N	TRG	SMETCLPTCL	THALLIUM	10 0	UG/L		U	10 0								
SW093	SW	REAL	SW09390001	29-JAN-90	N	TRG	SMETCLPTCL	VANADIUM	50.0	UG/L		U	50 0								
SW093	SW	REAL	SW09390001	29-JAN-90	N	TRG	SMETCLPTCL	ZINC	115	UG/L			20.0								
SW093	SW	REAL	SW09390001	29-JAN-90	N	TRG	SMETNOCLP	CESIUM	2500	UG/L		U	2500								
SW093	SW	REAL	SW09390001	29-JAN-90	N	TRG	SMETNOCLP	LITHIUM	100	UG/L		U	100								
SW093	SW	REAL	SW09390001	29-JAN-90	N	TRG	SMETNOCLP	MOLYBDENUM	100	UG/L		U	100								
SW093	SW	REAL	SW09390001	29-JAN-90	N	TRG	SMETNOCLP	STRONTIUM	623	UG/L			100								
SW093	SW	REAL	SW09390001	29-JAN-90	N	TRG	SMETNOCLP	TIN	100	UG/L		U	100								
SW093	SW	REAL	SW09390002	21-FEB-90	N	TRG	DMETCLPTAL	ALUMINUM	200	UG/L		U	200								
SW093	SW	REAL	SW09390002	21-FEB-90	N	TRG	DMETCLPTAL	ANTIMONY	60.0	UG/L		U	60.0								
SW093	SW	REAL	SW09390002	21-FEB-90	N	TRG	DMETCLPTAL	ARSENIC	10 0	UG/L		U	10.0								
SW093	SW	REAL	SW09390002	21-FEB-90	N	TRG	DMETCLPTAL	BARIUM	200	UG/L		U	200								

Location	ST	QC	Sample Number	Smpl Date	D	ID	Group	Chemical	Result	Unit	Error	Qual	D LMT	VA	RN1	RN2	RN3	RN4	VResult	VQual	VDET
SW093	SW	REAL	SW09390002	21-FEB-90	N	TRG	DMETCLPTAL	BERYLLIUM	5 0	UG/L		U	5 0								
SW093	SW	REAL	SW09390002	21-FEB-90	N	TRG	DMETCLPTAL	CADMIUM	5 0	UG/L		U	5 0								
SW093	SW	REAL	SW09390002	21-FEB-90	N	TRG	DMETCLPTAL	CALCIUM	93600	UG/L			5000								
SW093	SW	REAL	SW09390002	21-FEB-90	N	TRG	DMETCLPTAL	CHROMIUM	10 0	UG/L		U	10.0								
SW093	SW	REAL	SW09390002	21-FEB-90	N	TRG	DMETCLPTAL	COBALT	50 0	UG/L		U	50 0								
SW093	SW	REAL	SW09390002	21-FEB-90	N	TRG	DMETCLPTAL	COPPER	25 0	UG/L		U	25 0								
SW093	SW	REAL	SW09390002	21-FEB-90	N	TRG	DMETCLPTAL	IRON	156	UG/L			100								
SW093	SW	REAL	SW09390002	21-FEB-90	N	TRG	DMETCLPTAL	LEAD	100	UG/L		U	100								
SW093	SW	REAL	SW09390002	21-FEB-90	N	TRG	DMETCLPTAL	MAGNESIUM	21900	UG/L			5000								
SW093	SW	REAL	SW09390002	21-FEB-90	N	TRG	DMETCLPTAL	MANGANESE	483	UG/L			15.0								
SW093	SW	REAL	SW09390002	21-FEB-90	N	TRG	DMETCLPTAL	MERCURY	0.20	UG/L		U	0 20								
SW093	SW	REAL	SW09390002	21-FEB-90	N	TRG	DMETCLPTAL	NICKEL	40 0	UG/L		U	40.0								
SW093	SW	REAL	SW09390002	21-FEB-90	N	TRG	DMETCLPTAL	POTASSIUM	5000	UG/L		U	5000								
SW093	SW	REAL	SW09390002	21-FEB-90	N	TRG	DMETCLPTAL	SELENIUM	5.0	UG/L		U	5 0								
SW093	SW	REAL	SW09390002	21-FEB-90	N	TRG	DMETCLPTAL	SILVER	10.0	UG/L		U	10 0								
SW093	SW	REAL	SW09390002	21-FEB-90	N	TRG	DMETCLPTAL	SODIUM	84800	UG/L			5000								
SW093	SW	REAL	SW09390002	21-FEB-90	N	TRG	DMETCLPTAL	THALLIUM	10 0	UG/L		U	10 0								
SW093	SW	REAL	SW09390002	21-FEB-90	N	TRG	DMETCLPTAL	VANADIUM	50 0	UG/L		U	50 0								
SW093	SW	REAL	SW09390002	21-FEB-90	N	TRG	DMETCLPTAL	ZINC	62 0	UG/L		U	20 0								
SW093	SW	REAL	SW09390002	21-FEB-90	N	TRG	DMETNOCLP	CESIUM	2500	UG/L		U	2500								
SW093	SW	REAL	SW09390002	21-FEB-90	N	TRG	DMETNOCLP	LITHIUM	100	UG/L		U	100								
SW093	SW	REAL	SW09390002	21-FEB-90	N	TRG	DMETNOCLP	MOLYBDENUM	100	UG/L		U	100								
SW093	SW	REAL	SW09390002	21-FEB-90	N	TRG	DMETNOCLP	STRONTIUM	572	UG/L			100								
SW093	SW	REAL	SW09390002	21-FEB-90	N	TRG	DMETNOCLP	TIN	100	UG/L		U	100								
SW093	SW	REAL	SW09390002	21-FEB-90	N	TRG	SMETCLPTCL	ALUMINUM	200	UG/L		U	200								
SW093	SW	REAL	SW09390002	21-FEB-90	N	TRG	SMETCLPTCL	ANTIMONY	60.0	UG/L		U	60 0								
SW093	SW	REAL	SW09390002	21-FEB-90	N	TRG	SMETCLPTCL	ARSENIC	10 0	UG/L		U	10 0								
SW093	SW	REAL	SW09390002	21-FEB-90	N	TRG	SMETCLPTCL	BARIUM	200	UG/L		U	200								
SW093	SW	REAL	SW09390002	21-FEB-90	N	TRG	SMETCLPTCL	BERYLLIUM	5 0	UG/L		U	5 0								
SW093	SW	REAL	SW09390002	21-FEB-90	N	TRG	SMETCLPTCL	CADMIUM	5 0	UG/L		U	5 0								
SW093	SW	REAL	SW09390002	21-FEB-90	N	TRG	SMETCLPTCL	CALCIUM	91700	UG/L			5000								
SW093	SW	REAL	SW09390002	21-FEB-90	N	TRG	SMETCLPTCL	CHROMIUM	10 0	UG/L		U	10 0								
SW093	SW	REAL	SW09390002	21-FEB-90	N	TRG	SMETCLPTCL	COBALT	50.0	UG/L		U	50 0								
SW093	SW	REAL	SW09390002	21-FEB-90	N	TRG	SMETCLPTCL	COPPER	25.0	UG/L		U	25 0								
SW093	SW	REAL	SW09390002	21-FEB-90	N	TRG	SMETCLPTCL	CYANIDE					10 0								
SW093	SW	REAL	SW09390002	21-FEB-90	N	TRG	SMETCLPTCL	IRON	1040	UG/L			100								
SW093	SW	REAL	SW09390002	21-FEB-90	N	TRG	SMETCLPTCL	LEAD	100	UG/L		U	100								
SW093	SW	REAL	SW09390002	21-FEB-90	N	TRG	SMETCLPTCL	MAGNESIUM	22200	UG/L			5000								
SW093	SW	REAL	SW09390002	21-FEB-90	N	TRG	SMETCLPTCL	MANGANESE	524	UG/L			15 0								
SW093	SW	REAL	SW09390002	21-FEB-90	N	TRG	SMETCLPTCL	MERCURY	0 20	UG/L		U	0 20								
SW093	SW	REAL	SW09390002	21-FEB-90	N	TRG	SMETCLPTCL	NICKEL	40.0	UG/L		U	40.0								
SW093	SW	REAL	SW09390002	21-FEB-90	N	TRG	SMETCLPTCL	POTASSIUM	5000	UG/L		U	5000								
SW093	SW	REAL	SW09390002	21-FEB-90	N	TRG	SMETCLPTCL	SELENIUM	5.0	UG/L		U	5 0								
SW093	SW	REAL	SW09390002	21-FEB-90	N	TRG	SMETCLPTCL	SILVER	10 0	UG/L		U	10.0								
SW093	SW	REAL	SW09390002	21-FEB-90	N	TRG	SMETCLPTCL	SODIUM	87400	UG/L			5000								
SW093	SW	REAL	SW09390002	21-FEB-90	N	TRG	SMETCLPTCL	THALLIUM	10 0	UG/L		U	10 0								
SW093	SW	REAL	SW09390002	21-FEB-90	N	TRG	SMETCLPTCL	VANADIUM	50 0	UG/L		U	50 0								
SW093	SW	REAL	SW09390002	21-FEB-90	N	TRG	SMETCLPTCL	ZINC	99 3	UG/L			20.0								
SW093	SW	REAL	SW09390002	21-FEB-90	N	TRG	SMETNOCLP	CESIUM	2500	UG/L		U	2500								
SW093	SW	REAL	SW09390002	21-FEB-90	N	TRG	SMETNOCLP	LITHIUM	100	UG/L		U	100								
SW093	SW	REAL	SW09390002	21-FEB-90	N	TRG	SMETNOCLP	MOLYBDENUM	100	UG/L		U	100								
SW093	SW	REAL	SW09390002	21-FEB-90	N	TRG	SMETNOCLP	STRONTIUM	584	UG/L			100								
SW093	SW	REAL	SW09390002	21-FEB-90	N	TRG	SMETNOCLP	TIN	100	UG/L		U	100								
SW093	SW	REAL	SW09390003	16-MAR-90	N	TRG	DMETCLPTAL	ALUMINUM	35.00	UG/L		U	200								
SW093	SW	REAL	SW09390003	16-MAR-90	N	TRG	DMETCLPTAL	ANTIMONY	26.00	UG/L		U	60								
SW093	SW	REAL	SW09390003	16-MAR-90	N	TRG	DMETCLPTAL	ARSENIC	2.00	UG/L		UW	10								
SW093	SW	REAL	SW09390003	16-MAR-90	N	TRG	DMETCLPTAL	BARIUM	83.80	UG/L		B	200								
SW093	SW	REAL	SW09390003	16-MAR-90	N	TRG	DMETCLPTAL	BERYLLIUM	1.00	UG/L		U	5								
SW093	SW	REAL	SW09390003	16-MAR-90	N	TRG	DMETCLPTAL	CADMIUM	2.00	UG/L		U	5								
SW093	SW	REAL	SW09390003	16-MAR-90	N	TRG	DMETCLPTAL	CALCIUM	49700 00	UG/L			5000								
SW093	SW	REAL	SW09390003	16-MAR-90	N	TRG	DMETCLPTAL	CHROMIUM	5 00	UG/L		U	10								
SW093	SW	REAL	SW09390003	16-MAR-90	N	TRG	DMETCLPTAL	COBALT	4.00	UG/L		U	50								
SW093	SW	REAL	SW09390003	16-MAR-90	N	TRG	DMETCLPTAL	COPPER	6 60	UG/L		B	25								

Location	ST	QC	Sample Number	Smpl Date	D	ID	Group	Chemical	Result	Unit	Error	Qual	D LMT	VA	RN1	RN2	RN3	RN4	VResult	VQual	VDET
SW093	SW	REAL	SW09390003	16-MAR-90	N	TRG	DMETCLPTAL	CYANIDE	10 0	UG/L		U	10								
SW093	SW	REAL	SW09390003	16-MAR-90	N	TRG	DMETCLPTAL	IRON	83 40	UG/L		B	100								
SW093	SW	REAL	SW09390003	16-MAR-90	N	TRG	DMETCLPTAL	LEAD	2 00	UG/L		U	5								
SW093	SW	REAL	SW09390003	16-MAR-90	N	TRG	DMETCLPTAL	MAGNESIUM	10.00	UG/L			5000								
SW093	SW	REAL	SW09390003	16-MAR-90	N	TRG	DMETCLPTAL	MANGANESE	77 80	UG/L			15								
SW093	SW	REAL	SW09390003	16-MAR-90	N	TRG	DMETCLPTAL	MERCURY					0.2								
SW093	SW	REAL	SW09390003	16-MAR-90	N	TRG	DMETCLPTAL	NICKEL	6 00	UG/L		U	40								
SW093	SW	REAL	SW09390003	16-MAR-90	N	TRG	DMETCLPTAL	POTASSIUM	4150 00	UG/L		B	5000								
SW093	SW	REAL	SW09390003	16-MAR-90	N	TRG	DMETCLPTAL	SELENIUM	3.00	UG/L		UN*	5								
SW093	SW	REAL	SW09390003	16-MAR-90	N	TRG	DMETCLPTAL	SILVER	6 00	UG/L		U	10								
SW093	SW	REAL	SW09390003	16-MAR-90	N	TRG	DMETCLPTAL	SODIUM	38100 00	UG/L			5000								
SW093	SW	REAL	SW09390003	16-MAR-90	N	TRG	DMETCLPTAL	THALLIUM	3.00	UG/L		UNW	10								
SW093	SW	REAL	SW09390003	16-MAR-90	N	TRG	DMETCLPTAL	VANADIUM	6 00	UG/L		U	50								
SW093	SW	REAL	SW09390003	16-MAR-90	N	TRG	DMETCLPTAL	ZINC	30.10	UG/L			20								
SW093	SW	REAL	SW09390003	16-MAR-90	N	TRG	DMETNOCLP	CESIUM	50.00	UG/L		U	1000								
SW093	SW	REAL	SW09390003	16-MAR-90	N	TRG	DMETNOCLP	LITHIUM	10 00	UG/L		U	100								
SW093	SW	REAL	SW09390003	16-MAR-90	N	TRG	DMETNOCLP	MOLYBDENUM	35.00	UG/L		U	200								
SW093	SW	REAL	SW09390003	16-MAR-90	N	TRG	DMETNOCLP	STRONTIUM	279 00	UG/L			200								
SW093	SW	REAL	SW09390003	16-MAR-90	N	TRG	DMETNOCLP	TIN	25.00	UG/L		U	200								
SW093	SW	REAL	SW09390003	16-MAR-90	N	TRG	SMETCLPTCL	ALUMINUM	1700 00	UG/L			200								
SW093	SW	REAL	SW09390003	16-MAR-90	N	TRG	SMETCLPTCL	ANTIMONY	26 00	UG/L		U	60								
SW093	SW	REAL	SW09390003	16-MAR-90	N	TRG	SMETCLPTCL	ARSENIC	2.20	UG/L		B	10								
SW093	SW	REAL	SW09390003	16-MAR-90	N	TRG	SMETCLPTCL	BARIUM	93 30	UG/L		B	200								
SW093	SW	REAL	SW09390003	16-MAR-90	N	TRG	SMETCLPTCL	BERYLLIUM	1 00	UG/L		U	5								
SW093	SW	REAL	SW09390003	16-MAR-90	N	TRG	SMETCLPTCL	CADMIUM	2.00	UG/L		U	5								
SW093	SW	REAL	SW09390003	16-MAR-90	N	TRG	SMETCLPTCL	CALCIUM	49600 00	UG/L			5000								
SW093	SW	REAL	SW09390003	16-MAR-90	N	TRG	SMETCLPTCL	CHROMIUM	5.00	UG/L		U	10								
SW093	SW	REAL	SW09390003	16-MAR-90	N	TRG	SMETCLPTCL	COBALT	4.00	UG/L		U	50								
SW093	SW	REAL	SW09390003	16-MAR-90	N	TRG	SMETCLPTCL	COPPER	6.50	UG/L		B	25								
SW093	SW	REAL	SW09390003	16-MAR-90	N	TRG	SMETCLPTCL	CYANIDE	10.0	UG/L		U	10								
SW093	SW	REAL	SW09390003	16-MAR-90	N	TRG	SMETCLPTCL	IRON	1640 00	UG/L			100								
SW093	SW	REAL	SW09390003	16-MAR-90	N	TRG	SMETCLPTCL	LEAD	2.10	UG/L		B	5								
SW093	SW	REAL	SW09390003	16-MAR-90	N	TRG	SMETCLPTCL	MAGNESIUM	9980 00	UG/L			5000								
SW093	SW	REAL	SW09390003	16-MAR-90	N	TRG	SMETCLPTCL	MANGANESE	94 80	UG/L			15								
SW093	SW	REAL	SW09390003	16-MAR-90	N	TRG	SMETCLPTCL	MERCURY	0.20	UG/L		U	0 2								
SW093	SW	REAL	SW09390003	16-MAR-90	N	TRG	SMETCLPTCL	NICKEL	6.70	UG/L		B	40								
SW093	SW	REAL	SW09390003	16-MAR-90	N	TRG	SMETCLPTCL	POTASSIUM	4330.00	UG/L		B	5000								
SW093	SW	REAL	SW09390003	16-MAR-90	N	TRG	SMETCLPTCL	SELENIUM	3.00	UG/L		UN*S	5								
SW093	SW	REAL	SW09390003	16-MAR-90	N	TRG	SMETCLPTCL	SILVER	6.00	UG/L		U	10								
SW093	SW	REAL	SW09390003	16-MAR-90	N	TRG	SMETCLPTCL	SODIUM	37400 00	UG/L			5000								
SW093	SW	REAL	SW09390003	16-MAR-90	N	TRG	SMETCLPTCL	THALLIUM	3 00	UG/L		UNW	10								
SW093	SW	REAL	SW09390003	16-MAR-90	N	TRG	SMETCLPTCL	VANADIUM	6 00	UG/L		U	50								
SW093	SW	REAL	SW09390003	16-MAR-90	N	TRG	SMETCLPTCL	ZINC	91 20	UG/L			20								
SW093	SW	REAL	SW09390003	16-MAR-90	N	TRG	SMETNOCLP	CESIUM	50 00	UG/L		B	1000								
SW093	SW	REAL	SW09390003	16-MAR-90	N	TRG	SMETNOCLP	LITHIUM	11.30	UG/L		B	100								
SW093	SW	REAL	SW09390003	16-MAR-90	N	TRG	SMETNOCLP	MOLYBDENUM	35.00	UG/L		U	200								
SW093	SW	REAL	SW09390003	16-MAR-90	N	TRG	SMETNOCLP	STRONTIUM	280.00	UG/L			200								
SW093	SW	REAL	SW09390003	16-MAR-90	N	TRG	SMETNOCLP	TIN	25.00	UG/L		U	200								
SW093	SW	REAL	SW093W052990A	29-MAY-90	N	TRG	DMETCLPTAL	ALUMINUM	200	UG/L		U	200								
SW093	SW	REAL	SW093W052990A	29-MAY-90	N	TRG	DMETCLPTAL	ALUMINUM	457	UG/L			200								
SW093	SW	REAL	SW093W052990A	29-MAY-90	N	TRG	DMETCLPTAL	ANTIMONY	60.0	UG/L		U	60 0								
SW093	SW	REAL	SW093W052990A	29-MAY-90	N	TRG	DMETCLPTAL	ARSENIC	10 0	UG/L		U	10.0								
SW093	SW	REAL	SW093W052990A	29-MAY-90	N	TRG	DMETCLPTAL	BARIUM	200	UG/L		U	200								
SW093	SW	REAL	SW093W052990A	29-MAY-90	N	TRG	DMETCLPTAL	BERYLLIUM	5.0	UG/L		U	5.0								
SW093	SW	REAL	SW093W052990A	29-MAY-90	N	TRG	DMETCLPTAL	CADMIUM	5.0	UG/L		U	5.0								
SW093	SW	REAL	SW093W052990A	29-MAY-90	N	TRG	DMETCLPTAL	CALCIUM	76400	UG/L			5000								
SW093	SW	REAL	SW093W052990A	29-MAY-90	N	TRG	DMETCLPTAL	CALCIUM	77200	UG/L			5000								
SW093	SW	REAL	SW093W052990A	29-MAY-90	N	TRG	DMETCLPTAL	CESIUM	1000	UG/L		U	1000								
SW093	SW	REAL	SW093W052990A	29-MAY-90	N	TRG	DMETCLPTAL	CHROMIUM	10.0	UG/L		U	10 0								
SW093	SW	REAL	SW093W052990A	29-MAY-90	N	TRG	DMETCLPTAL	COBALT	50 0	UG/L		U	50.0								
SW093	SW	REAL	SW093W052990A	29-MAY-90	N	TRG	DMETCLPTAL	COPPER	25.0	UG/L		U	25.0								
SW093	SW	REAL	SW093W052990A	29-MAY-90	N	TRG	DMETCLPTAL	CYANIDE	10	UG/L			10								
SW093	SW	REAL	SW093W052990A	29-MAY-90	N	TRG	DMETCLPTAL	IRON	100	UG/L		U	100								

Location	ST	QC	Sample Number	Smpl Date	D	ID	Group	Chemical	Result	Unit	Error	Qual	D LMT	VA	RN1	RN2	RN3	RN4	VResult	VQual	VDET
SW093	SW	REAL	SW093W052990A	29-MAY-90	N	TRG	DMETCLPTAL	IRON	750	UG/L			100								
SW093	SW	REAL	SW093W052990A	29-MAY-90	N	TRG	DMETCLPTAL	LEAD	3 0	UG/L		U	3 0								
SW093	SW	REAL	SW093W052990A	29-MAY-90	N	TRG	DMETCLPTAL	LITHIUM	100	UG/L		U	100								
SW093	SW	REAL	SW093W052990A	29-MAY-90	N	TRG	DMETCLPTAL	MAGNESIUM	17900	UG/L			5000								
SW093	SW	REAL	SW093W052990A	29-MAY-90	N	TRG	DMETCLPTAL	MAGNESIUM	18000	UG/L			5000								
SW093	SW	REAL	SW093W052990A	29-MAY-90	N	TRG	DMETCLPTAL	MANGANESE	195	UG/L			15 0								
SW093	SW	REAL	SW093W052990A	29-MAY-90	N	TRG	DMETCLPTAL	MANGANESE	201	UG/L			15 0								
SW093	SW	REAL	SW093W052990A	29-MAY-90	N	TRG	DMETCLPTAL	MERCURY	0 20	UG/L		U	0 20								
SW093	SW	REAL	SW093W052990A	29-MAY-90	N	TRG	DMETCLPTAL	MOLYBDENUM	100	UG/L		U	100								
SW093	SW	REAL	SW093W052990A	29-MAY-90	N	TRG	DMETCLPTAL	NICKEL	40 0	UG/L		U	40 0								
SW093	SW	REAL	SW093W052990A	29-MAY-90	N	TRG	DMETCLPTAL	POTASSIUM	5000	UG/L		U	5000								
SW093	SW	REAL	SW093W052990A	29-MAY-90	N	TRG	DMETCLPTAL	SELENIUM	15 5	UG/L			5.0								
SW093	SW	REAL	SW093W052990A	29-MAY-90	N	TRG	DMETCLPTAL	SELENIUM	18 4	UG/L			5 0								
SW093	SW	REAL	SW093W052990A	29-MAY-90	N	TRG	DMETCLPTAL	SILVER	10 0	UG/L		U	10 0								
SW093	SW	REAL	SW093W052990A	29-MAY-90	N	TRG	DMETCLPTAL	SODIUM	41500	UG/L			5000								
SW093	SW	REAL	SW093W052990A	29-MAY-90	N	TRG	DMETCLPTAL	SODIUM	41700	UG/L			5000								
SW093	SW	REAL	SW093W052990A	29-MAY-90	N	TRG	DMETCLPTAL	STRONTIUM	1000	UG/L		U	1000								
SW093	SW	REAL	SW093W052990A	29-MAY-90	N	TRG	DMETCLPTAL	THALLIUM	10 0	UG/L		U	10 0								
SW093	SW	REAL	SW093W052990A	29-MAY-90	N	TRG	DMETCLPTAL	TIN	100	UG/L		U	100								
SW093	SW	REAL	SW093W052990A	29-MAY-90	N	TRG	DMETCLPTAL	VANADIUM	50 0	UG/L		U	50 0								
SW093	SW	REAL	SW093W052990A	29-MAY-90	N	TRG	DMETCLPTAL	ZINC	20 0	UG/L		U	20 0								
SW093	SW	REAL	SW093W052990A	29-MAY-90	N	TRG	DMETCLPTAL	ZINC	297	UG/L			20 0								
SW093	SW	REAL	SW093W052990A	29-MAY-90	N	TRG	DMETNOCLP	CESIUM	1000	UG/L		U	1000								
SW093	SW	REAL	SW093W052990A	29-MAY-90	N	TRG	DMETNOCLP	LITHIUM	100	UG/L		U	100								
SW093	SW	REAL	SW093W052990A	29-MAY-90	N	TRG	DMETNOCLP	MOLYBDENUM	100	UG/L		U	100								
SW093	SW	REAL	SW093W052990A	29-MAY-90	N	TRG	DMETNOCLP	STRONTIUM	1000	UG/L		U	1000								
SW093	SW	REAL	SW093W052990A	29-MAY-90	N	TRG	DMETNOCLP	TIN	100	UG/L		U	100								
SW093	SW	REAL	SW70003WC	23-JUL-90	N	DL	SMETCLPTCL	ALUMINUM	45600	UG/L		N									
SW093	SW	REAL	SW70003WC	23-JUL-90	N	DL	SMETCLPTCL	ANTIMONY	37 0	UG/L		U									
SW093	SW	REAL	SW70003WC	23-JUL-90	N	DL	SMETCLPTCL	ARSENIC	3.8	UG/L		B									
SW093	SW	REAL	SW70003WC	23-JUL-90	N	DL	SMETCLPTCL	BARIUM	471	UG/L											
SW093	SW	REAL	SW70003WC	23-JUL-90	N	DL	SMETCLPTCL	BERYLLIUM	3.8	UG/L		B									
SW093	SW	REAL	SW70003WC	23-JUL-90	N	DL	SMETCLPTCL	CADMIUM	4 0	UG/L		U									
SW093	SW	REAL	SW70003WC	23-JUL-90	N	DL	SMETCLPTCL	CALCIUM	43700	UG/L											
SW093	SW	REAL	SW70003WC	23-JUL-90	N	DL	SMETCLPTCL	CHROMIUM	55 9	UG/L											
SW093	SW	REAL	SW70003WC	23-JUL-90	N	DL	SMETCLPTCL	COBALT	25.3	UG/L		B									
SW093	SW	REAL	SW70003WC	23-JUL-90	N	DL	SMETCLPTCL	COPPER	86.1	UG/L											
SW093	SW	REAL	SW70003WC	23-JUL-90	N	DL	SMETCLPTCL	IRON	55300	UG/L											
SW093	SW	REAL	SW70003WC	23-JUL-90	N	DL	SMETCLPTCL	LEAD	74 7	UG/L											
SW093	SW	REAL	SW70003WC	23-JUL-90	N	DL	SMETCLPTCL	MAGNESIUM	16900	UG/L											
SW093	SW	REAL	SW70003WC	23-JUL-90	N	DL	SMETCLPTCL	MANGANESE	988	UG/L											
SW093	SW	REAL	SW70003WC	23-JUL-90	N	DL	SMETCLPTCL	MERCURY	0 4	UG/L		U									
SW093	SW	REAL	SW70003WC	23-JUL-90	N	DL	SMETCLPTCL	NICKEL	61 9	UG/L											
SW093	SW	REAL	SW70003WC	23-JUL-90	N	DL	SMETCLPTCL	POTASSIUM	9540	UG/L											
SW093	SW	REAL	SW70003WC	23-JUL-90	N	DL	SMETCLPTCL	SELENIUM	1.0	UG/L		UW									
SW093	SW	REAL	SW70003WC	23-JUL-90	N	DL	SMETCLPTCL	SILVER	4 2	UG/L		BN									
SW093	SW	REAL	SW70003WC	23-JUL-90	N	DL	SMETCLPTCL	SODIUM	12200	UG/L											
SW093	SW	REAL	SW70003WC	23-JUL-90	N	DL	SMETCLPTCL	THALLIUM	1 0	UG/L		UN									
SW093	SW	REAL	SW70003WC	23-JUL-90	N	DL	SMETCLPTCL	VANADIUM	125	UG/L											
SW093	SW	REAL	SW70003WC	23-JUL-90	N	DL	SMETCLPTCL	ZINC	608	UG/L											
SW093	SW	REAL	SW70003WC	23-JUL-90	N	TRG	SMETCLPTCL	ALUMINUM	45600	UG/L		N									
SW093	SW	REAL	SW70003WC	23-JUL-90	N	TRG	SMETCLPTCL	ANTIMONY	37.0	UG/L		U									
SW093	SW	REAL	SW70003WC	23-JUL-90	N	TRG	SMETCLPTCL	ARSENIC	3 8	UG/L		B									
SW093	SW	REAL	SW70003WC	23-JUL-90	N	TRG	SMETCLPTCL	BARIUM	471	UG/L											
SW093	SW	REAL	SW70003WC	23-JUL-90	N	TRG	SMETCLPTCL	BERYLLIUM	3.8	UG/L		B									
SW093	SW	REAL	SW70003WC	23-JUL-90	N	TRG	SMETCLPTCL	CADMIUM	4 0	UG/L		U									
SW093	SW	REAL	SW70003WC	23-JUL-90	N	TRG	SMETCLPTCL	CALCIUM	43700	UG/L											
SW093	SW	REAL	SW70003WC	23-JUL-90	N	TRG	SMETCLPTCL	CHROMIUM	55.9	UG/L											
SW093	SW	REAL	SW70003WC	23-JUL-90	N	TRG	SMETCLPTCL	COBALT	25 3	UG/L		B									
SW093	SW	REAL	SW70003WC	23-JUL-90	N	TRG	SMETCLPTCL	COPPER	86.1	UG/L											
SW093	SW	REAL	SW70003WC	23-JUL-90	N	TRG	SMETCLPTCL	IRON	55300	UG/L											
SW093	SW	REAL	SW70003WC	23-JUL-90	N	TRG	SMETCLPTCL	LEAD	74.7	UG/L											
SW093	SW	REAL	SW70003WC	23-JUL-90	N	TRG	SMETCLPTCL	MAGNESIUM	16900	UG/L											

Location	ST	QC	Sample Number	Smpl Date	D	ID	Group	Chemical	Result	Unit	Error	Qual	D	LMT	VA	RN1	RN2	RN3	RN4	VResult	VQual	VDET
SW093	SW	REAL	SW70003WC	23-JUL-90	N	TRG	SMETCLPTCL	MANGANESE	988	UG/L												
SW093	SW	REAL	SW70003WC	23-JUL-90	N	TRG	SMETCLPTCL	NICKEL	61 9	UG/L												
SW093	SW	REAL	SW70003WC	23-JUL-90	N	TRG	SMETCLPTCL	POTASSIUM	9540	UG/L												
SW093	SW	REAL	SW70003WC	23-JUL-90	N	TRG	SMETCLPTCL	SELENIUM	1 0	UG/L		UW										
SW093	SW	REAL	SW70003WC	23-JUL-90	N	TRG	SMETCLPTCL	SILVER	4.2	UG/L		BN										
SW093	SW	REAL	SW70003WC	23-JUL-90	N	TRG	SMETCLPTCL	SODIUM	12200	UG/L												
SW093	SW	REAL	SW70003WC	23-JUL-90	N	TRG	SMETCLPTCL	THALLIUM	1 0	UG/L		UN										
SW093	SW	REAL	SW70003WC	23-JUL-90	N	TRG	SMETCLPTCL	VANADIUM	125	UG/L												
SW093	SW	REAL	SW70003WC	23-JUL-90	N	TRG	SMETCLPTCL	ZINC	608	UG/L												
SW093	SW	REAL	SW70006WC	24-JUL-90	N	DL	SMETCLPTCL	ALUMINUM	8720	UG/L		N										
SW093	SW	REAL	SW70006WC	24-JUL-90	N	DL	SMETCLPTCL	ANTIMONY	37 0	UG/L		U										
SW093	SW	REAL	SW70006WC	24-JUL-90	N	DL	SMETCLPTCL	ARSENIC	2 7	UG/L		B										
SW093	SW	REAL	SW70006WC	24-JUL-90	N	DL	SMETCLPTCL	BARIUM	137	UG/L		B										
SW093	SW	REAL	SW70006WC	24-JUL-90	N	DL	SMETCLPTCL	BERYLLIUM	1 0	UG/L		U										
SW093	SW	REAL	SW70006WC	24-JUL-90	N	DL	SMETCLPTCL	CADMIUM	5 8	UG/L												
SW093	SW	REAL	SW70006WC	24-JUL-90	N	DL	SMETCLPTCL	CALCIUM	54600	UG/L												
SW093	SW	REAL	SW70006WC	24-JUL-90	N	DL	SMETCLPTCL	CHROMIUM	10 9	UG/L												
SW093	SW	REAL	SW70006WC	24-JUL-90	N	DL	SMETCLPTCL	COBALT	8 0	UG/L		U										
SW093	SW	REAL	SW70006WC	24-JUL-90	N	DL	SMETCLPTCL	COPPER	17.5	UG/L		B										
SW093	SW	REAL	SW70006WC	24-JUL-90	N	DL	SMETCLPTCL	IRON	6250	UG/L												
SW093	SW	REAL	SW70006WC	24-JUL-90	N	DL	SMETCLPTCL	LEAD	10 5	UG/L		S										
SW093	SW	REAL	SW70006WC	24-JUL-90	N	DL	SMETCLPTCL	MAGNESIUM	10300	UG/L												
SW093	SW	REAL	SW70006WC	24-JUL-90	N	DL	SMETCLPTCL	MANGANESE	243	UG/L												
SW093	SW	REAL	SW70006WC	24-JUL-90	N	DL	SMETCLPTCL	MERCURY	0 4	UG/L		U										
SW093	SW	REAL	SW70006WC	24-JUL-90	N	DL	SMETCLPTCL	NICKEL	23 0	UG/L		U										
SW093	SW	REAL	SW70006WC	24-JUL-90	N	DL	SMETCLPTCL	POTASSIUM	4380	UG/L		B										
SW093	SW	REAL	SW70006WC	24-JUL-90	N	DL	SMETCLPTCL	SELENIUM	1.0	UG/L		UW										
SW093	SW	REAL	SW70006WC	24-JUL-90	N	DL	SMETCLPTCL	SILVER	3.7	UG/L		BN										
SW093	SW	REAL	SW70006WC	24-JUL-90	N	DL	SMETCLPTCL	SODIUM	25600	UG/L												
SW093	SW	REAL	SW70006WC	24-JUL-90	N	DL	SMETCLPTCL	THALLIUM	1 0	UG/L		UN										
SW093	SW	REAL	SW70006WC	24-JUL-90	N	DL	SMETCLPTCL	VANADIUM	19 8	UG/L		B										
SW093	SW	REAL	SW70006WC	24-JUL-90	N	DL	SMETCLPTCL	ZINC	162	UG/L												
SW093	SW	REAL	SW70006WC	24-JUL-90	N	TRG	SMETCLPTCL	ALUMINUM	6720	UG/L		N										
SW093	SW	REAL	SW70006WC	24-JUL-90	N	TRG	SMETCLPTCL	ANTIMONY	37.0	UG/L		U										
SW093	SW	REAL	SW70006WC	24-JUL-90	N	TRG	SMETCLPTCL	ARSENIC	2.7	UG/L		B										
SW093	SW	REAL	SW70006WC	24-JUL-90	N	TRG	SMETCLPTCL	BARIUM	137	UG/L		B										
SW093	SW	REAL	SW70006WC	24-JUL-90	N	TRG	SMETCLPTCL	BERYLLIUM	1.0	UG/L		U										
SW093	SW	REAL	SW70006WC	24-JUL-90	N	TRG	SMETCLPTCL	CADMIUM	5.8	UG/L												
SW093	SW	REAL	SW70006WC	24-JUL-90	N	TRG	SMETCLPTCL	CALCIUM	54600	UG/L												
SW093	SW	REAL	SW70006WC	24-JUL-90	N	TRG	SMETCLPTCL	CHROMIUM	10.9	UG/L												
SW093	SW	REAL	SW70006WC	24-JUL-90	N	TRG	SMETCLPTCL	COBALT	8.0	UG/L		U										
SW093	SW	REAL	SW70006WC	24-JUL-90	N	TRG	SMETCLPTCL	COPPER	17.5	UG/L		B										
SW093	SW	REAL	SW70006WC	24-JUL-90	N	TRG	SMETCLPTCL	IRON	6250	UG/L												
SW093	SW	REAL	SW70006WC	24-JUL-90	N	TRG	SMETCLPTCL	LEAD	10.5	UG/L		S										
SW093	SW	REAL	SW70006WC	24-JUL-90	N	TRG	SMETCLPTCL	MAGNESIUM	10300	UG/L												
SW093	SW	REAL	SW70006WC	24-JUL-90	N	TRG	SMETCLPTCL	MANGANESE	243	UG/L												
SW093	SW	REAL	SW70006WC	24-JUL-90	N	TRG	SMETCLPTCL	NICKEL	23 0	UG/L		U										
SW093	SW	REAL	SW70006WC	24-JUL-90	N	TRG	SMETCLPTCL	POTASSIUM	4380	UG/L		B										
SW093	SW	REAL	SW70006WC	24-JUL-90	N	TRG	SMETCLPTCL	SELENIUM	1.0	UG/L		UW										
SW093	SW	REAL	SW70006WC	24-JUL-90	N	TRG	SMETCLPTCL	SILVER	3 7	UG/L		BN										
SW093	SW	REAL	SW70006WC	24-JUL-90	N	TRG	SMETCLPTCL	SODIUM	25600	UG/L												
SW093	SW	REAL	SW70006WC	24-JUL-90	N	TRG	SMETCLPTCL	THALLIUM	1.0	UG/L		UN										
SW093	SW	REAL	SW70006WC	24-JUL-90	N	TRG	SMETCLPTCL	VANADIUM	19.8	UG/L		B										
SW093	SW	REAL	SW70006WC	24-JUL-90	N	TRG	SMETCLPTCL	ZINC	162	UG/L												
SW093	SW	REAL	SW70007WC	31-JUL-90	N																	
SW093	SW	REAL	SW70012WC	06-SEP-90	N	TRG	SMETCLPTCL	ALUMINUM	28800	UG/L												
SW093	SW	REAL	SW70012WC	06-SEP-90	N	TRG	SMETCLPTCL	ANTIMONY	35.0	UG/L		U										
SW093	SW	REAL	SW70012WC	06-SEP-90	N	TRG	SMETCLPTCL	ARSENIC	4.5	UG/L		BN										
SW093	SW	REAL	SW70012WC	06-SEP-90	N	TRG	SMETCLPTCL	BARIUM	336	UG/L												
SW093	SW	REAL	SW70012WC	06-SEP-90	N	TRG	SMETCLPTCL	BERYLLIUM	2.7	UG/L		B										
SW093	SW	REAL	SW70012WC	06-SEP-90	N	TRG	SMETCLPTCL	CADMIUM	3.3	UG/L		B										
SW093	SW	REAL	SW70012WC	06-SEP-90	N	TRG	SMETCLPTCL	CALCIUM	34400	UG/L												
SW093	SW	REAL	SW70012WC	06-SEP-90	N	TRG	SMETCLPTCL	CHROMIUM	36.7	UG/L												

Location	ST	QC	Sample Number	Smpl Date	D	ID	Group	Chemical	Result	Unit	Error	Qual	D LMT	VA	RN1	RN2	RN3	RN4	VResult	VQual	VDET
SW093	SW	REAL	SW70012WC	06-SEP-90	N	TRG	SMETCLPTCL	COBALT	19 3	UG/L		B									
SW093	SW	REAL	SW70012WC	06-SEP-90	N	TRG	SMETCLPTCL	COPPER	67 5	UG/L											
SW093	SW	REAL	SW70012WC	06-SEP-90	N	TRG	SMETCLPTCL	IRON	39500	UG/L											
SW093	SW	REAL	SW70012WC	06-SEP-90	N	TRG	SMETCLPTCL	LEAD	57 4	UG/L		SN									
SW093	SW	REAL	SW70012WC	06-SEP-90	N	TRG	SMETCLPTCL	MAGNESIUM	11200	UG/L											
SW093	SW	REAL	SW70012WC	06-SEP-90	N	TRG	SMETCLPTCL	MANGANESE	701	UG/L											
SW093	SW	REAL	SW70012WC	06-SEP-90	N	TRG	SMETCLPTCL	MERCURY	0 3	UG/L											
SW093	SW	REAL	SW70012WC	06-SEP-90	N	TRG	SMETCLPTCL	NICKEL	38 4	UG/L		B									
SW093	SW	REAL	SW70012WC	06-SEP-90	N	TRG	SMETCLPTCL	POTASSIUM	8200	UG/L											
SW093	SW	REAL	SW70012WC	06-SEP-90	N	TRG	SMETCLPTCL	SELENIUM	10 0	UG/L		UWN									
SW093	SW	REAL	SW70012WC	06-SEP-90	N	TRG	SMETCLPTCL	SILVER	4.0	UG/L		U									
SW093	SW	REAL	SW70012WC	06-SEP-90	N	TRG	SMETCLPTCL	SODIUM	8800	UG/L											
SW093	SW	REAL	SW70012WC	06-SEP-90	N	TRG	SMETCLPTCL	THALLIUM	1 0	UG/L		UWN									
SW093	SW	REAL	SW70012WC	06-SEP-90	N	TRG	SMETCLPTCL	VANADIUM	89 4	UG/L											
SW093	SW	REAL	SW70012WC	06-SEP-90	N	TRG	SMETCLPTCL	ZINC	516	UG/L											
SW093	SW	REAL	SW70014WC	06-SEP-90	N																
SW093	SW	REAL	SW70017WC	19-SEP-90	N																
SW093	SW	REAL	SW70022WC	24-OCT-90	N	TRG	SMETCLPTCL	ALUMINUM	7430	UG/L											
SW093	SW	REAL	SW70022WC	24-OCT-90	N	TRG	SMETCLPTCL	ANTIMONY	35.0	UG/L		U									
SW093	SW	REAL	SW70022WC	24-OCT-90	N	TRG	SMETCLPTCL	ARSENIC	2 1	UG/L		B									
SW093	SW	REAL	SW70022WC	24-OCT-90	N	TRG	SMETCLPTCL	BARIUM	83 1	UG/L		B									
SW093	SW	REAL	SW70022WC	24-OCT-90	N	TRG	SMETCLPTCL	BERYLLIUM	1 0	UG/L		U									
SW093	SW	REAL	SW70022WC	24-OCT-90	N	TRG	SMETCLPTCL	CADMIUM	3.6	UG/L		B									
SW093	SW	REAL	SW70022WC	24-OCT-90	N	TRG	SMETCLPTCL	CALCIUM	27000	UG/L											
SW093	SW	REAL	SW70022WC	24-OCT-90	N	TRG	SMETCLPTCL	CHROMIUM	11 1	UG/L											
SW093	SW	REAL	SW70022WC	24-OCT-90	N	TRG	SMETCLPTCL	COBALT	6 0	UG/L		U									
SW093	SW	REAL	SW70022WC	24-OCT-90	N	TRG	SMETCLPTCL	COPPER	11 6	UG/L		B									
SW093	SW	REAL	SW70022WC	24-OCT-90	N	TRG	SMETCLPTCL	IRON	4860	UG/L											
SW093	SW	REAL	SW70022WC	24-OCT-90	N	TRG	SMETCLPTCL	LEAD	4 4	UG/L		S									
SW093	SW	REAL	SW70022WC	24-OCT-90	N	TRG	SMETCLPTCL	LITHIUM	0 5	MG/L		U	0 5								
SW093	SW	REAL	SW70022WC	24-OCT-90	N	TRG	SMETCLPTCL	MAGNESIUM	5770	UG/L											
SW093	SW	REAL	SW70022WC	24-OCT-90	N	TRG	SMETCLPTCL	MANGANESE	184	UG/L											
SW093	SW	REAL	SW70022WC	24-OCT-90	N	TRG	SMETCLPTCL	MERCURY	0.2	UG/L		U									
SW093	SW	REAL	SW70022WC	24-OCT-90	N	TRG	SMETCLPTCL	MOLYBDENUM	1	MG/L		U	1								
SW093	SW	REAL	SW70022WC	24-OCT-90	N	TRG	SMETCLPTCL	NICKEL	12.0	UG/L		U									
SW093	SW	REAL	SW70022WC	24-OCT-90	N	TRG	SMETCLPTCL	POTASSIUM	6530	UG/L											
SW093	SW	REAL	SW70022WC	24-OCT-90	N	TRG	SMETCLPTCL	SELENIUM	2.0	UG/L		UWN									
SW093	SW	REAL	SW70022WC	24-OCT-90	N	TRG	SMETCLPTCL	SILVER	4 0	UG/L		U									
SW093	SW	REAL	SW70022WC	24-OCT-90	N	TRG	SMETCLPTCL	SODIUM	22000	UG/L											
SW093	SW	REAL	SW70022WC	24-OCT-90	N	TRG	SMETCLPTCL	STRONTIUM	0.5	MG/L		U	0 5								
SW093	SW	REAL	SW70022WC	24-OCT-90	N	TRG	SMETCLPTCL	THALLIUM	1.0	UG/L		UWN									
SW093	SW	REAL	SW70022WC	24-OCT-90	N	TRG	SMETCLPTCL	TIN	2	MG/L		U	2								
SW093	SW	REAL	SW70022WC	24-OCT-90	N	TRG	SMETCLPTCL	VANADIUM	18 6	UG/L		B									
SW093	SW	REAL	SW70022WC	24-OCT-90	N	TRG	SMETCLPTCL	ZINC	89 1	UG/L											
SW093	SW	REAL	SW70022WC	24-OCT-90	N	TRG	SMETMOCLP	CESIUM	0.5	MG/L		U	0 5								
SW093	SW	REAL	SW70041WC	19-NOV-90	N																
SW093	SW		SW093W043090	30-APR-90	N																
SW118	SW	REAL	SW00458WC	29-OCT-90	N	TRG	DMETCLPTAL	ALUMINUM	49.30	UG/L		B	200 0								
SW118	SW	REAL	SW00458WC	29-OCT-90	N	TRG	DMETCLPTAL	ANTIMONY	24 30	UG/L		B	60 00								
SW118	SW	REAL	SW00458WC	29-OCT-90	N	TRG	DMETCLPTAL	ARSENIC	2.00	UG/L		U	10 00								
SW118	SW	REAL	SW00458WC	29-OCT-90	N	TRG	DMETCLPTAL	BARIUM	105.00	UG/L		BE	200 0								
SW118	SW	REAL	SW00458WC	29-OCT-90	N	TRG	DMETCLPTAL	BERYLLIUM	1.00	UG/L		U	5 000								
SW118	SW	REAL	SW00458WC	29-OCT-90	N	TRG	DMETCLPTAL	CADMIUM	2.60	UG/L		B	5 000								
SW118	SW	REAL	SW00458WC	29-OCT-90	N	TRG	DMETCLPTAL	CALCIUM	65800 00	UG/L		E	5000								
SW118	SW	REAL	SW00458WC	29-OCT-90	N	TRG	DMETCLPTAL	CHROMIUM	18 50	UG/L			10.00								
SW118	SW	REAL	SW00458WC	29-OCT-90	N	TRG	DMETCLPTAL	COBALT	5.90	UG/L		B	50 00								
SW118	SW	REAL	SW00458WC	29-OCT-90	N	TRG	DMETCLPTAL	COPPER	13.80	UG/L		B	25.00								
SW118	SW	REAL	SW00458WC	29-OCT-90	N	TRG	DMETCLPTAL	IRON	63.20	UG/L		B*	100 0								
SW118	SW	REAL	SW00458WC	29-OCT-90	N	TRG	DMETCLPTAL	LEAD	1.00	UG/L		U	3.000								
SW118	SW	REAL	SW00458WC	29-OCT-90	N	TRG	DMETCLPTAL	MAGNESIUM	16300.00	UG/L		E	5000.								
SW118	SW	REAL	SW00458WC	29-OCT-90	N	TRG	DMETCLPTAL	MANGANESE	16.20	UG/L		E	15 00								
SW118	SW	REAL	SW00458WC	29-OCT-90	N	TRG	DMETCLPTAL	MERCURY	0 20	UG/L		U	0.200								
SW118	SW	REAL	SW00458WC	29-OCT-90	N	TRG	DMETCLPTAL	NICKEL	9 20	UG/L		B	40 00								

Location	ST	QC	Sample Number	Smpl Date	D	ID	Group	Chemical	Result	Unit	Error	Qual	D LMT	VA	RN1	RN2	RN3	RN4	VResult	VQual	VDET
SW118	SW	REAL	SW00458WC	29-OCT-90	N	TRG	DMETCLPTAL	POTASSIUM	1880 00	UG/L		B	5000								
SW118	SW	REAL	SW00458WC	29-OCT-90	N	TRG	DMETCLPTAL	SELENIUM	2.00	UG/L		U	5 000								
SW118	SW	REAL	SW00458WC	29-OCT-90	N	TRG	DMETCLPTAL	SILVER	6 50	UG/L		B	10 00								
SW118	SW	REAL	SW00458WC	29-OCT-90	N	TRG	DMETCLPTAL	SODIUM	31000 00	UG/L		E	5000								
SW118	SW	REAL	SW00458WC	29-OCT-90	N	TRG	DMETCLPTAL	THALLIUM	2.00	UG/L		UWN	10.00								
SW118	SW	REAL	SW00458WC	29-OCT-90	N	TRG	DMETCLPTAL	VANADIUM	8.20	UG/L		B	50.00								
SW118	SW	REAL	SW00458WC	29-OCT-90	N	TRG	DMETCLPTAL	ZINC	9 10	UG/L		B	20.00								
SW118	SW	REAL	SW00458WC	29-OCT-90	N	TRG	DMETNOCLP	CESIUM	300 00	UG/L		B	1000								
SW118	SW	REAL	SW00458WC	29-OCT-90	N	TRG	DMETNOCLP	LITHIUM	20.00	UG/L		B	100.0								
SW118	SW	REAL	SW00458WC	29-OCT-90	N	TRG	DMETNOCLP	MOLYBDENUM	8 60	UG/L		B	200 0								
SW118	SW	REAL	SW00458WC	29-OCT-90	N	TRG	DMETNOCLP	STRONTIUM	410 00	UG/L		E	200.0								
SW118	SW	REAL	SW00458WC	29-OCT-90	N	TRG	DMETNOCLP	TIN	23.10	UG/L		B	200 0								
SW118	SW	REAL	SW00458WC	29-OCT-90	N	TRG	SMETCLPTCL	ALUMINUM	378 00	UG/L		N*	200 0								
SW118	SW	REAL	SW00458WC	29-OCT-90	N	TRG	SMETCLPTCL	ANTIMONY	13.20	UG/L		B	60.00								
SW118	SW	REAL	SW00458WC	29-OCT-90	N	TRG	SMETCLPTCL	ARSENIC	2 00	UG/L		U	10 00								
SW118	SW	REAL	SW00458WC	29-OCT-90	N	TRG	SMETCLPTCL	BARIUM	110 00	UG/L		B	200 0								
SW118	SW	REAL	SW00458WC	29-OCT-90	N	TRG	SMETCLPTCL	BERYLLIUM	1 00	UG/L		U	5 000								
SW118	SW	REAL	SW00458WC	29-OCT-90	N	TRG	SMETCLPTCL	CADMIUM	2.00	UG/L		U	5 000								
SW118	SW	REAL	SW00458WC	29-OCT-90	N	TRG	SMETCLPTCL	CALCIUM	60900 00	UG/L			5000								
SW118	SW	REAL	SW00458WC	29-OCT-90	N	TRG	SMETCLPTCL	CHROMIUM	9.90	UG/L		B	10.00								
SW118	SW	REAL	SW00458WC	29-OCT-90	N	TRG	SMETCLPTCL	COBALT	3 00	UG/L		U	50 00								
SW118	SW	REAL	SW00458WC	29-OCT-90	N	TRG	SMETCLPTCL	COPPER	7.20	UG/L		B	25 00								
SW118	SW	REAL	SW00458WC	29-OCT-90	N	TRG	SMETCLPTCL	CYANIDE	1 50	UG/L		U	10 00								
SW118	SW	REAL	SW00458WC	29-OCT-90	N	TRG	SMETCLPTCL	IRON	616.00	UG/L		*	100 0								
SW118	SW	REAL	SW00458WC	29-OCT-90	N	TRG	SMETCLPTCL	LEAD	1 00	UG/L		U	3 000								
SW118	SW	REAL	SW00458WC	29-OCT-90	N	TRG	SMETCLPTCL	MAGNESIUM	16100 00	UG/L			5000								
SW118	SW	REAL	SW00458WC	29-OCT-90	N	TRG	SMETCLPTCL	MANGANESE	32 10	UG/L		N*	15 00								
SW118	SW	REAL	SW00458WC	29-OCT-90	N	TRG	SMETCLPTCL	MERCURY	0 41	UG/L		N	0 200								
SW118	SW	REAL	SW00458WC	29-OCT-90	N	TRG	SMETCLPTCL	NICKEL	4 80	UG/L		B	40.00								
SW118	SW	REAL	SW00458WC	29-OCT-90	N	TRG	SMETCLPTCL	POTASSIUM	2020 00	UG/L		B	5000								
SW118	SW	REAL	SW00458WC	29-OCT-90	N	TRG	SMETCLPTCL	SELENIUM	2.00	UG/L		U	5 000								
SW118	SW	REAL	SW00458WC	29-OCT-90	N	TRG	SMETCLPTCL	SILVER	3 00	UG/L		U	10.00								
SW118	SW	REAL	SW00458WC	29-OCT-90	N	TRG	SMETCLPTCL	SODIUM	34100 00	UG/L			5000								
SW118	SW	REAL	SW00458WC	29-OCT-90	N	TRG	SMETCLPTCL	THALLIUM	2 00	UG/L		UWN	10 00								
SW118	SW	REAL	SW00458WC	29-OCT-90	N	TRG	SMETCLPTCL	VANADIUM	6 10	UG/L		B	50 00								
SW118	SW	REAL	SW00458WC	29-OCT-90	N	TRG	SMETCLPTCL	ZINC	16 10	UG/L		B	20 00								
SW118	SW	REAL	SW00458WC	29-OCT-90	N	TRG	SMETNOCLP	CESIUM	300.00	UG/L		B	1000								
SW118	SW	REAL	SW00458WC	29-OCT-90	N	TRG	SMETNOCLP	LITHIUM	20.00	UG/L		B	100.0								
SW118	SW	REAL	SW00458WC	29-OCT-90	N	TRG	SMETNOCLP	MOLYBDENUM	6.00	UG/L		B	200 0								
SW118	SW	REAL	SW00458WC	29-OCT-90	N	TRG	SMETNOCLP	STRONTIUM	411 00	UG/L			200 0								
SW118	SW	REAL	SW00458WC	29-OCT-90	N	TRG	SMETNOCLP	TIN	20.40	UG/L		B	200.0								
SW118	SW	REAL	SW00559WC	27-NOV-90	N	TRG	DMETCLPTAL	ALUMINUM	10.00	UG/L		U	200 0								
SW118	SW	REAL	SW00559WC	27-NOV-90	N	TRG	DMETCLPTAL	ANTIMONY	7.00	UG/L		U	60.00								
SW118	SW	REAL	SW00559WC	27-NOV-90	N	TRG	DMETCLPTAL	ARSENIC	2 00	UG/L		U	10 00								
SW118	SW	REAL	SW00559WC	27-NOV-90	N	TRG	DMETCLPTAL	BARIUM	85.20	UG/L		B	200 0								
SW118	SW	REAL	SW00559WC	27-NOV-90	N	TRG	DMETCLPTAL	BERYLLIUM	1.00	UG/L		U	5 000								
SW118	SW	REAL	SW00559WC	27-NOV-90	N	TRG	DMETCLPTAL	CADMIUM	2.00	UG/L		U	5 000								
SW118	SW	REAL	SW00559WC	27-NOV-90	N	TRG	DMETCLPTAL	CALCIUM	55700 00	UG/L			5000								
SW118	SW	REAL	SW00559WC	27-NOV-90	N	TRG	DMETCLPTAL	CHROMIUM	5.00	UG/L		U	10.00								
SW118	SW	REAL	SW00559WC	27-NOV-90	N	TRG	DMETCLPTAL	COBALT	3.00	UG/L		U	50.00								
SW118	SW	REAL	SW00559WC	27-NOV-90	N	TRG	DMETCLPTAL	COPPER	2.00	UG/L		U	25.00								
SW118	SW	REAL	SW00559WC	27-NOV-90	N	TRG	DMETCLPTAL	IRON	20.60	UG/L		B	100 0								
SW118	SW	REAL	SW00559WC	27-NOV-90	N	TRG	DMETCLPTAL	LEAD	1.00	UG/L		U	3 000								
SW118	SW	REAL	SW00559WC	27-NOV-90	N	TRG	DMETCLPTAL	MAGNESIUM	14600.00	UG/L			5000								
SW118	SW	REAL	SW00559WC	27-NOV-90	N	TRG	DMETCLPTAL	MANGANESE	10.70	UG/L		BE	15.00								
SW118	SW	REAL	SW00559WC	27-NOV-90	N	TRG	DMETCLPTAL	MERCURY	0.20	UG/L		U	0.200								
SW118	SW	REAL	SW00559WC	27-NOV-90	N	TRG	DMETCLPTAL	NICKEL	4.00	UG/L		U	40.00								
SW118	SW	REAL	SW00559WC	27-NOV-90	N	TRG	DMETCLPTAL	POTASSIUM	1460 00	UG/L		BE	5000								
SW118	SW	REAL	SW00559WC	27-NOV-90	N	TRG	DMETCLPTAL	SELENIUM	1.00	UG/L		BW	5.000								
SW118	SW	REAL	SW00559WC	27-NOV-90	N	TRG	DMETCLPTAL	SILVER	3.00	UG/L		U	10.00								
SW118	SW	REAL	SW00559WC	27-NOV-90	N	TRG	DMETCLPTAL	SODIUM	31800.00	UG/L		E	5000								
SW118	SW	REAL	SW00559WC	27-NOV-90	N	TRG	DMETCLPTAL	THALLIUM	2.00	UG/L		U	10.00								
SW118	SW	REAL	SW00559WC	27-NOV-90	N	TRG	DMETCLPTAL	VANADIUM	2.00	UG/L		U	50.00								

Location	ST	QC	Sample Number	Smpl Date	D	ID	Group	Chemical	Result	Unit	Error	Qual	D LMT	VA	RN1	RN2	RN3	RN4	VResult	VQual	VDET
SW118	SW	REAL	SW00559WC	27-NOV-90	N	TRG	DMETCLPTAL	ZINC	10 10	UG/L		B	20 00								
SW118	SW	REAL	SW00559WC	27-NOV-90	N	TRG	DMETNOCLP	CESIUM	76 00	UG/L		U	1000								
SW118	SW	REAL	SW00559WC	27-NOV-90	N	TRG	DMETNOCLP	LITHIUM	7 40	UG/L		B	100 0								
SW118	SW	REAL	SW00559WC	27-NOV-90	N	TRG	DMETNOCLP	MOLYBDENUM	2 00	UG/L		U	200 0								
SW118	SW	REAL	SW00559WC	27-NOV-90	N	TRG	DMETNOCLP	STRONTIUM	357 00	UG/L		E	200 0								
SW118	SW	REAL	SW00559WC	27-NOV-90	N	TRG	DMETNOCLP	TIN	7.00	UG/L		U	200 0								
SW118	SW	REAL	SW00559WC	27-NOV-90	N	TRG	SMETCLPTCL	ALUMINUM	143 00	UG/L		B	200 0								
SW118	SW	REAL	SW00559WC	27-NOV-90	N	TRG	SMETCLPTCL	ANTIMONY	7 00	UG/L		U	60 00								
SW118	SW	REAL	SW00559WC	27-NOV-90	N	TRG	SMETCLPTCL	ARSENIC	2 00	UG/L		U	10 00								
SW118	SW	REAL	SW00559WC	27-NOV-90	N	TRG	SMETCLPTCL	BARIUM	91 50	UG/L		B	200 0								
SW118	SW	REAL	SW00559WC	27-NOV-90	N	TRG	SMETCLPTCL	BERYLLIUM	1 00	UG/L		U	5.000								
SW118	SW	REAL	SW00559WC	27-NOV-90	N	TRG	SMETCLPTCL	CADMIUM	2 00	UG/L		U	5.000								
SW118	SW	REAL	SW00559WC	27-NOV-90	N	TRG	SMETCLPTCL	CALCIUM	57400 00	UG/L			5000.								
SW118	SW	REAL	SW00559WC	27-NOV-90	N	TRG	SMETCLPTCL	CHROMIUM	5.00	UG/L		U	10 00								
SW118	SW	REAL	SW00559WC	27-NOV-90	N	TRG	SMETCLPTCL	COBALT	3 00	UG/L		U	50 00								
SW118	SW	REAL	SW00559WC	27-NOV-90	N	TRG	SMETCLPTCL	COPPER	2 00	UG/L		U	25 00								
SW118	SW	REAL	SW00559WC	27-NOV-90	N	TRG	SMETCLPTCL	CYANIDE	2.50	UG/L		B	10 00								
SW118	SW	REAL	SW00559WC	27-NOV-90	N	TRG	SMETCLPTCL	IRON	301.00	UG/L			100 0								
SW118	SW	REAL	SW00559WC	27-NOV-90	N	TRG	SMETCLPTCL	LEAD	1.00	UG/L		UW	3 000								
SW118	SW	REAL	SW00559WC	27-NOV-90	N	TRG	SMETCLPTCL	MAGNESIUM	14700 00	UG/L			5000								
SW118	SW	REAL	SW00559WC	27-NOV-90	N	TRG	SMETCLPTCL	MANGANESE	23 60	UG/L			15 00								
SW118	SW	REAL	SW00559WC	27-NOV-90	N	TRG	SMETCLPTCL	MERCURY	0.20	UG/L		UN	0 200								
SW118	SW	REAL	SW00559WC	27-NOV-90	N	TRG	SMETCLPTCL	NICKEL	4 00	UG/L		U	40 00								
SW118	SW	REAL	SW00559WC	27-NOV-90	N	TRG	SMETCLPTCL	POTASSIUM	1700 00	UG/L		BE	5000								
SW118	SW	REAL	SW00559WC	27-NOV-90	N	TRG	SMETCLPTCL	SELENIUM	1.00	UG/L		UN	5 000								
SW118	SW	REAL	SW00559WC	27-NOV-90	N	TRG	SMETCLPTCL	SILVER	3 00	UG/L		U	10 00								
SW118	SW	REAL	SW00559WC	27-NOV-90	N	TRG	SMETCLPTCL	SODIUM	31500 00	UG/L			5000								
SW118	SW	REAL	SW00559WC	27-NOV-90	N	TRG	SMETCLPTCL	THALLIUM	2.00	UG/L		UWN	10 00								
SW118	SW	REAL	SW00559WC	27-NOV-90	N	TRG	SMETCLPTCL	VANADIUM	3 40	UG/L		B	50 00								
SW118	SW	REAL	SW00559WC	27-NOV-90	N	TRG	SMETCLPTCL	ZINC	14 60	UG/L		B	20.00								
SW118	SW	REAL	SW00559WC	27-NOV-90	N	TRG	SMETNOCLP	CESIUM	76 00	UG/L		U	1000.								
SW118	SW	REAL	SW00559WC	27-NOV-90	N	TRG	SMETNOCLP	LITHIUM	7 40	UG/L		B	100 0								
SW118	SW	REAL	SW00559WC	27-NOV-90	N	TRG	SMETNOCLP	MOLYBDENUM	2 00	UG/L		U	200 0								
SW118	SW	REAL	SW00559WC	27-NOV-90	N	TRG	SMETNOCLP	STRONTIUM	354 00	UG/L			200 0								
SW118	SW	REAL	SW00559WC	27-NOV-90	N	TRG	SMETNOCLP	TIN	12.00	UG/L		B	200 0								
SW129	SW	MSD	SW00464WC	05-NOV-90	N	TRG	DMETCLPTAL	ALUMINUM	62 5	UG/L		B	200								
SW129	SW	MSD	SW00464WC	05-NOV-90	N	TRG	DMETCLPTAL	ANTIMONY	22 0	UG/L		U	60								
SW129	SW	MSD	SW00464WC	05-NOV-90	N	TRG	DMETCLPTAL	ARSENIC	1.1	UG/L		B	10								
SW129	SW	MSD	SW00464WC	05-NOV-90	N	TRG	DMETCLPTAL	BARIUM	49 7	UG/L		B	200								
SW129	SW	MSD	SW00464WC	05-NOV-90	N	TRG	DMETCLPTAL	BERYLLIUM	1.0	UG/L		U	5								
SW129	SW	MSD	SW00464WC	05-NOV-90	N	TRG	DMETCLPTAL	CADMIUM	5 0	UG/L		U	5								
SW129	SW	MSD	SW00464WC	05-NOV-90	N	TRG	DMETCLPTAL	CALCIUM	32100	UG/L			5000								
SW129	SW	MSD	SW00464WC	05-NOV-90	N	TRG	DMETCLPTAL	CHROMIUM	4.0	UG/L		U	10								
SW129	SW	MSD	SW00464WC	05-NOV-90	N	TRG	DMETCLPTAL	COBALT	4.0	UG/L		U	50								
SW129	SW	MSD	SW00464WC	05-NOV-90	N	TRG	DMETCLPTAL	COPPER	5 0	UG/L		U	25								
SW129	SW	MSD	SW00464WC	05-NOV-90	N	TRG	DMETCLPTAL	IRON	62 2	UG/L		B	100								
SW129	SW	MSD	SW00464WC	05-NOV-90	N	TRG	DMETCLPTAL	LEAD	1.0	UG/L		U	3								
SW129	SW	MSD	SW00464WC	05-NOV-90	N	TRG	DMETCLPTAL	MAGNESIUM	5340	UG/L			5000								
SW129	SW	MSD	SW00464WC	05-NOV-90	N	TRG	DMETCLPTAL	MANGANESE	34 6	UG/L			15								
SW129	SW	MSD	SW00464WC	05-NOV-90	N	TRG	DMETCLPTAL	MERCURY	0.20	UG/L		U	0.2								
SW129	SW	MSD	SW00464WC	05-NOV-90	N	TRG	DMETCLPTAL	NICKEL	9 0	UG/L		U	40								
SW129	SW	MSD	SW00464WC	05-NOV-90	N	TRG	DMETCLPTAL	POTASSIUM	3850	UG/L		B	5000								
SW129	SW	MSD	SW00464WC	05-NOV-90	N	TRG	DMETCLPTAL	SELENIUM	2.0	UG/L		U	5								
SW129	SW	MSD	SW00464WC	05-NOV-90	N	TRG	DMETCLPTAL	SILVER	9.8	UG/L		B	10								
SW129	SW	MSD	SW00464WC	05-NOV-90	N	TRG	DMETCLPTAL	SODIUM	14200	UG/L			5000								
SW129	SW	MSD	SW00464WC	05-NOV-90	N	TRG	DMETCLPTAL	THALLIUM	2.0	UG/L		U	10								
SW129	SW	MSD	SW00464WC	05-NOV-90	N	TRG	DMETCLPTAL	VANADIUM	9.6	UG/L		B	50								
SW129	SW	MSD	SW00464WC	05-NOV-90	N	TRG	DMETCLPTAL	ZINC	3.7	UG/L		B	20								
SW129	SW	MSD	SW00464WC	05-NOV-90	N	TRG	DMETNOCLP	CESIUM	500	UG/L		U	1000								
SW129	SW	MSD	SW00464WC	05-NOV-90	N	TRG	DMETNOCLP	LITHIUM	10.0	UG/L		U	100								
SW129	SW	MSD	SW00464WC	05-NOV-90	N	TRG	DMETNOCLP	MOLYBDENUM	9.0	UG/L		U	200								
SW129	SW	MSD	SW00464WC	05-NOV-90	N	TRG	DMETNOCLP	PHOSPHORUS	227	UG/L		B	1000								
SW129	SW	MSD	SW00464WC	05-NOV-90	N	TRG	DMETNOCLP	SILICON	2730	UG/L		B	5000								

Location	ST	QC	Sample Number	Smpl Date	D	ID	Group	Chemical	Result	Unit	Error	Qual	D LMT	VA	RN1	RN2	RN3	RN4	VResult	VQual	VDET
SW129	SW	MSD	SW00464WC	05-NOV-90	N	TRG	DMETNOCLP	STRONTIUM	118	UG/L		B	200								
SW129	SW	MSD	SW00464WC	05-NOV-90	N	TRG	DMETNOCLP	TIN	48 0	UG/L		B	200								
SW129	SW	MSD	SW00464WC	05-NOV-90	N	TRG	SMETCLPTCL	ALUMINUM	152	UG/L		B	200								
SW129	SW	MSD	SW00464WC	05-NOV-90	N	TRG	SMETCLPTCL	ANTIMONY	22.0	UG/L		U	60								
SW129	SW	MSD	SW00464WC	05-NOV-90	N	TRG	SMETCLPTCL	ARSENIC	1 0	UG/L		U	10								
SW129	SW	MSD	SW00464WC	05-NOV-90	N	TRG	SMETCLPTCL	BARIUM	47 2	UG/L		B	200								
SW129	SW	MSD	SW00464WC	05-NOV-90	N	TRG	SMETCLPTCL	BERYLLIUM	1 0	UG/L		U	5								
SW129	SW	MSD	SW00464WC	05-NOV-90	N	TRG	SMETCLPTCL	CADMIUM	5 0	UG/L		U	5								
SW129	SW	MSD	SW00464WC	05-NOV-90	N	TRG	SMETCLPTCL	CALCIUM	28300	UG/L			5000								
SW129	SW	MSD	SW00464WC	05-NOV-90	N	TRG	SMETCLPTCL	CHROMIUM	4 0	UG/L		U	10								
SW129	SW	MSD	SW00464WC	05-NOV-90	N	TRG	SMETCLPTCL	COBALT	4 0	UG/L		U	50								
SW129	SW	MSD	SW00464WC	05-NOV-90	N	TRG	SMETCLPTCL	COPPER	5 0	UG/L		U	25								
SW129	SW	MSD	SW00464WC	05-NOV-90	N	TRG	SMETCLPTCL	IRON	508	UG/L			100								
SW129	SW	MSD	SW00464WC	05-NOV-90	N	TRG	SMETCLPTCL	LEAD	2 2	UG/L		B	3								
SW129	SW	MSD	SW00464WC	05-NOV-90	N	TRG	SMETCLPTCL	MAGNESIUM	4680	UG/L		B	5000								
SW129	SW	MSD	SW00464WC	05-NOV-90	N	TRG	SMETCLPTCL	MANGANESE	56 6	UG/L			15								
SW129	SW	MSD	SW00464WC	05-NOV-90	N	TRG	SMETCLPTCL	MERCURY	0 20	UG/L		U	0 2								
SW129	SW	MSD	SW00464WC	05-NOV-90	N	TRG	SMETCLPTCL	NICKEL	9 0	UG/L		U	40								
SW129	SW	MSD	SW00464WC	05-NOV-90	N	TRG	SMETCLPTCL	POTASSIUM	2590	UG/L		B	5000								
SW129	SW	MSD	SW00464WC	05-NOV-90	N	TRG	SMETCLPTCL	SELENIUM	2 0	UG/L		U	5								
SW129	SW	MSD	SW00464WC	05-NOV-90	N	TRG	SMETCLPTCL	SILVER	7.3	UG/L		B	10								
SW129	SW	MSD	SW00464WC	05-NOV-90	N	TRG	SMETCLPTCL	SODIUM	12900	UG/L			5000								
SW129	SW	MSD	SW00464WC	05-NOV-90	N	TRG	SMETCLPTCL	THALLIUM	2 0	UG/L		U	10								
SW129	SW	MSD	SW00464WC	05-NOV-90	N	TRG	SMETCLPTCL	VANADIUM	6 5	UG/L		B	50								
SW129	SW	MSD	SW00464WC	05-NOV-90	N	TRG	SMETCLPTCL	ZINC	22.2	UG/L			20								
SW129	SW	MSD	SW00464WC	05-NOV-90	N	TRG	SMETNOCLP	CESIUM	500	UG/L		U	1000								
SW129	SW	MSD	SW00464WC	05-NOV-90	N	TRG	SMETNOCLP	LITHIUM	10 0	UG/L		U	100								
SW129	SW	MSD	SW00464WC	05-NOV-90	N	TRG	SMETNOCLP	MOLYBDENUM	9 0	UG/L		U	200								
SW129	SW	MSD	SW00464WC	05-NOV-90	N	TRG	SMETNOCLP	PHOSPHORUS	193	UG/L		B	1000								
SW129	SW	MSD	SW00464WC	05-NOV-90	N	TRG	SMETNOCLP	STRONTIUM	106	UG/L		B	200								
SW129	SW	MSD	SW00464WC	05-NOV-90	N	TRG	SMETNOCLP	TIN	30 0	UG/L		U	200								
SW129	SW	REAL	SW00421WC	15-OCT-90	N	TRG	SMETCLPTCL	ALUMINUM	60	UG/L		U									
SW129	SW	REAL	SW00421WC	15-OCT-90	N	TRG	SMETCLPTCL	ANTIMONY	30	UG/L		U									
SW129	SW	REAL	SW00421WC	15-OCT-90	N	TRG	SMETCLPTCL	ARSENIC	2	UG/L		U									
SW129	SW	REAL	SW00421WC	15-OCT-90	N	TRG	SMETCLPTCL	BARIUM	152	UG/L		B									
SW129	SW	REAL	SW00421WC	15-OCT-90	N	TRG	SMETCLPTCL	BERYLLIUM	2	UG/L		U									
SW129	SW	REAL	SW00421WC	15-OCT-90	N	TRG	SMETCLPTCL	CADMIUM	3 2	UG/L		B									
SW129	SW	REAL	SW00421WC	15-OCT-90	N	TRG	SMETCLPTCL	CALCIUM	86700	UG/L											
SW129	SW	REAL	SW00421WC	15-OCT-90	N	TRG	SMETCLPTCL	CESIUM	2	UG/L		UWN									
SW129	SW	REAL	SW00421WC	15-OCT-90	N	TRG	SMETCLPTCL	CHROMIUM	10	UG/L		U									
SW129	SW	REAL	SW00421WC	15-OCT-90	N	TRG	SMETCLPTCL	COBALT	10	UG/L		U									
SW129	SW	REAL	SW00421WC	15-OCT-90	N	TRG	SMETCLPTCL	COPPER	13.7	UG/L		B									
SW129	SW	REAL	SW00421WC	15-OCT-90	N	TRG	SMETCLPTCL	IRON	10	UG/L		U									
SW129	SW	REAL	SW00421WC	15-OCT-90	N	TRG	SMETCLPTCL	LEAD	2	UG/L		U									
SW129	SW	REAL	SW00421WC	15-OCT-90	N	TRG	SMETCLPTCL	LITHIUM	50	UG/L		U									
SW129	SW	REAL	SW00421WC	15-OCT-90	N	TRG	SMETCLPTCL	MAGNESIUM	20400	UG/L											
SW129	SW	REAL	SW00421WC	15-OCT-90	N	TRG	SMETCLPTCL	MANGANESE	20.1	UG/L											
SW129	SW	REAL	SW00421WC	15-OCT-90	N	TRG	SMETCLPTCL	MERCURY	.2	UG/L		U									
SW129	SW	REAL	SW00421WC	15-OCT-90	N	TRG	SMETCLPTCL	MOLYBDENUM	10	UG/L		U									
SW129	SW	REAL	SW00421WC	15-OCT-90	N	TRG	SMETCLPTCL	NICKEL	20	UG/L		U									
SW129	SW	REAL	SW00421WC	15-OCT-90	N	TRG	SMETCLPTCL	POTASSIUM	1490	UG/L		B									
SW129	SW	REAL	SW00421WC	15-OCT-90	N	TRG	SMETCLPTCL	SELENIUM	2 8	UG/L		BW									
SW129	SW	REAL	SW00421WC	15-OCT-90	N	TRG	SMETCLPTCL	SILICON	7390	UG/L											
SW129	SW	REAL	SW00421WC	15-OCT-90	N	TRG	SMETCLPTCL	SILVER	13 3	UG/L											
SW129	SW	REAL	SW00421WC	15-OCT-90	N	TRG	SMETCLPTCL	SODIUM	13200	UG/L											
SW129	SW	REAL	SW00421WC	15-OCT-90	N	TRG	SMETCLPTCL	STRONTIUM	532	UG/L											
SW129	SW	REAL	SW00421WC	15-OCT-90	N	TRG	SMETCLPTCL	THALLIUM	2	UG/L		U									
SW129	SW	REAL	SW00421WC	15-OCT-90	N	TRG	SMETCLPTCL	TIN	50	UG/L		U									
SW129	SW	REAL	SW00421WC	15-OCT-90	N	TRG	SMETCLPTCL	VANADIUM	10	UG/L		U									
SW129	SW	REAL	SW00421WC	15-OCT-90	N	TRG	SMETCLPTCL	ZINC	5	UG/L		U									

Tissue Mag Cations & Silicon 1991

3-23-92

Location	ST	QC	Sample Number	Smpl Date	D	ID	Group	Chemical	Result	Unit	Error	Qual	D LMT	VA	RN1	RN2	RN3	RN4	VResult	VQual	VDET
SED118	SD	REAL	SD00229WC	21-MAY-91	N	TRG	SMETCLPTCL	ALUMINUM	8900	MG/KG			200								
SED118	SD	REAL	SD00229WC	21-MAY-91	N	TRG	SMETCLPTCL	ANTIMONY	2 4	MG/KG		U	60								
SED118	SD	REAL	SD00229WC	21-MAY-91	N	TRG	SMETCLPTCL	ARSENIC	5 4	MG/KG			10								
SED118	SD	REAL	SD00229WC	21-MAY-91	N	TRG	SMETCLPTCL	BARIUM	96	MG/KG			200								
SED118	SD	REAL	SD00229WC	21-MAY-91	N	TRG	SMETCLPTCL	BERYLLIUM	0 44	MG/KG		U	5								
SED118	SD	REAL	SD00229WC	21-MAY-91	N	TRG	SMETCLPTCL	BERYLLIUM	0 66	MG/KG			5								
SED118	SD	REAL	SD00229WC	21-MAY-91	N	TRG	SMETCLPTCL	CALCIUM	6800	MG/KG			5000								
SED118	SD	REAL	SD00229WC	21-MAY-91	N	TRG	SMETCLPTCL	CESIUM	11	MG/KG		U	1000								
SED118	SD	REAL	SD00229WC	21-MAY-91	N	TRG	SMETCLPTCL	CHROMIUM	7 4	MG/KG			10								
SED118	SD	REAL	SD00229WC	21-MAY-91	N	TRG	SMETCLPTCL	COBALT	6 3	MG/KG			50								
SED118	SD	REAL	SD00229WC	21-MAY-91	N	TRG	SMETCLPTCL	COPPER	14	MG/KG			25								
SED118	SD	REAL	SD00229WC	21-MAY-91	N	TRG	SMETCLPTCL	IRON	12000	MG/KG			100								
SED118	SD	REAL	SD00229WC	21-MAY-91	N	TRG	SMETCLPTCL	LEAD	15	MG/KG			3								
SED118	SD	REAL	SD00229WC	21-MAY-91	N	TRG	SMETCLPTCL	LITHIUM	6.9	MG/KG			100								
SED118	SD	REAL	SD00229WC	21-MAY-91	N	TRG	SMETCLPTCL	MAGNESIUM	2400	MG/KG			5000								
SED118	SD	REAL	SD00229WC	21-MAY-91	N	TRG	SMETCLPTCL	MANGANESE	210	MG/KG			15								
SED118	SD	REAL	SD00229WC	21-MAY-91	N	TRG	SMETCLPTCL	MERCURY	0 12	MG/KG		U	0 2								
SED118	SD	REAL	SD00229WC	21-MAY-91	N	TRG	SMETCLPTCL	MOLYBDENUM	0 66	MG/KG		U	50								
SED118	SD	REAL	SD00229WC	21-MAY-91	N	TRG	SMETCLPTCL	NICKEL	11	MG/KG			40								
SED118	SD	REAL	SD00229WC	21-MAY-91	N	TRG	SMETCLPTCL	POTASSIUM	1200	MG/KG			5000								
SED118	SD	REAL	SD00229WC	21-MAY-91	N	TRG	SMETCLPTCL	SELENIUM	0 94	MG/KG		UI	5								
SED118	SD	REAL	SD00229WC	21-MAY-91	N	TRG	SMETCLPTCL	SILVER	0 44	MG/KG		U	10								
SED118	SD	REAL	SD00229WC	21-MAY-91	N	TRG	SMETCLPTCL	SODIUM	150	MG/KG			5000								
SED118	SD	REAL	SD00229WC	21-MAY-91	N	TRG	SMETCLPTCL	STRONTIUM	41	MG/KG			200								
SED118	SD	REAL	SD00229WC	21-MAY-91	N	TRG	SMETCLPTCL	THALLIUM	0 47	MG/KG		U	10								
SED118	SD	REAL	SD00229WC	21-MAY-91	N	TRG	SMETCLPTCL	TIN	2 9	MG/KG		U	200								
SED118	SD	REAL	SD00229WC	21-MAY-91	N	TRG	SMETCLPTCL	VANADIUM	23	MG/KG			50								
SED118	SD	REAL	SD00229WC	21-MAY-91	N	TRG	SMETCLPTCL	ZINC	62	MG/KG		I	20								
SED118	SD	REAL	SD00263WC	13-AUG-91	N	TRG	METCLP	ALUMINUM	7710	MG/KG			8 4								
SED118	SD	REAL	SD00263WC	13-AUG-91	N	TRG	METCLP	ANTIMONY	9 6	MG/KG		U	9 6								
SED118	SD	REAL	SD00263WC	13-AUG-91	N	TRG	METCLP	ARSENIC	6 8	MG/KG			0 22								
SED118	SD	REAL	SD00263WC	13-AUG-91	N	TRG	METCLP	BARIUM	93.5	MG/KG			1.0								
SED118	SD	REAL	SD00263WC	13-AUG-91	N	TRG	METCLP	BERYLLIUM	0 71	MG/KG			0 14								
SED118	SD	REAL	SD00263WC	13-AUG-91	N	TRG	METCLP	CADMIUM	1 0	MG/KG		U	1.0								
SED118	SD	REAL	SD00263WC	13-AUG-91	N	TRG	METCLP	CALCIUM	6730	MG/KG			4 5								
SED118	SD	REAL	SD00263WC	13-AUG-91	N	TRG	METCLP	CESIUM	114	MG/KG		U	114								
SED118	SD	REAL	SD00263WC	13-AUG-91	N	TRG	METCLP	CHROMIUM	5 8	MG/KG			1 3								
SED118	SD	REAL	SD00263WC	13-AUG-91	N	TRG	METCLP	COBALT	5 2	MG/KG			1.7								
SED118	SD	REAL	SD00263WC	13-AUG-91	N	TRG	METCLP	COPPER	14.1	MG/KG			1 2								
SED118	SD	REAL	SD00263WC	13-AUG-91	N	TRG	METCLP	IRON	11700	MG/KG			1 6								
SED118	SD	REAL	SD00263WC	13-AUG-91	N	TRG	METCLP	LEAD	16.8	MG/KG			1 8								
SED118	SD	REAL	SD00263WC	13-AUG-91	N	TRG	METCLP	LITHIUM	6 0	MG/KG			1 2								
SED118	SD	REAL	SD00263WC	13-AUG-91	N	TRG	METCLP	MAGNESIUM	2210	MG/KG			13 0								
SED118	SD	REAL	SD00263WC	13-AUG-91	N	TRG	METCLP	MANGANESE	193	MG/KG			0.57								
SED118	SD	REAL	SD00263WC	13-AUG-91	N	TRG	METCLP	MERCURY	0 10	MG/KG		U	0 10								
SED118	SD	REAL	SD00263WC	13-AUG-91	N	TRG	METCLP	MOLYBDENUM	2 3	MG/KG		U	2 3								
SED118	SD	REAL	SD00263WC	13-AUG-91	N	TRG	METCLP	NICKEL	10.8	MG/KG			2 4								
SED118	SD	REAL	SD00263WC	13-AUG-91	N	TRG	METCLP	POTASSIUM	1000	MG/KG			244								
SED118	SD	REAL	SD00263WC	13-AUG-91	N	TRG	METCLP	SELENIUM	0 33	MG/KG		U	0 33								
SED118	SD	REAL	SD00263WC	13-AUG-91	N	TRG	METCLP	SILICON	276	MG/KG			4 4								
SED118	SD	REAL	SD00263WC	13-AUG-91	N	TRG	METCLP	SILVER	1 5	MG/KG		U	1 5								
SED118	SD	REAL	SD00263WC	13-AUG-91	N	TRG	METCLP	SODIUM	112	MG/KG			10 9								
SED118	SD	REAL	SD00263WC	13-AUG-91	N	TRG	METCLP	STRONTIUM	38.1	MG/KG			1.7								
SED118	SD	REAL	SD00263WC	13-AUG-91	N	TRG	METCLP	THALLIUM	0 45	MG/KG			0 45								
SED118	SD	REAL	SD00263WC	13-AUG-91	N	TRG	METCLP	TIN	9 2	MG/KG			8.9								
SED118	SD	REAL	SD00263WC	13-AUG-91	N	TRG	METCLP	VANADIUM	17 5	MG/KG			1 5								
SED118	SD	REAL	SD00263WC	13-AUG-91	N	TRG	METCLP	ZINC	51 6	MG/KG			1.6								
SED118	SD	REAL	SS00195WC	27-MAR-91	N	TRG	SMETCLPTCL	ALUMINUM	8360	MG/KG			5.3								
SED118	SD	REAL	SS00195WC	27-MAR-91	N	TRG	SMETCLPTCL	ANTIMONY	5.5	MG/KG		U	5 5								
SED118	SD	REAL	SS00195WC	27-MAR-91	N	TRG	SMETCLPTCL	ARSENIC	5.5	MG/KG			0 26								
SED118	SD	REAL	SS00195WC	27-MAR-91	N	TRG	SMETCLPTCL	BARIUM	112	MG/KG			1.3								
SED118	SD	REAL	SS00195WC	27-MAR-91	N	TRG	SMETCLPTCL	BERYLLIUM	0 69	MG/KG			0 18								
SED118	SD	REAL	SS00195WC	27-MAR-91	N	TRG	SMETCLPTCL	CADMIUM	0 81	MG/KG		U	0 81								

Location	ST	QC	Sample Number	Smpl Date	D	ID	Group	Chemical	Result	Unit	Error	Qual	D LMT	VA	RN1	RN2	RN3	RN4	VResult	VQual	VDET
SED118	SD	REAL	SS00195WC	27-MAR-91	N	TRG	SMETCLPTCL	CALCIUM	9560	MG/KG			4 3								
SED118	SD	REAL	SS00195WC	27-MAR-91	N	TRG	SMETCLPTCL	CHROMIUM	9 4	MG/KG			2 1								
SED118	SD	REAL	SS00195WC	27-MAR-91	N	TRG	SMETCLPTCL	COBALT	6 9	MG/KG			0 90								
SED118	SD	REAL	SS00195WC	27-MAR-91	N	TRG	SMETCLPTCL	COPPER	11 1	MG/KG			0 75								
SED118	SD	REAL	SS00195WC	27-MAR-91	N	TRG	SMETCLPTCL	IRON	13500	MG/KG			1 3								
SED118	SD	REAL	SS00195WC	27-MAR-91	N	TRG	SMETCLPTCL	LEAD	15.2	MG/KG			0 88								
SED118	SD	REAL	SS00195WC	27-MAR-91	N	TRG	SMETCLPTCL	MAGNESIUM	2650	MG/KG			10 8								
SED118	SD	REAL	SS00195WC	27-MAR-91	N	TRG	SMETCLPTCL	MANGANESE	349	MG/KG			0 30								
SED118	SD	REAL	SS00195WC	27-MAR-91	N	TRG	SMETCLPTCL	MERCURY	0 11	MG/KG		U	0 11								
SED118	SD	REAL	SS00195WC	27-MAR-91	N	TRG	SMETCLPTCL	NICKEL	12 5	MG/KG			1.2								
SED118	SD	REAL	SS00195WC	27-MAR-91	N	TRG	SMETCLPTCL	POTASSIUM	1320	MG/KG			28.4								
SED118	SD	REAL	SS00195WC	27-MAR-91	N	TRG	SMETCLPTCL	SELENIUM	0 32	MG/KG		U	0.32								
SED118	SD	REAL	SS00195WC	27-MAR-91	N	TRG	SMETCLPTCL	SILVER	1 1	MG/KG		U	1 1								
SED118	SD	REAL	SS00195WC	27-MAR-91	N	TRG	SMETCLPTCL	SODIUM	260	MG/KG			6 4								
SED118	SD	REAL	SS00195WC	27-MAR-91	N	TRG	SMETCLPTCL	THALLIUM	0.41	MG/KG		U	0 41								
SED118	SD	REAL	SS00195WC	27-MAR-91	N	TRG	SMETCLPTCL	VANADIUM	25.1	MG/KG			0 60								
SED118	SD	REAL	SS00195WC	27-MAR-91	N	TRG	SMETCLPTCL	ZINC	57 6	MG/KG			1 4								
SED118	SD	REAL	SS00195WC	27-MAR-91	N	TRG	SMETNOCLP	CESIUM	150	MG/KG		U	150								
SED118	SD	REAL	SS00195WC	27-MAR-91	N	TRG	SMETNOCLP	LITHIUM	7 4	MG/KG			0 12								
SED118	SD	REAL	SS00195WC	27-MAR-91	N	TRG	SMETNOCLP	MOLYBDENUM	3 3	MG/KG		U	3 3								
SED118	SD	REAL	SS00195WC	27-MAR-91	N	TRG	SMETNOCLP	SILICON	1320	MG/KG			4 3								
SED118	SD	REAL	SS00195WC	27-MAR-91	N	TRG	SMETNOCLP	STRONTIUM	41.5	MG/KG			2 2								
SED118	SD	REAL	SS00195WC	27-MAR-91	N	TRG	SMETNOCLP	TIN	7 3	MG/KG		U	7 3								
SW018	SW	REAL	SW00693WC	30-JAN-91	N																
SW018	SW	REAL	SW00899WC	25-MAR-91	N	TRG	DMETCLPTAL	ALUMINUM	130	UG/L			17 7								
SW018	SW	REAL	SW00899WC	25-MAR-91	N	TRG	DMETCLPTAL	ANTIMONY	18 2	UG/L		U	18 2								
SW018	SW	REAL	SW00899WC	25-MAR-91	N	TRG	DMETCLPTAL	ARSENIC	0.90	UG/L		U	0 90								
SW018	SW	REAL	SW00899WC	25-MAR-91	N	TRG	DMETCLPTAL	BARIUM	129	UG/L			4 4								
SW018	SW	REAL	SW00899WC	25-MAR-91	N	TRG	DMETCLPTAL	BERYLLIUM	0.60	UG/L		U	0 60								
SW018	SW	REAL	SW00899WC	25-MAR-91	N	TRG	DMETCLPTAL	CADMIUM	2 7	UG/L		U	2 7								
SW018	SW	REAL	SW00899WC	25-MAR-91	N	TRG	DMETCLPTAL	CALCIUM	83600	UG/L			14 3								
SW018	SW	REAL	SW00899WC	25-MAR-91	N	TRG	DMETCLPTAL	CHROMIUM	6.9	UG/L		U	6 9								
SW018	SW	REAL	SW00899WC	25-MAR-91	N	TRG	DMETCLPTAL	COBALT	3.0	UG/L		U	3 0								
SW018	SW	REAL	SW00899WC	25-MAR-91	N	TRG	DMETCLPTAL	COPPER	13 6	UG/L			2 5								
SW018	SW	REAL	SW00899WC	25-MAR-91	N	TRG	DMETCLPTAL	IRON	191	UG/L			4 3								
SW018	SW	REAL	SW00899WC	25-MAR-91	N	TRG	DMETCLPTAL	LEAD	1.6	UG/L			1 0								
SW018	SW	REAL	SW00899WC	25-MAR-91	N	TRG	DMETCLPTAL	MAGNESIUM	17700	UG/L			35.9								
SW018	SW	REAL	SW00899WC	25-MAR-91	N	TRG	DMETCLPTAL	MANGANESE	130	UG/L			1 0								
SW018	SW	REAL	SW00899WC	25-MAR-91	N	TRG	DMETCLPTAL	MERCURY	0.20	UG/L		U	0 20								
SW018	SW	REAL	SW00899WC	25-MAR-91	N	TRG	DMETCLPTAL	NICKEL	3.9	UG/L		U	3.9								
SW018	SW	REAL	SW00899WC	25-MAR-91	N	TRG	DMETCLPTAL	POTASSIUM	2870	UG/L			94 8								
SW018	SW	REAL	SW00899WC	25-MAR-91	N	TRG	DMETCLPTAL	SELENIUM	1.1	UG/L		U	1.1								
SW018	SW	REAL	SW00899WC	25-MAR-91	N	TRG	DMETCLPTAL	SILVER	3.8	UG/L		U	3 8								
SW018	SW	REAL	SW00899WC	25-MAR-91	N	TRG	DMETCLPTAL	SODIUM	37100	UG/L			21 4								
SW018	SW	REAL	SW00899WC	25-MAR-91	N	TRG	DMETCLPTAL	THALLIUM	1.4	UG/L		U	1 4								
SW018	SW	REAL	SW00899WC	25-MAR-91	N	TRG	DMETCLPTAL	VANADIUM	2 0	UG/L		U	2 0								
SW018	SW	REAL	SW00899WC	25-MAR-91	N	TRG	DMETCLPTAL	ZINC	13 3	UG/L			4 7								
SW018	SW	REAL	SW00899WC	25-MAR-91	N	TRG	DMETNOCLP	CESIUM	500	UG/L		U	500								
SW018	SW	REAL	SW00899WC	25-MAR-91	N	TRG	DMETNOCLP	LITHIUM	8 1	UG/L			2.0								
SW018	SW	REAL	SW00899WC	25-MAR-91	N	TRG	DMETNOCLP	MOLYBDENUM	10 9	UG/L		U	10 9								
SW018	SW	REAL	SW00899WC	25-MAR-91	N	TRG	DMETNOCLP	SILICON	5830	UG/L			14 2								
SW018	SW	REAL	SW00899WC	25-MAR-91	N	TRG	DMETNOCLP	STRONTIUM	454	UG/L			7 3								
SW018	SW	REAL	SW00899WC	25-MAR-91	N	TRG	DMETNOCLP	TIN	24.2	UG/L		U	24 2								
SW018	SW	REAL	SW00899WC	25-MAR-91	N	TRG	SMETCLPTCL	ALUMINUM	118	UG/L			17.7								
SW018	SW	REAL	SW00899WC	25-MAR-91	N	TRG	SMETCLPTCL	ANTIMONY	18.2	UG/L		U	18.2								
SW018	SW	REAL	SW00899WC	25-MAR-91	N	TRG	SMETCLPTCL	ARSENIC	0.90	UG/L		U	0 90								
SW018	SW	REAL	SW00899WC	25-MAR-91	N	TRG	SMETCLPTCL	BARIUM	133	UG/L			4 4								
SW018	SW	REAL	SW00899WC	25-MAR-91	N	TRG	SMETCLPTCL	BERYLLIUM	0.60	UG/L		U	0 60								
SW018	SW	REAL	SW00899WC	25-MAR-91	N	TRG	SMETCLPTCL	CADMIUM	2 7	UG/L		U	2 7								
SW018	SW	REAL	SW00899WC	25-MAR-91	N	TRG	SMETCLPTCL	CALCIUM	84000	UG/L			14 3								
SW018	SW	REAL	SW00899WC	25-MAR-91	N	TRG	SMETCLPTCL	CHROMIUM	6.9	UG/L		U	6 9								
SW018	SW	REAL	SW00899WC	25-MAR-91	N	TRG	SMETCLPTCL	COBALT	3 0	UG/L		U	3 0								
SW018	SW	REAL	SW00899WC	25-MAR-91	N	TRG	SMETCLPTCL	COPPER	8.0	UG/L			2 5								

Location	ST	QC	Sample Number	Smpl Date	D	ID	Group	Chemical	Result	Unit	Error	Qual	D LMT	VA	RN1	RN2	RN3	RN4	VResult	VQual	VDET
SW018	SW	REAL	SW00899WC	25-MAR-91	N	TRG	SMETCLPTCL	IRON	316	UG/L			4 3								
SW018	SW	REAL	SW00899WC	25-MAR-91	N	TRG	SMETCLPTCL	LEAD	2 5	UG/L			1 0								
SW018	SW	REAL	SW00899WC	25-MAR-91	N	TRG	SMETCLPTCL	MAGNESIUM	17700	UG/L			35 9								
SW018	SW	REAL	SW00899WC	25-MAR-91	N	TRG	SMETCLPTCL	MANGANESE	144	UG/L			1 0								
SW018	SW	REAL	SW00899WC	25-MAR-91	N	TRG	SMETCLPTCL	MERCURY	0 20	UG/L		U	0 20								
SW018	SW	REAL	SW00899WC	25-MAR-91	N	TRG	SMETCLPTCL	NICKEL	3 9	UG/L		U	3 9								
SW018	SW	REAL	SW00899WC	25-MAR-91	N	TRG	SMETCLPTCL	POTASSIUM	2850	UG/L			94 8								
SW018	SW	REAL	SW00899WC	25-MAR-91	N	TRG	SMETCLPTCL	SELENIUM	1 1	UG/L		U	1.1								
SW018	SW	REAL	SW00899WC	25-MAR-91	N	TRG	SMETCLPTCL	SILVER	3 8	UG/L		U	3.8								
SW018	SW	REAL	SW00899WC	25-MAR-91	N	TRG	SMETCLPTCL	SODIUM	36800	UG/L			21.4								
SW018	SW	REAL	SW00899WC	25-MAR-91	N	TRG	SMETCLPTCL	THALLIUM	1 4	UG/L		U	1 4								
SW018	SW	REAL	SW00899WC	25-MAR-91	N	TRG	SMETCLPTCL	VANADIUM	2 0	UG/L		U	2 0								
SW018	SW	REAL	SW00899WC	25-MAR-91	N	TRG	SMETCLPTCL	ZINC	10.5	UG/L			4 7								
SW018	SW	REAL	SW00899WC	25-MAR-91	N	TRG	SMETNOCLP	CESIUM	500	UG/L		U	500								
SW018	SW	REAL	SW00899WC	25-MAR-91	N	TRG	SMETNOCLP	LITHIUM	8 1	UG/L			2 0								
SW018	SW	REAL	SW00899WC	25-MAR-91	N	TRG	SMETNOCLP	MOLYBDENUM	10 9	UG/L		U	10 9								
SW018	SW	REAL	SW00899WC	25-MAR-91	N	TRG	SMETNOCLP	SILICON	5680	UG/L			14 2								
SW018	SW	REAL	SW00899WC	25-MAR-91	N	TRG	SMETNOCLP	STRONTIUM	454	UG/L			7 3								
SW018	SW	REAL	SW00899WC	25-MAR-91	N	TRG	SMETNOCLP	TIN	24.2	UG/L		U	24.2								
SW018	SW	REAL	SW01002WC	16-APR-91	Y	TRG	DMETCLPTAL	ALUMINUM	108	UG/L		U	108								
SW018	SW	REAL	SW01002WC	16-APR-91	Y	TRG	DMETCLPTAL	ANTIMONY	25.6	UG/L		U	25.6								
SW018	SW	REAL	SW01002WC	16-APR-91	Y	TRG	DMETCLPTAL	ARSENIC	0 90	UG/L		U	0 90								
SW018	SW	REAL	SW01002WC	16-APR-91	Y	TRG	DMETCLPTAL	BARIUM	94 7	UG/L			4 4								
SW018	SW	REAL	SW01002WC	16-APR-91	Y	TRG	DMETCLPTAL	BERYLLIUM	0 60	UG/L		U	0 60								
SW018	SW	REAL	SW01002WC	16-APR-91	Y	TRG	DMETCLPTAL	CADMIUM	3 3	UG/L		U	3 3								
SW018	SW	REAL	SW01002WC	16-APR-91	Y	TRG	DMETCLPTAL	CALCIUM	59400	UG/L			14.5								
SW018	SW	REAL	SW01002WC	16-APR-91	Y	TRG	DMETCLPTAL	CHROMIUM	6.9	UG/L		U	6 9								
SW018	SW	REAL	SW01002WC	16-APR-91	Y	TRG	DMETCLPTAL	COBALT	3 6	UG/L		U	3 6								
SW018	SW	REAL	SW01002WC	16-APR-91	Y	TRG	DMETCLPTAL	COPPER	4 7	UG/L		U	4 7								
SW018	SW	REAL	SW01002WC	16-APR-91	Y	TRG	DMETCLPTAL	IRON	29.6	UG/L			6 3								
SW018	SW	REAL	SW01002WC	16-APR-91	Y	TRG	DMETCLPTAL	LEAD	1.0	UG/L		U	1.0								
SW018	SW	REAL	SW01002WC	16-APR-91	Y	TRG	DMETCLPTAL	MAGNESIUM	11500	UG/L			36 6								
SW018	SW	REAL	SW01002WC	16-APR-91	Y	TRG	DMETCLPTAL	MANGANESE	110	UG/L			1 0								
SW018	SW	REAL	SW01002WC	16-APR-91	Y	TRG	DMETCLPTAL	MERCURY	0 20	UG/L		U	0 20								
SW018	SW	REAL	SW01002WC	16-APR-91	Y	TRG	DMETCLPTAL	NICKEL	14 7	UG/L		U	14 7								
SW018	SW	REAL	SW01002WC	16-APR-91	Y	TRG	DMETCLPTAL	POTASSIUM	4150	UG/L			2050								
SW018	SW	REAL	SW01002WC	16-APR-91	Y	TRG	DMETCLPTAL	SELENIUM	1.1	UG/L		U	1 1								
SW018	SW	REAL	SW01002WC	16-APR-91	Y	TRG	DMETCLPTAL	SILVER	5.0	UG/L		U	5 0								
SW018	SW	REAL	SW01002WC	16-APR-91	Y	TRG	DMETCLPTAL	SODIUM	30200	UG/L			43 5								
SW018	SW	REAL	SW01002WC	16-APR-91	Y	TRG	DMETCLPTAL	THALLIUM	1.4	UG/L		U	1 4								
SW018	SW	REAL	SW01002WC	16-APR-91	Y	TRG	DMETCLPTAL	VANADIUM	5 7	UG/L		U	5 7								
SW018	SW	REAL	SW01002WC	16-APR-91	Y	TRG	DMETCLPTAL	ZINC	19.1	UG/L			4 7								
SW018	SW	REAL	SW01002WC	16-APR-91	Y	TRG	DMETNOCLP	CESIUM	500	UG/L		U	500								
SW018	SW	REAL	SW01002WC	16-APR-91	Y	TRG	DMETNOCLP	LITHIUM	4 3	UG/L		U	4 3								
SW018	SW	REAL	SW01002WC	16-APR-91	Y	TRG	DMETNOCLP	MOLYBDENUM	5 7	UG/L		U	5 7								
SW018	SW	REAL	SW01002WC	16-APR-91	Y	TRG	DMETNOCLP	SILICON	4450	UG/L			25 7								
SW018	SW	REAL	SW01002WC	16-APR-91	Y	TRG	DMETNOCLP	STRONTIUM	336	UG/L			7 3								
SW018	SW	REAL	SW01002WC	16-APR-91	Y	TRG	DMETNOCLP	TIN	24.2	UG/L		U	24 2								
SW018	SW	REAL	SW01002WC	16-APR-91	Y	TRG	SMETCLPTCL	ALUMINUM	196	UG/L			108								
SW018	SW	REAL	SW01002WC	16-APR-91	Y	TRG	SMETCLPTCL	ANTIMONY	25.6	UG/L		U	25 6								
SW018	SW	REAL	SW01002WC	16-APR-91	Y	TRG	SMETCLPTCL	ARSENIC	0.90	UG/L		U	0.90								
SW018	SW	REAL	SW01002WC	16-APR-91	Y	TRG	SMETCLPTCL	BARIUM	102	UG/L			4 4								
SW018	SW	REAL	SW01002WC	16-APR-91	Y	TRG	SMETCLPTCL	BERYLLIUM	0.60	UG/L		U	0 60								
SW018	SW	REAL	SW01002WC	16-APR-91	Y	TRG	SMETCLPTCL	CADMIUM	3.3	UG/L		U	3 3								
SW018	SW	REAL	SW01002WC	16-APR-91	Y	TRG	SMETCLPTCL	CALCIUM	60800	UG/L			14.5								
SW018	SW	REAL	SW01002WC	16-APR-91	Y	TRG	SMETCLPTCL	CHROMIUM	6.9	UG/L		U	6.9								
SW018	SW	REAL	SW01002WC	16-APR-91	Y	TRG	SMETCLPTCL	COBALT	3 6	UG/L		U	3 6								
SW018	SW	REAL	SW01002WC	16-APR-91	Y	TRG	SMETCLPTCL	COPPER	4.7	UG/L		U	4.7								
SW018	SW	REAL	SW01002WC	16-APR-91	Y	TRG	SMETCLPTCL	IRON	426	UG/L			6 3								
SW018	SW	REAL	SW01002WC	16-APR-91	Y	TRG	SMETCLPTCL	LEAD	3.0	UG/L			1.0								
SW018	SW	REAL	SW01002WC	16-APR-91	Y	TRG	SMETCLPTCL	MAGNESIUM	11700	UG/L			36.6								
SW018	SW	REAL	SW01002WC	16-APR-91	Y	TRG	SMETCLPTCL	MANGANESE	166	UG/L			1.0								
SW018	SW	REAL	SW01002WC	16-APR-91	Y	TRG	SMETCLPTCL	MERCURY	0.20	UG/L		U	0.20								

Loration	ST	QC	Sample Number	Smpl Date	D	ID	Group	Chemical	Result	Unit	Error	Qual	D LMT	VA	RN1	RN2	RN3	RN4	VResult	VQual	VDET
SW018	SW	REAL	SW01002WC	16-APR-91	Y	TRG	SMETCLPTCL	NICKEL	14 7	UG/L		U	14 7								
SW018	SW	REAL	SW01002WC	16-APR-91	Y	TRG	SMETCLPTCL	POTASSIUM	3950	UG/L			2050								
SW018	SW	REAL	SW01002WC	16-APR-91	Y	TRG	SMETCLPTCL	SELENIUM	1.1	UG/L		U	1 1								
SW018	SW	REAL	SW01002WC	16-APR-91	Y	TRG	SMETCLPTCL	SILVER	5.0	UG/L		U	5 0								
SW018	SW	REAL	SW01002WC	16-APR-91	Y	TRG	SMETCLPTCL	SODIUM	30600	UG/L			43 5								
SW018	SW	REAL	SW01002WC	16-APR-91	Y	TRG	SMETCLPTCL	THALLIUM	1.4	UG/L		U	1.4								
SW018	SW	REAL	SW01002WC	16-APR-91	Y	TRG	SMETCLPTCL	VANADIUM	5.7	UG/L		U	5.7								
SW018	SW	REAL	SW01002WC	16-APR-91	Y	TRG	SMETCLPTCL	ZINC	24 6	UG/L			4 7								
SW018	SW	REAL	SW01002WC	16-APR-91	Y	TRG	SMETNOCLP	CESIUM	500	UG/L		U	500								
SW018	SW	REAL	SW01002WC	16-APR-91	Y	TRG	SMETNOCLP	LITHIUM	4.3	UG/L		U	4 3								
SW018	SW	REAL	SW01002WC	16-APR-91	Y	TRG	SMETNOCLP	MOLYBDENUM	11 4	UG/L			5 7								
SW018	SW	REAL	SW01002WC	16-APR-91	Y	TRG	SMETNOCLP	SILICON	4790	UG/L			25 7								
SW018	SW	REAL	SW01002WC	16-APR-91	Y	TRG	SMETNOCLP	STRONTIUM	336	UG/L			7 3								
SW018	SW	REAL	SW01002WC	16-APR-91	Y	TRG	SMETNOCLP	TIN	24 2	UG/L		U	24 2								
SW018	SW	REAL	SW01109WC	30-MAY-91	N	TRG	DMETCLPTAL	ALUMINUM	24	UG/L			200								
SW018	SW	REAL	SW01109WC	30-MAY-91	N	TRG	DMETCLPTAL	ANTIMONY	11	UG/L		U	60								
SW018	SW	REAL	SW01109WC	30-MAY-91	N	TRG	DMETCLPTAL	ARSENIC	2 0	UG/L		U	10								
SW018	SW	REAL	SW01109WC	30-MAY-91	N	TRG	DMETCLPTAL	BARIUM	140	UG/L			200								
SW018	SW	REAL	SW01109WC	30-MAY-91	N	TRG	DMETCLPTAL	BERYLLIUM	1.0	UG/L			5								
SW018	SW	REAL	SW01109WC	30-MAY-91	N	TRG	DMETCLPTAL	CALCIUM	84000	UG/L			5000								
SW018	SW	REAL	SW01109WC	30-MAY-91	N	TRG	DMETCLPTAL	CESIUM	50	UG/L		U	1000								
SW018	SW	REAL	SW01109WC	30-MAY-91	N	TRG	DMETCLPTAL	CHROMIUM	4.8	UG/L			10								
SW018	SW	REAL	SW01109WC	30-MAY-91	N	TRG	DMETCLPTAL	COBALT	2 0	UG/L		U	50								
SW018	SW	REAL	SW01109WC	30-MAY-91	N	TRG	DMETCLPTAL	COPPER	3 0	UG/L		U	25								
SW018	SW	REAL	SW01109WC	30-MAY-91	N	TRG	DMETCLPTAL	IRON	240	UG/L			100								
SW018	SW	REAL	SW01109WC	30-MAY-91	N	TRG	DMETCLPTAL	LEAD	1.0	UG/L		U	3								
SW018	SW	REAL	SW01109WC	30-MAY-91	N	TRG	DMETCLPTAL	LITHIUM	6 4	UG/L			100								
SW018	SW	REAL	SW01109WC	30-MAY-91	N	TRG	DMETCLPTAL	MAGNESIUM	16000	UG/L			5000								
SW018	SW	REAL	SW01109WC	30-MAY-91	N	TRG	DMETCLPTAL	MANGANESE	100	UG/L			15								
SW018	SW	REAL	SW01109WC	30-MAY-91	N	TRG	DMETCLPTAL	MERCURY	0.20	UG/L		U	0 2								
SW018	SW	REAL	SW01109WC	30-MAY-91	N	TRG	DMETCLPTAL	MOLYBDENUM	3 0	UG/L		U	50								
SW018	SW	REAL	SW01109WC	30-MAY-91	N	TRG	DMETCLPTAL	NICKEL	12	UG/L			40								
SW018	SW	REAL	SW01109WC	30-MAY-91	N	TRG	DMETCLPTAL	POTASSIUM	3000	UG/L			5000								
SW018	SW	REAL	SW01109WC	30-MAY-91	N	TRG	DMETCLPTAL	SELENIUM	4.0	UG/L		U	5								
SW018	SW	REAL	SW01109WC	30-MAY-91	N	TRG	DMETCLPTAL	SILVER	2 0	UG/L		U	10								
SW018	SW	REAL	SW01109WC	30-MAY-91	N	TRG	DMETCLPTAL	SODIUM	32000	UG/L			5000								
SW018	SW	REAL	SW01109WC	30-MAY-91	N	TRG	DMETCLPTAL	STRONTIUM	480	UG/L			200								
SW018	SW	REAL	SW01109WC	30-MAY-91	N	TRG	DMETCLPTAL	THALLIUM	3 0	UG/L		UI	10								
SW018	SW	REAL	SW01109WC	30-MAY-91	N	TRG	DMETCLPTAL	TIN	13	UG/L		U	200								
SW018	SW	REAL	SW01109WC	30-MAY-91	N	TRG	DMETCLPTAL	VANADIUM	2 0	UG/L		U	50								
SW018	SW	REAL	SW01109WC	30-MAY-91	N	TRG	DMETCLPTAL	ZINC	27	UG/L			20								
SW018	SW	REAL	SW01109WC	30-MAY-91	N	TRG	SMETCLPTCL	ALUMINUM	100	UG/L			200								
SW018	SW	REAL	SW01109WC	30-MAY-91	N	TRG	SMETCLPTCL	ANTIMONY	11	UG/L		U	60								
SW018	SW	REAL	SW01109WC	30-MAY-91	N	TRG	SMETCLPTCL	ARSENIC	4.0	UG/L		U	10								
SW018	SW	REAL	SW01109WC	30-MAY-91	N	TRG	SMETCLPTCL	BARIUM	140	UG/L			200								
SW018	SW	REAL	SW01109WC	30-MAY-91	N	TRG	SMETCLPTCL	BERYLLIUM	1.0	UG/L		U	5								
SW018	SW	REAL	SW01109WC	30-MAY-91	N	TRG	SMETCLPTCL	BERYLLIUM	1 1	UG/L			5								
SW018	SW	REAL	SW01109WC	30-MAY-91	N	TRG	SMETCLPTCL	CALCIUM	89000	UG/L			5000								
SW018	SW	REAL	SW01109WC	30-MAY-91	N	TRG	SMETCLPTCL	CESIUM	50	UG/L		U	1000								
SW018	SW	REAL	SW01109WC	30-MAY-91	N	TRG	SMETCLPTCL	CHROMIUM	2.0	UG/L		U	10								
SW018	SW	REAL	SW01109WC	30-MAY-91	N	TRG	SMETCLPTCL	COBALT	2.0	UG/L		U	50								
SW018	SW	REAL	SW01109WC	30-MAY-91	N	TRG	SMETCLPTCL	COPPER	3 0	UG/L		U	25								
SW018	SW	REAL	SW01109WC	30-MAY-91	N	TRG	SMETCLPTCL	IRON	160	UG/L			100								
SW018	SW	REAL	SW01109WC	30-MAY-91	N	TRG	SMETCLPTCL	LEAD	2.6	UG/L		I	3								
SW018	SW	REAL	SW01109WC	30-MAY-91	N	TRG	SMETCLPTCL	LITHIUM	7.9	UG/L			100								
SW018	SW	REAL	SW01109WC	30-MAY-91	N	TRG	SMETCLPTCL	MAGNESIUM	17000	UG/L			5000								
SW018	SW	REAL	SW01109WC	30-MAY-91	N	TRG	SMETCLPTCL	MANGANESE	120	UG/L			15								
SW018	SW	REAL	SW01109WC	30-MAY-91	N	TRG	SMETCLPTCL	MERCURY	0.20	UG/L		U	0.2								
SW018	SW	REAL	SW01109WC	30-MAY-91	N	TRG	SMETCLPTCL	MOLYBDENUM	3 0	UG/L		U	50								
SW018	SW	REAL	SW01109WC	30-MAY-91	N	TRG	SMETCLPTCL	NICKEL	4 0	UG/L		U	40								
SW018	SW	REAL	SW01109WC	30-MAY-91	N	TRG	SMETCLPTCL	POTASSIUM	2900	UG/L			5000								
SW018	SW	REAL	SW01109WC	30-MAY-91	N	TRG	SMETCLPTCL	SELENIUM	4.0	UG/L		UI	5								
SW018	SW	REAL	SW01109WC	30-MAY-91	N	TRG	SMETCLPTCL	SILVER	2.0	UG/L		U	10								

Loration	ST	QC	Sample Number	Smpl Date	D	ID	Group	Chemical	Result	Unit	Error	Qual	D LMT	VA	RN1	RN2	RN3	RN4	VResult	VQual	VDET
SW018	SW	REAL	SW01109WC	30-MAY-91	N	TRG	SMETCLPTCL	SODIUM	32000	UG/L			5000								
SW018	SW	REAL	SW01109WC	30-MAY-91	N	TRG	SMETCLPTCL	STRONTIUM	480	UG/L			200								
SW018	SW	REAL	SW01109WC	30-MAY-91	N	TRG	SMETCLPTCL	THALLIUM	1 0	UG/L		UI	10								
SW018	SW	REAL	SW01109WC	30-MAY-91	N	TRG	SMETCLPTCL	TIN	13	UG/L		U	200								
SW018	SW	REAL	SW01109WC	30-MAY-91	N	TRG	SMETCLPTCL	VANADIUM	2 0	UG/L		U	50								
SW018	SW	REAL	SW01109WC	30-MAY-91	N	TRG	SMETCLPTCL	ZINC	22	UG/L			20								
SW018	SW	REAL	SW01212WC	17-JUN-91	N	TRG	DMETCLP	SILICON	5280	UG/L			10 5								
SW018	SW	REAL	SW01212WC	17-JUN-91	N	TRG	DMETCLPTAL	ALUMINUM	100	UG/L			200								
SW018	SW	REAL	SW01212WC	17-JUN-91	N	TRG	DMETCLPTAL	ANTIMONY	11	UG/L		U	60								
SW018	SW	REAL	SW01212WC	17-JUN-91	N	TRG	DMETCLPTAL	ARSENIC	2 0	UG/L		U	10								
SW018	SW	REAL	SW01212WC	17-JUN-91	N	TRG	DMETCLPTAL	BARIUM	140	UG/L			200								
SW018	SW	REAL	SW01212WC	17-JUN-91	N	TRG	DMETCLPTAL	BERYLLIUM	1.0	UG/L		U	5								
SW018	SW	REAL	SW01212WC	17-JUN-91	N	TRG	DMETCLPTAL	CALCIUM	82000	UG/L			5000								
SW018	SW	REAL	SW01212WC	17-JUN-91	N	TRG	DMETCLPTAL	CESIUM	60	UG/L			1000								
SW018	SW	REAL	SW01212WC	17-JUN-91	N	TRG	DMETCLPTAL	CHROMIUM	2.0	UG/L		U	10								
SW018	SW	REAL	SW01212WC	17-JUN-91	N	TRG	DMETCLPTAL	COBALT	2 7	UG/L			50								
SW018	SW	REAL	SW01212WC	17-JUN-91	N	TRG	DMETCLPTAL	COPPER	3 0	UG/L		U	25								
SW018	SW	REAL	SW01212WC	17-JUN-91	N	TRG	DMETCLPTAL	IRON	210	UG/L			100								
SW018	SW	REAL	SW01212WC	17-JUN-91	N	TRG	DMETCLPTAL	LEAD	1 3	UG/L			3								
SW018	SW	REAL	SW01212WC	17-JUN-91	N	TRG	DMETCLPTAL	LITHIUM	6 9	UG/L			100								
SW018	SW	REAL	SW01212WC	17-JUN-91	N	TRG	DMETCLPTAL	MAGNESIUM	16000	UG/L			5000								
SW018	SW	REAL	SW01212WC	17-JUN-91	N	TRG	DMETCLPTAL	MANGANESE	150	UG/L			15								
SW018	SW	REAL	SW01212WC	17-JUN-91	N	TRG	DMETCLPTAL	MERCURY	0 20	UG/L		U	0.2								
SW018	SW	REAL	SW01212WC	17-JUN-91	N	TRG	DMETCLPTAL	MOLYBDENUM	3 0	UG/L		U	50								
SW018	SW	REAL	SW01212WC	17-JUN-91	N	TRG	DMETCLPTAL	NICKEL	4 0	UG/L		U	40								
SW018	SW	REAL	SW01212WC	17-JUN-91	N	TRG	DMETCLPTAL	POTASSIUM	2700	UG/L			5000								
SW018	SW	REAL	SW01212WC	17-JUN-91	N	TRG	DMETCLPTAL	SELENIUM	4 0	UG/L		U	5								
SW018	SW	REAL	SW01212WC	17-JUN-91	N	TRG	DMETCLPTAL	SILVER	2.0	UG/L		U	10								
SW018	SW	REAL	SW01212WC	17-JUN-91	N	TRG	DMETCLPTAL	SODIUM	32000	UG/L			5000								
SW018	SW	REAL	SW01212WC	17-JUN-91	N	TRG	DMETCLPTAL	STRONTIUM	470	UG/L			200								
SW018	SW	REAL	SW01212WC	17-JUN-91	N	TRG	DMETCLPTAL	THALLIUM	5 0	UG/L		UI	10								
SW018	SW	REAL	SW01212WC	17-JUN-91	N	TRG	DMETCLPTAL	TIN	13	UG/L		U	200								
SW018	SW	REAL	SW01212WC	17-JUN-91	N	TRG	DMETCLPTAL	VANADIUM	2.0	UG/L		U	50								
SW018	SW	REAL	SW01212WC	17-JUN-91	N	TRG	DMETCLPTAL	ZINC	18	UG/L			20								
SW018	SW	REAL	SW01212WC	17-JUN-91	N	TRG	METCLP	SILICON	5540	UG/L			10 5								
SW018	SW	REAL	SW01212WC	17-JUN-91	N	TRG	SMETCLPTCL	ALUMINUM	32	UG/L			200								
SW018	SW	REAL	SW01212WC	17-JUN-91	N	TRG	SMETCLPTCL	ANTIMONY	11	UG/L		U	60								
SW018	SW	REAL	SW01212WC	17-JUN-91	N	TRG	SMETCLPTCL	ARSENIC	2.0	UG/L		UI	10								
SW018	SW	REAL	SW01212WC	17-JUN-91	N	TRG	SMETCLPTCL	BARIUM	140	UG/L			200								
SW018	SW	REAL	SW01212WC	17-JUN-91	N	TRG	SMETCLPTCL	BERYLLIUM	1.0	UG/L		U	5								
SW018	SW	REAL	SW01212WC	17-JUN-91	N	TRG	SMETCLPTCL	BERYLLIUM	2 4	UG/L			5								
SW018	SW	REAL	SW01212WC	17-JUN-91	N	TRG	SMETCLPTCL	CALCIUM	80000	UG/L			5000								
SW018	SW	REAL	SW01212WC	17-JUN-91	N	TRG	SMETCLPTCL	CESIUM	50	UG/L		U	1000								
SW018	SW	REAL	SW01212WC	17-JUN-91	N	TRG	SMETCLPTCL	CHROMIUM	2.0	UG/L		U	10								
SW018	SW	REAL	SW01212WC	17-JUN-91	N	TRG	SMETCLPTCL	COBALT	2 0	UG/L		U	50								
SW018	SW	REAL	SW01212WC	17-JUN-91	N	TRG	SMETCLPTCL	COPPER	19	UG/L			25								
SW018	SW	REAL	SW01212WC	17-JUN-91	N	TRG	SMETCLPTCL	IRON	20	UG/L			100								
SW018	SW	REAL	SW01212WC	17-JUN-91	N	TRG	SMETCLPTCL	LEAD	2.4	UG/L			3								
SW018	SW	REAL	SW01212WC	17-JUN-91	N	TRG	SMETCLPTCL	LITHIUM	7.4	UG/L			100								
SW018	SW	REAL	SW01212WC	17-JUN-91	N	TRG	SMETCLPTCL	MAGNESIUM	16000	UG/L			5000								
SW018	SW	REAL	SW01212WC	17-JUN-91	N	TRG	SMETCLPTCL	MANGANESE	140	UG/L			15								
SW018	SW	REAL	SW01212WC	17-JUN-91	N	TRG	SMETCLPTCL	MERCURY	0.20	UG/L		U	0 2								
SW018	SW	REAL	SW01212WC	17-JUN-91	N	TRG	SMETCLPTCL	MOLYBDENUM	3.0	UG/L		U	50								
SW018	SW	REAL	SW01212WC	17-JUN-91	N	TRG	SMETCLPTCL	NICKEL	10	UG/L			40								
SW018	SW	REAL	SW01212WC	17-JUN-91	N	TRG	SMETCLPTCL	POTASSIUM	4700	UG/L			5000								
SW018	SW	REAL	SW01212WC	17-JUN-91	N	TRG	SMETCLPTCL	SELENIUM	4.0	UG/L		U	5								
SW018	SW	REAL	SW01212WC	17-JUN-91	N	TRG	SMETCLPTCL	SILVER	2.0	UG/L		U	10								
SW018	SW	REAL	SW01212WC	17-JUN-91	N	TRG	SMETCLPTCL	SODIUM	33000	UG/L			5000								
SW018	SW	REAL	SW01212WC	17-JUN-91	N	TRG	SMETCLPTCL	STRONTIUM	460	UG/L			200								
SW018	SW	REAL	SW01212WC	17-JUN-91	N	TRG	SMETCLPTCL	THALLIUM	1.0	UG/L		UI	10								
SW018	SW	REAL	SW01212WC	17-JUN-91	N	TRG	SMETCLPTCL	TIN	13	UG/L		U	200								
SW018	SW	REAL	SW01212WC	17-JUN-91	N	TRG	SMETCLPTCL	VANADIUM	2.0	UG/L		U	50								
SW018	SW	REAL	SW01212WC	17-JUN-91	N	TRG	SMETCLPTCL	ZINC	20	UG/L			20								

Location	ST	QC	Sample Number	Smpl Date	D	ID	Group	Chemical	Result	Unit	Error	Qual	D LMT	VA	RN1	RN2	RN3	RN4	VResult	VQual	VDET
SW018	SW	REAL	SW01315WC	15-JUL-91	N	TRG	DMETNOCLP	SILICON	6220	UG/L			10 5								
SW018	SW	REAL	SW01315WC	15-JUL-91	N	TRG	SMETNOCLP	SILICON	5920	UG/L			10 5								
SW018	SW	REAL	SW01421WC	19-AUG-91	N	TRG	DMETCLP	ALUMINUM	36.8	UG/L		U	36 8								
SW018	SW	REAL	SW01421WC	19-AUG-91	N	TRG	DMETCLP	ANTIMONY	42 2	UG/L		U	42 2								
SW018	SW	REAL	SW01421WC	19-AUG-91	N	TRG	DMETCLP	ARSENIC	0 70	UG/L		U	0 70								
SW018	SW	REAL	SW01421WC	19-AUG-91	N	TRG	DMETCLP	BARIUM	120	UG/L			4 6								
SW018	SW	REAL	SW01421WC	19-AUG-91	N	TRG	DMETCLP	BERYLLIUM	0.60	UG/L		U	0 60								
SW018	SW	REAL	SW01421WC	19-AUG-91	N	TRG	DMETCLP	CADMIUM	4.6	UG/L		U	4 6								
SW018	SW	REAL	SW01421WC	19-AUG-91	N	TRG	DMETCLP	CALCIUM	76500	UG/L			19.6								
SW018	SW	REAL	SW01421WC	19-AUG-91	N	TRG	DMETCLP	CESIUM	500	UG/L		U	500								
SW018	SW	REAL	SW01421WC	19-AUG-91	N	TRG	DMETCLP	CHROMIUM	5.5	UG/L		U	5 5								
SW018	SW	REAL	SW01421WC	19-AUG-91	N	TRG	DMETCLP	COBALT	7 3	UG/L		U	7 3								
SW018	SW	REAL	SW01421WC	19-AUG-91	N	TRG	DMETCLP	COPPER	5 4	UG/L		U	5 4								
SW018	SW	REAL	SW01421WC	19-AUG-91	N	TRG	DMETCLP	IRON	32.9	UG/L			6 9								
SW018	SW	REAL	SW01421WC	19-AUG-91	N	TRG	DMETCLP	LEAD	0.90	UG/L		U	0 90								
SW018	SW	REAL	SW01421WC	19-AUG-91	N	TRG	DMETCLP	LITHIUM	5 6	UG/L			5 4								
SW018	SW	REAL	SW01421WC	19-AUG-91	N	TRG	DMETCLP	MAGNESIUM	15000	UG/L			57 0								
SW018	SW	REAL	SW01421WC	19-AUG-91	N	TRG	DMETCLP	MANGANESE	161	UG/L			2 5								
SW018	SW	REAL	SW01421WC	19-AUG-91	N	TRG	DMETCLP	MERCURY	0 20	UG/L		U	0 20								
SW018	SW	REAL	SW01421WC	19-AUG-91	N	TRG	DMETCLP	MOLYBDENUM	10 0	UG/L		U	10.0								
SW018	SW	REAL	SW01421WC	19-AUG-91	N	TRG	DMETCLP	NICKEL	10 7	UG/L		U	10 7								
SW018	SW	REAL	SW01421WC	19-AUG-91	N	TRG	DMETCLP	POTASSIUM	2250	UG/L			1070								
SW018	SW	REAL	SW01421WC	19-AUG-91	N	TRG	DMETCLP	SELENIUM	1 2	UG/L		U	1 2								
SW018	SW	REAL	SW01421WC	19-AUG-91	N	TRG	DMETCLP	SILICON	7480	UG/L			20 8								
SW018	SW	REAL	SW01421WC	19-AUG-91	N	TRG	DMETCLP	SILVER	6 8	UG/L		U	6 8								
SW018	SW	REAL	SW01421WC	19-AUG-91	N	TRG	DMETCLP	SODIUM	26800	UG/L			47 8								
SW018	SW	REAL	SW01421WC	19-AUG-91	N	TRG	DMETCLP	STRONTIUM	418	UG/L			7.5								
SW018	SW	REAL	SW01421WC	19-AUG-91	N	TRG	DMETCLP	THALLIUM	1 6	UG/L		U	1 6								
SW018	SW	REAL	SW01421WC	19-AUG-91	N	TRG	DMETCLP	TIN	38.9	UG/L		U	38 9								
SW018	SW	REAL	SW01421WC	19-AUG-91	N	TRG	DMETCLP	VANADIUM	6.5	UG/L		U	6 5								
SW018	SW	REAL	SW01421WC	19-AUG-91	N	TRG	DMETCLP	ZINC	10.5	UG/L			7 2								
SW018	SW	REAL	SW01421WC	19-AUG-91	N	TRG	METCLP	ALUMINUM	49 0	UG/L			36 8								
SW018	SW	REAL	SW01421WC	19-AUG-91	N	TRG	METCLP	ANTIMONY	42.2	UG/L		U	42 2								
SW018	SW	REAL	SW01421WC	19-AUG-91	N	TRG	METCLP	ARSENIC	0.70	UG/L		U	0.70								
SW018	SW	REAL	SW01421WC	19-AUG-91	N	TRG	METCLP	BARIUM	124	UG/L			4 6								
SW018	SW	REAL	SW01421WC	19-AUG-91	N	TRG	METCLP	BERYLLIUM	0 60	UG/L		U	0 60								
SW018	SW	REAL	SW01421WC	19-AUG-91	N	TRG	METCLP	CADMIUM	4 6	UG/L		U	4 6								
SW018	SW	REAL	SW01421WC	19-AUG-91	N	TRG	METCLP	CALCIUM	74100	UG/L			19 6								
SW018	SW	REAL	SW01421WC	19-AUG-91	N	TRG	METCLP	CESIUM	500	UG/L		U	500								
SW018	SW	REAL	SW01421WC	19-AUG-91	N	TRG	METCLP	CHROMIUM	5 5	UG/L		U	5 5								
SW018	SW	REAL	SW01421WC	19-AUG-91	N	TRG	METCLP	COBALT	7 3	UG/L		U	7 3								
SW018	SW	REAL	SW01421WC	19-AUG-91	N	TRG	METCLP	COPPER	5 4	UG/L		U	5 4								
SW018	SW	REAL	SW01421WC	19-AUG-91	N	TRG	METCLP	IRON	232	UG/L			6 9								
SW018	SW	REAL	SW01421WC	19-AUG-91	N	TRG	METCLP	LEAD	0.80	UG/L		U	0 80								
SW018	SW	REAL	SW01421WC	19-AUG-91	N	TRG	METCLP	LITHIUM	6.7	UG/L			5 4								
SW018	SW	REAL	SW01421WC	19-AUG-91	N	TRG	METCLP	MAGNESIUM	14400	UG/L			57 0								
SW018	SW	REAL	SW01421WC	19-AUG-91	N	TRG	METCLP	MANGANESE	164	UG/L			2 5								
SW018	SW	REAL	SW01421WC	19-AUG-91	N	TRG	METCLP	MERCURY	0 20	UG/L			0 20								
SW018	SW	REAL	SW01421WC	19-AUG-91	N	TRG	METCLP	MOLYBDENUM	10.0	UG/L		U	10 0								
SW018	SW	REAL	SW01421WC	19-AUG-91	N	TRG	METCLP	NICKEL	10 7	UG/L		U	10 7								
SW018	SW	REAL	SW01421WC	19-AUG-91	N	TRG	METCLP	POTASSIUM	2460	UG/L			1070								
SW018	SW	REAL	SW01421WC	19-AUG-91	N	TRG	METCLP	SELENIUM	1 2	UG/L		U	1 2								
SW018	SW	REAL	SW01421WC	19-AUG-91	N	TRG	METCLP	SILICON	6670	UG/L			20 8								
SW018	SW	REAL	SW01421WC	19-AUG-91	N	TRG	METCLP	SILVER	6 8	UG/L		U	6.8								
SW018	SW	REAL	SW01421WC	19-AUG-91	N	TRG	METCLP	SODIUM	26300	UG/L			47 8								
SW018	SW	REAL	SW01421WC	19-AUG-91	N	TRG	METCLP	STRONTIUM	419	UG/L			7.5								
SW018	SW	REAL	SW01421WC	19-AUG-91	N	TRG	METCLP	THALLIUM	1 6	UG/L		U	1 6								
SW018	SW	REAL	SW01421WC	19-AUG-91	N	TRG	METCLP	TIN	38.9	UG/L		U	38.9								
SW018	SW	REAL	SW01421WC	19-AUG-91	N	TRG	METCLP	VANADIUM	6.5	UG/L		U	6 5								
SW018	SW	REAL	SW01421WC	19-AUG-91	N	TRG	METCLP	ZINC	7 2	UG/L		U	7.2								
SW018	SW	REAL	SW01527WC	09-SEP-91	N	TRG	DMETCLP	SILICON	6820	UG/L			20 8								
SW018	SW	REAL	SW01527WC	09-SEP-91	N	TRG	DMETCLPTAL	ALUMINUM	17	UG/L		U	200								
SW018	SW	REAL	SW01527WC	09-SEP-91	N	TRG	DMETCLPTAL	ANTIMONY	14	UG/L		U	60								

Location	ST	QC	Sample Number	Smpl Date	D	ID	Group	Chemical	Result	Unit	Error	Qual	D LMT	VA	RN1	RN2	RN3	RN4	VResult	VQual	VDET
SW018	SW	REAL	SW01527WC	09-SEP-91	N	TRG	DMETCLPTAL	ARSENIC	2 0	UG/L		UI	10								
SW018	SW	REAL	SW01527WC	09-SEP-91	N	TRG	DMETCLPTAL	BARIUM	120	UG/L			200								
SW018	SW	REAL	SW01527WC	09-SEP-91	N	TRG	DMETCLPTAL	BERYLLIUM	1 0	UG/L		U	5								
SW018	SW	REAL	SW01527WC	09-SEP-91	N	TRG	DMETCLPTAL	BERYLLIUM	1 4	UG/L			5								
SW018	SW	REAL	SW01527WC	09-SEP-91	N	TRG	DMETCLPTAL	CALCIUM	83000	UG/L			5000								
SW018	SW	REAL	SW01527WC	09-SEP-91	N	TRG	DMETCLPTAL	CESIUM	50	UG/L			1000								
SW018	SW	REAL	SW01527WC	09-SEP-91	N	TRG	DMETCLPTAL	CHROMIUM	2 0	UG/L		U	10								
SW018	SW	REAL	SW01527WC	09-SEP-91	N	TRG	DMETCLPTAL	COBALT	2 0	UG/L		U	50								
SW018	SW	REAL	SW01527WC	09-SEP-91	N	TRG	DMETCLPTAL	COPPER	2 0	UG/L		U	25								
SW018	SW	REAL	SW01527WC	09-SEP-91	N	TRG	DMETCLPTAL	IRON	8 5	UG/L			100								
SW018	SW	REAL	SW01527WC	09-SEP-91	N	TRG	DMETCLPTAL	LEAD	2 4	UG/L			3								
SW018	SW	REAL	SW01527WC	09-SEP-91	N	TRG	DMETCLPTAL	LITHIUM	6 1	UG/L			100								
SW018	SW	REAL	SW01527WC	09-SEP-91	N	TRG	DMETCLPTAL	MAGNESIUM	16000	UG/L			5000								
SW018	SW	REAL	SW01527WC	09-SEP-91	N	TRG	DMETCLPTAL	MANGANESE	180	UG/L			15								
SW018	SW	REAL	SW01527WC	09-SEP-91	N	TRG	DMETCLPTAL	MERCURY	0 20	UG/L		U	0 2								
SW018	SW	REAL	SW01527WC	09-SEP-91	N	TRG	DMETCLPTAL	MOLYBDENUM	4 0	UG/L		U	50								
SW018	SW	REAL	SW01527WC	09-SEP-91	N	TRG	DMETCLPTAL	NICKEL	5 0	UG/L		U	40								
SW018	SW	REAL	SW01527WC	09-SEP-91	N	TRG	DMETCLPTAL	POTASSIUM	2100	UG/L			5000								
SW018	SW	REAL	SW01527WC	09-SEP-91	N	TRG	DMETCLPTAL	SELENIUM	4 0	UG/L		UI	5								
SW018	SW	REAL	SW01527WC	09-SEP-91	N	TRG	DMETCLPTAL	SILVER	5 0	UG/L		U	10								
SW018	SW	REAL	SW01527WC	09-SEP-91	N	TRG	DMETCLPTAL	SODIUM	28000	UG/L			5000								
SW018	SW	REAL	SW01527WC	09-SEP-91	N	TRG	DMETCLPTAL	STRONTIUM	470	UG/L			200								
SW018	SW	REAL	SW01527WC	09-SEP-91	N	TRG	DMETCLPTAL	THALLIUM	1 0	UG/L		UI	10								
SW018	SW	REAL	SW01527WC	09-SEP-91	N	TRG	DMETCLPTAL	TIN	11	UG/L		U	200								
SW018	SW	REAL	SW01527WC	09-SEP-91	N	TRG	DMETCLPTAL	VANADIUM	2 0	UG/L		U	50								
SW018	SW	REAL	SW01527WC	09-SEP-91	N	TRG	DMETCLPTAL	ZINC	5 0	UG/L		U	20								
SW018	SW	REAL	SW01527WC	09-SEP-91	N	TRG	SMETCLPTCL	ALUMINUM	41	UG/L			200								
SW018	SW	REAL	SW01527WC	09-SEP-91	N	TRG	SMETCLPTCL	ANTIMONY	14	UG/L		U	60								
SW018	SW	REAL	SW01527WC	09-SEP-91	N	TRG	SMETCLPTCL	ARSENIC	2 0	UG/L		U	10								
SW018	SW	REAL	SW01527WC	09-SEP-91	N	TRG	SMETCLPTCL	BARIUM	130	UG/L			200								
SW018	SW	REAL	SW01527WC	09-SEP-91	N	TRG	SMETCLPTCL	BERYLLIUM	1 0	UG/L		U	5								
SW018	SW	REAL	SW01527WC	09-SEP-91	N	TRG	SMETCLPTCL	CALCIUM	84000	UG/L			5000								
SW018	SW	REAL	SW01527WC	09-SEP-91	N	TRG	SMETCLPTCL	CESIUM	60	UG/L			1000								
SW018	SW	REAL	SW01527WC	09-SEP-91	N	TRG	SMETCLPTCL	CHROMIUM	2.0	UG/L		U	10								
SW018	SW	REAL	SW01527WC	09-SEP-91	N	TRG	SMETCLPTCL	COBALT	2 0	UG/L		U	50								
SW018	SW	REAL	SW01527WC	09-SEP-91	N	TRG	SMETCLPTCL	COPPER	2 0	UG/L		U	25								
SW018	SW	REAL	SW01527WC	09-SEP-91	N	TRG	SMETCLPTCL	IRON	480	UG/L			100								
SW018	SW	REAL	SW01527WC	09-SEP-91	N	TRG	SMETCLPTCL	LEAD	3.2	UG/L			3								
SW018	SW	REAL	SW01527WC	09-SEP-91	N	TRG	SMETCLPTCL	LITHIUM	8 4	UG/L			100								
SW018	SW	REAL	SW01527WC	09-SEP-91	N	TRG	SMETCLPTCL	MAGNESIUM	17000	UG/L			5000								
SW018	SW	REAL	SW01527WC	09-SEP-91	N	TRG	SMETCLPTCL	MANGANESE	170	UG/L			15								
SW018	SW	REAL	SW01527WC	09-SEP-91	N	TRG	SMETCLPTCL	MERCURY	0.20	UG/L		U	0 2								
SW018	SW	REAL	SW01527WC	09-SEP-91	N	TRG	SMETCLPTCL	MOLYBDENUM	4 0	UG/L		U	50								
SW018	SW	REAL	SW01527WC	09-SEP-91	N	TRG	SMETCLPTCL	NICKEL	5.0	UG/L		U	40								
SW018	SW	REAL	SW01527WC	09-SEP-91	N	TRG	SMETCLPTCL	POTASSIUM	2000	UG/L			5000								
SW018	SW	REAL	SW01527WC	09-SEP-91	N	TRG	SMETCLPTCL	SELENIUM	4.0	UG/L		UI	5								
SW018	SW	REAL	SW01527WC	09-SEP-91	N	TRG	SMETCLPTCL	SILVER	5 0	UG/L		U	10								
SW018	SW	REAL	SW01527WC	09-SEP-91	N	TRG	SMETCLPTCL	SODIUM	29000	UG/L			5000								
SW018	SW	REAL	SW01527WC	09-SEP-91	N	TRG	SMETCLPTCL	STRONTIUM	470	UG/L			200								
SW018	SW	REAL	SW01527WC	09-SEP-91	N	TRG	SMETCLPTCL	THALLIUM	4 0	UG/L		UI	10								
SW018	SW	REAL	SW01527WC	09-SEP-91	N	TRG	SMETCLPTCL	TIN	11	UG/L		U	200								
SW018	SW	REAL	SW01527WC	09-SEP-91	N	TRG	SMETCLPTCL	VANADIUM	2 0	UG/L		U	50								
SW018	SW	REAL	SW01527WC	09-SEP-91	N	TRG	SMETCLPTCL	ZINC	5.0	UG/L		U	20								
SW018	SW	REAL	SW01633WC	07-OCT-91	N	TRG	DMETCLPTAL	ALUMINUM	22.3	UG/L		U	22 3								
SW018	SW	REAL	SW01633WC	07-OCT-91	N	TRG	DMETCLPTAL	ANTIMONY	13 8	UG/L		U	13 8								
SW018	SW	REAL	SW01633WC	07-OCT-91	N	TRG	DMETCLPTAL	ARSENIC	1.0	UG/L		U	1 0								
SW018	SW	REAL	SW01633WC	07-OCT-91	N	TRG	DMETCLPTAL	BARIUM	90.8	UG/L			5 6								
SW018	SW	REAL	SW01633WC	07-OCT-91	N	TRG	DMETCLPTAL	BERYLLIUM	0.50	UG/L		U	0 50								
SW018	SW	REAL	SW01633WC	07-OCT-91	N	TRG	DMETCLPTAL	CADMIUM	2.4	UG/L		U	2 4								
SW018	SW	REAL	SW01633WC	07-OCT-91	N	TRG	DMETCLPTAL	CALCIUM	76300	UG/L			29.2								
SW018	SW	REAL	SW01633WC	07-OCT-91	N	TRG	DMETCLPTAL	CHROMIUM	2.6	UG/L		U	2 6								
SW018	SW	REAL	SW01633WC	07-OCT-91	N	TRG	DMETCLPTAL	COBALT	2.8	UG/L		U	2 8								
SW018	SW	REAL	SW01633WC	07-OCT-91	N	TRG	DMETCLPTAL	COPPER	2.1	UG/L		U	2 1								

Location	ST	QC	Sample Number	Smpl Date	D	ID	Group	Chemical	Result	Unit	Error	Qual	D LMT	VA	RN1	RN2	RN3	RN4	VResult	VQual	VDET
SW018	SW	REAL	SW01633WC	07-OCT-91	N	TRG	DMETCLPTAL	IRON	23 9	UG/L			16 7								
SW018	SW	REAL	SW01633WC	07-OCT-91	N	TRG	DMETCLPTAL	LEAD	1.4	UG/L			0 90								
SW018	SW	REAL	SW01633WC	07-OCT-91	N	TRG	DMETCLPTAL	MAGNESIUM	14600	UG/L			33 1								
SW018	SW	REAL	SW01633WC	07-OCT-91	N	TRG	DMETCLPTAL	MANGANESE	204	UG/L			1.3								
SW018	SW	REAL	SW01633WC	07-OCT-91	N	TRG	DMETCLPTAL	MERCURY	0.20	UG/L		U	0 20								
SW018	SW	REAL	SW01633WC	07-OCT-91	N	TRG	DMETCLPTAL	NICKEL	5 9	UG/L		U	5.9								
SW018	SW	REAL	SW01633WC	07-OCT-91	N	TRG	DMETCLPTAL	POTASSIUM	2480	UG/L			675								
SW018	SW	REAL	SW01633WC	07-OCT-91	N	TRG	DMETCLPTAL	SELENIUM	1.5	UG/L		U	1 5								
SW018	SW	REAL	SW01633WC	07-OCT-91	N	TRG	DMETCLPTAL	SILVER	2.9	UG/L		U	2 9								
SW018	SW	REAL	SW01633WC	07-OCT-91	N	TRG	DMETCLPTAL	SODIUM	26000	UG/L			172								
SW018	SW	REAL	SW01633WC	07-OCT-91	N	TRG	DMETCLPTAL	THALLIUM	1.9	UG/L		U	1 9								
SW018	SW	REAL	SW01633WC	07-OCT-91	N	TRG	DMETCLPTAL	VANADIUM	2 3	UG/L		U	2 3								
SW018	SW	REAL	SW01633WC	07-OCT-91	N	TRG	DMETCLPTAL	ZINC	4 3	UG/L		U	4.3								
SW018	SW	REAL	SW01633WC	07-OCT-91	N	TRG	DMETNOCLP	CESIUM	500	UG/L		U	500								
SW018	SW	REAL	SW01633WC	07-OCT-91	N	TRG	DMETNOCLP	LITHIUM	7 1	UG/L		U	7 1								
SW018	SW	REAL	SW01633WC	07-OCT-91	N	TRG	DMETNOCLP	MOLYBDENUM	5.8	UG/L		U	5 8								
SW018	SW	REAL	SW01633WC	07-OCT-91	N	TRG	DMETNOCLP	SILICON	7000	UG/L			21 0								
SW018	SW	REAL	SW01633WC	07-OCT-91	N	TRG	DMETNOCLP	STRONTIUM	400	UG/L			2 3								
SW018	SW	REAL	SW01633WC	07-OCT-91	N	TRG	DMETNOCLP	TIN	10 4	UG/L		U	10 4								
SW019	SW	REAL	SW01076WC	12-APR-91	N	TRG	DMETCLPTAL	ALUMINUM	108	UG/L		U	108								
SW019	SW	REAL	SW01076WC	12-APR-91	N	TRG	DMETCLPTAL	ANTIMONY	25.6	UG/L		U	25 6								
SW019	SW	REAL	SW01076WC	12-APR-91	N	TRG	DMETCLPTAL	ARSENIC	0 90	UG/L		U	0 90								
SW019	SW	REAL	SW01076WC	12-APR-91	N	TRG	DMETCLPTAL	BARIUM	26.4	UG/L			1 3								
SW019	SW	REAL	SW01076WC	12-APR-91	N	TRG	DMETCLPTAL	BERYLLIUM	0 50	UG/L		U	0 50								
SW019	SW	REAL	SW01076WC	12-APR-91	N	TRG	DMETCLPTAL	CADMIUM	3 3	UG/L		U	3 3								
SW019	SW	REAL	SW01076WC	12-APR-91	N	TRG	DMETCLPTAL	CALCIUM	10900	UG/L			14 5								
SW019	SW	REAL	SW01076WC	12-APR-91	N	TRG	DMETCLPTAL	CHROMIUM	4 1	UG/L		U	4 1								
SW019	SW	REAL	SW01076WC	12-APR-91	N	TRG	DMETCLPTAL	COBALT	3 6	UG/L		U	3.6								
SW019	SW	REAL	SW01076WC	12-APR-91	N	TRG	DMETCLPTAL	COPPER	4 7	UG/L		U	4 7								
SW019	SW	REAL	SW01076WC	12-APR-91	N	TRG	DMETCLPTAL	IRON	106	UG/L			6 3								
SW019	SW	REAL	SW01076WC	12-APR-91	N	TRG	DMETCLPTAL	LEAD	3.1	UG/L			1.5								
SW019	SW	REAL	SW01076WC	12-APR-91	N	TRG	DMETCLPTAL	MAGNESIUM	1150	UG/L			36 6								
SW019	SW	REAL	SW01076WC	12-APR-91	N	TRG	DMETCLPTAL	MANGANESE	15.2	UG/L			1.0								
SW019	SW	REAL	SW01076WC	12-APR-91	N	TRG	DMETCLPTAL	MERCURY	0 20	UG/L		U	0 20								
SW019	SW	REAL	SW01076WC	12-APR-91	N	TRG	DMETCLPTAL	NICKEL	14.7	UG/L		U	14 7								
SW019	SW	REAL	SW01076WC	12-APR-91	N	TRG	DMETCLPTAL	POTASSIUM	19900	UG/L			2050								
SW019	SW	REAL	SW01076WC	12-APR-91	N	TRG	DMETCLPTAL	SELENIUM	1.1	UG/L		U	1 1								
SW019	SW	REAL	SW01076WC	12-APR-91	N	TRG	DMETCLPTAL	SILVER	5 0	UG/L		U	5.0								
SW019	SW	REAL	SW01076WC	12-APR-91	N	TRG	DMETCLPTAL	SODIUM	64000	UG/L			43 5								
SW019	SW	REAL	SW01076WC	12-APR-91	N	TRG	DMETCLPTAL	THALLIUM	1 4	UG/L		U	1 4								
SW019	SW	REAL	SW01076WC	12-APR-91	N	TRG	DMETCLPTAL	VANADIUM	5.7	UG/L		U	5.7								
SW019	SW	REAL	SW01076WC	12-APR-91	N	TRG	DMETCLPTAL	ZINC	33 7	UG/L			1 8								
SW019	SW	REAL	SW01076WC	12-APR-91	N	TRG	DMETNOCLP	CESIUM	500	UG/L		U	500								
SW019	SW	REAL	SW01076WC	12-APR-91	N	TRG	DMETNOCLP	LITHIUM	2.0	UG/L			2.0								
SW019	SW	REAL	SW01076WC	12-APR-91	N	TRG	DMETNOCLP	MOLYBDENUM	5 7	UG/L		U	5 7								
SW019	SW	REAL	SW01076WC	12-APR-91	N	TRG	DMETNOCLP	SILICON	969	UG/L			25 7								
SW019	SW	REAL	SW01076WC	12-APR-91	N	TRG	DMETNOCLP	STRONTIUM	55.2	UG/L			3.5								
SW019	SW	REAL	SW01076WC	12-APR-91	N	TRG	DMETNOCLP	TIN	14 8	UG/L		U	14 8								
SW019	SW	REAL	SW01076WC	12-APR-91	N	TRG	SMETCLPTCL	ALUMINUM	6290	UG/L			108								
SW019	SW	REAL	SW01076WC	12-APR-91	N	TRG	SMETCLPTCL	ANTIMONY	25.6	UG/L		U	25 6								
SW019	SW	REAL	SW01076WC	12-APR-91	N	TRG	SMETCLPTCL	ARSENIC	0.90	UG/L		U	0 90								
SW019	SW	REAL	SW01076WC	12-APR-91	N	TRG	SMETCLPTCL	BARIUM	68 6	UG/L			1.3								
SW019	SW	REAL	SW01076WC	12-APR-91	N	TRG	SMETCLPTCL	BERYLLIUM	0.50	UG/L		U	0 50								
SW019	SW	REAL	SW01076WC	12-APR-91	N	TRG	SMETCLPTCL	CADMIUM	3.3	UG/L		U	3.3								
SW019	SW	REAL	SW01076WC	12-APR-91	N	TRG	SMETCLPTCL	CALCIUM	12200	UG/L			14.5								
SW019	SW	REAL	SW01076WC	12-APR-91	N	TRG	SMETCLPTCL	CHROMIUM	12.8	UG/L			4.1								
SW019	SW	REAL	SW01076WC	12-APR-91	N	TRG	SMETCLPTCL	COBALT	5.4	UG/L			3.6								
SW019	SW	REAL	SW01076WC	12-APR-91	N	TRG	SMETCLPTCL	COPPER	16.2	UG/L			4.7								
SW019	SW	REAL	SW01076WC	12-APR-91	N	TRG	SMETCLPTCL	IRON	6400	UG/L			6 3								
SW019	SW	REAL	SW01076WC	12-APR-91	N	TRG	SMETCLPTCL	LEAD	29 1	UG/L			1 5								
SW019	SW	REAL	SW01076WC	12-APR-91	N	TRG	SMETCLPTCL	MAGNESIUM	2590	UG/L			36.6								
SW019	SW	REAL	SW01076WC	12-APR-91	N	TRG	SMETCLPTCL	MANGANESE	97 0	UG/L			1.0								
SW019	SW	REAL	SW01076WC	12-APR-91	N	TRG	SMETCLPTCL	MERCURY	0.20	UG/L		U	0.20								

Loration	ST	QC	Sample Number	Smpl Date	D	ID	Group	Chemical	Result	Unit	Error	Qual	D LMT	VA	RN1	RN2	RN3	RN4	VResult	VQual	VDET
SW019	SW	REAL	SW01076WC	12-APR-91	N	TRG	SMETCLPTCL	NICKEL	14 7	UG/L		U	14 7								
SW019	SW	REAL	SW01076WC	12-APR-91	N	TRG	SMETCLPTCL	POTASSIUM	21600	UG/L			2050								
SW019	SW	REAL	SW01076WC	12-APR-91	N	TRG	SMETCLPTCL	SELENIUM	1.1	UG/L		U	1 1								
SW019	SW	REAL	SW01076WC	12-APR-91	N	TRG	SMETCLPTCL	SILVER	5 0	UG/L		U	5 0								
SW019	SW	REAL	SW01076WC	12-APR-91	N	TRG	SMETCLPTCL	SODIUM	63000	UG/L			43 5								
SW019	SW	REAL	SW01076WC	12-APR-91	N	TRG	SMETCLPTCL	THALLIUM	1.4	UG/L		U	1 4								
SW019	SW	REAL	SW01076WC	12-APR-91	N	TRG	SMETCLPTCL	VANADIUM	18 6	UG/L			5 7								
SW019	SW	REAL	SW01076WC	12-APR-91	N	TRG	SMETCLPTCL	ZINC	144	UG/L			1 8								
SW019	SW	REAL	SW01076WC	12-APR-91	N	TRG	SMETNOCLP	CESIUM	500	UG/L		U	500								
SW019	SW	REAL	SW01076WC	12-APR-91	N	TRG	SMETNOCLP	LITHIUM	6 9	UG/L			2 0								
SW019	SW	REAL	SW01076WC	12-APR-91	N	TRG	SMETNOCLP	MOLYBDENUM	5 7	UG/L		U	5 7								
SW019	SW	REAL	SW01076WC	12-APR-91	N	TRG	SMETNOCLP	SILICON	14700	UG/L			25.7								
SW019	SW	REAL	SW01076WC	12-APR-91	N	TRG	SMETNOCLP	STRONTIUM	65.0	UG/L			3 5								
SW019	SW	REAL	SW01076WC	12-APR-91	N	TRG	SMETNOCLP	TIN	14 8	UG/L		U	14 8								
SW019	SW	REAL	SW01389WC	23-JUL-91	N																
SW019	SW	REAL	SW01495WC	22-AUG-91	Y																
SW019	SW	REAL	SW01601WC	23-SEP-91	Y																
SW019	SW	REAL	SW01707WC	31-OCT-91	Y																
SW020	SW	REAL	SW01077WC	12-APR-91	N	TRG	DMETCLPTAL	ALUMINUM	108	UG/L		U	108								
SW020	SW	REAL	SW01077WC	12-APR-91	N	TRG	DMETCLPTAL	ANTIMONY	25.6	UG/L		U	25 6								
SW020	SW	REAL	SW01077WC	12-APR-91	N	TRG	DMETCLPTAL	ARSENIC	0 90	UG/L		U	0 90								
SW020	SW	REAL	SW01077WC	12-APR-91	N	TRG	DMETCLPTAL	BARIUM	17 3	UG/L			1 3								
SW020	SW	REAL	SW01077WC	12-APR-91	N	TRG	DMETCLPTAL	BERYLLIUM	0.50	UG/L		U	0 50								
SW020	SW	REAL	SW01077WC	12-APR-91	N	TRG	DMETCLPTAL	CADMIUM	3 3	UG/L		U	3 3								
SW020	SW	REAL	SW01077WC	12-APR-91	N	TRG	DMETCLPTAL	CALCIUM	10800	UG/L			14 5								
SW020	SW	REAL	SW01077WC	12-APR-91	N	TRG	DMETCLPTAL	CHROMIUM	4 1	UG/L		U	4 1								
SW020	SW	REAL	SW01077WC	12-APR-91	N	TRG	DMETCLPTAL	COBALT	3 6	UG/L		U	3.6								
SW020	SW	REAL	SW01077WC	12-APR-91	N	TRG	DMETCLPTAL	COPPER	19 7	UG/L			4.7								
SW020	SW	REAL	SW01077WC	12-APR-91	N	TRG	DMETCLPTAL	IRON	93 5	UG/L			6 3								
SW020	SW	REAL	SW01077WC	12-APR-91	N	TRG	DMETCLPTAL	LEAD	1.9	UG/L			1 5								
SW020	SW	REAL	SW01077WC	12-APR-91	N	TRG	DMETCLPTAL	MAGNESIUM	1130	UG/L			36 6								
SW020	SW	REAL	SW01077WC	12-APR-91	N	TRG	DMETCLPTAL	MANGANESE	6 2	UG/L			1 0								
SW020	SW	REAL	SW01077WC	12-APR-91	N	TRG	DMETCLPTAL	MERCURY	0.20	UG/L		U	0 20								
SW020	SW	REAL	SW01077WC	12-APR-91	N	TRG	DMETCLPTAL	NICKEL	15.5	UG/L			14 7								
SW020	SW	REAL	SW01077WC	12-APR-91	N	TRG	DMETCLPTAL	POTASSIUM	4270	UG/L			2050								
SW020	SW	REAL	SW01077WC	12-APR-91	N	TRG	DMETCLPTAL	SELENIUM	1.1	UG/L		U	1 1								
SW020	SW	REAL	SW01077WC	12-APR-91	N	TRG	DMETCLPTAL	SILVER	5 0	UG/L		U	5 0								
SW020	SW	REAL	SW01077WC	12-APR-91	N	TRG	DMETCLPTAL	SODIUM	32900	UG/L			43 5								
SW020	SW	REAL	SW01077WC	12-APR-91	N	TRG	DMETCLPTAL	THALLIUM	1.4	UG/L		U	1.4								
SW020	SW	REAL	SW01077WC	12-APR-91	N	TRG	DMETCLPTAL	VANADIUM	5 7	UG/L		U	5 7								
SW020	SW	REAL	SW01077WC	12-APR-91	N	TRG	DMETCLPTAL	ZINC	16 2	UG/L			1.8								
SW020	SW	REAL	SW01077WC	12-APR-91	N	TRG	DMETNOCLP	CESIUM	500	UG/L		U	500								
SW020	SW	REAL	SW01077WC	12-APR-91	N	TRG	DMETNOCLP	LITHIUM	2.0	UG/L			2 0								
SW020	SW	REAL	SW01077WC	12-APR-91	N	TRG	DMETNOCLP	MOLYBDENUM	5.7	UG/L		U	5 7								
SW020	SW	REAL	SW01077WC	12-APR-91	N	TRG	DMETNOCLP	SILICON	1030	UG/L			25 7								
SW020	SW	REAL	SW01077WC	12-APR-91	N	TRG	DMETNOCLP	STRONTIUM	52.0	UG/L			3.5								
SW020	SW	REAL	SW01077WC	12-APR-91	N	TRG	DMETNOCLP	TIN	14 8	UG/L		U	14 8								
SW020	SW	REAL	SW01077WC	12-APR-91	N	TRG	SMETCLPTCL	ALUMINUM	13000	UG/L			108								
SW020	SW	REAL	SW01077WC	12-APR-91	N	TRG	SMETCLPTCL	ANTIMONY	25 6	UG/L		U	25 6								
SW020	SW	REAL	SW01077WC	12-APR-91	N	TRG	SMETCLPTCL	ARSENIC	1 6	UG/L			0.90								
SW020	SW	REAL	SW01077WC	12-APR-91	N	TRG	SMETCLPTCL	BARIUM	94.5	UG/L			1 3								
SW020	SW	REAL	SW01077WC	12-APR-91	N	TRG	SMETCLPTCL	BERYLLIUM	0.70	UG/L			0.50								
SW020	SW	REAL	SW01077WC	12-APR-91	N	TRG	SMETCLPTCL	CADMIUM	3 3	UG/L		U	3 3								
SW020	SW	REAL	SW01077WC	12-APR-91	N	TRG	SMETCLPTCL	CALCIUM	18800	UG/L			14 5								
SW020	SW	REAL	SW01077WC	12-APR-91	N	TRG	SMETCLPTCL	CHROMIUM	10 8	UG/L			4.1								
SW020	SW	REAL	SW01077WC	12-APR-91	N	TRG	SMETCLPTCL	COBALT	4.1	UG/L			3.6								
SW020	SW	REAL	SW01077WC	12-APR-91	N	TRG	SMETCLPTCL	COPPER	17.6	UG/L			4.7								
SW020	SW	REAL	SW01077WC	12-APR-91	N	TRG	SMETCLPTCL	IRON	12200	UG/L			6.3								
SW020	SW	REAL	SW01077WC	12-APR-91	N	TRG	SMETCLPTCL	LEAD	26 4	UG/L			1.5								
SW020	SW	REAL	SW01077WC	12-APR-91	N	TRG	SMETCLPTCL	MAGNESIUM	4080	UG/L			36.6								
SW020	SW	REAL	SW01077WC	12-APR-91	N	TRG	SMETCLPTCL	MANGANESE	149	UG/L			1.0								
SW020	SW	REAL	SW01077WC	12-APR-91	N	TRG	SMETCLPTCL	MERCURY	0.20	UG/L		U	0 20								
SW020	SW	REAL	SW01077WC	12-APR-91	N	TRG	SMETCLPTCL	NICKEL	20.6	UG/L			14.7								

Location	ST	QC	Sample Number	Smpl Date	D	ID	Group	Chemical	Result	Unit	Error	Qual	D LMT	VA	RN1	RN2	RN3	RN4	VResult	VQual	VDET
SW020	SW	REAL	SW01077WC	12-APR-91	N	TRG	SMETCLPTCL	POTASSIUM	6750	UG/L			2050								
SW020	SW	REAL	SW01077WC	12-APR-91	N	TRG	SMETCLPTCL	SELENIUM	1 1	UG/L		U	1 1								
SW020	SW	REAL	SW01077WC	12-APR-91	N	TRG	SMETCLPTCL	SILVER	5 0	UG/L		U	5 0								
SW020	SW	REAL	SW01077WC	12-APR-91	N	TRG	SMETCLPTCL	SODIUM	32900	UG/L			43 5								
SW020	SW	REAL	SW01077WC	12-APR-91	N	TRG	SMETCLPTCL	THALLIUM	1.4	UG/L		U	1 4								
SW020	SW	REAL	SW01077WC	12-APR-91	N	TRG	SMETCLPTCL	VANADIUM	30 3	UG/L			5 7								
SW020	SW	REAL	SW01077WC	12-APR-91	N	TRG	SMETCLPTCL	ZINC	164	UG/L			1 8								
SW020	SW	REAL	SW01077WC	12-APR-91	N	TRG	SMETNOCLP	CESIUM	500	UG/L		U	500								
SW020	SW	REAL	SW01077WC	12-APR-91	N	TRG	SMETNOCLP	LITHIUM	10 4	UG/L			2.0								
SW020	SW	REAL	SW01077WC	12-APR-91	N	TRG	SMETNOCLP	MOLYBDENUM	5 7	UG/L		U	5 7								
SW020	SW	REAL	SW01077WC	12-APR-91	N	TRG	SMETNOCLP	SILICON	29300	UG/L			25.7								
SW020	SW	REAL	SW01077WC	12-APR-91	N	TRG	SMETNOCLP	STRONTIUM	88 8	UG/L			3.5								
SW020	SW	REAL	SW01077WC	12-APR-91	N	TRG	SMETNOCLP	TIN	14 8	UG/L		U	14.8								
SW020	SW	REAL	SW01390WC	23-JUL-91	N																
SW020	SW	REAL	SW01496WC	22-AUG-91	Y																
SW020	SW	REAL	SW01602WC	23-SEP-91	Y																
SW020	SW	REAL	SW01708WC	31-OCT-91	Y																
SW022	SW	REAL	SW01078WC	12-APR-91	Y																
SW022	SW	REAL	SW01391WC	23-JUL-91	N																
SW022	SW	REAL	SW01497WC	22-AUG-91	Y																
SW022	SW	REAL	SW01603WC	23-SEP-91	Y																
SW022	SW	REAL	SW01709WC	31-OCT-91	Y																
SW022	SW	REAL	SW60067WCA	15-MAR-91	N																
SW022	SW	REAL	SW60070WC	10-APR-91	N																
SW022	SW	REAL	SW60071WC	15-APR-91	N																
SW022	SW	REAL	SW60074WC	15-APR-91	N																
SW022	SW	REAL	SW60078WC	01-MAY-91	N																
SW022	SW	REAL	SW60082WC	01-MAY-91	N																
SW022	SW	REAL	SW60087WC	06-MAY-91	N																
SW022	SW	REAL	SW60088WC	17-MAY-91	N	TRG	SMETCLPTCL	ALUMINUM	18000	UG/L			200								
SW022	SW	REAL	SW60088WC	17-MAY-91	N	TRG	SMETCLPTCL	ANTIMONY	17	UG/L		U	60								
SW022	SW	REAL	SW60088WC	17-MAY-91	N	TRG	SMETCLPTCL	ARSENIC	4 1	UG/L			10								
SW022	SW	REAL	SW60088WC	17-MAY-91	N	TRG	SMETCLPTCL	BARIUM	180	UG/L			200								
SW022	SW	REAL	SW60088WC	17-MAY-91	N	TRG	SMETCLPTCL	BERYLLIUM	1 0	UG/L		U	5								
SW022	SW	REAL	SW60088WC	17-MAY-91	N	TRG	SMETCLPTCL	BERYLLIUM	3 0	UG/L		U	5								
SW022	SW	REAL	SW60088WC	17-MAY-91	N	TRG	SMETCLPTCL	CALCIUM	48000	UG/L			5000								
SW022	SW	REAL	SW60088WC	17-MAY-91	N	TRG	SMETCLPTCL	CESIUM	50	UG/L			1000								
SW022	SW	REAL	SW60088WC	17-MAY-91	N	TRG	SMETCLPTCL	CHROMIUM	18	UG/L			10								
SW022	SW	REAL	SW60088WC	17-MAY-91	N	TRG	SMETCLPTCL	COBALT	7.7	UG/L			50								
SW022	SW	REAL	SW60088WC	17-MAY-91	N	TRG	SMETCLPTCL	COPPER	29	UG/L			25								
SW022	SW	REAL	SW60088WC	17-MAY-91	N	TRG	SMETCLPTCL	IRON	15000	UG/L			100								
SW022	SW	REAL	SW60088WC	17-MAY-91	N	TRG	SMETCLPTCL	LEAD	44	UG/L			3								
SW022	SW	REAL	SW60088WC	17-MAY-91	N	TRG	SMETCLPTCL	LITHIUM	13	UG/L			100								
SW022	SW	REAL	SW60088WC	17-MAY-91	N	TRG	SMETCLPTCL	MAGNESIUM	7600	UG/L			5000								
SW022	SW	REAL	SW60088WC	17-MAY-91	N	TRG	SMETCLPTCL	MANGANESE	220	UG/L			15								
SW022	SW	REAL	SW60088WC	17-MAY-91	N	TRG	SMETCLPTCL	MERCURY	0 20	UG/L		U	0 2								
SW022	SW	REAL	SW60088WC	17-MAY-91	N	TRG	SMETCLPTCL	MOLYBDENUM	26	UG/L		U	50								
SW022	SW	REAL	SW60088WC	17-MAY-91	N	TRG	SMETCLPTCL	NICKEL	16	UG/L			40								
SW022	SW	REAL	SW60088WC	17-MAY-91	N	TRG	SMETCLPTCL	POTASSIUM	6400	UG/L			5000								
SW022	SW	REAL	SW60088WC	17-MAY-91	N	TRG	SMETCLPTCL	SELENIUM	3 0	UG/L		UI	5								
SW022	SW	REAL	SW60088WC	17-MAY-91	N	TRG	SMETCLPTCL	SILVER	5.0	UG/L		U	10								
SW022	SW	REAL	SW60088WC	17-MAY-91	N	TRG	SMETCLPTCL	SODIUM	19000	UG/L			5000								
SW022	SW	REAL	SW60088WC	17-MAY-91	N	TRG	SMETCLPTCL	STRONTIUM	200	UG/L			200								
SW022	SW	REAL	SW60088WC	17-MAY-91	N	TRG	SMETCLPTCL	THALLIUM	3 0	UG/L		UI	10								
SW022	SW	REAL	SW60088WC	17-MAY-91	N	TRG	SMETCLPTCL	TIN	16	UG/L		U	200								
SW022	SW	REAL	SW60088WC	17-MAY-91	N	TRG	SMETCLPTCL	VANADIUM	40	UG/L			50								
SW022	SW	REAL	SW60088WC	17-MAY-91	N	TRG	SMETCLPTCL	ZINC	210	UG/L			20								
SW022	SW	REAL	SW60089WC	17-MAY-91	N																
SW022	SW	REAL	SW60098WC	23-MAY-91	N	TRG	SMETCLPTCL	ALUMINUM	21000	UG/L			200								
SW022	SW	REAL	SW60098WC	23-MAY-91	N	TRG	SMETCLPTCL	ANTIMONY	17	UG/L		U	60								
SW022	SW	REAL	SW60098WC	23-MAY-91	N	TRG	SMETCLPTCL	ARSENIC	5.3	UG/L		I	10								
SW022	SW	REAL	SW60098WC	23-MAY-91	N	TRG	SMETCLPTCL	BARIUM	200	UG/L			200								
SW022	SW	REAL	SW60098WC	23-MAY-91	N	TRG	SMETCLPTCL	BERYLLIUM	1.4	UG/L			5								

Location	ST	QC	Sample Number	Smpl Date	D	ID	Group	Chemical	Result	Unit	Error	Qual	D LMT	VA	RN1	RN2	RN3	RN4	VResult	VQual	VDET
SW022	SW	REAL	SW60098WC	23-MAY-91	N	TRG	SMETCLPTCL	BERYLLIUM	3 0	UG/L		U	5								
SW022	SW	REAL	SW60098WC	23-MAY-91	N	TRG	SMETCLPTCL	CALCIUM	37000	UG/L			5000								
SW022	SW	REAL	SW60098WC	23-MAY-91	N	TRG	SMETCLPTCL	CESIUM	50	UG/L		U	1000								
SW022	SW	REAL	SW60098WC	23-MAY-91	N	TRG	SMETCLPTCL	CHROMIUM	28	UG/L			10								
SW022	SW	REAL	SW60098WC	23-MAY-91	N	TRG	SMETCLPTCL	COBALT	8 6	UG/L			50								
SW022	SW	REAL	SW60098WC	23-MAY-91	N	TRG	SMETCLPTCL	COPPER	45	UG/L			25								
SW022	SW	REAL	SW60098WC	23-MAY-91	N	TRG	SMETCLPTCL	IRON	22000	UG/L			100								
SW022	SW	REAL	SW60098WC	23-MAY-91	N	TRG	SMETCLPTCL	LEAD	73	UG/L			3								
SW022	SW	REAL	SW60098WC	23-MAY-91	N	TRG	SMETCLPTCL	LITHIUM	16	UG/L			100								
SW022	SW	REAL	SW60098WC	23-MAY-91	N	TRG	SMETCLPTCL	MAGNESIUM	7800	UG/L			5000								
SW022	SW	REAL	SW60098WC	23-MAY-91	N	TRG	SMETCLPTCL	MANGANESE	340	UG/L			15								
SW022	SW	REAL	SW60098WC	23-MAY-91	N	TRG	SMETCLPTCL	MERCURY	0 20	UG/L		U	0 2								
SW022	SW	REAL	SW60098WC	23-MAY-91	N	TRG	SMETCLPTCL	MOLYBDENUM	26	UG/L		U	50								
SW022	SW	REAL	SW60098WC	23-MAY-91	N	TRG	SMETCLPTCL	NICKEL	19	UG/L			40								
SW022	SW	REAL	SW60098WC	23-MAY-91	N	TRG	SMETCLPTCL	POTASSIUM	6400	UG/L			5000								
SW022	SW	REAL	SW60098WC	23-MAY-91	N	TRG	SMETCLPTCL	SELENIUM	4 0	UG/L		UI	5								
SW022	SW	REAL	SW60098WC	23-MAY-91	N	TRG	SMETCLPTCL	SILVER	5 0	UG/L		U	10								
SW022	SW	REAL	SW60098WC	23-MAY-91	N	TRG	SMETCLPTCL	SODIUM	12000	UG/L			5000								
SW022	SW	REAL	SW60098WC	23-MAY-91	N	TRG	SMETCLPTCL	STRONTIUM	150	UG/L			200								
SW022	SW	REAL	SW60098WC	23-MAY-91	N	TRG	SMETCLPTCL	THALLIUM	3 0	UG/L		U	10								
SW022	SW	REAL	SW60098WC	23-MAY-91	N	TRG	SMETCLPTCL	TIN	16	UG/L		U	200								
SW022	SW	REAL	SW60098WC	23-MAY-91	N	TRG	SMETCLPTCL	VANADIUM	53	UG/L			50								
SW022	SW	REAL	SW60098WC	23-MAY-91	N	TRG	SMETCLPTCL	ZINC	350	UG/L			20								
SW022	SW	REAL	SW60102WC	03-JUN-91	N	TRG	SMETCLPTCL	ALUMINUM	21700 00	UG/L			200 0								
SW022	SW	REAL	SW60102WC	03-JUN-91	N	TRG	SMETCLPTCL	ANTIMONY	25.60	UG/L		B	60 00								
SW022	SW	REAL	SW60102WC	03-JUN-91	N	TRG	SMETCLPTCL	ARSENIC	3 00	UG/L		B	10 00								
SW022	SW	REAL	SW60102WC	03-JUN-91	N	TRG	SMETCLPTCL	BARIUM	399.00	UG/L		E	200 0								
SW022	SW	REAL	SW60102WC	03-JUN-91	N	TRG	SMETCLPTCL	BERYLLIUM	2 60	UG/L		B	5 000								
SW022	SW	REAL	SW60102WC	03-JUN-91	N	TRG	SMETCLPTCL	CADMIUM	3 00	UG/L		B	5 000								
SW022	SW	REAL	SW60102WC	03-JUN-91	N	TRG	SMETCLPTCL	CALCIUM	106000 00	UG/L			5000								
SW022	SW	REAL	SW60102WC	03-JUN-91	N	TRG	SMETCLPTCL	CHROMIUM	34.20	UG/L			10 00								
SW022	SW	REAL	SW60102WC	03-JUN-91	N	TRG	SMETCLPTCL	COBALT	14 60	UG/L		B	50.00								
SW022	SW	REAL	SW60102WC	03-JUN-91	N	TRG	SMETCLPTCL	COPPER	59 00	UG/L			25 00								
SW022	SW	REAL	SW60102WC	03-JUN-91	N	TRG	SMETCLPTCL	IRON	22600 00	UG/L			100 0								
SW022	SW	REAL	SW60102WC	03-JUN-91	N	TRG	SMETCLPTCL	LEAD	105 00	UG/L			3 000								
SW022	SW	REAL	SW60102WC	03-JUN-91	N	TRG	SMETCLPTCL	MAGNESIUM	12000.00	UG/L			5000								
SW022	SW	REAL	SW60102WC	03-JUN-91	N	TRG	SMETCLPTCL	MANGANESE	761.00	UG/L			15 00								
SW022	SW	REAL	SW60102WC	03-JUN-91	N	TRG	SMETCLPTCL	MERCURY	0.20	UG/L		U	0 200								
SW022	SW	REAL	SW60102WC	03-JUN-91	N	TRG	SMETCLPTCL	NICKEL	31 60	UG/L		B	40.00								
SW022	SW	REAL	SW60102WC	03-JUN-91	N	TRG	SMETCLPTCL	POTASSIUM	6380 00	UG/L		E	5000.								
SW022	SW	REAL	SW60102WC	03-JUN-91	N	TRG	SMETCLPTCL	SELENIUM	2 00	UG/L		UN	5 000								
SW022	SW	REAL	SW60102WC	03-JUN-91	N	TRG	SMETCLPTCL	SILVER	2 00	UG/L		U	10.00								
SW022	SW	REAL	SW60102WC	03-JUN-91	N	TRG	SMETCLPTCL	SODIUM	8630 00	UG/L			5000.								
SW022	SW	REAL	SW60102WC	03-JUN-91	N	TRG	SMETCLPTCL	THALLIUM	1 00	UG/L		UW	10 00								
SW022	SW	REAL	SW60102WC	03-JUN-91	N	TRG	SMETCLPTCL	VANADIUM	66 30	UG/L			50.00								
SW022	SW	REAL	SW60102WC	03-JUN-91	N	TRG	SMETCLPTCL	ZINC	530.00	UG/L			20 00								
SW022	SW	REAL	SW60102WC	03-JUN-91	N	TRG	SMETNOCLP	CESIUM	1.00	UG/L		UN	1000								
SW022	SW	REAL	SW60102WC	03-JUN-91	N	TRG	SMETNOCLP	LITHIUM	18 50	UG/L		B	100.0								
SW022	SW	REAL	SW60102WC	03-JUN-91	N	TRG	SMETNOCLP	MOLYBDENUM	4 10	UG/L		B	200 0								
SW022	SW	REAL	SW60102WC	03-JUN-91	N	TRG	SMETNOCLP	STRONTIUM	288 00	UG/L			200 0								
SW022	SW	REAL	SW60102WC	03-JUN-91	N	TRG	SMETNOCLP	TIN	26 70	UG/L		B	200 0								
SW022	SW	REAL	SW60103WC	03-JUN-91	N																
SW022	SW	REAL	SW60112WC	11-JUN-91	N	TRG	SMETCLPTCL	ALUMINUM	35100 00	UG/L		*	200 0								
SW022	SW	REAL	SW60112WC	11-JUN-91	N	TRG	SMETCLPTCL	ANTIMONY	40 20	UG/L		BN	60 00								
SW022	SW	REAL	SW60112WC	11-JUN-91	N	TRG	SMETCLPTCL	ARSENIC	6.00	UG/L		BN	10 00								
SW022	SW	REAL	SW60112WC	11-JUN-91	N	TRG	SMETCLPTCL	BARIUM	465.00	UG/L			200.0								
SW022	SW	REAL	SW60112WC	11-JUN-91	N	TRG	SMETCLPTCL	BERYLLIUM	2.70	UG/L		B	5.000								
SW022	SW	REAL	SW60112WC	11-JUN-91	N	TRG	SMETCLPTCL	CADMIUM	3.90	UG/L		B	5.000								
SW022	SW	REAL	SW60112WC	11-JUN-91	N	TRG	SMETCLPTCL	CALCIUM	88400 00	UG/L			5000.								
SW022	SW	REAL	SW60112WC	11-JUN-91	N	TRG	SMETCLPTCL	CHROMIUM	49.20	UG/L		*	10.00								
SW022	SW	REAL	SW60112WC	11-JUN-91	N	TRG	SMETCLPTCL	COBALT	21 50	UG/L		B	50 00								
SW022	SW	REAL	SW60112WC	11-JUN-91	N	TRG	SMETCLPTCL	COPPER	71.60	UG/L			25 00								
SW022	SW	REAL	SW60112WC	11-JUN-91	N	TRG	SMETCLPTCL	IRON	38700 00	UG/L		*	100.0								

Location	ST	QC	Sample Number	Smpl Date	D	ID	Group	Chemical	Result	Unit	Error	Qual	D LMT	VA	RN1	RN2	RN3	RN4	VResult	VQual	VDET
SW022	SW	REAL	SW60112WC	11-JUN-91	N	TRG	SMETCLPTCL	LEAD	125 00	UG/L		S	3 000								
SW022	SW	REAL	SW60112WC	11-JUN-91	N	TRG	SMETCLPTCL	MAGNESIUM	15900 00	UG/L			5000								
SW022	SW	REAL	SW60112WC	11-JUN-91	N	TRG	SMETCLPTCL	MANGANESE	894.00	UG/L			15 00								
SW022	SW	REAL	SW60112WC	11-JUN-91	N	TRG	SMETCLPTCL	MERCURY	0.20	UG/L		UN	0 200								
SW022	SW	REAL	SW60112WC	11-JUN-91	N	TRG	SMETCLPTCL	NICKEL	45 70	UG/L			40 00								
SW022	SW	REAL	SW60112WC	11-JUN-91	N	TRG	SMETCLPTCL	POTASSIUM	8610.00	UG/L			5000								
SW022	SW	REAL	SW60112WC	11-JUN-91	N	TRG	SMETCLPTCL	SELENIUM	2 00	UG/L		U	5 000								
SW022	SW	REAL	SW60112WC	11-JUN-91	N	TRG	SMETCLPTCL	SILVER	2.00	UG/L		U	10 00								
SW022	SW	REAL	SW60112WC	11-JUN-91	N	TRG	SMETCLPTCL	SODIUM	7130.00	UG/L			5000								
SW022	SW	REAL	SW60112WC	11-JUN-91	N	TRG	SMETCLPTCL	THALLIUM	1 00	UG/L		U	10 00								
SW022	SW	REAL	SW60112WC	11-JUN-91	N	TRG	SMETCLPTCL	VANADIUM	93 80	UG/L			50 00								
SW022	SW	REAL	SW60112WC	11-JUN-91	N	TRG	SMETCLPTCL	ZINC	560.00	UG/L		E	20 00								
SW022	SW	REAL	SW60112WC	11-JUN-91	N	TRG	SMETNOCLP	CESIUM	112 00	UG/L		U	1000								
SW022	SW	REAL	SW60112WC	11-JUN-91	N	TRG	SMETNOCLP	LITHIUM	27.40	UG/L		B	100.0								
SW022	SW	REAL	SW60112WC	11-JUN-91	N	TRG	SMETNOCLP	MOLYBDENUM	5 90	UG/L		B	200 0								
SW022	SW	REAL	SW60112WC	11-JUN-91	N	TRG	SMETNOCLP	STRONTIUM	272.00	UG/L			200 0								
SW022	SW	REAL	SW60112WC	11-JUN-91	N	TRG	SMETNOCLP	TIN	30.80	UG/L		B	200 0								
SW022	SW	REAL	SW60114WC	25-JUN-91	N																
SW022	SW	REAL	SW60117WC	10-JUL-91	N																
SW022	SW	REAL	SW60120WC	10-JUL-91	N																
SW022	SW	REAL	SW60125WC	23-JUL-91	N																
SW022	SW	REAL	SW60129WC	24-JUL-91	N																
SW022	SW	REAL	SW60130WC	29-JUL-91	N																
SW022	SW	REAL	SW60132WC	05-AUG-91	N																
SW022	SW	REAL	SW60136WC	05-AUG-91	N																
SW022	SW	REAL	SW60140WC	07-AUG-91	N																
SW022	SW	REAL	SW60145WC	12-AUG-91	N																
SW022	SW	REAL	SW60148WC	12-AUG-91	N																
SW022	SW	REAL	SW60156WC	19-AUG-91	N	TRG	SMETCLPTCL	ALUMINUM	12000	UG/L			200								
SW022	SW	REAL	SW60156WC	19-AUG-91	N	TRG	SMETCLPTCL	ANTIMONY	11	UG/L		U	60								
SW022	SW	REAL	SW60156WC	19-AUG-91	N	TRG	SMETCLPTCL	ARSENIC	4 0	UG/L		UI	10								
SW022	SW	REAL	SW60156WC	19-AUG-91	N	TRG	SMETCLPTCL	BARIUM	120	UG/L			200								
SW022	SW	REAL	SW60156WC	19-AUG-91	N	TRG	SMETCLPTCL	BERYLLIUM	1.0	UG/L		U	5								
SW022	SW	REAL	SW60156WC	19-AUG-91	N	TRG	SMETCLPTCL	BERYLLIUM	2.0	UG/L		U	5								
SW022	SW	REAL	SW60156WC	19-AUG-91	N	TRG	SMETCLPTCL	CALCIUM	29000	UG/L			5000								
SW022	SW	REAL	SW60156WC	19-AUG-91	N	TRG	SMETCLPTCL	CESIUM	50	UG/L		U	1000								
SW022	SW	REAL	SW60156WC	19-AUG-91	N	TRG	SMETCLPTCL	CHROMIUM	7.9	UG/L			10								
SW022	SW	REAL	SW60156WC	19-AUG-91	N	TRG	SMETCLPTCL	COBALT	3 8	UG/L			50								
SW022	SW	REAL	SW60156WC	19-AUG-91	N	TRG	SMETCLPTCL	COPPER	24	UG/L			25								
SW022	SW	REAL	SW60156WC	19-AUG-91	N	TRG	SMETCLPTCL	IRON	11000	UG/L			100								
SW022	SW	REAL	SW60156WC	19-AUG-91	N	TRG	SMETCLPTCL	LEAD	40	UG/L			3								
SW022	SW	REAL	SW60156WC	19-AUG-91	N	TRG	SMETCLPTCL	LITHIUM	7 6	UG/L			100								
SW022	SW	REAL	SW60156WC	19-AUG-91	N	TRG	SMETCLPTCL	MAGNESIUM	5200	UG/L			5000								
SW022	SW	REAL	SW60156WC	19-AUG-91	N	TRG	SMETCLPTCL	MANGANESE	150	UG/L			15								
SW022	SW	REAL	SW60156WC	19-AUG-91	N	TRG	SMETCLPTCL	MERCURY	0.20	UG/L		U	0.2								
SW022	SW	REAL	SW60156WC	19-AUG-91	N	TRG	SMETCLPTCL	MOLYBDENUM	3.0	UG/L		U	50								
SW022	SW	REAL	SW60156WC	19-AUG-91	N	TRG	SMETCLPTCL	NICKEL	11	UG/L			40								
SW022	SW	REAL	SW60156WC	19-AUG-91	N	TRG	SMETCLPTCL	POTASSIUM	4800	UG/L			5000								
SW022	SW	REAL	SW60156WC	19-AUG-91	N	TRG	SMETCLPTCL	SELENIUM	4.0	UG/L		UI	5								
SW022	SW	REAL	SW60156WC	19-AUG-91	N	TRG	SMETCLPTCL	SILVER	2 0	UG/L		U	10								
SW022	SW	REAL	SW60156WC	19-AUG-91	N	TRG	SMETCLPTCL	SODIUM	10000	UG/L			5000								
SW022	SW	REAL	SW60156WC	19-AUG-91	N	TRG	SMETCLPTCL	STRONTIUM	130	UG/L			200								
SW022	SW	REAL	SW60156WC	19-AUG-91	N	TRG	SMETCLPTCL	THALLIUM	1.0	UG/L		UI	10								
SW022	SW	REAL	SW60156WC	19-AUG-91	N	TRG	SMETCLPTCL	TIN	13	UG/L		U	200								
SW022	SW	REAL	SW60156WC	19-AUG-91	N	TRG	SMETCLPTCL	VANADIUM	30	UG/L			50								
SW022	SW	REAL	SW60156WC	19-AUG-91	N	TRG	SMETCLPTCL	ZINC	200	UG/L			20								
SW023	SW	DUP	SW80113WC	17-APR-91	N	TRG	DMETCLPTAL	ALUMINUM	108	UG/L		U	108								
SW023	SW	DUP	SW80113WC	17-APR-91	N	TRG	DMETCLPTAL	ANTIMONY	25.6	UG/L		U	25.6								
SW023	SW	DUP	SW80113WC	17-APR-91	N	TRG	DMETCLPTAL	ARSENIC	0.90	UG/L		U	0.90								
SW023	SW	DUP	SW80113WC	17-APR-91	N	TRG	DMETCLPTAL	BARIUM	70.8	UG/L			4.4								
SW023	SW	DUP	SW80113WC	17-APR-91	N	TRG	DMETCLPTAL	BERYLLIUM	0.60	UG/L		U	0 60								
SW023	SW	DUP	SW80113WC	17-APR-91	N	TRG	DMETCLPTAL	CADMIUM	3.3	UG/L		U	3 3								
SW023	SW	DUP	SW80113WC	17-APR-91	N	TRG	DMETCLPTAL	CALCIUM	48200	UG/L			14 5								

Location	ST	QC	Sample Number	Smpl Date	D	ID	Group	Chemical	Result	Unit	Error	Qual	D LMT	VA	RN1	RN2	RN3	RN4	VResult	VQual	VDET
SW023	SW	DUP	SW80113WC	17-APR-91	N	TRG	DMETCLPTAL	CHROMIUM	6 9	UG/L		U	6 9								
SW023	SW	DUP	SW80113WC	17-APR-91	N	TRG	DMETCLPTAL	COBALT	3 6	UG/L		U	3 6								
SW023	SW	DUP	SW80113WC	17-APR-91	N	TRG	DMETCLPTAL	COPPER	4 7	UG/L		U	4 7								
SW023	SW	DUP	SW80113WC	17-APR-91	N	TRG	DMETCLPTAL	IRON	36 1	UG/L			6 3								
SW023	SW	DUP	SW80113WC	17-APR-91	N	TRG	DMETCLPTAL	LEAD	1 0	UG/L		U	1 0								
SW023	SW	DUP	SW80113WC	17-APR-91	N	TRG	DMETCLPTAL	MAGNESIUM	12300	UG/L			36 6								
SW023	SW	DUP	SW80113WC	17-APR-91	N	TRG	DMETCLPTAL	MANGANESE	29.9	UG/L			1 0								
SW023	SW	DUP	SW80113WC	17-APR-91	N	TRG	DMETCLPTAL	MERCURY	0 20	UG/L		U	0 20								
SW023	SW	DUP	SW80113WC	17-APR-91	N	TRG	DMETCLPTAL	NICKEL	14.7	UG/L		U	14 7								
SW023	SW	DUP	SW80113WC	17-APR-91	N	TRG	DMETCLPTAL	POTASSIUM	2350	UG/L			2050								
SW023	SW	DUP	SW80113WC	17-APR-91	N	TRG	DMETCLPTAL	SELENIUM	1 8	UG/L			1 1								
SW023	SW	DUP	SW80113WC	17-APR-91	N	TRG	DMETCLPTAL	SILVER	5 0	UG/L		U	5 0								
SW023	SW	DUP	SW80113WC	17-APR-91	N	TRG	DMETCLPTAL	SODIUM	34000	UG/L			43 5								
SW023	SW	DUP	SW80113WC	17-APR-91	N	TRG	DMETCLPTAL	THALLIUM	1 4	UG/L		U	1 4								
SW023	SW	DUP	SW80113WC	17-APR-91	N	TRG	DMETCLPTAL	VANADIUM	5 7	UG/L		U	5 7								
SW023	SW	DUP	SW80113WC	17-APR-91	N	TRG	DMETCLPTAL	ZINC	21 2	UG/L			4 7								
SW023	SW	DUP	SW80113WC	17-APR-91	N	TRG	DMETNOCLP	CESIUM	500	UG/L		U	500								
SW023	SW	DUP	SW80113WC	17-APR-91	N	TRG	DMETNOCLP	LITHIUM	4 3	UG/L			4.3								
SW023	SW	DUP	SW80113WC	17-APR-91	N	TRG	DMETNOCLP	MOLYBDENUM	5 7	UG/L		U	5 7								
SW023	SW	DUP	SW80113WC	17-APR-91	N	TRG	DMETNOCLP	SILICON	2840	UG/L			25 7								
SW023	SW	DUP	SW80113WC	17-APR-91	N	TRG	DMETNOCLP	STRONTIUM	315	UG/L			7 3								
SW023	SW	DUP	SW80113WC	17-APR-91	N	TRG	DMETNOCLP	TIN	24 2	UG/L		U	24 2								
SW023	SW	DUP	SW80113WC	17-APR-91	N	TRG	SMETCLPTCL	ALUMINUM	108	UG/L		U	108								
SW023	SW	DUP	SW80113WC	17-APR-91	N	TRG	SMETCLPTCL	ANTIMONY	25 6	UG/L		U	25 6								
SW023	SW	DUP	SW80113WC	17-APR-91	N	TRG	SMETCLPTCL	ARSENIC	0 90	UG/L		U	0.90								
SW023	SW	DUP	SW80113WC	17-APR-91	N	TRG	SMETCLPTCL	BARIUM	74 2	UG/L			4 4								
SW023	SW	DUP	SW80113WC	17-APR-91	N	TRG	SMETCLPTCL	BERYLLIUM	0 60	UG/L		U	0 60								
SW023	SW	DUP	SW80113WC	17-APR-91	N	TRG	SMETCLPTCL	CADMIUM	3 3	UG/L		U	3 3								
SW023	SW	DUP	SW80113WC	17-APR-91	N	TRG	SMETCLPTCL	CALCIUM	48000	UG/L			14.5								
SW023	SW	DUP	SW80113WC	17-APR-91	N	TRG	SMETCLPTCL	CHROMIUM	6.9	UG/L		U	6.9								
SW023	SW	DUP	SW80113WC	17-APR-91	N	TRG	SMETCLPTCL	COBALT	3.6	UG/L		U	3 6								
SW023	SW	DUP	SW80113WC	17-APR-91	N	TRG	SMETCLPTCL	COPPER	4 7	UG/L		U	4 7								
SW023	SW	DUP	SW80113WC	17-APR-91	N	TRG	SMETCLPTCL	IRON	254	UG/L			6.3								
SW023	SW	DUP	SW80113WC	17-APR-91	N	TRG	SMETCLPTCL	LEAD	1.0	UG/L		U	1 0								
SW023	SW	DUP	SW80113WC	17-APR-91	N	TRG	SMETCLPTCL	MAGNESIUM	12300	UG/L			36 6								
SW023	SW	DUP	SW80113WC	17-APR-91	N	TRG	SMETCLPTCL	MANGANESE	33.9	UG/L			1.0								
SW023	SW	DUP	SW80113WC	17-APR-91	N	TRG	SMETCLPTCL	MERCURY	0 20	UG/L		U	0 20								
SW023	SW	DUP	SW80113WC	17-APR-91	N	TRG	SMETCLPTCL	NICKEL	14.7	UG/L		U	14 7								
SW023	SW	DUP	SW80113WC	17-APR-91	N	TRG	SMETCLPTCL	POTASSIUM	2320	UG/L			2050								
SW023	SW	DUP	SW80113WC	17-APR-91	N	TRG	SMETCLPTCL	SELENIUM	1.5	UG/L			1.1								
SW023	SW	DUP	SW80113WC	17-APR-91	N	TRG	SMETCLPTCL	SILVER	5 0	UG/L		U	5.0								
SW023	SW	DUP	SW80113WC	17-APR-91	N	TRG	SMETCLPTCL	SODIUM	33900	UG/L			43 5								
SW023	SW	DUP	SW80113WC	17-APR-91	N	TRG	SMETCLPTCL	THALLIUM	2 5	UG/L			1.4								
SW023	SW	DUP	SW80113WC	17-APR-91	N	TRG	SMETCLPTCL	VANADIUM	5 7	UG/L		U	5 7								
SW023	SW	DUP	SW80113WC	17-APR-91	N	TRG	SMETCLPTCL	ZINC	36.9	UG/L			4 7								
SW023	SW	DUP	SW80113WC	17-APR-91	N	TRG	SMETNOCLP	CESIUM	500	UG/L		U	500								
SW023	SW	DUP	SW80113WC	17-APR-91	N	TRG	SMETNOCLP	LITHIUM	4.3	UG/L		U	4.3								
SW023	SW	DUP	SW80113WC	17-APR-91	N	TRG	SMETNOCLP	MOLYBDENUM	5 7	UG/L		U	5 7								
SW023	SW	DUP	SW80113WC	17-APR-91	N	TRG	SMETNOCLP	SILICON	2860	UG/L			25 7								
SW023	SW	DUP	SW80113WC	17-APR-91	N	TRG	SMETNOCLP	STRONTIUM	311	UG/L			7.3								
SW023	SW	DUP	SW80113WC	17-APR-91	N	TRG	SMETNOCLP	TIN	24.2	UG/L		U	24.2								
SW023	SW	DUP	SW80159WC	16-SEP-91	N	TRG	DMETCLP	ALUMINUM	22.3	UG/L		U	22.3								
SW023	SW	DUP	SW80159WC	16-SEP-91	N	TRG	DMETCLP	ANTIMONY	13 8	UG/L		U	13 8								
SW023	SW	DUP	SW80159WC	16-SEP-91	N	TRG	DMETCLP	ARSENIC	1.9	UG/L			1.1								
SW023	SW	DUP	SW80159WC	16-SEP-91	N	TRG	DMETCLP	BARIUM	103	UG/L			5 6								
SW023	SW	DUP	SW80159WC	16-SEP-91	N	TRG	DMETCLP	BERYLLIUM	0.50	UG/L		U	0.50								
SW023	SW	DUP	SW80159WC	16-SEP-91	N	TRG	DMETCLP	CADMIUM	2 4	UG/L		U	2 4								
SW023	SW	DUP	SW80159WC	16-SEP-91	N	TRG	DMETCLP	CALCIUM	73200	UG/L			29.2								
SW023	SW	DUP	SW80159WC	16-SEP-91	N	TRG	DMETCLP	CESIUM	500	UG/L		U	500								
SW023	SW	DUP	SW80159WC	16-SEP-91	N	TRG	DMETCLP	CHROMIUM	2.6	UG/L		U	2.6								
SW023	SW	DUP	SW80159WC	16-SEP-91	N	TRG	DMETCLP	COBALT	2.8	UG/L		U	2.8								
SW023	SW	DUP	SW80159WC	16-SEP-91	N	TRG	DMETCLP	COPPER	2.2	UG/L			2.1								
SW023	SW	DUP	SW80159WC	16-SEP-91	N	TRG	DMETCLP	IRON	16.7	UG/L		U	16.7								

Location	ST	QC	Sample Number	Smpl Date	D	ID	Group	Chemical	Result	Unit	Error	Qual	D LMT	VA	RN1	RN2	RN3	RN4	VResult	VQual	VDET
SW023	SW	DUP	SW80159WC	16-SEP-91	N	TRG	DMETCLP	LEAD	4 9	UG/L			0 90								
SW023	SW	DUP	SW80159WC	16-SEP-91	N	TRG	DMETCLP	LITHIUM	12 9	UG/L			7 1								
SW023	SW	DUP	SW80159WC	16-SEP-91	N	TRG	DMETCLP	MAGNESIUM	18700	UG/L			33 1								
SW023	SW	DUP	SW80159WC	16-SEP-91	N	TRG	DMETCLP	MANGANESE	14.9	UG/L			1.3								
SW023	SW	DUP	SW80159WC	16-SEP-91	N	TRG	DMETCLP	MERCURY	0.20	UG/L		U	0 20								
SW023	SW	DUP	SW80159WC	16-SEP-91	N	TRG	DMETCLP	MOLYBDENUM	7 2	UG/L			5 8								
SW023	SW	DUP	SW80159WC	16-SEP-91	N	TRG	DMETCLP	NICKEL	5 9	UG/L		U	5 9								
SW023	SW	DUP	SW80159WC	16-SEP-91	N	TRG	DMETCLP	POTASSIUM	1320	UG/L			675								
SW023	SW	DUP	SW80159WC	16-SEP-91	N	TRG	DMETCLP	SELENIUM	1 2	UG/L		U	1.2								
SW023	SW	DUP	SW80159WC	16-SEP-91	N	TRG	DMETCLP	SILICON	5220	UG/L			21.0								
SW023	SW	DUP	SW80159WC	16-SEP-91	N	TRG	DMETCLP	SILVER	2 9	UG/L		U	2 9								
SW023	SW	DUP	SW80159WC	16-SEP-91	N	TRG	DMETCLP	SODIUM	43100	UG/L			172								
SW023	SW	DUP	SW80159WC	16-SEP-91	N	TRG	DMETCLP	STRONTIUM	509	UG/L			2 3								
SW023	SW	DUP	SW80159WC	16-SEP-91	N	TRG	DMETCLP	THALLIUM	1.9	UG/L		U	1 9								
SW023	SW	DUP	SW80159WC	16-SEP-91	N	TRG	DMETCLP	TIN	10.4	UG/L		U	10 4								
SW023	SW	DUP	SW80159WC	16-SEP-91	N	TRG	DMETCLP	VANADIUM	2 3	UG/L		U	2 3								
SW023	SW	DUP	SW80159WC	16-SEP-91	N	TRG	DMETCLP	ZINC	12 5	UG/L			4 3								
SW023	SW	DUP	SW80159WC	16-SEP-91	N	TRG	METCLP	ALUMINUM	68 0	UG/L			22 3								
SW023	SW	DUP	SW80159WC	16-SEP-91	N	TRG	METCLP	ANTIMONY	13.8	UG/L		U	13 8								
SW023	SW	DUP	SW80159WC	16-SEP-91	N	TRG	METCLP	ARSENIC	1 7	UG/L			0.70								
SW023	SW	DUP	SW80159WC	16-SEP-91	N	TRG	METCLP	BARIUM	123	UG/L			5 6								
SW023	SW	DUP	SW80159WC	16-SEP-91	N	TRG	METCLP	BERYLLIUM	0 60	UG/L			0 50								
SW023	SW	DUP	SW80159WC	16-SEP-91	N	TRG	METCLP	CADMIUM	2 4	UG/L		U	2 4								
SW023	SW	DUP	SW80159WC	16-SEP-91	N	TRG	METCLP	CALCIUM	72200	UG/L			29.2								
SW023	SW	DUP	SW80159WC	16-SEP-91	N	TRG	METCLP	CESIUM	500	UG/L		U	500								
SW023	SW	DUP	SW80159WC	16-SEP-91	N	TRG	METCLP	CHROMIUM	2 6	UG/L		U	2 6								
SW023	SW	DUP	SW80159WC	16-SEP-91	N	TRG	METCLP	COBALT	2 8	UG/L		U	2 8								
SW023	SW	DUP	SW80159WC	16-SEP-91	N	TRG	METCLP	COPPER	3 6	UG/L			2 1								
SW023	SW	DUP	SW80159WC	16-SEP-91	N	TRG	METCLP	IRON	171	UG/L			16 7								
SW023	SW	DUP	SW80159WC	16-SEP-91	N	TRG	METCLP	LEAD	3 3	UG/L			0 90								
SW023	SW	DUP	SW80159WC	16-SEP-91	N	TRG	METCLP	LITHIUM	10.0	UG/L			7 1								
SW023	SW	DUP	SW80159WC	16-SEP-91	N	TRG	METCLP	MAGNESIUM	18300	UG/L			33 1								
SW023	SW	DUP	SW80159WC	16-SEP-91	N	TRG	METCLP	MANGANESE	16.9	UG/L			1.3								
SW023	SW	DUP	SW80159WC	16-SEP-91	N	TRG	METCLP	MERCURY	0.20	UG/L		U	0 20								
SW023	SW	DUP	SW80159WC	16-SEP-91	N	TRG	METCLP	MOLYBDENUM	7 6	UG/L			5 8								
SW023	SW	DUP	SW80159WC	16-SEP-91	N	TRG	METCLP	NICKEL	5 9	UG/L		U	5 9								
SW023	SW	DUP	SW80159WC	16-SEP-91	N	TRG	METCLP	POTASSIUM	1840	UG/L			675								
SW023	SW	DUP	SW80159WC	16-SEP-91	N	TRG	METCLP	SELENIUM	1 7	UG/L			1 2								
SW023	SW	DUP	SW80159WC	16-SEP-91	N	TRG	METCLP	SILICON	5090	UG/L			21 0								
SW023	SW	DUP	SW80159WC	16-SEP-91	N	TRG	METCLP	SILVER	2 9	UG/L		U	2 9								
SW023	SW	DUP	SW80159WC	16-SEP-91	N	TRG	METCLP	SODIUM	41800	UG/L			172								
SW023	SW	DUP	SW80159WC	16-SEP-91	N	TRG	METCLP	STRONTIUM	485	UG/L			2 3								
SW023	SW	DUP	SW80159WC	16-SEP-91	N	TRG	METCLP	THALLIUM	2 4	UG/L		U	2 4								
SW023	SW	DUP	SW80159WC	16-SEP-91	N	TRG	METCLP	TIN	10.4	UG/L		U	10.4								
SW023	SW	DUP	SW80159WC	16-SEP-91	N	TRG	METCLP	VANADIUM	2 9	UG/L			2 3								
SW023	SW	DUP	SW80159WC	16-SEP-91	N	TRG	METCLP	ZINC	24 4	UG/L			4 3								
SW023	SW	LR	SW01583WCLR	16-SEP-91	N																
SW023	SW	MS	SW01058WCMSD	17-APR-91	N																
SW023	SW	MS	SW01583WCMS	16-SEP-91	N																
SW023	SW	MSD	SW01058WCMS	17-APR-91	N																
SW023	SW	MSD	SW01583WCMSD	16-SEP-91	N																
SW023	SW	REAL	SW00750WC	14-JAN-91	N	TRG	DMETCLPTAL	ALUMINUM	97.60	UG/L		B	200 0								
SW023	SW	REAL	SW00750WC	14-JAN-91	N	TRG	DMETCLPTAL	ANTIMONY	17 00	UG/L		B	60 00								
SW023	SW	REAL	SW00750WC	14-JAN-91	N	TRG	DMETCLPTAL	ARSENIC	2 00	UG/L		U	10 00								
SW023	SW	REAL	SW00750WC	14-JAN-91	N	TRG	DMETCLPTAL	BARIUM	94.60	UG/L		BE	200 0								
SW023	SW	REAL	SW00750WC	14-JAN-91	N	TRG	DMETCLPTAL	BERYLLIUM	1 00	UG/L		U	5 000								
SW023	SW	REAL	SW00750WC	14-JAN-91	N	TRG	DMETCLPTAL	CADMIUM	2.00	UG/L		U	5 000								
SW023	SW	REAL	SW00750WC	14-JAN-91	N	TRG	DMETCLPTAL	CALCIUM	74900 00	UG/L		E	5000.								
SW023	SW	REAL	SW00750WC	14-JAN-91	N	TRG	DMETCLPTAL	CHROMIUM	7 80	UG/L		B	10.00								
SW023	SW	REAL	SW00750WC	14-JAN-91	N	TRG	DMETCLPTAL	COBALT	3.00	UG/L		U	50.00								
SW023	SW	REAL	SW00750WC	14-JAN-91	N	TRG	DMETCLPTAL	COPPER	13.20	UG/L		B	25 00								
SW023	SW	REAL	SW00750WC	14-JAN-91	N	TRG	DMETCLPTAL	IRON	131 00	UG/L		E	100.0								
SW023	SW	REAL	SW00750WC	14-JAN-91	N	TRG	DMETCLPTAL	LEAD	1.00	UG/L		U	3.000								

Location	ST	QC	Sample Number	Smpl Date	D	ID	Group	Chemical	Result	Unit	Error	Qual	D	LMT	VA	RN1	RN2	RN3	RN4	VResult	VQual	VDET
SW023	SW	REAL	SW00750WC	14-JAN-91	N	TRG	DMETCLPTAL	MAGNESIUM	21500 00	UG/L		E		5000								
SW023	SW	REAL	SW00750WC	14-JAN-91	N	TRG	DMETCLPTAL	MANGANESE	54 70	UG/L		E		15 00								
SW023	SW	REAL	SW00750WC	14-JAN-91	N	TRG	DMETCLPTAL	MERCURY	0 20	UG/L		U		0 200								
SW023	SW	REAL	SW00750WC	14-JAN-91	N	TRG	DMETCLPTAL	NICKEL	4 00	UG/L		U		40 00								
SW023	SW	REAL	SW00750WC	14-JAN-91	N	TRG	DMETCLPTAL	POTASSIUM	2650 00	UG/L		B		5000								
SW023	SW	REAL	SW00750WC	14-JAN-91	N	TRG	DMETCLPTAL	SELENIUM	4.00	UG/L		B		5 000								
SW023	SW	REAL	SW00750WC	14-JAN-91	N	TRG	DMETCLPTAL	SILVER	3 00	UG/L		U		10 00								
SW023	SW	REAL	SW00750WC	14-JAN-91	N	TRG	DMETCLPTAL	SODIUM	54900 00	UG/L		E		5000								
SW023	SW	REAL	SW00750WC	14-JAN-91	N	TRG	DMETCLPTAL	THALLIUM	3 00	UG/L		U		10.00								
SW023	SW	REAL	SW00750WC	14-JAN-91	N	TRG	DMETCLPTAL	VANADIUM	5 50	UG/L		B		50 00								
SW023	SW	REAL	SW00750WC	14-JAN-91	N	TRG	DMETCLPTAL	ZINC	12.60	UG/L		B		20 00								
SW023	SW	REAL	SW00750WC	14-JAN-91	N	TRG	DMETNOCLP	CESIUM	76 00	UG/L		U		1000								
SW023	SW	REAL	SW00750WC	14-JAN-91	N	TRG	DMETNOCLP	LITHIUM	10 50	UG/L		B		100 0								
SW023	SW	REAL	SW00750WC	14-JAN-91	N	TRG	DMETNOCLP	MOLYBDENUM	9 20	UG/L		B		200 0								
SW023	SW	REAL	SW00750WC	14-JAN-91	N	TRG	DMETNOCLP	STRONTIUM	549 00	UG/L		E		200 0								
SW023	SW	REAL	SW00750WC	14-JAN-91	N	TRG	DMETNOCLP	TIN	18 60	UG/L		B		200 0								
SW023	SW	REAL	SW00750WC	14-JAN-91	N	TRG	SMETCLPTCL	ALUMINUM	142 00	UG/L		B		200 0								
SW023	SW	REAL	SW00750WC	14-JAN-91	N	TRG	SMETCLPTCL	ANTIMONY	15.90	UG/L		B		60 00								
SW023	SW	REAL	SW00750WC	14-JAN-91	N	TRG	SMETCLPTCL	ARSENIC	2 00	UG/L		U		10 00								
SW023	SW	REAL	SW00750WC	14-JAN-91	N	TRG	SMETCLPTCL	BARIUM	107 00	UG/L		BE		200 0								
SW023	SW	REAL	SW00750WC	14-JAN-91	N	TRG	SMETCLPTCL	BERYLLIUM	1 50	UG/L		B		5 000								
SW023	SW	REAL	SW00750WC	14-JAN-91	N	TRG	SMETCLPTCL	CADMIUM	2 00	UG/L		U		5 000								
SW023	SW	REAL	SW00750WC	14-JAN-91	N	TRG	SMETCLPTCL	CALCIUM	74600 00	UG/L		E		5000								
SW023	SW	REAL	SW00750WC	14-JAN-91	N	TRG	SMETCLPTCL	CHROMIUM	11 60	UG/L				10 00								
SW023	SW	REAL	SW00750WC	14-JAN-91	N	TRG	SMETCLPTCL	COBALT	3 00	UG/L		U		50 00								
SW023	SW	REAL	SW00750WC	14-JAN-91	N	TRG	SMETCLPTCL	COPPER	7 30	UG/L		B		25 00								
SW023	SW	REAL	SW00750WC	14-JAN-91	N	TRG	SMETCLPTCL	CYANIDE	3 50	UG/L		U		10 00								
SW023	SW	REAL	SW00750WC	14-JAN-91	N	TRG	SMETCLPTCL	IRON	522.00	UG/L		E		100 0								
SW023	SW	REAL	SW00750WC	14-JAN-91	N	TRG	SMETCLPTCL	LEAD	1.00	UG/L		U		3 000								
SW023	SW	REAL	SW00750WC	14-JAN-91	N	TRG	SMETCLPTCL	MAGNESIUM	21200.00	UG/L		E		5000								
SW023	SW	REAL	SW00750WC	14-JAN-91	N	TRG	SMETCLPTCL	MANGANESE	63.30	UG/L		E		15 00								
SW023	SW	REAL	SW00750WC	14-JAN-91	N	TRG	SMETCLPTCL	MERCURY	0.20	UG/L		U		0 200								
SW023	SW	REAL	SW00750WC	14-JAN-91	N	TRG	SMETCLPTCL	NICKEL	6.40	UG/L		B		40 00								
SW023	SW	REAL	SW00750WC	14-JAN-91	N	TRG	SMETCLPTCL	POTASSIUM	2650.00	UG/L		B		5000								
SW023	SW	REAL	SW00750WC	14-JAN-91	N	TRG	SMETCLPTCL	SELENIUM	3.20	UG/L		BS		5 000								
SW023	SW	REAL	SW00750WC	14-JAN-91	N	TRG	SMETCLPTCL	SILVER	3.00	UG/L		U		10 00								
SW023	SW	REAL	SW00750WC	14-JAN-91	N	TRG	SMETCLPTCL	SODIUM	51000 00	UG/L		E		5000								
SW023	SW	REAL	SW00750WC	14-JAN-91	N	TRG	SMETCLPTCL	THALLIUM	3.00	UG/L		U		10.00								
SW023	SW	REAL	SW00750WC	14-JAN-91	N	TRG	SMETCLPTCL	VANADIUM	8.50	UG/L		B		50 00								
SW023	SW	REAL	SW00750WC	14-JAN-91	N	TRG	SMETCLPTCL	ZINC	36 20	UG/L				20 00								
SW023	SW	REAL	SW00750WC	14-JAN-91	N	TRG	SMETNOCLP	CESIUM	76 00	UG/L		U		1000								
SW023	SW	REAL	SW00750WC	14-JAN-91	N	TRG	SMETNOCLP	LITHIUM	11 90	UG/L		B		100 0								
SW023	SW	REAL	SW00750WC	14-JAN-91	N	TRG	SMETNOCLP	MOLYBDENUM	24 40	UG/L		B		200 0								
SW023	SW	REAL	SW00750WC	14-JAN-91	N	TRG	SMETNOCLP	STRONTIUM	554.00	UG/L		E		200 0								
SW023	SW	REAL	SW00750WC	14-JAN-91	N	TRG	SMETNOCLP	TIN	19.30	UG/L		B		200 0								
SW023	SW	REAL	SW00853WC	20-FEB-91	N																	
SW023	SW	REAL	SW00956WC	28-MAR-91	N	TRG	DMETCLPTAL	ALUMINUM	84 8	UG/L				17 7								
SW023	SW	REAL	SW00956WC	28-MAR-91	N	TRG	DMETCLPTAL	ANTIMONY	18.3	UG/L				18 2								
SW023	SW	REAL	SW00956WC	28-MAR-91	N	TRG	DMETCLPTAL	ARSENIC	0.90	UG/L		U		0.90								
SW023	SW	REAL	SW00956WC	28-MAR-91	N	TRG	DMETCLPTAL	BARIUM	78 0	UG/L				4 4								
SW023	SW	REAL	SW00956WC	28-MAR-91	N	TRG	DMETCLPTAL	BERYLLIUM	0.60	UG/L		U		0.60								
SW023	SW	REAL	SW00956WC	28-MAR-91	N	TRG	DMETCLPTAL	CADMIUM	2.7	UG/L		U		2 7								
SW023	SW	REAL	SW00956WC	28-MAR-91	N	TRG	DMETCLPTAL	CALCIUM	55600	UG/L				14.3								
SW023	SW	REAL	SW00956WC	28-MAR-91	N	TRG	DMETCLPTAL	CHROMIUM	6.9	UG/L		U		6 9								
SW023	SW	REAL	SW00956WC	28-MAR-91	N	TRG	DMETCLPTAL	COBALT	3.0	UG/L		U		3.0								
SW023	SW	REAL	SW00956WC	28-MAR-91	N	TRG	DMETCLPTAL	COPPER	9.4	UG/L				2.5								
SW023	SW	REAL	SW00956WC	28-MAR-91	N	TRG	DMETCLPTAL	IRON	106	UG/L				4.3								
SW023	SW	REAL	SW00956WC	28-MAR-91	N	TRG	DMETCLPTAL	LEAD	1.0	UG/L				1.0								
SW023	SW	REAL	SW00956WC	28-MAR-91	N	TRG	DMETCLPTAL	MAGNESIUM	15300	UG/L				35.9								
SW023	SW	REAL	SW00956WC	28-MAR-91	N	TRG	DMETCLPTAL	MANGANESE	54.9	UG/L				1 0								
SW023	SW	REAL	SW00956WC	28-MAR-91	N	TRG	DMETCLPTAL	MERCURY	0.20	UG/L		U		0.20								
SW023	SW	REAL	SW00956WC	28-MAR-91	N	TRG	DMETCLPTAL	NICKEL	3 9	UG/L		U		3 9								
SW023	SW	REAL	SW00956WC	28-MAR-91	N	TRG	DMETCLPTAL	POTASSIUM	1800	UG/L				94 8								

Location	ST	QC	Sample Number	Smpl Date	D	ID	Group	Chemical	Result	Unit	Error	Qual	D LMT	VA	RN1	RN2	RN3	RN4	VResult	VQual	VDET
SW023	SW	REAL	SW00956WC	28-MAR-91	N	TRG	DMETCLPTAL	SELENIUM	2 7	UG/L			1 1								
SW023	SW	REAL	SW00956WC	28-MAR-91	N	TRG	DMETCLPTAL	SILVER	3 8	UG/L		U	3 8								
SW023	SW	REAL	SW00956WC	28-MAR-91	N	TRG	DMETCLPTAL	SODIUM	37900	UG/L			21 4								
SW023	SW	REAL	SW00956WC	28-MAR-91	N	TRG	DMETCLPTAL	THALLIUM	1 4	UG/L		U	1 4								
SW023	SW	REAL	SW00956WC	28-MAR-91	N	TRG	DMETCLPTAL	VANADIUM	2 0	UG/L		U	2 0								
SW023	SW	REAL	SW00956WC	28-MAR-91	N	TRG	DMETCLPTAL	ZINC	23.5	UG/L			4 7								
SW023	SW	REAL	SW00956WC	28-MAR-91	N	TRG	DMETNOCLP	CESIUM	500	UG/L		U	500								
SW023	SW	REAL	SW00956WC	28-MAR-91	N	TRG	DMETNOCLP	LITHIUM	7 6	UG/L			2 0								
SW023	SW	REAL	SW00956WC	28-MAR-91	N	TRG	DMETNOCLP	MOLYBDENUM	10 9	UG/L		U	10 9								
SW023	SW	REAL	SW00956WC	28-MAR-91	N	TRG	DMETNOCLP	SILICON	2620	UG/L			14 2								
SW023	SW	REAL	SW00956WC	28-MAR-91	N	TRG	DMETNOCLP	STRONTIUM	367	UG/L			7 3								
SW023	SW	REAL	SW00956WC	28-MAR-91	N	TRG	DMETNOCLP	TIN	24 2	UG/L		U	24 2								
SW023	SW	REAL	SW00956WC	28-MAR-91	N	TRG	SMETCLPTCL	ALUMINUM	148	UG/L			17.7								
SW023	SW	REAL	SW00956WC	28-MAR-91	N	TRG	SMETCLPTCL	ANTIMONY	18.2	UG/L		U	18 2								
SW023	SW	REAL	SW00956WC	28-MAR-91	N	TRG	SMETCLPTCL	ARSENIC	0 90	UG/L		U	0 90								
SW023	SW	REAL	SW00956WC	28-MAR-91	N	TRG	SMETCLPTCL	BARIUM	80 6	UG/L			4.4								
SW023	SW	REAL	SW00956WC	28-MAR-91	N	TRG	SMETCLPTCL	BERYLLIUM	0 60	UG/L		U	0 60								
SW023	SW	REAL	SW00956WC	28-MAR-91	N	TRG	SMETCLPTCL	CADMIUM	2 7	UG/L		U	2 7								
SW023	SW	REAL	SW00956WC	28-MAR-91	N	TRG	SMETCLPTCL	CALCIUM	55500	UG/L			14 3								
SW023	SW	REAL	SW00956WC	28-MAR-91	N	TRG	SMETCLPTCL	CHROMIUM	6 9	UG/L		U	6 9								
SW023	SW	REAL	SW00956WC	28-MAR-91	N	TRG	SMETCLPTCL	COBALT	3 0	UG/L		U	3 0								
SW023	SW	REAL	SW00956WC	28-MAR-91	N	TRG	SMETCLPTCL	COPPER	13 1	UG/L			2 5								
SW023	SW	REAL	SW00956WC	28-MAR-91	N	TRG	SMETCLPTCL	IRON	427	UG/L			4 3								
SW023	SW	REAL	SW00956WC	28-MAR-91	N	TRG	SMETCLPTCL	LEAD	2 8	UG/L			1 0								
SW023	SW	REAL	SW00956WC	28-MAR-91	N	TRG	SMETCLPTCL	MAGNESIUM	15300	UG/L			35 9								
SW023	SW	REAL	SW00956WC	28-MAR-91	N	TRG	SMETCLPTCL	MANGANESE	62 8	UG/L			1 0								
SW023	SW	REAL	SW00956WC	28-MAR-91	N	TRG	SMETCLPTCL	MERCURY	0 20	UG/L		U	0 20								
SW023	SW	REAL	SW00956WC	28-MAR-91	N	TRG	SMETCLPTCL	NICKEL	3 9	UG/L		U	3 9								
SW023	SW	REAL	SW00956WC	28-MAR-91	N	TRG	SMETCLPTCL	POTASSIUM	1820	UG/L			94 8								
SW023	SW	REAL	SW00956WC	28-MAR-91	N	TRG	SMETCLPTCL	SELENIUM	2.8	UG/L			1 1								
SW023	SW	REAL	SW00956WC	28-MAR-91	N	TRG	SMETCLPTCL	SILVER	3 8	UG/L		U	3 8								
SW023	SW	REAL	SW00956WC	28-MAR-91	N	TRG	SMETCLPTCL	SODIUM	38200	UG/L			21 4								
SW023	SW	REAL	SW00956WC	28-MAR-91	N	TRG	SMETCLPTCL	THALLIUM	1 4	UG/L		U	1 4								
SW023	SW	REAL	SW00956WC	28-MAR-91	N	TRG	SMETCLPTCL	VANADIUM	2 0	UG/L		U	2 0								
SW023	SW	REAL	SW00956WC	28-MAR-91	N	TRG	SMETCLPTCL	ZINC	36.4	UG/L			4.7								
SW023	SW	REAL	SW00956WC	28-MAR-91	N	TRG	SMETNOCLP	CESIUM	500	UG/L		U	500								
SW023	SW	REAL	SW00956WC	28-MAR-91	N	TRG	SMETNOCLP	LITHIUM	8 1	UG/L			2 0								
SW023	SW	REAL	SW00956WC	28-MAR-91	N	TRG	SMETNOCLP	MOLYBDENUM	10 9	UG/L		U	10 9								
SW023	SW	REAL	SW00956WC	28-MAR-91	N	TRG	SMETNOCLP	SILICON	2770	UG/L			14 2								
SW023	SW	REAL	SW00956WC	28-MAR-91	N	TRG	SMETNOCLP	STRONTIUM	368	UG/L			7 3								
SW023	SW	REAL	SW00956WC	28-MAR-91	N	TRG	SMETNOCLP	TIN	24.2	UG/L		U	24 2								
SW023	SW	REAL	SW01058WC	17-APR-91	N	TRG	DMETCLPTAL	ALUMINUM	108	UG/L		U	108								
SW023	SW	REAL	SW01058WC	17-APR-91	N	TRG	DMETCLPTAL	ANTIMONY	25 6	UG/L		U	25 6								
SW023	SW	REAL	SW01058WC	17-APR-91	N	TRG	DMETCLPTAL	ARSENIC	0 90	UG/L		U	0 90								
SW023	SW	REAL	SW01058WC	17-APR-91	N	TRG	DMETCLPTAL	BARIUM	74 6	UG/L			4 4								
SW023	SW	REAL	SW01058WC	17-APR-91	N	TRG	DMETCLPTAL	BERYLLIUM	0 60	UG/L		U	0.60								
SW023	SW	REAL	SW01058WC	17-APR-91	N	TRG	DMETCLPTAL	CADMIUM	3.3	UG/L		U	3 3								
SW023	SW	REAL	SW01058WC	17-APR-91	N	TRG	DMETCLPTAL	CALCIUM	49200	UG/L			14 5								
SW023	SW	REAL	SW01058WC	17-APR-91	N	TRG	DMETCLPTAL	CHROMIUM	6.9	UG/L		U	6.9								
SW023	SW	REAL	SW01058WC	17-APR-91	N	TRG	DMETCLPTAL	COBALT	3.6	UG/L		U	3 6								
SW023	SW	REAL	SW01058WC	17-APR-91	N	TRG	DMETCLPTAL	COPPER	4 7	UG/L		U	4.7								
SW023	SW	REAL	SW01058WC	17-APR-91	N	TRG	DMETCLPTAL	IRON	29 9	UG/L			6 3								
SW023	SW	REAL	SW01058WC	17-APR-91	N	TRG	DMETCLPTAL	LEAD	1 6	UG/L			1.0								
SW023	SW	REAL	SW01058WC	17-APR-91	N	TRG	DMETCLPTAL	MAGNESIUM	12500	UG/L			36 6								
SW023	SW	REAL	SW01058WC	17-APR-91	N	TRG	DMETCLPTAL	MANGANESE	31.2	UG/L			1.0								
SW023	SW	REAL	SW01058WC	17-APR-91	N	TRG	DMETCLPTAL	MERCURY	0.20	UG/L		U	0 20								
SW023	SW	REAL	SW01058WC	17-APR-91	N	TRG	DMETCLPTAL	NICKEL	14.7	UG/L		U	14.7								
SW023	SW	REAL	SW01058WC	17-APR-91	N	TRG	DMETCLPTAL	POTASSIUM	2500	UG/L			2050								
SW023	SW	REAL	SW01058WC	17-APR-91	N	TRG	DMETCLPTAL	SELENIUM	1.8	UG/L			1.1								
SW023	SW	REAL	SW01058WC	17-APR-91	N	TRG	DMETCLPTAL	SILVER	5 0	UG/L		U	5 0								
SW023	SW	REAL	SW01058WC	17-APR-91	N	TRG	DMETCLPTAL	SODIUM	34200	UG/L			43 5								
SW023	SW	REAL	SW01058WC	17-APR-91	N	TRG	DMETCLPTAL	THALLIUM	1.4	UG/L		U	1.4								
SW023	SW	REAL	SW01058WC	17-APR-91	N	TRG	DMETCLPTAL	VANADIUM	5.7	UG/L		U	5 7								

Location	ST	QC	Sample Number	Smpl Date	D	ID	Group	Chemical	Result	Unit	Error	Qual	D LMT	VA	RN1	RN2	RN3	RN4	VResult	VQual	VDET
SW023	SW	REAL	SW01058WC	17-APR-91	N	TRG	DMETCLPTAL	ZINC	23 1	UG/L			4 7								
SW023	SW	REAL	SW01058WC	17-APR-91	N	TRG	DMETNOCLP	CESIUM	500	UG/L		U	500								
SW023	SW	REAL	SW01058WC	17-APR-91	N	TRG	DMETNOCLP	LITHIUM	5 9	UG/L			4 3								
SW023	SW	REAL	SW01058WC	17-APR-91	N	TRG	DMETNOCLP	MOLYBDENUM	6 1	UG/L			5 7								
SW023	SW	REAL	SW01058WC	17-APR-91	N	TRG	DMETNOCLP	SILICON	2840	UG/L			25 7								
SW023	SW	REAL	SW01058WC	17-APR-91	N	TRG	DMETNOCLP	STRONTIUM	349	UG/L			7 3								
SW023	SW	REAL	SW01058WC	17-APR-91	N	TRG	DMETNOCLP	TIN	24 2	UG/L		U	24 2								
SW023	SW	REAL	SW01058WC	17-APR-91	N	TRG	SMETCLPTCL	ALUMINUM	108	UG/L		U	108								
SW023	SW	REAL	SW01058WC	17-APR-91	N	TRG	SMETCLPTCL	ANTIMONY	25.6	UG/L		U	25.6								
SW023	SW	REAL	SW01058WC	17-APR-91	N	TRG	SMETCLPTCL	ARSENIC	0 90	UG/L		U	0 90								
SW023	SW	REAL	SW01058WC	17-APR-91	N	TRG	SMETCLPTCL	BARIUM	74.2	UG/L			4 4								
SW023	SW	REAL	SW01058WC	17-APR-91	N	TRG	SMETCLPTCL	BERYLLIUM	0.60	UG/L		U	0 60								
SW023	SW	REAL	SW01058WC	17-APR-91	N	TRG	SMETCLPTCL	CADMIUM	3.3	UG/L		U	3.3								
SW023	SW	REAL	SW01058WC	17-APR-91	N	TRG	SMETCLPTCL	CALCIUM	49300	UG/L			14 5								
SW023	SW	REAL	SW01058WC	17-APR-91	N	TRG	SMETCLPTCL	CHROMIUM	6.9	UG/L		U	6 9								
SW023	SW	REAL	SW01058WC	17-APR-91	N	TRG	SMETCLPTCL	COBALT	3 6	UG/L		U	3 6								
SW023	SW	REAL	SW01058WC	17-APR-91	N	TRG	SMETCLPTCL	COPPER	4 7	UG/L		U	4 7								
SW023	SW	REAL	SW01058WC	17-APR-91	N	TRG	SMETCLPTCL	IRON	264	UG/L			6 3								
SW023	SW	REAL	SW01058WC	17-APR-91	N	TRG	SMETCLPTCL	LEAD	4 9	UG/L			1 0								
SW023	SW	REAL	SW01058WC	17-APR-91	N	TRG	SMETCLPTCL	MAGNESIUM	12500	UG/L			36 6								
SW023	SW	REAL	SW01058WC	17-APR-91	N	TRG	SMETCLPTCL	MANGANESE	33.8	UG/L			1 0								
SW023	SW	REAL	SW01058WC	17-APR-91	N	TRG	SMETCLPTCL	MERCURY	0 20	UG/L		U	0 20								
SW023	SW	REAL	SW01058WC	17-APR-91	N	TRG	SMETCLPTCL	NICKEL	14 7	UG/L		U	14 7								
SW023	SW	REAL	SW01058WC	17-APR-91	N	TRG	SMETCLPTCL	POTASSIUM	2410	UG/L			2050								
SW023	SW	REAL	SW01058WC	17-APR-91	N	TRG	SMETCLPTCL	SELENIUM	1 4	UG/L			1 1								
SW023	SW	REAL	SW01058WC	17-APR-91	N	TRG	SMETCLPTCL	SILVER	5.0	UG/L		U	5 0								
SW023	SW	REAL	SW01058WC	17-APR-91	N	TRG	SMETCLPTCL	SODIUM	34600	UG/L			43 5								
SW023	SW	REAL	SW01058WC	17-APR-91	N	TRG	SMETCLPTCL	THALLIUM	1 4	UG/L		U	1 4								
SW023	SW	REAL	SW01058WC	17-APR-91	N	TRG	SMETCLPTCL	VANADIUM	5 7	UG/L		U	5 7								
SW023	SW	REAL	SW01058WC	17-APR-91	N	TRG	SMETCLPTCL	ZINC	30 4	UG/L			4.7								
SW023	SW	REAL	SW01058WC	17-APR-91	N	TRG	SMETNOCLP	CESIUM	500	UG/L		U	500								
SW023	SW	REAL	SW01058WC	17-APR-91	N	TRG	SMETNOCLP	LITHIUM	4.3	UG/L		U	4 3								
SW023	SW	REAL	SW01058WC	17-APR-91	N	TRG	SMETNOCLP	MOLYBDENUM	5.7	UG/L		U	5 7								
SW023	SW	REAL	SW01058WC	17-APR-91	N	TRG	SMETNOCLP	SILICON	2930	UG/L			25 7								
SW023	SW	REAL	SW01058WC	17-APR-91	N	TRG	SMETNOCLP	STRONTIUM	342	UG/L			7.3								
SW023	SW	REAL	SW01058WC	17-APR-91	N	TRG	SMETNOCLP	TIN	24.2	UG/L		U	24 2								
SW023	SW	REAL	SW01165WC	20-MAY-91	N	TRG	DMETCLPTAL	ALUMINUM	28	UG/L			200								
SW023	SW	REAL	SW01165WC	20-MAY-91	N	TRG	DMETCLPTAL	ANTIMONY	17	UG/L		U	60								
SW023	SW	REAL	SW01165WC	20-MAY-91	N	TRG	DMETCLPTAL	ARSENIC	2.0	UG/L		U	10								
SW023	SW	REAL	SW01165WC	20-MAY-91	N	TRG	DMETCLPTAL	BARIUM	98	UG/L			200								
SW023	SW	REAL	SW01165WC	20-MAY-91	N	TRG	DMETCLPTAL	BERYLLIUM	1.0	UG/L		U	5								
SW023	SW	REAL	SW01165WC	20-MAY-91	N	TRG	DMETCLPTAL	BERYLLIUM	3.0	UG/L		U	5								
SW023	SW	REAL	SW01165WC	20-MAY-91	N	TRG	DMETCLPTAL	CALCIUM	60000	UG/L			5000								
SW023	SW	REAL	SW01165WC	20-MAY-91	N	TRG	DMETCLPTAL	CESIUM	60	UG/L			1000								
SW023	SW	REAL	SW01165WC	20-MAY-91	N	TRG	DMETCLPTAL	CHROMIUM	3.0	UG/L		U	10								
SW023	SW	REAL	SW01165WC	20-MAY-91	N	TRG	DMETCLPTAL	COBALT	4.0	UG/L		U	50								
SW023	SW	REAL	SW01165WC	20-MAY-91	N	TRG	DMETCLPTAL	COPPER	4.0	UG/L		U	25								
SW023	SW	REAL	SW01165WC	20-MAY-91	N	TRG	DMETCLPTAL	IRON	39	UG/L			100								
SW023	SW	REAL	SW01165WC	20-MAY-91	N	TRG	DMETCLPTAL	LEAD	1 5	UG/L			3								
SW023	SW	REAL	SW01165WC	20-MAY-91	N	TRG	DMETCLPTAL	LITHIUM	8.7	UG/L			100								
SW023	SW	REAL	SW01165WC	20-MAY-91	N	TRG	DMETCLPTAL	MAGNESIUM	14000	UG/L			5000								
SW023	SW	REAL	SW01165WC	20-MAY-91	N	TRG	DMETCLPTAL	MANGANESE	18	UG/L			15								
SW023	SW	REAL	SW01165WC	20-MAY-91	N	TRG	DMETCLPTAL	MERCURY	0.20	UG/L		U	0 2								
SW023	SW	REAL	SW01165WC	20-MAY-91	N	TRG	DMETCLPTAL	MOLYBDENUM	26	UG/L		U	50								
SW023	SW	REAL	SW01165WC	20-MAY-91	N	TRG	DMETCLPTAL	NICKEL	5.0	UG/L		U	40								
SW023	SW	REAL	SW01165WC	20-MAY-91	N	TRG	DMETCLPTAL	POTASSIUM	2200	UG/L		I	5000								
SW023	SW	REAL	SW01165WC	20-MAY-91	N	TRG	DMETCLPTAL	SELENIUM	6.9	UG/L			5								
SW023	SW	REAL	SW01165WC	20-MAY-91	N	TRG	DMETCLPTAL	SILVER	5.0	UG/L		U	10								
SW023	SW	REAL	SW01165WC	20-MAY-91	N	TRG	DMETCLPTAL	SODIUM	35000	UG/L			5000								
SW023	SW	REAL	SW01165WC	20-MAY-91	N	TRG	DMETCLPTAL	STRONTIUM	400	UG/L			200								
SW023	SW	REAL	SW01165WC	20-MAY-91	N	TRG	DMETCLPTAL	THALLIUM	15	UG/L		UI	10								
SW023	SW	REAL	SW01165WC	20-MAY-91	N	TRG	DMETCLPTAL	TIN	16	UG/L		U	200								
SW023	SW	REAL	SW01165WC	20-MAY-91	N	TRG	DMETCLPTAL	VANADIUM	3.0	UG/L		U	50								

Location	ST	QC	Sample Number	Smpl Date	D	ID	Group	Chemical	Result	Unit	Error	Qual	D LMT	VA	RN1	RN2	RN3	RN4	VResult	VQual	VDET
SW023	SW	REAL	SW01165WC	20-MAY-91	N	TRG	DMETCLPTAL	ZINC	41	UG/L			20								
SW023	SW	REAL	SW01165WC	20-MAY-91	N	TRG	SMETCLPTCL	ALUMINUM	46	UG/L			200								
SW023	SW	REAL	SW01165WC	20-MAY-91	N	TRG	SMETCLPTCL	ANTIMONY	17	UG/L		U	60								
SW023	SW	REAL	SW01165WC	20-MAY-91	N	TRG	SMETCLPTCL	ARSENIC	2 0	UG/L		U	10								
SW023	SW	REAL	SW01165WC	20-MAY-91	N	TRG	SMETCLPTCL	BARIUM	97	UG/L			200								
SW023	SW	REAL	SW01165WC	20-MAY-91	N	TRG	SMETCLPTCL	BERYLLIUM	1 0	UG/L		U	5								
SW023	SW	REAL	SW01165WC	20-MAY-91	N	TRG	SMETCLPTCL	BERYLLIUM	3 0	UG/L		U	5								
SW023	SW	REAL	SW01165WC	20-MAY-91	N	TRG	SMETCLPTCL	CALCIUM	57000	UG/L			5000								
SW023	SW	REAL	SW01165WC	20-MAY-91	N	TRG	SMETCLPTCL	CESIUM	110	UG/L			1000								
SW023	SW	REAL	SW01165WC	20-MAY-91	N	TRG	SMETCLPTCL	CHROMIUM	3 0	UG/L		U	10								
SW023	SW	REAL	SW01165WC	20-MAY-91	N	TRG	SMETCLPTCL	COBALT	4 0	UG/L		U	50								
SW023	SW	REAL	SW01165WC	20-MAY-91	N	TRG	SMETCLPTCL	COPPER	4 0	UG/L		U	25								
SW023	SW	REAL	SW01165WC	20-MAY-91	N	TRG	SMETCLPTCL	IRON	120	UG/L			100								
SW023	SW	REAL	SW01165WC	20-MAY-91	N	TRG	SMETCLPTCL	LEAD	1 4	UG/L			3								
SW023	SW	REAL	SW01165WC	20-MAY-91	N	TRG	SMETCLPTCL	LITHIUM	6 5	UG/L			100								
SW023	SW	REAL	SW01165WC	20-MAY-91	N	TRG	SMETCLPTCL	MAGNESIUM	13000	UG/L			5000								
SW023	SW	REAL	SW01165WC	20-MAY-91	N	TRG	SMETCLPTCL	MANGANESE	19	UG/L			15								
SW023	SW	REAL	SW01165WC	20-MAY-91	N	TRG	SMETCLPTCL	MERCURY	0 20	UG/L		U	0 2								
SW023	SW	REAL	SW01165WC	20-MAY-91	N	TRG	SMETCLPTCL	MOLYBDENUM	26	UG/L		U	50								
SW023	SW	REAL	SW01165WC	20-MAY-91	N	TRG	SMETCLPTCL	NICKEL	5 0	UG/L		U	40								
SW023	SW	REAL	SW01165WC	20-MAY-91	N	TRG	SMETCLPTCL	POTASSIUM	2100	UG/L			5000								
SW023	SW	REAL	SW01165WC	20-MAY-91	N	TRG	SMETCLPTCL	SELENIUM	3 0	UG/L		U	5								
SW023	SW	REAL	SW01165WC	20-MAY-91	N	TRG	SMETCLPTCL	SILVER	5 0	UG/L		U	10								
SW023	SW	REAL	SW01165WC	20-MAY-91	N	TRG	SMETCLPTCL	SODIUM	34000	UG/L			5000								
SW023	SW	REAL	SW01165WC	20-MAY-91	N	TRG	SMETCLPTCL	STRONTIUM	400	UG/L			200								
SW023	SW	REAL	SW01165WC	20-MAY-91	N	TRG	SMETCLPTCL	THALLIUM	2 0	UG/L		UI	10								
SW023	SW	REAL	SW01165WC	20-MAY-91	N	TRG	SMETCLPTCL	TIN	16	UG/L		U	200								
SW023	SW	REAL	SW01165WC	20-MAY-91	N	TRG	SMETCLPTCL	VANADIUM	3 0	UG/L		U	50								
SW023	SW	REAL	SW01165WC	20-MAY-91	N	TRG	SMETCLPTCL	ZINC	43	UG/L			20								
SW023	SW	REAL	SW01165WC	20-MAY-91	N	TRG	SMETNOCLP	SILICON	3370	UG/L			14 2								
SW023	SW	REAL	SW01165WC	20-MAY-91	N	TRG	SMETNOCLP	SILICON	3450	UG/L			25 7								
SW023	SW	REAL	SW01268WC	25-JUN-91	N	TRG	DMETCLP	SILICON	3980	UG/L			10 5								
SW023	SW	REAL	SW01268WC	25-JUN-91	N	TRG	METCLP	SILICON	4300	UG/L			10 5								
SW023	SW	REAL	SW01371WC	17-JUL-91	N																
SW023	SW	REAL	SW01477WC	06-AUG-91	N	TRG	DMETCLP	SILICON	5350	UG/L			10 5								
SW023	SW	REAL	SW01477WC	06-AUG-91	N	TRG	DMETCLPTAL	ALUMINUM	13	UG/L			200								
SW023	SW	REAL	SW01477WC	06-AUG-91	N	TRG	DMETCLPTAL	ANTIMONY	11	UG/L		U	60								
SW023	SW	REAL	SW01477WC	06-AUG-91	N	TRG	DMETCLPTAL	ARSENIC	2 0	UG/L		U	10								
SW023	SW	REAL	SW01477WC	06-AUG-91	N	TRG	DMETCLPTAL	BARIUM	120	UG/L			200								
SW023	SW	REAL	SW01477WC	06-AUG-91	N	TRG	DMETCLPTAL	BERYLLIUM	1.0	UG/L		U	5								
SW023	SW	REAL	SW01477WC	06-AUG-91	N	TRG	DMETCLPTAL	BERYLLIUM	2 0	UG/L		U	5								
SW023	SW	REAL	SW01477WC	06-AUG-91	N	TRG	DMETCLPTAL	CALCIUM	77000	UG/L			5000								
SW023	SW	REAL	SW01477WC	06-AUG-91	N	TRG	DMETCLPTAL	CESIUM	50	UG/L		U	1000								
SW023	SW	REAL	SW01477WC	06-AUG-91	N	TRG	DMETCLPTAL	CHROMIUM	2 0	UG/L		U	10								
SW023	SW	REAL	SW01477WC	06-AUG-91	N	TRG	DMETCLPTAL	COBALT	2 0	UG/L		U	50								
SW023	SW	REAL	SW01477WC	06-AUG-91	N	TRG	DMETCLPTAL	COPPER	3.0	UG/L		U	25								
SW023	SW	REAL	SW01477WC	06-AUG-91	N	TRG	DMETCLPTAL	IRON	20	UG/L			100								
SW023	SW	REAL	SW01477WC	06-AUG-91	N	TRG	DMETCLPTAL	LEAD	1 8	UG/L			3								
SW023	SW	REAL	SW01477WC	06-AUG-91	N	TRG	DMETCLPTAL	LITHIUM	12	UG/L			100								
SW023	SW	REAL	SW01477WC	06-AUG-91	N	TRG	DMETCLPTAL	MAGNESIUM	20000	UG/L			5000								
SW023	SW	REAL	SW01477WC	06-AUG-91	N	TRG	DMETCLPTAL	MANGANESE	28	UG/L			15								
SW023	SW	REAL	SW01477WC	06-AUG-91	N	TRG	DMETCLPTAL	MERCURY	0 20	UG/L		U	0 2								
SW023	SW	REAL	SW01477WC	06-AUG-91	N	TRG	DMETCLPTAL	MOLYBDENUM	3.0	UG/L		U	50								
SW023	SW	REAL	SW01477WC	06-AUG-91	N	TRG	DMETCLPTAL	NICKEL	4 0	UG/L		U	40								
SW023	SW	REAL	SW01477WC	06-AUG-91	N	TRG	DMETCLPTAL	POTASSIUM	2800	UG/L			5000								
SW023	SW	REAL	SW01477WC	06-AUG-91	N	TRG	DMETCLPTAL	SELENIUM	4.0	UG/L		U	5								
SW023	SW	REAL	SW01477WC	06-AUG-91	N	TRG	DMETCLPTAL	SILVER	2.0	UG/L		U	10								
SW023	SW	REAL	SW01477WC	06-AUG-91	N	TRG	DMETCLPTAL	SODIUM	51000	UG/L			5000								
SW023	SW	REAL	SW01477WC	06-AUG-91	N	TRG	DMETCLPTAL	STRONTIUM	550	UG/L			200								
SW023	SW	REAL	SW01477WC	06-AUG-91	N	TRG	DMETCLPTAL	THALLIUM	15	UG/L		UI	10								
SW023	SW	REAL	SW01477WC	06-AUG-91	N	TRG	DMETCLPTAL	TIN	13	UG/L		U	200								
SW023	SW	REAL	SW01477WC	06-AUG-91	N	TRG	DMETCLPTAL	VANADIUM	3.0	UG/L		U	50								
SW023	SW	REAL	SW01477WC	06-AUG-91	N	TRG	DMETCLPTAL	ZINC	3 0	UG/L		U	20								

Location	ST	QC	Sample Number	Smpl Date	D	ID	Group	Chemical	Result	Unit	Error	Qual	D LMT	VA	RN1	RN2	RN3	RN4	VResult	VQual	VDET
SW023	SW	REAL	SW01477WC	06-AUG-91	N	TRG	DMETNOCLP	SILICON	5350	UG/L			10 5								
SW023	SW	REAL	SW01477WC	06-AUG-91	N	TRG	METCLP	SILICON	1700	UG/L			10 5								
SW023	SW	REAL	SW01477WC	06-AUG-91	N	TRG	SMETNOCLP	SILICON	1700	UG/L			10 5								
SW023	SW	REAL	SW01583WC	16-SEP-91	N	TRG	DMETCLP	ALUMINUM	22.3	UG/L		U	22 3								
SW023	SW	REAL	SW01583WC	16-SEP-91	N	TRG	DMETCLP	ANTIMONY	13 8	UG/L		U	13 8								
SW023	SW	REAL	SW01583WC	16-SEP-91	N	TRG	DMETCLP	ARSENIC	1 1	UG/L		U	1 1								
SW023	SW	REAL	SW01583WC	16-SEP-91	N	TRG	DMETCLP	BARIUM	97 3	UG/L			5 6								
SW023	SW	REAL	SW01583WC	16-SEP-91	N	TRG	DMETCLP	BERYLLIUM	0 50	UG/L		U	0 50								
SW023	SW	REAL	SW01583WC	16-SEP-91	N	TRG	DMETCLP	CADMIUM	2 4	UG/L		U	2.4								
SW023	SW	REAL	SW01583WC	16-SEP-91	N	TRG	DMETCLP	CALCIUM	74600	UG/L			29 2								
SW023	SW	REAL	SW01583WC	16-SEP-91	N	TRG	DMETCLP	CESIUM	500	UG/L		U	500								
SW023	SW	REAL	SW01583WC	16-SEP-91	N	TRG	DMETCLP	CHROMIUM	2 6	UG/L		U	2.6								
SW023	SW	REAL	SW01583WC	16-SEP-91	N	TRG	DMETCLP	COBALT	2 8	UG/L		U	2 8								
SW023	SW	REAL	SW01583WC	16-SEP-91	N	TRG	DMETCLP	COPPER	2 1	UG/L		U	2 1								
SW023	SW	REAL	SW01583WC	16-SEP-91	N	TRG	DMETCLP	IRON	16 7	UG/L		U	16 7								
SW023	SW	REAL	SW01583WC	16-SEP-91	N	TRG	DMETCLP	LEAD	2 7	UG/L			0 90								
SW023	SW	REAL	SW01583WC	16-SEP-91	N	TRG	DMETCLP	LITHIUM	11 6	UG/L			7 1								
SW023	SW	REAL	SW01583WC	16-SEP-91	N	TRG	DMETCLP	MAGNESIUM	18800	UG/L			33 1								
SW023	SW	REAL	SW01583WC	16-SEP-91	N	TRG	DMETCLP	MANGANESE	13 3	UG/L			1 3								
SW023	SW	REAL	SW01583WC	16-SEP-91	N	TRG	DMETCLP	MERCURY	0 20	UG/L		U	0 20								
SW023	SW	REAL	SW01583WC	16-SEP-91	N	TRG	DMETCLP	MOLYBDENUM	5 8	UG/L		U	5 8								
SW023	SW	REAL	SW01583WC	16-SEP-91	N	TRG	DMETCLP	NICKEL	5 9	UG/L		U	5 9								
SW023	SW	REAL	SW01583WC	16-SEP-91	N	TRG	DMETCLP	POTASSIUM	1820	UG/L			675								
SW023	SW	REAL	SW01583WC	16-SEP-91	N	TRG	DMETCLP	SELENIUM	1 2	UG/L		U	1 2								
SW023	SW	REAL	SW01583WC	16-SEP-91	N	TRG	DMETCLP	SILICON	5290	UG/L			21 0								
SW023	SW	REAL	SW01583WC	16-SEP-91	N	TRG	DMETCLP	SILVER	2 9	UG/L		U	2 9								
SW023	SW	REAL	SW01583WC	16-SEP-91	N	TRG	DMETCLP	SODIUM	42700	UG/L			172								
SW023	SW	REAL	SW01583WC	16-SEP-91	N	TRG	DMETCLP	STRONTIUM	512	UG/L			2 3								
SW023	SW	REAL	SW01583WC	16-SEP-91	N	TRG	DMETCLP	THALLIUM	1 9	UG/L		U	1 9								
SW023	SW	REAL	SW01583WC	16-SEP-91	N	TRG	DMETCLP	TIN	10 4	UG/L		U	10 4								
SW023	SW	REAL	SW01583WC	16-SEP-91	N	TRG	DMETCLP	VANADIUM	2 3	UG/L		U	2.3								
SW023	SW	REAL	SW01583WC	16-SEP-91	N	TRG	DMETCLP	ZINC	4 3	UG/L		U	4 3								
SW023	SW	REAL	SW01583WC	16-SEP-91	N	TRG	METCLP	ALUMINUM	55.8	UG/L			22 3								
SW023	SW	REAL	SW01583WC	16-SEP-91	N	TRG	METCLP	ANTIMONY	13 8	UG/L		U	13 8								
SW023	SW	REAL	SW01583WC	16-SEP-91	N	TRG	METCLP	ARSENIC	1 2	UG/L			0 70								
SW023	SW	REAL	SW01583WC	16-SEP-91	N	TRG	METCLP	BARIUM	117	UG/L			5 6								
SW023	SW	REAL	SW01583WC	16-SEP-91	N	TRG	METCLP	BERYLLIUM	0.70	UG/L			0 50								
SW023	SW	REAL	SW01583WC	16-SEP-91	N	TRG	METCLP	CADMIUM	2 4	UG/L		U	2 4								
SW023	SW	REAL	SW01583WC	16-SEP-91	N	TRG	METCLP	CALCIUM	71100	UG/L			29 2								
SW023	SW	REAL	SW01583WC	16-SEP-91	N	TRG	METCLP	CESIUM	500	UG/L		U	500								
SW023	SW	REAL	SW01583WC	16-SEP-91	N	TRG	METCLP	CHROMIUM	2 6	UG/L		U	2 6								
SW023	SW	REAL	SW01583WC	16-SEP-91	N	TRG	METCLP	COBALT	2 8	UG/L		U	2 8								
SW023	SW	REAL	SW01583WC	16-SEP-91	N	TRG	METCLP	COPPER	2 9	UG/L			2 1								
SW023	SW	REAL	SW01583WC	16-SEP-91	N	TRG	METCLP	IRON	142	UG/L			16 7								
SW023	SW	REAL	SW01583WC	16-SEP-91	N	TRG	METCLP	LEAD	1 6	UG/L			0 90								
SW023	SW	REAL	SW01583WC	16-SEP-91	N	TRG	METCLP	LITHIUM	11.7	UG/L			7 1								
SW023	SW	REAL	SW01583WC	16-SEP-91	N	TRG	METCLP	MAGNESIUM	17800	UG/L			33 1								
SW023	SW	REAL	SW01583WC	16-SEP-91	N	TRG	METCLP	MANGANESE	18 0	UG/L			1 3								
SW023	SW	REAL	SW01583WC	16-SEP-91	N	TRG	METCLP	MERCURY	0.20	UG/L		U	0 20								
SW023	SW	REAL	SW01583WC	16-SEP-91	N	TRG	METCLP	MOLYBDENUM	8.4	UG/L			5 8								
SW023	SW	REAL	SW01583WC	16-SEP-91	N	TRG	METCLP	NICKEL	5 9	UG/L		U	5 9								
SW023	SW	REAL	SW01583WC	16-SEP-91	N	TRG	METCLP	POTASSIUM	2030	UG/L			675								
SW023	SW	REAL	SW01583WC	16-SEP-91	N	TRG	METCLP	SELENIUM	1 8	UG/L			1 2								
SW023	SW	REAL	SW01583WC	16-SEP-91	N	TRG	METCLP	SILICON	4940	UG/L			21.0								
SW023	SW	REAL	SW01583WC	16-SEP-91	N	TRG	METCLP	SILVER	2.9	UG/L		U	2 9								
SW023	SW	REAL	SW01583WC	16-SEP-91	N	TRG	METCLP	SODIUM	40000	UG/L			172								
SW023	SW	REAL	SW01583WC	16-SEP-91	N	TRG	METCLP	STRONTIUM	482	UG/L			2 3								
SW023	SW	REAL	SW01583WC	16-SEP-91	N	TRG	METCLP	THALLIUM	2.4	UG/L		U	2 4								
SW023	SW	REAL	SW01583WC	16-SEP-91	N	TRG	METCLP	TIN	10.4	UG/L		U	10 4								
SW023	SW	REAL	SW01583WC	16-SEP-91	N	TRG	METCLP	VANADIUM	4 8	UG/L			2 3								
SW023	SW	REAL	SW01583WC	16-SEP-91	N	TRG	METCLP	ZINC	20.3	UG/L			4 3								
SW023	SW	REAL	SW01689WC	15-OCT-91	N	TRG	DMETCLPTAL	ALUMINUM	54	UG/L			200								
SW023	SW	REAL	SW01689WC	15-OCT-91	N	TRG	DMETCLPTAL	ANTIMONY	14	UG/L		U	60								

Location	ST	QC	Sample Number	Smpl Date	D	ID	Group	Chemical	Result	Unit	Error	Qual	D LMT	VA	RN1	RN2	RN3	RN4	VResult	VQual	VDET
SW023	SW	REAL	SW01689WC	15-OCT-91	N	TRG	DMETCLPTAL	ARSENIC	2 0	UG/L		U	10								
SW023	SW	REAL	SW01689WC	15-OCT-91	N	TRG	DMETCLPTAL	BARIUM	120	UG/L			200								
SW023	SW	REAL	SW01689WC	15-OCT-91	N	TRG	DMETCLPTAL	BERYLLIUM	1 0	UG/L		U	5								
SW023	SW	REAL	SW01689WC	15-OCT-91	N	TRG	DMETCLPTAL	BERYLLIUM	1 2	UG/L			5								
SW023	SW	REAL	SW01689WC	15-OCT-91	N	TRG	DMETCLPTAL	CALCIUM	77000	UG/L			5000								
SW023	SW	REAL	SW01689WC	15-OCT-91	N	TRG	DMETCLPTAL	CESIUM	60	UG/L			1000								
SW023	SW	REAL	SW01689WC	15-OCT-91	N	TRG	DMETCLPTAL	CHROMIUM	2.0	UG/L		U	10								
SW023	SW	REAL	SW01689WC	15-OCT-91	N	TRG	DMETCLPTAL	COBALT	2 0	UG/L		U	50								
SW023	SW	REAL	SW01689WC	15-OCT-91	N	TRG	DMETCLPTAL	COPPER	2 0	UG/L		U	25								
SW023	SW	REAL	SW01689WC	15-OCT-91	N	TRG	DMETCLPTAL	IRON	38	UG/L			100								
SW023	SW	REAL	SW01689WC	15-OCT-91	N	TRG	DMETCLPTAL	LEAD	1 0	UG/L			3								
SW023	SW	REAL	SW01689WC	15-OCT-91	N	TRG	DMETCLPTAL	LITHIUM	9 8	UG/L			100								
SW023	SW	REAL	SW01689WC	15-OCT-91	N	TRG	DMETCLPTAL	MAGNESIUM	18000	UG/L			5000								
SW023	SW	REAL	SW01689WC	15-OCT-91	N	TRG	DMETCLPTAL	MANGANESE	16	UG/L			15								
SW023	SW	REAL	SW01689WC	15-OCT-91	N	TRG	DMETCLPTAL	MERCURY	0 20	UG/L		U	0 2								
SW023	SW	REAL	SW01689WC	15-OCT-91	N	TRG	DMETCLPTAL	MOLYBDENUM	4 0	UG/L		U	200								
SW023	SW	REAL	SW01689WC	15-OCT-91	N	TRG	DMETCLPTAL	NICKEL	5.0	UG/L		U	40								
SW023	SW	REAL	SW01689WC	15-OCT-91	N	TRG	DMETCLPTAL	POTASSIUM	1700	UG/L			5000								
SW023	SW	REAL	SW01689WC	15-OCT-91	N	TRG	DMETCLPTAL	SELENIUM	4 0	UG/L		U	5								
SW023	SW	REAL	SW01689WC	15-OCT-91	N	TRG	DMETCLPTAL	SILVER	5 0	UG/L		U	10								
SW023	SW	REAL	SW01689WC	15-OCT-91	N	TRG	DMETCLPTAL	SODIUM	38000	UG/L			5000								
SW023	SW	REAL	SW01689WC	15-OCT-91	N	TRG	DMETCLPTAL	STRONTIUM	480	UG/L			200								
SW023	SW	REAL	SW01689WC	15-OCT-91	N	TRG	DMETCLPTAL	THALLIUM	5 0	UG/L		UI	10								
SW023	SW	REAL	SW01689WC	15-OCT-91	N	TRG	DMETCLPTAL	TIN	11	UG/L		U	200								
SW023	SW	REAL	SW01689WC	15-OCT-91	N	TRG	DMETCLPTAL	VANADIUM	2 0	UG/L		U	50								
SW023	SW	REAL	SW01689WC	15-OCT-91	N	TRG	DMETCLPTAL	ZINC	5 0	UG/L		U	20								
SW023	SW	REAL	SW01689WC	15-OCT-91	N	TRG	SMETCLPTCL	ALUMINUM	330	UG/L			200								
SW023	SW	REAL	SW01689WC	15-OCT-91	N	TRG	SMETCLPTCL	ANTIMONY	14	UG/L		U	60								
SW023	SW	REAL	SW01689WC	15-OCT-91	N	TRG	SMETCLPTCL	ARSENIC	2 0	UG/L		U	10								
SW023	SW	REAL	SW01689WC	15-OCT-91	N	TRG	SMETCLPTCL	BARIUM	130	UG/L			200								
SW023	SW	REAL	SW01689WC	15-OCT-91	N	TRG	SMETCLPTCL	BERYLLIUM	1 0	UG/L		U	5								
SW023	SW	REAL	SW01689WC	15-OCT-91	N	TRG	SMETCLPTCL	CALCIUM	78000	UG/L			5000								
SW023	SW	REAL	SW01689WC	15-OCT-91	N	TRG	SMETCLPTCL	CESIUM	50	UG/L		U	1000								
SW023	SW	REAL	SW01689WC	15-OCT-91	N	TRG	SMETCLPTCL	CHROMIUM	2 0	UG/L		U	10								
SW023	SW	REAL	SW01689WC	15-OCT-91	N	TRG	SMETCLPTCL	COBALT	2 4	UG/L			50								
SW023	SW	REAL	SW01689WC	15-OCT-91	N	TRG	SMETCLPTCL	COPPER	2 0	UG/L		U	25								
SW023	SW	REAL	SW01689WC	15-OCT-91	N	TRG	SMETCLPTCL	IRON	160	UG/L			100								
SW023	SW	REAL	SW01689WC	15-OCT-91	N	TRG	SMETCLPTCL	LEAD	2 0	UG/L		U	3								
SW023	SW	REAL	SW01689WC	15-OCT-91	N	TRG	SMETCLPTCL	LITHIUM	12	UG/L			100								
SW023	SW	REAL	SW01689WC	15-OCT-91	N	TRG	SMETCLPTCL	MAGNESIUM	18000	UG/L			5000								
SW023	SW	REAL	SW01689WC	15-OCT-91	N	TRG	SMETCLPTCL	MANGANESE	28	UG/L			15								
SW023	SW	REAL	SW01689WC	15-OCT-91	N	TRG	SMETCLPTCL	MERCURY	0 20	UG/L		U	0 2								
SW023	SW	REAL	SW01689WC	15-OCT-91	N	TRG	SMETCLPTCL	MOLYBDENUM	4 0	UG/L		U	200								
SW023	SW	REAL	SW01689WC	15-OCT-91	N	TRG	SMETCLPTCL	NICKEL	5 0	UG/L		U	40								
SW023	SW	REAL	SW01689WC	15-OCT-91	N	TRG	SMETCLPTCL	POTASSIUM	1700	UG/L			5000								
SW023	SW	REAL	SW01689WC	15-OCT-91	N	TRG	SMETCLPTCL	SELENIUM	4 0	UG/L		UI	5								
SW023	SW	REAL	SW01689WC	15-OCT-91	N	TRG	SMETCLPTCL	SILVER	5 0	UG/L		U	10								
SW023	SW	REAL	SW01689WC	15-OCT-91	N	TRG	SMETCLPTCL	SODIUM	38000	UG/L			5000								
SW023	SW	REAL	SW01689WC	15-OCT-91	N	TRG	SMETCLPTCL	STRONTIUM	480	UG/L			200								
SW023	SW	REAL	SW01689WC	15-OCT-91	N	TRG	SMETCLPTCL	THALLIUM	5.0	UG/L		UI	10								
SW023	SW	REAL	SW01689WC	15-OCT-91	N	TRG	SMETCLPTCL	TIN	11	UG/L		U	200								
SW023	SW	REAL	SW01689WC	15-OCT-91	N	TRG	SMETCLPTCL	VANADIUM	2.1	UG/L			50								
SW023	SW	REAL	SW01689WC	15-OCT-91	N	TRG	SMETCLPTCL	ZINC	26	UG/L			20								
SW023	SW	REAL	SW60062WC	22-FEB-91	N	TRG	SMETCLPTCL	ANTIMONY	8.00	UG/L		U	60.00								
SW023	SW	REAL	SW60062WC	22-FEB-91	N	TRG	SMETCLPTCL	ARSENIC	2.00	UG/L		U	10 00								
SW023	SW	REAL	SW60062WC	22-FEB-91	N	TRG	SMETCLPTCL	BARIUM	86.00	UG/L		B	200.0								
SW023	SW	REAL	SW60062WC	22-FEB-91	N	TRG	SMETCLPTCL	BERYLLIUM	1.00	UG/L		U	5.000								
SW023	SW	REAL	SW60062WC	22-FEB-91	N	TRG	SMETCLPTCL	CADMIUM	2 00	UG/L		U	5 000								
SW023	SW	REAL	SW60062WC	22-FEB-91	N	TRG	SMETCLPTCL	CALCIUM	46200.00	UG/L			5000.								
SW023	SW	REAL	SW60062WC	22-FEB-91	N	TRG	SMETCLPTCL	CHROMIUM	5.00	UG/L		U	10.00								
SW023	SW	REAL	SW60062WC	22-FEB-91	N	TRG	SMETCLPTCL	COBALT	3 00	UG/L		U	50 00								
SW023	SW	REAL	SW60062WC	22-FEB-91	N	TRG	SMETCLPTCL	COPPER	2.10	UG/L		B	25.00								
SW023	SW	REAL	SW60062WC	22-FEB-91	N	TRG	SMETCLPTCL	IRON	1220 00	UG/L		N*	100.0								

Loration	ST	QC	Sample Number	Smpl Date	D	ID	Group	Chemical	Result	Unit	Error	Qual	D LMT	VA	RN1	RN2	RN3	RN4	VResult	VQual	VDET
SW023	SW	REAL	SW60062WC	22-FEB-91	N	TRG	SMETCLPTCL	LEAD	2.30	UG/L		BW	3 000								
SW023	SW	REAL	SW60062WC	22-FEB-91	N	TRG	SMETCLPTCL	MAGNESIUM	12000 00	UG/L			5000								
SW023	SW	REAL	SW60062WC	22-FEB-91	N	TRG	SMETCLPTCL	MANGANESE	122 00	UG/L			15 00								
SW023	SW	REAL	SW60062WC	22-FEB-91	N	TRG	SMETCLPTCL	MERCURY	0 20	UG/L		UN	0 200								
SW023	SW	REAL	SW60062WC	22-FEB-91	N	TRG	SMETCLPTCL	NICKEL	4 00	UG/L		U	40.00								
SW023	SW	REAL	SW60062WC	22-FEB-91	N	TRG	SMETCLPTCL	POTASSIUM	8170 00	UG/L			5000								
SW023	SW	REAL	SW60062WC	22-FEB-91	N	TRG	SMETCLPTCL	SELENIUM	2.00	UG/L		UN	5 000								
SW023	SW	REAL	SW60062WC	22-FEB-91	N	TRG	SMETCLPTCL	SILVER	3.00	UG/L		U	10 00								
SW023	SW	REAL	SW60062WC	22-FEB-91	N	TRG	SMETCLPTCL	SODIUM	105000 00	UG/L			5000								
SW023	SW	REAL	SW60062WC	22-FEB-91	N	TRG	SMETCLPTCL	THALLIUM	1 00	UG/L		B	10 00								
SW023	SW	REAL	SW60062WC	22-FEB-91	N	TRG	SMETCLPTCL	VANADIUM	2 90	UG/L		B	50 00								
SW023	SW	REAL	SW60062WC	22-FEB-91	N	TRG	SMETCLPTCL	ZINC	173 00	UG/L			20 00								
SW023	SW	REAL	SW60062WC	22-FEB-91	N	TRG	SMETNOCLP	ALUMINUM	574.00	UG/L			200 0								
SW023	SW	REAL	SW60062WC	22-FEB-91	N	TRG	SMETNOCLP	CESIUM	76.00	UG/L		U	1000								
SW023	SW	REAL	SW60062WC	22-FEB-91	N	TRG	SMETNOCLP	LITHIUM	10 50	UG/L		B	100 0								
SW023	SW	REAL	SW60062WC	22-FEB-91	N	TRG	SMETNOCLP	MOLYBDENUM	9 30	UG/L		B	200 0								
SW023	SW	REAL	SW60062WC	22-FEB-91	N	TRG	SMETNOCLP	STRONTIUM	352 00	UG/L			200 0								
SW023	SW	REAL	SW60062WC	22-FEB-91	N	TRG	SMETNOCLP	TIN	16.10	UG/L		B	200 0								
SW023	SW	REAL	SW60063WC	22-FEB-91	N																
SW023	SW	REAL	SW60066WCB	02-APR-91	N																
SW023	SW	REAL	SW60068WC	10-APR-91	N	TRG	SMETCLPTCL	ALUMINUM	19000	UG/L			200								
SW023	SW	REAL	SW60068WC	10-APR-91	N	TRG	SMETCLPTCL	ANTIMONY	17	UG/L		U	60								
SW023	SW	REAL	SW60068WC	10-APR-91	N	TRG	SMETCLPTCL	ARSENIC	6 5	UG/L			10								
SW023	SW	REAL	SW60068WC	10-APR-91	N	TRG	SMETCLPTCL	BARIUM	280	UG/L			200								
SW023	SW	REAL	SW60068WC	10-APR-91	N	TRG	SMETCLPTCL	BERYLLIUM	1.0	UG/L		U	5								
SW023	SW	REAL	SW60068WC	10-APR-91	N	TRG	SMETCLPTCL	BERYLLIUM	3 0	UG/L		U	5								
SW023	SW	REAL	SW60068WC	10-APR-91	N	TRG	SMETCLPTCL	CALCIUM	73000	UG/L			5000								
SW023	SW	REAL	SW60068WC	10-APR-91	N	TRG	SMETCLPTCL	CESIUM	50	UG/L		U	1000								
SW023	SW	REAL	SW60068WC	10-APR-91	N	TRG	SMETCLPTCL	CHROMIUM	16	UG/L			10								
SW023	SW	REAL	SW60068WC	10-APR-91	N	TRG	SMETCLPTCL	COBALT	9 9	UG/L			50								
SW023	SW	REAL	SW60068WC	10-APR-91	N	TRG	SMETCLPTCL	COPPER	44	UG/L			25								
SW023	SW	REAL	SW60068WC	10-APR-91	N	TRG	SMETCLPTCL	CYANIDES (SOLUBLE SALTS AND CO	20	UG/L		U	10								
SW023	SW	REAL	SW60068WC	10-APR-91	N	TRG	SMETCLPTCL	IRON	21000	UG/L			100								
SW023	SW	REAL	SW60068WC	10-APR-91	N	TRG	SMETCLPTCL	LEAD	31	UG/L			3								
SW023	SW	REAL	SW60068WC	10-APR-91	N	TRG	SMETCLPTCL	LITHIUM	14	UG/L			100								
SW023	SW	REAL	SW60068WC	10-APR-91	N	TRG	SMETCLPTCL	MAGNESIUM	18000	UG/L			5000								
SW023	SW	REAL	SW60068WC	10-APR-91	N	TRG	SMETCLPTCL	MANGANESE	1100	UG/L			15								
SW023	SW	REAL	SW60068WC	10-APR-91	N	TRG	SMETCLPTCL	MERCURY	0 20	UG/L		U	0.2								
SW023	SW	REAL	SW60068WC	10-APR-91	N	TRG	SMETCLPTCL	MOLYBDENUM	26	UG/L		U	50								
SW023	SW	REAL	SW60068WC	10-APR-91	N	TRG	SMETCLPTCL	NICKEL	16	UG/L			40								
SW023	SW	REAL	SW60068WC	10-APR-91	N	TRG	SMETCLPTCL	POTASSIUM	6900	UG/L			5000								
SW023	SW	REAL	SW60068WC	10-APR-91	N	TRG	SMETCLPTCL	SELENIUM	3.0	UG/L		UI	5								
SW023	SW	REAL	SW60068WC	10-APR-91	N	TRG	SMETCLPTCL	SILVER	5 0	UG/L		U	10								
SW023	SW	REAL	SW60068WC	10-APR-91	N	TRG	SMETCLPTCL	SODIUM	42000	UG/L			5000								
SW023	SW	REAL	SW60068WC	10-APR-91	N	TRG	SMETCLPTCL	STRONTIUM	460	UG/L			200								
SW023	SW	REAL	SW60068WC	10-APR-91	N	TRG	SMETCLPTCL	THALLIUM	3 0	UG/L		UI	10								
SW023	SW	REAL	SW60068WC	10-APR-91	N	TRG	SMETCLPTCL	TIN	16	UG/L		U	200								
SW023	SW	REAL	SW60068WC	10-APR-91	N	TRG	SMETCLPTCL	VANADIUM	50	UG/L			50								
SW023	SW	REAL	SW60068WC	10-APR-91	N	TRG	SMETCLPTCL	ZINC	600	UG/L			20								
SW023	SW	REAL	SW60069WC	15-APR-91	N	TRG	SMETCLPTCL	ALUMINUM	16000	UG/L			200								
SW023	SW	REAL	SW60069WC	15-APR-91	N	TRG	SMETCLPTCL	ANTIMONY	20	UG/L			60								
SW023	SW	REAL	SW60069WC	15-APR-91	N	TRG	SMETCLPTCL	ARSENIC	5.6	UG/L			10								
SW023	SW	REAL	SW60069WC	15-APR-91	N	TRG	SMETCLPTCL	BARIUM	200	UG/L			200								
SW023	SW	REAL	SW60069WC	15-APR-91	N	TRG	SMETCLPTCL	BERYLLIUM	1.0	UG/L		U	5								
SW023	SW	REAL	SW60069WC	15-APR-91	N	TRG	SMETCLPTCL	BERYLLIUM	3.0	UG/L		U	5								
SW023	SW	REAL	SW60069WC	15-APR-91	N	TRG	SMETCLPTCL	CALCIUM	37000	UG/L			5000								
SW023	SW	REAL	SW60069WC	15-APR-91	N	TRG	SMETCLPTCL	CESIUM	50	UG/L		U	1000								
SW023	SW	REAL	SW60069WC	15-APR-91	N	TRG	SMETCLPTCL	CHROMIUM	19	UG/L			10								
SW023	SW	REAL	SW60069WC	15-APR-91	N	TRG	SMETCLPTCL	COBALT	8.1	UG/L			50								
SW023	SW	REAL	SW60069WC	15-APR-91	N	TRG	SMETCLPTCL	COPPER	37	UG/L			25								
SW023	SW	REAL	SW60069WC	15-APR-91	N	TRG	SMETCLPTCL	CYANIDES (SOLUBLE SALTS AND CO	20	UG/L		U	10								
SW023	SW	REAL	SW60069WC	15-APR-91	N	TRG	SMETCLPTCL	IRON	17000	UG/L			100								
SW023	SW	REAL	SW60069WC	15-APR-91	N	TRG	SMETCLPTCL	LEAD	43	UG/L			3								

Location	ST	QC	Sample Number	Smpl Date	D	ID	Group	Chemical	Result	Unit	Error	Qual	D LMT	VA	RN1	RN2	RN3	RN4	VResult	VQual	VDET
SW023	SW	REAL	SW60069WC	15-APR-91	N	TRG	SMETCLPTCL	LITHIUM	14	UG/L			100								
SW023	SW	REAL	SW60069WC	15-APR-91	N	TRG	SMETCLPTCL	MAGNESIUM	8400	UG/L			5000								
SW023	SW	REAL	SW60069WC	15-APR-91	N	TRG	SMETCLPTCL	MANGANESE	600	UG/L			15								
SW023	SW	REAL	SW60069WC	15-APR-91	N	TRG	SMETCLPTCL	MERCURY	0 20	UG/L		U	0 2								
SW023	SW	REAL	SW60069WC	15-APR-91	N	TRG	SMETCLPTCL	MOLYBDENUM	26	UG/L		U	50								
SW023	SW	REAL	SW60069WC	15-APR-91	N	TRG	SMETCLPTCL	NICKEL	19	UG/L			40								
SW023	SW	REAL	SW60069WC	15-APR-91	N	TRG	SMETCLPTCL	POTASSIUM	8600	UG/L			5000								
SW023	SW	REAL	SW60069WC	15-APR-91	N	TRG	SMETCLPTCL	SELENIUM	15	UG/L		UI	5								
SW023	SW	REAL	SW60069WC	15-APR-91	N	TRG	SMETCLPTCL	SILVER	5 0	UG/L		U	10								
SW023	SW	REAL	SW60069WC	15-APR-91	N	TRG	SMETCLPTCL	SODIUM	39000	UG/L			5000								
SW023	SW	REAL	SW60069WC	15-APR-91	N	TRG	SMETCLPTCL	STRONTIUM	200	UG/L			200								
SW023	SW	REAL	SW60069WC	15-APR-91	N	TRG	SMETCLPTCL	THALLIUM	3 0	UG/L		UI	10								
SW023	SW	REAL	SW60069WC	15-APR-91	N	TRG	SMETCLPTCL	TIN	16	UG/L		U	200								
SW023	SW	REAL	SW60069WC	15-APR-91	N	TRG	SMETCLPTCL	VANADIUM	42	UG/L			50								
SW023	SW	REAL	SW60069WC	15-APR-91	N	TRG	SMETCLPTCL	ZINC	530	UG/L			20								
SW023	SW	REAL	SW60075WC	23-APR-91	N																
SW023	SW	REAL	SW60083WC	01-MAY-91	N																
SW023	SW	REAL	SW60090WC	17-MAY-91	N	TRG	SMETCLPTCL	ALUMINUM	16000	UG/L			200								
SW023	SW	REAL	SW60090WC	17-MAY-91	N	TRG	SMETCLPTCL	ANTIMONY	17	UG/L		U	60								
SW023	SW	REAL	SW60090WC	17-MAY-91	N	TRG	SMETCLPTCL	ARSENIC	10	UG/L			10								
SW023	SW	REAL	SW60090WC	17-MAY-91	N	TRG	SMETCLPTCL	BARIUM	210	UG/L			200								
SW023	SW	REAL	SW60090WC	17-MAY-91	N	TRG	SMETCLPTCL	BERYLLIUM	1 0	UG/L		U	5								
SW023	SW	REAL	SW60090WC	17-MAY-91	N	TRG	SMETCLPTCL	BERYLLIUM	3.0	UG/L		U	5								
SW023	SW	REAL	SW60090WC	17-MAY-91	N	TRG	SMETCLPTCL	CALCIUM	36000	UG/L			5000								
SW023	SW	REAL	SW60090WC	17-MAY-91	N	TRG	SMETCLPTCL	CESIUM	50	UG/L		U	1000								
SW023	SW	REAL	SW60090WC	17-MAY-91	N	TRG	SMETCLPTCL	CHROMIUM	21	UG/L			10								
SW023	SW	REAL	SW60090WC	17-MAY-91	N	TRG	SMETCLPTCL	COBALT	10	UG/L			50								
SW023	SW	REAL	SW60090WC	17-MAY-91	N	TRG	SMETCLPTCL	COPPER	88	UG/L			25								
SW023	SW	REAL	SW60090WC	17-MAY-91	N	TRG	SMETCLPTCL	IRON	19000	UG/L			100								
SW023	SW	REAL	SW60090WC	17-MAY-91	N	TRG	SMETCLPTCL	LEAD	71	UG/L			3								
SW023	SW	REAL	SW60090WC	17-MAY-91	N	TRG	SMETCLPTCL	LITHIUM	15	UG/L			100								
SW023	SW	REAL	SW60090WC	17-MAY-91	N	TRG	SMETCLPTCL	MAGNESIUM	9800	UG/L			5000								
SW023	SW	REAL	SW60090WC	17-MAY-91	N	TRG	SMETCLPTCL	MANGANESE	1300	UG/L			15								
SW023	SW	REAL	SW60090WC	17-MAY-91	N	TRG	SMETCLPTCL	MERCURY	0 20	UG/L		U	0 2								
SW023	SW	REAL	SW60090WC	17-MAY-91	N	TRG	SMETCLPTCL	MOLYBDENUM	26	UG/L		U	50								
SW023	SW	REAL	SW60090WC	17-MAY-91	N	TRG	SMETCLPTCL	NICKEL	19	UG/L			40								
SW023	SW	REAL	SW60090WC	17-MAY-91	N	TRG	SMETCLPTCL	POTASSIUM	5800	UG/L			5000								
SW023	SW	REAL	SW60090WC	17-MAY-91	N	TRG	SMETCLPTCL	SELENIUM	3.0	UG/L		UI	5								
SW023	SW	REAL	SW60090WC	17-MAY-91	N	TRG	SMETCLPTCL	SILVER	5 0	UG/L		U	10								
SW023	SW	REAL	SW60090WC	17-MAY-91	N	TRG	SMETCLPTCL	SODIUM	22000	UG/L			5000								
SW023	SW	REAL	SW60090WC	17-MAY-91	N	TRG	SMETCLPTCL	STRONTIUM	220	UG/L			200								
SW023	SW	REAL	SW60090WC	17-MAY-91	N	TRG	SMETCLPTCL	THALLIUM	3 0	UG/L		UI	10								
SW023	SW	REAL	SW60090WC	17-MAY-91	N	TRG	SMETCLPTCL	TIN	16	UG/L		U	200								
SW023	SW	REAL	SW60090WC	17-MAY-91	N	TRG	SMETCLPTCL	VANADIUM	45	UG/L			50								
SW023	SW	REAL	SW60090WC	17-MAY-91	N	TRG	SMETCLPTCL	ZINC	1200	UG/L			20								
SW023	SW	REAL	SW60100WC	23-MAY-91	N	TRG	SMETCLPTCL	ALUMINUM	7700	UG/L			200								
SW023	SW	REAL	SW60100WC	23-MAY-91	N	TRG	SMETCLPTCL	ANTIMONY	17	UG/L		U	60								
SW023	SW	REAL	SW60100WC	23-MAY-91	N	TRG	SMETCLPTCL	ARSENIC	3.9	UG/L		I	10								
SW023	SW	REAL	SW60100WC	23-MAY-91	N	TRG	SMETCLPTCL	BARIUM	93	UG/L			200								
SW023	SW	REAL	SW60100WC	23-MAY-91	N	TRG	SMETCLPTCL	BERYLLIUM	1.0	UG/L		U	5								
SW023	SW	REAL	SW60100WC	23-MAY-91	N	TRG	SMETCLPTCL	BERYLLIUM	3.0	UG/L		U	5								
SW023	SW	REAL	SW60100WC	23-MAY-91	N	TRG	SMETCLPTCL	CALCIUM	21000	UG/L			5000								
SW023	SW	REAL	SW60100WC	23-MAY-91	N	TRG	SMETCLPTCL	CESIUM	50	UG/L		U	1000								
SW023	SW	REAL	SW60100WC	23-MAY-91	N	TRG	SMETCLPTCL	CHROMIUM	11	UG/L			10								
SW023	SW	REAL	SW60100WC	23-MAY-91	N	TRG	SMETCLPTCL	COBALT	4.0	UG/L		U	50								
SW023	SW	REAL	SW60100WC	23-MAY-91	N	TRG	SMETCLPTCL	COPPER	21	UG/L			25								
SW023	SW	REAL	SW60100WC	23-MAY-91	N	TRG	SMETCLPTCL	IRON	7600	UG/L			100								
SW023	SW	REAL	SW60100WC	23-MAY-91	N	TRG	SMETCLPTCL	LEAD	20	UG/L			3								
SW023	SW	REAL	SW60100WC	23-MAY-91	N	TRG	SMETCLPTCL	LITHIUM	7.4	UG/L			100								
SW023	SW	REAL	SW60100WC	23-MAY-91	N	TRG	SMETCLPTCL	MAGNESIUM	4800	UG/L			5000								
SW023	SW	REAL	SW60100WC	23-MAY-91	N	TRG	SMETCLPTCL	MANGANESE	140	UG/L			15								
SW023	SW	REAL	SW60100WC	23-MAY-91	N	TRG	SMETCLPTCL	MERCURY	0.20	UG/L		U	0.2								
SW023	SW	REAL	SW60100WC	23-MAY-91	N	TRG	SMETCLPTCL	MOLYBDENUM	26	UG/L		U	50								

Location	ST	QC	Sample Number	Smpl Date	D	ID	Group	Chemical	Result	Unit	Error	Qual	D LMT	VA	RN1	RN2	RN3	RN4	VResult	VQual	VDET
SW023	SW	REAL	SW60100WC	23-MAY-91	N	TRG	SMETCLPTCL	NICKEL	7 3	UG/L			40								
SW023	SW	REAL	SW60100WC	23-MAY-91	N	TRG	SMETCLPTCL	POTASSIUM	3400	UG/L			5000								
SW023	SW	REAL	SW60100WC	23-MAY-91	N	TRG	SMETCLPTCL	SELENIUM	4 0	UG/L		U	5								
SW023	SW	REAL	SW60100WC	23-MAY-91	N	TRG	SMETCLPTCL	SILVER	5.0	UG/L		U	10								
SW023	SW	REAL	SW60100WC	23-MAY-91	N	TRG	SMETCLPTCL	SODIUM	12000	UG/L			5000								
SW023	SW	REAL	SW60100WC	23-MAY-91	N	TRG	SMETCLPTCL	STRONTIUM	120	UG/L			200								
SW023	SW	REAL	SW60100WC	23-MAY-91	N	TRG	SMETCLPTCL	THALLIUM	3 0	UG/L		UI	10								
SW023	SW	REAL	SW60100WC	23-MAY-91	N	TRG	SMETCLPTCL	TIN	16	UG/L		U	200								
SW023	SW	REAL	SW60100WC	23-MAY-91	N	TRG	SMETCLPTCL	VANADIUM	20	UG/L			50								
SW023	SW	REAL	SW60100WC	23-MAY-91	N	TRG	SMETCLPTCL	ZINC	200	UG/L			20								
SW023	SW	REAL	SW60101WC	28-MAY-91	N	TRG	SMETCLPTCL	ALUMINUM	2100	UG/L			200								
SW023	SW	REAL	SW60101WC	28-MAY-91	N	TRG	SMETCLPTCL	ANTIMONY	17	UG/L		U	60								
SW023	SW	REAL	SW60101WC	28-MAY-91	N	TRG	SMETCLPTCL	ARSENIC	2.4	UG/L		I	10								
SW023	SW	REAL	SW60101WC	28-MAY-91	N	TRG	SMETCLPTCL	BARIUM	69	UG/L			200								
SW023	SW	REAL	SW60101WC	28-MAY-91	N	TRG	SMETCLPTCL	BERYLLIUM	1 0	UG/L		U	5								
SW023	SW	REAL	SW60101WC	28-MAY-91	N	TRG	SMETCLPTCL	BERYLLIUM	3.0	UG/L		U	5								
SW023	SW	REAL	SW60101WC	28-MAY-91	N	TRG	SMETCLPTCL	CALCIUM	30000	UG/L			5000								
SW023	SW	REAL	SW60101WC	28-MAY-91	N	TRG	SMETCLPTCL	CESIUM	50	UG/L		U	1000								
SW023	SW	REAL	SW60101WC	28-MAY-91	N	TRG	SMETCLPTCL	CHROMIUM	3.0	UG/L		U	10								
SW023	SW	REAL	SW60101WC	28-MAY-91	N	TRG	SMETCLPTCL	COBALT	4 0	UG/L		U	50								
SW023	SW	REAL	SW60101WC	28-MAY-91	N	TRG	SMETCLPTCL	COPPER	13	UG/L			25								
SW023	SW	REAL	SW60101WC	28-MAY-91	N	TRG	SMETCLPTCL	IRON	2600	UG/L			100								
SW023	SW	REAL	SW60101WC	28-MAY-91	N	TRG	SMETCLPTCL	LEAD	6 9	UG/L			3								
SW023	SW	REAL	SW60101WC	28-MAY-91	N	TRG	SMETCLPTCL	LITHIUM	3 7	UG/L			100								
SW023	SW	REAL	SW60101WC	28-MAY-91	N	TRG	SMETCLPTCL	MAGNESIUM	6300	UG/L			5000								
SW023	SW	REAL	SW60101WC	28-MAY-91	N	TRG	SMETCLPTCL	MANGANESE	55	UG/L			15								
SW023	SW	REAL	SW60101WC	28-MAY-91	N	TRG	SMETCLPTCL	MERCURY	0.20	UG/L		U	0 2								
SW023	SW	REAL	SW60101WC	28-MAY-91	N	TRG	SMETCLPTCL	MOLYBDENUM	26	UG/L		U	50								
SW023	SW	REAL	SW60101WC	28-MAY-91	N	TRG	SMETCLPTCL	NICKEL	5.0	UG/L		U	40								
SW023	SW	REAL	SW60101WC	28-MAY-91	N	TRG	SMETCLPTCL	POTASSIUM	2500	UG/L			5000								
SW023	SW	REAL	SW60101WC	28-MAY-91	N	TRG	SMETCLPTCL	SELENIUM	4 0	UG/L		UI	5								
SW023	SW	REAL	SW60101WC	28-MAY-91	N	TRG	SMETCLPTCL	SILVER	5 0	UG/L		U	10								
SW023	SW	REAL	SW60101WC	28-MAY-91	N	TRG	SMETCLPTCL	SODIUM	18000	UG/L			5000								
SW023	SW	REAL	SW60101WC	28-MAY-91	N	TRG	SMETCLPTCL	STRONTIUM	190	UG/L			200								
SW023	SW	REAL	SW60101WC	28-MAY-91	N	TRG	SMETCLPTCL	THALLIUM	3.0	UG/L		UI	10								
SW023	SW	REAL	SW60101WC	28-MAY-91	N	TRG	SMETCLPTCL	TIN	16	UG/L		U	200								
SW023	SW	REAL	SW60101WC	28-MAY-91	N	TRG	SMETCLPTCL	VANADIUM	6.1	UG/L			50								
SW023	SW	REAL	SW60101WC	28-MAY-91	N	TRG	SMETCLPTCL	ZINC	140	UG/L			20								
SW023	SW	REAL	SW60124WC	23-JUL-91	N																
SW023	SW	REAL	SW60133WC	05-AUG-91	N																
SW023	SW	REAL	SW60141WC	07-AUG-91	N																
SW023	SW	REAL	SW60149WC	12-AUG-91	N																
SW023	SW	REAL	SW60157WC	19-AUG-91	N																
SW023	SW	RNS	SW80112WC	17-APR-91	N	TRG	DMETCLPTAL	ALUMINUM	108	UG/L		U	108								
SW023	SW	RNS	SW80112WC	17-APR-91	N	TRG	DMETCLPTAL	ANTIMONY	25 6	UG/L		U	25 6								
SW023	SW	RNS	SW80112WC	17-APR-91	N	TRG	DMETCLPTAL	ARSENIC	0 90	UG/L		U	0 90								
SW023	SW	RNS	SW80112WC	17-APR-91	N	TRG	DMETCLPTAL	BARIUM	4.4	UG/L		U	4 4								
SW023	SW	RNS	SW80112WC	17-APR-91	N	TRG	DMETCLPTAL	BERYLLIUM	1.1	UG/L			0 60								
SW023	SW	RNS	SW80112WC	17-APR-91	N	TRG	DMETCLPTAL	CADMIUM	3 3	UG/L		U	3 3								
SW023	SW	RNS	SW80112WC	17-APR-91	N	TRG	DMETCLPTAL	CALCIUM	105	UG/L			14 5								
SW023	SW	RNS	SW80112WC	17-APR-91	N	TRG	DMETCLPTAL	CHROMIUM	6.9	UG/L		U	6.9								
SW023	SW	RNS	SW80112WC	17-APR-91	N	TRG	DMETCLPTAL	COBALT	3.6	UG/L		U	3 6								
SW023	SW	RNS	SW80112WC	17-APR-91	N	TRG	DMETCLPTAL	COPPER	4.7	UG/L		U	4 7								
SW023	SW	RNS	SW80112WC	17-APR-91	N	TRG	DMETCLPTAL	IRON	51 2	UG/L			6.3								
SW023	SW	RNS	SW80112WC	17-APR-91	N	TRG	DMETCLPTAL	LEAD	1.0	UG/L		U	1 0								
SW023	SW	RNS	SW80112WC	17-APR-91	N	TRG	DMETCLPTAL	MAGNESIUM	36.6	UG/L		U	36.6								
SW023	SW	RNS	SW80112WC	17-APR-91	N	TRG	DMETCLPTAL	MANGANESE	1.0	UG/L		U	1.0								
SW023	SW	RNS	SW80112WC	17-APR-91	N	TRG	DMETCLPTAL	MERCURY	0.20	UG/L		U	0 20								
SW023	SW	RNS	SW80112WC	17-APR-91	N	TRG	DMETCLPTAL	NICKEL	14.7	UG/L		U	14.7								
SW023	SW	RNS	SW80112WC	17-APR-91	N	TRG	DMETCLPTAL	POTASSIUM	2050	UG/L		U	2050								
SW023	SW	RNS	SW80112WC	17-APR-91	N	TRG	DMETCLPTAL	SELENIUM	1.1	UG/L		U	1.1								
SW023	SW	RNS	SW80112WC	17-APR-91	N	TRG	DMETCLPTAL	SILVER	5.0	UG/L		U	5 0								
SW023	SW	RNS	SW80112WC	17-APR-91	N	TRG	DMETCLPTAL	SODIUM	172	UG/L			43 5								

Location	ST	QC	Sample Number	Smpl Date	D	ID	Group	Chemical	Result	Unit	Error	Qual	D LMT	VA	RN1	RN2	RN3	RN4	VResult	VQual	VDET
SW023	SW	RNS	SW80112WC	17-APR-91	N	TRG	DMETCLPTAL	THALLIUM	1 4	UG/L		U	1 4								
SW023	SW	RNS	SW80112WC	17-APR-91	N	TRG	DMETCLPTAL	VANADIUM	5 7	UG/L		U	5 7								
SW023	SW	RNS	SW80112WC	17-APR-91	N	TRG	DMETCLPTAL	ZINC	4 7	UG/L		U	4 7								
SW023	SW	RNS	SW80112WC	17-APR-91	N	TRG	DMETNOCLP	CESIUM	500	UG/L		U	500								
SW023	SW	RNS	SW80112WC	17-APR-91	N	TRG	DMETNOCLP	LITHIUM	4 3	UG/L		U	4.3								
SW023	SW	RNS	SW80112WC	17-APR-91	N	TRG	DMETNOCLP	MOLYBDENUM	5 7	UG/L		U	5 7								
SW023	SW	RNS	SW80112WC	17-APR-91	N	TRG	DMETNOCLP	SILICON	25 7	UG/L		U	25 7								
SW023	SW	RNS	SW80112WC	17-APR-91	N	TRG	DMETNOCLP	STRONTIUM	10 4	UG/L			7 3								
SW023	SW	RNS	SW80112WC	17-APR-91	N	TRG	DMETNOCLP	TIN	24 2	UG/L		U	24 2								
SW023	SW	RNS	SW80112WC	17-APR-91	N	TRG	SMETCLPTCL	ALUMINUM	108	UG/L		U	108								
SW023	SW	RNS	SW80112WC	17-APR-91	N	TRG	SMETCLPTCL	ANTIMONY	25 6	UG/L		U	25 6								
SW023	SW	RNS	SW80112WC	17-APR-91	N	TRG	SMETCLPTCL	ARSENIC	0 90	UG/L		U	0 90								
SW023	SW	RNS	SW80112WC	17-APR-91	N	TRG	SMETCLPTCL	BARIUM	4.4	UG/L		U	4 4								
SW023	SW	RNS	SW80112WC	17-APR-91	N	TRG	SMETCLPTCL	BERYLLIUM	0 60	UG/L		U	0 60								
SW023	SW	RNS	SW80112WC	17-APR-91	N	TRG	SMETCLPTCL	CADMIUM	3 3	UG/L		U	3 3								
SW023	SW	RNS	SW80112WC	17-APR-91	N	TRG	SMETCLPTCL	CALCIUM	160	UG/L			14 5								
SW023	SW	RNS	SW80112WC	17-APR-91	N	TRG	SMETCLPTCL	CHROMIUM	6.9	UG/L		U	6 9								
SW023	SW	RNS	SW80112WC	17-APR-91	N	TRG	SMETCLPTCL	COBALT	3 6	UG/L		U	3 6								
SW023	SW	RNS	SW80112WC	17-APR-91	N	TRG	SMETCLPTCL	COPPER	4 7	UG/L		U	4.7								
SW023	SW	RNS	SW80112WC	17-APR-91	N	TRG	SMETCLPTCL	IRON	27.8	UG/L			6 3								
SW023	SW	RNS	SW80112WC	17-APR-91	N	TRG	SMETCLPTCL	LEAD	2.0	UG/L			1 0								
SW023	SW	RNS	SW80112WC	17-APR-91	N	TRG	SMETCLPTCL	MAGNESIUM	36 6	UG/L		U	36 6								
SW023	SW	RNS	SW80112WC	17-APR-91	N	TRG	SMETCLPTCL	MANGANESE	1 0	UG/L		U	1 0								
SW023	SW	RNS	SW80112WC	17-APR-91	N	TRG	SMETCLPTCL	MERCURY	0 20	UG/L		U	0 20								
SW023	SW	RNS	SW80112WC	17-APR-91	N	TRG	SMETCLPTCL	NICKEL	14 7	UG/L		U	14.7								
SW023	SW	RNS	SW80112WC	17-APR-91	N	TRG	SMETCLPTCL	POTASSIUM	2050	UG/L		U	2050								
SW023	SW	RNS	SW80112WC	17-APR-91	N	TRG	SMETCLPTCL	SELENIUM	1.1	UG/L		U	1.1								
SW023	SW	RNS	SW80112WC	17-APR-91	N	TRG	SMETCLPTCL	SILVER	5 0	UG/L		U	5 0								
SW023	SW	RNS	SW80112WC	17-APR-91	N	TRG	SMETCLPTCL	SODIUM	170	UG/L			43 5								
SW023	SW	RNS	SW80112WC	17-APR-91	N	TRG	SMETCLPTCL	THALLIUM	2.1	UG/L			1 4								
SW023	SW	RNS	SW80112WC	17-APR-91	N	TRG	SMETCLPTCL	VANADIUM	5.7	UG/L		U	5.7								
SW023	SW	RNS	SW80112WC	17-APR-91	N	TRG	SMETCLPTCL	ZINC	4.7	UG/L		U	4.7								
SW023	SW	RNS	SW80112WC	17-APR-91	N	TRG	SMETNOCLP	CESIUM	500	UG/L		U	500								
SW023	SW	RNS	SW80112WC	17-APR-91	N	TRG	SMETNOCLP	LITHIUM	4.3	UG/L		U	4.3								
SW023	SW	RNS	SW80112WC	17-APR-91	N	TRG	SMETNOCLP	MOLYBDENUM	5.7	UG/L		U	5 7								
SW023	SW	RNS	SW80112WC	17-APR-91	N	TRG	SMETNOCLP	SILICON	25 7	UG/L		U	25 7								
SW023	SW	RNS	SW80112WC	17-APR-91	N	TRG	SMETNOCLP	STRONTIUM	7 3	UG/L		U	7 3								
SW023	SW	RNS	SW80112WC	17-APR-91	N	TRG	SMETNOCLP	TIN	24 2	UG/L		U	24.2								
SW023	SW	RNS	SW80158WC	16-SEP-91	N	TRG	DMETCLP	ALUMINUM	22.3	UG/L		U	22 3								
SW023	SW	RNS	SW80158WC	16-SEP-91	N	TRG	DMETCLP	ANTIMONY	13 8	UG/L		U	13 8								
SW023	SW	RNS	SW80158WC	16-SEP-91	N	TRG	DMETCLP	ARSENIC	1 1	UG/L		U	1 1								
SW023	SW	RNS	SW80158WC	16-SEP-91	N	TRG	DMETCLP	BARIUM	5.6	UG/L		U	5 6								
SW023	SW	RNS	SW80158WC	16-SEP-91	N	TRG	DMETCLP	BERYLLIUM	0.50	UG/L		U	0 50								
SW023	SW	RNS	SW80158WC	16-SEP-91	N	TRG	DMETCLP	CADMIUM	2.4	UG/L		U	2 4								
SW023	SW	RNS	SW80158WC	16-SEP-91	N	TRG	DMETCLP	CALCIUM	338	UG/L			29 2								
SW023	SW	RNS	SW80158WC	16-SEP-91	N	TRG	DMETCLP	CESIUM	500	UG/L		U	500								
SW023	SW	RNS	SW80158WC	16-SEP-91	N	TRG	DMETCLP	CHROMIUM	2.6	UG/L		U	2.6								
SW023	SW	RNS	SW80158WC	16-SEP-91	N	TRG	DMETCLP	COBALT	2.8	UG/L		U	2 8								
SW023	SW	RNS	SW80158WC	16-SEP-91	N	TRG	DMETCLP	COPPER	2.1	UG/L		U	2 1								
SW023	SW	RNS	SW80158WC	16-SEP-91	N	TRG	DMETCLP	IRON	16 7	UG/L		U	16.7								
SW023	SW	RNS	SW80158WC	16-SEP-91	N	TRG	DMETCLP	LEAD	0 90	UG/L		U	0 90								
SW023	SW	RNS	SW80158WC	16-SEP-91	N	TRG	DMETCLP	LITHIUM	7 1	UG/L		U	7 1								
SW023	SW	RNS	SW80158WC	16-SEP-91	N	TRG	DMETCLP	MAGNESIUM	55 2	UG/L			33 1								
SW023	SW	RNS	SW80158WC	16-SEP-91	N	TRG	DMETCLP	MANGANESE	1.3	UG/L		U	1 3								
SW023	SW	RNS	SW80158WC	16-SEP-91	N	TRG	DMETCLP	MERCURY	0.20	UG/L		U	0 20								
SW023	SW	RNS	SW80158WC	16-SEP-91	N	TRG	DMETCLP	MOLYBDENUM	5.8	UG/L		U	5 8								
SW023	SW	RNS	SW80158WC	16-SEP-91	N	TRG	DMETCLP	NICKEL	5.9	UG/L		U	5 9								
SW023	SW	RNS	SW80158WC	16-SEP-91	N	TRG	DMETCLP	POTASSIUM	675	UG/L		U	675								
SW023	SW	RNS	SW80158WC	16-SEP-91	N	TRG	DMETCLP	SELENIUM	1 2	UG/L		U	1 2								
SW023	SW	RNS	SW80158WC	16-SEP-91	N	TRG	DMETCLP	SILICON	193	UG/L			21 0								
SW023	SW	RNS	SW80158WC	16-SEP-91	N	TRG	DMETCLP	SILVER	2 9	UG/L		U	2.9								
SW023	SW	RNS	SW80158WC	16-SEP-91	N	TRG	DMETCLP	SODIUM	420	UG/L			172								
SW023	SW	RNS	SW80158WC	16-SEP-91	N	TRG	DMETCLP	STRONTIUM	9.0	UG/L			2 3								

Location	ST	QC	Sample Number	Smpl Date	D	ID	Group	Chemical	Result	Unit	Error	Qual	D LMT	VA	RN1	RN2	RN3	RN4	VResult	VQual	VDET
SW023	SW	RNS	SW80158WC	16-SEP-91	N	TRG	DMETCLP	THALLIUM	1 9	UG/L			1 9								
SW023	SW	RNS	SW80158WC	16-SEP-91	N	TRG	DMETCLP	TIN	10 4	UG/L		U	10 4								
SW023	SW	RNS	SW80158WC	16-SEP-91	N	TRG	DMETCLP	VANADIUM	2 3	UG/L		U	2 3								
SW023	SW	RNS	SW80158WC	16-SEP-91	N	TRG	DMETCLP	ZINC	4 3	UG/L		U	4 3								
SW023	SW	RNS	SW80158WC	16-SEP-91	N	TRG	METCLP	ALUMINUM	35 4	UG/L			22 3								
SW023	SW	RNS	SW80158WC	16-SEP-91	N	TRG	METCLP	ANTIMONY	13 8	UG/L		U	13 8								
SW023	SW	RNS	SW80158WC	16-SEP-91	N	TRG	METCLP	ARSENIC	0.70	UG/L		U	0 70								
SW023	SW	RNS	SW80158WC	16-SEP-91	N	TRG	METCLP	BARIUM	9 1	UG/L			5 6								
SW023	SW	RNS	SW80158WC	16-SEP-91	N	TRG	METCLP	BERYLLIUM	0 90	UG/L			0 50								
SW023	SW	RNS	SW80158WC	16-SEP-91	N	TRG	METCLP	CADMIUM	2 4	UG/L		U	2 4								
SW023	SW	RNS	SW80158WC	16-SEP-91	N	TRG	METCLP	CALCIUM	234	UG/L			29 2								
SW023	SW	RNS	SW80158WC	16-SEP-91	N	TRG	METCLP	CESIUM	500	UG/L		U	500								
SW023	SW	RNS	SW80158WC	16-SEP-91	N	TRG	METCLP	CHROMIUM	2 7	UG/L			2.6								
SW023	SW	RNS	SW80158WC	16-SEP-91	N	TRG	METCLP	COBALT	3 5	UG/L			2 8								
SW023	SW	RNS	SW80158WC	16-SEP-91	N	TRG	METCLP	COPPER	8 2	UG/L			2 1								
SW023	SW	RNS	SW80158WC	16-SEP-91	N	TRG	METCLP	IRON	19 4	UG/L			16 7								
SW023	SW	RNS	SW80158WC	16-SEP-91	N	TRG	METCLP	LEAD	1 0	UG/L			0 90								
SW023	SW	RNS	SW80158WC	16-SEP-91	N	TRG	METCLP	LITHIUM	7 1	UG/L		U	7 1								
SW023	SW	RNS	SW80158WC	16-SEP-91	N	TRG	METCLP	MAGNESIUM	54 1	UG/L			33 1								
SW023	SW	RNS	SW80158WC	16-SEP-91	N	TRG	METCLP	MANGANESE	3 5	UG/L			1.3								
SW023	SW	RNS	SW80158WC	16-SEP-91	N	TRG	METCLP	MERCURY	0 20	UG/L		U	0 20								
SW023	SW	RNS	SW80158WC	16-SEP-91	N	TRG	METCLP	MOLYBDENUM	5 8	UG/L		U	5.8								
SW023	SW	RNS	SW80158WC	16-SEP-91	N	TRG	METCLP	NICKEL	5 9	UG/L		U	5 9								
SW023	SW	RNS	SW80158WC	16-SEP-91	N	TRG	METCLP	POTASSIUM	675	UG/L		U	675								
SW023	SW	RNS	SW80158WC	16-SEP-91	N	TRG	METCLP	SELENIUM	1 2	UG/L		U	1.2								
SW023	SW	RNS	SW80158WC	16-SEP-91	N	TRG	METCLP	SILICON	184	UG/L			21 0								
SW023	SW	RNS	SW80158WC	16-SEP-91	N	TRG	METCLP	SILVER	2.9	UG/L		U	2 9								
SW023	SW	RNS	SW80158WC	16-SEP-91	N	TRG	METCLP	SODIUM	390	UG/L			172								
SW023	SW	RNS	SW80158WC	16-SEP-91	N	TRG	METCLP	STRONTIUM	2 7	UG/L			2.3								
SW023	SW	RNS	SW80158WC	16-SEP-91	N	TRG	METCLP	THALLIUM	2 4	UG/L		U	2 4								
SW023	SW	RNS	SW80158WC	16-SEP-91	N	TRG	METCLP	TIN	10 4	UG/L		U	10 4								
SW023	SW	RNS	SW80158WC	16-SEP-91	N	TRG	METCLP	VANADIUM	3 3	UG/L			2.3								
SW023	SW	RNS	SW80158WC	16-SEP-91	N	TRG	METCLP	ZINC	11.9	UG/L			4.3								
SW023	SW		SW60066WC	08-APR-91	N	TRG	SMETCLPTCL	ALUMINUM	3200	UG/L			200								
SW023	SW		SW60066WC	08-APR-91	N	TRG	SMETCLPTCL	ANTIMONY	17	UG/L		U	60								
SW023	SW		SW60066WC	08-APR-91	N	TRG	SMETCLPTCL	ARSENIC	5 4	UG/L			10								
SW023	SW		SW60066WC	08-APR-91	N	TRG	SMETCLPTCL	BARIUM	88	UG/L			200								
SW023	SW		SW60066WC	08-APR-91	N	TRG	SMETCLPTCL	BERYLLIUM	1.0	UG/L		U	5								
SW023	SW		SW60066WC	08-APR-91	N	TRG	SMETCLPTCL	BERYLLIUM	3 0	UG/L		U	5								
SW023	SW		SW60066WC	08-APR-91	N	TRG	SMETCLPTCL	CALCIUM	34000	UG/L			5000								
SW023	SW		SW60066WC	08-APR-91	N	TRG	SMETCLPTCL	CESIUM	50	UG/L		U	1000								
SW023	SW		SW60066WC	08-APR-91	N	TRG	SMETCLPTCL	CHROMIUM	3 0	UG/L		U	10								
SW023	SW		SW60066WC	08-APR-91	N	TRG	SMETCLPTCL	COBALT	4 0	UG/L		U	50								
SW023	SW		SW60066WC	08-APR-91	N	TRG	SMETCLPTCL	COPPER	32	UG/L			25								
SW023	SW		SW60066WC	08-APR-91	N	TRG	SMETCLPTCL	CYANIDES (SOLUBLE SALTS AND CO	20	UG/L		U	10								
SW023	SW		SW60066WC	08-APR-91	N	TRG	SMETCLPTCL	IRON	9700	UG/L			100								
SW023	SW		SW60066WC	08-APR-91	N	TRG	SMETCLPTCL	LEAD	11	UG/L		I	3								
SW023	SW		SW60066WC	08-APR-91	N	TRG	SMETCLPTCL	LITHIUM	4 4	UG/L			100								
SW023	SW		SW60066WC	08-APR-91	N	TRG	SMETCLPTCL	MAGNESIUM	8500	UG/L			5000								
SW023	SW		SW60066WC	08-APR-91	N	TRG	SMETCLPTCL	MANGANESE	530	UG/L			15								
SW023	SW		SW60066WC	08-APR-91	N	TRG	SMETCLPTCL	MERCURY	0 34	UG/L			0.2								
SW023	SW		SW60066WC	08-APR-91	N	TRG	SMETCLPTCL	MOLYBDENUM	26	UG/L		U	50								
SW023	SW		SW60066WC	08-APR-91	N	TRG	SMETCLPTCL	NICKEL	15	UG/L			40								
SW023	SW		SW60066WC	08-APR-91	N	TRG	SMETCLPTCL	POTASSIUM	3800	UG/L			5000								
SW023	SW		SW60066WC	08-APR-91	N	TRG	SMETCLPTCL	SELENIUM	3.3	UG/L		I	5								
SW023	SW		SW60066WC	08-APR-91	N	TRG	SMETCLPTCL	SILVER	5.0	UG/L		U	10								
SW023	SW		SW60066WC	08-APR-91	N	TRG	SMETCLPTCL	SODIUM	27000	UG/L			5000								
SW023	SW		SW60066WC	08-APR-91	N	TRG	SMETCLPTCL	STRONTIUM	230	UG/L			200								
SW023	SW		SW60066WC	08-APR-91	N	TRG	SMETCLPTCL	THALLIUM	3 0	UG/L		UI	10								
SW023	SW		SW60066WC	08-APR-91	N	TRG	SMETCLPTCL	TIN	16	UG/L		U	200								
SW023	SW		SW60066WC	08-APR-91	N	TRG	SMETCLPTCL	VANADIUM	12	UG/L			50								
SW023	SW		SW60066WC	08-APR-91	N	TRG	SMETCLPTCL	ZINC	350	UG/L			20								
SW037	SW	REAL	SW00720WC	08-JAN-91	Y																

Location	ST	QC	Sample Number	Smpl Date	D	ID	Group	Chemical	Result	Unit	Error	Qual	D LMT	VA	RN1	RN2	RN3	RN4	VResult	VQual	VDET
SW037	SW	REAL	SW00823WC	20-FEB-91	N																
SW037	SW	REAL	SW00926WC	21-MAR-91	Y																
SW037	SW	REAL	SW01028WC	09-APR-91	Y																
SW037	SW	REAL	SW01135WC	16-MAY-91	Y																
SW037	SW	REAL	SW01238WC	20-JUN-91	Y																
SW037	SW	REAL	SW01341WC	25-JUL-91	Y																
SW037	SW	REAL	SW01447WC	28-AUG-91	Y																
SW037	SW	REAL	SW01553WC	18-SEP-91	Y																
SW037	SW	REAL	SW01659WC	23-OCT-91	Y																
SW038	SW	REAL	SW00726WC	08-JAN-91	N																
SW038	SW	REAL	SW00829WC	20-FEB-91	N																
SW038	SW	REAL	SW00932WC	28-MAR-91	N	TRG	DMETCLPTAL	ALUMINUM	92 70	UG/L		B	200 0								
SW038	SW	REAL	SW00932WC	28-MAR-91	N	TRG	DMETCLPTAL	ANTIMONY	6.00	UG/L		U	60.00								
SW038	SW	REAL	SW00932WC	28-MAR-91	N	TRG	DMETCLPTAL	ARSENIC	3.00	UG/L		B	10 00								
SW038	SW	REAL	SW00932WC	28-MAR-91	N	TRG	DMETCLPTAL	BARIUM	152 00	UG/L		B	200 0								
SW038	SW	REAL	SW00932WC	28-MAR-91	N	TRG	DMETCLPTAL	BERYLLIUM	1.00	UG/L		U	5 000								
SW038	SW	REAL	SW00932WC	28-MAR-91	N	TRG	DMETCLPTAL	CADMIUM	2.00	UG/L		U	5 000								
SW038	SW	REAL	SW00932WC	28-MAR-91	N	TRG	DMETCLPTAL	CALCIUM	89500 00	UG/L			5000								
SW038	SW	REAL	SW00932WC	28-MAR-91	N	TRG	DMETCLPTAL	CHROMIUM	3.00	UG/L		U	10 00								
SW038	SW	REAL	SW00932WC	28-MAR-91	N	TRG	DMETCLPTAL	COBALT	3 00	UG/L		U	50 00								
SW038	SW	REAL	SW00932WC	28-MAR-91	N	TRG	DMETCLPTAL	COPPER	11 00	UG/L		U	25 00								
SW038	SW	REAL	SW00932WC	28-MAR-91	N	TRG	DMETCLPTAL	IRON	137 00	UG/L			100 0								
SW038	SW	REAL	SW00932WC	28-MAR-91	N	TRG	DMETCLPTAL	LEAD	1 00	UG/L		UW	3 000								
SW038	SW	REAL	SW00932WC	28-MAR-91	N	TRG	DMETCLPTAL	MAGNESIUM	20900 00	UG/L			5000								
SW038	SW	REAL	SW00932WC	28-MAR-91	N	TRG	DMETCLPTAL	MANGANESE	17.60	UG/L			15 00								
SW038	SW	REAL	SW00932WC	28-MAR-91	N	TRG	DMETCLPTAL	MERCURY	0 20	UG/L		U	0 200								
SW038	SW	REAL	SW00932WC	28-MAR-91	N	TRG	DMETCLPTAL	NICKEL	3 00	UG/L		U	40 00								
SW038	SW	REAL	SW00932WC	28-MAR-91	N	TRG	DMETCLPTAL	POTASSIUM	549 00	UG/L		B	5000								
SW038	SW	REAL	SW00932WC	28-MAR-91	N	TRG	DMETCLPTAL	SELENIUM	2 00	UG/L		UW	5.000								
SW038	SW	REAL	SW00932WC	28-MAR-91	N	TRG	DMETCLPTAL	SILVER	2.00	UG/L		U	10.00								
SW038	SW	REAL	SW00932WC	28-MAR-91	N	TRG	DMETCLPTAL	SODIUM	16400.00	UG/L			5000.								
SW038	SW	REAL	SW00932WC	28-MAR-91	N	TRG	DMETCLPTAL	THALLIUM	3 00	UG/L		U	10.00								
SW038	SW	REAL	SW00932WC	28-MAR-91	N	TRG	DMETCLPTAL	VANADIUM	2 90	UG/L		B	50 00								
SW038	SW	REAL	SW00932WC	28-MAR-91	N	TRG	DMETCLPTAL	ZINC	13 30	UG/L		B	20 00								
SW038	SW	REAL	SW00932WC	28-MAR-91	N	TRG	DMETNOCLP	CESIUM	112 00	UG/L		U	1000								
SW038	SW	REAL	SW00932WC	28-MAR-91	N	TRG	DMETNOCLP	LITHIUM	2 00	UG/L		U	100.0								
SW038	SW	REAL	SW00932WC	28-MAR-91	N	TRG	DMETNOCLP	MOLYBDENUM	2 00	UG/L		U	200 0								
SW038	SW	REAL	SW00932WC	28-MAR-91	N	TRG	DMETNOCLP	STRONTIUM	540 00	UG/L			200 0								
SW038	SW	REAL	SW00932WC	28-MAR-91	N	TRG	DMETNOCLP	TIN	18.60	UG/L		B	200 0								
SW038	SW	REAL	SW00932WC	28-MAR-91	N	TRG	SMETCLPTCL	ALUMINUM	39 90	UG/L		B	200 0								
SW038	SW	REAL	SW00932WC	28-MAR-91	N	TRG	SMETCLPTCL	ANTIMONY	11 70	UG/L		B	60 00								
SW038	SW	REAL	SW00932WC	28-MAR-91	N	TRG	SMETCLPTCL	ARSENIC	2 00	UG/L		B	10 00								
SW038	SW	REAL	SW00932WC	28-MAR-91	N	TRG	SMETCLPTCL	BARIUM	150 00	UG/L		B	200 0								
SW038	SW	REAL	SW00932WC	28-MAR-91	N	TRG	SMETCLPTCL	BERYLLIUM	1.00	UG/L		U	5.000								
SW038	SW	REAL	SW00932WC	28-MAR-91	N	TRG	SMETCLPTCL	CADMIUM	2.00	UG/L		U	5 000								
SW038	SW	REAL	SW00932WC	28-MAR-91	N	TRG	SMETCLPTCL	CALCIUM	89300 00	UG/L			5000.								
SW038	SW	REAL	SW00932WC	28-MAR-91	N	TRG	SMETCLPTCL	CHROMIUM	3.30	UG/L		B	10 00								
SW038	SW	REAL	SW00932WC	28-MAR-91	N	TRG	SMETCLPTCL	COBALT	3.00	UG/L		U	50 00								
SW038	SW	REAL	SW00932WC	28-MAR-91	N	TRG	SMETCLPTCL	COPPER	11 00	UG/L		U	25 00								
SW038	SW	REAL	SW00932WC	28-MAR-91	N	TRG	SMETCLPTCL	CYANIDE	3.50	UG/L		U	10 00								
SW038	SW	REAL	SW00932WC	28-MAR-91	N	TRG	SMETCLPTCL	IRON	12 60	UG/L		B	100 0								
SW038	SW	REAL	SW00932WC	28-MAR-91	N	TRG	SMETCLPTCL	LEAD	1.00	UG/L		U	3 000								
SW038	SW	REAL	SW00932WC	28-MAR-91	N	TRG	SMETCLPTCL	MAGNESIUM	20900.00	UG/L			5000								
SW038	SW	REAL	SW00932WC	28-MAR-91	N	TRG	SMETCLPTCL	MANGANESE	15 70	UG/L			15.00								
SW038	SW	REAL	SW00932WC	28-MAR-91	N	TRG	SMETCLPTCL	MERCURY	0.20	UG/L		U	0 200								
SW038	SW	REAL	SW00932WC	28-MAR-91	N	TRG	SMETCLPTCL	NICKEL	3 00	UG/L		U	40 00								
SW038	SW	REAL	SW00932WC	28-MAR-91	N	TRG	SMETCLPTCL	POTASSIUM	636 00	UG/L		B	5000.								
SW038	SW	REAL	SW00932WC	28-MAR-91	N	TRG	SMETCLPTCL	SELENIUM	2.00	UG/L		B	5 000								
SW038	SW	REAL	SW00932WC	28-MAR-91	N	TRG	SMETCLPTCL	SILVER	2.00	UG/L		U	10.00								
SW038	SW	REAL	SW00932WC	28-MAR-91	N	TRG	SMETCLPTCL	SODIUM	16600.00	UG/L			5000								
SW038	SW	REAL	SW00932WC	28-MAR-91	N	TRG	SMETCLPTCL	THALLIUM	3.00	UG/L		U	10.00								
SW038	SW	REAL	SW00932WC	28-MAR-91	N	TRG	SMETCLPTCL	VANADIUM	3 40	UG/L		B	50 00								
SW038	SW	REAL	SW00932WC	28-MAR-91	N	TRG	SMETCLPTCL	ZINC	3 60	UG/L		B	20.00								

Location	ST	QC	Sample Number	Smpl Date	D	ID	Group	Chemical	Result	Unit	Error	Qual	D	LMT	VA	RN1	RN2	RN3	RN4	VResult	VQual	VDET
SW038	SW	REAL	SW00932WC	28-MAR-91	N	TRG	SMETNOCLP	CESIUM	112 00	UG/L		U		1000								
SW038	SW	REAL	SW00932WC	28-MAR-91	N	TRG	SMETNOCLP	LITHIUM	2 00	UG/L		U		100 0								
SW038	SW	REAL	SW00932WC	28-MAR-91	N	TRG	SMETNOCLP	MOLYBDENUM	2 00	UG/L		U		200 0								
SW038	SW	REAL	SW00932WC	28-MAR-91	N	TRG	SMETNOCLP	STRONTIUM	540.00	UG/L				200 0								
SW038	SW	REAL	SW00932WC	28-MAR-91	N	TRG	SMETNOCLP	TIN	15 60	UG/L		B		200 0								
SW038	SW	REAL	SW01034WC	09-APR-91	N	TRG	DMETCLPTAL	ALUMINUM	108	UG/L		U		108								
SW038	SW	REAL	SW01034WC	09-APR-91	N	TRG	DMETCLPTAL	ANTIMONY	25 6	UG/L		U		25 6								
SW038	SW	REAL	SW01034WC	09-APR-91	N	TRG	DMETCLPTAL	ARSENIC	0 90	UG/L		U		0 90								
SW038	SW	REAL	SW01034WC	09-APR-91	N	TRG	DMETCLPTAL	BARIUM	151	UG/L				1.3								
SW038	SW	REAL	SW01034WC	09-APR-91	N	TRG	DMETCLPTAL	BERYLLIUM	0 50	UG/L		U		0 50								
SW038	SW	REAL	SW01034WC	09-APR-91	N	TRG	DMETCLPTAL	CADMIUM	2 7	UG/L		U		2.7								
SW038	SW	REAL	SW01034WC	09-APR-91	N	TRG	DMETCLPTAL	CALCIUM	80600	UG/L				14 5								
SW038	SW	REAL	SW01034WC	09-APR-91	N	TRG	DMETCLPTAL	CHROMIUM	4 1	UG/L		U		4 1								
SW038	SW	REAL	SW01034WC	09-APR-91	N	TRG	DMETCLPTAL	COBALT	3 6	UG/L		U		3.6								
SW038	SW	REAL	SW01034WC	09-APR-91	N	TRG	DMETCLPTAL	COPPER	4 7	UG/L		U		4 7								
SW038	SW	REAL	SW01034WC	09-APR-91	N	TRG	DMETCLPTAL	IRON	22 1	UG/L				6 3								
SW038	SW	REAL	SW01034WC	09-APR-91	N	TRG	DMETCLPTAL	LEAD	1 4	UG/L		U		1 4								
SW038	SW	REAL	SW01034WC	09-APR-91	N	TRG	DMETCLPTAL	MAGNESIUM	18600	UG/L				36 6								
SW038	SW	REAL	SW01034WC	09-APR-91	N	TRG	DMETCLPTAL	MANGANESE	27 3	UG/L				1 0								
SW038	SW	REAL	SW01034WC	09-APR-91	N	TRG	DMETCLPTAL	MERCURY	0 20	UG/L		U		0 20								
SW038	SW	REAL	SW01034WC	09-APR-91	N	TRG	DMETCLPTAL	NICKEL	14.7	UG/L		U		14 7								
SW038	SW	REAL	SW01034WC	09-APR-91	N	TRG	DMETCLPTAL	POTASSIUM	2050	UG/L		U		2050								
SW038	SW	REAL	SW01034WC	09-APR-91	N	TRG	DMETCLPTAL	SELENIUM	1 1	UG/L		U		1 1								
SW038	SW	REAL	SW01034WC	09-APR-91	N	TRG	DMETCLPTAL	SILVER	5.0	UG/L		U		5 0								
SW038	SW	REAL	SW01034WC	09-APR-91	N	TRG	DMETCLPTAL	SODIUM	14800	UG/L				43 5								
SW038	SW	REAL	SW01034WC	09-APR-91	N	TRG	DMETCLPTAL	THALLIUM	1.4	UG/L		U		1.4								
SW038	SW	REAL	SW01034WC	09-APR-91	N	TRG	DMETCLPTAL	VANADIUM	5 7	UG/L		U		5 7								
SW038	SW	REAL	SW01034WC	09-APR-91	N	TRG	DMETCLPTAL	ZINC	4.5	UG/L				1 8								
SW038	SW	REAL	SW01034WC	09-APR-91	N	TRG	DMETNOCLP	CESIUM	500	UG/L		U		500								
SW038	SW	REAL	SW01034WC	09-APR-91	N	TRG	DMETNOCLP	LITHIUM	8 4	UG/L				2 0								
SW038	SW	REAL	SW01034WC	09-APR-91	N	TRG	DMETNOCLP	MOLYBDENUM	5 7	UG/L		U		5 7								
SW038	SW	REAL	SW01034WC	09-APR-91	N	TRG	DMETNOCLP	SILICON	6310	UG/L				14 2								
SW038	SW	REAL	SW01034WC	09-APR-91	N	TRG	DMETNOCLP	STRONTIUM	460	UG/L				7 3								
SW038	SW	REAL	SW01034WC	09-APR-91	N	TRG	DMETNOCLP	TIN	14 8	UG/L		U		14 8								
SW038	SW	REAL	SW01034WC	09-APR-91	N	TRG	SMETCLPTCL	ALUMINUM	672	UG/L				108								
SW038	SW	REAL	SW01034WC	09-APR-91	N	TRG	SMETCLPTCL	ANTIMONY	25.6	UG/L		U		25 6								
SW038	SW	REAL	SW01034WC	09-APR-91	N	TRG	SMETCLPTCL	ARSENIC	0 90	UG/L		U		0 90								
SW038	SW	REAL	SW01034WC	09-APR-91	N	TRG	SMETCLPTCL	BARIUM	158	UG/L				1 3								
SW038	SW	REAL	SW01034WC	09-APR-91	N	TRG	SMETCLPTCL	BERYLLIUM	0.50	UG/L		U		0 50								
SW038	SW	REAL	SW01034WC	09-APR-91	N	TRG	SMETCLPTCL	CADMIUM	2 7	UG/L		U		2 7								
SW038	SW	REAL	SW01034WC	09-APR-91	N	TRG	SMETCLPTCL	CALCIUM	81400	UG/L				14 5								
SW038	SW	REAL	SW01034WC	09-APR-91	N	TRG	SMETCLPTCL	CHROMIUM	4.1	UG/L		U		4 1								
SW038	SW	REAL	SW01034WC	09-APR-91	N	TRG	SMETCLPTCL	COBALT	3 6	UG/L		U		3 6								
SW038	SW	REAL	SW01034WC	09-APR-91	N	TRG	SMETCLPTCL	COPPER	4.7	UG/L		U		4 7								
SW038	SW	REAL	SW01034WC	09-APR-91	N	TRG	SMETCLPTCL	IRON	514	UG/L				6 3								
SW038	SW	REAL	SW01034WC	09-APR-91	N	TRG	SMETCLPTCL	LEAD	1 4	UG/L		U		1 4								
SW038	SW	REAL	SW01034WC	09-APR-91	N	TRG	SMETCLPTCL	MAGNESIUM	18700	UG/L				36 6								
SW038	SW	REAL	SW01034WC	09-APR-91	N	TRG	SMETCLPTCL	MANGANESE	32 0	UG/L				1 0								
SW038	SW	REAL	SW01034WC	09-APR-91	N	TRG	SMETCLPTCL	MERCURY	0 20	UG/L		U		0 20								
SW038	SW	REAL	SW01034WC	09-APR-91	N	TRG	SMETCLPTCL	NICKEL	14 7	UG/L		U		14 7								
SW038	SW	REAL	SW01034WC	09-APR-91	N	TRG	SMETCLPTCL	POTASSIUM	2050	UG/L		U		2050								
SW038	SW	REAL	SW01034WC	09-APR-91	N	TRG	SMETCLPTCL	SELENIUM	1.1	UG/L		U		1 1								
SW038	SW	REAL	SW01034WC	09-APR-91	N	TRG	SMETCLPTCL	SILVER	5.0	UG/L		U		5 0								
SW038	SW	REAL	SW01034WC	09-APR-91	N	TRG	SMETCLPTCL	SODIUM	15600	UG/L				43 5								
SW038	SW	REAL	SW01034WC	09-APR-91	N	TRG	SMETCLPTCL	THALLIUM	1.4	UG/L		U		1 4								
SW038	SW	REAL	SW01034WC	09-APR-91	N	TRG	SMETCLPTCL	VANADIUM	5.7	UG/L		U		5 7								
SW038	SW	REAL	SW01034WC	09-APR-91	N	TRG	SMETCLPTCL	ZINC	27 5	UG/L				1 8								
SW038	SW	REAL	SW01034WC	09-APR-91	N	TRG	SMETNOCLP	CESIUM	500	UG/L		U		500								
SW038	SW	REAL	SW01034WC	09-APR-91	N	TRG	SMETNOCLP	LITHIUM	8 9	UG/L				2 0								
SW038	SW	REAL	SW01034WC	09-APR-91	N	TRG	SMETNOCLP	MOLYBDENUM	5 7	UG/L		U		5.7								
SW038	SW	REAL	SW01034WC	09-APR-91	N	TRG	SMETNOCLP	SILICON	7720	UG/L				14 2								
SW038	SW	REAL	SW01034WC	09-APR-91	N	TRG	SMETNOCLP	STRONTIUM	461	UG/L				7 3								
SW038	SW	REAL	SW01034WC	09-APR-91	N	TRG	SMETNOCLP	TIN	14 8	UG/L		U		14 8								

Location	ST	QC	Sample Number	Smpl Date	D	ID	Group	Chemical	Result	Unit	Error	Qual	D LMT	VA	RN1	RN2	RN3	RN4	VResult	VQual	VDET
SW038	SW	REAL	SW01141WC	16-MAY-91	N	TRG	DMETCLPTAL	ALUMINUM	108	UG/L		U	108								
SW038	SW	REAL	SW01141WC	16-MAY-91	N	TRG	DMETCLPTAL	ANTIMONY	25 6	UG/L		U	25 6								
SW038	SW	REAL	SW01141WC	16-MAY-91	N	TRG	DMETCLPTAL	ARSENIC	0 90	UG/L		U	0 90								
SW038	SW	REAL	SW01141WC	16-MAY-91	N	TRG	DMETCLPTAL	BARIUM	137	UG/L			1 3								
SW038	SW	REAL	SW01141WC	16-MAY-91	N	TRG	DMETCLPTAL	BERYLLIUM	0 50	UG/L		U	0 50								
SW038	SW	REAL	SW01141WC	16-MAY-91	N	TRG	DMETCLPTAL	CADMIUM	3 3	UG/L		U	3 3								
SW038	SW	REAL	SW01141WC	16-MAY-91	N	TRG	DMETCLPTAL	CALCIUM	62700	UG/L			14 5								
SW038	SW	REAL	SW01141WC	16-MAY-91	N	TRG	DMETCLPTAL	CHROMIUM	4 1	UG/L		U	4 1								
SW038	SW	REAL	SW01141WC	16-MAY-91	N	TRG	DMETCLPTAL	COBALT	3 6	UG/L		U	3 6								
SW038	SW	REAL	SW01141WC	16-MAY-91	N	TRG	DMETCLPTAL	COPPER	4 7	UG/L		U	4 7								
SW038	SW	REAL	SW01141WC	16-MAY-91	N	TRG	DMETCLPTAL	IRON	17 1	UG/L			6.3								
SW038	SW	REAL	SW01141WC	16-MAY-91	N	TRG	DMETCLPTAL	LEAD	1.0	UG/L		U	1 0								
SW038	SW	REAL	SW01141WC	16-MAY-91	N	TRG	DMETCLPTAL	MAGNESIUM	15700	UG/L			36 6								
SW038	SW	REAL	SW01141WC	16-MAY-91	N	TRG	DMETCLPTAL	MANGANESE	18 8	UG/L			1 0								
SW038	SW	REAL	SW01141WC	16-MAY-91	N	TRG	DMETCLPTAL	MERCURY	0 20	UG/L		U	0 20								
SW038	SW	REAL	SW01141WC	16-MAY-91	N	TRG	DMETCLPTAL	NICKEL	14 7	UG/L		U	14.7								
SW038	SW	REAL	SW01141WC	16-MAY-91	N	TRG	DMETCLPTAL	POTASSIUM	2050	UG/L		U	2050								
SW038	SW	REAL	SW01141WC	16-MAY-91	N	TRG	DMETCLPTAL	SELENIUM	1.1	UG/L		U	1.1								
SW038	SW	REAL	SW01141WC	16-MAY-91	N	TRG	DMETCLPTAL	SILVER	5 0	UG/L		U	5 0								
SW038	SW	REAL	SW01141WC	16-MAY-91	N	TRG	DMETCLPTAL	SODIUM	14300	UG/L			43 5								
SW038	SW	REAL	SW01141WC	16-MAY-91	N	TRG	DMETCLPTAL	THALLIUM	1 4	UG/L		U	1 4								
SW038	SW	REAL	SW01141WC	16-MAY-91	N	TRG	DMETCLPTAL	VANADIUM	5.7	UG/L		U	5 7								
SW038	SW	REAL	SW01141WC	16-MAY-91	N	TRG	DMETCLPTAL	ZINC	1 8	UG/L		U	1 8								
SW038	SW	REAL	SW01141WC	16-MAY-91	N	TRG	DMETNOCLP	CESIUM	500	UG/L		U	500								
SW038	SW	REAL	SW01141WC	16-MAY-91	N	TRG	DMETNOCLP	LITHIUM	4.3	UG/L		U	4 3								
SW038	SW	REAL	SW01141WC	16-MAY-91	N	TRG	DMETNOCLP	MOLYBDENUM	5 7	UG/L		U	5.7								
SW038	SW	REAL	SW01141WC	16-MAY-91	N	TRG	DMETNOCLP	SILICON	6730	UG/L			25 7								
SW038	SW	REAL	SW01141WC	16-MAY-91	N	TRG	DMETNOCLP	STRONTIUM	400	UG/L			3 5								
SW038	SW	REAL	SW01141WC	16-MAY-91	N	TRG	DMETNOCLP	TIN	14 8	UG/L		U	14 8								
SW038	SW	REAL	SW01141WC	16-MAY-91	N	TRG	SMETCLPTCL	ALUMINUM	108	UG/L		U	108								
SW038	SW	REAL	SW01141WC	16-MAY-91	N	TRG	SMETCLPTCL	ANTIMONY	25.6	UG/L		U	25 6								
SW038	SW	REAL	SW01141WC	16-MAY-91	N	TRG	SMETCLPTCL	ARSENIC	0 90	UG/L		U	0.90								
SW038	SW	REAL	SW01141WC	16-MAY-91	N	TRG	SMETCLPTCL	BARIUM	141	UG/L			1.3								
SW038	SW	REAL	SW01141WC	16-MAY-91	N	TRG	SMETCLPTCL	BERYLLIUM	0.50	UG/L		U	0 50								
SW038	SW	REAL	SW01141WC	16-MAY-91	N	TRG	SMETCLPTCL	CADMIUM	3 3	UG/L		U	3 3								
SW038	SW	REAL	SW01141WC	16-MAY-91	N	TRG	SMETCLPTCL	CALCIUM	66000	UG/L			14 5								
SW038	SW	REAL	SW01141WC	16-MAY-91	N	TRG	SMETCLPTCL	CHROMIUM	4.1	UG/L		U	4.1								
SW038	SW	REAL	SW01141WC	16-MAY-91	N	TRG	SMETCLPTCL	COBALT	3 6	UG/L		U	3 6								
SW038	SW	REAL	SW01141WC	16-MAY-91	N	TRG	SMETCLPTCL	COPPER	4 7	UG/L		U	4.7								
SW038	SW	REAL	SW01141WC	16-MAY-91	N	TRG	SMETCLPTCL	IRON	177	UG/L			6 3								
SW038	SW	REAL	SW01141WC	16-MAY-91	N	TRG	SMETCLPTCL	LEAD	1 4	UG/L		U	1 4								
SW038	SW	REAL	SW01141WC	16-MAY-91	N	TRG	SMETCLPTCL	MAGNESIUM	16200	UG/L			36 6								
SW038	SW	REAL	SW01141WC	16-MAY-91	N	TRG	SMETCLPTCL	MANGANESE	21 2	UG/L			1 0								
SW038	SW	REAL	SW01141WC	16-MAY-91	N	TRG	SMETCLPTCL	MERCURY	0 20	UG/L		U	0 20								
SW038	SW	REAL	SW01141WC	16-MAY-91	N	TRG	SMETCLPTCL	NICKEL	14 7	UG/L		U	14 7								
SW038	SW	REAL	SW01141WC	16-MAY-91	N	TRG	SMETCLPTCL	POTASSIUM	2630	UG/L			2050								
SW038	SW	REAL	SW01141WC	16-MAY-91	N	TRG	SMETCLPTCL	SELENIUM	1 1	UG/L		U	1.1								
SW038	SW	REAL	SW01141WC	16-MAY-91	N	TRG	SMETCLPTCL	SILVER	5.0	UG/L		U	5 0								
SW038	SW	REAL	SW01141WC	16-MAY-91	N	TRG	SMETCLPTCL	SODIUM	14000	UG/L			43.5								
SW038	SW	REAL	SW01141WC	16-MAY-91	N	TRG	SMETCLPTCL	THALLIUM	2.1	UG/L			1 4								
SW038	SW	REAL	SW01141WC	16-MAY-91	N	TRG	SMETCLPTCL	VANADIUM	5 7	UG/L		U	5 7								
SW038	SW	REAL	SW01141WC	16-MAY-91	N	TRG	SMETCLPTCL	ZINC	1 8	UG/L		U	1 8								
SW038	SW	REAL	SW01141WC	16-MAY-91	N	TRG	SMETNOCLP	CESIUM	500	UG/L		U	500								
SW038	SW	REAL	SW01141WC	16-MAY-91	N	TRG	SMETNOCLP	LITHIUM	4.3	UG/L		U	4.3								
SW038	SW	REAL	SW01141WC	16-MAY-91	N	TRG	SMETNOCLP	MOLYBDENUM	5.7	UG/L		U	5 7								
SW038	SW	REAL	SW01141WC	16-MAY-91	N	TRG	SMETNOCLP	SILICON	6000	UG/L			25.7								
SW038	SW	REAL	SW01141WC	16-MAY-91	N	TRG	SMETNOCLP	STRONTIUM	415	UG/L			3.5								
SW038	SW	REAL	SW01141WC	16-MAY-91	N	TRG	SMETNOCLP	TIN	14.8	UG/L		U	14 8								
SW038	SW	REAL	SW01244WC	20-JUN-91	N	TRG	DMETCLP	SILICON	6700	UG/L			10 5								
SW038	SW	REAL	SW01244WC	20-JUN-91	N	TRG	METCLP	SILICON	6820	UG/L			10 5								
SW038	SW	REAL	SW01347WC	25-JUL-91	N																
SW038	SW	REAL	SW01453WC	28-AUG-91	N	TRG	DMETCLP	ALUMINUM	37.5	UG/L			36 8								
SW038	SW	REAL	SW01453WC	28-AUG-91	N	TRG	DMETCLP	ANTIMONY	42 2	UG/L		U	42 2								

Location	ST	QC	Sample Number	Smpl Date	D	ID	Group	Chemical	Result	Unit	Error	Qual	D LMT	VA	RN1	RN2	RN3	RN4	VResult	VQual	VDET
SW038	SW	REAL	SW01453WC	28-AUG-91	N	TRG	DMETCLP	ARSENIC	0.70	UG/L		U	0 70								
SW038	SW	REAL	SW01453WC	28-AUG-91	N	TRG	DMETCLP	BARIUM	159	UG/L			4 6								
SW038	SW	REAL	SW01453WC	28-AUG-91	N	TRG	DMETCLP	BERYLLIUM	0 60	UG/L		U	0 60								
SW038	SW	REAL	SW01453WC	28-AUG-91	N	TRG	DMETCLP	CADMIUM	4 6	UG/L		U	4 6								
SW038	SW	REAL	SW01453WC	28-AUG-91	N	TRG	DMETCLP	CALCIUM	73500	UG/L			19 6								
SW038	SW	REAL	SW01453WC	28-AUG-91	N	TRG	DMETCLP	CESIUM	500	UG/L		U	500								
SW038	SW	REAL	SW01453WC	28-AUG-91	N	TRG	DMETCLP	CHROMIUM	5 5	UG/L		U	5 5								
SW038	SW	REAL	SW01453WC	28-AUG-91	N	TRG	DMETCLP	COBALT	7.3	UG/L		U	7 3								
SW038	SW	REAL	SW01453WC	28-AUG-91	N	TRG	DMETCLP	COPPER	5 4	UG/L		U	5 4								
SW038	SW	REAL	SW01453WC	28-AUG-91	N	TRG	DMETCLP	IRON	22 6	UG/L			6 9								
SW038	SW	REAL	SW01453WC	28-AUG-91	N	TRG	DMETCLP	LEAD	1.3	UG/L		U	1 3								
SW038	SW	REAL	SW01453WC	28-AUG-91	N	TRG	DMETCLP	LITHIUM	5 8	UG/L			5 4								
SW038	SW	REAL	SW01453WC	28-AUG-91	N	TRG	DMETCLP	MAGNESIUM	15200	UG/L			57 0								
SW038	SW	REAL	SW01453WC	28-AUG-91	N	TRG	DMETCLP	MANGANESE	5.4	UG/L			2 5								
SW038	SW	REAL	SW01453WC	28-AUG-91	N	TRG	DMETCLP	MERCURY	0 20	UG/L		U	0 20								
SW038	SW	REAL	SW01453WC	28-AUG-91	N	TRG	DMETCLP	MOLYBDENUM	10 0	UG/L		U	10.0								
SW038	SW	REAL	SW01453WC	28-AUG-91	N	TRG	DMETCLP	NICKEL	10 7	UG/L		U	10 7								
SW038	SW	REAL	SW01453WC	28-AUG-91	N	TRG	DMETCLP	POTASSIUM	1070	UG/L		U	1070								
SW038	SW	REAL	SW01453WC	28-AUG-91	N	TRG	DMETCLP	SELENIUM	1.2	UG/L		U	1 2								
SW038	SW	REAL	SW01453WC	28-AUG-91	N	TRG	DMETCLP	SILICON	9150	UG/L			20 8								
SW038	SW	REAL	SW01453WC	28-AUG-91	N	TRG	DMETCLP	SILVER	6 8	UG/L		U	6 8								
SW038	SW	REAL	SW01453WC	28-AUG-91	N	TRG	DMETCLP	SODIUM	9670	UG/L			47 8								
SW038	SW	REAL	SW01453WC	28-AUG-91	N	TRG	DMETCLP	STRONTIUM	430	UG/L			7 5								
SW038	SW	REAL	SW01453WC	28-AUG-91	N	TRG	DMETCLP	THALLIUM	1 6	UG/L		U	1 6								
SW038	SW	REAL	SW01453WC	28-AUG-91	N	TRG	DMETCLP	TIN	38 9	UG/L		U	38 9								
SW038	SW	REAL	SW01453WC	28-AUG-91	N	TRG	DMETCLP	VANADIUM	6.5	UG/L		U	6 5								
SW038	SW	REAL	SW01453WC	28-AUG-91	N	TRG	DMETCLP	ZINC	7 2	UG/L		U	7 2								
SW038	SW	REAL	SW01453WC	28-AUG-91	N	TRG	METCLP	ALUMINUM	105	UG/L			36 8								
SW038	SW	REAL	SW01453WC	28-AUG-91	N	TRG	METCLP	ANTIMONY	42 2	UG/L		U	42 2								
SW038	SW	REAL	SW01453WC	28-AUG-91	N	TRG	METCLP	ARSENIC	0.70	UG/L		U	0 70								
SW038	SW	REAL	SW01453WC	28-AUG-91	N	TRG	METCLP	BARIUM	172	UG/L			4 6								
SW038	SW	REAL	SW01453WC	28-AUG-91	N	TRG	METCLP	BERYLLIUM	0.60	UG/L		U	0 60								
SW038	SW	REAL	SW01453WC	28-AUG-91	N	TRG	METCLP	CADMIUM	4.6	UG/L		U	4.6								
SW038	SW	REAL	SW01453WC	28-AUG-91	N	TRG	METCLP	CALCIUM	82400	UG/L			19 6								
SW038	SW	REAL	SW01453WC	28-AUG-91	N	TRG	METCLP	CESIUM	500	UG/L		U	500								
SW038	SW	REAL	SW01453WC	28-AUG-91	N	TRG	METCLP	CHROMIUM	5 5	UG/L		U	5 5								
SW038	SW	REAL	SW01453WC	28-AUG-91	N	TRG	METCLP	COBALT	7 3	UG/L		U	7 3								
SW038	SW	REAL	SW01453WC	28-AUG-91	N	TRG	METCLP	COPPER	5 4	UG/L		U	5.4								
SW038	SW	REAL	SW01453WC	28-AUG-91	N	TRG	METCLP	IRON	145	UG/L			6 9								
SW038	SW	REAL	SW01453WC	28-AUG-91	N	TRG	METCLP	LEAD	1.3	UG/L		U	1 3								
SW038	SW	REAL	SW01453WC	28-AUG-91	N	TRG	METCLP	LITHIUM	5.4	UG/L		U	5 4								
SW038	SW	REAL	SW01453WC	28-AUG-91	N	TRG	METCLP	MAGNESIUM	15700	UG/L			57 0								
SW038	SW	REAL	SW01453WC	28-AUG-91	N	TRG	METCLP	MANGANESE	15 1	UG/L			2 5								
SW038	SW	REAL	SW01453WC	28-AUG-91	N	TRG	METCLP	MERCURY	0 20	UG/L		U	0 20								
SW038	SW	REAL	SW01453WC	28-AUG-91	N	TRG	METCLP	MOLYBDENUM	10 0	UG/L		U	10 0								
SW038	SW	REAL	SW01453WC	28-AUG-91	N	TRG	METCLP	NICKEL	10 7	UG/L		U	10 7								
SW038	SW	REAL	SW01453WC	28-AUG-91	N	TRG	METCLP	POTASSIUM	1070	UG/L		U	1070								
SW038	SW	REAL	SW01453WC	28-AUG-91	N	TRG	METCLP	SELENIUM	1.2	UG/L		U	1 2								
SW038	SW	REAL	SW01453WC	28-AUG-91	N	TRG	METCLP	SILICON	8820	UG/L			20 8								
SW038	SW	REAL	SW01453WC	28-AUG-91	N	TRG	METCLP	SILVER	6 8	UG/L		U	6 8								
SW038	SW	REAL	SW01453WC	28-AUG-91	N	TRG	METCLP	SODIUM	9920	UG/L			47.8								
SW038	SW	REAL	SW01453WC	28-AUG-91	N	TRG	METCLP	STRONTIUM	444	UG/L			7 5								
SW038	SW	REAL	SW01453WC	28-AUG-91	N	TRG	METCLP	THALLIUM	1.6	UG/L		U	1 6								
SW038	SW	REAL	SW01453WC	28-AUG-91	N	TRG	METCLP	TIN	38 9	UG/L		U	38 9								
SW038	SW	REAL	SW01453WC	28-AUG-91	N	TRG	METCLP	VANADIUM	6.5	UG/L		U	6.5								
SW038	SW	REAL	SW01453WC	28-AUG-91	N	TRG	METCLP	ZINC	17.4	UG/L			7.2								
SW038	SW	REAL	SW01559WC	18-SEP-91	N	TRG	DMETCLP	ALUMINUM	22.3	UG/L		U	22 3								
SW038	SW	REAL	SW01559WC	18-SEP-91	N	TRG	DMETCLP	ANTIMONY	13.8	UG/L		U	13 8								
SW038	SW	REAL	SW01559WC	18-SEP-91	N	TRG	DMETCLP	ARSENIC	1.1	UG/L		U	1.1								
SW038	SW	REAL	SW01559WC	18-SEP-91	N	TRG	DMETCLP	BARIUM	147	UG/L			5.6								
SW038	SW	REAL	SW01559WC	18-SEP-91	N	TRG	DMETCLP	BERYLLIUM	0.50	UG/L		U	0.50								
SW038	SW	REAL	SW01559WC	18-SEP-91	N	TRG	DMETCLP	CADMIUM	2.4	UG/L		U	2 4								
SW038	SW	REAL	SW01559WC	18-SEP-91	N	TRG	DMETCLP	CALCIUM	77100	UG/L			29 2								

Location	ST	QC	Sample Number	Smpl Date	D	ID	Group	Chemical	Result	Unit	Error	Qual	D LMT	VA	RN1	RN2	RN3	RN4	VResult	VQual	VDET
SW038	SW	REAL	SW01559WC	18-SEP-91	N	TRG	DMETCLP	CESIUM	500	UG/L		U	500								
SW038	SW	REAL	SW01559WC	18-SEP-91	N	TRG	DMETCLP	CHROMIUM	2 6	UG/L		U	2 6								
SW038	SW	REAL	SW01559WC	18-SEP-91	N	TRG	DMETCLP	COBALT	2 8	UG/L		U	2 8								
SW038	SW	REAL	SW01559WC	18-SEP-91	N	TRG	DMETCLP	COPPER	3 1	UG/L			2 1								
SW038	SW	REAL	SW01559WC	18-SEP-91	N	TRG	DMETCLP	IRON	16 7	UG/L		U	16 7								
SW038	SW	REAL	SW01559WC	18-SEP-91	N	TRG	DMETCLP	LEAD	0 90	UG/L		U	0.90								
SW038	SW	REAL	SW01559WC	18-SEP-91	N	TRG	DMETCLP	LITHIUM	7 1	UG/L		U	7 1								
SW038	SW	REAL	SW01559WC	18-SEP-91	N	TRG	DMETCLP	MAGNESIUM	16300	UG/L			33 1								
SW038	SW	REAL	SW01559WC	18-SEP-91	N	TRG	DMETCLP	MANGANESE	3.8	UG/L			1.3								
SW038	SW	REAL	SW01559WC	18-SEP-91	N	TRG	DMETCLP	MERCURY	0 20	UG/L		U	0 20								
SW038	SW	REAL	SW01559WC	18-SEP-91	N	TRG	DMETCLP	MOLYBDENUM	5 8	UG/L		U	5 8								
SW038	SW	REAL	SW01559WC	18-SEP-91	N	TRG	DMETCLP	NICKEL	5 9	UG/L		U	5 9								
SW038	SW	REAL	SW01559WC	18-SEP-91	N	TRG	DMETCLP	POTASSIUM	675	UG/L		U	675								
SW038	SW	REAL	SW01559WC	18-SEP-91	N	TRG	DMETCLP	SELENIUM	1 2	UG/L		U	1 2								
SW038	SW	REAL	SW01559WC	18-SEP-91	N	TRG	DMETCLP	SILICON	8170	UG/L			21 0								
SW038	SW	REAL	SW01559WC	18-SEP-91	N	TRG	DMETCLP	SILVER	2 9	UG/L		U	2 9								
SW038	SW	REAL	SW01559WC	18-SEP-91	N	TRG	DMETCLP	SODIUM	11900	UG/L			172								
SW038	SW	REAL	SW01559WC	18-SEP-91	N	TRG	DMETCLP	STRONTIUM	418	UG/L			2 3								
SW038	SW	REAL	SW01559WC	18-SEP-91	N	TRG	DMETCLP	THALLIUM	1 9	UG/L		U	1 9								
SW038	SW	REAL	SW01559WC	18-SEP-91	N	TRG	DMETCLP	TIN	10.4	UG/L		U	10 4								
SW038	SW	REAL	SW01559WC	18-SEP-91	N	TRG	DMETCLP	VANADIUM	2 3	UG/L		U	2 3								
SW038	SW	REAL	SW01559WC	18-SEP-91	N	TRG	DMETCLP	ZINC	68 5	UG/L			4 3								
SW038	SW	REAL	SW01559WC	18-SEP-91	N	TRG	METCLP	ALUMINUM	65 5	UG/L			22 3								
SW038	SW	REAL	SW01559WC	18-SEP-91	N	TRG	METCLP	ANTIMONY	13 8	UG/L		U	13 8								
SW038	SW	REAL	SW01559WC	18-SEP-91	N	TRG	METCLP	ARSENIC	0 70	UG/L		U	0 70								
SW038	SW	REAL	SW01559WC	18-SEP-91	N	TRG	METCLP	BARIUM	158	UG/L			5 6								
SW038	SW	REAL	SW01559WC	18-SEP-91	N	TRG	METCLP	BERYLLIUM	0 90	UG/L			0 50								
SW038	SW	REAL	SW01559WC	18-SEP-91	N	TRG	METCLP	CADMIUM	2 4	UG/L		U	2 4								
SW038	SW	REAL	SW01559WC	18-SEP-91	N	TRG	METCLP	CALCIUM	78500	UG/L			29 2								
SW038	SW	REAL	SW01559WC	18-SEP-91	N	TRG	METCLP	CESIUM	500	UG/L		U	500								
SW038	SW	REAL	SW01559WC	18-SEP-91	N	TRG	METCLP	CHROMIUM	2 6	UG/L		U	2.6								
SW038	SW	REAL	SW01559WC	18-SEP-91	N	TRG	METCLP	COBALT	2 8	UG/L		U	2 8								
SW038	SW	REAL	SW01559WC	18-SEP-91	N	TRG	METCLP	COPPER	4 6	UG/L			2 1								
SW038	SW	REAL	SW01559WC	18-SEP-91	N	TRG	METCLP	IRON	82 4	UG/L			16 7								
SW038	SW	REAL	SW01559WC	18-SEP-91	N	TRG	METCLP	LEAD	0 90	UG/L		U	0 90								
SW038	SW	REAL	SW01559WC	18-SEP-91	N	TRG	METCLP	LITHIUM	7.1	UG/L		U	7 1								
SW038	SW	REAL	SW01559WC	18-SEP-91	N	TRG	METCLP	MAGNESIUM	16400	UG/L			33 1								
SW038	SW	REAL	SW01559WC	18-SEP-91	N	TRG	METCLP	MANGANESE	6 6	UG/L			1.3								
SW038	SW	REAL	SW01559WC	18-SEP-91	N	TRG	METCLP	MERCURY	0 20	UG/L		U	0.20								
SW038	SW	REAL	SW01559WC	18-SEP-91	N	TRG	METCLP	MOLYBDENUM	5 8	UG/L		U	5.8								
SW038	SW	REAL	SW01559WC	18-SEP-91	N	TRG	METCLP	NICKEL	5 9	UG/L		U	5.9								
SW038	SW	REAL	SW01559WC	18-SEP-91	N	TRG	METCLP	POTASSIUM	675	UG/L		U	675								
SW038	SW	REAL	SW01559WC	18-SEP-91	N	TRG	METCLP	SELENIUM	1 2	UG/L		U	1.2								
SW038	SW	REAL	SW01559WC	18-SEP-91	N	TRG	METCLP	SILICON	9400	UG/L			21 0								
SW038	SW	REAL	SW01559WC	18-SEP-91	N	TRG	METCLP	SILVER	2 9	UG/L		U	2 9								
SW038	SW	REAL	SW01559WC	18-SEP-91	N	TRG	METCLP	SODIUM	11400	UG/L			172								
SW038	SW	REAL	SW01559WC	18-SEP-91	N	TRG	METCLP	STRONTIUM	428	UG/L			2 3								
SW038	SW	REAL	SW01559WC	18-SEP-91	N	TRG	METCLP	THALLIUM	2.4	UG/L		U	2.4								
SW038	SW	REAL	SW01559WC	18-SEP-91	N	TRG	METCLP	TIN	10.4	UG/L		U	10 4								
SW038	SW	REAL	SW01559WC	18-SEP-91	N	TRG	METCLP	VANADIUM	2 3	UG/L		U	2.3								
SW038	SW	REAL	SW01559WC	18-SEP-91	N	TRG	METCLP	ZINC	8.7	UG/L			4.3								
SW038	SW	REAL	SW01665WC	23-OCT-91	N	TRG	DMETCLPTAL	ALUMINUM	36 00	UG/L		B	200 0								
SW038	SW	REAL	SW01665WC	23-OCT-91	N	TRG	DMETCLPTAL	ANTIMONY	19 30	UG/L		B	60 00								
SW038	SW	REAL	SW01665WC	23-OCT-91	N	TRG	DMETCLPTAL	ARSENIC	2 00	UG/L		U	10.00								
SW038	SW	REAL	SW01665WC	23-OCT-91	N	TRG	DMETCLPTAL	BARIUM	160.00	UG/L		B	200 0								
SW038	SW	REAL	SW01665WC	23-OCT-91	N	TRG	DMETCLPTAL	BERYLLIUM	1.00	UG/L		U	5 000								
SW038	SW	REAL	SW01665WC	23-OCT-91	N	TRG	DMETCLPTAL	CADMIUM	2 00	UG/L		U	5 000								
SW038	SW	REAL	SW01665WC	23-OCT-91	N	TRG	DMETCLPTAL	CALCIUM	85500 00	UG/L			5000.								
SW038	SW	REAL	SW01665WC	23-OCT-91	N	TRG	DMETCLPTAL	CHROMIUM	6.50	UG/L		B	10 00								
SW038	SW	REAL	SW01665WC	23-OCT-91	N	TRG	DMETCLPTAL	COBALT	3 00	UG/L		U	50 00								
SW038	SW	REAL	SW01665WC	23-OCT-91	N	TRG	DMETCLPTAL	COPPER	3 00	UG/L		U	25.00								
SW038	SW	REAL	SW01665WC	23-OCT-91	N	TRG	DMETCLPTAL	IRON	14.80	UG/L		BN*	100.0								
SW038	SW	REAL	SW01665WC	23-OCT-91	N	TRG	DMETCLPTAL	LEAD	1.00	UG/L		U	3.000								

Location	ST	QC	Sample Number	Smpl Date	D	ID	Group	Chemical	Result	Unit	Error	Qual	D LMT	VA	RN1	RN2	RN3	RN4	VResult	VQual	VDET
SW038	SW	REAL	SW01665WC	23-OCT-91	N	TRG	DMETCLPTAL	MAGNESIUM	17200 00	UG/L			5000								
SW038	SW	REAL	SW01665WC	23-OCT-91	N	TRG	DMETCLPTAL	MANGANESE	5 10	UG/L		B	15 00								
SW038	SW	REAL	SW01665WC	23-OCT-91	N	TRG	DMETCLPTAL	MERCURY	0 20	UG/L		U	0 200								
SW038	SW	REAL	SW01665WC	23-OCT-91	N	TRG	DMETCLPTAL	NICKEL	17.00	UG/L		U	40 00								
SW038	SW	REAL	SW01665WC	23-OCT-91	N	TRG	DMETCLPTAL	POTASSIUM	983 00	UG/L		B	5000								
SW038	SW	REAL	SW01665WC	23-OCT-91	N	TRG	DMETCLPTAL	SELENIUM	2.00	UG/L		U	5.000								
SW038	SW	REAL	SW01665WC	23-OCT-91	N	TRG	DMETCLPTAL	SILVER	2 00	UG/L		U	10 00								
SW038	SW	REAL	SW01665WC	23-OCT-91	N	TRG	DMETCLPTAL	SODIUM	11100 00	UG/L			5000								
SW038	SW	REAL	SW01665WC	23-OCT-91	N	TRG	DMETCLPTAL	THALLIUM	1 00	UG/L		U	10 00								
SW038	SW	REAL	SW01665WC	23-OCT-91	N	TRG	DMETCLPTAL	VANADIUM	3.70	UG/L		B	50 00								
SW038	SW	REAL	SW01665WC	23-OCT-91	N	TRG	DMETCLPTAL	ZINC	5 40	UG/L		B*	20 00								
SW038	SW	REAL	SW01665WC	23-OCT-91	N	TRG	DMETNOCLP	CESIUM	51 00	UG/L		U	1000								
SW038	SW	REAL	SW01665WC	23-OCT-91	N	TRG	DMETNOCLP	LITHIUM	4 50	UG/L		B	100 0								
SW038	SW	REAL	SW01665WC	23-OCT-91	N	TRG	DMETNOCLP	MOLYBDENUM	3 00	UG/L		U	200 0								
SW038	SW	REAL	SW01665WC	23-OCT-91	N	TRG	DMETNOCLP	STRONTIUM	485 00	UG/L			200 0								
SW038	SW	REAL	SW01665WC	23-OCT-91	N	TRG	DMETNOCLP	TIN	17 00	UG/L		U	200 0								
SW038	SW	REAL	SW01665WC	23-OCT-91	N	TRG	SMETCLPTCL	ALUMINUM	86 00	UG/L		B	200 0								
SW038	SW	REAL	SW01665WC	23-OCT-91	N	TRG	SMETCLPTCL	ANTIMONY	14 30	UG/L		B	60.00								
SW038	SW	REAL	SW01665WC	23-OCT-91	N	TRG	SMETCLPTCL	ARSENIC	2 00	UG/L		U	10 00								
SW038	SW	REAL	SW01665WC	23-OCT-91	N	TRG	SMETCLPTCL	BARIUM	166 00	UG/L		B	200 0								
SW038	SW	REAL	SW01665WC	23-OCT-91	N	TRG	SMETCLPTCL	BERYLLIUM	1.00	UG/L		U	5 000								
SW038	SW	REAL	SW01665WC	23-OCT-91	N	TRG	SMETCLPTCL	CADMIUM	2 00	UG/L		U	5 000								
SW038	SW	REAL	SW01665WC	23-OCT-91	N	TRG	SMETCLPTCL	CALCIUM	87600 00	UG/L			5000								
SW038	SW	REAL	SW01665WC	23-OCT-91	N	TRG	SMETCLPTCL	CHROMIUM	6 40	UG/L		B	10 00								
SW038	SW	REAL	SW01665WC	23-OCT-91	N	TRG	SMETCLPTCL	COBALT	3 00	UG/L		U	50 00								
SW038	SW	REAL	SW01665WC	23-OCT-91	N	TRG	SMETCLPTCL	COPPER	3 00	UG/L		U	25.00								
SW038	SW	REAL	SW01665WC	23-OCT-91	N	TRG	SMETCLPTCL	CYANIDE	2 00	UG/L		U	10 00								
SW038	SW	REAL	SW01665WC	23-OCT-91	N	TRG	SMETCLPTCL	IRON	132.00	UG/L		N*	100 0								
SW038	SW	REAL	SW01665WC	23-OCT-91	N	TRG	SMETCLPTCL	LEAD	1.00	UG/L		U	3.000								
SW038	SW	REAL	SW01665WC	23-OCT-91	N	TRG	SMETCLPTCL	MAGNESIUM	17200 00	UG/L			5000								
SW038	SW	REAL	SW01665WC	23-OCT-91	N	TRG	SMETCLPTCL	MANGANESE	11.10	UG/L		B	15 00								
SW038	SW	REAL	SW01665WC	23-OCT-91	N	TRG	SMETCLPTCL	MERCURY	0.20	UG/L		U	0 200								
SW038	SW	REAL	SW01665WC	23-OCT-91	N	TRG	SMETCLPTCL	NICKEL	17.00	UG/L		U	40.00								
SW038	SW	REAL	SW01665WC	23-OCT-91	N	TRG	SMETCLPTCL	POTASSIUM	800.00	UG/L		B	5000								
SW038	SW	REAL	SW01665WC	23-OCT-91	N	TRG	SMETCLPTCL	SELENIUM	2.00	UG/L		U	5 000								
SW038	SW	REAL	SW01665WC	23-OCT-91	N	TRG	SMETCLPTCL	SILVER	2.00	UG/L		U	10.00								
SW038	SW	REAL	SW01665WC	23-OCT-91	N	TRG	SMETCLPTCL	SODIUM	11100.00	UG/L			5000								
SW038	SW	REAL	SW01665WC	23-OCT-91	N	TRG	SMETCLPTCL	THALLIUM	1.00	UG/L		U	10 00								
SW038	SW	REAL	SW01665WC	23-OCT-91	N	TRG	SMETCLPTCL	VANADIUM	4.10	UG/L		B	50 00								
SW038	SW	REAL	SW01665WC	23-OCT-91	N	TRG	SMETCLPTCL	ZINC	2.40	UG/L		B*	20 00								
SW038	SW	REAL	SW01665WC	23-OCT-91	N	TRG	SMETNOCLP	CESIUM	51.00	UG/L		U	1000								
SW038	SW	REAL	SW01665WC	23-OCT-91	N	TRG	SMETNOCLP	LITHIUM	4.00	UG/L		B	100 0								
SW038	SW	REAL	SW01665WC	23-OCT-91	N	TRG	SMETNOCLP	MOLYBDENUM	3.00	UG/L		U	200 0								
SW038	SW	REAL	SW01665WC	23-OCT-91	N	TRG	SMETNOCLP	STRONTIUM	485 00	UG/L			200 0								
SW038	SW	REAL	SW01665WC	23-OCT-91	N	TRG	SMETNOCLP	TIN	17 00	UG/L		U	200 0								
SW038	SW	REAL	SW01716WC	07-NOV-91	N																
SW093	SW	LR	SW00961WCLR	14-MAR-91	N																
SW093	SW	REAL	SW00795WC	30-JAN-91	N																
SW093	SW	REAL	SW00856WC	20-FEB-91	N																
SW093	SW	REAL	SW00961WC	14-MAR-91	N																
SW093	SW	REAL	SW01063WC	15-APR-91	N	TRG	DMETCLPTAL	ALUMINUM	108	UG/L		U	108								
SW093	SW	REAL	SW01063WC	15-APR-91	N	TRG	DMETCLPTAL	ANTIMONY	25.6	UG/L		U	25.6								
SW093	SW	REAL	SW01063WC	15-APR-91	N	TRG	DMETCLPTAL	ARSENIC	0.90	UG/L		U	0.90								
SW093	SW	REAL	SW01063WC	15-APR-91	N	TRG	DMETCLPTAL	BARIUM	87 9	UG/L			1 3								
SW093	SW	REAL	SW01063WC	15-APR-91	N	TRG	DMETCLPTAL	BERYLLIUM	0.50	UG/L		U	0 50								
SW093	SW	REAL	SW01063WC	15-APR-91	N	TRG	DMETCLPTAL	CADMIUM	3.3	UG/L		U	3 3								
SW093	SW	REAL	SW01063WC	15-APR-91	N	TRG	DMETCLPTAL	CALCIUM	41400	UG/L			14 5								
SW093	SW	REAL	SW01063WC	15-APR-91	N	TRG	DMETCLPTAL	CHROMIUM	4.1	UG/L		U	4 1								
SW093	SW	REAL	SW01063WC	15-APR-91	N	TRG	DMETCLPTAL	COBALT	3.6	UG/L		U	3 6								
SW093	SW	REAL	SW01063WC	15-APR-91	N	TRG	DMETCLPTAL	COPPER	4.7	UG/L		U	4.7								
SW093	SW	REAL	SW01063WC	15-APR-91	N	TRG	DMETCLPTAL	IRON	37 5	UG/L			6 3								
SW093	SW	REAL	SW01063WC	15-APR-91	N	TRG	DMETCLPTAL	LEAD	3.2	UG/L			1 5								
SW093	SW	REAL	SW01063WC	15-APR-91	N	TRG	DMETCLPTAL	MAGNESIUM	9280	UG/L			36.6								

Location	ST	QC	Sample Number	Smpl Date	D	ID	Group	Chemical	Result	Unit	Error	Qual	D LMT	VA	RN1	RN2	RN3	RN4	VResult	VQual	VDET
SW093	SW	REAL	SW01063WC	15-APR-91	N	TRG	DMETCLPTAL	MANGANESE	76 7	UG/L			1 0								
SW093	SW	REAL	SW01063WC	15-APR-91	N	TRG	DMETCLPTAL	MERCURY	0 20	UG/L		U	0 20								
SW093	SW	REAL	SW01063WC	15-APR-91	N	TRG	DMETCLPTAL	NICKEL	14 7	UG/L		U	14 7								
SW093	SW	REAL	SW01063WC	15-APR-91	N	TRG	DMETCLPTAL	POTASSIUM	2810	UG/L			2050								
SW093	SW	REAL	SW01063WC	15-APR-91	N	TRG	DMETCLPTAL	SELENIUM	1 1	UG/L			1 1								
SW093	SW	REAL	SW01063WC	15-APR-91	N	TRG	DMETCLPTAL	SILVER	5 0	UG/L		U	5 0								
SW093	SW	REAL	SW01063WC	15-APR-91	N	TRG	DMETCLPTAL	SODIUM	30700	UG/L			43 5								
SW093	SW	REAL	SW01063WC	15-APR-91	N	TRG	DMETCLPTAL	THALLIUM	1 4	UG/L		U	1 4								
SW093	SW	REAL	SW01063WC	15-APR-91	N	TRG	DMETCLPTAL	VANADIUM	5 7	UG/L		U	5 7								
SW093	SW	REAL	SW01063WC	15-APR-91	N	TRG	DMETCLPTAL	ZINC	25 8	UG/L			1 8								
SW093	SW	REAL	SW01063WC	15-APR-91	N	TRG	DMETNOCLP	CESIUM	500	UG/L		U	500								
SW093	SW	REAL	SW01063WC	15-APR-91	N	TRG	DMETNOCLP	LITHIUM	5.5	UG/L			2.0								
SW093	SW	REAL	SW01063WC	15-APR-91	N	TRG	DMETNOCLP	MOLYBDENUM	5 7	UG/L		U	5 7								
SW093	SW	REAL	SW01063WC	15-APR-91	N	TRG	DMETNOCLP	SILICON	3720	UG/L			25 7								
SW093	SW	REAL	SW01063WC	15-APR-91	N	TRG	DMETNOCLP	STRONTIUM	243	UG/L			3 5								
SW093	SW	REAL	SW01063WC	15-APR-91	N	TRG	DMETNOCLP	TIN	14.8	UG/L		U	14 8								
SW093	SW	REAL	SW01063WC	15-APR-91	N	TRG	SMETCLPTCL	ALUMINUM	321	UG/L			108								
SW093	SW	REAL	SW01063WC	15-APR-91	N	TRG	SMETCLPTCL	ANTIMONY	25 6	UG/L		U	25 6								
SW093	SW	REAL	SW01063WC	15-APR-91	N	TRG	SMETCLPTCL	ARSENIC	0 90	UG/L		U	0.90								
SW093	SW	REAL	SW01063WC	15-APR-91	N	TRG	SMETCLPTCL	BARIUM	96 6	UG/L			1.3								
SW093	SW	REAL	SW01063WC	15-APR-91	N	TRG	SMETCLPTCL	BERYLLIUM	0 50	UG/L		U	0 50								
SW093	SW	REAL	SW01063WC	15-APR-91	N	TRG	SMETCLPTCL	CADMIUM	3 3	UG/L		U	3 3								
SW093	SW	REAL	SW01063WC	15-APR-91	N	TRG	SMETCLPTCL	CALCIUM	43800	UG/L			14 5								
SW093	SW	REAL	SW01063WC	15-APR-91	N	TRG	SMETCLPTCL	CHROMIUM	4.1	UG/L		U	4.1								
SW093	SW	REAL	SW01063WC	15-APR-91	N	TRG	SMETCLPTCL	COBALT	3 6	UG/L		U	3 6								
SW093	SW	REAL	SW01063WC	15-APR-91	N	TRG	SMETCLPTCL	COPPER	4 7	UG/L		U	4 7								
SW093	SW	REAL	SW01063WC	15-APR-91	N	TRG	SMETCLPTCL	IRON	488	UG/L			6 3								
SW093	SW	REAL	SW01063WC	15-APR-91	N	TRG	SMETCLPTCL	LEAD	36 2	UG/L			1 5								
SW093	SW	REAL	SW01063WC	15-APR-91	N	TRG	SMETCLPTCL	MAGNESIUM	9820	UG/L			36 6								
SW093	SW	REAL	SW01063WC	15-APR-91	N	TRG	SMETCLPTCL	MANGANESE	87 8	UG/L			1.0								
SW093	SW	REAL	SW01063WC	15-APR-91	N	TRG	SMETCLPTCL	MERCURY	0 20	UG/L		U	0 20								
SW093	SW	REAL	SW01063WC	15-APR-91	N	TRG	SMETCLPTCL	NICKEL	14 7	UG/L		U	14 7								
SW093	SW	REAL	SW01063WC	15-APR-91	N	TRG	SMETCLPTCL	POTASSIUM	2810	UG/L			2050								
SW093	SW	REAL	SW01063WC	15-APR-91	N	TRG	SMETCLPTCL	SELENIUM	1.1	UG/L		U	1.1								
SW093	SW	REAL	SW01063WC	15-APR-91	N	TRG	SMETCLPTCL	SILVER	5 0	UG/L		U	5 0								
SW093	SW	REAL	SW01063WC	15-APR-91	N	TRG	SMETCLPTCL	SODIUM	32200	UG/L			43 5								
SW093	SW	REAL	SW01063WC	15-APR-91	N	TRG	SMETCLPTCL	THALLIUM	1.4	UG/L		U	1.4								
SW093	SW	REAL	SW01063WC	15-APR-91	N	TRG	SMETCLPTCL	VANADIUM	5 7	UG/L		U	5.7								
SW093	SW	REAL	SW01063WC	15-APR-91	N	TRG	SMETCLPTCL	ZINC	38 7	UG/L			1 8								
SW093	SW	REAL	SW01063WC	15-APR-91	N	TRG	SMETNOCLP	CESIUM	500	UG/L		U	500								
SW093	SW	REAL	SW01063WC	15-APR-91	N	TRG	SMETNOCLP	LITHIUM	6 0	UG/L			2.0								
SW093	SW	REAL	SW01063WC	15-APR-91	N	TRG	SMETNOCLP	MOLYBDENUM	5.7	UG/L		U	5 7								
SW093	SW	REAL	SW01063WC	15-APR-91	N	TRG	SMETNOCLP	SILICON	4530	UG/L			25 7								
SW093	SW	REAL	SW01063WC	15-APR-91	N	TRG	SMETNOCLP	STRONTIUM	256	UG/L			3 5								
SW093	SW	REAL	SW01063WC	15-APR-91	N	TRG	SMETNOCLP	TIN	14.8	UG/L		U	14 8								
SW093	SW	REAL	SW01170WC	22-MAY-91	N	TRG	DMETCLPTAL	ALUMINUM	31	UG/L			200								
SW093	SW	REAL	SW01170WC	22-MAY-91	N	TRG	DMETCLPTAL	ANTIMONY	17	UG/L		U	60								
SW093	SW	REAL	SW01170WC	22-MAY-91	N	TRG	DMETCLPTAL	ARSENIC	2 0	UG/L		UI	10								
SW093	SW	REAL	SW01170WC	22-MAY-91	N	TRG	DMETCLPTAL	BARIUM	110	UG/L			200								
SW093	SW	REAL	SW01170WC	22-MAY-91	N	TRG	DMETCLPTAL	BERYLLIUM	1 0	UG/L		U	5								
SW093	SW	REAL	SW01170WC	22-MAY-91	N	TRG	DMETCLPTAL	BERYLLIUM	3 0	UG/L		U	5								
SW093	SW	REAL	SW01170WC	22-MAY-91	N	TRG	DMETCLPTAL	CALCIUM	65000	UG/L			5000								
SW093	SW	REAL	SW01170WC	22-MAY-91	N	TRG	DMETCLPTAL	CESIUM	50	UG/L		U	1000								
SW093	SW	REAL	SW01170WC	22-MAY-91	N	TRG	DMETCLPTAL	CHROMIUM	3.0	UG/L		U	10								
SW093	SW	REAL	SW01170WC	22-MAY-91	N	TRG	DMETCLPTAL	COBALT	4 0	UG/L		U	50								
SW093	SW	REAL	SW01170WC	22-MAY-91	N	TRG	DMETCLPTAL	COPPER	4 0	UG/L		U	25								
SW093	SW	REAL	SW01170WC	22-MAY-91	N	TRG	DMETCLPTAL	IRON	67	UG/L			100								
SW093	SW	REAL	SW01170WC	22-MAY-91	N	TRG	DMETCLPTAL	LEAD	1 6	UG/L			3								
SW093	SW	REAL	SW01170WC	22-MAY-91	N	TRG	DMETCLPTAL	LITHIUM	10	UG/L			100								
SW093	SW	REAL	SW01170WC	22-MAY-91	N	TRG	DMETCLPTAL	MAGNESIUM	14000	UG/L			5000								
SW093	SW	REAL	SW01170WC	22-MAY-91	N	TRG	DMETCLPTAL	MANGANESE	190	UG/L			15								
SW093	SW	REAL	SW01170WC	22-MAY-91	N	TRG	DMETCLPTAL	MERCURY	0.20	UG/L		U	0.2								
SW093	SW	REAL	SW01170WC	22-MAY-91	N	TRG	DMETCLPTAL	MOLYBDENUM	26	UG/L		U	50								

Location	ST	QC	Sample Number	Smpl Date	D	ID	Group	Chemical	Result	Unit	Error	Qual	D LMT	VA	RN1	RN2	RN3	RN4	VResult	VQual	VDET
SW093	SW	REAL	SW01170WC	22-MAY-91	N	TRG	DMETCLPTAL	NICKEL	5 0	UG/L		U	40								
SW093	SW	REAL	SW01170WC	22-MAY-91	N	TRG	DMETCLPTAL	POTASSIUM	3200	UG/L		I	5000								
SW093	SW	REAL	SW01170WC	22-MAY-91	N	TRG	DMETCLPTAL	SELENIUM	5 0	UG/L			5								
SW093	SW	REAL	SW01170WC	22-MAY-91	N	TRG	DMETCLPTAL	SILVER	5 0	UG/L		U	10								
SW093	SW	REAL	SW01170WC	22-MAY-91	N	TRG	DMETCLPTAL	SODIUM	34000	UG/L			5000								
SW093	SW	REAL	SW01170WC	22-MAY-91	N	TRG	DMETCLPTAL	STRONTIUM	380	UG/L			200								
SW093	SW	REAL	SW01170WC	22-MAY-91	N	TRG	DMETCLPTAL	THALLIUM	15	UG/L		UI	10								
SW093	SW	REAL	SW01170WC	22-MAY-91	N	TRG	DMETCLPTAL	TIN	16	UG/L		U	200								
SW093	SW	REAL	SW01170WC	22-MAY-91	N	TRG	DMETCLPTAL	VANADIUM	3.0	UG/L		U	50								
SW093	SW	REAL	SW01170WC	22-MAY-91	N	TRG	DMETCLPTAL	ZINC	47	UG/L			20								
SW093	SW	REAL	SW01170WC	22-MAY-91	N	TRG	SMETCLPTCL	ALUMINUM	1500	UG/L			200								
SW093	SW	REAL	SW01170WC	22-MAY-91	N	TRG	SMETCLPTCL	ANTIMONY	17	UG/L		U	60								
SW093	SW	REAL	SW01170WC	22-MAY-91	N	TRG	SMETCLPTCL	ARSENIC	2 0	UG/L		U	10								
SW093	SW	REAL	SW01170WC	22-MAY-91	N	TRG	SMETCLPTCL	BARIUM	140	UG/L			200								
SW093	SW	REAL	SW01170WC	22-MAY-91	N	TRG	SMETCLPTCL	BERYLLIUM	1.0	UG/L		U	5								
SW093	SW	REAL	SW01170WC	22-MAY-91	N	TRG	SMETCLPTCL	BERYLLIUM	3 0	UG/L		U	5								
SW093	SW	REAL	SW01170WC	22-MAY-91	N	TRG	SMETCLPTCL	CALCIUM	72000	UG/L			5000								
SW093	SW	REAL	SW01170WC	22-MAY-91	N	TRG	SMETCLPTCL	CESIUM	50	UG/L		U	1000								
SW093	SW	REAL	SW01170WC	22-MAY-91	N	TRG	SMETCLPTCL	CHROMIUM	3.0	UG/L		U	10								
SW093	SW	REAL	SW01170WC	22-MAY-91	N	TRG	SMETCLPTCL	COBALT	4 0	UG/L		U	50								
SW093	SW	REAL	SW01170WC	22-MAY-91	N	TRG	SMETCLPTCL	COPPER	4.0	UG/L		U	25								
SW093	SW	REAL	SW01170WC	22-MAY-91	N	TRG	SMETCLPTCL	IRON	2600	UG/L			100								
SW093	SW	REAL	SW01170WC	22-MAY-91	N	TRG	SMETCLPTCL	LEAD	1.9	UG/L			3								
SW093	SW	REAL	SW01170WC	22-MAY-91	N	TRG	SMETCLPTCL	LITHIUM	10	UG/L			100								
SW093	SW	REAL	SW01170WC	22-MAY-91	N	TRG	SMETCLPTCL	MAGNESIUM	15000	UG/L			5000								
SW093	SW	REAL	SW01170WC	22-MAY-91	N	TRG	SMETCLPTCL	MANGANESE	290	UG/L			15								
SW093	SW	REAL	SW01170WC	22-MAY-91	N	TRG	SMETCLPTCL	MERCURY	0.20	UG/L		U	0.2								
SW093	SW	REAL	SW01170WC	22-MAY-91	N	TRG	SMETCLPTCL	MOLYBDENUM	26	UG/L		U	50								
SW093	SW	REAL	SW01170WC	22-MAY-91	N	TRG	SMETCLPTCL	NICKEL	5.0	UG/L		U	40								
SW093	SW	REAL	SW01170WC	22-MAY-91	N	TRG	SMETCLPTCL	POTASSIUM	3500	UG/L			5000								
SW093	SW	REAL	SW01170WC	22-MAY-91	N	TRG	SMETCLPTCL	SELENIUM	3.0	UG/L		U	5								
SW093	SW	REAL	SW01170WC	22-MAY-91	N	TRG	SMETCLPTCL	SILVER	5.0	UG/L		U	10								
SW093	SW	REAL	SW01170WC	22-MAY-91	N	TRG	SMETCLPTCL	SODIUM	35000	UG/L			5000								
SW093	SW	REAL	SW01170WC	22-MAY-91	N	TRG	SMETCLPTCL	STRONTIUM	430	UG/L			200								
SW093	SW	REAL	SW01170WC	22-MAY-91	N	TRG	SMETCLPTCL	THALLIUM	2.0	UG/L		UI	10								
SW093	SW	REAL	SW01170WC	22-MAY-91	N	TRG	SMETCLPTCL	TIN	16	UG/L		U	200								
SW093	SW	REAL	SW01170WC	22-MAY-91	N	TRG	SMETCLPTCL	VANADIUM	4.3	UG/L			50								
SW093	SW	REAL	SW01170WC	22-MAY-91	N	TRG	SMETCLPTCL	ZINC	98	UG/L			20								
SW093	SW	REAL	SW01170WC	22-MAY-91	N	TRG	SMETNOCLP	SILICON	4110	UG/L			14 2								
SW093	SW	REAL	SW01170WC	22-MAY-91	N	TRG	SMETNOCLP	SILICON	6430	UG/L			25 7								
SW093	SW	REAL	SW01273WC	26-JUN-91	N	TRG	DMETCLP	SILICON	6030	UG/L			10 5								
SW093	SW	REAL	SW01273WC	26-JUN-91	N	TRG	METCLP	SILICON	6060	UG/L			10.5								
SW093	SW	REAL	SW01376WC	29-JUL-91	N																
SW093	SW	REAL	SW01482WC	14-AUG-91	N	TRG	DMETCLP	SILICON	7450	UG/L			10 5								
SW093	SW	REAL	SW01482WC	14-AUG-91	N	TRG	DMETCLPTAL	ALUMINUM	10	UG/L		U	200								
SW093	SW	REAL	SW01482WC	14-AUG-91	N	TRG	DMETCLPTAL	ANTIMONY	11	UG/L		U	60								
SW093	SW	REAL	SW01482WC	14-AUG-91	N	TRG	DMETCLPTAL	ARSENIC	2.0	UG/L		U	10								
SW093	SW	REAL	SW01482WC	14-AUG-91	N	TRG	DMETCLPTAL	BARIUM	130	UG/L			200								
SW093	SW	REAL	SW01482WC	14-AUG-91	N	TRG	DMETCLPTAL	BERYLLIUM	1.0	UG/L		U	5								
SW093	SW	REAL	SW01482WC	14-AUG-91	N	TRG	DMETCLPTAL	BERYLLIUM	2 0	UG/L		U	5								
SW093	SW	REAL	SW01482WC	14-AUG-91	N	TRG	DMETCLPTAL	CALCIUM	84000	UG/L			5000								
SW093	SW	REAL	SW01482WC	14-AUG-91	N	TRG	DMETCLPTAL	CESIUM	50	UG/L			1000								
SW093	SW	REAL	SW01482WC	14-AUG-91	N	TRG	DMETCLPTAL	CHROMIUM	2.0	UG/L		U	10								
SW093	SW	REAL	SW01482WC	14-AUG-91	N	TRG	DMETCLPTAL	COBALT	2.0	UG/L		U	50								
SW093	SW	REAL	SW01482WC	14-AUG-91	N	TRG	DMETCLPTAL	COPPER	3.0	UG/L		U	25								
SW093	SW	REAL	SW01482WC	14-AUG-91	N	TRG	DMETCLPTAL	IRON	7.2	UG/L			100								
SW093	SW	REAL	SW01482WC	14-AUG-91	N	TRG	DMETCLPTAL	LEAD	1.0	UG/L		U	3								
SW093	SW	REAL	SW01482WC	14-AUG-91	N	TRG	DMETCLPTAL	LITHIUM	12	UG/L			100								
SW093	SW	REAL	SW01482WC	14-AUG-91	N	TRG	DMETCLPTAL	MAGNESIUM	18000	UG/L			5000								
SW093	SW	REAL	SW01482WC	14-AUG-91	N	TRG	DMETCLPTAL	MANGANESE	490	UG/L			15								
SW093	SW	REAL	SW01482WC	14-AUG-91	N	TRG	DMETCLPTAL	MERCURY	0.54	UG/L			0.2								
SW093	SW	REAL	SW01482WC	14-AUG-91	N	TRG	DMETCLPTAL	MOLYBDENUM	3.0	UG/L		U	50								
SW093	SW	REAL	SW01482WC	14-AUG-91	N	TRG	DMETCLPTAL	NICKEL	4.0	UG/L		U	40								

Location	ST	QC	Sample Number	Smpl Date	D	ID	Group	Chemical	Result	Unit	Error	Qual	D LMT	VA	RN1	RN2	RN3	RN4	VResult	VQual	VDET
SW093	SW	REAL	SW01482WC	14-AUG-91	N	TRG	DMETCLPTAL	POTASSIUM	3400	UG/L			5000								
SW093	SW	REAL	SW01482WC	14-AUG-91	N	TRG	DMETCLPTAL	SELENIUM	4 0	UG/L		UI	5								
SW093	SW	REAL	SW01482WC	14-AUG-91	N	TRG	DMETCLPTAL	SILVER	2.0	UG/L		U	10								
SW093	SW	REAL	SW01482WC	14-AUG-91	N	TRG	DMETCLPTAL	SODIUM	40000	UG/L			5000								
SW093	SW	REAL	SW01482WC	14-AUG-91	N	TRG	DMETCLPTAL	STRONTIUM	490	UG/L			200								
SW093	SW	REAL	SW01482WC	14-AUG-91	N	TRG	DMETCLPTAL	THALLIUM	3 0	UG/L		UI	10								
SW093	SW	REAL	SW01482WC	14-AUG-91	N	TRG	DMETCLPTAL	TIN	13	UG/L		U	200								
SW093	SW	REAL	SW01482WC	14-AUG-91	N	TRG	DMETCLPTAL	VANADIUM	3 0	UG/L		U	50								
SW093	SW	REAL	SW01482WC	14-AUG-91	N	TRG	DMETCLPTAL	ZINC	3 0	UG/L		U	20								
SW093	SW	REAL	SW01482WC	14-AUG-91	N	TRG	DMETNOCLP	SILICON	7450	UG/L			10 5								
SW093	SW	REAL	SW01482WC	14-AUG-91	N	TRG	METCLP	SILICON	6520	UG/L			10 5								
SW093	SW	REAL	SW01482WC	14-AUG-91	N	TRG	SMETNOCLP	SILICON	6520	UG/L			10 5								
SW093	SW	REAL	SW01588WC	19-SEP-91	N	TRG	DMETCLPTAL	ALUMINUM	17	UG/L			200								
SW093	SW	REAL	SW01588WC	19-SEP-91	N	TRG	DMETCLPTAL	ANTIMONY	14	UG/L		U	60								
SW093	SW	REAL	SW01588WC	19-SEP-91	N	TRG	DMETCLPTAL	ARSENIC	2 0	UG/L		UI	10								
SW093	SW	REAL	SW01588WC	19-SEP-91	N	TRG	DMETCLPTAL	BARIUM	83	UG/L			200								
SW093	SW	REAL	SW01588WC	19-SEP-91	N	TRG	DMETCLPTAL	BERYLLIUM	1.0	UG/L		U	5								
SW093	SW	REAL	SW01588WC	19-SEP-91	N	TRG	DMETCLPTAL	BERYLLIUM	5 0	UG/L			5								
SW093	SW	REAL	SW01588WC	19-SEP-91	N	TRG	DMETCLPTAL	CALCIUM	53000	UG/L			5000								
SW093	SW	REAL	SW01588WC	19-SEP-91	N	TRG	DMETCLPTAL	CESIUM	50	UG/L			1000								
SW093	SW	REAL	SW01588WC	19-SEP-91	N	TRG	DMETCLPTAL	CHROMIUM	2.0	UG/L		U	10								
SW093	SW	REAL	SW01588WC	19-SEP-91	N	TRG	DMETCLPTAL	COBALT	2 0	UG/L		U	50								
SW093	SW	REAL	SW01588WC	19-SEP-91	N	TRG	DMETCLPTAL	COPPER	3 1	UG/L			25								
SW093	SW	REAL	SW01588WC	19-SEP-91	N	TRG	DMETCLPTAL	IRON	47	UG/L			100								
SW093	SW	REAL	SW01588WC	19-SEP-91	N	TRG	DMETCLPTAL	LEAD	2 0	UG/L		U	3								
SW093	SW	REAL	SW01588WC	19-SEP-91	N	TRG	DMETCLPTAL	LITHIUM	3.7	UG/L			100								
SW093	SW	REAL	SW01588WC	19-SEP-91	N	TRG	DMETCLPTAL	MAGNESIUM	10000	UG/L			5000								
SW093	SW	REAL	SW01588WC	19-SEP-91	N	TRG	DMETCLPTAL	MANGANESE	250	UG/L			15								
SW093	SW	REAL	SW01588WC	19-SEP-91	N	TRG	DMETCLPTAL	MERCURY	0 20	UG/L		U	0.2								
SW093	SW	REAL	SW01588WC	19-SEP-91	N	TRG	DMETCLPTAL	MOLYBDENUM	4.0	UG/L		U	200								
SW093	SW	REAL	SW01588WC	19-SEP-91	N	TRG	DMETCLPTAL	NICKEL	5 0	UG/L		U	40								
SW093	SW	REAL	SW01588WC	19-SEP-91	N	TRG	DMETCLPTAL	POTASSIUM	3500	UG/L			5000								
SW093	SW	REAL	SW01588WC	19-SEP-91	N	TRG	DMETCLPTAL	SELENIUM	4 0	UG/L		U	5								
SW093	SW	REAL	SW01588WC	19-SEP-91	N	TRG	DMETCLPTAL	SILVER	5 0	UG/L		U	10								
SW093	SW	REAL	SW01588WC	19-SEP-91	N	TRG	DMETCLPTAL	SODIUM	22000	UG/L			5000								
SW093	SW	REAL	SW01588WC	19-SEP-91	N	TRG	DMETCLPTAL	STRONTIUM	280	UG/L			200								
SW093	SW	REAL	SW01588WC	19-SEP-91	N	TRG	DMETCLPTAL	THALLIUM	4.0	UG/L		UI	10								
SW093	SW	REAL	SW01588WC	19-SEP-91	N	TRG	DMETCLPTAL	TIN	11	UG/L		U	200								
SW093	SW	REAL	SW01588WC	19-SEP-91	N	TRG	DMETCLPTAL	VANADIUM	2.0	UG/L		U	50								
SW093	SW	REAL	SW01588WC	19-SEP-91	N	TRG	DMETCLPTAL	ZINC	6.6	UG/L			20								
SW093	SW	REAL	SW01588WC	19-SEP-91	N	TRG	DMETNOCLP	SILICON	4620	UG/L			20 8								
SW093	SW	REAL	SW01588WC	19-SEP-91	N	TRG	SMETCLPTCL	ALUMINUM	2000	UG/L			200								
SW093	SW	REAL	SW01588WC	19-SEP-91	N	TRG	SMETCLPTCL	ANTIMONY	14	UG/L		U	60								
SW093	SW	REAL	SW01588WC	19-SEP-91	N	TRG	SMETCLPTCL	ARSENIC	2 0	UG/L		UI	10								
SW093	SW	REAL	SW01588WC	19-SEP-91	N	TRG	SMETCLPTCL	BARIUM	100	UG/L			200								
SW093	SW	REAL	SW01588WC	19-SEP-91	N	TRG	SMETCLPTCL	BERYLLIUM	1.0	UG/L		U	5								
SW093	SW	REAL	SW01588WC	19-SEP-91	N	TRG	SMETCLPTCL	BERYLLIUM	1 1	UG/L			5								
SW093	SW	REAL	SW01588WC	19-SEP-91	N	TRG	SMETCLPTCL	CALCIUM	56000	UG/L			5000								
SW093	SW	REAL	SW01588WC	19-SEP-91	N	TRG	SMETCLPTCL	CESIUM	60	UG/L			1000								
SW093	SW	REAL	SW01588WC	19-SEP-91	N	TRG	SMETCLPTCL	CHROMIUM	2 0	UG/L		U	10								
SW093	SW	REAL	SW01588WC	19-SEP-91	N	TRG	SMETCLPTCL	COBALT	2 0	UG/L		U	50								
SW093	SW	REAL	SW01588WC	19-SEP-91	N	TRG	SMETCLPTCL	COPPER	6.2	UG/L			25								
SW093	SW	REAL	SW01588WC	19-SEP-91	N	TRG	SMETCLPTCL	IRON	2200	UG/L			100								
SW093	SW	REAL	SW01588WC	19-SEP-91	N	TRG	SMETCLPTCL	LEAD	6 7	UG/L			3								
SW093	SW	REAL	SW01588WC	19-SEP-91	N	TRG	SMETCLPTCL	LITHIUM	5 8	UG/L			100								
SW093	SW	REAL	SW01588WC	19-SEP-91	N	TRG	SMETCLPTCL	MAGNESIUM	11000	UG/L			5000								
SW093	SW	REAL	SW01588WC	19-SEP-91	N	TRG	SMETCLPTCL	MANGANESE	280	UG/L			15								
SW093	SW	REAL	SW01588WC	19-SEP-91	N	TRG	SMETCLPTCL	MERCURY	0 20	UG/L		U	0.2								
SW093	SW	REAL	SW01588WC	19-SEP-91	N	TRG	SMETCLPTCL	MOLYBDENUM	4.0	UG/L		U	200								
SW093	SW	REAL	SW01588WC	19-SEP-91	N	TRG	SMETCLPTCL	NICKEL	6 1	UG/L			40								
SW093	SW	REAL	SW01588WC	19-SEP-91	N	TRG	SMETCLPTCL	POTASSIUM	3700	UG/L			5000								
SW093	SW	REAL	SW01588WC	19-SEP-91	N	TRG	SMETCLPTCL	SELENIUM	4.0	UG/L		U	5								
SW093	SW	REAL	SW01588WC	19-SEP-91	N	TRG	SMETCLPTCL	SILVER	5.0	UG/L		U	10								

Location	ST	QC	Sample Number	Smpl Date	D	ID	Group	Chemical	Result	Unit	Error	Qual	D LMT	VA	RN1	RN2	RN3	RN4	VResult	VQual	VDET
SW093	SW	REAL	SW01588WC	19-SEP-91	N	TRG	SMETCLPTCL	SODIUM	23000	UG/L			5000								
SW093	SW	REAL	SW01588WC	19-SEP-91	N	TRG	SMETCLPTCL	STRONTIUM	290	UG/L			200								
SW093	SW	REAL	SW01588WC	19-SEP-91	N	TRG	SMETCLPTCL	THALLIUM	1.0	UG/L		UI	10								
SW093	SW	REAL	SW01588WC	19-SEP-91	N	TRG	SMETCLPTCL	TIN	11	UG/L		U	200								
SW093	SW	REAL	SW01588WC	19-SEP-91	N	TRG	SMETCLPTCL	VANADIUM	4 0	UG/L			50								
SW093	SW	REAL	SW01588WC	19-SEP-91	N	TRG	SMETCLPTCL	ZINC	31	UG/L			20								
SW093	SW	REAL	SW01588WC	19-SEP-91	N	TRG	SMETNOCLP	SILICON	9070	UG/L			20 8								
SW093	SW	REAL	SW01694WC	28-OCT-91	N																
SW093	SW	REAL	SW60065WC	19-MAR-91	N																
SW093	SW	REAL	SW60093WC	17-MAY-91	N	TRG	SMETCLPTCL	ALUMINUM	110000	UG/L			200								
SW093	SW	REAL	SW60093WC	17-MAY-91	N	TRG	SMETCLPTCL	ANTIMONY	17	UG/L		U	60								
SW093	SW	REAL	SW60093WC	17-MAY-91	N	TRG	SMETCLPTCL	ARSENIC	5.7	UG/L			10								
SW093	SW	REAL	SW60093WC	17-MAY-91	N	TRG	SMETCLPTCL	BARIUM	1000	UG/L			200								
SW093	SW	REAL	SW60093WC	17-MAY-91	N	TRG	SMETCLPTCL	BERYLLIUM	3 0	UG/L			5								
SW093	SW	REAL	SW60093WC	17-MAY-91	N	TRG	SMETCLPTCL	BERYLLIUM	6.8	UG/L			5								
SW093	SW	REAL	SW60093WC	17-MAY-91	N	TRG	SMETCLPTCL	CALCIUM	77000	UG/L			5000								
SW093	SW	REAL	SW60093WC	17-MAY-91	N	TRG	SMETCLPTCL	CESIUM	60	UG/L			1000								
SW093	SW	REAL	SW60093WC	17-MAY-91	N	TRG	SMETCLPTCL	CHROMIUM	99	UG/L			10								
SW093	SW	REAL	SW60093WC	17-MAY-91	N	TRG	SMETCLPTCL	COBALT	53	UG/L			50								
SW093	SW	REAL	SW60093WC	17-MAY-91	N	TRG	SMETCLPTCL	COPPER	120	UG/L			25								
SW093	SW	REAL	SW60093WC	17-MAY-91	N	TRG	SMETCLPTCL	IRON	110000	UG/L			100								
SW093	SW	REAL	SW60093WC	17-MAY-91	N	TRG	SMETCLPTCL	LEAD	86	UG/L			3								
SW093	SW	REAL	SW60093WC	17-MAY-91	N	TRG	SMETCLPTCL	LITHIUM	70	UG/L			100								
SW093	SW	REAL	SW60093WC	17-MAY-91	N	TRG	SMETCLPTCL	MAGNESIUM	31000	UG/L			5000								
SW093	SW	REAL	SW60093WC	17-MAY-91	N	TRG	SMETCLPTCL	MANGANESE	2100	UG/L			15								
SW093	SW	REAL	SW60093WC	17-MAY-91	N	TRG	SMETCLPTCL	MERCURY	0 20	UG/L		U	0 2								
SW093	SW	REAL	SW60093WC	17-MAY-91	N	TRG	SMETCLPTCL	MOLYBDENUM	26	UG/L		U	50								
SW093	SW	REAL	SW60093WC	17-MAY-91	N	TRG	SMETCLPTCL	NICKEL	100	UG/L			40								
SW093	SW	REAL	SW60093WC	17-MAY-91	N	TRG	SMETCLPTCL	POTASSIUM	18000	UG/L			5000								
SW093	SW	REAL	SW60093WC	17-MAY-91	N	TRG	SMETCLPTCL	SELENIUM	15	UG/L		U	5								
SW093	SW	REAL	SW60093WC	17-MAY-91	N	TRG	SMETCLPTCL	SILVER	5.0	UG/L		U	10								
SW093	SW	REAL	SW60093WC	17-MAY-91	N	TRG	SMETCLPTCL	SODIUM	28000	UG/L			5000								
SW093	SW	REAL	SW60093WC	17-MAY-91	N	TRG	SMETCLPTCL	STRONTIUM	440	UG/L			200								
SW093	SW	REAL	SW60093WC	17-MAY-91	N	TRG	SMETCLPTCL	THALLIUM	3.0	UG/L		UI	10								
SW093	SW	REAL	SW60093WC	17-MAY-91	N	TRG	SMETCLPTCL	TIN	16	UG/L		U	200								
SW093	SW	REAL	SW60093WC	17-MAY-91	N	TRG	SMETCLPTCL	VANADIUM	250	UG/L			50								
SW093	SW	REAL	SW60093WC	17-MAY-91	N	TRG	SMETCLPTCL	ZINC	750	UG/L			20								
SW093	SW	REAL	SW60110WC	11-JUN-91	N	TRG	SMETCLPTCL	ALUMINUM	45300.00	UG/L		*	200 0								
SW093	SW	REAL	SW60110WC	11-JUN-91	N	TRG	SMETCLPTCL	ANTIMONY	39.30	UG/L		BN	60.00								
SW093	SW	REAL	SW60110WC	11-JUN-91	N	TRG	SMETCLPTCL	ARSENIC	3.00	UG/L		BN	10 00								
SW093	SW	REAL	SW60110WC	11-JUN-91	N	TRG	SMETCLPTCL	BARIUM	388.00	UG/L			200 0								
SW093	SW	REAL	SW60110WC	11-JUN-91	N	TRG	SMETCLPTCL	BERYLLIUM	3.50	UG/L		B	5 000								
SW093	SW	REAL	SW60110WC	11-JUN-91	N	TRG	SMETCLPTCL	CADMIUM	4.90	UG/L		B	5 000								
SW093	SW	REAL	SW60110WC	11-JUN-91	N	TRG	SMETCLPTCL	CALCIUM	30200 00	UG/L			5000								
SW093	SW	REAL	SW60110WC	11-JUN-91	N	TRG	SMETCLPTCL	CHROMIUM	52.20	UG/L		*	10 00								
SW093	SW	REAL	SW60110WC	11-JUN-91	N	TRG	SMETCLPTCL	COBALT	18.80	UG/L		B	50 00								
SW093	SW	REAL	SW60110WC	11-JUN-91	N	TRG	SMETCLPTCL	COPPER	54.20	UG/L			25 00								
SW093	SW	REAL	SW60110WC	11-JUN-91	N	TRG	SMETCLPTCL	IRON	45900.00	UG/L		*	100.0								
SW093	SW	REAL	SW60110WC	11-JUN-91	N	TRG	SMETCLPTCL	LEAD	57.20	UG/L			3.000								
SW093	SW	REAL	SW60110WC	11-JUN-91	N	TRG	SMETCLPTCL	MAGNESIUM	12400 00	UG/L			5000								
SW093	SW	REAL	SW60110WC	11-JUN-91	N	TRG	SMETCLPTCL	MANGANESE	683 00	UG/L			15.00								
SW093	SW	REAL	SW60110WC	11-JUN-91	N	TRG	SMETCLPTCL	MERCURY	0.20	UG/L		UN	0 200								
SW093	SW	REAL	SW60110WC	11-JUN-91	N	TRG	SMETCLPTCL	NICKEL	47 70	UG/L			40 00								
SW093	SW	REAL	SW60110WC	11-JUN-91	N	TRG	SMETCLPTCL	POTASSIUM	8640.00	UG/L			5000.								
SW093	SW	REAL	SW60110WC	11-JUN-91	N	TRG	SMETCLPTCL	SELENIUM	2.00	UG/L		UW	5 000								
SW093	SW	REAL	SW60110WC	11-JUN-91	N	TRG	SMETCLPTCL	SILVER	2.00	UG/L		U	10.00								
SW093	SW	REAL	SW60110WC	11-JUN-91	N	TRG	SMETCLPTCL	SODIUM	15100 00	UG/L			5000.								
SW093	SW	REAL	SW60110WC	11-JUN-91	N	TRG	SMETCLPTCL	THALLIUM	1.00	UG/L		B	10.00								
SW093	SW	REAL	SW60110WC	11-JUN-91	N	TRG	SMETCLPTCL	VANADIUM	107.00	UG/L			50 00								
SW093	SW	REAL	SW60110WC	11-JUN-91	N	TRG	SMETCLPTCL	ZINC	429 00	UG/L		E	20 00								
SW093	SW	REAL	SW60110WC	11-JUN-91	N	TRG	SMETNOCLP	CESIUM	112.00	UG/L		U	1000								
SW093	SW	REAL	SW60110WC	11-JUN-91	N	TRG	SMETNOCLP	LITHIUM	27.90	UG/L		B	100.0								
SW093	SW	REAL	SW60110WC	11-JUN-91	N	TRG	SMETNOCLP	MOLYBDENUM	8.10	UG/L		B	200 0								

Location	ST	QC	Sample Number	Smpl Date	D	ID	Group	Chemical	Result	Unit	Error	Qual	D LMT	VA	RN1	RN2	RN3	RN4	VResult	VQual	VDET
SW093	SW	REAL	SW60110WC	11-JUN-91	N	TRG	SMETNOCLP	STRONTIUM	188 00	UG/L		B	200 0								
SW093	SW	REAL	SW60110WC	11-JUN-91	N	TRG	SMETNOCLP	TIN	36 20	UG/L		B	200 0								
SW093	SW	REAL	SW60118WC	10-JUL-91	N																
SW093	SW	REAL	SW60123WC	23-JUL-91	N																
SW093	SW	REAL	SW60131WC	29-JUL-91	N	TRG	SMETCLPTCL	ALUMINUM	17000	UG/L			200								
SW093	SW	REAL	SW60131WC	29-JUL-91	N	TRG	SMETCLPTCL	ANTIMONY	11	UG/L		U	60								
SW093	SW	REAL	SW60131WC	29-JUL-91	N	TRG	SMETCLPTCL	ARSENIC	4 0	UG/L		UI	10								
SW093	SW	REAL	SW60131WC	29-JUL-91	N	TRG	SMETCLPTCL	BARIUM	160	UG/L			200								
SW093	SW	REAL	SW60131WC	29-JUL-91	N	TRG	SMETCLPTCL	BERYLLIUM	1 0	UG/L		U	5								
SW093	SW	REAL	SW60131WC	29-JUL-91	N	TRG	SMETCLPTCL	BERYLLIUM	1 3	UG/L			5								
SW093	SW	REAL	SW60131WC	29-JUL-91	N	TRG	SMETCLPTCL	CALCIUM	24000	UG/L			5000								
SW093	SW	REAL	SW60131WC	29-JUL-91	N	TRG	SMETCLPTCL	CESIUM	50	UG/L			1000								
SW093	SW	REAL	SW60131WC	29-JUL-91	N	TRG	SMETCLPTCL	CHROMIUM	21	UG/L			10								
SW093	SW	REAL	SW60131WC	29-JUL-91	N	TRG	SMETCLPTCL	COBALT	6 7	UG/L			50								
SW093	SW	REAL	SW60131WC	29-JUL-91	N	TRG	SMETCLPTCL	COPPER	23	UG/L			25								
SW093	SW	REAL	SW60131WC	29-JUL-91	N	TRG	SMETCLPTCL	IRON	16000	UG/L			100								
SW093	SW	REAL	SW60131WC	29-JUL-91	N	TRG	SMETCLPTCL	LEAD	45	UG/L			3								
SW093	SW	REAL	SW60131WC	29-JUL-91	N	TRG	SMETCLPTCL	LITHIUM	17	UG/L			100								
SW093	SW	REAL	SW60131WC	29-JUL-91	N	TRG	SMETCLPTCL	MAGNESIUM	7100	UG/L			5000								
SW093	SW	REAL	SW60131WC	29-JUL-91	N	TRG	SMETCLPTCL	MANGANESE	280	UG/L			15								
SW093	SW	REAL	SW60131WC	29-JUL-91	N	TRG	SMETCLPTCL	MERCURY	0 20	UG/L		U	0 2								
SW093	SW	REAL	SW60131WC	29-JUL-91	N	TRG	SMETCLPTCL	MOLYBDENUM	3 0	UG/L		U	50								
SW093	SW	REAL	SW60131WC	29-JUL-91	N	TRG	SMETCLPTCL	NICKEL	11	UG/L			40								
SW093	SW	REAL	SW60131WC	29-JUL-91	N	TRG	SMETCLPTCL	POTASSIUM	5900	UG/L			5000								
SW093	SW	REAL	SW60131WC	29-JUL-91	N	TRG	SMETCLPTCL	SELENIUM	20	UG/L		U	5								
SW093	SW	REAL	SW60131WC	29-JUL-91	N	TRG	SMETCLPTCL	SILVER	2 0	UG/L		U	10								
SW093	SW	REAL	SW60131WC	29-JUL-91	N	TRG	SMETCLPTCL	SODIUM	11000	UG/L			5000								
SW093	SW	REAL	SW60131WC	29-JUL-91	N	TRG	SMETCLPTCL	STRONTIUM	140	UG/L			200								
SW093	SW	REAL	SW60131WC	29-JUL-91	N	TRG	SMETCLPTCL	THALLIUM	3 0	UG/L		U	10								
SW093	SW	REAL	SW60131WC	29-JUL-91	N	TRG	SMETCLPTCL	TIN	13	UG/L		U	200								
SW093	SW	REAL	SW60131WC	29-JUL-91	N	TRG	SMETCLPTCL	VANADIUM	42	UG/L			50								
SW093	SW	REAL	SW60131WC	29-JUL-91	N	TRG	SMETCLPTCL	ZINC	250	UG/L			20								
SW093	SW	REAL	SW60135WC	05-AUG-91	N																
SW093	SW	REAL	SW60143WC	07-AUG-91	N																
SW093	SW	REAL	SW60150WC	12-AUG-91	N																
SW093	SW	REAL	SW60158WC	19-AUG-91	N	TRG	SMETCLPTCL	ALUMINUM	10000	UG/L			200								
SW093	SW	REAL	SW60158WC	19-AUG-91	N	TRG	SMETCLPTCL	ANTIMONY	11	UG/L		U	60								
SW093	SW	REAL	SW60158WC	19-AUG-91	N	TRG	SMETCLPTCL	ARSENIC	4 0	UG/L		UI	10								
SW093	SW	REAL	SW60158WC	19-AUG-91	N	TRG	SMETCLPTCL	BARIUM	130	UG/L			200								
SW093	SW	REAL	SW60158WC	19-AUG-91	N	TRG	SMETCLPTCL	BERYLLIUM	1 1	UG/L			5								
SW093	SW	REAL	SW60158WC	19-AUG-91	N	TRG	SMETCLPTCL	BERYLLIUM	2 0	UG/L		U	5								
SW093	SW	REAL	SW60158WC	19-AUG-91	N	TRG	SMETCLPTCL	CALCIUM	29000	UG/L			5000								
SW093	SW	REAL	SW60158WC	19-AUG-91	N	TRG	SMETCLPTCL	CESIUM	50	UG/L		U	1000								
SW093	SW	REAL	SW60158WC	19-AUG-91	N	TRG	SMETCLPTCL	CHROMIUM	7 6	UG/L			10								
SW093	SW	REAL	SW60158WC	19-AUG-91	N	TRG	SMETCLPTCL	COBALT	4 9	UG/L			50								
SW093	SW	REAL	SW60158WC	19-AUG-91	N	TRG	SMETCLPTCL	COPPER	22	UG/L			25								
SW093	SW	REAL	SW60158WC	19-AUG-91	N	TRG	SMETCLPTCL	IRON	11000	UG/L			100								
SW093	SW	REAL	SW60158WC	19-AUG-91	N	TRG	SMETCLPTCL	LEAD	80	UG/L			3								
SW093	SW	REAL	SW60158WC	19-AUG-91	N	TRG	SMETCLPTCL	LITHIUM	8.9	UG/L			100								
SW093	SW	REAL	SW60158WC	19-AUG-91	N	TRG	SMETCLPTCL	MAGNESIUM	6900	UG/L			5000								
SW093	SW	REAL	SW60158WC	19-AUG-91	N	TRG	SMETCLPTCL	MANGANESE	300	UG/L			15								
SW093	SW	REAL	SW60158WC	19-AUG-91	N	TRG	SMETCLPTCL	MERCURY	0.20	UG/L		U	0 2								
SW093	SW	REAL	SW60158WC	19-AUG-91	N	TRG	SMETCLPTCL	MOLYBDENUM	3.0	UG/L		U	50								
SW093	SW	REAL	SW60158WC	19-AUG-91	N	TRG	SMETCLPTCL	NICKEL	9.3	UG/L			40								
SW093	SW	REAL	SW60158WC	19-AUG-91	N	TRG	SMETCLPTCL	POTASSIUM	4800	UG/L			5000								
SW093	SW	REAL	SW60158WC	19-AUG-91	N	TRG	SMETCLPTCL	SELENIUM	4.0	UG/L		UI	5								
SW093	SW	REAL	SW60158WC	19-AUG-91	N	TRG	SMETCLPTCL	SILVER	2 0	UG/L		U	10								
SW093	SW	REAL	SW60158WC	19-AUG-91	N	TRG	SMETCLPTCL	SODIUM	13000	UG/L			5000								
SW093	SW	REAL	SW60158WC	19-AUG-91	N	TRG	SMETCLPTCL	STRONTIUM	170	UG/L			200								
SW093	SW	REAL	SW60158WC	19-AUG-91	N	TRG	SMETCLPTCL	THALLIUM	1.0	UG/L		UI	10								
SW093	SW	REAL	SW60158WC	19-AUG-91	N	TRG	SMETCLPTCL	TIN	13	UG/L		U	200								
SW093	SW	REAL	SW60158WC	19-AUG-91	N	TRG	SMETCLPTCL	VANADIUM	24	UG/L			50								
SW093	SW	REAL	SW60158WC	19-AUG-91	N	TRG	SMETCLPTCL	ZINC	250	UG/L			20								

Location	ST	QC	Sample Number	Smpl Date	D	ID	Group	Chemical	Result	Unit	Error	Qual	D LMT	VA	RN1	RN2	RN3	RN4	VResult	VQual	VDET
SW093	SW		SW01694WC	28-OCT-91	N																
SW118	SW	REAL	SW00765WC	30-JAN-91	N																
SW118	SW	REAL	SW00868WC	20-FEB-91	N																
SW118	SW	REAL	SW00971WC	21-MAR-91	N	TRG	DMETCLPTAL	ALUMINUM	21 9	UG/L			17 7								
SW118	SW	REAL	SW00971WC	21-MAR-91	N	TRG	DMETCLPTAL	ANTIMONY	18 2	UG/L		U	18 2								
SW118	SW	REAL	SW00971WC	21-MAR-91	N	TRG	DMETCLPTAL	ARSENIC	0 90	UG/L		U	0 90								
SW118	SW	REAL	SW00971WC	21-MAR-91	N	TRG	DMETCLPTAL	BARIUM	130	UG/L			4 4								
SW118	SW	REAL	SW00971WC	21-MAR-91	N	TRG	DMETCLPTAL	BERYLLIUM	0.60	UG/L		U	0 60								
SW118	SW	REAL	SW00971WC	21-MAR-91	N	TRG	DMETCLPTAL	CADMIUM	2 7	UG/L		U	2 7								
SW118	SW	REAL	SW00971WC	21-MAR-91	N	TRG	DMETCLPTAL	CALCIUM	63500	UG/L			14 3								
SW118	SW	REAL	SW00971WC	21-MAR-91	N	TRG	DMETCLPTAL	CHROMIUM	6.9	UG/L		U	6 9								
SW118	SW	REAL	SW00971WC	21-MAR-91	N	TRG	DMETCLPTAL	COBALT	3 0	UG/L		U	3 0								
SW118	SW	REAL	SW00971WC	21-MAR-91	N	TRG	DMETCLPTAL	COPPER	3 8	UG/L			2 5								
SW118	SW	REAL	SW00971WC	21-MAR-91	N	TRG	DMETCLPTAL	IRON	49.5	UG/L			4 3								
SW118	SW	REAL	SW00971WC	21-MAR-91	N	TRG	DMETCLPTAL	LEAD	1 5	UG/L		U	1 5								
SW118	SW	REAL	SW00971WC	21-MAR-91	N	TRG	DMETCLPTAL	MAGNESIUM	16400	UG/L			35 9								
SW118	SW	REAL	SW00971WC	21-MAR-91	N	TRG	DMETCLPTAL	MANGANESE	5 4	UG/L			1 0								
SW118	SW	REAL	SW00971WC	21-MAR-91	N	TRG	DMETCLPTAL	MERCURY	0 20	UG/L		U	0 20								
SW118	SW	REAL	SW00971WC	21-MAR-91	N	TRG	DMETCLPTAL	NICKEL	3 9	UG/L		U	3 9								
SW118	SW	REAL	SW00971WC	21-MAR-91	N	TRG	DMETCLPTAL	POTASSIUM	2100	UG/L			94 8								
SW118	SW	REAL	SW00971WC	21-MAR-91	N	TRG	DMETCLPTAL	SELENIUM	1 1	UG/L		U	1.1								
SW118	SW	REAL	SW00971WC	21-MAR-91	N	TRG	DMETCLPTAL	SILVER	3 8	UG/L		U	3 8								
SW118	SW	REAL	SW00971WC	21-MAR-91	N	TRG	DMETCLPTAL	SODIUM	40200	UG/L			21 4								
SW118	SW	REAL	SW00971WC	21-MAR-91	N	TRG	DMETCLPTAL	THALLIUM	1 4	UG/L		U	1 4								
SW118	SW	REAL	SW00971WC	21-MAR-91	N	TRG	DMETCLPTAL	VANADIUM	2 0	UG/L		U	2 0								
SW118	SW	REAL	SW00971WC	21-MAR-91	N	TRG	DMETCLPTAL	ZINC	8 4	UG/L			4 7								
SW118	SW	REAL	SW00971WC	21-MAR-91	N	TRG	DMETNOCLP	CESIUM	500	UG/L		U	500								
SW118	SW	REAL	SW00971WC	21-MAR-91	N	TRG	DMETNOCLP	LITHIUM	11 9	UG/L			2 0								
SW118	SW	REAL	SW00971WC	21-MAR-91	N	TRG	DMETNOCLP	MOLYBDENUM	10 9	UG/L		U	10 9								
SW118	SW	REAL	SW00971WC	21-MAR-91	N	TRG	DMETNOCLP	SILICON	4090	UG/L			14.2								
SW118	SW	REAL	SW00971WC	21-MAR-91	N	TRG	DMETNOCLP	STRONTIUM	397	UG/L			7 3								
SW118	SW	REAL	SW00971WC	21-MAR-91	N	TRG	DMETNOCLP	TIN	24 2	UG/L		U	24 2								
SW118	SW	REAL	SW00971WC	21-MAR-91	N	TRG	SMETCLPTCL	ALUMINUM	83.8	UG/L			17 7								
SW118	SW	REAL	SW00971WC	21-MAR-91	N	TRG	SMETCLPTCL	ANTIMONY	18 2	UG/L		U	18.2								
SW118	SW	REAL	SW00971WC	21-MAR-91	N	TRG	SMETCLPTCL	ARSENIC	0.90	UG/L		U	0 90								
SW118	SW	REAL	SW00971WC	21-MAR-91	N	TRG	SMETCLPTCL	BARIUM	129	UG/L			4.4								
SW118	SW	REAL	SW00971WC	21-MAR-91	N	TRG	SMETCLPTCL	BERYLLIUM	0 60	UG/L		U	0 60								
SW118	SW	REAL	SW00971WC	21-MAR-91	N	TRG	SMETCLPTCL	CADMIUM	2 7	UG/L		U	2 7								
SW118	SW	REAL	SW00971WC	21-MAR-91	N	TRG	SMETCLPTCL	CALCIUM	62100	UG/L			14 3								
SW118	SW	REAL	SW00971WC	21-MAR-91	N	TRG	SMETCLPTCL	CHROMIUM	6.9	UG/L		U	6 9								
SW118	SW	REAL	SW00971WC	21-MAR-91	N	TRG	SMETCLPTCL	COBALT	3 0	UG/L		U	3 0								
SW118	SW	REAL	SW00971WC	21-MAR-91	N	TRG	SMETCLPTCL	COPPER	2 5	UG/L		U	2 5								
SW118	SW	REAL	SW00971WC	21-MAR-91	N	TRG	SMETCLPTCL	IRON	152	UG/L			4.3								
SW118	SW	REAL	SW00971WC	21-MAR-91	N	TRG	SMETCLPTCL	LEAD	2.8	UG/L			1 5								
SW118	SW	REAL	SW00971WC	21-MAR-91	N	TRG	SMETCLPTCL	MAGNESIUM	16000	UG/L			35 9								
SW118	SW	REAL	SW00971WC	21-MAR-91	N	TRG	SMETCLPTCL	MANGANESE	19.1	UG/L			1.0								
SW118	SW	REAL	SW00971WC	21-MAR-91	N	TRG	SMETCLPTCL	MERCURY	0.20	UG/L		U	0 20								
SW118	SW	REAL	SW00971WC	21-MAR-91	N	TRG	SMETCLPTCL	NICKEL	3.9	UG/L		U	3 9								
SW118	SW	REAL	SW00971WC	21-MAR-91	N	TRG	SMETCLPTCL	POTASSIUM	2080	UG/L			94 8								
SW118	SW	REAL	SW00971WC	21-MAR-91	N	TRG	SMETCLPTCL	SELENIUM	1.1	UG/L		U	1 1								
SW118	SW	REAL	SW00971WC	21-MAR-91	N	TRG	SMETCLPTCL	SILVER	3 8	UG/L		U	3 8								
SW118	SW	REAL	SW00971WC	21-MAR-91	N	TRG	SMETCLPTCL	SODIUM	39100	UG/L			21 4								
SW118	SW	REAL	SW00971WC	21-MAR-91	N	TRG	SMETCLPTCL	THALLIUM	1 4	UG/L		U	1 4								
SW118	SW	REAL	SW00971WC	21-MAR-91	N	TRG	SMETCLPTCL	VANADIUM	2 0	UG/L			2 0								
SW118	SW	REAL	SW00971WC	21-MAR-91	N	TRG	SMETCLPTCL	ZINC	6.7	UG/L			4 7								
SW118	SW	REAL	SW00971WC	21-MAR-91	N	TRG	SMETNOCLP	CESIUM	500	UG/L		U	500								
SW118	SW	REAL	SW00971WC	21-MAR-91	N	TRG	SMETNOCLP	LITHIUM	11.4	UG/L			2.0								
SW118	SW	REAL	SW00971WC	21-MAR-91	N	TRG	SMETNOCLP	MOLYBDENUM	10.9	UG/L		U	10.9								
SW118	SW	REAL	SW00971WC	21-MAR-91	N	TRG	SMETNOCLP	SILICON	4140	UG/L			14 2								
SW118	SW	REAL	SW00971WC	21-MAR-91	N	TRG	SMETNOCLP	STRONTIUM	387	UG/L			7 3								
SW118	SW	REAL	SW00971WC	21-MAR-91	N	TRG	SMETNOCLP	TIN	24.2	UG/L		U	24.2								
SW118	SW	REAL	SW01073WC	10-APR-91	N	TRG	DMETCLPTAL	ALUMINUM	184	UG/L			108								
SW118	SW	REAL	SW01073WC	10-APR-91	N	TRG	DMETCLPTAL	ANTIMONY	25.6	UG/L		U	25.6								

Location	ST	QC	Sample Number	Smpl Date	D	ID	Group	Chemical	Result	Unit	Error	Qual	D LMT	VA	RN1	RN2	RN3	RN4	VResult	VQual	VDET
SW118	SW	REAL	SW01073WC	10-APR-91	N	TRG	DMETCLPTAL	ARSENIC	0 90	UG/L		U	0 90								
SW118	SW	REAL	SW01073WC	10-APR-91	N	TRG	DMETCLPTAL	BARIUM	127	UG/L			1 3								
SW118	SW	REAL	SW01073WC	10-APR-91	N	TRG	DMETCLPTAL	BERYLLIUM	0.50	UG/L		U	0 50								
SW118	SW	REAL	SW01073WC	10-APR-91	N	TRG	DMETCLPTAL	CADMIUM	3 3	UG/L		U	3 3								
SW118	SW	REAL	SW01073WC	10-APR-91	N	TRG	DMETCLPTAL	CALCIUM	67200	UG/L			14 5								
SW118	SW	REAL	SW01073WC	10-APR-91	N	TRG	DMETCLPTAL	CHROMIUM	5.7	UG/L			4 1								
SW118	SW	REAL	SW01073WC	10-APR-91	N	TRG	DMETCLPTAL	COBALT	3 6	UG/L		U	3 6								
SW118	SW	REAL	SW01073WC	10-APR-91	N	TRG	DMETCLPTAL	COPPER	4.7	UG/L		U	4 7								
SW118	SW	REAL	SW01073WC	10-APR-91	N	TRG	DMETCLPTAL	IRON	86 7	UG/L			6 3								
SW118	SW	REAL	SW01073WC	10-APR-91	N	TRG	DMETCLPTAL	LEAD	1 5	UG/L		U	1 5								
SW118	SW	REAL	SW01073WC	10-APR-91	N	TRG	DMETCLPTAL	MAGNESIUM	17500	UG/L			36.6								
SW118	SW	REAL	SW01073WC	10-APR-91	N	TRG	DMETCLPTAL	MANGANESE	26 6	UG/L			1 0								
SW118	SW	REAL	SW01073WC	10-APR-91	N	TRG	DMETCLPTAL	MERCURY	0 20	UG/L		U	0 20								
SW118	SW	REAL	SW01073WC	10-APR-91	N	TRG	DMETCLPTAL	NICKEL	14.7	UG/L		U	14 7								
SW118	SW	REAL	SW01073WC	10-APR-91	N	TRG	DMETCLPTAL	POTASSIUM	3000	UG/L			2050								
SW118	SW	REAL	SW01073WC	10-APR-91	N	TRG	DMETCLPTAL	SELENIUM	1 1	UG/L		U	1 1								
SW118	SW	REAL	SW01073WC	10-APR-91	N	TRG	DMETCLPTAL	SILVER	5 0	UG/L		U	5 0								
SW118	SW	REAL	SW01073WC	10-APR-91	N	TRG	DMETCLPTAL	SODIUM	41400	UG/L			43 5								
SW118	SW	REAL	SW01073WC	10-APR-91	N	TRG	DMETCLPTAL	THALLIUM	1.4	UG/L		U	1.4								
SW118	SW	REAL	SW01073WC	10-APR-91	N	TRG	DMETCLPTAL	VANADIUM	5 7	UG/L		U	5 7								
SW118	SW	REAL	SW01073WC	10-APR-91	N	TRG	DMETCLPTAL	ZINC	13.4	UG/L			1.8								
SW118	SW	REAL	SW01073WC	10-APR-91	N	TRG	DMETNOCLP	CESIUM	500	UG/L		U	500								
SW118	SW	REAL	SW01073WC	10-APR-91	N	TRG	DMETNOCLP	LITHIUM	15 9	UG/L			2.0								
SW118	SW	REAL	SW01073WC	10-APR-91	N	TRG	DMETNOCLP	MOLYBDENUM	5 7	UG/L		U	5 7								
SW118	SW	REAL	SW01073WC	10-APR-91	N	TRG	DMETNOCLP	SILICON	5180	UG/L			25 7								
SW118	SW	REAL	SW01073WC	10-APR-91	N	TRG	DMETNOCLP	STRONTIUM	422	UG/L			3 5								
SW118	SW	REAL	SW01073WC	10-APR-91	N	TRG	DMETNOCLP	TIN	14 8	UG/L		U	14 8								
SW118	SW	REAL	SW01073WC	10-APR-91	N	TRG	SMETCLPTCL	ALUMINUM	108	UG/L		U	108								
SW118	SW	REAL	SW01073WC	10-APR-91	N	TRG	SMETCLPTCL	ANTIMONY	25 6	UG/L		U	25 6								
SW118	SW	REAL	SW01073WC	10-APR-91	N	TRG	SMETCLPTCL	ARSENIC	0 90	UG/L		U	0 90								
SW118	SW	REAL	SW01073WC	10-APR-91	N	TRG	SMETCLPTCL	BARIUM	130	UG/L			1 3								
SW118	SW	REAL	SW01073WC	10-APR-91	N	TRG	SMETCLPTCL	BERYLLIUM	0.60	UG/L			0 50								
SW118	SW	REAL	SW01073WC	10-APR-91	N	TRG	SMETCLPTCL	CADMIUM	3 3	UG/L		U	3 3								
SW118	SW	REAL	SW01073WC	10-APR-91	N	TRG	SMETCLPTCL	CALCIUM	66700	UG/L			14.5								
SW118	SW	REAL	SW01073WC	10-APR-91	N	TRG	SMETCLPTCL	CHROMIUM	5.5	UG/L			4 1								
SW118	SW	REAL	SW01073WC	10-APR-91	N	TRG	SMETCLPTCL	COBALT	3 6	UG/L		U	3 6								
SW118	SW	REAL	SW01073WC	10-APR-91	N	TRG	SMETCLPTCL	COPPER	4 7	UG/L		U	4 7								
SW118	SW	REAL	SW01073WC	10-APR-91	N	TRG	SMETCLPTCL	IRON	227	UG/L			6 3								
SW118	SW	REAL	SW01073WC	10-APR-91	N	TRG	SMETCLPTCL	LEAD	1.5	UG/L		U	1 5								
SW118	SW	REAL	SW01073WC	10-APR-91	N	TRG	SMETCLPTCL	MAGNESIUM	17400	UG/L			36.6								
SW118	SW	REAL	SW01073WC	10-APR-91	N	TRG	SMETCLPTCL	MANGANESE	23 4	UG/L			1 0								
SW118	SW	REAL	SW01073WC	10-APR-91	N	TRG	SMETCLPTCL	MERCURY	0.20	UG/L		U	0 20								
SW118	SW	REAL	SW01073WC	10-APR-91	N	TRG	SMETCLPTCL	NICKEL	14 7	UG/L		U	14 7								
SW118	SW	REAL	SW01073WC	10-APR-91	N	TRG	SMETCLPTCL	POTASSIUM	2250	UG/L			2050								
SW118	SW	REAL	SW01073WC	10-APR-91	N	TRG	SMETCLPTCL	SELENIUM	1.1	UG/L		U	1 1								
SW118	SW	REAL	SW01073WC	10-APR-91	N	TRG	SMETCLPTCL	SILVER	5 0	UG/L		U	5 0								
SW118	SW	REAL	SW01073WC	10-APR-91	N	TRG	SMETCLPTCL	SODIUM	41000	UG/L			43 5								
SW118	SW	REAL	SW01073WC	10-APR-91	N	TRG	SMETCLPTCL	THALLIUM	1.4	UG/L		U	1 4								
SW118	SW	REAL	SW01073WC	10-APR-91	N	TRG	SMETCLPTCL	VANADIUM	5.7	UG/L		U	5 7								
SW118	SW	REAL	SW01073WC	10-APR-91	N	TRG	SMETCLPTCL	ZINC	4 3	UG/L			1 8								
SW118	SW	REAL	SW01073WC	10-APR-91	N	TRG	SMETNOCLP	CESIUM	500	UG/L		U	500								
SW118	SW	REAL	SW01073WC	10-APR-91	N	TRG	SMETNOCLP	LITHIUM	14 9	UG/L			2 0								
SW118	SW	REAL	SW01073WC	10-APR-91	N	TRG	SMETNOCLP	MOLYBDENUM	5.7	UG/L		U	5 7								
SW118	SW	REAL	SW01073WC	10-APR-91	N	TRG	SMETNOCLP	SILICON	4720	UG/L			25 7								
SW118	SW	REAL	SW01073WC	10-APR-91	N	TRG	SMETNOCLP	STRONTIUM	413	UG/L			3 5								
SW118	SW	REAL	SW01073WC	10-APR-91	N	TRG	SMETNOCLP	TIN	26.4	UG/L			14.8								
SW118	SW	REAL	SW01180WC	09-MAY-91	N	TRG	DMETCLPTAL	ALUMINUM	108	UG/L		U	108								
SW118	SW	REAL	SW01180WC	09-MAY-91	N	TRG	DMETCLPTAL	ANTIMONY	25 6	UG/L		U	25.6								
SW118	SW	REAL	SW01180WC	09-MAY-91	N	TRG	DMETCLPTAL	ARSENIC	0.90	UG/L		U	0.90								
SW118	SW	REAL	SW01180WC	09-MAY-91	N	TRG	DMETCLPTAL	BARIUM	99.0	UG/L			1.3								
SW118	SW	REAL	SW01180WC	09-MAY-91	N	TRG	DMETCLPTAL	BERYLLIUM	0.50	UG/L		U	0 50								
SW118	SW	REAL	SW01180WC	09-MAY-91	N	TRG	DMETCLPTAL	CADMIUM	3 3	UG/L		U	3 3								
SW118	SW	REAL	SW01180WC	09-MAY-91	N	TRG	DMETCLPTAL	CALCIUM	46900	UG/L			14.5								

Location	ST	QC	Sample Number	Smpl Date	D	ID	Group	Chemical	Result	Unit	Error	Qual	D	LMT	VA	RN1	RN2	RN3	RN4	VResult	VQual	VDET
SW118	SW	REAL	SW01180WC	09-MAY-91	N	TRG	DMETCLPTAL	CHROMIUM	4 1	UG/L		U		4 1								
SW118	SW	REAL	SW01180WC	09-MAY-91	N	TRG	DMETCLPTAL	COBALT	3 6	UG/L		U		3 6								
SW118	SW	REAL	SW01180WC	09-MAY-91	N	TRG	DMETCLPTAL	COPPER	4.7	UG/L		U		4 7								
SW118	SW	REAL	SW01180WC	09-MAY-91	N	TRG	DMETCLPTAL	IRON	74 0	UG/L				6 3								
SW118	SW	REAL	SW01180WC	09-MAY-91	N	TRG	DMETCLPTAL	LEAD	1 4	UG/L		U		1 4								
SW118	SW	REAL	SW01180WC	09-MAY-91	N	TRG	DMETCLPTAL	MAGNESIUM	12000	UG/L				36 6								
SW118	SW	REAL	SW01180WC	09-MAY-91	N	TRG	DMETCLPTAL	MANGANESE	6 4	UG/L				1.0								
SW118	SW	REAL	SW01180WC	09-MAY-91	N	TRG	DMETCLPTAL	MERCURY	0 20	UG/L		U		0 20								
SW118	SW	REAL	SW01180WC	09-MAY-91	N	TRG	DMETCLPTAL	NICKEL	14 7	UG/L		U		14 7								
SW118	SW	REAL	SW01180WC	09-MAY-91	N	TRG	DMETCLPTAL	POTASSIUM	2050	UG/L		U		2050								
SW118	SW	REAL	SW01180WC	09-MAY-91	N	TRG	DMETCLPTAL	SELENIUM	1.1	UG/L				1 1								
SW118	SW	REAL	SW01180WC	09-MAY-91	N	TRG	DMETCLPTAL	SILVER	5 0	UG/L		U		5 0								
SW118	SW	REAL	SW01180WC	09-MAY-91	N	TRG	DMETCLPTAL	SODIUM	33000	UG/L				43 5								
SW118	SW	REAL	SW01180WC	09-MAY-91	N	TRG	DMETCLPTAL	THALLIUM	1.4	UG/L		U		1 4								
SW118	SW	REAL	SW01180WC	09-MAY-91	N	TRG	DMETCLPTAL	VANADIUM	5.7	UG/L		U		5 7								
SW118	SW	REAL	SW01180WC	09-MAY-91	N	TRG	DMETCLPTAL	ZINC	258	UG/L				1 8								
SW118	SW	REAL	SW01180WC	09-MAY-91	N	TRG	DMETNOCLP	CESIUM	500	UG/L		U		500								
SW118	SW	REAL	SW01180WC	09-MAY-91	N	TRG	DMETNOCLP	LITHIUM	7.4	UG/L				4 3								
SW118	SW	REAL	SW01180WC	09-MAY-91	N	TRG	DMETNOCLP	MOLYBDENUM	5.7	UG/L		U		5 7								
SW118	SW	REAL	SW01180WC	09-MAY-91	N	TRG	DMETNOCLP	SILICON	2590	UG/L				25 7								
SW118	SW	REAL	SW01180WC	09-MAY-91	N	TRG	DMETNOCLP	STRONTIUM	289	UG/L				3 5								
SW118	SW	REAL	SW01180WC	09-MAY-91	N	TRG	DMETNOCLP	TIN	14.8	UG/L		U		14.8								
SW118	SW	REAL	SW01180WC	09-MAY-91	N	TRG	SMETCLPTCL	ALUMINUM	108	UG/L		U		108								
SW118	SW	REAL	SW01180WC	09-MAY-91	N	TRG	SMETCLPTCL	ANTIMONY	25 6	UG/L		U		25 6								
SW118	SW	REAL	SW01180WC	09-MAY-91	N	TRG	SMETCLPTCL	ARSENIC	0.90	UG/L		U		0 90								
SW118	SW	REAL	SW01180WC	09-MAY-91	N	TRG	SMETCLPTCL	BARIUM	100	UG/L				1 3								
SW118	SW	REAL	SW01180WC	09-MAY-91	N	TRG	SMETCLPTCL	BERYLLIUM	0.50	UG/L		U		0 50								
SW118	SW	REAL	SW01180WC	09-MAY-91	N	TRG	SMETCLPTCL	CADMIUM	3.3	UG/L		U		3 3								
SW118	SW	REAL	SW01180WC	09-MAY-91	N	TRG	SMETCLPTCL	CALCIUM	46500	UG/L				14 5								
SW118	SW	REAL	SW01180WC	09-MAY-91	N	TRG	SMETCLPTCL	CHROMIUM	4.1	UG/L		U		4 1								
SW118	SW	REAL	SW01180WC	09-MAY-91	N	TRG	SMETCLPTCL	COBALT	3.6	UG/L		U		3 6								
SW118	SW	REAL	SW01180WC	09-MAY-91	N	TRG	SMETCLPTCL	COPPER	4.7	UG/L		U		4 7								
SW118	SW	REAL	SW01180WC	09-MAY-91	N	TRG	SMETCLPTCL	IRON	149	UG/L				6 3								
SW118	SW	REAL	SW01180WC	09-MAY-91	N	TRG	SMETCLPTCL	LEAD	1.0	UG/L		U		1 0								
SW118	SW	REAL	SW01180WC	09-MAY-91	N	TRG	SMETCLPTCL	MAGNESIUM	12000	UG/L				36 6								
SW118	SW	REAL	SW01180WC	09-MAY-91	N	TRG	SMETCLPTCL	MANGANESE	7.5	UG/L				1 0								
SW118	SW	REAL	SW01180WC	09-MAY-91	N	TRG	SMETCLPTCL	MERCURY	0.20	UG/L		U		0 20								
SW118	SW	REAL	SW01180WC	09-MAY-91	N	TRG	SMETCLPTCL	NICKEL	14.7	UG/L		U		14 7								
SW118	SW	REAL	SW01180WC	09-MAY-91	N	TRG	SMETCLPTCL	POTASSIUM	2050	UG/L		U		2050								
SW118	SW	REAL	SW01180WC	09-MAY-91	N	TRG	SMETCLPTCL	SELENIUM	1.1	UG/L		U		1 1								
SW118	SW	REAL	SW01180WC	09-MAY-91	N	TRG	SMETCLPTCL	SILVER	5 0	UG/L		U		5 0								
SW118	SW	REAL	SW01180WC	09-MAY-91	N	TRG	SMETCLPTCL	SODIUM	32900	UG/L				43 5								
SW118	SW	REAL	SW01180WC	09-MAY-91	N	TRG	SMETCLPTCL	THALLIUM	1.4	UG/L		U		1 4								
SW118	SW	REAL	SW01180WC	09-MAY-91	N	TRG	SMETCLPTCL	VANADIUM	5 7	UG/L		U		5 7								
SW118	SW	REAL	SW01180WC	09-MAY-91	N	TRG	SMETCLPTCL	ZINC	63 0	UG/L				1 8								
SW118	SW	REAL	SW01180WC	09-MAY-91	N	TRG	SMETNOCLP	CESIUM	500	UG/L		U		500								
SW118	SW	REAL	SW01180WC	09-MAY-91	N	TRG	SMETNOCLP	LITHIUM	8.2	UG/L				4 3								
SW118	SW	REAL	SW01180WC	09-MAY-91	N	TRG	SMETNOCLP	MOLYBDENUM	5.7	UG/L		U		5 7								
SW118	SW	REAL	SW01180WC	09-MAY-91	N	TRG	SMETNOCLP	SILICON	2500	UG/L				25 7								
SW118	SW	REAL	SW01180WC	09-MAY-91	N	TRG	SMETNOCLP	STRONTIUM	320	UG/L				3 5								
SW118	SW	REAL	SW01180WC	09-MAY-91	N	TRG	SMETNOCLP	TIN	14.8	UG/L		U		14 8								
SW118	SW	REAL	SW01283WC	26-JUN-91	N	TRG	DMETCLP	SILICON	5030	UG/L				10 5								
SW118	SW	REAL	SW01283WC	26-JUN-91	N	TRG	METCLP	SILICON	5960	UG/L				10 5								
SW118	SW	REAL	SW01386WC	24-JUL-91	N																	
SW118	SW	REAL	SW01492WC	07-AUG-91	N	TRG	DMETCLP	SILICON	6140	UG/L				10.5								
SW118	SW	REAL	SW01492WC	07-AUG-91	N	TRG	DMETCLPTAL	ALUMINUM	23	UG/L				200								
SW118	SW	REAL	SW01492WC	07-AUG-91	N	TRG	DMETCLPTAL	ANTIMONY	11	UG/L		U		60								
SW118	SW	REAL	SW01492WC	07-AUG-91	N	TRG	DMETCLPTAL	ARSENIC	2.0	UG/L		U		10								
SW118	SW	REAL	SW01492WC	07-AUG-91	N	TRG	DMETCLPTAL	BARIUM	86	UG/L				200								
SW118	SW	REAL	SW01492WC	07-AUG-91	N	TRG	DMETCLPTAL	BERYLLIUM	1.0	UG/L		U		5								
SW118	SW	REAL	SW01492WC	07-AUG-91	N	TRG	DMETCLPTAL	BERYLLIUM	2.0	UG/L		U		5								
SW118	SW	REAL	SW01492WC	07-AUG-91	N	TRG	DMETCLPTAL	CALCIUM	46000	UG/L				5000								
SW118	SW	REAL	SW01492WC	07-AUG-91	N	TRG	DMETCLPTAL	CESIUM	50	UG/L				1000								

Location	ST	QC	Sample Number	Smpl Date	D	ID	Group	Chemical	Result	Unit	Error	Qual	D	LMT	VA	RN1	RN2	RN3	RN4	VResult	VQual	VDET
SW118	SW	REAL	SW01492WC	07-AUG-91	N	TRG	DMETCLPTAL	CHROMIUM	2 0	UG/L		U		10								
SW118	SW	REAL	SW01492WC	07-AUG-91	N	TRG	DMETCLPTAL	COBALT	2 0	UG/L		U		50								
SW118	SW	REAL	SW01492WC	07-AUG-91	N	TRG	DMETCLPTAL	COPPER	3 0	UG/L		U		25								
SW118	SW	REAL	SW01492WC	07-AUG-91	N	TRG	DMETCLPTAL	IRON	97	UG/L				100								
SW118	SW	REAL	SW01492WC	07-AUG-91	N	TRG	DMETCLPTAL	LEAD	1 0	UG/L		U		3								
SW118	SW	REAL	SW01492WC	07-AUG-91	N	TRG	DMETCLPTAL	LITHIUM	8 5	UG/L				100								
SW118	SW	REAL	SW01492WC	07-AUG-91	N	TRG	DMETCLPTAL	MAGNESIUM	11000	UG/L				5000								
SW118	SW	REAL	SW01492WC	07-AUG-91	N	TRG	DMETCLPTAL	MANGANESE	14	UG/L				15								
SW118	SW	REAL	SW01492WC	07-AUG-91	N	TRG	DMETCLPTAL	MERCURY	0.20	UG/L		U		0 2								
SW118	SW	REAL	SW01492WC	07-AUG-91	N	TRG	DMETCLPTAL	MOLYBDENUM	3 0	UG/L		U		50								
SW118	SW	REAL	SW01492WC	07-AUG-91	N	TRG	DMETCLPTAL	NICKEL	4.0	UG/L		U		40								
SW118	SW	REAL	SW01492WC	07-AUG-91	N	TRG	DMETCLPTAL	POTASSIUM	2800	UG/L				5000								
SW118	SW	REAL	SW01492WC	07-AUG-91	N	TRG	DMETCLPTAL	SELENIUM	4 0	UG/L		UI		5								
SW118	SW	REAL	SW01492WC	07-AUG-91	N	TRG	DMETCLPTAL	SILVER	2 0	UG/L		U		10								
SW118	SW	REAL	SW01492WC	07-AUG-91	N	TRG	DMETCLPTAL	SODIUM	30000	UG/L				5000								
SW118	SW	REAL	SW01492WC	07-AUG-91	N	TRG	DMETCLPTAL	STRONTIUM	290	UG/L				200								
SW118	SW	REAL	SW01492WC	07-AUG-91	N	TRG	DMETCLPTAL	THALLIUM	15	UG/L		UI		10								
SW118	SW	REAL	SW01492WC	07-AUG-91	N	TRG	DMETCLPTAL	TIN	13	UG/L		U		200								
SW118	SW	REAL	SW01492WC	07-AUG-91	N	TRG	DMETCLPTAL	VANADIUM	3 0	UG/L		U		50								
SW118	SW	REAL	SW01492WC	07-AUG-91	N	TRG	DMETCLPTAL	ZINC	3 3	UG/L				20								
SW118	SW	REAL	SW01492WC	07-AUG-91	N	TRG	DMETNOCLP	SILICON	6140	UG/L				10 5								
SW118	SW	REAL	SW01492WC	07-AUG-91	N	TRG	METCLP	SILICON	6000	UG/L				10 5								
SW118	SW	REAL	SW01492WC	07-AUG-91	N	TRG	SMETNOCLP	SILICON	6000	UG/L				10 5								
SW118	SW	REAL	SW01598WC	25-SEP-91	Y																	
SW118	SW	REAL	SW01704WC	23-OCT-91	Y																	
SW118	SW	REAL	SW60066WCA	15-MAR-91	N																	
SW118	SW	REAL	SW60067WCB	02-APR-91	N																	
SW118	SW	REAL	SW60073WC	15-APR-91	N																	
SW118	SW	REAL	SW60077WC	01-MAY-91	N																	
SW118	SW	REAL	SW60080WC	01-MAY-91	N																	
SW118	SW	REAL	SW60084WC	06-MAY-91	N																	
SW118	SW	REAL	SW60085WC	06-MAY-91	N																	
SW118	SW	REAL	SW60094WC	17-MAY-91	N	TRG	SMETCLPTCL	ALUMINUM	65000	UG/L				200								
SW118	SW	REAL	SW60094WC	17-MAY-91	N	TRG	SMETCLPTCL	ANTIMONY	17	UG/L		U		60								
SW118	SW	REAL	SW60094WC	17-MAY-91	N	TRG	SMETCLPTCL	ARSENIC	4.4	UG/L		I		10								
SW118	SW	REAL	SW60094WC	17-MAY-91	N	TRG	SMETCLPTCL	BARIUM	530	UG/L				200								
SW118	SW	REAL	SW60094WC	17-MAY-91	N	TRG	SMETCLPTCL	BERYLLIUM	3.0	UG/L		U		5								
SW118	SW	REAL	SW60094WC	17-MAY-91	N	TRG	SMETCLPTCL	BERYLLIUM	3 1	UG/L				5								
SW118	SW	REAL	SW60094WC	17-MAY-91	N	TRG	SMETCLPTCL	CALCIUM	39000	UG/L				5000								
SW118	SW	REAL	SW60094WC	17-MAY-91	N	TRG	SMETCLPTCL	CESIUM	60	UG/L				1000								
SW118	SW	REAL	SW60094WC	17-MAY-91	N	TRG	SMETCLPTCL	CHROMIUM	59	UG/L				10								
SW118	SW	REAL	SW60094WC	17-MAY-91	N	TRG	SMETCLPTCL	COBALT	25	UG/L				50								
SW118	SW	REAL	SW60094WC	17-MAY-91	N	TRG	SMETCLPTCL	COPPER	60	UG/L				25								
SW118	SW	REAL	SW60094WC	17-MAY-91	N	TRG	SMETCLPTCL	IRON	62000	UG/L				100								
SW118	SW	REAL	SW60094WC	17-MAY-91	N	TRG	SMETCLPTCL	LEAD	40	UG/L				3								
SW118	SW	REAL	SW60094WC	17-MAY-91	N	TRG	SMETCLPTCL	LITHIUM	35	UG/L				100								
SW118	SW	REAL	SW60094WC	17-MAY-91	N	TRG	SMETCLPTCL	MAGNESIUM	19000	UG/L				5000								
SW118	SW	REAL	SW60094WC	17-MAY-91	N	TRG	SMETCLPTCL	MANGANESE	860	UG/L				15								
SW118	SW	REAL	SW60094WC	17-MAY-91	N	TRG	SMETCLPTCL	MERCURY	0.20	UG/L		U		0 2								
SW118	SW	REAL	SW60094WC	17-MAY-91	N	TRG	SMETCLPTCL	MOLYBDENUM	26	UG/L		U		50								
SW118	SW	REAL	SW60094WC	17-MAY-91	N	TRG	SMETCLPTCL	NICKEL	54	UG/L				40								
SW118	SW	REAL	SW60094WC	17-MAY-91	N	TRG	SMETCLPTCL	POTASSIUM	10000	UG/L				5000								
SW118	SW	REAL	SW60094WC	17-MAY-91	N	TRG	SMETCLPTCL	SELENIUM	15	UG/L		UI		5								
SW118	SW	REAL	SW60094WC	17-MAY-91	N	TRG	SMETCLPTCL	SILVER	5 0	UG/L		U		10								
SW118	SW	REAL	SW60094WC	17-MAY-91	N	TRG	SMETCLPTCL	SODIUM	17000	UG/L				5000								
SW118	SW	REAL	SW60094WC	17-MAY-91	N	TRG	SMETCLPTCL	STRONTIUM	290	UG/L				200								
SW118	SW	REAL	SW60094WC	17-MAY-91	N	TRG	SMETCLPTCL	THALLIUM	3.0	UG/L		UI		10								
SW118	SW	REAL	SW60094WC	17-MAY-91	N	TRG	SMETCLPTCL	TIN	16	UG/L		U		200								
SW118	SW	REAL	SW60094WC	17-MAY-91	N	TRG	SMETCLPTCL	VANADIUM	150	UG/L				50								
SW118	SW	REAL	SW60094WC	17-MAY-91	N	TRG	SMETCLPTCL	ZINC	380	UG/L				20								
SW118	SW	REAL	SW60095WC	17-MAY-91	N																	
SW118	SW	REAL	SW60099WC	23-MAY-91	N	TRG	SMETCLPTCL	ALUMINUM	27000	UG/L				200								
SW118	SW	REAL	SW60099WC	23-MAY-91	N	TRG	SMETCLPTCL	ANTIMONY	17	UG/L		U		60								

Location	ST	QC	Sample Number	Smpl Date	D	ID	Group	Chemical	Result	Unit	Error	Qual	D LMT	VA	RN1	RN2	RN3	RN4	VResult	VQual	VDET
SW118	SW	REAL	SW60099WC	23-MAY-91	N	TRG	SMETCLPTCL	ARSENIC	5 8	UG/L		I	10								
SW118	SW	REAL	SW60099WC	23-MAY-91	N	TRG	SMETCLPTCL	BARIUM	260	UG/L			200								
SW118	SW	REAL	SW60099WC	23-MAY-91	N	TRG	SMETCLPTCL	BERYLLIUM	1.6	UG/L			5								
SW118	SW	REAL	SW60099WC	23-MAY-91	N	TRG	SMETCLPTCL	BERYLLIUM	3 0	UG/L		U	5								
SW118	SW	REAL	SW60099WC	23-MAY-91	N	TRG	SMETCLPTCL	CALCIUM	25000	UG/L			5000								
SW118	SW	REAL	SW60099WC	23-MAY-91	N	TRG	SMETCLPTCL	CESIUM	50	UG/L		U	1000								
SW118	SW	REAL	SW60099WC	23-MAY-91	N	TRG	SMETCLPTCL	CHROMIUM	26	UG/L			10								
SW118	SW	REAL	SW60099WC	23-MAY-91	N	TRG	SMETCLPTCL	COBALT	11	UG/L			50								
SW118	SW	REAL	SW60099WC	23-MAY-91	N	TRG	SMETCLPTCL	COPPER	42	UG/L			25								
SW118	SW	REAL	SW60099WC	23-MAY-91	N	TRG	SMETCLPTCL	IRON	28000	UG/L			100								
SW118	SW	REAL	SW60099WC	23-MAY-91	N	TRG	SMETCLPTCL	LEAD	26	UG/L			3								
SW118	SW	REAL	SW60099WC	23-MAY-91	N	TRG	SMETCLPTCL	LITHIUM	18	UG/L			100								
SW118	SW	REAL	SW60099WC	23-MAY-91	N	TRG	SMETCLPTCL	MAGNESIUM	12000	UG/L			5000								
SW118	SW	REAL	SW60099WC	23-MAY-91	N	TRG	SMETCLPTCL	MANGANESE	530	UG/L			15								
SW118	SW	REAL	SW60099WC	23-MAY-91	N	TRG	SMETCLPTCL	MERCURY	0 20	UG/L		U	0.2								
SW118	SW	REAL	SW60099WC	23-MAY-91	N	TRG	SMETCLPTCL	MOLYBDENUM	26	UG/L		U	50								
SW118	SW	REAL	SW60099WC	23-MAY-91	N	TRG	SMETCLPTCL	NICKEL	28	UG/L			40								
SW118	SW	REAL	SW60099WC	23-MAY-91	N	TRG	SMETCLPTCL	POTASSIUM	6100	UG/L			5000								
SW118	SW	REAL	SW60099WC	23-MAY-91	N	TRG	SMETCLPTCL	SELENIUM	4 0	UG/L		UI	5								
SW118	SW	REAL	SW60099WC	23-MAY-91	N	TRG	SMETCLPTCL	SILVER	5 0	UG/L		U	10								
SW118	SW	REAL	SW60099WC	23-MAY-91	N	TRG	SMETCLPTCL	SODIUM	16000	UG/L			5000								
SW118	SW	REAL	SW60099WC	23-MAY-91	N	TRG	SMETCLPTCL	STRONTIUM	190	UG/L			200								
SW118	SW	REAL	SW60099WC	23-MAY-91	N	TRG	SMETCLPTCL	THALLIUM	3.0	UG/L		UI	10								
SW118	SW	REAL	SW60099WC	23-MAY-91	N	TRG	SMETCLPTCL	TIN	16	UG/L		U	200								
SW118	SW	REAL	SW60099WC	23-MAY-91	N	TRG	SMETCLPTCL	VANADIUM	64	UG/L			50								
SW118	SW	REAL	SW60099WC	23-MAY-91	N	TRG	SMETCLPTCL	ZINC	180	UG/L			20								
SW118	SW	REAL	SW60106WC	03-JUN-91	N	TRG	SMETCLPTCL	ALUMINUM	120000.00	UG/L			200 0								
SW118	SW	REAL	SW60106WC	03-JUN-91	N	TRG	SMETCLPTCL	ANTIMONY	92 60	UG/L			60 00								
SW118	SW	REAL	SW60106WC	03-JUN-91	N	TRG	SMETCLPTCL	ARSENIC	5 00	UG/L		B	10 00								
SW118	SW	REAL	SW60106WC	03-JUN-91	N	TRG	SMETCLPTCL	BARIUM	1980 00	UG/L		E	200.0								
SW118	SW	REAL	SW60106WC	03-JUN-91	N	TRG	SMETCLPTCL	BERYLLIUM	10 80	UG/L			5.000								
SW118	SW	REAL	SW60106WC	03-JUN-91	N	TRG	SMETCLPTCL	CADMIUM	9.80	UG/L			5 000								
SW118	SW	REAL	SW60106WC	03-JUN-91	N	TRG	SMETCLPTCL	CALCIUM	101000 00	UG/L			5000								
SW118	SW	REAL	SW60106WC	03-JUN-91	N	TRG	SMETCLPTCL	CHROMIUM	130.00	UG/L			10 00								
SW118	SW	REAL	SW60106WC	03-JUN-91	N	TRG	SMETCLPTCL	COBALT	87.10	UG/L			50 00								
SW118	SW	REAL	SW60106WC	03-JUN-91	N	TRG	SMETCLPTCL	COPPER	192 00	UG/L			25 00								
SW118	SW	REAL	SW60106WC	03-JUN-91	N	TRG	SMETCLPTCL	IRON	156000 00	UG/L			100.0								
SW118	SW	REAL	SW60106WC	03-JUN-91	N	TRG	SMETCLPTCL	LEAD	103.00	UG/L			3 000								
SW118	SW	REAL	SW60106WC	03-JUN-91	N	TRG	SMETCLPTCL	MAGNESIUM	50000 00	UG/L			5000								
SW118	SW	REAL	SW60106WC	03-JUN-91	N	TRG	SMETCLPTCL	MANGANESE	3640.00	UG/L			15 00								
SW118	SW	REAL	SW60106WC	03-JUN-91	N	TRG	SMETCLPTCL	MERCURY	0.20	UG/L		U	0 200								
SW118	SW	REAL	SW60106WC	03-JUN-91	N	TRG	SMETCLPTCL	NICKEL	183 00	UG/L			40.00								
SW118	SW	REAL	SW60106WC	03-JUN-91	N	TRG	SMETCLPTCL	POTASSIUM	17200 00	UG/L		E	5000								
SW118	SW	REAL	SW60106WC	03-JUN-91	N	TRG	SMETCLPTCL	SELENIUM	2 00	UG/L		UN	5 000								
SW118	SW	REAL	SW60106WC	03-JUN-91	N	TRG	SMETCLPTCL	SILVER	2.00	UG/L		U	10.00								
SW118	SW	REAL	SW60106WC	03-JUN-91	N	TRG	SMETCLPTCL	SODIUM	23500 00	UG/L			5000								
SW118	SW	REAL	SW60106WC	03-JUN-91	N	TRG	SMETCLPTCL	THALLIUM	1 00	UG/L		UW	10.00								
SW118	SW	REAL	SW60106WC	03-JUN-91	N	TRG	SMETCLPTCL	VANADIUM	305.00	UG/L			50.00								
SW118	SW	REAL	SW60106WC	03-JUN-91	N	TRG	SMETCLPTCL	ZINC	1260.00	UG/L			20.00								
SW118	SW	REAL	SW60106WC	03-JUN-91	N	TRG	SMETNOCLP	CESIUM	1.00	UG/L		UN	1000								
SW118	SW	REAL	SW60106WC	03-JUN-91	N	TRG	SMETNOCLP	LITHIUM	84.50	UG/L		B	100.0								
SW118	SW	REAL	SW60106WC	03-JUN-91	N	TRG	SMETNOCLP	MOLYBDENUM	15.80	UG/L		B	200 0								
SW118	SW	REAL	SW60106WC	03-JUN-91	N	TRG	SMETNOCLP	STRONTIUM	739.00	UG/L			200 0								
SW118	SW	REAL	SW60106WC	03-JUN-91	N	TRG	SMETNOCLP	TIN	94.60	UG/L		B	200.0								
SW118	SW	REAL	SW60107WC	03-JUN-91	N																
SW118	SW	REAL	SW60111WC	11-JUN-91	N	TRG	SMETCLPTCL	ALUMINUM	68800.00	UG/L		*	200 0								
SW118	SW	REAL	SW60111WC	11-JUN-91	N	TRG	SMETCLPTCL	ANTIMONY	55.40	UG/L		BN	60.00								
SW118	SW	REAL	SW60111WC	11-JUN-91	N	TRG	SMETCLPTCL	ARSENIC	3.00	UG/L		BN	10 00								
SW118	SW	REAL	SW60111WC	11-JUN-91	N	TRG	SMETCLPTCL	BARIUM	801.00	UG/L			200.0								
SW118	SW	REAL	SW60111WC	11-JUN-91	N	TRG	SMETCLPTCL	BERYLLIUM	4.80	UG/L		B	5.000								
SW118	SW	REAL	SW60111WC	11-JUN-91	N	TRG	SMETCLPTCL	CADMIUM	4 90	UG/L		B	5 000								
SW118	SW	REAL	SW60111WC	11-JUN-91	N	TRG	SMETCLPTCL	CALCIUM	50600.00	UG/L			5000.								
SW118	SW	REAL	SW60111WC	11-JUN-91	N	TRG	SMETCLPTCL	CHROMIUM	71.80	UG/L		*	10.00								

Location	ST	QC	Sample Number	Smpl Date	D	ID	Group	Chemical	Result	Unit	Error	Qual	D LMT	VA	RN1	RN2	RN3	RN4	VResult	VQual	VDET
SW118	SW	REAL	SW60111WC	11-JUN-91	N	TRG	SMETCLPTCL	COBALT	31 30	UG/L		B	50 00								
SW118	SW	REAL	SW60111WC	11-JUN-91	N	TRG	SMETCLPTCL	COPPER	74 60	UG/L			25 00								
SW118	SW	REAL	SW60111WC	11-JUN-91	N	TRG	SMETCLPTCL	IRON	71700 00	UG/L		*	100 0								
SW118	SW	REAL	SW60111WC	11-JUN-91	N	TRG	SMETCLPTCL	LEAD	54 60	UG/L		S	3 000								
SW118	SW	REAL	SW60111WC	11-JUN-91	N	TRG	SMETCLPTCL	MAGNESIUM	25100 00	UG/L			5000.								
SW118	SW	REAL	SW60111WC	11-JUN-91	N	TRG	SMETCLPTCL	MANGANESE	1360 00	UG/L			15.00								
SW118	SW	REAL	SW60111WC	11-JUN-91	N	TRG	SMETCLPTCL	MERCURY	0.20	UG/L		UN	0 200								
SW118	SW	REAL	SW60111WC	11-JUN-91	N	TRG	SMETCLPTCL	NICKEL	73 30	UG/L			40 00								
SW118	SW	REAL	SW60111WC	11-JUN-91	N	TRG	SMETCLPTCL	POTASSIUM	10800 00	UG/L			5000								
SW118	SW	REAL	SW60111WC	11-JUN-91	N	TRG	SMETCLPTCL	SELENIUM	2 00	UG/L		U	5 000								
SW118	SW	REAL	SW60111WC	11-JUN-91	N	TRG	SMETCLPTCL	SILVER	2 00	UG/L		U	10.00								
SW118	SW	REAL	SW60111WC	11-JUN-91	N	TRG	SMETCLPTCL	SODIUM	51100 00	UG/L			5000								
SW118	SW	REAL	SW60111WC	11-JUN-91	N	TRG	SMETCLPTCL	THALLIUM	1 00	UG/L		UW	10.00								
SW118	SW	REAL	SW60111WC	11-JUN-91	N	TRG	SMETCLPTCL	VANADIUM	162 00	UG/L			50 00								
SW118	SW	REAL	SW60111WC	11-JUN-91	N	TRG	SMETCLPTCL	ZINC	546.00	UG/L		E	20 00								
SW118	SW	REAL	SW60111WC	11-JUN-91	N	TRG	SMETNOCLP	CESIUM	112 00	UG/L		U	1000								
SW118	SW	REAL	SW60111WC	11-JUN-91	N	TRG	SMETNOCLP	LITHIUM	41.40	UG/L		B	100.0								
SW118	SW	REAL	SW60111WC	11-JUN-91	N	TRG	SMETNOCLP	MOLYBDENUM	10.50	UG/L		B	200.0								
SW118	SW	REAL	SW60111WC	11-JUN-91	N	TRG	SMETNOCLP	STRONTIUM	397.00	UG/L			200 0								
SW118	SW	REAL	SW60111WC	11-JUN-91	N	TRG	SMETNOCLP	TIN	55.40	UG/L		B	200 0								
SW118	SW	REAL	SW60115WC	25-JUN-91	N																
SW118	SW	REAL	SW60122WC	10-JUL-91	N																
SW118	SW	REAL	SW60128WC	24-JUL-91	N																
SW118	SW	REAL	SW60138WC	05-AUG-91	N																
SW118	SW	REAL	SW60147WC	12-AUG-91	N																
SW118	SW		SW60067WC	08-APR-91	N																
SW129	SW	REAL	SW00728WC	08-JAN-91	N																
SW129	SW	REAL	SW00831WC	20-FEB-91	N																
SW129	SW	REAL	SW00934WC	28-MAR-91	N	TRG	DMETCLPTAL	ALUMINUM	70 6	UG/L			17 7								
SW129	SW	REAL	SW00934WC	28-MAR-91	N	TRG	DMETCLPTAL	ANTIMONY	18 2	UG/L		U	18 2								
SW129	SW	REAL	SW00934WC	28-MAR-91	N	TRG	DMETCLPTAL	ARSENIC	0 90	UG/L		U	0.90								
SW129	SW	REAL	SW00934WC	28-MAR-91	N	TRG	DMETCLPTAL	BARIUM	132	UG/L			4 4								
SW129	SW	REAL	SW00934WC	28-MAR-91	N	TRG	DMETCLPTAL	BERYLLIUM	0 60	UG/L		U	0.60								
SW129	SW	REAL	SW00934WC	28-MAR-91	N	TRG	DMETCLPTAL	CADMIUM	4.8	UG/L			2 7								
SW129	SW	REAL	SW00934WC	28-MAR-91	N	TRG	DMETCLPTAL	CALCIUM	74700	UG/L			14 3								
SW129	SW	REAL	SW00934WC	28-MAR-91	N	TRG	DMETCLPTAL	CHROMIUM	6 9	UG/L		U	6.9								
SW129	SW	REAL	SW00934WC	28-MAR-91	N	TRG	DMETCLPTAL	COBALT	3 0	UG/L		U	3 0								
SW129	SW	REAL	SW00934WC	28-MAR-91	N	TRG	DMETCLPTAL	COPPER	14.1	UG/L			2.5								
SW129	SW	REAL	SW00934WC	28-MAR-91	N	TRG	DMETCLPTAL	IRON	90.5	UG/L			4.3								
SW129	SW	REAL	SW00934WC	28-MAR-91	N	TRG	DMETCLPTAL	LEAD	3.2	UG/L			1 0								
SW129	SW	REAL	SW00934WC	28-MAR-91	N	TRG	DMETCLPTAL	MAGNESIUM	20400	UG/L			35 9								
SW129	SW	REAL	SW00934WC	28-MAR-91	N	TRG	DMETCLPTAL	MANGANESE	28.3	UG/L			1.0								
SW129	SW	REAL	SW00934WC	28-MAR-91	N	TRG	DMETCLPTAL	MERCURY	0.20	UG/L		U	0.20								
SW129	SW	REAL	SW00934WC	28-MAR-91	N	TRG	DMETCLPTAL	NICKEL	3 9	UG/L		U	3 9								
SW129	SW	REAL	SW00934WC	28-MAR-91	N	TRG	DMETCLPTAL	POTASSIUM	2040	UG/L			94 8								
SW129	SW	REAL	SW00934WC	28-MAR-91	N	TRG	DMETCLPTAL	SELENIUM	1.1	UG/L		U	1 1								
SW129	SW	REAL	SW00934WC	28-MAR-91	N	TRG	DMETCLPTAL	SILVER	3.8	UG/L		U	3 8								
SW129	SW	REAL	SW00934WC	28-MAR-91	N	TRG	DMETCLPTAL	SODIUM	16400	UG/L			21.4								
SW129	SW	REAL	SW00934WC	28-MAR-91	N	TRG	DMETCLPTAL	THALLIUM	1.4	UG/L		U	1 4								
SW129	SW	REAL	SW00934WC	28-MAR-91	N	TRG	DMETCLPTAL	VANADIUM	2 0	UG/L		U	2 0								
SW129	SW	REAL	SW00934WC	28-MAR-91	N	TRG	DMETCLPTAL	ZINC	8.5	UG/L			4 7								
SW129	SW	REAL	SW00934WC	28-MAR-91	N	TRG	DMETNOCLP	CESIUM	500	UG/L		U	500								
SW129	SW	REAL	SW00934WC	28-MAR-91	N	TRG	DMETNOCLP	LITHIUM	6.6	UG/L			2.0								
SW129	SW	REAL	SW00934WC	28-MAR-91	N	TRG	DMETNOCLP	MOLYBDENUM	10.9	UG/L		U	10 9								
SW129	SW	REAL	SW00934WC	28-MAR-91	N	TRG	DMETNOCLP	SILICON	2980	UG/L			14.2								
SW129	SW	REAL	SW00934WC	28-MAR-91	N	TRG	DMETNOCLP	STRONTIUM	446	UG/L			7.3								
SW129	SW	REAL	SW00934WC	28-MAR-91	N	TRG	DMETNOCLP	TIN	24.2	UG/L		U	24 2								
SW129	SW	REAL	SW00934WC	28-MAR-91	N	TRG	SMETCLPTCL	ALUMINUM	285	UG/L			17.7								
SW129	SW	REAL	SW00934WC	28-MAR-91	N	TRG	SMETCLPTCL	ANTIMONY	18.2	UG/L		U	18.2								
SW129	SW	REAL	SW00934WC	28-MAR-91	N	TRG	SMETCLPTCL	ARSENIC	0.90	UG/L		U	0.90								
SW129	SW	REAL	SW00934WC	28-MAR-91	N	TRG	SMETCLPTCL	BARIUM	134	UG/L			4.4								
SW129	SW	REAL	SW00934WC	28-MAR-91	N	TRG	SMETCLPTCL	BERYLLIUM	0.60	UG/L		U	0 60								
SW129	SW	REAL	SW00934WC	28-MAR-91	N	TRG	SMETCLPTCL	CADMIUM	2.7	UG/L		U	2.7								

Location	ST	QC	Sample Number	Smpl Date	D	ID	Group	Chemical	Result	Unit	Error	Qual	D LMT	VA	RN1	RN2	RN3	RN4	VResult	VQual	VDET
SW129	SW	REAL	SW00934WC	28-MAR-91	N	TRG	SMETCLPTCL	CALCIUM	73200	UG/L			14 3								
SW129	SW	REAL	SW00934WC	28-MAR-91	N	TRG	SMETCLPTCL	CHROMIUM	6 9	UG/L		U	6 9								
SW129	SW	REAL	SW00934WC	28-MAR-91	N	TRG	SMETCLPTCL	COBALT	3 0	UG/L		U	3 0								
SW129	SW	REAL	SW00934WC	28-MAR-91	N	TRG	SMETCLPTCL	COPPER	6.6	UG/L			2 5								
SW129	SW	REAL	SW00934WC	28-MAR-91	N	TRG	SMETCLPTCL	IRON	340	UG/L			4 3								
SW129	SW	REAL	SW00934WC	28-MAR-91	N	TRG	SMETCLPTCL	LEAD	3 0	UG/L			1 0								
SW129	SW	REAL	SW00934WC	28-MAR-91	N	TRG	SMETCLPTCL	MAGNESIUM	20000	UG/L			35 9								
SW129	SW	REAL	SW00934WC	28-MAR-91	N	TRG	SMETCLPTCL	MANGANESE	21 5	UG/L			1 0								
SW129	SW	REAL	SW00934WC	28-MAR-91	N	TRG	SMETCLPTCL	MERCURY	0 20	UG/L		U	0 20								
SW129	SW	REAL	SW00934WC	28-MAR-91	N	TRG	SMETCLPTCL	NICKEL	3 9	UG/L		U	3 9								
SW129	SW	REAL	SW00934WC	28-MAR-91	N	TRG	SMETCLPTCL	POTASSIUM	2030	UG/L			94.8								
SW129	SW	REAL	SW00934WC	28-MAR-91	N	TRG	SMETCLPTCL	SELENIUM	1 1	UG/L		U	1 1								
SW129	SW	REAL	SW00934WC	28-MAR-91	N	TRG	SMETCLPTCL	SILVER	3 8	UG/L		U	3 8								
SW129	SW	REAL	SW00934WC	28-MAR-91	N	TRG	SMETCLPTCL	SODIUM	15800	UG/L			21 4								
SW129	SW	REAL	SW00934WC	28-MAR-91	N	TRG	SMETCLPTCL	THALLIUM	1 4	UG/L		U	1 4								
SW129	SW	REAL	SW00934WC	28-MAR-91	N	TRG	SMETCLPTCL	VANADIUM	2.6	UG/L			2 0								
SW129	SW	REAL	SW00934WC	28-MAR-91	N	TRG	SMETCLPTCL	ZINC	7 5	UG/L			4 7								
SW129	SW	REAL	SW00934WC	28-MAR-91	N	TRG	SMETNOCLP	CESIUM	500	UG/L		U	500								
SW129	SW	REAL	SW00934WC	28-MAR-91	N	TRG	SMETNOCLP	LITHIUM	6 6	UG/L			2 0								
SW129	SW	REAL	SW00934WC	28-MAR-91	N	TRG	SMETNOCLP	MOLYBDENUM	10.9	UG/L		U	10.9								
SW129	SW	REAL	SW00934WC	28-MAR-91	N	TRG	SMETNOCLP	SILICON	3340	UG/L			14 2								
SW129	SW	REAL	SW00934WC	28-MAR-91	N	TRG	SMETNOCLP	STRONTIUM	437	UG/L			7 3								
SW129	SW	REAL	SW00934WC	28-MAR-91	N	TRG	SMETNOCLP	TIN	24 2	UG/L		U	24 2								
SW129	SW	REAL	SW01036WC	09-APR-91	N	TRG	DMETCLPTAL	ALUMINUM	108	UG/L		U	108								
SW129	SW	REAL	SW01036WC	09-APR-91	N	TRG	DMETCLPTAL	ANTIMONY	25 6	UG/L		U	25 6								
SW129	SW	REAL	SW01036WC	09-APR-91	N	TRG	DMETCLPTAL	ARSENIC	0.90	UG/L		U	0 90								
SW129	SW	REAL	SW01036WC	09-APR-91	N	TRG	DMETCLPTAL	BARIUM	124	UG/L			1 3								
SW129	SW	REAL	SW01036WC	09-APR-91	N	TRG	DMETCLPTAL	BERYLLIUM	0 50	UG/L		U	0 50								
SW129	SW	REAL	SW01036WC	09-APR-91	N	TRG	DMETCLPTAL	CADMIUM	2 7	UG/L		U	2 7								
SW129	SW	REAL	SW01036WC	09-APR-91	N	TRG	DMETCLPTAL	CALCIUM	66800	UG/L			14 5								
SW129	SW	REAL	SW01036WC	09-APR-91	N	TRG	DMETCLPTAL	CHROMIUM	4.1	UG/L		U	4 1								
SW129	SW	REAL	SW01036WC	09-APR-91	N	TRG	DMETCLPTAL	COBALT	3 6	UG/L		U	3 6								
SW129	SW	REAL	SW01036WC	09-APR-91	N	TRG	DMETCLPTAL	COPPER	4 7	UG/L		U	4 7								
SW129	SW	REAL	SW01036WC	09-APR-91	N	TRG	DMETCLPTAL	IRON	22 8	UG/L			6 3								
SW129	SW	REAL	SW01036WC	09-APR-91	N	TRG	DMETCLPTAL	LEAD	1 4	UG/L		U	1 4								
SW129	SW	REAL	SW01036WC	09-APR-91	N	TRG	DMETCLPTAL	MAGNESIUM	18700	UG/L			36 6								
SW129	SW	REAL	SW01036WC	09-APR-91	N	TRG	DMETCLPTAL	MANGANESE	9 4	UG/L			1 0								
SW129	SW	REAL	SW01036WC	09-APR-91	N	TRG	DMETCLPTAL	MERCURY	0 20	UG/L		U	0 20								
SW129	SW	REAL	SW01036WC	09-APR-91	N	TRG	DMETCLPTAL	NICKEL	14 7	UG/L		U	14.7								
SW129	SW	REAL	SW01036WC	09-APR-91	N	TRG	DMETCLPTAL	POTASSIUM	2050	UG/L		U	2050								
SW129	SW	REAL	SW01036WC	09-APR-91	N	TRG	DMETCLPTAL	SELENIUM	1.1	UG/L		U	1 1								
SW129	SW	REAL	SW01036WC	09-APR-91	N	TRG	DMETCLPTAL	SILVER	5.0	UG/L		U	5 0								
SW129	SW	REAL	SW01036WC	09-APR-91	N	TRG	DMETCLPTAL	SODIUM	15200	UG/L			43 5								
SW129	SW	REAL	SW01036WC	09-APR-91	N	TRG	DMETCLPTAL	THALLIUM	1 4	UG/L		U	1 4								
SW129	SW	REAL	SW01036WC	09-APR-91	N	TRG	DMETCLPTAL	VANADIUM	5 7	UG/L		U	5 7								
SW129	SW	REAL	SW01036WC	09-APR-91	N	TRG	DMETCLPTAL	ZINC	4 5	UG/L			1 8								
SW129	SW	REAL	SW01036WC	09-APR-91	N	TRG	DMETNOCLP	CESIUM	500	UG/L		U	500								
SW129	SW	REAL	SW01036WC	09-APR-91	N	TRG	DMETNOCLP	LITHIUM	8 4	UG/L			2 0								
SW129	SW	REAL	SW01036WC	09-APR-91	N	TRG	DMETNOCLP	MOLYBDENUM	5 7	UG/L		U	5 7								
SW129	SW	REAL	SW01036WC	09-APR-91	N	TRG	DMETNOCLP	SILICON	2630	UG/L			14 2								
SW129	SW	REAL	SW01036WC	09-APR-91	N	TRG	DMETNOCLP	STRONTIUM	434	UG/L			7 3								
SW129	SW	REAL	SW01036WC	09-APR-91	N	TRG	DMETNOCLP	TIN	14.8	UG/L		U	14.8								
SW129	SW	REAL	SW01036WC	09-APR-91	N	TRG	SMETCLPTCL	ALUMINUM	363	UG/L			108								
SW129	SW	REAL	SW01036WC	09-APR-91	N	TRG	SMETCLPTCL	ANTIMONY	25.6	UG/L		U	25 6								
SW129	SW	REAL	SW01036WC	09-APR-91	N	TRG	SMETCLPTCL	ARSENIC	0.90	UG/L		U	0.90								
SW129	SW	REAL	SW01036WC	09-APR-91	N	TRG	SMETCLPTCL	BARIUM	127	UG/L			1.3								
SW129	SW	REAL	SW01036WC	09-APR-91	N	TRG	SMETCLPTCL	BERYLLIUM	0.50	UG/L		U	0.50								
SW129	SW	REAL	SW01036WC	09-APR-91	N	TRG	SMETCLPTCL	CADMIUM	2.7	UG/L		U	2 7								
SW129	SW	REAL	SW01036WC	09-APR-91	N	TRG	SMETCLPTCL	CALCIUM	66600	UG/L			14 5								
SW129	SW	REAL	SW01036WC	09-APR-91	N	TRG	SMETCLPTCL	CHROMIUM	4.1	UG/L		U	4 1								
SW129	SW	REAL	SW01036WC	09-APR-91	N	TRG	SMETCLPTCL	COBALT	3 6	UG/L		U	3.6								
SW129	SW	REAL	SW01036WC	09-APR-91	N	TRG	SMETCLPTCL	COPPER	4.7	UG/L		U	4 7								
SW129	SW	REAL	SW01036WC	09-APR-91	N	TRG	SMETCLPTCL	IRON	384	UG/L			6 3								

Location	ST	QC	Sample Number	Smpl Date	D	ID	Group	Chemical	Result	Unit	Error	Qual	D LMT	VA	RN1	RN2	RN3	RN4	VResult	VQual	VDET
SW129	SW	REAL	SW01036WC	09-APR-91	N	TRG	SMETCLPTCL	LEAD	1.4	UG/L			1 4								
SW129	SW	REAL	SW01036WC	09-APR-91	N	TRG	SMETCLPTCL	MAGNESIUM	18600	UG/L			36 6								
SW129	SW	REAL	SW01036WC	09-APR-91	N	TRG	SMETCLPTCL	MANGANESE	18.2	UG/L			1 0								
SW129	SW	REAL	SW01036WC	09-APR-91	N	TRG	SMETCLPTCL	MERCURY	0 20	UG/L		U	0 20								
SW129	SW	REAL	SW01036WC	09-APR-91	N	TRG	SMETCLPTCL	NICKEL	14 7	UG/L		U	14.7								
SW129	SW	REAL	SW01036WC	09-APR-91	N	TRG	SMETCLPTCL	POTASSIUM	2380	UG/L			2050								
SW129	SW	REAL	SW01036WC	09-APR-91	N	TRG	SMETCLPTCL	SELENIUM	1.1	UG/L		U	1 1								
SW129	SW	REAL	SW01036WC	09-APR-91	N	TRG	SMETCLPTCL	SILVER	5 0	UG/L		U	5 0								
SW129	SW	REAL	SW01036WC	09-APR-91	N	TRG	SMETCLPTCL	SODIUM	15200	UG/L			43 5								
SW129	SW	REAL	SW01036WC	09-APR-91	N	TRG	SMETCLPTCL	THALLIUM	1 4	UG/L		U	1.4								
SW129	SW	REAL	SW01036WC	09-APR-91	N	TRG	SMETCLPTCL	VANADIUM	5.7	UG/L		U	5 7								
SW129	SW	REAL	SW01036WC	09-APR-91	N	TRG	SMETCLPTCL	ZINC	3.4	UG/L			1.8								
SW129	SW	REAL	SW01036WC	09-APR-91	N	TRG	SMETNOCLP	CESIUM	500	UG/L		U	500								
SW129	SW	REAL	SW01036WC	09-APR-91	N	TRG	SMETNOCLP	LITHIUM	8 9	UG/L			2 0								
SW129	SW	REAL	SW01036WC	09-APR-91	N	TRG	SMETNOCLP	MOLYBDENUM	5 7	UG/L		U	5 7								
SW129	SW	REAL	SW01036WC	09-APR-91	N	TRG	SMETNOCLP	SILICON	3680	UG/L			14.2								
SW129	SW	REAL	SW01036WC	09-APR-91	N	TRG	SMETNOCLP	STRONTIUM	436	UG/L			7 3								
SW129	SW	REAL	SW01036WC	09-APR-91	N	TRG	SMETNOCLP	TIN	14 8	UG/L		U	14 8								
SW129	SW	REAL	SW01143WC	16-MAY-91	N	TRG	DMETCLPTAL	ALUMINUM	108	UG/L		U	108								
SW129	SW	REAL	SW01143WC	16-MAY-91	N	TRG	DMETCLPTAL	ANTIMONY	25.6	UG/L		U	25 6								
SW129	SW	REAL	SW01143WC	16-MAY-91	N	TRG	DMETCLPTAL	ARSENIC	0.90	UG/L		U	0 90								
SW129	SW	REAL	SW01143WC	16-MAY-91	N	TRG	DMETCLPTAL	BARIUM	118	UG/L			1 3								
SW129	SW	REAL	SW01143WC	16-MAY-91	N	TRG	DMETCLPTAL	BERYLLIUM	0 50	UG/L		U	0 50								
SW129	SW	REAL	SW01143WC	16-MAY-91	N	TRG	DMETCLPTAL	CADMIUM	3 3	UG/L		U	3 3								
SW129	SW	REAL	SW01143WC	16-MAY-91	N	TRG	DMETCLPTAL	CALCIUM	66800	UG/L			14 5								
SW129	SW	REAL	SW01143WC	16-MAY-91	N	TRG	DMETCLPTAL	CHROMIUM	4.1	UG/L		U	4 1								
SW129	SW	REAL	SW01143WC	16-MAY-91	N	TRG	DMETCLPTAL	COBALT	3.6	UG/L		U	3 6								
SW129	SW	REAL	SW01143WC	16-MAY-91	N	TRG	DMETCLPTAL	COPPER	4 7	UG/L		U	4 7								
SW129	SW	REAL	SW01143WC	16-MAY-91	N	TRG	DMETCLPTAL	IRON	32 2	UG/L			6 3								
SW129	SW	REAL	SW01143WC	16-MAY-91	N	TRG	DMETCLPTAL	LEAD	1 0	UG/L		U	1 0								
SW129	SW	REAL	SW01143WC	16-MAY-91	N	TRG	DMETCLPTAL	MAGNESIUM	17800	UG/L			36 6								
SW129	SW	REAL	SW01143WC	16-MAY-91	N	TRG	DMETCLPTAL	MANGANESE	60.6	UG/L			1 0								
SW129	SW	REAL	SW01143WC	16-MAY-91	N	TRG	DMETCLPTAL	MERCURY	0 20	UG/L		U	0 20								
SW129	SW	REAL	SW01143WC	16-MAY-91	N	TRG	DMETCLPTAL	NICKEL	14 7	UG/L		U	14 7								
SW129	SW	REAL	SW01143WC	16-MAY-91	N	TRG	DMETCLPTAL	POTASSIUM	3120	UG/L			2050								
SW129	SW	REAL	SW01143WC	16-MAY-91	N	TRG	DMETCLPTAL	SELENIUM	1.1	UG/L		U	1 1								
SW129	SW	REAL	SW01143WC	16-MAY-91	N	TRG	DMETCLPTAL	SILVER	5 0	UG/L		U	5 0								
SW129	SW	REAL	SW01143WC	16-MAY-91	N	TRG	DMETCLPTAL	SODIUM	20000	UG/L			43.5								
SW129	SW	REAL	SW01143WC	16-MAY-91	N	TRG	DMETCLPTAL	THALLIUM	1.4	UG/L		U	1 4								
SW129	SW	REAL	SW01143WC	16-MAY-91	N	TRG	DMETCLPTAL	VANADIUM	5 7	UG/L		U	5 7								
SW129	SW	REAL	SW01143WC	16-MAY-91	N	TRG	DMETCLPTAL	ZINC	8 2	UG/L			1 8								
SW129	SW	REAL	SW01143WC	16-MAY-91	N	TRG	DMETNOCLP	CESIUM	500	UG/L		U	500								
SW129	SW	REAL	SW01143WC	16-MAY-91	N	TRG	DMETNOCLP	LITHIUM	4.3	UG/L		U	4 3								
SW129	SW	REAL	SW01143WC	16-MAY-91	N	TRG	DMETNOCLP	MOLYBDENUM	5 7	UG/L		U	5 7								
SW129	SW	REAL	SW01143WC	16-MAY-91	N	TRG	DMETNOCLP	SILICON	4200	UG/L			25.7								
SW129	SW	REAL	SW01143WC	16-MAY-91	N	TRG	DMETNOCLP	STRONTIUM	421	UG/L			3 5								
SW129	SW	REAL	SW01143WC	16-MAY-91	N	TRG	DMETNOCLP	TIN	14.8	UG/L		U	14 8								
SW129	SW	REAL	SW01143WC	16-MAY-91	N	TRG	SMETCLPTCL	ALUMINUM	138	UG/L			108								
SW129	SW	REAL	SW01143WC	16-MAY-91	N	TRG	SMETCLPTCL	ANTIMONY	25.6	UG/L		U	25 6								
SW129	SW	REAL	SW01143WC	16-MAY-91	N	TRG	SMETCLPTCL	ARSENIC	0 90	UG/L		U	0 90								
SW129	SW	REAL	SW01143WC	16-MAY-91	N	TRG	SMETCLPTCL	BARIUM	121	UG/L			1 3								
SW129	SW	REAL	SW01143WC	16-MAY-91	N	TRG	SMETCLPTCL	BERYLLIUM	0 50	UG/L		U	0 50								
SW129	SW	REAL	SW01143WC	16-MAY-91	N	TRG	SMETCLPTCL	CADMIUM	3.3	UG/L		U	3 3								
SW129	SW	REAL	SW01143WC	16-MAY-91	N	TRG	SMETCLPTCL	CALCIUM	68300	UG/L			14 5								
SW129	SW	REAL	SW01143WC	16-MAY-91	N	TRG	SMETCLPTCL	CHROMIUM	4.1	UG/L		U	4.1								
SW129	SW	REAL	SW01143WC	16-MAY-91	N	TRG	SMETCLPTCL	COBALT	3.6	UG/L		U	3 6								
SW129	SW	REAL	SW01143WC	16-MAY-91	N	TRG	SMETCLPTCL	COPPER	5 6	UG/L			4.7								
SW129	SW	REAL	SW01143WC	16-MAY-91	N	TRG	SMETCLPTCL	IRON	195	UG/L			6 3								
SW129	SW	REAL	SW01143WC	16-MAY-91	N	TRG	SMETCLPTCL	LEAD	1.4	UG/L		U	1 4								
SW129	SW	REAL	SW01143WC	16-MAY-91	N	TRG	SMETCLPTCL	MAGNESIUM	18000	UG/L			36 6								
SW129	SW	REAL	SW01143WC	16-MAY-91	N	TRG	SMETCLPTCL	MANGANESE	59.4	UG/L			1.0								
SW129	SW	REAL	SW01143WC	16-MAY-91	N	TRG	SMETCLPTCL	MERCURY	0.20	UG/L		U	0 20								
SW129	SW	REAL	SW01143WC	16-MAY-91	N	TRG	SMETCLPTCL	NICKEL	14.7	UG/L		U	14.7								

Location	ST	QC	Sample Number	Smpl Date	D	ID	Group	Chemical	Result	Unit	Error	Qual	D LMT	VA	RN1	RN2	RN3	RN4	VResult	VQual	VDET
SW129	SW	REAL	SW01143WC	16-MAY-91	N	TRG	SMETCLPTCL	POTASSIUM	3520	UG/L			2050								
SW129	SW	REAL	SW01143WC	16-MAY-91	N	TRG	SMETCLPTCL	SELENIUM	1 1	UG/L		U	1 1								
SW129	SW	REAL	SW01143WC	16-MAY-91	N	TRG	SMETCLPTCL	SILVER	5 0	UG/L		U	5 0								
SW129	SW	REAL	SW01143WC	16-MAY-91	N	TRG	SMETCLPTCL	SODIUM	19100	UG/L			43 5								
SW129	SW	REAL	SW01143WC	16-MAY-91	N	TRG	SMETCLPTCL	THALLIUM	1.4	UG/L		U	1 4								
SW129	SW	REAL	SW01143WC	16-MAY-91	N	TRG	SMETCLPTCL	VANADIUM	5.7	UG/L		U	5 7								
SW129	SW	REAL	SW01143WC	16-MAY-91	N	TRG	SMETCLPTCL	ZINC	1 8	UG/L		U	1 8								
SW129	SW	REAL	SW01143WC	16-MAY-91	N	TRG	SMETNOCLP	CESIUM	500	UG/L		U	500								
SW129	SW	REAL	SW01143WC	16-MAY-91	N	TRG	SMETNOCLP	LITHIUM	4 7	UG/L			4 3								
SW129	SW	REAL	SW01143WC	16-MAY-91	N	TRG	SMETNOCLP	MOLYBDENUM	5.7	UG/L		U	5 7								
SW129	SW	REAL	SW01143WC	16-MAY-91	N	TRG	SMETNOCLP	SILICON	4160	UG/L			25 7								
SW129	SW	REAL	SW01143WC	16-MAY-91	N	TRG	SMETNOCLP	STRONTIUM	415	UG/L			3 5								
SW129	SW	REAL	SW01143WC	16-MAY-91	N	TRG	SMETNOCLP	TIN	14 8	UG/L		U	14 8								
SW129	SW	REAL	SW01246WC	26-JUN-91	N	TRG	DMETCLP	SILICON	7530	UG/L			10 5								
SW129	SW	REAL	SW01246WC	26-JUN-91	N	TRG	METCLP	SILICON	10200	UG/L			10 5								
SW129	SW	REAL	SW01349WC	22-JUL-91	N																
SW129	SW	REAL	SW01455WC	13-AUG-91	N	TRG	DMETCLP	SILICON	7260	UG/L			10 5								
SW129	SW	REAL	SW01455WC	13-AUG-91	N	TRG	DMETCLPTAL	ALUMINUM	19	UG/L			200								
SW129	SW	REAL	SW01455WC	13-AUG-91	N	TRG	DMETCLPTAL	ANTIMONY	11	UG/L		U	60								
SW129	SW	REAL	SW01455WC	13-AUG-91	N	TRG	DMETCLPTAL	ARSENIC	2 3	UG/L			10								
SW129	SW	REAL	SW01455WC	13-AUG-91	N	TRG	DMETCLPTAL	BARIUM	140	UG/L			200								
SW129	SW	REAL	SW01455WC	13-AUG-91	N	TRG	DMETCLPTAL	BERYLLIUM	1.0	UG/L		U	5								
SW129	SW	REAL	SW01455WC	13-AUG-91	N	TRG	DMETCLPTAL	BERYLLIUM	2 0	UG/L		U	5								
SW129	SW	REAL	SW01455WC	13-AUG-91	N	TRG	DMETCLPTAL	CALCIUM	72000	UG/L			5000								
SW129	SW	REAL	SW01455WC	13-AUG-91	N	TRG	DMETCLPTAL	CESIUM	50	UG/L		U	1000								
SW129	SW	REAL	SW01455WC	13-AUG-91	N	TRG	DMETCLPTAL	CHROMIUM	2.2	UG/L			10								
SW129	SW	REAL	SW01455WC	13-AUG-91	N	TRG	DMETCLPTAL	COBALT	2 0	UG/L		U	50								
SW129	SW	REAL	SW01455WC	13-AUG-91	N	TRG	DMETCLPTAL	COPPER	3 0	UG/L		U	25								
SW129	SW	REAL	SW01455WC	13-AUG-91	N	TRG	DMETCLPTAL	IRON	30	UG/L			100								
SW129	SW	REAL	SW01455WC	13-AUG-91	N	TRG	DMETCLPTAL	LEAD	1 0	UG/L		U	3								
SW129	SW	REAL	SW01455WC	13-AUG-91	N	TRG	DMETCLPTAL	LITHIUM	8 5	UG/L			100								
SW129	SW	REAL	SW01455WC	13-AUG-91	N	TRG	DMETCLPTAL	MAGNESIUM	18000	UG/L			5000								
SW129	SW	REAL	SW01455WC	13-AUG-91	N	TRG	DMETCLPTAL	MANGANESE	72	UG/L			15								
SW129	SW	REAL	SW01455WC	13-AUG-91	N	TRG	DMETCLPTAL	MERCURY	0.54	UG/L			0.2								
SW129	SW	REAL	SW01455WC	13-AUG-91	N	TRG	DMETCLPTAL	MOLYBDENUM	3 0	UG/L		U	50								
SW129	SW	REAL	SW01455WC	13-AUG-91	N	TRG	DMETCLPTAL	NICKEL	4 0	UG/L		U	40								
SW129	SW	REAL	SW01455WC	13-AUG-91	N	TRG	DMETCLPTAL	POTASSIUM	1700	UG/L			5000								
SW129	SW	REAL	SW01455WC	13-AUG-91	N	TRG	DMETCLPTAL	SELENIUM	4 0	UG/L		UI	5								
SW129	SW	REAL	SW01455WC	13-AUG-91	N	TRG	DMETCLPTAL	SILVER	2 0	UG/L		U	10								
SW129	SW	REAL	SW01455WC	13-AUG-91	N	TRG	DMETCLPTAL	SODIUM	14000	UG/L			5000								
SW129	SW	REAL	SW01455WC	13-AUG-91	N	TRG	DMETCLPTAL	STRONTIUM	450	UG/L			200								
SW129	SW	REAL	SW01455WC	13-AUG-91	N	TRG	DMETCLPTAL	THALLIUM	3.0	UG/L		UI	10								
SW129	SW	REAL	SW01455WC	13-AUG-91	N	TRG	DMETCLPTAL	TIN	13	UG/L		U	200								
SW129	SW	REAL	SW01455WC	13-AUG-91	N	TRG	DMETCLPTAL	VANADIUM	3.1	UG/L			50								
SW129	SW	REAL	SW01455WC	13-AUG-91	N	TRG	DMETCLPTAL	ZINC	3 0	UG/L		U	20								
SW129	SW	REAL	SW01455WC	13-AUG-91	N	TRG	DMETNOCLP	SILICON	7260	UG/L			10 5								
SW129	SW	REAL	SW01455WC	13-AUG-91	N	TRG	METCLP	SILICON	8320	UG/L			10 5								
SW129	SW	REAL	SW01455WC	13-AUG-91	N	TRG	SMETNOCLP	SILICON	8320	UG/L			10 5								
SW129	SW	REAL	SW01561WC	18-SEP-91	N	TRG	DMETCLP	ALUMINUM	22.3	UG/L		U	22 3								
SW129	SW	REAL	SW01561WC	18-SEP-91	N	TRG	DMETCLP	ANTIMONY	13.8	UG/L		U	13 8								
SW129	SW	REAL	SW01561WC	18-SEP-91	N	TRG	DMETCLP	ARSENIC	1 1	UG/L		U	1.1								
SW129	SW	REAL	SW01561WC	18-SEP-91	N	TRG	DMETCLP	BARIUM	158	UG/L			5 6								
SW129	SW	REAL	SW01561WC	18-SEP-91	N	TRG	DMETCLP	BERYLLIUM	0.50	UG/L		U	0 50								
SW129	SW	REAL	SW01561WC	18-SEP-91	N	TRG	DMETCLP	CADMIUM	2 4	UG/L		U	2.4								
SW129	SW	REAL	SW01561WC	18-SEP-91	N	TRG	DMETCLP	CALCIUM	72200	UG/L			29 2								
SW129	SW	REAL	SW01561WC	18-SEP-91	N	TRG	DMETCLP	CESIUM	500	UG/L		U	500								
SW129	SW	REAL	SW01561WC	18-SEP-91	N	TRG	DMETCLP	CHROMIUM	2.6	UG/L		U	2.6								
SW129	SW	REAL	SW01561WC	18-SEP-91	N	TRG	DMETCLP	COBALT	2 8	UG/L		U	2.8								
SW129	SW	REAL	SW01561WC	18-SEP-91	N	TRG	DMETCLP	COPPER	4 9	UG/L			2.1								
SW129	SW	REAL	SW01561WC	18-SEP-91	N	TRG	DMETCLP	IRON	16.7	UG/L		U	16.7								
SW129	SW	REAL	SW01561WC	18-SEP-91	N	TRG	DMETCLP	LEAD	0 90	UG/L		U	0.90								
SW129	SW	REAL	SW01561WC	18-SEP-91	N	TRG	DMETCLP	LITHIUM	7 1	UG/L		U	7 1								
SW129	SW	REAL	SW01561WC	18-SEP-91	N	TRG	DMETCLP	MAGNESIUM	19700	UG/L			33.1								

Location	ST	QC	Sample Number	Smpl Date	D	ID	Group	Chemical	Result	Unit	Error	Qual	D LMT	VA	RN1	RN2	RN3	RN4	VResult	VQual	VDET
SW129	SW	REAL	SW01561WC	18-SEP-91	N	TRG	DMETCLP	MANGANESE	22 6	UG/L			1 3								
SW129	SW	REAL	SW01561WC	18-SEP-91	N	TRG	DMETCLP	MERCURY	0 20	UG/L		U	0 20								
SW129	SW	REAL	SW01561WC	18-SEP-91	N	TRG	DMETCLP	MOLYBDENUM	5 8	UG/L		U	5 8								
SW129	SW	REAL	SW01561WC	18-SEP-91	N	TRG	DMETCLP	NICKEL	7 3	UG/L			5 9								
SW129	SW	REAL	SW01561WC	18-SEP-91	N	TRG	DMETCLP	POTASSIUM	2120	UG/L			675								
SW129	SW	REAL	SW01561WC	18-SEP-91	N	TRG	DMETCLP	SELENIUM	1 2	UG/L		U	1 2								
SW129	SW	REAL	SW01561WC	18-SEP-91	N	TRG	DMETCLP	SILICON	6770	UG/L			21 0								
SW129	SW	REAL	SW01561WC	18-SEP-91	N	TRG	DMETCLP	SILVER	2.9	UG/L		U	2.9								
SW129	SW	REAL	SW01561WC	18-SEP-91	N	TRG	DMETCLP	SODIUM	13600	UG/L			172								
SW129	SW	REAL	SW01561WC	18-SEP-91	N	TRG	DMETCLP	STRONTIUM	456	UG/L			2.3								
SW129	SW	REAL	SW01561WC	18-SEP-91	N	TRG	DMETCLP	THALLIUM	1.9	UG/L		U	1 9								
SW129	SW	REAL	SW01561WC	18-SEP-91	N	TRG	DMETCLP	TIN	10.4	UG/L		U	10 4								
SW129	SW	REAL	SW01561WC	18-SEP-91	N	TRG	DMETCLP	VANADIUM	3 9	UG/L			2 3								
SW129	SW	REAL	SW01561WC	18-SEP-91	N	TRG	DMETCLP	ZINC	4.5	UG/L			4 3								
SW129	SW	REAL	SW01561WC	18-SEP-91	N	TRG	METCLP	ALUMINUM	370	UG/L			22 3								
SW129	SW	REAL	SW01561WC	18-SEP-91	N	TRG	METCLP	ANTIMONY	13 8	UG/L		U	13 8								
SW129	SW	REAL	SW01561WC	18-SEP-91	N	TRG	METCLP	ARSENIC	0.70	UG/L		U	0 70								
SW129	SW	REAL	SW01561WC	18-SEP-91	N	TRG	METCLP	BARIUM	177	UG/L			5 6								
SW129	SW	REAL	SW01561WC	18-SEP-91	N	TRG	METCLP	BERYLLIUM	1.1	UG/L			0 50								
SW129	SW	REAL	SW01561WC	18-SEP-91	N	TRG	METCLP	CADMIUM	2 4	UG/L		U	2 4								
SW129	SW	REAL	SW01561WC	18-SEP-91	N	TRG	METCLP	CALCIUM	73700	UG/L			29 2								
SW129	SW	REAL	SW01561WC	18-SEP-91	N	TRG	METCLP	CESIUM	500	UG/L		U	500								
SW129	SW	REAL	SW01561WC	18-SEP-91	N	TRG	METCLP	CHROMIUM	2 6	UG/L		U	2 6								
SW129	SW	REAL	SW01561WC	18-SEP-91	N	TRG	METCLP	COBALT	2.8	UG/L			2 8								
SW129	SW	REAL	SW01561WC	18-SEP-91	N	TRG	METCLP	COPPER	9 2	UG/L			2 1								
SW129	SW	REAL	SW01561WC	18-SEP-91	N	TRG	METCLP	IRON	299	UG/L			16 7								
SW129	SW	REAL	SW01561WC	18-SEP-91	N	TRG	METCLP	LEAD	2 9	UG/L			0 90								
SW129	SW	REAL	SW01561WC	18-SEP-91	N	TRG	METCLP	LITHIUM	7 1	UG/L		U	7 1								
SW129	SW	REAL	SW01561WC	18-SEP-91	N	TRG	METCLP	MAGNESIUM	20200	UG/L			33.1								
SW129	SW	REAL	SW01561WC	18-SEP-91	N	TRG	METCLP	MANGANESE	73.8	UG/L			1 3								
SW129	SW	REAL	SW01561WC	18-SEP-91	N	TRG	METCLP	MERCURY	0.20	UG/L		U	0 20								
SW129	SW	REAL	SW01561WC	18-SEP-91	N	TRG	METCLP	MOLYBDENUM	5 8	UG/L		U	5 8								
SW129	SW	REAL	SW01561WC	18-SEP-91	N	TRG	METCLP	NICKEL	5.9	UG/L		U	5 9								
SW129	SW	REAL	SW01561WC	18-SEP-91	N	TRG	METCLP	POTASSIUM	2280	UG/L			675								
SW129	SW	REAL	SW01561WC	18-SEP-91	N	TRG	METCLP	SELENIUM	1 2	UG/L		U	1 2								
SW129	SW	REAL	SW01561WC	18-SEP-91	N	TRG	METCLP	SILICON	8080	UG/L			21 0								
SW129	SW	REAL	SW01561WC	18-SEP-91	N	TRG	METCLP	SILVER	2 9	UG/L		U	2 9								
SW129	SW	REAL	SW01561WC	18-SEP-91	N	TRG	METCLP	SODIUM	14400	UG/L			172								
SW129	SW	REAL	SW01561WC	18-SEP-91	N	TRG	METCLP	STRONTIUM	477	UG/L			2 3								
SW129	SW	REAL	SW01561WC	18-SEP-91	N	TRG	METCLP	THALLIUM	2 4	UG/L		U	2 4								
SW129	SW	REAL	SW01561WC	18-SEP-91	N	TRG	METCLP	TIN	10.4	UG/L		U	10 4								
SW129	SW	REAL	SW01561WC	18-SEP-91	N	TRG	METCLP	VANADIUM	4 2	UG/L			2 3								
SW129	SW	REAL	SW01561WC	18-SEP-91	N	TRG	METCLP	ZINC	15 1	UG/L			4 3								
SW129	SW	REAL	SW01667WC	23-OCT-91	N	TRG	DMETCLPTAL	ALUMINUM	35 10	UG/L		B	200 0								
SW129	SW	REAL	SW01667WC	23-OCT-91	N	TRG	DMETCLPTAL	ANTIMONY	15.40	UG/L		B	60 00								
SW129	SW	REAL	SW01667WC	23-OCT-91	N	TRG	DMETCLPTAL	ARSENIC	2 00	UG/L		U	10.00								
SW129	SW	REAL	SW01667WC	23-OCT-91	N	TRG	DMETCLPTAL	BARIUM	166.00	UG/L		B	200 0								
SW129	SW	REAL	SW01667WC	23-OCT-91	N	TRG	DMETCLPTAL	BERYLLIUM	1.00	UG/L		U	5.000								
SW129	SW	REAL	SW01667WC	23-OCT-91	N	TRG	DMETCLPTAL	CADMIUM	2 00	UG/L		U	5 000								
SW129	SW	REAL	SW01667WC	23-OCT-91	N	TRG	DMETCLPTAL	CALCIUM	80200.00	UG/L			5000								
SW129	SW	REAL	SW01667WC	23-OCT-91	N	TRG	DMETCLPTAL	CHROMIUM	6.30	UG/L		B	10 00								
SW129	SW	REAL	SW01667WC	23-OCT-91	N	TRG	DMETCLPTAL	COBALT	3 00	UG/L		U	50.00								
SW129	SW	REAL	SW01667WC	23-OCT-91	N	TRG	DMETCLPTAL	COPPER	3.00	UG/L		U	25 00								
SW129	SW	REAL	SW01667WC	23-OCT-91	N	TRG	DMETCLPTAL	IRON	61.30	UG/L		BN*	100.0								
SW129	SW	REAL	SW01667WC	23-OCT-91	N	TRG	DMETCLPTAL	LEAD	1 00	UG/L		U	3.000								
SW129	SW	REAL	SW01667WC	23-OCT-91	N	TRG	DMETCLPTAL	MAGNESIUM	20300 00	UG/L			5000.								
SW129	SW	REAL	SW01667WC	23-OCT-91	N	TRG	DMETCLPTAL	MANGANESE	18.20	UG/L			15 00								
SW129	SW	REAL	SW01667WC	23-OCT-91	N	TRG	DMETCLPTAL	MERCURY	0.20	UG/L		U	0.200								
SW129	SW	REAL	SW01667WC	23-OCT-91	N	TRG	DMETCLPTAL	NICKEL	17.00	UG/L		U	40.00								
SW129	SW	REAL	SW01667WC	23-OCT-91	N	TRG	DMETCLPTAL	POTASSIUM	1720.00	UG/L		B	5000.								
SW129	SW	REAL	SW01667WC	23-OCT-91	N	TRG	DMETCLPTAL	SELENIUM	2.00	UG/L		U	5.000								
SW129	SW	REAL	SW01667WC	23-OCT-91	N	TRG	DMETCLPTAL	SILVER	2 00	UG/L		U	10 00								
SW129	SW	REAL	SW01667WC	23-OCT-91	N	TRG	DMETCLPTAL	SODIUM	13600 00	UG/L			5000.								

Location	ST	QC	Sample Number	Smpl Date	D	ID	Group	Chemical	Result	Unit	Error	Qual	D LMT	VA	RN1	RN2	RN3	RN4	VResult	VQual	VDET
SW129	SW	REAL	SW01667WC	23-OCT-91	N	TRG	DMETCLPTAL	THALLIUM	1 00	UG/L		B	10 00								
SW129	SW	REAL	SW01667WC	23-OCT-91	N	TRG	DMETCLPTAL	VANADIUM	4 50	UG/L		B	50 00								
SW129	SW	REAL	SW01667WC	23-OCT-91	N	TRG	DMETCLPTAL	ZINC	5 60	UG/L		B*	20 00								
SW129	SW	REAL	SW01667WC	23-OCT-91	N	TRG	DMETNOCLP	CESIUM	51.00	UG/L		U	1000								
SW129	SW	REAL	SW01667WC	23-OCT-91	N	TRG	DMETNOCLP	LITHIUM	4 30	UG/L		B	100 0								
SW129	SW	REAL	SW01667WC	23-OCT-91	N	TRG	DMETNOCLP	MOLYBDENUM	3 00	UG/L		U	200.0								
SW129	SW	REAL	SW01667WC	23-OCT-91	N	TRG	DMETNOCLP	STRONTIUM	526 00	UG/L			200.0								
SW129	SW	REAL	SW01667WC	23-OCT-91	N	TRG	DMETNOCLP	TIN	17 00	UG/L		U	200 0								
SW129	SW	REAL	SW01667WC	23-OCT-91	N	TRG	SMETCLPTCL	ALUMINUM	945 00	UG/L			200 0								
SW129	SW	REAL	SW01667WC	23-OCT-91	N	TRG	SMETCLPTCL	ANTIMONY	16.70	UG/L		B	60 00								
SW129	SW	REAL	SW01667WC	23-OCT-91	N	TRG	SMETCLPTCL	ARSENIC	2 00	UG/L		U	10 00								
SW129	SW	REAL	SW01667WC	23-OCT-91	N	TRG	SMETCLPTCL	BARIUM	173 00	UG/L		B	200.0								
SW129	SW	REAL	SW01667WC	23-OCT-91	N	TRG	SMETCLPTCL	BERYLLIUM	1 00	UG/L		U	5.000								
SW129	SW	REAL	SW01667WC	23-OCT-91	N	TRG	SMETCLPTCL	CADMIUM	2 00	UG/L		U	5 000								
SW129	SW	REAL	SW01667WC	23-OCT-91	N	TRG	SMETCLPTCL	CALCIUM	80200 00	UG/L			5000								
SW129	SW	REAL	SW01667WC	23-OCT-91	N	TRG	SMETCLPTCL	CHROMIUM	6 30	UG/L		B	10 00								
SW129	SW	REAL	SW01667WC	23-OCT-91	N	TRG	SMETCLPTCL	COBALT	3 00	UG/L		U	50 00								
SW129	SW	REAL	SW01667WC	23-OCT-91	N	TRG	SMETCLPTCL	COPPER	6.00	UG/L		B	25 00								
SW129	SW	REAL	SW01667WC	23-OCT-91	N	TRG	SMETCLPTCL	CYANIDE	2 00	UG/L		U	10 00								
SW129	SW	REAL	SW01667WC	23-OCT-91	N	TRG	SMETCLPTCL	IRON	730 00	UG/L		N*	100 0								
SW129	SW	REAL	SW01667WC	23-OCT-91	N	TRG	SMETCLPTCL	LEAD	1.40	UG/L		B	3 000								
SW129	SW	REAL	SW01667WC	23-OCT-91	N	TRG	SMETCLPTCL	MAGNESIUM	20400 00	UG/L			5000								
SW129	SW	REAL	SW01667WC	23-OCT-91	N	TRG	SMETCLPTCL	MANGANESE	48 90	UG/L			15 00								
SW129	SW	REAL	SW01667WC	23-OCT-91	N	TRG	SMETCLPTCL	MERCURY	0.53	UG/L			0 200								
SW129	SW	REAL	SW01667WC	23-OCT-91	N	TRG	SMETCLPTCL	NICKEL	17.00	UG/L		U	40.00								
SW129	SW	REAL	SW01667WC	23-OCT-91	N	TRG	SMETCLPTCL	POTASSIUM	1830 00	UG/L		B	5000								
SW129	SW	REAL	SW01667WC	23-OCT-91	N	TRG	SMETCLPTCL	SELENIUM	2.00	UG/L		U	5 000								
SW129	SW	REAL	SW01667WC	23-OCT-91	N	TRG	SMETCLPTCL	SILVER	2 00	UG/L		U	10 00								
SW129	SW	REAL	SW01667WC	23-OCT-91	N	TRG	SMETCLPTCL	SODIUM	13700 00	UG/L			5000								
SW129	SW	REAL	SW01667WC	23-OCT-91	N	TRG	SMETCLPTCL	THALLIUM	1 00	UG/L		U	10 00								
SW129	SW	REAL	SW01667WC	23-OCT-91	N	TRG	SMETCLPTCL	VANADIUM	6 30	UG/L		B	50 00								
SW129	SW	REAL	SW01667WC	23-OCT-91	N	TRG	SMETCLPTCL	ZINC	11.70	UG/L		B*	20 00								
SW129	SW	REAL	SW01667WC	23-OCT-91	N	TRG	SMETNOCLP	CESIUM	51 00	UG/L		U	1000								
SW129	SW	REAL	SW01667WC	23-OCT-91	N	TRG	SMETNOCLP	LITHIUM	4.40	UG/L		B	100.0								
SW129	SW	REAL	SW01667WC	23-OCT-91	N	TRG	SMETNOCLP	MOLYBDENUM	3 00	UG/L		U	200.0								
SW129	SW	REAL	SW01667WC	23-OCT-91	N	TRG	SMETNOCLP	STRONTIUM	521.00	UG/L			200 0								
SW129	SW	REAL	SW01667WC	23-OCT-91	N	TRG	SMETNOCLP	TIN	17 00	UG/L		U	200 0								

Location	ST	QC	Sample Number	Smpl Date	D	ID	Group	Chemical	Result	Unit	Error	Qual	D LMT	VA	RN1	RN2	RN3	RN4	VResult	VQual	VDET
SED118	SD	REAL	SD00229WC	21-MAY-91	N																
SED118	SD	REAL	SD00263WC	13-AUG-91	N																
SED118	SD	REAL	SS00195WC	27-MAR-91	N	TRG	TRADS	AMERICIUM-241	005483	PCI/G	00636	J	02								
SED118	SD	REAL	SS00195WC	27-MAR-91	N	TRG	TRADS	CESIUM-137	03612	PCI/G	0536	J	1								
SED118	SD	REAL	SS00195WC	27-MAR-91	N	TRG	TRADS	GROSS ALPHA - DISSOLVED	5 212	PCI/G	2 3		4								
SED118	SD	REAL	SS00195WC	27-MAR-91	N	TRG	TRADS	GROSS BETA - DISSOLVED	19 79	PCI/G	3 69		10								
SED118	SD	REAL	SS00195WC	27-MAR-91	N	TRG	TRADS	PLUTONIUM-239/240	03464	PCI/G	0135		03								
SED118	SD	REAL	SS00195WC	27-MAR-91	N	TRG	TRADS	RADIUM-226	1 074	PCI/G	188		5								
SED118	SD	REAL	SS00195WC	27-MAR-91	N	TRG	TRADS	RADIUM-228	2 046	PCI/G	.364		5								
SED118	SD	REAL	SS00195WC	27-MAR-91	N	TRG	TRADS	STRONTIUM-89,90	.1478	PCI/G	0635	J	1								
SED118	SD	REAL	SS00195WC	27-MAR-91	N	TRG	TRADS	TRITIUM	70.37	PCI/L	202	J	400	V	78	99					
SED118	SD	REAL	SS00195WC	27-MAR-91	N	TRG	TRADS	URANIUM-233,-234	1 32	PCI/G	328		3								
SED118	SD	REAL	SS00195WC	27-MAR-91	N	TRG	TRADS	URANIUM-235	05618	PCI/G	0567	J	.3								
SED118	SD	REAL	SS00195WC	27-MAR-91	N	TRG	TRADS	URANIUM-238	1 096	PCI/G	.291		3								
SW018	SW	REAL	SW00693WC	30-JAN-91	N																
SW018	SW	REAL	SW00899WC	25-MAR-91	N																
SW018	SW	REAL	SW01002WC	16-APR-91	Y																
SW018	SW	REAL	SW01109WC	30-MAY-91	N																
SW018	SW	REAL	SW01212WC	17-JUN-91	N	TRG	DRADS	GROSS ALPHA - DISSOLVED	6 695	PCI/L	3 18		2								
SW018	SW	REAL	SW01212WC	17-JUN-91	N	TRG	DRADS	GROSS BETA - DISSOLVED	11 74	PCI/L	2 88		4								
SW018	SW	REAL	SW01212WC	17-JUN-91	N	TRG	DRADS	RADIUM-226	13	PCI/L	0836	J	5								
SW018	SW	REAL	SW01212WC	17-JUN-91	N	TRG	DRADS	STRONTIUM-89,90	5047	PCI/L	32	J	1								
SW018	SW	REAL	SW01212WC	17-JUN-91	N	TRG	DRADS	TRITIUM	72 57	PCI/L	194	J	400								
SW018	SW	REAL	SW01212WC	17-JUN-91	N	TRG	DRADS	URANIUM-233,-234	2 44	PCI/L	732		6								
SW018	SW	REAL	SW01212WC	17-JUN-91	N	TRG	DRADS	URANIUM-235	2197	PCI/L	205	J	6								
SW018	SW	REAL	SW01212WC	17-JUN-91	N	TRG	DRADS	URANIUM-238	8 434	PCI/L	1.62		6								
SW018	SW	REAL	SW01212WC	17-JUN-91	N	TRG	TRADS	AMERICIUM-241	005482	PCI/L	00451	J	01								
SW018	SW	REAL	SW01212WC	17-JUN-91	N	TRG	TRADS	CESIUM-137	2491	PCI/L	355	J	1								
SW018	SW	REAL	SW01212WC	17-JUN-91	N	TRG	TRADS	PLUTONIUM-239/240	006324	PCI/L	00545	J	01								
SW018	SW	REAL	SW01315WC	15-JUL-91	N	TRG	DRADS	GROSS ALPHA - DISSOLVED	2.924	PCI/L	1 79		2								
SW018	SW	REAL	SW01315WC	15-JUL-91	N	TRG	DRADS	GROSS BETA - DISSOLVED	6 156	PCI/L	1 99		4								
SW018	SW	REAL	SW01315WC	15-JUL-91	N	TRG	DRADS	STRONTIUM-89,90	.3168	PCI/L	.298	J	1								
SW018	SW	REAL	SW01315WC	15-JUL-91	N	TRG	DRADS	TRITIUM	74 32	PCI/L	186	J	400								
SW018	SW	REAL	SW01315WC	15-JUL-91	N	TRG	DRADS	URANIUM-233,-234	2 801	PCI/L	832		6								
SW018	SW	REAL	SW01315WC	15-JUL-91	N	TRG	DRADS	URANIUM-235	-.00805	PCI/L	0114	J	6								
SW018	SW	REAL	SW01315WC	15-JUL-91	N	TRG	DRADS	URANIUM-238	5 022	PCI/L	1.19		.6								
SW018	SW	REAL	SW01315WC	15-JUL-91	N	TRG	TRADS	AMERICIUM-241	.003052	PCI/L	.00433	J	01								
SW018	SW	REAL	SW01315WC	15-JUL-91	N	TRG	TRADS	CESIUM-137	.1103	PCI/L	33	J	1								
SW018	SW	REAL	SW01315WC	15-JUL-91	N	TRG	TRADS	PLUTONIUM-239/240	001972	PCI/L	0028	J	.01								
SW018	SW	REAL	SW01421WC	19-AUG-91	N																
SW018	SW	REAL	SW01527WC	09-SEP-91	N																
SW018	SW	REAL	SW01633WC	07-OCT-91	N																
SW019	SW	REAL	SW01076WC	12-APR-91	N																
SW019	SW	REAL	SW01389WC	23-JUL-91	N	TRG	DRADS	GROSS ALPHA - DISSOLVED	1 403	PCI/L	826	J	2								
SW019	SW	REAL	SW01389WC	23-JUL-91	N	TRG	DRADS	GROSS BETA - DISSOLVED	6 653	PCI/L	1 47		4								
SW019	SW	REAL	SW01389WC	23-JUL-91	N	TRG	DRADS	STRONTIUM-89,90	3574	PCI/L	348	J	1								
SW019	SW	REAL	SW01389WC	23-JUL-91	N	TRG	DRADS	TRITIUM	241 7	PCI/L	205	J	400								
SW019	SW	REAL	SW01389WC	23-JUL-91	N	TRG	DRADS	URANIUM-233,-234	.4812	PCI/L	.305	J	6								
SW019	SW	REAL	SW01389WC	23-JUL-91	N	TRG	DRADS	URANIUM-235	04506	PCI/L	0903	J	6								
SW019	SW	REAL	SW01389WC	23-JUL-91	N	TRG	DRADS	URANIUM-238	.2181	PCI/L	204	J	6								
SW019	SW	REAL	SW01389WC	23-JUL-91	N	TRG	TRADS	AMERICIUM-241	004441	PCI/L	00447	J	01								
SW019	SW	REAL	SW01389WC	23-JUL-91	N	TRG	TRADS	CESIUM-137	.2559	PCI/L	366	J	1								
SW019	SW	REAL	SW01389WC	23-JUL-91	N	TRG	TRADS	PLUTONIUM-239/240	.006751	PCI/L	.00555	J	.01								
SW019	SW	REAL	SW01495WC	22-AUG-91	Y																
SW019	SW	REAL	SW01601WC	23-SEP-91	Y																
SW019	SW	REAL	SW01707WC	31-OCT-91	Y																
SW020	SW	REAL	SW01077WC	12-APR-91	N																
SW020	SW	REAL	SW01390WC	23-JUL-91	N	TRG	DRADS	GROSS ALPHA - DISSOLVED	1 568	PCI/L	731	J	2								
SW020	SW	REAL	SW01390WC	23-JUL-91	N	TRG	DRADS	GROSS BETA - DISSOLVED	6 318	PCI/L	1.39		4								
SW020	SW	REAL	SW01390WC	23-JUL-91	N	TRG	DRADS	STRONTIUM-89,90	.6723	PCI/L	.427	J	1								
SW020	SW	REAL	SW01390WC	23-JUL-91	N	TRG	DRADS	TRITIUM	234	PCI/L	204	J	400								
SW020	SW	REAL	SW01390WC	23-JUL-91	N	TRG	DRADS	URANIUM-233,-234	.3408	PCI/L	.271	J	.6								
SW020	SW	REAL	SW01390WC	23-JUL-91	N	TRG	DRADS	URANIUM-235	-.0161	PCI/L	0163	J	6								

Location	ST	QC	Sample Number	Smpl Date	D	ID	Group	Chemical	Result	Unit	Error	Qual	D LMT	VA	RN1	RN2	RN3	RN4	VResult	VQual	VDET
SW020	SW	REAL	SW01390WC	23-JUL-91	N	TRG	DRADS	URANIUM-238	1351	PCI/L	176	J	6								
SW020	SW	REAL	SW01390WC	23-JUL-91	N	TRG	TRADS	AMERICIUM-241	03563	PCI/L	0157		01								
SW020	SW	REAL	SW01390WC	23-JUL-91	N	TRG	TRADS	CESIUM-137	- 0522	PCI/L	384	J	1								
SW020	SW	REAL	SW01390WC	23-JUL-91	N	TRG	TRADS	PLUTONIUM-239/240	1346	PCI/L	0333		.01								
SW020	SW	REAL	SW01496WC	22-AUG-91	Y																
SW020	SW	REAL	SW01602WC	23-SEP-91	Y																
SW020	SW	REAL	SW01708WC	31-OCT-91	Y																
SW022	SW	REAL	SW01078WC	12-APR-91	Y																
SW022	SW	REAL	SW01391WC	23-JUL-91	N	TRG	DRADS	GROSS ALPHA - DISSOLVED	3 054	PCI/L	1 15		2								
SW022	SW	REAL	SW01391WC	23-JUL-91	N	TRG	DRADS	GROSS BETA - DISSOLVED	7 494	PCI/L	1 51		4								
SW022	SW	REAL	SW01391WC	23-JUL-91	N	TRG	DRADS	STRONTIUM-89,90	.8201	PCI/L	.46	J	1								
SW022	SW	REAL	SW01391WC	23-JUL-91	N	TRG	DRADS	TRITIUM	211 8	PCI/L	203	J	400								
SW022	SW	REAL	SW01391WC	23-JUL-91	N	TRG	DRADS	URANIUM-233,-234	.08114	PCI/L	.126	J	.6								
SW022	SW	REAL	SW01391WC	23-JUL-91	N	TRG	DRADS	URANIUM-235	- 00706	PCI/L	01	J	6								
SW022	SW	REAL	SW01391WC	23-JUL-91	N	TRG	DRADS	URANIUM-238	3493	PCI/L	.253	J	6								
SW022	SW	REAL	SW01391WC	23-JUL-91	N	TRG	TRADS	AMERICIUM-241	008091	PCI/L	.00667	J	01								
SW022	SW	REAL	SW01391WC	23-JUL-91	N	TRG	TRADS	CESIUM-137	- 0565	PCI/L	323	J	1								
SW022	SW	REAL	SW01391WC	23-JUL-91	N	TRG	TRADS	PLUTONIUM-239/240	.03967	PCI/L	0176		01								
SW022	SW	REAL	SW01497WC	22-AUG-91	Y																
SW022	SW	REAL	SW01603WC	23-SEP-91	Y																
SW022	SW	REAL	SW01709WC	31-OCT-91	Y																
SW022	SW	REAL	SW60067WCA	15-MAR-91	N																
SW022	SW	REAL	SW60070WC	10-APR-91	N																
SW022	SW	REAL	SW60071WC	15-APR-91	N																
SW022	SW	REAL	SW60074WC	15-APR-91	N																
SW022	SW	REAL	SW60078WC	01-MAY-91	N	TRG	DRADS	TRITIUM	-13 5	PCI/L	186	J	400								
SW022	SW	REAL	SW60082WC	01-MAY-91	N	TRG	DRADS	TRITIUM	50 17	PCI/L	190	J	400								
SW022	SW	REAL	SW60087WC	06-MAY-91	N	TRG	DRADS	TRITIUM	-20 2	PCI/L	186	J	400								
SW022	SW	REAL	SW60088WC	17-MAY-91	N	TRG	DRADS	TRITIUM	77 14	PCI/L	195	J	400								
SW022	SW	REAL	SW60088WC	17-MAY-91	N		TRADS	GROSS ALPHA - SUSPENDED	7 353	PCI/L	3 72792		3 7								
SW022	SW	REAL	SW60088WC	17-MAY-91	N		TRADS	GROSS BETA - SUSPENDED	10.58	PCI/L	3 78084		5 2								
SW022	SW	REAL	SW60089WC	17-MAY-91	N	TRG	DRADS	TRITIUM	123.4	PCI/L	198	J	400								
SW022	SW	REAL	SW60089WC	17-MAY-91	N		TRADS	GROSS ALPHA - SUSPENDED	.8773	PCI/L	1 384544		2.0								
SW022	SW	REAL	SW60089WC	17-MAY-91	N		TRADS	GROSS BETA - SUSPENDED	1 989	PCI/L	1 3426		2 1								
SW022	SW	REAL	SW60098WC	23-MAY-91	N	TRG	DRADS	TRITIUM	21.34	PCI/L	192	J	400								
SW022	SW	REAL	SW60098WC	23-MAY-91	N	TRG	TRADS	GROSS ALPHA - DISSOLVED	6 4	PCI/L	2 4		2 0								
SW022	SW	REAL	SW60098WC	23-MAY-91	N	TRG	TRADS	GROSS BETA - DISSOLVED	13	PCI/L	1 8		1.9								
SW022	SW	REAL	SW60102WC	03-JUN-91	N	TRG	DRADS	TRITIUM	-32 9	PCI/L	139	J	400								
SW022	SW	REAL	SW60102WC	03-JUN-91	N	TRG	TRADS	GROSS ALPHA - DISSOLVED	31	PCI/L	9 5		7.1								
SW022	SW	REAL	SW60102WC	03-JUN-91	N	TRG	TRADS	GROSS BETA - DISSOLVED	30	PCI/L	3 7		3 4								
SW022	SW	REAL	SW60103WC	03-JUN-91	N	TRG	DRADS	TRITIUM	62 51	PCI/L	146	J	400								
SW022	SW	REAL	SW60103WC	03-JUN-91	N	TRG	TRADS	GROSS ALPHA - DISSOLVED	0.46	PCI/L	1 6	U	2.5								
SW022	SW	REAL	SW60103WC	03-JUN-91	N	TRG	TRADS	GROSS BETA - DISSOLVED	4 8	PCI/L	1 4		1 8								
SW022	SW	REAL	SW60112WC	11-JUN-91	N	TRG	DRADS	TRITIUM	7 748	PCI/L	191	J	400								
SW022	SW	REAL	SW60112WC	11-JUN-91	N	TRG	TRADS	GROSS ALPHA - DISSOLVED	12	PCI/L	4 5		3 7								
SW022	SW	REAL	SW60112WC	11-JUN-91	N	TRG	TRADS	GROSS BETA - DISSOLVED	14	PCI/L	1 9		1 9								
SW022	SW	REAL	SW60114WC	25-JUN-91	N	TRG	DRADS	TRITIUM	13 92	PCI/L	193	J	400								
SW022	SW	REAL	SW60114WC	25-JUN-91	N	TRG	TRADS	GROSS ALPHA - DISSOLVED	-0 050	PCI/L	1.5	U	2 4								
SW022	SW	REAL	SW60114WC	25-JUN-91	N	TRG	TRADS	GROSS BETA - DISSOLVED	2 8	PCI/L	0 84	J	1 2								
SW022	SW	REAL	SW60117WC	10-JUL-91	N	TRG	DRADS	TRITIUM	96.69	PCI/L	204	J	400								
SW022	SW	REAL	SW60120WC	10-JUL-91	N	TRG	DRADS	TRITIUM	89 92	PCI/L	203	J	400								
SW022	SW	REAL	SW60125WC	23-JUL-91	N	TRG	DRADS	TRITIUM	10.24	PCI/L	193	J	400								
SW022	SW	REAL	SW60129WC	24-JUL-91	N	TRG	DRADS	TRITIUM	32.57	PCI/L	194	J	400								
SW022	SW	REAL	SW60130WC	29-JUL-91	N	TRG	DRADS	TRITIUM	-19.5	PCI/L	192	J	400								
SW022	SW	REAL	SW60132WC	05-AUG-91	N	TRG	DRADS	TRITIUM	72.8	PCI/L	197	J	400								
SW022	SW	REAL	SW60136WC	05-AUG-91	N	TRG	DRADS	TRITIUM	-36.4	PCI/L	191	J	400								
SW022	SW	REAL	SW60140WC	07-AUG-91	N	TRG	DRADS	TRITIUM	-14	PCI/L	192	J	400								
SW022	SW	REAL	SW60145WC	12-AUG-91	N	TRG	DRADS	TRITIUM	-42.9	PCI/L	212	J	400								
SW022	SW	REAL	SW60148WC	12-AUG-91	N	TRG	DRADS	TRITIUM	-3.73	PCI/L	214	J	400								
SW022	SW	REAL	SW60156WC	19-AUG-91	N																
SW023	SW	DUP	SW80113WC	17-APR-91	N																
SW023	SW	DUP	SW80159WC	16-SEP-91	N																
SW023	SW	LR	SW01583WCLR	16-SEP-91	N																

Location	ST	QC	Sample Number	Smpl Date	D	ID	Group	Chemical	Result	Unit	Error	Qual	D LMT	VA	RN1	RN2	RN3	RN4	VResult	VQual	VDET
SW023	SW	MS	SW01058WCMSD	~~17-APR-91~~	~~N~~																
SW023	SW	MS	SW01583WCMS	~~16-SEP-91~~	~~N~~																
SW023	SW	MSD	SW01058WCMS	~~17-APR-91~~	~~N~~																
SW023	SW	MSD	SW01583WCMSD	~~16-SEP-91~~	~~N~~																
SW023	SW	REAL	SW00750WC	14-JAN-91	N	TRG	DRADS	AMERICIUM-241	.4000	PCI/L		U	01								
SW023	SW	REAL	SW00750WC	14-JAN-91	N	TRG	DRADS	GROSS ALPHA PARTICLE RADIOACTI	2 000	PCI/L		U	2								
SW023	SW	REAL	SW00750WC	14-JAN-91	N	TRG	DRADS	GROSS BETA PARTICLE RADIOACTIV	6 200	PCI/L	1 900		4								
SW023	SW	REAL	SW00750WC	14-JAN-91	N	TRG	DRADS	GROSS GAMMA	.7000	PCI/L		U	1								
SW023	SW	REAL	SW00750WC	14-JAN-91	N	TRG	DRADS	GROSS GAMMA	1 000	PCI/L		U	1								
SW023	SW	REAL	SW00750WC	14-JAN-91	N	TRG	DRADS	PLUTONIUM-239	.0200	PCI/L		U	01								
SW023	SW	REAL	SW00750WC	14-JAN-91	N	TRG	DRADS	STRONTIUM-89	.4000	PCI/L		U	1								
SW023	SW	REAL	SW00750WC	14-JAN-91	N	TRG	DRADS	STRONTIUM-90	.8300	PCI/L	3500		1								
SW023	SW	REAL	SW00750WC	14-JAN-91	N	TRG	DRADS	TRITIUM	200 0	PCI/L		U	400								
SW023	SW	REAL	SW00750WC	14-JAN-91	N	TRG	DRADS	URANIUM-234	3.000	PCI/L	5000		6								
SW023	SW	REAL	SW00750WC	14-JAN-91	N	TRG	DRADS	URANIUM-235	.1000	PCI/L		U	6								
SW023	SW	REAL	SW00750WC	14-JAN-91	N	TRG	DRADS	URANIUM-238	2 100	PCI/L	4000		6								
SW023	SW	REAL	SW00853WC	~~20-FEB-91~~	~~N~~																
SW023	SW	REAL	SW00956WC	28-MAR-91	N	TRG	DRADS	AMERICIUM-241	.0300	PCI/L		U	01								
SW023	SW	REAL	SW00956WC	28-MAR-91	N	TRG	DRADS	AMERICIUM-241	0700	PCI/L		U	01								
SW023	SW	REAL	SW00956WC	28-MAR-91	N	TRG	DRADS	GROSS ALPHA PARTICLE RADIOACTI	4.500	PCI/L	1 700		2								
SW023	SW	REAL	SW00956WC	28-MAR-91	N	TRG	DRADS	GROSS ALPHA PARTICLE RADIOACTI	5.300	PCI/L	1 800		2								
SW023	SW	REAL	SW00956WC	28-MAR-91	N	TRG	DRADS	GROSS BETA PARTICLE RADIOACTIV	3.000	PCI/L	1 800		4								
SW023	SW	REAL	SW00956WC	28-MAR-91	N	TRG	DRADS	GROSS BETA PARTICLE RADIOACTIV	3 000	PCI/L		U	4								
SW023	SW	REAL	SW00956WC	28-MAR-91	N	TRG	DRADS	GROSS GAMMA	0350	PCI/L	6360		1								
SW023	SW	REAL	SW00956WC	28-MAR-91	N	TRG	DRADS	GROSS GAMMA	0370	PCI/L	6630		1								
SW023	SW	REAL	SW00956WC	28-MAR-91	N	TRG	DRADS	GROSS GAMMA	.5700	PCI/L	.7800		1								
SW023	SW	REAL	SW00956WC	28-MAR-91	N	TRG	DRADS	GROSS GAMMA	1 100	PCI/L	7000		1								
SW023	SW	REAL	SW00956WC	28-MAR-91	N	TRG	DRADS	PLUTONIUM-239	.0100	PCI/L		U	01								
SW023	SW	REAL	SW00956WC	28-MAR-91	N	TRG	DRADS	STRONTIUM-89	6000	PCI/L		U	1								
SW023	SW	REAL	SW00956WC	28-MAR-91	N	TRG	DRADS	STRONTIUM-89	1 000	PCI/L		U	1								
SW023	SW	REAL	SW00956WC	28-MAR-91	N	TRG	DRADS	STRONTIUM-90	6000	PCI/L		U	1								
SW023	SW	REAL	SW00956WC	28-MAR-91	N	TRG	DRADS	STRONTIUM-90	1.000	PCI/L		U	1								
SW023	SW	REAL	SW00956WC	28-MAR-91	N	TRG	DRADS	TRITIUM	280.0	PCI/L	110 0		400								
SW023	SW	REAL	SW00956WC	28-MAR-91	N	TRG	DRADS	TRITIUM	340.0	PCI/L	110 0		400								
SW023	SW	REAL	SW00956WC	28-MAR-91	N	TRG	DRADS	URANIUM-234	3.100	PCI/L	.6000		6								
SW023	SW	REAL	SW00956WC	28-MAR-91	N	TRG	DRADS	URANIUM-234	3 400	PCI/L	6000		6								
SW023	SW	REAL	SW00956WC	28-MAR-91	N	TRG	DRADS	URANIUM-235	.1000	PCI/L		U	6								
SW023	SW	REAL	SW00956WC	28-MAR-91	N	TRG	DRADS	URANIUM-238	2.600	PCI/L	6000		6								
SW023	SW	REAL	SW00956WC	28-MAR-91	N	TRG	DRADS	URANIUM-238	2 700	PCI/L	.5000		6								
SW023	SW	REAL	SW01058WC	17-APR-91	N																
SW023	SW	REAL	SW01165WC	20-MAY-91	N																
SW023	SW	REAL	SW01268WC	25-JUN-91	N	TRG	DRADS	GROSS ALPHA - DISSOLVED	11 93	PCI/L	4 57		2								
SW023	SW	REAL	SW01268WC	25-JUN-91	N	TRG	DRADS	GROSS BETA - DISSOLVED	3 481	PCI/L	1 75	J	4								
SW023	SW	REAL	SW01268WC	25-JUN-91	N	TRG	DRADS	RADIUM-226	.1409	PCI/L	.0848	J	5								
SW023	SW	REAL	SW01268WC	25-JUN-91	N	TRG	DRADS	STRONTIUM-89,90	.9856	PCI/L	.511	J	1								
SW023	SW	REAL	SW01268WC	25-JUN-91	N	TRG	DRADS	TRITIUM	226 7	PCI/L	212	J	400								
SW023	SW	REAL	SW01268WC	25-JUN-91	N	TRG	DRADS	URANIUM-233,-234	5 038	PCI/L	639		.6								
SW023	SW	REAL	SW01268WC	25-JUN-91	N	TRG	DRADS	URANIUM-235	.1633	PCI/L	.0785	J	6								
SW023	SW	REAL	SW01268WC	25-JUN-91	N	TRG	DRADS	URANIUM-238	4.57	PCI/L	.592		6								
SW023	SW	REAL	SW01268WC	25-JUN-91	N	TRG	TRADS	AMERICIUM-241	.001574	PCI/L	.00306	J	01								
SW023	SW	REAL	SW01268WC	25-JUN-91	N	TRG	TRADS	CESIUM-137	1334	PCI/L	307	J	1								
SW023	SW	REAL	SW01268WC	25-JUN-91	N	TRG	TRADS	PLUTONIUM-239/240	003866	PCI/L	00494	J	01								
SW023	SW	REAL	SW01371WC	17-JUL-91	N	TRG	DRADS	GROSS ALPHA - DISSOLVED	3 83	PCI/L	2 08		2								
SW023	SW	REAL	SW01371WC	17-JUL-91	N	TRG	DRADS	GROSS BETA - DISSOLVED	4.079	PCI/L	1 77		4								
SW023	SW	REAL	SW01371WC	17-JUL-91	N	TRG	DRADS	STRONTIUM-89,90	.8999	PCI/L	.49	J	1								
SW023	SW	REAL	SW01371WC	17-JUL-91	N	TRG	DRADS	TRITIUM	177.6	PCI/L	219	J	400								
SW023	SW	REAL	SW01371WC	17-JUL-91	N	TRG	DRADS	URANIUM-233,-234	3.357	PCI/L	1.1		6								
SW023	SW	REAL	SW01371WC	17-JUL-91	N	TRG	DRADS	URANIUM-235	.2866	PCI/L	295	J	.6								
SW023	SW	REAL	SW01371WC	17-JUL-91	N	TRG	DRADS	URANIUM-238	2.991	PCI/L	1.03		.6								
SW023	SW	REAL	SW01371WC	17-JUL-91	N	TRG	TRADS	AMERICIUM-241	001189	PCI/L	.00238	J	.01								
SW023	SW	REAL	SW01371WC	17-JUL-91	N	TRG	TRADS	CESIUM-137	.2267	PCI/L	364	J	1								
SW023	SW	REAL	SW01371WC	17-JUL-91	N	TRG	TRADS	PLUTONIUM-239/240	.00367	PCI/L	.00427	J	01								
SW023	SW	REAL	SW01477WC	06-AUG-91	N	TRG	DRADS	GROSS ALPHA - DISSOLVED	6.284	PCI/L	3.2		2								

Location	ST	QC	Sample Number	Smpl Date	D	ID	Group		Chemical	Result	Unit	Error	Qual	D LMT	VA	RN1	RN2	RN3	RN4	VResult	VQual	VDET
SW023	SW	REAL	SW01477WC	06-AUG-91	N	TRG	DRADS	✓	GROSS BETA - DISSOLVED	7 756	PCI/L	2 27		4								
SW023	SW	REAL	SW01477WC	06-AUG-91	N	TRG	DRADS		RADIUM-226	1625	PCI/L	0839	J	5								
SW023	SW	REAL	SW01477WC	06-AUG-91	N	TRG	DRADS		STRONTIUM-89,90	621	PCI/L	439	J	1								
SW023	SW	REAL	SW01477WC	06-AUG-91	N	TRG	DRADS		TRITIUM	106 2	PCI/L	204	J	400								
SW023	SW	REAL	SW01477WC	06-AUG-91	N	TRG	DRADS		URANIUM-233,-234	4 122	PCI/L	.983		6								
SW023	SW	REAL	SW01477WC	06-AUG-91	N	TRG	DRADS		URANIUM-235	04312	PCI/L	0864	J	6								
SW023	SW	REAL	SW01477WC	06-AUG-91	N	TRG	DRADS		URANIUM-238	3 227	PCI/L	844		6								
SW023	SW	REAL	SW01477WC	06-AUG-91	N	TRG	TRADS		AMERICIUM-241	003179	PCI/L	.00406	J	01								
SW023	SW	REAL	SW01477WC	06-AUG-91	N	TRG	TRADS		CESIUM-137	1667	PCI/L	3	J	1								
SW023	SW	REAL	SW01477WC	06-AUG-91	N	TRG	TRADS		PLUTONIUM-239/240	.003278	PCI/L	00521	J	01								
SW023	SW	REAL	SW01583WC	16-SEP-91	N																	
SW023	SW	REAL	SW01689WC	15-OCT-91	N																	
SW023	SW	REAL	SW60062WC	22-FEB-91	N		TRADS	✓	GROSS ALPHA - SUSPENDED	4 392	PCI/L	3 75536		4 4								
SW023	SW	REAL	SW60062WC	22-FEB-91	N		TRADS	✓	GROSS BETA - SUSPENDED	13 98	PCI/L	2 7734		3 2								
SW023	SW	REAL	SW60063WC	22-FEB-91	N		TRADS	✓	GROSS ALPHA - SUSPENDED	1 919	PCI/L	1 387876		1 5								
SW023	SW	REAL	SW60063WC	22-FEB-91	N		TRADS	✓	GROSS BETA - SUSPENDED	5.828	PCI/L	1 32986		1 6								
SW023	SW	REAL	SW60066WCB	02-APR-91	N																	
SW023	SW	REAL	SW60068WC	10-APR-91	N																	
SW023	SW	REAL	SW60069WC	15-APR-91	N																	
SW023	SW	REAL	SW60075WC	23-APR-91	N	TRG	DRADS		TRITIUM	18 36	PCI/L	188	J	400								
SW023	SW	REAL	SW60083WC	01-MAY-91	N	TRG	DRADS		TRITIUM	7.719	PCI/L	187	J	400								
SW023	SW	REAL	SW60090WC	17-MAY-91	N	TRG	DRADS		TRITIUM	90 64	PCI/L	196	J	400								
SW023	SW	REAL	SW60090WC	17-MAY-91	N		TRADS	✓	GROSS ALPHA - SUSPENDED	6 589	PCI/L	3 62796		3 4								
SW023	SW	REAL	SW60090WC	17-MAY-91	N		TRADS	✓	GROSS BETA - SUSPENDED	17 71	PCI/L	4 08072		5 1								
SW023	SW	REAL	SW60100WC	23-MAY-91	N	TRG	DRADS		TRITIUM	128 9	PCI/L	198	J	400								
SW023	SW	REAL	SW60100WC	23-MAY-91	N	TRG	TRADS		GROSS ALPHA - DISSOLVED ?	6.0	PCI/L	0 97		0 87								
SW023	SW	REAL	SW60100WC	23-MAY-91	N	TRG	TRADS		GROSS BETA - DISSOLVED ?	8 9	PCI/L	0 80		1 0								
SW023	SW	REAL	SW60101WC	28-MAY-91	N	TRG	DRADS		TRITIUM	114 9	PCI/L	197	J	400								
SW023	SW	REAL	SW60101WC	28-MAY-91	N	TRG	TRADS		GROSS ALPHA - DISSOLVED ?	2 9	PCI/L	1 7		1 8								
SW023	SW	REAL	SW60101WC	28-MAY-91	N	TRG	TRADS		GROSS BETA - DISSOLVED ?	6 5	PCI/L	1 5		1 9								
SW023	SW	REAL	SW60124WC	23-JUL-91	N	TRG	DRADS		TRITIUM	132 1	PCI/L	199	J	400								
SW023	SW	REAL	SW60133WC	05-AUG-91	N																	
SW023	SW	REAL	SW60141WC	07-AUG-91	N	TRG	DRADS		TRITIUM	81 18	PCI/L	197	J	400								
SW023	SW	REAL	SW60149WC	12-AUG-91	N	TRG	DRADS		TRITIUM	-26 1	PCI/L	213	J	400								
SW023	SW	REAL	SW60157WC	19-AUG-91	N																	
SW023	SW	RNS	SW80112WC	17-APR-91	N																	
SW023	SW	RNS	SW80158WC	16-SEP-91	N																	
SW023	SW		SW60066WC	08-APR-91	N		TRADS	✓	GROSS ALPHA - SUSPENDED	1 83	PCI/L	1 791048		2 3								
SW023	SW		SW60066WC	08-APR-91	N		TRADS	✓	GROSS BETA - SUSPENDED	4.979	PCI/L	1 251264		1 5								
SW037	SW	REAL	SW00720WC	~~08-JAN-91~~	~~Y~~																	
SW037	SW	REAL	SW00823WC	20-FEB-91	N																	
SW037	SW	REAL	SW00926WC	21-MAR-91	Y																	
SW037	SW	REAL	SW01028WC	09-APR-91	Y																	
SW037	SW	REAL	SW01135WC	16-MAY-91	Y																	
SW037	SW	REAL	SW01238WC	20-JUN-91	Y																	
SW037	SW	REAL	SW01341WC	25-JUL-91	Y																	
SW037	SW	REAL	SW01447WC	28-AUG-91	Y																	
SW037	SW	REAL	SW01553WC	18-SEP-91	Y																	
SW037	SW	REAL	SW01659WC	~~23-OCT-91~~	~~Y~~																	
SW038	SW	REAL	SW00726WC	~~08-JAN-91~~	~~N~~																	
SW038	SW	REAL	SW00829WC	~~20-FEB-91~~	~~N~~																	
SW038	SW	REAL	SW00932WC	28-MAR-91	N	TRG	DRADS		AMERICIUM-241	.0200	PCI/L		U	01								
SW038	SW	REAL	SW00932WC	28-MAR-91	N	TRG	DRADS	✓	GROSS ALPHA PARTICLE RADIOACTI	1 700	PCI/L	1 400		2								
SW038	SW	REAL	SW00932WC	28-MAR-91	N	TRG	DRADS	✓	GROSS BETA PARTICLE RADIOACTIV	3.000	PCI/L		U	4								
SW038	SW	REAL	SW00932WC	28-MAR-91	N	TRG	DRADS		GROSS GAMMA	-0.32	PCI/L	7000		1								
SW038	SW	REAL	SW00932WC	28-MAR-91	N	TRG	DRADS		GROSS GAMMA	.7900	PCI/L	.4200		1								
SW038	SW	REAL	SW00932WC	28-MAR-91	N	TRG	DRADS		PLUTONIUM-239	.0100	PCI/L		U	01								
SW038	SW	REAL	SW00932WC	28-MAR-91	N	TRG	DRADS		STRONTIUM-89	.8000	PCI/L		U	1								
SW038	SW	REAL	SW00932WC	28-MAR-91	N	TRG	DRADS		STRONTIUM-90	.9000	PCI/L		U	1								
SW038	SW	REAL	SW00932WC	28-MAR-91	N	TRG	DRADS		TRITIUM	190.0	PCI/L	100 0		400								
SW038	SW	REAL	SW00932WC	28-MAR-91	N	TRG	DRADS		URANIUM-234	4.500	PCI/L	.8000		.6								
SW038	SW	REAL	SW00932WC	28-MAR-91	N	TRG	DRADS		URANIUM-235	.2000	PCI/L		U	6								
SW038	SW	REAL	SW00932WC	28-MAR-91	N	TRG	DRADS		URANIUM-238	3.000	PCI/L	7000		.6								

Location	ST	QC	Sample Number	Smpl Date	D	ID	Group	Chemical	Result	Unit	Error	Qual	D LMT	VA	RN1	RN2	RN3	RN4	VResult	VQual	VDET
SW038	SW	REAL	SW01034WC	09-APR-91	N																
SW038	SW	REAL	SW01141WC	16-MAY-91	N																
SW038	SW	REAL	SW01244WC	20-JUN-91	N	TRG	DRADS	GROSS ALPHA - DISSOLVED	5 741	PCI/L	3 64		2								
SW038	SW	REAL	SW01244WC	20-JUN-91	N	TRG	DRADS	GROSS BETA - DISSOLVED	1 947	PCI/L	1 44	J	4								
SW038	SW	REAL	SW01244WC	20-JUN-91	N	TRG	DRADS	RADIUM-226	1598	PCI/L	0848	J	5								
SW038	SW	REAL	SW01244WC	20-JUN-91	N	TRG	DRADS	STRONTIUM-89,90	5306	PCI/L	.311	J	1								
SW038	SW	REAL	SW01244WC	20-JUN-91	N	TRG	DRADS	TRITIUM	83 59	PCI/L	196	J	400								
SW038	SW	REAL	SW01244WC	20-JUN-91	N	TRG	DRADS	URANIUM-233,-234	1.719	PCI/L	582		.6								
SW038	SW	REAL	SW01244WC	20-JUN-91	N	TRG	DRADS	URANIUM-235	06613	PCI/L	.119	J	.6								
SW038	SW	REAL	SW01244WC	20-JUN-91	N	TRG	DRADS	URANIUM-238	8514	PCI/L	.393		6								
SW038	SW	REAL	SW01244WC	20-JUN-91	N	TRG	TRADS	AMERICIUM-241	.006123	PCI/L	00616	J	01								
SW038	SW	REAL	SW01244WC	20-JUN-91	N	TRG	TRADS	CESIUM-137	.1189	PCI/L	271	J	1								
SW038	SW	REAL	SW01244WC	20-JUN-91	N	TRG	TRADS	PLUTONIUM-239/240	001197	PCI/L	0024	J	.01								
SW038	SW	REAL	SW01347WC	25-JUL-91	N	TRG	DRADS	GROSS ALPHA - DISSOLVED	2 276	PCI/L	1.76		2								
SW038	SW	REAL	SW01347WC	25-JUL-91	N	TRG	DRADS	GROSS BETA - DISSOLVED	2 644	PCI/L	1 4	J	4								
SW038	SW	REAL	SW01347WC	25-JUL-91	N	TRG	DRADS	STRONTIUM-89,90	5417	PCI/L	387	J	1								
SW038	SW	REAL	SW01347WC	25-JUL-91	N	TRG	DRADS	TRITIUM	16 47	PCI/L	211	J	400								
SW038	SW	REAL	SW01347WC	25-JUL-91	N	TRG	DRADS	URANIUM-233,-234	1 901	PCI/L	.809		.6								
SW038	SW	REAL	SW01347WC	25-JUL-91	N	TRG	DRADS	URANIUM-235	.2228	PCI/L	266	J	6								
SW038	SW	REAL	SW01347WC	25-JUL-91	N	TRG	DRADS	URANIUM-238	6043	PCI/L	44		.6								
SW038	SW	REAL	SW01347WC	25-JUL-91	N	TRG	TRADS	AMERICIUM-241	003108	PCI/L	00441	J	01								
SW038	SW	REAL	SW01347WC	25-JUL-91	N	TRG	TRADS	CESIUM-137	-.095	PCI/L	.344	J	1								
SW038	SW	REAL	SW01347WC	25-JUL-91	N	TRG	TRADS	PLUTONIUM-239/240	001146	PCI/L	.0023	J	01								
SW038	SW	REAL	SW01453WC	28-AUG-91	N																
SW038	SW	REAL	SW01559WC	18-SEP-91	N																
SW038	SW	REAL	SW01665WC	23-OCT-91	N																
SW038	SW	REAL	SW01716WC	07-NOV-91	N																
SW093	SW	LR	SW00961WCLR	14-MAR-91	N																
SW093	SW	REAL	SW00755WC	30-JAN-91	N																
SW093	SW	REAL	SW00858WC	20-FEB-91	N																
SW093	SW	REAL	SW00961WC	14-MAR-91	N	TRG	DRADS	AMERICIUM-241	.0090	PCI/L		U	01								
SW093	SW	REAL	SW00961WC	14-MAR-91	N	TRG	DRADS	AMERICIUM-241	.0200	PCI/L		U	01								
SW093	SW	REAL	SW00961WC	14-MAR-91	N	TRG	DRADS	GROSS ALPHA PARTICLE RADIOACTI	3.000	PCI/L		U	2								
SW093	SW	REAL	SW00961WC	14-MAR-91	N	TRG	DRADS	GROSS BETA PARTICLE RADIOACTIV	6.400	PCI/L	1 900		4								
SW093	SW	REAL	SW00961WC	14-MAR-91	N	TRG	DRADS	GROSS BETA PARTICLE RADIOACTIV	8 700	PCI/L	2 000		4								
SW093	SW	REAL	SW00961WC	14-MAR-91	N	TRG	DRADS	GROSS GAMMA	-0.19	PCI/L	3400		1								
SW093	SW	REAL	SW00961WC	14-MAR-91	N	TRG	DRADS	GROSS GAMMA	.0071	PCI/L	.5760		1								
SW093	SW	REAL	SW00961WC	14-MAR-91	N	TRG	DRADS	GROSS GAMMA	2800	PCI/L	3100		1								
SW093	SW	REAL	SW00961WC	14-MAR-91	N	TRG	DRADS	GROSS GAMMA	.3400	PCI/L	.6100		1								
SW093	SW	REAL	SW00961WC	14-MAR-91	N	TRG	DRADS	GROSS GAMMA	.6000	PCI/L		U	1								
SW093	SW	REAL	SW00961WC	14-MAR-91	N	TRG	DRADS	GROSS GAMMA	.7000	PCI/L		U	1								
SW093	SW	REAL	SW00961WC	14-MAR-91	N	TRG	DRADS	GROSS GAMMA	1.000	PCI/L		U	1								
SW093	SW	REAL	SW00961WC	14-MAR-91	N	TRG	DRADS	PLUTONIUM-239	0100	PCI/L		U	01								
SW093	SW	REAL	SW00961WC	14-MAR-91	N	TRG	DRADS	PLUTONIUM-239	0200	PCI/L		U	01								
SW093	SW	REAL	SW00961WC	14-MAR-91	N	TRG	DRADS	STRONTIUM-89	1.000	PCI/L		U	1								
SW093	SW	REAL	SW00961WC	14-MAR-91	N	TRG	DRADS	STRONTIUM-90	4000	PCI/L		U	1								
SW093	SW	REAL	SW00961WC	14-MAR-91	N	TRG	DRADS	TRITIUM	200 0	PCI/L		U	400								
SW093	SW	REAL	SW00961WC	14-MAR-91	N	TRG	DRADS	URANIUM-234	2.100	PCI/L	6000		6								
SW093	SW	REAL	SW00961WC	14-MAR-91	N	TRG	DRADS	URANIUM-234	3 000	PCI/L	7000		6								
SW093	SW	REAL	SW00961WC	14-MAR-91	N	TRG	DRADS	URANIUM-235	2000	PCI/L		U	.6								
SW093	SW	REAL	SW00961WC	14-MAR-91	N	TRG	DRADS	URANIUM-238	3.900	PCI/L	8000		6								
SW093	SW	REAL	SW00961WC	14-MAR-91	N	TRG	DRADS	URANIUM-238	4.500	PCI/L	.9000		6								
SW093	SW	REAL	SW01063WC	15-APR-91	N																
SW093	SW	REAL	SW01170WC	22-MAY-91	N																
SW093	SW	REAL	SW01273WC	26-JUN-91	N	TRG	DRADS	GROSS ALPHA - DISSOLVED	5.506	PCI/L	2.65		2								
SW093	SW	REAL	SW01273WC	26-JUN-91	N	TRG	DRADS	GROSS BETA - DISSOLVED	4.701	PCI/L	1.61		4								
SW093	SW	REAL	SW01273WC	26-JUN-91	N	TRG	DRADS	RADIUM-226	1425	PCI/L	.0824	J	5								
SW093	SW	REAL	SW01273WC	26-JUN-91	N	TRG	DRADS	STRONTIUM-89,90	5786	PCI/L	.332	J	1								
SW093	SW	REAL	SW01273WC	26-JUN-91	N	TRG	DRADS	TRITIUM	42.44	PCI/L	201	J	400								
SW093	SW	REAL	SW01273WC	26-JUN-91	N	TRG	DRADS	URANIUM-233,-234	2 646	PCI/L	.396		6								
SW093	SW	REAL	SW01273WC	26-JUN-91	N	TRG	DRADS	URANIUM-235	1074	PCI/L	.0628	J	.6								
SW093	SW	REAL	SW01273WC	26-JUN-91	N	TRG	DRADS	URANIUM-238	4.152	PCI/L	.548		.6								
SW093	SW	REAL	SW01273WC	26-JUN-91	N	TRG	TRADS	AMERICIUM-241	002936	PCI/L	00416	J	01								

Location	ST	QC	Sample Number	Smpl Date	D	ID	Group	Chemical	Result	Unit	Error	Qual	D LMT	VA	RN1	RN2	RN3	RN4	VResult	VQual	VDET
SW093	SW	REAL	SW01273WC	26-JUN-91	N	TRG	TRADS	CESIUM-137	- 358	PCI/L	499	J	1								
SW093	SW	REAL	SW01273WC	26-JUN-91	N	TRG	TRADS	PLUTONIUM-239/240	0002226	PCI/L	00194	J	01								
SW093	SW	REAL	SW01376WC	29-JUL-91	N	TRG	DRADS	GROSS ALPHA - DISSOLVED	3.811	PCI/L	2 2		2								
SW093	SW	REAL	SW01376WC	29-JUL-91	N	TRG	DRADS	GROSS BETA - DISSOLVED	8 117	PCI/L	2 18		4								
SW093	SW	REAL	SW01376WC	29-JUL-91	N	TRG	DRADS	STRONTIUM-89,90	7066	PCI/L	452	J	1								
SW093	SW	REAL	SW01376WC	29-JUL-91	N	TRG	DRADS	TRITIUM	1424	PCI/L	273		400								
SW093	SW	REAL	SW01376WC	29-JUL-91	N	TRG	DRADS	URANIUM-233,-234	2.066	PCI/L	751		6								
SW093	SW	REAL	SW01376WC	29-JUL-91	N	TRG	DRADS	URANIUM-235	04971	PCI/L	.119	J	6								
SW093	SW	REAL	SW01376WC	29-JUL-91	N	TRG	DRADS	URANIUM-238	3 427	PCI/L	1 01		6								
SW093	SW	REAL	SW01376WC	29-JUL-91	N	TRG	TRADS	AMERICIUM-241	001775	PCI/L	00451	J	01								
SW093	SW	REAL	SW01376WC	29-JUL-91	N	TRG	TRADS	CESIUM-137	1745	PCI/L	344	J	1								
SW093	SW	REAL	SW01376WC	29-JUL-91	N	TRG	TRADS	PLUTONIUM-239/240	-.000836	PCI/L	00119	J	01								
SW093	SW	REAL	SW01482WC	14-AUG-91	N	TRG	DRADS	GROSS ALPHA - DISSOLVED	4.919	PCI/L	3.45		2								
SW093	SW	REAL	SW01482WC	14-AUG-91	N	TRG	DRADS	GROSS BETA - DISSOLVED	11.24	PCI/L	2 31		4								
SW093	SW	REAL	SW01482WC	14-AUG-91	N	TRG	DRADS	STRONTIUM-89,90	.7277	PCI/L	408	J	1								
SW093	SW	REAL	SW01482WC	14-AUG-91	N	TRG	DRADS	TRITIUM	-81 3	PCI/L	214	J	400								
SW093	SW	REAL	SW01482WC	14-AUG-91	N	TRG	DRADS	URANIUM-233,-234	2.072	PCI/L	709		6								
SW093	SW	REAL	SW01482WC	14-AUG-91	N	TRG	DRADS	URANIUM-235	09877	PCI/L	.148	J	6								
SW093	SW	REAL	SW01482WC	14-AUG-91	N	TRG	DRADS	URANIUM-238	4.783	PCI/L	1 17		6								
SW093	SW	REAL	SW01482WC	14-AUG-91	N	TRG	TRADS	AMERICIUM-241	0	PCI/L	00572	J	01								
SW093	SW	REAL	SW01482WC	14-AUG-91	N	TRG	TRADS	CESIUM-137	0753	PCI/L	399	J	1								
SW093	SW	REAL	SW01482WC	14-AUG-91	N	TRG	TRADS	PLUTONIUM-239/240	00329	PCI/L	.00381	J	01								
SW093	SW	REAL	SW01588WC	19-SEP-91	N																
SW093	SW	REAL	SW01694WC	28-OCT-91	N																
SW093	SW	REAL	SW60065WC	19-MAR-91	N		TRADS	GROSS ALPHA - SUSPENDED	74 97	PCI/L	19 698		12 8								
SW093	SW	REAL	SW60065WC	19-MAR-91	N		TRADS	GROSS BETA - SUSPENDED	87 83	PCI/L	8 3006		6 7								
SW093	SW	REAL	SW60093WC	17-MAY-91	N	TRG	DRADS	TRITIUM	47 25	PCI/L	194	J	400								
SW093	SW	REAL	SW60093WC	17-MAY-91	N		TRADS	GROSS ALPHA - SUSPENDED	12 35	PCI/L	7 08736		7 6								
SW093	SW	REAL	SW60093WC	17-MAY-91	N		TRADS	GROSS BETA - SUSPENDED	22.45	PCI/L	7 15204		9 5								
SW093	SW	REAL	SW60110WC	11-JUN-91	N	TRG	DRADS	TRITIUM	77 48	PCI/L	194	J	400								
SW093	SW	REAL	SW60110WC	11-JUN-91	N	TRG	TRADS	GROSS ALPHA - DISSOLVED	5 3	PCI/L	2 0		2 2								
SW093	SW	REAL	SW60110WC	11-JUN-91	N	TRG	TRADS	GROSS BETA - DISSOLVED	13	PCI/L	1 2		1 2								
SW093	SW	REAL	SW60118WC	10-JUL-91	N	TRG	DRADS	TRITIUM	135 4	PCI/L	206	J	400								
SW093	SW	REAL	SW60123WC	23-JUL-91	N	TRG	DRADS	TRITIUM	-64 2	PCI/L	189	J	400								
SW093	SW	REAL	SW60131WC	29-JUL-91	N	TRG	DRADS	TRITIUM	133.5	PCI/L	199	J	400								
SW093	SW	REAL	SW60135WC	05-AUG-91	N	TRG	DRADS	TRITIUM	19 6	PCI/L	194	J	400								
SW093	SW	REAL	SW60143WC	07-AUG-91	N	TRG	DRADS	TRITIUM	52 25	PCI/L	196	J	400								
SW093	SW	REAL	SW60150WC	12-AUG-91	N	TRG	DRADS	TRITIUM	-53.2	PCI/L	212	J	400								
SW093	SW	REAL	SW60158WC	19-AUG-91	N																
SW093	SW		SW01694WC	28-OCT-91	N																
SW118	SW	REAL	SW00765WC	30-JAN-91	N																
SW118	SW	REAL	SW00868WC	20-FEB-91	N																
SW118	SW	REAL	SW00971WC	21-MAR-91	N	TRG	DRADS	AMERICIUM-241	0700	PCI/L		U	01								
SW118	SW	REAL	SW00971WC	21-MAR-91	N	TRG	DRADS	GROSS ALPHA PARTICLE RADIOACTI	2.500	PCI/L	1 700		2								
SW118	SW	REAL	SW00971WC	21-MAR-91	N	TRG	DRADS	GROSS BETA PARTICLE RADIOACTIV	4 000	PCI/L	1 700		4								
SW118	SW	REAL	SW00971WC	21-MAR-91	N	TRG	DRADS	GROSS GAMMA	0061	PCI/L	5030	U	1								
SW118	SW	REAL	SW00971WC	21-MAR-91	N	TRG	DRADS	GROSS GAMMA	1400	PCI/L	3100	U	1								
SW118	SW	REAL	SW00971WC	21-MAR-91	N	TRG	DRADS	PLUTONIUM-239	0200	PCI/L	0100		01								
SW118	SW	REAL	SW00971WC	21-MAR-91	N	TRG	DRADS	STRONTIUM-89	1.000	PCI/L		U	1								
SW118	SW	REAL	SW00971WC	21-MAR-91	N	TRG	DRADS	STRONTIUM-90	.6000	PCI/L		U	1								
SW118	SW	REAL	SW00971WC	21-MAR-91	N	TRG	DRADS	TRITIUM	200.0	PCI/L		U	400								
SW118	SW	REAL	SW00971WC	21-MAR-91	N	TRG	DRADS	URANIUM-234	2.200	PCI/L	5000		6								
SW118	SW	REAL	SW00971WC	21-MAR-91	N	TRG	DRADS	URANIUM-235	0900	PCI/L		U	6								
SW118	SW	REAL	SW00971WC	21-MAR-91	N	TRG	DRADS	URANIUM-238	2.000	PCI/L	5000		6								
SW118	SW	REAL	SW01073WC	10-APR-91	N																
SW118	SW	REAL	SW01180WC	09-MAY-91	N																
SW118	SW	REAL	SW01283WC	26-JUN-91	N	TRG	DRADS	GROSS ALPHA - DISSOLVED	5.709	PCI/L	3 48		2								
SW118	SW	REAL	SW01283WC	26-JUN-91	N	TRG	DRADS	GROSS BETA - DISSOLVED	10.23	PCI/L	2 75		4								
SW118	SW	REAL	SW01283WC	26-JUN-91	N	TRG	DRADS	RADIUM-226	2823	PCI/L	.102	J	5								
SW118	SW	REAL	SW01283WC	26-JUN-91	N	TRG	DRADS	STRONTIUM-89,90	1.806	PCI/L	.733		1								
SW118	SW	REAL	SW01283WC	26-JUN-91	N	TRG	DRADS	TRITIUM	30 62	PCI/L	193	J	400								
SW118	SW	REAL	SW01283WC	26-JUN-91	N	TRG	DRADS	URANIUM-233,-234	2.269	PCI/L	708		.6								
SW118	SW	REAL	SW01283WC	26-JUN-91	N	TRG	DRADS	URANIUM-235	0	PCI/L	138	J	.6								

Location	ST	QC	Sample Number	Smpl Date	D	ID	Group	Chemical	Result	Unit	Error	Qual	D LMT	VA	RN1	RN2	RN3	RN4	VResult	VQual	VDET
SW118	SW	REAL	SW01283WC	26-JUN-91	N	TRG	DRADS	URANIUM-238	1 966	PCI/L	65		6								
SW118	SW	REAL	SW01283WC	26-JUN-91	N	TRG	TRADS	AMERICIUM-241	008126	PCI/L	00581	J	01								
SW118	SW	REAL	SW01283WC	26-JUN-91	N	TRG	TRADS	CESIUM-137	- 199	PCI/L	344	J	1								
SW118	SW	REAL	SW01283WC	26-JUN-91	N	TRG	TRADS	PLUTONIUM-239/240	008616	PCI/L	00713	J	01								
SW118	SW	REAL	SW01386WC	24-JUL-91	N	TRG	DRADS	GROSS ALPHA - DISSOLVED	2 28	PCI/L	1.75		2								
SW118	SW	REAL	SW01386WC	24-JUL-91	N	TRG	DRADS	GROSS BETA - DISSOLVED	5 231	PCI/L	1 35		4								
SW118	SW	REAL	SW01386WC	24-JUL-91	N	TRG	DRADS	STRONTIUM-89,90	5581	PCI/L	397	J	1								
SW118	SW	REAL	SW01386WC	24-JUL-91	N	TRG	DRADS	TRITIUM	95.97	PCI/L	215	J	400								
SW118	SW	REAL	SW01386WC	24-JUL-91	N	TRG	DRADS	URANIUM-233,-234	1 247	PCI/L	544		6								
SW118	SW	REAL	SW01386WC	24-JUL-91	N	TRG	DRADS	URANIUM-235	04987	PCI/L	109	J	6								
SW118	SW	REAL	SW01386WC	24-JUL-91	N	TRG	DRADS	URANIUM-238	1.071	PCI/L	504		.6								
SW118	SW	REAL	SW01386WC	24-JUL-91	N	TRG	TRADS	AMERICIUM-241	001465	PCI/L	00293	J	01								
SW118	SW	REAL	SW01386WC	24-JUL-91	N	TRG	TRADS	CESIUM-137	- 0572	PCI/L	422	J	1								
SW118	SW	REAL	SW01386WC	24-JUL-91	N	TRG	TRADS	PLUTONIUM-239/240	- 00103	PCI/L	00206	J	01								
SW118	SW	REAL	SW01492WC	07-AUG-91	N	TRG	DRADS	GROSS ALPHA - DISSOLVED	1.82	PCI/L	929	J	2								
SW118	SW	REAL	SW01492WC	07-AUG-91	N	TRG	DRADS	GROSS BETA - DISSOLVED	3 005	PCI/L	1 08	J	4								
SW118	SW	REAL	SW01492WC	07-AUG-91	N	TRG	DRADS	STRONTIUM-89,90	5916	PCI/L	411	J	1								
SW118	SW	REAL	SW01492WC	07-AUG-91	N	TRG	DRADS	TRITIUM	54 98	PCI/L	201	J	400								
SW118	SW	REAL	SW01492WC	07-AUG-91	N	TRG	DRADS	URANIUM-233,-234	1.418	PCI/L	.518		6								
SW118	SW	REAL	SW01492WC	07-AUG-91	N	TRG	DRADS	URANIUM-235	08044	PCI/L	119	J	6								
SW118	SW	REAL	SW01492WC	07-AUG-91	N	TRG	DRADS	URANIUM-238	7089	PCI/L	356		6								
SW118	SW	REAL	SW01492WC	07-AUG-91	N	TRG	TRADS	AMERICIUM-241	002946	PCI/L	00418	J	01								
SW118	SW	REAL	SW01492WC	07-AUG-91	N	TRG	TRADS	CESIUM-137	2266	PCI/L	306	J	1								
SW118	SW	REAL	SW01492WC	07-AUG-91	N	TRG	TRADS	PLUTONIUM-239/240	003507	PCI/L	00406	J	01								
SW118	SW	REAL	SW01598WC	25-SEP-91	Y																
SW118	SW	REAL	SW01704WC	23-OCT-91	Y																
SW118	SW	REAL	SW60066WCA	15-MAR-91	N																
SW118	SW	REAL	SW60067WCB	02-APR-91	N																
SW118	SW	REAL	SW60073WC	15-APR-91	N																
SW118	SW	REAL	SW60077WC	01-MAY-91	N	TRG	DRADS	TRITIUM	-42 5	PCI/L	185	J	400								
SW118	SW	REAL	SW60080WC	01-MAY-91	N	TRG	DRADS	TRITIUM	106 1	PCI/L	192	J	400								
SW118	SW	REAL	SW60084WC	06-MAY-91	N	TRG	DRADS	TRITIUM	57.85	PCI/L	190	J	400								
SW118	SW	REAL	SW60085WC	06-MAY-91	N	TRG	DRADS	TRITIUM	-1 93	PCI/L	187	J	400								
SW118	SW	REAL	SW60094WC	17-MAY-91	N	TRG	DRADS	TRITIUM	197 7	PCI/L	202	J	400								
SW118	SW	REAL	SW60094WC	17-MAY-91	N		TRADS	GROSS ALPHA - SUSPENDED	33 12	PCI/L	11.01716		9 0								
SW118	SW	REAL	SW60094WC	17-MAY-91	N		TRADS	GROSS BETA - SUSPENDED	30 99	PCI/L	4 96272		5 4								
SW118	SW	REAL	SW60095WC	17-MAY-91	N	TRG	DRADS	TRITIUM	17 36	PCI/L	193	J	400								
SW118	SW	REAL	SW60095WC	17-MAY-91	N		TRADS	GROSS ALPHA - SUSPENDED	04914	PCI/L	.994504		1 6								
SW118	SW	REAL	SW60095WC	17-MAY-91	N		TRADS	GROSS BETA - SUSPENDED	1.792	PCI/L	1 392188		2 2								
SW118	SW	REAL	SW60099WC	23-MAY-91	N	TRG	DRADS	TRITIUM	10 2	PCI/L	192	J	400								
SW118	SW	REAL	SW60099WC	23-MAY-91	N	TRG	TRADS	GROSS ALPHA - DISSOLVED	5.7	PCI/L	1 3		1 5								
SW118	SW	REAL	SW60099WC	23-MAY-91	N	TRG	TRADS	GROSS BETA - DISSOLVED	10	PCI/L	0 77		0 90								
SW118	SW	REAL	SW60106WC	03-JUN-91	N	TRG	DRADS	TRITIUM	-38 4	PCI/L	139	J	400								
SW118	SW	REAL	SW60106WC	03-JUN-91	N	TRG	TRADS	GROSS ALPHA - DISSOLVED	79	PCI/L	28		22								
SW118	SW	REAL	SW60106WC	03-JUN-91	N	TRG	TRADS	GROSS BETA - DISSOLVED	110	PCI/L	12		11								
SW118	SW	REAL	SW60107WC	03-JUN-91	N	TRG	DRADS	TRITIUM	-85 7	PCI/L	136	J	400								
SW118	SW	REAL	SW60107WC	03-JUN-91	N	TRG	TRADS	GROSS ALPHA - DISSOLVED	-0 084	PCI/L	1.1	U	1 8								
SW118	SW	REAL	SW60107WC	03-JUN-91	N	TRG	TRADS	GROSS BETA - DISSOLVED	2.5	PCI/L	0 85	J	1 2								
SW118	SW	REAL	SW60111WC	11-JUN-91	N	TRG	DRADS	TRITIUM	24.21	PCI/L	192	J	400								
SW118	SW	REAL	SW60111WC	11-JUN-91	N	TRG	TRADS	GROSS ALPHA - DISSOLVED	21	PCI/L	7.7		7 7								
SW118	SW	REAL	SW60111WC	11-JUN-91	N	TRG	TRADS	GROSS BETA - DISSOLVED	19	PCI/L	3 4		4 0								
SW118	SW	REAL	SW60115WC	25-JUN-91	N	TRG	DRADS	TRITIUM	-59 4	PCI/L	189	J	400								
SW118	SW	REAL	SW60115WC	25-JUN-91	N	TRG	TRADS	GROSS ALPHA - DISSOLVED	3.2	PCI/L	1.8		2 4								
SW118	SW	REAL	SW60115WC	25-JUN-91	N	TRG	TRADS	GROSS BETA - DISSOLVED	4 1	PCI/L	1.0		1 4								
SW118	SW	REAL	SW60122WC	10-JUL-91	N	TRG	DRADS	TRITIUM	-46 4	PCI/L	197	J	400								
SW118	SW	REAL	SW60128WC	24-JUL-91	N	TRG	DRADS	TRITIUM	31.64	PCI/L	194	J	400								
SW118	SW	REAL	SW60138WC	05-AUG-91	N	TRG	DRADS	TRITIUM	129.7	PCI/L	200	J	400								
SW118	SW	REAL	SW60147WC	12-AUG-91	N	TRG	DRADS	TRITIUM	-32 6	PCI/L	213	J	400								
SW118	SW		SW60067WC	08-APR-91	N		TRADS	GROSS ALPHA - SUSPENDED	2.237	PCI/L	2.49704		3 3								
SW118	SW		SW60067WC	08-APR-91	N		TRADS	GROSS BETA - SUSPENDED	9.345001	PCI/L	2 01292		2 4								
SW129	SW	REAL	SW00728WC	08-JAN-91	N																
SW129	SW	REAL	SW00831WC	20-FEB-91	N																
SW129	SW	REAL	SW00934WC	28-MAR-91	N	TRG	DRADS	AMERICIUM-241	1000	PCI/L		U	01								

Location	ST	QC	Sample Number	Smpl Date	D	ID	Group	Chemical	Result	Unit	Error	Qual	D LMT	VA	RN1	RN2	RN3	RN4	VResult	VQual	VDET
SW129	SW	REAL	SW00934WC	28-MAR-91	N	TRG	DRADS	GROSS ALPHA PARTICLE RADIOACTI	5 400	PCI/L	2 000		2								
SW129	SW	REAL	SW00934WC	28-MAR-91	N	TRG	DRADS	GROSS BETA PARTICLE RADIOACTIV	4.800	PCI/L	1 700		4								
SW129	SW	REAL	SW00934WC	28-MAR-91	N	TRG	DRADS	GROSS GAMMA	-0 33	PCI/L	7300		1								
SW129	SW	REAL	SW00934WC	28-MAR-91	N	TRG	DRADS	GROSS GAMMA	8200	PCI/L	4400		1								
SW129	SW	REAL	SW00934WC	28-MAR-91	N	TRG	DRADS	PLUTONIUM-239	0100	PCI/L		U	01								
SW129	SW	REAL	SW00934WC	28-MAR-91	N	TRG	DRADS	STRONTIUM-89	1 000	PCI/L		U	1								
SW129	SW	REAL	SW00934WC	28-MAR-91	N	TRG	DRADS	STRONTIUM-90	6000	PCI/L		U	1								
SW129	SW	REAL	SW00934WC	28-MAR-91	N	TRG	DRADS	TRITIUM	200 0	PCI/L		U	400								
SW129	SW	REAL	SW00934WC	28-MAR-91	N	TRG	DRADS	URANIUM-234	1.800	PCI/L	5000		6								
SW129	SW	REAL	SW00934WC	28-MAR-91	N	TRG	DRADS	URANIUM-235	0900	PCI/L		U	6								
SW129	SW	REAL	SW00934WC	28-MAR-91	N	TRG	DRADS	URANIUM-238	1 300	PCI/L	4000		6								
SW129	SW	REAL	SW01036WC	09-APR-91	N																
SW129	SW	REAL	SW01143WC	16-MAY-91	N																
SW129	SW	REAL	SW01246WC	26-JUN-91	N	TRG	DRADS	GROSS ALPHA - DISSOLVED	4 651	PCI/L	2 03		2								
SW129	SW	REAL	SW01246WC	26-JUN-91	N	TRG	DRADS	GROSS BETA - DISSOLVED	3 738	PCI/L	1 8	J	4								
SW129	SW	REAL	SW01246WC	26-JUN-91	N	TRG	DRADS	STRONTIUM-89,90	8973	PCI/L	.428	J	1								
SW129	SW	REAL	SW01246WC	26-JUN-91	N	TRG	DRADS	TRITIUM	95.58	PCI/L	198	J	400								
SW129	SW	REAL	SW01246WC	26-JUN-91	N	TRG	DRADS	URANIUM-233,-234	1 768	PCI/L	645		6								
SW129	SW	REAL	SW01246WC	26-JUN-91	N	TRG	DRADS	URANIUM-235	08174	PCI/L	148	J	6								
SW129	SW	REAL	SW01246WC	26-JUN-91	N	TRG	DRADS	URANIUM-238	4.23	PCI/L	1 07		6								
SW129	SW	REAL	SW01246WC	26-JUN-91	N	TRG	TRADS	AMERICIUM-241	003944	PCI/L	00426	J	01								
SW129	SW	REAL	SW01246WC	26-JUN-91	N	TRG	TRADS	CESIUM-137	-.203	PCI/L	.314	J	1								
SW129	SW	REAL	SW01246WC	26-JUN-91	N	TRG	TRADS	PLUTONIUM-239/240	005514	PCI/L	.00496	J	01								
SW129	SW	REAL	SW01349WC	22-JUL-91	N	TRG	DRADS	GROSS ALPHA - DISSOLVED	9 628	PCI/L	3.3		2								
SW129	SW	REAL	SW01349WC	22-JUL-91	N	TRG	DRADS	GROSS BETA - DISSOLVED	6 901	PCI/L	1 62		4								
SW129	SW	REAL	SW01349WC	22-JUL-91	N	TRG	DRADS	RADIUM-226	1883	PCI/L	.0797	J	5								
SW129	SW	REAL	SW01349WC	22-JUL-91	N	TRG	DRADS	STRONTIUM-89,90	7705	PCI/L	.469	J	1								
SW129	SW	REAL	SW01349WC	22-JUL-91	N	TRG	DRADS	TRITIUM	59.15	PCI/L	213	J	400								
SW129	SW	REAL	SW01349WC	22-JUL-91	N	TRG	DRADS	URANIUM-233,-234	1 89	PCI/L	66		.6								
SW129	SW	REAL	SW01349WC	22-JUL-91	N	TRG	DRADS	URANIUM-235	.0999	PCI/L	142	J	6								
SW129	SW	REAL	SW01349WC	22-JUL-91	N	TRG	DRADS	URANIUM-238	2 643	PCI/L	799		6								
SW129	SW	REAL	SW01349WC	22-JUL-91	N	TRG	TRADS	AMERICIUM-241	.004463	PCI/L	00518	J	01								
SW129	SW	REAL	SW01349WC	22-JUL-91	N	TRG	TRADS	CESIUM-137	4714	PCI/L	315	J	1								
SW129	SW	REAL	SW01349WC	22-JUL-91	N	TRG	TRADS	PLUTONIUM-239/240	.003177	PCI/L	00637	J	01								
SW129	SW	REAL	SW01455WC	13-AUG-91	N	TRG	DRADS	GROSS ALPHA - DISSOLVED	1.822	PCI/L	888	J	2								
SW129	SW	REAL	SW01455WC	13-AUG-91	N	TRG	DRADS	GROSS BETA - DISSOLVED	5.907	PCI/L	1.41		4								
SW129	SW	REAL	SW01455WC	13-AUG-91	N	TRG	DRADS	STRONTIUM-89,90	.9161	PCI/L	.487	J	1								
SW129	SW	REAL	SW01455WC	13-AUG-91	N	TRG	DRADS	TRITIUM	67.74	PCI/L	221	J	400								
SW129	SW	REAL	SW01455WC	13-AUG-91	N	TRG	DRADS	URANIUM-233,-234	1.685	PCI/L	697		6								
SW129	SW	REAL	SW01455WC	13-AUG-91	N	TRG	DRADS	URANIUM-235	0	PCI/L	.19	J	6								
SW129	SW	REAL	SW01455WC	13-AUG-91	N	TRG	DRADS	URANIUM-238	2.08	PCI/L	781		6								
SW129	SW	REAL	SW01455WC	13-AUG-91	N	TRG	TRADS	AMERICIUM-241	.004463	PCI/L	00633	J	01								
SW129	SW	REAL	SW01455WC	13-AUG-91	N	TRG	TRADS	CESIUM-137	2875	PCI/L	.323	J	1								
SW129	SW	REAL	SW01455WC	13-AUG-91	N	TRG	TRADS	PLUTONIUM-239/240	0	PCI/L	.00333	J	01								
SW129	SW	REAL	SW01561WC	18-SEP-91	N																
SW129	SW	REAL	SW01667WC	23-OCT-91	N																

Location	ST	QC	Sample Number	Smpl Date	D	ID	Group	Chemical	Result	Unit	Error	Qual	D LMT	VA	RN1	RN2	RN3	RN4	VResult	VQual	VDET
SED118	SD	REAL	SS00127WC	18-SEP-90	N	TRG	TRADS	AMERICIUM-241	004562	PCI/G	00459	J	02								
SED118	SD	REAL	SS00127WC	18-SEP-90	N	TRG	TRADS	CESIUM-137	09793	PCI/G	0552	J	1								
SED118	SD	REAL	SS00127WC	18-SEP-90	N	TRG	TRADS	GROSS ALPHA - DISSOLVED	10 09	PCI/G	3 49		4								
SED118	SD	REAL	SS00127WC	18-SEP-90	N	TRG	TRADS	GROSS BETA - DISSOLVED	27 66	PCI/G	4 14		10								
SED118	SD	REAL	SS00127WC	18-SEP-90	N	TRG	TRADS	PLUTONIUM-239/240	01728	PCI/G	00974	J	03								
SED118	SD	REAL	SS00127WC	18-SEP-90	N	TRG	TRADS	RADIUM-226	8512	PCI/G	.167		5								
SED118	SD	REAL	SS00127WC	18-SEP-90	N	TRG	TRADS	RADIUM-228	1 597	PCI/G	363		5								
SED118	SD	REAL	SS00127WC	18-SEP-90	N	TRG	TRADS	STRONTIUM-89,90	1089	PCI/G	0531	J	1								
SED118	SD	REAL	SS00127WC	18-SEP-90	N	TRG	TRADS	TRITIUM	763	PCI/L	241		400								
SED118	SD	REAL	SS00127WC	18-SEP-90	N	TRG	TRADS	URANIUM-233,-234	9722	PCI/G	151		3								
SED118	SD	REAL	SS00127WC	18-SEP-90	N	TRG	TRADS	URANIUM-235	02376	PCI/G	0205	J	3								
SED118	SD	REAL	SS00127WC	18-SEP-90	N	TRG	TRADS	URANIUM-238	9333	PCI/G	147		3								
SED118	SD	REAL	SS00161WC	28-NOV-90	N	TRG	TRADS	AMERICIUM-241	.007438	PCI/G	00674	J	02								
SED118	SD	REAL	SS00161WC	28-NOV-90	N	TRG	TRADS	CESIUM-137	007054	PCI/G	0431	J	1								
SED118	SD	REAL	SS00161WC	28-NOV-90	N	TRG	TRADS	GROSS ALPHA - DISSOLVED	7.572	PCI/G	3.05		4								
SED118	SD	REAL	SS00161WC	28-NOV-90	N	TRG	TRADS	GROSS BETA - DISSOLVED	26 97	PCI/G	4 02		10								
SED118	SD	REAL	SS00161WC	28-NOV-90	N	TRG	TRADS	PLUTONIUM-239/240	.02449	PCI/G	0109	J	03								
SED118	SD	REAL	SS00161WC	28-NOV-90	N	TRG	TRADS	RADIUM-226	.7033	PCI/G	141		5								
SED118	SD	REAL	SS00161WC	28-NOV-90	N	TRG	TRADS	RADIUM-228	1 463	PCI/G	276		.5								
SED118	SD	REAL	SS00161WC	28-NOV-90	N	TRG	TRADS	STRONTIUM-89,90	.2446	PCI/G	095	J	1								
SED118	SD	REAL	SS00161WC	28-NOV-90	N	TRG	TRADS	TRITIUM	-12 2	PCI/L	194	J	400	JA	68	78	99				
SED118	SD	REAL	SS00161WC	28-NOV-90	N	TRG	TRADS	URANIUM-233,-234	.8188	PCI/G	222		.3								
SED118	SD	REAL	SS00161WC	28-NOV-90	N	TRG	TRADS	URANIUM-235	07842	PCI/G	062	J	3								
SED118	SD	REAL	SS00161WC	28-NOV-90	N	TRG	TRADS	URANIUM-238	1 015	PCI/G	253		3								
SW018	SW	REAL	SW00487WC	23-NOV-90	Y																
SW022	SW	REAL	SW70001WC	23-JUL-90	N		TRADS	GROSS ALPHA PARTICLE RADIOACTI	31.450	PCI/L	9 910										
SW022	SW	REAL	SW70001WC	23-JUL-90	N		TRADS	GROSS BETA PARTICLE RADIOACTIV	36 970	PCI/L	4 060										
SW022	SW	REAL	SW70013WC	07-SEP-90	N		TRADS	GROSS ALPHA - SUSPENDED	10 95	PCI/L	3 39668		2 44								
SW022	SW	REAL	SW70013WC	07-SEP-90	N		TRADS	GROSS BETA PARTICLE RADIOACTIV	12 92	PCI/L	1 68658		1 59								
SW022	SW	REAL	SW70020WC	24-OCT-90	N		TRADS	TRITIUM	63 46627	PCI/L	134 3383		251								
SW022	SW	REAL	SW70020WC	24-OCT-90	N		TRADS	GROSS ALPHA - SUSPENDED	2.301	PCI/L	1 60132		1 97								
SW022	SW	REAL	SW70020WC	24-OCT-90	N		TRADS	GROSS BETA - SUSPENDED	4.042	PCI/L	1.65718		2 45								
SW022	SW	REAL	SW70027WC	08-NOV-90	N		TRADS	TRITIUM	21 71469	PCI/L	148 4233		248								
SW022	SW	REAL	SW70027WC	08-NOV-90	N		TRADS	GROSS ALPHA - SUSPENDED	26.24	PCI/L	8 83764		5 84								
SW022	SW	REAL	SW70028WC	07-NOV-90	N		TRADS	GROSS BETA - SUSPENDED	55 35	PCI/L	4.46488		3.16								
SW022	SW	REAL	SW70028WC	07-NOV-90	N		TRADS	GROSS ALPHA - SUSPENDED	6 042	PCI/L	2 56172		2 17								
SW022	SW	REAL	SW70030WC	08-NOV-90	N		TRADS	GROSS BETA - SUSPENDED	20 81	PCI/L	2.06192		1 87								
SW022	SW	REAL	SW70030WC	08-NOV-90	N		TRADS	GROSS ALPHA - SUSPENDED	3575	PCI/L	1 083684		1 58								
SW023	SW	REAL	SW00443WC	16-OCT-90	N		TRADS	GROSS BETA - SUSPENDED	3 709	PCI/L	1.185016		1 57								
SW023	SW	REAL	SW00443WC	16-OCT-90	N		TRADS	AMERICIUM-241	.04322	PCI/L	0171147		.009								
SW023	SW	REAL	SW00443WC	16-OCT-90	N		TRADS	CESIUM-137	0003125	PCI/L	.1499596		46								
SW023	SW	REAL	SW00443WC	16-OCT-90	N		TRADS	GROSS ALPHA - SUSPENDED	2 9	PCI/L	1 813392		2 11								
SW023	SW	REAL	SW00443WC	16-OCT-90	N		TRADS	GROSS BETA - SUSPENDED	7 482	PCI/L	1 04958		1 30								
SW023	SW	REAL	SW00443WC	16-OCT-90	N		TRADS	PLUTONIUM-239/240	.001978	PCI/L	.0058173		009								
SW023	SW	REAL	SW00443WC	16-OCT-90	N		TRADS	STRONTIUM-90	.007779	PCI/L	1187368		.30								
SW023	SW	REAL	SW00443WC	16-OCT-90	N		TRADS	TRITIUM	230.0725	PCI/L	154 6888		242								
SW023	SW	REAL	SW00443WC	16-OCT-90	N		TRADS	URANIUM-233,-234	4 753	PCI/L	1 238132		246								
SW023	SW	REAL	SW00443WC	16-OCT-90	N		TRADS	URANIUM-235/236	3197	PCI/L	2548		298								
SW023	SW	REAL	SW00443WC	16-OCT-90	N		TRADS	URANIUM-238	3.01	PCI/L	933156		246								
SW023	SW	REAL	SW00544WC	16-NOV-90	N	TRG	DRADS	AMERICIUM-241	.0300	PCI/L		U	.01								
SW023	SW	REAL	SW00544WC	16-NOV-90	N	TRG	DRADS	GROSS ALPHA PARTICLE RADIOACTI	2.000	PCI/L		U	2								
SW023	SW	REAL	SW00544WC	16-NOV-90	N	TRG	DRADS	GROSS BETA PARTICLE RADIOACTIV	4.300	PCI/L	1.800		4								
SW023	SW	REAL	SW00544WC	16-NOV-90	N	TRG	DRADS	GROSS GAMMA	.7000	PCI/L		U	1								
SW023	SW	REAL	SW00544WC	16-NOV-90	N	TRG	DRADS	GROSS GAMMA	1 000	PCI/L		U	1								
SW023	SW	REAL	SW00544WC	16-NOV-90	N	TRG	DRADS	PLUTONIUM-239	.7700	PCI/L	.2700		.01								
SW023	SW	REAL	SW00544WC	16-NOV-90	N	TRG	DRADS	STRONTIUM-89	1.000	PCI/L		U	1								
SW023	SW	REAL	SW00544WC	16-NOV-90	N	TRG	DRADS	STRONTIUM-90	.4000	PCI/L		U	1								
SW023	SW	REAL	SW00544WC	16-NOV-90	N	TRG	DRADS	TRITIUM	200.0	PCI/L		U	400								
SW023	SW	REAL	SW00544WC	16-NOV-90	N	TRG	DRADS	URANIUM-234	3.400	PCI/L	1 300		.6								
SW023	SW	REAL	SW00544WC	16-NOV-90	N	TRG	DRADS	URANIUM-235	.6000	PCI/L		U	.6								
SW023	SW	REAL	SW00544WC	16-NOV-90	N	TRG	DRADS	URANIUM-238	2.700	PCI/L	1.200		6								
SW023	SW	REAL	SW70002WC	23-JUL-90	N		TRADS	GROSS ALPHA PARTICLE RADIOACTI	40.240	PCI/L	12.880										
SW023	SW	REAL	SW70002WC	23-JUL-90	N		TRADS	GROSS BETA PARTICLE RADIOACTIV	40 710	PCI/L	5 060										

Location	ST	QC	Sample Number	Smpl Date	D	ID	Group	Chemical	Result	Unit	Error	Qual	D LMT	VA	RN1	RN2	RN3	RN4	VResult	VQual	VDET
SW023	SW	REAL	SW70005WC	24-JUL-90	N		TRADS	GROSS ALPHA PARTICLE RADIOACTI	5 030	PCI/L	2 440										
SW023	SW	REAL	SW70005WC	24-JUL-90	N		TRADS	GROSS BETA PARTICLE RADIOACTIV	8 170	PCI/L	1 450										
SW023	SW	REAL	SW70015WC	19-SEP-90	N		TRADS	GROSS ALPHA - SUSPENDED	8 787	PCI/L	3 22224		2 60								
SW023	SW	REAL	SW70015WC	19-SEP-90	N		TRADS	GROSS BETA PARTICLE RADIOACTIV	14 59	PCI/L	1 812608		1 77								
SW023	SW	REAL	SW70015WC	19-SEP-90	N		TRADS	TRITIUM	68 10082	PCI/L	136 5697		255								
SW023	SW	REAL	SW70029WC	08-NOV-90	N		TRADS	GROSS ALPHA - SUSPENDED	10 02	PCI/L	5.50564		4 81								
SW023	SW	REAL	SW70029WC	08-NOV-90	N		TRADS	GROSS BETA - SUSPENDED	63 07	PCI/L	4 72164		3 34								
SW023	SW	REAL	SW70040WC	19-NOV-90	N																
SW023	SW		SW70018WC	11-OCT-90	N		TRADS	GROSS ALPHA - SUSPENDED	6 856	PCI/L	2.26576		1 83								
SW023	SW		SW70018WC	11-OCT-90	N		TRADS	GROSS BETA - SUSPENDED	11 51	PCI/L	1.652868		1 72								
SW023	SW		SW70018WC	11-OCT-90	N		TRADS	TRITIUM	-49 9842	PCI/L	132 2383		261								
SW037	SW	REAL	SW00413WC	17-OCT-90	Y																
SW037	SW	REAL	SW00514WC	27-NOV-90	Y																
SW038	SW	REAL	SW00419WC	15-OCT-90	N		TRADS	AMERICIUM-241	009436	PCI/L	0038142		.013								
SW038	SW	REAL	SW00419WC	15-OCT-90	N		TRADS	CESIUM-137	004428	PCI/L	0948836		23								
SW038	SW	REAL	SW00419WC	15-OCT-90	N		TRADS	GROSS ALPHA - SUSPENDED	4312	PCI/L	1 58956		2 45								
SW038	SW	REAL	SW00419WC	15-OCT-90	N		TRADS	GROSS BETA - SUSPENDED	1 224	PCI/L	1 075452		1 66								
SW038	SW	REAL	SW00419WC	15-OCT-90	N		TRADS	PLUTONIUM-239/240	.008716	PCI/L	0085593		.009								
SW038	SW	REAL	SW00419WC	15-OCT-90	N		TRADS	STRONTIUM-90	.141	PCI/L	1784776		55								
SW038	SW	REAL	SW00419WC	15-OCT-90	N		TRADS	TRITIUM	158 5499	PCI/L	139.8311		255								
SW038	SW	REAL	SW00419WC	15-OCT-90	N		TRADS	URANIUM-233,-234	1 182	PCI/L	521752		.290								
SW038	SW	REAL	SW00419WC	15-OCT-90	N		TRADS	URANIUM-235/236	0 0	PCI/L	.1476468		351								
SW038	SW	REAL	SW00419WC	15-OCT-90	N		TRADS	URANIUM-238	.6222	PCI/L	378672		.290								
SW038	SW	REAL	SW00520WC	05-NOV-90	N	TRG	DRADS	AMERICIUM-241	0300	PCI/L		U	01								
SW038	SW	REAL	SW00520WC	05-NOV-90	N	TRG	DRADS	GROSS ALPHA PARTICLE RADIOACTI	3.000	PCI/L		U	2								
SW038	SW	REAL	SW00520WC	05-NOV-90	N	TRG	DRADS	GROSS BETA PARTICLE RADIOACTIV	4.000	PCI/L		U	4								
SW038	SW	REAL	SW00520WC	05-NOV-90	N	TRG	DRADS	GROSS GAMMA	7000	PCI/L		U	1								
SW038	SW	REAL	SW00520WC	05-NOV-90	N	TRG	DRADS	GROSS GAMMA	1 000	PCI/L		U	1								
SW038	SW	REAL	SW00520WC	05-NOV-90	N	TRG	DRADS	PLUTONIUM-239	.3000	PCI/L		U	01								
SW038	SW	REAL	SW00520WC	05-NOV-90	N	TRG	DRADS	RADIUM 226 AND 228	.5000	PCI/L		U	5								
SW038	SW	REAL	SW00520WC	05-NOV-90	N	TRG	DRADS	RADIUM 226 AND 228	.8000	PCI/L		U	1								
SW038	SW	REAL	SW00520WC	05-NOV-90	N	TRG	DRADS	STRONTIUM-89	9000	PCI/L		U	1								
SW038	SW	REAL	SW00520WC	05-NOV-90	N	TRG	DRADS	STRONTIUM-90	3000	PCI/L		U	1								
SW038	SW	REAL	SW00520WC	05-NOV-90	N	TRG	DRADS	TRITIUM	200.0	PCI/L		U	400								
SW038	SW	REAL	SW00520WC	05-NOV-90	N	TRG	DRADS	URANIUM-233,-234	1.100	PCI/L	5000		.6								
SW038	SW	REAL	SW00520WC	05-NOV-90	N	TRG	DRADS	URANIUM-235	.2000	PCI/L		U	6								
SW038	SW	REAL	SW00520WC	05-NOV-90	N	TRG	DRADS	URANIUM-238	.6300	PCI/L	3800		.6								
SW093	SW	MS	SW093W052990M	29-MAY-90	N																
SW093	SW	MS	SW80023WC	30-JUL-90	N																
SW093	SW	MSD	SW093W0529990S	29-MAY-90	N																
SW093	SW	MSD	SW80024WC	30-JUL-90	N																
SW093	SW	REAL	SW00096WC	22-JUN-90	N		TRADS	RADIUM-226	0 15	PCI/L	0 05		0 5								
SW093	SW	REAL	SW00197WC	30-JUL-90	N	TRG	DRADS	GROSS ALPHA - DISSOLVED	18.86	PCI/L	8 57		2								
SW093	SW	REAL	SW00197WC	30-JUL-90	N	TRG	DRADS	GROSS BETA - DISSOLVED	13 52	PCI/L	2 74		4								
SW093	SW	REAL	SW00197WC	30-JUL-90	N	TRG	DRADS	RADIUM-226	.1155	PCI/L	062	J	5								
SW093	SW	REAL	SW00197WC	30-JUL-90	N	TRG	DRADS	STRONTIUM-89,90	4118	PCI/L	304	J	1								
SW093	SW	REAL	SW00197WC	30-JUL-90	N	TRG	DRADS	TRITIUM	215.5	PCI/L	224	J	400								
SW093	SW	REAL	SW00197WC	30-JUL-90	N	TRG	DRADS	URANIUM-233,-234	3 603	PCI/L	496		.6								
SW093	SW	REAL	SW00197WC	30-JUL-90	N	TRG	DRADS	URANIUM-235	.1806	PCI/L	0825	J	.6								
SW093	SW	REAL	SW00197WC	30-JUL-90	N	TRG	DRADS	URANIUM-238	7 91	PCI/L	918		6								
SW093	SW	REAL	SW00197WC	30-JUL-90	N	TRG	TRADS	AMERICIUM-241	.03154	PCI/L	.0083		01								
SW093	SW	REAL	SW00197WC	30-JUL-90	N	TRG	TRADS	CESIUM-137	-.122	PCI/L	.434	J	1								
SW093	SW	REAL	SW00197WC	30-JUL-90	N	TRG	TRADS	PLUTONIUM-238	- 000612	PCI/L	.000868	J	01								
SW093	SW	REAL	SW00197WC	30-JUL-90	N	TRG	TRADS	PLUTONIUM-239/240	-.000305	PCI/L	000611	J	01								
SW093	SW	REAL	SW00275WC	30-AUG-90	N		TRADS	AMERICIUM-241	-.000864	PCI/L	.0050784		0 009								
SW093	SW	REAL	SW00275WC	30-AUG-90	N		TRADS	CESIUM-137	-.08843	PCI/L	.1303988		0 53								
SW093	SW	REAL	SW00275WC	30-AUG-90	N		TRADS	GROSS ALPHA - SUSPENDED	3.705	PCI/L	2.77536		2.88								
SW093	SW	REAL	SW00275WC	30-AUG-90	N		TRADS	GROSS BETA - SUSPENDED	9 963001	PCI/L	1 616608		1 80								
SW093	SW	REAL	SW00275WC	30-AUG-90	N		TRADS	PLUTONIUM-239/240	.003032	PCI/L	.0059466		0 009								
SW093	SW	REAL	SW00275WC	30-AUG-90	N		TRADS	STRONTIUM-90	3487	PCI/L	.229908		0 25								
SW093	SW	REAL	SW00275WC	30-AUG-90	N		TRADS	TRITIUM	230 2749	PCI/L	131.4666		257								
SW093	SW	REAL	SW00275WC	30-AUG-90	N		TRADS	URANIUM-233,-234	3 86	PCI/L	.895328		0 200								
SW093	SW	REAL	SW00275WC	30-AUG-90	N		TRADS	URANIUM-235/236	1558	PCI/L	204428		0 241								

Location	ST	QC	Sample Number	Smpl Date	D	ID	Group	Chemical	Result	Unit	Error	Qual	D LMT	VA	RN1	RN2	RN3	RN4	VResult	VQual	VDET
SW093	SW	REAL	SW00275WC	30-AUG-90	N		TRADS	URANIUM-238	6 004	PCI/L	1 253812		0 200								
SW093	SW	REAL	SW00353WC	25-SEP-90	N		TRADS	AMERICIUM-241	.005411	PCI/L	0106114		015								
SW093	SW	REAL	SW00353WC	25-SEP-90	N		TRADS	CESIUM-137	- 05185	PCI/L	1623272		55								
SW093	SW	REAL	SW00353WC	25-SEP-90	N		TRADS	GROSS ALPHA - SUSPENDED	7 082	PCI/L	3 40256		3 08								
SW093	SW	REAL	SW00353WC	25-SEP-90	N		TRADS	GROSS BETA - SUSPENDED	10 88	PCI/L	1 608376		1 65								
SW093	SW	REAL	SW00353WC	25-SEP-90	N		TRADS	PLUTONIUM-239/240	007495	PCI/L	0073618		010								
SW093	SW	REAL	SW00353WC	25-SEP-90	N		TRADS	STRONTIUM-90	.4323	PCI/L	330456		61								
SW093	SW	REAL	SW00353WC	25-SEP-90	N		TRADS	TRITIUM	109.9424	PCI/L	164 0909		243								
SW093	SW	REAL	SW00353WC	25-SEP-90	N		TRADS	URANIUM-233,-234	3 321	PCI/L	926688		.215								
SW093	SW	REAL	SW00353WC	25-SEP-90	N		TRADS	URANIUM-235/236	2792	PCI/L	222068		260								
SW093	SW	REAL	SW00353WC	25-SEP-90	N		TRADS	URANIUM-238	6 918	PCI/L	1.425312		215								
SW093	SW	REAL	SW00448WC	17-OCT-90	N		TRADS	AMERICIUM-241	06694	PCI/L	022638		013								
SW093	SW	REAL	SW00448WC	17-OCT-90	N		TRADS	CESIUM-137	04808	PCI/L	1093484		53								
SW093	SW	REAL	SW00448WC	17-OCT-90	N		TRADS	GROSS ALPHA - SUSPENDED	9.179	PCI/L	5 17048		5.89								
SW093	SW	REAL	SW00448WC	17-OCT-90	N		TRADS	GROSS BETA - SUSPENDED	9.383001	PCI/L	2 67344		3.49								
SW093	SW	REAL	SW00448WC	17-OCT-90	N		TRADS	PLUTONIUM-239/240	01393	PCI/L	0068678		006								
SW093	SW	REAL	SW00448WC	17-OCT-90	N		TRADS	STRONTIUM-90	3274	PCI/L	272832		47								
SW093	SW	REAL	SW00448WC	17-OCT-90	N		TRADS	TRITIUM	277 6977	PCI/L	157 6253		243								
SW093	SW	REAL	SW00448WC	17-OCT-90	N		TRADS	URANIUM-233,-234	2.557	PCI/L	7645961		205								
SW093	SW	REAL	SW00448WC	17-OCT-90	N		TRADS	URANIUM-235/236	.3202	PCI/L	213248		249								
SW093	SW	REAL	SW00448WC	17-OCT-90	N		TRADS	URANIUM-238	5 511	PCI/L	1.183056		205								
SW093	SW	REAL	SW00549WC	19-NOV-90	N	TRG	DRADS	AMERICIUM-241	2000	PCI/L		U	01								
SW093	SW	REAL	SW00549WC	19-NOV-90	N	TRG	DRADS	GROSS ALPHA PARTICLE RADIOACTI	4.500	PCI/L	2 000		2								
SW093	SW	REAL	SW00549WC	19-NOV-90	N	TRG	DRADS	GROSS BETA PARTICLE RADIOACTIV	8 000	PCI/L	1 900		4								
SW093	SW	REAL	SW00549WC	19-NOV-90	N	TRG	DRADS	GROSS GAMMA	8000	PCI/L		U	1								
SW093	SW	REAL	SW00549WC	19-NOV-90	N	TRG	DRADS	GROSS GAMMA	1.000	PCI/L		U	1								
SW093	SW	REAL	SW00549WC	19-NOV-90	N	TRG	DRADS	PLUTONIUM-239	0200	PCI/L		U	01								
SW093	SW	REAL	SW00549WC	19-NOV-90	N	TRG	DRADS	STRONTIUM-89	1 000	PCI/L		U	1								
SW093	SW	REAL	SW00549WC	19-NOV-90	N	TRG	DRADS	STRONTIUM-90	4000	PCI/L		U	1								
SW093	SW	REAL	SW00549WC	19-NOV-90	N	TRG	DRADS	TRITIUM	200 0	PCI/L		U	400								
SW093	SW	REAL	SW00549WC	19-NOV-90	N	TRG	DRADS	URANIUM-234	3.600	PCI/L	1 200		6								
SW093	SW	REAL	SW00549WC	19-NOV-90	N	TRG	DRADS	URANIUM-235	5000	PCI/L		U	6								
SW093	SW	REAL	SW00549WC	19-NOV-90	N	TRG	DRADS	URANIUM-238	7 200	PCI/L	1 700		6								
SW093	SW	REAL	SW09390001	29-JAN-90	N		TRADS	AMERICIUM-241	0 009	PCI/L	0 006		0.004								
SW093	SW	REAL	SW09390001	29-JAN-90	N		TRADS	CESIUM 137	0 06	PCI/L	0 48		0 78								
SW093	SW	REAL	SW09390001	29-JAN-90	N		TRADS	GROSS ALPHA PARTICLE RADIOACTI	11.6	PCI/L	2 2		1 9								
SW093	SW	REAL	SW09390001	29-JAN-90	N		TRADS	GROSS BETA PARTICLE RADIOACTIV	13.7	PCI/L	2 4		2 8								
SW093	SW	REAL	SW09390001	29-JAN-90	N		TRADS	PLUTONIUM-239	0.011	PCI/L	0.006		0 000								
SW093	SW	REAL	SW09390001	29-JAN-90	N		TRADS	STRONTIUM-90	0 41	PCI/L	0 33		0.49								
SW093	SW	REAL	SW09390001	29-JAN-90	N		TRADS	URANIUM-233,-234	3 64	PCI/L	0.60		0 05								
SW093	SW	REAL	SW09390001	29-JAN-90	N		TRADS	URANIUM-235	0 14	PCI/L	0.10		0.00								
SW093	SW	REAL	SW09390001	29-JAN-90	N		TRADS	URANIUM-238	4 36	PCI/L	0 67		0.07								
SW093	SW	REAL	SW09390002	21-FEB-90	N																
SW093	SW	REAL	SW09390003	16-MAR-90	N		TRADS	AMERICIUM-241	0 074	PCI/L	0 019		0 011								
SW093	SW	REAL	SW09390003	16-MAR-90	N		TRADS	CESIUM-137	-0 41	PCI/L	0 54		0 94								
SW093	SW	REAL	SW09390003	16-MAR-90	N		TRADS	GROSS ALPHA PARTICLE RADIOACTI	9 0	PCI/L	1.3		0 8								
SW093	SW	REAL	SW09390003	16-MAR-90	N		TRADS	GROSS BETA PARTICLE RADIOACTIV	8 8	PCI/L	2.4		3 2								
SW093	SW	REAL	SW09390003	16-MAR-90	N		TRADS	STRONTIUM-90	0.23	PCI/L	0 28		0 43								
SW093	SW	REAL	SW09390003	16-MAR-90	N		TRADS	TRITIUM	220	PCI/L	110		160								
SW093	SW	REAL	SW09390003	16-MAR-90	N		TRADS	URANIUM-233,-234	2.92	PCI/L	0 75		0.00								
SW093	SW	REAL	SW09390003	16-MAR-90	N		TRADS	URANIUM-235	0.20	PCI/L	0 18		0 00								
SW093	SW	REAL	SW09390003	16-MAR-90	N		TRADS	URANIUM-238	3 51	PCI/L	0 83		0 00								
SW093	SW	REAL	SW093W052990A	29-MAY-90	N		TRADS	CESIUM-137	0 29	PCI/L	0 34		1								
SW093	SW	REAL	SW093W052990A	29-MAY-90	N		TRADS	GROSS ALPHA - DISSOLVED	9.6	PCI/L	2 6		2								
SW093	SW	REAL	SW093W052990A	29-MAY-90	N		TRADS	GROSS BETA - DISSOLVED	10.7	PCI/L	2 8		4								
SW093	SW	REAL	SW093W052990A	29-MAY-90	N		TRADS	STRONTIUM-89,90	0 38	PCI/L	0.17		1								
SW093	SW	REAL	SW093W052990A	29-MAY-90	N		TRADS	TRITIUM	90	PCI/L	180		400								
SW093	SW	REAL	SW70003WC	23-JUL-90	N		TRADS	GROSS ALPHA PARTICLE RADIOACTI	44.890	PCI/L	13.160										
SW093	SW	REAL	SW70003WC	23-JUL-90	N		TRADS	GROSS BETA PARTICLE RADIOACTIV	44 030	PCI/L	5.160										
SW093	SW	REAL	SW70006WC	24-JUL-90	N		TRADS	GROSS ALPHA PARTICLE RADIOACTI	3.520	PCI/L	2 180										
SW093	SW	REAL	SW70006WC	24-JUL-90	N		TRADS	GROSS BETA PARTICLE RADIOACTIV	7.490	PCI/L	1 490										
SW093	SW	REAL	SW70007WC	31-JUL-90	N		TRADS	GROSS ALPHA PARTICLE RADIOACTI	36.930	PCI/L	9 630										
SW093	SW	REAL	SW70007WC	31-JUL-90	N		TRADS	GROSS BETA PARTICLE RADIOACTIV	42.960	PCI/L	3.990										

Location	ST	QC	Sample Number	Smpl Date	D	ID	Group	Chemical	Result	Unit	Error	Qual	D LMT	VA	RN1	RN2	RN3	RN4	VResult	VQual	VDET
SW093	SW	REAL	SW70012WC	06-SEP-90	N		TRADS	GROSS ALPHA - SUSPENDED	+4.068E+01	PCI/L	+9 988E+00		5 54								
SW093	SW	REAL	SW70012WC	06-SEP-90	N		TRADS	GROSS BETA PARTICLE RADIOACTIV	+4 426E+01	PCI/L	+4 208E+00		3 48								
SW093	SW	REAL	SW70012WC	06-SEP-90	N		TRADS	TRITIUM	73 86676	PCI/L	134 1		249								
SW093	SW	REAL	SW70014WC	06-SEP-90	N		TRADS	GROSS ALPHA - SUSPENDED	14 08	PCI/L	4 30808		3.09								
SW093	SW	REAL	SW70014WC	06-SEP-90	N		TRADS	GROSS BETA PARTICLE RADIOACTIV	18.09	PCI/L	1 956276		1 77								
SW093	SW	REAL	SW70017WC	19-SEP-90	N		TRADS	GROSS ALPHA - SUSPENDED	12	PCI/L	4 312		3 33								
SW093	SW	REAL	SW70017WC	19-SEP-90	N		TRADS	GROSS BETA PARTICLE RADIOACTIV	17 7	PCI/L	1 906884		1 67								
SW093	SW	REAL	SW70017WC	19-SEP-90	N		TRADS	TRITIUM	-1 59616	PCI/L	134.5959		258								
SW093	SW	REAL	SW70022WC	24-OCT-90	N		TRADS	GROSS ALPHA - SUSPENDED	4.104	PCI/L	1 859844		1 71								
SW093	SW	REAL	SW70022WC	24-OCT-90	N		TRADS	GROSS BETA - SUSPENDED	8 829001	PCI/L	1 454124		1 54								
SW093	SW	REAL	SW70022WC	24-OCT-90	N		TRADS	TRITIUM	26 00665	PCI/L	152.5794		254								
SW093	SW	REAL	SW70041WC	19-NOV-90	N																
SW093	SW		SW093W043090	30-APR-90	N		TRADS	RADIUM-226	0 30	PCI/L	0 07		0 5								
SW093	SW		SW093W043090	30-APR-90	N		TRADS	STRONTIUM-89,90	0 40	PCI/L	0 21		1								
SW093	SW		SW093W043090	30-APR-90	N		TRADS	TRITIUM	0	PCI/L	120		400								
SW118	SW	REAL	SW00458WC	29-OCT-90	N	TRG	DRADS	AMERICIUM-241	.0100	PCI/L		U	01								
SW118	SW	REAL	SW00458WC	29-OCT-90	N	TRG	DRADS	GROSS ALPHA PARTICLE RADIOACTI	3.300	PCI/L	1 800		2								
SW118	SW	REAL	SW00458WC	29-OCT-90	N	TRG	DRADS	GROSS BETA PARTICLE RADIOACTIV	3 300	PCI/L	2 000		4								
SW118	SW	REAL	SW00458WC	29-OCT-90	N	TRG	DRADS	GROSS GAMMA	.8000	PCI/L		U	1								
SW118	SW	REAL	SW00458WC	29-OCT-90	N	TRG	DRADS	GROSS GAMMA	1 000	PCI/L		U	1								
SW118	SW	REAL	SW00458WC	29-OCT-90	N	TRG	DRADS	PLUTONIUM-239	.3000	PCI/L		U	01								
SW118	SW	REAL	SW00458WC	29-OCT-90	N	TRG	DRADS	RADIUM 226 AND 228	7000	PCI/L		U	5								
SW118	SW	REAL	SW00458WC	29-OCT-90	N	TRG	DRADS	RADIUM 226 AND 228	1.000	PCI/L		U	1								
SW118	SW	REAL	SW00458WC	29-OCT-90	N	TRG	DRADS	STRONTIUM-89	1 000	PCI/L		U	1								
SW118	SW	REAL	SW00458WC	29-OCT-90	N	TRG	DRADS	STRONTIUM-90	5000	PCI/L		U	1								
SW118	SW	REAL	SW00458WC	29-OCT-90	N	TRG	DRADS	TRITIUM	220.0	PCI/L	120 0		400								
SW118	SW	REAL	SW00458WC	29-OCT-90	N	TRG	DRADS	URANIUM-233,-234	2.100	PCI/L	1 000		6								
SW118	SW	REAL	SW00458WC	29-OCT-90	N	TRG	DRADS	URANIUM-235	5000	PCI/L		U	6								
SW118	SW	REAL	SW00458WC	29-OCT-90	N	TRG	DRADS	URANIUM-238	2 800	PCI/L	1 200		.6								
SW118	SW	REAL	SW00559WC	27-NOV-90	N	TRG	DRADS	AMERICIUM-241	.0100	PCI/L		U	01								
SW118	SW	REAL	SW00559WC	27-NOV-90	N	TRG	DRADS	GROSS ALPHA PARTICLE RADIOACTI	2.000	PCI/L		U	2								
SW118	SW	REAL	SW00559WC	27-NOV-90	N	TRG	DRADS	GROSS BETA PARTICLE RADIOACTIV	3.400	PCI/L	1.700		4								
SW118	SW	REAL	SW00559WC	27-NOV-90	N	TRG	DRADS	GROSS GAMMA	.8000	PCI/L		U	1								
SW118	SW	REAL	SW00559WC	27-NOV-90	N	TRG	DRADS	GROSS GAMMA	1.000	PCI/L		U	1								
SW118	SW	REAL	SW00559WC	27-NOV-90	N	TRG	DRADS	PLUTONIUM-239	0400	PCI/L		U	01								
SW118	SW	REAL	SW00559WC	27-NOV-90	N	TRG	DRADS	STRONTIUM-89	1.000	PCI/L		U	1								
SW118	SW	REAL	SW00559WC	27-NOV-90	N	TRG	DRADS	STRONTIUM-90	.6000	PCI/L		U	1								
SW118	SW	REAL	SW00559WC	27-NOV-90	N	TRG	DRADS	TRITIUM	200.0	PCI/L		U	400								
SW118	SW	REAL	SW00559WC	27-NOV-90	N	TRG	DRADS	URANIUM-234	2 000	PCI/L	8000		6								
SW118	SW	REAL	SW00559WC	27-NOV-90	N	TRG	DRADS	URANIUM-235	.4000	PCI/L		U	6								
SW129	SW	MSD	SW00464WC	05-NOV-90	N	TRG	DRADS	URANIUM-238	2.000	PCI/L	.8000		6								
SW129	SW	MSD	SW00464WC	05-NOV-90	N	TRG	DRADS	AMERICIUM-241	.0200	PCI/L		U	01								
SW129	SW	MSD	SW00464WC	05-NOV-90	N	TRG	DRADS	GROSS ALPHA PARTICLE RADIOACTI	2 000	PCI/L		U	2								
SW129	SW	MSD	SW00464WC	05-NOV-90	N	TRG	DRADS	GROSS BETA PARTICLE RADIOACTIV	4 000	PCI/L		U	4								
SW129	SW	MSD	SW00464WC	05-NOV-90	N	TRG	DRADS	GROSS GAMMA	7000	PCI/L		U	1								
SW129	SW	MSD	SW00464WC	05-NOV-90	N	TRG	DRADS	GROSS GAMMA	1 000	PCI/L		U	1								
SW129	SW	MSD	SW00464WC	05-NOV-90	N	TRG	DRADS	PLUTONIUM-239	3000	PCI/L		U	.01								
SW129	SW	MSD	SW00464WC	05-NOV-90	N	TRG	DRADS	RADIUM 226 AND 228	.6000	PCI/L		U	5								
SW129	SW	MSD	SW00464WC	05-NOV-90	N	TRG	DRADS	RADIUM 226 AND 228	.8000	PCI/L		U	1								
SW129	SW	MSD	SW00464WC	05-NOV-90	N	TRG	DRADS	STRONTIUM-89	.9000	PCI/L		U	1								
SW129	SW	MSD	SW00464WC	05-NOV-90	N	TRG	DRADS	STRONTIUM-90	.4000	PCI/L		U	1								
SW129	SW	MSD	SW00464WC	05-NOV-90	N	TRG	DRADS	TRITIUM	200.0	PCI/L		U	400								
SW129	SW	MSD	SW00464WC	05-NOV-90	N	TRG	DRADS	URANIUM-233,-234	.3000	PCI/L		U	.6								
SW129	SW	MSD	SW00464WC	05-NOV-90	N	TRG	DRADS	URANIUM-235	.3000	PCI/L		U	.6								
SW129	SW	MSD	SW00464WC	05-NOV-90	N	TRG	DRADS	URANIUM-238	.3000	PCI/L		U	6								
SW129	SW	REAL	SW00421WC	15-OCT-90	N		TRADS	AMERICIUM-241	-.004232	PCI/L	.0046099		.008								
SW129	SW	REAL	SW00421WC	15-OCT-90	N		TRADS	CESIUM-137	-.0529	PCI/L	.075068		.28								
SW129	SW	REAL	SW00421WC	15-OCT-90	N		TRADS	GROSS ALPHA - SUSPENDED	3 849	PCI/L	2.499		2.77								
SW129	SW	REAL	SW00421WC	15-OCT-90	N		TRADS	GROSS BETA - SUSPENDED	4 002	PCI/L	1.314572		1 78								
SW129	SW	REAL	SW00421WC	15-OCT-90	N		TRADS	PLUTONIUM-239/240	-.003812	PCI/L	.0044884		.009								
SW129	SW	REAL	SW00421WC	15-OCT-90	N		TRADS	STRONTIUM-90	.06839	PCI/L	1219904		.25								
SW129	SW	REAL	SW00421WC	15-OCT-90	N		TRADS	TRITIUM	203.1071	PCI/L	145.4467		262								
SW129	SW	REAL	SW00421WC	15-OCT-90	N		TRADS	URANIUM-233,-234	2.811	PCI/L	.730296		.190								

Location	ST	QC	Sample Number	Smpl Date	D	ID	Group	Chemical	Result	Unit	Error	Qual	D LMT	VA	RN1	RN2	RN3	RN4	VResult	VQual	VDET
SW129	SW	REAL	SW00421WC	15-OCT-90	N		TRADS	URANIUM-235/236	09862	PCI/L	.0974512		230								
SW129	SW	REAL	SW00421WC	15-OCT-90	N		TRADS	URANIUM-238	2 566	PCI/L	7157921		.190								

Location	ST	QC	Sample Number	Smpl Date	D	ID	Group	Chemical	Result	Unit	Error	Qual	D LMT	VA	RN1	RN2	RN3	RN4	VResult	VQual	VDET
SED118	SD	REAL	SS00127WC	18-SEP-90	N	DL	PSTCLPTCL	% MOISTURE	13	% MOIS											
SED118	SD	REAL	SS00127WC	18-SEP-90	N	DL	PSTCLPTCL	4,4'-DDD	76	UG/KG		U									
SED118	SD	REAL	SS00127WC	18-SEP-90	N	DL	PSTCLPTCL	4,4'-DDE	76	UG/KG		U									
SED118	SD	REAL	SS00127WC	18-SEP-90	N	DL	PSTCLPTCL	4,4'-DDT	76	UG/KG		U									
SED118	SD	REAL	SS00127WC	18-SEP-90	N	DL	PSTCLPTCL	ALDRIN	38	UG/KG		U									
SED118	SD	REAL	SS00127WC	18-SEP-90	N	DL	PSTCLPTCL	AROCLOR-1016	380	UG/KG		U									
SED118	SD	REAL	SS00127WC	18-SEP-90	N	DL	PSTCLPTCL	AROCLOR 1221	380	UG/KG		U									
SED118	SD	REAL	SS00127WC	18-SEP-90	N	DL	PSTCLPTCL	AROCLOR-1232	380	UG/KG		U									
SED118	SD	REAL	SS00127WC	18-SEP-90	N	DL	PSTCLPTCL	AROCLOR-1242	380	UG/KG		U									
SED118	SD	REAL	SS00127WC	18-SEP-90	N	DL	PSTCLPTCL	AROCLOR-1248	380	UG/KG		U									
SED118	SD	REAL	SS00127WC	18-SEP-90	N	DL	PSTCLPTCL	AROCLOR-1254	760	UG/KG		U									
SED118	SD	REAL	SS00127WC	18-SEP-90	N	DL	PSTCLPTCL	AROCLOR-1260	760	UG/KG		U									
SED118	SD	REAL	SS00127WC	18-SEP-90	N	DL	PSTCLPTCL	DIELDRIN	76	UG/KG		U									
SED118	SD	REAL	SS00127WC	18-SEP-90	N	DL	PSTCLPTCL	ENDOSULFAN I	38	UG/KG		U									
SED118	SD	REAL	SS00127WC	18-SEP-90	N	DL	PSTCLPTCL	ENDOSULFAN II	76	UG/KG		U									
SED118	SD	REAL	SS00127WC	18-SEP-90	N	DL	PSTCLPTCL	ENDOSULFAN SULFATE	76	UG/KG		U									
SED118	SD	REAL	SS00127WC	18-SEP-90	N	DL	PSTCLPTCL	ENDRIN	76	UG/KG		U									
SED118	SD	REAL	SS00127WC	18-SEP-90	N	DL	PSTCLPTCL	ENDRIN KETONE	76	UG/KG		U									
SED118	SD	REAL	SS00127WC	18-SEP-90	N	DL	PSTCLPTCL	HEPTACHLOR	38	UG/KG		U									
SED118	SD	REAL	SS00127WC	18-SEP-90	N	DL	PSTCLPTCL	HEPTACHLOR EPOXIDE	38	UG/KG		U									
SED118	SD	REAL	SS00127WC	18-SEP-90	N	DL	PSTCLPTCL	METHOXYCHLOR	380	UG/KG		U									
SED118	SD	REAL	SS00127WC	18-SEP-90	N	DL	PSTCLPTCL	TOXAPHENE	760	UG/KG		U									
SED118	SD	REAL	SS00127WC	18-SEP-90	N	DL	PSTCLPTCL	alpha-BHC	38	UG/KG		U									
SED118	SD	REAL	SS00127WC	18-SEP-90	N	DL	PSTCLPTCL	alpha-CHLORDANE	380	UG/KG		U									
SED118	SD	REAL	SS00127WC	18-SEP-90	N	DL	PSTCLPTCL	beta-BHC	38	UG/KG		U									
SED118	SD	REAL	SS00127WC	18-SEP-90	N	DL	PSTCLPTCL	delta-BHC	38	UG/KG		U									
SED118	SD	REAL	SS00127WC	18-SEP-90	N	DL	PSTCLPTCL	gamma-BHC (LINDANE)	38	UG/KG		U									
SED118	SD	REAL	SS00127WC	18-SEP-90	N	DL	PSTCLPTCL	gamma-CHLORDANE	380	UG/KG		U									
SED118	SD	REAL	SS00127WC	18-SEP-90	N	TRG	PSTCLPTCL	% MOISTURE	13	% MOIS											
SED118	SD	REAL	SS00127WC	18-SEP-90	N	TRG	PSTCLPTCL	4,4'-DDD	19	UG/KG		U									
SED118	SD	REAL	SS00127WC	18-SEP-90	N	TRG	PSTCLPTCL	4,4'-DDE	19	UG/KG		U									
SED118	SD	REAL	SS00127WC	18-SEP-90	N	TRG	PSTCLPTCL	4,4'-DDT	19	UG/KG		U									
SED118	SD	REAL	SS00127WC	18-SEP-90	N	TRG	PSTCLPTCL	ALDRIN	9.5	UG/KG		U									
SED118	SD	REAL	SS00127WC	18-SEP-90	N	TRG	PSTCLPTCL	AROCLOR-1016	95	UG/KG		U									
SED118	SD	REAL	SS00127WC	18-SEP-90	N	TRG	PSTCLPTCL	AROCLOR-1221	95	UG/KG		U									
SED118	SD	REAL	SS00127WC	18-SEP-90	N	TRG	PSTCLPTCL	AROCLOR-1232	95	UG/KG		U									
SED118	SD	REAL	SS00127WC	18-SEP-90	N	TRG	PSTCLPTCL	AROCLOR-1242	95	UG/KG		U									
SED118	SD	REAL	SS00127WC	18-SEP-90	N	TRG	PSTCLPTCL	AROCLOR-1248	95	UG/KG		U									
SED118	SD	REAL	SS00127WC	18-SEP-90	N	TRG	PSTCLPTCL	AROCLOR-1254	190	UG/KG		U									
SED118	SD	REAL	SS00127WC	18-SEP-90	N	TRG	PSTCLPTCL	AROCLOR-1260	190	UG/KG		U									
SED118	SD	REAL	SS00127WC	18-SEP-90	N	TRG	PSTCLPTCL	DIELDRIN	19	UG/KG		U									
SED118	SD	REAL	SS00127WC	18-SEP-90	N	TRG	PSTCLPTCL	ENDOSULFAN I	9 5	UG/KG		U									
SED118	SD	REAL	SS00127WC	18-SEP-90	N	TRG	PSTCLPTCL	ENDOSULFAN II	19	UG/KG		U									
SED118	SD	REAL	SS00127WC	18-SEP-90	N	TRG	PSTCLPTCL	ENDOSULFAN SULFATE	19	UG/KG		U									
SED118	SD	REAL	SS00127WC	18-SEP-90	N	TRG	PSTCLPTCL	ENDRIN	19	UG/KG		U									
SED118	SD	REAL	SS00127WC	18-SEP-90	N	TRG	PSTCLPTCL	ENDRIN KETONE	19	UG/KG		U									
SED118	SD	REAL	SS00127WC	18-SEP-90	N	TRG	PSTCLPTCL	HEPTACHLOR	9.5	UG/KG		U									
SED118	SD	REAL	SS00127WC	18-SEP-90	N	TRG	PSTCLPTCL	HEPTACHLOR EPOXIDE	9.5	UG/KG		U									
SED118	SD	REAL	SS00127WC	18-SEP-90	N	TRG	PSTCLPTCL	METHOXYCHLOR	95	UG/KG		U									
SED118	SD	REAL	SS00127WC	18-SEP-90	N	TRG	PSTCLPTCL	TOXAPHENE	190	UG/KG		U									
SED118	SD	REAL	SS00127WC	18-SEP-90	N	TRG	PSTCLPTCL	alpha-BHC	9 5	UG/KG		U									
SED118	SD	REAL	SS00127WC	18-SEP-90	N	TRG	PSTCLPTCL	alpha-CHLORDANE	95	UG/KG		U									
SED118	SD	REAL	SS00127WC	18-SEP-90	N	TRG	PSTCLPTCL	beta-BHC	9 5	UG/KG		U									
SED118	SD	REAL	SS00127WC	18-SEP-90	N	TRG	PSTCLPTCL	delta-BHC	9 5	UG/KG		U									
SED118	SD	REAL	SS00127WC	18-SEP-90	N	TRG	PSTCLPTCL	gamma-BHC (LINDANE)	9 5	UG/KG		U									
SED118	SD	REAL	SS00127WC	18-SEP-90	N	TRG	PSTCLPTCL	gamma-CHLORDANE	95	UG/KG		U									
SED118	SD	REAL	SS00161WC	28-NOV-90	N	TRG	PSTCLPTCL	4,4'-DDD	110	UG/KG		U	0 100								
SED118	SD	REAL	SS00161WC	28-NOV-90	N	TRG	PSTCLPTCL	4,4'-DDE	110	UG/KG		U	0 100								
SED118	SD	REAL	SS00161WC	28-NOV-90	N	TRG	PSTCLPTCL	4,4'-DDT	110	UG/KG		U	0.100								
SED118	SD	REAL	SS00161WC	28-NOV-90	N	TRG	PSTCLPTCL	ALDRIN	57	UG/KG		U	0 050								
SED118	SD	REAL	SS00161WC	28-NOV-90	N	TRG	PSTCLPTCL	AROCLOR-1016	570	UG/KG		U	0.500								
SED118	SD	REAL	SS00161WC	28-NOV-90	N	TRG	PSTCLPTCL	AROCLOR-1221	570	UG/KG		U	0 500								
SED118	SD	REAL	SS00161WC	28-NOV-90	N	TRG	PSTCLPTCL	AROCLOR-1232	570	UG/KG		U	0 500								

Location	ST	QC	Sample Number	Smpl Date	D	ID	Group	Chemical	Result	Unit	Error	Qual	D LMT	VA	RN1	RN2	RN3	RN4	VResult	VQual	VDET
SED118	SD	REAL	SS00161WC	28-NOV-90	N	TRG	PSTCLPTCL	AROCLOR-1242	570	UG/KG		U	0 500								
SED118	SD	REAL	SS00161WC	28-NOV-90	N	TRG	PSTCLPTCL	AROCLOR-1248	570	UG/KG		U	0 500								
SED118	SD	REAL	SS00161WC	28-NOV-90	N	TRG	PSTCLPTCL	AROCLOR-1254	1100	UG/KG		U	1 000								
SED118	SD	REAL	SS00161WC	28-NOV-90	N	TRG	PSTCLPTCL	AROCLOR-1260	1100	UG/KG		U	1.000								
SED118	SD	REAL	SS00161WC	28-NOV-90	N	TRG	PSTCLPTCL	DIELDRIN	110	UG/KG		U	0 100								
SED118	SD	REAL	SS00161WC	28-NOV-90	N	TRG	PSTCLPTCL	ENDOSULFAN I	57	UG/KG		U	0.050								
SED118	SD	REAL	SS00161WC	28-NOV-90	N	TRG	PSTCLPTCL	ENDOSULFAN II	110	UG/KG		U	0.100								
SED118	SD	REAL	SS00161WC	28-NOV-90	N	TRG	PSTCLPTCL	ENDOSULFAN SULFATE	110	UG/KG		U	0 100								
SED118	SD	REAL	SS00161WC	28-NOV-90	N	TRG	PSTCLPTCL	ENDRIN	110	UG/KG		U	0 100								
SED118	SD	REAL	SS00161WC	28-NOV-90	N	TRG	PSTCLPTCL	ENDRIN KETONE	110	UG/KG		U	0.100								
SED118	SD	REAL	SS00161WC	28-NOV-90	N	TRG	PSTCLPTCL	HEPTACHLOR	57	UG/KG		U	0 050								
SED118	SD	REAL	SS00161WC	28-NOV-90	N	TRG	PSTCLPTCL	HEPTACHLOR EPOXIDE	57	UG/KG		U	0.050								
SED118	SD	REAL	SS00161WC	28-NOV-90	N	TRG	PSTCLPTCL	METHOXYCHLOR	570	UG/KG		U	0.500								
SED118	SD	REAL	SS00161WC	28-NOV-90	N	TRG	PSTCLPTCL	TOXAPHENE	1100	UG/KG		U	1.000								
SED118	SD	REAL	SS00161WC	28-NOV-90	N	TRG	PSTCLPTCL	alpha-BHC	57	UG/KG		U	0.050								
SED118	SD	REAL	SS00161WC	28-NOV-90	N	TRG	PSTCLPTCL	alpha-CHLORDANE	570	UG/KG		U	0 500								
SED118	SD	REAL	SS00161WC	28-NOV-90	N	TRG	PSTCLPTCL	beta-BHC	57	UG/KG		U	0 050								
SED118	SD	REAL	SS00161WC	28-NOV-90	N	TRG	PSTCLPTCL	delta-BHC	57	UG/KG		U	0 050								
SED118	SD	REAL	SS00161WC	28-NOV-90	N	TRG	PSTCLPTCL	gamma-BHC (LINDANE)	57	UG/KG		U	0.050								
SED118	SD	REAL	SS00161WC	28-NOV-90	N	TRG	PSTCLPTCL	gamma-CHLORDANE	570	UG/KG		U	0 500								
SED118	SD	REAL	SS00161WC	28-NOV-90	N	TRG	WQPL	ALKALINITY AS CACO3	1300	MG/KG											
SED118	SD	REAL	SS00161WC	28-NOV-90	N	TRG	WQPL	NITRATE/NITRITE	2.3	MG/KG			0.02								
SED118	SD	REAL	SS00161WC	28-NOV-90	N	TRG	WQPL	NITRITE	0 7	MG/KG		U	0 02								
SED118	SD	REAL	SS00161WC	28-NOV-90	N	TRG	WQPL	pH	8 10	MG/KG											
SW018	SW	REAL	SW00487WC	23-NOV-90	Y																
SW022	SW	REAL	SW70001WC	23-JUL-90	N	TRG	WQPL	BICARBONATE AS CACO3	53	MG/L			5								
SW022	SW	REAL	SW70001WC	23-JUL-90	N	TRG	WQPL	CARBONATE AS CACO3	5	MG/L		U	5								
SW022	SW	REAL	SW70001WC	23-JUL-90	N	TRG	WQPL	CARBONATE AS CACO3	ND	MG/L			5								
SW022	SW	REAL	SW70001WC	23-JUL-90	N	TRG	WQPL	CHLORIDE	6.8	MG/L			0 4								
SW022	SW	REAL	SW70001WC	23-JUL-90	N	TRG	WQPL	FLUORIDE	0 3	MG/L			0 2								
SW022	SW	REAL	SW70001WC	23-JUL-90	N	TRG	WQPL	NITRATE/NITRITE	1 8	MG/L			0 2								
SW022	SW	REAL	SW70001WC	23-JUL-90	N	TRG	WQPL	PHOSPHORUS	1 8	MG/L			0.1								
SW022	SW	REAL	SW70001WC	23-JUL-90	N	TRG	WQPL	SULFATE	9 1	MG/L			9.1								
SW022	SW	REAL	SW70001WC	23-JUL-90	N	TRG	WQPL	TOTAL ALKALINITY	53	MG/L			5								
SW022	SW	REAL	SW70001WC	23-JUL-90	N	TRG	WQPL	TOTAL DISSOLVED SOLIDS	180	MG/L			15								
SW022	SW	REAL	SW70001WC	23-JUL-90	N	TRG	WQPL	TOTAL SUSPENDED SOLIDS	2800	MG/L			20								
SW022	SW	REAL	SW70013WC	07-SEP-90	N	TRG	WQPL	ALKALINITY AS CACO3	10	MG/L		U	10								
SW022	SW	REAL	SW70013WC	07-SEP-90	N	TRG	WQPL	AMMONIA	2 5	MG/L			0 5								
SW022	SW	REAL	SW70013WC	07-SEP-90	N	TRG	WQPL	BICARBONATE AS CACO3	58	MG/L			10								
SW022	SW	REAL	SW70013WC	07-SEP-90	N	TRG	WQPL	CHLORIDE	5	MG/L			2								
SW022	SW	REAL	SW70013WC	07-SEP-90	N	TRG	WQPL	FLUORIDE	0.5	MG/L		U	0 5								
SW022	SW	REAL	SW70013WC	07-SEP-90	N	TRG	WQPL	NITRATE/NITRITE	1.3	MG/L			0 1								
SW022	SW	REAL	SW70013WC	07-SEP-90	N	TRG	WQPL	SULFATE	11	MG/L			10								
SW022	SW	REAL	SW70013WC	07-SEP-90	N	TRG	WQPL	TOTAL ALKALINITY	58	MG/L			10								
SW022	SW	REAL	SW70013WC	07-SEP-90	N	TRG	WQPL	TOTAL DISSOLVED SOLIDS	100	MG/L			2								
SW022	SW	REAL	SW70013WC	07-SEP-90	N	TRG	WQPL	TOTAL SUSPENDED SOLIDS	300	MG/L			2								
SW022	SW	REAL	SW70020WC	24-OCT-90	N																
SW022	SW	REAL	SW70027WC	08-NOV-90	N	TRG	WQPL	ALKALINITY AS CACO3	10	MG/L		U	10								
SW022	SW	REAL	SW70027WC	08-NOV-90	N	TRG	WQPL	BICARBONATE AS CACO3	68	MG/L			10								
SW022	SW	REAL	SW70027WC	08-NOV-90	N	TRG	WQPL	CHLORIDE	220	MG/L			2								
SW022	SW	REAL	SW70027WC	08-NOV-90	N	TRG	WQPL	FLUORIDE	0.5	MG/L		U	0 5								
SW022	SW	REAL	SW70027WC	08-NOV-90	N	TRG	WQPL	NITRATE/NITRITE	1 0	MG/L			0 1								
SW022	SW	REAL	SW70027WC	08-NOV-90	N	TRG	WQPL	NITRITE	0.05	MG/L			0.01								
SW022	SW	REAL	SW70027WC	08-NOV-90	N	TRG	WQPL	ORTHOPHOSPHATE	0.13	MG/L			0 01								
SW022	SW	REAL	SW70027WC	08-NOV-90	N	TRG	WQPL	PHOSPHORUS	0.83	MG/L			0.01								
SW022	SW	REAL	SW70027WC	08-NOV-90	N	TRG	WQPL	SILICON	25	MG/L			2								
SW022	SW	REAL	SW70027WC	08-NOV-90	N	TRG	WQPL	SULFATE	13	MG/L			10								
SW022	SW	REAL	SW70027WC	08-NOV-90	N	TRG	WQPL	TOTAL ALKALINITY	68	MG/L			10								
SW022	SW	REAL	SW70027WC	08-NOV-90	N	TRG	WQPL	TOTAL DISSOLVED SOLIDS	570	MG/L			2								
SW022	SW	REAL	SW70027WC	08-NOV-90	N	TRG	WQPL	TOTAL SUSPENDED SOLIDS	920	MG/L			2								
SW022	SW	REAL	SW70028WC	07-NOV-90	N	TRG	WQPL	ALKALINITY AS CACO3	10	MG/L		U	10								
SW022	SW	REAL	SW70028WC	07-NOV-90	N	TRG	WQPL	BICARBONATE AS CACO3	48	MG/L			10								
SW022	SW	REAL	SW70028WC	07-NOV-90	N	TRG	WQPL	CHLORIDE	84	MG/L			2								

Location	ST	QC	Sample Number	Smpl Date	D	ID	Group	Chemical	Result	Unit	Error	Qual	D LMT	VA	RN1	RN2	RN3	RN4	VResult	VQual	VDET
SW022	SW	REAL	SW70028WC	07-NOV-90	N	TRG	WQPL	FLUORIDE	0 5	MG/L		U	0 5								
SW022	SW	REAL	SW70028WC	07-NOV-90	N	TRG	WQPL	NITRATE/NITRITE	1 4	MG/L			0 1								
SW022	SW	REAL	SW70028WC	07-NOV-90	N	TRG	WQPL	NITRITE	0 02	MG/L			0 01								
SW022	SW	REAL	SW70028WC	07-NOV-90	N	TRG	WQPL	ORTHOPHOSPHATE	0 16	MG/L			0 01								
SW022	SW	REAL	SW70028WC	07-NOV-90	N	TRG	WQPL	PHOSPHORUS	0 28	MG/L			0 01								
SW022	SW	REAL	SW70028WC	07-NOV-90	N	TRG	WQPL	SILICON	12	MG/L			2								
SW022	SW	REAL	SW70028WC	07-NOV-90	N	TRG	WQPL	SULFATE	10	MG/L			10								
SW022	SW	REAL	SW70028WC	07-NOV-90	N	TRG	WQPL	TOTAL ALKALINITY	48	MG/L			10								
SW022	SW	REAL	SW70028WC	07-NOV-90	N	TRG	WQPL	TOTAL DISSOLVED SOLIDS	220	MG/L			2								
SW022	SW	REAL	SW70028WC	07-NOV-90	N	TRG	WQPL	TOTAL SUSPENDED SOLIDS	130	MG/L			2								
SW022	SW	REAL	SW70030WC	08-NOV-90	N																
SW023	SW	REAL	SW00443WC	16-OCT-90	N	TRG	PSTCLPTCL	4,4'-DDD	0 10	UG/L		U	0 10								
SW023	SW	REAL	SW00443WC	16-OCT-90	N	TRG	PSTCLPTCL	4,4'-DDE	0.10	UG/L		U	0.10								
SW023	SW	REAL	SW00443WC	16-OCT-90	N	TRG	PSTCLPTCL	4,4'-DDT	0 10	UG/L		U	0 10								
SW023	SW	REAL	SW00443WC	16-OCT-90	N	TRG	PSTCLPTCL	ALDRIN	0 05	UG/L		U	0 05								
SW023	SW	REAL	SW00443WC	16-OCT-90	N	TRG	PSTCLPTCL	AROCLOR-1016	0 50	UG/L		U	0 50								
SW023	SW	REAL	SW00443WC	16-OCT-90	N	TRG	PSTCLPTCL	AROCLOR-1221	0 50	UG/L		U	0 50								
SW023	SW	REAL	SW00443WC	16-OCT-90	N	TRG	PSTCLPTCL	AROCLOR-1232	0 50	UG/L		U	0 50								
SW023	SW	REAL	SW00443WC	16-OCT-90	N	TRG	PSTCLPTCL	AROCLOR-1242	0 50	UG/L		U	0 50								
SW023	SW	REAL	SW00443WC	16-OCT-90	N	TRG	PSTCLPTCL	AROCLOR-1248	0 50	UG/L		U	0 50								
SW023	SW	REAL	SW00443WC	16-OCT-90	N	TRG	PSTCLPTCL	AROCLOR-1254	1 00	UG/L		U	1.00								
SW023	SW	REAL	SW00443WC	16-OCT-90	N	TRG	PSTCLPTCL	AROCLOR-1260	1 00	UG/L		U	1 00								
SW023	SW	REAL	SW00443WC	16-OCT-90	N	TRG	PSTCLPTCL	DIELDRIN	0.10	UG/L		U	0 10								
SW023	SW	REAL	SW00443WC	16-OCT-90	N	TRG	PSTCLPTCL	ENDOSULFAN I	0 05	UG/L		U	0.05								
SW023	SW	REAL	SW00443WC	16-OCT-90	N	TRG	PSTCLPTCL	ENDOSULFAN II	0 10	UG/L		U	0.10								
SW023	SW	REAL	SW00443WC	16-OCT-90	N	TRG	PSTCLPTCL	ENDOSULFAN SULFATE	0 10	UG/L		U	0 10								
SW023	SW	REAL	SW00443WC	16-OCT-90	N	TRG	PSTCLPTCL	ENDRIN	0 10	UG/L		U	0 10								
SW023	SW	REAL	SW00443WC	16-OCT-90	N	TRG	PSTCLPTCL	ENDRIN KETONE	0 10	UG/L		U	0 10								
SW023	SW	REAL	SW00443WC	16-OCT-90	N	TRG	PSTCLPTCL	HEPTACHLOR	0 05	UG/L		U	0 05								
SW023	SW	REAL	SW00443WC	16-OCT-90	N	TRG	PSTCLPTCL	HEPTACHLOR EPOXIDE	0 05	UG/L		U	0 05								
SW023	SW	REAL	SW00443WC	16-OCT-90	N	TRG	PSTCLPTCL	METHOXYCHLOR	0.50	UG/L		U	0 50								
SW023	SW	REAL	SW00443WC	16-OCT-90	N	TRG	PSTCLPTCL	TOXAPHENE	1.00	UG/L		U	1 00								
SW023	SW	REAL	SW00443WC	16-OCT-90	N	TRG	PSTCLPTCL	alpha-BHC	0.05	UG/L		U	0.05								
SW023	SW	REAL	SW00443WC	16-OCT-90	N	TRG	PSTCLPTCL	alpha-CHLORDANE	0.50	UG/L		U	0.50								
SW023	SW	REAL	SW00443WC	16-OCT-90	N	TRG	PSTCLPTCL	beta-BHC	0.05	UG/L		U	0 05								
SW023	SW	REAL	SW00443WC	16-OCT-90	N	TRG	PSTCLPTCL	delta-BHC	0 05	UG/L		U	0 05								
SW023	SW	REAL	SW00443WC	16-OCT-90	N	TRG	PSTCLPTCL	gamma-BHC (LINDANE)	0.05	UG/L		U	0 05								
SW023	SW	REAL	SW00443WC	16-OCT-90	N	TRG	PSTCLPTCL	gamma-CHLORDANE	0 50	UG/L		U	0 50								
SW023	SW	REAL	SW00443WC	16-OCT-90	N	TRG	WQPL	BICARBONATE AS CACO3	200	MG/L			1								
SW023	SW	REAL	SW00443WC	16-OCT-90	N	TRG	WQPL	CARBONATE	1	MG/L		U	1								
SW023	SW	REAL	SW00443WC	16-OCT-90	N	TRG	WQPL	CHLORIDE	100	MG/L			10								
SW023	SW	REAL	SW00443WC	16-OCT-90	N	TRG	WQPL	CYANIDES (SOLUBLE SALTS AND CO	0 02	MG/L		U	0.02								
SW023	SW	REAL	SW00443WC	16-OCT-90	N	TRG	WQPL	FLUORIDE, SOLUBLE	1 1	MG/L			0 2								
SW023	SW	REAL	SW00443WC	16-OCT-90	N	TRG	WQPL	NITRATE	7 1	MG/L											
SW023	SW	REAL	SW00443WC	16-OCT-90	N	TRG	WQPL	NITRITE	1	MG/L		U									
SW023	SW	REAL	SW00443WC	16-OCT-90	N	TRG	WQPL	OIL AND GREASE	5	MG/L		U	5								
SW023	SW	REAL	SW00443WC	16-OCT-90	N	TRG	WQPL	PHOSPHATE	0.2	MG/L		U	0 2								
SW023	SW	REAL	SW00443WC	16-OCT-90	N	TRG	WQPL	PHOSPHORUS	02	MG/L		U									
SW023	SW	REAL	SW00443WC	16-OCT-90	N	TRG	WQPL	PHOSPHORUS	0.02	MG/L			0 01								
SW023	SW	REAL	SW00443WC	16-OCT-90	N	TRG	WQPL	SILICA, DISSOLVED	28	MG/L			2								
SW023	SW	REAL	SW00443WC	16-OCT-90	N	TRG	WQPL	SULFATE	46	MG/L			20								
SW023	SW	REAL	SW00443WC	16-OCT-90	N	TRG	WQPL	TOTAL DISSOLVED SOLIDS	640	MG/L			10								
SW023	SW	REAL	SW00443WC	16-OCT-90	N	TRG	WQPL	TOTAL SUSPENDED SOLIDS	5	MG/L			4								
SW023	SW	REAL	SW00544WC	16-NOV-90	N	TRG	WQPL	BICARBONATE AS CACO3	280	MG/L			1 0								
SW023	SW	REAL	SW00544WC	16-NOV-90	N	TRG	WQPL	CARBONATE AS CACO3	0	MG/L			1 0								
SW023	SW	REAL	SW00544WC	16-NOV-90	N	TRG	WQPL	CHLORIDE	65	MG/L			0 2								
SW023	SW	REAL	SW00544WC	16-NOV-90	N	TRG	WQPL	CYANIDES (SOLUBLE SALTS AND CO	0.02	MG/L		U	0 02								
SW023	SW	REAL	SW00544WC	16-NOV-90	N	TRG	WQPL	FLUORIDE	0.9	MG/L			0.1								
SW023	SW	REAL	SW00544WC	16-NOV-90	N	TRG	WQPL	HYDROGEN SULFIDE	10	MG/L		U	10								
SW023	SW	REAL	SW00544WC	16-NOV-90	N	TRG	WQPL	NITRATE/NITRITE	3.7	MG/L			0.02								
SW023	SW	REAL	SW00544WC	16-NOV-90	N	TRG	WQPL	NITRITE	0.02	MG/L		U	0 02								
SW023	SW	REAL	SW00544WC	16-NOV-90	N	TRG	WQPL	OIL AND GREASE	5	MG/L		U	5								
SW023	SW	REAL	SW00544WC	16-NOV-90	N	TRG	WQPL	ORTHOPHOSPHATE	0.01	MG/L		U	0 01								

Location	ST	QC	Sample Number	Smpl Date	D	ID	Group	Chemical	Result	Unit	Error	Qual	D LMT	VA	RN1	RN2	RN3	RN4	VResult	VQual	VDET
SW023	SW	REAL	SW00544WC	16-NOV-90	N	TRG	WQPL	PHOSPHATE	0 01	MG/L			0 01								
SW023	SW	REAL	SW00544WC	16-NOV-90	N	TRG	WQPL	SILICA, DISSOLVED	22	MG/L			2								
SW023	SW	REAL	SW00544WC	16-NOV-90	N	TRG	WQPL	SILICA, DISSOLVED	5 0	MG/L			0 4								
SW023	SW	REAL	SW00544WC	16-NOV-90	N	TRG	WQPL	SULFATE	56	MG/L			2 0								
SW023	SW	REAL	SW00544WC	16-NOV-90	N	TRG	WQPL	TOTAL DISSOLVED SOLIDS	520	MG/L			10 0								
SW023	SW	REAL	SW00544WC	16-NOV-90	N	TRG	WQPL	TOTAL SUSPENDED SOLIDS	4	MG/L		U	4 0								
SW023	SW	REAL	SW70002WC	23-JUL-90	N	TRG	WQPL	BICARBONATE AS CACO3	69	MG/L			5								
SW023	SW	REAL	SW70002WC	23-JUL-90	N	TRG	WQPL	CARBONATE AS CACO3	5	MG/L		U	5								
SW023	SW	REAL	SW70002WC	23-JUL-90	N	TRG	WQPL	CARBONATE AS CACO3	ND	MG/L			5								
SW023	SW	REAL	SW70002WC	23-JUL-90	N	TRG	WQPL	CHLORIDE	8 0	MG/L			0 4								
SW023	SW	REAL	SW70002WC	23-JUL-90	N	TRG	WQPL	FLUORIDE	0.3	MG/L			0 2								
SW023	SW	REAL	SW70002WC	23-JUL-90	N	TRG	WQPL	NITRATE/NITRITE	1 7	MG/L			0 2								
SW023	SW	REAL	SW70002WC	23-JUL-90	N	TRG	WQPL	PHOSPHORUS	1 5	MG/L			0 1								
SW023	SW	REAL	SW70002WC	23-JUL-90	N	TRG	WQPL	SULFATE	9 6	MG/L			0 5								
SW023	SW	REAL	SW70002WC	23-JUL-90	N	TRG	WQPL	TOTAL ALKALINITY	69	MG/L			5								
SW023	SW	REAL	SW70002WC	23-JUL-90	N	TRG	WQPL	TOTAL DISSOLVED SOLIDS	140	MG/L			15								
SW023	SW	REAL	SW70002WC	23-JUL-90	N	TRG	WQPL	TOTAL SUSPENDED SOLIDS	1600	MG/L			20								
SW023	SW	REAL	SW70005WC	24-JUL-90	N	TRG	WQPL	BICARBONATE AS CACO3	120	MG/L			5								
SW023	SW	REAL	SW70005WC	24-JUL-90	N	TRG	WQPL	CARBONATE AS CACO3	5	MG/L		U	5								
SW023	SW	REAL	SW70005WC	24-JUL-90	N	TRG	WQPL	CARBONATE AS CACO3	ND	MG/L			5								
SW023	SW	REAL	SW70005WC	24-JUL-90	N	TRG	WQPL	CHLORIDE	22	MG/L			2								
SW023	SW	REAL	SW70005WC	24-JUL-90	N	TRG	WQPL	FLUORIDE	0.6	MG/L			0 2								
SW023	SW	REAL	SW70005WC	24-JUL-90	N	TRG	WQPL	NITRATE/NITRITE	2 8	MG/L			0 4								
SW023	SW	REAL	SW70005WC	24-JUL-90	N	TRG	WQPL	PHOSPHORUS	1 4	MG/L			0 1								
SW023	SW	REAL	SW70005WC	24-JUL-90	N	TRG	WQPL	SULFATE	25	MG/L			2 5								
SW023	SW	REAL	SW70005WC	24-JUL-90	N	TRG	WQPL	TOTAL ALKALINITY	120	MG/L			5								
SW023	SW	REAL	SW70005WC	24-JUL-90	N	TRG	WQPL	TOTAL DISSOLVED SOLIDS	220	MG/L			15								
SW023	SW	REAL	SW70005WC	24-JUL-90	N	TRG	WQPL	TOTAL SUSPENDED SOLIDS	120	MG/L			10								
SW023	SW	REAL	SW70015WC	19-SEP-90	N	TRG	WQPL	ALKALINITY AS CACO3	10	MG/L		U	10								
SW023	SW	REAL	SW70015WC	19-SEP-90	N	TRG	WQPL	BICARBONATE AS CACO3	53	MG/L			10								
SW023	SW	REAL	SW70015WC	19-SEP-90	N	TRG	WQPL	CHLORIDE	7	MG/L			2								
SW023	SW	REAL	SW70015WC	19-SEP-90	N	TRG	WQPL	FLUORIDE	0.5	MG/L		U	0 5								
SW023	SW	REAL	SW70015WC	19-SEP-90	N	TRG	WQPL	NITRATE/NITRITE	1.0	MG/L			0 1								
SW023	SW	REAL	SW70015WC	19-SEP-90	N	TRG	WQPL	ORTHOPHOSPHATE	0.08	MG/L			0 01								
SW023	SW	REAL	SW70015WC	19-SEP-90	N	TRG	WQPL	SULFATE	10	MG/L		U	10								
SW023	SW	REAL	SW70015WC	19-SEP-90	N	TRG	WQPL	TOTAL ALKALINITY	53	MG/L			10								
SW023	SW	REAL	SW70015WC	19-SEP-90	N	TRG	WQPL	TOTAL DISSOLVED SOLIDS	94	MG/L			2								
SW023	SW	REAL	SW70015WC	19-SEP-90	N	TRG	WQPL	TOTAL SUSPENDED SOLIDS	360	MG/L			2								
SW023	SW	REAL	SW70029WC	08-NOV-90	N	TRG	WQPL	BICARBONATE AS CACO3	80	MG/L											
SW023	SW	REAL	SW70029WC	08-NOV-90	N	TRG	WQPL	CARBONATE AS CACO3	1	MG/L		U									
SW023	SW	REAL	SW70029WC	08-NOV-90	N	TRG	WQPL	CHLORIDE	330	MG/L											
SW023	SW	REAL	SW70029WC	08-NOV-90	N	TRG	WQPL	FLUORIDE, SOLUBLE	.5	MG/L		U									
SW023	SW	REAL	SW70029WC	08-NOV-90	N	TRG	WQPL	NITRATE/NITRITE	2	MG/L											
SW023	SW	REAL	SW70029WC	08-NOV-90	N	TRG	WQPL	NITRITE	01	MG/L		U									
SW023	SW	REAL	SW70029WC	08-NOV-90	N	TRG	WQPL	PHOSPHATE	.14	MG/L											
SW023	SW	REAL	SW70029WC	08-NOV-90	N	TRG	WQPL	PHOSPHORUS	17	MG/L											
SW023	SW	REAL	SW70029WC	08-NOV-90	N	TRG	WQPL	SULFATE	14	MG/L											
SW023	SW	REAL	SW70029WC	08-NOV-90	N	TRG	WQPL	TOTAL DISSOLVED SOLIDS	401	MG/L											
SW023	SW	REAL	SW70029WC	08-NOV-90	N	TRG	WQPL	TOTAL SUSPENDED SOLIDS	115	MG/L											
SW023	SW	REAL	SW70040WC	19-NOV-90	N	TRG	WQPL	BICARBONATE AS CACO3	100	MG/L			1 0								
SW023	SW	REAL	SW70040WC	19-NOV-90	N	TRG	WQPL	CARBONATE AS CACO3	0	MG/L			1 0								
SW023	SW	REAL	SW70040WC	19-NOV-90	N	TRG	WQPL	CHLORIDE	120	MG/L			0 2								
SW023	SW	REAL	SW70040WC	19-NOV-90	N	TRG	WQPL	FLUORIDE	0 4	MG/L			0.1								
SW023	SW	REAL	SW70040WC	19-NOV-90	N	TRG	WQPL	NITRATE/NITRITE	1 8	MG/L			0.02								
SW023	SW	REAL	SW70040WC	19-NOV-90	N	TRG	WQPL	NITRITE	0 02	MG/L		U	0 02								
SW023	SW	REAL	SW70040WC	19-NOV-90	N	TRG	WQPL	PHOSPHATE	0 08	MG/L			0 01								
SW023	SW	REAL	SW70040WC	19-NOV-90	N	TRG	WQPL	SILICA, DISSOLVED	2 2	MG/L			0.4								
SW023	SW	REAL	SW70040WC	19-NOV-90	N	TRG	WQPL	SULFATE	18	MG/L			2 0								
SW023	SW	REAL	SW70040WC	19-NOV-90	N	TRG	WQPL	TOTAL DISSOLVED SOLIDS	310	MG/L			10.0								
SW023	SW	REAL	SW70040WC	19-NOV-90	N	TRG	WQPL	TOTAL SUSPENDED SOLIDS	62	MG/L			4 0								
SW023	SW		SW70018WC	11-OCT-90	N																
SW037	SW	REAL	SW00413WC	17-OCT-90	Y																
SW037	SW	REAL	SW00514WC	27-NOV-90	Y																

Location	ST	QC	Sample Number	Smpl Date	D	ID	Group	Chemical	Result	Unit	Error	Qual	D	LMT	VA	RN1	RN2	RN3	RN4	VResult	VQual	VDET
SW038	SW	REAL	SW00419WC	15-OCT-90	N	TRG	PSTCLPTCL	4,4'-DDD	1	UG/L		U										
SW038	SW	REAL	SW00419WC	15-OCT-90	N	TRG	PSTCLPTCL	4,4'-DDE	.1	UG/L		U										
SW038	SW	REAL	SW00419WC	15-OCT-90	N	TRG	PSTCLPTCL	4,4'-DDT	.1	UG/L		U										
SW038	SW	REAL	SW00419WC	15-OCT-90	N	TRG	PSTCLPTCL	ALDRIN	05	UG/L		U										
SW038	SW	REAL	SW00419WC	15-OCT-90	N	TRG	PSTCLPTCL	AROCLOR-1016	5	UG/L		U										
SW038	SW	REAL	SW00419WC	15-OCT-90	N	TRG	PSTCLPTCL	AROCLOR-1221	5	UG/L		U										
SW038	SW	REAL	SW00419WC	15-OCT-90	N	TRG	PSTCLPTCL	AROCLOR-1232	.5	UG/L		U										
SW038	SW	REAL	SW00419WC	15-OCT-90	N	TRG	PSTCLPTCL	AROCLOR-1242	5	UG/L		U										
SW038	SW	REAL	SW00419WC	15-OCT-90	N	TRG	PSTCLPTCL	AROCLOR-1248	5	UG/L		U										
SW038	SW	REAL	SW00419WC	15-OCT-90	N	TRG	PSTCLPTCL	AROCLOR-1254	1	UG/L		U										
SW038	SW	REAL	SW00419WC	15-OCT-90	N	TRG	PSTCLPTCL	AROCLOR-1260	1	UG/L		U										
SW038	SW	REAL	SW00419WC	15-OCT-90	N	TRG	PSTCLPTCL	DIELDRIN	1	UG/L		U										
SW038	SW	REAL	SW00419WC	15-OCT-90	N	TRG	PSTCLPTCL	ENDOSULFAN I	.05	UG/L		U										
SW038	SW	REAL	SW00419WC	15-OCT-90	N	TRG	PSTCLPTCL	ENDOSULFAN II	1	UG/L		U										
SW038	SW	REAL	SW00419WC	15-OCT-90	N	TRG	PSTCLPTCL	ENDOSULFAN SULFATE	1	UG/L		U										
SW038	SW	REAL	SW00419WC	15-OCT-90	N	TRG	PSTCLPTCL	ENDRIN	1	UG/L		U										
SW038	SW	REAL	SW00419WC	15-OCT-90	N	TRG	PSTCLPTCL	ENDRIN KETONE	1	UG/L		U										
SW038	SW	REAL	SW00419WC	15-OCT-90	N	TRG	PSTCLPTCL	HEPTACHLOR	05	UG/L		U										
SW038	SW	REAL	SW00419WC	15-OCT-90	N	TRG	PSTCLPTCL	HEPTACHLOR EPOXIDE	05	UG/L		U										
SW038	SW	REAL	SW00419WC	15-OCT-90	N	TRG	PSTCLPTCL	METHOXYCHLOR	5	UG/L		U										
SW038	SW	REAL	SW00419WC	15-OCT-90	N	TRG	PSTCLPTCL	TOXAPHENE	1	UG/L		U										
SW038	SW	REAL	SW00419WC	15-OCT-90	N	TRG	PSTCLPTCL	alpha-BHC	05	UG/L		U										
SW038	SW	REAL	SW00419WC	15-OCT-90	N	TRG	PSTCLPTCL	alpha-CHLORDANE	5	UG/L		U										
SW038	SW	REAL	SW00419WC	15-OCT-90	N	TRG	PSTCLPTCL	beta-BHC	05	UG/L		U										
SW038	SW	REAL	SW00419WC	15-OCT-90	N	TRG	PSTCLPTCL	delta-BHC	05	UG/L		U										
SW038	SW	REAL	SW00419WC	15-OCT-90	N	TRG	PSTCLPTCL	gamma-BHC (LINDANE)	05	UG/L		U										
SW038	SW	REAL	SW00419WC	15-OCT-90	N	TRG	PSTCLPTCL	gamma-CHLORDANE	5	UG/L		U										
SW038	SW	REAL	SW00419WC	15-OCT-90	N	TRG	WQPL	ALKALINITY AS CACO3	214 56	MG/L												
SW038	SW	REAL	SW00419WC	15-OCT-90	N	TRG	WQPL	CHLORIDE	39	MG/L												
SW038	SW	REAL	SW00419WC	15-OCT-90	N	TRG	WQPL	CYANIDE	2	UG/L		U										
SW038	SW	REAL	SW00419WC	15-OCT-90	N	TRG	WQPL	FLUORIDE	.76	MG/L												
SW038	SW	REAL	SW00419WC	15-OCT-90	N	TRG	WQPL	NITRATE	.77	MG/L												
SW038	SW	REAL	SW00419WC	15-OCT-90	N	TRG	WQPL	OIL AND GREASE	1 43	MG/L												
SW038	SW	REAL	SW00419WC	15-OCT-90	N	TRG	WQPL	PHOSPHORUS	05	MG/L												
SW038	SW	REAL	SW00419WC	15-OCT-90	N	TRG	WQPL	TOTAL DISSOLVED SOLIDS	277	MG/L												
SW038	SW	REAL	SW00419WC	15-OCT-90	N	TRG	WQPL	TOTAL SUSPENDED SOLIDS	7	MG/L												
SW038	SW	REAL	SW00520WC	05-NOV-90	N	TRG	WQPL	BICARBONATE AS CACO3	220	MG/L												
SW038	SW	REAL	SW00520WC	05-NOV-90	N	TRG	WQPL	CARBONATE AS CACO3	1	MG/L		U										
SW038	SW	REAL	SW00520WC	05-NOV-90	N	TRG	WQPL	CHLORIDE	42	MG/L												
SW038	SW	REAL	SW00520WC	05-NOV-90	N	TRG	WQPL	CYANIDES (SOLUBLE SALTS AND CO	0.02	MG/L		U		0 02								
SW038	SW	REAL	SW00520WC	05-NOV-90	N	TRG	WQPL	FLUORIDE, SOLUBLE	.5	MG/L		U										
SW038	SW	REAL	SW00520WC	05-NOV-90	N	TRG	WQPL	NITRATE/NITRITE	1.2	MG/L												
SW038	SW	REAL	SW00520WC	05-NOV-90	N	TRG	WQPL	NITRITE	01	MG/L		U										
SW038	SW	REAL	SW00520WC	05-NOV-90	N	TRG	WQPL	OIL AND GREASE	5	MG/L		U		5								
SW038	SW	REAL	SW00520WC	05-NOV-90	N	TRG	WQPL	PHOSPHATE	.02	MG/L												
SW038	SW	REAL	SW00520WC	05-NOV-90	N	TRG	WQPL	PHOSPHORUS	.01	MG/L												
SW038	SW	REAL	SW00520WC	05-NOV-90	N	TRG	WQPL	SILICA, DISSOLVED	38	MG/L				2								
SW038	SW	REAL	SW00520WC	05-NOV-90	N	TRG	WQPL	SULFATE	27	MG/L												
SW038	SW	REAL	SW00520WC	05-NOV-90	N	TRG	WQPL	SULFIDE	10	MG/L		U		10								
SW038	SW	REAL	SW00520WC	05-NOV-90	N	TRG	WQPL	TOTAL DISSOLVED SOLIDS	412	MG/L												
SW038	SW	REAL	SW00520WC	05-NOV-90	N	TRG	WQPL	TOTAL SUSPENDED SOLIDS	3	MG/L												
SW093	SW	MS	SW093W052990M	29-MAY-90	N																	
SW093	SW	MS	SW80023WC	30-JUL-90	N	TRG	WQPL	CYANIDES (SOLUBLE SALTS AND CO	0 02	MG/L		U		0 02								
SW093	SW	MSD	SW093W0529990S	29-MAY-90	N																	
SW093	SW	MSD	SW80024WC	30-JUL-90	N																	
SW093	SW	REAL	SW00096WC	22-JUN-90	N	TRG	WQPL	CYANIDE	10.0	UG/L		U		10 0								
SW093	SW	REAL	SW00197WC	30-JUL-90	N	TRG	WQPL	CHLORIDE	49	MG/L				0.1								
SW093	SW	REAL	SW00197WC	30-JUL-90	N	TRG	WQPL	CYANIDES (SOLUBLE SALTS AND CO	0 02	MG/L		U		0.02								
SW093	SW	REAL	SW00197WC	30-JUL-90	N	TRG	WQPL	FLUORIDE, SOLUBLE	0.4	MG/L				0 2								
SW093	SW	REAL	SW00197WC	30-JUL-90	N	TRG	WQPL	NITRATE	5.6	MG/L				0.1								
SW093	SW	REAL	SW00197WC	30-JUL-90	N	TRG	WQPL	NITRITE	1	MG/L		U		0.1								
SW093	SW	REAL	SW00197WC	30-JUL-90	N	TRG	WQPL	OIL AND GREASE	5	MG/L		U		5								
SW093	SW	REAL	SW00197WC	30-JUL-90	N	TRG	WQPL	PHOSPHATE	0 2	MG/L		U		0 2								

Location	ST	QC	Sample Number	Smpl Date	D	ID	Group	Chemical	Result	Unit	Error	Qual	D.LMT	VA	RN1	RN2	RN3	RN4	VResult	VQual	VDET
SW093	SW	REAL	SW00197WC	30-JUL-90	N	TRG	WQPL	PHOSPHORUS	0 010	MG/L		U	0 010								
SW093	SW	REAL	SW00197WC	30-JUL-90	N	TRG	WQPL	SILICON	14	MG/L			2								
SW093	SW	REAL	SW00197WC	30-JUL-90	N	TRG	WQPL	SULFATE	46	MG/L			0 2								
SW093	SW	REAL	SW00197WC	30-JUL-90	N	TRG	WQPL	TOTAL DISSOLVED SOLIDS	170	MG/L			10								
SW093	SW	REAL	SW00197WC	30-JUL-90	N	TRG	WQPL	TOTAL SUSPENDED SOLIDS	4	MG/L			4								
SW093	SW	REAL	SW00275WC	30-AUG-90	N	TRG	WQPL	BICARBONATE AS CACO3	310	MG/L			1 0								
SW093	SW	REAL	SW00275WC	30-AUG-90	N	TRG	WQPL	CARBONATE AS CACO3	0	MG/L			1 0								
SW093	SW	REAL	SW00275WC	30-AUG-90	N	TRG	WQPL	CHLORIDE	64	MG/L			0.2								
SW093	SW	REAL	SW00275WC	30-AUG-90	N	TRG	WQPL	FLUORIDE	0 6	MG/L			0 1								
SW093	SW	REAL	SW00275WC	30-AUG-90	N	TRG	WQPL	NITRATE/NITRITE	2.9	MG/L			0 02								
SW093	SW	REAL	SW00275WC	30-AUG-90	N	TRG	WQPL	NITRITE	0.02	MG/L		U	0.02								
SW093	SW	REAL	SW00275WC	30-AUG-90	N	TRG	WQPL	OIL AND GREASE	0 3	MG/L			0 2								
SW093	SW	REAL	SW00275WC	30-AUG-90	N	TRG	WQPL	ORTHOPHOSPHATE	0 01	MG/L		U	0 01								
SW093	SW	REAL	SW00275WC	30-AUG-90	N	TRG	WQPL	PHOSPHATE	0 01	MG/L		U	0 01								
SW093	SW	REAL	SW00275WC	30-AUG-90	N	TRG	WQPL	SILICA, DISSOLVED	6 2	MG/L			0 4								
SW093	SW	REAL	SW00275WC	30-AUG-90	N	TRG	WQPL	SULFATE	61	MG/L			2 0								
SW093	SW	REAL	SW00275WC	30-AUG-90	N	TRG	WQPL	TOTAL DISSOLVED SOLIDS	540	MG/L			10 0								
SW093	SW	REAL	SW00275WC	30-AUG-90	N	TRG	WQPL	TOTAL SUSPENDED SOLIDS	5	MG/L			4 0								
SW093	SW	REAL	SW00353WC	25-SEP-90	N	TRG	WQPL	BICARBONATE AS CACO3	300	MG/L			1 0								
SW093	SW	REAL	SW00353WC	25-SEP-90	N	TRG	WQPL	CARBONATE AS CACO3	0	MG/L			1 0								
SW093	SW	REAL	SW00353WC	25-SEP-90	N	TRG	WQPL	CHLORIDE	51	MG/L			0 2								
SW093	SW	REAL	SW00353WC	25-SEP-90	N	TRG	WQPL	FLUORIDE	0 6	MG/L			0 1								
SW093	SW	REAL	SW00353WC	25-SEP-90	N	TRG	WQPL	NITRATE/NITRITE	1 9	MG/L			0 02								
SW093	SW	REAL	SW00353WC	25-SEP-90	N	TRG	WQPL	NITRITE	0.02	MG/L		U	0 02								
SW093	SW	REAL	SW00353WC	25-SEP-90	N	TRG	WQPL	OIL AND GREASE	0 6	MG/L			0 2								
SW093	SW	REAL	SW00353WC	25-SEP-90	N	TRG	WQPL	ORTHOPHOSPHATE	0 01	MG/L		U	0 01								
SW093	SW	REAL	SW00353WC	25-SEP-90	N	TRG	WQPL	PHOSPHATE	0 01	MG/L		U	0.01								
SW093	SW	REAL	SW00353WC	25-SEP-90	N	TRG	WQPL	SILICA, DISSOLVED	6 9	MG/L			0 4								
SW093	SW	REAL	SW00353WC	25-SEP-90	N	TRG	WQPL	SULFATE	51	MG/L			2 0								
SW093	SW	REAL	SW00353WC	25-SEP-90	N	TRG	WQPL	TOTAL DISSOLVED SOLIDS	449	MG/L			10 0								
SW093	SW	REAL	SW00353WC	25-SEP-90	N	TRG	WQPL	TOTAL SUSPENDED SOLIDS	4	MG/L		U	4.0								
SW093	SW	REAL	SW00448WC	17-OCT-90	N	TRG	PSTCLPTCL	4,4'-DDD	0 10	UG/L		U	0 10								
SW093	SW	REAL	SW00448WC	17-OCT-90	N	TRG	PSTCLPTCL	4,4'-DDE	0 10	UG/L		U	0 10								
SW093	SW	REAL	SW00448WC	17-OCT-90	N	TRG	PSTCLPTCL	4,4'-DDT	0 10	UG/L		U	0 10								
SW093	SW	REAL	SW00448WC	17-OCT-90	N	TRG	PSTCLPTCL	ALDRIN	0.05	UG/L		U	0 05								
SW093	SW	REAL	SW00448WC	17-OCT-90	N	TRG	PSTCLPTCL	AROCLOR-1016	0.50	UG/L		U	0.50								
SW093	SW	REAL	SW00448WC	17-OCT-90	N	TRG	PSTCLPTCL	AROCLOR-1221	0 50	UG/L		U	0 50								
SW093	SW	REAL	SW00448WC	17-OCT-90	N	TRG	PSTCLPTCL	AROCLOR-1232	0 50	UG/L		U	0 50								
SW093	SW	REAL	SW00448WC	17-OCT-90	N	TRG	PSTCLPTCL	AROCLOR-1242	0 50	UG/L		U	0 50								
SW093	SW	REAL	SW00448WC	17-OCT-90	N	TRG	PSTCLPTCL	AROCLOR-1248	0.50	UG/L		U	0.50								
SW093	SW	REAL	SW00448WC	17-OCT-90	N	TRG	PSTCLPTCL	AROCLOR-1254	1.00	UG/L		U	1.00								
SW093	SW	REAL	SW00448WC	17-OCT-90	N	TRG	PSTCLPTCL	AROCLOR-1260	1.00	UG/L		U	1.00								
SW093	SW	REAL	SW00448WC	17-OCT-90	N	TRG	PSTCLPTCL	DIELDRIN	0.10	UG/L		U	0 10								
SW093	SW	REAL	SW00448WC	17-OCT-90	N	TRG	PSTCLPTCL	ENDOSULFAN I	0.05	UG/L		U	0 05								
SW093	SW	REAL	SW00448WC	17-OCT-90	N	TRG	PSTCLPTCL	ENDOSULFAN II	0 10	UG/L		U	0 10								
SW093	SW	REAL	SW00448WC	17-OCT-90	N	TRG	PSTCLPTCL	ENDOSULFAN SULFATE	0.10	UG/L		U	0.10								
SW093	SW	REAL	SW00448WC	17-OCT-90	N	TRG	PSTCLPTCL	ENDRIN	0.10	UG/L		U	0 10								
SW093	SW	REAL	SW00448WC	17-OCT-90	N	TRG	PSTCLPTCL	ENDRIN KETONE	0 10	UG/L		U	0 10								
SW093	SW	REAL	SW00448WC	17-OCT-90	N	TRG	PSTCLPTCL	HEPTACHLOR	0.05	UG/L		U	0.05								
SW093	SW	REAL	SW00448WC	17-OCT-90	N	TRG	PSTCLPTCL	HEPTACHLOR EPOXIDE	0.05	UG/L		U	0 05								
SW093	SW	REAL	SW00448WC	17-OCT-90	N	TRG	PSTCLPTCL	METHOXYCHLOR	0 50	UG/L		U	0.50								
SW093	SW	REAL	SW00448WC	17-OCT-90	N	TRG	PSTCLPTCL	TOXAPHENE	1 00	UG/L		U	1.00								
SW093	SW	REAL	SW00448WC	17-OCT-90	N	TRG	PSTCLPTCL	alpha-BHC	0.05	UG/L		U	0.05								
SW093	SW	REAL	SW00448WC	17-OCT-90	N	TRG	PSTCLPTCL	alpha-CHLORDANE	0.50	UG/L		U	0 50								
SW093	SW	REAL	SW00448WC	17-OCT-90	N	TRG	PSTCLPTCL	beta-BHC	0.05	UG/L		U	0.05								
SW093	SW	REAL	SW00448WC	17-OCT-90	N	TRG	PSTCLPTCL	delta-BHC	0 05	UG/L		U	0.05								
SW093	SW	REAL	SW00448WC	17-OCT-90	N	TRG	PSTCLPTCL	gamma-BHC (LINDANE)	0 05	UG/L		U	0.05								
SW093	SW	REAL	SW00448WC	17-OCT-90	N	TRG	PSTCLPTCL	gamma-CHLORDANE	0 50	UG/L		U	0.50								
SW093	SW	REAL	SW00448WC	17-OCT-90	N	TRG	WQPL	BICARBONATE AS CACO3	280	MG/L			1								
SW093	SW	REAL	SW00448WC	17-OCT-90	N	TRG	WQPL	CARBONATE	1	MG/L		U	1								
SW093	SW	REAL	SW00448WC	17-OCT-90	N	TRG	WQPL	CHLORIDE	54	MG/L			0.1								
SW093	SW	REAL	SW00448WC	17-OCT-90	N	TRG	WQPL	CYANIDE, AMENABLE	0.02	MG/L		U	0 02								
SW093	SW	REAL	SW00448WC	17-OCT-90	N	TRG	WQPL	FLUORIDE, SOLUBLE	0 6	MG/L			0 2								

Location	ST	QC	Sample Number	Smpl Date	D	ID	Group	Chemical	Result	Unit	Error	Qual	D	LMT	VA	RN1	RN2	RN3	RN4	VResult	VQual	VDET
SW093	SW	REAL	SW00448WC	17-OCT-90	N	TRG	WQPL	NITRATE	2.36	MG/L												
SW093	SW	REAL	SW00448WC	17-OCT-90	N	TRG	WQPL	NITRITE	1	MG/L		U										
SW093	SW	REAL	SW00448WC	17-OCT-90	N	TRG	WQPL	OIL AND GREASE	5	MG/L		U		5								
SW093	SW	REAL	SW00448WC	17-OCT-90	N	TRG	WQPL	PHOSPHATE	0 2	MG/L		U		0 2								
SW093	SW	REAL	SW00448WC	17-OCT-90	N	TRG	WQPL	PHOSPHORUS	02	MG/L		U										
SW093	SW	REAL	SW00448WC	17-OCT-90	N	TRG	WQPL	SILICON	28	MG/L				2								
SW093	SW	REAL	SW00448WC	17-OCT-90	N	TRG	WQPL	SULFATE	51	MG/L				0 2								
SW093	SW	REAL	SW00448WC	17-OCT-90	N	TRG	WQPL	TOTAL DISSOLVED SOLIDS	530	MG/L				10								
SW093	SW	REAL	SW00448WC	17-OCT-90	N	TRG	WQPL	TOTAL SUSPENDED SOLIDS	5	MG/L				4								
SW093	SW	REAL	SW00549WC	19-NOV-90	N	TRG	WQPL	BICARBONATE AS CACO3	260	MG/L				1 0								
SW093	SW	REAL	SW00549WC	19-NOV-90	N	TRG	WQPL	CARBONATE AS CACO3	0	MG/L				1 0								
SW093	SW	REAL	SW00549WC	19-NOV-90	N	TRG	WQPL	CHLORIDE	48	MG/L				0 2								
SW093	SW	REAL	SW00549WC	19-NOV-90	N	TRG	WQPL	FLUORIDE	0.5	MG/L				0 1								
SW093	SW	REAL	SW00549WC	19-NOV-90	N	TRG	WQPL	NITRATE/NITRITE	2 0	MG/L				0 02								
SW093	SW	REAL	SW00549WC	19-NOV-90	N	TRG	WQPL	NITRITE	0.02	MG/L		U		0 02								
SW093	SW	REAL	SW00549WC	19-NOV-90	N	TRG	WQPL	OIL AND GREASE	0 3	MG/L				0 2								
SW093	SW	REAL	SW00549WC	19-NOV-90	N	TRG	WQPL	ORTHOPHOSPHATE	0 01	MG/L				0 01								
SW093	SW	REAL	SW00549WC	19-NOV-90	N	TRG	WQPL	PHOSPHATE	0.02	MG/L				0 01								
SW093	SW	REAL	SW00549WC	19-NOV-90	N	TRG	WQPL	SILICA, DISSOLVED	6.5	MG/L				0 4								
SW093	SW	REAL	SW00549WC	19-NOV-90	N	TRG	WQPL	SULFATE	39	MG/L				2 0								
SW093	SW	REAL	SW00549WC	19-NOV-90	N	TRG	WQPL	SULFIDE	1	MG/L		U		2 0								
SW093	SW	REAL	SW00549WC	19-NOV-90	N	TRG	WQPL	TOTAL DISSOLVED SOLIDS	430	MG/L				10 0								
SW093	SW	REAL	SW00549WC	19-NOV-90	N	TRG	WQPL	TOTAL SUSPENDED SOLIDS	10	MG/L				4 0								
SW093	SW	REAL	SW09390001	29-JAN-90	N	TRG	RFIN	BICARBONATE	390	MG/L					V					390		10
SW093	SW	REAL	SW09390001	29-JAN-90	N	TRG	RFIN	CARBONATE	5	MG/L		U			V					5 0	U	10
SW093	SW	REAL	SW09390001	29-JAN-90	N	TRG	RFIN	CHLORIDE	75	MG/L					V					75 0		5
SW093	SW	REAL	SW09390001	29-JAN-90	N	TRG	RFIN	NITRATE/NITRITE	4.2	MG/L					V					4 2		5
SW093	SW	REAL	SW09390001	29-JAN-90	N	TRG	RFIN	OIL AND GREASE	1	MG/L					V					1 0		5
SW093	SW	REAL	SW09390001	29-JAN-90	N	TRG	RFIN	SULFATE	72	MG/L					V					72.0		5
SW093	SW	REAL	SW09390001	29-JAN-90	N	TRG	RFIN	TOTAL DISSOLVED SOLIDS	550	MG/L					V					550		5
SW093	SW	REAL	SW09390001	29-JAN-90	N	TRG	RFIN	pH	7 8	PHUNIT										7 8		
SW093	SW	REAL	SW09390002	21-FEB-90	N	TRG	RFIN	BICARBONATE	310	MG/L					V					310		10
SW093	SW	REAL	SW09390002	21-FEB-90	N	TRG	RFIN	CARBONATE	5	MG/L		U			V					5.0	U	10
SW093	SW	REAL	SW09390002	21-FEB-90	N	TRG	RFIN	CHLORIDE	160	MG/L					V					160		5
SW093	SW	REAL	SW09390002	21-FEB-90	N	TRG	RFIN	NITRATE/NITRITE	3.6	MG/L					V					3.6		5
SW093	SW	REAL	SW09390002	21-FEB-90	N	TRG	RFIN	OIL AND GREASE	1	MG/L		U			V					1 0		5
SW093	SW	REAL	SW09390002	21-FEB-90	N	TRG	RFIN	SULFATE	47	MG/L					V					47 0		5
SW093	SW	REAL	SW09390002	21-FEB-90	N	TRG	RFIN	TOTAL DISSOLVED SOLIDS	590	MG/L					V					590		5
SW093	SW	REAL	SW09390002	21-FEB-90	N	TRG	RFIN	TOTAL SUSPENDED SOLIDS	10	MG/L					V					10.0		10
SW093	SW	REAL	SW09390002	21-FEB-90	N	TRG	RFIN	pH	7.9	PHUNIT										7.9		
SW093	SW	REAL	SW09390003	16-MAR-90	N	TRG	RFIN	BICARBONATE	130	MG/L					V					130		10
SW093	SW	REAL	SW09390003	16-MAR-90	N	TRG	RFIN	CARBONATE	5	MG/L		U			V					5	U	10
SW093	SW	REAL	SW09390003	16-MAR-90	N	TRG	RFIN	CHLORIDE	64	MG/L					V					64		5
SW093	SW	REAL	SW09390003	16-MAR-90	N	TRG	RFIN	NITRATE/NITRITE	8.3	MG/L					V					8.3		5 0
SW093	SW	REAL	SW09390003	16-MAR-90	N	TRG	RFIN	OIL AND GREASE	1	MG/L		U			V					1	U	5
SW093	SW	REAL	SW09390003	16-MAR-90	N	TRG	RFIN	SULFATE	34	MG/L					V					34 0		5
SW093	SW	REAL	SW09390003	16-MAR-90	N	TRG	RFIN	TOTAL DISSOLVED SOLIDS	680	MG/L					V					680		5
SW093	SW	REAL	SW09390003	16-MAR-90	N	TRG	RFIN	TOTAL SUSPENDED SOLIDS	24	MG/L					V					24 0		10
SW093	SW	REAL	SW09390003	16-MAR-90	N	TRG	RFIN	pH	7 9	PHUNIT										7.9		
SW093	SW	REAL	SW093W052990A	29-MAY-90	N		WQPL	BICARBONATE	250	MG/L												
SW093	SW	REAL	SW093W052990A	29-MAY-90	N		WQPL	CARBONATE	5	MG/L		U										
SW093	SW	REAL	SW093W052990A	29-MAY-90	N		WQPL	CHLORIDE	41	MG/L												
SW093	SW	REAL	SW093W052990A	29-MAY-90	N		WQPL	NITRATE/NITRITE	3.0	MG/L												
SW093	SW	REAL	SW093W052990A	29-MAY-90	N		WQPL	OIL AND GREASE	1	MG/L		U										
SW093	SW	REAL	SW093W052990A	29-MAY-90	N		WQPL	SULFATE	120	MG/L												
SW093	SW	REAL	SW093W052990A	29-MAY-90	N		WQPL	TOTAL DISSOLVED SOLIDS	490	MG/L												
SW093	SW	REAL	SW093W052990A	29-MAY-90	N		WQPL	TOTAL SUSPENDED SOLIDS	36	MG/L												
SW093	SW	REAL	SW093W052990A	29-MAY-90	N		WQPL	pH	7.9	PHUNIT												
SW093	SW	REAL	SW70003WC	23-JUL-90	N	TRG	WQPL	BICARBONATE AS CACO3	50	MG/L				5								
SW093	SW	REAL	SW70003WC	23-JUL-90	N	TRG	WQPL	CARBONATE AS CACO3	5	MG/L		U		5								
SW093	SW	REAL	SW70003WC	23-JUL-90	N	TRG	WQPL	CARBONATE AS CACO3	ND	MG/L				5								
SW093	SW	REAL	SW70003WC	23-JUL-90	N	TRG	WQPL	CHLORIDE	8.6	MG/L				1								
SW093	SW	REAL	SW70003WC	23-JUL-90	N	TRG	WQPL	FLUORIDE	0.3	MG/L				0 2								

Location	ST	QC	Sample Number	Smpl Date	D	ID	Group	Chemical	Result	Unit	Error	Qual	D	LMT	VA	RN1	RN2	RN3	RN4	VResult	VQual	VDET
SW093	SW	REAL	SW70003WC	23-JUL-90	N	TRG	WQPL	NITRATE/NITRITE	5	MG/L			1									
SW093	SW	REAL	SW70003WC	23-JUL-90	N	TRG	WQPL	PHOSPHORUS	1.1	MG/L			0 1									
SW093	SW	REAL	SW70003WC	23-JUL-90	N	TRG	WQPL	SULFATE	9 6	MG/L			1									
SW093	SW	REAL	SW70003WC	23-JUL-90	N	TRG	WQPL	TOTAL ALKALINITY	50	MG/L			5									
SW093	SW	REAL	SW70003WC	23-JUL-90	N	TRG	WQPL	TOTAL DISSOLVED SOLIDS	160	MG/L			15									
SW093	SW	REAL	SW70006WC	24-JUL-90	N	TRG	WQPL	TOTAL SUSPENDED SOLIDS	2100	MG/L			20									
SW093	SW	REAL	SW70006WC	24-JUL-90	N	TRG	WQPL	BICARBONATE AS CACO3	130	MG/L			5									
SW093	SW	REAL	SW70006WC	24-JUL-90	N	TRG	WQPL	CARBONATE AS CACO3	5	MG/L		U	5									
SW093	SW	REAL	SW70006WC	24-JUL-90	N	TRG	WQPL	CARBONATE AS CACO3	ND	MG/L			5									
SW093	SW	REAL	SW70006WC	24-JUL-90	N	TRG	WQPL	CHLORIDE	20	MG/L			2									
SW093	SW	REAL	SW70006WC	24-JUL-90	N	TRG	WQPL	FLUORIDE	0.4	MG/L			0 2									
SW093	SW	REAL	SW70006WC	24-JUL-90	N	TRG	WQPL	NITRATE/NITRITE	4 0	MG/L			0.4									
SW093	SW	REAL	SW70006WC	24-JUL-90	N	TRG	WQPL	PHOSPHORUS	0 3	MG/L			0 1									
SW093	SW	REAL	SW70006WC	24-JUL-90	N	TRG	WQPL	SULFATE	22	MG/L			2.5									
SW093	SW	REAL	SW70006WC	24-JUL-90	N	TRG	WQPL	TOTAL ALKALINITY	130	MG/L			5									
SW093	SW	REAL	SW70006WC	24-JUL-90	N	TRG	WQPL	TOTAL DISSOLVED SOLIDS	240	MG/L			15									
SW093	SW	REAL	SW70007WC	31-JUL-90	N	TRG	WQPL	TOTAL SUSPENDED SOLIDS	70	MG/L			5									
SW093	SW	REAL	SW70007WC	31-JUL-90	N	TRG	WQPL	BICARBONATE AS CACO3	66	MG/L			1.0									
SW093	SW	REAL	SW70007WC	31-JUL-90	N	TRG	WQPL	CARBONATE AS CACO3	0	MG/L			1.0									
SW093	SW	REAL	SW70007WC	31-JUL-90	N	TRG	WQPL	CHLORIDE	12 4	MG/L			0 2									
SW093	SW	REAL	SW70007WC	31-JUL-90	N	TRG	WQPL	FLUORIDE	0.2	MG/L			0.1									
SW093	SW	REAL	SW70007WC	31-JUL-90	N	TRG	WQPL	NITRATE/NITRITE	4 9	MG/L			0 02									
SW093	SW	REAL	SW70007WC	31-JUL-90	N	TRG	WQPL	NITRITE	0 02	MG/L		U	0 02									
SW093	SW	REAL	SW70007WC	31-JUL-90	N	TRG	WQPL	ORTHOPHOSPHATE	0 06	MG/L			0 01									
SW093	SW	REAL	SW70007WC	31-JUL-90	N	TRG	WQPL	PHOSPHATE	0.84	MG/L			0 01									
SW093	SW	REAL	SW70007WC	31-JUL-90	N	TRG	WQPL	SILICA, DISSOLVED	1 9	MG/L			0 4									
SW093	SW	REAL	SW70007WC	31-JUL-90	N	TRG	WQPL	SULFATE	15	MG/L			2 0									
SW093	SW	REAL	SW70007WC	31-JUL-90	N	TRG	WQPL	TOTAL DISSOLVED SOLIDS	190	MG/L			10 0									
SW093	SW	REAL	SW70007WC	31-JUL-90	N	TRG	WQPL	TOTAL SUSPENDED SOLIDS	1100	MG/L			4 0									
SW093	SW	REAL	SW70012WC	06-SEP-90	N	TRG	WQPL	ALKALINITY AS CACO3	10	MG/L		U	10									
SW093	SW	REAL	SW70012WC	06-SEP-90	N	TRG	WQPL	AMMONIA	3.4	MG/L			0 5									
SW093	SW	REAL	SW70012WC	06-SEP-90	N	TRG	WQPL	BICARBONATE AS CACO3	56	MG/L			10									
SW093	SW	REAL	SW70012WC	06-SEP-90	N	TRG	WQPL	CHLORIDE	8	MG/L			2									
SW093	SW	REAL	SW70012WC	06-SEP-90	N	TRG	WQPL	FLUORIDE	0.5	MG/L		U	0.5									
SW093	SW	REAL	SW70012WC	06-SEP-90	N	TRG	WQPL	NITRATE/NITRITE	1 8	MG/L			0 1									
SW093	SW	REAL	SW70012WC	06-SEP-90	N	TRG	WQPL	SULFATE	10	MG/L		U	10									
SW093	SW	REAL	SW70012WC	06-SEP-90	N	TRG	WQPL	TOTAL ALKALINITY	56	MG/L			10									
SW093	SW	REAL	SW70012WC	06-SEP-90	N	TRG	WQPL	TOTAL DISSOLVED SOLIDS	110	MG/L			2									
SW093	SW	REAL	SW70014WC	06-SEP-90	N			TOTAL SUSPENDED SOLIDS	1170	MG/L			2									
SW093	SW	REAL	SW70017WC	19-SEP-90	N	TRG	WQPL	ALKALINITY AS CACO3	10	MG/L		U	10									
SW093	SW	REAL	SW70017WC	19-SEP-90	N	TRG	WQPL	BICARBONATE AS CACO3	65	MG/L			10									
SW093	SW	REAL	SW70017WC	19-SEP-90	N	TRG	WQPL	CHLORIDE	11	MG/L			2									
SW093	SW	REAL	SW70017WC	19-SEP-90	N	TRG	WQPL	FLUORIDE	0 5	MG/L		U	0 5									
SW093	SW	REAL	SW70017WC	19-SEP-90	N	TRG	WQPL	NITRATE/NITRITE	3.1	MG/L			0 1									
SW093	SW	REAL	SW70017WC	19-SEP-90	N	TRG	WQPL	ORTHOPHOSPHATE	0 07	MG/L			0 01									
SW093	SW	REAL	SW70017WC	19-SEP-90	N	TRG	WQPL	SULFATE	10	MG/L		U	10									
SW093	SW	REAL	SW70017WC	19-SEP-90	N	TRG	WQPL	TOTAL ALKALINITY	65	MG/L			10									
SW093	SW	REAL	SW70017WC	19-SEP-90	N	TRG	WQPL	TOTAL DISSOLVED SOLIDS	140	MG/L			2									
SW093	SW	REAL	SW70017WC	19-SEP-90	N	TRG	WQPL	TOTAL SUSPENDED SOLIDS	810	MG/L			2									
SW093	SW	REAL	SW70022WC	24-OCT-90	N	TRG	WQPL	ALKALINITY AS CACO3	10	MG/L		U	10									
SW093	SW	REAL	SW70022WC	24-OCT-90	N	TRG	WQPL	AMMONIA	6 1	MG/L			0 5									
SW093	SW	REAL	SW70022WC	24-OCT-90	N	TRG	WQPL	BICARBONATE AS CACO3	62	MG/L			10									
SW093	SW	REAL	SW70022WC	24-OCT-90	N	TRG	WQPL	CHLORIDE	22	MG/L			2									
SW093	SW	REAL	SW70022WC	24-OCT-90	N	TRG	WQPL	FLUORIDE	0.5	MG/L		U	0 5									
SW093	SW	REAL	SW70022WC	24-OCT-90	N	TRG	WQPL	NITRATE/NITRITE	8 3	MG/L			0 1									
SW093	SW	REAL	SW70022WC	24-OCT-90	N	TRG	WQPL	NITRITE	0.02	MG/L												
SW093	SW	REAL	SW70022WC	24-OCT-90	N	TRG	WQPL	ORTHOPHOSPHATE	0 01	MG/L		U	0 01									
SW093	SW	REAL	SW70022WC	24-OCT-90	N	TRG	WQPL	PHOSPHORUS	0 09	MG/L			0 01									
SW093	SW	REAL	SW70022WC	24-OCT-90	N	TRG	WQPL	SILICON	3	MG/L			2									
SW093	SW	REAL	SW70022WC	24-OCT-90	N	TRG	WQPL	SULFATE	16	MG/L			10									
SW093	SW	REAL	SW70022WC	24-OCT-90	N	TRG	WQPL	TOTAL ALKALINITY	62	MG/L			10									
SW093	SW	REAL	SW70022WC	24-OCT-90	N	TRG	WQPL	TOTAL DISSOLVED SOLIDS	220	MG/L			2									

Location	ST	QC	Sample Number	Smpl Date	D	ID	Group	Chemical	Result	Unit	Error	Qual	D LMT	VA	RN1	RN2	RN3	RN4	VResult	VQual	VDET
SW093	SW	REAL	SW70022WC	24-OCT-90	N	TRG	WQPL	TOTAL SUSPENDED SOLIDS	100	MG/L			2								
SW093	SW	REAL	SW70041WC	19-NOV-90	N																
SW093	SW		SW093W043090	30-APR-90	N																
SW118	SW	REAL	SW00458WC	29-OCT-90	N	TRG	PSTCLPTCL	4,4'-DDD	0 10	UG/L		U	0 100								
SW118	SW	REAL	SW00458WC	29-OCT-90	N	TRG	PSTCLPTCL	4,4'-DDE	0 10	UG/L		U	0 100								
SW118	SW	REAL	SW00458WC	29-OCT-90	N	TRG	PSTCLPTCL	4,4'-DDT	0.10	UG/L		U	0.100								
SW118	SW	REAL	SW00458WC	29-OCT-90	N	TRG	PSTCLPTCL	ALDRIN	0.050	UG/L		U	0 050								
SW118	SW	REAL	SW00458WC	29-OCT-90	N	TRG	PSTCLPTCL	AROCLOR-1016	0.50	UG/L		U	0.500								
SW118	SW	REAL	SW00458WC	29-OCT-90	N	TRG	PSTCLPTCL	AROCLOR-1221	0.50	UG/L		U	0.500								
SW118	SW	REAL	SW00458WC	29-OCT-90	N	TRG	PSTCLPTCL	AROCLOR-1232	0.50	UG/L		U	0 500								
SW118	SW	REAL	SW00458WC	29-OCT-90	N	TRG	PSTCLPTCL	AROCLOR-1242	0 50	UG/L		U	0 500								
SW118	SW	REAL	SW00458WC	29-OCT-90	N	TRG	PSTCLPTCL	AROCLOR-1248	0.50	UG/L		U	0 500								
SW118	SW	REAL	SW00458WC	29-OCT-90	N	TRG	PSTCLPTCL	AROCLOR-1254	1.0	UG/L		U	1 000								
SW118	SW	REAL	SW00458WC	29-OCT-90	N	TRG	PSTCLPTCL	AROCLOR-1260	1 0	UG/L		U	1 000								
SW118	SW	REAL	SW00458WC	29-OCT-90	N	TRG	PSTCLPTCL	DIELDRIN	0 10	UG/L		U	0 100								
SW118	SW	REAL	SW00458WC	29-OCT-90	N	TRG	PSTCLPTCL	ENDOSULFAN I	0.050	UG/L		U	0.050								
SW118	SW	REAL	SW00458WC	29-OCT-90	N	TRG	PSTCLPTCL	ENDOSULFAN II	0 10	UG/L		U	0 100								
SW118	SW	REAL	SW00458WC	29-OCT-90	N	TRG	PSTCLPTCL	ENDOSULFAN SULFATE	0 10	UG/L		U	0 100								
SW118	SW	REAL	SW00458WC	29-OCT-90	N	TRG	PSTCLPTCL	ENDRIN	0 10	UG/L		U	0 100								
SW118	SW	REAL	SW00458WC	29-OCT-90	N	TRG	PSTCLPTCL	ENDRIN KETONE	0 10	UG/L		U	0 100								
SW118	SW	REAL	SW00458WC	29-OCT-90	N	TRG	PSTCLPTCL	HEPTACHLOR	0 050	UG/L		U	0 050								
SW118	SW	REAL	SW00458WC	29-OCT-90	N	TRG	PSTCLPTCL	HEPTACHLOR EPOXIDE	0 050	UG/L		U	0 050								
SW118	SW	REAL	SW00458WC	29-OCT-90	N	TRG	PSTCLPTCL	METHOXYCHLOR	0 50	UG/L		U	0 500								
SW118	SW	REAL	SW00458WC	29-OCT-90	N	TRG	PSTCLPTCL	TOXAPHENE	1 0	UG/L		U	1 000								
SW118	SW	REAL	SW00458WC	29-OCT-90	N	TRG	PSTCLPTCL	alpha-BHC	0 050	UG/L		U	0 050								
SW118	SW	REAL	SW00458WC	29-OCT-90	N	TRG	PSTCLPTCL	alpha-CHLORDANE	0.50	UG/L		U	0 500								
SW118	SW	REAL	SW00458WC	29-OCT-90	N	TRG	PSTCLPTCL	beta-BHC	0 050	UG/L		U	0 050								
SW118	SW	REAL	SW00458WC	29-OCT-90	N	TRG	PSTCLPTCL	delta-BHC	0.050	UG/L		U	0 050								
SW118	SW	REAL	SW00458WC	29-OCT-90	N	TRG	PSTCLPTCL	gamma-BHC (LINDANE)	0 050	UG/L		U	0 050								
SW118	SW	REAL	SW00458WC	29-OCT-90	N	TRG	PSTCLPTCL	gamma-CHLORDANE	0 50	UG/L		U	0 500								
SW118	SW	REAL	SW00458WC	29-OCT-90	N	TRG	WQPL	BICARBONATE AS CACO3	250	MG/L			1 0								
SW118	SW	REAL	SW00458WC	29-OCT-90	N	TRG	WQPL	CARBONATE AS CACO3	0	MG/L			1.0								
SW118	SW	REAL	SW00458WC	29-OCT-90	N	TRG	WQPL	CHLORIDE	22	MG/L			0 2								
SW118	SW	REAL	SW00458WC	29-OCT-90	N	TRG	WQPL	FLUORIDE	0 4	MG/L			0 1								
SW118	SW	REAL	SW00458WC	29-OCT-90	N	TRG	WQPL	NITRATE/NITRITE	0.02	MG/L			0 02								
SW118	SW	REAL	SW00458WC	29-OCT-90	N	TRG	WQPL	NITRITE	0.02	MG/L		U	0 02								
SW118	SW	REAL	SW00458WC	29-OCT-90	N	TRG	WQPL	OIL AND GREASE	0.5	MG/L			0.2								
SW118	SW	REAL	SW00458WC	29-OCT-90	N	TRG	WQPL	ORTHOPHOSPHATE	0 01	MG/L		U	0 01								
SW118	SW	REAL	SW00458WC	29-OCT-90	N	TRG	WQPL	PHOSPHATE	0 02	MG/L			0 01								
SW118	SW	REAL	SW00458WC	29-OCT-90	N	TRG	WQPL	SILICA, DISSOLVED	6 6	MG/L			0 4								
SW118	SW	REAL	SW00458WC	29-OCT-90	N	TRG	WQPL	SULFATE	29	MG/L			2.0								
SW118	SW	REAL	SW00458WC	29-OCT-90	N	TRG	WQPL	TOTAL DISSOLVED SOLIDS	370	MG/L			10 0								
SW118	SW	REAL	SW00458WC	29-OCT-90	N	TRG	WQPL	TOTAL SUSPENDED SOLIDS	17	MG/L			4 0								
SW118	SW	REAL	SW00559WC	27-NOV-90	N	TRG	WQPL	BICARBONATE AS CACO3	230	MG/L			1.0								
SW118	SW	REAL	SW00559WC	27-NOV-90	N	TRG	WQPL	CARBONATE AS CACO3	0	MG/L			1 0								
SW118	SW	REAL	SW00559WC	27-NOV-90	N	TRG	WQPL	CHLORIDE	29	MG/L			0.2								
SW118	SW	REAL	SW00559WC	27-NOV-90	N	TRG	WQPL	FLUORIDE	0.4	MG/L			0.1								
SW118	SW	REAL	SW00559WC	27-NOV-90	N	TRG	WQPL	NITRATE/NITRITE	0.16	MG/L			0 02								
SW118	SW	REAL	SW00559WC	27-NOV-90	N	TRG	WQPL	NITRITE	0 02	MG/L		U	0 02								
SW118	SW	REAL	SW00559WC	27-NOV-90	N	TRG	WQPL	OIL AND GREASE	0 3	MG/L		U	0.2								
SW118	SW	REAL	SW00559WC	27-NOV-90	N	TRG	WQPL	ORTHOPHOSPHATE	0 01	MG/L		U	0 01								
SW118	SW	REAL	SW00559WC	27-NOV-90	N	TRG	WQPL	PHOSPHATE	0.01	MG/L		U	0 01								
SW118	SW	REAL	SW00559WC	27-NOV-90	N	TRG	WQPL	SILICA, DISSOLVED	5 8	MG/L			0.4								
SW118	SW	REAL	SW00559WC	27-NOV-90	N	TRG	WQPL	SULFATE	24	MG/L			2.0								
SW118	SW	REAL	SW00559WC	27-NOV-90	N	TRG	WQPL	SULFIDE	3	MG/L			2.0								
SW118	SW	REAL	SW00559WC	27-NOV-90	N	TRG	WQPL	TOTAL DISSOLVED SOLIDS	340	MG/L			10.0								
SW118	SW	REAL	SW00559WC	27-NOV-90	N	TRG	WQPL	TOTAL SUSPENDED SOLIDS	4	MG/L		U	4.0								
SW129	SW	MSD	SW00464WC	05-NOV-90	N	TRG	WQPL	BICARBONATE AS CACO3	80	MG/L											
SW129	SW	MSD	SW00464WC	05-NOV-90	N	TRG	WQPL	CARBONATE AS CACO3	1	MG/L		U									
SW129	SW	MSD	SW00464WC	05-NOV-90	N	TRG	WQPL	CHLORIDE	26	MG/L											
SW129	SW	MSD	SW00464WC	05-NOV-90	N	TRG	WQPL	CYANIDES (SOLUBLE SALTS AND CO	0.02	MG/L		U	0 02								
SW129	SW	MSD	SW00464WC	05-NOV-90	N	TRG	WQPL	FLUORIDE, SOLUBLE	.5	MG/L		U									
SW129	SW	MSD	SW00464WC	05-NOV-90	N	TRG	WQPL	NITRATE/NITRITE	.05	MG/L		U									

Location	ST	QC	Sample Number	Smpl Date	D	ID	Group	Chemical	Result	Unit	Error	Qual	D	LMT	VA	RN1	RN2	RN3	RN4	VResult	VQual	VDET
SW129	SW	MSD	SW00464WC	05-NOV-90	N	TRG	WQPL	NITRITE	.01	MG/L		U										
SW129	SW	MSD	SW00464WC	05-NOV-90	N	TRG	WQPL	OIL AND GREASE	5	MG/L		U		5								
SW129	SW	MSD	SW00464WC	05-NOV-90	N	TRG	WQPL	PHOSPHATE	53	MG/L												
SW129	SW	MSD	SW00464WC	05-NOV-90	N	TRG	WQPL	PHOSPHORUS	02	MG/L												
SW129	SW	MSD	SW00464WC	05-NOV-90	N	TRG	WQPL	SILICA, DISSOLVED	13	MG/L				2								
SW129	SW	MSD	SW00464WC	05-NOV-90	N	TRG	WQPL	SULFATE	14	MG/L												
SW129	SW	MSD	SW00464WC	05-NOV-90	N	TRG	WQPL	SULFIDE	10	MG/L		U		10								
SW129	SW	MSD	SW00464WC	05-NOV-90	N	TRG	WQPL	TOTAL DISSOLVED SOLIDS	379	MG/L												
SW129	SW	MSD	SW00464WC	05-NOV-90	N	TRG	WQPL	TOTAL SUSPENDED SOLIDS	12	MG/L												
SW129	SW	REAL	SW00421WC	15-OCT-90	N	DL	PSTCLPTCL	4,4'-ODD	2	UG/L		U										
SW129	SW	REAL	SW00421WC	15-OCT-90	N	DL	PSTCLPTCL	4,4'-DDE	2	UG/L		U										
SW129	SW	REAL	SW00421WC	15-OCT-90	N	DL	PSTCLPTCL	4,4'-DDT	.2	UG/L		U										
SW129	SW	REAL	SW00421WC	15-OCT-90	N	DL	PSTCLPTCL	ALDRIN	.1	UG/L		U										
SW129	SW	REAL	SW00421WC	15-OCT-90	N	DL	PSTCLPTCL	AROCLOR-1016	1	UG/L		U										
SW129	SW	REAL	SW00421WC	15-OCT-90	N	DL	PSTCLPTCL	AROCLOR-1221	1	UG/L		U										
SW129	SW	REAL	SW00421WC	15-OCT-90	N	DL	PSTCLPTCL	AROCLOR-1232	1	UG/L		U										
SW129	SW	REAL	SW00421WC	15-OCT-90	N	DL	PSTCLPTCL	AROCLOR-1242	1	UG/L		U										
SW129	SW	REAL	SW00421WC	15-OCT-90	N	DL	PSTCLPTCL	AROCLOR-1248	1	UG/L		U										
SW129	SW	REAL	SW00421WC	15-OCT-90	N	DL	PSTCLPTCL	AROCLOR-1254	2	UG/L		U										
SW129	SW	REAL	SW00421WC	15-OCT-90	N	DL	PSTCLPTCL	AROCLOR-1260	2	UG/L		U										
SW129	SW	REAL	SW00421WC	15-OCT-90	N	DL	PSTCLPTCL	DIELDRIN	.2	UG/L		U										
SW129	SW	REAL	SW00421WC	15-OCT-90	N	DL	PSTCLPTCL	ENDOSULFAN I	.1	UG/L		U										
SW129	SW	REAL	SW00421WC	15-OCT-90	N	DL	PSTCLPTCL	ENDOSULFAN II	.2	UG/L		U										
SW129	SW	REAL	SW00421WC	15-OCT-90	N	DL	PSTCLPTCL	ENDOSULFAN SULFATE	2	UG/L		U										
SW129	SW	REAL	SW00421WC	15-OCT-90	N	DL	PSTCLPTCL	ENDRIN	2	UG/L		U										
SW129	SW	REAL	SW00421WC	15-OCT-90	N	DL	PSTCLPTCL	ENDRIN KETONE	2	UG/L		U										
SW129	SW	REAL	SW00421WC	15-OCT-90	N	DL	PSTCLPTCL	HEPTACHLOR	.1	UG/L		U										
SW129	SW	REAL	SW00421WC	15-OCT-90	N	DL	PSTCLPTCL	HEPTACHLOR EPOXIDE	.1	UG/L		U										
SW129	SW	REAL	SW00421WC	15-OCT-90	N	DL	PSTCLPTCL	METHOXYCHLOR	1	UG/L		U										
SW129	SW	REAL	SW00421WC	15-OCT-90	N	DL	PSTCLPTCL	TOXAPHENE	2	UG/L		U										
SW129	SW	REAL	SW00421WC	15-OCT-90	N	DL	PSTCLPTCL	alpha-BHC	.1	UG/L		U										
SW129	SW	REAL	SW00421WC	15-OCT-90	N	DL	PSTCLPTCL	alpha-CHLORDANE	1	UG/L		U										
SW129	SW	REAL	SW00421WC	15-OCT-90	N	DL	PSTCLPTCL	beta-BHC	1	UG/L		U										
SW129	SW	REAL	SW00421WC	15-OCT-90	N	DL	PSTCLPTCL	delta-BHC	.1	UG/L		U										
SW129	SW	REAL	SW00421WC	15-OCT-90	N	DL	PSTCLPTCL	gamma-BHC (LINDANE)	.1	UG/L		U										
SW129	SW	REAL	SW00421WC	15-OCT-90	N	DL	PSTCLPTCL	gamma-CHLORDANE	1	UG/L		U										
SW129	SW	REAL	SW00421WC	15-OCT-90	N	TRG	PSTCLPTCL	4,4'-DDD	1	UG/L		U										
SW129	SW	REAL	SW00421WC	15-OCT-90	N	TRG	PSTCLPTCL	4,4'-DDE	1	UG/L		U										
SW129	SW	REAL	SW00421WC	15-OCT-90	N	TRG	PSTCLPTCL	4,4'-DDT	.1	UG/L		U										
SW129	SW	REAL	SW00421WC	15-OCT-90	N	TRG	PSTCLPTCL	ALDRIN	05	UG/L		U										
SW129	SW	REAL	SW00421WC	15-OCT-90	N	TRG	PSTCLPTCL	AROCLOR-1016	5	UG/L		U										
SW129	SW	REAL	SW00421WC	15-OCT-90	N	TRG	PSTCLPTCL	AROCLOR-1221	5	UG/L		U										
SW129	SW	REAL	SW00421WC	15-OCT-90	N	TRG	PSTCLPTCL	AROCLOR-1232	.5	UG/L		U										
SW129	SW	REAL	SW00421WC	15-OCT-90	N	TRG	PSTCLPTCL	AROCLOR-1242	5	UG/L		U										
SW129	SW	REAL	SW00421WC	15-OCT-90	N	TRG	PSTCLPTCL	AROCLOR-1248	5	UG/L		U										
SW129	SW	REAL	SW00421WC	15-OCT-90	N	TRG	PSTCLPTCL	AROCLOR-1254	1	UG/L		U										
SW129	SW	REAL	SW00421WC	15-OCT-90	N	TRG	PSTCLPTCL	AROCLOR-1260	1	UG/L		U										
SW129	SW	REAL	SW00421WC	15-OCT-90	N	TRG	PSTCLPTCL	DIELDRIN	1	UG/L		U										
SW129	SW	REAL	SW00421WC	15-OCT-90	N	TRG	PSTCLPTCL	ENDOSULFAN I	05	UG/L		U										
SW129	SW	REAL	SW00421WC	15-OCT-90	N	TRG	PSTCLPTCL	ENDOSULFAN II	.1	UG/L		U										
SW129	SW	REAL	SW00421WC	15-OCT-90	N	TRG	PSTCLPTCL	ENDOSULFAN SULFATE	.1	UG/L		U										
SW129	SW	REAL	SW00421WC	15-OCT-90	N	TRG	PSTCLPTCL	ENDRIN	1	UG/L		U										
SW129	SW	REAL	SW00421WC	15-OCT-90	N	TRG	PSTCLPTCL	ENDRIN KETONE	1	UG/L		U										
SW129	SW	REAL	SW00421WC	15-OCT-90	N	TRG	PSTCLPTCL	HEPTACHLOR	.05	UG/L		U										
SW129	SW	REAL	SW00421WC	15-OCT-90	N	TRG	PSTCLPTCL	HEPTACHLOR EPOXIDE	.05	UG/L		U										
SW129	SW	REAL	SW00421WC	15-OCT-90	N	TRG	PSTCLPTCL	METHOXYCHLOR	.5	UG/L		U										
SW129	SW	REAL	SW00421WC	15-OCT-90	N	TRG	PSTCLPTCL	TOXAPHENE	1	UG/L		U										
SW129	SW	REAL	SW00421WC	15-OCT-90	N	TRG	PSTCLPTCL	alpha-BHC	.05	UG/L		U										
SW129	SW	REAL	SW00421WC	15-OCT-90	N	TRG	PSTCLPTCL	alpha-CHLORDANE	5	UG/L		U										
SW129	SW	REAL	SW00421WC	15-OCT-90	N	TRG	PSTCLPTCL	beta-BHC	05	UG/L		U										
SW129	SW	REAL	SW00421WC	15-OCT-90	N	TRG	PSTCLPTCL	delta-BHC	.05	UG/L		U										
SW129	SW	REAL	SW00421WC	15-OCT-90	N	TRG	PSTCLPTCL	gamma-BHC (LINDANE)	.05	UG/L		U										
SW129	SW	REAL	SW00421WC	15-OCT-90	N	TRG	PSTCLPTCL	gamma-CHLORDANE	.5	UG/L		U										

Location	ST	QC	Sample Number	Smpl Date	D	ID	Group	Chemical	Result	Unit	Error	Qual	D LMT	VA	RN1	RN2	RN3	RN4	VResult	VQual	VDET
SW129	SW	REAL	SW00421WC	15-OCT-90	N	TRG	WQPL	ALKALINITY AS CACO3	235	MG/L											
SW129	SW	REAL	SW00421WC	15-OCT-90	N	TRG	WQPL	CHLORIDE	39 5	MG/L											
SW129	SW	REAL	SW00421WC	15-OCT-90	N	TRG	WQPL	CYANIDE	2	UG/L		U									
SW129	SW	REAL	SW00421WC	15-OCT-90	N	TRG	WQPL	FLUORIDE	56	MG/L											
SW129	SW	REAL	SW00421WC	15-OCT-90	N	TRG	WQPL	NITRATE	01	MG/L		U									
SW129	SW	REAL	SW00421WC	15-OCT-90	N	TRG	WQPL	OIL AND GREASE	1 7	MG/L											
SW129	SW	REAL	SW00421WC	15-OCT-90	N	TRG	WQPL	PHOSPHORUS	.02	MG/L		U									
SW129	SW	REAL	SW00421WC	15-OCT-90	N	TRG	WQPL	TOTAL DISSOLVED SOLIDS	443	MG/L											
SW129	SW	REAL	SW00421WC	15-OCT-90	N	TRG	WQPL	TOTAL SUSPENDED SOLIDS	4	MG/L											

Location	ST	QC	Sample Number	Smpl Date	D	ID	Group	Chemical	Result	Unit	Error	Qual	D LMT	VA	RN1	RN2	RN3	RN4	VResult	VQual	VDET
SED118	SD	REAL	SD00229WC	21-MAY-91	N	TRG	PSTCLPTCL	4,4'-DDD	24	UG/KG		U	24								
SED118	SD	REAL	SD00229WC	21-MAY-91	N	TRG	PSTCLPTCL	4,4'-DDE	24	UG/KG		U	24								
SED118	SD	REAL	SD00229WC	21-MAY-91	N	TRG	PSTCLPTCL	4,4'-DDT	24	UG/KG		U	24								
SED118	SD	REAL	SD00229WC	21-MAY-91	N	TRG	PSTCLPTCL	ALDRIN	12	UG/KG		U	12								
SED118	SD	REAL	SD00229WC	21-MAY-91	N	TRG	PSTCLPTCL	AROCLOR-1016	120	UG/KG		U	120								
SED118	SD	REAL	SD00229WC	21-MAY-91	N	TRG	PSTCLPTCL	AROCLOR-1221	120	UG/KG		U	120								
SED118	SD	REAL	SD00229WC	21-MAY-91	N	TRG	PSTCLPTCL	AROCLOR-1232	120	UG/KG		U	120								
SED118	SD	REAL	SD00229WC	21-MAY-91	N	TRG	PSTCLPTCL	AROCLOR-1242	120	UG/KG		U	120								
SED118	SD	REAL	SD00229WC	21-MAY-91	N	TRG	PSTCLPTCL	AROCLOR-1248	120	UG/KG		U	120								
SED118	SD	REAL	SD00229WC	21-MAY-91	N	TRG	PSTCLPTCL	AROCLOR-1254	240	UG/KG		U	240								
SED118	SD	REAL	SD00229WC	21-MAY-91	N	TRG	PSTCLPTCL	AROCLOR-1260	240	UG/KG		U	240								
SED118	SD	REAL	SD00229WC	21-MAY-91	N	TRG	PSTCLPTCL	DIELDRIN	24	UG/KG		U	24								
SED118	SD	REAL	SD00229WC	21-MAY-91	N	TRG	PSTCLPTCL	ENDOSULFAN I	12	UG/KG		U	12								
SED118	SD	REAL	SD00229WC	21-MAY-91	N	TRG	PSTCLPTCL	ENDOSULFAN II	24	UG/KG		U	24								
SED118	SD	REAL	SD00229WC	21-MAY-91	N	TRG	PSTCLPTCL	ENDOSULFAN SULFATE	24	UG/KG		U	24								
SED118	SD	REAL	SD00229WC	21-MAY-91	N	TRG	PSTCLPTCL	ENDRIN	24	UG/KG		U	24								
SED118	SD	REAL	SD00229WC	21-MAY-91	N	TRG	PSTCLPTCL	ENDRIN KETONE	24	UG/KG		U	24								
SED118	SD	REAL	SD00229WC	21-MAY-91	N	TRG	PSTCLPTCL	HEPTACHLOR	12	UG/KG		U	12								
SED118	SD	REAL	SD00229WC	21-MAY-91	N	TRG	PSTCLPTCL	HEPTACHLOR EPOXIDE	12	UG/KG		U	12								
SED118	SD	REAL	SD00229WC	21-MAY-91	N	TRG	PSTCLPTCL	METHOXYCHLOR	120	UG/KG		U	120								
SED118	SD	REAL	SD00229WC	21-MAY-91	N	TRG	PSTCLPTCL	TOXAPHENE	240	UG/KG		U	240								
SED118	SD	REAL	SD00229WC	21-MAY-91	N	TRG	PSTCLPTCL	alpha-BHC	12	UG/KG		U	12								
SED118	SD	REAL	SD00229WC	21-MAY-91	N	TRG	PSTCLPTCL	alpha-CHLORDANE	120	UG/KG		U	120								
SED118	SD	REAL	SD00229WC	21-MAY-91	N	TRG	PSTCLPTCL	beta-BHC	12	UG/KG		U	12								
SED118	SD	REAL	SD00229WC	21-MAY-91	N	TRG	PSTCLPTCL	delta-BHC	12	UG/KG		U	12								
SED118	SD	REAL	SD00229WC	21-MAY-91	N	TRG	PSTCLPTCL	gamma-BHC (LINDANE)	12	UG/KG		U	12								
SED118	SD	REAL	SD00229WC	21-MAY-91	N	TRG	PSTCLPTCL	gamma-CHLORDANE	120	UG/KG		U	120								
SED118	SD	REAL	SD00229WC	21-MAY-91	N	TRG	WQPL	ALKALINITY AS CACO3	0.11	%			0 10								
SED118	SD	REAL	SD00229WC	21-MAY-91	N	TRG	WQPL	NITRATE/NITRITE	4 2	MG/KG			1 5								
SED118	SD	REAL	SD00229WC	21-MAY-91	N	TRG	WQPL	TOTAL SOLIDS	64 6	%			0.10								
SED118	SD	REAL	SD00229WC	21-MAY-91	N	TRG	WQPL	pH	7 9	PHUNIT			0 20								
SED118	SD	REAL	SD00263WC	13-AUG-91	N	TRG	WQPL	ALKALINITY AS CACO3	0 27	%			0.10								
SED118	SD	REAL	SD00263WC	13-AUG-91	N	TRG	WQPL	NITRATE/NITRITE	6.3	MG/KG			1 4								
SED118	SD	REAL	SD00263WC	13-AUG-91	N	TRG	WQPL	TOTAL SOLIDS	69.2	%			0 10								
SED118	SD	REAL	SD00263WC	13-AUG-91	N	TRG	WQPL	pH	8.3	PHUNIT			0.20								
SED118	SD	REAL	SS00195WC	27-MAR-91	N	TRG	PSTCLPTCL	4,4'-DDD	25	UG/KG		U	25								
SED118	SD	REAL	SS00195WC	27-MAR-91	N	TRG	PSTCLPTCL	4,4'-DDE	25	UG/KG		U	25								
SED118	SD	REAL	SS00195WC	27-MAR-91	N	TRG	PSTCLPTCL	4,4'-DDT	25	UG/KG		U	25								
SED118	SD	REAL	SS00195WC	27-MAR-91	N	TRG	PSTCLPTCL	ALDRIN	13	UG/KG		U	13								
SED118	SD	REAL	SS00195WC	27-MAR-91	N	TRG	PSTCLPTCL	AROCLOR-1016	130	UG/KG		U	130								
SED118	SD	REAL	SS00195WC	27-MAR-91	N	TRG	PSTCLPTCL	AROCLOR-1221	130	UG/KG		U	130								
SED118	SD	REAL	SS00195WC	27-MAR-91	N	TRG	PSTCLPTCL	AROCLOR-1232	130	UG/KG		U	130								
SED118	SD	REAL	SS00195WC	27-MAR-91	N	TRG	PSTCLPTCL	AROCLOR-1242	130	UG/KG		U	130								
SED118	SD	REAL	SS00195WC	27-MAR-91	N	TRG	PSTCLPTCL	AROCLOR-1248	130	UG/KG		U	130								
SED118	SD	REAL	SS00195WC	27-MAR-91	N	TRG	PSTCLPTCL	AROCLOR-1254	250	UG/KG		U	250								
SED118	SD	REAL	SS00195WC	27-MAR-91	N	TRG	PSTCLPTCL	AROCLOR-1260	250	UG/KG		U	250								
SED118	SD	REAL	SS00195WC	27-MAR-91	N	TRG	PSTCLPTCL	DIELDRIN	25	UG/KG		U	25								
SED118	SD	REAL	SS00195WC	27-MAR-91	N	TRG	PSTCLPTCL	ENDOSULFAN I	13	UG/KG		U	13								
SED118	SD	REAL	SS00195WC	27-MAR-91	N	TRG	PSTCLPTCL	ENDOSULFAN II	25	UG/KG		U	25								
SED118	SD	REAL	SS00195WC	27-MAR-91	N	TRG	PSTCLPTCL	ENDOSULFAN SULFATE	25	UG/KG		U	25								
SED118	SD	REAL	SS00195WC	27-MAR-91	N	TRG	PSTCLPTCL	ENDRIN	25	UG/KG		U	25								
SED118	SD	REAL	SS00195WC	27-MAR-91	N	TRG	PSTCLPTCL	ENDRIN KETONE	25	UG/KG		U	25								
SED118	SD	REAL	SS00195WC	27-MAR-91	N	TRG	PSTCLPTCL	HEPTACHLOR	13	UG/KG		U	13								
SED118	SD	REAL	SS00195WC	27-MAR-91	N	TRG	PSTCLPTCL	HEPTACHLOR EPOXIDE	13	UG/KG		U	13								
SED118	SD	REAL	SS00195WC	27-MAR-91	N	TRG	PSTCLPTCL	METHOXYCHLOR	130	UG/KG		U	130								
SED118	SD	REAL	SS00195WC	27-MAR-91	N	TRG	PSTCLPTCL	TOXAPHENE	250	UG/KG		U	250								
SED118	SD	REAL	SS00195WC	27-MAR-91	N	TRG	PSTCLPTCL	alpha-BHC	13	UG/KG		U	13								
SED118	SD	REAL	SS00195WC	27-MAR-91	N	TRG	PSTCLPTCL	alpha-CHLORDANE	130	UG/KG		U	130								
SED118	SD	REAL	SS00195WC	27-MAR-91	N	TRG	PSTCLPTCL	beta-BHC	13	UG/KG		U	13								
SED118	SD	REAL	SS00195WC	27-MAR-91	N	TRG	PSTCLPTCL	delta-BHC	13	UG/KG		U	13								
SED118	SD	REAL	SS00195WC	27-MAR-91	N	TRG	PSTCLPTCL	gamma-BHC (LINDANE)	13	UG/KG		U	13								
SED118	SD	REAL	SS00195WC	27-MAR-91	N	TRG	PSTCLPTCL	gamma-CHLORDANE	130	UG/KG		U	130								
SED118	SD	REAL	SS00195WC	27-MAR-91	N	TRG	WQPL	ALKALINITY AS CACO3	0 44	%			0.10								

Location	ST	QC	Sample Number	Smpl Date	D	ID	Group	Chemical	Result	Unit	Error	Qual	D LMT	VA	RN1	RN2	RN3	RN4	VResult	VQual	VDET
SED118	SD	REAL	SS00195WC	27-MAR-91	N	TRG	WQPL	NITRATE/NITRITE	3 1	MG/KG			1 5								
SED118	SD	REAL	SS00195WC	27-MAR-91	N	TRG	WQPL	TOTAL SOLIDS	62.4	%			0 10								
SED118	SD	REAL	SS00195WC	27-MAR-91	N	TRG	WQPL	pH	7 5	PHUNIT			0 20								
SW018	SW	REAL	SW00693WC	30-JAN-91	N																
SW018	SW	REAL	SW00899WC	25-MAR-91	N	TRG	WQPL	BICARBONATE AS CACO3	267	MG/L			10 0								
SW018	SW	REAL	SW00899WC	25-MAR-91	N	TRG	WQPL	CARBONATE AS CACO3	10.0	MG/L		U	10 0								
SW018	SW	REAL	SW00899WC	25-MAR-91	N	TRG	WQPL	CBOD5	6.5	MG/L			1.0								
SW018	SW	REAL	SW00899WC	25-MAR-91	N	TRG	WQPL	CBOD5	6 9	MG/L			1 0								
SW018	SW	REAL	SW00899WC	25-MAR-91	N	TRG	WQPL	CHLORIDE	67 0	MG/L			5 0								
SW018	SW	REAL	SW00899WC	25-MAR-91	N	TRG	WQPL	CYANIDE	20 0	UG/L		U	20 0								
SW018	SW	REAL	SW00899WC	25-MAR-91	N	TRG	WQPL	FLUORIDE, SOLUBLE	0.64	MG/L			0 10								
SW018	SW	REAL	SW00899WC	25-MAR-91	N	TRG	WQPL	NITRATE/NITRITE	1.5	MG/L			0 20								
SW018	SW	REAL	SW00899WC	25-MAR-91	N	TRG	WQPL	NITRITE	0 020	MG/L		U	0.020								
SW018	SW	REAL	SW00899WC	25-MAR-91	N	TRG	WQPL	OIL AND GREASE	6 7	MG/L		U	6.7								
SW018	SW	REAL	SW00899WC	25-MAR-91	N	TRG	WQPL	ORTHOPHOSPHATE	0 050	MG/L		U	0.050								
SW018	SW	REAL	SW00899WC	25-MAR-91	N	TRG	WQPL	PHOSPHORUS	0.050	MG/L		U	0.050								
SW018	SW	REAL	SW00899WC	25-MAR-91	N	TRG	WQPL	SOLIDS, NONVOLATILE SUSPENDED	5 0	MG/L		U	5.0								
SW018	SW	REAL	SW00899WC	25-MAR-91	N	TRG	WQPL	SULFATE	40 2	MG/L			5 0								
SW018	SW	REAL	SW00899WC	25-MAR-91	N	TRG	WQPL	SULFIDE	1 0	MG/L		U	1 0								
SW018	SW	REAL	SW00899WC	25-MAR-91	N	TRG	WQPL	TOTAL DISSOLVED SOLIDS	396	MG/L			10 0								
SW018	SW	REAL	SW00899WC	25-MAR-91	N	TRG	WQPL	TOTAL ORGANIC CARBON	3.8	MG/L			1.0								
SW018	SW	REAL	SW00899WC	25-MAR-91	N	TRG	WQPL	TOTAL ORGANIC CARBON	4 0	MG/L			1 0								
SW018	SW	REAL	SW01002WC	16-APR-91	Y	TRG	PSTCLPTCL	4,4'-DDD	0.10	UG/L		U	0 10								
SW018	SW	REAL	SW01002WC	16-APR-91	Y	TRG	PSTCLPTCL	4,4'-DDE	0.10	UG/L		U	0 10								
SW018	SW	REAL	SW01002WC	16-APR-91	Y	TRG	PSTCLPTCL	4,4'-DDT	0 10	UG/L		U	0 10								
SW018	SW	REAL	SW01002WC	16-APR-91	Y	TRG	PSTCLPTCL	ALDRIN	0 050	UG/L		U	0 050								
SW018	SW	REAL	SW01002WC	16-APR-91	Y	TRG	PSTCLPTCL	AROCLOR-1016	0.50	UG/L		U	0 50								
SW018	SW	REAL	SW01002WC	16-APR-91	Y	TRG	PSTCLPTCL	AROCLOR-1221	0 50	UG/L		U	0 50								
SW018	SW	REAL	SW01002WC	16-APR-91	Y	TRG	PSTCLPTCL	AROCLOR-1232	0.50	UG/L		U	0 50								
SW018	SW	REAL	SW01002WC	16-APR-91	Y	TRG	PSTCLPTCL	AROCLOR-1242	0 50	UG/L		U	0.50								
SW018	SW	REAL	SW01002WC	16-APR-91	Y	TRG	PSTCLPTCL	AROCLOR-1248	0.50	UG/L		U	0.50								
SW018	SW	REAL	SW01002WC	16-APR-91	Y	TRG	PSTCLPTCL	AROCLOR-1254	1 0	UG/L		U	1.0								
SW018	SW	REAL	SW01002WC	16-APR-91	Y	TRG	PSTCLPTCL	AROCLOR-1260	1.0	UG/L		U	1.0								
SW018	SW	REAL	SW01002WC	16-APR-91	Y	TRG	PSTCLPTCL	DIELDRIN	0.10	UG/L		U	0 10								
SW018	SW	REAL	SW01002WC	16-APR-91	Y	TRG	PSTCLPTCL	ENDOSULFAN I	0.050	UG/L		U	0.050								
SW018	SW	REAL	SW01002WC	16-APR-91	Y	TRG	PSTCLPTCL	ENDOSULFAN II	0 10	UG/L		U	0 10								
SW018	SW	REAL	SW01002WC	16-APR-91	Y	TRG	PSTCLPTCL	ENDOSULFAN SULFATE	0.10	UG/L		U	0.10								
SW018	SW	REAL	SW01002WC	16-APR-91	Y	TRG	PSTCLPTCL	ENDRIN	0.10	UG/L		U	0.10								
SW018	SW	REAL	SW01002WC	16-APR-91	Y	TRG	PSTCLPTCL	ENDRIN KETONE	0.10	UG/L		U	0 10								
SW018	SW	REAL	SW01002WC	16-APR-91	Y	TRG	PSTCLPTCL	HEPTACHLOR	0.050	UG/L		U	0 050								
SW018	SW	REAL	SW01002WC	16-APR-91	Y	TRG	PSTCLPTCL	HEPTACHLOR EPOXIDE	0 050	UG/L		U	0 050								
SW018	SW	REAL	SW01002WC	16-APR-91	Y	TRG	PSTCLPTCL	METHOXYCHLOR	0.50	UG/L		U	0 50								
SW018	SW	REAL	SW01002WC	16-APR-91	Y	TRG	PSTCLPTCL	TOXAPHENE	1 0	UG/L		U	1 0								
SW018	SW	REAL	SW01002WC	16-APR-91	Y	TRG	PSTCLPTCL	alpha-BHC	0 050	UG/L		U	0.050								
SW018	SW	REAL	SW01002WC	16-APR-91	Y	TRG	PSTCLPTCL	alpha-CHLORDANE	0 50	UG/L		U	0.50								
SW018	SW	REAL	SW01002WC	16-APR-91	Y	TRG	PSTCLPTCL	beta-BHC	0 050	UG/L		U	0 050								
SW018	SW	REAL	SW01002WC	16-APR-91	Y	TRG	PSTCLPTCL	delta-BHC	0 050	UG/L		U	0 050								
SW018	SW	REAL	SW01002WC	16-APR-91	Y	TRG	PSTCLPTCL	gamma-BHC (LINDANE)	0 050	UG/L		U	0 050								
SW018	SW	REAL	SW01002WC	16-APR-91	Y	TRG	PSTCLPTCL	gamma-CHLORDANE	0 50	UG/L		U	0.50								
SW018	SW	REAL	SW01002WC	16-APR-91	Y	TRG	WQPL	BICARBONATE AS CACO3	145	MG/L			10.0								
SW018	SW	REAL	SW01002WC	16-APR-91	Y	TRG	WQPL	CARBONATE AS CACO3	10 0	MG/L		U	10 0								
SW018	SW	REAL	SW01002WC	16-APR-91	Y	TRG	WQPL	CBOD5	5.8	MG/L			1.0								
SW018	SW	REAL	SW01002WC	16-APR-91	Y	TRG	WQPL	CBOD5	5 9	MG/L			1.0								
SW018	SW	REAL	SW01002WC	16-APR-91	Y	TRG	WQPL	CHLORIDE	54.4	MG/L			5.0								
SW018	SW	REAL	SW01002WC	16-APR-91	Y	TRG	WQPL	CYANIDE	10.0	UG/L		U	10 0								
SW018	SW	REAL	SW01002WC	16-APR-91	Y	TRG	WQPL	FLUORIDE, SOLUBLE	0.53	MG/L			0.10								
SW018	SW	REAL	SW01002WC	16-APR-91	Y	TRG	WQPL	NITRATE/NITRITE	1.9	MG/L			0 20								
SW018	SW	REAL	SW01002WC	16-APR-91	Y	TRG	WQPL	NITRITE	0 020	MG/L		U	0.020								
SW018	SW	REAL	SW01002WC	16-APR-91	Y	TRG	WQPL	OIL AND GREASE	5.9	MG/L		U	5 9								
SW018	SW	REAL	SW01002WC	16-APR-91	Y	TRG	WQPL	ORTHOPHOSPHATE	0.050	MG/L		U	0.050								
SW018	SW	REAL	SW01002WC	16-APR-91	Y	TRG	WQPL	PHOSPHORUS	0 050	MG/L		U	0.050								
SW018	SW	REAL	SW01002WC	16-APR-91	Y	TRG	WQPL	SOLIDS, NONVOLATILE SUSPENDED	5.0	MG/L		U	5.0								
SW018	SW	REAL	SW01002WC	16-APR-91	Y	TRG	WQPL	SULFATE	35.7	MG/L			5.0								

Location	ST	QC	Sample Number	Smpl Date	D	ID	Group	Chemical	Result	Unit	Error	Qual	D LMT	VA	RN1	RN2	RN3	RN4	VResult	VQual	VDET
SW018	SW	REAL	SW01002WC	16-APR-91	Y	TRG	WQPL	SULFIDE	1 0	MG/L		U	1 0								
SW018	SW	REAL	SW01002WC	16-APR-91	Y	TRG	WQPL	TOTAL DISSOLVED SOLIDS	352	MG/L			10 0								
SW018	SW	REAL	SW01002WC	16-APR-91	Y	TRG	WQPL	TOTAL ORGANIC CARBON	4 5	MG/L			1 0								
SW018	SW	REAL	SW01002WC	16-APR-91	Y	TRG	WQPL	TOTAL ORGANIC CARBON	4 6	MG/L			1 0								
SW018	SW	REAL	SW01109WC	30-MAY-91	N	TRG	WQPL	BICARBONATE AS CACO3	185	MG/L			10 0								
SW018	SW	REAL	SW01109WC	30-MAY-91	N	TRG	WQPL	CARBONATE AS CACO3	10 0	MG/L		U	10 0								
SW018	SW	REAL	SW01109WC	30-MAY-91	N	TRG	WQPL	CHLORIDE	58.0	MG/L			5 0								
SW018	SW	REAL	SW01109WC	30-MAY-91	N	TRG	WQPL	CYANIDE	10 0	UG/L		U	10 0								
SW018	SW	REAL	SW01109WC	30-MAY-91	N	TRG	WQPL	FLUORIDE, SOLUBLE	0 50	MG/L			0.10								
SW018	SW	REAL	SW01109WC	30-MAY-91	N	TRG	WQPL	NITRATE/NITRITE	2 1	MG/L			0 20								
SW018	SW	REAL	SW01109WC	30-MAY-91	N	TRG	WQPL	NITRITE	0 020	MG/L		U	0 020								
SW018	SW	REAL	SW01109WC	30-MAY-91	N	TRG	WQPL	OIL AND GREASE	8 2	MG/L		U	8 2								
SW018	SW	REAL	SW01109WC	30-MAY-91	N	TRG	WQPL	ORTHOPHOSPHATE	0 050	MG/L		U	0 050								
SW018	SW	REAL	SW01109WC	30-MAY-91	N	TRG	WQPL	PHOSPHORUS	0.050	MG/L		U	0 050								
SW018	SW	REAL	SW01109WC	30-MAY-91	N	TRG	WQPL	SOLIDS, NONVOLATILE SUSPENDED	10 0	MG/L			5 0								
SW018	SW	REAL	SW01109WC	30-MAY-91	N	TRG	WQPL	SULFATE	31 8	MG/L			5 0								
SW018	SW	REAL	SW01109WC	30-MAY-91	N	TRG	WQPL	SULFIDE	1 0	MG/L		U	1 0								
SW018	SW	REAL	SW01109WC	30-MAY-91	N	TRG	WQPL	TOTAL DISSOLVED SOLIDS	388	MG/L			10.0								
SW018	SW	REAL	SW01212WC	17-JUN-91	N	TRG	WQPL	BICARBONATE AS CACO3	222	MG/L			10 0								
SW018	SW	REAL	SW01212WC	17-JUN-91	N	TRG	WQPL	CARBONATE AS CACO3	10.0	MG/L		U	10.0								
SW018	SW	REAL	SW01212WC	17-JUN-91	N	TRG	WQPL	CHLORIDE	59 7	MG/L			5.0								
SW018	SW	REAL	SW01212WC	17-JUN-91	N	TRG	WQPL	CYANIDES (SOLUBLE SALTS AND CO	10 0	UG/L		U	10 0								
SW018	SW	REAL	SW01212WC	17-JUN-91	N	TRG	WQPL	FLUORIDE, SOLUBLE	0.53	MG/L			0 10								
SW018	SW	REAL	SW01212WC	17-JUN-91	N	TRG	WQPL	NITRATE/NITRITE	2.0	MG/L			0 20								
SW018	SW	REAL	SW01212WC	17-JUN-91	N	TRG	WQPL	NITRITE	0 020	MG/L		U	0 020								
SW018	SW	REAL	SW01212WC	17-JUN-91	N	TRG	WQPL	OIL AND GREASE	12 2	MG/L		U	12 2								
SW018	SW	REAL	SW01212WC	17-JUN-91	N	TRG	WQPL	ORTHOPHOSPHATE	0.050	MG/L		U	0 050								
SW018	SW	REAL	SW01212WC	17-JUN-91	N	TRG	WQPL	PHOSPHORUS	0 74	MG/L			0 050								
SW018	SW	REAL	SW01212WC	17-JUN-91	N	TRG	WQPL	SULFATE	32 2	MG/L			5 0								
SW018	SW	REAL	SW01212WC	17-JUN-91	N	TRG	WQPL	SULFIDE	1 0	MG/L		U	1 0								
SW018	SW	REAL	SW01212WC	17-JUN-91	N	TRG	WQPL	TOTAL DISSOLVED SOLIDS	360	MG/L			10 0								
SW018	SW	REAL	SW01212WC	17-JUN-91	N	TRG	WQPL	TOTAL SOLIDS	5.0	MG/L		U	5 0								
SW018	SW	REAL	SW01315WC	15-JUL-91	N																
SW018	SW	REAL	SW01421WC	19-AUG-91	N	TRG	WQPL	BICARBONATE AS CACO3	257	MG/L			10 0								
SW018	SW	REAL	SW01421WC	19-AUG-91	N	TRG	WQPL	CARBONATE AS CACO3	10.0	MG/L		U	10 0								
SW018	SW	REAL	SW01421WC	19-AUG-91	N	TRG	WQPL	CHLORIDE	40 3	MG/L			5 0								
SW018	SW	REAL	SW01421WC	19-AUG-91	N	TRG	WQPL	CYANIDE	10 0	UG/L		U	10 0								
SW018	SW	REAL	SW01421WC	19-AUG-91	N	TRG	WQPL	DISSOLVED ORGANIC CARBON	4	MG/L			1								
SW018	SW	REAL	SW01421WC	19-AUG-91	N	TRG	WQPL	FLUORIDE, SOLUBLE	0 48	MG/L			0 10								
SW018	SW	REAL	SW01421WC	19-AUG-91	N	TRG	WQPL	NITRATE/NITRITE	1 2	MG/L			0 10								
SW018	SW	REAL	SW01421WC	19-AUG-91	N	TRG	WQPL	NITRITE	0 020	MG/L		U	0 020								
SW018	SW	REAL	SW01421WC	19-AUG-91	N	TRG	WQPL	OIL AND GREASE	5 5	MG/L		U	5 5								
SW018	SW	REAL	SW01421WC	19-AUG-91	N	TRG	WQPL	ORTHOPHOSPHATE	0.050	MG/L		U	0 050								
SW018	SW	REAL	SW01421WC	19-AUG-91	N	TRG	WQPL	PHOSPHORUS	0.050	MG/L		U	0 050								
SW018	SW	REAL	SW01421WC	19-AUG-91	N	TRG	WQPL	SOLIDS, NONVOLATILE SUSPENDED	5 0	MG/L		U	5 0								
SW018	SW	REAL	SW01421WC	19-AUG-91	N	TRG	WQPL	SULFATE	29.0	MG/L			5 0								
SW018	SW	REAL	SW01421WC	19-AUG-91	N	TRG	WQPL	SULFIDE	1.0	MG/L		U	1 0								
SW018	SW	REAL	SW01421WC	19-AUG-91	N	TRG	WQPL	TOTAL DISSOLVED SOLIDS	368	MG/L			10 0								
SW018	SW	REAL	SW01421WC	19-AUG-91	N	TRG	WQPL	TOTAL ORGANIC CARBON	4	MG/L			1								
SW018	SW	REAL	SW01527WC	09-SEP-91	N	TRG	WQPL	BICARBONATE AS CACO3	288	MG/L			10 0								
SW018	SW	REAL	SW01527WC	09-SEP-91	N	TRG	WQPL	CARBONATE AS CACO3	10.0	MG/L		U	10 0								
SW018	SW	REAL	SW01527WC	09-SEP-91	N	TRG	WQPL	CHLORIDE	46 2	MG/L			5 0								
SW018	SW	REAL	SW01527WC	09-SEP-91	N	TRG	WQPL	CYANIDES (SOLUBLE SALTS AND CO	20.0	UG/L		U	20 0								
SW018	SW	REAL	SW01527WC	09-SEP-91	N	TRG	WQPL	DISSOLVED ORGANIC CARBON	2	MG/L			1								
SW018	SW	REAL	SW01527WC	09-SEP-91	N	TRG	WQPL	FLUORIDE, SOLUBLE	0 56	MG/L			0 10								
SW018	SW	REAL	SW01527WC	09-SEP-91	N	TRG	WQPL	NITRATE/NITRITE	0.89	MG/L			0.10								
SW018	SW	REAL	SW01527WC	09-SEP-91	N	TRG	WQPL	NITRITE	0.020	MG/L		U	0 020								
SW018	SW	REAL	SW01527WC	09-SEP-91	N	TRG	WQPL	OIL AND GREASE	5 3	MG/L		U	5 3								
SW018	SW	REAL	SW01527WC	09-SEP-91	N	TRG	WQPL	ORTHOPHOSPHATE	0 050	MG/L		U	0 050								
SW018	SW	REAL	SW01527WC	09-SEP-91	N	TRG	WQPL	PHOSPHORUS	0.050	MG/L		U	0.050								
SW018	SW	REAL	SW01527WC	09-SEP-91	N	TRG	WQPL	SULFATE	38.1	MG/L			10.0								
SW018	SW	REAL	SW01527WC	09-SEP-91	N	TRG	WQPL	SULFIDE	1 0	MG/L		U	1 0								
SW018	SW	REAL	SW01527WC	09-SEP-91	N	TRG	WQPL	TOTAL DISSOLVED SOLIDS	350	MG/L			10 0								

Location	ST	QC	Sample Number	Smpl Date	D	ID	Group	Chemical	Result	Unit	Error	Qual	D	LMT	VA	RN1	RN2	RN3	RN4	VResult	VQual	VDET
SW018	SW	REAL	SW01527WC	09-SEP-91	N	TRG	WQPL	TOTAL ORGANIC CARBON	3	MG/L				1								
SW018	SW	REAL	SW01527WC	09-SEP-91	N	TRG	WQPL	TOTAL SOLIDS	5 0	MG/L		U		5 0								
SW018	SW	REAL	SW01633WC	07-OCT-91	N	TRG	WQPL	DISSOLVED ORGANIC CARBON	2	MG/L				1								
SW018	SW	REAL	SW01633WC	07-OCT-91	N	TRG	WQPL	TOTAL ORGANIC CARBON	2	MG/L				1								
SW019	SW	REAL	SW01076WC	12-APR-91	N	TRG	PSTCLPTCL	4,4'-DDD	0 10	UG/L		U		0 10								
SW019	SW	REAL	SW01076WC	12-APR-91	N	TRG	PSTCLPTCL	4,4'-DDE	0.10	UG/L		U		0 10								
SW019	SW	REAL	SW01076WC	12-APR-91	N	TRG	PSTCLPTCL	4,4'-DDT	0 10	UG/L		U		0 10								
SW019	SW	REAL	SW01076WC	12-APR-91	N	TRG	PSTCLPTCL	ALDRIN	0 050	UG/L		U		0 050								
SW019	SW	REAL	SW01076WC	12-APR-91	N	TRG	PSTCLPTCL	AROCLOR-1016	0.50	UG/L		U		0.50								
SW019	SW	REAL	SW01076WC	12-APR-91	N	TRG	PSTCLPTCL	AROCLOR-1221	0 50	UG/L		U		0 50								
SW019	SW	REAL	SW01076WC	12-APR-91	N	TRG	PSTCLPTCL	AROCLOR-1232	0.50	UG/L		U		0 50								
SW019	SW	REAL	SW01076WC	12-APR-91	N	TRG	PSTCLPTCL	AROCLOR-1242	0 50	UG/L		U		0 50								
SW019	SW	REAL	SW01076WC	12-APR-91	N	TRG	PSTCLPTCL	AROCLOR-1248	0.50	UG/L		U		0 50								
SW019	SW	REAL	SW01076WC	12-APR-91	N	TRG	PSTCLPTCL	AROCLOR-1254	1 0	UG/L		U		1 0								
SW019	SW	REAL	SW01076WC	12-APR-91	N	TRG	PSTCLPTCL	AROCLOR-1260	1 0	UG/L		U		1 0								
SW019	SW	REAL	SW01076WC	12-APR-91	N	TRG	PSTCLPTCL	DIELDRIN	0 10	UG/L		U		0 10								
SW019	SW	REAL	SW01076WC	12-APR-91	N	TRG	PSTCLPTCL	ENDOSULFAN I	0 050	UG/L		U		0 050								
SW019	SW	REAL	SW01076WC	12-APR-91	N	TRG	PSTCLPTCL	ENDOSULFAN II	0 10	UG/L		U		0 10								
SW019	SW	REAL	SW01076WC	12-APR-91	N	TRG	PSTCLPTCL	ENDOSULFAN SULFATE	0.10	UG/L		U		0 10								
SW019	SW	REAL	SW01076WC	12-APR-91	N	TRG	PSTCLPTCL	ENDRIN	0 10	UG/L		U		0 10								
SW019	SW	REAL	SW01076WC	12-APR-91	N	TRG	PSTCLPTCL	ENDRIN KETONE	0.10	UG/L		U		0 10								
SW019	SW	REAL	SW01076WC	12-APR-91	N	TRG	PSTCLPTCL	HEPTACHLOR	0 050	UG/L		U		0 050								
SW019	SW	REAL	SW01076WC	12-APR-91	N	TRG	PSTCLPTCL	HEPTACHLOR EPOXIDE	0 050	UG/L		U		0 050								
SW019	SW	REAL	SW01076WC	12-APR-91	N	TRG	PSTCLPTCL	METHOXYCHLOR	0 50	UG/L		U		0 50								
SW019	SW	REAL	SW01076WC	12-APR-91	N	TRG	PSTCLPTCL	TOXAPHENE	1 0	UG/L		U		1 0								
SW019	SW	REAL	SW01076WC	12-APR-91	N	TRG	PSTCLPTCL	alpha-BHC	0 010	UG/L		J		0 050								
SW019	SW	REAL	SW01076WC	12-APR-91	N	TRG	PSTCLPTCL	alpha-CHLORDANE	0 50	UG/L		U		0 50								
SW019	SW	REAL	SW01076WC	12-APR-91	N	TRG	PSTCLPTCL	beta-BHC	0 050	UG/L		U		0 050								
SW019	SW	REAL	SW01076WC	12-APR-91	N	TRG	PSTCLPTCL	delta-BHC	0 050	UG/L		U		0 050								
SW019	SW	REAL	SW01076WC	12-APR-91	N	TRG	PSTCLPTCL	gamma-BHC (LINDANE)	0.050	UG/L		U		0 050								
SW019	SW	REAL	SW01076WC	12-APR-91	N	TRG	PSTCLPTCL	gamma-CHLORDANE	0 50	UG/L		U		0 50								
SW019	SW	REAL	SW01076WC	12-APR-91	N	TRG	WQPL	BICARBONATE AS CACO3	25.7	MG/L				10.0								
SW019	SW	REAL	SW01076WC	12-APR-91	N	TRG	WQPL	CARBONATE AS CACO3	10 0	MG/L		U		10 0								
SW019	SW	REAL	SW01076WC	12-APR-91	N	TRG	WQPL	CBOD5	6.3	MG/L				1 0								
SW019	SW	REAL	SW01076WC	12-APR-91	N	TRG	WQPL	CHLORIDE	123	MG/L				25 0								
SW019	SW	REAL	SW01076WC	12-APR-91	N	TRG	WQPL	CYANIDE	10.0	UG/L		U		10 0								
SW019	SW	REAL	SW01076WC	12-APR-91	N	TRG	WQPL	FLUORIDE, SOLUBLE	0 16	MG/L				0 10								
SW019	SW	REAL	SW01076WC	12-APR-91	N	TRG	WQPL	NITRATE/NITRITE	1 7	MG/L				0 10								
SW019	SW	REAL	SW01076WC	12-APR-91	N	TRG	WQPL	NITRITE	0.027	MG/L				0.020								
SW019	SW	REAL	SW01076WC	12-APR-91	N	TRG	WQPL	OIL AND GREASE	12.2	MG/L		U		12.2								
SW019	SW	REAL	SW01076WC	12-APR-91	N	TRG	WQPL	ORTHOPHOSPHATE	0 050	MG/L		U		0 050								
SW019	SW	REAL	SW01076WC	12-APR-91	N	TRG	WQPL	PHOSPHORUS	0 76	MG/L				0 050								
SW019	SW	REAL	SW01076WC	12-APR-91	N	TRG	WQPL	SOLIDS, NONVOLATILE SUSPENDED	110	MG/L				5.0								
SW019	SW	REAL	SW01076WC	12-APR-91	N	TRG	WQPL	SULFATE	43 0	MG/L				10.0								
SW019	SW	REAL	SW01076WC	12-APR-91	N	TRG	WQPL	SULFIDE	1 0	MG/L		U		1.0								
SW019	SW	REAL	SW01076WC	12-APR-91	N	TRG	WQPL	TOTAL DISSOLVED SOLIDS	292	MG/L				10 0								
SW019	SW	REAL	SW01076WC	12-APR-91	N	TRG	WQPL	TOTAL ORGANIC CARBON	5 9	MG/L				1.0								
SW019	SW	REAL	SW01076WC	12-APR-91	N	TRG	WQPL	TOTAL ORGANIC CARBON	6 0	MG/L				1 0								
SW019	SW	REAL	SW01389WC	23-JUL-91	N	TRG	WQPL	BICARBONATE AS CACO3	52.4	MG/L				10 0								
SW019	SW	REAL	SW01389WC	23-JUL-91	N	TRG	WQPL	CARBONATE AS CACO3	10 0	MG/L		U		10 0								
SW019	SW	REAL	SW01389WC	23-JUL-91	N	TRG	WQPL	CHLORIDE	22.5	MG/L				5 0								
SW019	SW	REAL	SW01389WC	23-JUL-91	N	TRG	WQPL	CYANIDE	10.0	UG/L		U		10 0								
SW019	SW	REAL	SW01389WC	23-JUL-91	N	TRG	WQPL	FLUORIDE, SOLUBLE	0 24	MG/L				0.10								
SW019	SW	REAL	SW01389WC	23-JUL-91	N	TRG	WQPL	NITRATE/NITRITE	3 0	MG/L				0 20								
SW019	SW	REAL	SW01389WC	23-JUL-91	N	TRG	WQPL	NITRITE	0.056	MG/L				0.020								
SW019	SW	REAL	SW01389WC	23-JUL-91	N	TRG	WQPL	OIL AND GREASE	5 6	MG/L		U		5.6								
SW019	SW	REAL	SW01389WC	23-JUL-91	N	TRG	WQPL	ORTHOPHOSPHATE	0.33	MG/L				0 050								
SW019	SW	REAL	SW01389WC	23-JUL-91	N	TRG	WQPL	PHOSPHORUS	0 26	MG/L				0.050								
SW019	SW	REAL	SW01389WC	23-JUL-91	N	TRG	WQPL	SOLIDS, NONVOLATILE SUSPENDED	15 0	MG/L				5.0								
SW019	SW	REAL	SW01389WC	23-JUL-91	N	TRG	WQPL	SULFATE	9.4	MG/L				5 0								
SW019	SW	REAL	SW01389WC	23-JUL-91	N	TRG	WQPL	SULFIDE	1.0	MG/L		U		1.0								
SW019	SW	REAL	SW01389WC	23-JUL-91	N	TRG	WQPL	TOTAL DISSOLVED SOLIDS	118	MG/L				10 0								
SW019	SW	REAL	SW01495WC	22-AUG-91	Y																	

Location	ST	QC	Sample Number	Smpl Date	D	ID	Group	Chemical	Result	Unit	Error	Qual	D LMT	VA	RN1	RN2	RN3	RN4	VResult	VQual	VDET
SW019	SW	REAL	SW01601WC	23-SEP-91	Y																
SW019	SW	REAL	SW01707WC	31-OCT-91	Y																
SW020	SW	REAL	SW01077WC	12-APR-91	N	TRG	PSTCLPTCL	4,4'-DDD	0 10	UG/L		U	0 10								
SW020	SW	REAL	SW01077WC	12-APR-91	N	TRG	PSTCLPTCL	4,4'-DDE	0.10	UG/L		U	0 10								
SW020	SW	REAL	SW01077WC	12-APR-91	N	TRG	PSTCLPTCL	4,4'-DDT	0 10	UG/L		U	0 10								
SW020	SW	REAL	SW01077WC	12-APR-91	N	TRG	PSTCLPTCL	ALDRIN	0.050	UG/L		U	0 050								
SW020	SW	REAL	SW01077WC	12-APR-91	N	TRG	PSTCLPTCL	AROCLOR-1016	0 50	UG/L		U	0 50								
SW020	SW	REAL	SW01077WC	12-APR-91	N	TRG	PSTCLPTCL	AROCLOR-1221	0.50	UG/L		U	0 50								
SW020	SW	REAL	SW01077WC	12-APR-91	N	TRG	PSTCLPTCL	AROCLOR-1232	0.50	UG/L		U	0 50								
SW020	SW	REAL	SW01077WC	12-APR-91	N	TRG	PSTCLPTCL	AROCLOR-1242	0 50	UG/L		U	0 50								
SW020	SW	REAL	SW01077WC	12-APR-91	N	TRG	PSTCLPTCL	AROCLOR-1248	0.50	UG/L		U	0 50								
SW020	SW	REAL	SW01077WC	12-APR-91	N	TRG	PSTCLPTCL	AROCLOR-1254	1.0	UG/L		U	1 0								
SW020	SW	REAL	SW01077WC	12-APR-91	N	TRG	PSTCLPTCL	AROCLOR-1260	1 0	UG/L		U	1 0								
SW020	SW	REAL	SW01077WC	12-APR-91	N	TRG	PSTCLPTCL	DIELDRIN	0.10	UG/L		U	0 10								
SW020	SW	REAL	SW01077WC	12-APR-91	N	TRG	PSTCLPTCL	ENDOSULFAN I	0.050	UG/L		U	0 050								
SW020	SW	REAL	SW01077WC	12-APR-91	N	TRG	PSTCLPTCL	ENDOSULFAN II	0 10	UG/L		U	0 10								
SW020	SW	REAL	SW01077WC	12-APR-91	N	TRG	PSTCLPTCL	ENDOSULFAN SULFATE	0 10	UG/L		U	0 10								
SW020	SW	REAL	SW01077WC	12-APR-91	N	TRG	PSTCLPTCL	ENDRIN	0.10	UG/L		U	0 10								
SW020	SW	REAL	SW01077WC	12-APR-91	N	TRG	PSTCLPTCL	ENDRIN KETONE	0 10	UG/L		U	0 10								
SW020	SW	REAL	SW01077WC	12-APR-91	N	TRG	PSTCLPTCL	HEPTACHLOR	0 050	UG/L		U	0 050								
SW020	SW	REAL	SW01077WC	12-APR-91	N	TRG	PSTCLPTCL	HEPTACHLOR EPOXIDE	0.050	UG/L		U	0 050								
SW020	SW	REAL	SW01077WC	12-APR-91	N	TRG	PSTCLPTCL	METHOXYCHLOR	0 50	UG/L		U	0 50								
SW020	SW	REAL	SW01077WC	12-APR-91	N	TRG	PSTCLPTCL	TOXAPHENE	1 0	UG/L		U	1 0								
SW020	SW	REAL	SW01077WC	12-APR-91	N	TRG	PSTCLPTCL	alpha-BHC	0.010	UG/L		J	0 050								
SW020	SW	REAL	SW01077WC	12-APR-91	N	TRG	PSTCLPTCL	alpha-CHLORDANE	0 50	UG/L		U	0 50								
SW020	SW	REAL	SW01077WC	12-APR-91	N	TRG	PSTCLPTCL	beta-BHC	0 050	UG/L		U	0 050								
SW020	SW	REAL	SW01077WC	12-APR-91	N	TRG	PSTCLPTCL	delta-BHC	0.050	UG/L		U	0 050								
SW020	SW	REAL	SW01077WC	12-APR-91	N	TRG	PSTCLPTCL	gamma-BHC (LINDANE)	0 050	UG/L		U	0 050								
SW020	SW	REAL	SW01077WC	12-APR-91	N	TRG	PSTCLPTCL	gamma-CHLORDANE	0 50	UG/L		U	0 50								
SW020	SW	REAL	SW01077WC	12-APR-91	N	TRG	WQPL	BICARBONATE AS CACO3	45.6	MG/L			10 0								
SW020	SW	REAL	SW01077WC	12-APR-91	N	TRG	WQPL	CARBONATE AS CACO3	10 0	MG/L		U	10 0								
SW020	SW	REAL	SW01077WC	12-APR-91	N	TRG	WQPL	CBOD5	7.1	MG/L			1.0								
SW020	SW	REAL	SW01077WC	12-APR-91	N	TRG	WQPL	CBOD5	7.4	MG/L			1 0								
SW020	SW	REAL	SW01077WC	12-APR-91	N	TRG	WQPL	CHLORIDE	56.5	MG/L			25.0								
SW020	SW	REAL	SW01077WC	12-APR-91	N	TRG	WQPL	CYANIDE	10 0	UG/L		U	10 0								
SW020	SW	REAL	SW01077WC	12-APR-91	N	TRG	WQPL	FLUORIDE, SOLUBLE	0.21	MG/L			0.10								
SW020	SW	REAL	SW01077WC	12-APR-91	N	TRG	WQPL	NITRATE/NITRITE	0 87	MG/L			0 10								
SW020	SW	REAL	SW01077WC	12-APR-91	N	TRG	WQPL	NITRITE	0.020	MG/L		U	0 020								
SW020	SW	REAL	SW01077WC	12-APR-91	N	TRG	WQPL	OIL AND GREASE	11.9	MG/L		U	11.9								
SW020	SW	REAL	SW01077WC	12-APR-91	N	TRG	WQPL	ORTHOPHOSPHATE	0 050	MG/L		U	0 050								
SW020	SW	REAL	SW01077WC	12-APR-91	N	TRG	WQPL	PHOSPHORUS	0 46	MG/L			0 050								
SW020	SW	REAL	SW01077WC	12-APR-91	N	TRG	WQPL	SOLIDS, NONVOLATILE SUSPENDED	244	MG/L			5 0								
SW020	SW	REAL	SW01077WC	12-APR-91	N	TRG	WQPL	SULFATE	69.6	MG/L			20.0								
SW020	SW	REAL	SW01077WC	12-APR-91	N	TRG	WQPL	SULFIDE	1.0	MG/L		U	1 0								
SW020	SW	REAL	SW01077WC	12-APR-91	N	TRG	WQPL	TOTAL DISSOLVED SOLIDS	194	MG/L			10 0								
SW020	SW	REAL	SW01077WC	12-APR-91	N	TRG	WQPL	TOTAL ORGANIC CARBON	6.0	MG/L			1 0								
SW020	SW	REAL	SW01077WC	12-APR-91	N	TRG	WQPL	TOTAL ORGANIC CARBON	6.2	MG/L			1 0								
SW020	SW	REAL	SW01390WC	23-JUL-91	N	TRG	WQPL	BICARBONATE AS CACO3	27.5	MG/L			10 0								
SW020	SW	REAL	SW01390WC	23-JUL-91	N	TRG	WQPL	CARBONATE AS CACO3	10 0	MG/L		U	10 0								
SW020	SW	REAL	SW01390WC	23-JUL-91	N	TRG	WQPL	CHLORIDE	9.8	MG/L			5 0								
SW020	SW	REAL	SW01390WC	23-JUL-91	N	TRG	WQPL	CYANIDE	10.0	UG/L		U	10.0								
SW020	SW	REAL	SW01390WC	23-JUL-91	N	TRG	WQPL	FLUORIDE, SOLUBLE	0.15	MG/L			0.10								
SW020	SW	REAL	SW01390WC	23-JUL-91	N	TRG	WQPL	NITRATE/NITRITE	1.3	MG/L			0 10								
SW020	SW	REAL	SW01390WC	23-JUL-91	N	TRG	WQPL	NITRITE	0.064	MG/L			0.020								
SW020	SW	REAL	SW01390WC	23-JUL-91	N	TRG	WQPL	OIL AND GREASE	6.6	MG/L		U	6.6								
SW020	SW	REAL	SW01390WC	23-JUL-91	N	TRG	WQPL	ORTHOPHOSPHATE	0.31	MG/L			0 050								
SW020	SW	REAL	SW01390WC	23-JUL-91	N	TRG	WQPL	PHOSPHORUS	0.30	MG/L			0 050								
SW020	SW	REAL	SW01390WC	23-JUL-91	N	TRG	WQPL	SOLIDS, NONVOLATILE SUSPENDED	70 0	MG/L			5.0								
SW020	SW	REAL	SW01390WC	23-JUL-91	N	TRG	WQPL	SULFATE	6.1	MG/L			5 0								
SW020	SW	REAL	SW01390WC	23-JUL-91	N	TRG	WQPL	SULFIDE	1.0	MG/L		U	1.0								
SW020	SW	REAL	SW01390WC	23-JUL-91	N	TRG	WQPL	TOTAL DISSOLVED SOLIDS	68.0	MG/L			10 0								
SW020	SW	REAL	SW01496WC	22-AUG-91	Y																
SW020	SW	REAL	SW01602WC	23-SEP-91	Y																

Location	ST	QC	Sample Number	Smpl Date	D	ID	Group	Chemical	Result	Unit	Error	Qual	D LMT	VA	RN1	RN2	RN3	RN4	VResult	VQual	VDEI
SW020	SW	REAL	SW01708WC	31-OCT-91	Y																
SW022	SW	REAL	SW01078WC	12-APR-91	Y																
SW022	SW	REAL	SW01391WC	23-JUL-91	N	TRG	WQPL	BICARBONATE AS CACO3	43 9	MG/L			10 0								
SW022	SW	REAL	SW01391WC	23-JUL-91	N	TRG	WQPL	CARBONATE AS CACO3	10 0	MG/L		U	10 0								
SW022	SW	REAL	SW01391WC	23-JUL-91	N	TRG	WQPL	CHLORIDE	11.0	MG/L			5 0								
SW022	SW	REAL	SW01391WC	23-JUL-91	N	TRG	WQPL	CYANIDE	10.0	UG/L		U	10 0								
SW022	SW	REAL	SW01391WC	23-JUL-91	N	TRG	WQPL	FLUORIDE, SOLUBLE	0.19	MG/L			0.10								
SW022	SW	REAL	SW01391WC	23-JUL-91	N	TRG	WQPL	NITRATE/NITRITE	1 5	MG/L			0 10								
SW022	SW	REAL	SW01391WC	23-JUL-91	N	TRG	WQPL	NITRITE	0 063	MG/L			0.020								
SW022	SW	REAL	SW01391WC	23-JUL-91	N	TRG	WQPL	OIL AND GREASE	6 3	MG/L		U	6.3								
SW022	SW	REAL	SW01391WC	23-JUL-91	N	TRG	WQPL	ORTHOPHOSPHATE	0 050	MG/L		U	0 050								
SW022	SW	REAL	SW01391WC	23-JUL-91	N	TRG	WQPL	PHOSPHORUS	0.092	MG/L			0.050								
SW022	SW	REAL	SW01391WC	23-JUL-91	N	TRG	WQPL	SOLIDS, NONVOLATILE SUSPENDED	57.0	MG/L			5.0								
SW022	SW	REAL	SW01391WC	23-JUL-91	N	TRG	WQPL	SULFATE	8 4	MG/L			5 0								
SW022	SW	REAL	SW01391WC	23-JUL-91	N	TRG	WQPL	SULFIDE	1 0	MG/L		U	1 0								
SW022	SW	REAL	SW01391WC	23-JUL-91	N	TRG	WQPL	TOTAL DISSOLVED SOLIDS	96 0	MG/L			10 0								
SW022	SW	REAL	SW01497WC	22-AUG-91	Y																
SW022	SW	REAL	SW01603WC	23-SEP-91	Y																
SW022	SW	REAL	SW01709WC	31-OCT-91	Y																
SW022	SW	REAL	SW60067WCA	15-MAR-91	N																
SW022	SW	REAL	SW60070WC	10-APR-91	N																
SW022	SW	REAL	SW60071WC	15-APR-91	N																
SW022	SW	REAL	SW60074WC	15-APR-91	N																
SW022	SW	REAL	SW60078WC	01-MAY-91	N																
SW022	SW	REAL	SW60082WC	01-MAY-91	N																
SW022	SW	REAL	SW60087WC	06-MAY-91	N																
SW022	SW	REAL	SW60088WC	17-MAY-91	N	TRG	WQPL	ALKALINITY AS CACO3	110	MG/L			10								
SW022	SW	REAL	SW60088WC	17-MAY-91	N	TRG	WQPL	BICARBONATE	110	MG/L			10								
SW022	SW	REAL	SW60088WC	17-MAY-91	N	TRG	WQPL	CARBONATE AS CACO3	10	MG/L		U	10								
SW022	SW	REAL	SW60088WC	17-MAY-91	N	TRG	WQPL	CHLORIDE	19	MG/L			2								
SW022	SW	REAL	SW60088WC	17-MAY-91	N	TRG	WQPL	FLUORIDE	0.5	MG/L		U	0 5								
SW022	SW	REAL	SW60088WC	17-MAY-91	N	TRG	WQPL	NITRATE/NITRITE	1 3	MG/L			0 1								
SW022	SW	REAL	SW60088WC	17-MAY-91	N	TRG	WQPL	NITRITE	0.11	MG/L			0 01								
SW022	SW	REAL	SW60088WC	17-MAY-91	N	TRG	WQPL	PHOSPHATE	0 05	MG/L		U	0 05								
SW022	SW	REAL	SW60088WC	17-MAY-91	N	TRG	WQPL	SILICON	2	MG/L		U	2								
SW022	SW	REAL	SW60088WC	17-MAY-91	N	TRG	WQPL	SULFATE	10	MG/L		U	10								
SW022	SW	REAL	SW60088WC	17-MAY-91	N	TRG	WQPL	TOTAL DISSOLVED SOLIDS	160	MG/L			2								
SW022	SW	REAL	SW60088WC	17-MAY-91	N	TRG	WQPL	TOTAL SUSPENDED SOLIDS	540	MG/L			2								
SW022	SW	REAL	SW60089WC	17-MAY-91	N																
SW022	SW	REAL	SW60098WC	23-MAY-91	N	TRG	WQPL	ALKALINITY AS CACO3	65	MG/L			10								
SW022	SW	REAL	SW60098WC	23-MAY-91	N	TRG	WQPL	BICARBONATE	65	MG/L			10								
SW022	SW	REAL	SW60098WC	23-MAY-91	N	TRG	WQPL	CARBONATE AS CACO3	10	MG/L		U	10								
SW022	SW	REAL	SW60098WC	23-MAY-91	N	TRG	WQPL	CHLORIDE	10	MG/L			2								
SW022	SW	REAL	SW60098WC	23-MAY-91	N	TRG	WQPL	FLUORIDE	0.5	MG/L		U	0 5								
SW022	SW	REAL	SW60098WC	23-MAY-91	N	TRG	WQPL	NITRATE/NITRITE	1 7	MG/L			0.1								
SW022	SW	REAL	SW60098WC	23-MAY-91	N	TRG	WQPL	PHOSPHATE	0.10	MG/L			0.01								
SW022	SW	REAL	SW60098WC	23-MAY-91	N	TRG	WQPL	SULFATE	19	MG/L			10								
SW022	SW	REAL	SW60098WC	23-MAY-91	N	TRG	WQPL	TOTAL DISSOLVED SOLIDS	100	MG/L			2								
SW022	SW	REAL	SW60098WC	23-MAY-91	N	TRG	WQPL	TOTAL SUSPENDED SOLIDS	670	MG/L			2								
SW022	SW	REAL	SW60102WC	03-JUN-91	N	TRG	WQPL	BICARBONATE AS CACO3	260	MG/L			1 0								
SW022	SW	REAL	SW60102WC	03-JUN-91	N	TRG	WQPL	CARBONATE AS CACO3	2	MG/L			1.0								
SW022	SW	REAL	SW60102WC	03-JUN-91	N	TRG	WQPL	CHLORIDE	8.4	MG/L			0.2								
SW022	SW	REAL	SW60102WC	03-JUN-91	N	TRG	WQPL	FLUORIDE	0 3	MG/L			0 1								
SW022	SW	REAL	SW60102WC	03-JUN-91	N	TRG	WQPL	NITRATE/NITRITE	0.8	MG/L			0 02								
SW022	SW	REAL	SW60102WC	03-JUN-91	N	TRG	WQPL	NITRITE	0.10	MG/L			0.02								
SW022	SW	REAL	SW60102WC	03-JUN-91	N	TRG	WQPL	ORTHOPHOSPHATE	0.03	MG/L			0.01								
SW022	SW	REAL	SW60102WC	03-JUN-91	N	TRG	WQPL	SILICA, DISSOLVED	1.0	MG/L			0.4								
SW022	SW	REAL	SW60102WC	03-JUN-91	N	TRG	WQPL	SULFATE	6.0	MG/L			2 0								
SW022	SW	REAL	SW60102WC	03-JUN-91	N	TRG	WQPL	TOTAL DISSOLVED SOLIDS	100	MG/L			10.0								
SW022	SW	REAL	SW60102WC	03-JUN-91	N	TRG	WQPL	TOTAL SUSPENDED SOLIDS	2300	MG/L			4.0								
SW022	SW	REAL	SW60103WC	03-JUN-91	N																
SW022	SW	REAL	SW60112WC	11-JUN-91	N	TRG	WQPL	BICARBONATE AS CACO3	190	MG/L			1 0								
SW022	SW	REAL	SW60112WC	11-JUN-91	N	TRG	WQPL	CARBONATE AS CACO3	1	MG/L		U	1 0								

Location	ST	QC	Sample Number	Smpl Date	D	ID	Group	Chemical	Result	Unit	Error	Qual	D	LMT	VA	RN1	RN2	RN3	RN4	VResult	VQual	VDET
SW022	SW	REAL	SW60112WC	11-JUN-91	N	TRG	WQPL	CHLORIDE	6.2	MG/L			0	2								
SW022	SW	REAL	SW60112WC	11-JUN-91	N	TRG	WQPL	FLUORIDE	0 2	MG/L			0	1								
SW022	SW	REAL	SW60112WC	11-JUN-91	N	TRG	WQPL	NITRATE/NITRITE	1.1	MG/L			0	02								
SW022	SW	REAL	SW60112WC	11-JUN-91	N	TRG	WQPL	NITRITE	0 14	MG/L			0	02								
SW022	SW	REAL	SW60112WC	11-JUN-91	N	TRG	WQPL	ORTHOPHOSPHATE	0 04	MG/L			0	01								
SW022	SW	REAL	SW60112WC	11-JUN-91	N	TRG	WQPL	SILICA, DISSOLVED	1 0	MG/L			0	4								
SW022	SW	REAL	SW60112WC	11-JUN-91	N	TRG	WQPL	SULFATE	8	MG/L			2	0								
SW022	SW	REAL	SW60112WC	11-JUN-91	N	TRG	WQPL	TOTAL DISSOLVED SOLIDS	130	MG/L				10.0								
SW022	SW	REAL	SW60114WC	25-JUN-91	N			TOTAL SUSPENDED SOLIDS	2500	MG/L				4.0								
SW022	SW	REAL	SW60117WC	10-JUL-91	N																	
SW022	SW	REAL	SW60120WC	10-JUL-91	N																	
SW022	SW	REAL	SW60125WC	23-JUL-91	N	TRG	WQPL	ALKALINITY AS CACO3	52	MG/L				10								
SW022	SW	REAL	SW60125WC	23-JUL-91	N	TRG	WQPL	BICARBONATE	52	MG/L				10								
SW022	SW	REAL	SW60125WC	23-JUL-91	N	TRG	WQPL	CARBONATE AS CACO3	10	MG/L		U		10								
SW022	SW	REAL	SW60125WC	23-JUL-91	N	TRG	WQPL	CHLORIDE	11	MG/L				2								
SW022	SW	REAL	SW60125WC	23-JUL-91	N	TRG	WQPL	FLUORIDE	0.5	MG/L		U	0	5								
SW022	SW	REAL	SW60125WC	23-JUL-91	N	TRG	WQPL	NITRATE/NITRITE	1.4	MG/L			0	1								
SW022	SW	REAL	SW60125WC	23-JUL-91	N	TRG	WQPL	NITRITE	0.04	MG/L			0	01								
SW022	SW	REAL	SW60125WC	23-JUL-91	N	TRG	WQPL	PHOSPHATE	0 01	MG/L		U	0	01								
SW022	SW	REAL	SW60125WC	23-JUL-91	N	TRG	WQPL	SULFATE	11	MG/L				10								
SW022	SW	REAL	SW60125WC	23-JUL-91	N	TRG	WQPL	TOTAL DISSOLVED SOLIDS	128	MG/L				2								
SW022	SW	REAL	SW60125WC	23-JUL-91	N	TRG	WQPL	TOTAL SUSPENDED SOLIDS	36	MG/L				2								
SW022	SW	REAL	SW60129WC	24-JUL-91	N																	
SW022	SW	REAL	SW60130WC	29-JUL-91	N	TRG	WQPL	ALKALINITY AS CACO3	54	MG/L				10								
SW022	SW	REAL	SW60130WC	29-JUL-91	N	TRG	WQPL	BICARBONATE	54	MG/L				10								
SW022	SW	REAL	SW60130WC	29-JUL-91	N	TRG	WQPL	CARBONATE AS CACO3	10	MG/L		U		10								
SW022	SW	REAL	SW60130WC	29-JUL-91	N	TRG	WQPL	CHLORIDE	11	MG/L				2								
SW022	SW	REAL	SW60130WC	29-JUL-91	N	TRG	WQPL	FLUORIDE	0.5	MG/L		U	0	5								
SW022	SW	REAL	SW60130WC	29-JUL-91	N	TRG	WQPL	NITRATE/NITRITE	1.6	MG/L			0	05								
SW022	SW	REAL	SW60130WC	29-JUL-91	N	TRG	WQPL	NITRITE	0 08	MG/L				0.01								
SW022	SW	REAL	SW60130WC	29-JUL-91	N	TRG	WQPL	PHOSPHATE	0 17	MG/L			0	01								
SW022	SW	REAL	SW60130WC	29-JUL-91	N	TRG	WQPL	TOTAL DISSOLVED SOLIDS	122	MG/L				2								
SW022	SW	REAL	SW60130WC	29-JUL-91	N	TRG	WQPL	TOTAL SUSPENDED SOLIDS	208	MG/L				2								
SW022	SW	REAL	SW60132WC	05-AUG-91	N	TRG	WQPL	ALKALINITY AS CACO3	56	MG/L				10								
SW022	SW	REAL	SW60132WC	05-AUG-91	N	TRG	WQPL	BICARBONATE	56	MG/L				10								
SW022	SW	REAL	SW60132WC	05-AUG-91	N	TRG	WQPL	CARBONATE AS CACO3	10	MG/L		U		10								
SW022	SW	REAL	SW60132WC	05-AUG-91	N	TRG	WQPL	CHLORIDE	4	MG/L				2								
SW022	SW	REAL	SW60132WC	05-AUG-91	N	TRG	WQPL	FLUORIDE	0 5	MG/L		U	0	5								
SW022	SW	REAL	SW60132WC	05-AUG-91	N	TRG	WQPL	NITRATE/NITRITE	0 67	MG/L			0	05								
SW022	SW	REAL	SW60132WC	05-AUG-91	N	TRG	WQPL	NITRITE	0 03	MG/L			0	01								
SW022	SW	REAL	SW60132WC	05-AUG-91	N	TRG	WQPL	PHOSPHATE	0 01	MG/L		U	0	01								
SW022	SW	REAL	SW60132WC	05-AUG-91	N	TRG	WQPL	SULFATE	12	MG/L				10								
SW022	SW	REAL	SW60132WC	05-AUG-91	N	TRG	WQPL	TOTAL DISSOLVED SOLIDS	82	MG/L				10								
SW022	SW	REAL	SW60132WC	05-AUG-91	N	TRG	WQPL	TOTAL SUSPENDED SOLIDS	230	MG/L				2								
SW022	SW	REAL	SW60136WC	05-AUG-91	N																	
SW022	SW	REAL	SW60140WC	07-AUG-91	N	TRG	WQPL	ALKALINITY AS CACO3	42	MG/L				10								
SW022	SW	REAL	SW60140WC	07-AUG-91	N	TRG	WQPL	BICARBONATE	42	MG/L				10								
SW022	SW	REAL	SW60140WC	07-AUG-91	N	TRG	WQPL	CARBONATE AS CACO3	10	MG/L		U		10								
SW022	SW	REAL	SW60140WC	07-AUG-91	N	TRG	WQPL	CHLORIDE	4	MG/L				2								
SW022	SW	REAL	SW60140WC	07-AUG-91	N	TRG	WQPL	FLUORIDE	0 5	MG/L		U		0.5								
SW022	SW	REAL	SW60140WC	07-AUG-91	N	TRG	WQPL	NITRATE/NITRITE	0 77	MG/L			0	05								
SW022	SW	REAL	SW60140WC	07-AUG-91	N	TRG	WQPL	NITRITE	0 06	MG/L			0	01								
SW022	SW	REAL	SW60140WC	07-AUG-91	N	TRG	WQPL	PHOSPHATE	0 01	MG/L		U		0.01								
SW022	SW	REAL	SW60140WC	07-AUG-91	N	TRG	WQPL	SULFATE	12	MG/L				10								
SW022	SW	REAL	SW60140WC	07-AUG-91	N	TRG	WQPL	TOTAL DISSOLVED SOLIDS	94	MG/L				10								
SW022	SW	REAL	SW60140WC	07-AUG-91	N	TRG	WQPL	TOTAL SUSPENDED SOLIDS	1000	MG/L				2								
SW022	SW	REAL	SW60145WC	12-AUG-91	N																	
SW022	SW	REAL	SW60148WC	12-AUG-91	N	TRG	WQPL	ALKALINITY AS CACO3	44	MG/L				10								
SW022	SW	REAL	SW60148WC	12-AUG-91	N	TRG	WQPL	BICARBONATE	44	MG/L				10								
SW022	SW	REAL	SW60148WC	12-AUG-91	N	TRG	WQPL	CARBONATE AS CACO3	10	MG/L		U		10								
SW022	SW	REAL	SW60148WC	12-AUG-91	N	TRG	WQPL	CHLORIDE	7	MG/L				2								
SW022	SW	REAL	SW60148WC	12-AUG-91	N	TRG	WQPL	FLUORIDE	0.5	MG/L		U	0	5								

Location	ST	QC	Sample Number	Smpl Date	D	ID	Group	Chemical	Result	Unit	Error	Qual	D LMT	VA	RN1	RN2	RN3	RN4	VResult	VQual	VDET
SW022	SW	REAL	SW60148WC	12-AUG-91	N	TRG	WQPL	NITRATE/NITRITE	1 4	MG/L			0 05								
SW022	SW	REAL	SW60148WC	12-AUG-91	N	TRG	WQPL	NITRITE	0 06	MG/L			0.01								
SW022	SW	REAL	SW60148WC	12-AUG-91	N	TRG	WQPL	PHOSPHATE	0 01	MG/L		U	0 01								
SW022	SW	REAL	SW60148WC	12-AUG-91	N	TRG	WQPL	SULFATE	15	MG/L			10								
SW022	SW	REAL	SW60148WC	12-AUG-91	N	TRG	WQPL	TOTAL DISSOLVED SOLIDS	86	MG/L			10								
SW022	SW	REAL	SW60148WC	12-AUG-91	N	TRG	WQPL	TOTAL SUSPENDED SOLIDS	45	MG/L			2								
SW022	SW	REAL	SW60156WC	19-AUG-91	N	TRG	WQPL	ALKALINITY AS CACO3	70	MG/L			10								
SW022	SW	REAL	SW60156WC	19-AUG-91	N	TRG	WQPL	BICARBONATE	70	MG/L			10								
SW022	SW	REAL	SW60156WC	19-AUG-91	N	TRG	WQPL	CARBONATE AS CACO3	10	MG/L		U	10								
SW022	SW	REAL	SW60156WC	19-AUG-91	N	TRG	WQPL	CHLORIDE	10	MG/L			2								
SW022	SW	REAL	SW60156WC	19-AUG-91	N	TRG	WQPL	FLUORIDE	0.5	MG/L		U	0 5								
SW022	SW	REAL	SW60156WC	19-AUG-91	N	TRG	WQPL	NITRATE/NITRITE	0 93	MG/L			0 05								
SW022	SW	REAL	SW60156WC	19-AUG-91	N	TRG	WQPL	NITRITE	0 56	MG/L			0 01								
SW022	SW	REAL	SW60156WC	19-AUG-91	N	TRG	WQPL	PHOSPHATE	0 08	MG/L			0 01								
SW022	SW	REAL	SW60156WC	19-AUG-91	N	TRG	WQPL	SULFATE	18	MG/L			10								
SW022	SW	REAL	SW60156WC	19-AUG-91	N	TRG	WQPL	TOTAL DISSOLVED SOLIDS	138	MG/L			10								
SW022	SW	REAL	SW60156WC	19-AUG-91	N	TRG	WQPL	TOTAL SUSPENDED SOLIDS	393	MG/L			2								
SW023	SW	DUP	SW80113WC	17-APR-91	N	TRG	PSTCLPTCL	4,4'-DDD	0 10	UG/L		U	0 10								
SW023	SW	DUP	SW80113WC	17-APR-91	N	TRG	PSTCLPTCL	4,4'-DDE	0 10	UG/L		U	0 10								
SW023	SW	DUP	SW80113WC	17-APR-91	N	TRG	PSTCLPTCL	4,4'-DDT	0.10	UG/L		U	0 10								
SW023	SW	DUP	SW80113WC	17-APR-91	N	TRG	PSTCLPTCL	ALDRIN	0 050	UG/L		U	0 050								
SW023	SW	DUP	SW80113WC	17-APR-91	N	TRG	PSTCLPTCL	AROCLOR-1016	0.50	UG/L		U	0 50								
SW023	SW	DUP	SW80113WC	17-APR-91	N	TRG	PSTCLPTCL	AROCLOR-1221	0 50	UG/L		U	0 50								
SW023	SW	DUP	SW80113WC	17-APR-91	N	TRG	PSTCLPTCL	AROCLOR-1232	0 50	UG/L		U	0 50								
SW023	SW	DUP	SW80113WC	17-APR-91	N	TRG	PSTCLPTCL	AROCLOR-1242	0 50	UG/L		U	0 50								
SW023	SW	DUP	SW80113WC	17-APR-91	N	TRG	PSTCLPTCL	AROCLOR-1248	0 50	UG/L		U	0 50								
SW023	SW	DUP	SW80113WC	17-APR-91	N	TRG	PSTCLPTCL	AROCLOR-1254	1.0	UG/L		U	1 0								
SW023	SW	DUP	SW80113WC	17-APR-91	N	TRG	PSTCLPTCL	AROCLOR-1260	1 0	UG/L		U	1 0								
SW023	SW	DUP	SW80113WC	17-APR-91	N	TRG	PSTCLPTCL	DIELDRIN	0 10	UG/L		U	0 10								
SW023	SW	DUP	SW80113WC	17-APR-91	N	TRG	PSTCLPTCL	ENDOSULFAN I	0 050	UG/L		U	0 050								
SW023	SW	DUP	SW80113WC	17-APR-91	N	TRG	PSTCLPTCL	ENDOSULFAN II	0 10	UG/L		U	0 10								
SW023	SW	DUP	SW80113WC	17-APR-91	N	TRG	PSTCLPTCL	ENDOSULFAN SULFATE	0.10	UG/L		U	0 10								
SW023	SW	DUP	SW80113WC	17-APR-91	N	TRG	PSTCLPTCL	ENDRIN	0.10	UG/L		U	0.10								
SW023	SW	DUP	SW80113WC	17-APR-91	N	TRG	PSTCLPTCL	ENDRIN KETONE	0 10	UG/L		U	0.10								
SW023	SW	DUP	SW80113WC	17-APR-91	N	TRG	PSTCLPTCL	HEPTACHLOR	0 050	UG/L		U	0.050								
SW023	SW	DUP	SW80113WC	17-APR-91	N	TRG	PSTCLPTCL	HEPTACHLOR EPOXIDE	0.050	UG/L		U	0 050								
SW023	SW	DUP	SW80113WC	17-APR-91	N	TRG	PSTCLPTCL	METHOXYCHLOR	0 50	UG/L		U	0 50								
SW023	SW	DUP	SW80113WC	17-APR-91	N	TRG	PSTCLPTCL	TOXAPHENE	1 0	UG/L		U	1 0								
SW023	SW	DUP	SW80113WC	17-APR-91	N	TRG	PSTCLPTCL	alpha-BHC	0 050	UG/L		U	0 050								
SW023	SW	DUP	SW80113WC	17-APR-91	N	TRG	PSTCLPTCL	alpha-CHLORDANE	0.50	UG/L		U	0 50								
SW023	SW	DUP	SW80113WC	17-APR-91	N	TRG	PSTCLPTCL	beta-BHC	0.050	UG/L		U	0 050								
SW023	SW	DUP	SW80113WC	17-APR-91	N	TRG	PSTCLPTCL	delta-BHC	0 050	UG/L		U	0 050								
SW023	SW	DUP	SW80113WC	17-APR-91	N	TRG	PSTCLPTCL	gamma-BHC (LINDANE)	0.050	UG/L		U	0 050								
SW023	SW	DUP	SW80113WC	17-APR-91	N	TRG	PSTCLPTCL	gamma-CHLORDANE	0.50	UG/L		U	0 50								
SW023	SW	DUP	SW80113WC	17-APR-91	N	TRG	WQPL	BICARBONATE AS CACO3	135	MG/L			10.0								
SW023	SW	DUP	SW80113WC	17-APR-91	N	TRG	WQPL	CARBONATE AS CACO3	10.0	MG/L		U	10.0								
SW023	SW	DUP	SW80113WC	17-APR-91	N	TRG	WQPL	CBOD5	3 6	MG/L			1.0								
SW023	SW	DUP	SW80113WC	17-APR-91	N	TRG	WQPL	CHLORIDE	50.3	MG/L			5 0								
SW023	SW	DUP	SW80113WC	17-APR-91	N	TRG	WQPL	CYANIDE	10 0	UG/L		U	10 0								
SW023	SW	DUP	SW80113WC	17-APR-91	N	TRG	WQPL	FLUORIDE, SOLUBLE	0.53	MG/L			0 10								
SW023	SW	DUP	SW80113WC	17-APR-91	N	TRG	WQPL	NITRATE/NITRITE	4 3	MG/L			0.50								
SW023	SW	DUP	SW80113WC	17-APR-91	N	TRG	WQPL	NITRITE	0.052	MG/L			0.020								
SW023	SW	DUP	SW80113WC	17-APR-91	N	TRG	WQPL	OIL AND GREASE	5 2	MG/L		U	5.2								
SW023	SW	DUP	SW80113WC	17-APR-91	N	TRG	WQPL	ORTHOPHOSPHATE	0 050	MG/L		U	0 050								
SW023	SW	DUP	SW80113WC	17-APR-91	N	TRG	WQPL	PHOSPHORUS	0.050	MG/L		U	0 050								
SW023	SW	DUP	SW80113WC	17-APR-91	N	TRG	WQPL	SOLIDS, NONVOLATILE SUSPENDED	5.0	MG/L		U	5.0								
SW023	SW	DUP	SW80113WC	17-APR-91	N	TRG	WQPL	SULFATE	36 8	MG/L			10 0								
SW023	SW	DUP	SW80113WC	17-APR-91	N	TRG	WQPL	SULFIDE	1.0	MG/L		U	1.0								
SW023	SW	DUP	SW80113WC	17-APR-91	N	TRG	WQPL	TOTAL DISSOLVED SOLIDS	352	MG/L			10 0								
SW023	SW	DUP	SW80113WC	17-APR-91	N	TRG	WQPL	TOTAL ORGANIC CARBON	3.8	MG/L			1.0								
SW023	SW	DUP	SW80113WC	17-APR-91	N	TRG	WQPL	TOTAL ORGANIC CARBON	4.0	MG/L			1.0								
SW023	SW	DUP	SW80159WC	16-SEP-91	N	TRG	WQPL	BICARBONATE AS CACO3	239	MG/L			10 0								
SW023	SW	DUP	SW80159WC	16-SEP-91	N	TRG	WQPL	CARBONATE AS CACO3	10.0	MG/L		U	10 0								

Location	ST	QC	Sample Number	Smpl Date	D	ID	Group	Chemical	Result	Unit	Error	Qual	D LMT	VA	RN1	RN2	RN3	RN4	VResult	VQual	VDET
SW023	SW	DUP	SW80159WC	16-SEP-91	N	TRG	WQPL	CHLORIDE	62 4	MG/L			5 0								
SW023	SW	DUP	SW80159WC	16-SEP-91	N	TRG	WQPL	CYANIDES (SOLUBLE SALTS AND CO	10 0	UG/L		U	10 0								
SW023	SW	DUP	SW80159WC	16-SEP-91	N	TRG	WQPL	DISSOLVED ORGANIC CARBON	1	MG/L		U	1								
SW023	SW	DUP	SW80159WC	16-SEP-91	N	TRG	WQPL	FLUORIDE, SOLUBLE	0 80	MG/L			0 10								
SW023	SW	DUP	SW80159WC	16-SEP-91	N	TRG	WQPL	NITRATE/NITRITE	2 2	MG/L			0 20								
SW023	SW	DUP	SW80159WC	16-SEP-91	N	TRG	WQPL	NITRITE	0 020	MG/L		U	0 020								
SW023	SW	DUP	SW80159WC	16-SEP-91	N	TRG	WQPL	OIL AND GREASE	5 6	MG/L		U	5 6								
SW023	SW	DUP	SW80159WC	16-SEP-91	N	TRG	WQPL	ORTHOPHOSPHATE	0 050	MG/L		U	0 050								
SW023	SW	DUP	SW80159WC	16-SEP-91	N	TRG	WQPL	PHOSPHORUS	0 050	MG/L		U	0 050								
SW023	SW	DUP	SW80159WC	16-SEP-91	N	TRG	WQPL	SULFATE	37.9	MG/L			10.0								
SW023	SW	DUP	SW80159WC	16-SEP-91	N	TRG	WQPL	SULFIDE	1 0	MG/L		U	1 0								
SW023	SW	DUP	SW80159WC	16-SEP-91	N	TRG	WQPL	TOTAL DISSOLVED SOLIDS	368	MG/L			10.0								
SW023	SW	DUP	SW80159WC	16-SEP-91	N	TRG	WQPL	TOTAL ORGANIC CARBON	1	MG/L		U	1								
SW023	SW	DUP	SW80159WC	16-SEP-91	N	TRG	WQPL	TOTAL SOLIDS	6 0	MG/L			5 0								
SW023	SW	LR	SW01583WCLR	16-SEP-91	N																
SW023	SW	MS	SW01058WCMSD	17-APR-91	N																
SW023	SW	MS	SW01583WCMS	16-SEP-91	N	TRG	WQPL	DISSOLVED ORGANIC CARBON	1	MG/L			1								
SW023	SW	MSD	SW01058WCMS	17-APR-91	N																
SW023	SW	MSD	SW01583WCMSD	16-SEP-91	N																
SW023	SW	REAL	SW00750WC	14-JAN-91	N	TRG	WQPL	BICARBONATE AS CACO3	250	MG/L			1 0								
SW023	SW	REAL	SW00750WC	14-JAN-91	N	TRG	WQPL	CARBONATE AS CACO3	0	MG/L			1.0								
SW023	SW	REAL	SW00750WC	14-JAN-91	N	TRG	WQPL	CHLORIDE	51	MG/L			0 2								
SW023	SW	REAL	SW00750WC	14-JAN-91	N	TRG	WQPL	DISSOLVED ORGANIC CARBON	5	MG/L			1 0								
SW023	SW	REAL	SW00750WC	14-JAN-91	N	TRG	WQPL	FLUORIDE	0 7	MG/L			0 1								
SW023	SW	REAL	SW00750WC	14-JAN-91	N	TRG	WQPL	NITRATE/NITRITE	4 7	MG/L			0 02								
SW023	SW	REAL	SW00750WC	14-JAN-91	N	TRG	WQPL	NITRITE	0 02	MG/L		U	0 02								
SW023	SW	REAL	SW00750WC	14-JAN-91	N	TRG	WQPL	OIL AND GREASE	0 2	MG/L			0 2								
SW023	SW	REAL	SW00750WC	14-JAN-91	N	TRG	WQPL	ORTHOPHOSPHATE	0.01	MG/L			0 01								
SW023	SW	REAL	SW00750WC	14-JAN-91	N	TRG	WQPL	PHOSPHATE	0 02	MG/L			0 01								
SW023	SW	REAL	SW00750WC	14-JAN-91	N	TRG	WQPL	SILICA, DISSOLVED	4.1	MG/L			0 4								
SW023	SW	REAL	SW00750WC	14-JAN-91	N	TRG	WQPL	SULFATE	51	MG/L			2 0								
SW023	SW	REAL	SW00750WC	14-JAN-91	N	TRG	WQPL	SULFIDE	1	MG/L		U	2 0								
SW023	SW	REAL	SW00750WC	14-JAN-91	N	TRG	WQPL	TOTAL DISSOLVED SOLIDS	420	MG/L			10 0								
SW023	SW	REAL	SW00750WC	14-JAN-91	N	TRG	WQPL	TOTAL ORGANIC CARBON	4	MG/L			1 0								
SW023	SW	REAL	SW00750WC	14-JAN-91	N	TRG	WQPL	TOTAL SUSPENDED SOLIDS	4	MG/L		U	4 0								
SW023	SW	REAL	SW00853WC	20-FEB-91	N																
SW023	SW	REAL	SW00956WC	28-MAR-91	N	TRG	WQPL	BICARBONATE AS CACO3	182	MG/L			10 0								
SW023	SW	REAL	SW00956WC	28-MAR-91	N	TRG	WQPL	CARBONATE AS CACO3	10 0	MG/L		U	10.0								
SW023	SW	REAL	SW00956WC	28-MAR-91	N	TRG	WQPL	CBOD5	4.0	MG/L			1 0								
SW023	SW	REAL	SW00956WC	28-MAR-91	N	TRG	WQPL	CBOD5	4 1	MG/L			1 0								
SW023	SW	REAL	SW00956WC	28-MAR-91	N	TRG	WQPL	CHLORIDE	43 0	MG/L			5 0								
SW023	SW	REAL	SW00956WC	28-MAR-91	N	TRG	WQPL	CYANIDE	20 0	UG/L		U	20 0								
SW023	SW	REAL	SW00956WC	28-MAR-91	N	TRG	WQPL	FLUORIDE, SOLUBLE	0.60	MG/L			0 10								
SW023	SW	REAL	SW00956WC	28-MAR-91	N	TRG	WQPL	NITRATE/NITRITE	3 8	MG/L			1 0								
SW023	SW	REAL	SW00956WC	28-MAR-91	N	TRG	WQPL	NITRITE	0 020	MG/L		U	0 020								
SW023	SW	REAL	SW00956WC	28-MAR-91	N	TRG	WQPL	OIL AND GREASE	6.2	MG/L		U	6 2								
SW023	SW	REAL	SW00956WC	28-MAR-91	N	TRG	WQPL	ORTHOPHOSPHATE	0.050	MG/L		U	0 050								
SW023	SW	REAL	SW00956WC	28-MAR-91	N	TRG	WQPL	PHOSPHORUS	0 050	MG/L		U	0 050								
SW023	SW	REAL	SW00956WC	28-MAR-91	N	TRG	WQPL	SOLIDS, NONVOLATILE SUSPENDED	53.0	MG/L			5 0								
SW023	SW	REAL	SW00956WC	28-MAR-91	N	TRG	WQPL	SULFATE	46 2	MG/L			5 0								
SW023	SW	REAL	SW00956WC	28-MAR-91	N	TRG	WQPL	SULFIDE	1 0	MG/L		U	1.0								
SW023	SW	REAL	SW00956WC	28-MAR-91	N	TRG	WQPL	TOTAL DISSOLVED SOLIDS	332	MG/L			10.0								
SW023	SW	REAL	SW00956WC	28-MAR-91	N	TRG	WQPL	TOTAL ORGANIC CARBON	3 4	MG/L			1.0								
SW023	SW	REAL	SW01058WC	17-APR-91	N	TRG	PSTCLPTCL	4,4'-DDD	0.10	UG/L		U	0 10								
SW023	SW	REAL	SW01058WC	17-APR-91	N	TRG	PSTCLPTCL	4,4'-DDE	0.10	UG/L		U	0.10								
SW023	SW	REAL	SW01058WC	17-APR-91	N	TRG	PSTCLPTCL	4,4'-DDT	0.10	UG/L		U	0 10								
SW023	SW	REAL	SW01058WC	17-APR-91	N	TRG	PSTCLPTCL	ALDRIN	0 051	UG/L		U	0 051								
SW023	SW	REAL	SW01058WC	17-APR-91	N	TRG	PSTCLPTCL	AROCLOR-1016	0.51	UG/L		U	0.51								
SW023	SW	REAL	SW01058WC	17-APR-91	N	TRG	PSTCLPTCL	AROCLOR-1221	0 51	UG/L		U	0 51								
SW023	SW	REAL	SW01058WC	17-APR-91	N	TRG	PSTCLPTCL	AROCLOR-1232	0.51	UG/L		U	0.51								
SW023	SW	REAL	SW01058WC	17-APR-91	N	TRG	PSTCLPTCL	AROCLOR-1242	0 51	UG/L		U	0.51								
SW023	SW	REAL	SW01058WC	17-APR-91	N	TRG	PSTCLPTCL	AROCLOR-1248	0.51	UG/L		U	0 51								
SW023	SW	REAL	SW01058WC	17-APR-91	N	TRG	PSTCLPTCL	AROCLOR-1254	1 0	UG/L		U	1 0								

Location	ST	QC	Sample Number	Smpl Date	D	ID	Group	Chemical	Result	Unit	Error	Qual	D LMT	VA	RN1	RN2	RN3	RN4	VResult	VQual	VDET
SW023	SW	REAL	SW01058WC	17-APR-91	N	TRG	PSTCLPTCL	AROCLOR-1260	1 0	UG/L		U	1 0								
SW023	SW	REAL	SW01058WC	17-APR-91	N	TRG	PSTCLPTCL	DIELDRIN	0 10	UG/L		U	0 10								
SW023	SW	REAL	SW01058WC	17-APR-91	N	TRG	PSTCLPTCL	ENDOSULFAN I	0 051	UG/L		U	0.051								
SW023	SW	REAL	SW01058WC	17-APR-91	N	TRG	PSTCLPTCL	ENDOSULFAN II	0.10	UG/L		U	0 10								
SW023	SW	REAL	SW01058WC	17-APR-91	N	TRG	PSTCLPTCL	ENDOSULFAN SULFATE	0 10	UG/L		U	0 10								
SW023	SW	REAL	SW01058WC	17-APR-91	N	TRG	PSTCLPTCL	ENDRIN	0.10	UG/L		U	0.10								
SW023	SW	REAL	SW01058WC	17-APR-91	N	TRG	PSTCLPTCL	ENDRIN KETONE	0 10	UG/L		U	0 10								
SW023	SW	REAL	SW01058WC	17-APR-91	N	TRG	PSTCLPTCL	HEPTACHLOR	0.051	UG/L		U	0 051								
SW023	SW	REAL	SW01058WC	17-APR-91	N	TRG	PSTCLPTCL	HEPTACHLOR EPOXIDE	0 051	UG/L		U	0 051								
SW023	SW	REAL	SW01058WC	17-APR-91	N	TRG	PSTCLPTCL	METHOXYCHLOR	0 51	UG/L		U	0 51								
SW023	SW	REAL	SW01058WC	17-APR-91	N	TRG	PSTCLPTCL	TOXAPHENE	1 0	UG/L		U	1.0								
SW023	SW	REAL	SW01058WC	17-APR-91	N	TRG	PSTCLPTCL	alpha-BHC	0 051	UG/L		U	0 051								
SW023	SW	REAL	SW01058WC	17-APR-91	N	TRG	PSTCLPTCL	alpha-CHLORDANE	0 51	UG/L		U	0 51								
SW023	SW	REAL	SW01058WC	17-APR-91	N	TRG	PSTCLPTCL	beta-BHC	0 051	UG/L		U	0 051								
SW023	SW	REAL	SW01058WC	17-APR-91	N	TRG	PSTCLPTCL	delta-BHC	0 051	UG/L		U	0 051								
SW023	SW	REAL	SW01058WC	17-APR-91	N	TRG	PSTCLPTCL	gamma-BHC (LINDANE)	0 051	UG/L		U	0 051								
SW023	SW	REAL	SW01058WC	17-APR-91	N	TRG	PSTCLPTCL	gamma-CHLORDANE	0 51	UG/L		U	0 51								
SW023	SW	REAL	SW01058WC	17-APR-91	N	TRG	WQPL	BICARBONATE AS CACO3	117	MG/L			10.0								
SW023	SW	REAL	SW01058WC	17-APR-91	N	TRG	WQPL	CARBONATE AS CACO3	10 0	MG/L		U	10 0								
SW023	SW	REAL	SW01058WC	17-APR-91	N	TRG	WQPL	CBOD5	4.0	MG/L			1 0								
SW023	SW	REAL	SW01058WC	17-APR-91	N	TRG	WQPL	CBOD5	4 1	MG/L			1 0								
SW023	SW	REAL	SW01058WC	17-APR-91	N	TRG	WQPL	CHLORIDE	50 3	MG/L			5 0								
SW023	SW	REAL	SW01058WC	17-APR-91	N	TRG	WQPL	CYANIDE	10 0	UG/L		U	10.0								
SW023	SW	REAL	SW01058WC	17-APR-91	N	TRG	WQPL	FLUORIDE, SOLUBLE	0.60	MG/L			0 10								
SW023	SW	REAL	SW01058WC	17-APR-91	N	TRG	WQPL	NITRATE/NITRITE	3 7	MG/L			0 50								
SW023	SW	REAL	SW01058WC	17-APR-91	N	TRG	WQPL	NITRITE	0 053	MG/L			0 020								
SW023	SW	REAL	SW01058WC	17-APR-91	N	TRG	WQPL	OIL AND GREASE	5.2	MG/L		U	5 2								
SW023	SW	REAL	SW01058WC	17-APR-91	N	TRG	WQPL	ORTHOPHOSPHATE	0 050	MG/L		U	0 050								
SW023	SW	REAL	SW01058WC	17-APR-91	N	TRG	WQPL	PHOSPHORUS	0 050	MG/L		U	0 050								
SW023	SW	REAL	SW01058WC	17-APR-91	N	TRG	WQPL	SOLIDS, NONVOLATILE SUSPENDED	8 0	MG/L			5 0								
SW023	SW	REAL	SW01058WC	17-APR-91	N	TRG	WQPL	SULFATE	41 0	MG/L			10.0								
SW023	SW	REAL	SW01058WC	17-APR-91	N	TRG	WQPL	SULFIDE	1.0	MG/L		U	1 0								
SW023	SW	REAL	SW01058WC	17-APR-91	N	TRG	WQPL	TOTAL DISSOLVED SOLIDS	328	MG/L			10.0								
SW023	SW	REAL	SW01058WC	17-APR-91	N	TRG	WQPL	TOTAL ORGANIC CARBON	3.8	MG/L			1 0								
SW023	SW	REAL	SW01165WC	20-MAY-91	N																
SW023	SW	REAL	SW01268WC	25-JUN-91	N	TRG	WQPL	BICARBONATE AS CACO3	279	MG/L			10 0								
SW023	SW	REAL	SW01268WC	25-JUN-91	N	TRG	WQPL	CARBONATE AS CACO3	10 0	MG/L		U	10 0								
SW023	SW	REAL	SW01268WC	25-JUN-91	N	TRG	WQPL	CHLORIDE	68 3	MG/L			5.0								
SW023	SW	REAL	SW01268WC	25-JUN-91	N	TRG	WQPL	CYANIDE	10 0	UG/L		U	10 0								
SW023	SW	REAL	SW01268WC	25-JUN-91	N	TRG	WQPL	FLUORIDE, SOLUBLE	0.93	MG/L			0 10								
SW023	SW	REAL	SW01268WC	25-JUN-91	N	TRG	WQPL	NITRATE/NITRITE	5.4	MG/L			0 50								
SW023	SW	REAL	SW01268WC	25-JUN-91	N	TRG	WQPL	NITRITE	0 020	MG/L		U	0 020								
SW023	SW	REAL	SW01268WC	25-JUN-91	N	TRG	WQPL	OIL AND GREASE	5.1	MG/L		U	5 1								
SW023	SW	REAL	SW01268WC	25-JUN-91	N	TRG	WQPL	ORTHOPHOSPHATE	0 050	MG/L		U	0 050								
SW023	SW	REAL	SW01268WC	25-JUN-91	N	TRG	WQPL	PHOSPHORUS	0 054	MG/L			0 050								
SW023	SW	REAL	SW01268WC	25-JUN-91	N	TRG	WQPL	SOLIDS, NONVOLATILE SUSPENDED	5 0	MG/L		U	5 0								
SW023	SW	REAL	SW01268WC	25-JUN-91	N	TRG	WQPL	SULFATE	58 4	MG/L			10.0								
SW023	SW	REAL	SW01268WC	25-JUN-91	N	TRG	WQPL	SULFIDE	1.0	MG/L		U	1 0								
SW023	SW	REAL	SW01268WC	25-JUN-91	N	TRG	WQPL	TOTAL DISSOLVED SOLIDS	512	MG/L			10 0								
SW023	SW	REAL	SW01371WC	17-JUL-91	N	TRG	WQPL	BICARBONATE AS CACO3	30	MG/L			1 0								
SW023	SW	REAL	SW01371WC	17-JUL-91	N	TRG	WQPL	CARBONATE AS CACO3	2	MG/L			1 0								
SW023	SW	REAL	SW01371WC	17-JUL-91	N	TRG	WQPL	CHLORIDE	57	MG/L			0 2								
SW023	SW	REAL	SW01371WC	17-JUL-91	N	TRG	WQPL	DISSOLVED ORGANIC CARBON	2	MG/L			1								
SW023	SW	REAL	SW01371WC	17-JUL-91	N	TRG	WQPL	FLUORIDE	0 8	MG/L			0 1								
SW023	SW	REAL	SW01371WC	17-JUL-91	N	TRG	WQPL	NITRATE/NITRITE	3.5	MG/L			0 02								
SW023	SW	REAL	SW01371WC	17-JUL-91	N	TRG	WQPL	NITRITE	0.04	MG/L			0.02								
SW023	SW	REAL	SW01371WC	17-JUL-91	N	TRG	WQPL	OIL AND GREASE	0 4	MG/L			0 2								
SW023	SW	REAL	SW01371WC	17-JUL-91	N	TRG	WQPL	ORTHOPHOSPHATE	0.01	MG/L		U	0 01								
SW023	SW	REAL	SW01371WC	17-JUL-91	N	TRG	WQPL	PHOSPHATE	0.01	MG/L			0 01								
SW023	SW	REAL	SW01371WC	17-JUL-91	N	TRG	WQPL	SILICA, DISSOLVED	5 2	MG/L			0.4								
SW023	SW	REAL	SW01371WC	17-JUL-91	N	TRG	WQPL	SULFATE	39	MG/L			2.0								
SW023	SW	REAL	SW01371WC	17-JUL-91	N	TRG	WQPL	SULFIDE	1	MG/L		U	2.0								
SW023	SW	REAL	SW01371WC	17-JUL-91	N	TRG	WQPL	TOTAL DISSOLVED SOLIDS	460	MG/L			10.0								

Location	ST	QC	Sample Number	Smpl Date	D	ID	Group	Chemical	Result	Unit	Error	Qual	D LMT	VA	RN1	RN2	RN3	RN4	VResult	VQual	VDET
SW023	SW	REAL	SW01371WC	17-JUL-91	N	TRG	WQPL	TOTAL ORGANIC CARBON	4	MG/L			1								
SW023	SW	REAL	SW01371WC	17-JUL-91	N	TRG	WQPL	TOTAL SUSPENDED SOLIDS	4	MG/L		U	4 0								
SW023	SW	REAL	SW01477WC	06-AUG-91	N	TRG	WQPL	BICARBONATE AS CACO3	276	MG/L			10 0								
SW023	SW	REAL	SW01477WC	06-AUG-91	N	TRG	WQPL	CARBONATE AS CACO3	12.5	MG/L			10 0								
SW023	SW	REAL	SW01477WC	06-AUG-91	N	TRG	WQPL	CHLORIDE	49 3	MG/L			5 0								
SW023	SW	REAL	SW01477WC	06-AUG-91	N	TRG	WQPL	CYANIDES (SOLUBLE SALTS AND CO	10 0	UG/L		U	10.0								
SW023	SW	REAL	SW01477WC	06-AUG-91	N	TRG	WQPL	FLUORIDE, SOLUBLE	0.88	MG/L			0 10								
SW023	SW	REAL	SW01477WC	06-AUG-91	N	TRG	WQPL	NITRATE/NITRITE	5 1	MG/L			0.50								
SW023	SW	REAL	SW01477WC	06-AUG-91	N	TRG	WQPL	NITRITE	0 020	MG/L		U	0 020								
SW023	SW	REAL	SW01477WC	06-AUG-91	N	TRG	WQPL	OIL AND GREASE	9.2	MG/L			5 3								
SW023	SW	REAL	SW01477WC	06-AUG-91	N	TRG	WQPL	ORTHOPHOSPHATE	0.050	MG/L		U	0 050								
SW023	SW	REAL	SW01477WC	06-AUG-91	N	TRG	WQPL	PHOSPHORUS	0 050	MG/L		U	0 050								
SW023	SW	REAL	SW01477WC	06-AUG-91	N	TRG	WQPL	SULFATE	46.8	MG/L			10 0								
SW023	SW	REAL	SW01477WC	06-AUG-91	N	TRG	WQPL	SULFIDE	1 0	MG/L		U	1 0								
SW023	SW	REAL	SW01477WC	06-AUG-91	N	TRG	WQPL	TOTAL DISSOLVED SOLIDS	424	MG/L			10 0								
SW023	SW	REAL	SW01477WC	06-AUG-91	N	TRG	WQPL	TOTAL SOLIDS	5 0	MG/L		U	5.0								
SW023	SW	REAL	SW01583WC	16-SEP-91	N	TRG	WQPL	BICARBONATE AS CACO3	241	MG/L			10 0								
SW023	SW	REAL	SW01583WC	16-SEP-91	N	TRG	WQPL	CARBONATE AS CACO3	10 0	MG/L		U	10 0								
SW023	SW	REAL	SW01583WC	16-SEP-91	N	TRG	WQPL	CHLORIDE	52 3	MG/L			5 0								
SW023	SW	REAL	SW01583WC	16-SEP-91	N	TRG	WQPL	CYANIDES (SOLUBLE SALTS AND CO	20 0	UG/L		U	20.0								
SW023	SW	REAL	SW01583WC	16-SEP-91	N	TRG	WQPL	DISSOLVED ORGANIC CARBON	2	MG/L			1								
SW023	SW	REAL	SW01583WC	16-SEP-91	N	TRG	WQPL	FLUORIDE, SOLUBLE	0 83	MG/L			0 10								
SW023	SW	REAL	SW01583WC	16-SEP-91	N	TRG	WQPL	NITRATE/NITRITE	2 3	MG/L			0 20								
SW023	SW	REAL	SW01583WC	16-SEP-91	N	TRG	WQPL	NITRITE	0 020	MG/L		U	0 020								
SW023	SW	REAL	SW01583WC	16-SEP-91	N	TRG	WQPL	OIL AND GREASE	56 0	MG/L			5 8								
SW023	SW	REAL	SW01583WC	16-SEP-91	N	TRG	WQPL	ORTHOPHOSPHATE	0.050	MG/L		U	0 050								
SW023	SW	REAL	SW01583WC	16-SEP-91	N	TRG	WQPL	PHOSPHORUS	0 050	MG/L		U	0 050								
SW023	SW	REAL	SW01583WC	16-SEP-91	N	TRG	WQPL	SULFATE	39 3	MG/L			10 0								
SW023	SW	REAL	SW01583WC	16-SEP-91	N	TRG	WQPL	SULFIDE	1 0	MG/L		U	1 0								
SW023	SW	REAL	SW01583WC	16-SEP-91	N	TRG	WQPL	TOTAL DISSOLVED SOLIDS	1530	MG/L			10 0								
SW023	SW	REAL	SW01583WC	16-SEP-91	N	TRG	WQPL	TOTAL ORGANIC CARBON	2	MG/L			1								
SW023	SW	REAL	SW01583WC	16-SEP-91	N	TRG	WQPL	TOTAL SOLIDS	5 0	MG/L			5 0								
SW023	SW	REAL	SW01689WC	15-OCT-91	N	TRG	WQPL	BICARBONATE AS CACO3	233	MG/L			10 0								
SW023	SW	REAL	SW01689WC	15-OCT-91	N	TRG	WQPL	CARBONATE AS CACO3	10 0	MG/L		U	10 0								
SW023	SW	REAL	SW01689WC	15-OCT-91	N	TRG	WQPL	CBOD5	1 8	MG/L			1.0								
SW023	SW	REAL	SW01689WC	15-OCT-91	N	TRG	WQPL	CBOD5	2.0	MG/L			1 0								
SW023	SW	REAL	SW01689WC	15-OCT-91	N	TRG	WQPL	CHLORIDE	46.5	MG/L			5 0								
SW023	SW	REAL	SW01689WC	15-OCT-91	N	TRG	WQPL	CYANIDE	10 0	UG/L		U	10 0								
SW023	SW	REAL	SW01689WC	15-OCT-91	N	TRG	WQPL	FLUORIDE, SOLUBLE	0.73	MG/L			0 10								
SW023	SW	REAL	SW01689WC	15-OCT-91	N	TRG	WQPL	NITRATE/NITRITE	3.2	MG/L			0.50								
SW023	SW	REAL	SW01689WC	15-OCT-91	N	TRG	WQPL	NITRITE	0 042	MG/L			0.020								
SW023	SW	REAL	SW01689WC	15-OCT-91	N	TRG	WQPL	OIL AND GREASE	6 3	MG/L		U	6 3								
SW023	SW	REAL	SW01689WC	15-OCT-91	N	TRG	WQPL	ORTHOPHOSPHATE	0 050	MG/L		U	0 050								
SW023	SW	REAL	SW01689WC	15-OCT-91	N	TRG	WQPL	PHOSPHORUS	0 050	MG/L		U	0 050								
SW023	SW	REAL	SW01689WC	15-OCT-91	N	TRG	WQPL	SOLIDS, NONVOLATILE SUSPENDED	5.0	MG/L			5 0								
SW023	SW	REAL	SW01689WC	15-OCT-91	N	TRG	WQPL	SULFATE	40.1	MG/L			5 0								
SW023	SW	REAL	SW01689WC	15-OCT-91	N	TRG	WQPL	SULFIDE	1.0	MG/L		U	1.0								
SW023	SW	REAL	SW01689WC	15-OCT-91	N	TRG	WQPL	TOTAL DISSOLVED SOLIDS	404	MG/L			10 0								
SW023	SW	REAL	SW01689WC	15-OCT-91	N	TRG	WQPL	TOTAL ORGANIC CARBON	1 4	MG/L			1.0								
SW023	SW	REAL	SW01689WC	15-OCT-91	N	TRG	WQPL	TOTAL ORGANIC CARBON	1 6	MG/L			1 0								
SW023	SW	REAL	SW60062WC	22-FEB-91	N	TRG	WQPL	BICARBONATE AS CACO3	140	MG/L			1 0								
SW023	SW	REAL	SW60062WC	22-FEB-91	N	TRG	WQPL	CARBONATE AS CACO3	0	MG/L			1 0								
SW023	SW	REAL	SW60062WC	22-FEB-91	N	TRG	WQPL	CHLORIDE	250	MG/L			0 2								
SW023	SW	REAL	SW60062WC	22-FEB-91	N	TRG	WQPL	FLUORIDE	0 6	MG/L			0 1								
SW023	SW	REAL	SW60062WC	22-FEB-91	N	TRG	WQPL	SULFATE	34	MG/L			2 0								
SW023	SW	REAL	SW60062WC	22-FEB-91	N	TRG	WQPL	TOTAL DISSOLVED SOLIDS	640	MG/L			10.0								
SW023	SW	REAL	SW60062WC	22-FEB-91	N	TRG	WQPL	TOTAL SUSPENDED SOLIDS	36	MG/L			4.0								
SW023	SW	REAL	SW60063WC	22-FEB-91	N	TRG	WQPL	SILICA, DISSOLVED	2.8	MG/L			0.4								
SW023	SW	REAL	SW60066WCB	02-APR-91	N																
SW023	SW	REAL	SW60068WC	10-APR-91	N	TRG	WQPL	ALKALINITY AS CACO3	160	MG/L			10								
SW023	SW	REAL	SW60068WC	10-APR-91	N	TRG	WQPL	BICARBONATE	160	MG/L			10								
SW023	SW	REAL	SW60068WC	10-APR-91	N	TRG	WQPL	CARBONATE AS CACO3	10	MG/L		U	10								
SW023	SW	REAL	SW60068WC	10-APR-91	N	TRG	WQPL	CHLORIDE	36	MG/L			2								

Location	ST	QC	Sample Number	Smpl Date	D	ID	Group	Chemical	Result	Unit	Error	Qual	D LMT	VA	RN1	RN2	RN3	RN4	VResult	VQual	VDEI
SW023	SW	REAL	SW60068WC	10-APR-91	N	TRG	WQPL	FLUORIDE	0 8	MG/L			0 5								
SW023	SW	REAL	SW60068WC	10-APR-91	N	TRG	WQPL	NITRATE/NITRITE	1 7	MG/L			0 1								
SW023	SW	REAL	SW60069WC	15-APR-91	N	TRG	WQPL	ALKALINITY AS CACO3	75	MG/L			10								
SW023	SW	REAL	SW60069WC	15-APR-91	N	TRG	WQPL	BICARBONATE	75	MG/L			10								
SW023	SW	REAL	SW60069WC	15-APR-91	N	TRG	WQPL	CARBONATE AS CACO3	10	MG/L		U	10								
SW023	SW	REAL	SW60069WC	15-APR-91	N	TRG	WQPL	CHLORIDE	62	MG/L			2								
SW023	SW	REAL	SW60069WC	15-APR-91	N	TRG	WQPL	FLUORIDE	0 5	MG/L		U	0 5								
SW023	SW	REAL	SW60069WC	15-APR-91	N	TRG	WQPL	NITRATE/NITRITE	1 1	MG/L			0 1								
SW023	SW	REAL	SW60069WC	15-APR-91	N	TRG	WQPL	TOTAL DISSOLVED SOLIDS	240	MG/L			2								
SW023	SW	REAL	SW60069WC	15-APR-91	N	TRG	WQPL	TOTAL SUSPENDED SOLIDS	420	MG/L			2								
SW023	SW	REAL	SW60075WC	23-APR-91	N	TRG	WQPL	ALKALINITY AS CACO3	86	MG/L			10								
SW023	SW	REAL	SW60075WC	23-APR-91	N	TRG	WQPL	BICARBONATE	86	MG/L			10								
SW023	SW	REAL	SW60075WC	23-APR-91	N	TRG	WQPL	CARBONATE AS CACO3	10	MG/L		U	10								
SW023	SW	REAL	SW60075WC	23-APR-91	N	TRG	WQPL	CHLORIDE	31	MG/L			2								
SW023	SW	REAL	SW60075WC	23-APR-91	N	TRG	WQPL	FLUORIDE	0 5	MG/L		U	0 5								
SW023	SW	REAL	SW60075WC	23-APR-91	N	TRG	WQPL	NITRATE/NITRITE	2 4	MG/L			0 1								
SW023	SW	REAL	SW60075WC	23-APR-91	N	TRG	WQPL	NITRITE	0 01	MG/L		U	0 01								
SW023	SW	REAL	SW60075WC	23-APR-91	N	TRG	WQPL	SULFATE	19	MG/L			10								
SW023	SW	REAL	SW60075WC	23-APR-91	N	TRG	WQPL	TOTAL DISSOLVED SOLIDS	180	MG/L			2								
SW023	SW	REAL	SW60075WC	23-APR-91	N	TRG	WQPL	TOTAL SUSPENDED SOLIDS	420	MG/L			2								
SW023	SW	REAL	SW60083WC	01-MAY-91	N	TRG	WQPL	ALKALINITY AS CACO3	77	MG/L			10								
SW023	SW	REAL	SW60083WC	01-MAY-91	N	TRG	WQPL	BICARBONATE	77	MG/L			10								
SW023	SW	REAL	SW60083WC	01-MAY-91	N	TRG	WQPL	CARBONATE AS CACO3	10	MG/L		U	10								
SW023	SW	REAL	SW60083WC	01-MAY-91	N	TRG	WQPL	CHLORIDE	26	MG/L			2								
SW023	SW	REAL	SW60083WC	01-MAY-91	N	TRG	WQPL	FLUORIDE	0 5	MG/L		U	0 5								
SW023	SW	REAL	SW60083WC	01-MAY-91	N	TRG	WQPL	NITRATE/NITRITE	0 9	MG/L			0 1								
SW023	SW	REAL	SW60083WC	01-MAY-91	N	TRG	WQPL	PHOSPHORUS	0 04	MG/L			0 01								
SW023	SW	REAL	SW60083WC	01-MAY-91	N	TRG	WQPL	SULFATE	24	MG/L			10								
SW023	SW	REAL	SW60083WC	01-MAY-91	N	TRG	WQPL	TOTAL DISSOLVED SOLIDS	200	MG/L			2								
SW023	SW	REAL	SW60083WC	01-MAY-91	N	TRG	WQPL	TOTAL SUSPENDED SOLIDS	160	MG/L			2								
SW023	SW	REAL	SW60090WC	17-MAY-91	N	TRG	WQPL	ALKALINITY AS CACO3	105	MG/L			10								
SW023	SW	REAL	SW60090WC	17-MAY-91	N	TRG	WQPL	BICARBONATE	105	MG/L			10								
SW023	SW	REAL	SW60090WC	17-MAY-91	N	TRG	WQPL	CARBONATE AS CACO3	10	MG/L		U	10								
SW023	SW	REAL	SW60090WC	17-MAY-91	N	TRG	WQPL	CHLORIDE	20	MG/L			2								
SW023	SW	REAL	SW60090WC	17-MAY-91	N	TRG	WQPL	FLUORIDE	0 5	MG/L		U	0 5								
SW023	SW	REAL	SW60090WC	17-MAY-91	N	TRG	WQPL	NITRATE/NITRITE	1 9	MG/L			0.1								
SW023	SW	REAL	SW60090WC	17-MAY-91	N	TRG	WQPL	NITRITE	0 11	MG/L			0 01								
SW023	SW	REAL	SW60090WC	17-MAY-91	N	TRG	WQPL	PHOSPHATE	0 01	MG/L		U	0 01								
SW023	SW	REAL	SW60090WC	17-MAY-91	N	TRG	WQPL	SILICON	2	MG/L		U	2								
SW023	SW	REAL	SW60090WC	17-MAY-91	N	TRG	WQPL	SULFATE	10	MG/L		U	10								
SW023	SW	REAL	SW60090WC	17-MAY-91	N	TRG	WQPL	TOTAL DISSOLVED SOLIDS	180	MG/L			2								
SW023	SW	REAL	SW60090WC	17-MAY-91	N	TRG	WQPL	TOTAL SUSPENDED SOLIDS	590	MG/L			2								
SW023	SW	REAL	SW60100WC	23-MAY-91	N	TRG	WQPL	ALKALINITY AS CACO3	85	MG/L			10								
SW023	SW	REAL	SW60100WC	23-MAY-91	N	TRG	WQPL	BICARBONATE	85	MG/L			10								
SW023	SW	REAL	SW60100WC	23-MAY-91	N	TRG	WQPL	CARBONATE AS CACO3	10	MG/L		U	10								
SW023	SW	REAL	SW60100WC	23-MAY-91	N	TRG	WQPL	CHLORIDE	13	MG/L			2								
SW023	SW	REAL	SW60100WC	23-MAY-91	N	TRG	WQPL	FLUORIDE	0.5	MG/L		U	0 5								
SW023	SW	REAL	SW60100WC	23-MAY-91	N	TRG	WQPL	NITRATE/NITRITE	2 5	MG/L			0 1								
SW023	SW	REAL	SW60100WC	23-MAY-91	N	TRG	WQPL	PHOSPHATE	0 13	MG/L			0 01								
SW023	SW	REAL	SW60100WC	23-MAY-91	N	TRG	WQPL	SULFATE	18	MG/L			10								
SW023	SW	REAL	SW60100WC	23-MAY-91	N	TRG	WQPL	TOTAL DISSOLVED SOLIDS	120	MG/L			2								
SW023	SW	REAL	SW60100WC	23-MAY-91	N	TRG	WQPL	TOTAL SUSPENDED SOLIDS	290	MG/L			2								
SW023	SW	REAL	SW60101WC	28-MAY-91	N	TRG	WQPL	ALKALINITY AS CACO3	83	MG/L			10								
SW023	SW	REAL	SW60101WC	28-MAY-91	N	TRG	WQPL	AMMONIA	0 7	MG/L			0 5								
SW023	SW	REAL	SW60101WC	28-MAY-91	N	TRG	WQPL	BICARBONATE	83	MG/L			10								
SW023	SW	REAL	SW60101WC	28-MAY-91	N	TRG	WQPL	CARBONATE AS CACO3	10	MG/L		U	10								
SW023	SW	REAL	SW60101WC	28-MAY-91	N	TRG	WQPL	CHLORIDE	23	MG/L			2								
SW023	SW	REAL	SW60101WC	28-MAY-91	N	TRG	WQPL	FLUORIDE	0.5	MG/L		U	0 5								
SW023	SW	REAL	SW60101WC	28-MAY-91	N	TRG	WQPL	NITRATE/NITRITE	2 0	MG/L			0 1								
SW023	SW	REAL	SW60101WC	28-MAY-91	N	TRG	WQPL	PHOSPHATE	0 15	MG/L			0.01								
SW023	SW	REAL	SW60101WC	28-MAY-91	N	TRG	WQPL	PHOSPHORUS	0.01	MG/L		U	0 01								
SW023	SW	REAL	SW60101WC	28-MAY-91	N	TRG	WQPL	SULFATE	10	MG/L			10								
SW023	SW	REAL	SW60101WC	28-MAY-91	N	TRG	WQPL	TOTAL DISSOLVED SOLIDS	210	MG/L			2								

Location	ST	QC	Sample Number	Smpl Date	D	ID	Group	Chemical	Result	Unit	Error	Qual	D LMT	VA	RN1	RN2	RN3	RN4	VResult	VQual	VDET
SW023	SW	REAL	SW60101WC	28-MAY-91	N	TRG	WQPL	TOTAL SUSPENDED SOLIDS	67	MG/L			2								
SW023	SW	REAL	SW60124WC	23-JUL-91	N	TRG	WQPL	ALKALINITY AS CACO3	60	MG/L			10								
SW023	SW	REAL	SW60124WC	23-JUL-91	N	TRG	WQPL	BICARBONATE	60	MG/L			10								
SW023	SW	REAL	SW60124WC	23-JUL-91	N	TRG	WQPL	CARBONATE AS CACO3	10	MG/L		U	10								
SW023	SW	REAL	SW60124WC	23-JUL-91	N	TRG	WQPL	CHLORIDE	11	MG/L			2								
SW023	SW	REAL	SW60124WC	23-JUL-91	N	TRG	WQPL	FLUORIDE	0 5	MG/L		U	0 5								
SW023	SW	REAL	SW60124WC	23-JUL-91	N	TRG	WQPL	NITRATE/NITRITE	1.1	MG/L			0 1								
SW023	SW	REAL	SW60124WC	23-JUL-91	N	TRG	WQPL	NITRITE	0 03	MG/L			0 01								
SW023	SW	REAL	SW60124WC	23-JUL-91	N	TRG	WQPL	PHOSPHATE	0 01	MG/L		U	0 01								
SW023	SW	REAL	SW60124WC	23-JUL-91	N	TRG	WQPL	SULFATE	11	MG/L			10								
SW023	SW	REAL	SW60124WC	23-JUL-91	N	TRG	WQPL	TOTAL DISSOLVED SOLIDS	106	MG/L			2								
SW023	SW	REAL	SW60124WC	23-JUL-91	N	TRG	WQPL	TOTAL SUSPENDED SOLIDS	3	MG/L			2								
SW023	SW	REAL	SW60133WC	05-AUG-91	N																
SW023	SW	REAL	SW60141WC	07-AUG-91	N	TRG	WQPL	ALKALINITY AS CACO3	58	MG/L			10								
SW023	SW	REAL	SW60141WC	07-AUG-91	N	TRG	WQPL	BICARBONATE	58	MG/L			10								
SW023	SW	REAL	SW60141WC	07-AUG-91	N	TRG	WQPL	CARBONATE AS CACO3	10	MG/L		U	10								
SW023	SW	REAL	SW60141WC	07-AUG-91	N	TRG	WQPL	CHLORIDE	5	MG/L			2								
SW023	SW	REAL	SW60141WC	07-AUG-91	N	TRG	WQPL	FLUORIDE	0.5	MG/L		U	0 5								
SW023	SW	REAL	SW60141WC	07-AUG-91	N	TRG	WQPL	NITRATE/NITRITE	0.77	MG/L			0 05								
SW023	SW	REAL	SW60141WC	07-AUG-91	N	TRG	WQPL	NITRITE	0 04	MG/L			0 01								
SW023	SW	REAL	SW60141WC	07-AUG-91	N	TRG	WQPL	PHOSPHATE	0 01	MG/L		U	0 01								
SW023	SW	REAL	SW60141WC	07-AUG-91	N	TRG	WQPL	SULFATE	12	MG/L			10								
SW023	SW	REAL	SW60141WC	07-AUG-91	N	TRG	WQPL	TOTAL DISSOLVED SOLIDS	94	MG/L			10								
SW023	SW	REAL	SW60141WC	07-AUG-91	N	TRG	WQPL	TOTAL SUSPENDED SOLIDS	1050	MG/L			2								
SW023	SW	REAL	SW60149WC	12-AUG-91	N	TRG	WQPL	ALKALINITY AS CACO3	62	MG/L			10								
SW023	SW	REAL	SW60149WC	12-AUG-91	N	TRG	WQPL	BICARBONATE	62	MG/L			10								
SW023	SW	REAL	SW60149WC	12-AUG-91	N	TRG	WQPL	CARBONATE AS CACO3	10	MG/L		U	10								
SW023	SW	REAL	SW60149WC	12-AUG-91	N	TRG	WQPL	CHLORIDE	2	MG/L		U	2								
SW023	SW	REAL	SW60149WC	12-AUG-91	N	TRG	WQPL	FLUORIDE	0 5	MG/L		U	0 5								
SW023	SW	REAL	SW60149WC	12-AUG-91	N	TRG	WQPL	NITRATE/NITRITE	0 72	MG/L			0 05								
SW023	SW	REAL	SW60149WC	12-AUG-91	N	TRG	WQPL	NITRITE	0 06	MG/L			0 01								
SW023	SW	REAL	SW60149WC	12-AUG-91	N	TRG	WQPL	PHOSPHATE	0 01	MG/L		U	0 01								
SW023	SW	REAL	SW60149WC	12-AUG-91	N	TRG	WQPL	SULFATE	20	MG/L			10								
SW023	SW	REAL	SW60149WC	12-AUG-91	N	TRG	WQPL	TOTAL DISSOLVED SOLIDS	74	MG/L			10								
SW023	SW	REAL	SW60149WC	12-AUG-91	N	TRG	WQPL	TOTAL SUSPENDED SOLIDS	72	MG/L			2								
SW023	SW	REAL	SW60157WC	19-AUG-91	N																
SW023	SW	RNS	SW80112WC	17-APR-91	N	TRG	PSTCLPTCL	4,4'-DDD	0 10	UG/L		U	0 10								
SW023	SW	RNS	SW80112WC	17-APR-91	N	TRG	PSTCLPTCL	4,4'-DDE	0 10	UG/L		U	0 10								
SW023	SW	RNS	SW80112WC	17-APR-91	N	TRG	PSTCLPTCL	4,4'-DDT	0.10	UG/L		U	0 10								
SW023	SW	RNS	SW80112WC	17-APR-91	N	TRG	PSTCLPTCL	ALDRIN	0 052	UG/L		U	0.052								
SW023	SW	RNS	SW80112WC	17-APR-91	N	TRG	PSTCLPTCL	AROCLOR-1016	0 52	UG/L		U	0 52								
SW023	SW	RNS	SW80112WC	17-APR-91	N	TRG	PSTCLPTCL	AROCLOR-1221	0 52	UG/L		U	0 52								
SW023	SW	RNS	SW80112WC	17-APR-91	N	TRG	PSTCLPTCL	AROCLOR-1232	0 52	UG/L		U	0 52								
SW023	SW	RNS	SW80112WC	17-APR-91	N	TRG	PSTCLPTCL	AROCLOR-1242	0 52	UG/L		U	0 52								
SW023	SW	RNS	SW80112WC	17-APR-91	N	TRG	PSTCLPTCL	AROCLOR-1248	0 52	UG/L		U	0 52								
SW023	SW	RNS	SW80112WC	17-APR-91	N	TRG	PSTCLPTCL	AROCLOR-1254	1.0	UG/L		U	1 0								
SW023	SW	RNS	SW80112WC	17-APR-91	N	TRG	PSTCLPTCL	AROCLOR-1260	1 0	UG/L		U	1 0								
SW023	SW	RNS	SW80112WC	17-APR-91	N	TRG	PSTCLPTCL	DIELORIN	0 10	UG/L		U	0 10								
SW023	SW	RNS	SW80112WC	17-APR-91	N	TRG	PSTCLPTCL	ENDOSULFAN I	0 052	UG/L		U	0 052								
SW023	SW	RNS	SW80112WC	17-APR-91	N	TRG	PSTCLPTCL	ENDOSULFAN II	0 10	UG/L		U	0 10								
SW023	SW	RNS	SW80112WC	17-APR-91	N	TRG	PSTCLPTCL	ENDOSULFAN SULFATE	0 10	UG/L		U	0.10								
SW023	SW	RNS	SW80112WC	17-APR-91	N	TRG	PSTCLPTCL	ENDRIN	0 10	UG/L		U	0 10								
SW023	SW	RNS	SW80112WC	17-APR-91	N	TRG	PSTCLPTCL	ENDRIN KETONE	0 10	UG/L		U	0.10								
SW023	SW	RNS	SW80112WC	17-APR-91	N	TRG	PSTCLPTCL	HEPTACHLOR	0 052	UG/L		U	0 052								
SW023	SW	RNS	SW80112WC	17-APR-91	N	TRG	PSTCLPTCL	HEPTACHLOR EPOXIDE	0 052	UG/L		U	0.052								
SW023	SW	RNS	SW80112WC	17-APR-91	N	TRG	PSTCLPTCL	METHOXYCHLOR	0.52	UG/L		U	0 52								
SW023	SW	RNS	SW80112WC	17-APR-91	N	TRG	PSTCLPTCL	TOXAPHENE	1 0	UG/L		U	1 0								
SW023	SW	RNS	SW80112WC	17-APR-91	N	TRG	PSTCLPTCL	alpha-BHC	0 052	UG/L		U	0.052								
SW023	SW	RNS	SW80112WC	17-APR-91	N	TRG	PSTCLPTCL	alpha-CHLORDANE	0 52	UG/L		U	0.52								
SW023	SW	RNS	SW80112WC	17-APR-91	N	TRG	PSTCLPTCL	beta-BHC	0.052	UG/L		U	0.052								
SW023	SW	RNS	SW80112WC	17-APR-91	N	TRG	PSTCLPTCL	delta-BHC	0 052	UG/L		U	0 052								
SW023	SW	RNS	SW80112WC	17-APR-91	N	TRG	PSTCLPTCL	gamma-BHC (LINDANE)	0 052	UG/L		U	0 052								
SW023	SW	RNS	SW80112WC	17-APR-91	N	TRG	PSTCLPTCL	gamma-CHLORDANE	0 52	UG/L		U	0 52								

Location	ST	QC	Sample Number	Smpl Date	D	ID	Group	Chemical	Result	Unit	Error	Qual	D LMT	VA	RN1	RN2	RN3	RN4	VResult	VQual	VDET
SW023	SW	RNS	SW80112WC	17-APR-91	N	TRG	WQPL	BICARBONATE AS CACO3	10 0	MG/L		U	10 0								
SW023	SW	RNS	SW80112WC	17-APR-91	N	TRG	WQPL	CARBONATE AS CACO3	10 0	MG/L		U	10 0								
SW023	SW	RNS	SW80112WC	17-APR-91	N	TRG	WQPL	CB005	1 0	MG/L		U	1 0								
SW023	SW	RNS	SW80112WC	17-APR-91	N	TRG	WQPL	CHLORIDE	5 0	MG/L		U	5 0								
SW023	SW	RNS	SW80112WC	17-APR-91	N	TRG	WQPL	CYANIDE	10 0	UG/L		U	10 0								
SW023	SW	RNS	SW80112WC	17-APR-91	N	TRG	WQPL	FLUORIDE, SOLUBLE	0.10	MG/L		U	0 10								
SW023	SW	RNS	SW80112WC	17-APR-91	N	TRG	WQPL	NITRATE/NITRITE	0 10	MG/L		U	0.10								
SW023	SW	RNS	SW80112WC	17-APR-91	N	TRG	WQPL	NITRITE	0.020	MG/L		U	0 020								
SW023	SW	RNS	SW80112WC	17-APR-91	N	TRG	WQPL	OIL AND GREASE	5 8	MG/L		U	5 8								
SW023	SW	RNS	SW80112WC	17-APR-91	N	TRG	WQPL	ORTHOPHOSPHATE	0 050	MG/L		U	0 050								
SW023	SW	RNS	SW80112WC	17-APR-91	N	TRG	WQPL	PHOSPHORUS	0.050	MG/L		U	0 050								
SW023	SW	RNS	SW80112WC	17-APR-91	N	TRG	WQPL	SOLIDS, NONVOLATILE SUSPENDED	5.0	MG/L		U	5 0								
SW023	SW	RNS	SW80112WC	17-APR-91	N	TRG	WQPL	SULFATE	5 0	MG/L		U	5 0								
SW023	SW	RNS	SW80112WC	17-APR-91	N	TRG	WQPL	SULFIDE	1 0	MG/L		U	1 0								
SW023	SW	RNS	SW80112WC	17-APR-91	N	TRG	WQPL	TOTAL DISSOLVED SOLIDS	10.0	MG/L		U	10 0								
SW023	SW	RNS	SW80112WC	17-APR-91	N	TRG	WQPL	TOTAL ORGANIC CARBON	1.0	MG/L		U	1 0								
SW023	SW	RNS	SW80158WC	16-SEP-91	N	TRG	WQPL	BICARBONATE AS CACO3	10 0	MG/L		U	10 0								
SW023	SW	RNS	SW80158WC	16-SEP-91	N	TRG	WQPL	CARBONATE AS CACO3	10 0	MG/L		U	10 0								
SW023	SW	RNS	SW80158WC	16-SEP-91	N	TRG	WQPL	CHLORIDE	5 0	MG/L		U	5.0								
SW023	SW	RNS	SW80158WC	16-SEP-91	N	TRG	WQPL	CYANIDES (SOLUBLE SALTS AND CO	10 0	UG/L		U	10 0								
SW023	SW	RNS	SW80158WC	16-SEP-91	N	TRG	WQPL	DISSOLVED ORGANIC CARBON	1	MG/L		U	1								
SW023	SW	RNS	SW80158WC	16-SEP-91	N	TRG	WQPL	FLUORIDE, SOLUBLE	0 10	MG/L		U	0 10								
SW023	SW	RNS	SW80158WC	16-SEP-91	N	TRG	WQPL	NITRATE/NITRITE	0.10	MG/L		U	0 10								
SW023	SW	RNS	SW80158WC	16-SEP-91	N	TRG	WQPL	NITRITE	0 020	MG/L		U	0 020								
SW023	SW	RNS	SW80158WC	16-SEP-91	N	TRG	WQPL	OIL AND GREASE	5.1	MG/L		U	5 1								
SW023	SW	RNS	SW80158WC	16-SEP-91	N	TRG	WQPL	ORTHOPHOSPHATE	0 050	MG/L		U	0 050								
SW023	SW	RNS	SW80158WC	16-SEP-91	N	TRG	WQPL	PHOSPHORUS	0 050	MG/L		U	0 050								
SW023	SW	RNS	SW80158WC	16-SEP-91	N	TRG	WQPL	SULFATE	5 0	MG/L		U	5 0								
SW023	SW	RNS	SW80158WC	16-SEP-91	N	TRG	WQPL	SULFIDE	1 0	MG/L		U	1 0								
SW023	SW	RNS	SW80158WC	16-SEP-91	N	TRG	WQPL	TOTAL DISSOLVED SOLIDS	12.0	MG/L			10 0								
SW023	SW	RNS	SW80158WC	16-SEP-91	N	TRG	WQPL	TOTAL ORGANIC CARBON	1	MG/L		U	1								
SW023	SW	RNS	SW80158WC	16-SEP-91	N	TRG	WQPL	TOTAL SOLIDS	5 0	MG/L		U	5 0								
SW023	SW		SW60066WC	08-APR-91	N	TRG	WQPL	ALKALINITY AS CACO3	90	MG/L			10								
SW023	SW		SW60066WC	08-APR-91	N	TRG	WQPL	BICARBONATE	90	MG/L			10								
SW023	SW		SW60066WC	08-APR-91	N	TRG	WQPL	CARBONATE AS CACO3	10	MG/L		U	10								
SW023	SW		SW60066WC	08-APR-91	N	TRG	WQPL	CHLORIDE	32	MG/L			2								
SW023	SW		SW60066WC	08-APR-91	N	TRG	WQPL	FLUORIDE	0.5	MG/L		U	0 5								
SW023	SW		SW60066WC	08-APR-91	N	TRG	WQPL	NITRATE/NITRITE	0 4	MG/L			0 1								
SW023	SW		SW60066WC	08-APR-91	N	TRG	WQPL	SULFATE	21	MG/L			10								
SW037	SW	REAL	SW00720WC	08-JAN-91	Y																
SW037	SW	REAL	SW00823WC	20-FEB-91	N																
SW037	SW	REAL	SW00926WC	21-MAR-91	Y																
SW037	SW	REAL	SW01028WC	09-APR-91	Y																
SW037	SW	REAL	SW01135WC	16-MAY-91	Y																
SW037	SW	REAL	SW01238WC	20-JUN-91	Y																
SW037	SW	REAL	SW01341WC	25-JUL-91	Y																
SW037	SW	REAL	SW01447WC	28-AUG-91	Y																
SW037	SW	REAL	SW01553WC	18-SEP-91	Y																
SW037	SW	REAL	SW01659WC	23-OCT-91	Y																
SW038	SW	REAL	SW00726WC	08-JAN-91	N																
SW038	SW	REAL	SW00829WC	20-FEB-91	N																
SW038	SW	REAL	SW00932WC	28-MAR-91	N	TRG	WQPL	BICARBONATE AS CACO3	250	MG/L			1 0								
SW038	SW	REAL	SW00932WC	28-MAR-91	N	TRG	WQPL	CARBONATE AS CACO3	0	MG/L			1 0								
SW038	SW	REAL	SW00932WC	28-MAR-91	N	TRG	WQPL	CHLORIDE	44	MG/L			0.2								
SW038	SW	REAL	SW00932WC	28-MAR-91	N	TRG	WQPL	DISSOLVED ORGANIC CARBON	39	MG/L			1.0								
SW038	SW	REAL	SW00932WC	28-MAR-91	N	TRG	WQPL	FLUORIDE	0 6	MG/L			0.1								
SW038	SW	REAL	SW00932WC	28-MAR-91	N	TRG	WQPL	NITRATE/NITRITE	0.2	MG/L			0 02								
SW038	SW	REAL	SW00932WC	28-MAR-91	N	TRG	WQPL	NITRITE	0.02	MG/L		U	0.02								
SW038	SW	REAL	SW00932WC	28-MAR-91	N	TRG	WQPL	OIL AND GREASE	0 5	MG/L			0.2								
SW038	SW	REAL	SW00932WC	28-MAR-91	N	TRG	WQPL	ORTHOPHOSPHATE	0.01	MG/L		U	0 01								
SW038	SW	REAL	SW00932WC	28-MAR-91	N	TRG	WQPL	PHOSPHATE	0.01	MG/L			0.01								
SW038	SW	REAL	SW00932WC	28-MAR-91	N	TRG	WQPL	SILICA, DISSOLVED	6 3	MG/L			0 4								
SW038	SW	REAL	SW00932WC	28-MAR-91	N	TRG	WQPL	SULFATE	29	MG/L			2 0								

Location	ST	QC	Sample Number	Smpl Date	D	ID	Group	Chemical	Result	Unit	Error	Qual	D LMT	VA	RN1	RN2	RN3	RN4	VResult	VQual	VDET
SW038	SW	REAL	SW00932WC	28-MAR-91	N	TRG	WQPL	SULFIDE	1	MG/L			2 0								
SW038	SW	REAL	SW00932WC	28-MAR-91	N	TRG	WQPL	TOTAL DISSOLVED SOLIDS	370	MG/L			10.0								
SW038	SW	REAL	SW00932WC	28-MAR-91	N	TRG	WQPL	TOTAL ORGANIC CARBON	4	MG/L			1 0								
SW038	SW	REAL	SW00932WC	28-MAR-91	N	TRG	WQPL	TOTAL SUSPENDED SOLIDS	4	MG/L		U	4 0								
SW038	SW	REAL	SW01034WC	09-APR-91	N	TRG	PSTCLPTCL	4,4'-DDD	0 10	UG/L		U	0 10								
SW038	SW	REAL	SW01034WC	09-APR-91	N	TRG	PSTCLPTCL	4,4'-DDE	0.10	UG/L		U	0 10								
SW038	SW	REAL	SW01034WC	09-APR-91	N	TRG	PSTCLPTCL	4,4'-DDT	0 10	UG/L		U	0 10								
SW038	SW	REAL	SW01034WC	09-APR-91	N	TRG	PSTCLPTCL	ALDRIN	0 050	UG/L		U	0 050								
SW038	SW	REAL	SW01034WC	09-APR-91	N	TRG	PSTCLPTCL	AROCLOR-1016	0 50	UG/L		U	0 50								
SW038	SW	REAL	SW01034WC	09-APR-91	N	TRG	PSTCLPTCL	AROCLOR-1221	0 50	UG/L		U	0 50								
SW038	SW	REAL	SW01034WC	09-APR-91	N	TRG	PSTCLPTCL	AROCLOR-1232	0.50	UG/L		U	0 50								
SW038	SW	REAL	SW01034WC	09-APR-91	N	TRG	PSTCLPTCL	AROCLOR-1242	0.50	UG/L		U	0.50								
SW038	SW	REAL	SW01034WC	09-APR-91	N	TRG	PSTCLPTCL	AROCLOR-1248	0.50	UG/L		U	0 50								
SW038	SW	REAL	SW01034WC	09-APR-91	N	TRG	PSTCLPTCL	AROCLOR-1254	1 0	UG/L		U	1 0								
SW038	SW	REAL	SW01034WC	09-APR-91	N	TRG	PSTCLPTCL	AROCLOR-1260	1 0	UG/L		U	1 0								
SW038	SW	REAL	SW01034WC	09-APR-91	N	TRG	PSTCLPTCL	DIELDRIN	0 10	UG/L		U	0 10								
SW038	SW	REAL	SW01034WC	09-APR-91	N	TRG	PSTCLPTCL	ENDOSULFAN I	0.050	UG/L		U	0 050								
SW038	SW	REAL	SW01034WC	09-APR-91	N	TRG	PSTCLPTCL	ENDOSULFAN II	0 10	UG/L		U	0.10								
SW038	SW	REAL	SW01034WC	09-APR-91	N	TRG	PSTCLPTCL	ENDOSULFAN SULFATE	0.10	UG/L		U	0 10								
SW038	SW	REAL	SW01034WC	09-APR-91	N	TRG	PSTCLPTCL	ENDRIN	0 10	UG/L		U	0 10								
SW038	SW	REAL	SW01034WC	09-APR-91	N	TRG	PSTCLPTCL	ENDRIN KETONE	0.10	UG/L		U	0.10								
SW038	SW	REAL	SW01034WC	09-APR-91	N	TRG	PSTCLPTCL	HEPTACHLOR	0.050	UG/L		U	0.050								
SW038	SW	REAL	SW01034WC	09-APR-91	N	TRG	PSTCLPTCL	HEPTACHLOR EPOXIDE	0.050	UG/L		U	0 050								
SW038	SW	REAL	SW01034WC	09-APR-91	N	TRG	PSTCLPTCL	METHOXYCHLOR	0.50	UG/L		U	0 50								
SW038	SW	REAL	SW01034WC	09-APR-91	N	TRG	PSTCLPTCL	TOXAPHENE	1 0	UG/L		U	1 0								
SW038	SW	REAL	SW01034WC	09-APR-91	N	TRG	PSTCLPTCL	alpha-BHC	0 050	UG/L		U	0 050								
SW038	SW	REAL	SW01034WC	09-APR-91	N	TRG	PSTCLPTCL	alpha-CHLORDANE	0 50	UG/L		U	0 50								
SW038	SW	REAL	SW01034WC	09-APR-91	N	TRG	PSTCLPTCL	beta-BHC	0.050	UG/L		U	0 050								
SW038	SW	REAL	SW01034WC	09-APR-91	N	TRG	PSTCLPTCL	delta-BHC	0.050	UG/L		U	0 050								
SW038	SW	REAL	SW01034WC	09-APR-91	N	TRG	PSTCLPTCL	gamma-BHC (LINDANE)	0.050	UG/L		U	0 050								
SW038	SW	REAL	SW01034WC	09-APR-91	N	TRG	PSTCLPTCL	gamma-CHLORDANE	0.50	UG/L		U	0.50								
SW038	SW	REAL	SW01034WC	09-APR-91	N	TRG	WQPL	BICARBONATE AS CACO3	165	MG/L			10 0								
SW038	SW	REAL	SW01034WC	09-APR-91	N	TRG	WQPL	CARBONATE AS CACO3	10.0	MG/L		U	10 0								
SW038	SW	REAL	SW01034WC	09-APR-91	N	TRG	WQPL	CBOD5	5.0	MG/L			1 0								
SW038	SW	REAL	SW01034WC	09-APR-91	N	TRG	WQPL	CBOD5	5 2	MG/L			1 0								
SW038	SW	REAL	SW01034WC	09-APR-91	N	TRG	WQPL	CHLORIDE	50.2	MG/L			5 0								
SW038	SW	REAL	SW01034WC	09-APR-91	N	TRG	WQPL	CYANIDE	10 0	UG/L		U	10 0								
SW038	SW	REAL	SW01034WC	09-APR-91	N	TRG	WQPL	FLUORIDE, SOLUBLE	0.68	MG/L			0 10								
SW038	SW	REAL	SW01034WC	09-APR-91	N	TRG	WQPL	NITRATE/NITRITE	0.15	MG/L			0 10								
SW038	SW	REAL	SW01034WC	09-APR-91	N	TRG	WQPL	NITRITE	0.020	MG/L		U	0 020								
SW038	SW	REAL	SW01034WC	09-APR-91	N	TRG	WQPL	OIL AND GREASE	5.4	MG/L		U	5 4								
SW038	SW	REAL	SW01034WC	09-APR-91	N	TRG	WQPL	ORTHOPHOSPHATE	0 050	MG/L		U	0 050								
SW038	SW	REAL	SW01034WC	09-APR-91	N	TRG	WQPL	PHOSPHORUS	0 050	MG/L		U	0 050								
SW038	SW	REAL	SW01034WC	09-APR-91	N	TRG	WQPL	SOLIDS, NONVOLATILE SUSPENDED	10 0	MG/L			5 0								
SW038	SW	REAL	SW01034WC	09-APR-91	N	TRG	WQPL	SULFATE	29 8	MG/L			10 0								
SW038	SW	REAL	SW01034WC	09-APR-91	N	TRG	WQPL	SULFIDE	1.0	MG/L		U	1 0								
SW038	SW	REAL	SW01034WC	09-APR-91	N	TRG	WQPL	TOTAL DISSOLVED SOLIDS	388	MG/L			10.0								
SW038	SW	REAL	SW01034WC	09-APR-91	N	TRG	WQPL	TOTAL ORGANIC CARBON	4 6	MG/L			1 0								
SW038	SW	REAL	SW01034WC	09-APR-91	N	TRG	WQPL	TOTAL ORGANIC CARBON	6 0	MG/L			1 0								
SW038	SW	REAL	SW01141WC	16-MAY-91	N	TRG	WQPL	BICARBONATE AS CACO3	191	MG/L			10 0								
SW038	SW	REAL	SW01141WC	16-MAY-91	N	TRG	WQPL	CARBONATE AS CACO3	10 0	MG/L		U	10 0								
SW038	SW	REAL	SW01141WC	16-MAY-91	N	TRG	WQPL	CHLORIDE	36 5	MG/L			5.0								
SW038	SW	REAL	SW01141WC	16-MAY-91	N	TRG	WQPL	CYANIDE	20 0	UG/L		U	20 0								
SW038	SW	REAL	SW01141WC	16-MAY-91	N	TRG	WQPL	FLUORIDE, SOLUBLE	0.60	MG/L			0.10								
SW038	SW	REAL	SW01141WC	16-MAY-91	N	TRG	WQPL	NITRATE/NITRITE	0.97	MG/L			0.10								
SW038	SW	REAL	SW01141WC	16-MAY-91	N	TRG	WQPL	NITRITE	0.020	MG/L		U	0.020								
SW038	SW	REAL	SW01141WC	16-MAY-91	N	TRG	WQPL	OIL AND GREASE	5.8	MG/L		U	5.8								
SW038	SW	REAL	SW01141WC	16-MAY-91	N	TRG	WQPL	ORTHOPHOSPHATE	0.050	MG/L		U	0.050								
SW038	SW	REAL	SW01141WC	16-MAY-91	N	TRG	WQPL	PHOSPHORUS	0.050	MG/L		U	0.050								
SW038	SW	REAL	SW01141WC	16-MAY-91	N	TRG	WQPL	SOLIDS, NONVOLATILE SUSPENDED	22.0	MG/L			5 0								
SW038	SW	REAL	SW01141WC	16-MAY-91	N	TRG	WQPL	SULFATE	22 5	MG/L			5.0								
SW038	SW	REAL	SW01141WC	16-MAY-91	N	TRG	WQPL	SULFIDE	1.0	MG/L		U	1.0								
SW038	SW	REAL	SW01141WC	16-MAY-91	N	TRG	WQPL	TOTAL DISSOLVED SOLIDS	640	MG/L			10.0								

Location	ST	QC	Sample Number	Smpl Date	D	ID	Group	Chemical	Result	Unit	Error	Qual	D LMT	VA	RN1	RN2	RN3	RN4	VResult	VQual	VDET
SW038	SW	REAL	SW01244WC	20-JUN-91	N	TRG	WQPL	BICARBONATE AS CACO3	219	MG/L			10 0								
SW038	SW	REAL	SW01244WC	20-JUN-91	N	TRG	WQPL	CARBONATE AS CACO3	10 0	MG/L		U	10 0								
SW038	SW	REAL	SW01244WC	20-JUN-91	N	TRG	WQPL	CHLORIDE	48 4	MG/L			5 0								
SW038	SW	REAL	SW01244WC	20-JUN-91	N	TRG	WQPL	CYANIDES (SOLUBLE SALTS AND CO	10 0	UG/L		U	10 0								
SW038	SW	REAL	SW01244WC	20-JUN-91	N	TRG	WQPL	FLUORIDE, SOLUBLE	0 58	MG/L			0 10								
SW038	SW	REAL	SW01244WC	20-JUN-91	N	TRG	WQPL	NITRATE/NITRITE	0.88	MG/L			0 10								
SW038	SW	REAL	SW01244WC	20-JUN-91	N	TRG	WQPL	NITRITE	0 020	MG/L		U	0 020								
SW038	SW	REAL	SW01244WC	20-JUN-91	N	TRG	WQPL	OIL AND GREASE	5 3	MG/L		U	5.3								
SW038	SW	REAL	SW01244WC	20-JUN-91	N	TRG	WQPL	ORTHOPHOSPHATE	0 050	MG/L		U	0 050								
SW038	SW	REAL	SW01244WC	20-JUN-91	N	TRG	WQPL	PHOSPHORUS	0 074	MG/L			0 050								
SW038	SW	REAL	SW01244WC	20-JUN-91	N	TRG	WQPL	SULFATE	37 0	MG/L			10 0								
SW038	SW	REAL	SW01244WC	20-JUN-91	N	TRG	WQPL	SULFIDE	1 0	MG/L		U	1 0								
SW038	SW	REAL	SW01244WC	20-JUN-91	N	TRG	WQPL	TOTAL DISSOLVED SOLIDS	350	MG/L			10 0								
SW038	SW	REAL	SW01244WC	20-JUN-91	N	TRG	WQPL	TOTAL SOLIDS	9 0	MG/L			5 0								
SW038	SW	REAL	SW01347WC	25-JUL-91	N	TRG	WQPL	BICARBONATE AS CACO3	236	MG/L			10 0								
SW038	SW	REAL	SW01347WC	25-JUL-91	N	TRG	WQPL	CARBONATE AS CACO3	10.0	MG/L		U	10 0								
SW038	SW	REAL	SW01347WC	25-JUL-91	N	TRG	WQPL	CHLORIDE	39 8	MG/L			5 0								
SW038	SW	REAL	SW01347WC	25-JUL-91	N	TRG	WQPL	CYANIDE	10 0	UG/L		U	10 0								
SW038	SW	REAL	SW01347WC	25-JUL-91	N	TRG	WQPL	FLUORIDE, SOLUBLE	0 51	MG/L			0.10								
SW038	SW	REAL	SW01347WC	25-JUL-91	N	TRG	WQPL	NITRATE/NITRITE	1 2	MG/L			0.10								
SW038	SW	REAL	SW01347WC	25-JUL-91	N	TRG	WQPL	NITRITE	0.020	MG/L		U	0.020								
SW038	SW	REAL	SW01347WC	25-JUL-91	N	TRG	WQPL	OIL AND GREASE	6 2	MG/L			5 8								
SW038	SW	REAL	SW01347WC	25-JUL-91	N	TRG	WQPL	ORTHOPHOSPHATE	0 050	MG/L		U	0.050								
SW038	SW	REAL	SW01347WC	25-JUL-91	N	TRG	WQPL	PHOSPHORUS	0 050	MG/L		U	0 050								
SW038	SW	REAL	SW01347WC	25-JUL-91	N	TRG	WQPL	SOLIDS, NONVOLATILE SUSPENDED	5.0	MG/L		U	5 0								
SW038	SW	REAL	SW01347WC	25-JUL-91	N	TRG	WQPL	SULFATE	25 2	MG/L			10 0								
SW038	SW	REAL	SW01347WC	25-JUL-91	N	TRG	WQPL	SULFIDE	1 0	MG/L		U	1 0								
SW038	SW	REAL	SW01347WC	25-JUL-91	N	TRG	WQPL	TOTAL DISSOLVED SOLIDS	348	MG/L			10 0								
SW038	SW	REAL	SW01453WC	28-AUG-91	N	TRG	WQPL	BICARBONATE AS CACO3	217	MG/L			10 0								
SW038	SW	REAL	SW01453WC	28-AUG-91	N	TRG	WQPL	CARBONATE AS CACO3	10 0	MG/L		U	10 0								
SW038	SW	REAL	SW01453WC	28-AUG-91	N	TRG	WQPL	CHLORIDE	39 6	MG/L			5 0								
SW038	SW	REAL	SW01453WC	28-AUG-91	N	TRG	WQPL	CYANIDE	10.0	UG/L		U	10 0								
SW038	SW	REAL	SW01453WC	28-AUG-91	N	TRG	WQPL	CYANIDES (SOLUBLE SALTS AND CO	10 0	UG/L		U	10 0								
SW038	SW	REAL	SW01453WC	28-AUG-91	N	TRG	WQPL	DISSOLVED ORGANIC CARBON	2	MG/L			1								
SW038	SW	REAL	SW01453WC	28-AUG-91	N	TRG	WQPL	FLUORIDE, SOLUBLE	0 48	MG/L			0 10								
SW038	SW	REAL	SW01453WC	28-AUG-91	N	TRG	WQPL	NITRATE/NITRITE	1 4	MG/L			0.10								
SW038	SW	REAL	SW01453WC	28-AUG-91	N	TRG	WQPL	NITRITE	0 020	MG/L		U	0 020								
SW038	SW	REAL	SW01453WC	28-AUG-91	N	TRG	WQPL	OIL AND GREASE	5 3	MG/L		U	5 3								
SW038	SW	REAL	SW01453WC	28-AUG-91	N	TRG	WQPL	ORTHOPHOSPHATE	0 050	MG/L		U	0 050								
SW038	SW	REAL	SW01453WC	28-AUG-91	N	TRG	WQPL	PHOSPHORUS	0 050	MG/L		U	0 050								
SW038	SW	REAL	SW01453WC	28-AUG-91	N	TRG	WQPL	SOLIDS, NONVOLATILE SUSPENDED	14 0	MG/L			5 0								
SW038	SW	REAL	SW01453WC	28-AUG-91	N	TRG	WQPL	SULFATE	24 0	MG/L			5 0								
SW038	SW	REAL	SW01453WC	28-AUG-91	N	TRG	WQPL	SULFIDE	1.0	MG/L		U	1 0								
SW038	SW	REAL	SW01453WC	28-AUG-91	N	TRG	WQPL	TOTAL DISSOLVED SOLIDS	326	MG/L			10 0								
SW038	SW	REAL	SW01453WC	28-AUG-91	N	TRG	WQPL	TOTAL ORGANIC CARBON	3	MG/L			1								
SW038	SW	REAL	SW01453WC	28-AUG-91	N	TRG	WQPL	TOTAL SOLIDS	14.0	MG/L			5 0								
SW038	SW	REAL	SW01559WC	18-SEP-91	N	TRG	WQPL	BICARBONATE AS CACO3	223	MG/L			10.0								
SW038	SW	REAL	SW01559WC	18-SEP-91	N	TRG	WQPL	CARBONATE AS CACO3	10.0	MG/L		U	10 0								
SW038	SW	REAL	SW01559WC	18-SEP-91	N	TRG	WQPL	CHLORIDE	37.1	MG/L			5 0								
SW038	SW	REAL	SW01559WC	18-SEP-91	N	TRG	WQPL	CYANIDES (SOLUBLE SALTS AND CO	10 0	UG/L		U	10 0								
SW038	SW	REAL	SW01559WC	18-SEP-91	N	TRG	WQPL	DISSOLVED ORGANIC CARBON	1	MG/L			1								
SW038	SW	REAL	SW01559WC	18-SEP-91	N	TRG	WQPL	FLUORIDE, SOLUBLE	0 57	MG/L			0 50								
SW038	SW	REAL	SW01559WC	18-SEP-91	N	TRG	WQPL	NITRATE/NITRITE	1.1	MG/L			0 10								
SW038	SW	REAL	SW01559WC	18-SEP-91	N	TRG	WQPL	NITRITE	0.020	MG/L		U	0 020								
SW038	SW	REAL	SW01559WC	18-SEP-91	N	TRG	WQPL	OIL AND GREASE	5.4	MG/L		U	5 4								
SW038	SW	REAL	SW01559WC	18-SEP-91	N	TRG	WQPL	ORTHOPHOSPHATE	0.050	MG/L		U	0 050								
SW038	SW	REAL	SW01559WC	18-SEP-91	N	TRG	WQPL	PHOSPHORUS	0.050	MG/L		U	0 050								
SW038	SW	REAL	SW01559WC	18-SEP-91	N	TRG	WQPL	SULFATE	20 7	MG/L			5 0								
SW038	SW	REAL	SW01559WC	18-SEP-91	N	TRG	WQPL	SULFIDE	1.0	MG/L		U	1 0								
SW038	SW	REAL	SW01559WC	18-SEP-91	N	TRG	WQPL	TOTAL DISSOLVED SOLIDS	344	MG/L			10.0								
SW038	SW	REAL	SW01559WC	18-SEP-91	N	TRG	WQPL	TOTAL ORGANIC CARBON	3	MG/L			1								
SW038	SW	REAL	SW01559WC	18-SEP-91	N	TRG	WQPL	TOTAL SOLIDS	6 0	MG/L			5.0								
SW038	SW	REAL	SW01665WC	23-OCT-91	N	TRG	PSTCLPTCL	4,4'-DDD	0 10	UG/L		U	0 100								

Location	ST	QC	Sample Number	Smpl Date	D	ID	Group	Chemical	Result	Unit	Error	Qual	D LMT	VA	RN1	RN2	RN3	RN4	VResult	VQual	VDEI
SW038	SW	REAL	SW01665WC	23-OCT-91	N	TRG	PSTCLPTCL	4,4'-DDE	0 10	UG/L		U	0 100								
SW038	SW	REAL	SW01665WC	23-OCT-91	N	TRG	PSTCLPTCL	4,4'-DDT	0 10	UG/L		U	0 100								
SW038	SW	REAL	SW01665WC	23-OCT-91	N	TRG	PSTCLPTCL	ALDRIN	0 050	UG/L		U	0 050								
SW038	SW	REAL	SW01665WC	23-OCT-91	N	TRG	PSTCLPTCL	AROCLOR-1016	0 50	UG/L		U	0 500								
SW038	SW	REAL	SW01665WC	23-OCT-91	N	TRG	PSTCLPTCL	AROCLOR-1221	0 50	UG/L		U	0 500								
SW038	SW	REAL	SW01665WC	23-OCT-91	N	TRG	PSTCLPTCL	AROCLOR-1232	0 50	UG/L		U	0 500								
SW038	SW	REAL	SW01665WC	23-OCT-91	N	TRG	PSTCLPTCL	AROCLOR-1242	0 50	UG/L		U	0 500								
SW038	SW	REAL	SW01665WC	23-OCT-91	N	TRG	PSTCLPTCL	AROCLOR-1248	0.50	UG/L		U	0.500								
SW038	SW	REAL	SW01665WC	23-OCT-91	N	TRG	PSTCLPTCL	AROCLOR-1254	1 0	UG/L		U	1.000								
SW038	SW	REAL	SW01665WC	23-OCT-91	N	TRG	PSTCLPTCL	AROCLOR-1260	1 0	UG/L		U	1 000								
SW038	SW	REAL	SW01665WC	23-OCT-91	N	TRG	PSTCLPTCL	DIELDRIN	0 10	UG/L		U	0 100								
SW038	SW	REAL	SW01665WC	23-OCT-91	N	TRG	PSTCLPTCL	ENDOSULFAN I	0.050	UG/L		U	0 050								
SW038	SW	REAL	SW01665WC	23-OCT-91	N	TRG	PSTCLPTCL	ENDOSULFAN II	0 10	UG/L		U	0 100								
SW038	SW	REAL	SW01665WC	23-OCT-91	N	TRG	PSTCLPTCL	ENDOSULFAN SULFATE	0 10	UG/L		U	0 100								
SW038	SW	REAL	SW01665WC	23-OCT-91	N	TRG	PSTCLPTCL	ENDRIN	0 10	UG/L		U	0 100								
SW038	SW	REAL	SW01665WC	23-OCT-91	N	TRG	PSTCLPTCL	ENDRIN KETONE	0 10	UG/L		U	0.100								
SW038	SW	REAL	SW01665WC	23-OCT-91	N	TRG	PSTCLPTCL	HEPTACHLOR	0.050	UG/L		U	0 050								
SW038	SW	REAL	SW01665WC	23-OCT-91	N	TRG	PSTCLPTCL	HEPTACHLOR EPOXIDE	0 050	UG/L		U	0 050								
SW038	SW	REAL	SW01665WC	23-OCT-91	N	TRG	PSTCLPTCL	METHOXYCHLOR	0 50	UG/L		U	0 500								
SW038	SW	REAL	SW01665WC	23-OCT-91	N	TRG	PSTCLPTCL	TOXAPHENE	1 0	UG/L		U	1 000								
SW038	SW	REAL	SW01665WC	23-OCT-91	N	TRG	PSTCLPTCL	alpha-BHC	0 050	UG/L		U	0 050								
SW038	SW	REAL	SW01665WC	23-OCT-91	N	TRG	PSTCLPTCL	alpha-CHLORDANE	0.50	UG/L		U	0.500								
SW038	SW	REAL	SW01665WC	23-OCT-91	N	TRG	PSTCLPTCL	beta-BHC	0.050	UG/L		U	0 050								
SW038	SW	REAL	SW01665WC	23-OCT-91	N	TRG	PSTCLPTCL	delta-BHC	0 050	UG/L		U	0 050								
SW038	SW	REAL	SW01665WC	23-OCT-91	N	TRG	PSTCLPTCL	gamma-BHC (LINDANE)	0 050	UG/L		U	0.050								
SW038	SW	REAL	SW01665WC	23-OCT-91	N	TRG	PSTCLPTCL	gamma-CHLORDANE	0 50	UG/L		U	0 500								
SW038	SW	REAL	SW01665WC	23-OCT-91	N	TRG	WQPL	BICARBONATE AS CACO3	220	MG/L			1 0								
SW038	SW	REAL	SW01665WC	23-OCT-91	N	TRG	WQPL	CARBONATE AS CACO3	1	MG/L		U	1 0								
SW038	SW	REAL	SW01665WC	23-OCT-91	N	TRG	WQPL	CHLORIDE	40	MG/L			0 2								
SW038	SW	REAL	SW01665WC	23-OCT-91	N	TRG	WQPL	DISSOLVED ORGANIC CARBON	1	MG/L		U	1								
SW038	SW	REAL	SW01665WC	23-OCT-91	N	TRG	WQPL	FLUORIDE	0 6	MG/L			0.1								
SW038	SW	REAL	SW01665WC	23-OCT-91	N	TRG	WQPL	NITRATE/NITRITE	1 3	MG/L			0 05								
SW038	SW	REAL	SW01665WC	23-OCT-91	N	TRG	WQPL	OIL AND GREASE	1.6	MG/L			0 2								
SW038	SW	REAL	SW01665WC	23-OCT-91	N	TRG	WQPL	ORTHOPHOSPHATE	0.02	MG/L		U	0.02								
SW038	SW	REAL	SW01665WC	23-OCT-91	N	TRG	WQPL	PHOSPHORUS	0 03	MG/L			0 02								
SW038	SW	REAL	SW01665WC	23-OCT-91	N	TRG	WQPL	SILICA, DISSOLVED	9 1	MG/L			0 4								
SW038	SW	REAL	SW01665WC	23-OCT-91	N	TRG	WQPL	SULFATE	29	MG/L			2 0								
SW038	SW	REAL	SW01665WC	23-OCT-91	N	TRG	WQPL	SULFIDE	1	MG/L		U	2 0								
SW038	SW	REAL	SW01665WC	23-OCT-91	N	TRG	WQPL	TOTAL DISSOLVED SOLIDS	340	MG/L			10 0								
SW038	SW	REAL	SW01665WC	23-OCT-91	N	TRG	WQPL	TOTAL ORGANIC CARBON	2	MG/L			1								
SW038	SW	REAL	SW01665WC	23-OCT-91	N	TRG	WQPL	TOTAL SUSPENDED SOLIDS	13	MG/L			4 0								
SW038	SW	REAL	SW01716WC	07-NOV-91	N	TRG	WQPL	DISSOLVED ORGANIC CARBON	1	MG/L			1								
SW038	SW	REAL	SW01716WC	07-NOV-91	N	TRG	WQPL	TOTAL ORGANIC CARBON	2	MG/L			1								
SW093	SW	LR	SW00961WCLR	14-MAR-91	N																
SW093	SW	REAL	SW00755WC	30-JAN-91	N																
SW093	SW	REAL	SW00858WC	20-FEB-91	N																
SW093	SW	REAL	SW00961WC	14-MAR-91	N																
SW093	SW	REAL	SW01063WC	15-APR-91	N	TRG	PSTCLPTCL	4,4'-DDD	0.10	UG/L		U	0.10								
SW093	SW	REAL	SW01063WC	15-APR-91	N	TRG	PSTCLPTCL	4,4'-DDE	0 10	UG/L		U	0 10								
SW093	SW	REAL	SW01063WC	15-APR-91	N	TRG	PSTCLPTCL	4,4'-DDT	0.10	UG/L		U	0.10								
SW093	SW	REAL	SW01063WC	15-APR-91	N	TRG	PSTCLPTCL	ALDRIN	0 052	UG/L		U	0.052								
SW093	SW	REAL	SW01063WC	15-APR-91	N	TRG	PSTCLPTCL	AROCLOR-1016	0.52	UG/L		U	0 52								
SW093	SW	REAL	SW01063WC	15-APR-91	N	TRG	PSTCLPTCL	AROCLOR-1221	0.52	UG/L		U	0.52								
SW093	SW	REAL	SW01063WC	15-APR-91	N	TRG	PSTCLPTCL	AROCLOR-1232	0 52	UG/L		U	0.52								
SW093	SW	REAL	SW01063WC	15-APR-91	N	TRG	PSTCLPTCL	AROCLOR-1242	0.52	UG/L		U	0.52								
SW093	SW	REAL	SW01063WC	15-APR-91	N	TRG	PSTCLPTCL	AROCLOR-1248	0.52	UG/L		U	0.52								
SW093	SW	REAL	SW01063WC	15-APR-91	N	TRG	PSTCLPTCL	AROCLOR-1254	1.0	UG/L		U	1 0								
SW093	SW	REAL	SW01063WC	15-APR-91	N	TRG	PSTCLPTCL	AROCLOR-1260	1.0	UG/L		U	1.0								
SW093	SW	REAL	SW01063WC	15-APR-91	N	TRG	PSTCLPTCL	DIELDRIN	0.10	UG/L		U	0.10								
SW093	SW	REAL	SW01063WC	15-APR-91	N	TRG	PSTCLPTCL	ENDOSULFAN I	0 052	UG/L		U	0.052								
SW093	SW	REAL	SW01063WC	15-APR-91	N	TRG	PSTCLPTCL	ENDOSULFAN II	0.10	UG/L		U	0.10								
SW093	SW	REAL	SW01063WC	15-APR-91	N	TRG	PSTCLPTCL	ENDOSULFAN SULFATE	0.10	UG/L		U	0.10								
SW093	SW	REAL	SW01063WC	15-APR-91	N	TRG	PSTCLPTCL	ENDRIN	0.10	UG/L		U	0.10								

Location	ST	QC	Sample Number	Smpl Date	D	ID	Group	Chemical	Result	Unit	Error	Qual	D.LMT	VA	RN1	RN2	RN3	RN4	VResult	VQual	VDET
SW093	SW	REAL	SW01063WC	15-APR-91	N	TRG	PSTCLPTCL	ENDRIN KETONE	0.10	UG/L		U	0 10								
SW093	SW	REAL	SW01063WC	15-APR-91	N	TRG	PSTCLPTCL	HEPTACHLOR	0 052	UG/L		U	0 052								
SW093	SW	REAL	SW01063WC	15-APR-91	N	TRG	PSTCLPTCL	HEPTACHLOR EPOXIDE	0 052	UG/L		U	0.052								
SW093	SW	REAL	SW01063WC	15-APR-91	N	TRG	PSTCLPTCL	METHOXYCHLOR	0 52	UG/L		U	0.52								
SW093	SW	REAL	SW01063WC	15-APR-91	N	TRG	PSTCLPTCL	TOXAPHENE	1.0	UG/L		U	1.0								
SW093	SW	REAL	SW01063WC	15-APR-91	N	TRG	PSTCLPTCL	alpha-BHC	0.052	UG/L		U	0.052								
SW093	SW	REAL	SW01063WC	15-APR-91	N	TRG	PSTCLPTCL	alpha-CHLORDANE	0 52	UG/L		U	0 52								
SW093	SW	REAL	SW01063WC	15-APR-91	N	TRG	PSTCLPTCL	beta-BHC	0 052	UG/L		U	0 052								
SW093	SW	REAL	SW01063WC	15-APR-91	N	TRG	PSTCLPTCL	delta-BHC	0.052	UG/L		U	0.052								
SW093	SW	REAL	SW01063WC	15-APR-91	N	TRG	PSTCLPTCL	gamma-BHC (LINDANE)	0 052	UG/L		U	0 052								
SW093	SW	REAL	SW01063WC	15-APR-91	N	TRG	PSTCLPTCL	gamma-CHLORDANE	0 52	UG/L		U	0 52								
SW093	SW	REAL	SW01063WC	15-APR-91	N	TRG	WQPL	BICARBONATE AS CACO3	119	MG/L			10 0								
SW093	SW	REAL	SW01063WC	15-APR-91	N	TRG	WQPL	CARBONATE AS CACO3	10 0	MG/L		U	10 0								
SW093	SW	REAL	SW01063WC	15-APR-91	N	TRG	WQPL	CBOD5	7 5	MG/L			1.0								
SW093	SW	REAL	SW01063WC	15-APR-91	N	TRG	WQPL	CBOD5	7 6	MG/L			1 0								
SW093	SW	REAL	SW01063WC	15-APR-91	N	TRG	WQPL	CHLORIDE	60 6	MG/L			5 0								
SW093	SW	REAL	SW01063WC	15-APR-91	N	TRG	WQPL	CYANIDE	10 0	UG/L		U	10 0								
SW093	SW	REAL	SW01063WC	15-APR-91	N	TRG	WQPL	FLUORIDE, SOLUBLE	0 36	MG/L			0.10								
SW093	SW	REAL	SW01063WC	15-APR-91	N	TRG	WQPL	NITRATE/NITRITE	1 4	MG/L			0 10								
SW093	SW	REAL	SW01063WC	15-APR-91	N	TRG	WQPL	NITRITE	0 020	MG/L		U	0 020								
SW093	SW	REAL	SW01063WC	15-APR-91	N	TRG	WQPL	OIL AND GREASE	5 3	MG/L		U	5 3								
SW093	SW	REAL	SW01063WC	15-APR-91	N	TRG	WQPL	ORTHOPHOSPHATE	0 050	MG/L		U	0 050								
SW093	SW	REAL	SW01063WC	15-APR-91	N	TRG	WQPL	PHOSPHORUS	0 050	MG/L		U	0 050								
SW093	SW	REAL	SW01063WC	15-APR-91	N	TRG	WQPL	SOLIDS, NONVOLATILE SUSPENDED	6 0	MG/L			5.0								
SW093	SW	REAL	SW01063WC	15-APR-91	N	TRG	WQPL	SULFATE	26.7	MG/L			5 0								
SW093	SW	REAL	SW01063WC	15-APR-91	N	TRG	WQPL	SULFIDE	1 0	MG/L		U	1 0								
SW093	SW	REAL	SW01063WC	15-APR-91	N	TRG	WQPL	TOTAL DISSOLVED SOLIDS	274	MG/L			10 0								
SW093	SW	REAL	SW01063WC	15-APR-91	N	TRG	WQPL	TOTAL ORGANIC CARBON	5 2	MG/L			1 0								
SW093	SW	REAL	SW01063WC	15-APR-91	N	TRG	WQPL	TOTAL ORGANIC CARBON	5 3	MG/L			1 0								
SW093	SW	REAL	SW01170WC	22-MAY-91	N																
SW093	SW	REAL	SW01273WC	26-JUN-91	N	TRG	WQPL	BICARBONATE AS CACO3	292	MG/L			10 0								
SW093	SW	REAL	SW01273WC	26-JUN-91	N	TRG	WQPL	CARBONATE AS CACO3	10.0	MG/L		U	10 0								
SW093	SW	REAL	SW01273WC	26-JUN-91	N	TRG	WQPL	CHLORIDE	49.8	MG/L			5.0								
SW093	SW	REAL	SW01273WC	26-JUN-91	N	TRG	WQPL	CYANIDE	10 0	UG/L		U	10 0								
SW093	SW	REAL	SW01273WC	26-JUN-91	N	TRG	WQPL	FLUORIDE, SOLUBLE	0.52	MG/L			0.10								
SW093	SW	REAL	SW01273WC	26-JUN-91	N	TRG	WQPL	NITRATE/NITRITE	2 2	MG/L			0 20								
SW093	SW	REAL	SW01273WC	26-JUN-91	N	TRG	WQPL	NITRITE	0.020	MG/L		U	0 020								
SW093	SW	REAL	SW01273WC	26-JUN-91	N	TRG	WQPL	OIL AND GREASE	5.8	MG/L		U	5 8								
SW093	SW	REAL	SW01273WC	26-JUN-91	N	TRG	WQPL	ORTHOPHOSPHATE	0 050	MG/L		U	0 050								
SW093	SW	REAL	SW01273WC	26-JUN-91	N	TRG	WQPL	PHOSPHORUS	0.050	MG/L		U	0 050								
SW093	SW	REAL	SW01273WC	26-JUN-91	N	TRG	WQPL	SOLIDS, NONVOLATILE SUSPENDED	9 0	MG/L			5 0								
SW093	SW	REAL	SW01273WC	26-JUN-91	N	TRG	WQPL	SULFATE	43 6	MG/L			10 0								
SW093	SW	REAL	SW01273WC	26-JUN-91	N	TRG	WQPL	SULFIDE	1.0	MG/L		U	1 0								
SW093	SW	REAL	SW01273WC	26-JUN-91	N	TRG	WQPL	TOTAL DISSOLVED SOLIDS	458	MG/L			10.0								
SW093	SW	REAL	SW01376WC	29-JUL-91	N	TRG	WQPL	BICARBONATE AS CACO3	272	MG/L			10 0								
SW093	SW	REAL	SW01376WC	29-JUL-91	N	TRG	WQPL	CARBONATE AS CACO3	10.0	MG/L		U	10 0								
SW093	SW	REAL	SW01376WC	29-JUL-91	N	TRG	WQPL	CHLORIDE	46 3	MG/L			5 0								
SW093	SW	REAL	SW01376WC	29-JUL-91	N	TRG	WQPL	CYANIDE	10 0	UG/L		U	10 0								
SW093	SW	REAL	SW01376WC	29-JUL-91	N	TRG	WQPL	FLUORIDE, SOLUBLE	0.49	MG/L			0 10								
SW093	SW	REAL	SW01376WC	29-JUL-91	N	TRG	WQPL	NITRATE/NITRITE	1.8	MG/L			0 10								
SW093	SW	REAL	SW01376WC	29-JUL-91	N	TRG	WQPL	NITRITE	0.020	MG/L		U	0 020								
SW093	SW	REAL	SW01376WC	29-JUL-91	N	TRG	WQPL	OIL AND GREASE	7.2	MG/L			5.2								
SW093	SW	REAL	SW01376WC	29-JUL-91	N	TRG	WQPL	ORTHOPHOSPHATE	0.050	MG/L		U	0 050								
SW093	SW	REAL	SW01376WC	29-JUL-91	N	TRG	WQPL	PHOSPHORUS	0.050	MG/L		U	0 050								
SW093	SW	REAL	SW01376WC	29-JUL-91	N	TRG	WQPL	SOLIDS, NONVOLATILE SUSPENDED	5.0	MG/L		U	5.0								
SW093	SW	REAL	SW01376WC	29-JUL-91	N	TRG	WQPL	SULFATE	43.4	MG/L			10.0								
SW093	SW	REAL	SW01376WC	29-JUL-91	N	TRG	WQPL	SULFIDE	1.0	MG/L		U	1 0								
SW093	SW	REAL	SW01376WC	29-JUL-91	N	TRG	WQPL	TOTAL DISSOLVED SOLIDS	422	MG/L			10.0								
SW093	SW	REAL	SW01482WC	14-AUG-91	N	TRG	WQPL	BICARBONATE AS CACO3	282	MG/L			10 0								
SW093	SW	REAL	SW01482WC	14-AUG-91	N	TRG	WQPL	CARBONATE AS CACO3	10.0	MG/L		U	10.0								
SW093	SW	REAL	SW01482WC	14-AUG-91	N	TRG	WQPL	CHLORIDE	45.6	MG/L			5 0								
SW093	SW	REAL	SW01482WC	14-AUG-91	N	TRG	WQPL	CYANIDE	10.0	UG/L		U	10.0								
SW093	SW	REAL	SW01482WC	14-AUG-91	N	TRG	WQPL	DISSOLVED ORGANIC CARBON	3	MG/L			1								

Location	ST	QC	Sample Number	Smpl Date	D	ID	Group	Chemical	Result	Unit	Error	Qual	D LMT	VA	RN1	RN2	RN3	RN4	VResult	VQual	VDET
SW093	SW	REAL	SW01482WC	14-AUG-91	N	TRG	WQPL	FLUORIDE, SOLUBLE	0 52	MG/L			0 10								
SW093	SW	REAL	SW01482WC	14-AUG-91	N	TRG	WQPL	NITRATE/NITRITE	2.2	MG/L			0 20								
SW093	SW	REAL	SW01482WC	14-AUG-91	N	TRG	WQPL	NITRITE	0 020	MG/L		U	0 020								
SW093	SW	REAL	SW01482WC	14-AUG-91	N	TRG	WQPL	OIL AND GREASE	11 6	MG/L		U	11 6								
SW093	SW	REAL	SW01482WC	14-AUG-91	N	TRG	WQPL	ORTHOPHOSPHATE	0 050	MG/L		U	0 050								
SW093	SW	REAL	SW01482WC	14-AUG-91	N	TRG	WQPL	PHOSPHORUS	0 050	MG/L		U	0.050								
SW093	SW	REAL	SW01482WC	14-AUG-91	N	TRG	WQPL	SOLIDS, NONVOLATILE SUSPENDED	5 0	MG/L		U	5 0								
SW093	SW	REAL	SW01482WC	14-AUG-91	N	TRG	WQPL	SULFATE	35 5	MG/L			5 0								
SW093	SW	REAL	SW01482WC	14-AUG-91	N	TRG	WQPL	SULFIDE	1 0	MG/L		U	1 0								
SW093	SW	REAL	SW01482WC	14-AUG-91	N	TRG	WQPL	TOTAL DISSOLVED SOLIDS	412	MG/L			10 0								
SW093	SW	REAL	SW01482WC	14-AUG-91	N	TRG	WQPL	TOTAL ORGANIC CARBON	5	MG/L			1								
SW093	SW	REAL	SW01588WC	19-SEP-91	N	TRG	WQPL	BICARBONATE AS CACO3	156	MG/L			10 0								
SW093	SW	REAL	SW01588WC	19-SEP-91	N	TRG	WQPL	CARBONATE AS CACO3	10 0	MG/L		U	10 0								
SW093	SW	REAL	SW01588WC	19-SEP-91	N	TRG	WQPL	CHLORIDE	23 3	MG/L			5.0								
SW093	SW	REAL	SW01588WC	19-SEP-91	N	TRG	WQPL	CYANIDES (SOLUBLE SALTS AND CO	10.0	UG/L		U	10 0								
SW093	SW	REAL	SW01588WC	19-SEP-91	N	TRG	WQPL	DISSOLVED ORGANIC CARBON	3	MG/L			1								
SW093	SW	REAL	SW01588WC	19-SEP-91	N	TRG	WQPL	FLUORIDE, SOLUBLE	0 40	MG/L			0 10								
SW093	SW	REAL	SW01588WC	19-SEP-91	N	TRG	WQPL	NITRATE/NITRITE	4.3	MG/L			0 50								
SW093	SW	REAL	SW01588WC	19-SEP-91	N	TRG	WQPL	NITRITE	0.020	MG/L		U	0 020								
SW093	SW	REAL	SW01588WC	19-SEP-91	N	TRG	WQPL	OIL AND GREASE	6 1	MG/L		U	6 1								
SW093	SW	REAL	SW01588WC	19-SEP-91	N	TRG	WQPL	ORTHOPHOSPHATE	0 050	MG/L		U	0 050								
SW093	SW	REAL	SW01588WC	19-SEP-91	N	TRG	WQPL	PHOSPHORUS	0 050	MG/L		U	0 050								
SW093	SW	REAL	SW01588WC	19-SEP-91	N	TRG	WQPL	SULFATE	38 2	MG/L			10 0								
SW093	SW	REAL	SW01588WC	19-SEP-91	N	TRG	WQPL	SULFIDE	1 0	MG/L		U	1 0								
SW093	SW	REAL	SW01588WC	19-SEP-91	N	TRG	WQPL	TOTAL DISSOLVED SOLIDS	266	MG/L			10 0								
SW093	SW	REAL	SW01588WC	19-SEP-91	N	TRG	WQPL	TOTAL ORGANIC CARBON	3	MG/L			1								
SW093	SW	REAL	SW01588WC	19-SEP-91	N	TRG	WQPL	TOTAL SOLIDS	30 0	MG/L			5 0								
SW093	SW	REAL	SW01694WC	28-OCT-91	N	TRG	WQPL	DISSOLVED ORGANIC CARBON	2	MG/L			1								
SW093	SW	REAL	SW01694WC	28-OCT-91	N	TRG	WQPL	TOTAL ORGANIC CARBON	3	MG/L			1								
SW093	SW	REAL	SW60065WC	19-MAR-91	N																
SW093	SW	REAL	SW60093WC	17-MAY-91	N	TRG	WQPL	ALKALINITY AS CACO3	115	MG/L			10								
SW093	SW	REAL	SW60093WC	17-MAY-91	N	TRG	WQPL	BICARBONATE	115	MG/L			10								
SW093	SW	REAL	SW60093WC	17-MAY-91	N	TRG	WQPL	CARBONATE AS CACO3	10	MG/L		U	10								
SW093	SW	REAL	SW60093WC	17-MAY-91	N	TRG	WQPL	CHLORIDE	43	MG/L			2								
SW093	SW	REAL	SW60093WC	17-MAY-91	N	TRG	WQPL	FLUORIDE	0 5	MG/L		U	0 5								
SW093	SW	REAL	SW60093WC	17-MAY-91	N	TRG	WQPL	NITRATE/NITRITE	1.9	MG/L			0.1								
SW093	SW	REAL	SW60093WC	17-MAY-91	N	TRG	WQPL	NITRITE	0 09	MG/L			0 01								
SW093	SW	REAL	SW60093WC	17-MAY-91	N	TRG	WQPL	PHOSPHATE	0 02	MG/L			0 01								
SW093	SW	REAL	SW60093WC	17-MAY-91	N	TRG	WQPL	SILICON	3	MG/L			2								
SW093	SW	REAL	SW60093WC	17-MAY-91	N	TRG	WQPL	SULFATE	22	MG/L			10								
SW093	SW	REAL	SW60093WC	17-MAY-91	N	TRG	WQPL	TOTAL DISSOLVED SOLIDS	190	MG/L			2								
SW093	SW	REAL	SW60093WC	17-MAY-91	N	TRG	WQPL	TOTAL SUSPENDED SOLIDS	6	MG/L			2								
SW093	SW	REAL	SW60110WC	11-JUN-91	N	TRG	WQPL	BICARBONATE AS CACO3	50	MG/L			1 0								
SW093	SW	REAL	SW60110WC	11-JUN-91	N	TRG	WQPL	CARBONATE AS CACO3	1	MG/L		U	1.0								
SW093	SW	REAL	SW60110WC	11-JUN-91	N	TRG	WQPL	CHLORIDE	20	MG/L			0 2								
SW093	SW	REAL	SW60110WC	11-JUN-91	N	TRG	WQPL	FLUORIDE	0.2	MG/L			0 1								
SW093	SW	REAL	SW60110WC	11-JUN-91	N	TRG	WQPL	NITRATE/NITRITE	1 3	MG/L			0 02								
SW093	SW	REAL	SW60110WC	11-JUN-91	N	TRG	WQPL	NITRITE	0.08	MG/L			0.02								
SW093	SW	REAL	SW60110WC	11-JUN-91	N	TRG	WQPL	ORTHOPHOSPHATE	0 04	MG/L			0 01								
SW093	SW	REAL	SW60110WC	11-JUN-91	N	TRG	WQPL	SILICA, DISSOLVED	1.7	MG/L			0.4								
SW093	SW	REAL	SW60110WC	11-JUN-91	N	TRG	WQPL	SULFATE	8	MG/L			2 0								
SW093	SW	REAL	SW60110WC	11-JUN-91	N	TRG	WQPL	TOTAL DISSOLVED SOLIDS	140	MG/L			10 0								
SW093	SW	REAL	SW60110WC	11-JUN-91	N	TRG	WQPL	TOTAL SUSPENDED SOLIDS	1900	MG/L			4.0								
SW093	SW	REAL	SW60118WC	10-JUL-91	N																
SW093	SW	REAL	SW60123WC	23-JUL-91	N	TRG	WQPL	ALKALINITY AS CACO3	98	MG/L			10								
SW093	SW	REAL	SW60123WC	23-JUL-91	N	TRG	WQPL	BICARBONATE	98	MG/L			10								
SW093	SW	REAL	SW60123WC	23-JUL-91	N	TRG	WQPL	CARBONATE AS CACO3	10	MG/L		U	10								
SW093	SW	REAL	SW60123WC	23-JUL-91	N	TRG	WQPL	CHLORIDE	28	MG/L			2								
SW093	SW	REAL	SW60123WC	23-JUL-91	N	TRG	WQPL	FLUORIDE	0.5	MG/L		U	0 5								
SW093	SW	REAL	SW60123WC	23-JUL-91	N	TRG	WQPL	NITRATE/NITRITE	1 2	MG/L			0 1								
SW093	SW	REAL	SW60123WC	23-JUL-91	N	TRG	WQPL	NITRITE	0.04	MG/L			0 01								
SW093	SW	REAL	SW60123WC	23-JUL-91	N	TRG	WQPL	PHOSPHATE	0.04	MG/L			0.01								
SW093	SW	REAL	SW60123WC	23-JUL-91	N	TRG	WQPL	SULFATE	26	MG/L			10								

Location	ST	QC	Sample Number	Smpl Date	D	ID	Group	Chemical	Result	Unit	Error	Qual	D LMT	VA	RN1	RN2	RN3	RN4	VResult	VQual	VDET
SW093	SW	REAL	SW60123WC	23-JUL-91	N	TRG	WQPL	TOTAL DISSOLVED SOLIDS	196	MG/L			2								
SW093	SW	REAL	SW60123WC	23-JUL-91	N	TRG	WQPL	TOTAL SUSPENDED SOLIDS	13	MG/L			2								
SW093	SW	REAL	SW60131WC	29-JUL-91	N																
SW093	SW	REAL	SW60135WC	05-AUG-91	N																
SW093	SW	REAL	SW60143WC	07-AUG-91	N	TRG	WQPL	ALKALINITY AS CACO3	36	MG/L			10								
SW093	SW	REAL	SW60143WC	07-AUG-91	N	TRG	WQPL	BICARBONATE	36	MG/L			10								
SW093	SW	REAL	SW60143WC	07-AUG-91	N	TRG	WQPL	CARBONATE AS CACO3	10	MG/L		U	10								
SW093	SW	REAL	SW60143WC	07-AUG-91	N	TRG	WQPL	CHLORIDE	12	MG/L			2								
SW093	SW	REAL	SW60143WC	07-AUG-91	N	TRG	WQPL	FLUORIDE	0 5	MG/L		U	0 5								
SW093	SW	REAL	SW60143WC	07-AUG-91	N	TRG	WQPL	NITRATE/NITRITE	0 68	MG/L			0 05								
SW093	SW	REAL	SW60143WC	07-AUG-91	N	TRG	WQPL	NITRITE	0 03	MG/L			0 01								
SW093	SW	REAL	SW60143WC	07-AUG-91	N	TRG	WQPL	PHOSPHATE	0 01	MG/L		U	0 01								
SW093	SW	REAL	SW60143WC	07-AUG-91	N	TRG	WQPL	SULFATE	21	MG/L			10								
SW093	SW	REAL	SW60143WC	07-AUG-91	N	TRG	WQPL	TOTAL DISSOLVED SOLIDS	100	MG/L			10								
SW093	SW	REAL	SW60143WC	07-AUG-91	N	TRG	WQPL	TOTAL SUSPENDED SOLIDS	1170	MG/L			2								
SW093	SW	REAL	SW60150WC	12-AUG-91	N	TRG	WQPL	ALKALINITY AS CACO3	68	MG/L			10								
SW093	SW	REAL	SW60150WC	12-AUG-91	N	TRG	WQPL	BICARBONATE	68	MG/L			10								
SW093	SW	REAL	SW60150WC	12-AUG-91	N	TRG	WQPL	CARBONATE AS CACO3	10	MG/L		U	10								
SW093	SW	REAL	SW60150WC	12-AUG-91	N	TRG	WQPL	CHLORIDE	14	MG/L			2								
SW093	SW	REAL	SW60150WC	12-AUG-91	N	TRG	WQPL	FLUORIDE	0 5	MG/L		U	0 5								
SW093	SW	REAL	SW60150WC	12-AUG-91	N	TRG	WQPL	NITRATE/NITRITE	0.40	MG/L			0 05								
SW093	SW	REAL	SW60150WC	12-AUG-91	N	TRG	WQPL	NITRITE	0 04	MG/L			0 01								
SW093	SW	REAL	SW60150WC	12-AUG-91	N	TRG	WQPL	PHOSPHATE	0 01	MG/L		U	0 01								
SW093	SW	REAL	SW60150WC	12-AUG-91	N	TRG	WQPL	SULFATE	22	MG/L			10								
SW093	SW	REAL	SW60150WC	12-AUG-91	N	TRG	WQPL	TOTAL DISSOLVED SOLIDS	140	MG/L			10								
SW093	SW	REAL	SW60150WC	12-AUG-91	N	TRG	WQPL	TOTAL SUSPENDED SOLIDS	112	MG/L			2								
SW093	SW	REAL	SW60158WC	19-AUG-91	N	TRG	WQPL	ALKALINITY AS CACO3	72	MG/L			10								
SW093	SW	REAL	SW60158WC	19-AUG-91	N	TRG	WQPL	BICARBONATE	72	MG/L			10								
SW093	SW	REAL	SW60158WC	19-AUG-91	N	TRG	WQPL	CARBONATE AS CACO3	10	MG/L		U	10								
SW093	SW	REAL	SW60158WC	19-AUG-91	N	TRG	WQPL	CHLORIDE	19	MG/L			2								
SW093	SW	REAL	SW60158WC	19-AUG-91	N	TRG	WQPL	FLUORIDE	0 5	MG/L		U	0 5								
SW093	SW	REAL	SW60158WC	19-AUG-91	N	TRG	WQPL	NITRATE/NITRITE	1.07	MG/L			0 05								
SW093	SW	REAL	SW60158WC	19-AUG-91	N	TRG	WQPL	NITRITE	0.05	MG/L			0.01								
SW093	SW	REAL	SW60158WC	19-AUG-91	N	TRG	WQPL	PHOSPHATE	0 01	MG/L		U	0 01								
SW093	SW	REAL	SW60158WC	19-AUG-91	N	TRG	WQPL	SULFATE	19	MG/L			10								
SW093	SW	REAL	SW60158WC	19-AUG-91	N	TRG	WQPL	TOTAL DISSOLVED SOLIDS	152	MG/L			10								
SW093	SW	REAL	SW60158WC	19-AUG-91	N	TRG	WQPL	TOTAL SUSPENDED SOLIDS	398	MG/L			2								
SW093	SW		SW01694WC	28-OCT-91	N	TRG	WQPL	DISSOLVED ORGANIC CARBON	2	MG/L			1								
SW093	SW		SW01694WC	28-OCT-91	N	TRG	WQPL	TOTAL ORGANIC CARBON	3	MG/L			1								
SW118	SW	REAL	SW00765WC	30-JAN-91	N																
SW118	SW	REAL	SW00868WC	20-FEB-91	N																
SW118	SW	REAL	SW00971WC	21-MAR-91	N	TRG	WQPL	BICARBONATE AS CACO3	199	MG/L			10 0								
SW118	SW	REAL	SW00971WC	21-MAR-91	N	TRG	WQPL	CARBONATE AS CACO3	10.0	MG/L		U	10 0								
SW118	SW	REAL	SW00971WC	21-MAR-91	N	TRG	WQPL	CBOD5	6 0	MG/L			1.0								
SW118	SW	REAL	SW00971WC	21-MAR-91	N	TRG	WQPL	CHLORIDE	71.5	MG/L			5 0								
SW118	SW	REAL	SW00971WC	21-MAR-91	N	TRG	WQPL	CYANIDE	20.0	UG/L		U	20.0								
SW118	SW	REAL	SW00971WC	21-MAR-91	N	TRG	WQPL	FLUORIDE, SOLUBLE	0 51	MG/L			0.10								
SW118	SW	REAL	SW00971WC	21-MAR-91	N	TRG	WQPL	NITRATE/NITRITE	0.11	MG/L			0 10								
SW118	SW	REAL	SW00971WC	21-MAR-91	N	TRG	WQPL	NITRITE	0 020	MG/L		U	0.020								
SW118	SW	REAL	SW00971WC	21-MAR-91	N	TRG	WQPL	OIL AND GREASE	8.2	MG/L		U	8 2								
SW118	SW	REAL	SW00971WC	21-MAR-91	N	TRG	WQPL	ORTHOPHOSPHATE	0 050	MG/L		U	0.050								
SW118	SW	REAL	SW00971WC	21-MAR-91	N	TRG	WQPL	PHOSPHORUS	0 050	MG/L		U	0.050								
SW118	SW	REAL	SW00971WC	21-MAR-91	N	TRG	WQPL	SOLIDS, NONVOLATILE SUSPENDED	5 0	MG/L		U	5 0								
SW118	SW	REAL	SW00971WC	21-MAR-91	N	TRG	WQPL	SULFATE	25 5	MG/L			5.0								
SW118	SW	REAL	SW00971WC	21-MAR-91	N	TRG	WQPL	SULFIDE	1.0	MG/L		U	1.0								
SW118	SW	REAL	SW00971WC	21-MAR-91	N	TRG	WQPL	TOTAL DISSOLVED SOLIDS	352	MG/L			10 0								
SW118	SW	REAL	SW00971WC	21-MAR-91	N	TRG	WQPL	TOTAL ORGANIC CARBON	4.3	MG/L			1.0								
SW118	SW	REAL	SW00971WC	21-MAR-91	N	TRG	WQPL	TOTAL ORGANIC CARBON	4.9	MG/L			1.0								
SW118	SW	REAL	SW01073WC	10-APR-91	N	TRG	PSTCLPTCL	4,4'-DDD	0.10	UG/L		U	0.10								
SW118	SW	REAL	SW01073WC	10-APR-91	N	TRG	PSTCLPTCL	4,4'-DDE	0.10	UG/L		U	0.10								
SW118	SW	REAL	SW01073WC	10-APR-91	N	TRG	PSTCLPTCL	4,4'-DDT	0.10	UG/L		U	0.10								
SW118	SW	REAL	SW01073WC	10-APR-91	N	TRG	PSTCLPTCL	ALDRIN	0.050	UG/L		U	0.050								
SW118	SW	REAL	SW01073WC	10-APR-91	N	TRG	PSTCLPTCL	AROCLOR-1016	0 50	UG/L		U	0.50								

Location	ST	QC	Sample Number	Smpl Date	D	ID	Group	Chemical	Result	Unit	Error	Qual	D LMT	VA	RN1	RN2	RN3	RN4	VResult	VQual	VDET
SW118	SW	REAL	SW01073WC	10-APR-91	N	TRG	PSTCLPTCL	AROCLOR-1221	0 50	UG/L		U	0 50								
SW118	SW	REAL	SW01073WC	10-APR-91	N	TRG	PSTCLPTCL	AROCLOR-1232	0.50	UG/L		U	0 50								
SW118	SW	REAL	SW01073WC	10-APR-91	N	TRG	PSTCLPTCL	AROCLOR-1242	0 50	UG/L		U	0 50								
SW118	SW	REAL	SW01073WC	10-APR-91	N	TRG	PSTCLPTCL	AROCLOR-1248	0.50	UG/L		U	0 50								
SW118	SW	REAL	SW01073WC	10-APR-91	N	TRG	PSTCLPTCL	AROCLOR-1254	1 0	UG/L		U	1 0								
SW118	SW	REAL	SW01073WC	10-APR-91	N	TRG	PSTCLPTCL	AROCLOR-1260	1.0	UG/L		U	1 0								
SW118	SW	REAL	SW01073WC	10-APR-91	N	TRG	PSTCLPTCL	DIELDRIN	0 10	UG/L		U	0 10								
SW118	SW	REAL	SW01073WC	10-APR-91	N	TRG	PSTCLPTCL	ENDOSULFAN I	0 050	UG/L		U	0 050								
SW118	SW	REAL	SW01073WC	10-APR-91	N	TRG	PSTCLPTCL	ENDOSULFAN II	0.10	UG/L		U	0 10								
SW118	SW	REAL	SW01073WC	10-APR-91	N	TRG	PSTCLPTCL	ENDOSULFAN SULFATE	0.10	UG/L		U	0 10								
SW118	SW	REAL	SW01073WC	10-APR-91	N	TRG	PSTCLPTCL	ENDRIN	0.10	UG/L		U	0 10								
SW118	SW	REAL	SW01073WC	10-APR-91	N	TRG	PSTCLPTCL	ENDRIN KETONE	0.10	UG/L		U	0 10								
SW118	SW	REAL	SW01073WC	10-APR-91	N	TRG	PSTCLPTCL	HEPTACHLOR	0.050	UG/L		U	0 050								
SW118	SW	REAL	SW01073WC	10-APR-91	N	TRG	PSTCLPTCL	HEPTACHLOR EPOXIDE	0.050	UG/L		U	0 050								
SW118	SW	REAL	SW01073WC	10-APR-91	N	TRG	PSTCLPTCL	METHOXYCHLOR	0.50	UG/L		U	0 50								
SW118	SW	REAL	SW01073WC	10-APR-91	N	TRG	PSTCLPTCL	TOXAPHENE	1.0	UG/L		U	1 0								
SW118	SW	REAL	SW01073WC	10-APR-91	N	TRG	PSTCLPTCL	alpha-BHC	0.050	UG/L		U	0 050								
SW118	SW	REAL	SW01073WC	10-APR-91	N	TRG	PSTCLPTCL	alpha-CHLORDANE	0.50	UG/L		U	0 50								
SW118	SW	REAL	SW01073WC	10-APR-91	N	TRG	PSTCLPTCL	beta-BHC	0.050	UG/L		U	0 050								
SW118	SW	REAL	SW01073WC	10-APR-91	N	TRG	PSTCLPTCL	delta-BHC	0 050	UG/L		U	0 050								
SW118	SW	REAL	SW01073WC	10-APR-91	N	TRG	PSTCLPTCL	gamma-BHC (LINDANE)	0 050	UG/L		U	0 050								
SW118	SW	REAL	SW01073WC	10-APR-91	N	TRG	PSTCLPTCL	gamma-CHLORDANE	0.50	UG/L		U	0.50								
SW118	SW	REAL	SW01073WC	10-APR-91	N	TRG	WQPL	BICARBONATE AS CACO3	210	MG/L			10 0								
SW118	SW	REAL	SW01073WC	10-APR-91	N	TRG	WQPL	CARBONATE AS CACO3	10.0	MG/L		U	10 0								
SW118	SW	REAL	SW01073WC	10-APR-91	N	TRG	WQPL	CBOD5	4 9	MG/L			1 0								
SW118	SW	REAL	SW01073WC	10-APR-91	N	TRG	WQPL	CBOD5	5.2	MG/L			1 0								
SW118	SW	REAL	SW01073WC	10-APR-91	N	TRG	WQPL	CHLORIDE	70 5	MG/L			5 0								
SW118	SW	REAL	SW01073WC	10-APR-91	N	TRG	WQPL	CYANIDE	10 0	UG/L		U	10 0								
SW118	SW	REAL	SW01073WC	10-APR-91	N	TRG	WQPL	FLUORIDE, SOLUBLE	0 53	MG/L			0 10								
SW118	SW	REAL	SW01073WC	10-APR-91	N	TRG	WQPL	NITRATE/NITRITE	0 10	MG/L		U	0 10								
SW118	SW	REAL	SW01073WC	10-APR-91	N	TRG	WQPL	NITRITE	0 020	MG/L		U	0 020								
SW118	SW	REAL	SW01073WC	10-APR-91	N	TRG	WQPL	OIL AND GREASE	8 2	MG/L		U	8 2								
SW118	SW	REAL	SW01073WC	10-APR-91	N	TRG	WQPL	ORTHOPHOSPHATE	0 050	MG/L		U	0 050								
SW118	SW	REAL	SW01073WC	10-APR-91	N	TRG	WQPL	PHOSPHORUS	0 050	MG/L		U	0 050								
SW118	SW	REAL	SW01073WC	10-APR-91	N	TRG	WQPL	SOLIDS, NONVOLATILE SUSPENDED	9.0	MG/L			5 0								
SW118	SW	REAL	SW01073WC	10-APR-91	N	TRG	WQPL	SULFATE	21 8	MG/L			5 0								
SW118	SW	REAL	SW01073WC	10-APR-91	N	TRG	WQPL	SULFIDE	1 0	MG/L		U	1.0								
SW118	SW	REAL	SW01073WC	10-APR-91	N	TRG	WQPL	TOTAL DISSOLVED SOLIDS	372	MG/L			10 0								
SW118	SW	REAL	SW01180WC	09-MAY-91	N	TRG	WQPL	TOTAL ORGANIC CARBON	4 1	MG/L			1 0								
SW118	SW	REAL	SW01180WC	09-MAY-91	N	TRG	WQPL	BICARBONATE AS CACO3	140	MG/L			10 0								
SW118	SW	REAL	SW01180WC	09-MAY-91	N	TRG	WQPL	CARBONATE AS CACO3	10.0	MG/L		U	10 0								
SW118	SW	REAL	SW01180WC	09-MAY-91	N	TRG	WQPL	CHLORIDE	58 9	MG/L			5 0								
SW118	SW	REAL	SW01180WC	09-MAY-91	N	TRG	WQPL	CYANIDE	10 0	UG/L		U	10.0								
SW118	SW	REAL	SW01180WC	09-MAY-91	N	TRG	WQPL	FLUORIDE, SOLUBLE	0.44	MG/L			0.10								
SW118	SW	REAL	SW01180WC	09-MAY-91	N	TRG	WQPL	NITRATE/NITRITE	0.10	MG/L		U	0 10								
SW118	SW	REAL	SW01180WC	09-MAY-91	N	TRG	WQPL	NITRITE	0.020	MG/L		U	0 020								
SW118	SW	REAL	SW01180WC	09-MAY-91	N	TRG	WQPL	OIL AND GREASE	6.2	MG/L		U	6 2								
SW118	SW	REAL	SW01180WC	09-MAY-91	N	TRG	WQPL	ORTHOPHOSPHATE	0 050	MG/L		U	0 050								
SW118	SW	REAL	SW01180WC	09-MAY-91	N	TRG	WQPL	PHOSPHORUS	0.050	MG/L		U	0.050								
SW118	SW	REAL	SW01180WC	09-MAY-91	N	TRG	WQPL	SOLIDS, NONVOLATILE SUSPENDED	5 0	MG/L		U	5 0								
SW118	SW	REAL	SW01180WC	09-MAY-91	N	TRG	WQPL	SULFATE	19 0	MG/L			5 0								
SW118	SW	REAL	SW01180WC	09-MAY-91	N	TRG	WQPL	SULFIDE	1.0	MG/L		U	1.0								
SW118	SW	REAL	SW01180WC	09-MAY-91	N	TRG	WQPL	TOTAL DISSOLVED SOLIDS	284	MG/L			10 0								
SW118	SW	REAL	SW01283WC	26-JUN-91	N	TRG	WQPL	BICARBONATE AS CACO3	239	MG/L			10.0								
SW118	SW	REAL	SW01283WC	26-JUN-91	N	TRG	WQPL	CARBONATE AS CACO3	10 0	MG/L		U	10 0								
SW118	SW	REAL	SW01283WC	26-JUN-91	N	TRG	WQPL	CHLORIDE	32.7	MG/L			5.0								
SW118	SW	REAL	SW01283WC	26-JUN-91	N	TRG	WQPL	CYANIDE	10 0	UG/L		U	10 0								
SW118	SW	REAL	SW01283WC	26-JUN-91	N	TRG	WQPL	FLUORIDE, SOLUBLE	0.44	MG/L			0.10								
SW118	SW	REAL	SW01283WC	26-JUN-91	N	TRG	WQPL	NITRATE/NITRITE	0.10	MG/L		U	0 10								
SW118	SW	REAL	SW01283WC	26-JUN-91	N	TRG	WQPL	NITRITE	0 020	MG/L		U	0.020								
SW118	SW	REAL	SW01283WC	26-JUN-91	N	TRG	WQPL	OIL AND GREASE	6.8	MG/L		U	6 8								
SW118	SW	REAL	SW01283WC	26-JUN-91	N	TRG	WQPL	ORTHOPHOSPHATE	0.050	MG/L		U	0 050								
SW118	SW	REAL	SW01283WC	26-JUN-91	N	TRG	WQPL	PHOSPHORUS	0.059	MG/L			0.050								

Location	ST	QC	Sample Number	Smpl Date	D	ID	Group	Chemical	Result	Unit	Error	Qual	D LMT	VA	RN1	RN2	RN3	RN4	VResult	VQual	VDET
SW118	SW	REAL	SW01283WC	26-JUN-91	N	TRG	WQPL	SOLIDS, NONVOLATILE SUSPENDED	28 0	MG/L			5.0								
SW118	SW	REAL	SW01283WC	26-JUN-91	N	TRG	WQPL	SULFATE	13 4	MG/L			5 0								
SW118	SW	REAL	SW01283WC	26-JUN-91	N	TRG	WQPL	SULFIDE	1.0	MG/L		U	1 0								
SW118	SW	REAL	SW01283WC	26-JUN-91	N	TRG	WQPL	TOTAL DISSOLVED SOLIDS	296	MG/L			10.0								
SW118	SW	REAL	SW01386WC	24-JUL-91	N	TRG	WQPL	BICARBONATE AS CACO3	194	MG/L			10 0								
SW118	SW	REAL	SW01386WC	24-JUL-91	N	TRG	WQPL	CARBONATE AS CACO3	10 0	MG/L		U	10 0								
SW118	SW	REAL	SW01386WC	24-JUL-91	N	TRG	WQPL	CHLORIDE	26 8	MG/L			5.0								
SW118	SW	REAL	SW01386WC	24-JUL-91	N	TRG	WQPL	CYANIDE	10 0	UG/L		U	10.0								
SW118	SW	REAL	SW01386WC	24-JUL-91	N	TRG	WQPL	FLUORIDE, SOLUBLE	0 39	MG/L			0.10								
SW118	SW	REAL	SW01386WC	24-JUL-91	N	TRG	WQPL	NITRATE/NITRITE	0.10	MG/L		U	0 10								
SW118	SW	REAL	SW01386WC	24-JUL-91	N	TRG	WQPL	NITRITE	0.020	MG/L		U	0 020								
SW118	SW	REAL	SW01386WC	24-JUL-91	N	TRG	WQPL	OIL AND GREASE	6 5	MG/L		U	6.5								
SW118	SW	REAL	SW01386WC	24-JUL-91	N	TRG	WQPL	ORTHOPHOSPHATE	0.050	MG/L		U	0 050								
SW118	SW	REAL	SW01386WC	24-JUL-91	N	TRG	WQPL	PHOSPHORUS	0 050	MG/L		U	0 050								
SW118	SW	REAL	SW01386WC	24-JUL-91	N	TRG	WQPL	SOLIDS, NONVOLATILE SUSPENDED	6 0	MG/L			5 0								
SW118	SW	REAL	SW01386WC	24-JUL-91	N	TRG	WQPL	SULFATE	14 3	MG/L			5 0								
SW118	SW	REAL	SW01386WC	24-JUL-91	N	TRG	WQPL	SULFIDE	1.0	MG/L		U	1 0								
SW118	SW	REAL	SW01386WC	24-JUL-91	N	TRG	WQPL	TOTAL DISSOLVED SOLIDS	246	MG/L			10 0								
SW118	SW	REAL	SW01492WC	07-AUG-91	N	TRG	WQPL	BICARBONATE AS CACO3	194	MG/L			10 0								
SW118	SW	REAL	SW01492WC	07-AUG-91	N	TRG	WQPL	CARBONATE AS CACO3	10 0	MG/L		U	10 0								
SW118	SW	REAL	SW01492WC	07-AUG-91	N	TRG	WQPL	CHLORIDE	27 0	MG/L			5 0								
SW118	SW	REAL	SW01492WC	07-AUG-91	N	TRG	WQPL	CYANIDES (SOLUBLE SALTS AND CO	10 0	UG/L		U	10.0								
SW118	SW	REAL	SW01492WC	07-AUG-91	N	TRG	WQPL	FLUORIDE, SOLUBLE	0.42	MG/L			0 10								
SW118	SW	REAL	SW01492WC	07-AUG-91	N	TRG	WQPL	NITRATE/NITRITE	0 10	MG/L		U	0 10								
SW118	SW	REAL	SW01492WC	07-AUG-91	N	TRG	WQPL	NITRITE	0.020	MG/L		U	0 020								
SW118	SW	REAL	SW01492WC	07-AUG-91	N	TRG	WQPL	OIL AND GREASE	7.5	MG/L			5 0								
SW118	SW	REAL	SW01492WC	07-AUG-91	N	TRG	WQPL	ORTHOPHOSPHATE	0.050	MG/L		U	0.050								
SW118	SW	REAL	SW01492WC	07-AUG-91	N	TRG	WQPL	PHOSPHORUS	0 050	MG/L		U	0 050								
SW118	SW	REAL	SW01492WC	07-AUG-91	N	TRG	WQPL	SULFATE	13 5	MG/L			5 0								
SW118	SW	REAL	SW01492WC	07-AUG-91	N	TRG	WQPL	SULFIDE	1 0	MG/L		U	1 0								
SW118	SW	REAL	SW01492WC	07-AUG-91	N	TRG	WQPL	TOTAL DISSOLVED SOLIDS	258	MG/L			10 0								
SW118	SW	REAL	SW01492WC	07-AUG-91	N	TRG	WQPL	TOTAL SOLIDS	8 0	MG/L			5.0								
SW118	SW	REAL	SW01598WC	25-SEP-91	Y																
SW118	SW	REAL	SW01704WC	23-OCT-91	Y																
SW118	SW	REAL	SW60066WCA	15-MAR-91	N																
SW118	SW	REAL	SW60067WCB	02-APR-91	N																
SW118	SW	REAL	SW60073WC	15-APR-91	N																
SW118	SW	REAL	SW60077WC	01-MAY-91	N																
SW118	SW	REAL	SW60080WC	01-MAY-91	N	TRG	WQPL	ALKALINITY AS CACO3	57	MG/L			10								
SW118	SW	REAL	SW60080WC	01-MAY-91	N	TRG	WQPL	BICARBONATE	57	MG/L			10								
SW118	SW	REAL	SW60080WC	01-MAY-91	N	TRG	WQPL	CARBONATE AS CACO3	10	MG/L		U	10								
SW118	SW	REAL	SW60080WC	01-MAY-91	N	TRG	WQPL	CHLORIDE	25	MG/L			2								
SW118	SW	REAL	SW60080WC	01-MAY-91	N	TRG	WQPL	FLUORIDE	0.5	MG/L		U	0 5								
SW118	SW	REAL	SW60080WC	01-MAY-91	N	TRG	WQPL	NITRATE/NITRITE	1 2	MG/L			0 1								
SW118	SW	REAL	SW60080WC	01-MAY-91	N	TRG	WQPL	PHOSPHORUS	0 04	MG/L			0.01								
SW118	SW	REAL	SW60080WC	01-MAY-91	N	TRG	WQPL	SULFATE	15	MG/L			10								
SW118	SW	REAL	SW60080WC	01-MAY-91	N	TRG	WQPL	TOTAL DISSOLVED SOLIDS	160	MG/L			2								
SW118	SW	REAL	SW60080WC	01-MAY-91	N	TRG	WQPL	TOTAL SUSPENDED SOLIDS	400	MG/L			2								
SW118	SW	REAL	SW60084WC	06-MAY-91	N																
SW118	SW	REAL	SW60085WC	06-MAY-91	N																
SW118	SW	REAL	SW60094WC	17-MAY-91	N	TRG	WQPL	ALKALINITY AS CACO3	85	MG/L			10								
SW118	SW	REAL	SW60094WC	17-MAY-91	N	TRG	WQPL	BICARBONATE	85	MG/L			10								
SW118	SW	REAL	SW60094WC	17-MAY-91	N	TRG	WQPL	CARBONATE AS CACO3	10	MG/L		U	10								
SW118	SW	REAL	SW60094WC	17-MAY-91	N	TRG	WQPL	CHLORIDE	19	MG/L			2								
SW118	SW	REAL	SW60094WC	17-MAY-91	N	TRG	WQPL	FLUORIDE	0.5	MG/L		U	0.5								
SW118	SW	REAL	SW60094WC	17-MAY-91	N	TRG	WQPL	NITRATE/NITRITE	0 1	MG/L		U	0.1								
SW118	SW	REAL	SW60094WC	17-MAY-91	N	TRG	WQPL	NITRITE	0.02	MG/L			0.01								
SW118	SW	REAL	SW60094WC	17-MAY-91	N	TRG	WQPL	PHOSPHATE	0.01	MG/L		U	0 01								
SW118	SW	REAL	SW60094WC	17-MAY-91	N	TRG	WQPL	SILICON	3	MG/L			2								
SW118	SW	REAL	SW60094WC	17-MAY-91	N	TRG	WQPL	SULFATE	10	MG/L		U	10								
SW118	SW	REAL	SW60094WC	17-MAY-91	N	TRG	WQPL	TOTAL DISSOLVED SOLIDS	130	MG/L			2								
SW118	SW	REAL	SW60094WC	17-MAY-91	N	TRG	WQPL	TOTAL SUSPENDED SOLIDS	2140	MG/L			2								
SW118	SW	REAL	SW60095WC	17-MAY-91	N																

Location	ST	QC	Sample Number	Smpl Date	D	ID	Group	Chemical	Result	Unit	Error	Qual	D LMT	VA	RN1	RN2	RN3	RN4	VResult	VQual	VDET
SW118	SW	REAL	SW60099WC	23-MAY-91	N	TRG	WQPL	ALKALINITY AS CACO3	70	MG/L			10								
SW118	SW	REAL	SW60099WC	23-MAY-91	N	TRG	WQPL	BICARBONATE	70	MG/L			10								
SW118	SW	REAL	SW60099WC	23-MAY-91	N	TRG	WQPL	CARBONATE AS CACO3	10	MG/L		U	10								
SW118	SW	REAL	SW60099WC	23-MAY-91	N	TRG	WQPL	CHLORIDE	17	MG/L			2								
SW118	SW	REAL	SW60099WC	23-MAY-91	N	TRG	WQPL	FLUORIDE	0 5	MG/L		U	0 5								
SW118	SW	REAL	SW60099WC	23-MAY-91	N	TRG	WQPL	NITRATE/NITRITE	1 8	MG/L			0 1								
SW118	SW	REAL	SW60099WC	23-MAY-91	N	TRG	WQPL	PHOSPHATE	0 04	MG/L			0 01								
SW118	SW	REAL	SW60099WC	23-MAY-91	N	TRG	WQPL	SULFATE	24	MG/L			10								
SW118	SW	REAL	SW60099WC	23-MAY-91	N	TRG	WQPL	TOTAL DISSOLVED SOLIDS	130	MG/L			2								
SW118	SW	REAL	SW60099WC	23-MAY-91	N	TRG	WQPL	TOTAL SUSPENDED SOLIDS	880	MG/L			2								
SW118	SW	REAL	SW60106WC	03-JUN-91	N	TRG	WQPL	BICARBONATE AS CACO3	74	MG/L			1 0								
SW118	SW	REAL	SW60106WC	03-JUN-91	N	TRG	WQPL	CARBONATE AS CACO3	1	MG/L		U	1 0								
SW118	SW	REAL	SW60106WC	03-JUN-91	N	TRG	WQPL	CHLORIDE	19	MG/L			0.2								
SW118	SW	REAL	SW60106WC	03-JUN-91	N	TRG	WQPL	FLUORIDE	0 3	MG/L			0 1								
SW118	SW	REAL	SW60106WC	03-JUN-91	N	TRG	WQPL	NITRATE/NITRITE	0.6	MG/L			0 02								
SW118	SW	REAL	SW60106WC	03-JUN-91	N	TRG	WQPL	NITRITE	0.04	MG/L			0 02								
SW118	SW	REAL	SW60106WC	03-JUN-91	N	TRG	WQPL	ORTHOPHOSPHATE	0.01	MG/L		U	0 01								
SW118	SW	REAL	SW60106WC	03-JUN-91	N	TRG	WQPL	SILICA, DISSOLVED	2 7	MG/L			0 4								
SW118	SW	REAL	SW60106WC	03-JUN-91	N	TRG	WQPL	SULFATE	9	MG/L			2 0								
SW118	SW	REAL	SW60106WC	03-JUN-91	N	TRG	WQPL	TOTAL DISSOLVED SOLIDS	160	MG/L			10.0								
SW118	SW	REAL	SW60106WC	03-JUN-91	N	TRG	WQPL	TOTAL SUSPENDED SOLIDS	8200	MG/L			4 0								
SW118	SW	REAL	SW60107WC	03-JUN-91	N																
SW118	SW	REAL	SW60111WC	11-JUN-91	N	TRG	WQPL	BICARBONATE AS CACO3	60	MG/L			1 0								
SW118	SW	REAL	SW60111WC	11-JUN-91	N	TRG	WQPL	CARBONATE AS CACO3	1	MG/L		U	1 0								
SW118	SW	REAL	SW60111WC	11-JUN-91	N	TRG	WQPL	CHLORIDE	83	MG/L			0 2								
SW118	SW	REAL	SW60111WC	11-JUN-91	N	TRG	WQPL	FLUORIDE	0.3	MG/L			0 1								
SW118	SW	REAL	SW60111WC	11-JUN-91	N	TRG	WQPL	NITRATE/NITRITE	1 4	MG/L			0 02								
SW118	SW	REAL	SW60111WC	11-JUN-91	N	TRG	WQPL	NITRITE	0.02	MG/L			0 02								
SW118	SW	REAL	SW60111WC	11-JUN-91	N	TRG	WQPL	ORTHOPHOSPHATE	0 01	MG/L		U	0 01								
SW118	SW	REAL	SW60111WC	11-JUN-91	N	TRG	WQPL	SILICA, DISSOLVED	3 2	MG/L			0 4								
SW118	SW	REAL	SW60111WC	11-JUN-91	N	TRG	WQPL	SULFATE	14	MG/L			2 0								
SW118	SW	REAL	SW60111WC	11-JUN-91	N	TRG	WQPL	TOTAL DISSOLVED SOLIDS	270	MG/L			10.0								
SW118	SW	REAL	SW60111WC	11-JUN-91	N	TRG	WQPL	TOTAL SUSPENDED SOLIDS	3000	MG/L			4 0								
SW118	SW	REAL	SW60115WC	25-JUN-91	N																
SW118	SW	REAL	SW60122WC	10-JUL-91	N																
SW118	SW	REAL	SW60128WC	24-JUL-91	N																
SW118	SW	REAL	SW60138WC	05-AUG-91	N																
SW118	SW	REAL	SW60147WC	12-AUG-91	N																
SW118	SW		SW60067WC	08-APR-91	N																
SW129	SW	REAL	SW00728WC	08-JAN-91	N																
SW129	SW	REAL	SW00831WC	20-FEB-91	N																
SW129	SW	REAL	SW00934WC	28-MAR-91	N	TRG	WQPL	BICARBONATE AS CACO3	222	MG/L			10 0								
SW129	SW	REAL	SW00934WC	28-MAR-91	N	TRG	WQPL	CARBONATE AS CACO3	10.0	MG/L		U	10 0								
SW129	SW	REAL	SW00934WC	28-MAR-91	N	TRG	WQPL	CBOD5	6 4	MG/L			1 0								
SW129	SW	REAL	SW00934WC	28-MAR-91	N	TRG	WQPL	CHLORIDE	46.1	MG/L			5 0								
SW129	SW	REAL	SW00934WC	28-MAR-91	N	TRG	WQPL	CYANIDE	20 0	UG/L		U	20 0								
SW129	SW	REAL	SW00934WC	28-MAR-91	N	TRG	WQPL	FLUORIDE, SOLUBLE	0.62	MG/L			0.10								
SW129	SW	REAL	SW00934WC	28-MAR-91	N	TRG	WQPL	NITRATE/NITRITE	0.14	MG/L			0 10								
SW129	SW	REAL	SW00934WC	28-MAR-91	N	TRG	WQPL	NITRITE	0.020	MG/L		U	0 020								
SW129	SW	REAL	SW00934WC	28-MAR-91	N	TRG	WQPL	OIL AND GREASE	5.4	MG/L		U	5.4								
SW129	SW	REAL	SW00934WC	28-MAR-91	N	TRG	WQPL	ORTHOPHOSPHATE	0.050	MG/L		U	0 050								
SW129	SW	REAL	SW00934WC	28-MAR-91	N	TRG	WQPL	PHOSPHORUS	0.050	MG/L		U	0 050								
SW129	SW	REAL	SW00934WC	28-MAR-91	N	TRG	WQPL	SOLIDS, NONVOLATILE SUSPENDED	6 0	MG/L			5 0								
SW129	SW	REAL	SW00934WC	28-MAR-91	N	TRG	WQPL	SULFATE	41 8	MG/L			5 0								
SW129	SW	REAL	SW00934WC	28-MAR-91	N	TRG	WQPL	SULFIDE	1 0	MG/L		U	1.0								
SW129	SW	REAL	SW00934WC	28-MAR-91	N	TRG	WQPL	TOTAL DISSOLVED SOLIDS	374	MG/L			10.0								
SW129	SW	REAL	SW00934WC	28-MAR-91	N	TRG	WQPL	TOTAL ORGANIC CARBON	3.7	MG/L			1.0								
SW129	SW	REAL	SW00934WC	28-MAR-91	N	TRG	WQPL	TOTAL ORGANIC CARBON	4.0	MG/L			1 0								
SW129	SW	REAL	SW01036WC	09-APR-91	N	TRG	PSTCLPTCL	4,4'-DDD	0.10	UG/L		U	0.10								
SW129	SW	REAL	SW01036WC	09-APR-91	N	TRG	PSTCLPTCL	4,4'-DDE	0.10	UG/L		U	0.10								
SW129	SW	REAL	SW01036WC	09-APR-91	N	TRG	PSTCLPTCL	4,4'-DDT	0.10	UG/L		U	0 10								
SW129	SW	REAL	SW01036WC	09-APR-91	N	TRG	PSTCLPTCL	ALDRIN	0.052	UG/L		U	0.052								
SW129	SW	REAL	SW01036WC	09-APR-91	N	TRG	PSTCLPTCL	AROCLOR-1016	0 52	UG/L		U	0 52								

Location	ST	QC	Sample Number	Smpl Date	D	ID	Group	Chemical	Result	Unit	Error	Qual	D LMT	VA	RN1	RN2	RN3	RN4	VResult	VQual	VDET
SW129	SW	REAL	SW01036WC	09-APR-91	N	TRG	PSTCLPTCL	AROCLOR-1221	0 52	UG/L		U	0 52								
SW129	SW	REAL	SW01036WC	09-APR-91	N	TRG	PSTCLPTCL	AROCLOR-1232	0 52	UG/L		U	0 52								
SW129	SW	REAL	SW01036WC	09-APR-91	N	TRG	PSTCLPTCL	AROCLOR-1242	0 52	UG/L		U	0 52								
SW129	SW	REAL	SW01036WC	09-APR-91	N	TRG	PSTCLPTCL	AROCLOR-1248	0 52	UG/L		U	0 52								
SW129	SW	REAL	SW01036WC	09-APR-91	N	TRG	PSTCLPTCL	AROCLOR-1254	1 0	UG/L		U	1 0								
SW129	SW	REAL	SW01036WC	09-APR-91	N	TRG	PSTCLPTCL	AROCLOR-1260	1.0	UG/L		U	1 0								
SW129	SW	REAL	SW01036WC	09-APR-91	N	TRG	PSTCLPTCL	DIELDRIN	0 10	UG/L		U	0 10								
SW129	SW	REAL	SW01036WC	09-APR-91	N	TRG	PSTCLPTCL	ENDOSULFAN I	0 052	UG/L		U	0 052								
SW129	SW	REAL	SW01036WC	09-APR-91	N	TRG	PSTCLPTCL	ENDOSULFAN II	0 10	UG/L		U	0 10								
SW129	SW	REAL	SW01036WC	09-APR-91	N	TRG	PSTCLPTCL	ENDOSULFAN SULFATE	0.10	UG/L		U	0 10								
SW129	SW	REAL	SW01036WC	09-APR-91	N	TRG	PSTCLPTCL	ENDRIN	0 10	UG/L		U	0 10								
SW129	SW	REAL	SW01036WC	09-APR-91	N	TRG	PSTCLPTCL	ENDRIN KETONE	0.10	UG/L		U	0 10								
SW129	SW	REAL	SW01036WC	09-APR-91	N	TRG	PSTCLPTCL	HEPTACHLOR	0 052	UG/L		U	0 052								
SW129	SW	REAL	SW01036WC	09-APR-91	N	TRG	PSTCLPTCL	HEPTACHLOR EPOXIDE	0 052	UG/L		U	0 052								
SW129	SW	REAL	SW01036WC	09-APR-91	N	TRG	PSTCLPTCL	METHOXYCHLOR	0 52	UG/L		U	0 52								
SW129	SW	REAL	SW01036WC	09-APR-91	N	TRG	PSTCLPTCL	TOXAPHENE	1 0	UG/L		U	1 0								
SW129	SW	REAL	SW01036WC	09-APR-91	N	TRG	PSTCLPTCL	alpha-BHC	0 052	UG/L		U	0 052								
SW129	SW	REAL	SW01036WC	09-APR-91	N	TRG	PSTCLPTCL	alpha-CHLORDANE	0.52	UG/L		U	0 52								
SW129	SW	REAL	SW01036WC	09-APR-91	N	TRG	PSTCLPTCL	beta-BHC	0 052	UG/L		U	0 052								
SW129	SW	REAL	SW01036WC	09-APR-91	N	TRG	PSTCLPTCL	delta-BHC	0 052	UG/L		U	0 052								
SW129	SW	REAL	SW01036WC	09-APR-91	N	TRG	PSTCLPTCL	gamma-BHC (LINDANE)	0 052	UG/L		U	0 052								
SW129	SW	REAL	SW01036WC	09-APR-91	N	TRG	PSTCLPTCL	gamma-CHLORDANE	0 52	UG/L		U	0.52								
SW129	SW	REAL	SW01036WC	09-APR-91	N	TRG	WQPL	BICARBONATE AS CACO3	250	MG/L			10 0								
SW129	SW	REAL	SW01036WC	09-APR-91	N	TRG	WQPL	CARBONATE AS CACO3	10 0	MG/L		U	10 0								
SW129	SW	REAL	SW01036WC	09-APR-91	N	TRG	WQPL	CBOD5	3 6	MG/L			1.0								
SW129	SW	REAL	SW01036WC	09-APR-91	N	TRG	WQPL	CBOD5	5 6	MG/L			1 0								
SW129	SW	REAL	SW01036WC	09-APR-91	N	TRG	WQPL	CHLORIDE	47 6	MG/L			5 0								
SW129	SW	REAL	SW01036WC	09-APR-91	N	TRG	WQPL	CYANIDE	10 0	UG/L		U	10.0								
SW129	SW	REAL	SW01036WC	09-APR-91	N	TRG	WQPL	FLUORIDE, SOLUBLE	0.66	MG/L			0.10								
SW129	SW	REAL	SW01036WC	09-APR-91	N	TRG	WQPL	NITRATE/NITRITE	0.10	MG/L		U	0 10								
SW129	SW	REAL	SW01036WC	09-APR-91	N	TRG	WQPL	NITRITE	0.020	MG/L		U	0 020								
SW129	SW	REAL	SW01036WC	09-APR-91	N	TRG	WQPL	OIL AND GREASE	5.3	MG/L		U	5 3								
SW129	SW	REAL	SW01036WC	09-APR-91	N	TRG	WQPL	ORTHOPHOSPHATE	0 050	MG/L		U	0 050								
SW129	SW	REAL	SW01036WC	09-APR-91	N	TRG	WQPL	PHOSPHORUS	0.050	MG/L		U	0 050								
SW129	SW	REAL	SW01036WC	09-APR-91	N	TRG	WQPL	SOLIDS, NONVOLATILE SUSPENDED	13 0	MG/L			5 0								
SW129	SW	REAL	SW01036WC	09-APR-91	N	TRG	WQPL	SULFATE	33.4	MG/L			10 0								
SW129	SW	REAL	SW01036WC	09-APR-91	N	TRG	WQPL	SULFIDE	1 0	MG/L		U	1.0								
SW129	SW	REAL	SW01036WC	09-APR-91	N	TRG	WQPL	TOTAL DISSOLVED SOLIDS	350	MG/L			10 0								
SW129	SW	REAL	SW01036WC	09-APR-91	N	TRG	WQPL	TOTAL ORGANIC CARBON	2 0	MG/L			1 0								
SW129	SW	REAL	SW01036WC	09-APR-91	N	TRG	WQPL	TOTAL ORGANIC CARBON	5 5	MG/L			1 0								
SW129	SW	REAL	SW01143WC	16-MAY-91	N	TRG	WQPL	BICARBONATE AS CACO3	185	MG/L			10 0								
SW129	SW	REAL	SW01143WC	16-MAY-91	N	TRG	WQPL	CARBONATE AS CACO3	10.0	MG/L		U	10 0								
SW129	SW	REAL	SW01143WC	16-MAY-91	N	TRG	WQPL	CHLORIDE	36 5	MG/L			5 0								
SW129	SW	REAL	SW01143WC	16-MAY-91	N	TRG	WQPL	CYANIDE	20.0	UG/L		U	20 0								
SW129	SW	REAL	SW01143WC	16-MAY-91	N	TRG	WQPL	FLUORIDE, SOLUBLE	0.54	MG/L			0 10								
SW129	SW	REAL	SW01143WC	16-MAY-91	N	TRG	WQPL	NITRATE/NITRITE	0.33	MG/L			0 10								
SW129	SW	REAL	SW01143WC	16-MAY-91	N	TRG	WQPL	NITRITE	0 020	MG/L		U	0 020								
SW129	SW	REAL	SW01143WC	16-MAY-91	N	TRG	WQPL	OIL AND GREASE	5.9	MG/L		U	5 9								
SW129	SW	REAL	SW01143WC	16-MAY-91	N	TRG	WQPL	ORTHOPHOSPHATE	0 050	MG/L		U	0 050								
SW129	SW	REAL	SW01143WC	16-MAY-91	N	TRG	WQPL	PHOSPHORUS	0 050	MG/L		U	0 050								
SW129	SW	REAL	SW01143WC	16-MAY-91	N	TRG	WQPL	SOLIDS, NONVOLATILE SUSPENDED	12 0	MG/L			5 0								
SW129	SW	REAL	SW01143WC	16-MAY-91	N	TRG	WQPL	SULFATE	53 6	MG/L			20 0								
SW129	SW	REAL	SW01143WC	16-MAY-91	N	TRG	WQPL	SULFIDE	1.0	MG/L		U	1 0								
SW129	SW	REAL	SW01143WC	16-MAY-91	N	TRG	WQPL	TOTAL DISSOLVED SOLIDS	622	MG/L			10 0								
SW129	SW	REAL	SW01246WC	26-JUN-91	N	TRG	WQPL	BICARBONATE AS CACO3	246	MG/L			10.0								
SW129	SW	REAL	SW01246WC	26-JUN-91	N	TRG	WQPL	CARBONATE AS CACO3	10.0	MG/L		U	10 0								
SW129	SW	REAL	SW01246WC	26-JUN-91	N	TRG	WQPL	CHLORIDE	46.1	MG/L			5.0								
SW129	SW	REAL	SW01246WC	26-JUN-91	N	TRG	WQPL	CYANIDE	10 0	UG/L		U	10 0								
SW129	SW	REAL	SW01246WC	26-JUN-91	N	TRG	WQPL	FLUORIDE, SOLUBLE	0.62	MG/L			0.10								
SW129	SW	REAL	SW01246WC	26-JUN-91	N	TRG	WQPL	NITRATE/NITRITE	0 20	MG/L		U	0 20								
SW129	SW	REAL	SW01246WC	26-JUN-91	N	TRG	WQPL	NITRITE	0.020	MG/L		U	0.020								
SW129	SW	REAL	SW01246WC	26-JUN-91	N	TRG	WQPL	OIL AND GREASE	5 6	MG/L		U	5 6								
SW129	SW	REAL	SW01246WC	26-JUN-91	N	TRG	WQPL	ORTHOPHOSPHATE	0.091	MG/L			0 050								

Location	ST	QC	Sample Number	Smpl Date	D	ID	Group	Chemical	Result	Unit	Error	Qual	D LMT	VA	RN1	RN2	RN3	RN4	VResult	VQual	VDET
SW129	SW	REAL	SW01246WC	26-JUN-91	N	TRG	WQPL	PHOSPHORUS	0 050	MG/L		U	0 050								
SW129	SW	REAL	SW01246WC	26-JUN-91	N	TRG	WQPL	SOLIDS, NONVOLATILE SUSPENDED	43 0	MG/L			5 0								
SW129	SW	REAL	SW01246WC	26-JUN-91	N	TRG	WQPL	SULFATE	22 9	MG/L			5 0								
SW129	SW	REAL	SW01246WC	26-JUN-91	N	TRG	WQPL	SULFIDE	1.0	MG/L		U	1 0								
SW129	SW	REAL	SW01246WC	26-JUN-91	N	TRG	WQPL	TOTAL DISSOLVED SOLIDS	342	MG/L			10 0								
SW129	SW	REAL	SW01349WC	22-JUL-91	N																
SW129	SW	REAL	SW01455WC	13-AUG-91	N	TRG	WQPL	BICARBONATE AS CACO3	226	MG/L			10 0								
SW129	SW	REAL	SW01455WC	13-AUG-91	N	TRG	WQPL	CARBONATE AS CACO3	10.0	MG/L		U	10 0								
SW129	SW	REAL	SW01455WC	13-AUG-91	N	TRG	WQPL	CHLORIDE	32.3	MG/L			5 0								
SW129	SW	REAL	SW01455WC	13-AUG-91	N	TRG	WQPL	CYANIDE	10.0	UG/L		U	10 0								
SW129	SW	REAL	SW01455WC	13-AUG-91	N	TRG	WQPL	DISSOLVED ORGANIC CARBON	4	MG/L			1								
SW129	SW	REAL	SW01455WC	13-AUG-91	N	TRG	WQPL	FLUORIDE, SOLUBLE	0.54	MG/L			0 10								
SW129	SW	REAL	SW01455WC	13-AUG-91	N	TRG	WQPL	NITRATE/NITRITE	0.10	MG/L		U	0.10								
SW129	SW	REAL	SW01455WC	13-AUG-91	N	TRG	WQPL	NITRITE	0 020	MG/L		U	0 020								
SW129	SW	REAL	SW01455WC	13-AUG-91	N	TRG	WQPL	OIL AND GREASE	7 3	MG/L		U	7 3								
SW129	SW	REAL	SW01455WC	13-AUG-91	N	TRG	WQPL	ORTHOPHOSPHATE	0 050	MG/L		U	0 050								
SW129	SW	REAL	SW01455WC	13-AUG-91	N	TRG	WQPL	PHOSPHORUS	0.050	MG/L		U	0 050								
SW129	SW	REAL	SW01455WC	13-AUG-91	N	TRG	WQPL	SOLIDS, NONVOLATILE SUSPENDED	31 0	MG/L			5 0								
SW129	SW	REAL	SW01455WC	13-AUG-91	N	TRG	WQPL	SULFATE	21 6	MG/L			5 0								
SW129	SW	REAL	SW01455WC	13-AUG-91	N	TRG	WQPL	SULFIDE	1 0	MG/L		U	1 0								
SW129	SW	REAL	SW01455WC	13-AUG-91	N	TRG	WQPL	TOTAL DISSOLVED SOLIDS	344	MG/L			10 0								
SW129	SW	REAL	SW01455WC	13-AUG-91	N	TRG	WQPL	TOTAL ORGANIC CARBON	8	MG/L			1								
SW129	SW	REAL	SW01561WC	18-SEP-91	N	TRG	WQPL	BICARBONATE AS CACO3	226	MG/L			10 0								
SW129	SW	REAL	SW01561WC	18-SEP-91	N	TRG	WQPL	CARBONATE AS CACO3	10 0	MG/L		U	10.0								
SW129	SW	REAL	SW01561WC	18-SEP-91	N	TRG	WQPL	CHLORIDE	45 8	MG/L			5 0								
SW129	SW	REAL	SW01561WC	18-SEP-91	N	TRG	WQPL	CYANIDES (SOLUBLE SALTS AND CO	10 0	UG/L		U	10.0								
SW129	SW	REAL	SW01561WC	18-SEP-91	N	TRG	WQPL	DISSOLVED ORGANIC CARBON	3	MG/L			1								
SW129	SW	REAL	SW01561WC	18-SEP-91	N	TRG	WQPL	FLUORIDE, SOLUBLE	0.61	MG/L			0.50								
SW129	SW	REAL	SW01561WC	18-SEP-91	N	TRG	WQPL	NITRATE/NITRITE	0.10	MG/L		U	0.10								
SW129	SW	REAL	SW01561WC	18-SEP-91	N	TRG	WQPL	NITRITE	0.020	MG/L		U	0.020								
SW129	SW	REAL	SW01561WC	18-SEP-91	N	TRG	WQPL	OIL AND GREASE	5.0	MG/L		U	5.0								
SW129	SW	REAL	SW01561WC	18-SEP-91	N	TRG	WQPL	ORTHOPHOSPHATE	0 050	MG/L		U	0.050								
SW129	SW	REAL	SW01561WC	18-SEP-91	N	TRG	WQPL	PHOSPHORUS	0.050	MG/L		U	0 050								
SW129	SW	REAL	SW01561WC	18-SEP-91	N	TRG	WQPL	SULFATE	31.2	MG/L			5 0								
SW129	SW	REAL	SW01561WC	18-SEP-91	N	TRG	WQPL	SULFIDE	1.0	MG/L		U	1 0								
SW129	SW	REAL	SW01561WC	18-SEP-91	N	TRG	WQPL	TOTAL DISSOLVED SOLIDS	338	MG/L			10.0								
SW129	SW	REAL	SW01561WC	18-SEP-91	N	TRG	WQPL	TOTAL ORGANIC CARBON	9	MG/L			1								
SW129	SW	REAL	SW01561WC	18-SEP-91	N	TRG	WQPL	TOTAL SOLIDS	44.0	MG/L			5 0								
SW129	SW	REAL	SW01667WC	23-OCT-91	N	TRG	PSTCLPTCL	4,4'-DDD	0.10	UG/L		U	0 100								
SW129	SW	REAL	SW01667WC	23-OCT-91	N	TRG	PSTCLPTCL	4,4'-DDE	0.10	UG/L		U	0 100								
SW129	SW	REAL	SW01667WC	23-OCT-91	N	TRG	PSTCLPTCL	4,4'-DDT	0 10	UG/L		U	0.100								
SW129	SW	REAL	SW01667WC	23-OCT-91	N	TRG	PSTCLPTCL	ALDRIN	0 050	UG/L		U	0.050								
SW129	SW	REAL	SW01667WC	23-OCT-91	N	TRG	PSTCLPTCL	AROCLOR-1016	0 50	UG/L		U	0 500								
SW129	SW	REAL	SW01667WC	23-OCT-91	N	TRG	PSTCLPTCL	AROCLOR-1221	0 50	UG/L		U	0.500								
SW129	SW	REAL	SW01667WC	23-OCT-91	N	TRG	PSTCLPTCL	AROCLOR-1232	0.50	UG/L		U	0 500								
SW129	SW	REAL	SW01667WC	23-OCT-91	N	TRG	PSTCLPTCL	AROCLOR-1242	0.50	UG/L		U	0 500								
SW129	SW	REAL	SW01667WC	23-OCT-91	N	TRG	PSTCLPTCL	AROCLOR-1248	0.50	UG/L		U	0.500								
SW129	SW	REAL	SW01667WC	23-OCT-91	N	TRG	PSTCLPTCL	AROCLOR-1254	1.0	UG/L		U	1 000								
SW129	SW	REAL	SW01667WC	23-OCT-91	N	TRG	PSTCLPTCL	AROCLOR-1260	1.0	UG/L		U	1 000								
SW129	SW	REAL	SW01667WC	23-OCT-91	N	TRG	PSTCLPTCL	DIELDRIN	0.10	UG/L		U	0 100								
SW129	SW	REAL	SW01667WC	23-OCT-91	N	TRG	PSTCLPTCL	ENDOSULFAN I	0 050	UG/L		U	0.050								
SW129	SW	REAL	SW01667WC	23-OCT-91	N	TRG	PSTCLPTCL	ENDOSULFAN II	0.10	UG/L		U	0.100								
SW129	SW	REAL	SW01667WC	23-OCT-91	N	TRG	PSTCLPTCL	ENDOSULFAN SULFATE	0.10	UG/L		U	0.100								
SW129	SW	REAL	SW01667WC	23-OCT-91	N	TRG	PSTCLPTCL	ENDRIN	0.10	UG/L		U	0.100								
SW129	SW	REAL	SW01667WC	23-OCT-91	N	TRG	PSTCLPTCL	ENDRIN KETONE	0.10	UG/L		U	0.100								
SW129	SW	REAL	SW01667WC	23-OCT-91	N	TRG	PSTCLPTCL	HEPTACHLOR	0.050	UG/L		U	0.050								
SW129	SW	REAL	SW01667WC	23-OCT-91	N	TRG	PSTCLPTCL	HEPTACHLOR EPOXIDE	0.050	UG/L		U	0.050								
SW129	SW	REAL	SW01667WC	23-OCT-91	N	TRG	PSTCLPTCL	METHOXYCHLOR	0.50	UG/L		U	0.500								
SW129	SW	REAL	SW01667WC	23-OCT-91	N	TRG	PSTCLPTCL	TOXAPHENE	1.0	UG/L		U	1.000								
SW129	SW	REAL	SW01667WC	23-OCT-91	N	TRG	PSTCLPTCL	alpha-BHC	0.050	UG/L		U	0 050								
SW129	SW	REAL	SW01667WC	23-OCT-91	N	TRG	PSTCLPTCL	alpha-CHLORDANE	0.50	UG/L		U	0 500								
SW129	SW	REAL	SW01667WC	23-OCT-91	N	TRG	PSTCLPTCL	beta-BHC	0.050	UG/L		U	0.050								
SW129	SW	REAL	SW01667WC	23-OCT-91	N	TRG	PSTCLPTCL	delta-BHC	0.050	UG/L		U	0 050								

Location	ST	QC	Sample Number	Smpl Date	D	ID	Group	Chemical	Result	Unit	Error	Qual	D LMT	VA	RN1	RN2	RN3	RN4	VResult	VQual	VDET
SW129	SW	REAL	SW01667WC	23-OCT-91	N	TRG	PSTCLPTCL	gamma-BHC (LINDANE)	0 050	UG/L		U	0 050								
SW129	SW	REAL	SW01667WC	23-OCT-91	N	TRG	PSTCLPTCL	gamma-CHLORDANE	0.50	UG/L		U	0.500								
SW129	SW	REAL	SW01667WC	23-OCT-91	N	TRG	WQPL	BICARBONATE AS CACO3	220	MG/L			1 0								
SW129	SW	REAL	SW01667WC	23-OCT-91	N	TRG	WQPL	CARBONATE AS CACO3	4	MG/L			1 0								
SW129	SW	REAL	SW01667WC	23-OCT-91	N	TRG	WQPL	CHLORIDE	45	MG/L			0.2								
SW129	SW	REAL	SW01667WC	23-OCT-91	N	TRG	WQPL	DISSOLVED ORGANIC CARBON	2	MG/L			1								
SW129	SW	REAL	SW01667WC	23-OCT-91	N	TRG	WQPL	FLUORIDE	0 6	MG/L			0 1								
SW129	SW	REAL	SW01667WC	23-OCT-91	N	TRG	WQPL	NITRATE/NITRITE	0.05	MG/L		U	0.05								
SW129	SW	REAL	SW01667WC	23-OCT-91	N	TRG	WQPL	OIL AND GREASE	1.0	MG/L			0.2								
SW129	SW	REAL	SW01667WC	23-OCT-91	N	TRG	WQPL	ORTHOPHOSPHATE	0 02	MG/L		U	0 02								
SW129	SW	REAL	SW01667WC	23-OCT-91	N	TRG	WQPL	PHOSPHORUS	0.03	MG/L			0.02								
SW129	SW	REAL	SW01667WC	23-OCT-91	N	TRG	WQPL	SILICA, DISSOLVED	6.1	MG/L			0.4								
SW129	SW	REAL	SW01667WC	23-OCT-91	N	TRG	WQPL	SULFATE	34	MG/L			2 0								
SW129	SW	REAL	SW01667WC	23-OCT-91	N	TRG	WQPL	SULFIDE	1	MG/L		U	2.0								
SW129	SW	REAL	SW01667WC	23-OCT-91	N	TRG	WQPL	TOTAL DISSOLVED SOLIDS	350	MG/L			10 0								
SW129	SW	REAL	SW01667WC	23-OCT-91	N	TRG	WQPL	TOTAL ORGANIC CARBON	3	MG/L			1								
SW129	SW	REAL	SW01667WC	23-OCT-91	N	TRG	WQPL	TOTAL SUSPENDED SOLIDS	20	MG/L			4.0								

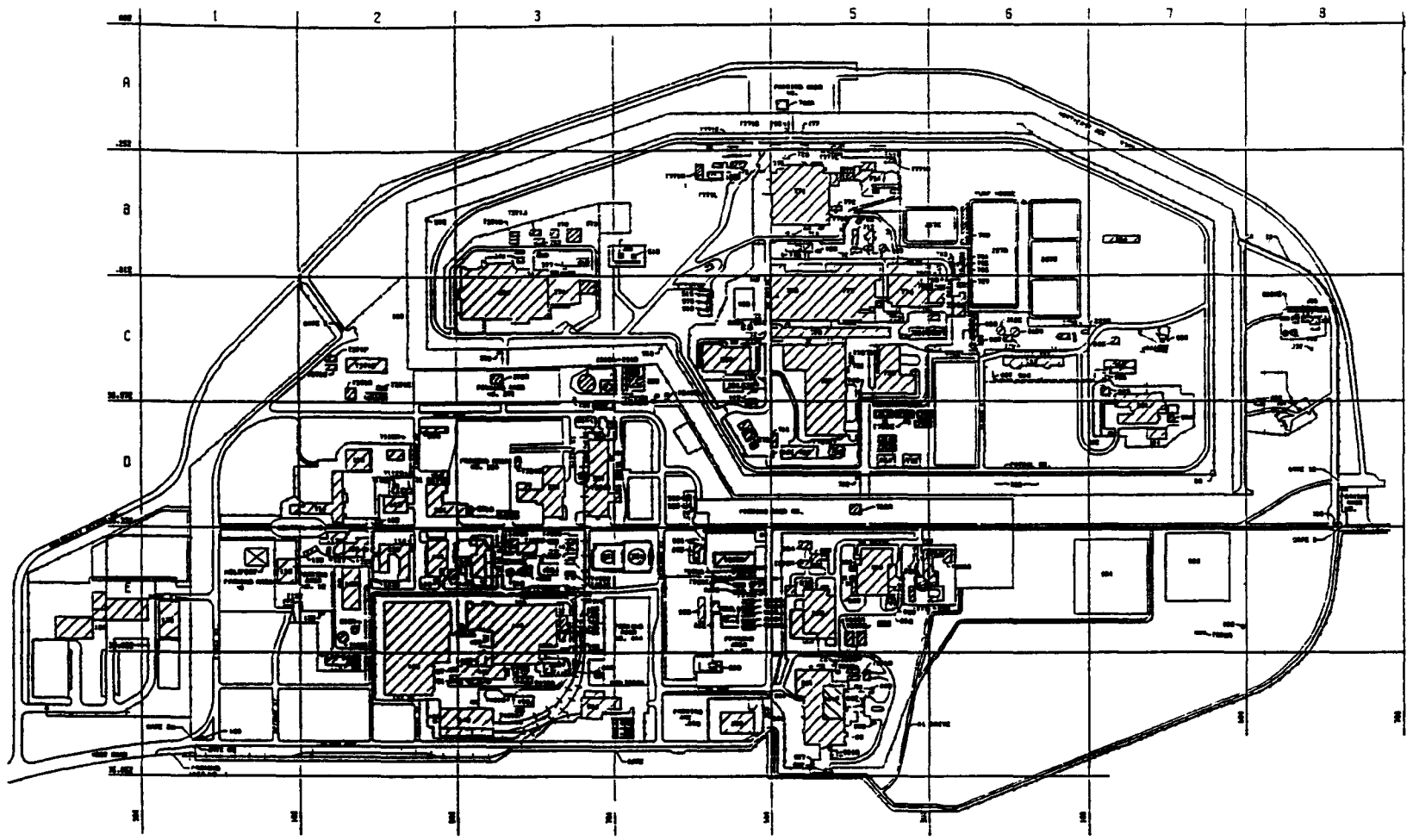

KEY TO DRAWINGS OF AREA PLOT PLAN

			A 3 15501 3	A 4 15501 4	A 5 15501 5	A 6 15501 6	A 7 15501 7			
		B 2 15501 10	B 3 15501 11	B 4 15501-12	B 5 15501 13	B 6 15501 14	B 7 15501 15	B 8 15501 16		
	C 1 15501 17	C 2 15501 18	C 3 15501 19	C 4 15501 20	C 5 15501 21	C 6 15501 22	C 7 15501 23	C 8 15501 24		
	D WI 15501 25	D 1 15501 26	D 2 15501 27	D 3 15501 28	D 4 15501 29	D 5 15501 30	D 6 15501 31	D 7 15501 32	D 8 15501 33	D 16 15501 34
	E WI 15501 38	E 1 15501 39	E 2 15501 40	E 3 15501 41	E 4 15501 42	5 15501 3	E 6 1 501 44	E 15501 45	8 15501 46	
	F WI 15501 49	F 1 15501 50	F 2 15501 51	F 3 15501 52	F 4 15501 53	F 5 15501 54	F 6 15501 55	F 7 15501 56	F 8 15501 57	
G W8 15501 59										

DWG 15501 74
DWG 15501 75

QUADRANT A 15501 70	QUADRANT B 15501 71
QUADRANT C 15501 72	QUADRANT D 15501 73

RFAO PLANT VICINITY
UTILITIES DRAINAGE &
QUADRANTS A B C D

REFERENCE DRAWINGS

255 - O ND D E
3 E BE S
300 B FER Z E O TO R ER
5520 O FL TS O P (G D S E
3 E CESS D D
8789 PLANT C T & DR GE PL
E 789 BOUNDR NES & MONUMENT T (S AR ENG)
26 2 R W TER L E FR MP G ST T O T ER
EATME L T
2720 E O ME T STUD C T S & ZO E
DES G S
62 OW SER ES F R W TE
E 7 9 E L EST E Q S
573 3 WECS TOWER LOC
25022 O ND T & S OR D L B DG 3

LEGEND

SYMBOL	DESCRIPTION
	BUILDING OR STRUCTURE
	PAVED AREA
	FENCE
	RAILROAD TRACK
	UNDERGROUND STRUCTURE

ABBREVIATIONS

DN ANDONED
BM AR AND METER NG
GUN
ALAR TEM DEE
B BL DOWN
NCH MH
NG
CAP ME
JR ACHLO DE
OU
RON PE
O RUGATED ME AL
IRE
ED
CNCR
OL NO ABL
OL INC ER TL
G NG E
INT
LEAN OU
DC ME LD ER O DEEP
MF DO ME LD E
OU
DUC P TRANS TE EEL NC.
LE TR AL O DEE
ELE TR ANHOLE
ALAR
OUNDA ON OR IN
SERGL ORAN
UEL I
GLP GLAS NED PE
GN GAS O PE OLEU O DEEP
GAS. NA AL
H ORDFLOR AC
MH AND HOL
GNE WELL ALAR TEM
KON GVOL
AS UM YDR DE
NSTRUME
AUNDR T
MH MANHOLE
OGEN
GEN O DE
TFAL WE
PLAN
ULL
POL TH ENE P
GCE
OL NLOR DE P
WR OC
RGC F -
OC T
GCE UPP
GND TEFL PE
TER
OR DRAIN
ANI AR ME
AM AR AE ED DE
UNLE
AM
TL TEEL
LEPHONE DE
MH ELEP ONE NHOL
WR WER ER
WS WER TE PL
UC NDE GROUND A LE-
UC NDERGROUND ABLE-C AS O -6 DEEP
C TR ED CL PE
ALVE AUL
AGE FF
OF VE MO E
OP EVE MO DU ER
P TER ACA
AR EYE MO NE
OP NDAR EVE MO MA
DBF DR ING ED TE

UTILITY INDENTIFICATION

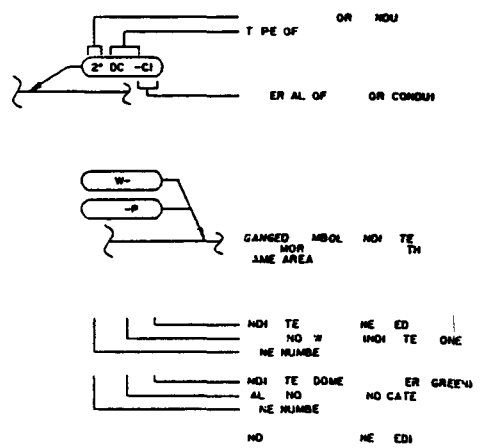

SYMBOLS

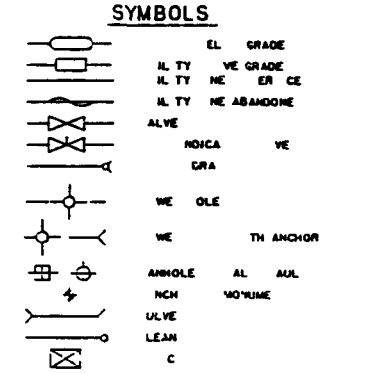

KEYWORDS						
S E						
2 T E						
3 ABO EGRO ND						
NDERGRO ND						
5						
S E						

		KELLOUGH	7 0 83	
		TRUJILLO	8 23 3	
		FERKUN	8 24 83	

MASTER DRAWING
MAINTAIN AS-BUILT PER DES &
FE GROUP RESPONSIBLE PCSE

UTILITY LAYOUT
LEGEND SHHET

D|15501-2-M|N|0

COMPUTER GENERATED R MSTIO4 U KJK LEGEND

MASTER DRAWING
MAINT I S UIL R ES 8
F R

KEYWORDS
L
2 RGR O
3 L
S E
5 80 EGROU D
S E
18

H U DA D
G UPDA D
CR
TE KUI 6-17 6
E O 20
6-14-90 – QU
7 – – J
R–E
U IL S

COMPUTER GE ER TED
D1150 – –

MASTER DRAWING
MAINTAIN AS BUILT PER DES a
FE GROUP RE PONS 3LE ___SE

	P	ADD D MAS R STAMP	7-2 -1 | - BIQU		9004 a
KEYWORDS	N	CONTROLLED DRAWING	1 17 87 | - | /C| | RKJ		DLG | 470601
L T					
2 DE GR ID	FRAC ANGL	DE GNED —		TI	E ER
3 P		DR WN KEL OUGH 20 8		CK FLA OF C	GOLDEN, COLORADO
S TE		CKE — —			
5 B E R ND	NL S3 NOTED	VE TERKUIN 6-17 86			
TE	REMOVE BUR S AND AR			SIT UTILITY PLANS	
COORD/COL NO	AL	SUBMITTE / APPRO ED DC		D | 15501-19-1/1 | P | C-3	

RETAIN COPY

COMPUTER GENERATED

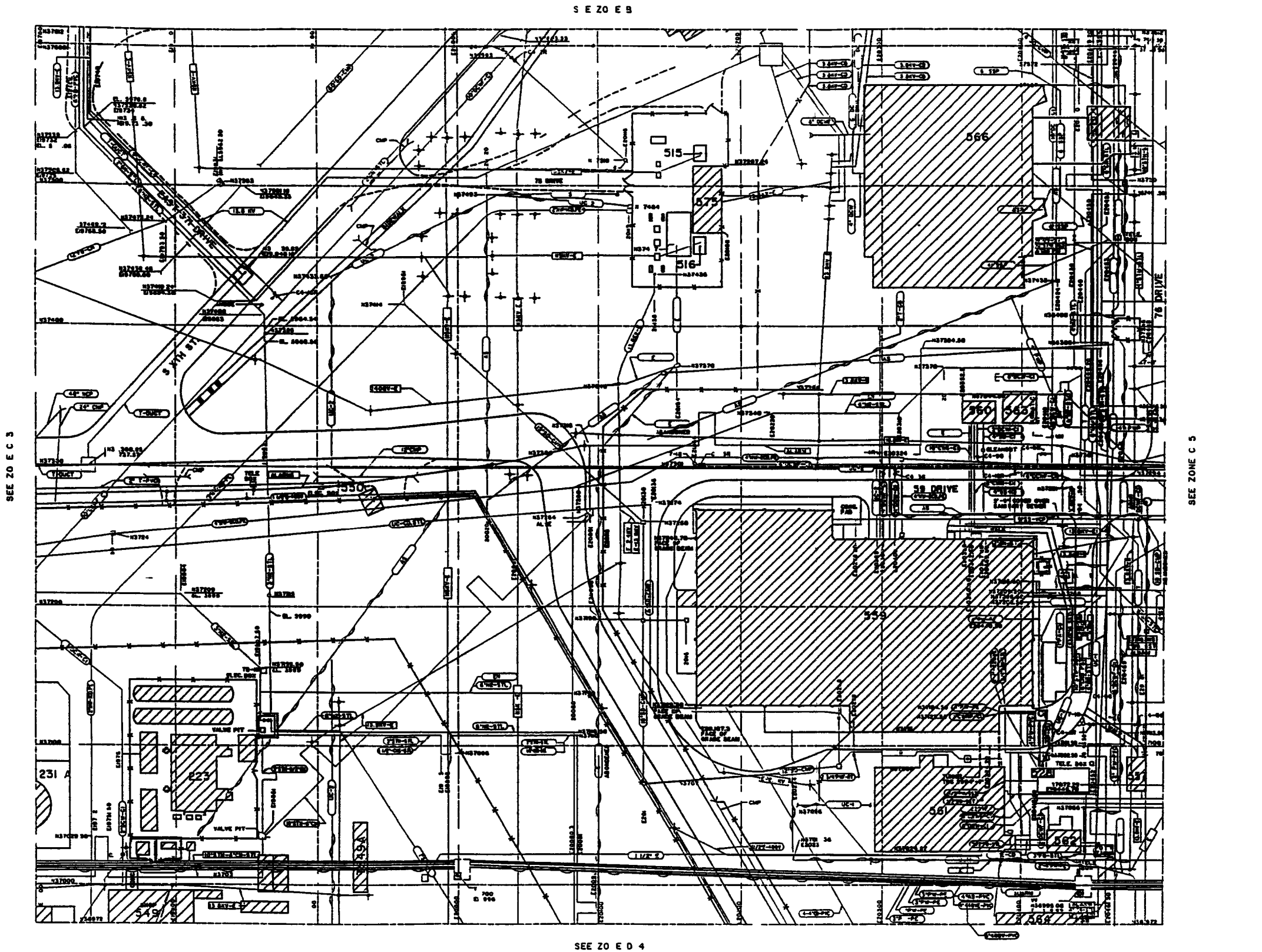

0 20 0 80 20

R	ADDED MASTER S AMP	7/ /4	—	LCBI QU		9004
P	CONTROLLED DRAWING	1 17 87	C	—	RKJ	DLG 47060

KEYWORDS
U TY
2 NDERGROUND
3 PL
S TE
5 AB VEGROUND
BLDG. FACILITY
S E
ROOM/AREA
GRID COORD./COL. NO.

DES GNE	—	—
DR WN	KELLOUGH	7 20 8
CHECKE	—	—
AP ROVED	TERKUN	17 86
SUBMITTED		
APP'D		
APPROVED DO		

CALE: 0 0

E RTM T E E QY
OCKY FL T CE GOLDEN, COLO ADO

SITE UTILITY PLAN

NG NUMB

D 15501-20-M P C 4

MASTER DRAWING
MAINTAIN AS-BUILT PER DES 8
FE GROUP RESPONSIBLE PSCE

RETAIN COPY COMPUTER GENERATED

MASTER DRAWING
MAINTAIN AS BUILT PER DES 8
FE GROUP RESPONSIBLE ____ SE

KEYWORDS
S E
2 UT L TY
3 ABOVEGROUND
4 UNDERGRO ND
5
S TE

ADDED AAS ER ST MP
M PD TE O D DWG IO 550 26
DE GNED — —
D WN KELLOUGH 7 20 8
CHE KE — —
AP VED TERKUN 6 27 86
CALE 0 -0
7 1 86 — BSP VT DLG 450031 900456

SITE UTILITY PLANS

D 15501-27-M N D 2

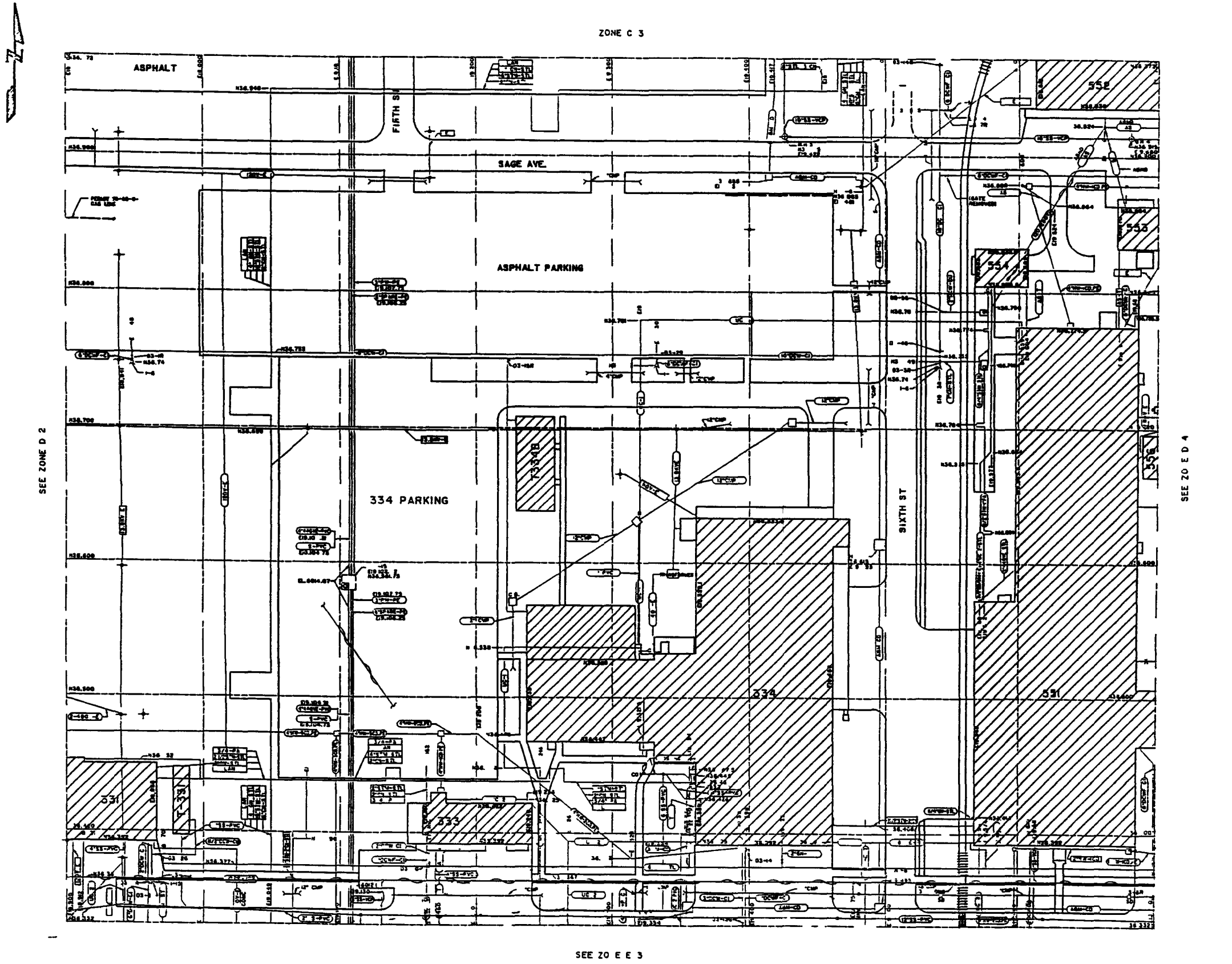

P	ADDED MAS P S .IP	7/8/19		9004
N	CONT OLLED DR ING	1 17 87		DLG 470 C1

KEYWORDS
S TE
2 L T ES
3 ABO EG O NO
IDE GR UN
5
LOG. A T
S TE
OM/AREA
GR COORD./COL NO.

DE GNE	—	—
DR AN	0 GH	20
CH KE	—	—
V	TERKUN	6 27 6

SITE UTILITY PLANS

MASTER DRAWING
MAINTAIN AS BUILT PER DES 8
FE GROUP RESPONSIBLE PCSE

D 15501-28-M P D-3

RETAIN COPY COMPUTER GENERATED

SEE ZO E D 3

SEE ZONE E

SEE ZONE C

SEE ZONE D 5

0 20 0 0 80 20

MASTER DRAWING
MAINTAIN AS BUILT PER OES-8
FE GROUP RESPONSIBLE CSE

L	ADDED MASTER STAMP		7/8/1		
K	UPDATED OLD DWG. NO 15 01 8		7 1 86	BSP	

KEYWORDS
S TE
2 UTL T ES
3 ABOVEGROUND
NDERGROUND
5
BLDG./FACILITY
S E

DE GNED —
DR KELLOUGH 20 8
CHE KED —
AP R VED TERKUN 6 27 86

CALE 0 -0

D THE F E ER
GOLDEN, COLORADO

SITE UTILITY PLANS

D 15501-29-M L D-4

9004
DLG 450031

SEE ZONE D 2

SEE ZONE E 1

SEE ZONE E 3

SEE ZONE F 2

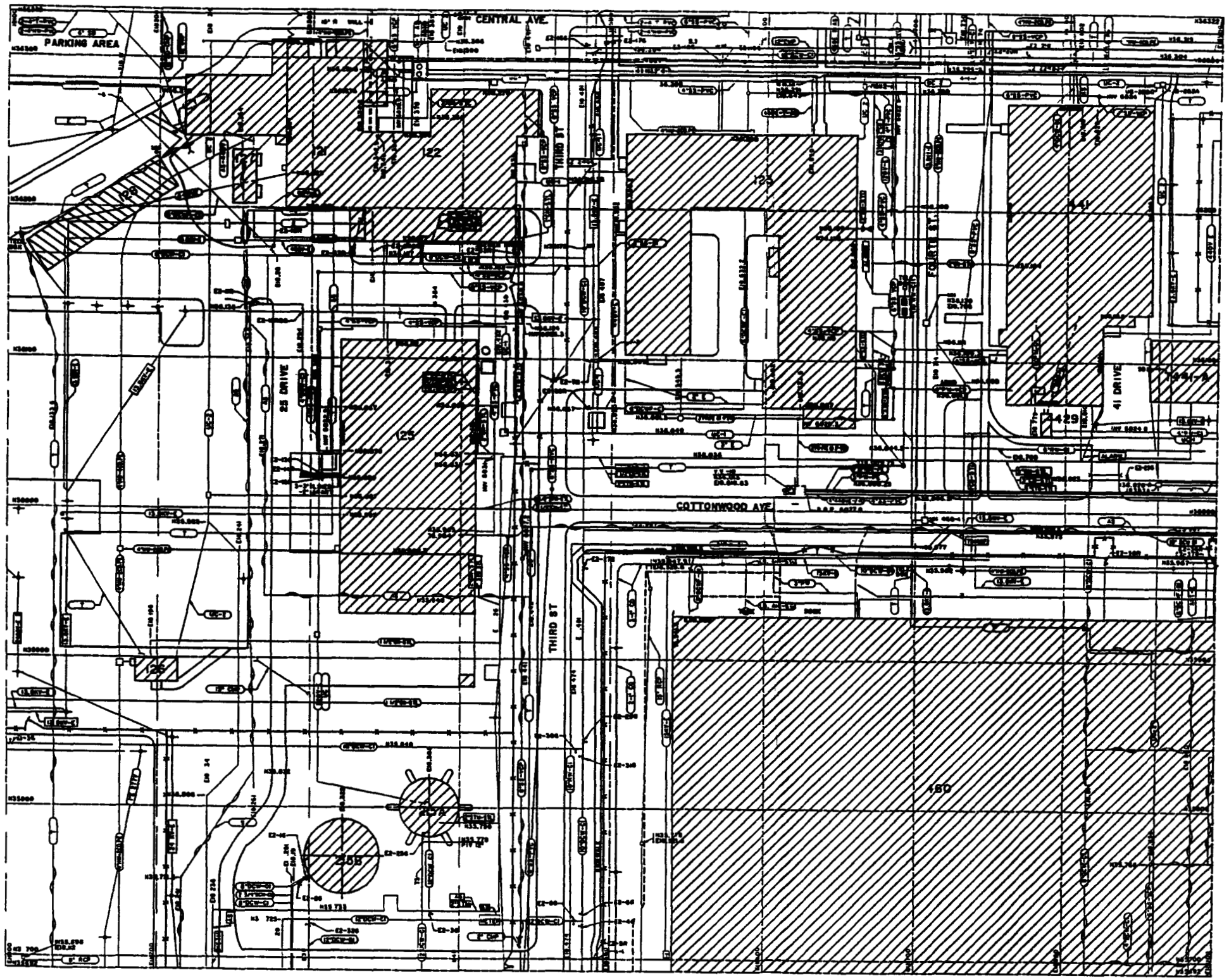

0' 20' 0 0' 80 20

	P	ADDED MASTER STAMP			7/20/ -	ML.N OU	9004
KEYWORDS	N	CONTROLLED DRAWING			1-17 87 -	WC - RKJ	DLG 47060
S TE		DE CR PTION			TE	F DOE	CLA MD
2 UT L T ES	TOLERANCES				TE		DEP RTME T F E E G
3 ABOVEGROUND	FRACT	DES GNED			—	—	OCKY FL TS ARE OFF CE GOLDEN,COLORADO
UNDERGROUND	ANGLE DEC	DR WN		KELLOUGH	7 20 83		
5	UNLESS NOTED THERWISE	CHECKED		—	—		R k P
SLOPE/ACILITY		APPROVED		TERKUN	6 27 86		O
SITE	REMOVE BURRS AND SHAR EDGE						
GRIS CHARLASIL INS.	HEAT ASSEMB						UTILITY LAYOUT
		SUBMITTED					Z O WING NUMBER UE EET
	CALE	APPRO CG FP					D 15501-40-M P E 2
	1 0 0	APPROVED DOE					

MASTER DRAWING

MAINTAIN AS-BUILT PER DES 8

FE GROUP RESPONSIBLE PCSE

MASTER DRAWING
MAINTAIN AS BUILT PER DES 8
FE GROUP R PONSIBLE SE

KEYWORDS
1 S TE
2 T ES
3 ABOVEGROUND
4 NDERGROUND

R ADDED MAS R S AMP 7/20/9 K110UI
P CONTROLLED DRAWING 1 17 87 — C|-RK|

DR WN KELLOUGH 7 20 85
CHECKED —
VED TERKUN 6 27 86

SITE UTILITY PLA S

1 9C 4
DLG 47C601

D 15501-41-M R E

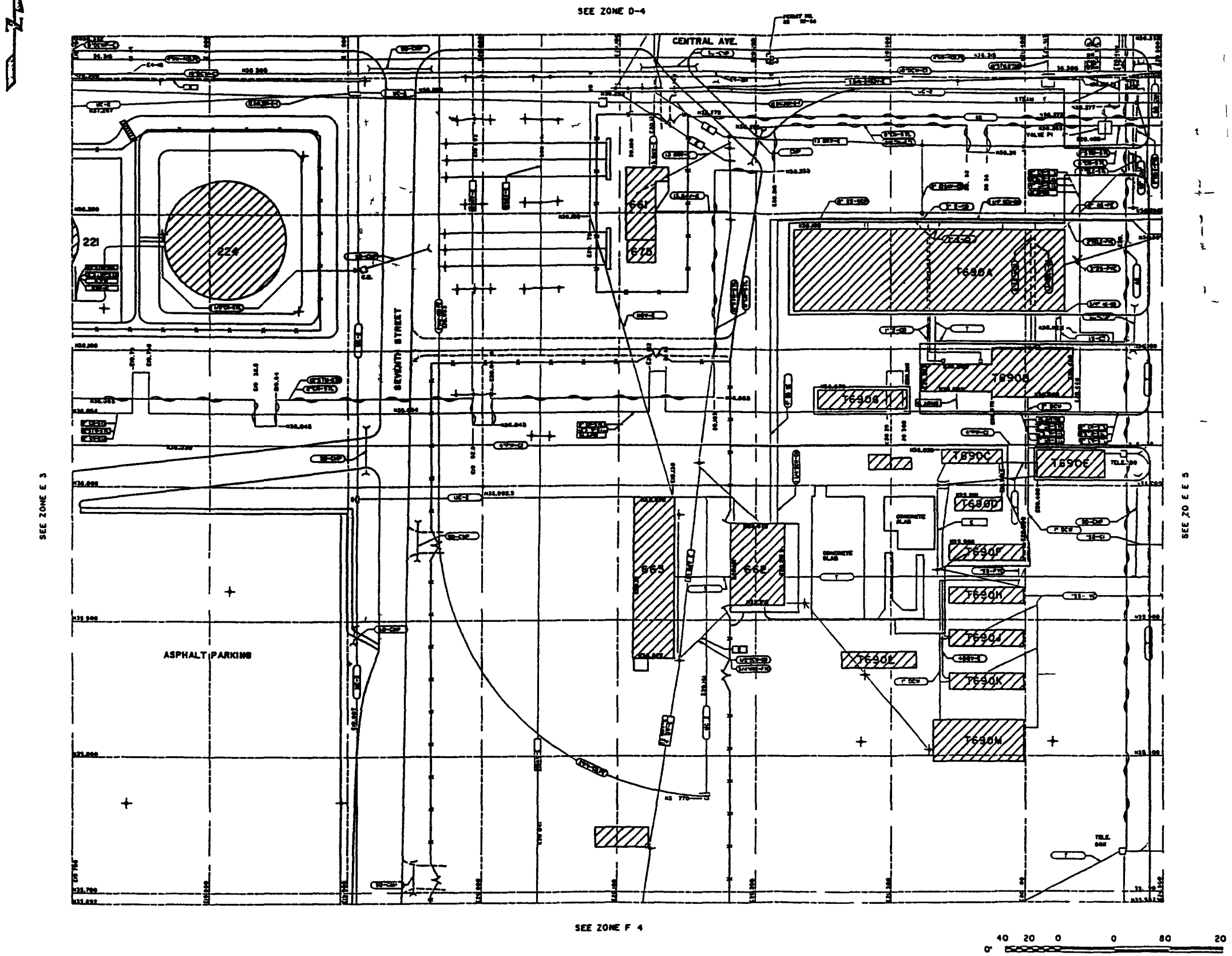

P	ADDED MASTER STAMP	7/20/9	KJ	OU	CS 9004581
N	UPDAT D OLD DWG NO 15501 35	7 1 86	DM	VT	DLG 4 0031

KEYWORDS
S TE
2 U T ES
3 ABOVEGROUND
4 UNDERGROUND
5
S TE

DE GNED
DR WN KELLOUGH 7 2 83
CHECKED
AP VED TERKUN 6 27 86

U S DEP TME T O E
OCK FL OFFICE GOLDEN, OLORADO

F
DE DO

SITE UTILITY PLANS

MASTER DRAWING
MAINTAIN S BUILT PER DES 8
FE GROUP RE PONSIBLE CSE

CALE 0 -0

D 15501-42-M P E 4

RETAIN COPY COMPUTER GENERATED